JAGUAR

Workshop Manual

X350 – XJ

2003 to 2009MY

VIN G00442 to VIN H99999

Version 1.7
May 2014

TABLE OF CONTENTS

1 : General Information

100 : Service Information

100-00 : General Information

Description and Operation

About This Manual
Application and Use of Specifications
General Service Information
Health and Safety Precautions
How To Use This Manual
Important Safety Instructions
Road/Roller Testing
Solvents, Sealants and Adhesives
Standard Workshop Practices

100-01 : Identification Codes

Description and Operation

Identification Codes - VIN Range: G00442->G45703
Identification Codes - VIN Range: G45704->G99999

100-02 : Jacking and Lifting

Description and Operation

Jacking
Jacking - Armoured Vehicles
Lifting

www.JagDocs.com

100-04 : Noise, Vibration and Harshness

General Procedures
Exhaust System Neutralizing
Description and Operation
Noise, Vibration and Harshness (NVH)
Diagnosis and Testing
Noise, Vibration and Harshness (NVH)

2 : Chassis

204 : Suspension

204-00 : Suspension System - General Information

Specifications
- Specifications

General Procedures
- Camber and Caster Adjustment
- Front Toe Adjustment (57.65.01)
- Rear Toe Adjustment (57.65.08)
- Wheel Bearing Inspection

Description and Operation
- Wheel Alignment Angles

Diagnosis and Testing
- Suspension System

204-01 : Front Suspension

Specifications
- Specifications

Description and Operation
- Front Suspension
- Front Suspension - Armoured Vehicles

Diagnosis and Testing
- Front Suspension

Removal and Installation
- Front Lower Arm (60.35.53)
- Rear Lower Arm (60.35.54)
- Rear Lower Arm Bushing (60.35.56)
- Shock Absorber Bushing (60.30.16)
- Front Stabilizer Bar - 3.0L NA V6 - AJ27 (60.10.01)
- Front Stabilizer Bar - 4.2L NA V8 - AJV8/4.2L SC V8 - AJV8/3.5L NA V8 - AJV8 (60.10.01)
- Front Stabilizer Bar - 2.7L V6 - TdV6 (60.10.01)

www.JagDocs.com

Front Stabilizer Bar Link (60.10.02)
Stabilizer Bar Link Bushing (60.10.03)
Upper Arm LH (60.35.41)
Upper Arm RH (60.35.42)
Front Wheel Bearing and Wheel Hub (60.25.03)
Wheel Knuckle (60.25.23)

204-02 : Rear Suspension

Specifications
Specifications
Description and Operation
Rear Suspension
Rear Suspension - Armoured Vehicles
Diagnosis and Testing
Rear Suspension
Removal and Installation
Lower Arm (64.35.43)
Rear Stabilizer Bar (64.35.08)
Rear Stabilizer Bar Link (64.35.24)
Upper Arm (64.25.31)
Rear Wheel Bearing (64.15.14)

204-04 : Wheels and Tires

Specifications
Specifications
Specifications
Specifications
Description and Operation
Wheels and Tires - VIN Range: G00442->G45703
Wheels and Tires - VIN Range: G45704->H18679
Wheels and Tires - VIN Range: H18680->H99999
Wheels and Tires - VIN Range: Armoured Vehicles
Diagnosis and Testing
Wheels and Tires - VIN Range: G00442->G45703
Wheels and Tires - VIN Range: G45704->G99999
Removal and Installation
Tire Low Pressure Sensor

Tire Pressure Monitoring System (TPMS) Front Antenna
Tire Pressure Monitoring System (TPMS) Module
Tire Pressure Monitoring System (TPMS) Rear Antenna
Wheel and Tire (74.20.05)
Wheel and Tire - Armoured Vehicles (74.20.05)

204-05 : Vehicle Dynamic Suspension

Specifications
Specifications
General Procedures
Air Leaks
Ride Height Adjustments
Description and Operation
Vehicle Dynamic Suspension
Diagnosis and Testing
Vehicle Dynamic Suspension
Removal and Installation
Air Suspension Compressor
Air Suspension Control Module (60.32.03)
Air Suspension Reservoir
Air Suspension Solenoid Valve Block
Front Air Spring (60.32.08)
Front Vertical Accelerometer (86.56.53)
Rear Air Spring - VIN Range: G00442->G45703 (60.32.10)
Rear Air Spring - VIN Range: G45704->G99999 (60.32.10)
Rear Air Spring Lower Bushing (64.32.03)
Rear Vertical Accelerometer (86.56.55)
Suspension Height Sensor (60.32.05)

205 : Driveline

205-00 : Driveline System - General Information

General Procedures
Driveline Angle Inspection
Description and Operation

www.JagDocs.com

Driveline System
Diagnosis and Testing
Driveline System

205-01 : Driveshaft

Specifications
Specifications
General Procedures
Driveshaft Runout and Balancing
Description and Operation
Driveshaft
Diagnosis and Testing
Driveshaft
Removal and Installation
Driveshaft (47.15.01)

205-02 : Rear Drive Axle/Differential

Specifications
Specifications
Description and Operation
Rear Drive Axle and Differential
Diagnosis and Testing
Rear Drive Axle and Differential
Removal and Installation
Axle Assembly - Vehicles Without: Differential Drain Plug (51.25.13)
Axle Assembly - Vehicles With: Differential Drain Plug (51.25.13)
Axle Housing Bushing (64.25.30)
In Vehicle Repair
Drive Pinion Seal (51.20.01)

205-05 : Rear Drive Halfshafts

Specifications

Specifications

Description and Operation

Rear Drive Halfshafts

Diagnosis and Testing

Rear Drive Halfshafts

Removal and Installation

Rear Halfshaft (47.10.13)

Inner Constant Velocity (CV) Joint Boot (47.10.33)

Outer Constant Velocity (CV) Joint Boot (47.10.32)

206 : Brake System

206-00 : Brake System - General Information

Specifications

Specifications

Specifications - Armoured Vehicles

General Procedures

Brake Disc Runout Check

Brake System Bleeding - VIN Range: G00442->G45703 (70.25.03)

Brake System Bleeding - VIN Range: G45704->H99999 (70.25.03)

Brake System Bleeding - Armoured Vehicles (70.25.03)

Description and Operation

Brake System - VIN Range: G00442->G45703

Brake System - VIN Range: G45704->G99999

Diagnosis and Testing

Brake System

206-03 : Front Disc Brake

Specifications

Specifications

Specifications

Description and Operation

Front Disc Brake - VIN Range: G00442->G45703

Front Disc Brake - VIN Range: G45704->G99999

Front Disc Brake

Front Disc Brake - Armoured Vehicles

www.JagDocs.com

Diagnosis and Testing

Front Disc Brake

Removal and Installation

Brake Caliper - Vehicles With: Standard Brakes, VIN Range: G00442->G45703 (70.55.02)

Brake Caliper - Vehicles With: Standard Brakes, VIN Range: G45704->G99999 (70.55.02)

Brake Caliper - Vehicles With: High Performance Brakes, VIN Range: G00442->G45704 (70.55.02)

Brake Caliper - Vehicles With: High Performance Brakes, VIN Range: G45704->G99999 (70.55.02)

Brake Caliper - Armoured Vehicles

Brake Disc - Vehicles With: Standard Brakes, VIN Range: G00442->G45703 (70.10.10)

Brake Disc - Vehicles With: Standard Brakes, VIN Range: G45704->G99999 (70.10.10)

Brake Disc - Vehicles With: High Performance Brakes, VIN Range: G00442->G45703 (70.10.10)

Brake Disc - Vehicles With: High Performance Brakes, VIN Range: G45704->G99999 (70.10.10)

Brake Disc - Armoured Vehicles

Brake Disc Shield - Vehicles With: Standard Brakes (70.10.18)

Brake Disc Shield - Vehicles With: High Performance Brakes (70.10.18)

Brake Pads - Vehicles With: Standard Brakes, VIN Range: G00442->G45703 (70.40.02)

Brake Pads - Vehicles With: Standard Brakes, VIN Range: G45704->G99999 (70.40.02)

Brake Pads - Vehicles With: High Performance Brakes, VIN Range: G00442->G45703 (70.40.02)

Brake Pads - Vehicles With: High Performance Brakes, VIN Range: G45704->G99999 (70.40.02)

Brake Pads - Armoured Vehicles

206-04 : Rear Disc Brake

Specifications

Specifications

Specifications

Description and Operation

Rear Disc Brake - VIN Range: G00442->G45703

Rear Disc Brake - VIN Range: G45704->G99999

Rear Disc Brake

Rear Disc Brake - Armoured Vehicles

Diagnosis and Testing
Rear Disc Brake
Removal and Installation
Brake Caliper - Vehicles With: Standard Brakes, VIN Range: G00442->G45703 (70.55.03)
Brake Caliper - Vehicles With: High Performance Brakes, VIN Range: G00442->G45703 (70.55.03)
Brake Caliper - VIN Range: G45704->G99999 (70.55.03)
Brake Caliper - Armoured Vehicles
Brake Disc - Vehicles With: Standard Brakes, VIN Range: G00442->G45703 (70.10.11)
Brake Disc - Vehicles With: High Performance Brakes, VIN Range: G00442->G45703 (70.10.11)
Brake Disc - VIN Range: G45704->G99999 (70.10.11)
Brake Disc - Armoured Vehicles (70.10.11)
Brake Pads - Vehicles With: Standard Brakes, VIN Range: G00442->G45703 (70.40.03)
Brake Pads - Vehicles With: High Performance Brakes, VIN Range: G00442->G45703 (70.40.03)
Brake Pads - VIN Range: G45704->G99999 (70.40.03)
Brake Pads - Armoured Vehicles (70.40.03)

206-05 : Parking Brake and Actuation

Specifications
Specifications
Specifications
General Procedures
Parking Brake Cable Tension Release - VIN Range: G00442->G45703
Parking Brake Cable Tension Release - VIN Range: G45704->G99999
Description and Operation
Parking Brake - VIN Range: G00442->G45703
Parking Brake - VIN Range: G45704->G99999
Diagnosis and Testing
Parking Brake - VIN Range: G00442->G45170
Parking Brake - VIN Range: G45171->G99999
Removal and Installation
Parking Brake Module - VIN Range: G00442->G45703 (70.35.47)
Parking Brake Module - VIN Range: G45704->G99999 (70.35.47)
Parking Brake Pads - Vehicles With: High Performance Brakes (70.40.04)
Parking Brake Rear Cables

www.JagDocs.com

Parking Brake Release Actuator - VIN Range: G00001->G03445 (70.35.45)
Parking Brake Release Actuator - VIN Range: G03446->H99999 (70.35.45)
Parking Brake Switch (70.35.46)

206-06 : Hydraulic Brake Actuation

Specifications
Specifications
Description and Operation
Hydraulic Brake Actuation
Hydraulic Brake Actuation
Diagnosis and Testing
Hydraulic Brake Actuation
Removal and Installation
Brake Fluid Reservoir (70.30.16)
Brake Master Cylinder - 4.2L NA V8 - AJV8/4.2L SC V8 - AJV8/3.0L NA V6 - AJ27/3.5L NA V8 - AJV8 (70.30.08)
Brake Master Cylinder - 2.7L V6 - TdV6 (70.30.08)

206-07 : Power Brake Actuation

Specifications
Specifications
Description and Operation
Brake Booster
Brake Booster
Diagnosis and Testing
Power Brake System
Removal and Installation
Brake Booster (70.50.17)
Brake Vacuum Pump

205-05 : Rear Drive Halfshafts

Specifications

Specifications

Description and Operation

Anti-Lock Control - Stability Assist - VIN Range: G00442->G45703

Anti-Lock Control - Stability Assist - VIN Range: G45704->G99999

Anti-Lock Control - Stability Assist

Diagnosis and Testing

Anti-Lock Control - Stability Assist - VIN Range: G00442->G45703

Anti-Lock Control - Stability Assist - VIN Range: G45704->G99999

Removal and Installation

Anti-Lock Brake System (ABS) Module (70.60.02)

Brake Master Cylinder Pressure Transducer

Brake Pedal Travel Sensor - VIN Range: G00442->G49700

Front Wheel Speed Sensor (70.60.03)

Hydraulic Control Unit (HCU) - VIN Range: G00442->G45703 (70.60.18)

Hydraulic Control Unit (HCU) - VIN Range: G45704->G99999 (70.60.18)

Rear Wheel Speed Sensor (70.60.04)

Steering Wheel Rotation Sensor (86.56.58)

Yaw Rate Sensor and Accelerometer (86.56.64)

211 : Steering System

211-00 : Steering System - General Information

Specifications

Specifications

General Procedures

Power Steering System Bleeding (57.15.02)

Steering Column Lower Shaft Setting

Power Steering System Flushing (57.15.08)

Description and Operation

Steering System

Diagnosis and Testing

Steering System

www.JagDocs.com

211-02 : Power Steering

Specifications

Specifications

Description and Operation

Power Steering

Diagnosis and Testing

Power Steering

Removal and Installation

Power Steering Control Valve Actuator (57.10.32)

Power Steering Fluid Cooler (57.15.11)

Power Steering Fluid Reservoir - 4.2L NA V8 - AJV8/4.2L SC V8 - AJV8/3.0L NA V6 - AJ27/3.5L NA V8 - AJV8 (57.15.08)

Power Steering Fluid Reservoir - 2.7L V6 - TdV6 (57.15.08)

Power Steering Pump - 3.0L NA V6 - AJ27 (57.20.14)

Power Steering Pump - 4.2L NA V8 - AJV8/4.2L SC V8 - AJV8/3.5L NA V8 - AJV8 (57.20.14)

Power Steering Pump - 2.7L V6 - TdV6 (57.20.14)

Steering Gear Bushing (57.10.30)

211-03 : Steering Linkage

Specifications

Specifications

Description and Operation

Steering Linkage

Diagnosis and Testing

Steering Linkage

Removal and Installation

Steering Gear Boot (57.10.29)

Tie Rod End (57.55.02)

211-04 : Steering Column

Specifications

Specifications

Description and Operation

Steering Column

Diagnosis and Testing

Steering Column

Removal and Installation

Ignition Switch Lock Cylinder (57.40.29)

Steering Column (57.40.01)

Steering Column Lower Shaft (57.40.05)

Steering Wheel (57.60.01)

Assembly & Disassembly

Steering Column

211-05 : Steering Column Switches

Description and Operation

Steering Column Switches

Diagnosis and Testing

Steering Column Switches

Removal and Installation

Steering Column Lock Actuator (57.40.41)

Steering Column Multifunction Switch LH (86.65.78)

Steering Column Multifunction Switch RH (86.65.41)

www.JagDocs.com

3 : Powertrain

303 : Engine

303-00 : Engine System - General Information

Specifications
Specifications
General Procedures
Bearing Inspection
Camshaft Bearing Journal Clearance
Camshaft Bearing Journal Diameter
Camshaft End Play
Camshaft Lobe Lift
Camshaft Surface Inspection
Connecting Rod Cleaning
Connecting Rod Large End Bore
Crankshaft End Play
Crankshaft Main Bearing Journal Clearance - 3.0L NA V6 - AJ27
Crankshaft Main Bearing Journal Clearance - 4.2L NA V8 - AJV8/4.2L SC V8 - AJV8/3.5L NA V8 - AJV8
Cylinder Bore Out-of-Round
Cylinder Head Distortion
Exhaust Manifold Cleaning and Inspection
Piston Inspection
Piston Pin Diameter
Piston Pin to Bore Diameter
Piston Ring End Gap
Piston Ring-to-Groove Clearance
Valve Spring Free Length
Valve Stem Diameter
Description and Operation
Engine
Diagnosis and Testing
Engine - 4.2L NA V8 - AJV8/4.2L SC V8 - AJV8/3.0L NA V6 - AJ27/3.5L NA V8 - AJV8
Engine - 2.7L V6 - TdV6

303-01A : Engine - 3.0L NA V6 - AJ27

Specifications
- Specifications

General Procedures
- Valve Clearance Adjustment (12.29.48)
- Valve Clearance Check (12.29.47)

Description and Operation
- Engine

Diagnosis and Testing
- Engine

Removal
- Engine (12.41.01)

Installation
- Engine (12.41.01)

In Vehicle Repair
- Camshafts LH (12.13.19)
- Crankshaft Front Seal (12.21.14)
- Crankshaft Pulley (12.21.09)
- Crankshaft Rear Seal (12.21.20)
- Cylinder Head (12.29.01)
- Engine Front Cover (12.65.01)
- Engine Mount (12.45.13)
- Exhaust Manifold LH - VIN Range: G004442->G45703 (30.15.55)
- Exhaust Manifold LH - VIN Range: G45704->G99999 (30.15.55)
- Flexplate (12.53.13)
- Intake Manifold (30.15.01)
- Lower Intake Manifold (30.15.61)
- Oil Cooler (12.60.68)
- Oil Pan (12.60.44)
- Oil Pump (12.60.26)
- Timing Drive Components (12.65.13)
- Valve Cover LH (12.29.43)
- Valve Cover RH (12.29.44)

Disassembly
- Engine

Disassembly/Assembly of subassemblies
- Cylinder Head (12.29.22)

www.JagDocs.com

Piston (12.17.02)
Assembly
Engine

303-01B : Engine - 4.2L NA V8 - AJV8/4.2L SC V8 - AJV8/3.5L NA V8 - AJV8

Specifications
Specifications
General Procedures
Valve Clearance Adjustment (12.29.48)
Valve Clearance Check (12.29.47)
Description and Operation
Engine
Diagnosis and Testing
Engine
Removal and Installation
Crankshaft Main Bearing Carrier
Removal
Engine (12.41.01)
Installation
Engine (12.41.01)
In Vehicle Repair
Camshafts RH - VIN Range: G00442->G45703 (12.13.18)
Camshafts RH - VIN Range: G45704->G99999 (12.13.18)
Crankshaft Front Seal - VIN Range: G00442->G45703 (12.21.14)
Crankshaft Front Seal - VIN Range: G45704->G99999 (12.21.14)
Crankshaft Pulley (12.21.09)
Crankshaft Rear Seal (12.21.20)
Cylinder Head LH - VIN Range: G00442->G45703 (12.29.02)
Cylinder Head LH - VIN Range: G45704->G99999 (12.29.02)
Engine Front Cover - VIN Range: G00442->G45703 (12.65.01)
Engine Front Cover - VIN Range: G45704->G99999 (12.65.01)
Engine Mount LH (12.45.01)
Engine Mount RH (12.45.03)
Exhaust Manifold RH - VIN Range: G00442->G45703 (30.15.56)
Exhaust Manifold RH - VIN Range: G45704->G99999 (30.15.56)
Flexplate (12.53.13)
Intake Manifold - VIN Range: G00442->G45703 (30.15.01)
Intake Manifold - VIN Range: G45704->G99999 (30.15.01)

Oil Cooler - Vehicles With: Supercharger (12.60.68)
Oil Cooler - Vehicles Without: Supercharger (12.60.68)
Oil Pan (12.60.44)
Oil Pan Extension (12.60.48)
Oil Pump - VIN Range: G00442->G45703 (12.60.26)
Oil Pump - VIN Range: G45704->G99999 (12.60.26)
Secondary Timing Chain Tensioner
Timing Drive Components - VIN Range: G00442->G45703 (12.65.13)
Timing Drive Components - VIN Range: G45704->G99999 (12.65.13)
Valve Cover LH - VIN Range: G00442->G45703 (12.29.43)
Valve Cover LH - VIN Range: G45704->G99999 (12.29.43)
Valve Cover RH - VIN Range: G00442->G45703 (12.29.44)
Valve Cover RH - VIN Range: G45704->G99999 (12.29.44)
Disassembly
Engine
Disassembly/Assembly of subassemblies
Cylinder Head (12.29.22)
Assembly
Engine

303-01C : Engine - 2.7L V6 - TdV6

Specifications
Specifications
Description and Operation
Engine
Diagnosis and Testing
Engine
Removal
Engine (12.41.01)
Installation
Engine (12.41.01)
In Vehicle Repair
Camshaft Front Seal
Camshaft Rear Seal
Camshafts LH (12.13.19)
Crankshaft Front Seal (12.21.14)
Crankshaft Rear Seal (12.21.20)
Crankshaft Vibration Damper (12.21.09)

www.JagDocs.com

Cylinder Head LH (12.29.02)
Engine Mount LH (12.45.01)
Engine Mount RH (12.45.03)
Exhaust Manifold LH (30.15.55)
Exhaust Manifold RH (30.15.56)
Flexplate (12.53.13)
Oil Filter Element (12.60.02)
Oil Pan (12.60.44)
Oil Pan Extension (12.60.48)
Oil Pump (12.60.26)
Timing Belt
Timing Belt Cover
Valve Cover LH (12.29.43)
Valve Cover RH (12.29.44)

303-03A : Engine Cooling - 4.2L NA V8 - AJV8/4.2L SC V8 - AJV8/3.0L NA V6 - AJ27/3.5L NA V8 - AJV8

Specifications
Specifications
General Procedures
Cooling System Backflushing
Cooling System Draining, Filling and Bleeding
Cooling System Draining and Vacuum Filling
Cooling System Flushing
Description and Operation
Engine Cooling
Diagnosis and Testing
Engine Cooling
Removal and Installation
Coolant Expansion Tank (26.15.01)
Cooling Fan Motor and Shroud (26.25.25)
Radiator (26.40.01)
Thermostat - 3.0L NA V6 - AJ27 (26.45.07)
Thermostat - 4.2L NA V8 - AJV8/3.5L NA V8 - AJV8 (26.45.07)
Thermostat - 4.2L SC V8 - AJV8 (26.45.07)
Water Pump - 3.0L NA V6 - AJ27, VIN Range: G00442->G45703 (26.50.01)
Water Pump - 3.0L NA V6 - AJ27, VIN Range: G45704->G99999 (26.50.01)
Water Pump - 4.2L NA V8 - AJV8/3.5L NA V8 - AJV8 (26.50.01)
Water Pump - 4.2L SC V8 - AJV8 (26.50.01)

303-03B : Supercharger Cooling

Specifications
- Specifications

General Procedures
- Supercharger Cooling System Draining, Filling and Bleeding

Description and Operation
- Supercharger Cooling

Diagnosis and Testing
- Supercharger Cooling

Removal and Installation
- Radiator
- Water Pump

303-03C : Engine Cooling - 2.7L V6 - TdV6

Specifications
- Specifications

General Procedures
- Cooling System Draining, Filling and Bleeding
- Cooling System Draining and Vacuum Filling

Description and Operation
- Engine Cooling

Diagnosis and Testing
- Engine Cooling

Removal and Installation
- Coolant Expansion Tank (26.15.01)
- Cooling Fan Motor and Shroud (26.25.25)
- Radiator (26.40.01)
- Thermostat (26.45.07)
- Water Pump (26.50.01)

www.JagDocs.com

303-04A : Fuel Charging and Controls - 3.0L NA V6 - AJ27

Specifications
- Specifications

Description and Operation
- Fuel Charging and Controls

Diagnosis and Testing
- Fuel Charging and Controls - VIN Range: G00442->G45703
- Fuel Charging and Controls - VIN Range: G45704->G99999

Removal and Installation
- Fuel Charging Wiring Harness (86.70.22)
- Fuel Injectors (18.10.02)
- Fuel Injection Supply Manifold (19.60.13)
- Throttle Body - VIN Range: G00442->G45703 (19.70.04)
- Throttle Body - VIN Range: G45704->G99999 (19.70.04)

303-04B : Fuel Charging and Controls - 4.2L NA V8 - AJV8/4.2L SC V8 - AJV8/3.5L NA V8 - AJV8

Specifications
- Specifications

Description and Operation
- Fuel Charging and Controls

Diagnosis and Testing
- Fuel Charging and Controls - VIN Range: G00442->G45703
- Fuel Charging and Controls - VIN Range: G45704->G99999

Removal and Installation
- Fuel Injection Supply Manifold (19.60.13)
- Fuel Injectors (18.10.02)
- Throttle Body - 4.2L SC V8 - AJV8, VIN Range: G00442->G45703 (19.70.04)
- Throttle Body - 4.2L SC V8 - AJV8, VIN Range: G45704->G99999 (19.70.04)
- Throttle Body - 4.2L NA V8 - AJV8/3.5L NA V8 - AJV8, VIN Range: G00442->G45703 (19.70.04)
- Throttle Body - 4.2L NA V8 - AJV8/3.5L NA V8 - AJV8, VIN Range: G45704->G99999 (19.70.04)

303-04C : Fuel Charging and Controls - 2.7L V6 - TdV6

Specifications
General Procedures
Fuel Injection Component Cleaning
Description and Operation
Fuel Charging and Controls
Diagnosis and Testing
Fuel Charging and Controls
Removal and Installation
Fuel Diverter Rail
Fuel Injection Pump
Fuel Injector (18.10.01)
Fuel Rail
Intake Air Shutoff Throttle
Swirl Plate Actuator Diaphragm

303-04D : Fuel Charging and Controls - Turbocharger - 2.7L V6 - TdV6

Specifications
Specifications
Description and Operation
Turbocharger
Diagnosis and Testing
Turbocharger
Removal and Installation
Turbocharger LH
Turbocharger RH

303-05 : Accessory Drive

Specifications
Specifications
Description and Operation
Accessory Drive
Diagnosis and Testing
Accessory Drive - 3.0L/3.5L/4.2L
Accessory Drive - 2.7L Diesel
Removal and Installation
Accessory Drive Belt - 3.0L NA V6 - AJ27, VIN Range: G00442->G45703

www.JagDocs.com

(12.10.40)
Accessory Drive Belt - 3.0L NA V6 - AJ27, VIN Range: G45704->G99999 (12.10.40)
Accessory Drive Belt - 4.2L NA V8 - AJV8/4.2L SC V8 - AJV8/3.5L NA V8 - AJV8 (12.10.40)
Accessory Drive Belt - 2.7L V6 - TdV6 (12.10.40)
Accessory Drive Belt Idler Pulley - 3.0L NA V6 - AJ27, VIN Range: G00442->G45703 (12.10.43)
Accessory Drive Belt Idler Pulley - 3.0L NA V6 - AJ27, VIN Range: G45704->G99999 (12.10.43)
Accessory Drive Belt Idler Pulley - 4.2L NA V8 - AJV8/4.2L SC V8 - AJV8/3.5L NA V8 - AJV8, VIN Range: G00442->G45703 (12.10.43)
Accessory Drive Belt Idler Pulley - 4.2L NA V8 - AJV8/4.2L SC V8 - AJV8/3.5L NA V8 - AJV8, VIN Range: G45704->G99999 (12.10.43)
Accessory Drive Belt Idler Pulley - 2.7L V6 - TdV6 (12.10.43)
Accessory Drive Belt Tensioner - 3.0L NA V6 - AJ27, VIN Range: G00442->G45703 (12.10.41)
Accessory Drive Belt Tensioner - 3.0L NA V6 - AJ27, VIN Range: G45704->G99999 (12.10.41)
Accessory Drive Belt Tensioner - 4.2L NA V8 - AJV8/4.2L SC V8 - AJV8/3.5L NA V8 - AJV8 (12.10.41)
Accessory Drive Belt Tensioner - 2.7L V6 - TdV6 (12.10.41)
Fuel Injection Pump Belt
Fuel Injection Pump Pulley
Supercharger Belt - VIN Range: G00442->G45703 (18.50.08)
Supercharger Belt - VIN Range: G45704->G99999 (18.50.08)
Supercharger Belt Idler Pulley - VIN Range: G04422->G45703 (18.50.09)
Supercharger Belt Idler Pulley - VIN Range: G45704->G99999 (18.50.09)
Supercharger Belt Tensioner - VIN Range: G00442->G99999 (18.50.24)

303-06 : Starting System

Specifications
Specifications
Description and Operation
Starting System
Diagnosis and Testing
Starting System

Removal and Installation

Starter Motor - 4.2L NA V8 - AJV8/4.2L SC V8 - AJV8/3.0L NA V6 - AJ27/3.5L NA V8 - AJV8 (86.60.01)

Starter Motor - 2.7L V6 - TdV6 (86.60.01)

303-07A : Engine Ignition - 3.0L NA V6 - AJ27

Specifications

Specifications

Description and Operation

Engine Ignition

Diagnosis and Testing

Engine Ignition - VIN Range: G00442->G45703

Engine Ignition - VIN Range: G45704->G99999

Removal and Installation

Ignition Coil-On-Plug LH (18.20.44)

Ignition Coil-On-Plug RH (18.20.43)

303-07B : Engine Ignition - 4.2L NA V8 - AJV8/4.2L SC V8 - AJV8/3.5L NA V8 - AJV8

Specifications

Specifications

Description and Operation

Engine Ignition

Diagnosis and Testing

Engine Ignition - VIN Range: G00442->G45703

Engine Ignition - VIN Range: G45704->G99999

Removal and Installation

Ignition Coil-On-Plug (18.20.40)

303-07C : Glow Plug System

Specifications

Specifications

Description and Operation

www.JagDocs.com

Glow Plug System
Diagnosis and Testing
Glow Plug System
Removal and Installation
Glow Plugs

303-08A : Engine Emission Control - 4.2L NA V8 - AJV8/4.2L SC V8 - AJV8/3.0L NA V6 - AJ27/3.5L NA V8 - AJV8

Specifications
Specifications
Specifications
Description and Operation
Engine Emission Control - VIN Range: G00442->G45703
Engine Emission Control - VIN Range: G45704->G99999
Diagnosis and Testing
Engine Emission Control - VIN Range: G00442->G45703
Engine Emission Control - VIN Range: G45704->G99999
Removal and Installation
Exhaust Gas Recirculation (EGR) Valve (17.45.01)
Exhaust Manifold to Exhaust Gas Recirculation (EGR) Valve Tube (17.45.11)
Secondary Air Injection (AIR) Control Valve - 3.0L NA V6 - AJ27
Secondary Air Injection (AIR) Control Valve - 4.2L NA V8 - AJV8/3.5L NA V8 - AJV8
Secondary Air Injection (AIR) Control Valve - 4.2L SC V8 - AJV8
Secondary Air Injection (AIR) Control Valve to Exhaust Manifold Tube LH - 3.0L NA V6 - AJ27
Secondary Air Injection (AIR) Control Valve to Exhaust Manifold Tube RH - 3.0L NA V6 - AJ27
Secondary Air Injection (AIR) Control Valve to Exhaust Manifold Tube - 4.2L NA V8 - AJV8/3.5L NA V8 - AJV8, 4.2L
Secondary Air Injection (AIR) Control Valve to Exhaust Manifold Tube - 4.2L SC V8 - AJV8, 4.2L
Secondary Air Injection (AIR) Pump

303-08B : Engine Emission Control - 2.7L V6 - TdV6

Specifications
- Specifications

Description and Operation
- Engine Emission Control

Diagnosis and Testing
- Engine Emission Control

Removal and Installation
- Crankcase Vent Oil Separator
- Exhaust Gas Recirculation (EGR) Valve LH
- Exhaust Gas Recirculation (EGR) Valve Outlet Tube (17.45.11)
- Exhaust Gas Recirculation (EGR) Valve RH

303-12A : Intake Air Distribution and Filtering - 3.0L NA V6 - AJ27

Specifications
- Specifications

Description and Operation
- Intake Air Distribution and Filtering

Diagnosis and Testing
- Intake Air Distribution and Filtering - VIN Range: G00442->G45703
- Intake Air Distribution and Filtering - VIN Range: G45704->G99999

Removal and Installation
- Air Cleaner (19.10.05)
- Air Cleaner Element (19.10.08)
- Air Cleaner Outlet Pipe (19.10.31)

303-12B : Intake Air Distribution and Filtering - 4.2L NA V8 - AJV8/4.2L SC V8 - AJV8/3.5L NA V8 - AJV8

Specifications
- Specifications

Description and Operation
- Intake Air Distribution and Filtering

Diagnosis and Testing
- Intake Air Distribution and Filtering - VIN Range: G00442->G45703
- Intake Air Distribution and Filtering - VIN Range: G45704->G99999

Removal and Installation
- Air Cleaner (19.10.05)

www.JagDocs.com

Air Cleaner Element (19.10.08)
Air Cleaner Outlet Pipe (19.10.31)
Charge Air Cooler
Supercharger - VIN Range: G00442->G45703 (18.50.15)
Supercharger - VIN Range: G45704->G99999 (18.50.15)
Supercharger Outlet Pipe (18.50.16)

303-12C : Intake Air Distribution and Filtering - 2.7L V6 - TdV6

Specifications
Specifications
Description and Operation
Intake Air Distribution and Filtering
Diagnosis and Testing
Intake Air Distribution and Filtering
Removal and Installation
Air Cleaner (19.10.05)
Air Cleaner Element (19.10.08)
Charge Air Cooler

303-13 : Evaporative Emissions

Specifications
Specifications
Description and Operation
Evaporative Emissions - VIN Range: G00442->G45703
Evaporative Emissions - VIN Range: G45704->G99999
Diagnosis and Testing
Evaporative Emissions - VIN Range: G00442->G45703
Evaporative Emissions - VIN Range: G45704->G99999
Removal and Installation
Evaporative Emission Canister - VIN Range: G00442->G45703 (17.15.13)
Evaporative Emission Canister - VIN Range: G45704->G99999 (17.15.13)
Evaporative Emission Canister Purge Valve - VIN Range: G00442->G45703 (17.15.30)
Evaporative Emission Canister Purge Valve - 3.0L NA V6 - AJ27, VIN Range: G45704->G99999 (17.15.30)

Evaporative Emission Canister Purge Valve - 4.2L SC V8 - AJV8/3.5L NA V8 - AJV8, VIN Range: G45171->G99999 (17.15.30)
Evaporative Emission Canister Purge Valve - 4.2L NA V8 - AJV8/3.5L NA V8 - AJV8, VIN Range: G45171->G99999 (17.15.30)
Evaporative Emission Canister Vent Solenoid (17.15.45)
Fuel Tank Pressure Sensor (19.55.31)

303-14A : Electronic Engine Controls - 3.0L NA V6 - AJ27

Specifications
Specifications
General Procedures
Brake Pedal Position (BPP) Switch Adjustment
Description and Operation
Electronic Engine Controls
Diagnosis and Testing
Electronic Engine Controls - VIN Range: G00442->G45703
Electronic Engine Controls - VIN Range: G45704->G99999
Removal and Installation
Brake Pedal Position (BPP) Switch
Camshaft Position (CMP) Sensor LH (18.31.12)
Camshaft Position (CMP) Sensor RH (18.31.11)
Catalyst Monitor Sensor (18.30.66)
Crankshaft Position (CKP) Sensor (18.30.12)
Engine Control Module (ECM) (18.30.01)
Engine Coolant Temperature (ECT) Sensor - VIN Range: G00442->G45703 (18.30.10)
Engine Coolant Temperature (ECT) Sensor - VIN Range: G45704->G99999 (18.30.10)
Fuel Rail Pressure (FRP) Sensor (18.30.98)
Fuel Temperature Sensor (18.30.99)
Heated Oxygen Sensor (HO2S)
Intake Manifold Tuning (IMT) Valve LH (19.70.30)
Knock Sensor (KS) LH (18.30.92)
Knock Sensor (KS) RH (18.30.93)
Manifold Absolute Pressure (MAP) Sensor (18.30.86)
Mass Air Flow (MAF) Sensor (18.30.15)
Oil Temperature Sensor (18.31.01)
Variable Camshaft Timing (VCT) Oil Control Solenoid (18.30.90)

www.JagDocs.com

303-14B : Electronic Engine Controls - 4.2L NA V8 - AJV8/4.2L SC V8 - AJV8/3.5L NA V8 - AJV8

Specifications
- Specifications

General Procedures
- Brake Pedal Position (BPP) Switch Adjustment
- Powertrain Control Module (PCM) Long Drive Cycle Self-Test
- Powertrain Control Module (PCM) Short Drive Cycle Self-Test

Description and Operation
- Electronic Engine Controls

Diagnosis and Testing
- Electronic Engine Controls - VIN Range: G00442->G45703
- Electronic Engine Controls - VIN Range: G45704->G99999

Removal and Installation
- Brake Pedal Position (BPP) Switch
- Camshaft Position (CMP) Sensor LH (18.31.12)
- Camshaft Position (CMP) Sensor RH (18.31.11)
- Catalyst Monitor Sensor (18.30.66)
- Crankshaft Position (CKP) Sensor (18.30.12)
- Engine Control Module (ECM) (18.30.01)
- Engine Coolant Temperature (ECT) Sensor - 4.2L SC V8 - AJV8 (18.30.10)
- Engine Coolant Temperature (ECT) Sensor - 4.2L NA V8 - AJV8 (18.30.10)
- Fuel Rail Pressure (FRP) Sensor (18.30.98)
- Fuel Temperature Sensor (18.30.99)
- Heated Oxygen Sensor (HO2S)
- Intake Air Temperature (IAT) Sensor - 4.2L SC V8 - AJV8 (18.30.52)
- Knock Sensor (KS) LH (18.30.92)
- Manifold Absolute Pressure (MAP) Sensor - 4.2L SC V8 - AJV8 (18.30.86)
- Manifold Absolute Pressure (MAP) Sensor - 4.2L NA V8 - AJV8 (18.30.86)
- Mass Air Flow (MAF) Sensor (18.30.15)
- Oil Temperature Sensor (18.31.01)
- Variable Camshaft Timing (VCT) Oil Control Solenoid (18.30.90)

303-14C : Electronic Engine Controls - 2.7L V6 - TdV6

Specifications
- Specifications

General Procedures
- Brake Pedal Position (BPP) Switch Adjustment

Description and Operation
- Electronic Engine Controls

Diagnosis and Testing
- Electronic Engine Controls

Removal and Installation
- Brake Pedal Position (BPP) Switch
- Camshaft Position (CMP) Sensor (18.30.63)
- Crankshaft Position (CKP) Sensor (18.30.12)
- Crankshaft Position (CKP) Sensor Ring
- Engine Control Module (ECM) (18.30.01)
- Engine Coolant Temperature (ECT) Sensor (18.30.10)
- Exhaust Gas Temperature Sensor
- Engine Oil Pressure (EOP) Sensor
- Fuel Rail Pressure (FRP) Sensor (18.30.98)
- Fuel Temperature Sensor (18.30.99)
- Intake Air Temperature (IAT) Sensor (18.30.52)
- Knock Sensor (KS) LH (18.30.92)
- Knock Sensor (KS) RH (18.30.93)
- Manifold Absolute Pressure (MAP) Sensor (18.30.86)
- Mass Air Flow (MAF) Sensor (18.30.15)
- Oil Temperature Sensor (18.31.01)

www.JagDocs.com

307 : Automatic Transmission/Transaxle

307-01 : Automatic Transmission/Transaxle

Specifications
- Specifications

General Procedures
- Transmission Fluid Drain and Refill (44.24.02)
- Transmission Fluid Level Check

Description and Operation
- Transmission Description

Diagnosis and Testing
- Diagnostic Strategy

Removal

Transmission - 3.0L NA V6 - AJ27 (44.20.01)

Transmission - 4.2L NA V8 - AJV8/4.2L SC V8 - AJV8/3.5L NA V8 - AJV8 (44.20.01)

Transmission - 2.7L V6 - TdV6 (44.20.01)

Installation

Transmission - 3.0L NA V6 - AJ27 (44.20.01)

Transmission - 4.2L NA V8 - AJV8/4.2L SC V8 - AJV8/3.5L NA V8 - AJV8 (44.20.01)

Transmission - 2.7L V6 - TdV6 (44.20.01)

In Vehicle Repair

Extension Housing Seal (44.20.18)

Transmission Fluid Pan, Gasket and Filter (44.24.07)

Transmission Control Module (TCM) and Main Control Valve Body

Disassembly/Assembly of subassemblies

Input Shaft Seal (44.32.07)

307-02 : Transmission/Transaxle Cooling

Specifications

Specifications

Description and Operation

Transmission Cooling

Diagnosis and Testing

Transmission Cooling

Removal and Installation

Transmission Fluid Cooler - 2.7L V6 - TdV6 (44.24.10)

Transmission Fluid Cooler Tubes - 4.2L NA V8 - AJV8/4.2L SC V8 - AJV8/3.0L NA V6 - AJ27/3.5L NA V8 - AJV8 (44.24.19)

Transmission Fluid Cooler Tubes - 2.7L V6 - TdV6 (44.24.19)

307-05 : Automatic Transmission/Transaxle External Controls

Specifications

Specifications

General Procedures

Selector Lever Cable Adjustment (44.15.07)

Description and Operation
External Controls
Diagnosis and Testing
External Controls
Removal and Installation
Selector Lever Cable and Bracket (44.15.08)
Selector Lever Assembly (44.15.04)

309 : Exhaust System

309-00 : Exhaust System

Specifications
Specifications
Description and Operation
Exhaust System
Diagnosis and Testing
Exhaust System
Removal and Installation
Catalytic Converter - 4.2L NA V8 - AJV8/4.2L SC V8 - AJV8/3.0L NA V6 - AJ27/3.5L NA V8 - AJV8 (17.50.05)
Catalytic Converter - 2.7L V6 - TdV6 (17.50.05)
Diesel Particulate Filter (DPF)
Diesel Particulate Filter (DPF) Differential Pressure Sensor
Exhaust System - 4.2L NA V8 - AJV8/4.2L SC V8 - AJV8/3.0L NA V6 - AJ27/3.5L NA V8 - AJV8
Exhaust System - 2.7L V6 - TdV6
Front Muffler - 4.2L NA V8 - AJV8/4.2L SC V8 - AJV8/3.0L NA V6 - AJ27/3.5L NA V8 - AJV8 (30.10.18)
Front Muffler - 2.7L V6 - TdV6 (30.10.18)
Muffler and Tailpipe (30.10.52)

www.JagDocs.com

310 : Fuel System

310-00 : Fuel System - General Information

Specifications

Specifications

General Procedures

Fuel System Pressure Check

Fuel System Pressure Release - 4.2L NA V8 - AJV8/4.2L SC V8 - AJV8/3.0L NA V6 - AJ27/3.5L NA V8 - AJV8 (19.50.02)

Fuel System Pressure Release - 2.7L V6 - TdV6 (19.50.02)

Fuel Tank Draining - VIN Range: G00442->G45703

Fuel Tank Draining - VIN Range: G45704->G99999

High-Pressure Fuel System Bleeding - 2.7L V6 - TdV6

Low-Pressure Fuel System Bleeding - 2.7L V6 - TdV6

Quick Release Coupling

Quick Release Coupling - Push Connect

Spring Lock Couplings

Description and Operation

Fuel System - VIN Range: G00442->G45703

Fuel System - VIN Range: G45704->G99999

310-01 : Fuel Tank and Lines

Specifications

Specifications

Description and Operation

Fuel Tank and Lines - VIN Range: G00442->G45703

Fuel Tank and Lines - VIN Range: G45704->G99999

Diagnosis and Testing

Fuel Tank and Lines - 4.2L NA V8 - AJV8/4.2L SC V8 - AJV8/3.0L NA V6 - AJ27/3.5L NA V8 - AJV8, VIN Range: G00442->G45703

Fuel Tank and Lines - 4.2L NA V8 - AJV8/4.2L SC V8 - AJV8/3.0L NA V6 - AJ27/3.5L NA V8 - AJV8, VIN Range: G45704->G99999

Fuel Tank and Lines - 2.7L V6 - TdV6

Removal and Installation

Fuel Filter - 4.2L NA V8 - AJV8/4.2L SC V8 - AJV8/3.0L NA V6 - AJ27/3.5L NA V8 - AJV8 (19.25.02)

Fuel Filter - 2.7L V6 - TdV6 (19.25.02)

Fuel Level Sender LH - 4.2L NA V8 - AJV8/4.2L SC V8 - AJV8/3.0L NA V6 - AJ27/3.5L NA V8 - AJV8, VIN Range: G00442->G45703

Fuel Level Sender LH - 4.2L NA V8 - AJV8/4.2L SC V8 - AJV8/3.0L NA V6 -

AJ27/3.5L NA V8 - AJV8, VIN Range: G45704->G99999
Fuel Level Sender LH - 2.7L V6 - TdV6
Fuel Level Sender RH - 4.2L NA V8 - AJV8/4.2L SC V8 - AJV8/3.0L NA V6 - AJ27/3.5L NA V8 - AJV8, VIN Range: G00442->G45703
Fuel Level Sender RH - 4.2L NA V8 - AJV8/4.2L SC V8 - AJV8/3.0L NA V6 - AJ27/3.5L NA V8 - AJV8, VIN Range: G45704->G99999
Fuel Level Sender RH - 2.7L V6 - TdV6
Fuel Pump Module - 4.2L NA V8 - AJV8/4.2L SC V8 - AJV8/3.0L NA V6 - AJ27/3.5L NA V8 - AJV8, VIN Range: G00442->G45703 (19.45.08)
Fuel Pump Module - 4.2L NA V8 - AJV8/4.2L SC V8 - AJV8/3.0L NA V6 - AJ27/3.5L NA V8 - AJV8, VIN Range: G45704->G99999 (19.45.08)
Fuel Pump Module - 2.7L V6 - TdV6 (19.45.08)
Fuel Tank - 4.2L NA V8 - AJV8/4.2L SC V8 - AJV8/3.0L NA V6 - AJ27/3.5L NA V8 - AJV8 (19.55.01)
Fuel Tank - 2.7L V6 - TdV6 (19.55.01)
Fuel Tank Filler Pipe (19.55.33)
Fuel Transfer Pump - 4.2L NA V8 - AJV8/4.2L SC V8 - AJV8/3.0L NA V6 - AJ27/3.5L NA V8 - AJV8, VIN Range: G00442->G45703 (19.45.21)
Fuel Transfer Unit - 4.2L NA V8 - AJV8/4.2L SC V8 - AJV8/3.0L NA V6 - AJ27/3.5L NA V8 - AJV8, VIN Range: G45704->G99999
Fuel Transfer Unit - 2.7L V6 - TdV6
Inertia Fuel Shutoff (IFS) Switch (18.30.35)

310-02 : Acceleration Control

Specifications
Specifications
Description and Operation
Acceleration Control
Diagnosis and Testing
Acceleration Control
Removal and Installation
Accelerator Pedal (19.20.01)

www.JagDocs.com

310-03 : Speed Control

Specifications

Specifications

General Procedures

Speed Control Module Alignment - VIN Range: G00442->H18679

Speed Control Module Alignment - VIN Range: H18680->H99999

Description and Operation

Speed Control - VIN Range: G00442->G45703

Speed Control - VIN Range: G45704->G99999

Diagnosis and Testing

Speed Control - VIN Range: G00442->G45703

Speed Control - VIN Range: G45704->G99999

Removal and Installation

Speed Control Deactivator Switch (19.75.20)

Speed Control Module (19.75.26)

Speed Control Sensor

Speed Control Switch (19.75.25)

4 : Electrical

412 : Climate Control System

412-00 : Climate Control System - General Information

Specifications
- Specifications

General Procedures
- Air Conditioning (A/C) System Flushing
- Air Conditioning (A/C) System Recovery, Evacuation and Charging (82.30.30)
- Contaminated Refrigerant Handling
- Electronic Leak Detection
- Fluorescent Dye Leak Detection
- Inspection and Assembly Requirements
- Manifold Gauge Set Connection
- Refrigerant Oil Adding
- Refrigerant System Tests

Description and Operation
- Climate Control System

Diagnosis and Testing
- Climate Control System

412-01 : Air Distribution and Filtering

Specifications
- Specifications

Description and Operation
- Air Distribution and Filtering

Diagnosis and Testing
- Air Distribution and Filtering

Removal and Installation
- Cabin Air Filter (76.10.09)
- Center Registers (82.20.38)

www.JagDocs.com

Driver Side Register (82.20.39)
Floor Console Register Duct (82.20.37)
Front Footwell Duct LH (82.20.91)
Front Footwell Duct RH (82.20.92)
Passenger Side Register (82.20.40)
Rear Footwell Duct (82.20.96)

412-02A : Heating and Ventilation

Specifications
Specifications
Description and Operation
Heating and Ventilation
Diagnosis and Testing
Heating and Ventilation
Removal and Installation
Auxiliary Coolant Flow Pump - 4.2L NA V8 - AJV8/4.2L SC V8 - AJV8/3.5L NA V8 - AJV8 (82.25.59)
Auxiliary Coolant Flow Pump - 2.7L V6 - TdV6 (82.25.59)
Blower Motor (82.25.66)
Heater Core (80.20.29)
Heater Core and Evaporator Core Housing (82.25.21)
Heater Hose (80.25.01)

412-02B : Auxiliary Heating

Specifications
Specifications
Description and Operation
Fuel Fired Booster Heater
Diagnosis and Testing
Fuel Fired Booster Heater
Removal and Installation
Fuel Fired Booster Heater

412-03A : Air Conditioning

Specifications
Specifications
Description and Operation
Air Conditioning
Diagnosis and Testing
Air Conditioning
Removal and Installation
Air Conditioning (A/C) Compressor - 3.0L NA V6 - AJ27, VIN Range: G00442->G45703 (82.10.20)
Air Conditioning (A/C) Compressor - 3.0L NA V6 - AJ27, VIN Range: G45704->G99999 (82.10.20)
Air Conditioning (A/C) Compressor - 4.2L NA V8 - AJV8/4.2L SC V8 - AJV8/3.5L NA V8 - AJV8, VIN Range: G00442->G45703 (82.10.20)
Air Conditioning (A/C) Compressor - 4.2L NA V8 - AJV8/4.2L SC V8 - AJV8/3.5L NA V8 - AJV8, VIN Range: G45704->G99999 (82.10.20)
Air Conditioning (A/C) Compressor - 2.7L V6 - TdV6 (82.10.20)
Condenser Core - 4.2L NA V8 - AJV8/4.2L SC V8 - AJV8/3.0L NA V6 - AJ27/3.5L NA V8 - AJV8 (82.15.07)
Condenser Core - 2.7L V6 - TdV6 (82.15.07)
Desiccant Bag - 4.2L NA V8 - AJV8/4.2L SC V8 - AJV8/3.0L NA V6 - AJ27/3.5L NA V8 - AJV8 (82.17.03)
Desiccant Bag - 2.7L V6 - TdV6 (82.17.03)
Pressure Cutoff Switch - 4.2L NA V8 - AJV8/4.2L SC V8 - AJV8/3.0L NA V6 - AJ27/3.5L NA V8 - AJV8 (82.10.32)
Pressure Cutoff Switch - 2.7L V6 - TdV6 (82.10.32)

412-03B : Auxiliary Climate Control

Specifications
Specifications
Description and Operation
Auxiliary Climate Control
Auxiliary Climate Control - Armoured Vehicles
Diagnosis and Testing
Auxiliary Climate Control
Removal and Installation
Auxiliary Climate Control Assembly
Auxiliary Evaporator Outlet and Inlet Line
Auxiliary Footwell Vent/Duct Blend Door Actuator

www.JagDocs.com

Auxiliary Heater Core and Evaporator Core Housing
Auxiliary Temperature Blend Door Actuator
Auxiliary Blower Motor
Auxiliary Blower Motor Resistor
Evaporator Core
Heater Core
Register

412-04 : Control Components

Specifications
Specifications
Description and Operation
Control Components
Control Components - VIN Range: H18680->H99999
Diagnosis and Testing
Control Components
Removal and Installation
Air Discharge Temperature Sensor (82.20.64)
Ambient Air Temperature Sensor (82.20.02)
Climate Control Assembly (82.20.07)
Cold Air Bypass Blend Door Actuator LH
Cold Air Bypass Blend Door Actuator RH
Defrost Vent/Register Blend Door Actuator LH
Defrost Vent/Register Blend Door Actuator RH
Footwell Vent/Duct Blend Door Actuator LH
Footwell Vent/Duct Blend Door Actuator RH
In-Vehicle Temperature Sensor (82.20.03)
Recirculation Blend Door Actuator (82.20.67)
Sunload Sensor (82.20.70)

413 : Instrumentation and Warning Systems

413-00 : Instrument Cluster and Panel Illumination

Diagnosis and Testing

Instrument Cluster and Panel Illumination

413-01 : Instrument Cluster

Specifications

Specifications

Description and Operation

Instrument Cluster

Diagnosis and Testing

Instrument Cluster

Removal and Installation

Indicator Bulb (86.45.61)

Instrument Cluster (88.20.01)

Instrument Cluster Lens (88.20.28)

413-06 : Horn

Specifications

Specifications

Description and Operation

Horn

Diagnosis and Testing

Horn

Removal and Installation

Horn (86.30.02)

Horn Switch (86.30.01)

413-07 : Clock

Description and Operation

Clock

Diagnosis and Testing

Clock

Removal and Installation

Clock (88.15.07)

www.JagDocs.com

413-08 : Information and Message Center

Description and Operation

Information and Message Center

Diagnosis and Testing

Information and Message Center

Removal and Installation

Message Center Switch (86.66.11)

413-09A : Warning Devices

General Procedures

Oil Change Indicator Reset

Description and Operation

Warning Devices

Warning Devices - Armoured Vehicles

Engine Protection System - Armoured Vehicles

Diagnosis and Testing

Warning Devices

413-13 : Parking Aid

Description and Operation

Parking Aid

Diagnosis and Testing

Parking Aid

Removal and Installation

Front Parking Aid Speaker (86.54.18)

Parking Aid Module - VIN Range: G00442->G45703 (86.80.39)

Parking Aid Module - VIN Range: G45704->G99999 (86.80.39)

Parking Aid Sensor (86.62.01)

Rear Parking Aid Speaker (86.54.19)

414 : Battery and Charging System

414-00 : Charging System - General Information

General Procedures
- Battery Charging

Description and Operation
- Charging System

Diagnosis and Testing
- Charging System
- Charging System - 2.7L V6 - TdV6

414-01 : Battery, Mounting and Cables

Specifications
- Specifications

General Procedures
- Battery Connect (86.15.15)
- Battery Disconnect and Connect

Description and Operation
- Battery and Cables

Diagnosis and Testing
- Battery

Removal and Installation
- Battery (86.15.01)
- Battery Ground Cable (86.15.19)
- Battery Tray (86.15.11)

414-02 : Generator and Regulator

Specifications
- Specifications

Description and Operation
- Generator

Diagnosis and Testing
- Generator

www.JagDocs.com

Removal and Installation

Generator - 3.0L NA V6 - AJ27 (86.10.02)

Generator - 4.2L NA V8 - AJV8/4.2L SC V8 - AJV8/3.5L NA V8 - AJV8 (86.10.02)

Generator - 2.7L V6 - TdV6 (86.10.02)

415 : Information and Entertainment Systems

415-00 : Information and Entertainment System - General Information *[page 403]*

General Procedures

Cassette Player Cleaning

Diagnosis and Testing

Audio System

415-01 : Audio Unit

Specifications

Specifications

Description and Operation

Audio System

Audio System - VIN Range: H18680->H99999

Audio System

Diagnosis and Testing

Audio System

Removal and Installation

Amplifier (86.50.10)

Audio Unit (86.50.03)

Compact Disc (CD) Changer (86.50.06)

Steering Wheel Audio Controls (86.50.42)

415-02 : Antenna

Description and Operation

Antenna

Diagnosis and Testing

Antenna

Removal and Installation

Antenna Isolator Module (86.51.08)

415-03 : Speakers

Description and Operation

Speakers

Speakers

Diagnosis and Testing

Speakers

Removal and Installation

Front Door Speaker (86.50.13)

Front Door Tweeter Speaker (86.50.63)

Instrument Panel Speaker

Rear Door Speaker (86.50.14)

Rear Door Tweeter Speaker (86.50.62)

Subwoofer Speaker (86.51.05)

415-07 : Video System

Specifications

Specifications

Description and Operation

Video System

Diagnosis and Testing

Video System

Removal and Installation

Digital Versatile Disc (DVD) Player

Rear Passenger Entertainment Control Panel

Video Display

Video System Module

www.JagDocs.com

417 : Lighting

417-01 : Exterior Lighting

Specifications
- Specifications

General Procedures
- Headlamp Adjustment (86.40.18)

Description and Operation
- Exterior Lighting
- Exterior Lighting - VIN Range: H18680->H99999
- Exterior Lighting - Armoured Vehicles

Diagnosis and Testing
- Headlamps

Removal and Installation
- Approach Lamp - VIN Range: G00442->H18679
- Approach Lamp - VIN Range: H18680->H99999
- Ballast - Vehicles With: High Intensity Discharge Headlamps (86.41.52)
- Front Fog Lamp - VIN Range: G00442->H18679 (86.40.96)
- Fog Lamp - VIN Range: H18680->H99999
- Headlamp Assembly (86.41.33)
- Headlamp Bulb - Vehicles With: High Intensity Discharge Headlamps (86.42.14)
- Headlamp Leveling Motor (86.42.04)
- Headlamp Leveling Sensor (86.42.15)
- High Mounted Stoplamp (86.41.01)
- Stoplamp Switch
- Rear Lamp Assembly (86.40.70)

417-02 : Interior Lighting

Description and Operation
- Interior Lighting

Diagnosis and Testing
- Interior Lighting

417-04 : Daytime Running Lamps (DRL)

Description and Operation

Daytime Running Lamps (DRL)

Diagnosis and Testing

Daytime Running Lamps (DRL)

418 : Electrical Distribution

418-00 : Module Communications Network

Description and Operation

Communications Network

Diagnosis and Testing

Communications Network

418-01 : Module Configuration

Diagnosis and Testing

Module Configuration

419 : Electronic Feature Group

419-01A : Anti-Theft - Active

Description and Operation

Anti-Theft - Active

Diagnosis and Testing

Anti-Theft - Active

Removal and Installation

Anti-Theft Alarm Horn (86.52.03)

www.JagDocs.com

419-01B : Anti-Theft - Passive

General Procedures

Anti-Theft Security Access

Key Programming Using Diagnostic Equipment

Key Programming Using Two Programmed Keys

Description and Operation

Anti-Theft - Passive

Diagnosis and Testing

Anti-Theft - Passive

Removal and Installation

Passive Anti-Theft System (PATS) Transceiver (86.52.30)

419-02 : Remote Convenience

General Procedures

Universal Transmitter Programming

Description and Operation

Universal Transmitter

Diagnosis and Testing

Universal Transmitter

419-07 : Navigation System

Description and Operation

Navigation System

Diagnosis and Testing

Navigation System

Removal and Installation

Navigation System Antenna - VIN Range: G00442->H18679 (86.62.06)

Navigation System Antenna - VIN Range: H18680->H99999 (86.62.06)

Navigation System Display Module (86.62.07)

Navigation System Module (86.62.05)

419-08 : Cellular Phone

Description and Operation

Cellular Phone - VIN Range: G00442->G45703

Cellular Phone - VIN Range: G45704->H18679

Cellular Phone - VIN Range: H18680->H99999

Diagnosis and Testing

Cellular Phone

Cellular Phone - Vehicles With: Bluetooth

Removal and Installation

Bluetooth Module

Cellular Phone Antenna - Vehicles With: Corded Cellular Phone, VIN Range: G00442->H18679 (86.51.17)

Cellular Phone Antenna - Vehicles With: Cordless Cellular Phone, VIN Range: G00442->H18679 (86.51.17)

Cellular Phone Antenna - VIN Range: H18680->H99999 (86.51.17)

Front Handset Holder

Transceiver Module

419-10 : Multifunction Electronic Modules

Specifications

Specifications

Description and Operation

Module Controlled Functions

Diagnosis and Testing

Multifunction Electronic Module

Removal and Installation

Driver Door Module (DDM) (86.80.29)

Driver Seat Module (DSM) (86.75.28)

Front Electronic Module (FEM) (86.80.41)

Multifunction Voice Activated Module (86.53.13)

Rear Electronic Module (REM) (86.80.37)

Rear Seat Module (RSM) (86.75.40)

www.JagDocs.com

5 : Body and Paint

501 : Body and Paint

501-02 : Front End Body Panels

Description and Operation

- Front End Body Panels

Removal and Installation

- Air Deflector (76.11.41)
- Cowl Vent Screen (76.10.01)
- Fender Splash Shield (76.10.90)
- Radiator Grille Opening Panel (76.10.06)
- Radiator Splash Shield (76.22.90)
- Secondary Bulkhead Center Panel

501-03 : Body Closures

Specifications

- Specifications

General Procedures

- Hood Alignment (76.16.02)
- Luggage Compartment Lid Alignment (76.19.03)
- Rear Door Alignment (76.28.08)

Description and Operation

- Body Closures

Removal and Installation

- Front Door Opening Weatherstrip (76.40.01)
- Hood (76.16.01)
- Door Check Arm - Armoured Vehicle

501-05 : Interior Trim and Ornamentation

Specifications

Specifications

Description and Operation

Interior Trim

Removal and Installation

A-Pillar Trim Panel (76.13.31)

B-Pillar Lower Trim Panel (76.13.29)

B-Pillar Upper Trim Panel (76.13.28)

Cowl Side Trim Panel (76.13.30)

C-Pillar Lower Trim Panel

C-Pillar Upper Trim Panel

Folding Tray (76.47.31)

Front Door Trim Panel (76.34.01)

Front Door Trim Panel - Armoured Vehicles (76.34.01)

Headliner (76.64.01)

Parcel Shelf (76.67.06)

Rear Door Quarter Window Blind

Rear Door Trim Panel (76.34.04)

Rear Door Trim Panel - Armoured Vehicles (76.34.04)

Rear Door Window Blind

Rear Window Blind (76.14.04)

Rear Window Blind Arm

Rear Window Blind Motor

Scuff Plate Trim Panel (76.13.81)

Sun Visor (76.10.48)

501-08 : Exterior Trim and Ornamentation

Description and Operation

Exterior Trim

Removal and Installation

Door Moulding (76.43.72)

Luggage Compartment Lid Moulding - VIN Range: G00442->H18679 (76.43.79)

Luggage Compartment Lid Moulding - VIN Range: H18680->H99999 (76.43.79)

Radiator Grille (76.55.03)

Rocker Panel Moulding (76.11.36)

Window Moulding (76.43.20)

www.JagDocs.com

501-09 : Rear View Mirrors

Specifications
- Specifications

Description and Operation
- Rear View Mirrors
- Rear View Mirrors - VIN Range: H18680->H99999

Diagnosis and Testing
- Rear View Mirrors

Removal and Installation
- Auto-Dimming Interior Mirror (76.10.56)
- Exterior Mirror (76.10.52)
- Exterior Mirror Cover (76.10.55)
- Exterior Mirror Glass (76.10.53)
- Exterior Mirror Motor - VIN Range: G00442->H18679 (76.10.57)
- Exterior Mirror Motor - VIN Range: H18680->H99999 (76.10.57)

501-10 : Seating

Specifications
- Specifications

Description and Operation
- Seats - VIN Range: G00442->H18679
- Seats - VIN Range: H18680->H99999

Diagnosis and Testing
- Seats - VIN Range: G00442->H18679
- Seats - VIN Range: H18680->H99999

Removal and Installation
- Front Seat (76.70.01)
- Front Seat Backrest - VIN Range: G00442->H18679 (76.70.06)
- Front Seat Backrest - VIN Range: H18680->H99999 (76.70.06)
- Front Seat Backrest Cover - VIN Range: G00442->H18679 (76.70.15)
- Front Seat Backrest Cover - VIN Range: H18680->H99999 (76.70.15)
- Front Seat Backrest Heater and Blower Assembly
- Front Seat Backrest Rear Cover - VIN Range: G00442->H18679 (76.70.03)
- Front Seat Backrest Rear Cover - VIN Range: H18680->H99999 (76.70.03)
- Front Seat Control Switch (86.75.46)
- Front Seat Cushion Cover - VIN Range: G00442->H18679 (76.70.33)
- Front Seat Cushion Cover - VIN Range: H18680->H99999 (76.70.33)
- Front Seat Cushion Heater and Blower Assembly

Front Seat Head Restraint - Vehicles With: Head Restraint Video Display, VIN Range: G00442->H18679 (76.70.14)
Front Seat Head Restraint - Vehicles With: Head Restraint Video Display, VIN Range: H18680->H99999 (76.70.14)
Front Seat Head Restraint Motor - VIN Range: G00442->H18679 (86.75.17)
Front Seat Head Restraint Motor - VIN Range: H18680->H99999 (86.75.17)
Front Seat Height Adjustment Motor (86.75.29)
Front Seat Lumbar Motor (86.75.44)
Front Seat Rear Height Adjustment Motor (86.75.32)
Front Seat Recliner Motor - VIN Range: G00442->H18679 (86.75.04)
Front Seat Recliner Motor - VIN Range: H18680->H99999 (86.75.04)
Front Seat Track Motor (86.75.33)
Lumbar Assembly (86.75.12)
Memory Seat Position Switch
Rear Outer Seat Backrest (76.70.76)
Rear Outer Seat Backrest Cover (76.70.51)
Rear Outer Seat Cushion (76.70.44)
Rear Seat Armrest (76.70.39)
Rear Seat Backrest (76.70.38)
Rear Seat Backrest Cover (76.70.48)
Rear Seat Control Switch (86.75.42)
Rear Seat Cushion (76.70.37)
Rear Seat Cushion Cover (76.70.47)
Rear Seat Head Restraint Motor (86.75.41)
Rear Seat Lumbar Motor (86.75.43)
Seat Armrest (76.70.97)
Seat Base (76.70.08)
Assembly & Disassembly
Rear Seat Backrest - Vehicles With: 40/20/40 Split Seat (76.70.48)

501-11 : Glass, Frames and Mechanisms

Specifications
Specifications
General Procedures
Door Window Motor Initialization

www.JagDocs.com

Description and Operation
Glass, Frames and Mechanisms
Glass, Frames and Mechanisms - Armoured Vehicles
Diagnosis and Testing
Glass, Frames and Mechanisms
Removal and Installation
Front Door Window Glass (76.31.01)
Front Door Window Regulator and Motor (86.25.04)
Front Door Window Regulator and Motor - Armoured Vehicles (86.25.04)
Rear Door Fixed Window Glass
Rear Door Window Glass (76.31.02)
Rear Door Window Glass - Armoured Vehicles (76.31.02)
Rear Door Window Regulator and Motor (86.25.09)
Rear Window Glass (76.81.11)
Rear Window Glass - Armoured Vehicles (76.81.11)
Window Control Switch (86.25.08)
Windshield Glass (76.81.40)
Windshield Glass - Armoured Vehicles (76.81.40)

501-12 : Instrument Panel and Console

Specifications
Specifications
Description and Operation
Instrument Panel
Removal and Installation
Floor Console - Vehicles With: Auxiliary Climate Control (76.25.01)
Floor Console - Vehicles Without: Auxiliary Climate Control (76.25.01)
Glove Compartment (76.52.03)
Instrument Panel (76.46.01)
Instrument Panel Console (88.20.34)
Overhead Console (76.13.69)

501-14 : Handles, Locks, Latches and Entry Systems

Specifications
Specifications
General Procedures
Remote Transmitter Programming
Description and Operation
Handles, Locks, Latches and Entry Systems
Diagnosis and Testing
Locks, Latches and Entry Systems

Removal and Installation

Exterior Door Handle (76.58.07)

Front Door Lock Actuator (76.37.74)

Front Door Lock Cylinder (76.37.71)

Interior Door Handle (76.37.31)

Luggage Compartment Lid Latch Actuator - VIN Range: G00442->H18679 (76.19.25)

Luggage Compartment Lid Latch Actuator - VIN Range: H18680->H99999 (76.19.25)

Luggage Compartment Lid Lock Cylinder - VIN Range: G00442->H18679 (76.19.19)

Luggage Compartment Lid Lock Cylinder - VIN Range: H18680->H99999 (76.19.19)

Rear Door Lock Actuator (76.37.09)

501-16 : Wipers and Washers

Specifications

Specifications

Specifications

Description and Operation

Wipers and Washers - VIN Range: G00442->G45703

Wipers and Washers - VIN Range: G45704->G99999

Diagnosis and Testing

Wipers and Washers

Removal and Installation

Headlamp Washer Jet (84.20.08)

Headlamp Washer Pump - VIN Range: G00442->G45703 (84.20.21)

Headlamp Washer Pump - VIN Range: G45704->G99999 (84.20.21)

Rain Sensor (84.12.10)

Windshield Washer Pump - VIN Range: G00442->G45703 (84.10.21)

Windshield Washer Pump - VIN Range: G45704->G99999 (84.10.21)

Windshield Washer Reservoir - VIN Range: G00442->G45703 (84.10.01)

Windshield Washer Reservoir - VIN Range: G45704->G99999 (84.10.01)

Windshield Wiper Motor (84.15.13)

Wiper Mounting Arm and Pivot Shaft (84.15.24)

Wiper Pivot Arm (84.15.03)

www.JagDocs.com

501-17 : Roof Opening Panel

Specifications
- Specifications

General Procedures
- Motor Synchronization (76.82.48)
- Roof Opening Panel Alignment

Description and Operation
- Roof Opening Panel

Diagnosis and Testing
- Roof Opening Panel

Removal and Installation
- Air Deflector (76.82.07)
- Roof Opening Panel Frame (76.82.01)
- Roof Opening Panel Front Drain Hose (76.82.21)
- Roof Opening Panel Glass (76.82.05)
- Roof Opening Panel Motor (86.76.01)
- Roof Opening Panel Weatherstrip (76.82.15)
- Trough Assembly (76.82.58)

501-19 : Bumpers

Specifications
- Specifications

Description and Operation
- Bumpers

Removal and Installation
- Front Bumper (76.22.08)
- Front Bumper Cover - VIN Range: G00442->H18679 (76.22.78)
- Front Bumper Cover - VIN Range: H18680->H99999 (76.22.78)
- Front Bumper Cover Insert (76.22.73)
- Rear Bumper (76.22.27)
- Rear Bumper Cover - VIN Range: G00442->H18679 (76.22.74)
- Rear Bumper Cover - VIN Range: H18680->H99999 (76.22.74)
- Rear Bumper Cover Insert (76.22.75)

501-20A : Safety Belt System

Specifications
- Specifications

Description and Operation
- Safety Belt System

Diagnosis and Testing
- Safety Belt System

Removal and Installation
- Front Safety Belt Buckle (76.73.49)
- Front Safety Belt Retractor (76.73.10)
- Front Safety Belt Shoulder Height Adjuster (76.73.12)
- Rear Center Safety Belt Retractor (76.73.20)
- Rear Safety Belt Buckle (76.73.50)
- Rear Safety Belt Retractor (76.73.18)

501-20B : Supplemental Restraint System

Specifications
- Specifications

General Procedures
- Air Bag Disposal

Description and Operation
- Air Bag Supplemental Restraint System (SRS)

Diagnosis and Testing
- Air Bag Supplemental Restraint System (SRS)

Removal and Installation
- B-Pillar Side Impact Sensor (76.73.68)
- Clockspring (86.65.92)
- C-Pillar Side Impact Sensor (76.73.69)
- Crash Sensor (76.73.55)
- Driver Air Bag Module (76.73.39)
- Front Passenger Seat Occupant Classification Sensor (76.73.60)
- Passenger Air Bag Deactivation (PAD) Indicator (76.73.58)
- Passenger Air Bag Module (76.73.37)
- Restraints Control Module (RCM) (76.73.48)
- Seat Position Sensor (76.73.62)
- Side Air Bag Module (76.73.47)
- Side Air Curtain Module (76.73.64)

www.JagDocs.com

502 : Frame and Mounting

502-00 : Uni-Body, Subframe and Mounting System

Specifications

Specifications

Description and Operation

Frame Assembly

Removal and Installation

Front Subframe - 3.0L NA V6 - AJ27 (76.10.05)

Front Subframe - 4.2L NA V8 - AJV8/4.2L SC V8 - AJV8/3.5L NA V8 - AJV8 (76.10.05)

Front Subframe - 2.7L V6 - TdV6 (76.10.05)

Front Subframe Front Bushing (60.35.51)

Front Subframe Rear Bushing (60.35.26)

Rear Subframe (64.25.01)

Rear Subframe Front Bushing (64.25.34)

Rear Subframe Rear Bushing (64.25.36)

1. GENERAL INFORMATION

100 : Service information

100-00 : General information

Description and operation

About This Manual

Notes, Cautions and Warnings

Throughout this manual, important information is highlighted by the use of notes, cautions and warnings. NOTES give additional information on a topic or procedure, CAUTIONS are given to prevent damage to the vehicle, and WARNINGS are given to prevent personal injury.

www.JagDocs.com

Application and Use of Specifications

Torque Specifications

Torque specifications are shown in the torque specifications chart located at the front of the relevant section.

General Service Information

Repairs and Replacements

When service parts are required, it is essential that only genuine Jaguar/Daimler replacements are used.

Attention is drawn to the following points concerning repairs and the fitting of replacement parts and accessories:

- Safety features embodied in the vehicle may be impaired if other than genuine parts are fitted. In certain territories, legislation prohibits the fitting of parts which are not produced to the vehicle manufacturer's specification.
- Torque wrench setting figures given in this manual must be strictly adhered to. Locking devices, where specified, must be fitted. If the efficiency of a locking device is impaired during removal it must be renewed.
- Owners purchasing accessories while travelling abroad should make sure that the accessory and its fitted location on the vehicle conform to mandatory requirements existing in their country of origin.
- The vehicle warranty may be invalidated by the fitting of other than genuine Jaguar/Daimler parts. All Jaguar/Daimler replacements have the full backing of the factory warranty.
- Jaguar/Daimler dealers are obliged to supply only genuine service parts.

Vehicle Specifications

Purchasers are advised that the specification details set out in this manual apply to a range of vehicles and not to any specific one. For the specification of a particular vehicle, purchasers should consult their dealer.

The Manufacturer reserves the right to vary the specifications, with or without notice, and at such times and in such manner as the Manufacturer thinks fit. Major as well as minor changes may be involved, in accordance with the Manufacturer's policy of continuous improvement.

Whilst every effort is made to make sure the accuracy of the particulars contained in this manual, neither the Manufacturer nor the Dealer, by whom the manual is supplied, shall in any circumstances be held liable for any inaccuracy or the consequences thereof.

Service Repair Operation Numbering

A master index of numbered operations has been compiled for universal application to all vehicles manufactured by Jaguar Cars Ltd.

Each operation is allocated a number from the master index and cross-refers with an identical number in the Repair Operation Times schedule. The number consists of six digits arranged in three pairs.

www.JagDocs.com

Each maintenance procedure in this manual is described in the sequence necessary to complete the operation in the minimum time, as specified in the Repair Operation Times schedule.

References to Bank-1 and Bank-2

References to Bank-1 and Bank-2 are made with regard to the engine. When viewed from the flywheel the right-hand bank will be Bank-1 and the left-hand bank will be Bank-2.

Special Tools

Any special tools and equipment required to perform a maintenance procedure, are shown at the beginning of each procedure. When possible, illustrations are given to assist in identifying the tool needed.

Disconnecting/Connecting the Battery

Always stop the engine before disconnecting the battery negative lead and make sure the battery positive lead is isolated i.e. wrapped in a suitable cloth.

WARNING: Radio code saving devices must not be used when conducting work on Air Bag or Fuel systems. It must be noted that, when using these devices, the vehicle electrical system is still live albeit with a reduced current flow.

NOTE:

Before disconnecting the battery make sure that the radio receiver/cassette player/mini disc player and compact disc player keycodes are known and, that no data is required from the engine control module (ECM) as battery disconnection will erase any fault codes and idle/drive values held in the Keep Alive Memory (KAM). It is not necessary to disconnect or remove electronic control modules.

Always disconnect the battery before commencing repair operations which require:

- The vehicle to be jacked up
- Work on the engine
- Work underneath the vehicle
- Arc welding

Alternatively a Radio Code Saver may be used. With the battery disconnected, a Radio Code Saver will allow sufficient current to pass to maintain the radio receiver/cassette player/mini disc player

and compact disc player memory, operate the clock and supply the door operated interior lights while isolating the battery in the event of a short circuit.

Reconnecting the Battery

WARNING: If the battery has been on bench charge the cells may be giving off explosive hydrogen gas. Avoid creating sparks, and if in doubt cover the vent plugs or covers with a damp cloth.

Always make sure that all electrical systems are switched OFF before reconnecting the battery to avoid causing sparks or damage to sensitive electrical equipment.

Always reconnect the battery positive lead first and the negative last, ensuring that there is a good electrical contact and the battery terminals are secure.

Restart the clock (where fitted) and set it to the correct time.

Re - enter the radio receiver/cassette player/mini disc player and compact disc player keycodes and preset' frequencies, if known.

Following reconnection of the battery, the engine should be allowed to idle until it has reached normal operating temperature as the stored idle and drive values contained within the ECM have been lost. Allow the vehicle to idle for a further three minutes. Drive the vehicle at constant speeds of approximately 48 km/h (30 mph), 64 km/h (40 mph), 80 km/h (50 mph), 96 km/h (60 mph) and 112 km/h (70 mph) for three minutes each. This may cause a driveability concern if the procedure is not carried out. This will allow the ECM to relearn idle values.

Connecting a Slave Battery Using Jump Leads

WARNING: If the slave battery has recently been charged and is gassing, cover the vent plugs or covers with a damp cloth to reduce the risk of explosion should arcing occur when connecting the jump leads.

CAUTION: A flat battery condition may have been caused by an electrical short circuit. If this condition exists there will be an apparently live circuit on the vehicle even when all normal circuits are switched off. This can cause arcing when the jump leads are connected.

www.JagDocs.com

CAUTION: Whilst it is not recommended that the vehicle is jump started, it is recognized that this may occasionally be the only practical way to mobilize a vehicle. In such an instance the discharged battery must be recharged immediately after jump starting to avoid permanent damage.

- Always make sure that the jump leads are adequate for the task. Heavy duty cables must be used.
- Always make sure that the slave battery is of the same voltage as the vehicle battery. The batteries must be connected in parallel.
- Always make sure that switchable electric circuits are switched off before connecting jump leads. This reduces the risk of sparks occurring when the final connection is made.

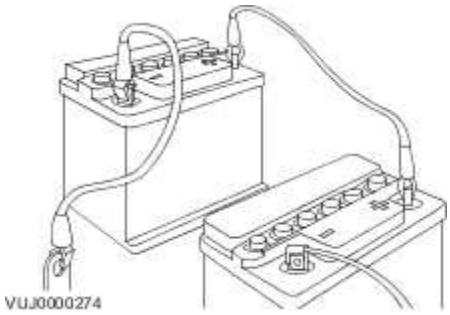

WARNING: Make sure that the ends of the jump leads do not touch each other or ground against the vehicle body at any time while the leads are attached to the battery. A fully charged battery, if shorted through jump leads, can discharge at a rate well above 1000 amps causing violent arcing and very rapid heating of the jump leads and terminals, and can even cause the battery to explode.

Always connect the jump leads in the following sequence.

- Slave battery positive first then vehicle battery positive.
- Slave battery negative next and then vehicle ground at least, 300 mm (12 in) from the battery terminal e.g. engine lifting bracket.

Always reduce the engine speed to idle before disconnecting the jump leads.

Before removing the jump leads from the vehicle that had the discharged battery, switch on the heater blower (high) or the heated rear screen, to reduce the voltage peak when the leads are removed.

Always disconnect the jump leads in the reverse order to the connecting sequence and take great care not to short the ends of the leads.

Do not rely on the alternator to restore a discharged battery. For an alternator to recharge a battery, it would take in excess of 8 hours continuous driving with no additional loads placed on the battery.

Component Cleaning

To prevent ingress of dirt, accumulations of loose dirt and greasy deposits should be removed before disconnecting or dismantling components or assemblies.

Components should be thoroughly cleaned before inspection prior to reassembly.

Cleaning Methods:

- Dry Cleaning
- Removal of loose dirt with soft or wire brushes.
- Scraping dirt off with a piece of metal or wood.
- Wiping off with a rag.

CAUTION: Compressed air is sometimes wet so use with caution, especially on hydraulic systems.

- Blowing dirt off with compressed air. (Eye protection should be worn when using this method).
- Removal of dry dust using vacuum equipment. This method should always be used to remove friction lining material dust (asbestos particles).
- Steam Cleaning

Calibration of Essential Measuring Equipment

WARNING: Failure to comply may result in personal injury or damage to components.

It is of fundamental importance that certain essential equipment e.g. torque wrenches, multimeters, exhaust gas analysers, rolling roads etc., are regularly calibrated in accordance with the manufacturers instructions.

www.JagDocs.com

Use of Control Modules

Control modules may only be used on the vehicle to which they were originally fitted. Do not attempt to use or test a control module on any other vehicle.

Functional Test

On completion of a maintenance procedure, a thorough test should be carried out, to make sure that the relevant vehicle systems are working correctly.

Preparation

Before disassembly, clean the surrounding area as thoroughly as possible. When components have been removed, blank off any exposed openings using grease-proof paper and masking tape. Immediately seal fuel, oil and hydraulic lines when separated, using plastic caps or plugs, to prevent loss of fluid and the entry of dirt. Close the open ends of oilways, exposed by component removal, with tapered hardwood plugs or readily visible plastic plugs. Immediately a component is removed, place it in a suitable container; use a separate container for each component and its associated parts. Before dismantling a component, clean it thoroughly with a recommended cleaning agent; check that the agent will not damage any of the materials within the component. Clean the bench and obtain marking materials, labels, containers and locking wire before dismantling a component.

Dismantling

Observe scrupulous cleanliness when dismantling components, particularly when parts of the brake, fuel or hydraulic systems are being worked on. A particle of dirt or a fragment of cloth could cause a dangerous malfunction if trapped in these systems. Clean all tapped holes, crevices, oilways and fluid passages with compressed air. Do not permit compressed air to enter an open wound. Always use eye protection when using compressed air.

Make sure that any O-rings used for sealing are correctly refitted or renewed if disturbed. Mark mating parts to make sure that they are replaced as dismantled. Whenever possible use marking materials which avoid the possibilities of causing distortion or the initiation of cracks, which could occur if a center punch or scriber were used. Wire together mating parts where necessary to prevent accidental interchange (e.g roller bearing components). Tie labels on to all parts to be renewed and to parts requiring further inspection before being passed for reassembly. Place labelled parts and other parts for rebuild in separate containers. Do not discard a part which is due for renewal until it has been compared with the new part, to make sure that the correct part has been obtained.

Inspection

Before inspecting a component for wear or performing a dimensional check, make sure that it is absolutely clean; a slight smear of grease can conceal an incipient failure. When a component is to be checked dimensionally against figures quoted for it, use the correct equipment (surface plates, micrometers, dial gauges etc.) in serviceable condition. The use of makeshift equipment can be dangerous. Reject a component if its dimensions are outside the limits quoted, or if damage is

apparent. A part may be refitted if its critical dimension is exactly to the limit size and it is otherwise satisfactory. Use Plastigauge 12 Type PG-1 for checking bearing surface clearance, e.g. big end bearing shell to crank journal. Instructions for the use of Plastigauge and a scale giving bearing clearances in steps of 0,0025 mm (0.0001 in) are supplied with the package.

On-Board Diagnostics (OBD)

This vehicle uses programmed electronic control systems to provide engine management and emission regulation, automatic transmission operation and anti-lock braking control. These control systems are integral with the On-Board Diagnostics (OBD) facility which is used in conjunction with either the Jaguar approved diagnostic system or the more restricted scan tools.

The OBD information in this manual provides diagnostic and rectification procedures for emission related electrical and mechanical systems. The information is intended to facilitate fault diagnosis and the subsequent rectification of the vehicle without recourse to the Jaguar approved diagnostic system.

The manual covers the following OBD topics:

- General Information
- Engine Management System
- Automatic Transmission
- Anti-lock Braking System

Each section comprises one or more of the following sub-sections as required.

The Description and Operation sub-section includes:

- A general illustration and parts list to help the identification of the particular system or component.
- A brief description of the system operating characteristics and monitoring procedure accompanied by a component illustration.
- Additional information, where appropriate, is provided in the form of component calibrations, characteristics and cross sectional views.
- A localized circuit diagram is included to provide circuit identification, connectors, splices, fuses, wire gauge and colors. See Circuit Diagrams.

The Diagnosis and Testing sub-section is dedicated to fault analysis and rectification, and includes:

- Recommended special tools.
- Symptom chart; a chart containing all relevant Diagnostic Trouble Codes (DTC), their possible causes and an indication of the appropriate test.
- Specific pinpoint test(s), designed so that fault diagnosis can be carried out in a logical and efficient manner.

The Removal and Installation sub-section covers:

- Removal procedure(s), formatted in the recommended sequence.

www.JagDocs.com

- Illustrated guide to the use of special tools.
- Illustrations to support the relevant text.
- Installation procedure as above and including special recommendations for processes, lubricants and tightening torques.

Circuit Diagrams

To understand the relationship between the vehicle electrical system and the system circuit diagrams, Refer to the Electrical Guide.

In the interest of clarity, single lines may represent multiple wires. Refer to the color code (1st alpha) followed by the wire reference (numeric/alpha/numeric) to trace origin and destination.

e.g. BW 647B002. BW (black with white trace) 647 (wire reference) B002 (stage from origin).

Glossary of Terms

This glossary of terms is intended to cover mainly emissions-related (to SAE J 1930) terminology, and other abbreviations that may be used in this manual.

The required term may be looked-up in the left-hand column, and subsequent columns give the standard acronym, unit or abbreviation, and definition.

Term(s)	Acronym / Unit / Abbreviation	Definition
Accelerator Pedal	AP	
Accelerator Pedal Position Sensor	APP	Is a multitrack sensor which inputs the drivers demand into the engine control module (ECM)
After Bottom Dead Center	ABDC	Event occurring after BDC
After Top Dead Center	ATDC	Event occurring after TDC
Airbag / Supplementary Restraint System	Airbag, SRS	Airbag restraint system for driver and front seat passenger
Air Cleaner	ACL	

Air Conditioning	A/C	
Air Conditioning Control Module	A/CCM	Module controlling air conditioning, heating and ventilation
Air Conditioning Signal	ACS	Air conditioning compressor clutch operation is signalled to the ECM which induces idle speed corrections to compensate for engine load changes
Alternating current	ac	
Air Fuel Ratio	AFR	Nominally 14.7 parts air to one part fuel
Ampere	A	SI unit of current
Ampere hour	Ah	
ABS Control Module	ABS CM	System which prevents wheel lock-up under braking by sensing lack of rotation of a wheel(s) and diverting fluid pressure away from it (them)
ABS / Traction Control Control Module	ABS/TCCM	System which prevents wheel lock-up under braking by sensing lack of rotation of a wheel(s) and diverting fluid pressure away from it (them)
Atmosphere	atm	Unit of pressure (1.01325 bar)
Barometric Absolute Pressure Sensor	BARO Sensor	Sensor measuring the pressure of surrounding air at any given temperature and altitude
Battery positive voltage	B+	The positive voltage from a battery or any circuit connected directly to it
Before Bottom Dead Center	BBDC	Event occurring before BDC
Before Top Dead	BTDC	Event (usually ignition) occurring before

www.JagDocs.com

Center		TDC
Blower	BLR	Device which supplies a current of air at moderate pressure, e.g. heater or A/C blower
Body Processor Module	BPM	Control module for body electrical systems, e.g. interior lamps, windshield wash / wipe control
Bottom Dead Center	BDC	Lowest point of piston travel in a reciprocating engine
Brake horsepower	BHP	Effective horsepower developed by an engine or motor, as measured by a brake applied to its output shaft
Brake Mean Effective Pressure	BMEP	The part of the effective pressure developed in a cylinder that would result in a cylinder output equal to the bhp of the engine
Brake On/Off	BOO	Indicates the position of the brake pedal
British Standard	BS	Standard specification issued by the British Standards Institution
British Standard Automotive	BSau	
Bus	Topology of a communication network	
Bypass Air	BPA	Mechanical control of throttle bypass air
Camshaft Position Sensor	CMP Sensor	Indicates camshaft position
Canadian Motor Vehicle Safety	CMVSS	

Standard		
Canister Purge	CANP	Controls purging of the EVAP canister
Carbon dioxide	CO2	Colorless gas with a density of approximately 1.5 times that of air
Carbon monoxide	CO	Poisonous gas produced as the result of incomplete combustion
Case Ground	CSE GND	Control module casing ground
Catalytic converter		In-line exhaust system device used to reduce the level of engine exhaust emissions
Celsius	C	SI term for the Centigrade scale, with freezing point at zero and boiling point at 100 degrees
Central Processor Unit	CPU	The section of a computer that contains the arithmetic, logic and control circuits. It performs arithmetic operations, controls instruction processing, and provides timing signals and other housekeeping operations
Cylinder Head Temperature Sensor	CHT Sensor	A sensor for measuring the temperature of the cylinder head
Closed Loop	CL	
Closed Loop System	CL System	Control system with one or more feedback loops
Column/Mirror Control Module	C/MCM	A self-contained group of electrical /electronic components, designed as a single replaceable unit, and controlling one or more processes

www.JagDocs.com

Controller Area Network	CAN	A communication system which allows control modules to be linked together.
Crankshaft Position Sensor	CKP Sensor	Generates crankshaft position information in conjunction with the CKPTR (also generates speed information in certain applications)
Crankcase Ventilation System	CV	System which scavenges camshaft cover and crankcase emissions and feeds them into the inlet manifold
Cubic centimeter	cm^3	
Curb weight		Weight of vehicle with fuel, lubricants and coolant, but excluding driver, passengers or payload
Data Link Connector	DLC	Connector providing access and/or control of the vehicle information, operating conditions, and diagnostic information
Data Output Line	DOL	Circuit that sends certain information from the ECM to the instrument cluster
Degree	deg, °	Angle or temperature
Department of Transportation (US)	DOT	Which is a fibre optic ring network, can be diagnosed through the SCP network, and with the optical bus tester.
Deutsche Institut fur Normung	DIN	German standards regulation body
Diagnostic Module	DM	Supplemental Restraint System (non - controlling) module for diagnostics overview
Diagnostic Test Mode	DTM	A level of capability in an OBD system. May include different functional states to observe signals, a base level to read

		DTCs, a monitor level which includes information on signal levels, bi-directional control with on/off board aids, and the ability to interface with remote diagnosis
Diagnostic Trouble Code	DTC	An alpha/numeric identifier for a fault condition identified by the On-Board Diagnostic (OBD) system
Differential pressure		Pressure difference between two regions e.g. between intake manifold and atmospheric pressures
Differential Pressure Feedback EGR	DPFE	An EGR system that monitors differential EGR pressure across a remote orifice to control EGR flow
Direct current	dc	Current which flows in one direction only, though it may have appreciable pulsations in its magnitude
Domestic Data Bus	D2B	
Exhaust Gas Recirculation Temperature Sensor	EGRT	Sensing EGR function based on temperature change
Engine Management System	EMS	The engine management system conditions and reads inputs, supplies processing capability, and provides output drivers to control actuators as directed by software and calibration
Engine Oil Pressure	EOP	
EGR Vacuum Regulator	EVR	Controls EGR flow by changing vacuum to the EGR valve

www.JagDocs.com

EGR Valve Position	EVP	An EGR system that directly monitors EGR valve position to control EGR flow
Electrically Erasable Programmable Read-Only Memory	EEPROM	
Electrically Programmable Read-Only memory	EPROM	
Electronic Secondary Air Injection	EAIR	A pump-driven system for providing secondary air using an electric air pump
Engine Control Module	ECM	
Engine Coolant Level	ECL	
Engine Coolant Temperature	ECT	
ECT Sensor	ECTS	Thermistor which provides engine coolant temperature signal to the ECM to trigger enrichment circuits which increase injector 'on' time for cold start and warm-up
Engine speed	RPM	
Environmental Protection Agency	EPA	
Evaporative Emission	EVAP	System designed to prevent fuel vapor from escaping into the atmosphere. Typically includes a charcoal filled canister to absorb fuel vapor

Evaporative Emission Control Valve	EVAPP	
Exhaust Gas Recirculation	EGR	System which reduces NOx emissions by adding exhaust gases to the incoming fuel/air charge
Exhaust Gas Recirculation Solenoid Vacuum Valve	EGRS	
Exhaust Gas Recirculation Temperature Sensor	EGRT Sensor	
Exhaust Gas Recirculation Valve	EGR Valve	
Fan Control	FC	Engine cooling fan control
Federal Motor Vehicle Safety Standard (US)	FMVSS	
Figure	Fig.	Illustration reference
Flash Electrically Erasable Programmable Read-Only Memory	FEEPROM	
Flash Erasable Programmable Read-Only Memory	FEPROM	
Flywheel Sensor	CKFS	Sensor mounted so as to be triggered by each flywheel ring gear tooth to give an engine speed signal

www.JagDocs.com

Fuel Injection	FI	Solenoid operated devices that spray a metered quantity of fuel into the inlet ports
Fuel Pressure Regulator Control	FPRC	Controls fuel pressure regulator; used primarily to give extra fuel at cold start-up
Fuel Pump	FP	Pumps fuel from the fuel tank to the fuel injection system
Fuel Pump Monitor	FP Module	Monitors operation of fuel pump
Fuel Pump Relay	FP Relay	Relay which controls electrical current to fuel pump
Fuel rich/lean		Qualitative evaluation of air/fuel ratio based on a ratio known as stoichiometry,or 14.7:1 (Lambda)
Generic Electronic Module	GEM	
Generator	GEN	Rotating machine which converts mechanical energy into electrical energy
Gramme centimeter	gcm	
Gramme (force)	gf	
Gramme (mass)	g	
Ground	GND	Electrical conductor used as a common return for an electrical circuit or circuits, and with a relative zero potential
Hard fault		A fault currently present in the system
Headlamp	HL	

Heated Oxygen Sensor	HO2S	Electrically heated oxygen sensor which induces fueling corrections
Hertz (frequency)	Hz	Frequency, one cycle per second
High Mounted Stoplamp	HMSL	
High tension	HT	
Hour	hour	
Hydrocarbon	HC	
Idle Air Control	IAC	Stepper motor driven device which varies the volume of air by-passing the throttle to maintain the programmed idle speed
Ignition amplifier	IA	Device which amplifies the ignition system output
Ignition ground	IGN GND	
Injection Pressure Sensor	IPS	
Inertia Fuel Shut-off	IFS	An inertia system that shuts off the fuel supply when activated by pre-determined force limits brought about by (e.g.) collision
Inertia Fuel Shut-off Switch	IFS Switch	Shuts down fuel and ignition systems in the event of a vehicle impact
Intake air		Air drawn through a cleaner and distributed to each cylinder for use in combustion
Intake Air Temperature	IAT	Temperature of intake air

www.JagDocs.com

Intake Air Temperature Sensor	IAT Sensor	Device used to measure IAT
Intake Air Temperature Sensor Ignition	IAT Sensor Ignition	Thermistor which signals the ECM to retard the ignition timing in response to high inlet air temperatures
Intake Air Temperature Sensor Injection	IAT Sensor Injection	Thermistor which inputs air density information to the ECM
Internal diameter	i.dia	
International Standards Organisation	ISO	
Kilogramme (mass)	kg	
Kilogramme (force)	kgf	
Kilogramme force per square centimeter	kgf/cm^2	
Kilometer	km	
Kilometer per hour	km/h	
Kilopascal	kPa	
Kilovolt	kV	
Knock Sensor	KS	Sensor which detects the onset of detonation, and signals the ECM to retard the ignition
Left-hand	LH	
Left-hand drive	LHD	

vehicle		
Left-hand thread	LHthd	
Liquid Crystal Display	LCD	Optical digital display system, applied voltage to which varies the way the crystals reflect light, thereby modifying the display
Litre	L	
Low Tension	LT	Primary circuit of the ignition system, linking the battery to the primary winding in the ignition coil
Malfunction Indicator Lamp	MIL	A required on-board indicator to alert the driver of an emission related malfunction
Manifold Absolute Pressure	MAP	Absolute pressure of the intake manifold air
Manifold Absolute Pressure Sensor	MAP Sensor	Sensor located in the ECM and ported to the intake manifold
Manifold Surface Temperature	MST	
Mass Air Flow	MAF	System which provides information on the mass flow rate of the intake air to the engine
Mass Air Flow Sensor	MAF Sensor	Hot-wire sensor which monitors air flow into the intake manifold for fueling and ignition control
Maximum	max.	
Meter (measurement)	m	

www.JagDocs.com

Metric (screw thread, e.g. M8)	M	
Microfarad	MFD	Unit of electrical capacitance, one millionth of a farad
Millimeter	mm	
Millimeter of mercury	mmHg	
Millisecond	ms	
Minimum	min.	
Minute	minute	
Model year	MY	
Motorized In-Car Aspirator	MIA	Device which constantly samples cabin temperature by passing air over a sensor, and communicates with the A/CCM to modify A/C system performance to suit
Multi Protocol Adapter	MPA	An interpreter for the various data languages present on a vehicle
National Institute of Occupational Safety and Health (US)	NIOSH	
Newton	N	SI unit of force. 1 N = 0.2248 pounds force
Newton Meter	Nm	SI unit of torque. Must not be confused with nm (nanometer)
Nox		Compounds of nitrogen and oxygen formed at high temperatures. Major

		source of exhaust-gas air pollution
Non-Volatile Random Access Memory	NVRAM	RAM which retains memory even if power supply is interrupted
Normally aspirated	N/A	Fueling system using intake air at atmospheric pressure; not supercharged or turbocharged
Normally Closed	NC	
Normally Open	NO	
North American Specification	NAS	Vehicles for sale in the USA and Canadian markets
Number	No.	
Occupational Safety and Health Administration (US)	OSHA	
On-Board Diagnostic	OBD	A system that monitors some or all computer input and output control signals. Signal(s) outside the pre-determined limits imply a fault in the system or a related system
Original Equipment Manufacturer	OEM	
Outside Diameter	o. dia	
Oxides of nitrogen	Nox	
Oxygen Sensor	O2S	A sensor which detects oxygen content in the exhaust gases
Parameter Identification	PID	An index number referring to a parameter within a module without

www.JagDocs.com

		knowledge of its storage location
Park Neutral Position	PNP	
Park Neutral Position Switch	PNP Switch	Indicates the selected non-drive modes of the (automatic) transmission
Part number	part no.	
Pulse Width Modulated	PWM	
Programmable Electronic Control Units System	PECUS	Process whereby a common ECM is programmed on the production line to suit the market requirements of a particular vehicle
Programmable Read-only Memory	PROM	ROM with some provision for setting the stored data after manufacture
Random Access Memory	RAM	Fast access memory store which is accessible for entry or extraction of data
Read-Only Memory	ROM	Fast access memory in which data is fixed and may not be changed
Reservoir	RES	Container, usually for oils, coolants or hydraulic fluids
Rest Of The World	ROW	
Return	RTN	A dedicated sensor ground circuit
Revolutions Per Minute	RPM	Shaft speed of a device, usually an engine or motor
Right-hand	RH	
Right-hand drive	RHD	
Scan Tool	ST	Device that interfaces with and

		communicates information on a data link
Seat Control Module	SCM	Module controlling the seat motor systems (not electric raise/lower-only seats)
Secondary Air		Air provided to the exhaust system
Secondary Air	AIR	System used for a period of time each time the engine is started, unless certain temperature criteria are met. Pumps air directly into the exhaust system which generates extra heat and reduces the time taken for the catalytic converters to reach operating temperature
Secondary Air Injection Bypass	AIR Bypass	Vents secondary air to atmosphere
Secondary Air Injection Check Valve	AIR Check Valve	Valve which prevents back-flow of exhaust gas to the AIR system when the system is inoperative
Secondary Air Injection Diverter	AIR Diverter	Diverts secondary air to either the catalyst or exhaust manifold
Secondary Air Injection Magnetic Clutch	AIR Clutch	Clutch mounted on the AIRP drive shaft
Secondary Air Injection Pump	AIR Pump	Mechanically driven rotary vane pump, driven through the AIRPC
Secondary Air Injection Relay	AIR Relay	Controls the injection of air into the exhaust system
Secondary Air Injection Switching Valve	AIR Switching Valve	Vacuum operated valve backing-up the AIRC

www.JagDocs.com

Security & Locking Control Module	SLCM	Module controlling the vehicle's security and closure-locking functions
Sensor	S	Generic name for a device that senses either the absolute value or a change in a physical quantity such as temperature, pressure or flow rate, and converts that change into an electrical quantity signal
Service Repair Operation (number)	SRO	Number generated by Jaguar Methods & Techniques system which relates to the time allowed to complete a repair operation. Further information on the system can be found in the separate Jaguar Publications (for each model range) entitled 'Repair Operation Times'
Shift Solenoid	SS	Controls shifting in an automatic transmission
Signal return	SIG RTN	
Sliding Roof Control Module	SRCM	
Society of Automotive Engineers	SAE	
Speed Control Control Module	SCCM	Module controlling Speed Control System
Square centimeter	cm^2	
Standard	std	
Standard Corporate Protocol	SCP	A high-speed, serial communications system linking all body system control modules. Control messages and data are passed between modules at up to

		786 messages per second
Supercharger	SC	An intake system which utilizes a supercharger (mechanically driven device that pressurizes intake air, thereby increasing density of charge air and the consequent power output from a given displacement)
Supercharger Bypass	SCB	
Tachometer	TACH	A circuit that provides input for an electronic tachometer display
Thermal Vacuum Valve	TVV	Controls vacuum levels or routing based on temperature
Throttle Body	TB	Device containing the throttle
Throttle Position	TP	
Throttle Position Sensor	TP Sensor	Interprets throttle position and movement to identify idle, acceleration and full-power demands
Throttle Manifold Absolute Pressure Sensor	TMAP	Combines the inlet air temperature and manifold pressure sensor in one component
Top Dead Center	TDC	
Torque Converter Clutch	TCC	
Transmission Control Module	TCM	Controls the shifting pattern of the (automatic) transmission
Transmission Control Switch	TCS	Modifies the operation of electronically controlled transmissions

www.JagDocs.com

Transmission Oil Temperature	TOT	Indicates temperature of transmission fluid
Transmission Range	TR	The range in which the transmission is operating
Turbine Shaft Speed	TSS	Indicates rotational speed of transmission output shaft or turbine shaft
Vacuum Solenoid Valve	VSV	Vacuum operated valve used in the speed control system
Vacuum Solenoid Valve (atm)	VSV(VA)	Vacuum atmospheric valve used in the speed control system
Vacuum Solenoid Valve (rel)	VSV(VR)	Vacuum release valve used in the speed control system
Vacuum Solenoid Valve (vac)	VSV(VV)	Vacuum valve used in the speed control system
Variable Valve Timing	VVT	A system by which the relationship of the crankshaft and camshaft may be altered during engine running
Vehicle Battery Adapter	VBA	Provides electrical power to the Jaguar approved diagnostic system and supplies a battery reference level
Vehicle Control Monitor	VCM	Instrument panel display which warns of faults
Vehicle Emission Control Information Label	VECI Label	
Vehicle Identification Number	VIN	Number assigned to the vehicle by the manufacturer, primarily for licensing and identification purposes

Vehicle Interface Adapter	VIA	Extends the Jaguar approved diagnostic system capability and provides a parallel interface to vehicle harnesses and ECMs
Vehicle Speed Sensor	VSS	Sensor which provides vehicle speed information
Viscosity Index	VI	
Voltage Regulator	VR	Device which regulates the variable output voltage of a generator
Watt	W	SI unit of power (1 hp = 745.7 watts)
Wide Open Throttle	WOT	Full throttle position

www.JagDocs.com

Health and Safety Precautions

Prolonged and repeated contact with mineral oil will result in the removal of natural oils from the skin, leading to dryness, irritation and dermatitis. In addition, used engine oil contains potentially harmful contaminants which may cause skin cancer. Washing facilities and adequate means of skin protection should be provided.

Observe these recommendations:

- Wear protective clothing, including impervious gloves where practicable.
- Do not put oily rags in pockets. Avoid contaminating clothes, particularly underwear, with oil.
- Overalls must be cleaned regularly. Discard oil impregnated clothing and footwear which cannot be washed or cleaned.
- First Aid treatment should be obtained immediately for open cuts or wounds.
- Use barrier creams, applying before each work period, to enable easier removal of dirty oil and grease from the skin.
- Wash with soap and water to make sure that all oil is removed (skin cleaner and a nail brush will help). The use of preparations containing lanolin will help to replace the natural skin oils which have been removed.
- Do not use petrol, kerosene, gas oil, thinners or solvents for washing skin.
- If skin disorders develop, obtain medical advice immediately.
- Where practical, degrease components prior to handling.
- Where there is a risk of fluids coming into contact with the eyes, eye protection should be worn, for example, goggles or a face shield. An eye wash facility should be provided.

The Health and Safety Precautions subsection refers to some commonly used chemicals and materials, hazards associated with their use, and safety measures to be taken. Some of these chemicals may be included in the following list either in their own right or as an ingredient in a sealer or adhesive.

Acids and Alkalis

See also Battery Acids.

e.g. caustic soda, sulphuric acid.

Used in batteries and cleaning materials.

Irritant and corrosive to the skin, eyes, nose and throat. Cause burns. Can destroy ordinary protective clothing.

Avoid splashes to the skin, eyes and clothing. Wear suitable protective impervious apron, gloves and goggles. Do not breath mists.

Ensure access to eye wash bottles, shower and soap are readily available for splashing accidents.

Display Eye Hazard sign.

Air Bags

See also Fire, Chemical Materials - General

Highly flammable, explosive – observe No Smoking policy.

Used as a safety restraint system mounted in the steering wheel.

The inflator contains a high - energetic propellant which, when ignited, produces a VERY HOT GAS (2500º C).

The gas generant used in air bags is Sodium Azide. This material is hermetically sealed in the module and is completely consumed during deployment. No attempt should be made to open an air bag inflator as this will lead to the risk of exposure to Sodium Azide. If a gas generator is ruptured, full protective clothing should be worn when dealing with the spillage.

After normal deployment, gloves and safety goggles should be worn during the handling process.

Deployed air bags should be disposed of in a plastic bag in accordance with local regulations at an approved chemical waste site.

Following any direct contact with gas generant.

- Wash affected areas thoroughly with water.
- Seek medical assistance if necessary.

Air Bags - Do's

- Do store in an airbag safe when not fitted to the vehicle.
- Do store modules in an upright position.
- Do keep modules dry.
- Do carry modules with the cover side pointing away from the body.
- Do place modules with their cover side upwards.
- Do carefully inspect modules for damage.
- Do stand to one side when connecting modules.
- Do make sure all test equipment is properly calibrated and maintained.
- Do wash you hands after handling deployed air bags.

Air Bags - Do Nots

- Do not store highly flammable material together with modules or gas generators.
- Do not store gas generators at temperatures exceeding 80º C.
- Do not store modules upside down.
- Do not attempt to open a gas generator housing.
- Do not expose gas generators to open flame or sources of heat.
- Do not place anything on top of a module cover.

www.JagDocs.com

- Do not use damaged modules.
- Do not touch a fired module or gas generator for at least 10 minutes.
- Do not use any electrical probes on the wiring circuit.

Air Conditioning Refrigerant

See also Chlorofluorocarbon, Chemical Materials

Highly flammable, combustible – observe No Smoking policy.

Skin contact may result in frostbite.

Instructions given by the manufacturer must be followed. Avoid naked lights, wear suitable protective gloves and goggles.

If refrigerant comes into contact with the skin or eyes, rinse the affected areas with water immediately. Eyes should also be rinsed with an appropriate irrigation solution and should not be rubbed. SEEK MEDICAL ASSISTANCE IF NECESSARY.

Air Conditioning Refrigerant - Do Nots

- Do not expose refrigerant bottles to sunlight or heat.
- Do not stand refrigerant bottles upright; when filling, hold them with the valve downwards.
- Do not expose refrigerant bottles to frost.
- Do not drop refrigerant bottles.
- Do not vent refrigerant to atmosphere under any circumstance.
- Do not mix refrigerants i.e. R12 (Freon) and R134a.

Antifreeze

See also Fire, Solvents.

e.g. isopropanol, ethylene glycol, methanol.

Highly flammable, flammable, combustible.

Used in vehicle coolant systems, brake air pressure systems, screenwash solutions.

Vapors may be given off from coolant antifreeze (glycol) when heated. Avoid breathing these vapors.

Antifreeze may be absorbed through the skin in toxic or harmful quantities. Antifreeze, if swallowed can be fatal and medical attention should be sought immediately.

These products must not be used in any cooling or industrial water system which is connected or linked to general, food preparation or drinking water supplies.

Asbestos

Used in brake and clutch linings, transmission brake bands and gaskets. Jaguar original production and replacement items are asbestos free.

See also Warning Symbols on Vehicles at the end of this subsection.

Breathing asbestos dust may cause lung damage or, in some cases, cancer.

The use of drum cleaning units, vacuum cleaning or damp wiping is preferred.

Asbestos dust waste should be dampened, placed in a sealed container and marked to make sure safe disposal. If any cutting or drilling is attempted on materials containing asbestos the item should be dampened and only hand tools or low speed power tools used.

Battery Acids

See also Acids and Alkalis.

Gases released during charging are explosive. Never use naked flames or allow sparks near charging or recently charged batteries.

Ensure adequate ventilation.

Brake and Clutch Linings and Pads

See Asbestos.

Brakes Fluids (Polyalkylene Glycols)

See also Fire.

Splashes to the skin and eyes may cause irritation. Avoid skin and eye contact as far as possible. Inhalation vapor hazards do not arise at ambient temperatures because of the very low vapor pressure.

Brazing

See Welding.

Chemical Materials

See also Legal Aspects.

Chemical materials such as solvents, sealers, adhesives, paints, resin foams, battery acids, antifreeze, brake fluids, fuels, oils and grease should always be used with caution and stored and handled with care. They may be toxic, harmful, corrosive, irritant or highly flammable

www.JagDocs.com

and give rise to hazardous fumes and dusts.

The effects of excessive exposure to chemicals may be immediate or delayed; briefly experienced or permanent; cumulative; superficial; life threatening; or may reduce life - expectancy.

Chemical Materials - Do's

- Do carefully read and observe hazard and precaution warnings given on material containers (labels) and in any accompanying leaflets, posters or other instructions. Material health and safety data sheets can be obtained from manufacturers.
- Do remove chemical materials from the skin and clothing as soon as practical after soiling. Change heavily soiled clothing and have it cleaned.
- Do organise work practices and protective clothing to avoid soiling of the skin and eyes, breathing vapors, aerosols, dusts or fumes, inadequate container labelling fire and explosion hazards.
- Do wash before breaks, before eating, smoking, drinking or using toilet facilities when handling chemical materials.
- Do keep work areas clean, uncluttered and free of spills.
- Do store chemical materials according to national and local regulations.
- Do keep chemical materials out of the reach of children.

Chemical Materials - Do Nots

- Do not mix chemical materials except under the manufacturer's instructions; some chemicals can form other toxic or harmful chemicals, give off toxic or harmful fumes or become explosive when mixed together.
- Do not spray chemical materials, particularly those based on solvents, in confined spaces e.g. when people are inside a vehicle.
- Do not apply heat or flame to chemical materials except under the manufacturer's instructions. Some are highly flammable and some may release toxic or harmful fumes.
- Do not leave containers open. Fumes given off can build up to toxic, harmful or explosive concentrations. Some fumes are heavier than air and will accumulate in confined areas, pits etc.
- Do not transfer chemical materials to unlabeled containers.
- Do not clean hands or clothing with chemicals. Chemicals, particularly solvents and fuels, will dry skin and may cause irritation leading to dermatitis or be absorbed through the skin in toxic or harmful quantities.
- Do not use emptied containers for other materials except when they have been cleaned under supervised conditions.
- Do not sniff or smell chemical materials. Brief exposure to high concentrations of fumes can be toxic or harmful.

Chlorofluorocarbons (CFC)

There is concern in the scientific community that CFCs and Halons are depleting the upper ozone layer which filters out harmful ultraviolet radiation. Decreased filtration of ultraviolet radiation may result in increases in skin cancer, cataracts and immune system suppression in

humans, as well as decreased productivity of crops and aquatic systems.

CFCs are used primarily as refrigerants in vehicle air conditioning systems and as aerosol propellants. Halons are used as fire extinguishants.

Jaguar supports worldwide elimination of CFC usage and it is recommended that Company subsidiaries and affiliates should phase out CFC usage as soon as acceptable substitutes are commercially available.

Clutch Fluids

See Brake fluids.

Clutch Linings and Pads

See Asbestos.

Corrosion Protection Materials

See also Solvents, Fire.

Highly flammable, flammable – observe No Smoking policy.

These materials are varied and the manufacturer's instructions should be followed. They may contain solvents, resins, petroleum products etc. Skin and eye contact should be avoided. They should only be sprayed in conditions of adequate ventilation and not in confined spaces.

Cutting

See Welding.

Dewaxing

See Solvents and Fuels (Kerosene).

Dusts

Powder, dusts or clouds may be irritant, harmful or toxic. Avoid breathing dusts from powdery chemical materials or those arising from dry abrasion operations. Wear respiratory protection if ventilation is inadequate.

Fine dusts of combustible material can present an explosion hazard. Avoid explosive limits and/or sources of ignition.

www.JagDocs.com

Electric Shock

Electric shock can result from the use of faulty electrical equipment or from the misuse of equipment in good condition.

Ensure that electrical equipment is maintained in good condition and frequently tested. Faulty equipment should be labelled and preferably removed from the work station.

Ensure that flexes, cables, plugs and sockets are not frayed, kinked, cut, cracked or otherwise damaged.

Ensure that electrical equipment and flexes do not come into contact with water.

Ensure that electrical equipment is protected by the correct rated fuse.

Never misuse electrical equipment and never use equipment which is in any way faulty. The results could be fatal.

Ensure that the cables of mobile electrical equipment cannot get trapped and damaged, such as in a vehicle hoist.

Ensure that the designated electrical workers are trained in basic First Aid.

In cases of electrocution:

- Switch off the power supply before approaching the victim.
- If this is not possible push or drag the victim from the source of electricity using dry non - conductive material.
- Commence resuscitation if trained to do so.
- SUMMON MEDICAL ASSISTANCE.

Engine Oils

See Lubricants and Grease.

Exhaust Fumes

These contain asphyxiating, harmful and toxic chemicals and particles such as carbon oxides, nitrogen oxides, aldehydes, lead and aromatic hydrocarbons. Engines should be run only under conditions of adequate exhaust extraction or general ventilation and not in confined spaces.

Gasolene (petrol) engine

There may not be adequate warning of odour or of irritation before toxic or harmful effects arise. These may be immediate or delayed.

Fibre Insulation

See also Dusts.

Used in noise and sound insulation.

The fibrous nature of surfaces and cut edges can cause skin irritation. This is usually a physical and not a chemical effect.

Precautions should be taken to avoid excessive skin contact through careful organization of work practices and the use of gloves.

Fire

See also Welding, Foams, Legal Aspects.

Many of the materials found on or associated with the repair of vehicles are highly flammable. Some give off toxic or harmful fumes if burnt.

Observe strict fire safety when storing and handling flammable materials or solvents, particularly near electrical equipment or welding processes.

Ensure, before using electrical or welding equipment, that there is no fire hazard present.

Have a suitable fire extinguisher available when using welding or heating equipment.

First Aid

Apart from meeting any legal requirements it is desirable for someone in the workshop to be trained in First Aid procedures.

Splashes in the eye should be flushed carefully with clean water for at least ten minutes.

Soiled skin should be washed with soap and water.

Individuals affected by inhalation of gases, fumes etc. should be removed to fresh air immediately. If effects persist, consult a doctor.

If liquids are swallowed inadvertently, consult a doctor giving him the information on the container or label. Do not induce vomiting unless this action is indicated on the label.

Fluoroelastomer

See Viton.

Foams - Polyurethane

See also Fire.

Used in sound and noise insulation. Cured foams used in seat and trim cushioning.

www.JagDocs.com

Follow manufacturer's instructions.

Unreacted components are irritating and may be harmful to the skin and eyes. Wear gloves and goggles.

Individuals with chronic respiratory diseases, asthma, bronchial medical problems, or histories of allergic diseases should not work in or near uncured materials.

The components, vapors or spray mists can cause direct irritation, sensitivity reactions and may be toxic or harmful.

Vapors and spray mists must not be inhaled. These materials must be applied with adequate ventilation and respiratory protection. Do not remove the respirator immediately after spraying, wait until the vapor/mists have cleared.

Burning of the uncured components and the cured foams can generate toxic and harmful fumes. Smoking, naked flames or the use of electrical equipment during foaming operations and until vapors/mists have cleared should not be allowed. Any heat cutting of cured foams or partially cured foams should be conducted with extraction ventilation.

Freon

See Air Conditioning Refrigerant.

Fuels

See also, Fire, Legal Aspects, Chemicals and Solvents.

Avoid skin contact with fuel where possible. Should contact occur, wash the affected skin with soap and water.

Gasoline (Petrol)

Highly flammable - observe No Smoking policy.

Swallowing can result in mouth and throat irritation and absorption from the stomach can result in drowsiness and unconsciousness. Small amounts can be fatal to children. Aspiration of liquid into the lungs e.g. through vomiting, is a very serious hazard.

Gasoline dries the skin and can cause irritation and dermatitis on prolonged or repeated contact. Liquid in the eye causes severe pain.

Motor gasoline may contain appreciable quantities of benzene, which is toxic upon inhalation, and the concentration of gasoline vapors must be kept very low. High concentrations will cause eye, nose and throat irritation, nausea, headache, depression and symptoms of drunkenness. Very high concentrations will result in rapid loss of consciousness.

Ensure there is adequate ventilation when handling and using gasoline. Great care must be

taken to avoid the serious consequences of inhalation in the event of vapor build up arising from spillages in confined spaces.

Special precautions apply to cleaning and maintenance operations on gasoline storage tanks.

Gasoline should not be used as a cleaning agent. It must not be siphoned by mouth. See First Aid.

Gas - oil (Diesel Fuel)

See warnings and cautions in relevant manual sections.

Combustible.

Gross or prolonged skin contact with high boiling point gas oils may also cause serious skin disorders including skin cancer.

Kerosene (Paraffin)

Used also as heating fuel, solvent and cleaning agent.

Flammable - observe No Smoking policy.

Irritation of the mouth and throat may result from swallowing. The main hazard from swallowing arises if liquid aspiration into the lungs occurs.

Liquid contact dries the skin and can cause irritation or dermatitis. Splashes in the eye may be slightly irritating.

In normal circumstances the low volatility does not give rise to harmful vapors. Exposure to mists and vapors from kerosene at elevated temperature should be avoided (mists may arise in dewaxing). Avoid skin and eye contact and make sure there is adequate ventilation.

Gas Cylinders

See also Fire.

Gases such as oxygen, acetylene, argon and propane are normally stored in cylinders at pressures of up to 13.790 kPa, (2000 lb/in2) and great care should be taken in handling these cylinders to avoid mechanical damage to them or to the valve gear attached. The contents of each cylinder should be clearly identified by appropriate markings.

Cylinders should be stored in well ventilated enclosures, and protected from ice and snow, or direct sunlight. Fuel gases (e.g. acetylene and propane) should not be stored in close proximity to oxygen cylinders.

Care should be exercised to prevent leaks from gas cylinders and lines, and to avoid sources of ignition.

Only trained personnel should undertake work involving gas cylinders.

www.JagDocs.com

Gases

See Gas Cylinders.

Gaskets (Fluoroelastomer)

See Viton.

General Workshop Tools and Equipment

It is essential that all tools and equipment are maintained in good condition and the correct safety equipment is used where required.

Never use tools or equipment for any purpose other than that for which they were designed. Never over – load equipment such as hoists, jacks, axle and chassis stands or lifting slings. Damage caused by overloading is not always immediately apparent and may result in a fatal failure the next time that the equipment is used.

Do not use damaged or defective tools or equipment, particularly high speed equipment such as grinding wheels. A damaged grinding wheel can disintegrate without warning and cause serious injury.

Wear suitable eye protection when using grinding, chiselling or sand blasting equipment.

Wear a suitable breathing mask when using abrasive blasting equipment, working with asbestos-based materials or using spraying equipment.

Ensure adequate ventilation to control dusts, mists and fumes.

High Pressure Air, Lubrication and Oil Test Equipment

See also Lubricants and Greases.

Always keep high pressure equipment in good condition, and regularly maintained, particularly at joints and unions.

Never direct a high pressure nozzle, e.g. diesel injector, at the skin as the fluid may penetrate to the under - lying tissue etc., and cause serious injury.

Halon

See CFCs.

Legal Aspects

Many laws and regulations make requirements relating to health and safety in the use and disposal of materials and equipment in workshops. Some of these laws which apply in the U.K. are listed. Similar laws exist for other territories:

- The Factories Act (1961).
- The Asbestos Regulations (1969).
- Highly Flammable Liquids and Liquified Petroleum Gases Regulations (1972).
- Control of Pollution Act (1974).
- Health and Safety at Work Act (1974).
- The Classification, Packaging and Labelling of Dangerous Substances Regulations (1978, 1981, 1983, 1984).
- Control of Lead at Work Regulations (1980).
- Control of Substances Hazardous to Health (COSHH) Regulations (1989).
- Abrasive Wheels Regulations (1970).
- Reporting of injuries, diseases and dangerous occurrences regulations 1985 (RIDDOR).

Workshops should be familiar, in detail, with these and associated laws and regulations.

Consult the local factory inspectorate if in any doubt.

Lubricants and Greases

Avoid all prolonged and repeated contact with mineral oils. All lubricants and greases may be irritating to the eyes and skin.

Used Engine Oil

Prolonged and repeated contact with mineral oil will result in the removal of natural oils from the skin, leading to dryness, irritation and dermatitis. In addition, used engine oil contains potentially harmful contaminants which may cause skin cancer. Adequate means of skin protection and washing facilities must be provided.

Do not employ used engine oils as lubricants or for any application where appreciable skin contact is likely to occur.

There are publications describing the problems and advising on precautionary measures. For the UK a typical Health and Safety Executive publication is: SHW 397: Cautionary Notice: Effects of mineral oil on the skin.

Health Protection Precautions

- Avoid prolonged and repeated contact with oils, particularly used engine oils.
- Wear protective clothing, including impervious gloves where practicable.
- Do not put oily rags into pockets.
- Avoid contaminating clothing.
- Heavily soiled clothing and oil - impregnated footwear should not be worn. Overalls must be cleaned regularly.
- First Aid treatment should be obtained immediately for open cuts and wounds.

www.JagDocs.com

- Use barrier creams, applying them before each work period, to help the removal of oil from the skin.
- Wash with soap and water to make sure all oil is removed (skin cleansers and nail brushes will help). Preparations containing lanoline replace the natural skin oils which have been removed.
- Do not use gasoline (petrol), kerosene (paraffin), diesel fuel (gas oil), thinners or solvents for cleaning skin.
- If skin disorders develop, obtain medical advice without delay.
- Where practical, degrease components prior to handling.
- Where there is a risk of eye contact, eye protection should be worn, for example, chemical goggles or face shields; in addition an eye wash facility should be provided.

Environmental Precautions

Burning used engine oil in small space heaters or boilers can be recommended only for units of approved design. In the UK the heating system must meet the requirements of HM Inspectorate of Pollution for small burners of less than 0.4 MW. If in doubt check with the appropriate local authority and/or manufacturer of approved appliances.

Dispose of used oil and used oil filters through authorized waste disposal contractors or licensed waste disposal sites, or to the waste oil reclamation trade, batterys should also be disposed off under similar arrangments. If in doubt, contact the relevant local authority for advice on disposal facilities.

It is illegal to pour used oil, antifreeze and automatic transmission fluid on to the ground, down sewers, drains, or into water courses.

Noise

Some operations may produce high noise levels which could, in time, damage hearing. In these cases, suitable ear protection must be worn.

Noise Insulation Materials

See Foams, Fibre Insulation.

0-Rings (Fluoroelastomer)

See Viton.

Paints

See also body and paint manual.

See also Solvents, Chemical Materials.

Highly flammable, flammable - observe No Smoking policy

Pressurized Equipment

See High Pressure Air, Lubrication and Oil Test Equipment.

Solder

Solders are mixtures of metals such that the melting point of the mixture is below that of the constituent metals (normally lead and tin). Solder application does not normally give rise to toxic lead fumes, provided a gas/air flame is used. Oxy - acetylene flames should not be used, as they are much hotter and will cause lead fumes to be produced.

Some fumes may be produced by the application of any flame to surfaces coated with grease etc. and inhalation of these should be avoided.

Removal of excess solder should be undertaken with care, to make sure that fine lead dust is not produced, which can give toxic effects if inhaled. Respiratory protection may be necessary.

Solder spillage and filings should be collected and removed promptly to prevent general air contamination by lead.

High standards of personal hygiene are necessary in order to avoid ingestion of lead or inhalation of solder dust from clothing.

Solvents

See also Chemical Materials, Fuels (Kerosene), Fire.

e.g. acetone, white spirit, toluene, xylene, trichloroethane.

Used in cleaning and dewaxing materials, paints, plastics, resins, thinners etc.

Some may be highly flammable or flammable.

Skin contact will degrease the skin and may result in irritation and dermatitis following repeated or prolonged contact. Some can be absorbed through the skin in toxic or harmful quantities.

Splashes in the eye may cause severe irritation and could lead to loss of vision.

Brief exposure of high concentrations of vapors or mists will cause eye and throat irritation, drowsiness, dizziness, headaches and, in the worst circumstances, unconsciousness.

Repeated or prolonged exposure to excessive but lower concentrations of vapors or mists, for which there might not be adequate warning indications, can cause more serious toxic or harmful effects.

Aspiration into the lungs (e.g. through vomiting) is the most serious consequence of swallowing.

www.JagDocs.com

Avoid splashes to the skin, eyes and clothing. Wear protective gloves, goggles and clothing if necessary.

Ensure good ventilation when in use, avoid breathing fumes, vapors and spray mists and keep containers tightly sealed. Do not use in confined spaces.

When spraying materials containing solvents, e.g. paints, adhesive, coatings, use extraction ventilation or personal respiratory protection in the absence of adequate general ventilation.

Do not apply heat or flame except under specific and detailed manufacturer's instructions.

Sound Insulation

See Fibre Insulation, Foams.

Suspended Loads

CAUTION: Never improvise lifting tackle.

There is always a danger when loads are lifted or suspended. Never work under an unsupported, suspended or raised load e.g. suspended engine, etc.

Always make sure that lifting equipment such as jacks, hoists, axle stands, slings, etc., are adequate and suitable for the job, in good condition and regularly maintained.

Transmission Brake Bands

See Asbestos.

Underseal

See Corrosion Protection.

Viton

In common with many other manufacturers' vehicles, some components fitted to the Jaguar range have 'O' rings, seals or gaskets which contain a material known as 'Viton'.

Viton is a fluoroelastomer, that is a synthetic rubber type which contains Fluorine. It is commonly used for 'O' rings, gaskets and seals of all types. Although Viton is the most well known fluoroelastomer, there are others, including Fluorel and Tecmoflon.

When used under design conditions fluoroelastomers are perfectly safe. If, however, they are exposed to temperatures in excess of 400º C, the material will not burn, but will decompose, and one of the products formed is hydrofluoric acid.

This acid is extremely corrosive and may be absorbed directly, through contact, into the body.

'O' rings, seals or gaskets which have been exposed to very high temperatures will appear charred or as a black sticky substance.

DO NOT, under any circumstances touch them or the attached components.

Enquiries should be made to determine whether Viton or any other fluoroelastomer has been used in the affected 'O' ring, seal or gasket. If they are of natural rubber or nitrile there is no hazard. If in doubt, be cautious and assume that the material may be Viton or any fluoroelastomer.

If Viton or any other fluoroelastomers have been used, the affected area should be decontaminated before the commencement of work.

Disposable heavy duty plastic gloves should be worn at all times, and the affected area washed down using wire wool and a limewater (calcium hydroxide) solution to neutralize the acid before disposing of the decomposed Viton residue and final cleaning of the area. After use, the plastic gloves should be discarded carefully and safely.

Welding

See also Fire, Electric Shock, Gas Cylinders.

Welding processes include Resistance Welding (Spot Welding), Arc Welding and Gas Welding.

Resistance Welding

This process may cause particles of molten metal to be emitted at a high velocity, and the eyes and skin must be protected.

Arc Welding

This process emits a high level of ultra - violet radiation which may cause arc - eye and skin burns to the operator and to other persons nearby. Gas - shielded welding processes are particularly hazardous in this respect. Personal protection must be worn, and screens used to shield other people.

CONTACT LENS WEARERS ARE ADVISED TO REVERT TO ORDINARY SPECTACLES WHEN ARC WELDING as the arc spectrum is believed to emit microwaves which dry out the fluid between the lens and the eye. This may result in blindness when the lens is removed from the eye.

Metal spatter will also occur, and appropriate eye and skin protection is necessary.

The heat of the welding arc will produce fumes and gases from the metals being welded, the rods and from any applied coatings or contamination on the surfaces being worked on. These

www.JagDocs.com

gases and fumes may be toxic and inhalation of these should be avoided. The use of extraction ventilation to remove the fumes from the working area may be necessary particularly in cases where the general ventilation is poor, or where considerable welding work is anticipated. In extreme cases or confined spaces where adequate ventilation cannot be provided, air-fed respirators may be necessary.

Gas Welding (and Cutting)

Oxy - acetylene torches may be used for welding and cutting, and special care must be taken to prevent leakage of these gases, with consequent risk of fire and explosion.

The process will produce metal spatter and eye and skin protection is necessary.

The flame is bright, and eye protection should be used, but the ultra - violet emission is much less than that from arc welding, and lighter filters may be used.

The process itself produces few toxic fumes, but such fumes and gases may be produced from coatings on the work, particularly during cutting away of damaged body parts, and inhalation of the fumes should be avoided.

In brazing, toxic fumes may be produced from the metals in the brazing rod, and a severe hazard may arise if brazing rods containing cadmium are used. In this event particular care must be taken to avoid inhalation of fumes and expert advice may be required.

SPECIAL PRECAUTIONS MUST BE TAKEN BEFORE ANY WELDING OR CUTTING TAKES PLACE ON VESSELS WHICH HAVE CONTAINED COMBUSTIBLE MATERIALS, E.G. BOILING OR STEAMING OUT OF FUEL TANKS.

Warning Symbols on Vehicles

Decals showing warning symbols will be found on various vehicle components.

These decals must not be removed. The warnings are for the attention of owners/operators and persons carrying out service or repair operations on the vehicle.

The most commonly found decals are reproduced below together with an explanation of the warnings.

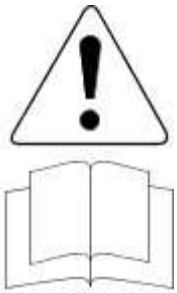

VUJ0000269

1 . Components or assemblies displaying the warning triangle and open book symbol advise consultation of the relevant section of the owners handbook before touching or attempting

adjustments of any kind.

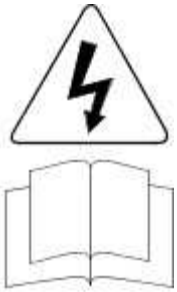

VUJ0000270

2 . Components or assemblies displaying the warning triangle with the electrified arrow and open book symbol give warning of inherent high voltages. Never touch these with the engine running or the ignition switched on. See Electric Shock in this subsection.

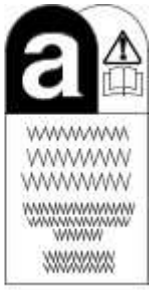

VUJ0000271

3 . Jaguar vehicles and replacement parts which contain asbestos are identified by this symbol. See Asbestos in this subsection.

VUJ0000272

4 . Components or assemblies displaying this symbol give warning that the component contains a corrosive substance. See Acids and Alkalis in this subsection.

VUJ0000273

5 . Vehicles displaying the caution circle with a deleted lighted match symbol, caution against the use of naked lights or flames within the immediate vicinity due to the presence of highly

www.JagDocs.com

flammable or explosive liquids or vapors. See Fire in this subsection.

VUJ0002037

6 . All vehicles fitted with the passenger air bag from the factory have a warning sticker attached to the instrument panel, prohibiting the use of rear facing child seats in the front seating position. Failure to follow this instructions may result in personal injury.

White Spirit

See Solvents.

Safety Precautions

WARNING: Working on the fuel system results in fuel and fuel vapor being present in the atmosphere. Fuel vapor is extremely flammable, hence great care must be taken whilst working on the fuel system. Adhere strictly to the following precautions:

- **Do not smoke in the work area.**
- **Display 'no smoking' signs around the area.**
- **Disconnect the battery before working on the fuel system.**
- **Do not connect/disconnect electrical circuits, use electrical equipment or other tools or engage in working practices which in any way may result in the production of sparks.**
- **Ensure that a CO2 fire extinguisher is close at hand.**
- **Ensure that dry sand is available to soak up any fuel spillage.**
- **Empty fuel using suitable fire proof equipment into an authorized explosion proof container.**
- **Do not empty fuel while working in a workshop or a pit.**
- **Ensure that working area is well ventilated.**
- **Ensure that any work on the fuel system is only carried out by experienced and well qualified maintenance personnel.**
- **Ensure that fume extraction equipment is used where appropriate.**

WARNING: Fume extraction equipment must be in operation when solvents are used e.g. Trichloroethane, white spirit, sbp3, methylene chloride, perchlorethylene. Do not smoke in the vicinity of volatile degreasing agents.

Whenever possible, use a ramp or pit whilst working beneath a vehicle, in preference to

jacking. Position chocks at the wheels as well as applying the parking brake. Never rely on a jack alone to support a vehicle. Use axle stands, or blocks carefully placed at the jacking points, to provide a rigid location. Check that any lifting equipment used has adequate capacity and is fully serviceable. Ensure that a suitable form of fire extinguisher is conveniently located. When using electrical tools and equipment, inspect the power lead for damage and check that it is properly earthed. Disconnect the earth (grounded) terminal of the vehicle battery. Do not disconnect any pipes of the air conditioning refrigeration system unless you are trained and instructed to do so. A refrigerant is used which can cause blindness if allowed to come into contact with the eyes. Ensure that adequate ventilation is provided when volatile degreasing agents are being used.

Adhere strictly to handling and safety instructions given on containers and labels. Keep oils and solvents away from naked flames and other sources of ignition. Do not apply heat in an attempt to free seized nuts or fittings; as well as causing damage to protective coatings, there is a risk of damage from stray heat to electronic equipment and brake lines. Do not leave tools, equipment, spilt oil etc. around the work area. Wear protective overalls and use barrier cream when necessary.

Environmental Protection

In some countries it is illegal to pour used oil onto the ground, down sewers or drains, or into water courses. The burning of used engine oil in small space heaters or boilers is not recommended unless emission control equipment is fitted. Dispose of used oil through authorized waste disposal contractors, to licensed waste disposal sites or to the waste oil reclamation trade. If in doubt, contact the Local Authority for advice on disposal facilities.

www.JagDocs.com

How To Use This Manual

Copyright Statement

Copyright.© Jaguar Cars Ltd. 1999

All rights reserved. No part of this publication may be reproduced, stored in a retrieval system or transmitted in any form, electronic, mechanical, photocopying, recording or other means, without prior written permission of Jaguar Cars Ltd., Customer Service Department, Browns Lane, Coventry, CV5 9DR, England.

Workshop Manual Organization

This manual covers descriptive, diagnostic (including OBD), and repair aspects to service the vehicle effectively.

The manual is arranged in sections, each section dealing with a specific part of a vehicle system. For example, Section 412-03 covers air conditioning, which is part of the climate control system.

The first digit of the section number indicates the group. There are five groups:

- General Information.
- Chassis.
- Powertrain.
- Electrical.
- Body and Paint.

The second and third digits of the section number indicate the vehicle system.

The last two digits of the section number indicate the part of the system covered by the section.

Important Safety Instructions

Safety Notice

Appropriate service methods and correct repair procedures are essential for the safe, reliable operation of all motor vehicles, as well as the safety of the person doing the work. This manual provides general directions for accomplishing service and repair work with tested effective techniques. Following them will help assure reliability.

There are numerous variations in procedures, techniques, tools, and parts for servicing vehicles, as well as in the skill of the person doing the work. This manual cannot possibly anticipate all such variations and provide advice or cautions as to each. Accordingly, anyone who departs from the instructions provided in the manual must first establish that neither personal safety or vehicle integrity is compromised from choices of methods, tools or parts.

www.JagDocs.com

Road/Roller Testing

Road or roller testing may be carried out for various reasons and a procedure detailing pre - test checks, through engine starting and stopping, pre - driving checks, on - test checks to final checks on completion of the test is given overleaf.

Unless complete vehicle performance is being checked, the full road test procedure need not be carried out. Instead, those items particularly relevant to the system/s being checked can be extracted.

Pre - Test Checks

WARNING: If the brake system hydraulic fluid level is low, pedal travel is excessive or a hydraulic leak is found, do not attempt to road test the vehicle until the reason for the low fluid level, excessive pedal travel or hydraulic leak is found and rectified.

It is suggested that pre - test checks, and functional tests of those systems/circuits which affect the safe and legal operations of the vehicle, such as brakes, lights and steering, should always be carried out before the road or roller test.

- Engine oil level
- Engine coolant level
- Tires, for correct pressure, compatible types and tread patterns, and wear within limits.
- There is sufficient fuel in the tank to complete the test.
- All around the engine, transmission and under the vehicle for oil, coolant, hydraulic and fuel leaks. Make a note of any apparent leaks and wipe off the surrounding areas to make it easier to identify the extent of the leak on completion of the test.

Starting the Engine

NOTE:

On initial drive away from cold and within the first 1.5 km (1 mile), do not depress accelerator pedal beyond half travel until the vehicle has attained a minimum speed of 25 km/h (15 miles/h). Never operate at high engine speed or with the accelerator pedal at full travel whilst the engine is cold.

With the ignition switched off, check:

- The handbrake is applied.
- The gear lever is in neutral.
- All instrument gauges (except fuel gauge) read zero.

With the ignition switched on, check:

- Ignition controlled warning lights come on.

- Engine temperature gauge registers a reading compatible with the engine temperature.
- Fuel gauge registers a reading appropriate to the fuel level in the tank.
- The operation of the handbrake warning light and fluid level warning indicator light.

On Road or Roller Test Check:

CAUTION: If road testing, check the brake operation while still travelling at low speed before continuing with the test. If the brakes pull to one side, or appear to be otherwise faulty, do not continue with the road test until the fault has been found and rectified.

- Clutch pedal operation is not stiff or heavy.
- Initial gear engagement is smooth and there is no evidence of clutch drag.
- Handbrake control operates smoothly and the handbrake releases quickly and completely.
- Clutch takes up the drive smoothly, without slip or judder.
- The engine power output is satisfactory, full power is achieved, acceleration is smooth and pedal operation not stiff or heavy, and engine speed returns to idle correctly.
- There is no excessive or abnormally colored smoke from the engine under normal driving, heavy load or overrun conditions.
- Steering operation, including power steering where fitted, is smooth, accurate, not excessively heavy or with excessive free play or vibration. Does not pull to one side and self centres smoothly after cornering.
- Speedometer, oil pressure warning lamp, coolant temperature gauge and tachometer (where fitted) register the correct readings or operate correctly.
- Switches and controls operate smoothly and positively, warning or indicator lights operate correctly and the direction indicator control self cancels when the steering is returned to the straight ahead position.
- Heating and ventilation systems work correctly and effectively.
- Brake operation and efficiency.

Brake Testing

WARNING: When brake testing, avoid breathing the smoke or fumes from hot brakes, this may contain asbestos dust which is hazardous to health, see Health and Safety Precautions.

Avoid brake testing on busy roads where it can cause inconvenience or danger to other road users.

CAUTION: Brake testing which includes heavy brake applications should not be carried out with new brake pads/discs or linings/drums until the components have bedded - in. New brake friction components will not reach full efficiency until the bedding - in process is complete.

www.JagDocs.com

Test the brakes at several speeds within the normal operating range using both light and heavy pedal pressure. Note any tendency to snatch, pull or drag, and any undue delay in application or release.

Allow the vehicle to coast and note any tendency to pull to one side, or evidence that the brakes are binding.

After stopping the vehicle (not immediately after a period of heavy braking), carefully check the brake temperature. A disc which feels hot, or appreciably hotter than the others, indicates that the brake is binding.

After completion of the test, check for:

- Oil, coolant, hydraulic, air and fuel leaks.
- Abnormal temperature of any moving components or assemblies, e.g. wheel hubs, transmission, axle etc., which might indicate overtightness or lack of lubrication.

Solvents, Sealants and Adhesives

WARNING: Always handle all solvents, sealers and adhesives with extreme care. Some contain chemicals or give off fumes which can be dangerous to health. Always follow the manufacturers instructions. If in doubt about any substance, particularly a solvent, DO NOT use it.

CAUTION: If in doubt about the suitability of any proprietary solvent or sealer for a particular application, contact the manufacturer of the product for information regarding storage, handling and application.

The Solvents, Sealers and Adhesives subsection refers to some commonly used chemicals and materials, hazards associated with their use, and safety measures to be taken.

Adhesives and Sealers

Highly flammable, flammable, combustible – observe No Smoking policy.

Generally should be stored in No Smoking' areas. Cleanliness and tidiness in use should be observed e.g. disposable paper covering benches; should be dispensed from applicators where possible; containers, including secondary containers, should be labelled appropriately.

Solvent - based Adhesives/Sealers - See Solvents

Follow manufacturer's instructions.

Water - based Adhesives/Sealers

Those based on polymer emulsions and rubber latexes may contain small amounts of volatile toxic and harmful chemicals. Skin and eye contact should be avoided and adequate ventilation provided during use.

Hot Melt Adhesives

In the solid state, they are safe. In the molten state they may cause burns and health hazards may arise from the inhalation of toxic fumes.

Use appropriate protective clothing and a thermostatically controlled heater with a thermal cut - out and adequate extraction.

www.JagDocs.com

Resin - based Adhesives/Sealers e.g. Epoxide and Formaldehyde Resin - based

Mixing should be carried out in well ventilated areas, as harmful or toxic volatile chemicals may be released.

Skin contact with uncured resins and hardeners can result in irritation, dermatitis, and absorption of toxic or harmful chemicals through the skin. Splashes can damage the eyes.

Provide adequate ventilation and avoid skin and eye contact.

Anaerobic, Cyanoacrylate (Super - glues) and other Acrylic Adhesives

Many are irritant, sensitizing or harmful to the skin and/or respiratory tract. Some are eye irritants.

Skin and eye contact should be avoided and the manufacturer's instructions followed.

Cyanoacrylate adhesives (super-glues) MUST NOT contact the skin or eyes. If skin or eye tissue is bonded, cover with a clean moist pad and seek immediate medical attention. Do not attempt to pull tissue apart. Use in well ventilated areas as vapors can cause irritation to the nose and eyes.

For two - pack systems see Resin - based and Isocyanate Adhesives/Sealers.

Isocyanate (Polyurethane) Adhesives/Sealers

See also Resin - based Adhesives

Individuals suffering from asthma or respiratory allergies should not work with or near these materials as sensitivity reactions can occur.

Over exposure is irritating to the eyes and respiratory system. Excessive concentrations may produce effects on the nervous system including drowsiness. In extreme cases, loss of consciousness may result. Long term exposure to vapor concentrations may result in adverse health effects.

Prolonged contact with the skin may lead to skin irritation and, in some cases, dermatitis.

Splashes entering the eye will cause discomfort and possible damage.

Any spraying should preferably be carried out in exhaust ventilated booths removing vapors and spray droplets from the breathing zone.

Wear appropriate gloves, eye and respiratory protection.

Standard Workshop Practices

Protecting the Vehicle

Always install covers to protect the fenders before commencing work in the engine compartment. Always install the interior protection kit, wear clean overalls and wash hands or wear gloves before working inside the vehicle. Avoid spilling hydraulic fluid, antifreeze or battery acid on the paintwork. In the event of spillage, wash off with water immediately. Use polythene sheets in the luggage compartment to protect carpets. Always use the recommended service tool, or a satisfactory equivalent, where specified. Protect temporarily exposed screw threads by replacing nuts or installing caps.

Vehicle in Workshop

When working on a vehicle in the workshop always make sure that:

- The parking brake is applied or the wheels are securely chocked to prevent the vehicle moving forwards or backwards
- If the engine is to be run, there is adequate ventilation, or an extraction hose to remove exhaust fumes is installed
- There is adequate room to jack up the vehicle and remove the wheels, if necessary
- Fender covers are always installed if any work is to be carried out in the engine compartment
- The battery is disconnected if working on the engine, underneath the vehicle, or if the vehicle is jacked up

CAUTION: When electric arc welding on a vehicle, always disconnect the generator wiring to prevent the possibility of a surge of current causing damage to the internal components of the generator.

- If using welding equipment on the vehicle, ensure a suitable fire extinguisher is readily available.

www.JagDocs.com

100-01 : Identification Codes

Description and operation

Identification Codes - VIN Range: G00442->G45703

Vehicle Identification Number (VIN)

The official VIN for title and registration purposes is stamped on a metal plate and fastened to the instrument panel. It is positioned close on the left-hand side of the vehicle and is visible from the outside.

The vehicle identification number is also located on the vehicle certification label.

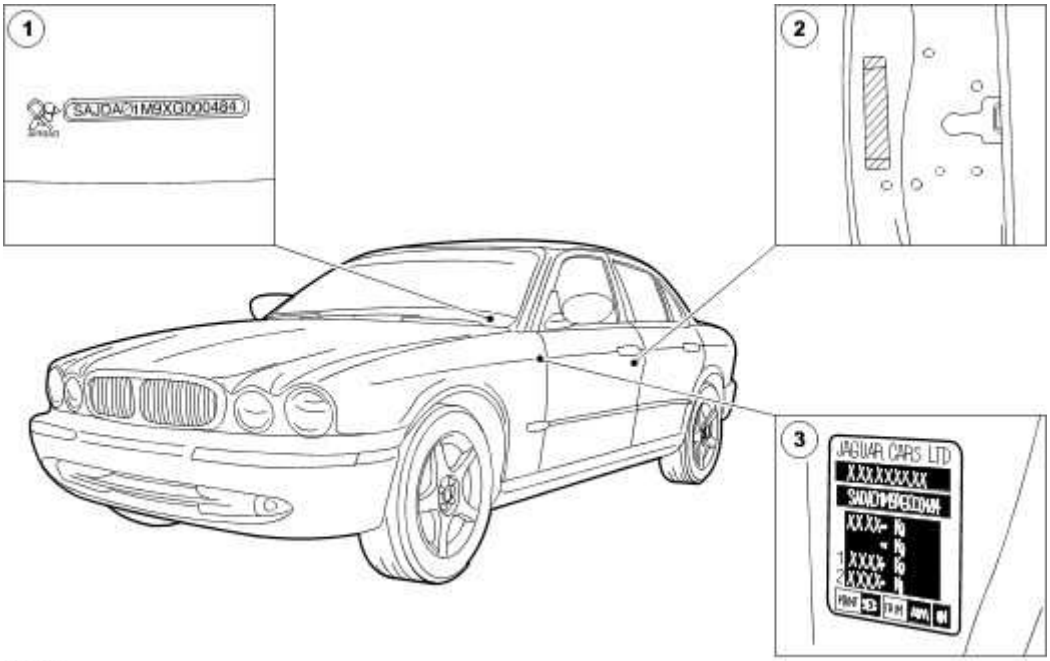

Item	Part Number	Description
1	—	VIN plate
2	—	Bar code label (America)
3	—	Vehicle identification label (Europe/rest of the world shown)

Vehicle Identification Number (Typical)

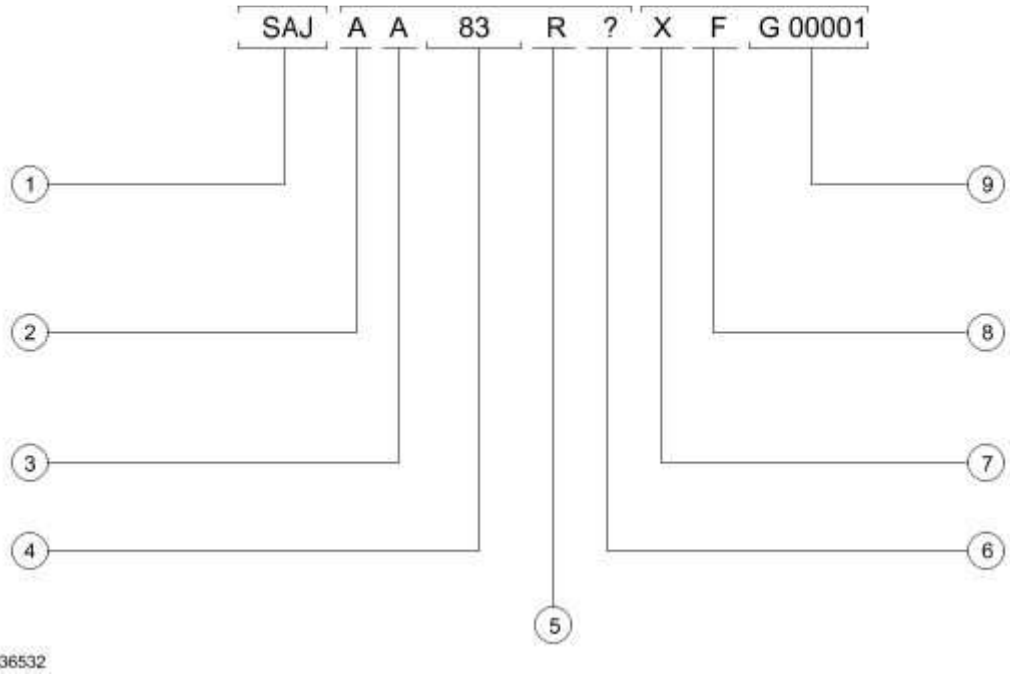

Item	Part Number	Description
1	—	World manufacturer identifier
2	—	Market, air bag specification
3	—	Transmission and steering code
4	—	Body code
5	—	Emission control system
6	—	Check digit
7	—	Model year
8	—	Assembly plant, model line
9	—	Production sequence number

World Manufacturer Identifier

VIN Positions 1, 2 and 3

Codes	Manufacturer	Make	Type
SAJ	Jaguar Cars Limited, England	Jaguar	Passenger Car

www.JagDocs.com

Market, Air Bag Specification

VIN position 4

VIN code	Description
A	Rest of the world with twin air bags, side air bags and curtain air bags (from 2002.5my)
D	USA with twin air bags, side air bags and curtain air bags (from 2002.5my)
F	Canada with twin air bags, side air bags and curtain air bags (from 2002.5my)

Transmission, Steering Code

VIN Position 5

VIN Code	Description
A	Automatic LHS
B	Manual LHS
C	Automatic RHS
D	Manual RHS

Body Code

VIN Position 6 and 7

VIN Code	Description
83	X350 LWB 4 door saloon - XJ
84	X350 LWB 4 door saloon - SE
85	X350 LWB 4 door saloon - XJR/Sport
86	X350 LWB 4 door saloon - Daimler/VDP/SV8

Engine Emission System

VIN Position 8

VIN Code	Description
N	3.0L Normally aspirated with evaporative emissions
P	3.5L Normally aspirated with stage 3 evaporative emissions
R	4.2L Normally aspirated with stage 3 evaporative emissions
S	4.2L Supercharged with stage 3 evaporative emissions

Check Digit

VIN Position 9

VIN Code	Description
0 - 9 or X	Calculated in accordance with American standard CFR part 565

Model Year

VIN Position 10

VIN Code	Description
1	2001 model year
2	2002 model year
3	2003 model year

Assembly Plant and Model Line

VIN Position 11

VIN Code	Description
R	Browns Lane 3.5L
S	Browns Lane 4.2L
T	Browns Lane 4.2L S/C
V	Browns Lane 3.0L

Production Sequence Number

VIN Position 12 through 17

Sequence Number
L00001 - L99999
M00001 - M99999
N00001 - N99999
P00001 - P99999
R00001 - R99999
G00001 - G99999

www.JagDocs.com

Vehicle Identification Label

The vehicle certification label also contains a 17 character vehicle identification number. This number is used for warranty identification of the vehicle. Refer to V.I.N coding chart/manual for full list of code representations.

Vehicle Certification Number (Europe and Rest of the world)

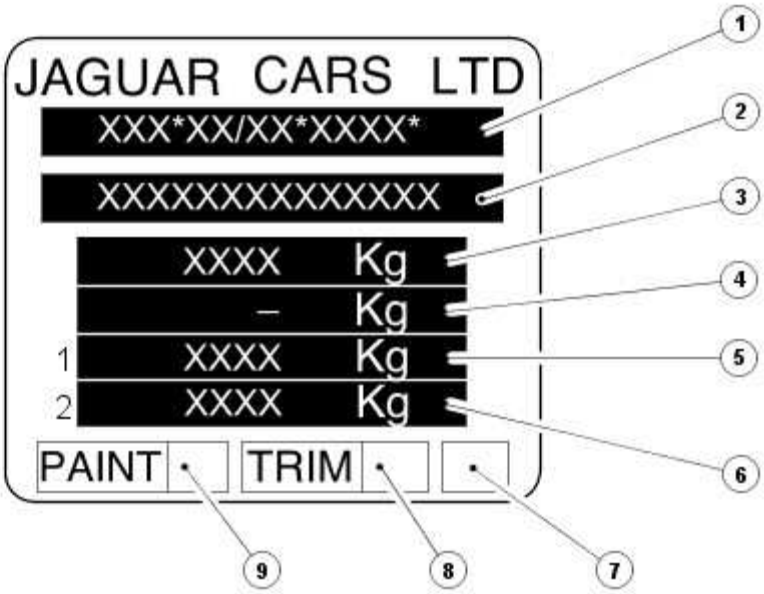

E36533

Item	Part Number	Description
1	—	Whole Vehicle Type Approval (WVTA) number printed here when applicable
2	—	Vehicle identification number
3	—	Gross vehicle weight
4	—	Gross train weight
5	—	Maximum permitted front axle loading
6	—	Maximum permitted rear axle loading
7	—	Date of manufacture
8	—	Interior trim code
9	—	Paint code

Vehicle Identification Label (North America)

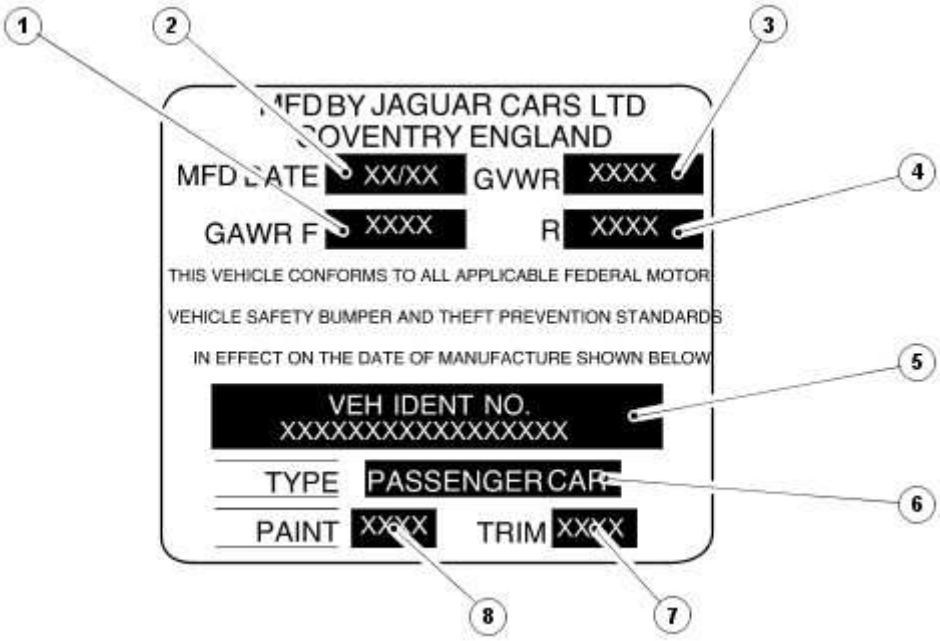

E36534

Item	Part Number	Description
1	—	Maximum permitted front axle loading
2	—	Date of manufacture
3	—	Maximum permitted rear axle loading
4	—	Gross vehicle weight
5	—	Vehicle identification number
6	—	Type
7	—	Interior trim code
8	—	Paint code

www.JagDocs.com

Vehicle Identification Label (Saudi Arabia and Gulf States)

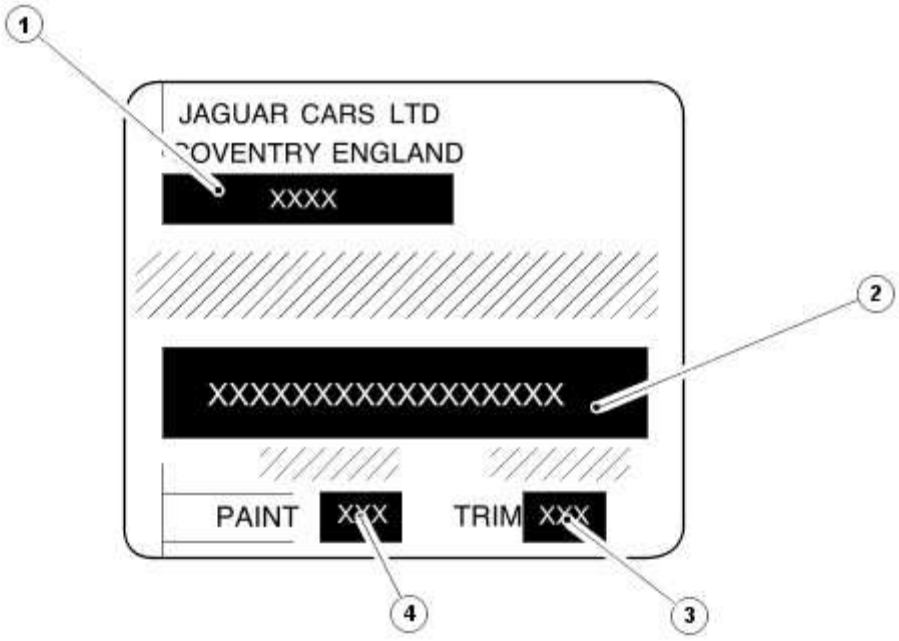

E36535

Item	Part Number	Description
1	—	Date of manufacturer
2	—	Vehicle identification number
3	—	Interior trim code
4	—	Paint code

Vehicle Identification Label (Canada)

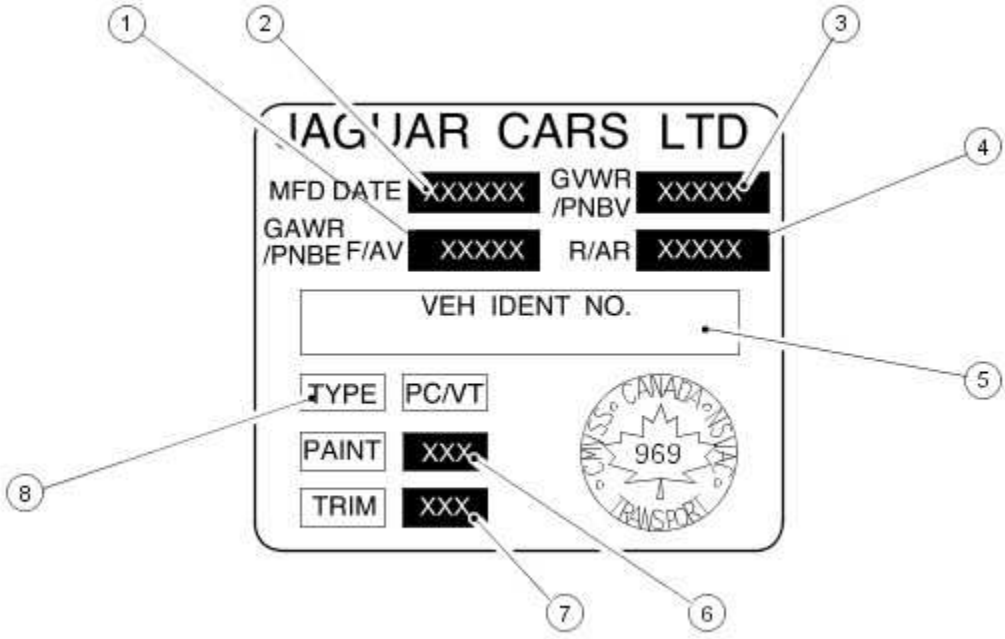

E36536

Item	Part Number	Description
1	—	Maximum permitted front axle loading
2	—	Date of manufacturer
3	—	Maximum permitted rear axle loading
4	—	Gross vehicle weight
5	—	Vehicle identification number
6	—	Paint code
7	—	Interior trim code
8	—	Type

Automatic Transmission Number

The serial number of the transmission unit is displayed on a metal label or bar code (where equipped) attached to the transmission casing.

Engine Number (V6)

The engine number is contained on a bar code label on the front cover and is also stamped in the cylinder block casting on the left hand side of the engine below the engine mounting.

Engine Number (V8)

The serial number is stamped on an engine web on the left hand side of the cylinder block behind the engine mounting. The emission code is also located here, on the transmission flange.

www.JagDocs.com

Identification Codes - VIN Range: G45704->G99999

Vehicle Identification Number (VIN)

The official Vehicle Identification Number (VIN) for title and registration purposes is stamped on a metal plate and fastened to the instrument panel. It is positioned close on the left-hand side of the vehicle and is visible from the outside.

The VIN is also located on the vehicle certification label.

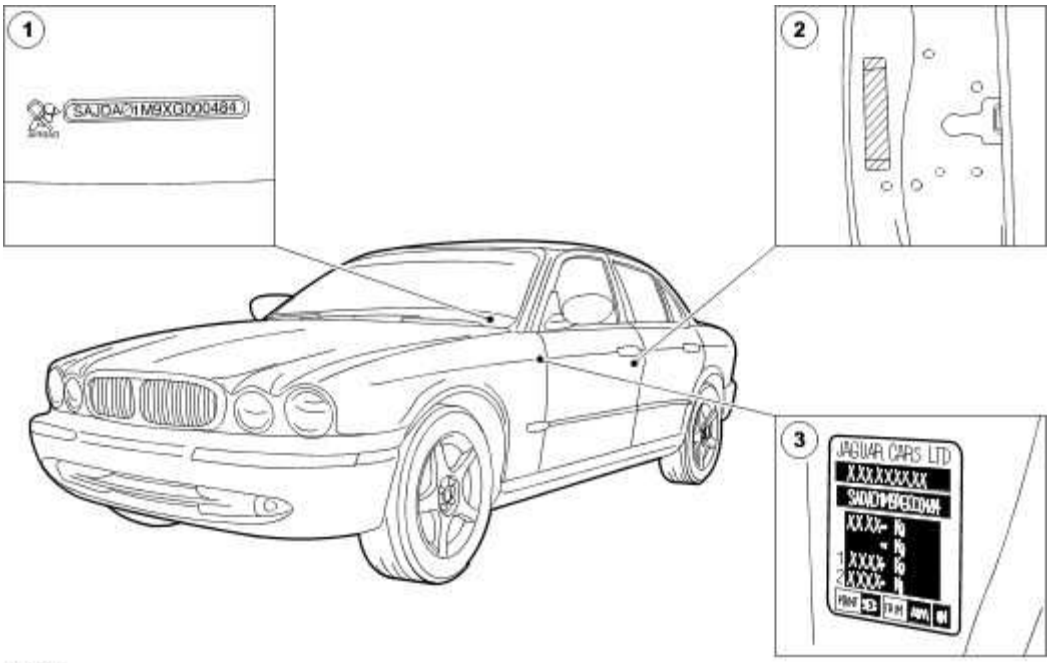

Item	Part Number	Description
1	—	VIN plate
2	—	Bar code label (USA)
3	—	VIN label (Europe/Rest of World shown)

Vehicle Identification Number (Typical)

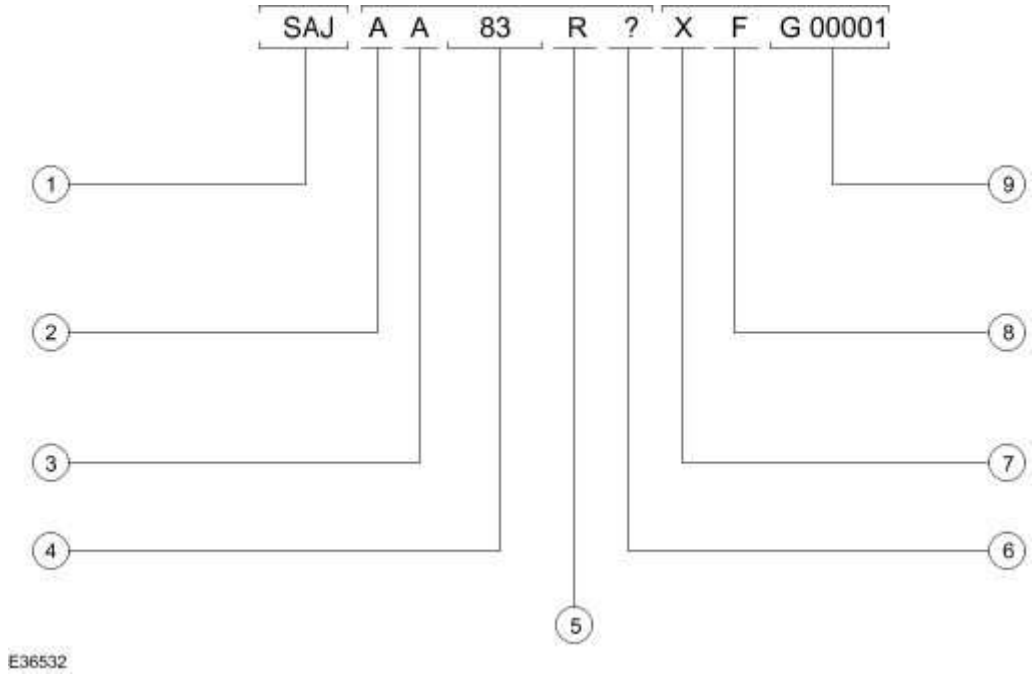

Item	Part Number	Description
1	—	World manufacturer identifier
2	—	Market, air bag specification
3	—	Transmission and steering code
4	—	Body code
5	—	Emission control system
6	—	Check digit
7	—	Model year
8	—	Assembly plant, model line
9	—	Production sequence number

World Manufacturer Identifier

VIN Positions 1, 2 and 3

Codes	Manufacturer	Make	Type
SAJ	Jaguar Cars Limited, England	Jaguar	Passenger Car

www.JagDocs.com

Market, Air Bag Specification

VIN position 4

VIN code	Description
A/C	Rest of World with twin air bags, side air bags and curtain air bags
K/L	Japan with twin air bags, side air bags and curtain air bags
W	USA with twin air bags, side air bags and curtain air bags
X	Canada with twin air bags, side air bags and curtain air bags
Y	Mexico with twin air bags, side air bags and curtain air bags

Transmission, Steering Code

VIN Position 5

VIN Code	Description
A	Automatic LHS
C	Automatic RHS

Body Code

VIN Position 6 and 7

VIN Code	Description
71	X350 SWB 5 seats - XJ
72	X350 SWB 5 seats - SE/Executive/Pack
73	X350 SWB 5 seats - XJR/Sport
74	X350 SWB 5 seats - Super V8/Daimler/VDP
75	X350 SWB 4 seats - XJ
76	X350 SWB 4 seats - SE/Executive/Pack
77	X350 SWB 4 seats - XJR/Sport
78	X350 SWB 4 seats - Super V8/Daimler/VDP
79	X350 LWB 5 seats - XJ
80	X350 LWB 5 seats - SE/Executive/Pack
82	X350 LWB 5 seats - Super V8/Daimler/VDP
83	X350 LWB 4 seats - XJ
84	X350 LWB 4 seats - SE/Executive/Pack
86	X350 LWB 4 seats - Super V8/Daimler/VDP
87	X350 SWB 5 seats - Sovereign
88	X350 SWB 4 seats - Sovereign
89	X350 LWB 5 seats - Sovereign

90	X350 LWB 4 seats - Sovereign
91	X350 LWB 4 seats - Armoured

Engine Emission System

VIN Position 8

NOTE:

*2 Includes the following markets; Austria, Belgium, Cyprus, Czech Rep, Denmark, Estonia, Finland, France, Germany, Greece, Holland, Hungary, Italy, Latvia, Lithuania, Luxembourg, Malta, Norway, Poland, Rep. of Ireland, Slovenia, Slovakia, Spain (incl. Canary Islands) and UK.

VIN Code	Engine	Market
D	3.0L	Argentina, Chilie, Dominican Rep, Guatamala, Middle East, Panama, Phillipines and Taiwan
E	3.5L	
F	4.2L	
K	4.2L Supercharged	
N/A	2.7L Diesel	
D	3.0L	China
N/A	3.5L	
F	4.2L	
N/A	4.2L Supercharged	
N/A	2.7L Diesel	
M	3.0L	East Europe*2, EU*2, Israel, Morrocco, Norway, Russia*2, Switzerland and Turkey
N	3.5L	
P	4.2L	
R	4.2L Supercharged	
1	2.7L Diesel	
W and U	3.0L	Brazil
N/A	3.5L	
X	4.2L	
V	4.2L Supercharged	

www.JagDocs.com

N/A	2.7L Diesel	
S and T	3.0L	Egypt and Syria
T	3.5L	
U	4.2L	
V	4.2L Supercharged	
N/A	2.7L Diesel	
S and T	3.0L	Korea
T	3.5L	
B	4.2L	
V	4.2L Supercharged	
N/A	2.7L Diesel	
H and M	3.0L	Japan
J	3.5L	
K	4.2L	
L and R	4.2L Supercharged	
N/A	2.7L Diesel	
N/A	3.0L	USA
N/A	3.5L	
B and C	4.2L	
C	4.2L Supercharged	
N/A	2.7L Diesel	
N/A	3.0L	Canada
N/A	3.5L	
B	4.2L	
C	4.2L Supercharged	
N/A	2.7L Diesel	
N/A	3.0L	Mexico
N/A	3.5L	
H	4.2L	
L	4.2L Supercharged	
N/A	2.7L Diesel	
D	3.0L	Indonisia, Malaysia, Singapore, Sri Lanka and Thailand
E	3.5L	

F	4.2L	
G	4.2L Supercharged	
N/A	2.7L Diesel	
H and M	3.0L	Austrailia, Hong Kong and New Zealand
J	3.5L	
K	4.2L	
L	4.2L Supercharged	
N/A	2.7L Diesel	
S and T	3.0L	South Africa
T	3.5L	
U	4.2L	
V	4.2L Supercharged	
N/A	2.7L Diesel	
M	3.0L	Cyprus, Malta and UK (and Eire)
N	3.5L	
P	4.2L	
R	4.2L Supercharged	
1	2.7L Diesel	

Check Digit

VIN Position 9

VIN Code	Description
0 - 9 or X	Calculated in accordance with American standard CFR part 565

Model Year

VIN Position 10

VIN Code	Description
6	2006 model year

www.JagDocs.com

Assembly Plant and Model Line

VIN Position 11

VIN Code	Description
R	Browns Lane 3.5L
S	Browns Lane 4.2L
T	Browns Lane 4.2L S/C
V	Browns Lane 3.0L
7	Castle Bromwich 2.7L Diesel
A	Castle Bromwich 3.0L
C	Castle Bromwich 3.5L
D	Castle Bromwich 4.2L
E	Castle Bromwich 4.2L S/C

Production Sequence Number

VIN Position 12 through 17

Sequence Number
G45704 - G99999

VIN Label

VIN Label (Europe and Rest of world)

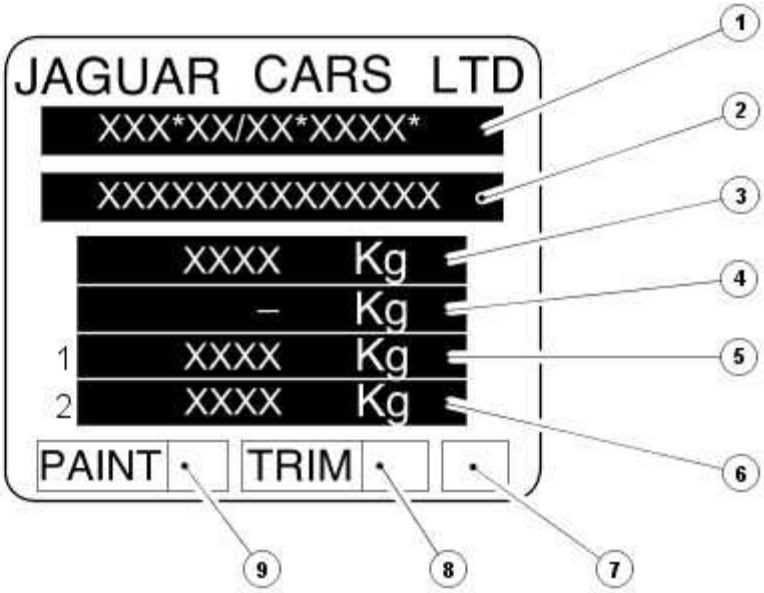

E36533

Item	Part Number	Description
1	—	Whole Vehicle Type Approval (WVTA)
2	—	VIN
3	—	Gross vehicle weight
4	—	Gross train weight
5	—	Maximum permitted front axle loading
6	—	Maximum permitted rear axle loading
7	—	Date of manufacture
8	—	Interior trim code
9	—	Paint code

www.JagDocs.com

VIN Label (North America)

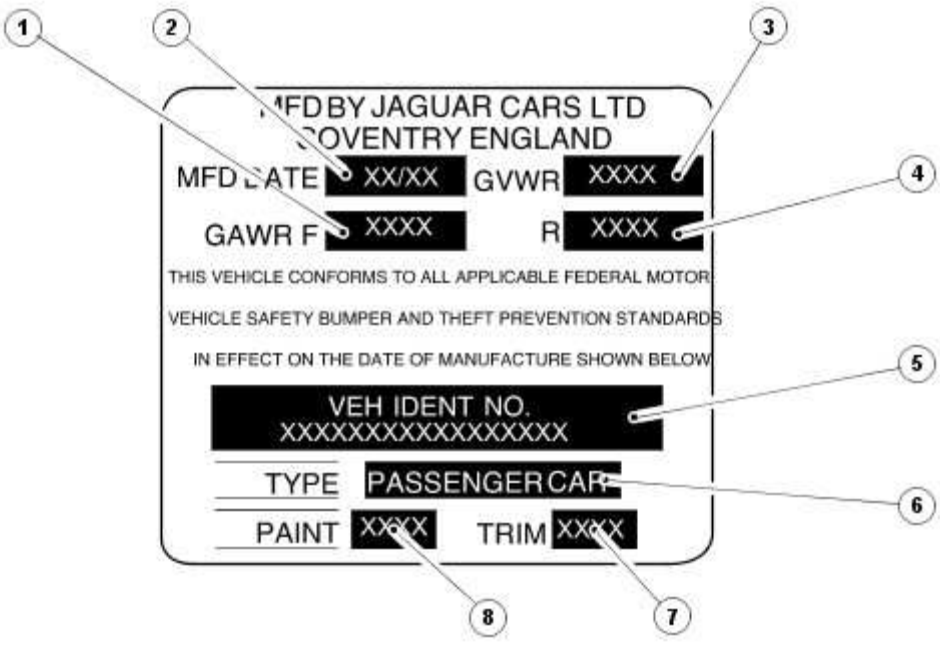

Item	Part Number	Description
1	—	Maximum permitted front axle loading
2	—	Date of manufacture
3	—	Gross vehicle weight
4	—	Maximum permitted rear axle loading
5	—	VIN
6	—	Type
7	—	Interior trim code
8	—	Paint code

VIN Label (Saudi Arabia and Gulf States)

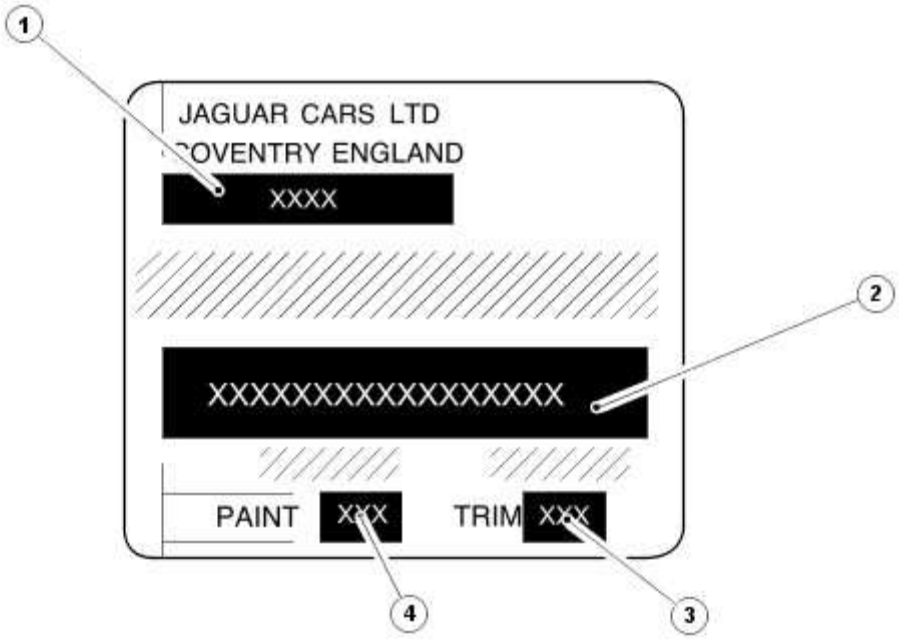

E36535

Item	Part Number	Description
1	—	Date of manufacturer
2	—	VIN
3	—	Interior trim code
4	—	Paint code

VIN Label (Canada)

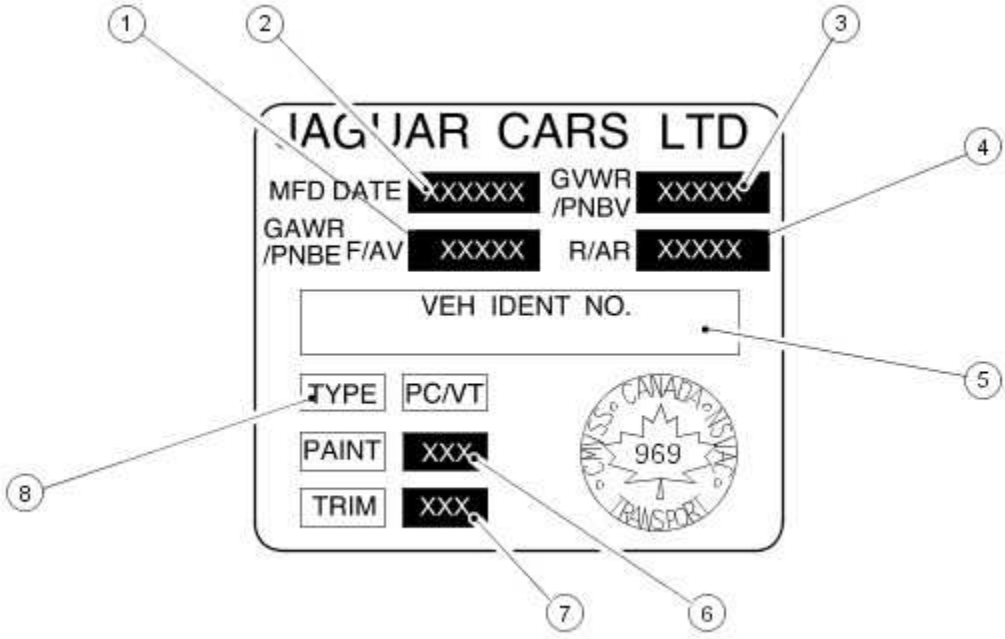

E36536

www.JagDocs.com

Item	Part Number	Description
1	—	Maximum permitted front axle loading
2	—	Date of manufacturer
3	—	Maximum permitted rear axle loading
4	—	Gross vehicle weight
5	—	VIN
6	—	Paint code
7	—	Interior trim code
8	—	Type

VIN Label (China)

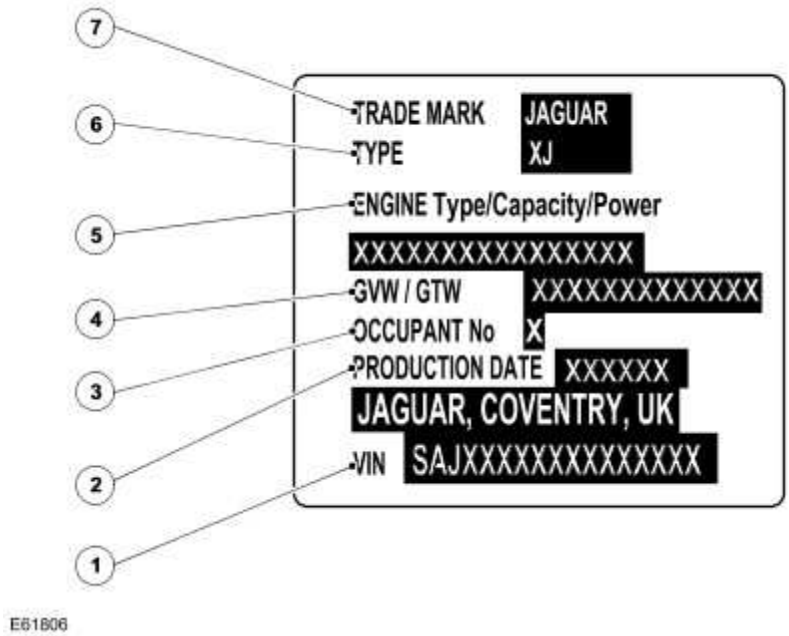

Item	Part Number	Description
1	—	VIN
2	—	Date of manufacturer
3	—	Occupant number
4	—	Gross vehicle weight/Gross train weight
5	—	Engine specification
6	—	Vehicle type
7	—	Trade mark

Automatic Transmission Number

The serial number of the transmission unit is displayed on a metal label or bar code (if equipped) attached to the transmission casing.

Engine Number - 3.0L

The engine number is contained on a bar code label on the front cover and is also stamped in the cylinder block casting on the left-hand side of the engine below the engine mounting.

Engine Number - 2.7L Diesel

The engine number is stamped next to the emission code on the lower right-hand side of the cylinder block near the engine mounting. In addition it is also shown together with engine information stamped onto the camshaft cover plate.

Engine Number - 3.5L, 4.2L and 4.2L Supercharged

The engine number is stamped on an engine web on the left-hand side of the cylinder block behind the engine mounting. The engine emission code is located on a lug under the exhaust manifold towards the left-hand rear of the cylinder block.

www.JagDocs.com

100-02 : Jacking and lifting

Description and operation

Jacking

Safety Precautions

WARNING: The jack provided with the vehicle is intended to be used in an emergency for changing a deflated tire. To avoid damage to the vehicle, never use the jack to raise the vehicle for any other purpose. Refer to the Driver Handbook when using the jack supplied with the vehicle. Failure to follow these instructions may result in personal injury.

The following safety precautions must be observed when raising the vehicle to carry out service operations:

- Never rely on a jack alone to support a vehicle. Always use suitable vehicle stands to provide rigid support.
- When working beneath a vehicle, whenever possible use a vehicle hoist instead of a jack and vehicle stands.
- Make sure that the vehicle is standing on firm, level ground before using a jack.
- Do not rely on the parking brake alone; chock the wheels and put the automatic transmission into Park if possible.
- Check that any lifting equipment used has adequate capacity for the load being lifted and is in correct working order.

Jacking – Armoured Vehicles

Safety Precautions

WARNING: Make sure that any jacks or stands that are used on the vehicle have sufficient capacity to carry the additional weight of the vehicle. Failure to follow these instructions may result in personal injury.

WARNING: The jack provided with the vehicle is intended to be used in an emergency for changing a deflated tire. To avoid damage to the vehicle, never use the jack to raise the vehicle for any other purpose. Refer to the Driver Handbook when using the jack supplied with the vehicle. Failure to follow these instructions may result in personal injury.

The following safety precautions must be observed when raising the vehicle to carry out service operations:

- Never rely on a jack alone to support a vehicle. Always use suitable vehicle stands to provide rigid support.
- When working beneath a vehicle, whenever possible use a vehicle hoist instead of a jack and vehicle stands.
- Make sure that the vehicle is standing on firm, level ground before using a jack.
- Do not rely on the parking brake alone; chock the wheels and put the automatic transmission into **Park** if possible.
- Check that any lifting equipment used has adequate capacity for the load being lifted and is in correct working order.

Vehicle Weight

The weight of the vehicle is greater than the standard vehicle. Always make sure that any jacks, lifts or hoists are capable of carrying these loads. All the jacking and lifting points for the vehicle are exactly the same as the standard vehicle.

Description	Front	Rear	Total
Unladen	1402kg	1448kg	2850kg
Gross Vehicle Weight	1500kg	1720kg	3200kg

www.JagDocs.com

Lifting

Lifting Points—Twin-Post Hoist

CAUTION: Do not allow the hoist adapters to contact the steering linkage, suspension arms, stabilizer bar, rear subframe stabilizer brackets or to compress the lower suspension arm stabilizer bar insulator. Damage to the suspension, exhaust and steering linkage components may occur if care is not exercised when positioning the hoist adapters of two-post hoists prior to lifting the vehicle.

CAUTION: Never use the rear axle as a lift point. Damage to the rear axle seals and bushes may occur.

CAUTION: When using a twin post hoist, a cushioned pad must be utilized to avoid body damage.

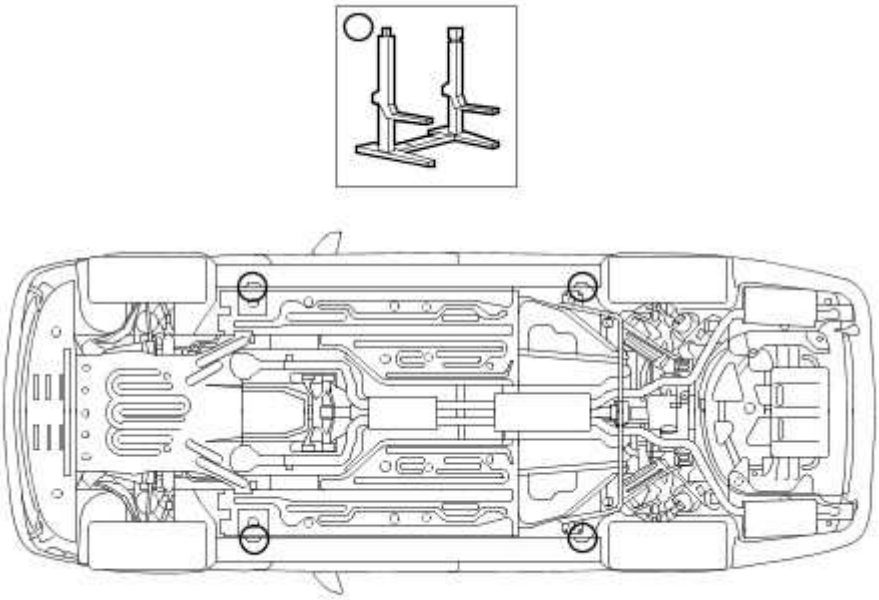

E36993

Lifting Points—Floor Jack and Axle Stands

CAUTION: If the vehicle is to be lifted using floor jacks, two jacks must be used to raise either the front or rear of the vehicle. If one jack only is used, excessive body twist may occur.

CAUTION: When using a floor jack to jack up the rear of the vehicle, the jack head must be aimed at the NVH bar securing bolts to aviod fuel tank damage or body damage.

CAUTION: When using a floor jack, a cushioned pad must be utilized to avoid body damage.

CAUTION: When using axle stands, a cushioned pad must be utilized to avoid damage to the body or rear subframe assembly.

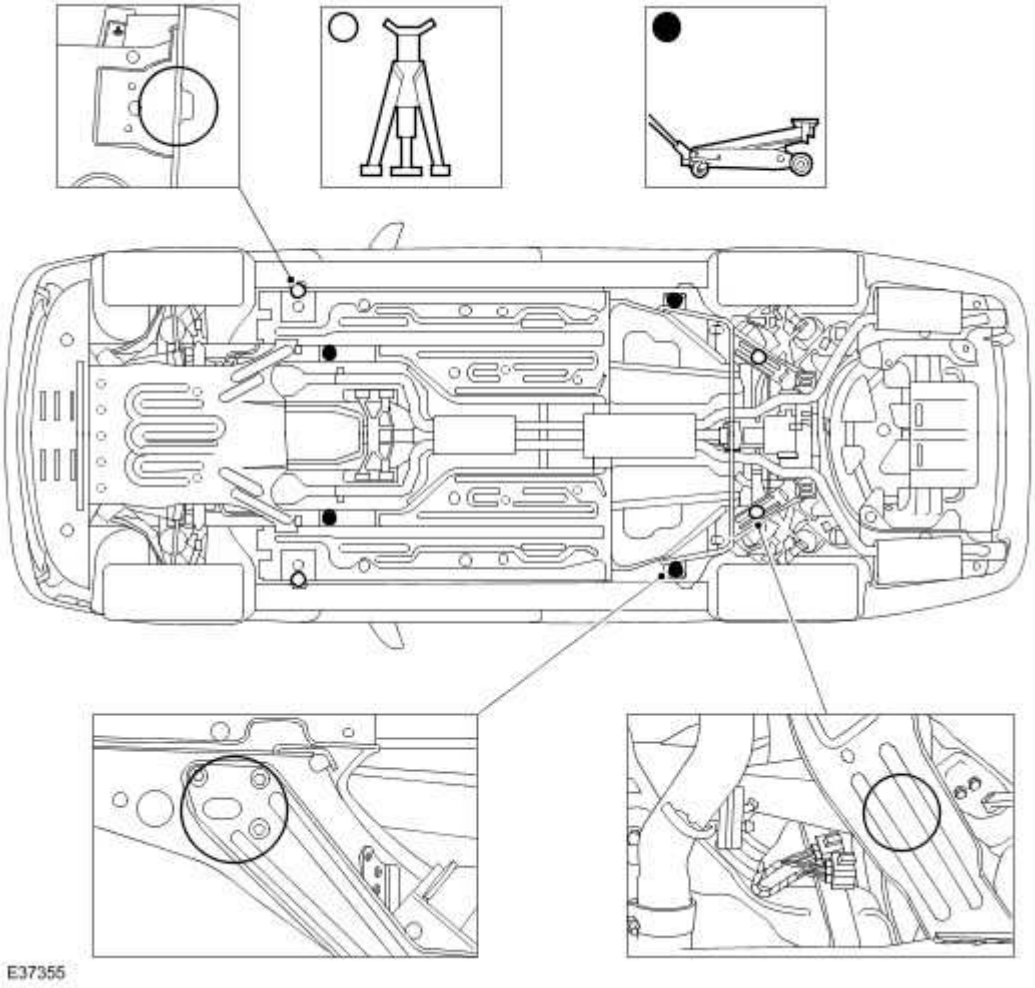

Vehicle Recovery

NOTE:

Prior to vehicle recovery, make sure the vehicle keys are available and the security system is disarmed.

www.JagDocs.com

Vehicle recovery methods are:

- By flat-bed transporter.
- By rear suspended tow.

Transporter or Trailer Recovery

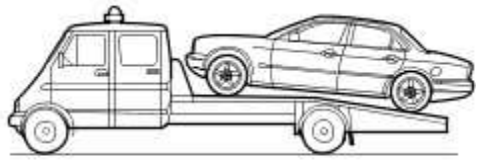

E36585

When the vehicle is being recovered by transporter or trailer:

- the parking brake must be applied and the wheels chocked.
- the gear selector lever must be in Neutral. Do not select Park on automatic transmission vehicles, as the parking lock mechanism may be damaged by the forward and backward rocking motion of the vehicle.
- the vehicle must be securely tied down to the transporter or trailer.

Rear Suspended Tow

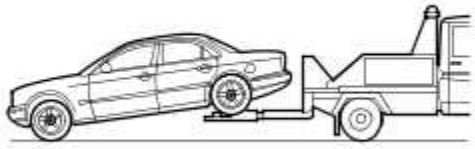

E36586

When the vehicle is being recovered by rear suspended tow:

- the ignition key must be removed from the ignition switch to lock the steering.
- the rear wheels must be correctly positioned in the lifting cradle and securely tied down.

Emergency Towing

WARNING: If the engine is not running, the steering will become heavy and the force necessary to effectively apply the brakes will be greatly increased.

CAUTION: A vehicle with a defective transmission must be towed by rear suspended tow.

When the vehicle is being towed on its own wheels:

- Local regulations for the towing of vehicles must be followed. In some countries the registration number of the towing vehicle and an 'On Tow' sign or warning triangle must be displayed at the rear of the towed vehicle.
- The gear selector lever must be in Neutral.
- The ignition switch must be in position II to release the steering lock and make the direction indicators, horn and stop lamps operate.
- A distance of 0,8 km (0.5 mile) must not be exceeded.
- A speed of 48 km/h (30 mph) must not be exceeded.
- The tow rope must be attached to the front towing eye.

www.JagDocs.com

Exhaust System Neutralizing

1. Loosen the muffler inlet pipe and resonator pipe to exhaust manifold fasteners at the flanges and the muffler inlet connection.

2. Place a stand to support the muffler parallel to the vehicle frame with the muffler pipe bracket free of stress.

3. Tighten the muffler connection.

4. Position the exhaust pipes to the manifolds and tighten. Make sure that the catalytic converter and heat shield do not contact the frame rails.

5. With the complete exhaust system tight (and cooled) the rear hanger insulator should be angled forward, to allow the system to expand rearward when heated during normal running

Noise, Vibration and Harshness (NVH)

Noise, vibration and harshness (NVH) is becoming more important as vehicles become more sophisticated and passenger comfort levels increase. This section is designed to aid in the diagnosis, testing and repair of NVH concerns.

- Noise is defined as sounds not associated with the operation of passenger compartment equipment that interface with customer satisfaction.
- Vibration is defined as impulses felt by the customer that are not caused by road surface changes.
- Harshness is a ride quality issue where the customer feels that the vehicle response to the road surface is sharply transmitted to the customer.

Diagnostic Theory

Diagnosis is more than just following a series of interrelated steps in order to find the solution to the specific condition. It is a way of looking at systems that are not functioning the way they should and finding out why. Also it is knowing how the system should work and whether it is working correctly.

There are basic rules for diagnosis. If these rules are followed, the cause of the condition is usually found the first time through the system.

Know the System

- Know how the parts go together.
- Know how the system operates as well as its limits and what happens when the system goes wrong.
- Sometimes this means checking the system against one that is known to be working correctly.

Know the History of the System

A clue in any one of these areas may save time:

- How old or new is the system?
- What kind of treatment has it had?
- Has it been repaired in the past in such a manner that might relate to the present condition?
- What is the repair history?

www.JagDocs.com

Know the History of the Condition

- Did it start suddenly or appear gradually?
- Was it related to some other occurrence such as a collision or previous part renewal?
- Know how the condition made itself known; it may be an important clue to the cause.

Know the Probability of Certain Conditions Developing

- Look for the simple rather than the complex.
- For example: Electrical conditions usually occur at connections rather than components. An engine no-start is more likely to be caused by a loose wire or small adjustment rather than a sheared-off camshaft.
    - Electrical conditions usually occur at connections rather than components.
    - An engine no-start is more likely to be caused by a loose wire or small adjustment rather than a sheared-off camshaft.
- Know the difference between impossible and improbable. Certain failures in a system can be improbable but still happen.
- New parts are just that, new. It does not mean they are always good functioning parts.

Do Not Cure the Symptom and Leave the Cause

Lowering the pressure in a front tire may correct the condition of a vehicle leaning to one side, but it does not correct the original condition.

Be Positive the Cause is Found

- Double check the findings.
- What caused a worn component?
- A loose transmission or engine mount could indicate that other mounts are also loose.

Diagnostic Charts

Charts are a simple way of expressing the relationship between basic logic and a physical system of components. They help discover the cause of a condition in the least time. Diagnostic charts combine many areas of diagnosis into one visual display:

- probability of certain things occurring in a system
- speed of checking certain components or functions before others
- simplicity of carrying out certain tests before others
- elimination of checking huge portions of a system by carrying out simple tests
- certainty of narrowing down the search to a small portion before carrying out in-depth testing

The fastest way to find a condition is to work with the tools that are available. This means working with proven diagnostic charts and the correct special equipment for the system.

Noise, Vibration and Harshness (NVH)

Inspection and Verification

1 . Verify the customer's concerns by operating the vehicle to duplicate the condition.

2 . Visually inspect the vehicle to determine any obvious cause(s) of the concern(s).

3 . If the inspection reveals obvious causes that can be readily identified, repair as necessary.

4 . If the concern(s) remains after the inspection, determine the symptom(s) and go to the Symptom Chart.

How To Use This Diagnostic Procedure Section

- Noise, vibration and harshness (NVH) concerns have become more important as vehicles have become more sensitive to these vibrations. This section is designed as an aid to identifying these situations.
- The section provides diagnostic procedures based on symptoms. If the condition occurs at high speed, for instance, the most likely place to start is under High Speed Shake.
- The road test procedure will tell how to sort the conditions into categories and how to tell a vibration from a shake.
- A series of Road Test Quick Checks is provided to make sure that a cause is either pinpointed or eliminated.
- Name the condition, proceed to the appropriate section and locate the correct diagnosis. When the condition is identified, the job is partly done.
- Follow the diagnostic procedure as outlined.
- Quick Checks are described within the step, while more involved tests and adjustments are outlined in General Procedures.
- Always follow each step exactly and make notes to recall important findings later.

Customer Interview

The road test and customer interview (if available) provide information that will help identify the concerns and will provide direction to the correct starting point for diagnosis.

Identify the Condition

NVH problems usually occur in a number of areas:

- tires
- engine accessories

www.JagDocs.com

- suspension
- driveline
- air leakage (wind noise)
- squeaks and rattles
- heating ventilation and air conditioning (HVAC)
- electrical (e.g. motor noise)
- transmission
- engine

It is important, therefore, that an NVH concern be isolated into its specific area(s) as soon as possible. The easiest and quickest way to do this is to carry out the Road Test as outlined.

Noise Diagnostic Procedure

Non-Axle Noise

The five most important sources of non-axle noise are exhaust, tires, roof racks, trim and mouldings, and transmission.

Therefore, make sure that none of the following conditions are the cause of the noise before proceeding with a driveline teardown and diagnosis.

- In certain conditions, the pitch of the exhaust may sound very much like gear noise. At other times, it can be mistaken for a wheel bearing rumble.
- Tires, especially snow tires, can have a high pitched tread whine or roar, similar to gear noise. Radial tires, to some degree, have this characteristic. Also, any non-standard tire with an unusual tread construction may emit a roar or whine type noise.
- Trim and mouldings can also cause whistling or a whining noise.
- Clunk may be a metallic noise heard when the automatic transmission is engaged in reverse or drive, or it may occur when the throttle is applied or released. It is caused by backlash somewhere in the driveline.
- Bearing rumble sounds like marbles being tumbled. This condition is usually caused by a damaged wheel bearing.

Noise Conditions

- Gear noise is typically a howling or whining due to gear damage or incorrect bearing preload. It can occur at various speeds and driving conditions, or it can be continuous.
- Chuckle is a particular rattling noise that sounds like a stick against the spokes of a spinning bicycle wheel. It occurs while decelerating from 64 km/h (40 miles/h) and can usually be heard all the way to a stop. The frequency varies with vehicle speed.
- Knock is very similar to chuckle, though it may be louder and occurs on acceleration or deceleration. The teardown will disclose what has to be corrected.

Check and rule out tires, exhaust and trim items before disassembling the transmission to diagnose and correct gear noise.

The noises described under Road Test usually have specific causes that can be diagnosed by

observation as the unit is disassembled. The initial clues are the type of noise heard on the road test and the driving conditions.

Vibration Conditions

NOTE:

New Constant Velocity (CV) joints should not be installed unless disassembly and inspection revealed unusual wear.

Clicking, popping or grinding noises may be caused by the following:

- Cut or damaged CV joint boots resulting in inadequate or contaminated lubricant in the outboard or inboard CV joint bearing housings
- Loose CV joint boot clamps
- Another component contacting the rear drive half shaft
- Worn, damaged or incorrectly installed wheel bearing, suspension or brake component

Vibration at highway speeds may be caused by the following:

- Out-of-balance front or rear wheels
- Out-of-round tires
- Driveline imbalance
- Driveline run-out (alignment)

NOTE:

Rear drive half shafts are not balanced and do not contribute to rotational vibration disturbances.

Shudder or vibration during acceleration may be caused by the following:

- Excessively worn or damaged outboard or inboard CV joint bearing housing
- Excessively high CV joint operating angles caused by incorrect ride height. Check ride height, verify correct spring rate and check items under Inoperative Conditions

Leakage Conditions

1 . Inspect the CV joint boots for evidence of cracks, tears or splits.

2 . Inspect the underbody for any indication of grease splatter in the vicinity of the rear drive half shaft, outboard and inboard CV joint boot locations, which is an indication of CV joint boot or CV joint boot clamp damage.

3 . Inspect the inboard CV joint bearing housing seal for leakage.

Inoperative Conditions

If a CV joint or rear drive half shaft pull-out occurs, check the following:

www.JagDocs.com

- suspension components for correct location, damage or wear
- bushings for wear
- subframe for damage
- bent or worn components Stabilizer bar link Left-hand rear suspension lower arm and bushing Right-hand rear suspension lower arm and bushing Rear wheel hub and rear drive half shaft

Road Test

A gear-driven unit will produce a certain amount of noise. Some noise is acceptable and may be audible at certain speeds or under various driving conditions as on a newly paved blacktop road. The slight noise is in no way detrimental and must be considered normal.

The road test and customer interview (if available) provide information needed to identify the condition and give direction to the correct starting point for diagnosis.

1 . Make notes throughout the diagnosis routine. Make sure to write down even the smallest piece of information, because it may turn out to be the most important.

2 . Do not touch anything until a road test and a thorough visual inspection of the vehicle have been carried out. Leave the tire pressures and vehicle load just where they were when the condition was first observed. Adjusting tire pressures, vehicle load or making other adjustments may reduce the conditions intensity to a point where it cannot be identified clearly. It may also inject something new into the system, preventing correct diagnosis.

3 . Make a visual inspection as part of the preliminary diagnosis routine, writing down anything that does not look right. Note tire pressures, but do not adjust them yet. Note leaking fluids, loose nuts and bolts, or bright spots where components may be rubbing against each other. Check the luggage compartment for unusual loads.

4 . Road test the vehicle and define the condition by reproducing it several times during the road test.

5 . Carry out the Road Test Quick Checks as soon as the condition is reproduced. This will identify the correct diagnostic procedure. Carry out the Road Test Quick Checks more than once to verify they are providing a valid result. Remember, the Road Test Quick Checks may not tell where the concern is, but they will tell where it is not.

Road Test Quick Checks

1 . 24-80 km/h (15-50 miles/h): With light acceleration, a moaning noise is heard and possibly a vibration is felt in the front floor pan. It is usually worse at a particular engine speed and at a particular throttle setting during acceleration at that speed. It may also produce a moaning sound, depending on what component is causing it. Refer to Tip-In Moan in the Symptom Chart.

2 . Acceleration/Deceleration: With slow acceleration and deceleration, a shake is sometimes noticed in the steering wheel/column, seats, front floor pan, front door trim panel or front end sheet metal. It is a low frequency vibration (around 9-15 cycles per second). It may or may

not be increased by applying brakes lightly. Refer to Idle Boom/Shake/Vibration in the Symptom Chart.

3 . High Speed: A vibration is felt in the front floor pan or seats with no visible shake, but with an accompanying sound or rumble, buzz, hum, drone or booming noise. Coast with the clutch pedal depressed or shift control selector lever in neutral and engine idling. If vibration is still evident, it may be related to wheels, tires, front disc brake discs, wheel hubs or front wheel bearings. Refer to High Speed Shake in the Symptom Chart.

4 . Engine rpm Sensitive: A vibration is felt whenever the engine reaches a particular rpm. It will disappear in neutral coasts. The vibration can be duplicated by operating the engine at the problem rpm while the vehicle is stationary. It can be caused by any component, from the accessory drive belt to the clutch or torque converter which turns at engine speed when the vehicle is stopped. Refer to High Speed Shake in the Symptom Chart.

5 . Noise and Vibration While Turning: Clicking, popping, or grinding noises may be due to the following:

- Worn, damaged, or incorrectly installed front wheel bearing.
- Worn or damaged incorrectly installed rear drive half shaft.
- Air suspension fault due to low level of vehicle under certain road conditions wheels may come into contact with the wheel arch liner.

Road Conditions

An experienced technician will always establish a route that will be used for all NVH diagnosis road tests. The road selected should be reasonably smooth, level and free of undulations (unless a particular condition needs to be identified). A smooth asphalt road that allows driving over a range of speeds is best. Gravel or bumpy roads are unsuitable because of the additional road noise produced. Once the route is established and consistently used, the road noise variable is eliminated from the test results.

NOTE:

Some concerns may be apparent only on smooth asphalt roads.

If a customer complains of a noise or vibration on a particular road and only on a particular road, the source of the concern may be the road surface. If possible, try to test the vehicle on the same type of road.

Vehicle Preparation

Carry out a thorough visual inspection of the vehicle before carrying out the road test. Note anything which is unusual. Do not repair or adjust any condition until the road test is carried out, unless the vehicle is inoperative or the condition could pose a hazard to the technician.

After verifying the condition has been corrected, make sure all components removed have been installed.

www.JagDocs.com

Lift Test

After a road test, it is sometimes useful to do a similar test on a lift.

When carrying out the high-speed shake diagnosis or engine accessory vibration diagnosis on a lift, observe the following precautions:

WARNING: If only one drive wheel is allowed to rotate, speed must be limited to 55 km/h (35 miles/h) indicated on the speedometer since actual wheel speed will be twice that indicated on the speedometer. Speed exceeding 55 km/h (35 miles/h) or allowing the drive wheel to hang unsupported could result in tire disintegration, differential failure, constant velocity joint and driveshaft failure, which could cause serious personal injury and extensive vehicle damage. Failure to follow these instructions may result in personal injury.

CAUTION: The suspension should not be allowed to hang free. When the CV joint is run at a very high angle, extra vibration as well as damage to the seals and joints can occur.

The rear suspension lower arm should be supported as far outboard as possible. To bring the vehicle to its correct ride height, the full weight of the vehicle should be supported in the rear by floor jacks. <<100-02>>

1 . Raise and support the vehicle. <<100-02>>

2 . Explore the speed range of interest using the Road Test Quick Checks as previously described.

3 . Carry out a coast down in neutral. If the vehicle is free of vibration when operating at a steady indicated speed and behaves very differently in drive and coast, a transmission concern is likely.

Note, however, that a test on the lift may produce different vibrations and noises than a road test because of the effect of the lift. It is not unusual to find vibrations on the lift that were not found in the road test. If the condition found on the road can be duplicated on the lift, carrying out experiments on the lift may save a great deal of time.

Symptom Chart

High-speed shake

Possible Source(s):

- Wheel end vibration.
- Engine/transmission.

- Driveline.

Action(s) to take:

- GO to Pinpoint Test A.

Tip-in moan

Possible Source(s):

- Air cleaner.
- Power steering (PS).
- Powertrain.
- Engine mounts.
- Exhaust system.

Action(s) to take:

- GO to Pinpoint Test B.

Idle boom/shake/vibration, or shudder

Possible Source(s):

- Cable(s)/hoses(s).
- Engine mounts.
- Exhaust system.
- Belt/pulleys.

Action(s) to take:

- GO to Pinpoint Test C.

Wheel end vibration analysis

Possible Source(s):

- Suspension/rear drive half shaft and CV joints.
- Tires/wheels.
- Wheel bearings.
- Rear wheel drive half shaft joint boots.

www.JagDocs.com

Action(s) to take:

- GO to Pinpoint Test D.

Non-axle noise

Possible Source(s):

- Trim/mouldings.
- A/C system.
- Accessories.
- Air suspension system.

Action(s) to take:

- GO to Pinpoint Test E.

Pinpoint Tests

NOTE:

These Pinpoint Tests are designed to take the technician through a step-by-step diagnosis procedure to determine the cause of a condition. It may not always be necessary to follow the chart to its conclusion. Carry out only the Pinpoint Test steps necessary to correct the condition. Then check operation of the system to make sure the condition is corrected.

After verifying that the condition has been corrected, make sure all components removed have been installed.

PINPOINT TEST G215673p1 : HIGH-SPEED SHAKE

G215673t2 : NEUTRAL COAST

1. Carry out the neutral coast test.

- **Does the vibration disappear during the neutral coast test?**

-> Yes
CHECK and INSTALL new engine/transmission mounts as necessary. REPEAT Road Test as outlined.

-> No
GO to Pinpoint Test G215673t10.

PINPOINT TEST G215673p2 : TIP-IN MOAN

G215673t3 : CHECK THE AIR CLEANER

1. Check the air cleaner.

Check the air cleaner, inlet tube, outlet tube, resonators and all other components associated with the air induction system for correct installation and tightness of all connections.

- **Are the components OK?**

-> Yes
GO to Pinpoint Test G215673t4.

-> No
CORRECT the condition. REPEAT the Road Test as outlined.

G215673t4 : CHECK THE EXHAUST SYSTEM

1. Carry out the exhaust system neutralizing procedure in this section.

- **Is the exhaust system OK?**

-> Yes
GO to Pinpoint Test G215673t5.

-> No
REPAIR as necessary. RESTORE vehicle. REPEAT the Road Test as outlined.

G215673t5 : CHECK THE POWER STEERING

1. Remove the auxiliary drive belt and test for tip-in moan.

- **Is the tip-in moan OK?**

-> Yes
REPAIR the power steering as necessary. For additional information, refer to <<211-02>>

-> No
CHECK and INSTALL new engine/transmission mounts as necessary. REPEAT Road Test as outlined.

www.JagDocs.com

PINPOINT TEST G215673p3 : IDLE BOOM/SHAKE/VIBRATION/SHUDDER

G215673t6 : CHECK CABLE/HOSES

1. Check the engine compartment for any component that may be grounding between the engine and body or chassis. Example: air conditioning (A/C) hoses.

- **Are the components OK?**

-> Yes
GO to Pinpoint Test G215673t7.

-> No
CORRECT the condition. REPEAT the Road Test as outlined.

G215673t7 : CHECK THE STEERING WHEEL DAMPER.

1. Remove the driver air bag module and visually inspect the steering wheel damper for correct installation or any touch condition.

- **Is the damper OK?**

-> Yes
GO to Pinpoint Test G215673t8.

-> No
CORRECT the condition. REPEAT the Road Test as outlined.

G215673t8 : CHECK THE COOLING RADIATOR

1. Check the engine cooling radiator mountings and bushings for security and condition. Check the radiator installation for any component that may have a touch condition.

- **Are the installation and bushings OK?**

-> Yes
GO to Pinpoint Test G215673t9.

-> No
CORRECT the condition. REPEAT the Road Test as outlined.

G215673t9 : CHECK THE EXHAUST SYSTEM

1. Carry out the exhaust system neutralizing procedure in this section.

- **Is the exhaust system OK?**

-> Yes
CHECK and INSTALL new engine/transmission mounts as necessary. REPEAT Road Test as outlined.

-> No
REPAIR as necessary. REPEAT Road Test.

PINPOINT TEST G215673p4 : WHEEL END VIBRATION ANALYSIS

G215673t10 : INSPECT THE TIRES

1. Inspect the tires.

Raise and support the vehicle. <<100-02>>

Inspect the tires for:

Correct tire size

Tire/wheel compatibility

Wear or damage

Tire beads correctly seated

- **Are the tires OK?**

-> Yes
GO to Pinpoint Test G215673t11.

-> No
INSPECT the wheels. For additional information, refer to <<204-00>> .

G215673t11 : INSPECT WHEEL BEARINGS

1. Inspect the wheel bearings. <<204-00>>

- **Are the wheel bearings OK?**

www.JagDocs.com

-> Yes
GO to Pinpoint Test G215673t12.

-> No
REPAIR as necessary. REPEAT the Road Test as outlined.

G215673t12 : INSPECT THE CONSTANT VELOCITY (CV) JOINT BOOTS

1. Inspect the CV joint boots.

Spin the rear tire by hand

Inspect for evidence of cracks, tears, splits or splattered grease

- **Are the CV joint boots OK?**

-> Yes
GO to Pinpoint Test G215673t13.

-> No
REPAIR as necessary. REPEAT the Road Test as outlined.

G215673t13 : INSPECT WHEEL AND TIRE RUNOUT

1. Inspect the wheel and tire runout.

Carry out the Wheel and Tire Check procedure. <<204-04>>

- **Is the wheel and tire runout OK?**

-> Yes
Balance the wheels and tires. Refer to the wheel balance equipment manufacturers instructions.

-> No
REPAIR as necessary. <<204-04>> REPEAT the Road Test as outlined.

PINPOINT TEST G215673p5 : NON-AXLE NOISE

G215673t14 : INSPECT VEHICLE TRIM

1. Check the grille and trim mouldings to see if they are the source of the noise.

- **Are the vehicle trim components causing the noise?**

-> Yes
INSTALL new trim or REPAIR as necessary. <<501-08>>

-> No
GO to Pinpoint Test G215673t15.

G215673t15 : CHECK THE A/C SYSTEM FOR NOISE

1. Check the A/C system components for noise by turning the A/C system on and off.

- **Is the A/C system causing the noise?**

-> Yes
Diagnose the A/C system. <<412-00>>

-> No
GO to Pinpoint Test G215673t16.

G215673t16 : CHECK NON-FACTORY ACCESSORIES

1. Inspect any accessories for being the source of the noise. Example: grounding body-to-frame, antennas, visors, bug deflectors and fog lights?

- **Are the accessories the cause of the noise?**

-> Yes
ADJUST, REPAIR or INSTALL new accessories or fasteners as required.

-> No
Verify the customer concern

G215673t1 : CHECK THE AIR SUSPENSION

1. Inspect the air suspension components for being the source of the noise.

- **Is the air suspension the cause of the noise?**

-> Yes
Install new components as required. <<204-05>>

-> No
Verify the customer concern.

www.JagDocs.com

2. CHASSIS

204 : Suspension

204-00 : Suspension System – General Information

Specifications

Specifications

Wheel Alignment Specification - Front

All Right-Hand Drive and Japan				
Item		**LH**	**RH**	**Split LH-RH**
Castor	Decimal degrees	7.57° ± 0.75°	7.04° ± 0.75°	0.54° ± 0.75°
	Degrees/minutes	7° 34' ± 45'	7° 2' ± 45'	0° 32' ± 45'
Camber	Decimal degrees	-0.7° ± 0.75°	-0.3° ± 0.75°	-0.4° ± 0.75°
	Degrees/minutes	-0° 42' ± 45'	-0° 18' ± 45'	-0° 24' ± 45'
Total toe	Decimal degrees	0.1° ± 0.2°		
	Degrees/minutes	0° 6' ± 12'		

USA, Canada, Mexico and Dominican Republic				
Item		**LH**	**RH**	**Split LH-RH**
Castor	Decimal degrees	7.48° ± 0.75°	7.48° ± 0.75°	0° ± 0.75°
	Degrees/minutes	7° 29' ± 45'	7° 29' ± 45'	0° ± 45'
Camber	Decimal degrees	-0.25° ± 0.75°	-0.75° ± 0.75°	0.5° ± 0.75°
	Degrees/minutes	-0° 15' ± 45'	-0° 45' ± 45'	0° 30' ± 45'
Total toe	Decimal degrees	0.1° ± 0.2°		
	Degrees/minutes	0° 6' ± 12'		

Rest of the World				
Item		**LH**	**RH**	**Split LH-RH**

Castor	Decimal degrees	7.48° ± 0.75°	7.48° ± 0.75°	0° ± 0.75°
	Degrees/minutes	7° 29' ± 45'	7° 29' ± 45'	0° ± 45'
Camber	Decimal degrees	-0.4° ± 0.75°	-0.6° ± 0.75°	0.2° ± 0.75°
	Degrees/minutes	-0° 24' ± 45'	-0° 36' ± 45'	0° 12' ± 45'
Total toe	Decimal degrees	0.1° ± 0.2°		
	Degrees/minutes	0° 6' ± 12'		

Wheel Alignment Specification - Rear

All Vehicles			
Item		**LH**	**RH**
Camber	Decimal degrees	-0.89° ± 0.75°	-0.89° ± 0.75°
	Degrees/minutes	-0° 53' ± 45'	-0° 53' ± 45'
Toe	Decimal degrees	0.083° ± 0.14°	0.083° ± 0.14°
	Degrees/minutes	0° 5' ± 8'	0° 5' ± 8'
Total toe	Decimal degrees	0.167° ± 0.20°	
	Degrees/minutes	0° 10' ± 12'	
Rear thrust angle	Decimal degrees	0° ± 0.14°	
	Degrees/minutes	0° ± 8'	

General Specifications

Item	**Specification**
Clear Vision	
Clear vision (negative value is counterclockwise)	0° ± 3°
Ride Height	
Front	386 ± 15 mm
Rear	373 ± 15 mm
Ball Joint Radial Play	
Lower ball joint — maximum	0.8 mm
Upper ball joint — maximum	0.8 mm

- All the above figures are measured at "kerb" height -all fluids at full and a full fuel tank.
- Tires must be inflated to normal pressure
- Rear thrust angle = (LH toe - RH toe) ÷ 2
- Ride height is measured from the centre of the wheel to the apex of the wheel arch, through the wheel centre line.

www.JagDocs.com

Published: Mar 12, 2014

Specifications – Armoured vehicles

General Specifications, All Right-Hand Drive and Japan

CAUTION: The shock absorber and spring assemblies must be changed in axle sets. Failure to follow this instruction may result in damage to the vehicle.

Item	LH	RH	Total/Split
Alignment Specifications — Front			
Caster	7.88° ± 0.7° or 7°53' ± 42'	7.88° ± 0.7° or 7°53' ± 42'	0° ± 0.7° or ± 42'
Camber	-0.6° ± 0.5° or -36' ± 30'	-0.4° ± 0.5° or -24' ± 30'	0.2° ± 0.7° or 12' ± 42'
Toe @ curb ride height (positive value is toe-in, negative value is toe-out)	-0.04° ± 0.04° or -2.5' ± 2.5'	-0.04° ± 0.04° or -2.5' ± 2.5'	-0.08° ± 0.08° or -5' ± 5'
Alignment Specifications — Rear			
Caster	—	—	—
Camber @ curb	-0.75° ± 0.75° or -45' ± 45'	-0.75° ± 0.75° or -45' ± 45'	0° ± 0.75° or ± 45'
Toe @ curb ride height (positive value is toe-in, negative value is toe-out)	0.16° ± 0.08° or 10' ± 5'	0.16° ± 0.08° or 10' ± 5'	0.33° ± 0.08° or 20' ± 5'

General Specifications, USA, Canada and Mexico

Item	LH	RH	Total/Split
Alignment Specifications — Front			
Caster	7.88° ± 0.7° or 7°53' ± 42'	7.88° ± 0.7° or 7°53' ± 42'	0° ± 0.7° or ± 42'
Camber	-0.1° ± 0.5° or -6' ± 30'	-0.6° ± 0.5° or -36' ± 30'	-0.5° ± 0.7° or -30' ± 42'
Toe @ curb ride height (positive value is toe-in, negative value is toe-out)	-0.04° ± 0.04° or -2.5' ± 2.5'	-0.04° ± 0.04° or -2.5' ± 2.5'	-0.08° ± 0.08° or -5' ± 5'
Alignment Specifications — Rear			
Caster	—	—	—
Camber @ curb	-0.75° ± 0.75° or -45' ± 45'	-0.75° ± 0.75° or -45' ± 45'	0° ± 0.75° or ± 45'
Toe @ curb ride height (positive value is toe-in, negative value is toe-out)	0.16° ± 0.08° or 10' ± 5'	0.16° ± 0.08° or 10' ± 5'	0.33° ± 0.08° or 20' ± 5'

General Specifications, Rest of the World

Item	LH	RH	Total/Split
Alignment Specifications — Front			
Caster	7.88° ± 0.7° or 7°53' ± 42'	7.88° ± 0.7° or 7°53' ± 42'	0° ± 0.7° or ± 42'
Camber	-0.4° ± 0.5° or -24' ± 30'	-0.6° ± 0.5° or -36' ± 30'	-0.2° ± 0.7° or -12'± 42'
Toe @ curb ride height (positive value is toe-in, negative value is toe-out)	-0.04° ± 0.04° or -2.5' ± 2.5'	-0.04° ± 0.04° or -2.5' ± 2.5'	-0.08° ± 0.08° or -5' ± 5'
Alignment Specifications — Rear			

Caster	—	—	—
Camber @ curb	-0.75° ± 0.75° or -45' ± 45'	-0.75° ± 0.75° or -45' ± 45'	0° ± 0.75° or ± 45'
Toe @ curb ride height (positive value is toe-in, negative value is toe-out)	0.16° ± 0.08° or 10' ± 5'	0.16° ± 0.08° or 10' ± 5'	0.33° ± 0.08° or 20' ± 5'

General Specification

Item	Specification
Crab angle — (right-hand rear toe - left-hand rear toe) ÷ 2	0° ± 0.1°
Clear Vision	
Clear vision (negative value is counterclockwise)	0° ± 3°
Ride Height	
Front	645 ± 2 mm (25.4 inches ± 0.07 inch)
Rear	645 ± 2 mm (25.4 inches ± 0.07 inch)
Ball Joint Radial Play	
Lower ball joint — maximum	0.8 mm (0.03 inch)
Upper ball joint — maximum	0.8 mm (0.03 inch)

Shock Absorber And Spring Assembly Inital Setting

NOTE:

The shock absorber and spring assembly ride height measurement is taken from the lower side of the lock nut to the lower body of the shock absorber.

Item	mm	inch
Front shock absorber and spring assembly	200	7.87
Rear shock absorber and spring assembly	160	6.29

Spring Rate

CAUTION: The shock absorber and spring assemblies must be changed in axle sets. Failure to follow this instruction may result in damage to the vehicle.

Item	N/mm	lb/inch
Front Spring	66.5	375
Rear Spring	96.4	553

Torque Specification

Item	Nm	lb-ft
Rear lower arm to subframe retaining nut and bolt	175	129
Front lower arm to subframe retaining nut and bolt	175	129
Tie rod end lock nut	100	74
Rear toe link lock nut	55	41

www.JagDocs.com

Camber and Caster Adjustment

NOTE:

The camber and caster adjustment for the left-hand side is shown, the procedure for adjusting the right-hand side is similar.

NOTE:

This procedure must be carried out using a 4-post ramp.

1. Check the camber and caster settings. Follow the equipment manufacturers instructions.

2. **NOTE:**

   Left-hand shown, right-hand similar.

Loosen the front lower arm lock nut.

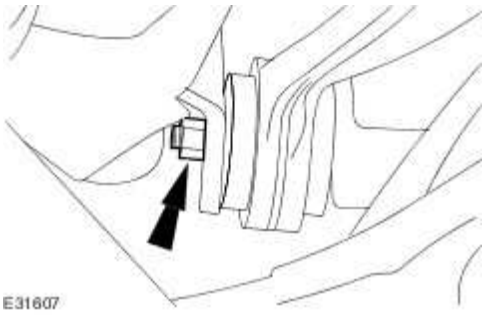

3. **NOTE:**

   Adjustments to the caster will affect the toe settings. Therefore, the caster and toe may need to be adjusted at the same time to achieve the correct settings.

NOTE:

Left-hand shown, right-hand similar.

Rotate the caster adjustment cam bolt to adjust the caster.

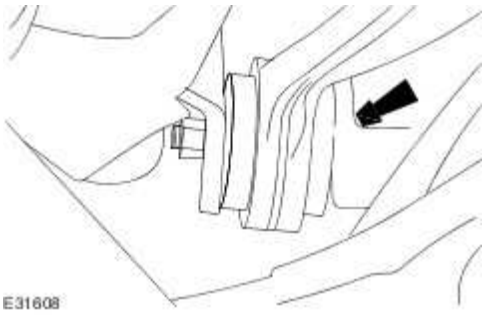

4. Check the caster settings. Follow the equipment manufacturers instructions. Adjust as necessary.

5. **NOTE:**
   Make sure the caster adjustment cam bolt does not rotate.

NOTE:
Left-hand shown, right-hand similar.

Tighten the caster adjustment cam bolt lock nut.

- Tighten to 175 Nm.

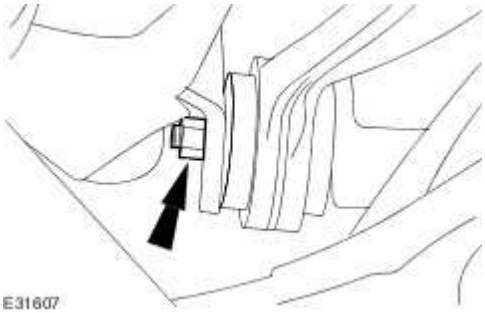

6. **NOTE:**
   Adjustments to the camber will affect the toe settings. Therefore, the camber and toe may need to be adjusted at the same time to achieve the correct settings.

NOTE:
Left-hand shown, right-hand similar.

Loosen the tie-rod end lock nut.

- Clean and lubricate the lock nut and tie-rod threads.

www.JagDocs.com

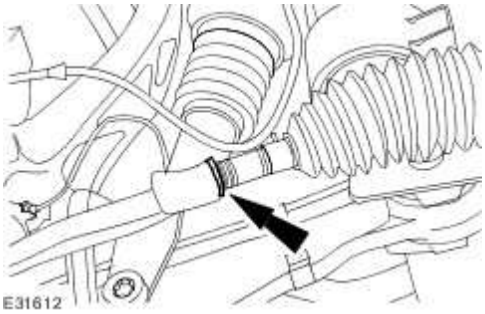

7.

CAUTION: Do not allow the tie-rod end or steering gear boot to twist when the tie-rod is rotated. Failure to follow this instruction may result in damage to the vehicle.

NOTE:

Left-hand, shown right-hand similar.

Rotate the tie-rod to adjust the toe.

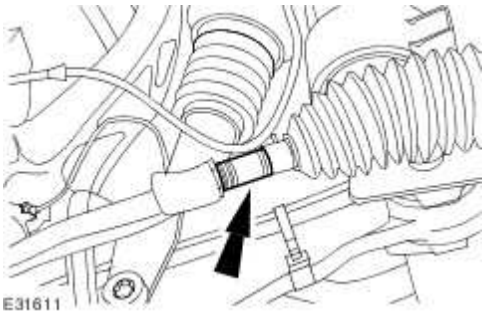

8. **NOTE:**

Left-hand shown, right-hand similar.

Loosen the rear lower arm lock nut.

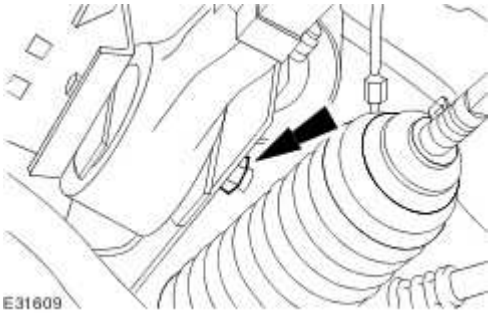

9. **NOTE:**

Left-hand shown, right-hand similar.

Rotate the camber adjustment cam bolt to adjust the camber.

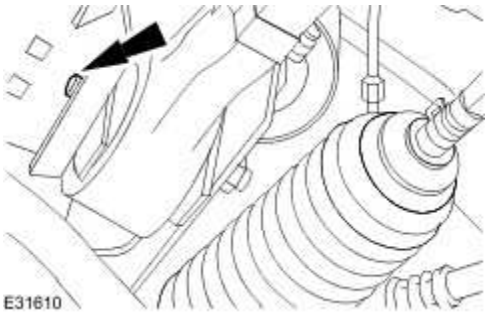

10. Check the camber and toe settings. Follow the equipment manufacturers instructions. Adjust as necessary.

11. **NOTE:**
    Make sure the camber adjustment cam bolt does not rotate.

NOTE:
Left-hand shown, right-hand similar.

Tighten the rear lower arm lock nut.

- Tighten to 175 Nm.

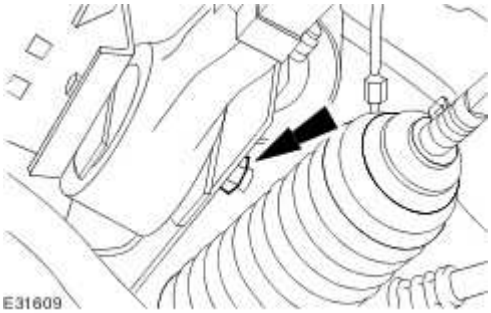

12. **NOTE:**
    Make sure the tie-rod or tie-rod end does not rotate.

NOTE:
Left-hand shown, right-hand similar.

Tighten the tie-rod end lock nut.

- Tighten to 100 Nm.

www.JagDocs.com

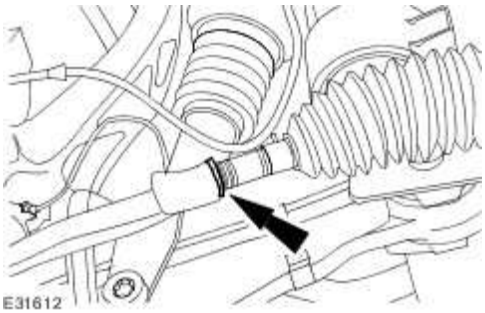
E31612

Front Toe Adjustment (57.65.01)

1. Start the engine and center the steering wheel.

2. Turn the engine off, and hold the steering wheel in the ' straight ahead' position by attaching a rigid link from the steering wheel to the brake pedal.

3. Check the toe settings. Follow the equipment manufacturers instructions.

4. **NOTE:**
   Left-hand shown, right-hand similar.

Loosen the tie-rod end lock nut.

- Clean and lubricate the lock nut and tie-rod threads.

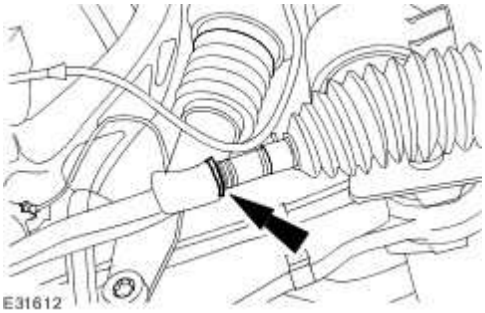

5.

CAUTION: Do not allow the tie-rod end or steering gear boot to twist when the tie-rod is rotated. Failure to follow this instruction may result in damage to the vehicle.

NOTE:
Left-hand shown, right-hand similar.

Rotate the tie-rod to adjust the toe setting.

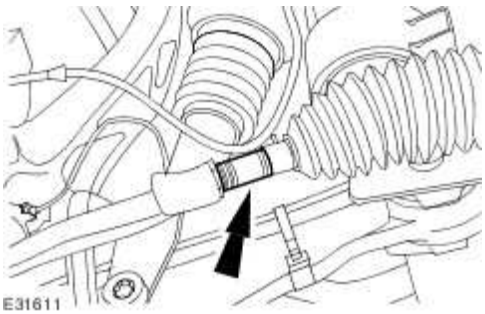

www.JagDocs.com

6. **NOTE:**
   Make sure the tie-rod or tie-rod end does not rotate.

NOTE:
   Left-hand shown, right-hand similar.

Tighten the tie-rod end lock nut.

- Tighten to 100 Nm.

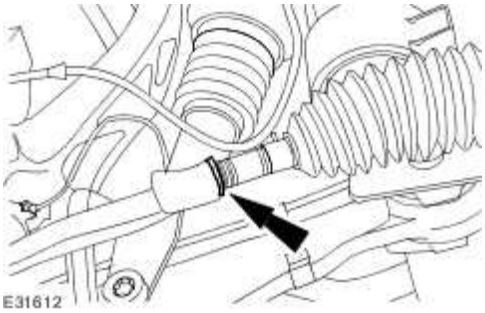

7. Recheck the toe settings. Follow the equipment manufacturers instructions.

Published: Feb 7, 2002

Rear Toe Adjustment (57.65.08)

1. Check the toe settings. Follow the equipment manufacturers instructions.

2. **NOTE:**
   Left-hand, shown right-hand similar.

Loosen the toe link lock nut.

- Clean and lubricate the lock nut and toe link threads.

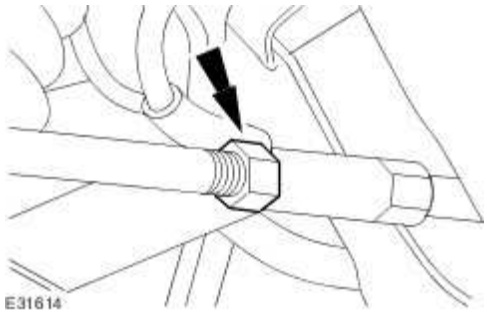

3. Rotate the toe link to adjust the toe settings.

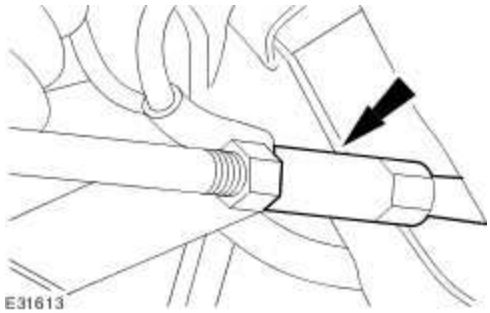

4. Tighten the toe link lock nut.
   - Tighten to 55 Nm.

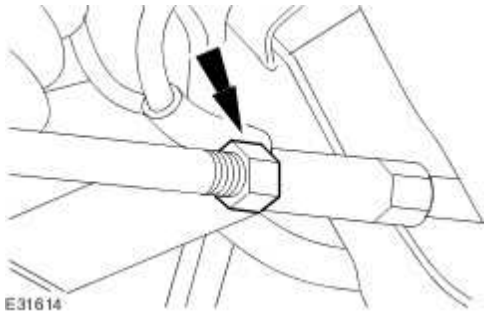

5. Check the toe settings. Follow the equipment manufacturers instructions.

www.JagDocs.com

Wheel Bearing Inspection

1. Raise and support the vehicle. For additional information, refer to<<100-02>>

2. **NOTE:**
   Make sure the wheel rotates freely and the brake pads are retracted sufficiently to allow movement of the tire and wheel assembly.

Firmly grasp the tire at the top and bottom and move the wheel inward and outward while lifting the weight of the tire off the wheel bearing.

3. If the tire and wheel is loose on the wheel hub assembly or does not rotate freely, install a new front wheel hub or rear hub as necessary. For additional information, refer to<<204-01>>or <<204-02>>

Wheel Alignment Angles

Camber, caster and toe are adjustable on the front suspension system. Only the toe is adjustable on the rear suspension system. Camber and caster are adjusted by means of eccentric cams on the lower arm mounting bolts. The front toe is adjusted by use of the front tie-rod. The rear toe is adjusted by the use of toe link assemblies connecting the knuckles to the rear sub-frame.

Camber

Negative Camber

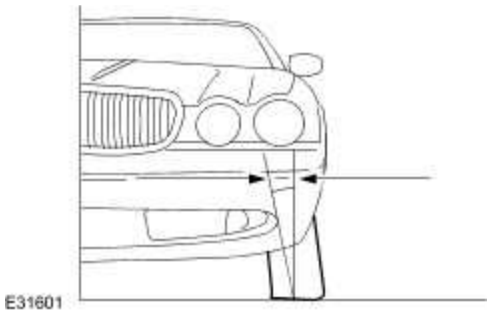

Positive Camber

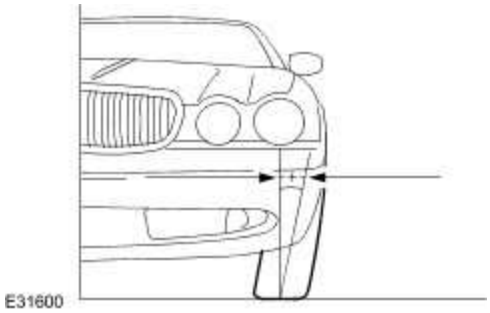

Camber is the vertical tilt of the wheel when viewed from the front. Camber can be positive or negative and has a direct effect on tire wear.

www.JagDocs.com

Caster

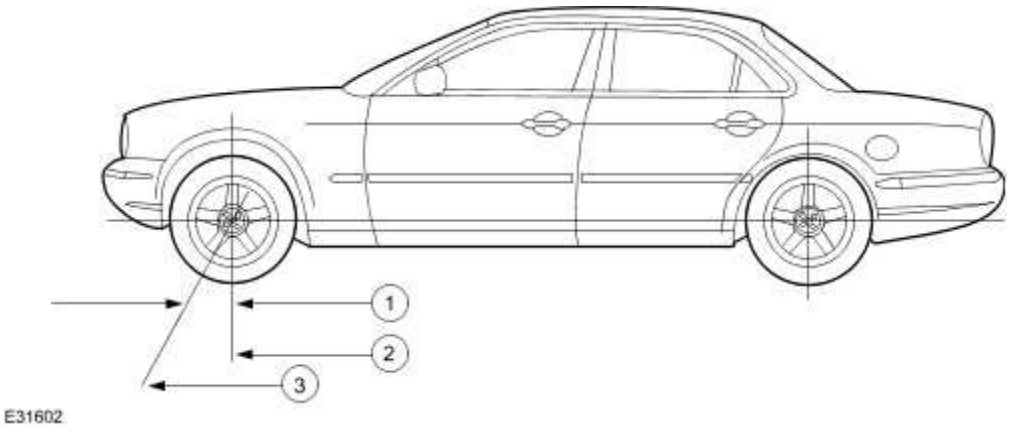

Item	Description
1	Positive caster
2	True vertical
3	Steering axis

Caster is the deviation from vertical of an imaginary line drawn through the ball joints when viewed from the side. The caster specifications in this section will give the vehicle the best directional stability characteristics when loaded and driven. The caster setting is not related to tire wear.

Toe

Positive Toe (Toe-In)

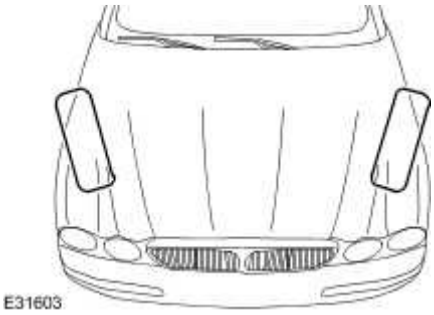

Negative Toe (Toe-Out)

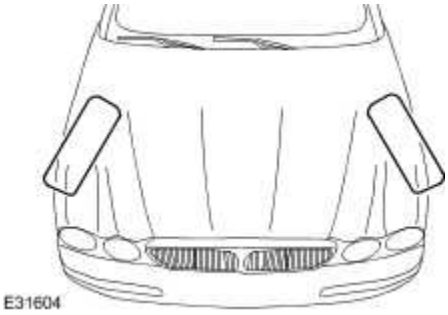

The vehicle toe setting:

- affects tire wear and directional stability.

Ride Height

NOTE:

All ride height measurements are carried out with vehicle empty and 9 liters of fuel in the tank (showroom condition). The vehicle must be driven above 40 km/h (25 miles/hour) for a minimum of five minutes to make sure that the reservoir is full.

Front Ride Height Measurement

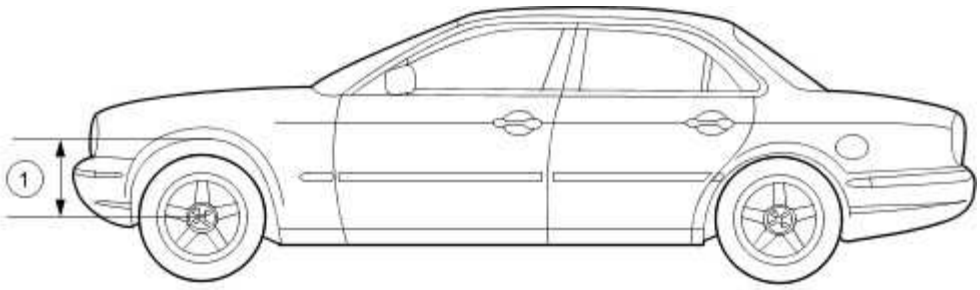

Item	Description
1	Ride height

www.JagDocs.com

Rear Ride Height Measurement

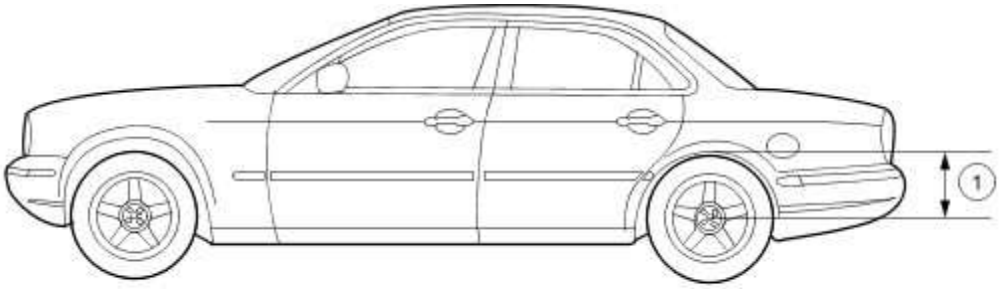

E31606

Item	Description
1	Ride height

Wheel Track

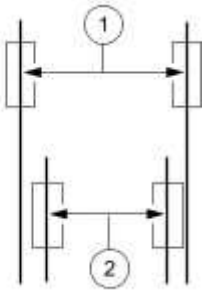

A0001102

Item	Description
1	Front track
2	Rear track

Crabbing

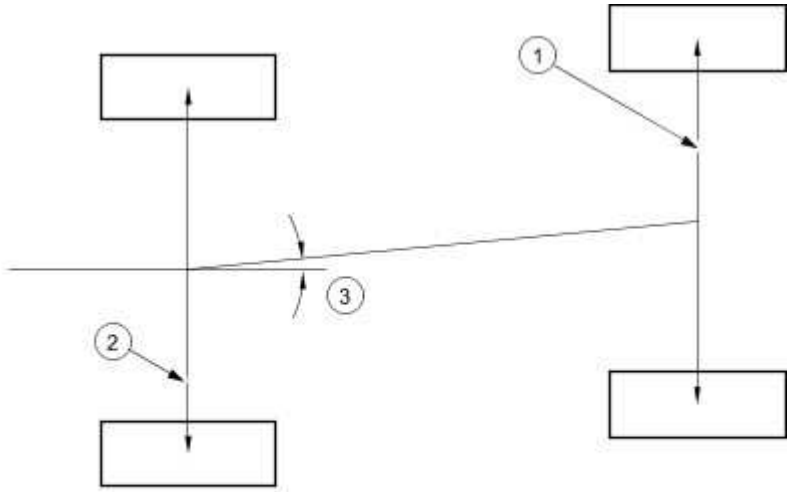

E31475

Item	Description
1	Front track
2	Rear track
3	Crabbing angle

Crabbing is the condition in which the independent rear suspension (IRS) system is not square to the chassis. Heavily crowned roads can give the illusion of crabbing.

Wander

Wander is the tendency of the vehicle to require frequent, random left and right steering wheel corrections to maintain a straight path down a level road.

Shimmy

Shimmy, as observed by the driver, is rotational oscillations of the steering wheel which may come and go over time, generally resulting from wheel and tire imbalances.

Shimmy can be experienced at any speed but generally between 80 to 145 km/h (50 to 90 miles/hour) and is most often experienced on smooth roads at steady speeds.

Nibble

Sometimes confused with shimmy, nibble is a condition resulting from tire interaction with various road surfaces or brake disc irregularity and observed by the driver as small rotational oscillations of the steering wheel.

www.JagDocs.com

Poor Returnability of the Steering

Poor returnability of the steering is used to describe the poor return of the steering wheel to center after a turn or the steering correction is completed.

Drift/Pull

Pull is a tugging sensation, felt by the hands on the steering wheel, that must be overcome to keep the vehicle going straight.

Drift describes what a vehicle with this condition does with hands off the steering wheel.

- A vehicle-related drift/pull, on a flat road, will cause a consistent deviation from the straight-ahead path and require constant steering input in the opposite direction to counteract the effect.
- Drift/pull may be induced by conditions external to the vehicle (i.e., wind, road crown).

Vague On-Center Feel

Vague on-center feel is characterized by little or no buildup of turning effort felt in the steering wheel as the wheel is rocked slowly left and right within very small turns around center or straight-ahead (under 20 degrees of steering wheel turn). Efforts may be said to be "flat on center".

- In the diagnosis of a roadability problem, it is important to understand the difference between wander and vague on-center feel.

Published: Mar 28, 2014

Suspension Design Height Setting – Armoured vehicles

Special Service Tools

204-603

E68796

C Spanner
204-603

204-604

E68797

C Spanner
204-603

CAUTION: The shock absorber and spring assemblies must be replaced in axle sets. Failure to follow this instruction may result in damage to the vehicle.

CAUTION: The suspension design height setting procedure must be carried out when the shock absorber and spring assembly or suspension components have been removed or renewed. Failure to follow this instruction may result in damage to the vehicle.

CAUTION: If equipped, make sure that the spare wheel and jack are removed from the vehicle before carrying out the suspension design height setting. Failure to follow this instruction may result in damage to the vehicle.

CAUTION: Make sure that the fuel tank is full of fuel. Failure to follow this instruction may result in damage to the vehicle.

CAUTION: Make sure that the vehicle contains no luggage or passengers. Failure to follow this instruction may result in damage to the vehicle.

CAUTION: This procedure will need to be carried out on all four shock absorber and spring assemblies. Failure to follow this instruction may result in damage to the vehicle.

NOTE:

The shock absorber and spring assemblies are supplied as complete assemblies and are not servicable.

www.JagDocs.com

1. Position the vehicle on a flat and level surface.

2. Check and adjust the tire pressures.

3. Measure the distance from the bottom of the wheel rim through the wheel centre to the lip of the wheel arch.

4. **NOTE:**

   If the suspension ride height is incorrect adjust as necessary.

Check that the suspension ride height is to the correct tolerance.
Specifications

5.

CAUTION: Make sure that the damper thread is dirt free and lubricated before loosening the lock nut and adjustment nut. Failure to follow this instruction may result in damage to the vehicle.

NOTE:

Its is possible to gain access to adjust the front spring and damper assemblies whilst still installed to the vehicle. Access is restricted to the rear spring and damper assembly adjustment nuts. The rear spring and damper assemblies may need to be removed from the vehicle to make the necessary adjustments.

NOTE:

One full turn of the adjustment nut will adjust the height at the road wheel by approximatly 2.25 mm (0.09 inch) at the road wheel.

NOTE:

Moving the adjustment nut towards the upper spring mount platform will raise the ride height.

Using the special tools, adjust the spring and damper assembly.

- Loosen the spring and damper locking nut.
- Adjust the spring seat position.

6. Using the special tools, tighten the lock nut.

7. Carry out a road test.
Suspension System

8. Repeat steps 1 to 4 and check that the suspension ride height is to the correct specification.
Specifications

9. If the suspension ride height is not to the correct specification repeat steps 5 to 8 until the correct specification is reached.

Suspension System

Inspection and Verification

WARNING: Before carrying out a road test, make sure the vehicle is safe to do so. Failure to follow this instruction may result in personal injury.

1 . Gather as much information from the driver as possible and verify the customer concern by carrying out a road test, as closely as possible reproducing the conditions under which the fault occurs.

If the customer complaint is of vibration.
Noise, Vibration and Harshness (NVH)

2 . Visually inspect for obvious signs of mechanical damage.

Mechanical
• Tire pressures • Damaged tires • Wheel bearing(s) • Loose or damaged front or rear suspension components • Loose, damaged or missing suspension fastener(s) • Damaged or leaking air suspension components • Worn or damaged suspension bushing(s) • Loose, worn or damaged steering system components • Damaged axle components

3 . If an obvious cause for an observed or reported condition is found, correct the cause (if possible) before proceeding to the symptom chart.

Symptom chart

Symptom	Possible causes	Action
Crabbing	• Incorrect rear thrust angle • Front or rear	Check the rear alignment. Rear Toe Adjustment (57.65.08) Check the front and rear suspension for signs of damage

www.JagDocs.com

	suspension components	or wear.
Drift/Pull/Wander	• Tire pressures • Uneven tire wear • Damaged steering components • Wheel alignment • Brake drag • Unevenly loaded or overloaded vehicle	Check and adjust the tire pressures (see visual inspection). Check for uneven tire wear, investigate the cause and rectify as necesssary. Check the steering for wear/damage. Check and adjust the wheel alignment as necessary. Check for binding brakes, rectify as necessary. Advise the driver of the load issues.
Front bottoming or riding low	• Damaged suspension components • Air spring fault	Check the suspension components for damage. Check the dynamic suspension. Vehicle Dynamic Suspension
Uneven tire wear	• Incorrect tire pressure (rapid center rib or inner and outer edge wear) • Incorrect front or rear toe (rapid inner or outer edge wear) • Incorrect camber (rapid inner or outer edge wear) • Tires out of balance (tires cupped or dished)	Check and adjust the tire pressures (see visual inspection). Check and adjust the wheel alignment as necessary. Balance the tires as necessary.
Harsh ride	• Damaged suspension components • Air spring fault	Check the suspension components for damage. Check the dynamic suspension. Vehicle Dynamic Suspension
Shimmy or wheel tramp	• Wheels/tires • Loose wheel nut(s) • Loose front suspension fasteners • Front wheel bearing(s) fault • Worn or damaged suspension component bushing • Loose, worn or damaged ball joint(s) • Loose, worn or damaged steering components	Check the wheels and tires for condition and balance. Check and tighten the wheel nuts and suspension fasteners to specification. Check the front wheel bearings, suspension bushings, ball joints and steering components for wear or damage. Check and adjust the wheel alignment as necessary.

	• Front wheel alignment	
Poor returnability of the steering (self-centering)	• Steering column • Ball joints • Steering components	Check the steering column universal joints, etc. Check the ball joints and other steering components.
Sway or roll	• Loose front or rear stabilizer bar • Worn lower suspension arm stabilizer bar insulators • Air spring fault	Check the stabilizer bar security and condition. Rectify as necessary. Check the air springs. Vehicle Dynamic Suspension
Vehicle leans to one side	• Front or rear suspension components • Air spring fault	Check the front and rear suspension. Check the air springs. Vehicle Dynamic Suspension

Component tests

Ball Joint Inspection

NOTE:

The front suspension is shown in the following procedures. The inspection of the rear suspension upper ball joint is similar.

1 . Raise and support the vehicle.

2 . Prior to carrying out any inspection of the ball joints, inspect the front wheel bearings.
Wheel Bearing Inspection

3 .

CAUTION: The safety stand beneath the suspension lower lower arm must only support the weight of the suspension and not the full weight of the vehicle. Failure to follow this instruction may result in damage to the components.

Position a safety stand beneath the front suspension lower arm or rear suspension lower arm to be tested.

www.JagDocs.com

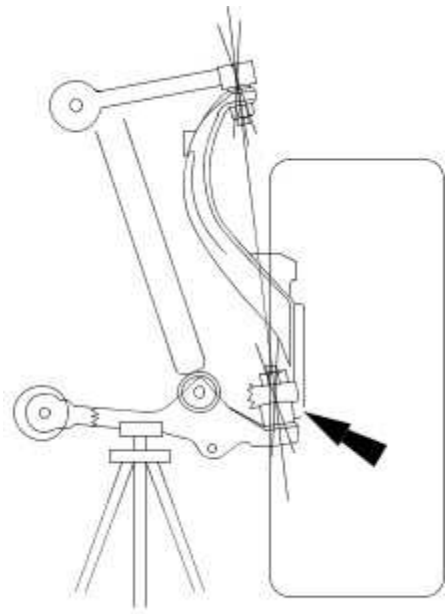

VUJ0005101

4 . While an assistant pulls and pushes the top and bottom of the tire, observe the relative movement between the ball joint and the front suspension lower arm. Any movement at or exceeding the specification indicates a worn or damaged ball joint. Install a new wheel knuckle as necessary.
Wheel Knuckle (60.25.23)

5 . While an assistant pulls and pushes the top and bottom of the tire, observe the relative movement between the ball joint and the front suspension upper arm or rear suspension upper arm. Any movement at or exceeding the specification indicates a worn or damaged ball joint. Install a new upper arm as necessary. Refer to
Upper Arm LH (60.35.41)
Upper Arm RH (60.35.42) or
Upper Arm (64.25.31) .

6 . Remove the safety stand.

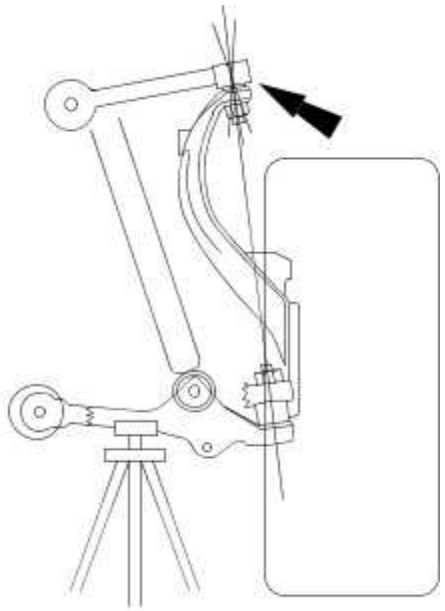

VUJ0005100

7 . Lower the vehicle.

www.JagDocs.com

204-01 : Front Suspension

Specification

Specifications

Torque Specifications

Description	Nm	lb-ft	lb-in
Steering gear to subframe retaining bolts	100	74	-
Stabilizer bar link retaining nut	43	32	-
Stabilizer bar link retaining nut and bolt	70	52	-
Stabilizer bar clamp retaining bolts	55	41	-
Rear lower arm ball joint retaining nut	92	68	-
Front and rear lower arm to subframe retaining nut and bolt	175	129	-
Front lower arm to rear lower arm retaining nut and bolt	A	A	A
Upper arm ball joint retaining nut	90	66	-
Upper arm to body retaining nuts and bolts	47	35	-
Air spring assembly to lower arm retaining bolt	175	129	-
Tie-rod end to wheel knuckle retaining nut	75	55	-
Wheel hub and bearing to wheel knuckle retaining bolts	90	66	-
Exhaust manifold to cylinder head retaining nuts (3.0l only)	20	15	-
Dipstick tube retaining bolt	10	7	-
Engine mount lower retaining nut	55	41	-
Front subframe front retaining bolt	200	148	-
Front subframe rear retaining bolt	115	85	-
Wheel and tire retaining nuts	125	92	-
Hydraulic control unit retaining bolts	9	-	80
A = refer to the procedure for the correct torque sequence	-	-	-

Torque Specifications – Armoured XJ

Description	Nm	lb-ft	lb-in
Rear lower arm ball joint retaining nut	75	55	-
Shock absorber and spring assembly upper retaining nuts	25	18	-

Front Suspension

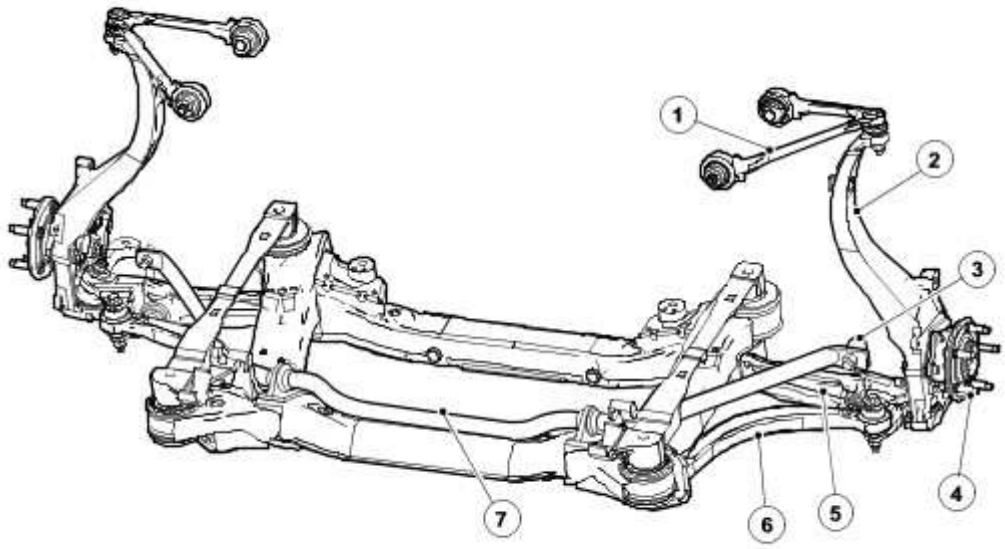

E36781

Item	Part Number	Description
1	—	Upper arm
2	—	Wheel knuckle
3	—	Stabilizer bar link
4	—	Wheel bearing and hub
5	—	Rear lower arm
6	—	Front lower arm
7	—	Stabilizer bar

WARNING: No attempt must be made to weld or repair the front subframe. If it is damaged a new one must be installed. Failure to follow this instruction may result in personal injury.

The independent front suspension is of the double wishbone type and is mounted on the front subframe, the front subframe consisting of a pressed steel fabrication.

The rear of the front subframe provides the mounting points for the power assisted steering gear and the engine mounts.

www.JagDocs.com

A vertical knuckle arm is installed between the lower and upper suspension arms. This wheel knuckle carries the lower arm swivel joint, front hub, ABS rotor, ABS sensor, wheel bearing and brake assembly.

A stabilizer bar is mounted via clamps and bushes to the front subframe and is linked via connecting links to each of the lower arms.

When cornering, weight is naturally transferred to the outer wheel and there is a natural tendency for the inner wheel to lift. The stabilizer bar helps to reduce the vehicle roll.

Front Suspension – Armoured XJ

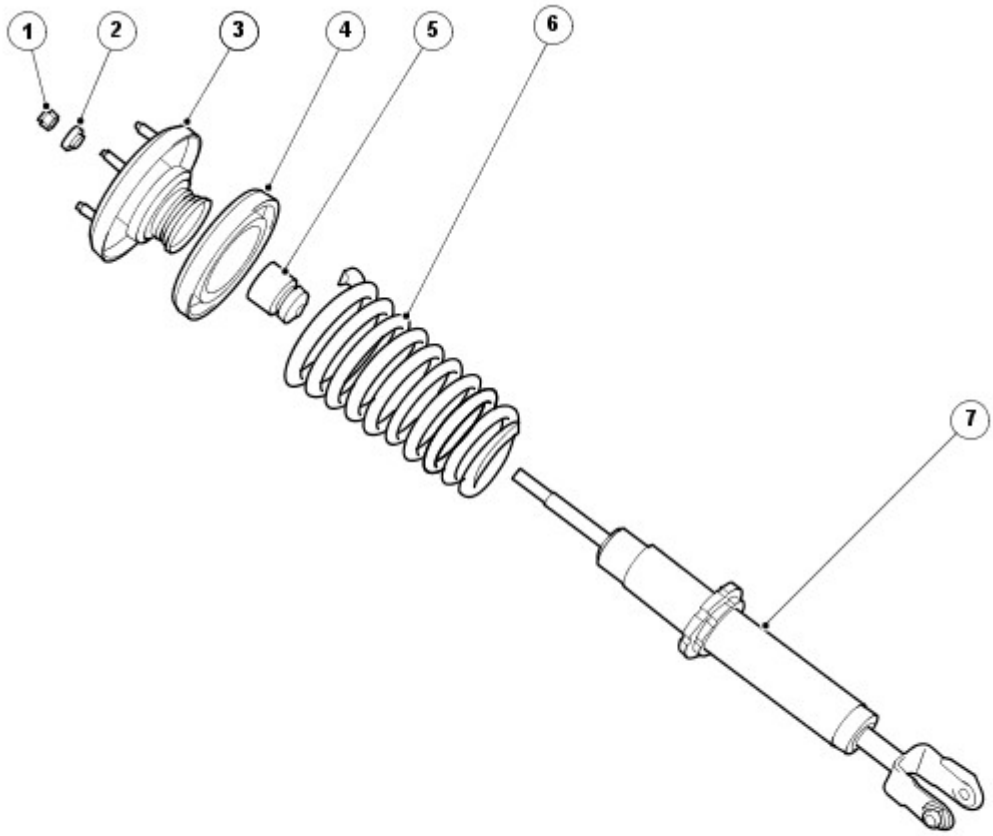

E66778

Item	Part Number	Description
1	—	Retaining nut
2	—	Washer
3	—	Top mount
4	—	Spring upper isolator
5	—	Bump stop
6	—	Spring
7	—	Shock absorber

CAUTION: The shock absorber and spring assemblies must be changed in axle sets. Failure to follow this instruction may result in damage to the vehicle.

The additional weight of the armour on the vehicle means that certain parts have needed to be uprated. The service life of many of the suspension components has been reduced due to the increased vehicle weight.

The armour vehicle is now fitted with shock absorber and spring assemblies to accomodate the extra weight of the armour.

www.JagDocs.com

Front Suspension

For additional information, refer to <<204-00>>

Published: Jun 25, 2002

Front Lower Arm (60.35.53)

Removal

1 . Remove the air deflector. <<501-02>>

2 . Remove the wheel and tire assembly. <<204-04>>

3 . Remove the front lower arm retaining nut and bolt.

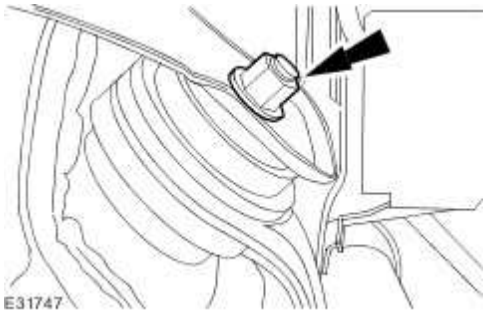

4 . **NOTE:**

Remove the front lower arm.

Remove and discard the nut and bolt.

www.JagDocs.com

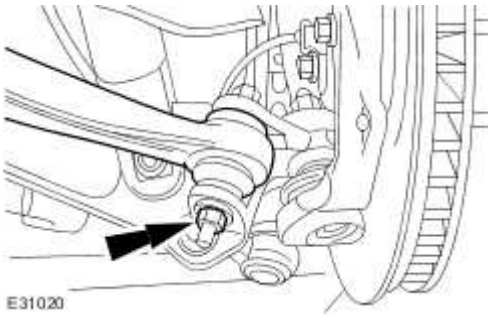

Installation

1 . **NOTE:**

Install a new nut and bolt.

Install the front lower arm.

- Stage 1: Tighten to 60 Nm.
- Stage 2: Tighten 135º.

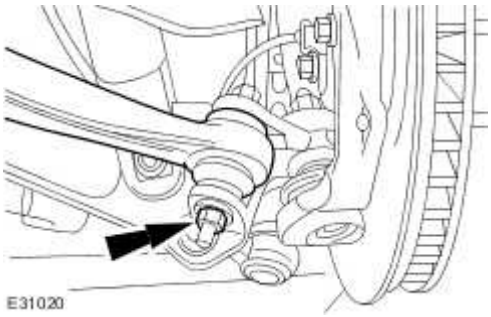

2 . Install the front lower arm inner retaining nut and bolt.

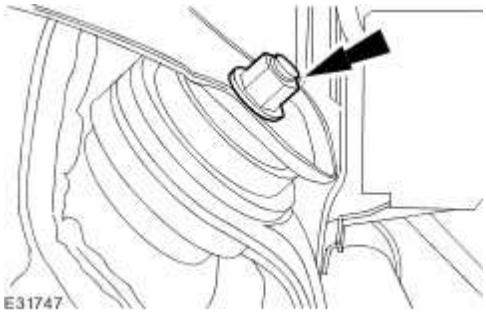

3 . Install the wheel and tire assembly. <<204-04>>

4 . Install the air deflector. <<501-02>>

5 . **CAUTION: The final tightening of the front lower arm inner retaining nut and bolt must be carried out with the vehicle on its wheels. Failure to follow this instruction may result in damage to the component.**

Tighten to 175 Nm.

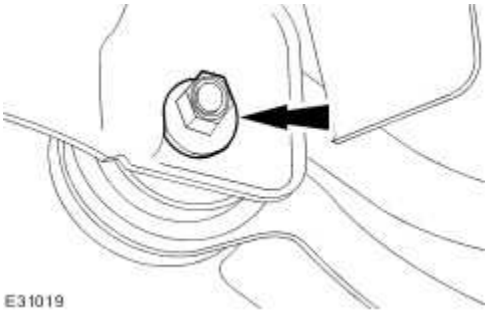

6 . Carry out the camber and caster adjustment. <<204-00>>

www.JagDocs.com

Rear Lower Arm (60.35.54)

Special Service Tools

Ball Joint Splitter
204-327

Removal

1 . Remove the wheel and tire assembly.
For additional information, refer to Wheel and Tire (74.20.05)
For additional information, refer to

2 . Remove the stabilizer bar link retaining nut.

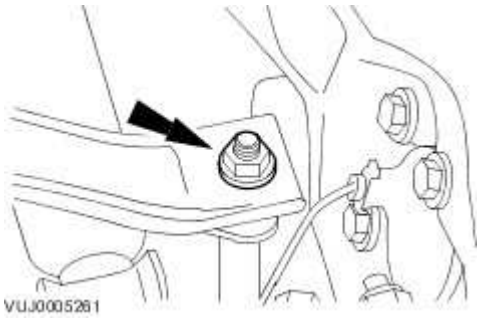

3 . Remove the stabilizer bar link.

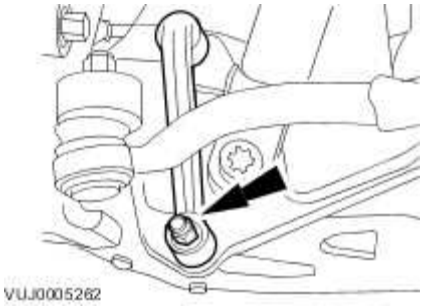

4 . Detach the headlamp leveling sensor retaining clip.

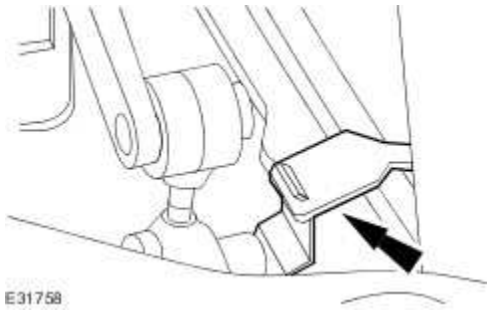

5 . Detach the tie rod end.

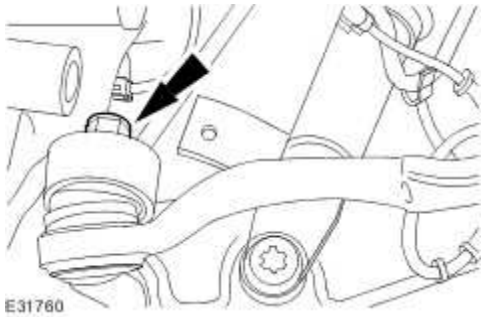

6 . Detach the air spring assembly.

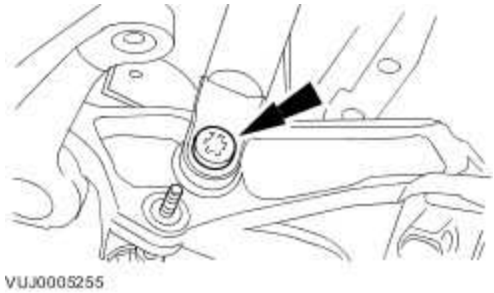

7 . Detach the rear lower arm.

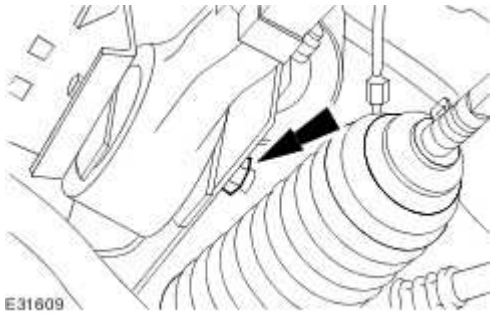

www.JagDocs.com

8 . Detach the front lower arm.

Remove and discard the retaining nut and bolt.

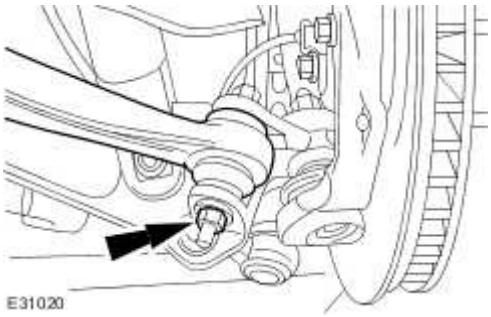

9 . **CAUTION: Prevent the rear lower arm ball joint ball pin hexagon from rotating. Failure to follow this instruction may result in damage to the lower ball joint boot.**

Loosen the rear lower arm ball joint retaining nut.

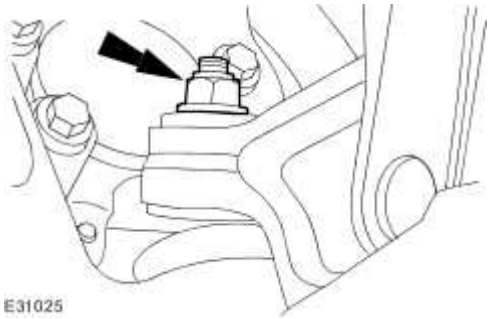

10 . **CAUTION: Prevent the rear lower arm ball joint ball pin hexagon from rotating. Failure to follow this instruction may result in damage to the lower ball joint boot.**

Adjust the rear lower arm ball joint retaining nut until the ball joint thread cannot be seen.

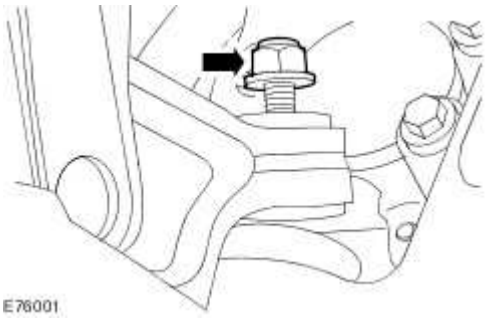

11. **WARNING: Make sure the special tool is supported while carrying out the operation. Failure to follow this instruction may result in personal injury.**

CAUTION: Make sure the special tool is supported while carrying out the operation. Failure to follow this instruction may result in damage to the special tool.

CAUTION: Make sure the special tool is correctly located and the lower ball joint boot is not damaged while carrying out the operation. Failure to follow this instruction may result in damage to the component.

Using the special tool, release the rear lower arm ball joint from the wheel knuckle lower pivot.

- Tighten the special tool adjusting bolt to a maximum of 60 Nm.
- If the rear lower arm ball joint releases from the wheel knuckle lower pivot using no more than 60 Nm on the special tool adjusting bolt, proceed to step 13.
- If the rear lower arm ball joint does not release from the wheel knuckle lower pivot using no more than 60 Nm on the special tool adjusting bolt, proceed to step 12.

www.JagDocs.com

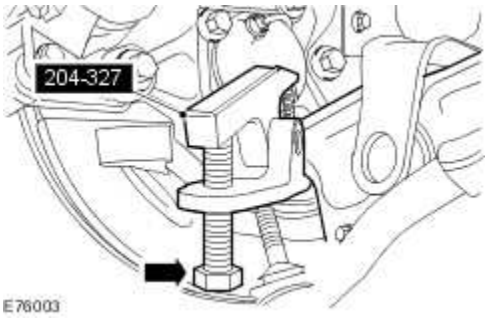

12. **WARNING: Make sure the special tool is supported while carrying out the operation. Failure to follow this instruction may result in personal injury.**

CAUTION: Make sure the special tool is supported while carrying out the operation. Failure to follow this instruction may result in damage to the special tool.

CAUTION: Make sure the special tool is correctly located and the lower ball joint boot is not damaged while carrying out the operation. Failure to follow this instruction may result in damage to the component.

NOTE:

Do not carry out this step if the rear lower arm ball joint released from the wheel knuckle lower pivot in step 11.

Using the special tool, release the rear lower arm ball joint from the wheel knuckle lower pivot.

1) Tighten the special tool adjusting bolt to a maximum of 60 Nm.

2) Strike the top surface of the special tool directly above the rear lower arm ball joint at the point indicated using a copper and hide mallet.

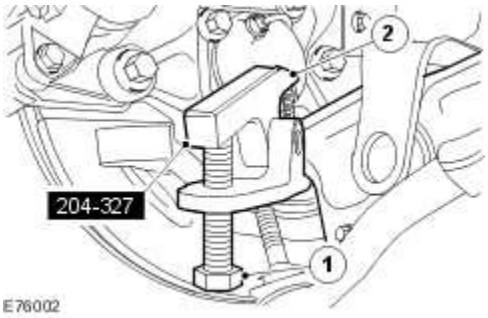

13. **CAUTION: Prevent the rear lower arm ball joint ball pin hexagon from rotating. Failure to follow this instruction may result in damage to the lower ball joint boot.**

Remove the rear lower arm.

- Remove and discard the retaining nut.

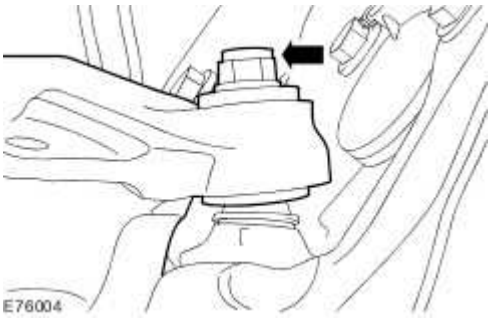

Installation

1. **CAUTION: Prevent the rear lower arm ball joint ball pin hexagon from rotating. Failure to follow this instruction may result in damage to the lower ball joint boot.**

NOTE:

Install a new retaining nut.

Install the rear lower arm.

www.JagDocs.com

- Tighten to 92 Nm.

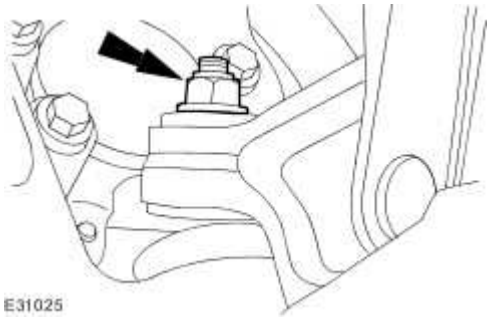

2 . **NOTE:**

Install a new retaining nut and bolt.

Attach the front lower arm.

- Stage 1: Tighten to 60 Nm.
- Stage 2: Tighten 135º.

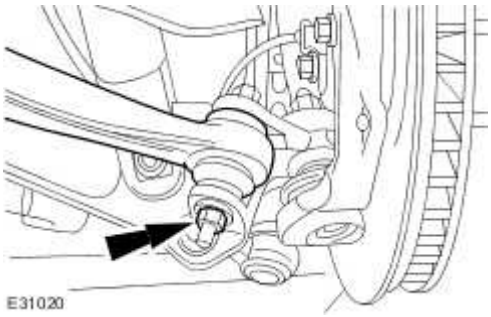

3 . Attach the rear lower arm.

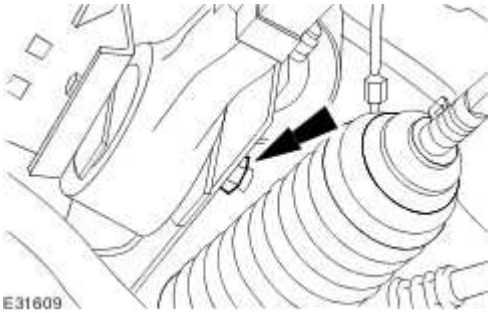

4 . Attach the air spring assembly.

Tighten to 175 Nm.

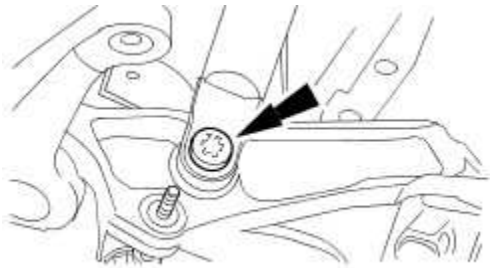

5 . Attach the tie rod end.

Tighten to 75 Nm.

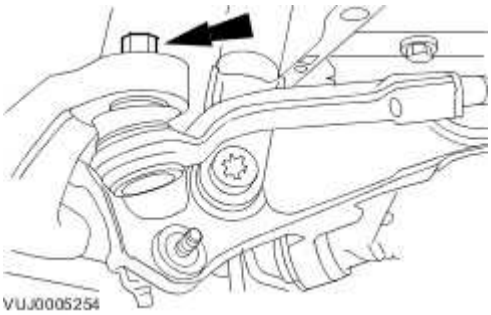

6 . Attach the head lamp leveling sensor retaining clip.

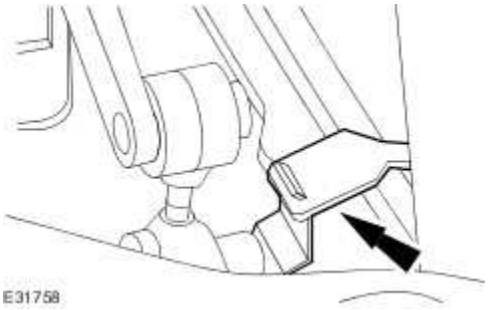

www.JagDocs.com

7 . Install the stabilizer bar link.

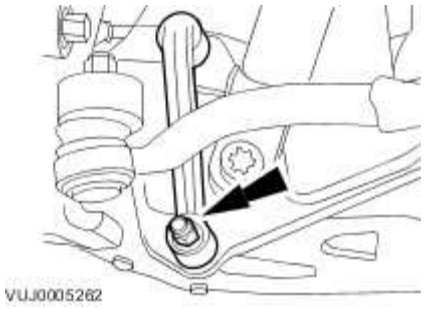

8 . Attach the stabilizer bar link.

Tighten to 43 Nm.

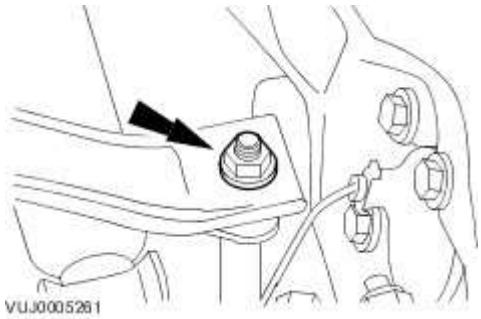

9 . Install the wheel and tire assembly.
For additional information, refer to Wheel and Tire (74.20.05)
For additional information, refer to

10 . **CAUTION: The final tightening of the rear lower arm inner retaining nut and bolt must be carried out with the vehicle on its wheels.**

Tighten to 175 Nm.

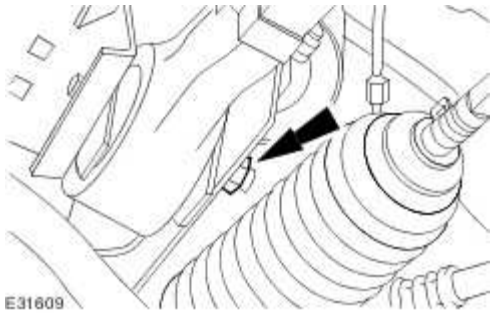

11 . Tighten to 70 Nm.

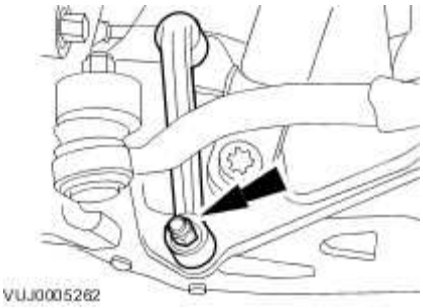

12 . Carry out the camber and caster adjustment.
For additional information, refer to Camber and Caster Adjustment

www.JagDocs.com

Rear Lower Arm Bushing (60.35.56)

Special Service Tools

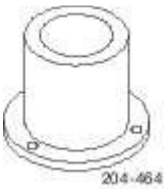

Guide Bush Installer
204-464

Remover Bush
204-333

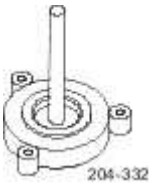

Base Guide - Bush Installer
204-332

Installer Bush
204-465

Replacer bush
204-334

Removal

1 . Remove the rear lower arm.
For additional information, refer to

2 . **NOTE:**

Note the orientation of the bushing before removal.

Using the special tools remove the rear lower arm bushing.

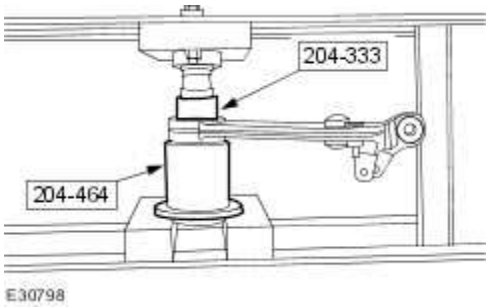

Installation

1 . Install the special tools to the rear lower arm.

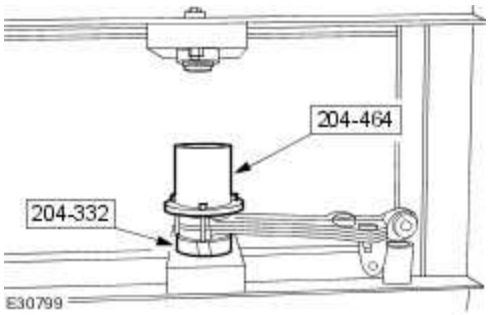

www.JagDocs.com

2 . Use the installer, align the special tools to the rear lower arm.

Tighten the retaining bolts

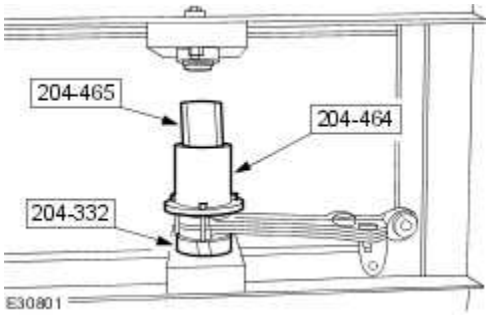

3 . **NOTE:**

Make sure the bushing is correctly orientated.

Install the rear lower arm bushing to the special tool.

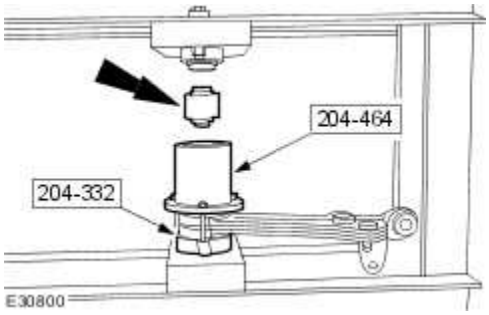

4 . Using the special tools, partially install the rear lower arm bushing.

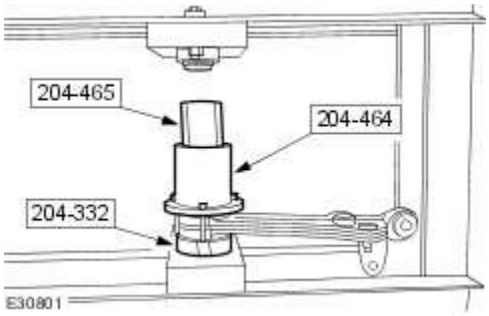

5 . Remove the special tool from the rear lower arm bushing.

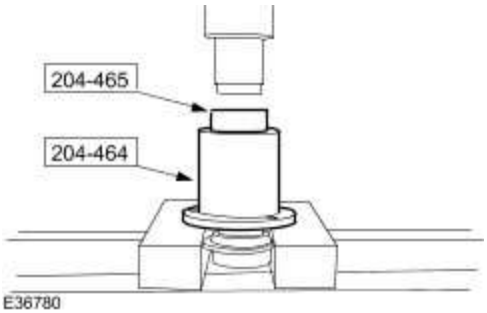

6 . Using the special tool, completely install the rear lower arm bushing.

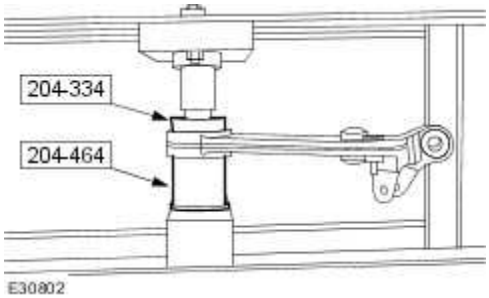

7 . Install the rear lower arm.
For additional information, refer to

www.JagDocs.com

Shock Absorber Bushing (60.30.16)

Special Service Tools

Remover Support Bush
204-335

Remover Bush
204-336

Replacer Support - Bush
204-337

Replacer - Bush
204-338

Removal

1 . Remove the rear lower arm.
For additional information, refer to

2. **CAUTION: Make sure the supporting tools are orientated correctly to the rear lower arm. Failure to follow this instruction may cause damage to the component.**

Using the special tools remove the shock absorber bushing.

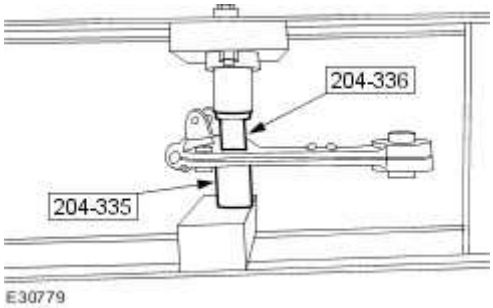

Installation

1 . **NOTE:**

Make sure the shock absorber bushing boot is correctly located into the special tool.

Install the shock absorber bushing to the special tool.

2. **CAUTION: Make sure the supporting tools are orientated correctly to the rear lower arm. Failure to follow this instruction may cause damage to the component.**

Using the special tools install the shock absorber bushing.

www.JagDocs.com

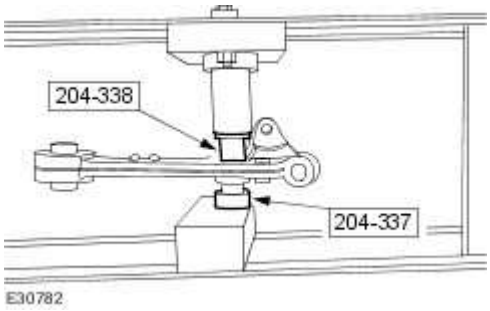

3 . Install the rear lower arm.
For additional information, refer to

Front Stabilizer Bar - 3.0L (60.10.01)

Special Service Tools

Powertrain Assembly Jack
HTJ1200-02

Engine Lifting Bracket
303-661

Engine Support Bracket
303-021

Removal

1 . Remove the cowl vent screen. <<501-02>>

2 . Remove the cabin air filter.

1) Detach the cabin air filter.

2) Remove the cabin air filter.

www.JagDocs.com

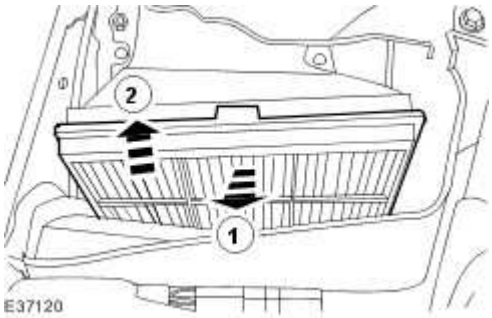

3 . Remove the cabin air filter housing.

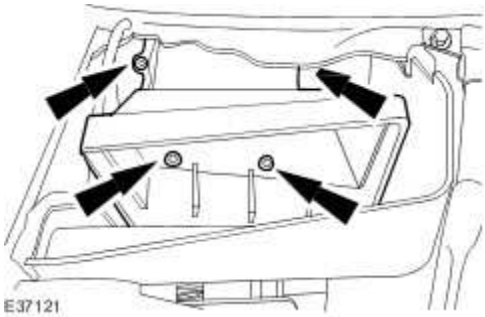

4 . Remove the right-hand engine compartment panel.

1) Remove the retaining bolt.

2) Remove the right-hand engine compartment panel.

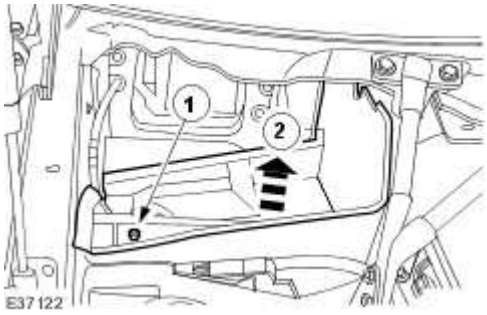

5 . Remove the left-hand engine compartment access panel.

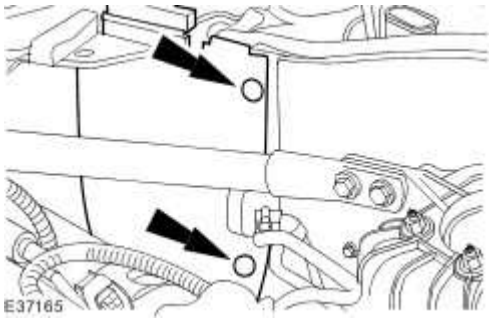

6 . Detach the dipstick tube.

- Remove the dipstick tube retaining bolt.

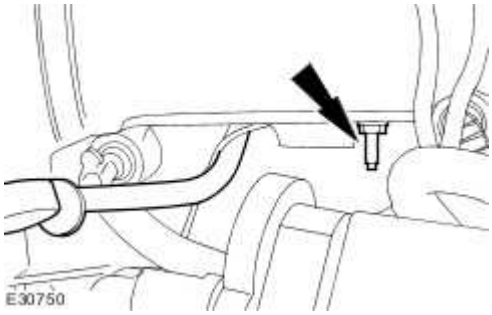

7 . **NOTE:**

Left-hand shown, right-hand similar.

Loosen the exhaust manifold retaining nut.

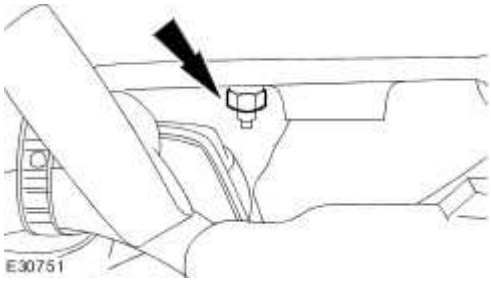

8 . **NOTE:**

Left-hand shown, right-hand similar.

www.JagDocs.com

Install the special tool to the exhaust manifold.

Install the retaining bolt.

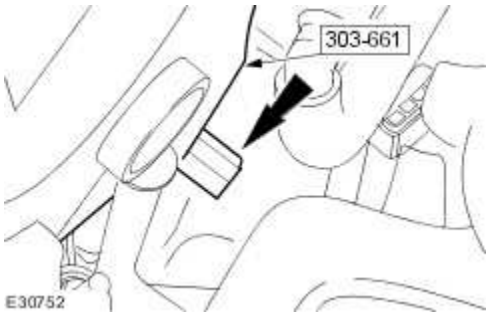

9 . **NOTE:**

Left-hand shown, right-hand similar.

Install the retaining bolt.

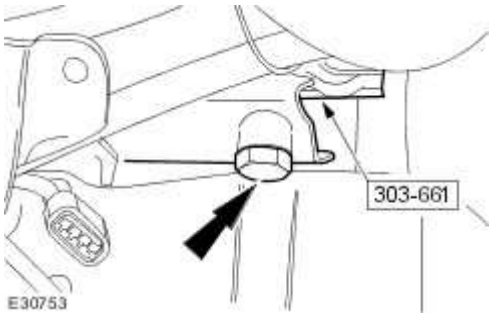

10 . Install the special tool support bars to the special tool.

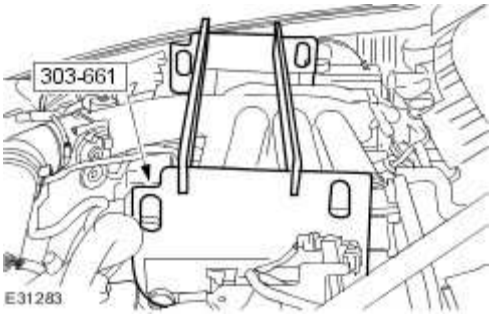

11 . Install the special tool.

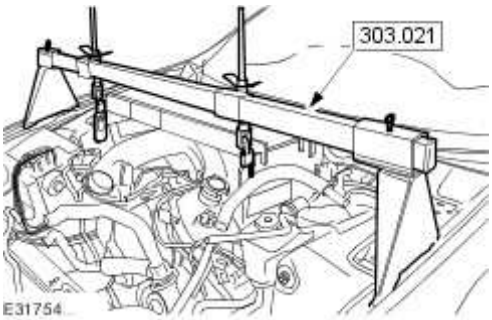

12 . **NOTE:**

Right-hand shown, left-hand similar.

Support the radiator.

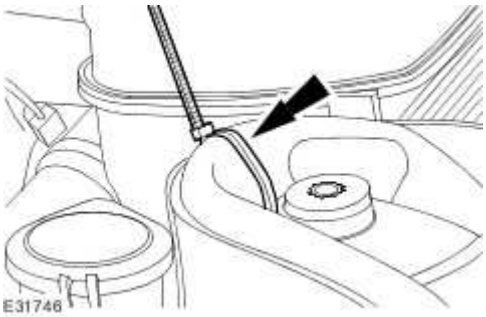

13 . Remove the radiator splash shield. <<501-02>>

14 . Remove the air deflector.

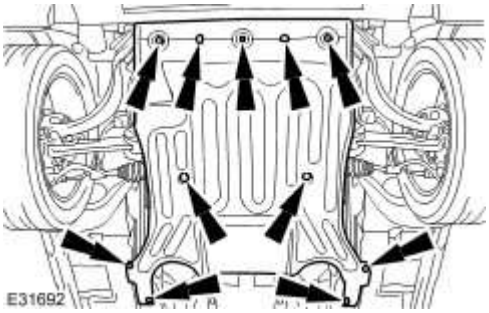

15 . **NOTE:**

Left-hand shown, right-hand similar.

www.JagDocs.com

Remove the front wheel and tire assembly.

16 . **NOTE:**

Left-hand shown, right-hand similar.

Remove the stabilizer bar link retaining nut.

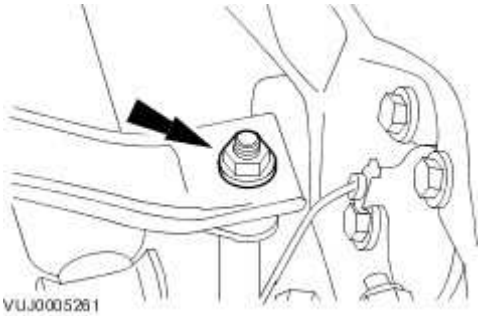

17 . **NOTE:**

Left-hand shown, right-hand similar.

Remove the stabilizer bar link.

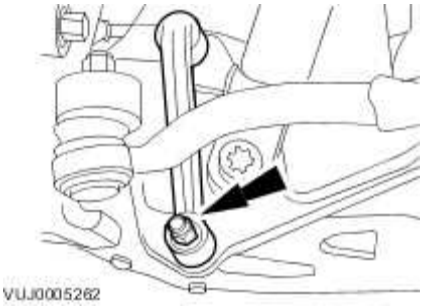

18 . Detach the steering gear.

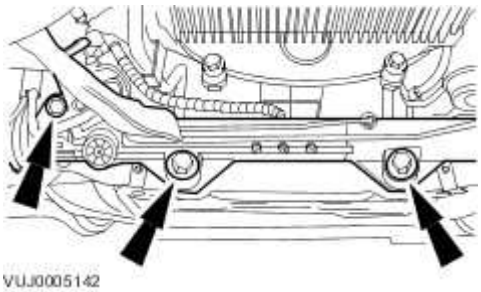

19 . **NOTE:**

Left-hand shown, right-hand similar.

Detach the headlamp leveling sensor retaining clip.

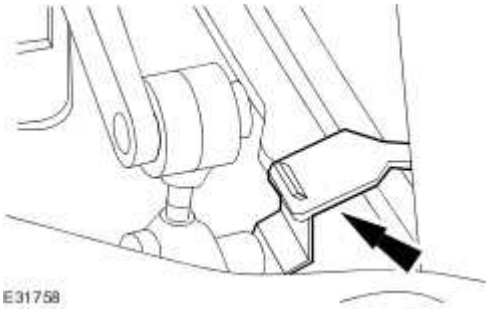

20 . **NOTE:**

Left-hand shown, right-hand similar.

Disconnect the headlamp leveling sensor electrical connector.

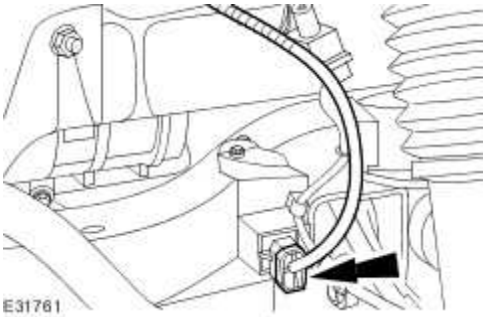

www.JagDocs.com

21 . **NOTE:**

Left-hand shown, right-hand similar.

Loosen the front lower arm retaining nut and bolt.

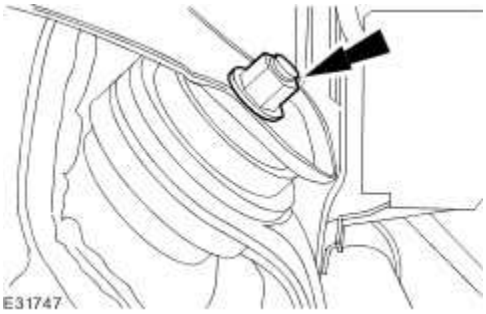

22 . **NOTE:**

Left-hand shown, right-hand similar.

Loosen the rear lower arm retaining nut and bolt.

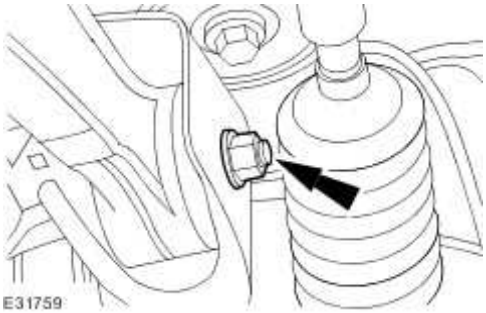

23 . **NOTE:**

Left-hand shown, right-hand similar.

Detach the air spring assembly.

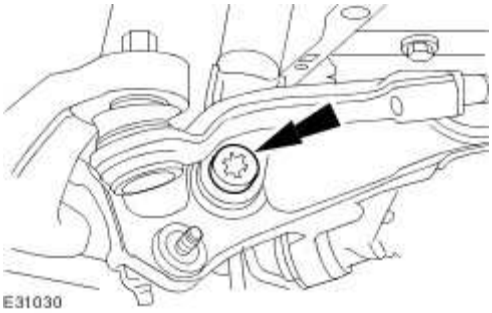

24 . **NOTE:**

Left-hand shown, right-hand similar.

Detach the engine mount.

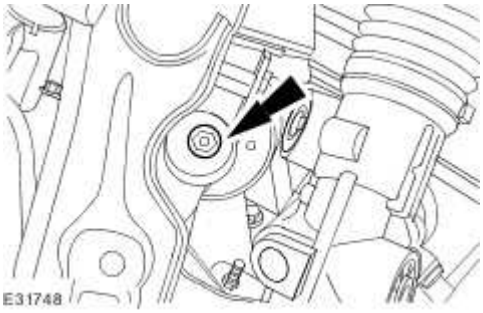

25 . Install the special tool.

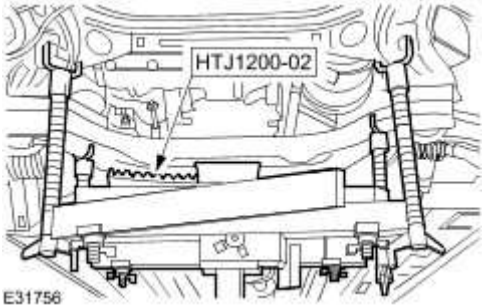

26 . **NOTE:**

Left-hand shown, right-hand similar.

Remove the front subframe front retaining bolt.

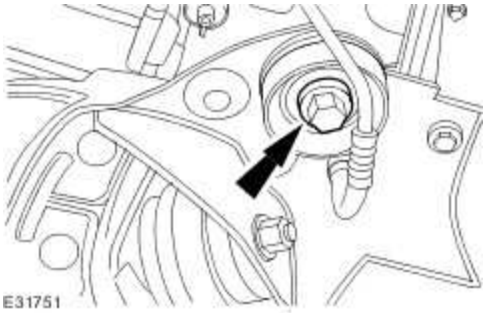

www.JagDocs.com

27 . **NOTE:**

Left-hand shown, right-hand similar.

Remove the front subframe rear retaining bolt.

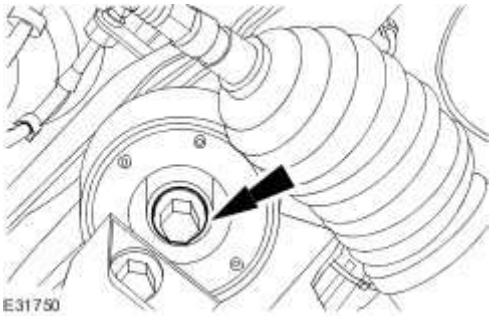

28 . Lower the special tool by approximately 200 mm (7.9 in).

29 . **NOTE:**

Left-hand shown, right-hand similar.

Remove the stabilizer bar clamp.

30 . Remove the stabilizer bar.

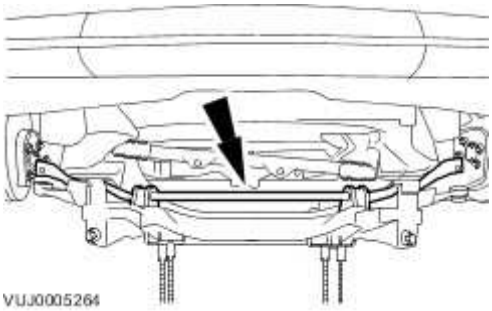

Installation

1 . Install the stabilizer bar

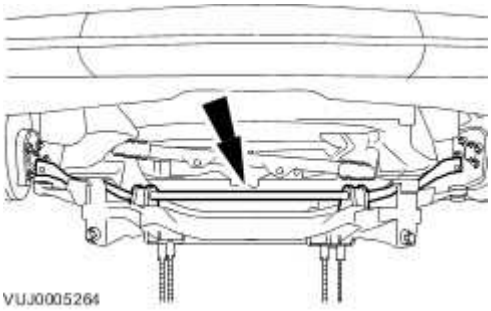

2 . **NOTE:**

Left-hand shown, right-hand similar.

Install the stabilizer bar clamp.

Tighten to 55 Nm.

3 . Using the special tool, install the front subframe.

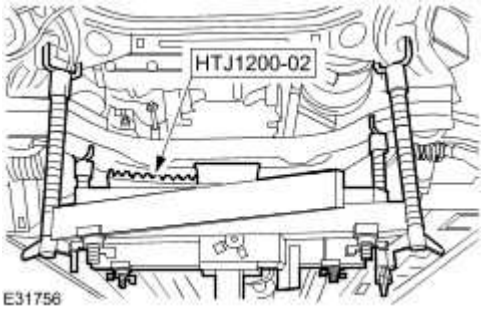

www.JagDocs.com

4 . Check the front subframe alignment. <<502-00>>

5 . **NOTE:**

Left-hand shown, right-hand similar.

Install the front subframe front retaining bolt.

Tighten to 200 Nm.

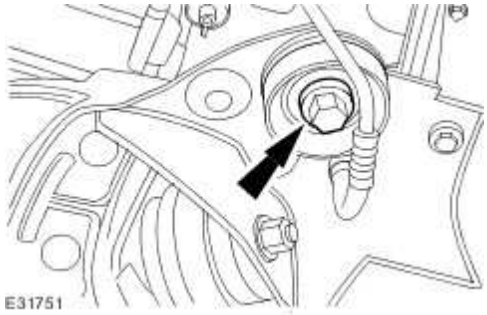

6 . **NOTE:**

Left-hand shown, right-hand similar.

Install the front subframe rear retaining bolt.

Tighten to 115 Nm.

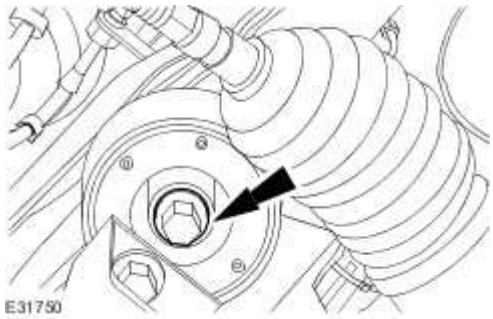

7 . Remove the special tool.

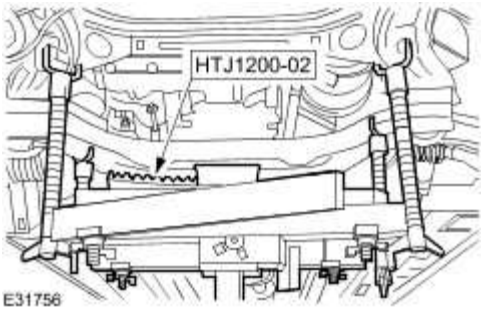

8 . **NOTE:**

Left-hand shown, right-hand similar.

Attach the engine mount.

- Tighten to 55 Nm.

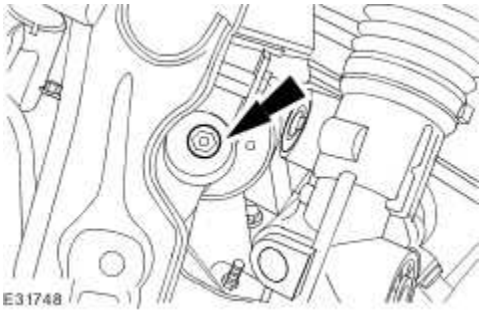

9 . **NOTE:**

Left-hand shown, right-hand similar.

Attach the air spring assembly.

- Tighten to 175 Nm.

www.JagDocs.com

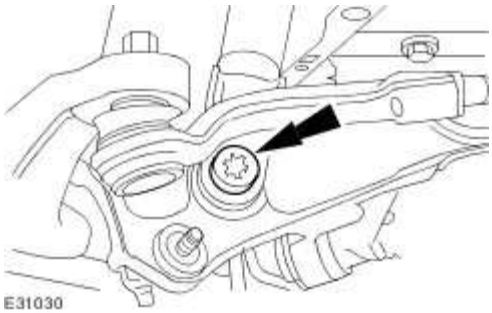

10 . **NOTE:**

Left-hand shown, right-hand similar.

Tighten the rear lower arm retaining nut and bolt.

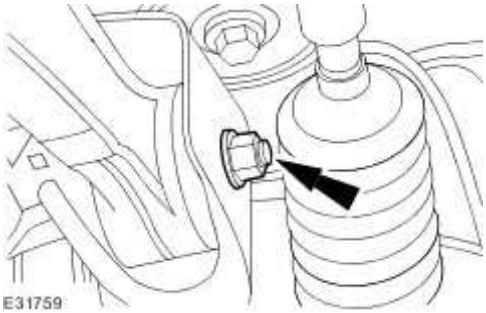

11 . **NOTE:**

Left-hand shown, right-hand similar.

Tighten the front lower arm retaining nut and bolt.

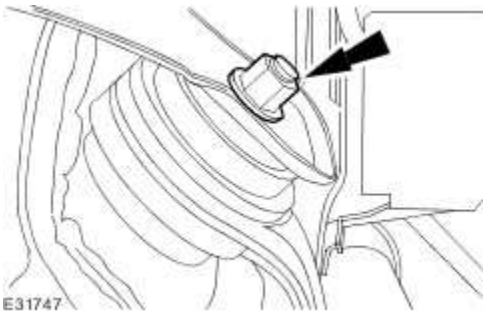

12 . Install the steering gear.

Tighten to 100 Nm.

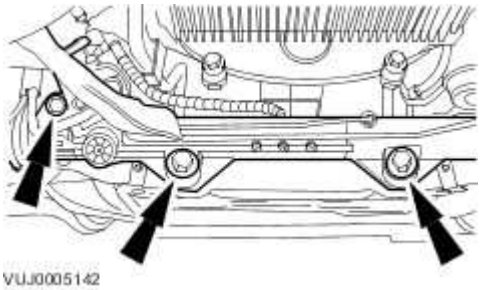

13 . **NOTE:**

Left-hand shown, right-hand similar.

Connect the headlamp leveling sensor electrical connector.

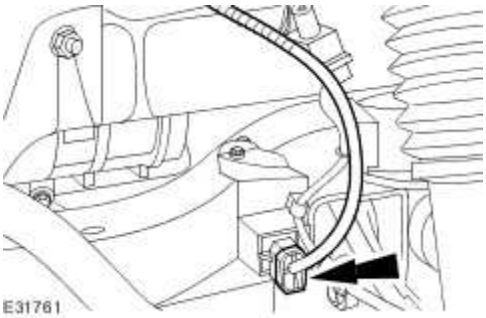

14 . **NOTE:**

Left-hand shown, right-hand similar.

Attach the headlamp leveling sensor retaining clip.

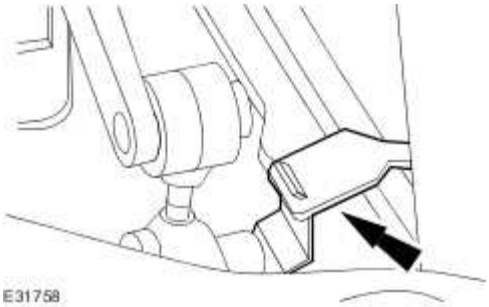

www.JagDocs.com

15 . **NOTE:**

Left-hand shown, right-hand similar.

Install the stabilizer bar link.

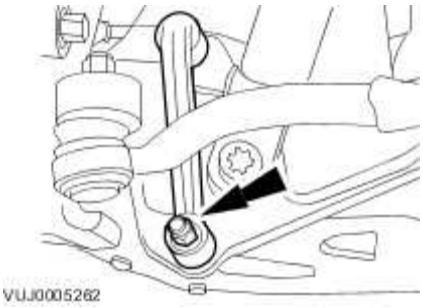

16 . **NOTE:**

Left-hand shown, right-hand similar.

Attach the stabilizer bar link.

- Tighten to 43 Nm.

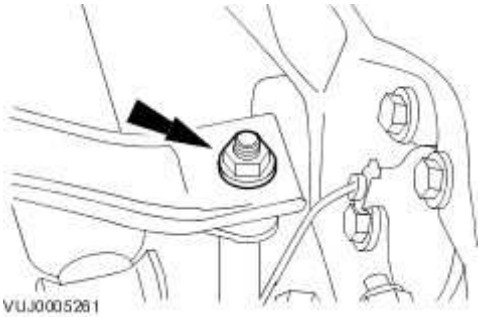

17 . **NOTE:**

Left-hand shown, right-hand similar.

Install the front wheel and tire assembly.

- Tighten to 125 Nm.

18 . Install the air deflector.

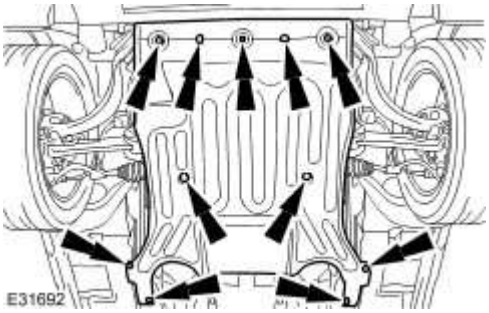

19 . Install the radiator splash shield. <<501-02>>

20 . **CAUTION: The final tightening of the rear lower arm inner retaining nut and bolt must be carried out with the vehicle on its wheels. Failure to follow this instruction may result in damage to the component.**

NOTE:

Left-hand shown, right-hand similar.

Tighten to 175 Nm.

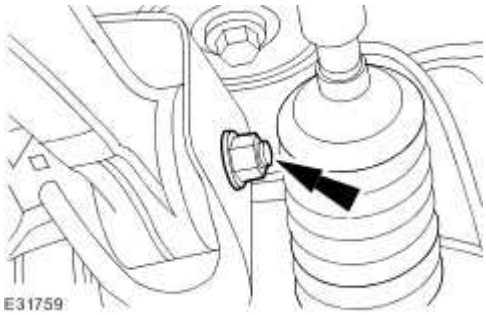

www.JagDocs.com

21 . **CAUTION: The final tightening of the rear lower arm inner retaining nut and bolt must be carried out with the vehicle on its wheels. Failure to follow this instruction may result in damage to the component.**

NOTE:

Left-hand shown, right-hand similar.

Tighten to 175 Nm.

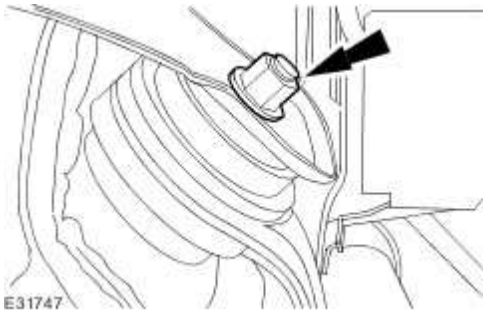

22 . **NOTE:**

Left-hand shown, right-hand similar.

Tighten to 70 Nm.

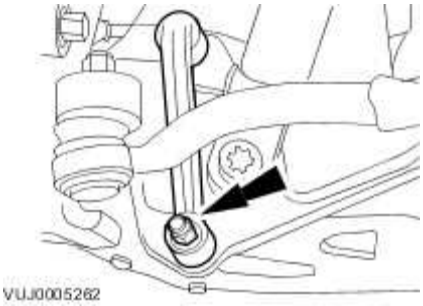

23 . **NOTE:**

Right-hand shown, left-hand similar.

Remove the radiator support.

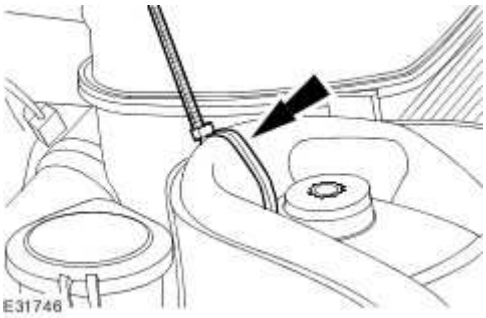

24 . Remove the special tool.

Loosen the special tool adjustment bolts.

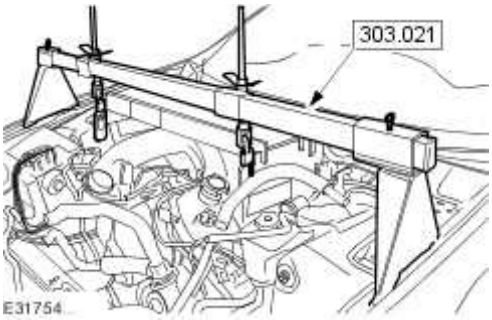

25 . Remove the special tool support bars from the special tool.

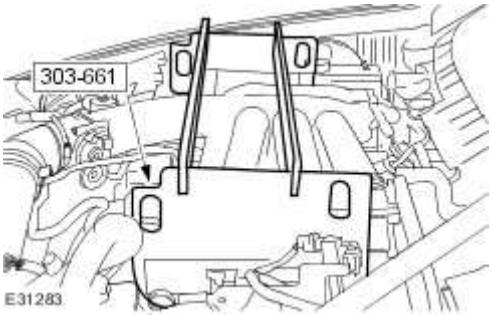

26 . **NOTE:**

Left-hand shown, right-hand similar.

Remove the retaining bolt.

www.JagDocs.com

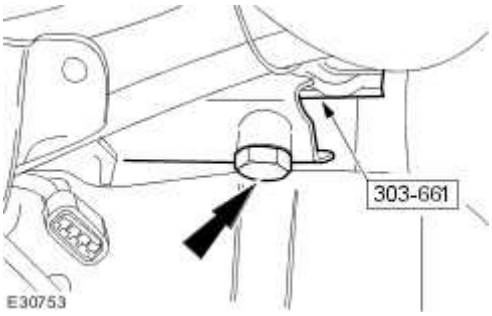

27 . **NOTE:**

Left-hand shown, right-hand similar.

Remove the special tool from the exhaust manifold.

- Remove the retaining bolt.

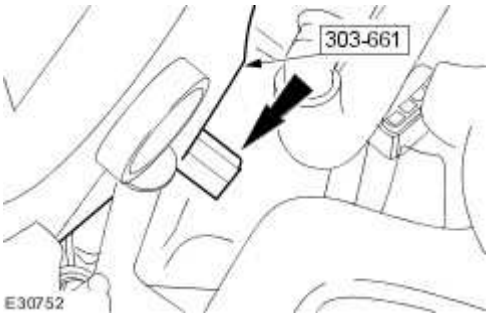

28 . **NOTE:**

Left-hand shown, right-hand similar.

Install the exhaust manifold retaining nut.

- Tighten to 20 Nm.

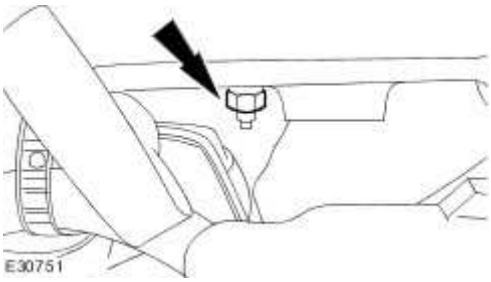

29 . Attach the dipstick tube.

- Install the dipstick tube retaining bolt.
- Tighten to 10 Nm.

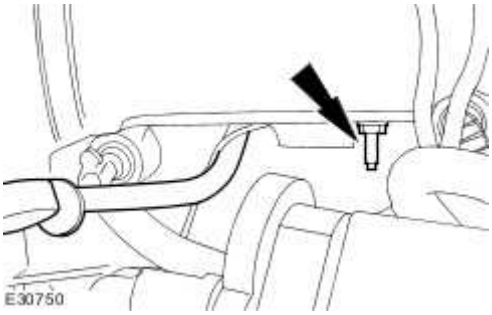

30 . Install the left-hand engine compartment access panel.

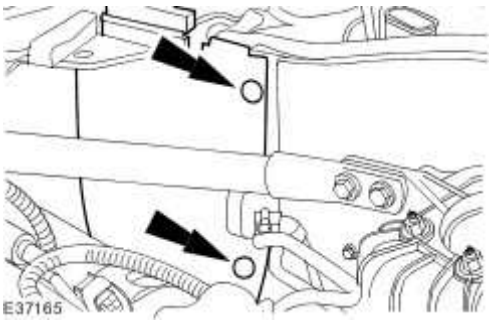

31 . Install the right-hand engine compartment panel.

1) Install the right-hand engine compartment panel.

2) Install the retaining bolt.

www.JagDocs.com

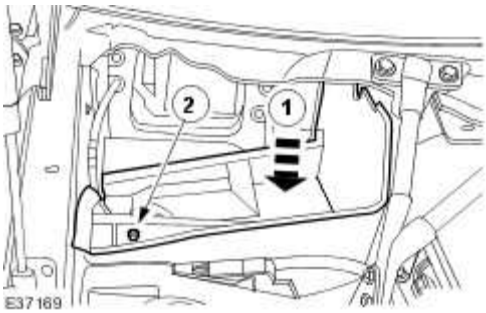

32 . Install the cabin air filter housing.

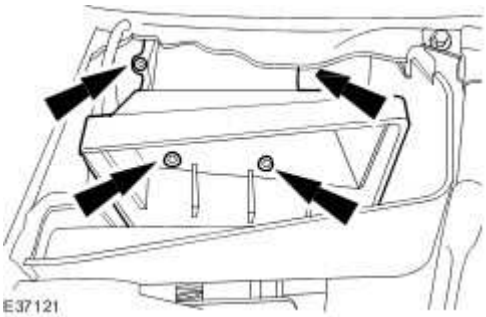

33 . Attach the cabin air filter.

1) Install the cabin air filter.

2) Attach the cabin air filter.

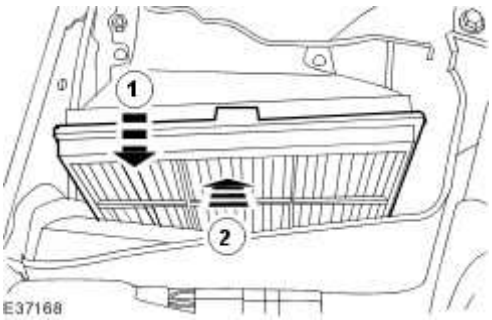

34 . Install the cowl vent screen. <<501-02>>

35 . Check the caster and camber adjustment. <<204-00>>

Front Stabilizer Bar - 3.5L/4.2L (60.10.01)

Special Service Tools

Powertrain Assembly Jack
HTJ1200-02

Engine Lifting Brackets
303-749

Engine Support Bracket
303-021

Subframe Alignment Bolt
502-007

Removal

Vehicles with 3.5L or 4.2L engine without supercharger

1 Remove the throttle body.
. For additional information, refer to Throttle Body - Vehicles Without: Supercharger, VIN Range: G00442->G45703 (19.70.04)
For additional information, refer to Throttle Body - Vehicles Without: Supercharger, VIN Range: G45704->G99999 (19.70.04)

www.JagDocs.com

All vehicles

2 . **NOTE:**

Right-hand shown, left-hand similar.

Support the radiator.

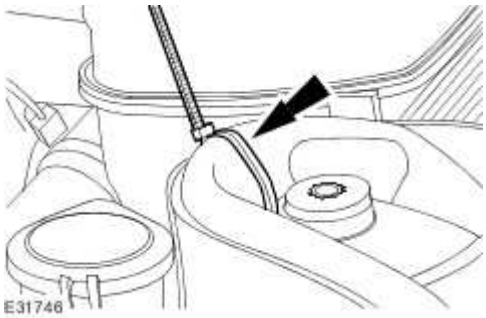

3 **NOTE:**

.

Vehicles with 3.5L or 4.2L engine without supercharger shown, vehicles with 4.2L engine with supercharger similar.

Install the special tools.

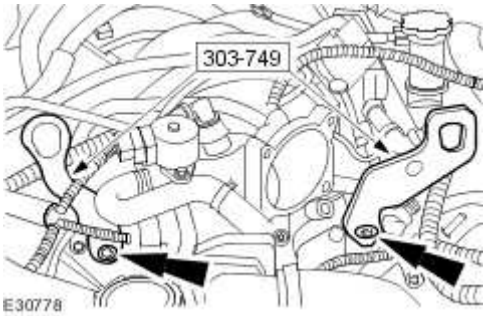

4 **NOTE:**

.

Vehicles with 3.5L or 4.2L engine without supercharger shown, vehicles with 4.2L engine with supercharger similar.

Install the special tool.

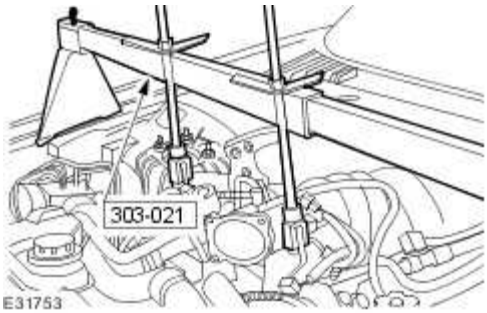

5 . Remove the radiator splash shield.
For additional information, refer to Radiator Splash Shield (76.22.90)

6 . Remove the air deflector.

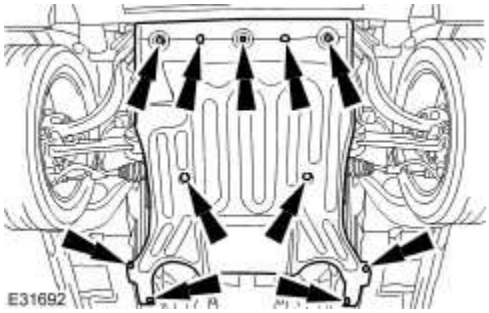

7 . Remove the front wheels and tires.
For additional information, refer to Wheel and Tire (74.20.05)

8 . **NOTE:**

Left-hand shown, right-hand similar.

Remove the stabilizer bar link retaining nut.

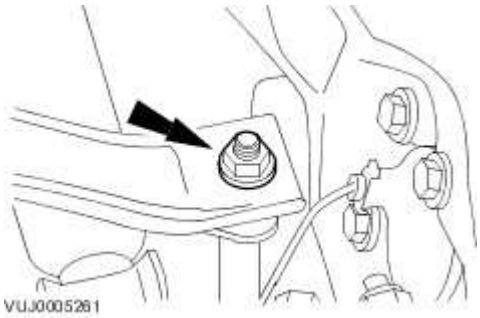

www.JagDocs.com

9 . **NOTE:**

Left-hand shown, right-hand similar.

Remove the stabilizer bar link.

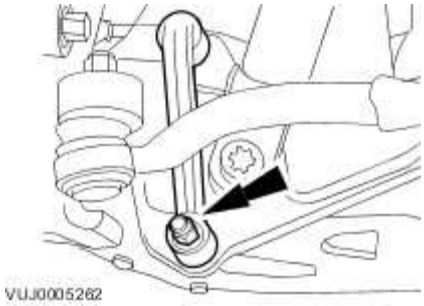

10 . Detach the steering gear.

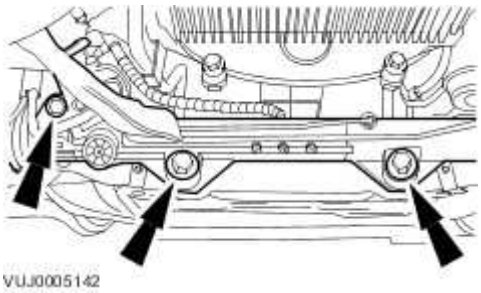

11 . **NOTE:**

Left-hand shown, right-hand similar.

Detach the headlamp leveling sensor retaining clip.

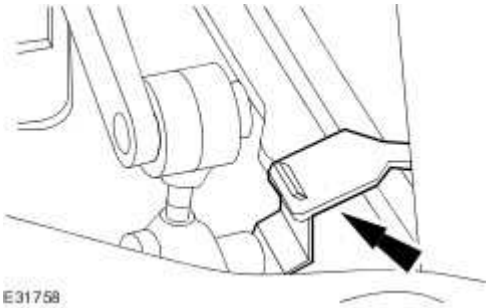

12 . **NOTE:**

Left-hand shown, right-hand similar.

Disconnect the headlamp leveling sensor electrical connector.

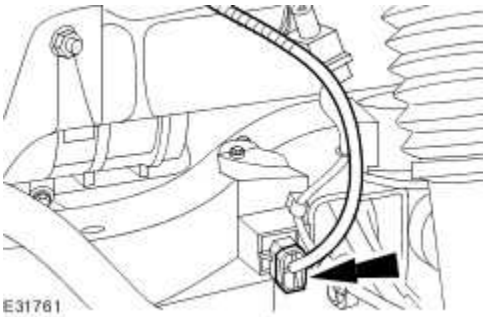

13 . **NOTE:**

Left-hand shown, right-hand similar.

Loosen the front lower arm retaining nut and bolt.

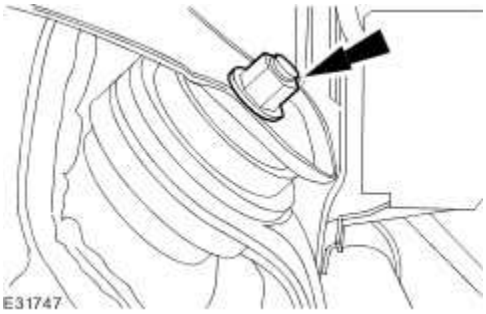

14 . **NOTE:**

Left-hand shown, right-hand similar.

Loosen the rear lower arm retaining nut and bolt.

www.JagDocs.com

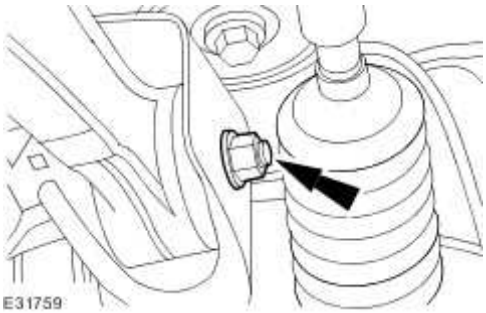

15 . **NOTE:**

Left-hand shown, right-hand similar.

Detach the air spring assembly.

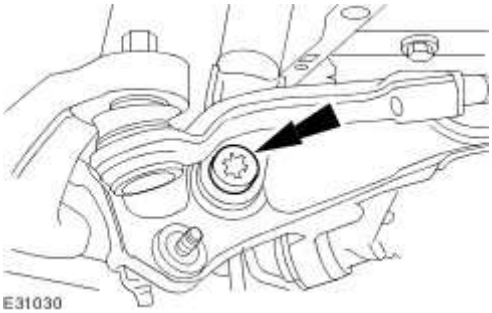

16 . **NOTE:**

Left-hand shown, right-hand similar.

Detach the engine mount.

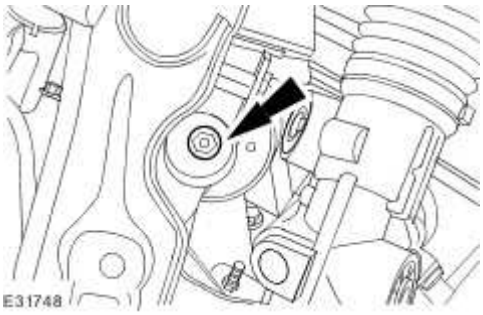

17 . Install the special tool.

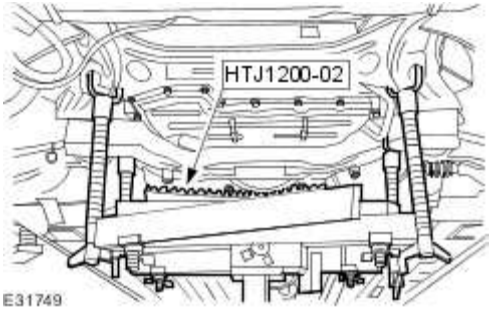

18 . **NOTE:**

Left-hand shown, right-hand similar.

Remove the front subframe front retaining bolts.

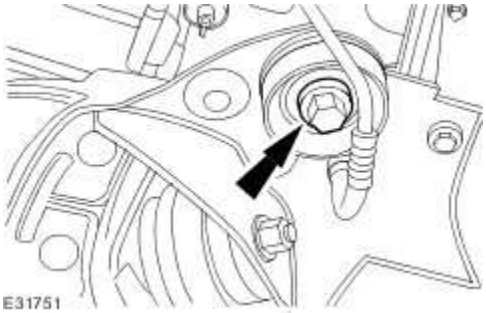

19 . **NOTE:**

Left-hand shown, right-hand similar.

Remove the front subframe rear retaining bolts.

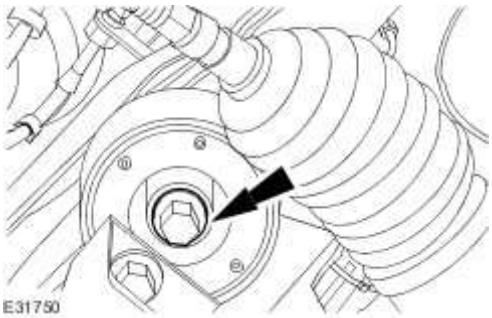

20 . Lower the special tool by approximately 200 mm (7.9 in).

www.JagDocs.com

21 . **NOTE:**

Left-hand shown, right-hand similar.

Remove the stabilizer bar clamp.

22 . Remove the stabilizer bar.

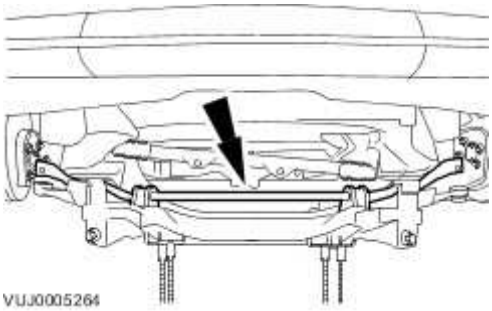

Installation

All vehicles

1 . Install the stabilizer bar

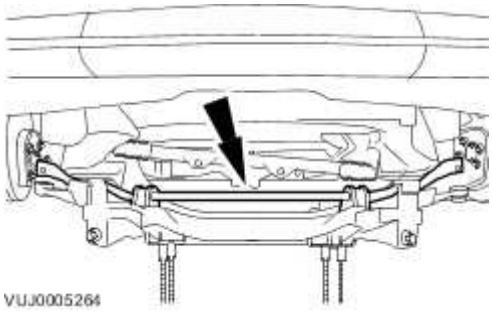

2 . **NOTE:**

Left-hand shown, right-hand similar.

Install the stabilizer bar clamp.

Tighten to 55 Nm.

3 . Using the special tool, install the front subframe.

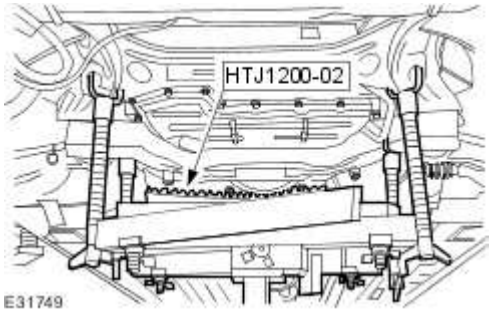

4 . Install the special tool.

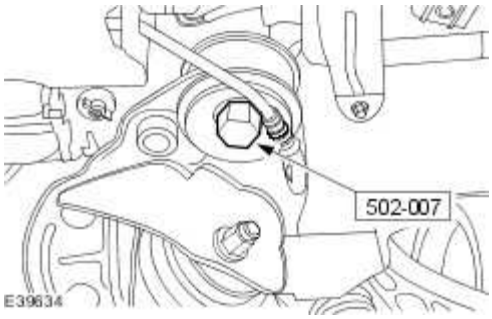

5 . Install the special tool.

www.JagDocs.com

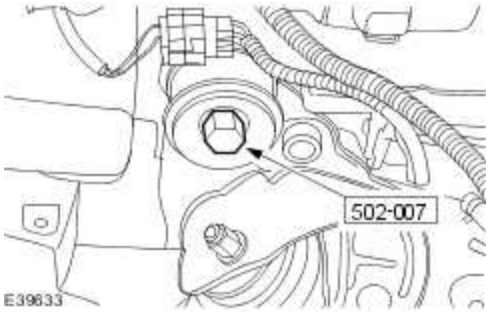

6 . **NOTE:**

Left-hand shown, right-hand similar.

Install the front subframe rear retaining bolts.

- Tighten to 115 Nm.

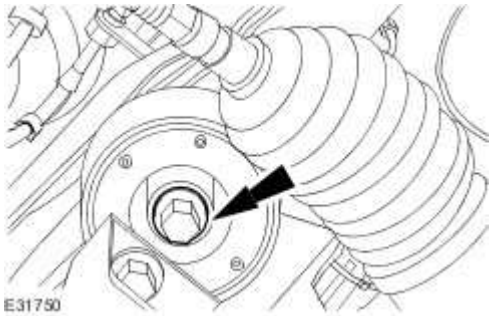

7 . Remove the special tool.

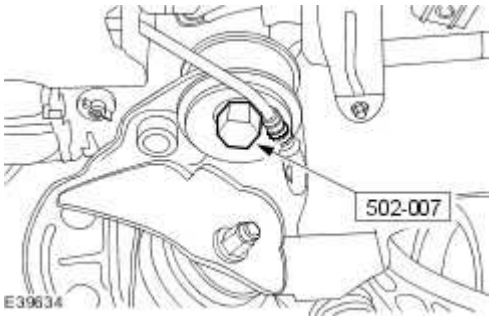

8 . Install the front subframe front retaining bolt.

- Stage 1: Tighten to 100 Nm.

- Stage 2: Tighten to 270°.

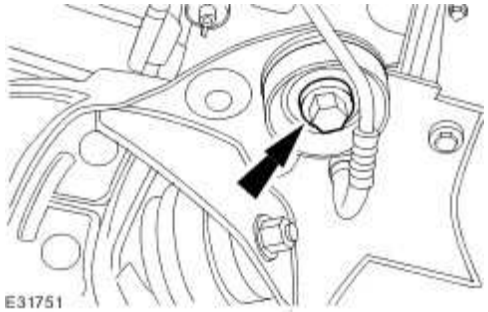

9 . Remove the special tool.

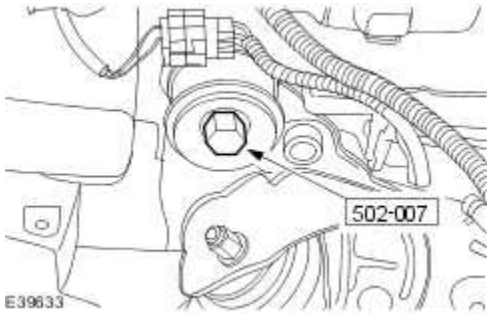

10 . Install the front subframe front retaining bolt.

- Stage 1: Tighten to 100 Nm.
- Stage 2: Tighten to 270°.

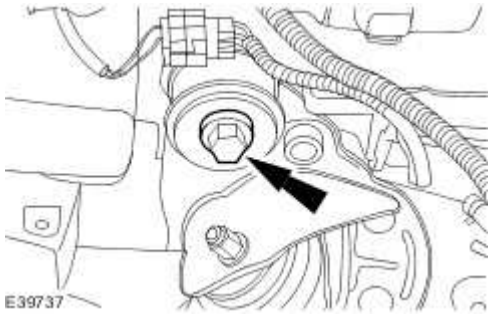

11 . Remove the special tool.

www.JagDocs.com

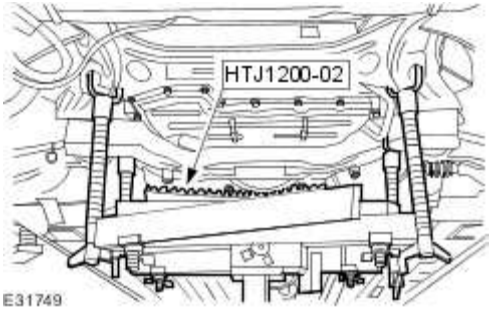

12 . **NOTE:**

Left-hand shown, right-hand similar.

Attach the engine mount.

Tighten to 55 Nm.

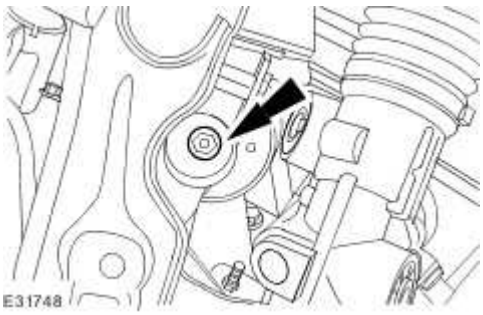

13 . **NOTE:**

Left-hand shown, right-hand similar.

Attach the air spring assembly.

Tighten to 175 Nm.

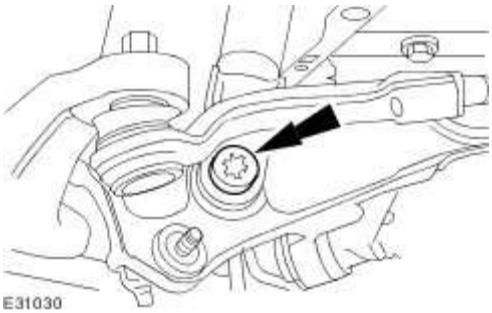

14 . **NOTE:**

Left-hand shown, right-hand similar.

Tighten the rear lower arm retaining nut and bolt.

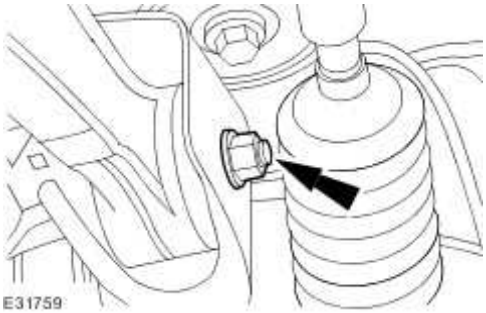

15 . **NOTE:**

Left-hand shown, right-hand similar.

Tighten the front lower arm retaining nut and bolt.

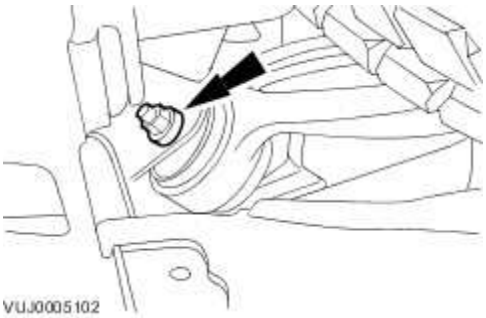

16 . Install the steering gear.

www.JagDocs.com

Tighten to 100 Nm.

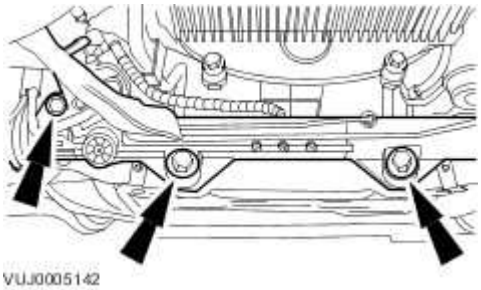

17 . **NOTE:**

Left-hand shown, right-hand similar.

Connect the headlamp leveling sensor electrical connector.

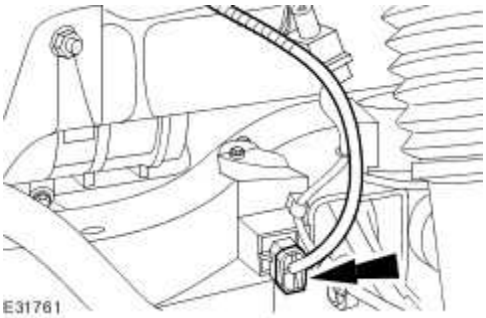

18 . **NOTE:**

Left-hand shown, right-hand similar.

Attach the headlamp leveling sensor retaining clip.

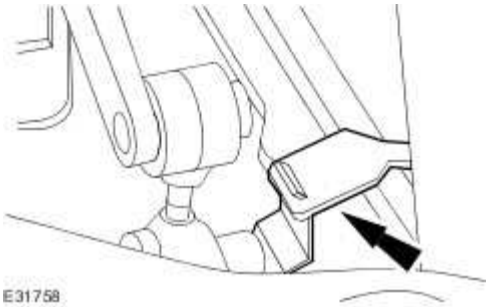

19 . **NOTE:**

Left-hand shown, right-hand similar.

Install the stabilizer bar link.

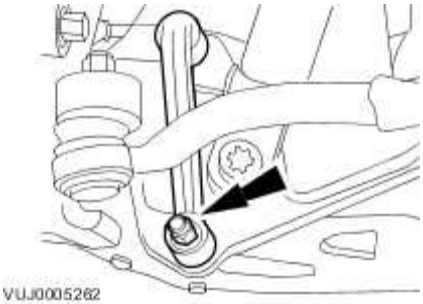

20 . **NOTE:**

Left-hand shown, right-hand similar.

Attach the stabilizer bar link.

- Tighten to 43 Nm.

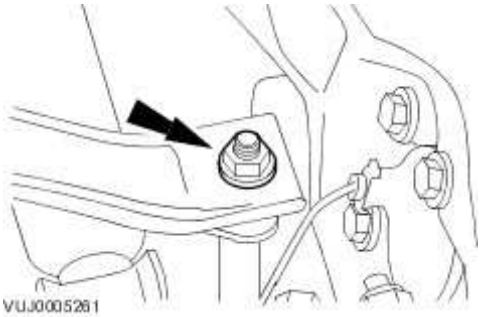

21 . Install the front wheels and tires.
For additional information, refer to Wheel and Tire (74.20.05)

22 . Install the air deflector.

www.JagDocs.com

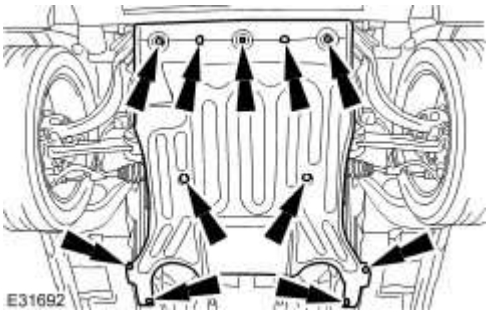

23 . Install the radiator splash shield.
For additional information, refer to [Radiator Splash Shield (76.22.90)]

24 **NOTE:**
.

The final tightening of the rear lower arm inner retaining nut and bolt must be carried out with the vehicle on its wheels.

NOTE:

Left-hand shown, right-hand similar.

Tighten to 175 Nm.

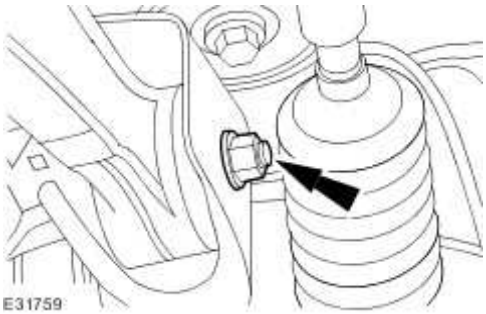

25 **NOTE:**
.

The final tightening of the front lower arm inner retaining nut and bolt must be carried out with the vehicle on its wheels.

NOTE:

Left-hand shown, right-hand similar.

Tighten to 175 Nm.

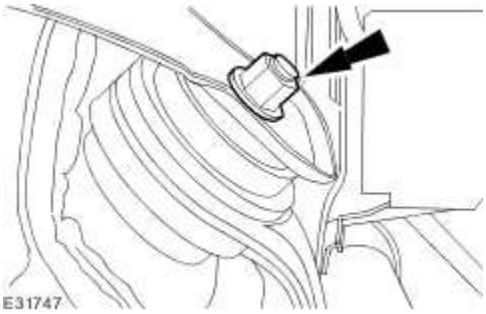

26 . **NOTE:**

Left-hand shown, right-hand similar.

Tighten to 70 Nm.

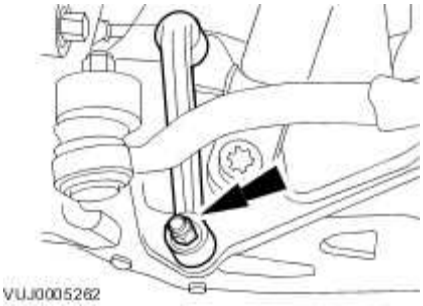

27 . **NOTE:**

Right-hand shown, left-hand similar.

Remove the radiator support.

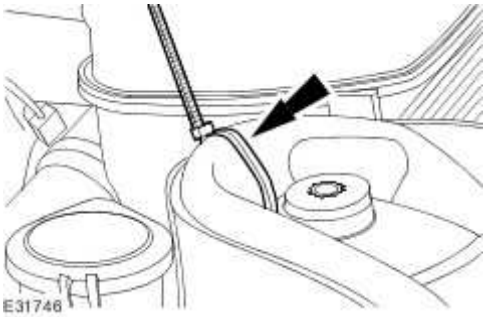

www.JagDocs.com

28 **NOTE:**

.

Vehicles with 3.5L or 4.2L engine without supercharger shown, vehicles with 4.2L engine with supercharger similar.

Remove the special tool.

- Loosen the special tool adjustment bolts.

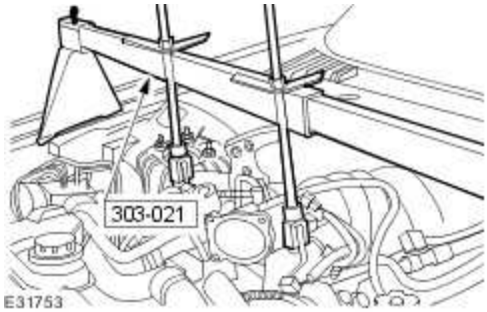

29 **NOTE:**

.

Vehicles with 3.5L or 4.2L engine without supercharger shown, vehicles with 4.2L engine with supercharger similar.

Remove the special tools.

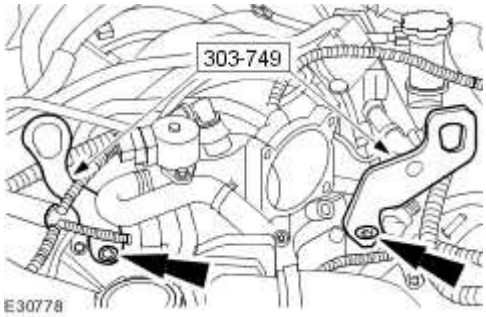

Vehicles with 3.5L or 4.2L engine without supercharger

30 Install the throttle body.

. For additional information, refer to Throttle Body - Vehicles Without: Supercharger, VIN Range: G00442->G45703 (19.70.04)

For additional information, refer to Throttle Body - Vehicles Without: Supercharger, VIN Range: G45704->G99999 (19.70.04)

All vehicles

31 . Check the caster and camber adjustment.

For additional information, refer to Camber and Caster Adjustment

www.JagDocs.com

Front Stabilizer Bar - 2.7L Diesel (60.10.01)

Removal

1 . Remove the front subframe.
For additional information, refer to Front Subframe - 2.7L Diesel (76.10.05)

2 . Remove the front subframe spacer.

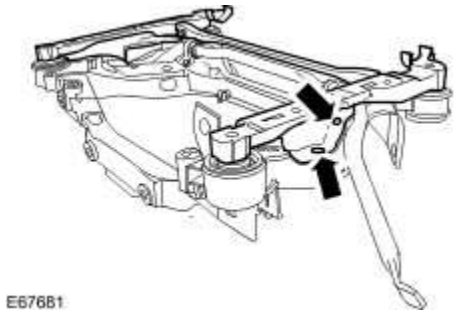

E67681

3 . Remove the stabilizer bar.

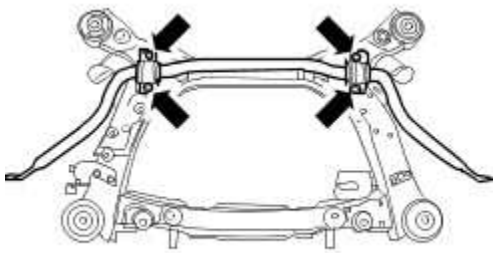

E67682

Installation

1 . To install, reverse the removal procedure.

Tighten to 55 Nm.

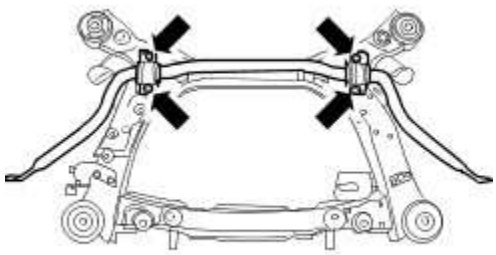

E67682

Front Stabilizer Bar Link (60.10.02)

Removal

1 . Raise and support the vehicle. <<100-02>>

2 . Remove the stabilizer bar link retaining nut.

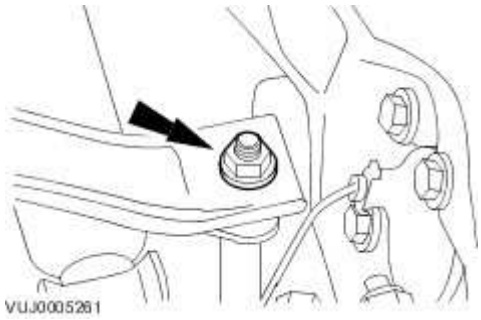

3 . Remove the stabilizer bar link.

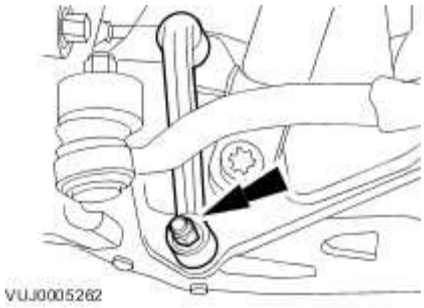

Installation

1 . Install the stabilizer bar link.

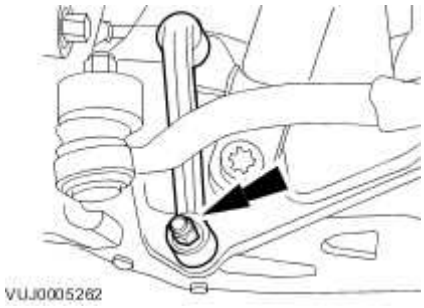

2 . Install the stabilizer bar link retaining nut.

www.JagDocs.com

Tighten to 43 Nm.

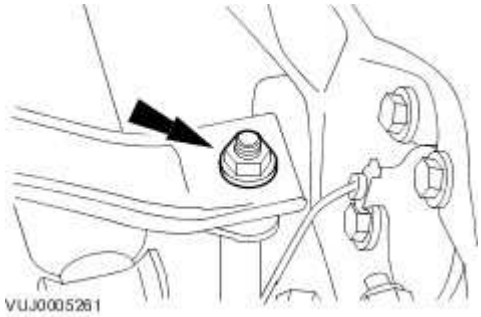

3 . Lower the vehicle.

4 **NOTE:**

.

The final tightening of the stabilizer bar retaining nut and bolt must be carried out with the vehicle on its wheels.

Tighten to 70 Nm.

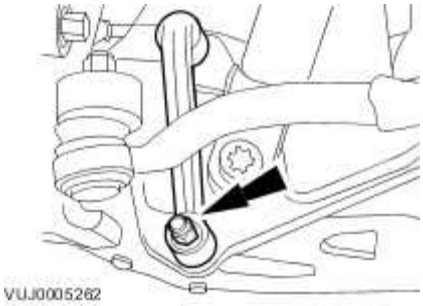

Stabilizer Bar Link Bushing (60.10.03)

Special Service Tools

Support
204-339

Bush Installer
204-340

Support
204-341

Bush Remove
204-342

Removal

1 . Remove the rear lower arm.
For additional information, refer to

2 . Using the special tools remove the stabilizer bar link bushing.

www.JagDocs.com

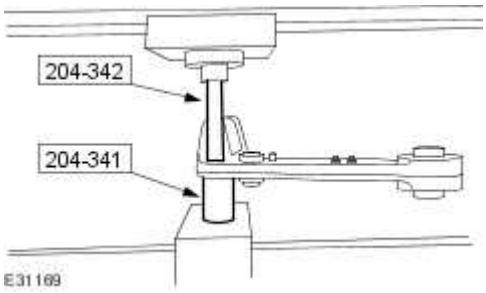

Installation

1 . **NOTE:**

Apply water to lubricate the bushing.

Using the special tools install the stabilizer bar link bushing.

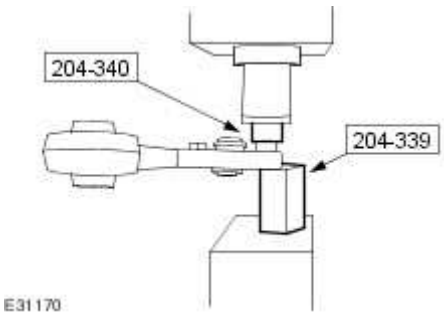

2 . Install the rear lower arm.
For additional information, refer to

Upper Arm LH (60.35.41)

Removal

1 . Remove the air spring assembly. <<204-05>>

2 . Remove the cowl vent screen access panel.

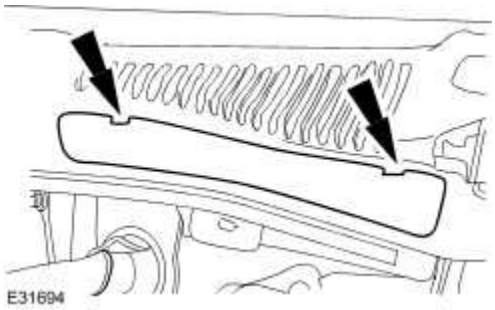

3 . Remove the upper arm rear retaining nut.

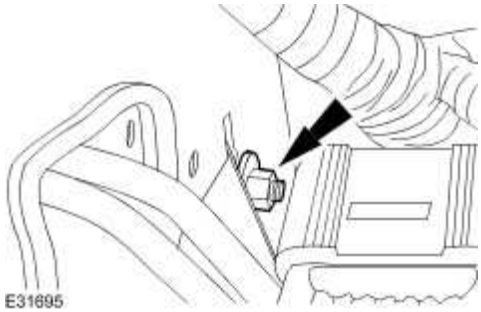

4 . Remove the air cleaner assembly. For additional information, refer to <<303-12A>> or <<303-12B>>

5 . Remove the upper arm front retaining nut.

www.JagDocs.com

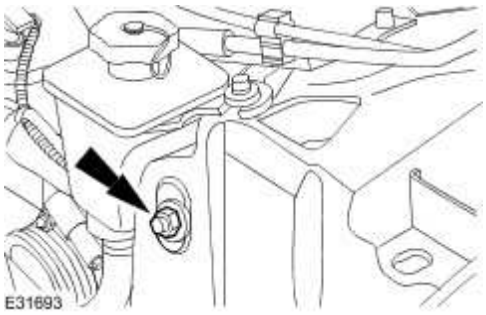

6 . **NOTE:**

Note the position of the upper arm retaining bolt locating tangs to aid installation.

Remove the upper arm.

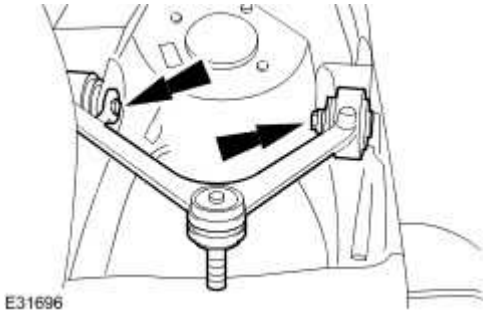

Installation

1 . **CAUTION: Make sure the upper arm retaining bolt locating tangs are correctly located. Failure to follow this instruction may result in damage to the vehicle.**

Install the upper arm.

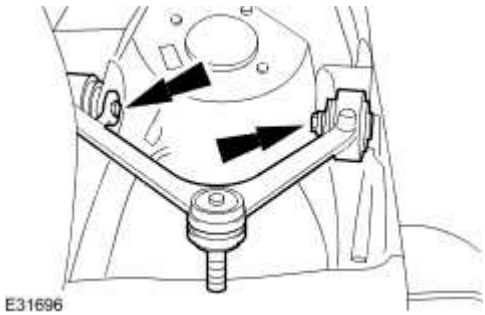

2 . Install the upper arm front retaining nut.

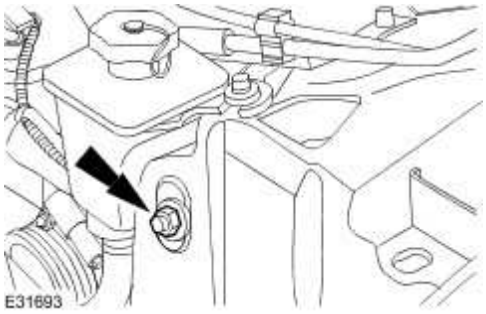

3 . Install the upper arm rear retaining nut.

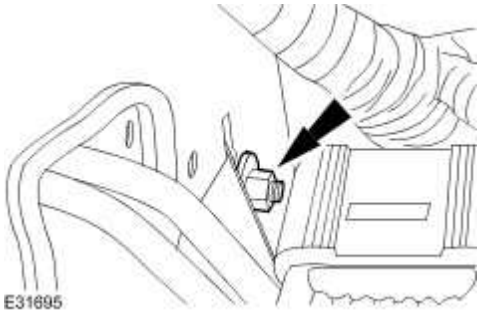

4 . Install the air spring assembly. <<204-05>>

5 **NOTE:**
.

The final tightening of the Upper arm retaining nut must be carried out with the vehicle on its wheels.

Tighten to 47 Nm.

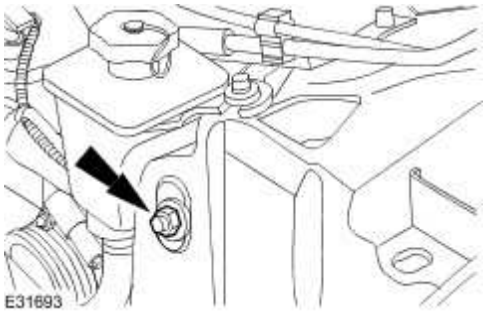

www.JagDocs.com

6 **NOTE:**

· The final tightening of the Upper arm retaining nut must be carried out with the vehicle on its wheels.

Tighten to 47 Nm.

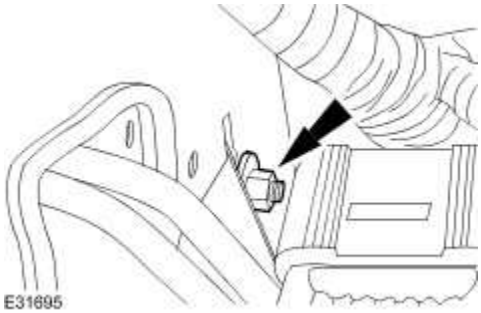

7 . Install the cowl vent screen access panel.

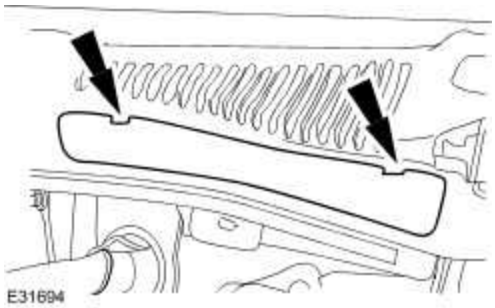

8 Install the air cleaner assembly. For additional information, refer to <<303-12A>> or <<303-
. 12B>>

Upper Arm RH (60.35.42)

Removal

1 . Remove the air spring assembly. <<204-05>>

2 . Remove the cowl vent screen access panel.

3 . Remove the upper arm rear retaining nut.

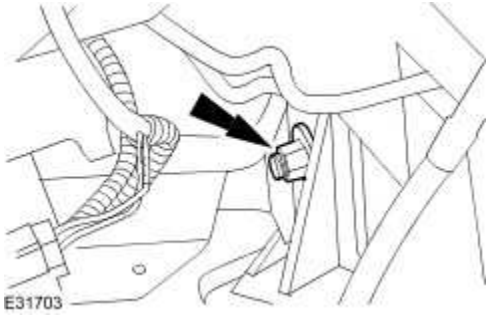

4 . Detach the engine compartment battery junction box.

5 . Detach the hydraulic control unit.

www.JagDocs.com

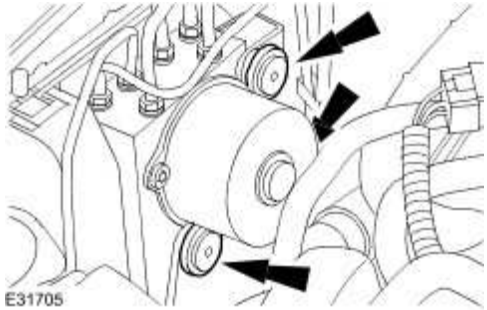

6 . Remove the hydraulic control unit mounting bracket upper retaining bolt.

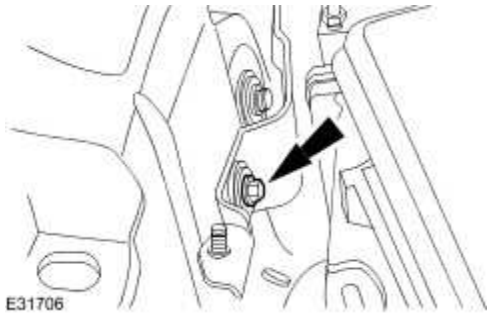

7 . Remove the hydraulic control unit mounting bracket retaining bolt.

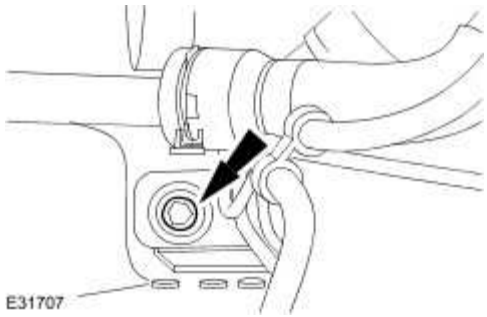

8 . Detach the hydraulic control unit mounting bracket.

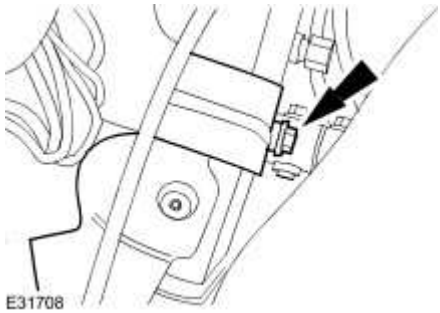

9 . Remove the upper arm front retaining nut.

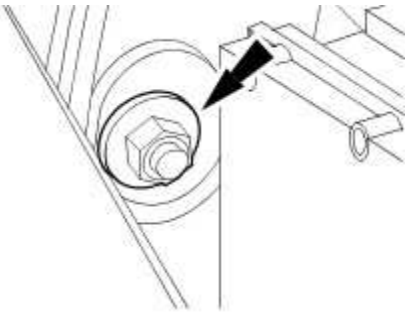

10 . **NOTE:**

Note the position of the upper arm retaining bolt locating tangs to aid installation.

Remove the upper arm.

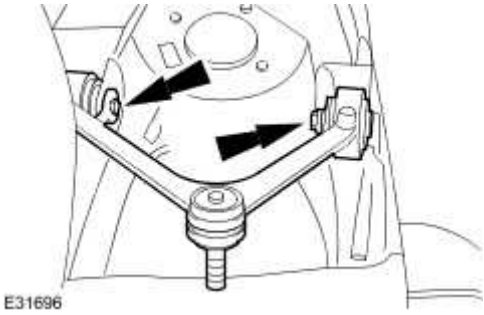

www.JagDocs.com

Installation

1 . **CAUTION: Make sure the upper arm retaining bolt locating tangs are correctly located. Failure to follow this instruction may result in damage to the component.**

Install the upper arm.

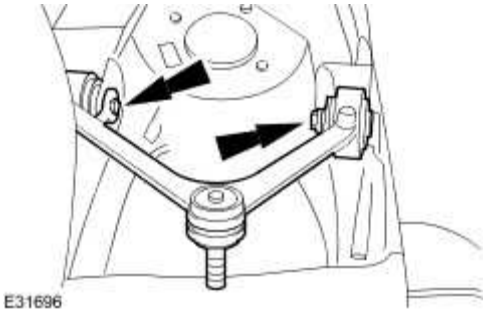

2 . Install the upper arm front retaining nut.

3 . Install the upper arm rear retaining nut.

4 . Install the air spring assembly. <<204-05>>

5 **NOTE:**

.

The final tightening of the Upper arm retaining nut must be carried out with the vehicle on its wheels.

Tighten to 47 Nm.

6 **NOTE:**

.

The final tightening of the Upper arm retaining nut must be carried out with the vehicle on its wheels.

Tighten to 47 Nm.

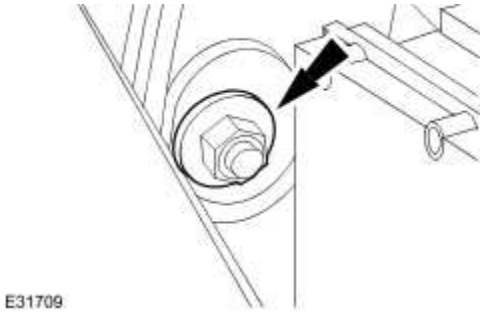

7 . Attach the hydraulic control unit mounting bracket.

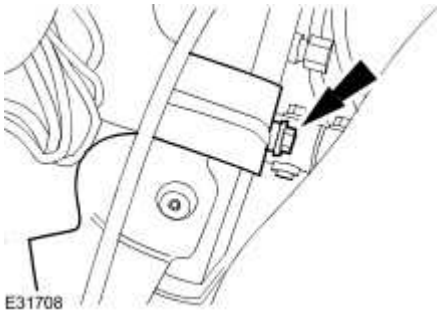

8 . Install the hydraulic control unit mounting bracket retaining bolt.

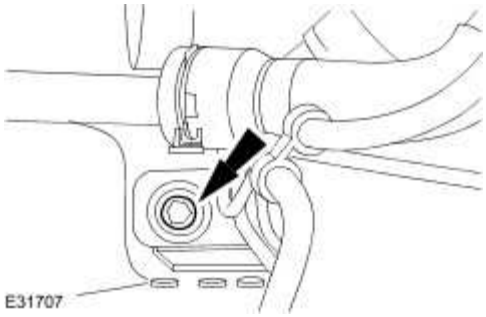

9 . Install the hydraulic control unit mounting bracket upper retaining bolt.

www.JagDocs.com

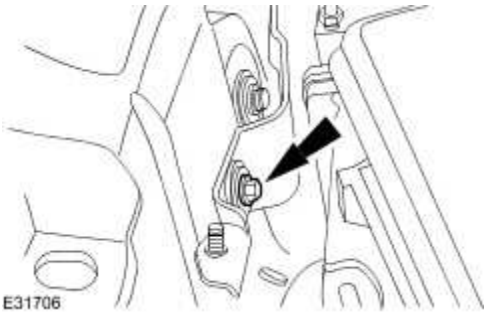

10 . Attach the hydraulic control unit.

1) Tighten to 9 Nm.

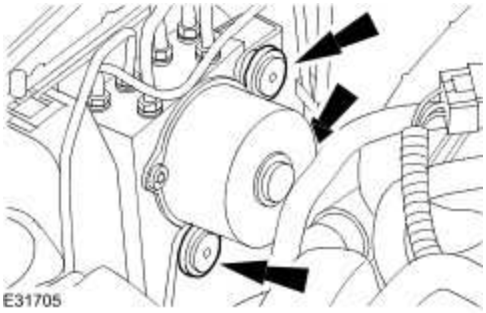

11 . Attach the engine compartment battery junction box.

12 . Install the cowl vent screen access panel.

Front Wheel Bearing and Wheel Hub (60.25.03)

Removal

1 Remove the brake disc.

. For additional information, refer to Brake Disc - Vehicles With: Standard Brakes, VIN Range: G00442->G45703 (70.10.10)
For additional information, refer to Brake Disc - Vehicles With: Standard Brakes, VIN Range: G45704->G99999 (70.10.10)
For additional information, refer to Brake Disc - Vehicles With: High Performance Brakes, VIN Range: G00442->G45703 (70.10.10)
For additional information, refer to Brake Disc - Vehicles With: High Performance Brakes, VIN Range: G45704->G99999 (70.10.10)

2 . Detach the front wheel speed sensor harness.

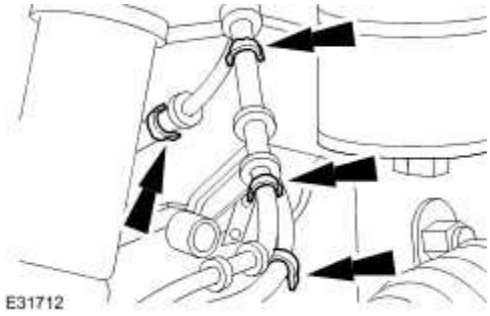

3 . Disconnect the front wheel speed sensor electrical connector.

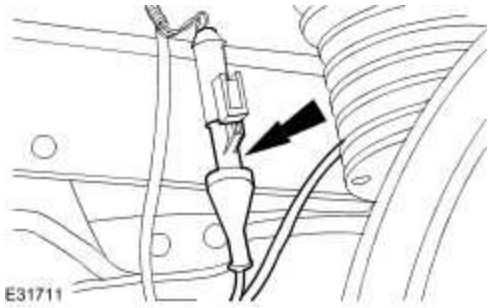

4 . Remove the wheel bearing and wheel hub retaining bolts.

www.JagDocs.com

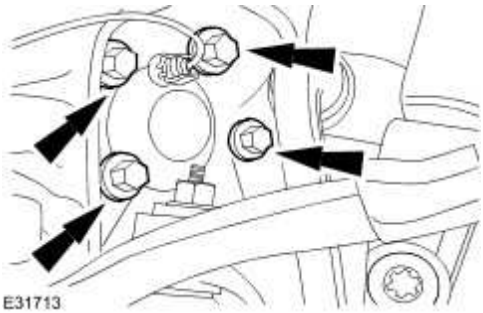

5 . Remove the wheel bearing and wheel hub.

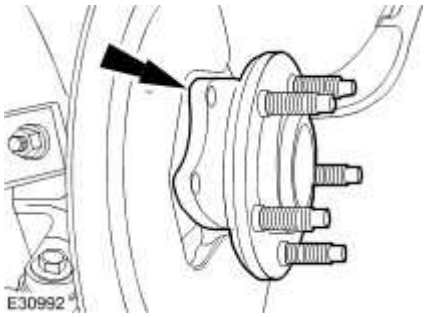

Installation

1 . To install, reverse the removal procedure.

Tighten to 90 Nm.

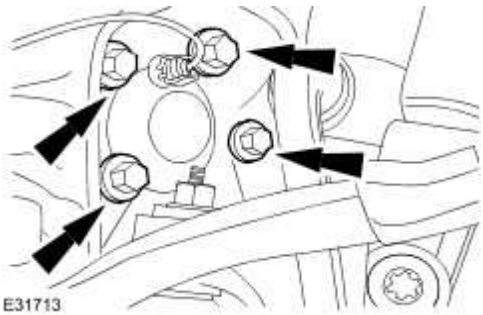

Wheel Knuckle (60.25.23)

Special Service Tools

Ball Joint Splitter
204-327

Removal

1 Remove the brake disc shield.
. For additional information, refer to Brake Disc Shield - Vehicles With: Standard Brakes (70.10.18)
For additional information, refer to Brake Disc Shield - Vehicles With: High Performance Brakes (70.10.18)

2 . Remove the stabilizer bar link retaining nut.

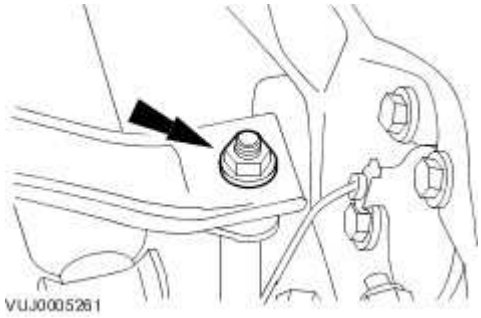

3 . Remove the stabilizer bar link.

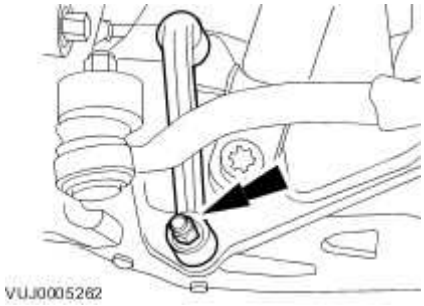

www.JagDocs.com

4. **CAUTION: Prevent the tie-rod end ball joint ball pin hexagon from rotating. Failure to do so may result in damage to the tie-rod end ball joint boot.**

Detach the tie-rod end.

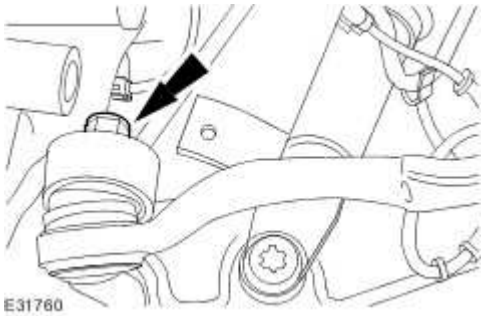

5. **CAUTION: Prevent the upper ball joint ball pin hexagon from rotating. Failure to do so may result in damage to the upper ball joint boot.**

CAUTION: Make sure the wheel knuckle is supported. Failure to follow these instructions may result in damage to the component.

Detach the upper arm.

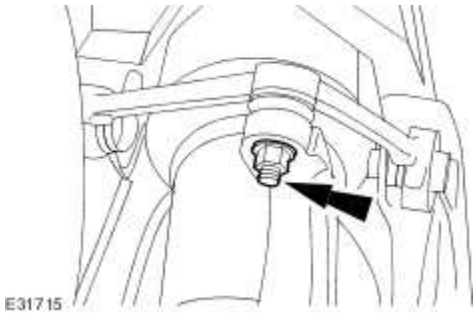

6. **CAUTION: Prevent the rear lower arm ball joint ball pin hexagon from rotating. Failure to follow this instruction may result in damage to the lower ball joint boot.**

Loosen the rear lower arm ball joint retaining nut.

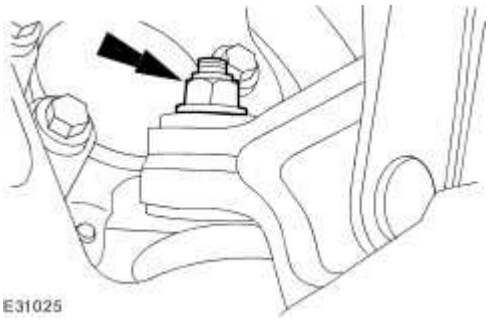

7. **CAUTION: Prevent the rear lower arm ball joint ball pin hexagon from rotating. Failure to follow this instruction may result in damage to the lower ball joint boot.**

Adjust the rear lower arm ball joint retaining nut until the ball joint thread cannot be seen.

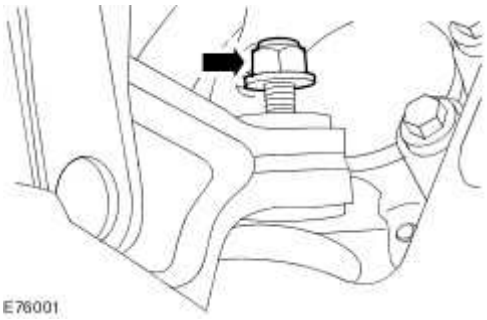

8. **WARNING: Make sure the special tool is supported while carrying out the operation. Failure to follow this instruction may result in personal injury.**

CAUTION: Make sure the special tool is supported while carrying out the operation. Failure to follow this instruction may result in damage to the special tool.

CAUTION: Make sure the special tool is correctly located and the lower ball joint boot is not damaged while carrying out the operation. Failure to follow this instruction may result in damage to the component.

Using the special tool, release the rear lower arm ball joint from the wheel knuckle lower

www.JagDocs.com

pivot.

- Tighten the special tool adjusting bolt to a maximum of 60 Nm.
- If the rear lower arm ball joint releases from the wheel knuckle lower pivot using no more than 60 Nm on the special tool adjusting bolt, proceed to step 10.
- If the rear lower arm ball joint does not release from the wheel knuckle lower pivot using no more than 60 Nm on the special tool adjusting bolt, proceed to step 9.

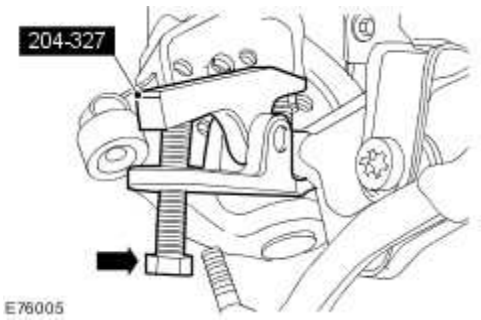

9. **WARNING: Make sure the special tool is supported while carrying out the operation. Failure to follow this instruction may result in personal injury.**

CAUTION: Make sure the special tool is supported while carrying out the operation. Failure to follow this instruction may result in damage to the special tool.

CAUTION: Make sure the special tool is correctly located and the lower ball joint boot is not damaged while carrying out the operation. Failure to follow this instruction may result in damage to the component.

NOTE:

Do not carry out this step if the rear lower arm ball joint released from the wheel knuckle lower pivot in step 8.

Using the special tool, release the rear lower arm ball joint from the wheel knuckle lower pivot.

1) Tighten the special tool adjusting bolt to a maximum of 60 Nm.

2) Strike the top surface of the special tool directly above the rear lower arm ball joint at the point indicated using a copper and hide mallet.

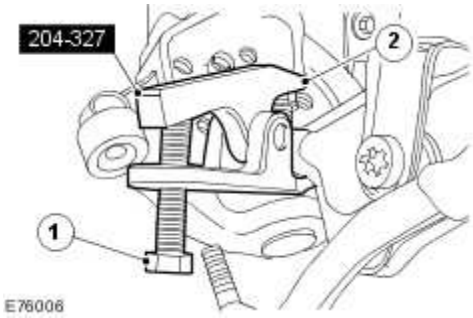

10. **WARNING: Make sure the wheel knuckle is supported while carrying out the operation. Failure to follow this instruction may result in personal injury.**

CAUTION: Make sure the wheel knuckle is supported while carrying out the operation. Failure to follow this instruction may result in may result in damage to the component.

CAUTION: Prevent the rear lower arm ball joint ball pin hexagon from rotating. Failure to follow this instruction may result in damage to the lower ball joint boot.

Remove the wheel knuckle.

- Remove and discard the retaining nut.

www.JagDocs.com

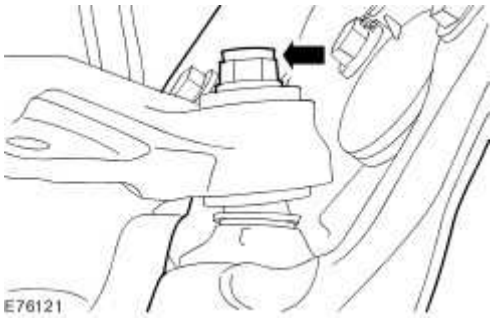

Installation

1. **CAUTION: Prevent the rear lower arm ball joint ball pin hexagon from rotating. Failure to follow this instruction may result in damage to the lower ball joint boot.**

NOTE:

Install a new retaining nut.

Install the wheel knuckle

- Tighten to 92 Nm.

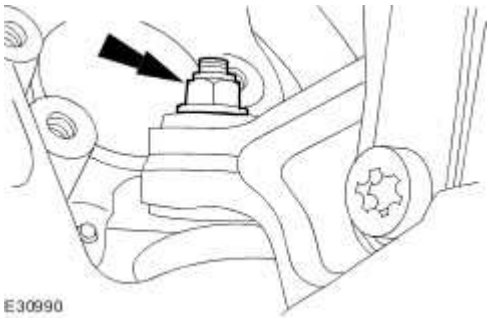

2 . Attach the upper arm.

- Tighten to 90 Nm

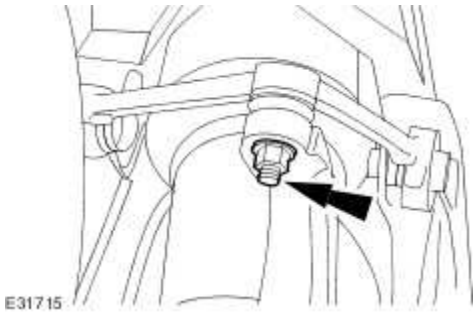

3 . Attach the tie rod end.

Tighten to 75 Nm.

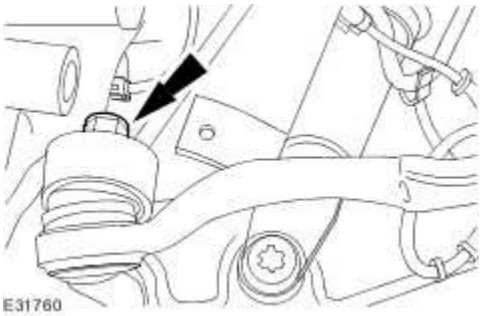

4 . Install the stabilizer bar link.

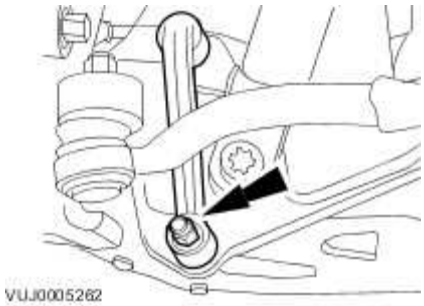

5 . Attach the stabilizer bar link.

Tighten to 43 Nm.

www.JagDocs.com

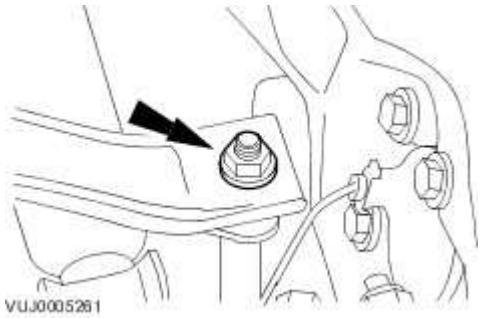

6 Install the brake disc shield.
. For additional information, refer to Brake Disc Shield - Vehicles With: Standard Brakes (70.10.18)
For additional information, refer to Brake Disc Shield - Vehicles With: High Performance Brakes (70.10.18)

7 **NOTE:**
.
The final tightening of the stabilizer bar link retaining nut and bolt must be carried out with the vehicle on its wheels.

Tighten to 70 Nm.

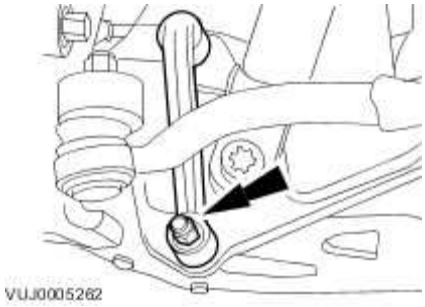

Published: Mar 12, 2014

Shock Absorber and Spring Assembly (60.30.02) – Armoured vehicles

Removal

1 . Remove the wheel and tire assembly.
For additional information, refer to

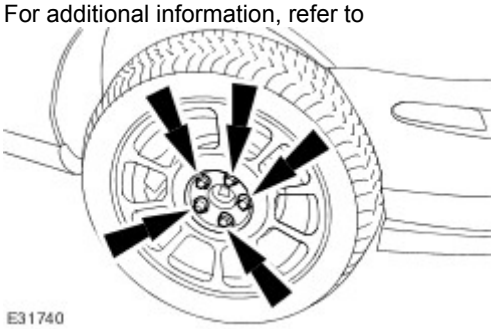

2 . **NOTE:**
Left-hand shown, right-hand similar.

Remove the shock absorber and spring assembly retaining nuts.

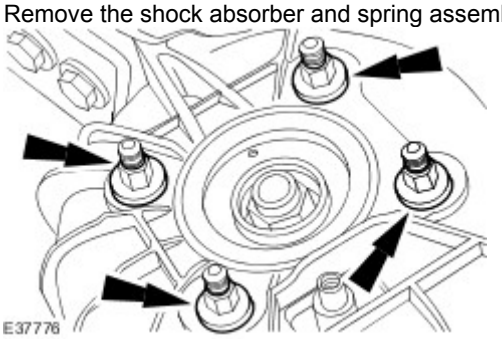

3 . Remove the stabilizer bar link.
For additional information, refer to

4 . Detach the headlamp leveling sensor link rod.

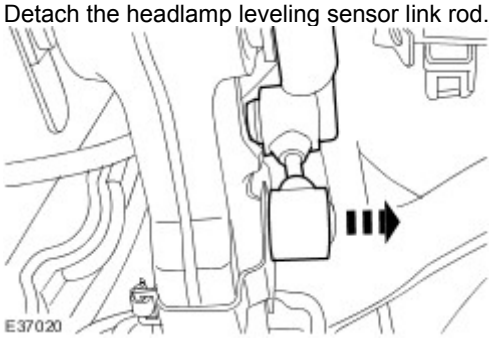

5 . Detach the brake line from the inner fender securing clips.

www.JagDocs.com

6 . **NOTE:**

Left-hand shown, right-hand similar.

Detach the shock absorber and spring assembly.

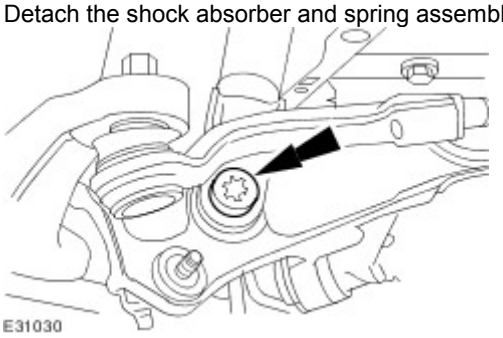

7 . **CAUTION: Prevent the upper ball joint ball pin hexagon from rotating. Failure to do so may result in damage to the upper ball joint boot.**

CAUTION: Make sure the wheel knuckle is supported. Failure to follow these instructions may result in damage to the vehicle.

NOTE:

Left-hand shown, right-hand similar.

Detach the upper arm.

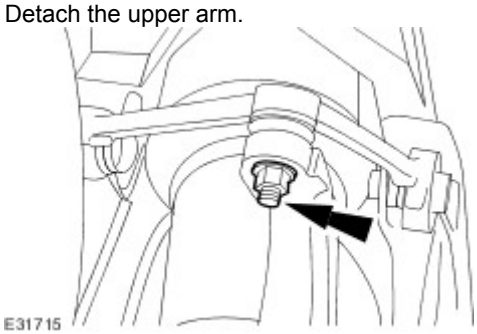

8 . Remove the shock absorber and spring assembly.

Installation

1 . **NOTE:**

If a new shock absorber and spring assembly is to be installed, make sure the ride height adjustment retaining nuts are set to the correct measurement.

NOTE:

The shock absorber and spring assembly ride height measurement is taken from the lower side of the lock nut to the lower body of the shock absorber.

Adjust the shock absorber and spring assembly to the correct setting.

For additional information, refer to

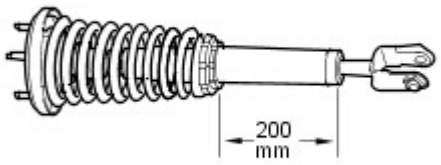

E66848

2 . To install, reverse the removal procedure.

Tighten to 90 Nm.

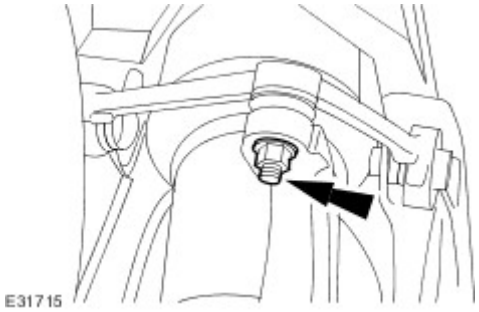

E31715

3 . **NOTE:**

Left-hand shown, right-hand similar.

Tighten to 175 Nm.

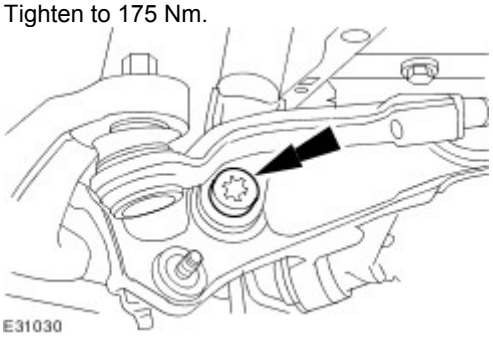

E31030

4 . **NOTE:**

Left-hand shown, right-hand similar.

Tighten to 25 Nm.

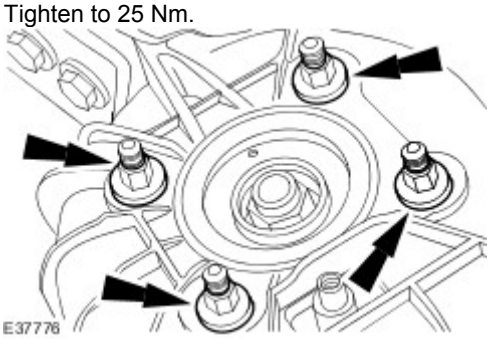

E37776

5 . Carry out the ride height adjustment procedure.

www.JagDocs.com

Specifications

Torque Specifications

Description	Nm	lb-ft	lb-in
Tie rod outer bolt	55	41	-
Lower arm inner bolts	163	120	-
Lower arm outer bolt	175*	129	-
Upper arm ball joint nut	90	66	-
Upper arm inner bolts	98	72	-
Shock absorber upper fixing nuts	28	21	-
Lower shock absorber bolt	133	98	-
Shock absorber top mounting nut without adaptive damping	50	37	-
Shock absorber top mounting nut with adaptive damping	27	20	-
Stabilizer bar	55	41	-
Stabilizer link mounting nuts	48	35	-
Wheel hub nut	300	221	-

*If you are re-using this fixing on a vehicle built prior to VIN H16808, then tighten to 150 Nm. If you are replacing a fixing, then you must replace both nut and bolt and tighten to 175 Nm.

Rear Suspension

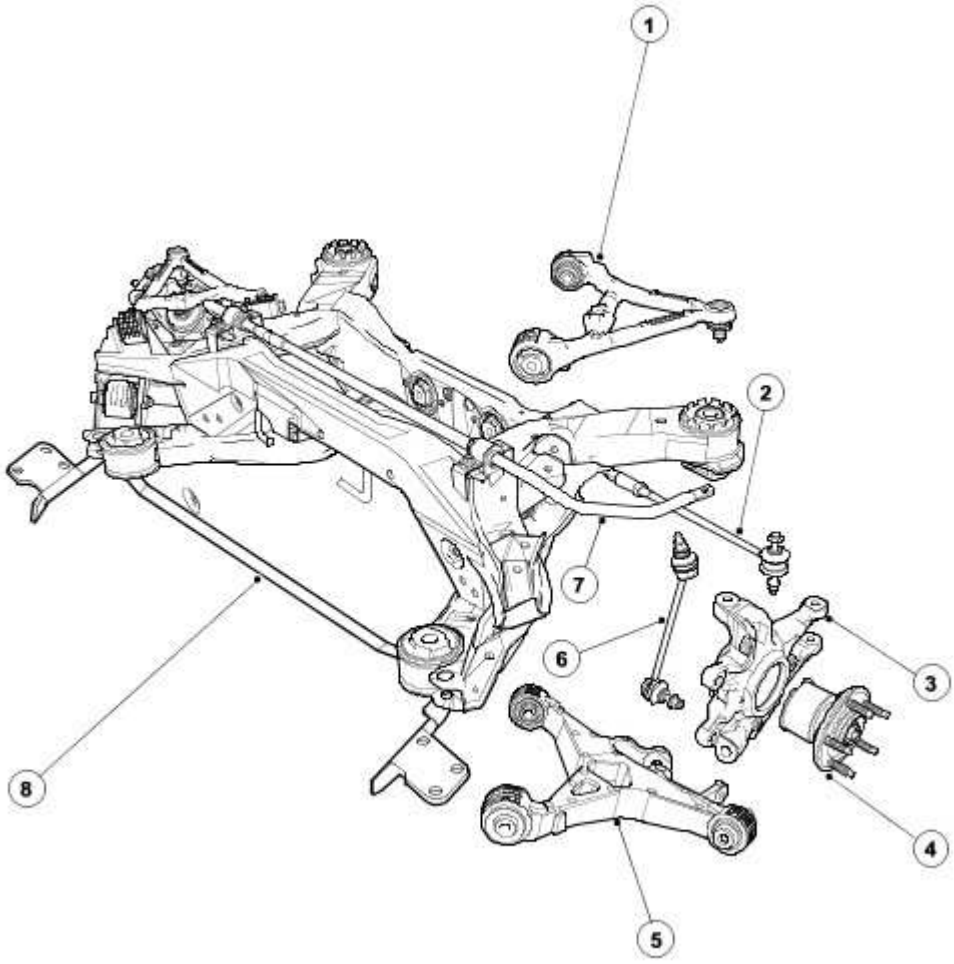

E31619

Item	Part Number	Description
1	—	Upper arm
2	—	Tie rod
3	—	Wheel knuckle
4	—	Wheel hub

www.JagDocs.com

5	—	Lower arm
6	—	Stabilizer bar drop link
7	—	Stabilizer bar
8	—	NVH brace

The independent rear suspension features aluminium upper and lower control arms which carry the hub assemblies and air springs.

Components

The wheel knuckle:

- carries the wheel hub.
- carries the brake caliper assembly.
- carries the Anti-lock brake (ABS) sensor.
- carries the wheel hub bearing and bearing seals.
- is of a unique design for vehicles with supercharger.

The stabilizer link:

- is of a steel construction with a ball joint at each end.
- transmits vertical movements of the rear suspension to the stabilizer bar.

The stabilizer bar:

- is mounted on the subframe.
- is connected to the left and right hand lower wishbones by the stabilizer bar drop links.
- is fitted to all models with or without sports suspension.

The upper arm:

- is a one piece aluminium casting and incorporates a built in ball joint.
- is the upper support for the wheel knuckle.
- is fitted with height sensors which are part of the high intensity discharge (HID) lights feature and the air suspension.

The tie rod:

- is of a two piece steel construction with a ball joint at both ends.
- is utilized to adjust rear wheel alignment.

The lower arm:

- is a one piece aluminium casting, with integral mounting points for the shock absorber and spring assembly and the stabilizer bar link.
- is the lower support for the wheel knuckle.

Rear Suspension – Armoured XJ

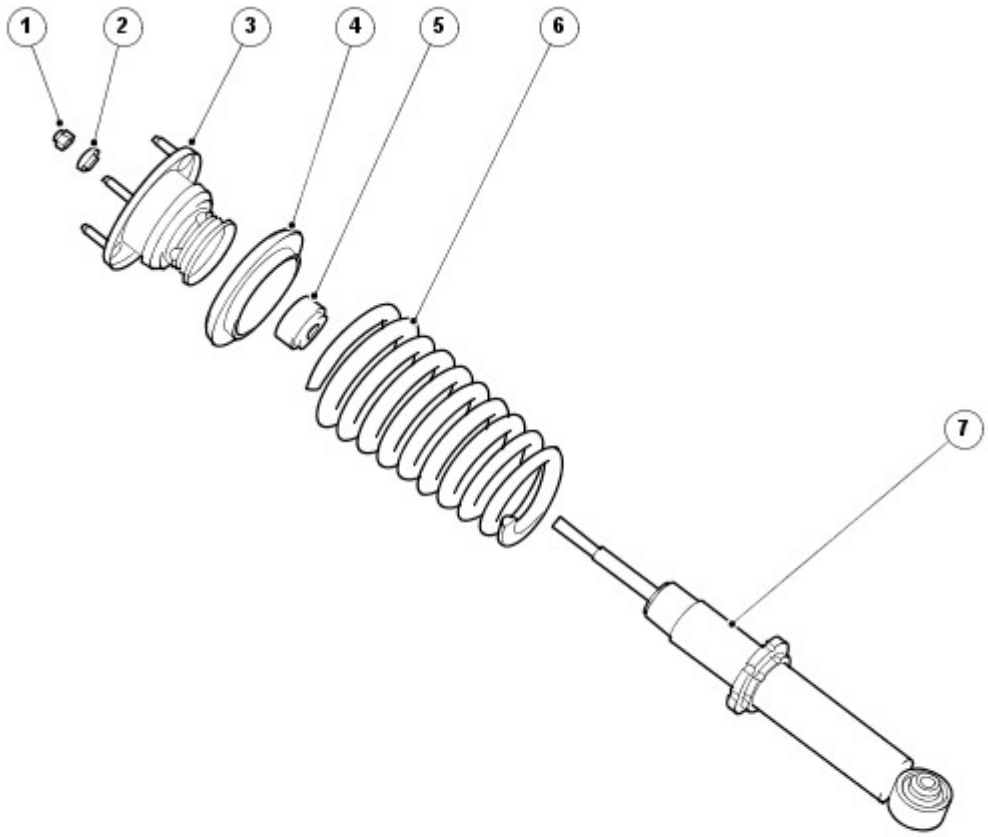

E66779

Item	Part Number	Description
1	—	Retaining nut
2	—	Washer
3	—	Top mount
4	—	Spring upper isolator
5	—	Bump stop
6	—	Spring
7	—	Shock absorber

CAUTION: The shock absorber and spring assemblies must be changed in axle sets. Failure to follow this instruction may result in damage to the vehicle.

The additional weight of the armour on the vehicle means that certain parts have needed to be uprated. The service life of many of the suspension components has been reduced due to the increased vehicle weight.

The armour vehicle is now fitted with shock absorber and spring assemblies to accommodate the extra weight of the armour.

www.JagDocs.com

Rear Suspension

For additional information, refer to<<204-00>>.

Lower Arm (64.35.43)

Removal

All vehicles

1 . Make sure the park brake is in the off position.

2 . Remove the wheel and tire.
For additional information, refer to Wheel and Tire (74.20.05)

3 . Detach the shock absorber assembly from the lower arm.

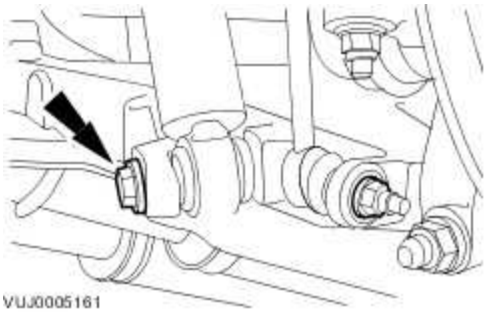

4 . Detach the stabilizer bar link.

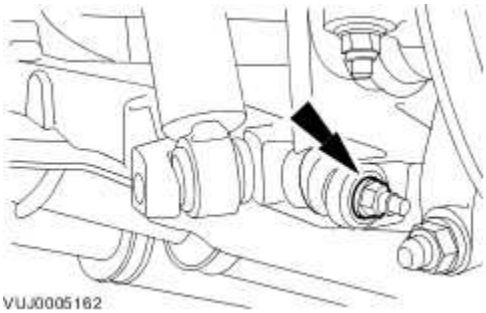

Vehicles without Brembo brakes

5 . **CAUTION: The brake caliper must be supported at all times.**

www.JagDocs.com

Detach the brake caliper and secure to one side.

- Remove and discard the brake caliper retaining bolts.

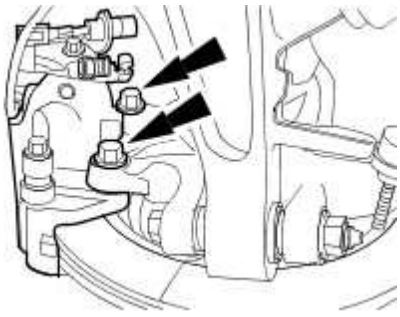

Vehicles with Brembo brakes

6 . **CAUTION: The brake caliper must be supported at all times.**

Detach the brake caliper and secure to one side.

- Remove and discard the brake caliper retaining bolts.

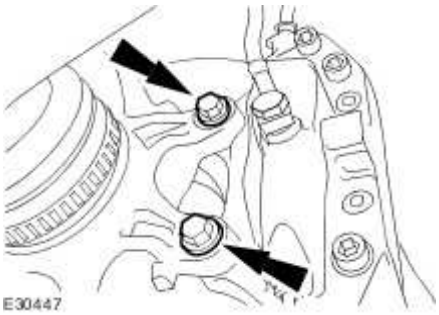

All vehicles

7 . Remove and discard the retaining clips and reposition the brake disc.

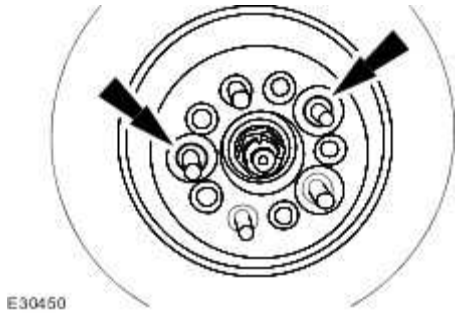

8 . Detach the lower arm from the wheel hub assembly.

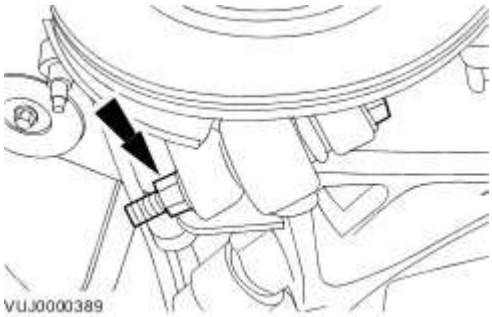

9 . Remove the lower arm.

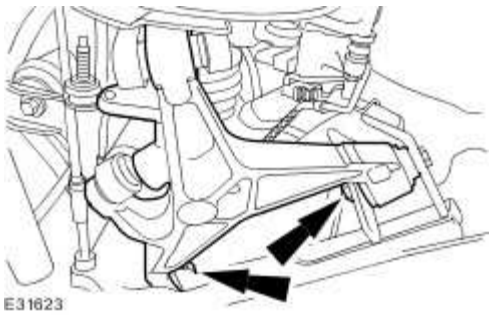

Installation

All vehicles

1 . **CAUTION: The final tightening of the rear suspension components must be carried out with the vehicle on its wheels.**

Install the lower arm.

www.JagDocs.com

- Install the retaining bolts.

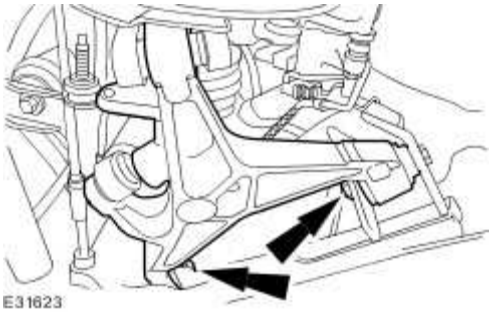

2. **CAUTION: The final tightening of the rear suspension components must be carried out with the vehicle on its wheels.**

Install the retaining nut and bolt.

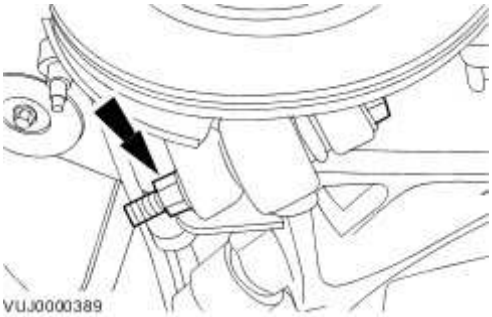

Vehicles without Brembo brakes

3 . Attach the brake caliper.

- Install new brake caliper retaining bolts.
- Tighten to 103 Nm.

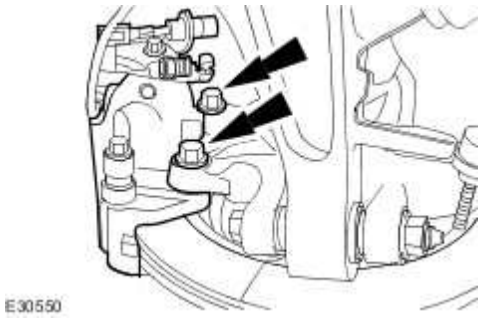

Vehicles with Brembo brakes

4 . Attach the brake caliper.

- Install new brake caliper retaining bolts.
- Tighten to 70 Nm.

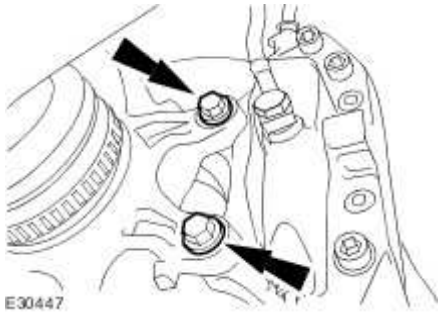

All vehicles

5 . **CAUTION: The final tightening of the rear suspension components must be carried out with the vehicle on its wheels.**

Attach the stabilizer bar link.

- Tighten to 48 Nm.

www.JagDocs.com

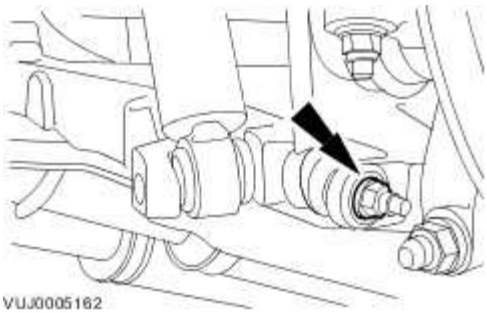

6. **CAUTION: The final tightening of the rear suspension components must be carried out with the vehicle on its wheels.**

Install the the shock absorber retaining bolt.

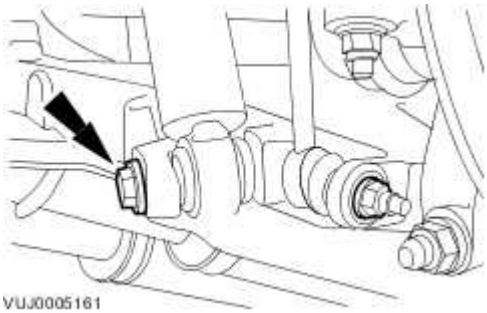

7 . Install the wheel and tire.
For additional information, refer to Wheel and Tire (74.20.05)

8 . Lower the vehicle.

9. **CAUTION: The final tightening of the rear suspension components must be carried out with the vehicle on its wheels.**

Tighten to 163 Nm.

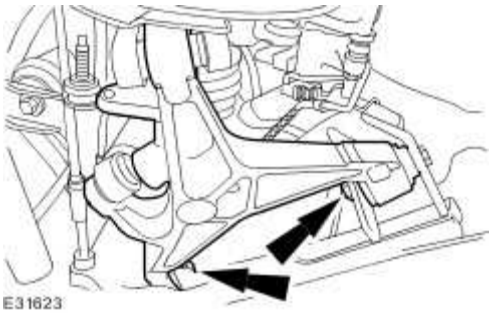

10. **CAUTION: The final tightening of the rear suspension components must be carried out with the vehicle on its wheels.**

Tighten to 175 Nm.

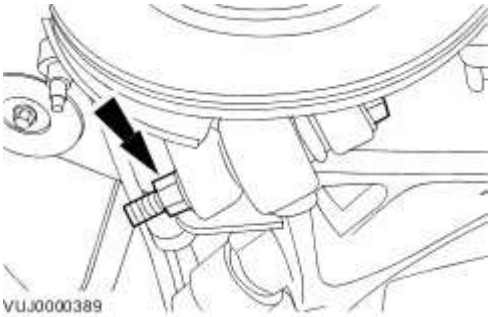

NOTE:

If you are re-using this fixing on a vehicle built prior to VIN H16808, then tighten old fixing to 150 Nm. If you are replacing a fixing, then you must replace both nut and bolt and tighten to 175 Nm.

11. **CAUTION: The final tightening of the rear suspension components must be carried out with the vehicle on its wheels.**

Tighten to 48 Nm.

www.JagDocs.com

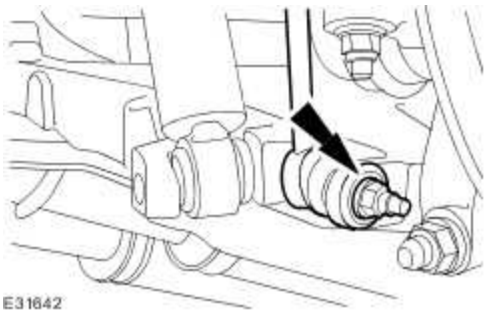

12 . **CAUTION: The final tightening of the rear suspension components must be carried out with the vehicle on its wheels.**

Tighten to 133 Nm.

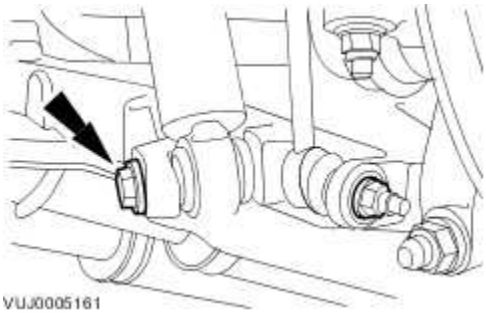

13 . Check the wheel alignment and adjust as necessary.
For additional information, refer to Wheel Alignment Angles

Rear Stabilizer Bar (64.35.08)

Special Service Tools

Powertrain assembly jack
HTJ1200-2

Removal

All vehicles

1 . Drain the right-hand fuel tank saddle. <<310-00>>

2 . Remove both the upper arms.
For additional information, refer to

3 . Remove the front muffler. <<309-00>>

Vehicles without Brembo brakes

4 . **CAUTION: The brake caliper must be supported at all times.**

Detach the brake caliper and brake caliper anchor plate and secure to one side.

- Remove and discard the brake caliper retaining bolts.

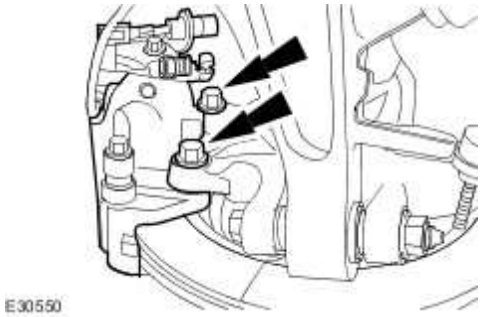

www.JagDocs.com

Vehicles with Brembo brakes

5 . **CAUTION: The brake caliper must be supported at all times.**

Detach the brake caliper and secure to one side.

- Remove and discard the brake caliper retaining bolts.

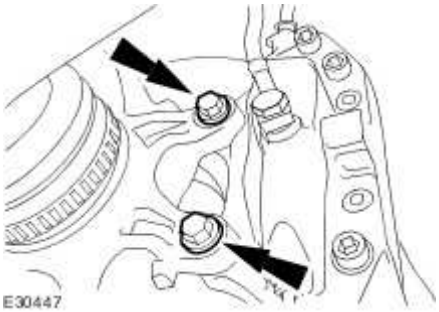

All vehicles

6 . **NOTE:**

Left-hand shown right-hand similar.

Disconnect the anti-lock brake system (ABS) sensor electrical connector.

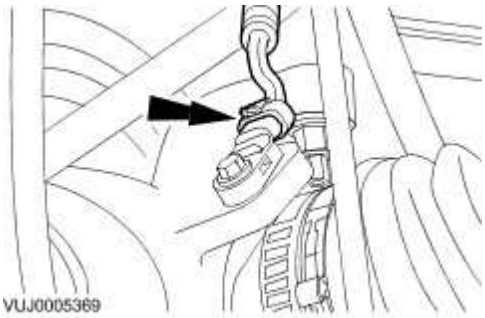

7 . **NOTE:**

Right-hand shown left-hand similar.

Detach the shock absorber and spring assembly from the lower arm.

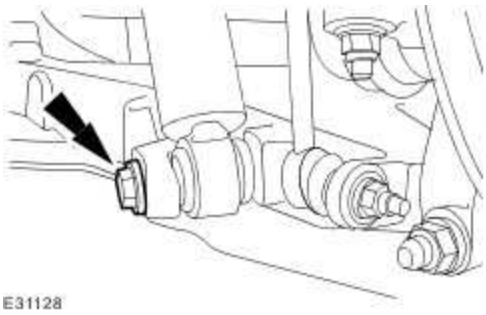

8 . **CAUTION: Under no circumstances must the flexible coupling (or its fixings) be loosened or removed from the driveshaft**

Detach the driveshaft from the rear drive axle flange.

- Mark the position of the driveshaft in relation to the rear drive axle flange.
- Mark the position of the balance nut in relation to the rear drive axle flange (if fitted).
- Mark the position of each nut and bolt in relation to the rear drive axle flexible joint.

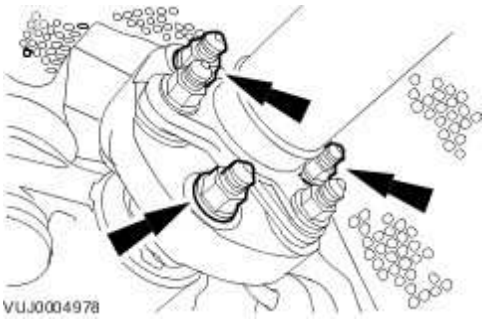

9 . Detach the fuel filler pipe.

- Remove and discard the hose clip.

www.JagDocs.com

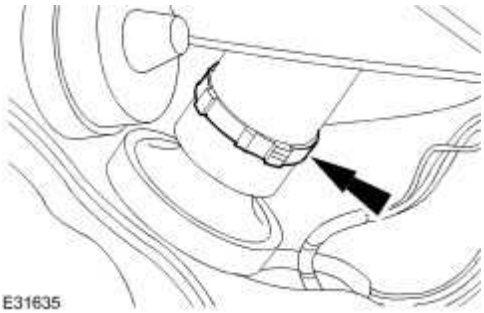

10 . Detach the electric parking brake motor harness.

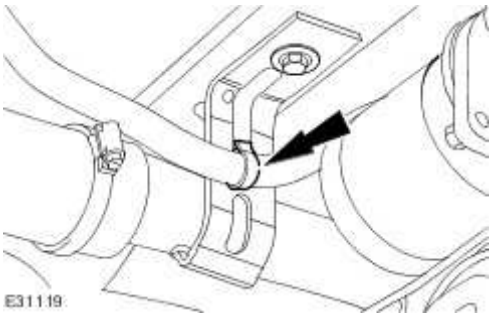

11 . Disconnect the electric parking brake motor electrical connector.

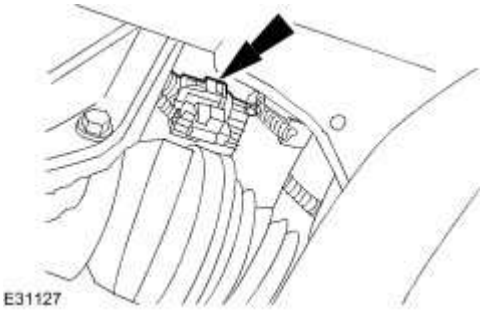

12 . Install the special tool to support the rear subframe.

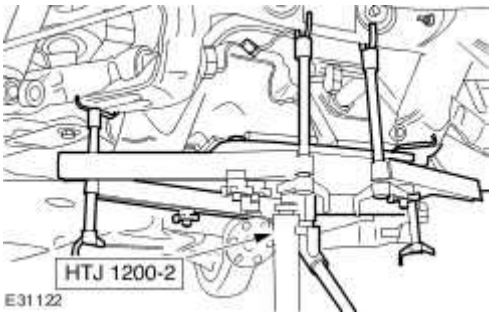

13 . **NOTE:**

Left-hand shown right-hand similar.

Remove the Noise,Vibration and Harshness brace retaining bolts.

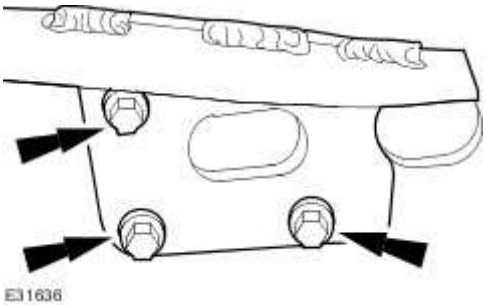

14 . Using the special tool, support the subframe.

15 . **NOTE:**

Left-hand shown right-hand similar.

Remove the subframe rear mount retaining bolt.

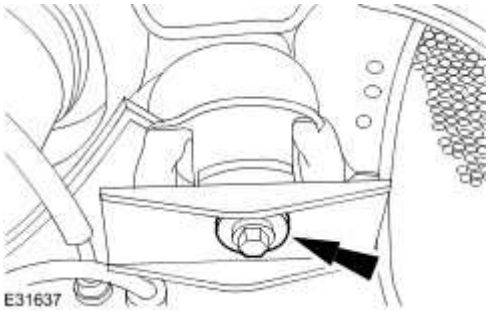

16 . **NOTE:**

Left-hand shown right-hand similar.

Remove the subframe front mount retaining bolt.

www.JagDocs.com

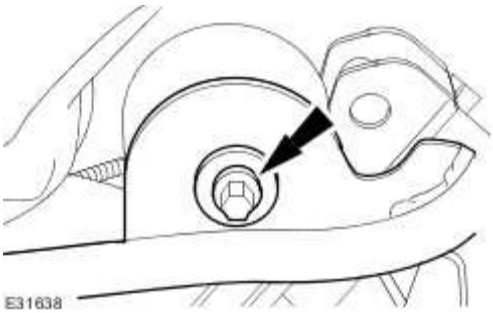

17 . Lower the subframe.

18 . **NOTE:**

Left-hand shown right-hand similar.

Remove the stabilizer bar link retaining nut dust cover.

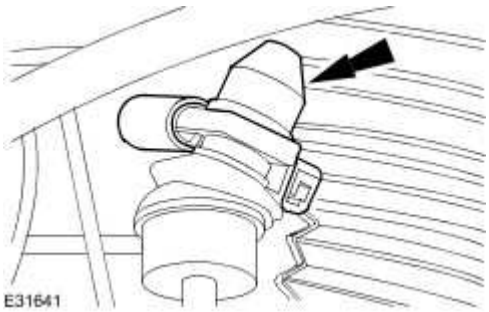

19 . **NOTE:**

Right-hand shown left-hand similar.

Remove the stabilizer bar link retaining nut.

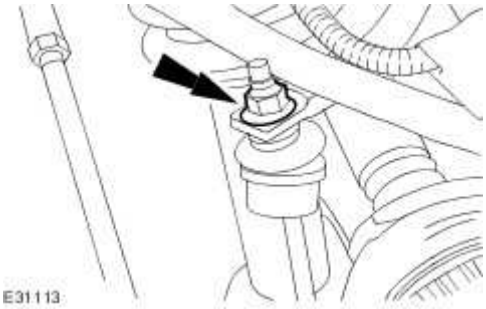

20 . **NOTE:**

Left-hand shown right-hand similar.

Remove the stabilizer bar.

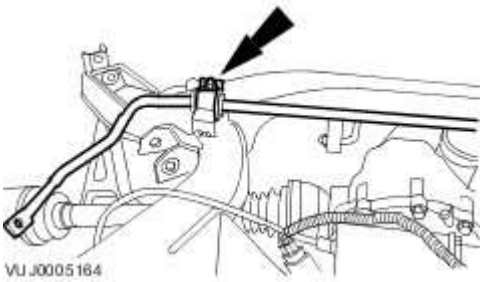

Installation

All vehicles

1 . **NOTE:**

Left-hand shown right-hand similar.

Install the stabilizer bar.

- Tighten to 55 Nm.

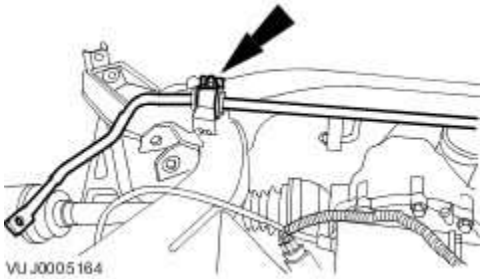

2 . **NOTE:**

Right-hand shown left-hand similar.

Install the stabilizer bar link retaining nut.

www.JagDocs.com

Tighten to 48 Nm.

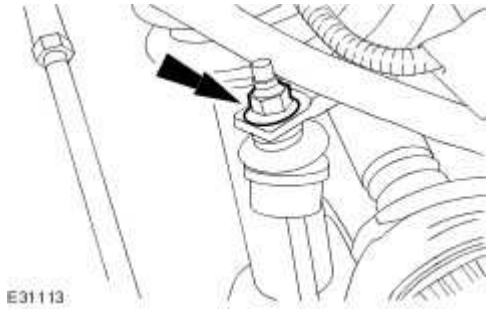

3 . **NOTE:**

Left-hand shown right-hand similar.

Install the stabilizer bar link retaining nut dust cover.

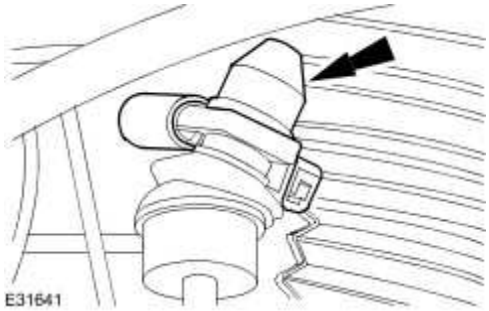

4 . Reposition the subframe.

5 . **NOTE:**

Left-hand shown right-hand similar.

Install the subframe front mount retaining bolt.

Tighten to 125 Nm.

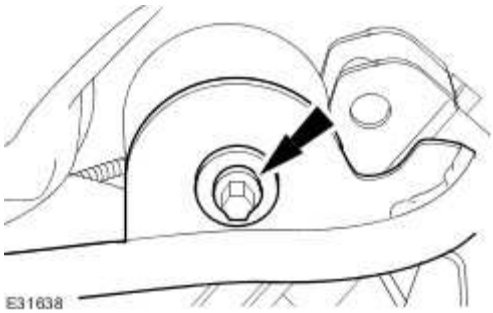

6 . **NOTE:**

Left-hand shown right-hand similar.

Install the subframe rear mount retaining bolt.

- Tighten to 125 Nm.

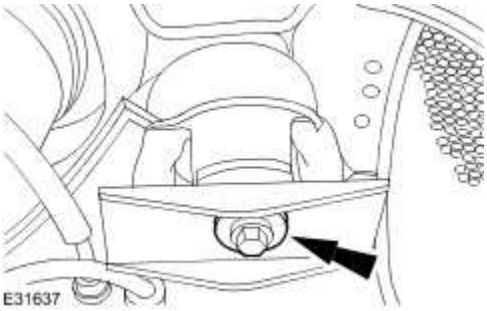

7 . **NOTE:**

Left-hand shown right-hand similar.

Install the Noise, Vibration and Harshness brace retaining bolts.

- Tighten to 48 Nm.

www.JagDocs.com

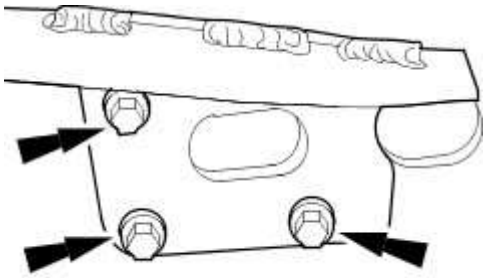

8 . Remove the special tool from the rear subframe.

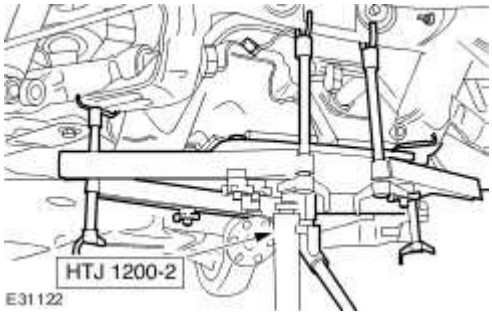

9 . Connect the electric parking brake motor electrical connector.

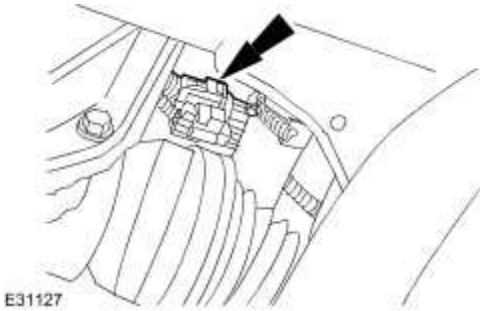

10 . Attach the electric parking brake motor harness.

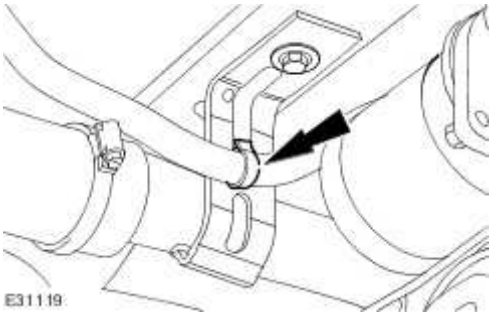

11 . Attach the fuel filler pipe.

- Fit and tighten new hose clip.

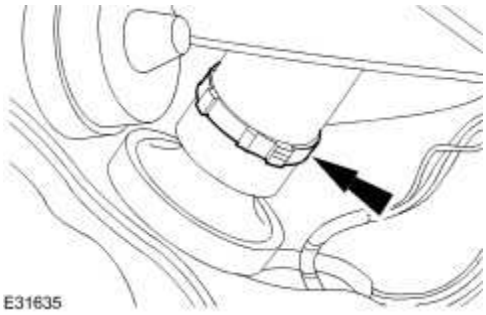

12 . Attach the driveshaft to the rear drive axle flange.

- Tighten to 88 Nm.

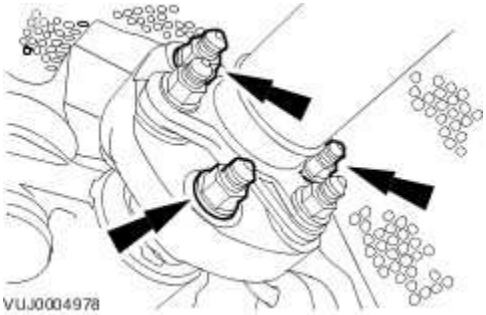

13 . **NOTE:**

Left-hand shown right-hand similar.

Connect the ABS sensor electrical connector.

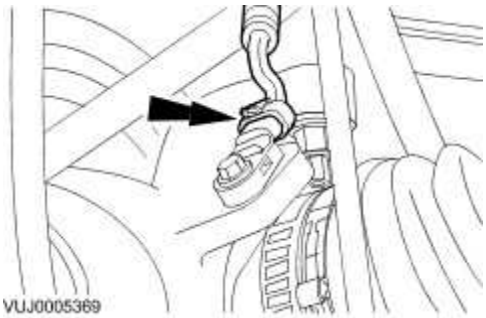

www.JagDocs.com

Vehicles without Brembo brakes

14 . Attach the brake caliper.

- Install new brake caliper retaining bolts.
- Tighten to 103 Nm.

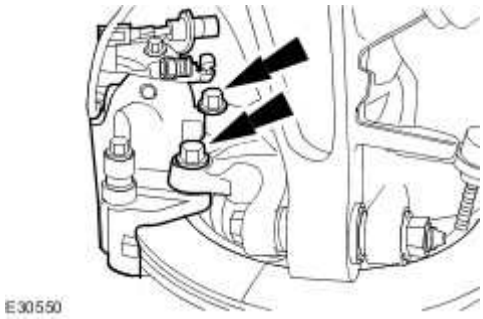

15 . Install the brake pads. <<206-04>>

Vehicles with Brembo brakes

16 . Attach the brake caliper.

- Install new brake caliper retaining bolts.
- Tighten to 70 Nm.

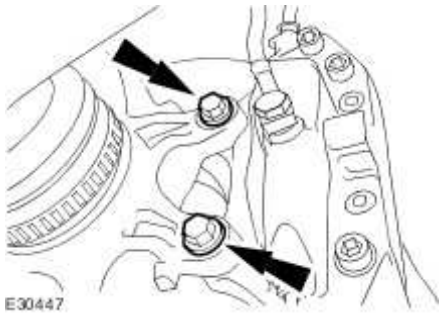

All vehicles

17 . Install the front muffler. <<309-00>>

18 . Install both the upper arms.
For additional information, refer to

19 . Fill the right-hand fuel tank saddle. <<310-00>>

20 . **CAUTION: The final tightening of the rear suspension components must be carried out with the vehicle on its wheels.**

Tighten to 133 Nm.

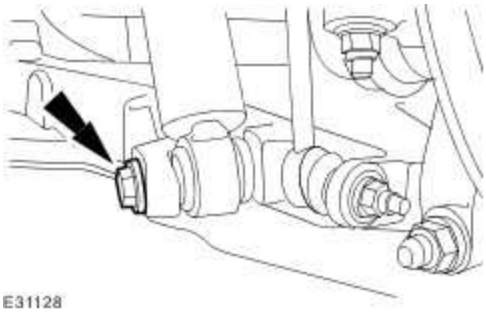

21 . Check the wheel alignment and adjust as necessary. <<204-00>>

22 . Carry out the rear subframe alignment procedure. <<502-00>>

www.JagDocs.com

Rear Stabilizer Bar Link (64.35.24)

Removal

1 . Remove the wheel and tire.
For additional information, refer to Wheel and Tire (74.20.05)

2 . **NOTE:**

Left-hand shown, right-hand similar.

Remove the stabilizer bar link retaining nut dust cover.

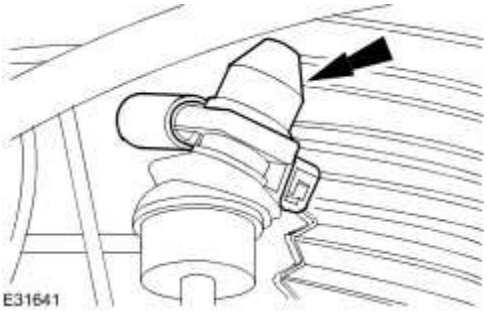

3 . **NOTE:**

Right-hand shown, left-hand similar.

Detach the stabilizer bar link.

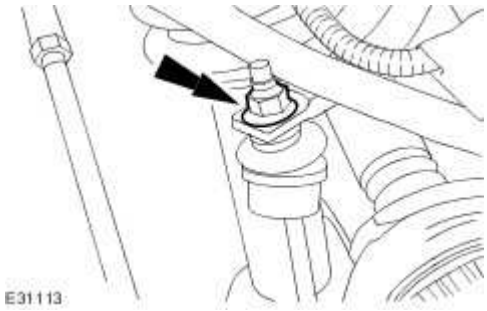

4 . **NOTE:**

Right-hand shown, left-hand similar.

Remove the stabilizer bar link.

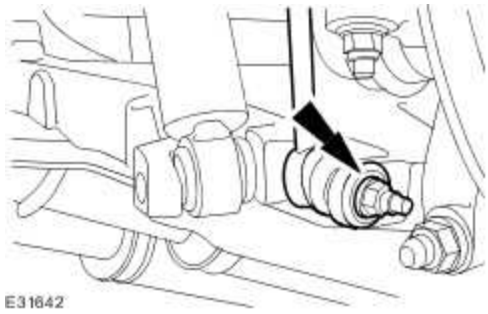

Installation

1 . To install, reverse the removal procedure.

Tighten to 48 Nm.

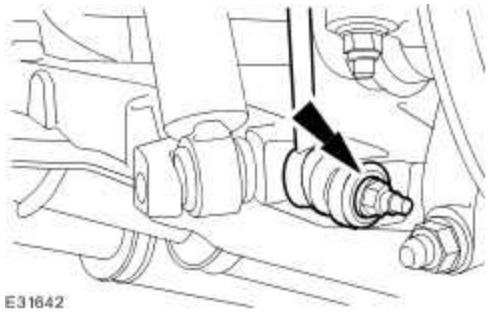

2 . Tighten to 48 Nm.

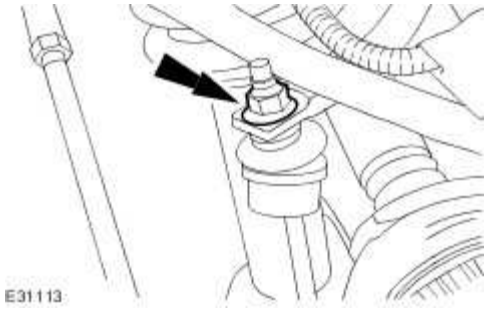

www.JagDocs.com

Upper Arm (64.25.31)

Removal

1 . Remove the wheel and tire. <<204-04>>

2 . Detach the high intensity discharge (HID) sensor link rod.

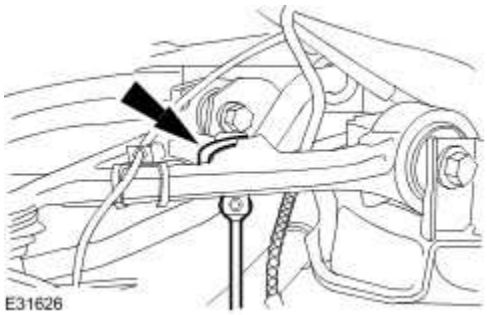

3 . Detach the anti-lock brake system (ABS) sensor wiring harness.

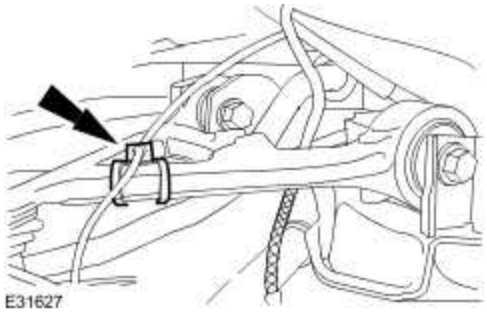

4 . Detach the upper arm from the wheel knuckle.

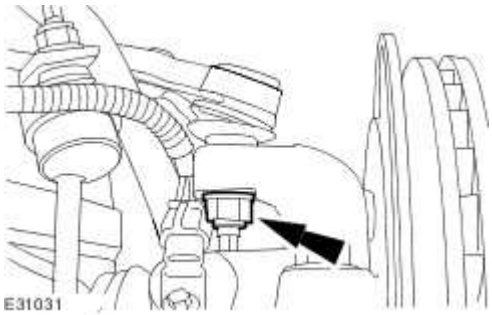

5 . Remove the upper arm.

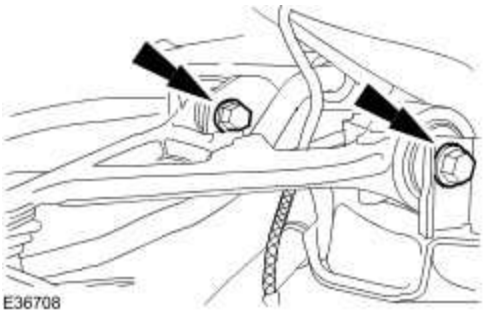

Installation

1. **CAUTION: The final tightening of the rear suspension components must be carried out with the vehicle on its wheels.**

CAUTION:

Install the upper arm.

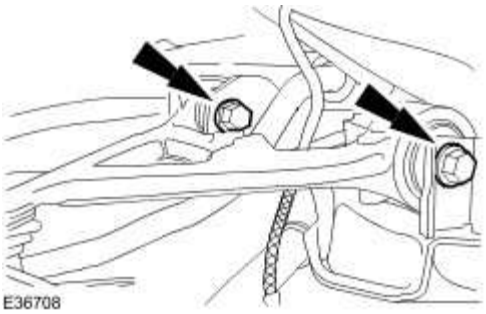

2. **CAUTION: The final tightening of the rear suspension components must be carried out with the vehicle on its wheels.**

Attach the upper arm to the wheel knuckle.

www.JagDocs.com

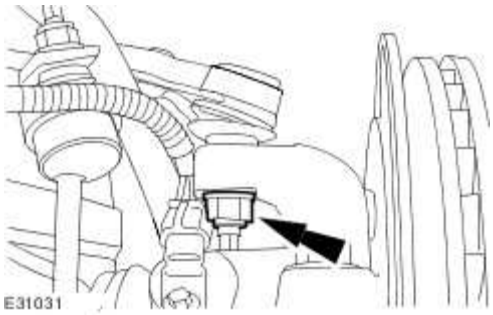

3 . Attach the anti-lock brake system (ABS) sensor wiring harness.

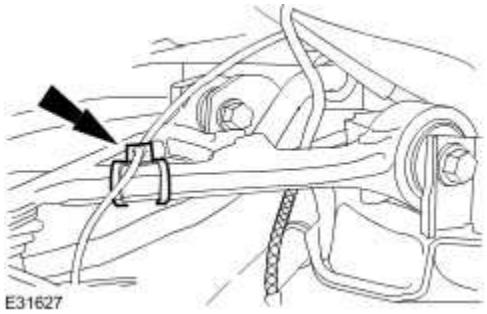

4 . Attach the high intensity discharge (HID) sensor link rod.

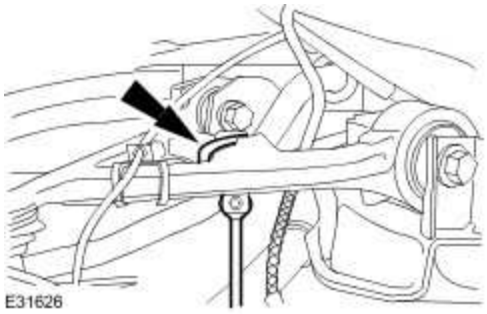

5 . Install the wheel and tire. <<204-04>>

6 . Lower the vehicle.

7 . **CAUTION: The final tightening of the rear suspension components must be carried out with the vehicle on its wheels.**

Tighten to 98 Nm.

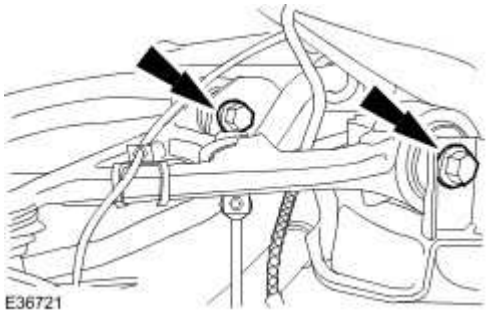

8 . **CAUTION: The final tightening of the rear suspension components must be carried out with the vehicle on its wheels.**

Tighten to 90 Nm.

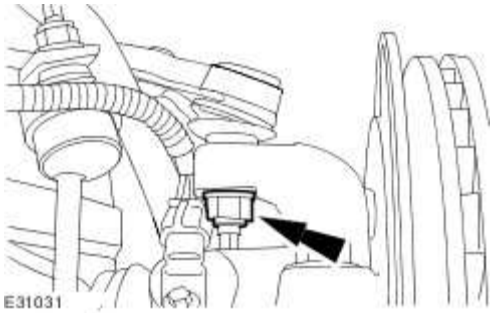

9 . Check and adjust the wheel alignment as necessary. <<204-00>>

www.JagDocs.com

Rear Wheel Bearing (64.15.14)

Special Service Tools

Hub puller
205-491

Adaptor nuts
205-491-01

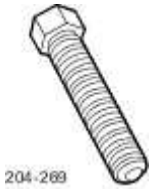

Flange remover forcing screw
204-269

Rear hub support tool
204-249

Rear hub bearing removal tool
204-250

Front hub remover
204-193

Bearing support
204-252

Removal

1 . Loosen the wheel hub nut.

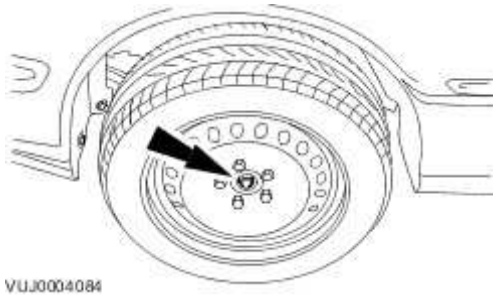

2 Remove the brake disc.
. For additional information, refer to Brake Disc - Vehicles With: Standard Brakes, VIN Range: G00442->G45703 (70.10.11)
For additional information, refer to Brake Disc - Vehicles With: High Performance Brakes, VIN Range: G00442->G45703 (70.10.11)
For additional information, refer to Brake Disc - VIN Range: G45704->G99999 (70.10.11)

3 . Detach the anti-lock brake system (ABS) sensor.

www.JagDocs.com

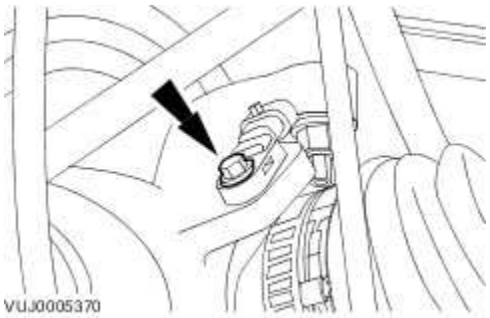

4 . Detach the outer tie rod.

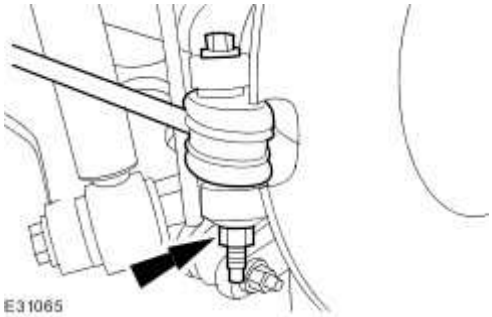

5 . Detach the lower arm from the wheel knuckle.

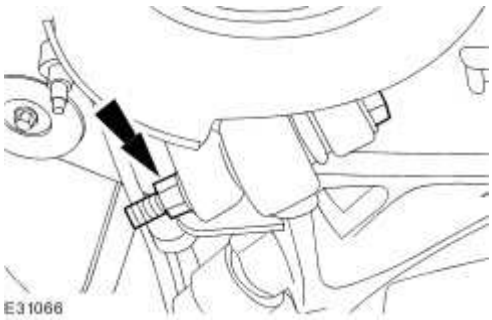

6 . Remove the wheel hub nut.

7 . Using the special tools, detach the halfshaft.

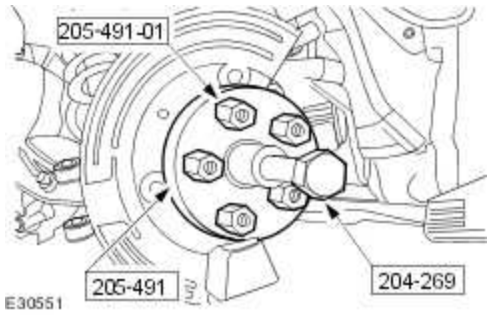

8 . Remove the wheel knuckle assembly.

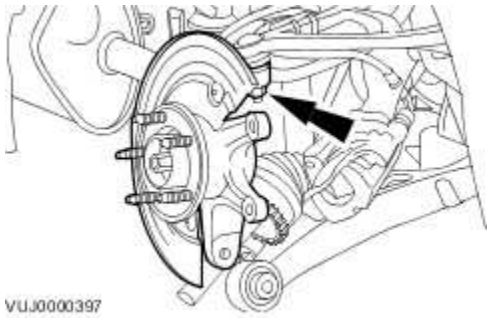

9 . Using the special tools, remove the wheel hub from the bearing.

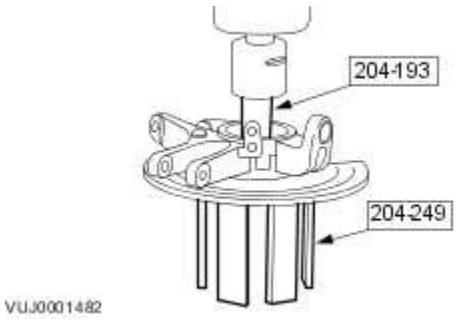

10 . Using the special tools, remove the inner bearing race from the hub.

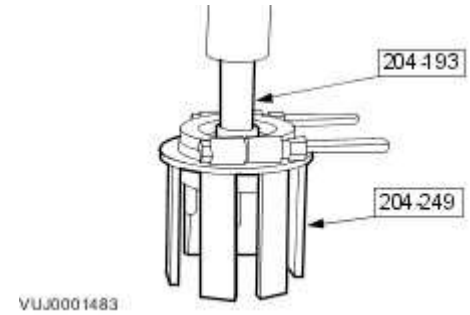

www.JagDocs.com

11 . Remove the circlip.

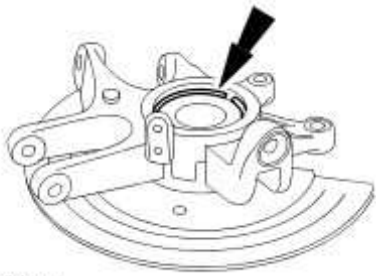

VUJ0000399

12 . Using the special tools, remove the bearing from the wheel knuckle.

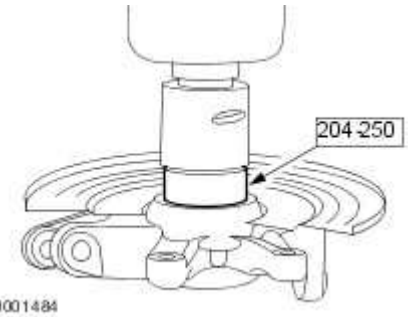

VUJ0001484

Installation

1 . **CAUTION: The final tightening of the rear suspension components must be carried out with the vehicle on its wheels.**

Using the special tools, install the bearing to the wheel knuckle.

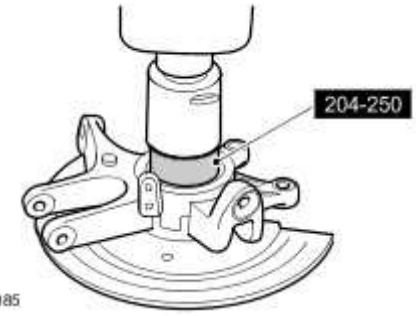

E123985

2 . Install the circlip.

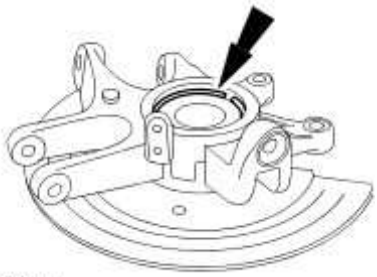

VUJ0000399

3 . Using the special tools, install the wheel hub to the bearing.

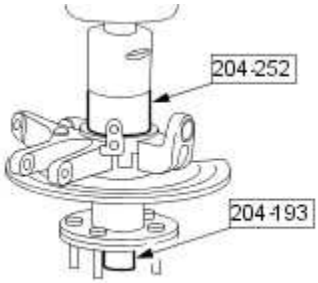

VUJ0001486

4 . Install the wheel knuckle assembly.

Tighten to 90 Nm.

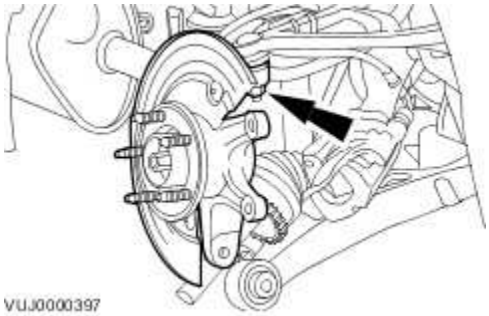

VUJ0000397

5 **NOTE:**

.

Using the old wheel hub nut tighten to 150 Nm.

NOTE:

Remove and discard the old wheel hub nut, install a new wheel hub nut tighten to 150

www.JagDocs.com

Nm.

Attach the wheel knuckle to the halfshaft.

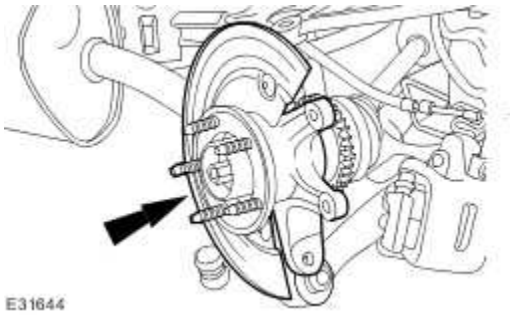

6 . Install the lower arm to the wheel knuckle.

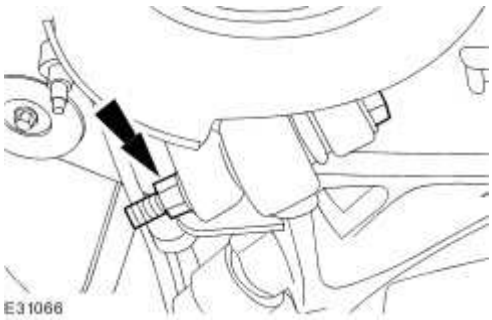

7 . Install the outer tie rod retaining bolt.

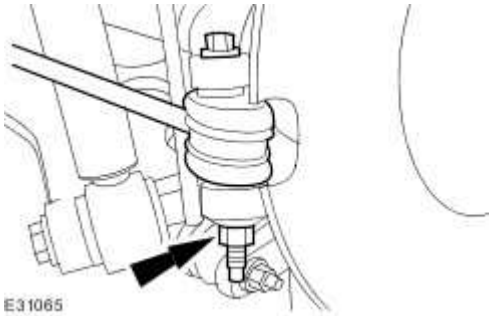

8 . Install the ABS sensor.

Tighten to 10 Nm.

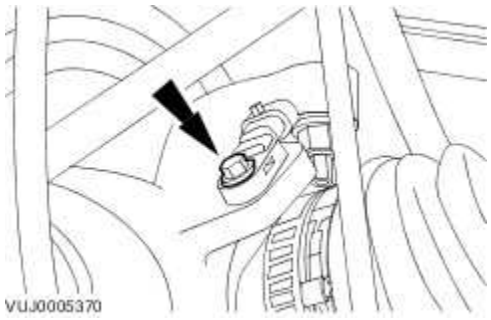

9 Install the brake disc.

. For additional information, refer to

For additional information, refer to

For additional information, refer to Brake Disc - Vehicles With: High Performance Brakes, VIN Range: G00442->G45703 (70.10.10)

For additional information, refer to Brake Disc - Vehicles With: High Performance Brakes, VIN Range: G45704->G99999 (70.10.10)

10 . Tighten the wheel hub nut.

Tighten to 300 Nm.

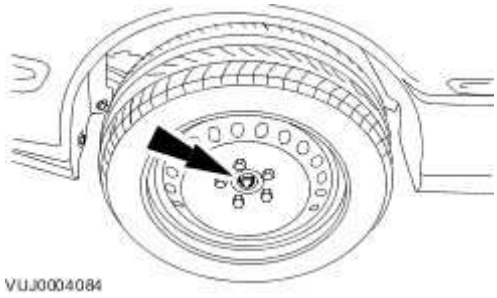

11

. **CAUTION: The final tightening of the rear suspension components must be carried out with the vehicle on its wheels.**

Tighten to 150 Nm.

www.JagDocs.com

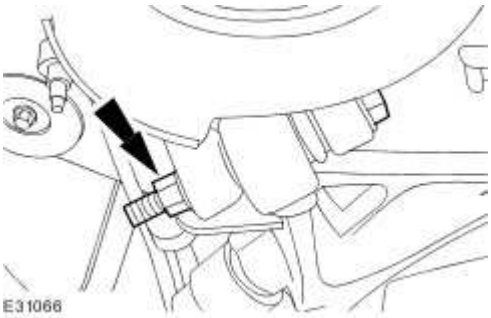

12. **CAUTION: The final tightening of the rear suspension components must be carried out with the vehicle on its wheels.**

Tighten to 55 Nm.

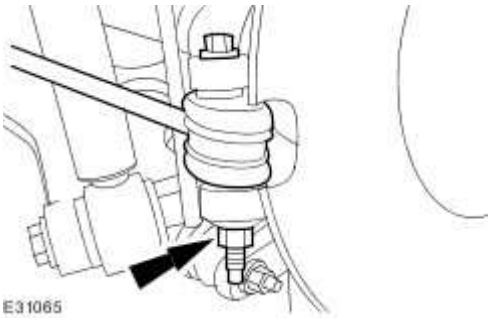

Published: Mar 12, 2014

Shock Absorber and Spring Assembly – Armoured Vehicles

Removal

1 . Remove the luggage compartment floor covering.
   1) Remove the luggage compartment floor covering securing screws.
   2) Remove the luggage compartment floor covering.

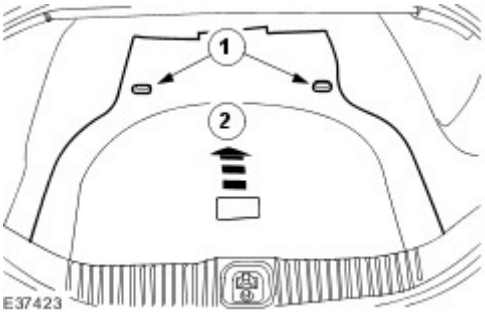

2 . **NOTE:**
   Left-hand shown, right-hand similar.

   Remove the luggage compartment side trim panel.

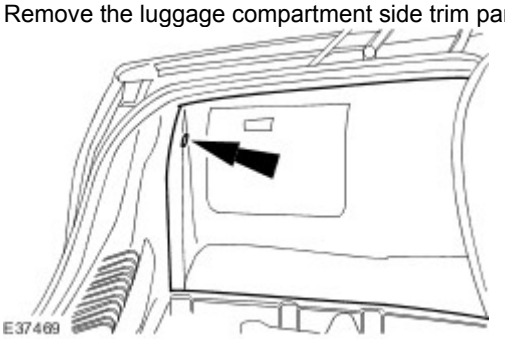

3 . **NOTE:**
   Left-hand shown, right-hand similar.

   Remove the shock absorber and spring assembly trim panel.

www.JagDocs.com

4 . **NOTE:**

Left-hand shown, right-hand similar.

Remove the shock absorber and spring assembly retaining nuts.

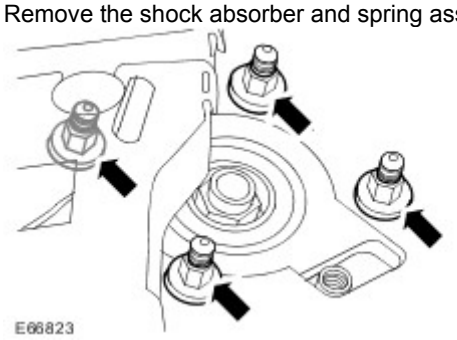

5 . Remove the rear wheel and tire assembly.
For additional information, refer to

6 . **NOTE:**

Left hand shown, right-hand similar.

Detach the stabilizer bar link.

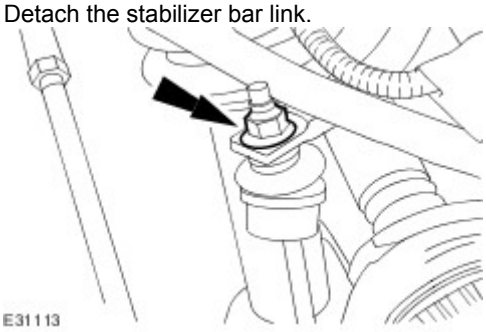

7 . **NOTE:**

Left hand shown, right-hand similar.

Remove the shock absorber and spring assembly.

- Remove the retaining bolt.

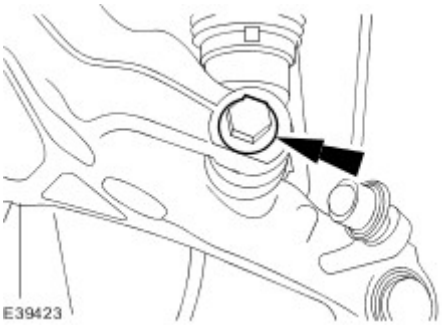

Installation

NOTE:

If a new shock absorber and spring assembly is to be installed, make sure the ride height adjustment retaining nuts are set to the correct measurement.

1 **NOTE:**

· If a new shock absorber and spring assembly is to be installed, make sure the ride height adjustment retaining nuts are set to the correct measurement.

NOTE:

The shock absorber and spring assembly ride height measurement is taken from the lower side of the lock nut to the lower body of the shockabsorber.

Adjust the shock absorber and spring assembly to the correct setting.
For additional information, refer to

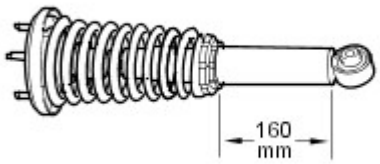

E66849

2 . **NOTE:**

Left hand shown, right-hand similar.

Install the shock absorber and spring assembly.

Tighten to 133 Nm.

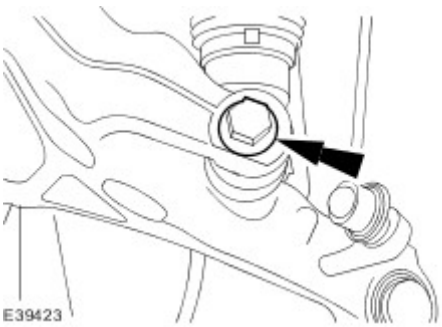

E39423

3 . **NOTE:**

Left hand shown, right-hand similar.

Tighten to 48 Nm.

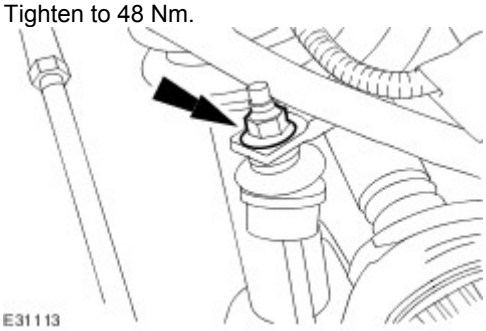

E31113

www.JagDocs.com

4 . Install the rear wheel and tire assembly.
For additional information, refer to

5 . **NOTE:**

Left-hand shown, right-hand similar.

Tighten to 25 Nm.

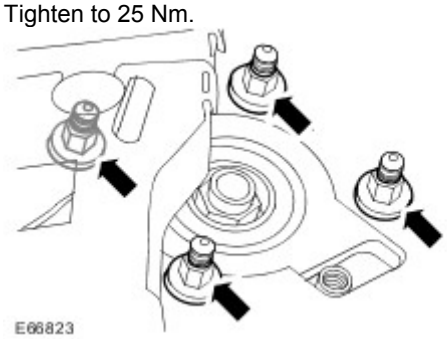

6 . **NOTE:**

Left-hand shown, right-hand similar.

Install the shock absorber and spring assembly trim panel.

7 . **NOTE:**

Left-hand shown, right-hand similar.

Install the luggage compartment side trim panel.

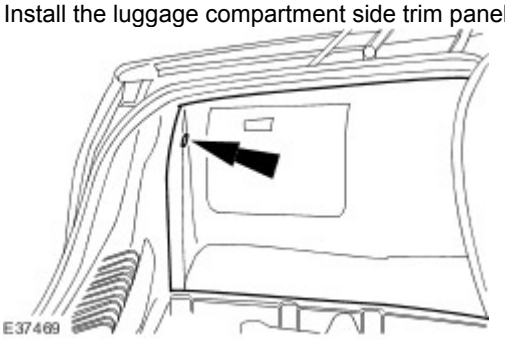

8 . Install the luggage compartment floor covering.

1) Install the luggage compartment floor covering.

2) Install the luggage compartment floor covering securing screws.

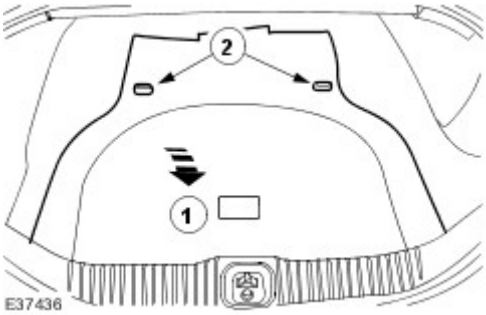

www.JagDocs.com

Specifications

US/Canada Tire Pressures

Wheel Size	Tire Size & Type	For Speeds up to 160 Km/h (100 miles/h) All Load Conditions		For Speeds over 160 Km/h (100 miles/h) All Load Conditions	
		Front	**Rear**	**Front**	**Rear**
17 inch	235/55R17 99H Continental	1.90 bar (28 lbf/in²)	2.10 bar (30 lbf/in²)	2.10 bar (30 lbf/in²)	2.20 bar (32 lbf/in²)
18 inch	235/50R18 97H Continental Conti Touring Contact CH95 or Michelin Pilot HX MXM4	1.90 bar (28 lbf/in²)	2.10 bar (30 lbf/in²)	2.10 bar (30 lbf/in²)	2.20 bar (32 lbf/in²)
19 inch	255/40R19 96 or 100Y Pirelli P-Zero	1.90 bar (28 lbf/in²)	2.10 bar (30 lbf/in²)	2.20 bar (32 lbf/in²)	2.30 bar (34 lbf/in²)
20 inch	255/35R20 97Y Michelin Pilot Sport	2.20 bar (32 lbf/in²)	2.30 bar (34 lbf/in²)	2.30 bar (34 lbf/in²)	2.50 bar (36 lbf/in²)
18 inch (temporary use spare wheel) Up to 80 km/h (50 mph)	135/80R 18	4.2 bar (60lbf/in²)		–	

Out-Side North America (OSNA) Tire Pressures

NOTE:

Not including other markets.

Wheel Size	Tire Size & Type	For Speeds up to 160 Km/h (100 miles/h) All Load Conditions		For Speeds over 160 Km/h (100 miles/h) All Load Conditions	
		Front	**Rear**	**Front**	**Rear**
17 inch	235/55R17 99W Continental	1.90 bar (28 lbf/in²)	2.10 bar (30 lbf/in²)	2.20 bar (32 lbf/in²)	2.30 bar (34 lbf/in²)
18 inch	235/50R18 97W Pirelli P6000	1.90 bar (28 lbf/in²)	2.10 bar (30 lbf/in²)	2.50 bar (36 lbf/in²)	2.60 bar (38 lbf/in²)

19 inch	255/40R19 96 or 100Y Pirelli P-Zero	1.90 bar (28 lbf/in²)	2.10 bar (30 lbf/in²)	2.20 bar (32 lbf/in²)	2.30 bar (34 lbf/in²)
20 inch	255/35R20 97Y Michelin Pilot Sport	2.20 bar (32 lbf/in²)	2.30 bar (34 lbf/in²)	2.30 bar (34 lbf/in²)	2.50 bar (36 lbf/in²)
18 inch (temporary use spare wheel) Up to 80 km/h (50 mph)	135/80R 18	4.2 bar (60lbf/in²)		–	

Other Markets Tire Pressures

NOTE:

Other markets includes: Russia, Estonia, Argentina, Brazil, Chile, Dominican Republic, Panama, Morroco, Phillippines and Sri Lanka.

Wheel Size	**Tire Size & Type**	**Front at all Speeds**	**Rear at all Speeds**
18 inch	235/50R18 97W Pirelli P6000	2.50 bar (36 lbf/in²)	2.60 bar (38 lbf/in²)
19 inch	255/40R19 96 or 100Y Pirelli P-Zero	2.20 bar (32 lbf/in²)	2.30 bar (34 lbf/in²)
20 inch	255/35R20 97Y Michelin Pilot Sport	2.30 bar (34 lbf/in²)	2.50 bar (36 lbf/in²)
18 inch (temporary use spare wheel) Up to 80 km/h (50 mph)	135/80R 18	4.2 bar (60lbf/in²)	

Torque Specifications

Description	**Nm**	**lb/ft**	**lb/in**
Wheel nuts	125	92	-

Wheel Specification

Wheel Type	**Wheel Size**
Ten spoke alloy	7.5 x 17
Eleven spoke alloy	7.5 x 17
Nineteen spoke alloy	8 x 18
Eight spoke alloy	8 x 18
Double seven spoke alloy	8 x 18
Twenty spoke alloy	8 x 18

www.JagDocs.com

Double five spoke alloy	8.5 x 19
Sport five spoke alloy	8.5 x 19

Tire Specification (winter)

Tire Manufacturer	Tire Size
Continental	235/55R17 103 V
Continental	235/50R18 101 V
Pirelli	235/50R18 101 V

Tire Specification (all seasons)

Tire Manufacturer	Tire Size
Continental	235/55R17 99 H
Continental or Michelin	235/50R18 97 H

Tire Specification (summer)

Tire Manufacturer	Tire Size
Continental	235/55R17 99 W
Pirelli	235/50R18 97 W
Pirelli	255/40R19 96 or 100 Y

Specifications

US/Canada Tire Pressures

Wheel Size	Tire Size & Type	For Speeds up to 160 Km/h (100 miles/h) All Load Conditions		For Speeds over 160 Km/h (100 miles/h) All Load Conditions	
		Front	**Rear**	**Front**	**Rear**
18 inch	235/50R18 97 H Continental Conti Touring Contact CH95 or Michelin Pilot HX MXM4	1.90 bar (28 lbf/in²)	2.10 bar (30 lbf/in²)	2.10 bar (30 lbf/in²)	2.20 bar (32 lbf/in²)
19 inch	255/40R19 96 Y Pirelli P-Zero	1.90 bar (28 lbf/in²)	2.10 bar (30 lbf/in²)	2.20 bar (32 lbf/in²)	2.30 bar (34 lbf/in²)
20 inch	255/35R20 97 Y Michelin Pilot Sport	2.20 bar (32 lbf/in²)	2.30 bar (34 lbf/in²)	2.30 bar (34 lbf/in²)	2.50 bar (36 lbf/in²)
20 inch	255/35ZR20 97 Y Dunlop SP Sport 01	2.20 bar (32 lbf/in²)	2.30 bar (34 lbf/in²)	2.30 bar (34 lbf/in²)	2.50 bar (36 lbf/in²)
18 inch (temporary use spare wheel) Up to 80 km/h (50 mph)	135/80R18	4.2 bar (60 lbf/in²)		–	

Out-Side North America (OSNA) Tire Pressures

NOTE:

OSNA markets includes: Russia, Estonia, Argentina, Brazil, Chile, Dominican Republic, Panama, Morroco, Phillippines and Sri Lanka.

Wheel Size	Tire Size & Type	Front at all Speeds	Rear at all Speeds
18 inch	235/50R18 97 W Pirelli P6000	2.50 bar (36 lbf/in²)	2.60 bar (38 lbf/in²)
19 inch	255/40R19 96 Y Pirelli P-Zero	2.20 bar (32 lbf/in²)	2.30 bar (34 lbf/in²)
20 inch	255/35R20 97 Y Michelin Pilot Sport	2.30 bar (34 lbf/in²)	2.50 bar (36 lbf/in²)
20 inch	255/35ZR20 97 Y Dunlop SP Sport 01	2.30 bar (34 lbf/in²)	2.50 bar (36 lbf/in²)
18 inch (temporary use spare wheel) Up to 80 km/h (50 mph)	135/80R18	4.2 bar (60 lbf/in²)	

www.JagDocs.com

All Other Markets Tire Pressures

Wheel Size	Tire Size & Type	For Speeds up to 160 Km/h (100 miles/h) All Load Conditions		For Speeds over 160 Km/h (100 miles/h) All Load Conditions	
		Front	Rear	Front	Rear
18 inch	235/50R18 97 W Pirelli P6000	1.90 bar (28 lbf/in²)	2.10 bar (30 lbf/in²)	2.50 bar (36 lbf/in²)	2.60 bar (38 lbf/in²)
19 inch	255/40R19 96 Y Pirelli P-Zero	1.90 bar (28 lbf/in²)	2.10 bar (30 lbf/in²)	2.20 bar (32 lbf/in²)	2.30 bar (34 lbf/in²)
20 inch	255/35R20 97 Y Michelin Pilot Sport	2.20 bar (32 lbf/in²)	2.30 bar (34 lbf/in²)	2.30 bar (34 lbf/in²)	2.50 bar (36 lbf/in²)
20 inch	255/35ZR20 97 Y Dunlop SP Sport 01	2.20 bar (32 lbf/in²)	2.30 bar (34 lbf/in²)	2.30 bar (34 lbf/in²)	2.50 bar (36 lbf/in²)
18 inch (temporary use spare wheel) Up to 80 km/h (50 mph)	135/80R18	4.2 bar (60 lbf/in²)		–	

Torque Specifications

Description	Nm	lb/ft	lb/in
Wheel nuts	125	92	-

Wheel Specification

Wheel Type	Wheel Size
Luxury alloy	8 x 18
Dynamic alloy	8 x 18
Rapier alloy	8 x 18
Tucana alloy	8 x 18
Custom alloy	8.5 x 19
Sabre alloy	8.5 x 19
Sepang alloy	9 x 20
Callisto alloy	9 x 20

Tire Specification (winter)

Tire Manufacturer	Tire Size
Continental	235/50R18 101 V
Pirelli	235/50R18 101 V

Tire Specification (all seasons)

Tire Manufacturer	Tire Size
Continental or Michelin	235/50R18 97 H

Tire Specification (summer)

Tire Manufacturer	Tire Size
Pirelli	235/50R18 97 W
Pirelli	255/40R19 96 Y
Michelin or Dunlop	255/35ZR20 97 Y

www.JagDocs.com

Specifications

US/Canada Tire Pressures

Wheel Size	Tire Size & Type	Front at all Speeds	Rear at all Speeds
18 inch	235/50R18 97 H Continental Conti Touring Contact CH95 or Michelin Pilot HX MXM4	2.10 bar (30 lbf/in²)	2.20 bar (32 lbf/in²)
19 inch	255/40R19 96 Y Pirelli P-Zero	2.20 bar (32 lbf/in²)	2.30 bar (34 lbf/in²)
19 inch	255/40 R19 100V Pirelli P6 4 Seasons	2.20 bar (32 lbf/in²)	2.30 bar (34 lbf/in²)
20 inch	255/35R20 97 Y Michelin Pilot Sport	2.30 bar (34 lbf/in²)	2.50 bar (36 lbf/in²)
20 inch	255/35ZR20 97 Y Dunlop SP Sport 01	2.30 bar (34 lbf/in²)	2.50 bar (36 lbf/in²)
18 inch (temporary use spare wheel) Up to 80 km/h (50 mph)	135/80R18	4.2 bar (60 lbf/in²)	

Out-Side North America (OSNA) Tire Pressures

NOTE:

OSNA markets includes: Russia, Estonia, Argentina, Brazil, Chile, Dominican Republic, Panama, Morroco, Phillippines and Sri Lanka.

Wheel Size	Tire Size & Type	Front at all Speeds	Rear at all Speeds
18 inch	235/50R18 97 W Pirelli P6000	2.50 bar (36 lbf/in²)	2.60 bar (38 lbf/in²)
19 inch	255/40R19 96 Y Pirelli P-Zero	2.20 bar (32 lbf/in²)	2.30 bar (34 lbf/in²)
20 inch	255/35R20 97 Y Michelin Pilot Sport	2.30 bar (34 lbf/in²)	2.50 bar (36 lbf/in²)
20 inch	255/35ZR20 97 Y Dunlop SP Sport 01	2.30 bar (34 lbf/in²)	2.50 bar (36 lbf/in²)
18 inch (temporary use spare wheel) Up to 80 km/h (50 mph)	135/80R18	4.2 bar (60 lbf/in²)	

All Other Markets Tire Pressures

Wheel Size	Tire Size & Type	For Speeds up to 160 Km/h (100 miles/h) All Load Conditions		For Speeds over 160 Km/h (100 miles/h) All Load Conditions	
		Front	Rear	Front	Rear
18 inch (Petrol)	235/50R18 97 W Pirelli P6000	1.90 bar (28 lbf/in²)	2.10 bar (30 lbf/in²)	2.50 bar (36 lbf/in²)	2.60 bar (38 lbf/in²)
18 inch (Diesel)	235/50R18 97 W Pirelli P6000	2.10 bar (30 lbf/in²)	2.10 bar (30 lbf/in²)	2.50 bar (36 lbf/in²)	2.60 bar (38 lbf/in²)
19 inch	255/40R19 96 Y Pirelli P-Zero	1.90 bar (28 lbf/in²)	2.10 bar (30 lbf/in²)	2.20 bar (32 lbf/in²)	2.30 bar (34 lbf/in²)
20 inch	255/35R20 97 Y Michelin Pilot Sport	2.20 bar (32 lbf/in²)	2.30 bar (34 lbf/in²)	2.30 bar (34 lbf/in²)	2.50 bar (36 lbf/in²)
20 inch	255/35ZR20 97 Y Dunlop SP Sport 01	2.20 bar (32 lbf/in²)	2.30 bar (34 lbf/in²)	2.30 bar (34 lbf/in²)	2.50 bar (36 lbf/in²)
18 inch (temporary use spare wheel) Up to 80 km/h (50 mph)	135/80R18	4.2 bar (60 lbf/in²)		–	

Torque Specifications

Description	Nm	lb/ft	lb/in
Wheel nuts	125	92	-

Wheel Specification

Wheel Type	Wheel Size
Tucana	8 x 18
Carelia	8.5 x 19
Polaris	8.5 x 19
Sabre	8.5 x 19
Sabre chrome	8.5 x 19
Vela	8.5 x 19
Sepang	9 x 20
Concept 8 (Callisto)	9 x 20
Cremona	9 x 20
Callisto	9 x 20

www.JagDocs.com

Tire Specification (all seasons)

Tire Manufacturer	Tire Size
Continental Pro Contact	235/50 R18 97H
Michelin Pilot HX MXM4	235/50 R18 97H
Pirelli P6 4 Seasons	255/40 R19 100V
Dunlop SP Sport 01	255/35 ZR20 97Y

Tire Specification (summer)

Tire Manufacturer	Tire Size
Pirelli P6000 Powergy	235/50 R18 97W
Continental Premium Contact 2	235/50 R18 97W
Pirelli P-Zero	255/40 R19 100V

Tire Specification (spare)

Tire Manufacturer	Tire Size
Pirelli Temp Spare	135/80 R18 104M

Wheels and Tires - VIN Range: G00442->G45703

WARNING: Do not mix different types of tires on the same vehicle such as radial, bias or bias belted tires except in emergencies (temporary spare usage). Failure to follow these instructions may result in personal injury.

WARNING: Never run the engine with one wheel off the ground, for example when changing a wheel. The wheel resting on the ground may cause the vehicle to move. Failure to follow these instructions may result in personal injury.

WARNING: Aftermarket aerosol tire sealants are extremely flammable. Always question the customer to make sure these products have not been used. Failure to follow these instructions may result in personal injury.

WARNING: Always wear safety goggles or a face shield when performing any work with wheel and tire assemblies. Failure to follow these instructions may result in personal injury.

WARNING: Retighten the wheel nuts at 800 km (500 miles) after any wheel change or anytime the wheel nuts are loosened. Failure to follow these instructions may result in personal injury.

WARNING: Failure to retighten the wheel nuts at the specified mileage could cause the wheels to become detached while the vehicle is in motion. Failure to follow these instructions may result in personal injury.

www.JagDocs.com

WARNING: Each individual axle, wheel and tire has its own maximum weight or tire inflation rating. Do not overload or over-inflate beyond the capacity of the lowest rated components of the system. Failure to follow these instructions may result in personal injury.

WARNING: When changing a wheel, make sure that the vehicle cannot move. Always apply the parking brake and select the transmission park position. Failure to follow these instructions may result in personal injury.

WARNING: Reduce air pressure as much as possible by pushing the valve core plunger in before removing the valve core. Failure to follow these instructions may result in personal injury.

CAUTION: Do not clean aluminium wheels with steel wool, abrasive type cleaners or detergents. Failure to follow these instructions may result in damage to the vehicle.

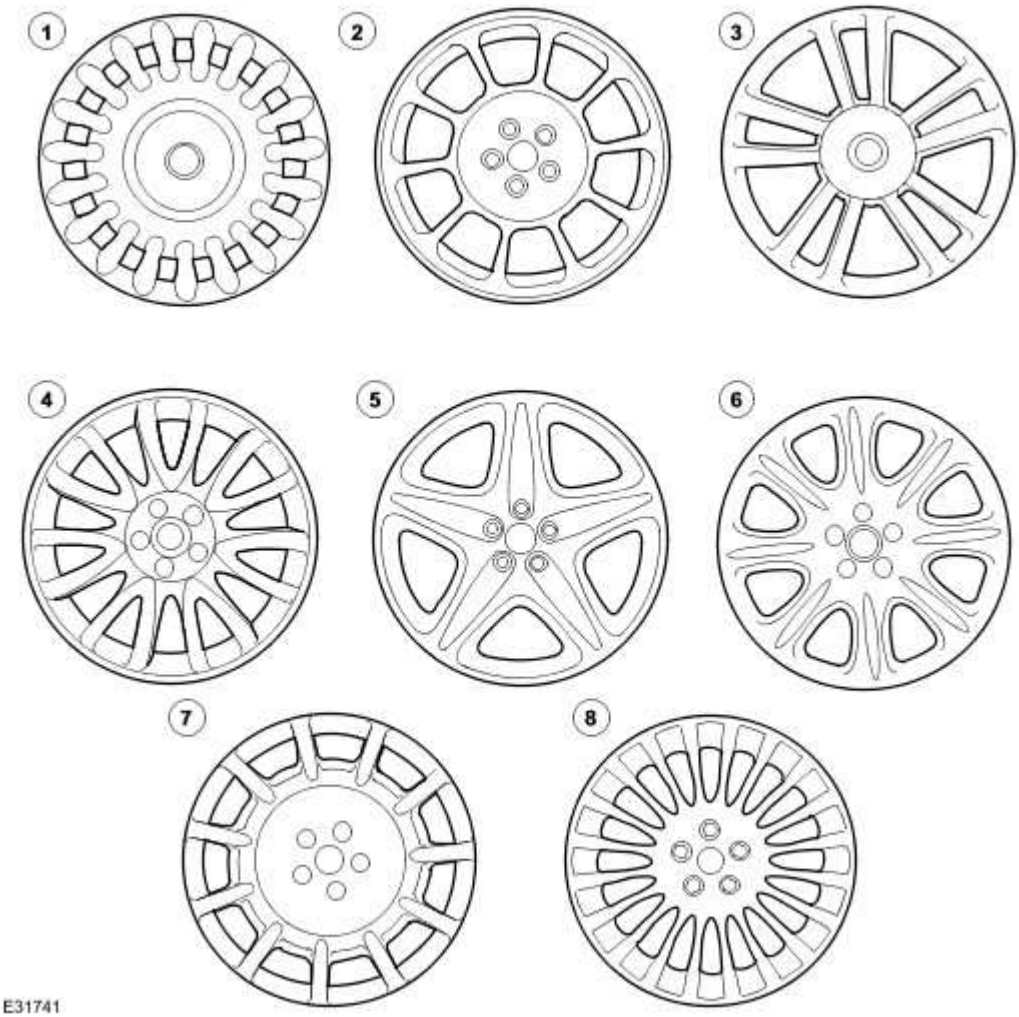

Item	Part Number	Description
1	-	Nineteen spoke alloy
2	-	Ten spoke alloy
3	-	Double five spoke alloy
4	-	Double seven spoke alloy
5	-	Sport five spoke alloy
6	-	Eight spoke alloy
7	-	Eleven spoke alloy
8		Twenty spoke alloy

www.JagDocs.com

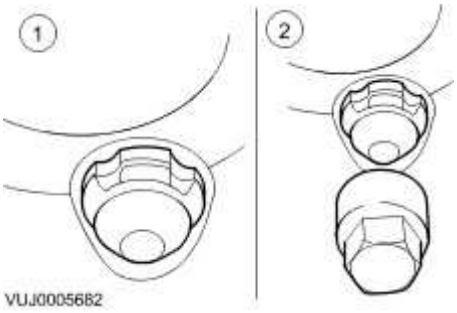

Item	Part Number	Description
1	-	Locking wheel nut
2	-	Locking wheel nut socket

Locking Wheel Nuts

Locking wheel nuts are fitted to certain markets and are available as an accessory in other markets.

One locking wheel nut is fitted to each road wheel and may only be removed by using the correctly coded socket.

Locking wheel nuts are available in one length. The correct socket is supplied with the vehicle tool kit. Sets of sockets are available to Jaguar dealers.

Recommended Tires

The radial ply tires recommended by Jaguar meet the high speed performance of the vehicle. Only tires of identical specification may be fitted as replacements. Under no circumstances must cross-ply tires be fitted.

Tire Inflation Pressures

All recommended tires, including winter tires, must be inflated to the pressures shown in the Specifications sub-section. Inflation pressures must only be checked when the tires are cold.

Tire Replacement and Wheel-Interchanging

When the replacement of a tire is necessary, it is preferable to fit a complete set. If two replacement tires are fitted (to one axle), they must be of the same manufacturer and type as those on the other axle.

New tires must be balanced before fitting to the vehicle.

Winter (Snow) Tires

Winter tires must only be fitted in complete four-wheel sets of the same type and size. The maximum speed with winter tires fitted (without snow chains) is 210 km/h (131 mile/h) for H rated tires or 240

km/h (149 mile/h) for V rated tires.

When using snow chains, note that:

- Snow chains must only be fitted to the rear wheels.
- Only Jaguar snow chains should be used.
- Snow chains must not be used on roads which are clear of snow.
- The maximum speed with winter tires and snow chains fitted is 48 km/h (30 mile/h).
- Traction control (where fitted) must be switched OFF when using snow chains.

Rotational Indicators

Some recommended winter tires may have an arrow moulded in the sidewall to indicate the correct direction of rotation. It is essential tires are fitted so that the arrow is pointing in the direction of rotation.

Some of the recommended tires for normal and winter use have an asymmetric tread pattern. These tires have inside and outside markers which should be fitted appropriately to the wheel.

Temporary-Use Spare Wheel

In certain markets, the spare wheel supplied with the vehicle is of the temporary-use type. It is narrower than the normal road wheel and takes up less room in the wheel luggage compartment.

When using this type of spare wheel note that:

- Maximum speed must not exceed 80 km/h (50 mile/h).
- The normal road wheel must be replaced as soon as possible.
- Only one temporary-use wheel may be fitted to the vehicle at any time.
- Traction control (where fitted) must be switched OFF.

Tread Wear Indicator

Tread wear indicators are molded into the bottom of the tread grooves across the width of the tire. The tire must be renewed when tread wear indicators become visible at the surface of the tread, in two or more adjacent tread grooves.

Note that tire tread depth and condition must comply with prevailing local legislation.

www.JagDocs.com

Wheels and Tires - VIN Range: G45704->H18679

WARNING: Do not mix different types of tires on the same vehicle such as radial, bias or bias belted tires except in emergencies (temporary spare usage). Failure to follow these instructions may result in personal injury.

WARNING: Never run the engine with one wheel off the ground, for example when changing a wheel. The wheel resting on the ground may cause the vehicle to move. Failure to follow these instructions may result in personal injury.

WARNING: Aftermarket aerosol tire sealants are extremely flammable. Always question the customer to make sure these products have not been used. Failure to follow these instructions may result in personal injury.

WARNING: Always wear safety goggles or a face shield when performing any work with wheel and tire assemblies. Failure to follow these instructions may result in personal injury.

WARNING: Tighten the wheel nuts at 800 km (500 miles) after any wheel change or anytime the wheel nuts are loosened. Failure to follow these instructions may result in personal injury.

WARNING: Failure to tighten the wheel nuts at the specified mileage could cause the wheels to become detached while the vehicle is in motion. Failure to follow these instructions may result in personal injury.

WARNING: Each individual axle, wheel and tire has its own maximum weight or tire inflation rating. Do not overload or over-inflate beyond the capacity of the lowest rated

components of the system. Failure to follow these instructions may result in personal injury.

WARNING: When changing a wheel, make sure that the vehicle cannot move. Always apply the parking brake and select the transmission park position. Failure to follow these instructions may result in personal injury.

WARNING: Reduce air pressure as much as possible by pushing the valve core plunger in before removing the valve core. Failure to follow these instructions may result in personal injury.

CAUTION: Do not clean aluminium wheels with steel wool, abrasive type cleaners or detergents. Failure to follow these instructions may result in damage to the vehicle.

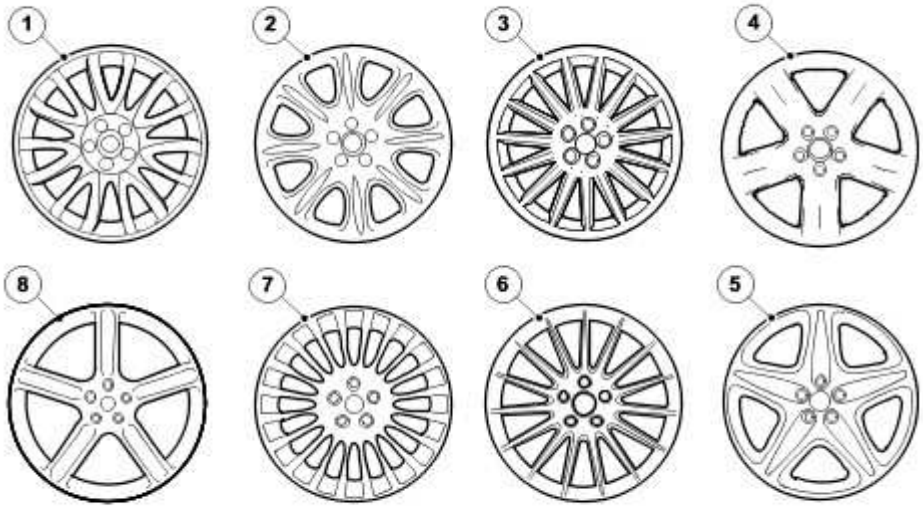

E74104

Item	Part Number	Description
1	-	Luxury
2	-	Dynamic

www.JagDocs.com

3	-	Sepang
4	-	Rapier
5	-	Tucana
6	-	Custom (Crome option available in the US)
7	-	Sabre (Crome option available in the US)
8		Callisto

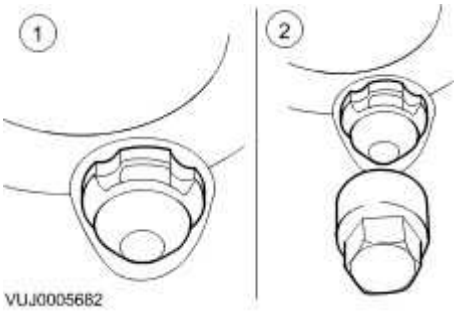

Item	Part Number	Description
1	-	Locking wheel nut
2	-	Locking wheel nut socket

Locking Wheel Nuts

Locking wheel nuts are fitted to certain markets and are available as an accessory in other markets.

One locking wheel nut is fitted to each road wheel and may only be removed by using the correctly coded socket.

Locking wheel nuts are available in one length. The correct socket is supplied with the vehicle tool kit. Sets of sockets are available to Jaguar dealers.

Recommended Tires

The radial ply tires recommended by Jaguar meet the high speed performance of the vehicle. Only tires of identical specification may be fitted as replacements. Under no circumstances must cross-ply tires be fitted.

Tire Inflation Pressures

All recommended tires, including winter tires, must be inflated to the pressures shown in the specifications. For additional information, refer to Specifications - VIN Range: G45704->G99999 (204-04 Wheels and Tires)

Tire Replacement and Wheel-Interchanging

When the replacement of a tire is necessary, it is preferable to fit an axle set. If two replacement tires are fitted (to one axle), they must be of the same manufacturer and type as those on the other axle.

New tires must be balanced before fitting to the vehicle.

Winter (Snow) Tires

Winter tires must only be fitted in complete four-wheel sets of the same type and size. The maximum speed with winter tires fitted (without snow chains) is 210 km/h (131 miles/h) for H rated tires or 240 km/h (149 miles/h) for V rated tires.

When using snow chains, note that:

- Snow chains must only be fitted to the rear wheels
- Only Jaguar snow chains should be used
- Snow chains must not be used on roads which are clear of snow
- The maximum speed with winter tires and snow chains fitted is 48 km/h (30 miles/h)
- Traction control (where fitted) must be switched OFF when using snow chains.

Rotational Indicators

Some recommended winter tires may have an arrow moulded in the sidewall to indicate the correct direction of rotation. It is essential tires are fitted so that the arrow is pointing in the direction of rotation.

Some of the recommended tires for normal and winter use have an asymmetric tread pattern. These tires have inside and outside markers which should be fitted correctly to the wheel.

Temporary-Use Spare Wheel

In certain markets, the spare wheel supplied with the vehicle is of the temporary-use type. It is narrower than the normal road wheel and takes up less room in the luggage compartment.

When using this type of spare wheel note that:

- Maximum speed must not exceed 80 km/h (50 miles/h)
- The normal road wheel must be replaced as soon as possible
- Only one temporary-use wheel may be fitted to the vehicle at any time
- Traction control (where fitted) must be switched OFF.

www.JagDocs.com

Tread Wear Indicator

Tread wear indicators are molded into the bottom of the tread grooves across the width of the tire. The tire must be renewed when tread wear indicators become visible at the surface of the tread, in two or more adjacent tread grooves.

Note that tire tread depth and condition must comply with specific market legislations.

Tire Changing

Caution: When removing or installing a new tire care must be taken to make sure that the tire low pressure sensor is not damaged. Make sure the tire bead is broken from the wheel rim 180 degrees from the tire low pressure sensor. Failure to follow this instruction may cause damage to the tire low pressure sensor.

Tire Pressure Monitoring

Visual Identification

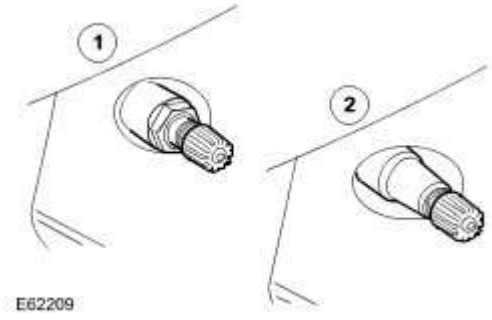

Wheels fitted with the tire low pressure sensor can be visually identified by the external metal lock nut and valve (1). All Jaguar non-tire pressure monitoring system wheels have a rubber valve fitted (2).

The tire pressure monitoring system monitors pressure in each tire including the full size spare tire (temporary-use spare wheels are not fitted with tire low pressure sensors and are consequently not monitored).

Tire Pressure Monitoring System - Component Location

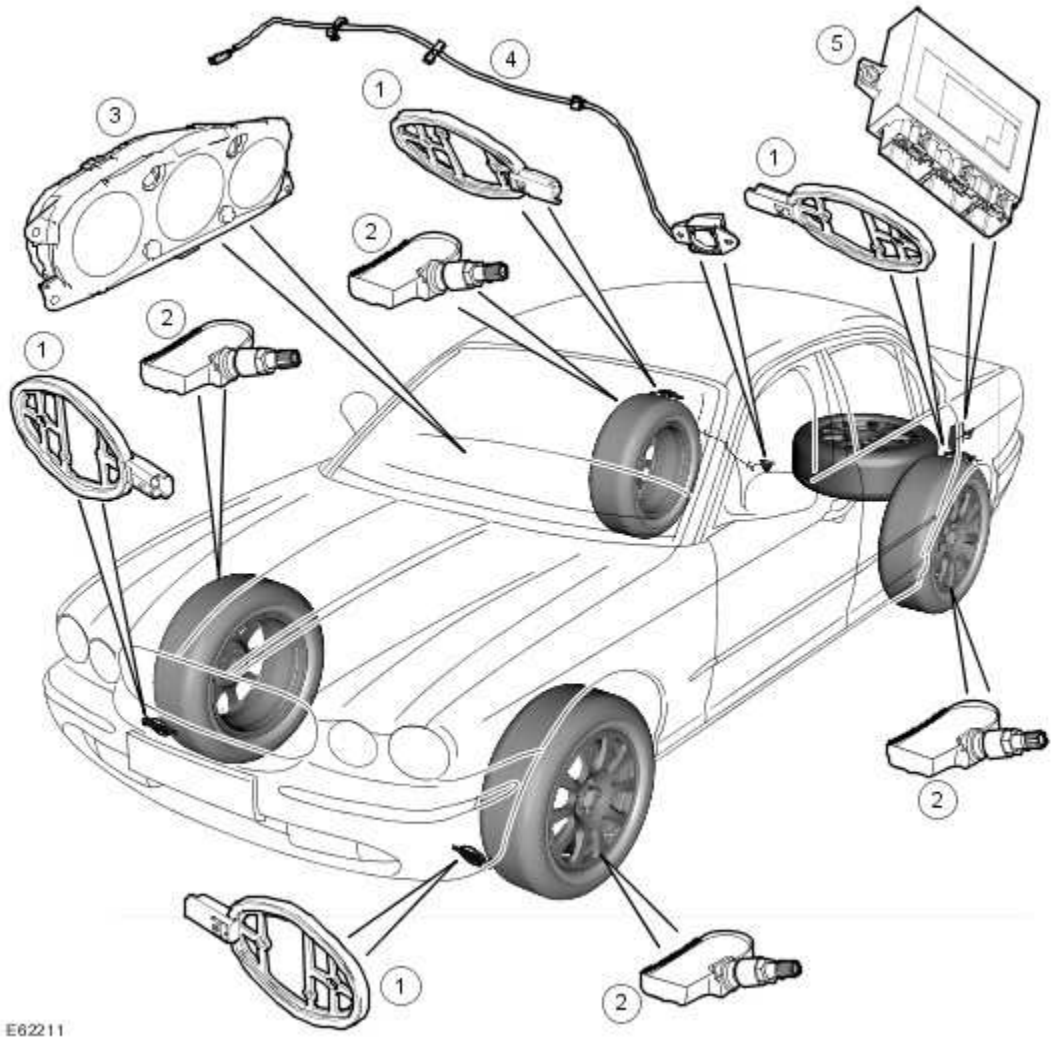

Item	Part Number	Description
1		Tire pressure monitoring system antenna
2		Tire low pressure sensor
3		Instrument cluster
4		External antenna
5		Tire pressure monitoring system module

The purpose of the tire pressure monitoring system is to assist the driver in maintaining the vehicle's tire pressures at the optimum level in order to:

- improve fuel consumption

www.JagDocs.com

- maintain ride and handling characteristics
- reduce the risk of rapid tire deflation – which may be caused by under inflated tires
- comply with legislation in specific markets.

The tire pressure monitoring system measures the pressure in each of the tires on the vehicle and issues warnings to the driver if any of the pressures deviate from a defined tolerance, which is dependant on the vehicle market and the size and type of tire fitted.

Note: During a **blow out** a very rapid reduction in tire pressure is experienced. The system is not intended to warn the driver of a **blow out**, since it is not possible to give the driver sufficient warning that such an event is occurring, due to its short duration. The design of the tire pressure monitoring system is to assist the driver in keeping the tires at the correct pressure, which may to reduce the likelihood of a tire **blow out** occurring.

Tire Pressure Monitoring System Module

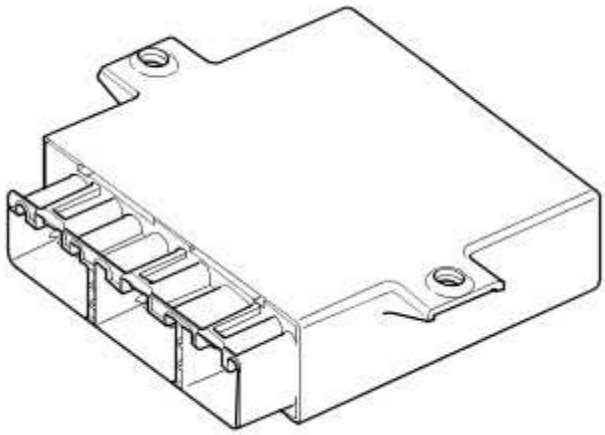

The tire pressure monitoring system module is located with the parking aid module in the luggage compartment of the vehicle.

The tire pressure monitoring system module's main function is to detect the following:

- the tire pressure is below the recommended low tolerance value – under inflated tire
- the position of the tire on the vehicle.

The tire pressure monitoring system module communicates with the vehicle instrument cluster to provide the driver with appropriate warnings and also indicates the status/failure of tire pressure monitoring system components.

Tire Location

Because of the requirement for different pressure targets and thresholds for the front and rear tires, the tire pressure monitoring system module can identify the position of the tires on the vehicle, and assign a received tire pressure sensor identification to a specific position on the vehicle (i.e. FL (front left), FR (front right), RL (rear left) or RR (rear right)).

Tire location is performed automatically by the module using an auto-location function. This function requires no manual intervention by the driver. The tire pressure monitoring system module can automatically learn the position of tires on the vehicle if the tire pressure sensors or their positions are changed on the vehicle.

The tire pressure monitoring system module can automatically detect, under normal conditions, the following:

- one or more tire pressure sensors have been replaced
- one or more tire pressure sensor identifications are missing
- one or more 'alien' identifications are being received, i.e. the module can reject identifications from tire pressure sensors that do not belong to the vehicle
- the spare tire and one of the tires in use on the vehicle have exchanged position on the vehicle.

Spare Tire Identification

Depending on the vehicle specification, the spare tire may or may not be fitted with a tire pressure sensor. Temporary-use spare wheels are not fitted with sensors and are consequently not monitored.

If the spare tire is fitted with a tire pressure sensor, the tire pressure monitoring system module can detect it, determine that it is the spare tire and monitor its pressure and issue warnings to the driver accordingly. If the tire pressure monitoring system module does not detect a spare tire pressure sensor, the tire pressure monitoring system module will not show a fault to the driver, however a fault code will be stored in the tire pressure monitoring system module.

If the spare tire is being monitored and the driver replaces a flat road tire with the spare tire, the tire pressure monitoring system module will not continually warn the driver that the original flat tire (now in the spare position) is flat. This prevents distraction of the driver by constant pressure warnings being issued. Warnings will only be displayed for 20 seconds after the ignition is switched on.

www.JagDocs.com

Tire Low Pressure Sensor

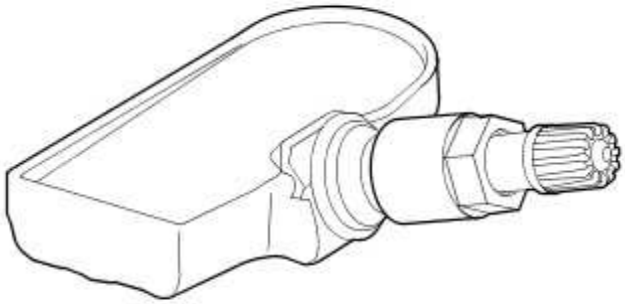

E45553

The tire pressure monitoring system uses ‘active’ tire low pressure sensors which are mounted on each wheel, inside the tire cavity. The sensor is retained in position by the valve attachment to the wheel. The tire low pressure sensors transmit their Radio Frequency (RF) signals at either 315 MHz or 433 MHz dependent on market requirements.

The tire low pressure sensor periodically measure the pressure and temperature of the air inside the tire. Pressure and temperature measurements are transmitted periodically to the external RF antenna on the vehicle.

The tire low pressure sensors are self-contained units which have no electrical connections into or out of the tire low pressure sensor.

The care points detailed in 'Tire Changing' must be followed to avoid damage to the tire low pressure sensor. If the tire low pressure sensor is removed, the nut, valve core, cap, seal and washer must also be replaced and the tire low pressure sensor tightened to the correct torque value. It is also recommended that the nut, valve core, cap, seal and washer are replaced at every tire change.

The RF transmission from the tire low pressure sensor contains a unique identification code in its transmission data, so that the tire pressure monitoring system module can identify the tire on the vehicle. If the tire low pressure sensor is replaced on a road wheel, the new sensor identification will be learnt when the vehicle is first driven at a speed of more than 20 km/h (12.5 miles/h) for 15 minutes. If a new tire low pressure sensor is fitted to the spare wheel, the identification for that tire low pressure sensor must be programmed into the tire pressure monitoring system module using a Jaguar approved diagnostic tool or that wheel will not be monitored. The code is provided on a label with the complete wheel and tire assembly when new and is also printed on the casing of each tire low pressure sensor.

In order to conserve battery power, the tire pressure monitoring system module uses different transmission rates when the wheel is stationary or moving. The wheel speed required to change between the stationary and moving transmission rates is approximately 20 kph (12.5 mile/h).

Antenna

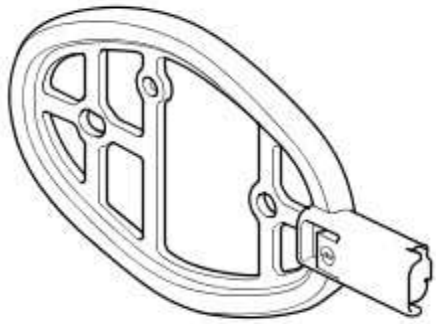

E45552

The antennas are located near the front of the front wheel arches, and the rear of the rear wheel arches. The tire pressure monitoring system has four antennas. Each antenna has a connector which connects with the body wiring harness.

The antenna is a passive, Low Frequency (LF) transmitter. Each antenna is controlled by the tire pressure monitoring system module and provides an auto-location feature to identify tire positions on the vehicle.

The tire pressure monitoring system module energizes each antenna in turn using LF drivers. The corresponding tire low pressure sensor detects the resulting LF transmission and modifies the mode status within the RF transmission. This data is received by the tire pressure monitoring system module through the external RF antenna. The tire pressure monitoring system module can then determine which sensor is transmitting and its location on the vehicle.

External Antenna

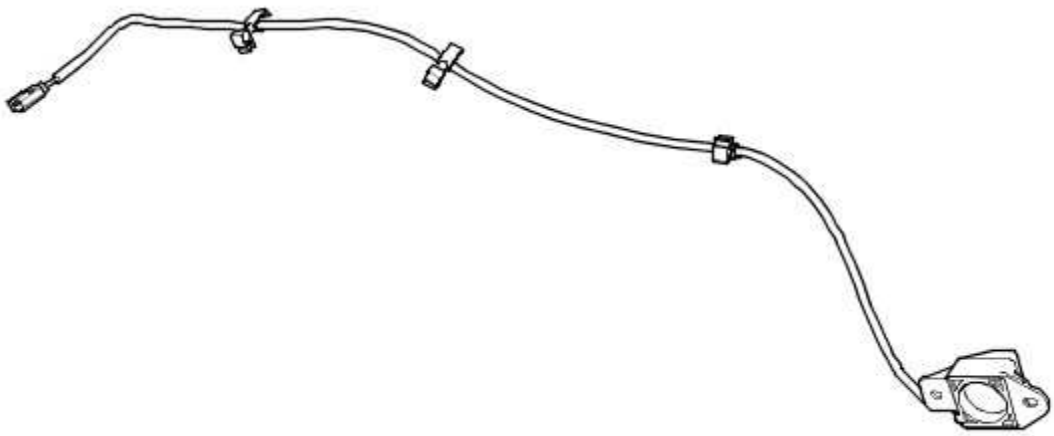

E62213

The tire pressure monitoring system external antenna is located at the rear of the vehicle and is mounted between the spare wheel well and rear subframe.

www.JagDocs.com

The unit receives tire pressure, temperature and acceleration readings from each tire and interfaces with the tire pressure monitoring system module. The tire pressure monitoring system module then transmits the appropriate messages to the instrument cluster.

The unit also receives further information from each tire pressure sensor concerning wheel identification, mode status and the condition of the tire pressure sensor battery.

Instrument Cluster Indications

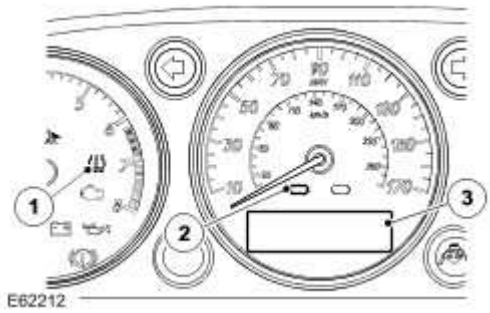

Item	Part Number	Description
1		Low tire pressure warning indicator
2		Secondary amber warning indicator
3		Message center

Warnings are displayed by the low tire pressure warning indicator, the secondary amber warning indicator and a text message displayed in the message center.

The warning indicators are driven by controller area network (CAN) messages from the tire pressure monitoring system module. The warning indicators are illuminated by the instrument cluster software for three seconds when the ignition is switched to position II for a bulb check.

Note: If the vehicle is not fitted with the tire pressure monitoring system, the warning indicators will not illuminate at any time.

System Operation

The tire low pressure sensor transmits by RF (315 MHz or 433 MHz depending on market) signal. These signals contains data which corresponds to tire low pressure sensor identification, tire pressure, tire temperature, acceleration and tire low pressure sensor mode.

Each time the vehicle is driven, the tire pressure monitoring system module activates each LF antenna in turn. The corresponding tire low pressure sensor detects the LF signal and responds by modifying the mode status within the RF transmission.

The system enters 'parking mode' after the vehicle speed has been less than 20 km/h (12.5 miles/h) for 12 minutes. In parking mode the tire low pressure sensors transmit a coded signal to the tire pressure monitoring system module once every 13 hours. If the tire pressure decreases by more than 0.06 bar (1 lbf/in²) the tire low pressure sensor will transmit more often as pressure is lost.

The spare tire sensor transmits a signal every 13 hours in the same manner as the road wheels when in parking mode. If the tire pressure decreases by more than 0.06 bar (1 lbf/in²) the tire low pressure sensor will transmit more often as pressure is lost.

As each wheel responds to the LF signal from the tire pressure monitoring system module, it is assigned a position on the vehicle and is monitored for the remainder of that drive cycle in that position.

When the vehicle has been parked for more than 15 minutes and then driven at a speed of more than 20 km/h (12.5 miles/h), the antennas fire in turn for 6 seconds on all except North American specification vehicles or for 18 seconds on North American specification only vehicles in the following order:

- Front left
- Six second pause (for the tire pressure monitoring system module to detect a response from the tire low pressure sensor)
- Front right
- Six second pause
- Rear right
- Six second pause
- Rear left
- Six second pause

Each tire low pressure sensor responds in turn so the tire pressure monitoring system module can establish the tire low pressure sensor positions at the start of the drive cycle. This process is repeated up to three times but less if the tire low pressure sensor positions are already known in the tire pressure monitoring system module. This process is known as 'Auto Location' and takes three to four minutes on all except North American specification vehicles and seven to eight minutes on North American specification vehicles to complete. During this period the tire low pressure sensors transmit at regular intervals, once every 5 seconds on all except North American specification vehicles and once every 15 seconds on North American specification vehicles. For the remainder of the drive cycle the tire low pressure sensors transmit once every 60 seconds or if a change in tire pressure is sensed until the vehicle stops and the tire pressure monitoring system returns to parking mode.

Once the wheel position is established, the antennas stop firing and do not fire again until the vehicle has been parked for more than 15 minutes. The signal transmissions from each tire low pressure sensor continue at one minute intervals whilst the vehicle is being driven. This transmission is to monitor the tire pressure. The warning occurs at 25% deflation and comprises of message center amber secondary warning light, the low tire pressure warning indicator and an appropriate message displayed in the instrument cluster message center. The message center will also display additional information about the position of the affected wheel(s).

www.JagDocs.com

Wheels and Tires - VIN Range: H18680->H99999

OVERVIEW

A number of wheel and tire size combinations are available. A Tire Pressure Monitoring System (TPMS) is also available. The system monitors the pressure in each tire and informs the driver if the pressure falls below predetermined thresholds.

TIRES

Tires are available in a number of different sizes and tread patterns dependent on vehicle specification. Tire sizes are as follows:

- T135/80R18 (space saver wheel)
- 235/50R18 Front / Rear
- 255/40R19 Front / Rear
- 255/35R20 Front / Rear.

WARNING: Tires should be inflated to the recommended pressures (as given in the Owners Handbook) only when the tires are cold (ambient temperature). If the tires have been subjected to use or exposed to direct sunlight, move the vehicle into a shaded position and allow the tires to cool before checking/adjusting the pressures.

Tire Changing

On vehicles fitted with TPMS, care must be taken when removing and refitting tires to ensure that the tire pressure sensor is not damaged.

Vehicles fitted with TPMS can be visually identified by an external metal locknut and valve of the tire pressure sensor on the road wheels. Vehicles without TPMS will have rubber tire valve.

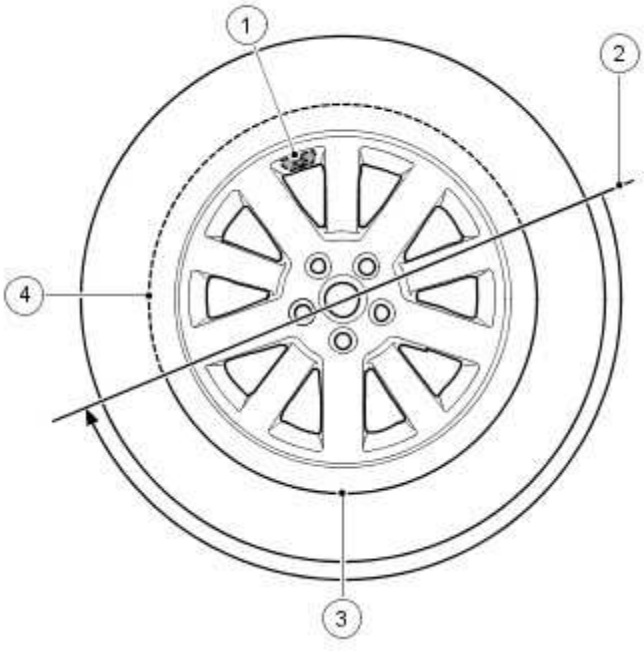

Item	Part Number	Description
1		Tire valve and pressure sensor
2		Tire fitting/removal tool initial start position
3		High tire and bead tension area
4		Low tire and bead tension area

When removing the tire, the bead breaker must not be used within 90º of the tire valve in each direction on each side of the tire.

When using the tire removal machine, the fitting arm start position must be positioned as shown in the tire changing illustration for each side of the tire. The wheel can then be rotated through 180 degrees in a clockwise direction. This will relieve tension from the tire bead allowing the remaining 180 degrees of the tire to be manually pulled from the rim.

When refitting the tire, position the fitting arm as shown. Rotate the tire and take care that the bead on the low tension side of the tire does not damage the sensor.

TREAD Act - North America Only

Vehicles supplied to the North American markets must comply with the legislation of the Transport Recall Enhancement, Accountability and Documentation (TREAD) act. Part of the requirement of the TREAD act is for the vehicle to display a label, positioned on the driver's side 'B' pillar, which defines

www.JagDocs.com

the recommended tire inflation pressure, load limits and maximum load of passengers and luggage weight the vehicle can safely carry. This label will be specific to each individual vehicle and will be installed on the production line.

This label must not be removed from the vehicle. The label information will only define the specification of the vehicle as it came off the production line. It will not include dealer or owner fitted accessory wheels and tires of differing size from the original fitment.

If the label is damaged or removed for body repair, it must be replaced with a new label specific to that vehicle. A new label is requested from Jaguar parts and will be printed specifically for the supplied VIN (vehicle identification number) of the vehicle.

TIRE PRESSURE MONITORING SYSTEM COMPONENT LOCATION

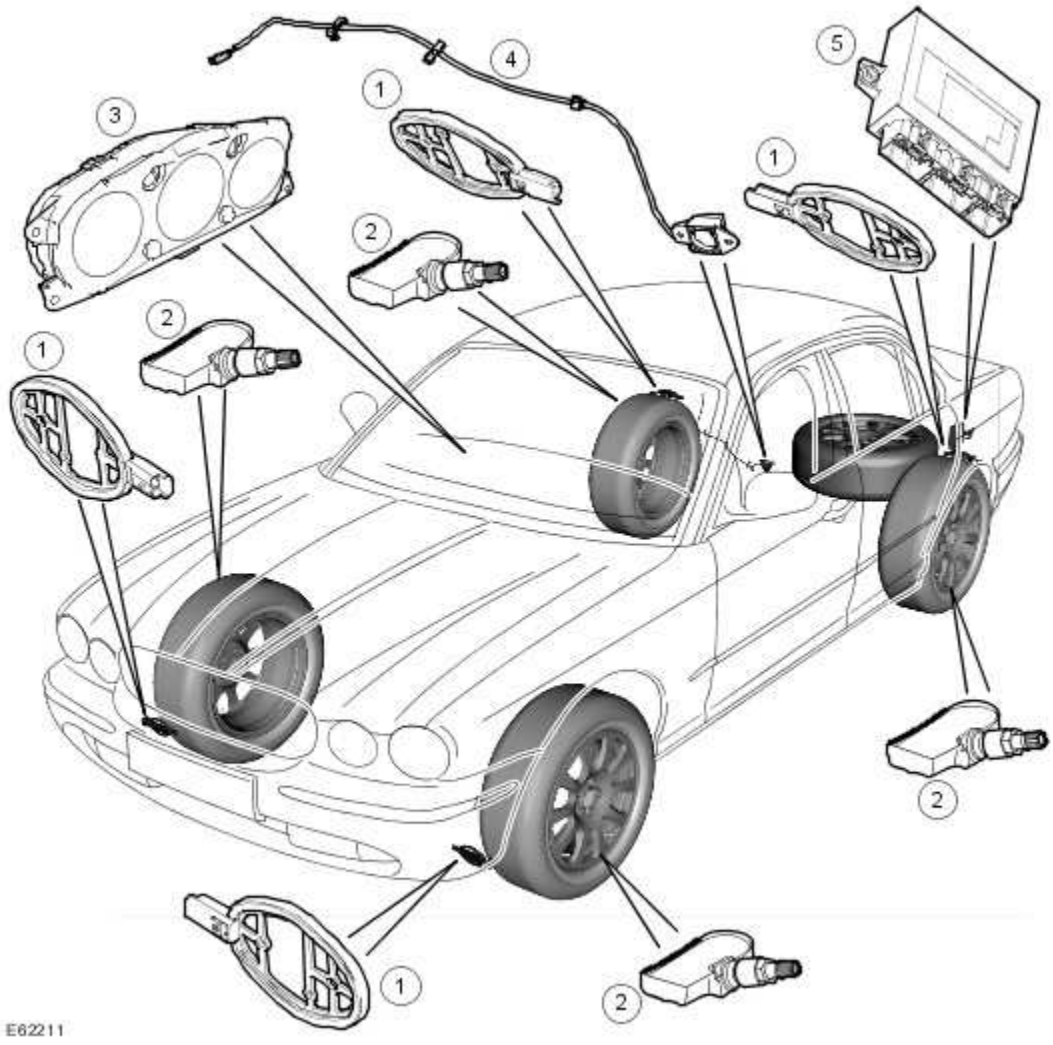

Item	Part Number	Description
1		Initiator (4 off)

2		Tire pressure sensor (5 off)
3		Instrument cluster
4		Radio Frequency (RF) antenna
5		TPMS module

NOTE:

A tire pressure sensor is not fitted to a temporary spare wheel.

OVERVIEW

The TPMS is a driver assistance system which assists the driver to maintain the tire pressures at the optimum level. The TPMS is a standard fitment on NAS vehicles and an optional fitment in other markets. The TPMS system has the following benefits:

- Improve fuel consumption
- Maintain ride and handling characteristics
- Reduce the risk of rapid tire deflation - which may be caused by under inflated tires
- Comply with legislation requirements in relevant markets.

CAUTION: The TPMS is not intended as a replacement for regular tire pressure and tire condition checks and should be considered as additional to good tire maintenance practices.

The TPMS measures the pressure in each of the tires on the vehicle and issues warnings to the driver if any of the pressures deviate from defined tolerances.

NOTE:

During a 'blow-out' a very rapid reduction in pressure is experienced. The system is not intended to warn the driver of a 'blow-out', since it is not possible to give the driver sufficient warning that such an event is occurring, due to its short duration. The design of the TPMS is to assist the driver in keeping the tires at the correct pressure, which will tend to reduce the likelihood of a tire 'blow-out' occurring.

The controlling software for the TPMS is located within a TPMS module. The software detects the following:

- the tire pressure is below the recommended low pressure value - under inflated tire
- the position of the tire on the vehicle.

www.JagDocs.com

The system comprises a TPMS module, a RF antenna, 4 initiators and 4 or 5 tire pressure sensors, depending on the type of spare wheel fitted.

The TPMS module is located on the LH (left-hand) side of the trunk. The RF antenna is located beneath the rear of the vehicle. The front initiators are positioned at the front of the wheel arches, behind the fender splash shields. The rear initiators are positioned at the rear of the rear wheel arches, behind the fender splash shields.

The 4 initiators are hardwired to the TPMS module. The initiators transmit 125 KHz Low Frequency (LF) signals to the tire pressure sensors which respond by modifying the mode status within the RF transmission. The 315 or 433 MHz RF signals are detected by the RF antenna which is connected directly to the TPMS module. The received RF signals from the tire pressure sensors are passed to the TPMS module and contain identification, pressure, temperature and acceleration information for each wheel and tire.

The TPMS module communicates with the instrument cluster via the high speed CAN (controller area network) bus to provide the driver with appropriate warnings. The TPMS module also indicates status or failure of the TPMS or components.

Tire Location and Identification

The TPMS can identify the position of the wheels on the vehicle and assign a received tire pressure sensor identification to a specific position on the vehicle, for example FL (front left), FR (front right), RL (rear left) and RR (rear right). This feature is required because of the different pressure targets and threshold between the front and rear tires.

The wheel location is performed automatically by the TPMS module using an 'auto-location' function. This function is fully automatic and requires no input from the driver. The TPMS module automatically re-learns the position of the wheels on the vehicle if the tire pressure sensors are replaced or the wheel positions on the vehicle are changed.

The TPMS software can automatically detect, under all operating conditions, the following:

- one or more new tire pressure sensors have been fitted
- one or more tire pressure sensors have stopped transmitting
- reject identifications from tire pressure sensors which do not belong to the vehicle
- two 'running' wheels on the vehicle have changed positions.

If a new tire pressure sensor is fitted on any 'running' wheel, the module can learn the new sensor identification automatically when the vehicle is driven for more than 15 minutes at a speed of more than 20 km/h (12.5 mph).

The tire learn and location process is ready to commence when the vehicle has been stationary or traveling at less than 12 mph (20 km/h) for 15 minutes. This is known as 'parking mode'. The learn/locate process requires the vehicle to be driven at speeds of more than 20 km/h (12.5 mph) for 15 minutes. If the vehicle speed reduces to below 20 km/h (12.5 mph), the learn process timer is suspended until the vehicle speed increases to more than 20 km/h (12.5 mph), after which time the

timer is resumed. If the vehicle speed remains below 20 km/h (12.5 mph) for more than 15 minutes, the timer is set to zero and process starts again.

If the tire pressure sensors fitted to the running wheels vehicle are changed, the module can learn the new sensor identifications automatically. The learn function requires no manual intervention by the driver.

INITIATOR

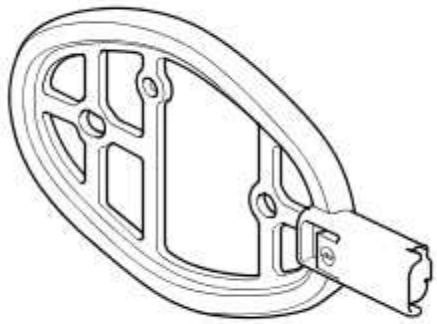

E45552

The front initiators are located near the front of the front wheel arches, behind the fender splash shields. The rear initiators are located at the rear of the rear wheel arches, behind the fender splash shields. Each initiator has a connector which connects to the vehicle body harness.

The initiator is a passive LF transmitter. It transmits signals which are received by the tire pressure sensors prompting them to modify their mode status.

The TPMS module energizes each initiator in turn using LF drivers. The corresponding tire pressure sensor detects the LF signal and responds by modifying the mode status within the RF transmission.

TIRE PRESSURE SENSOR

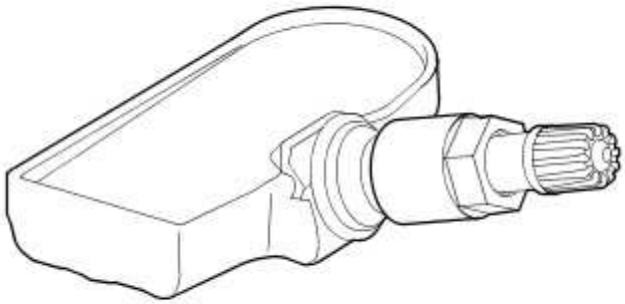

E45553

www.JagDocs.com

The TPMS uses active tire pressure sensors which are located on each wheel, inside the tire cavity. The sensor incorporates the tire valve and is secured by a nut on the outside of the wheel. The sensor contains a Printed Circuit Board (PCB) which houses a PTC (positive temperature coefficient) sensor, a Piezo pressure sensor, a radio receiver and transmitter and a lithium battery.

The tire pressure sensors use the PTC (positive temperature coefficient) sensor and the Piezo sensor to periodically measure the pressure and temperature of the air inside the tire. The data is transmitted by RF data signals at either 315 MHz or 433 MHz dependant on market requirements.

The RF transmission from the sensor contains a unique identification code in its transmission data. This allows the TPMS to identify the wheel on the vehicle. The tire pressure sensor can also detect when the wheel is rotating. In order to preserve battery power, the sensor uses different transmission rates when the wheel is stationary or moving.

If a sensor is replaced on a 'running wheel', the vehicle must remain stationary for 15 minutes before being driven. This allows the system to detect the new sensor. To initiate full TPMS operation, the vehicle must then be driven at a speed of more than 20 km/h (12.5 mph) for 15 minutes, then remain stationary for a further 15 minutes.

Care Points

The care points detailed in 'Tire Changing' earlier in this section must be followed to avoid damage to the sensor.

If a new sensor or tire is fitted, a new nut, seal and washer must also be fitted and the sensor nut tightened to the correct torque as given in the Removal and Installation section of this manual.

If the valve nut is loosened, the seal, washer and nut must be replaced.

RF ANTENNA

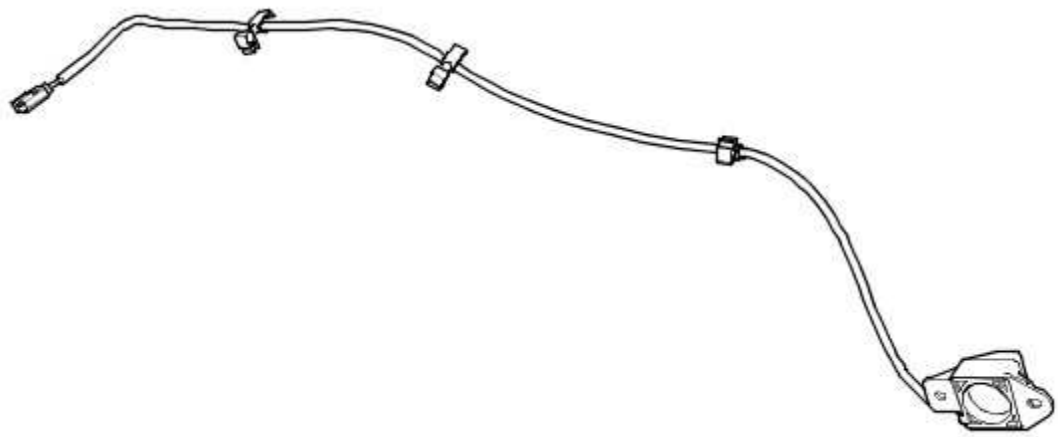

E62213

The TPMS RF antenna is located at the rear of the vehicle and is mounted between the spare wheel well and rear subframe. The unit receives tire pressure, temperature and acceleration readings from each tire and interfaces with the TPMS module. The TPMS module then transmits the appropriate

messages to the instrument cluster. The unit also receives further information from each tire pressure sensor concerning wheel identification, mode status and the condition of the tire pressure sensor battery.

INSTRUMENT CLUSTER AND MESSAGE CENTER

Item	Part Number	Description
1		Low tire pressure warning indicator
2		Message Center

The warning indications to the driver are common on all vehicles fitted with TPMS. The driver is alerted to system warnings by a low tire pressure warning indicator in the instrument cluster and an applicable text message in the message center.

The TPMS module passes system status information to the instrument cluster on the high speed CAN (controller area network) bus. The instrument cluster then converts this data into illumination of the warning indicator and display of an appropriate message.

When the ignition is switched on, the warning indicator is illuminated for 3 seconds for a bulb check.

NOTE:

If the vehicle is not fitted with the TPMS, the warning indicator will not illuminate.

The instrument cluster checks, within the 3 second bulb check period, for a CAN (controller area network) bus message from the TPMS. During this time the TPMS performs internal tests and CAN (controller area network) bus initialization. The warning indicator will be extinguished if the TPMS module does not issue a fault message or tire pressure warning message.

If a TPMS fault warning message is detected by the instrument cluster at ignition on, the warning

www.JagDocs.com

indicator will flash for 72 seconds after the 3 second bulb check period and then remain permanently illuminated.

If a tire pressure warning message is detected by the instrument cluster at ignition on, the warning indicator will extinguish briefly after the 3 second bulb check period, before re-illuminating to indicate a tire pressure warning.

The following table shows the warning indicator functionality for given events:

Message	Reason	Action
CHECK PRESSURE RH FRONT TYRE	RH (right-hand) front tire pressure has fallen to 25% of recommended pressure.	Stop the vehicle as soon as safely possible. Check all tire pressures and inflate to recommended pressure.
CHECK PRESSURE LH FRONT TYRE	LH (left-hand) front tire pressure has fallen to 25% of recommended pressure.	Stop the vehicle as soon as safely possible. Check all tire pressures and inflate to recommended pressure.
CHECK PRESSURE RH REAR TYRE	RH (right-hand) rear tire pressure has fallen to 25% of recommended pressure.	Stop the vehicle as soon as safely possible. Check all tire pressures and inflate to recommended pressure.
CHECK PRESSURE LH REAR TYRE	LH (left-hand) rear tire pressure has fallen to 25% of recommended pressure.	Stop the vehicle as soon as safely possible. Check all tire pressures and inflate to recommended pressure.
TYRE PRESSURE SENSOR FAULT	Pressure sensor failure, a wheel has been fitted to the vehicle that does not contain a pressure sensor, or interference from an unapproved accessory.	A fault has occurred in the TPMS. Interrogate the TPMS module for faults and diagnose using the Jaguar approved diagnostic system.
TYRE PRESSURE SYSTEM FAULT	No transmission from more than one pressure sensor, more than one pressure sensor fault, or CAN (controller area network) bus signal missing.	A fault has occurred in the TPMS. Interrogate the TPMS module for faults and diagnose using the Jaguar approved diagnostic system.
TYRE PRESSURES LOW FOR SPEED	Tire pressures are not suitable for high speed driving.	Stop the vehicle as soon as safely possible. Check all tire pressures and inflate to recommended pressure.

CONTROL DIAGRAM

NOTE:

A = Hardwired; **D** = High Speed CAN (controller area network) bus; **F** = RF Transmission; **W** = LF Transmission

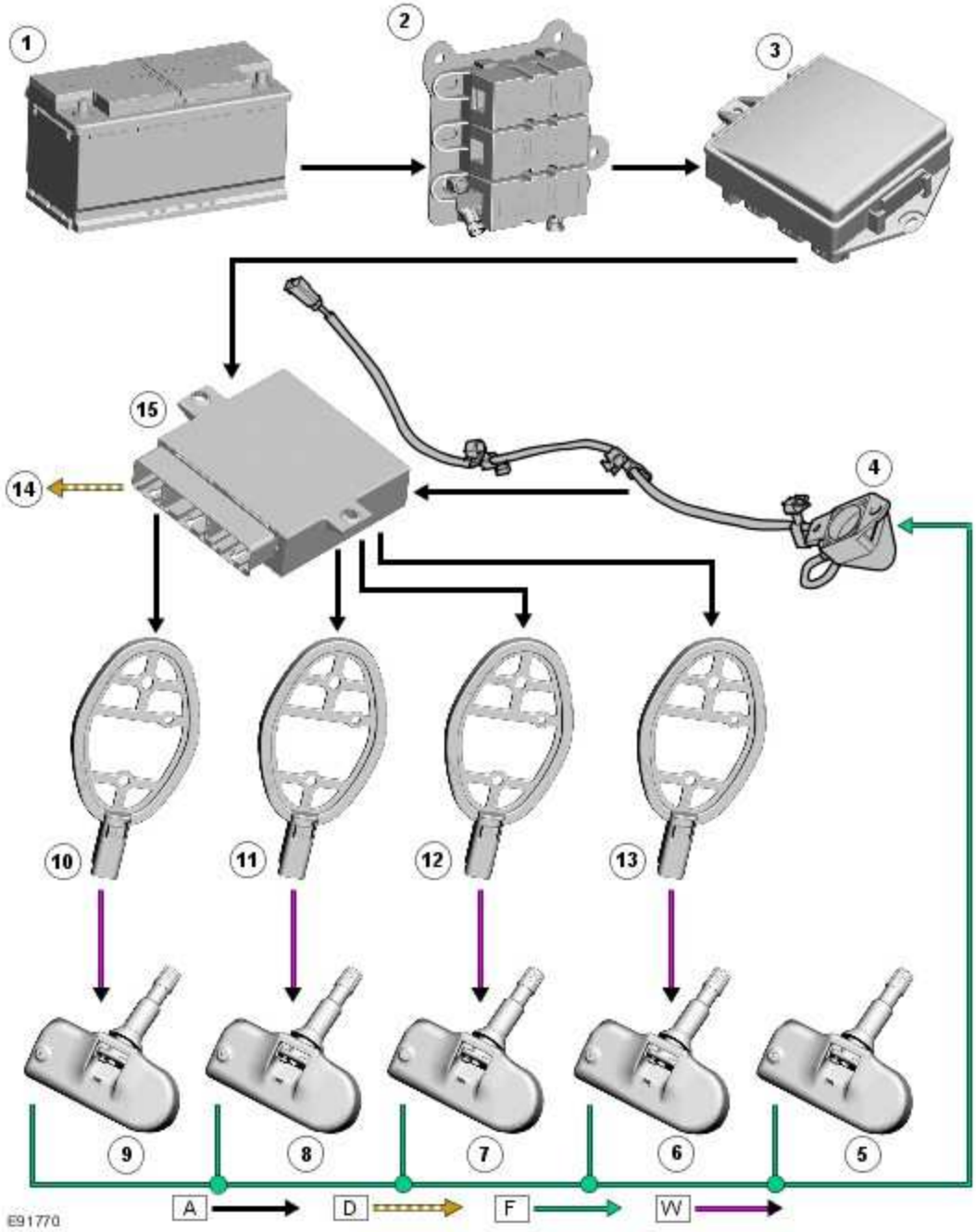

Item	Part Number	Description
1		Battery
2		Battery fuse box

www.JagDocs.com

3		Rear power distribution box
4		RF antenna
5		Spare wheel pressure sensor (if fitted)
6		LH (left-hand) rear pressure sensor
7		RH (right-hand) rear pressure sensor
8		LH (left-hand) front pressure sensor
9		RH (right-hand) front pressure sensor
10		RH (right-hand) front initiator
11		LH (left-hand) front initiator
12		RH (right-hand) rear initiator
13		LH (left-hand) rear initiator
14		High speed CAN (controller area network) bus to other vehicle systems
15		TPMS module

PRINCIPLES OF OPERATION

Each time the vehicle is driven the TPMS module activates each initiator in turn to transmit a LF 125 KHz signal to each tire pressure sensor. The LF signal is received by the tire pressure sensor which responds by transmitting a signal which is received by the RF antenna. The signal contains coded data which corresponds to sensor identification, air pressure, air temperature and acceleration data and is passed to the TPMS module.

When the vehicle has been parked for more than 15 minutes and then driven at a speed of more than 12.5 mph (20 km/h), the initiators fire in turn for 6 seconds on all 433 MHz vehicles or for 18 seconds on 315 MHz vehicles in the following order:

- Front left
- 6 second pause (for the TPMS module to detect a response from the tire pressure sensor)
- Front right
- 6 second pause
- Rear right
- 6 second pause
- Rear left
- 6 second pause.

Each tire pressure sensor responds in turn which allows the TPMS module to establish the sensor positions at the start of the drive cycle. This process is repeated up to 3 times but less if the sensor positions are already known. The process is known as 'Auto Location' and takes 2 to 4 minutes to complete.

During this period the tire pressure sensors transmit at regular intervals, once every 5 seconds (once every 15 seconds on 315 MHz vehicles). For the remainder of the drive cycle the tire pressure sensors transmit once every 60 seconds or more often if a change of tire pressure is sensed until the vehicle stops and the TPMS returns to the parking mode.

Once the wheel positions have been established, the initiators stop transmitting the LF signal and do not transmit again until the vehicle has been parked for more than 15 minutes.

The TPMS enters 'Parking Mode' after the vehicle speed has been less than 20 km/h (12.5 mph) for 15 minutes. In parking mode the tire pressure sensors transmit a coded RF signal once every 13 hours. If the tire pressure decreases by more than 0.06 bar (1 lbf/in^2), the sensor will transmit more often if pressure in the tire is being lost.

www.JagDocs.com

Wheels and Tires – Armoured Vehicles

WARNING: Do not mix different types of tires on the same vehicle such as radial, bias or bias belted tires except in emergencies (temporary spare usage). Failure to follow these instructions may result in personal injury.

WARNING: Never run the engine with one wheel off the ground, for example when changing a wheel. The wheel resting on the ground may cause the vehicle to move. Failure to follow these instructions may result in personal injury.

WARNING: Aftermarket aerosol tire sealants are extremely flammable. Always question the customer to make sure these products have not been used. Failure to follow these instructions may result in personal injury.

WARNING: Always wear safety goggles or a face shield when performing any work with wheel and tire assemblies. Failure to follow these instructions may result in personal injury.

WARNING: Retighten the wheel nuts at 800 km (500 miles) after any wheel change or anytime the wheel nuts are loosened. Failure to follow these instructions may result in personal injury.

WARNING: Failure to retighten the wheel nuts at the specified mileage could cause the wheels to come become detached while the vehicle is in motion. Failure to follow these instructions may result in personal injury.

WARNING: Each individual axle, wheel and tire has its own maximum weight or tire inflation rating. Do not overload or over-inflate beyond the capacity of the lowest rated components of the system. Failure to follow these instructions may result in personal injury.

WARNING: When changing a wheel, make sure that the vehicle cannot move. Always apply the parking brake and select the transmission park position. Failure to follow these instructions may result in personal injury.

WARNING: Reduce air pressure as much as possible by pushing the valve core plunger in before removing the valve core. Failure to follow these instructions may result in personal injury.

CAUTION: Do not clean aluminium wheels with steel wool, abrasive type cleaners or detergents. Failure to follow these instructions may result in damage to the vehicle.

CAUTION: The vehicle is fitted with directional tires, which should always be fitted in accordance with the direction of rotation symbol on the tire.

NOTE:

The maximum distance that can be driven on a punctured tire varies greatly depending on the type of terrain.

The vehicle is only available with 19 inch wheels, due to the specification of the brakes and tires fitted. The vehicle is fitted with 255/45 ZR19 104Y Pirelli P Zero, which feature a run-flat capability. For additional

information, refer to Wheel and Tire (204-04)
In the event of a puncture, the vehicle can still be driven at a maximum speed of 50 kph (31 mile/h); for a distance of approximately 100 kph (62 mile/h). Note: Care must be taken not to damage the tire low pressure sensor when removing and installing the tire. For additional information, refer to Wheel and Tire (204-04)

Rodgard Runflat Components

The Rodgard runflat system consist of two main components.

Item	Part Number	Description
1		Roller
2		Runner

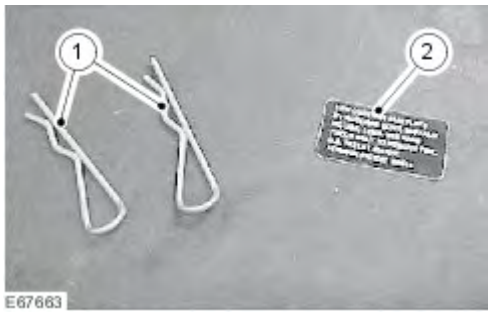

Item	Part Number	Description
1		Retaining clip
2		Installation label

Rodgard Runflat

The Rodgard toolbox contains the equipment used in the installation.

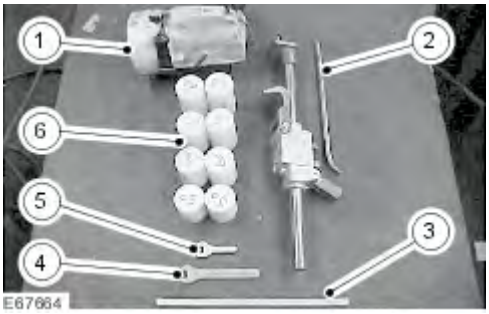

Item	Part Number	Description
1		Torch
2		Bead stretcher/release bar

www.JagDocs.com

3		Gauge
4		13mm Insulated spanner
5		13mm spanner
6		Nylon blocks

Tire Low Pressure Sensor Components

The tire low pressure sensors have 3 major components.

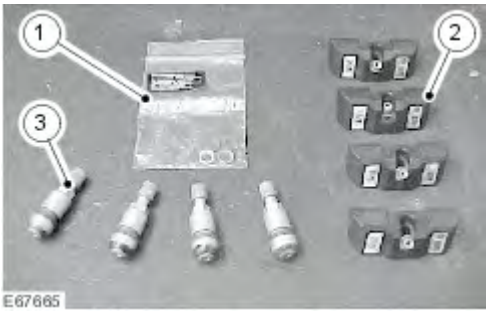

Item	Part Number	Description
1		Coloured washers
2		Tire low pressure sensors
3		Tire valves

NOTE:

The colour of the washer must match the colour of the mark on the tire low pressure sensor.

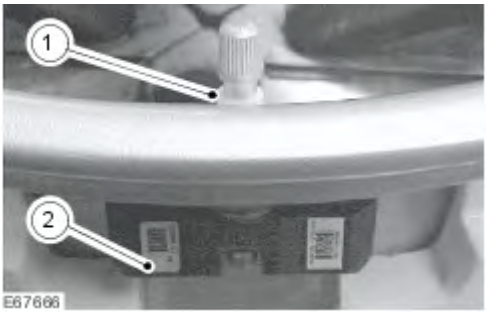

Item	Part Number	Description
1		Coloured washer
2		Coloured mark

For further information on the tire run flat system contact; Rodgard, 1355 Clinton Street, Buffalo, New York 14206, U.S.A Tel: (716)823-1411. Fax: (716)823 1607. www.rodgard.com.

Wheels and Tires - VIN Range: G00442->G45703

General notes

Factory installed tires and wheels are designed to operate satisfactory when inflated to the recommended inflation pressures; refer to the Specifications sub-section. The recommended pressures apply to vehicle loads up to and including full-rated load capacity.

Correct tire pressures and driving technique have an important influence on tire life. Heavy cornering, excessively rapid acceleration and unnecessary sharp braking increase tire wear.

Replacement tires should follow the recommended:

- size.
- speed rating.
- load range.
- radial construction type.

The use of any other size or type may seriously affect:

- safety.
- ride.
- handling.
- speedometer and odometer calibration.
- vehicle ground clearance.
- tire clearance between body and chassis.
- wheel bearing life.
- brake cooling.

Wheels need to be renewed when:

- impact damaged.
- heavily corroded.
- porous.
- wheel stud holes or seats become damaged.
- they have excessive radial or lateral runout.

Safety notes

WARNING: Do not mix different types of tires on the same vehicle. Handling may be seriously affected resulting in loss of control. Failure to follow these instructions may result in

www.JagDocs.com

WARNING: When using winter tires, observe the direction of the sidewall moulded indicators; correct tire rotational direction is critical. Failure to follow these instructions may result in personal injury.

WARNING: A tire and wheel must always be correctly matched. Wider or narrower tires than recommended could cause danger through sudden deflation. Failure to follow these instructions may result in personal injury.

WARNING: When using the temporary spare wheel, maximum speed must not exceed 80 km/h (50 mile/h). Drive with caution and replace with the specified wheel and tire assembly as soon as possible. Failure to follow these instructions may result in personal injury.

WARNING: Traction control (if available) must not be engaged with a temporary spare wheel fitted. Failure to follow these instructions may result in personal injury.

WARNING: When changing a wheel, make sure that the vehicle cannot move. Always apply the parking brake and select the transmission park position. Failure to follow these instructions may result in personal injury.

WARNING: Never run the engine with one wheel off the ground, for example, when changing the wheel. The wheel resting on the ground may cause the vehicle to move. Failure to follow these instructions may result in personal injury.

WARNING: Tighten the wheel nuts to specification. Too tight may cause damage, too loose may allow the wheel to become detached. Failure to follow these instructions may result in personal injury.

WARNING: Use only wheels and wheel nuts supplied by Jaguar. Aftermarket wheels or wheel nuts may not fit or function correctly and could cause injury or damage. Failure to follow these instructions may result in personal injury.

Inspection and Verification

1 . Verify the customer's concern by driving the vehicle.

2 . Visually inspect for obvious signs of damage:

Visual Inspection Chart

Mechanical
Incorrect tire pressure
Wheel imbalance
Tires worn beyond tread wear indicators
Cuts
Abrasions
Bulges (blister)
Ply separation
Embedded objects
Impact damage
Incorrect speed rating
Incorrect load rating
Incorrect rotational direction

1 . If an obvious cause for an observed or reported concern is found, correct the cause (if possible) before proceeding to the next step.

www.JagDocs.com

2 . If the concern is not visually evident, verify the symptom and refer to Symptom Chart.

Tire Wear Inspection

To maximize tire performance, inspect the tires for signs of incorrect inflation and uneven wear which may indicate a need for balancing, rotation or front suspension alignment. Tires should also be checked frequently for cuts, stone bruises, abrasions, blisters, and for objects that may have become embedded in the tread. More frequent inspections are recommended when rapid or extreme temperature changes occur or when road surfaces are rough or occasionally littered with debris.

Tire Wear Diagnosis

New tires should be installed if the wear indictors are exposed or if there is severe shoulder wear. Shoulder wear is usually caused by either excessive camber or excessive toe on radial tires.

Sometimes incorrect rear toe settings or damaged struts will cause severe cupping' or scalloped' tire wear on non-drive wheels.

Incorrect rear toe alignment will also cause other unusual wear patterns.

Road Test

A tire vibration diagnostic procedure always begins with a road test. The road test and customer interview (if available) will provide much of the information needed to find the source of a vibration.

During the road test, drive the vehicle on a road that is smooth and free of undulations. If vibration is apparent, note and record the following:

- The speed at which the vibration occurs.
- What type of vibration occurs in each speed range. Mechanical or audible.
- How the vibration is affected by changes in the following: Engine torque. Vehicle speed. Engine speed.
- Type of vibration-sensitivity: torque sensitive, vehicle speed sensitive or engine speed sensitive.

The following explanations help isolate the source of the vibration.

Torque Sensitive

This means that the condition may be improved or made worse by accelerating, decelerating, coasting, maintaining a steady vehicle speed or applying engine torque.

Vehicle Speed Sensitive

This means that the vibration always occurs at the same vehicle speed and is not affected by engine torque, engine speed or the transmission gear selected.

Engine Speed Sensitive

This means that the vibration occurs at varying vehicle speeds when a different transmission gear is selected. It may sometimes be isolated by increasing or decreasing engine speed with the

transmission in NEUTRAL or by stall testing with the transmission in gear. If the condition is engine speed sensitive, the cause is probably not related to the tires.

If the road test indicates that there is tire whine, but no shake or vibration, the noise originates with the contact between the tire and the road surface.

A thumping noise usually means that the tire has a flat or soft spot making a noise as they slap the roadway. Tire whine may be distinguished from axle noise. Tire whine remains the same over a range of speeds.

Tires show excess wear on edge of treads

Possible Source(s):

- Tires under-inflated.

Action(s) to take:

- Correct pressure to specification.

Possible Source(s):

- Vehicle overloaded.

Action(s) to take:

- Correct as required.

Tires show excess wear on edge of treads (having the correct tire pressures)

Possible Source(s):

- Incorrect toe setting.

Action(s) to take:

- Set to specification. For additional information, <<204-00>>

Tires show excess wear in center of tread

Possible Source(s):

- Tires over-inflated.

Action(s) to take:

www.JagDocs.com

- Correct pressure to specification.

Other excessive tire wear problems

Possible Source(s):

- Incorrect tire pressure.

Action(s) to take:

- Correct pressure to specification.

Possible Source(s):

- Incorrect tire and wheel usage.

Action(s) to take:

- Install correct tire and wheel combination.

Possible Source(s):

- Loose or leaking air springs.

Action(s) to take:

- Tighten or install new air springs as necessary. For additional information, <<204-05>>

Possible Source(s):

- Geometry out of alignment.

Action(s) to take:

- Check and adjust. For additional information, <<204-00>>

Possible Source(s):

- Loose, worn or damaged suspension components.

Action(s) to take:

- Inspect, repair or install new suspension components as necessary.

Possible Source(s):

- Wheel and tire assembly out of balance.

Action(s) to take:

- Balance wheel and tire assembly.

Possible Source(s):

- Excessive lateral or radial runout of wheel or tire.

Action(s) to take:

- Check, repair or install a new wheel or tire as necessary. Refer to the procedure in this section.

Wheel mounting is difficult

Possible Source(s):

- Incorrect application or mismatched parts, including wheel studs and wheel nuts. Corroded, worn or damaged parts.

Action(s) to take:

- Clean or install a new part.

Wobble or shimmy affecting wheel runout

Possible Source(s):

- Damaged wheel (eventually damaging wheel bearings and causing uneven tire wear).

Action(s) to take:

- Inspect wheel rims for damage and runout. Install a new wheel rim as necessary.

Excessive vibration, rough steering or severe tire wear

Possible Source(s):

- Loose or incorrect attaching parts.

Action(s) to take:

- Tighten or install new parts.

www.JagDocs.com

Vehicle vibrations

Possible Source(s):

- Tires and wheels mismatched.

Action(s) to take:

- Install correct tire and wheel combination.

Possible Source(s):

- Inflation pressure too high or too low.

Action(s) to take:

- Correct pressure to specification.

Possible Source(s):

- Uneven tire wear.

Action(s) to take:

- Refer to Diagnosis and Testing in this section.

Possible Source(s):

- Out-of-balance wheel, tire, wheel hub or disc assembly.

Action(s) to take:

- Determine the out-of-balance component and balance or install a new part.

Possible Source(s):

- Damaged or distorted wheel from road impact hazard or incorrect handling.

Action(s) to take:

- Install a new wheel.

Possible Source(s):

- Excessive radial runout.

Action(s) to take:

- Install a new wheel or tire. Check for incorrect wheel and tire specifications.

Possible Source(s):

- Excessive lateral runout.

Action(s) to take:

- Install a new wheel or tire.

Possible Source(s):

- Incorrectly seated tire.

Action(s) to take:

- Remount the tire.

Possible Source(s):

- Loose wheel mountings - damaged wheel studs, wheel nuts, worn or broken wheel hub face or foreign material on mounting faces.

Action(s) to take:

- Tighten or install new parts. Clean mounting surfaces.

Possible Source(s):

- Defective wheel bearings.

Action(s) to take:

- Install a new bearing set. For additional information refer to <<204-01>> or <<204-02>>

Possible Source(s):

- Brake disc imbalance.

Action(s) to take:

- For additional information refer to <<206-00>>

Possible Source(s):

www.JagDocs.com

- Water in tires.

Action(s) to take:

- Remove water.

Possible Source(s):

- Loose engine or transmission mounts.

Action(s) to take:

- Tighten or install a new mount.

Possible Source(s):

- Incorrect front end alignment.

Action(s) to take:

- Align front end. For additional information, <<204-01>>

Possible Source(s):

- Loose or worn driveline or suspension parts.

Action(s) to take:

- Repair or install new parts.

Possible Source(s):

- Excessive driveshaft runout or imbalance.

Action(s) to take:

- Install a new driveshaft. For additional information, <<205-01>>

Possible Source(s):

- Worn or damaged flexible drive joint.

Action(s) to take:

- Install a new driveshaft. For additional information, <<205-01>>

Damaged wheel hub stud threads

Possible Source(s):

- Sliding wheel across the wheel studs during installation. Loose wheel nuts.

Action(s) to take:

- Install new wheel studs.

Broken wheel studs

Possible Source(s):

- Loose or overtightened wheel nuts.

Action(s) to take:

- Install new wheel studs.

Corrosion and contamination streaks from the wheel hub wheel stud holes

Possible Source(s):

- Loose wheel nuts.

Action(s) to take:

- Check complete assembly. Install new parts. Follow correct torque procedure.

Damaged wheel nuts

Possible Source(s):

- Loose wheel assembly.

Action(s) to take:

- Install new wheel nuts. Follow correct torque procedure.

Possible Source(s):

- Over-tightened wheel nuts.

Action(s) to take:

www.JagDocs.com

- Install new wheel nuts. Follow correct torque procedure.

Frozen wheel nuts

Possible Source(s):

- Corrosion or galling.

Action(s) to take:

- If corrosion is light, wire brush away corrosion. If corrosion is excessive install new wheel studs and wheel nuts.

Wheels and Tires - VIN Range: G45704->G99999

Overview

This section will provide basic information to assist in the diagnosis of tire-related faults.

Tire pressure monitoring systems (TPMS) have been introduced on 2006 my vehicles and this section will also provide information to assist in the diagnosis of the system fitted to Jaguar vehicles.

Tire pressure monitoring system

Principle of operation

Each road wheel has a sensor which feeds information to the control module which will then interpret the information and display a message on the driver message center, along with a warning light and an amber lozenge if appropriate.

The messages are self-explanatory, but full descriptions can be found in the owner guide.

For additional information on the description and operation of the TPMS.
Wheels and Tires - VIN Range: G45704->H18679

TPMS inspection and verification

1 . Verify the customer complaint.

NOTE:

Record any messages displayed by the system.

2 . Visually inspect for obvious signs of mechanical or electrical damage.

Mechanical	Electrical
• Tire pressures • Tire/Wheel damage • Tire low pressure sensor fitment/damage • Front antenna fitment/damage • Rear antenna fitment/damage • External antenna fitment/damage	• Fuses (FPDB, RPDB, PJB) • Front antenna fitment/damage • Rear antenna fitment/damage • External antenna fitment/damage • TPMS module • Connectors/Harnesses

3 . If an obvious cause for an observed or reported concern is found, correct the cause (if possible) before proceeding to the next step.

www.JagDocs.com

4 . If the cause is not visually evident use the Jaguar approved diagnostic system or a scan tool to retrieve the fault codes before proceeding to the diagnostic trouble code (DTC) index.

DTC Index

NOTE:

Generic scan tools may not read the codes listed, or may read only 5-digit codes. Match the 5 digits from the scan tool to the first 5 digits of the 7-digit code listed to identify the fault (the last 2 digits give extra information read by the manufacturer-approved diagnostic system).

DTC	Description	Possible causes	Action
B1A5611	External antenna	• Antenna: short circuit to ground	GO to Pinpoint Test G528618p1.
B1A5612	External antenna	• Antenna: high resistance • Antenna: short circuit to battery	GO to Pinpoint Test G528618p1.
B1A5638	External antenna	• Antenna: signal frequency incorrect	Replace the external antenna.
B247700	Module configuration failure	• TPMS module not configured at end of line or at PDI	Configure the module using the Jaguar approved diagnostic system
C1A5616	Left hand front tire low pressure sensor	• Low battery detected	Replace the tire low pressure sensor. Tire Low Pressure Sensor
C1A5631	Left hand front tire low pressure sensor	• No signal detected	Check for stored DTCs B1A5611, B1A5612 or B1A5638 and follow the actions indicated. If none of these DTCs are stored replace the tire low pressure sensor. Tire Low Pressure Sensor
C1A5691	Left hand front tire low pressure sensor	• Data out of range	Replace the tire low pressure sensor. Tire Low Pressure Sensor
C1A5693	Left hand front tire low	• No sensor can be found at this location	Check for stored DTCs C1A5711, C1A5712, C1A5713 or C1A5631 and

	pressure sensor		follow the actions indicated.
C1A5711	Left hand front antenna	• Output circuit: short circuit to ground	GO to Pinpoint Test G528618p2.
C1A5712	Left hand front antenna	• Output circuit: short circuit to battery	GO to Pinpoint Test G528618p2.
C1A5713	Left hand front antenna	• Output circuit: high resistance	GO to Pinpoint Test G528618p2.
C1A5816	Right hand front tire low pressure sensor	• Low battery detected	Replace the tire low pressure sensor. Tire Low Pressure Sensor
C1A5831	Right hand front tire low pressure sensor	• No signal detected	Check for stored DTCs B1A5611, B1A5612 or B1A5638 and follow the actions indicated. If none of these DTCs are stored replace the tire low pressure sensor. Tire Low Pressure Sensor
C1A5891	Right hand front tire low pressure sensor	• Data out of range	Replace the tire low pressure sensor. Tire Low Pressure Sensor
C1A5893	Right hand front tire low pressure sensor	• No sensor can be found at this location	Check for stored DTCs C1A5911, C1A5912, C1A5913 or C1A5831 and follow the actions indicated.
C1A5911	Right hand front antenna	• Output circuit: short circuit to ground	GO to Pinpoint Test G528618p3.
C1A5912	Right hand front antenna	• Output circuit: short circuit to battery	GO to Pinpoint Test G528618p3.
C1A5913	Right hand front antenna	• Output circuit: high resistance	GO to Pinpoint Test G528618p3.
C1A6016	Left hand rear tire low pressure sensor	• Low battery detected	Replace the tire low pressure sensor. Tire Low Pressure Sensor
C1A6031	Left hand rear tire low	• No signal detected	Check for stored DTCs B1A5611, B1A5612 or B1A5638 and follow the

www.JagDocs.com

	pressure sensor		actions indicated. If none of these DTCs are stored replace the tire low pressure sensor. Tire Low Pressure Sensor
C1A6091	Left hand rear tire low pressure sensor	• Data out of range	Replace the tire low pressure sensor. Tire Low Pressure Sensor
C1A6093	Left hand rear tire low pressure sensor	• No sensor can be found at this location	Check for stored DTCs C1A6111, C1A6112, C1A6113 or C1A60 31 and follow the actions indicated.
C1A6111	Left hand rear antenna	• Output circuit: short circuit to ground	GO to Pinpoint Test G528618p4.
C1A6112	Left hand rear antenna	• Output circuit: short circuit to battery	GO to Pinpoint Test G528618p4.
C1A6113	Left hand rear antenna	• Output circuit: high resistance	GO to Pinpoint Test G528618p4.
C1A6216	Right hand rear tire low pressure sensor	• Low battery detected	Replace the tire low pressure sensor. Tire Low Pressure Sensor
C1A6231	Right hand rear tire low pressure sensor	• No signal detected	Check for stored DTCs B1A5611, B1A5612 or B1A5638 and follow the actions indicated. If none of these DTCs are stored replace the tire low pressure sensor. Tire Low Pressure Sensor
C1A6291	Right hand rear tire low pressure sensor	• Data out of range	Replace the tire low pressure sensor. Tire Low Pressure Sensor
C1A6293	Right hand rear tire low pressure sensor	• No sensor can be found at this location	Check for stored DTCs C1A6311, C1A6312, C1A6313 or C1A6231 and follow the actions indicated.
C1A6311	Right hand rear antenna	• Output circuit: short circuit to ground	GO to Pinpoint Test G528618p5.

C1A6312	Right hand rear antenna	• Output circuit: short circuit to battery	GO to Pinpoint Test G528618p5.
C1A6313	Right hand rear antenna	• Output circuit: high resistance	GO to Pinpoint Test G528618p5.
C1A6416	Spare tire low pressure sensor	• Low battery detected	Replace the tire low pressure sensor. Tire Low Pressure Sensor
C1A6491	Spare tire low pressure sensor	• Data out of range	Replace the tire low pressure sensor. Tire Low Pressure Sensor
C1A6493	Spare tire low pressure sensor	• No sensor can be found at this location	If the vehicle is fitted with a temporary spare wheel and tyre take no action. Check for stored DTCs B1A5611, B1A5612 or B1A5638 and follow the actions indicated. If none of these DTCs are stored replace the tire low pressure sensor. Tire Low Pressure Sensor
C1D1800	Location failure	• The control module cannot locate the sensor	Check for DTCs indicating a component fault.
U007300	CAN BUS off	• CAN communication error	For network tests, Communications Network
U1A1449	CAN error	• CAN failed to initialise	For network tests, Communications Network
U251800	CAN error	• CAN signal fault: DATC, ambient temperature/barometric pressure	For network tests, Communications Network
U252100	CAN error	• CAN signal fault: ABS, vehicle reference speed	For network tests, Communications Network
U252300	CAN error	• CAN signal fault: ECM, engine speed	For network tests, Communications Network

Wheels and tires inspection and verification

Basic information on the wheels and tires available for this model year can be found at.

Wheels and Tires - VIN Range: G45704->H18679

www.JagDocs.com

Specifications for the wheels and tires (pressures, torques, etc) can be found at the same link.

When replacing wheels or tires you must comply with local legislation regarding health and safety and correct fitment.

If the vehicle is fitted with TPMS, only Jaguar approved wheels and tyres should be used. If the wheel and tyre size is changed (for example from R18 to R20) the TPMS module should be updated with the correct pressure information appropriate to the new wheel and tyre set. Update the TPMS module using the Jaguar approved diagnostic system.

As a general guideline, only replace tires in pairs or as a set, and only with tires of equivalent size and specification.

Confirm the symptoms of the customer complaint.

As much information as possible should be gathered from the driver to assist in diagnosing the cause(s).

1 . Before a road test, carry out a basic inspection to make sure the vehicle is safe and legal to drive.

Basic inspection

- Correct tire inflation.
  Specifications
- Legal tire tread depth.
- Cuts/Bulges in tire sidewall(s).
- Tire ply separation.
- Embedded objects.
- Wheel rim damage.
- Correct tire fitment (specification, direction of rotation, etc).
- Any obvious distortion of the tire (flat/high spots).
- Worn/Damaged steering or suspension components.
  Front Suspension
  Rear Suspension

Road test

If the results of the basic inspection are acceptable, carry out a road test to confirm the symptoms.

To reproduce the symptoms, test the vehicle on similar roads to those on which the fault occurs and at similar speeds (provided it is legal to do so).

If the vibration or noise can be reproduced, note the speed at which it occurs and see if it is possible to drive through the symptom, meaning, is it possible to alter the fault by driving faster or slower than the speed at which it occurs?

If it **is** possible, it is likely that the fault is caused by an imbalance in the wheel or tire.

If the vibration or noise gets worse as the vehicle speed increases, it is likely that the fault is caused by distortion in the wheel or tire, or worn or damaged components.

Distortion checks

Check for distortion by raising the vehicle so that the wheels are free and placing an axle stand or similar fixed object next to each wheel in turn.

If the stand is placed at the tread of the tire, the tire can be checked for ovality by turning the wheel by hand and checking for high or low spots where the gap between the tread and the stand increases or reduces.

If the stand is placed next to the wheel rim or tire sidewall, the wheel and tire can be checked for run-out in a similar way.

Pinpoint tests

NOTE:

When performing voltage or resistance tests, always use a digital multimeter (DMM) accurate to 3 decimal places, and with an up-to-date calibration certificate. When testing resistance, always take the resistance of the DMM leads into account.

NOTE:

Check and rectify basic faults before beginning diagnostic routines involving pinpoint tests.

NOTE:

If DTCs are recorded and a fault is not present when performing the pinpoint tests, an intermittent concern may be the cause. Always check for loose connections and corroded terminals.

PINPOINT TEST G528618p1 : EXTERNAL ANTENNA NO CONNECTION

www.JagDocs.com

G528618t1 : Check the external antenna signal circuit for short circuit to ground

1. Key off. 2. Disconnect the TPMS external antenna electrical connector, CR99. 3.

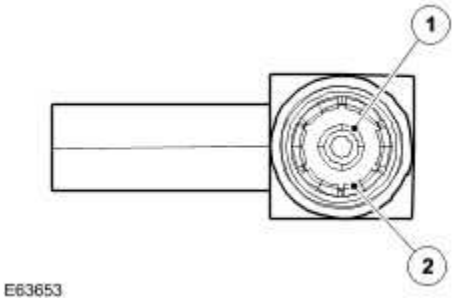

Measure the resistance between:

CR99, harness side	Battery
Pin 01, signal	Negative terminal

- **Is the resistance less than 10,000 ohms?**

-> Yes

GO to Pinpoint Test G528618t44.

-> No

GO to Pinpoint Test G528618t2.

G528618t2 : Check the external antenna signal circuit for short circuit to power

1. Measure the resistance between:

CR99, harness side	Battery
Pin 01, signal	Positive terminal

- **Is the resistance less than 10,000 ohms?**

-> Yes

GO to Pinpoint Test G528618t45.

-> No

GO to Pinpoint Test G528618t3.

G528618t44 : Check whether the short circuit is in the harness or the module

1. Disconnect the TPMS module connector, CR96. 2.

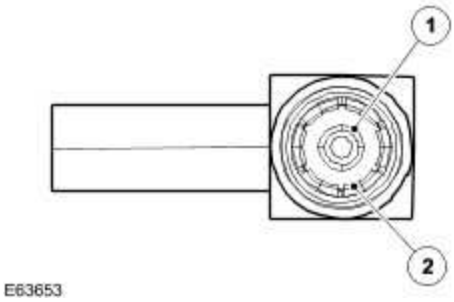

Measure the resistance between:

CR99, harness side	Battery
Pin 01, signal	Negative terminal

- **Is the resistance less than 10,000 ohms?**

-> Yes

REPAIR the short circuit. For additional information, refer to the wiring diagram. Clear the DTC and test the system for normal operation.

-> No

INSTALL a new TPMS control module.

Tire Pressure Monitoring System (TPMS) Module

G528618t45 : Check whether the short circuit is in the harness or the module

1. Disconnect the TPMS module connector, CR96. 2.

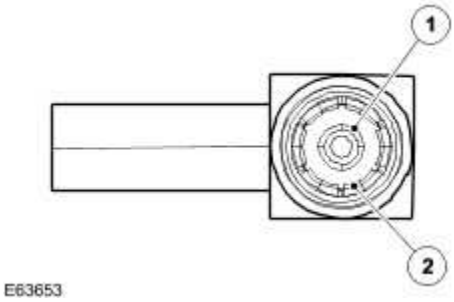

Measure the resistance between:

CR99, harness side	Battery

www.JagDocs.com

Pin 01, signal	Positive terminal

- **Is the resistance less than 10,000 ohms?**

-> Yes
REPAIR the short circuit. For additional information, refer to the wiring diagram. Clear the DTC and test the system for normal operation.

-> No
INSTALL a new TPMS control module.
Tire Pressure Monitoring System (TPMS) Module

G528618t3 : Check the external antenna signal circuit for high resistance

1. Measure the resistance between:

CR96, harness side	CR99, harness side
Pin 01, signal	Pin 01, signal

- **Is the resistance greater than 5 ohms?**

-> Yes
REPAIR the high resistance. For additional information, refer to the wiring diagram. Clear the DTC and test the system for normal operation.

-> No
INSTALL a new external antenna.

PINPOINT TEST G528618p2 : LEFT HAND FRONT LOW-FREQUENCY ANTENNA CIRCUIT

G528618t7 : Check the antenna negative circuit for short circuit to ground

1. Key off. 2. Disconnect the left hand front low-frequency antenna electrical connector, EC83. 3.

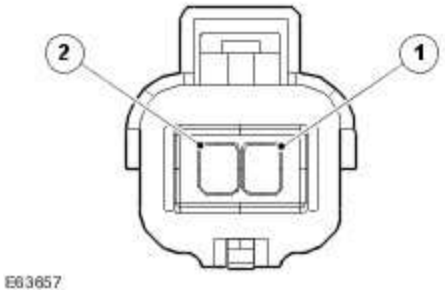

4. Measure the resistance between:

EC83, harness side	Battery
Pin 02, negative	Negative terminal

- **Is the resistance less than 10,000 ohms?**

-> Yes

GO to Pinpoint Test G528618t28.

-> No

GO to Pinpoint Test G528618t4.

G528618t4 : Check the antenna negative circuit for short circuit to power

1. Measure the resistance between:

EC83, harness side	Battery
Pin 02, negative	Positive terminal

- **Is the resistance less than 10,000 ohms?**

-> Yes

GO to Pinpoint Test G528618t30.

-> No

GO to Pinpoint Test G528618t29.

www.JagDocs.com

www.JagDocs.com

G528618t29 : Check the antenna positive circuit for short circuit to ground

1. Measure the resistance between:

EC83, harness side	Battery
Pin 01, positive	Negative terminal

- **Is the resistance less than 10,000 ohms?**

-> Yes

GO to Pinpoint Test G528618t32.

-> No

GO to Pinpoint Test G528618t31.

G528618t31 : Check the antenna positive circuit for short circuit to power

1. Measure the resistance between:

EC83, harness side	Battery
Pin 01, positive	Positive terminal

- **Is the resistance less than 10,000 ohms?**

-> Yes

GO to Pinpoint Test G528618t33.

-> No

GO to Pinpoint Test G528618t9.

G528618t28 : Check whether the short circuit is in the harness or the module

1. Disconnect the TPMS module connector, CR94. 2.

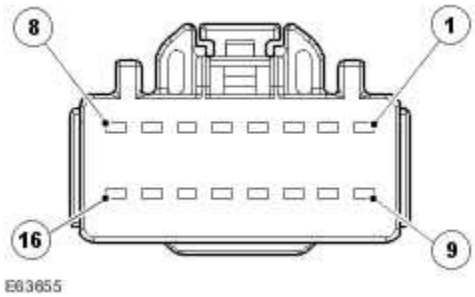

3. Measure the resistance between:

EC83, harness side	Battery
Pin 02, negative	Negative terminal

- **Is the resistance less than 10,000 ohms?**

-> Yes

REPAIR the short circuit. This circuit contains intermediate connector, EC17. For additional information, refer to the wiring diagram. Clear the DTC and test the system for normal operation.

-> No

INSTALL a new TPMS control module.

Tire Pressure Monitoring System (TPMS) Module

G528618t30 : Check whether the short circuit is in the harness or the module

1. Disconnect the TPMS module connector, CR94. 2.

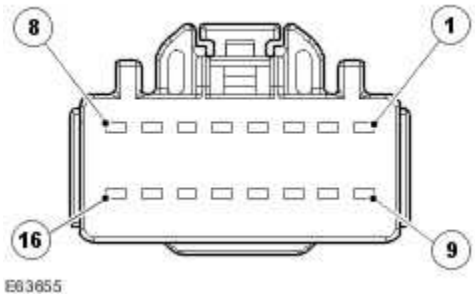

3. Measure the resistance between:

EC83, harness side	Battery
Pin 02, negative	Positive terminal

www.JagDocs.com

- **Is the resistance less than 10,000 ohms?**

-> Yes
REPAIR the short circuit. This circuit contains intermediate connector, EC17. For additional information, refer to the wiring diagram. Clear the DTC and test the system for normal operation.

-> No
INSTALL a new TPMS control module.
Tire Pressure Monitoring System (TPMS) Module

G528618t32 : Check whether the short circuit is in the harness or the module

1. Disconnect the TPMS module connector, CR94. 2.

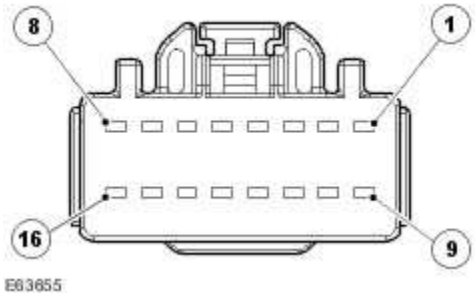

3. Measure the resistance between:

EC83, harness side	Battery
Pin 01, positive	Negative terminal

- **Is the resistance less than 10,000 ohms?**

-> Yes
REPAIR the short circuit. This circuit contains intermediate connector, EC17. For additional information, refer to the wiring diagram. Clear the DTC and test the system for normal operation.

-> No
INSTALL a new TPMS control module.
Tire Pressure Monitoring System (TPMS) Module

G528618t33 : Check whether the short circuit is in the harness or the module

1. Disconnect the TPMS module connector, CR94. 2.

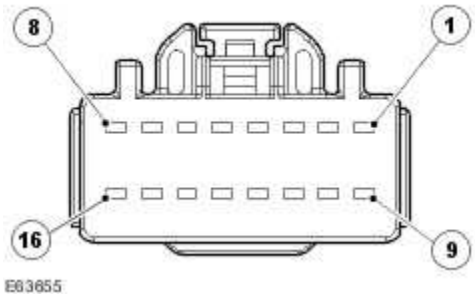

3. Measure the resistance between:

EC83, harness side	Battery
Pin 01, positive	Positive terminal

- **Is the resistance less than 10,000 ohms?**

-> Yes
REPAIR the short circuit. This circuit contains intermediate connector, EC17. For additional information, refer to the wiring diagram. Clear the DTC and test the system for normal operation.

-> No
INSTALL a new TPMS control module.
Tire Pressure Monitoring System (TPMS) Module

G528618t9 : Check the antenna negative circuit for high resistance

1. Measure the resistance between:

CR94, harness side	EC83, harness side
Pin 14, negative	Pin 02, negative

- **Is the resistance greater than 5 ohms?**

-> Yes
REPAIR the high resistance circuit. This circuit contains intermediate connector, EC17. For additional information, refer to the wiring diagram. Clear the DTC and test the system for normal operation.

-> No

www.JagDocs.com

GO to Pinpoint Test G528618t8.

G528618t8 : Check the antenna positive circuit for high resistance

1. Measure the resistance between:

CR94, harness side	EC83, harness side
Pin 13, positive	Pin 01, positive

- **Is the resistance greater than 5 ohms?**

-> Yes

REPAIR the high resistance circuit. This circuit contains intermediate connector, EC17. For additional information, refer to the wiring diagram. Clear the DTC and test the system for normal operation.

-> No

INSTALL a new left hand front low-frequency antenna.

Tire Pressure Monitoring System (TPMS) Front Antenna

PINPOINT TEST G528618p3 : RIGHT HAND FRONT LOW-FREQUENCY ANTENNA CIRCUIT

G528618t5 : Check the antenna negative circuit for short circuit to ground

1. Key off. 2. Disconnect the right hand front low-frequency antenna electrical connector, EC84. 3.

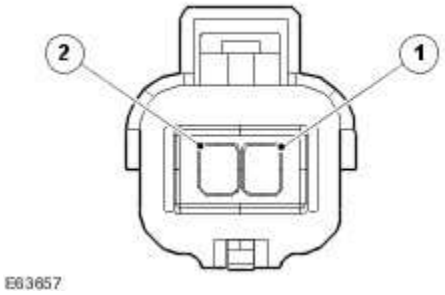

Measure the resistance between:

EC84, harness side	Battery
Pin 02, negative	Negative terminal

- **Is the resistance less than 10,000 ohms?**

-> Yes
GO to Pinpoint Test G528618t12.

-> No
GO to Pinpoint Test G528618t6.

G528618t6 : Check the antenna negative circuit for short circuit to power

1. Measure the resistance between:

EC84, harness side	Battery
Pin 02, negative	Positive terminal

- **Is the resistance less than 10,000 ohms?**

-> Yes
GO to Pinpoint Test G528618t13.

-> No
GO to Pinpoint Test G528618t10.

G528618t10 : Check the antenna positive circuit for short circuit to ground

1. Measure the resistance between:

EC84, harness side	Battery
Pin 01, positive	Negative terminal

- **Is the resistance less than 10,000 ohms?**

-> Yes
GO to Pinpoint Test G528618t14.

-> No
GO to Pinpoint Test G528618t11.

www.JagDocs.com

G528618t11 : Check the antenna positive circuit for short circuit to power

1. Measure the resistance between:

EC84, harness side	Battery
Pin 01, positive	Positive terminal

- **Is the resistance less than 10,000 ohms?**

-> Yes

GO to Pinpoint Test G528618t15.

-> No

GO to Pinpoint Test G528618t16.

G528618t12 : Check whether the short circuit is in the harness or the module

1. Disconnect the TPMS module connector, CR94. 2.

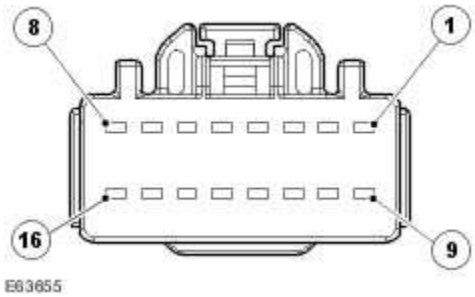

Measure the resistance between:

EC84, harness side	Battery
Pin 02, negative	Negative terminal

- **Is the resistance less than 10,000 ohms?**

-> Yes

REPAIR the short circuit. This circuit contains intermediate connector, EC17. For additional information, refer to the wiring diagram. Clear the DTC and test the system for normal operation.

-> No

INSTALL a new TPMS control module.
Tire Pressure Monitoring System (TPMS) Module

G528618t13 : Check whether the short circuit is in the harness or the module

1. Disconnect the TPMS module connector, CR94. 2.

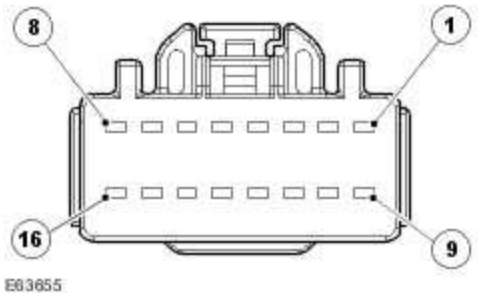

Measure the resistance between:

EC84, harness side	Battery
Pin 02, negative	Positive terminal

- **Is the resistance less than 10,000 ohms?**

-> Yes
REPAIR the short circuit. This circuit contains intermediate connector, EC17. For additional information, refer to the wiring diagram. Clear the DTC and test the system for normal operation.

-> No
INSTALL a new TPMS control module.
Tire Pressure Monitoring System (TPMS) Module

G528618t14 : Check whether the short circuit is in the harness or the module

1. Disconnect the TPMS module connector, CR94. 2.

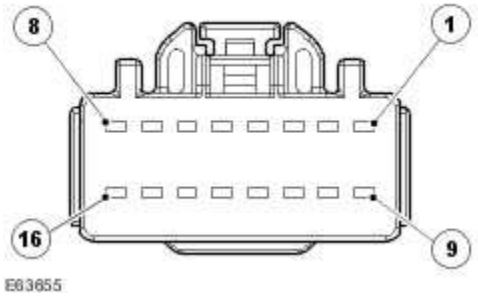

Measure the resistance between:

EC84, harness side	Battery

www.JagDocs.com

Pin 01, positive	Negative terminal

- **Is the resistance less than 10,000 ohms?**

-> Yes
REPAIR the short circuit. This circuit contains intermediate connector, EC17. For additional information, refer to the wiring diagram. Clear the DTC and test the system for normal operation.

-> No
INSTALL a new TPMS control module.
Tire Pressure Monitoring System (TPMS) Module

G528618t15 : Check whether the short circuit is in the harness or the module

1. Disconnect the TPMS module connector, CR94. 2.

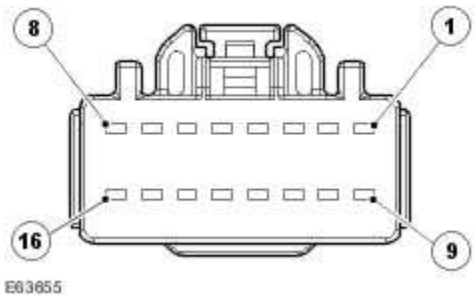

Measure the resistance between:

EC84, harness side	Battery
Pin 01, positive	Positive terminal

- **Is the resistance less than 10,000 ohms?**

-> Yes
REPAIR the short circuit. This circuit contains intermediate connector, EC17. For additional information, refer to the wiring diagram. Clear the DTC and test the system for normal operation.

-> No
INSTALL a new TPMS control module.
Tire Pressure Monitoring System (TPMS) Module

G528618t16 : Check the antenna negative circuit for high resistance

1. Measure the resistance between:

CR94, harness side	EC84, harness side
Pin 16, negative	Pin 02, negative

- **Is the resistance greater than 5 ohms?**

-> Yes
REPAIR the high resistance circuit. This circuit contains intermediate connector, EC17. For additional information, refer to the wiring diagram. Clear the DTC and test the system for normal operation.

-> No
GO to Pinpoint Test G528618t17.

G528618t17 : Check the antenna positive circuit for high resistance

1. Measure the resistance between:

CR94, harness side	EC84, harness side
Pin 15, positive	Pin 01, positive

- **Is the resistance greater than 5 ohms?**

-> Yes
REPAIR the high resistance circuit. This circuit contains intermediate connector, EC17. For additional information, refer to the wiring diagram. Clear the DTC and test the system for normal operation.

-> No
INSTALL a new right hand front low-frequency antenna.
Tire Pressure Monitoring System (TPMS) Front Antenna

PINPOINT TEST G528618p4 : LEFT HAND REAR LOW-FREQUENCY ANTENNA CIRCUIT

www.JagDocs.com

G528618t18 : Check the antenna negative circuit for short circuit to ground

1. Key off. 2. Disconnect the left hand rear low-frequency antenna electrical connector, BR08. 3.

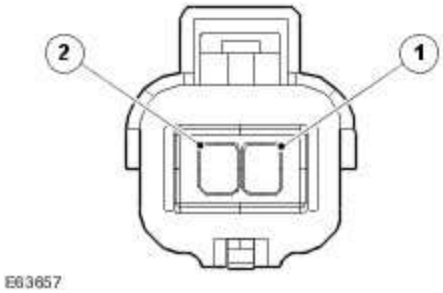

Measure the resistance between:

BR08, harness side	Battery
Pin 02, negative	Negative terminal

- **Is the resistance less than 10,000 ohms?**

-> Yes

GO to Pinpoint Test G528618t22.

-> No

GO to Pinpoint Test G528618t19.

G528618t19 : Check the antenna negative circuit for short circuit to power

1. Measure the resistance between:

BR08, harness side	Battery
Pin 02, negative	Positive terminal

- **Is the resistance less than 10,000 ohms?**

-> Yes

GO to Pinpoint Test G528618t23.

-> No

GO to Pinpoint Test G528618t20.

G528618t20 : Check the antenna positive circuit for short circuit to ground

1. Measure the resistance between:

BR08, harness side	Battery
Pin 01, positive	Negative terminal

- **Is the resistance less than 10,000 ohms?**

-> Yes

GO to Pinpoint Test G528618t24.

-> No

GO to Pinpoint Test G528618t21.

G528618t21 : Check the antenna positive circuit for short circuit to power

1. Measure the resistance between:

BR08, harness side	Battery
Pin 01, positive	Positive terminal

- **Is the resistance less than 10,000 ohms?**

-> Yes

GO to Pinpoint Test G528618t25.

-> No

GO to Pinpoint Test G528618t26.

www.JagDocs.com

G528618t22 : Check whether the short circuit is in the harness or the module

1. Disconnect the TPMS module connector, CR94. 2.

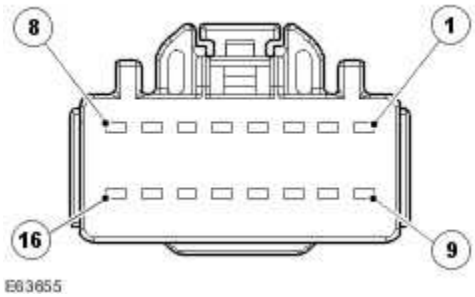

Measure the resistance between:

BR08, harness side	Battery
Pin 02, negative	Negative terminal

- **Is the resistance less than 10,000 ohms?**

-> Yes

REPAIR the short circuit. This circuit contains intermediate connector, BR01. For additional information, refer to the wiring diagram. Clear the DTC and test the system for normal operation.

-> No

INSTALL a new TPMS control module.

Tire Pressure Monitoring System (TPMS) Module

G528618t23 : Check whether the short circuit is in the harness or the module

1. Disconnect the TPMS module connector, CR94. 2.

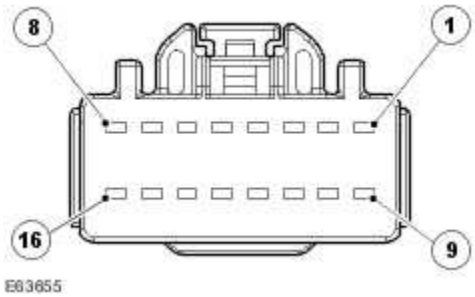

Measure the resistance between:

BR08, harness side	Battery
Pin 02, negative	Positive terminal

- **Is the resistance less than 10,000 ohms?**

-> Yes
REPAIR the short circuit. This circuit contains intermediate connector, BR01. For additional information, refer to the wiring diagram. Clear the DTC and test the system for normal operation.

-> No
INSTALL a new TPMS control module.
Tire Pressure Monitoring System (TPMS) Module

G528618t24 : Check whether the short circuit is in the harness or the module

1. Disconnect the TPMS module connector, CR94. 2.

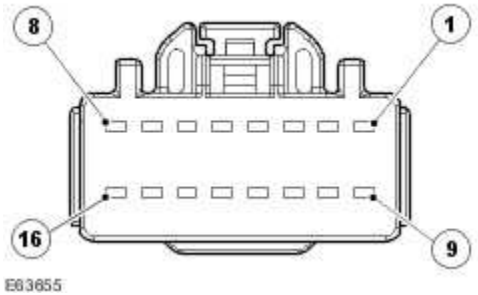

Measure the resistance between:

BR08, harness side	Battery
Pin 01, positive	Negative terminal

- **Is the resistance less than 10,000 ohms?**

-> Yes
REPAIR the short circuit. This circuit contains intermediate connector, BR01. For additional information, refer to the wiring diagram. Clear the DTC and test the system for normal operation.

-> No
INSTALL a new TPMS control module.
Tire Pressure Monitoring System (TPMS) Module

www.JagDocs.com

G528618t25 : Check whether the short circuit is in the harness or the module

1. Disconnect the TPMS module connector, CR94. 2.

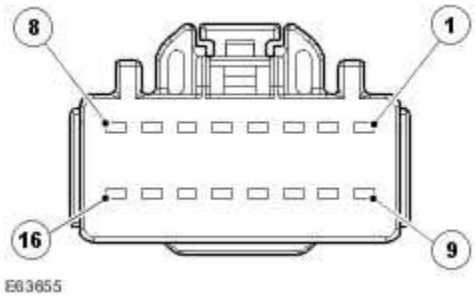

Measure the resistance between:

BR08, harness side	Battery
Pin 01, positive	Positive terminal

- **Is the resistance less than 10,000 ohms?**

-> Yes
REPAIR the short circuit. This circuit contains intermediate connector, BR01. For additional information, refer to the wiring diagram. Clear the DTC and test the system for normal operation.

-> No
INSTALL a new TPMS control module.
Tire Pressure Monitoring System (TPMS) Module

G528618t26 : Check whether the short circuit is in the harness or the module

1. Measure the resistance between:

CR94, harness side	BR08, harness side
Pin 06, negative	Pin 02, ground

- **Is the resistance greater than 5 ohms?**

-> Yes
REPAIR the high resistance circuit. This circuit contains intermediate connector, BR01. For additional information, refer to the wiring diagram. Clear the DTC and test the system for normal operation.

-> No

GO to Pinpoint Test G528618t27.

G528618t27 : Check the antenna positive circuit for high resistance

1. Measure the resistance between:

CR94, harness side	BR08, harness side
Pin 05, positive	Pin 01, positive

- **Is the resistance greater than 5 ohms?**

-> Yes

REPAIR the high resistance circuit. This circuit contains intermediate connector, BR01. For additional information, refer to the wiring diagram. Clear the DTC and test the system for normal operation.

-> No

INSTALL a new rear left hand low-frequency antenna.

Tire Pressure Monitoring System (TPMS) Rear Antenna

PINPOINT TEST G528618p5 : RIGHT HAND REAR LOW-FREQUENCY ANTENNA CIRCUIT

G528618t34 : Check the antenna negative circuit for short circuit to ground

1. Key off. 2. Disconnect the right hand rear low-frequency antenna electrical connector, BR09. 3.

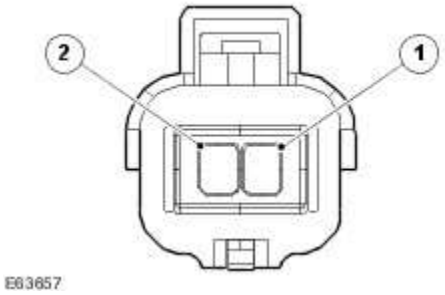

Measure the resistance between:

BR09, harness side	Battery
Pin 02, negative	Negative terminal

www.JagDocs.com

- **Is the resistance less than 10,000 ohms?**

-> Yes
GO to Pinpoint Test G528618t38.

-> No
GO to Pinpoint Test G528618t35.

G528618t35 : Check the antenna negative circuit for short circuit to power

1. Measure the resistance between:

BR09, harness side	Battery
Pin 02, negative	Positive terminal

- **Is the resistance less than 10,000 ohms?**

-> Yes
GO to Pinpoint Test G528618t39.

-> No
GO to Pinpoint Test G528618t36.

G528618t36 : Check the antenna positive circuit for short circuit to ground

1. Measure the resistance between:

BR09, harness side	Battery
Pin 01, positive	Negative terminal

- **Is the resistance less than 10,000 ohms?**

-> Yes
GO to Pinpoint Test G528618t40.

-> No
GO to Pinpoint Test G528618t37.

G528618t37 : Check the antenna positive circuit for short circuit to power

1. Measure the resistance between:

BR09, harness side	Battery
Pin 01, positive	Positive terminal

- **Is the resistance less than 10,000 ohms?**

-> Yes

GO to Pinpoint Test G528618t41.

-> No

GO to Pinpoint Test G528618t42.

G528618t38 : Check whether the short circuit is in the harness or the module

1. Disconnect the TPMS module connector, CR94. 2.

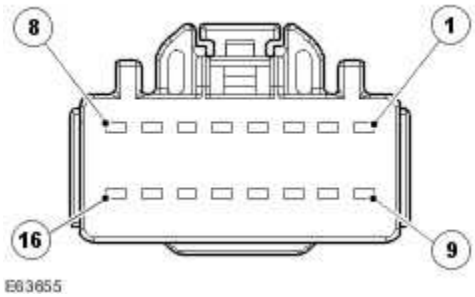

Measure the resistance between:

BR09, harness side	Battery
Pin 02, negative	Negative terminal

- **Is the resistance less than 10,000 ohms?**

-> Yes

REPAIR the short circuit. This circuit contains intermediate connector, BR01. For additional information, refer to the wiring diagram. Clear the DTC and test the system for normal operation.

-> No

www.JagDocs.com

INSTALL a new TPMS control module.
Tire Pressure Monitoring System (TPMS) Module

G528618t39 : Check whether the short circuit is in the harness or the module

1. Disconnect the TPMS module connector, CR94. 2.

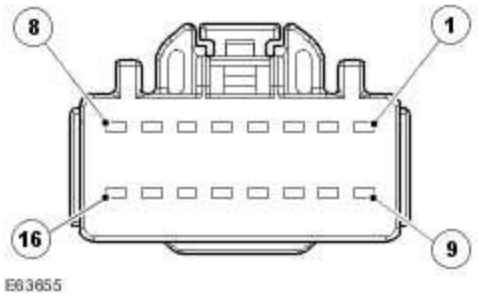

Measure the resistance between:

BR09, harness side	Battery
Pin 02, negative	Positive terminal

- **Is the resistance less than 10,000 ohms?**

-> Yes
REPAIR the short circuit. This circuit contains intermediate connector, BR01. For additional information, refer to the wiring diagram. Clear the DTC and test the system for normal operation.

-> No
INSTALL a new TPMS control module.
Tire Pressure Monitoring System (TPMS) Module

G528618t40 : Check whether the short circuit is in the harness or the module

1. Disconnect the TPMS module connector, CR94. 2.

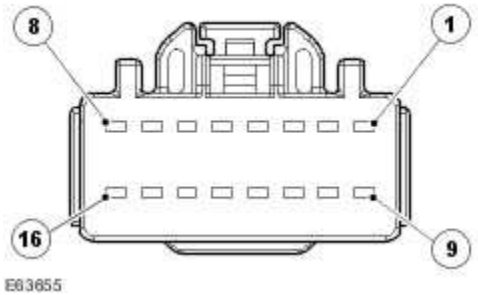

Measure the resistance between:

BR09, harness side	Battery

Pin 01, positive	Negative terminal

- **Is the resistance less than 10,000 ohms?**

-> Yes
REPAIR the short circuit. This circuit contains intermediate connector, BR01. For additional information, refer to the wiring diagram. Clear the DTC and test the system for normal operation.

-> No
INSTALL a new TPMS control module.
Tire Pressure Monitoring System (TPMS) Module

G528618t41 : Check whether the short circuit is in the harness or the module

1. Disconnect the TPMS module connector, CR94. 2.

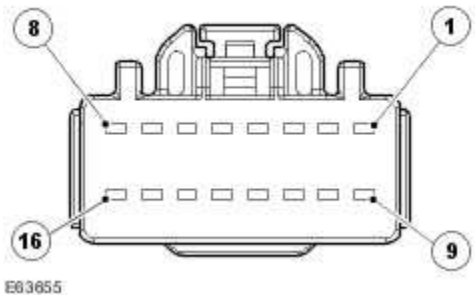

Measure the resistance between:

BR09, harness side	Battery
Pin 01, positive	Positive terminal

- **Is the resistance less than 10,000 ohms?**

-> Yes
REPAIR the short circuit. This circuit contains intermediate connector, BR01. For additional information, refer to the wiring diagram. Clear the DTC and test the system for normal operation.

-> No
INSTALL a new TPMS control module.
Tire Pressure Monitoring System (TPMS) Module

G528618t42 : Check whether the short circuit is in the harness or the module

1. Measure the resistance between:

www.JagDocs.com

CR94, harness side	BR09, harness side
Pin 08, negative	Pin 02, negative

- **Is the resistance greater than 5 ohms?**

-> Yes
REPAIR the high resistance circuit. This circuit contains intermediate connector, BR01. For additional information, refer to the wiring diagram. Clear the DTC and test the system for normal operation.

-> No
GO to Pinpoint Test G528618t43.

G528618t43 : Check whether the short circuit is in the harness or the module

1. Measure the resistance between:

CR94, harness side	BR09, harness side
Pin 07, positive	Pin 01, positive

- **Is the resistance greater than 5 ohms?**

-> Yes
REPAIR the high resistance circuit. This circuit contains intermediate connector, BR001. For additional information, refer to the wiring diagram. Clear the DTC and test the system for normal operation.

-> No
INSTALL a new rear right hand low-frequency antenna.
Tire Pressure Monitoring System (TPMS) Rear Antenna

Tire Low Pressure Sensor

Removal

NOTE:

It is strongly recommended that a new tire low pressure sensor O-ring seal, washer, nut, valve core and cap are installed each time a tire is removed and installed. The O-ring seal, washer, nut, valve core and cap must be replaced if the tire low pressure sensor is removed. Removal of the tire low pressure sensor retaining nut must be regarded as tire low pressure sensor removal. The tire low pressure sensor valve cap must always be in place except when inflating, releasing pressure or checking pressure.

1 . Remove the wheel and tire.
For additional information, refer to Wheel and Tire (74.20.05)

2 . **CAUTION: Make sure the tire bead is broken from the wheel rim 180 degrees from the tire low pressure sensor. Failure to follow this instruction may result in damage to the tire low pressure sensor.**

Remove the tire.
For additional information, refer to Wheels and Tires - VIN Range: G45704->H18679

3 . **CAUTION: Make sure you do not push on the tire low pressure sensor valve. Failure to follow this instruction may result in damage to the valve.**

Remove the tire low pressure sensor.

- Remove and discard the tire low pressure sensor retaining nut, valve core, valve cap, O-ring seal and washer.

www.JagDocs.com

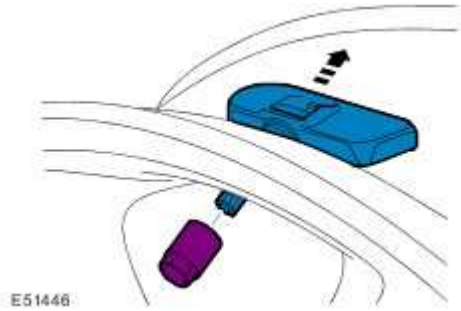

Installation

1. **CAUTION: The base of the valve stem must be held whilst pushing on the new seal and washer. Failure to follow this instruction may result in damage to the tire low pressure sensor.**

NOTE:

Make sure that the washer and O-ring seal are installed correctly. The flat face of washer must be seated against the sensor housing. The taper of O-ring seal points towards the wheel.

Install a new washer and O-ring seal.

- Install a new valve core and valve cap.

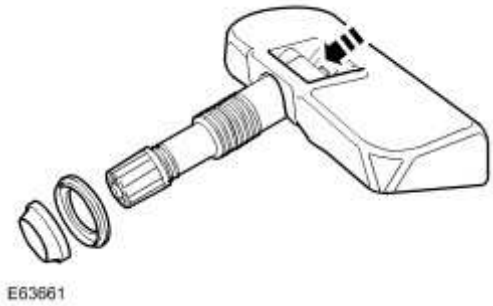

2. **CAUTION: Make sure solvents or cleaning agents of any type are not used to clean the tire low pressure sensor. Failure to follow this instruction may result in damage to the**

tire low pressure sensor.

NOTE:

If the tire low pressure sensor is replaced on a road wheel, the new tire low pressure sensor identification code will be learnt when the vehicle is first driven. If a new tire low pressure sensor is fitted to the spare wheel the identification code for that tire low pressure sensor must be programmed into the tire pressure monitoring system module. The identification code is printed on the casing of each tire low pressure sensor and is prefixed with ID.

Install the tire low pressure sensor.

1) Support the base of the valve stem when installing the tire low pressure sensor.

2) Hold the tire low pressure sensor against the wheel rim when tightening the retaining nut.

- Install a new tire low pressure sensor retaining nut.
- Tighten the nut to 8 Nm.

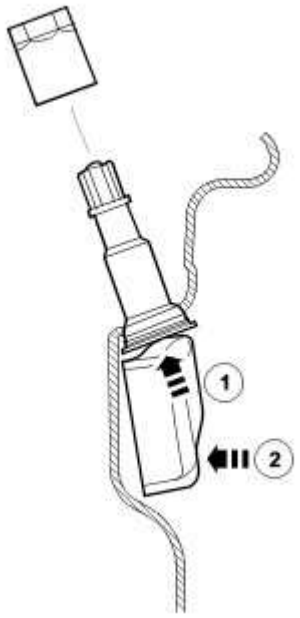

E63771

www.JagDocs.com

3 . **CAUTION: Make sure no damage occurs to the tire low pressure sensor.**

Install the tire and balance the wheel.
For additional information, refer to Wheels and Tires - VIN Range: G45704->H18679

4 . Install the wheel and tire.
For additional information, refer to Wheel and Tire (74.20.05)

Tire Pressure Monitoring System (TPMS) Front Antenna

Removal

1 . **NOTE:**

Left-hand shown, right-hand similar.

Detach the fender splash shield.

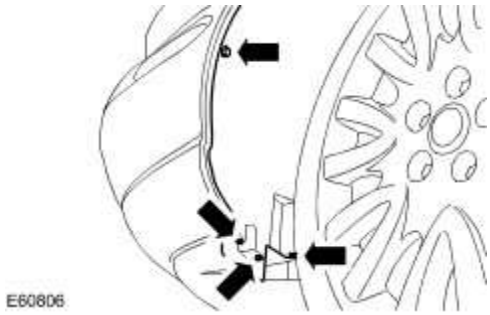

2 . **NOTE:**

Left-hand shown, right-hand similar.

Remove the tire pressure monitoring system front antenna.

1) Disconnect the electrical connector.

2) Remove the tire pressure monitoring system front antenna.

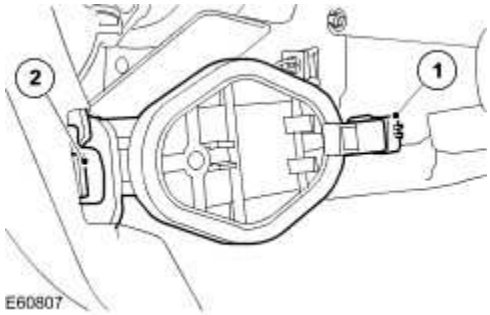

Installation

1 . To install, reverse the removal procedure.

www.JagDocs.com

Tire Pressure Monitoring System (TPMS) Module

Removal

1 . Reposition the luggage compartment floor covering.

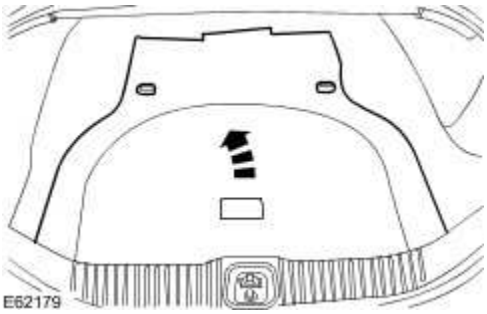

2 . Disconnect the tire pressure monitoring system module electrical connectors.

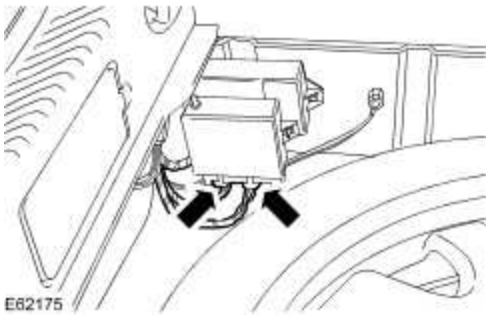

3 . Reposition the tire pressure monitoring system module.

1) Remove the retaining nut.

2) Reposition the tire pressure monitoring system module.

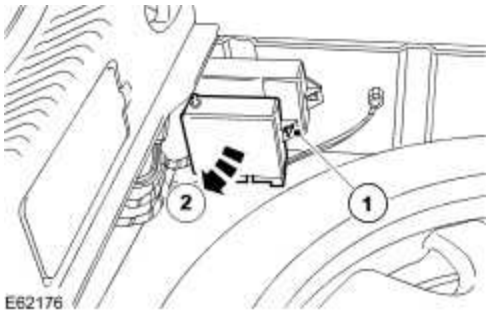

4 . Remove the tire pressure monitoring system module.

- Disconnect the external antenna.

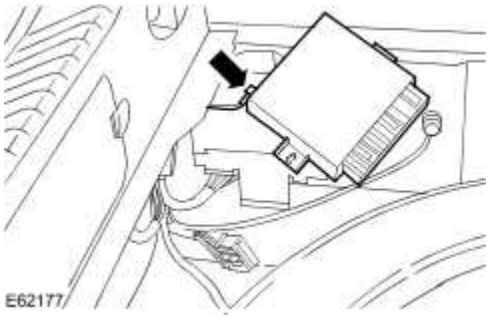

Installation

1 . To install, reverse the removal procedure.

- Tighten to 5 Nm.

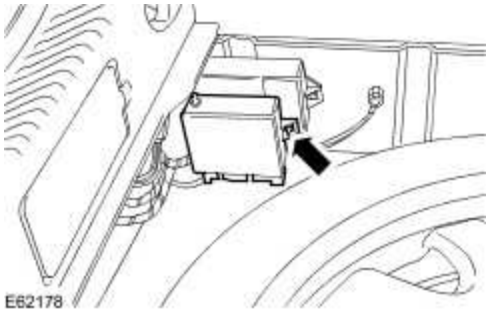

www.JagDocs.com

Tire Pressure Monitoring System (TPMS) Rear Antenna

Removal

1 . **NOTE:**

Right-hand shown, left-hand similar.

Detach the fender splash shield.

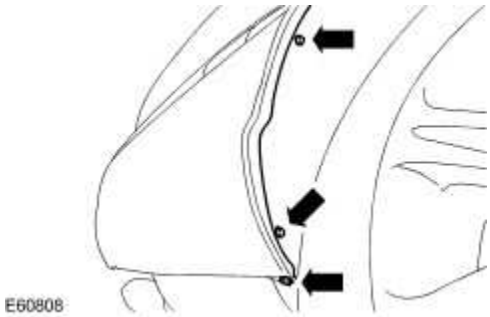

2 . **NOTE:**

Right-hand shown, left-hand similar.

Remove the tire pressure monitoring system rear antenna.

1) Disconnect the electrical connector.

2) Remove the tire pressure monitoring system rear antenna.

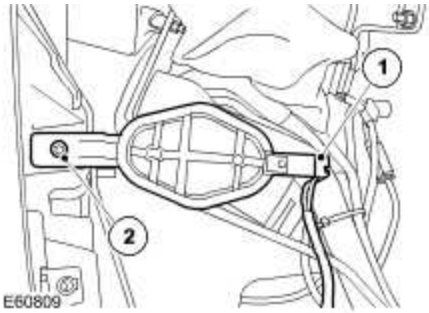

Installation

1 . To install, reverse the removal procedure.

www.JagDocs.com

Wheel and Tire (74.20.05)

Removal

1. **CAUTION: Do not use heat to loosen a seized wheel nut. Excessive heat may cause damage to the wheel and wheel bearings.**

   Loosen the wheel nuts.

2 . Raise and support the vehicle. <<100-02>>

3 . Remove the wheel and tire assembly.

Installation

1. **WARNING: Make sure there is no contamination of the wheel, hub or brake disc contact surfaces. Installation without metal to metal contact at the mounting surfaces may cause the wheel nuts to loosen and allow the wheel to detach with the vehicle in motion. Failure to follow these instructions may result in personal injury.**

WARNING: Apply a small amount of grease to the hub and wheel mating surfaces before installation. Make sure the grease does not come into contact with the vehicles braking components and the wheel stud threads. Failure to follow these instructions may result in personal injury.

To install, reverse the removal procedure.

- Tighten to 125 Nm.

www.JagDocs.com

Published: Mar 12, 2014

Wheel and Tire (74.20.05) – Armoured Vehicles

Removal

NOTE:

For further information on the tire run flat system contact; Rodgard, 1355 Clinton Street, Buffalo, New York 14206, U.S.A Tel: (716)823-1411. Fax: (716)823 1607. www.rodgard.com.

NOTE:

It is advised that the tire is removed and installed on a Hofmann Racing machine.

1 . **CAUTION: Do not use heat to loosen a seized wheel nut. Excessive heat may cause damage to the wheel and wheel bearings.**

Loosen the wheel nuts.

2 . Raise and support the vehicle.
For additional information, refer to

3 . Remove the wheel and tire assembly.

4 . Install the wheel to the Hofmann Racing machine and clamp the installation bed.

5 . **CAUTION: Make sure that the tire does not come into contact with the tire low pressure sensor.**

Detach the tire upper bead.

6 . Install the nylon spacers.

7 . Remove the retaining clip.

8 **NOTE:**

· If there is a problem using the third arm on the Hofmann Racing machine to pull the tire bead back, then use the bead stretcher supplied in the Rodgard toolbox.

Detach the roller.

Remove the retaining nut.

9 .

CAUTION: Make sure that the Rodgard runflat system does not come into contact with the tire low pressure sensor.

Remove the the Rodgard runflat system.

www.JagDocs.com

10 . **CAUTION: Make sure that the tire does not come into contact with the tire low pressure sensor.**

Remove the tire.

Installation

1 . **CAUTION: Use suitable lubrication to aid tire installation.**

CAUTION: Make sure that the tire does not come into contact with the tire low pressure sensor.

CAUTION: Make sure the directional arrow on the side of the tire wall is facing in the correct direction.

Install the tire to the wheel.

2 . Separate one end of the roller.

- Loosen the retaining nut on the roller assembly.

3 . Install two nylon blocks between the tire and the face of the wheel.

4 .

CAUTION: Make sure the side marked OUTBOARD is facing upwards.

Check that the opening of the runner is located correctly around the tire low pressure sensor. Once this has been verified, reposition the runner to the upper ridge of the wheel.

5 .

CAUTION: Make sure the side marked OUTBOARD is facing upwards.

Install the roller to the wheel and tire assembly.

6 . Reposition the rollers into the tire and around the runner. Once this has been done, make sure that the connections on the roller assembly are at 90° to the tire low pressure sensor.

7 .

CAUTION: Make sure the roller is slotted into the runner.

Pull the roller halfs together so that the retaining bolt threads are within the other roller half. Additional nylon blocks need to be inserted between the tire and roller, to keep the roller against the runner.

- Install the retaining nut.

www.JagDocs.com

8 **NOTE:**

· If there is a problem using the third arm on the hofmann racing machine to pull the tire bead back, then the bead stretcher supplied in the Rodgard toolbox should be used as an alternative.

Check that the opening of the runner is still correctly located around the tire low pressure sensor. If this is satisfactory then install the third arm on the hofmann racing machine to pull the tire bead back around the first connection on the roller.

9 . Tighten both retaining nuts equally.

10 . **NOTE:**

To measure the gap use the Gauge provided, which is equal to 11mm (0.43 inch).

Set the gap evenly with the gauge.

11 . Rotate the nut until the small dot is facing directly upwards.

12 . Install the retaining clip into the slot until it engages the hole in the bolt thread.

13 . To check that the retaining clip is fully engaged, try to rotate the nut with the pin in place. This will also lock the pin. Repeat for the other connection at the opposite end.

14 . Remove all of the installed nylon blocks from between the tire and the face of the wheel.

15 . **CAUTION: Make sure that the tire does not come into contact with the tire low pressure sensor.**

Attach the tire upper bead.

16 . Check the wheel and tire to ensure no damage has been caused during any of the procedure.

17 . Remove the wheel from the Hofmann racing machine.

18 . Install an installation label behind the valve on the skirt of the wheel.

19 . Inflate the tire
For additional information, refer to , test and balance the wheel and tire assembly as per customer requirements.

www.JagDocs.com

20
.

WARNING: Make sure there is no contamination of the wheel, hub or brake disc contact surfaces. Installation without metal to metal contact at the mounting surfaces may cause the wheel nuts to loosen and allow the wheel to detach with the vehicle in motion. Failure to follow these instructions may result in personal injury.

WARNING: Apply a small amount of grease to the hub and wheel mating surfaces before installation. Make sure the grease does not come into contact with the vehicles braking components and the wheel stud threads. Failure to follow these instructions may result in personal injury.

Install the wheel and tire assembly.

- Tighten to 125 Nm.

Specifications

Torque Specifications

Description	Nm	lb-ft	lb-in
Compressor to body retaining nuts	20	15	-
Reservoir to body retaining nuts	7	-	62
Solenoid valve block to reservoir retaining nuts	5	-	44
Air pipes	5	-	44
Air suspension module to body retaining nuts	4	-	35
Front height sensors retaining bolts	20	15	-
Front height sensor to bracket retaining bolts	5	-	44
Rear height sensors retaining bolts	20	15	-
Front vertical accelerometer to body retaining nuts	4	-	35
Rear vertical accelerometer to body retaining nuts	4	-	35
Front air spring to body upper retaining nuts	25	18	-
Front suspension upper arm retaining nut	90	66	-
Front air spring assembly to lower arm retaining bolt	175	129	-
Rear air spring to body upper retaining nuts	25	18	-
Rear air spring assembly to lower arm retaining bolt	133	98	-
Compressor air pipe retaining nut	2	-	18

www.JagDocs.com

Air Leaks

1.

CAUTION: Any spray used must have a corrosion inhibitor, and must not cause damage to paintwork, plastics, metals or plastic pipes.

NOTE:

The recommended leak detection spray is GOTEC LDS, Jaguar part number C2C 22398.

The recommended leak detection spray should be used to identify any suspected leaks. This procedure should also be used where any of the air suspension components have been disturbed.

2. Clean around the area of the suspected air leak.

3. Using the recommended leak detection spray, spray around all of the air suspension components, working systematically until the source of the air leak has been found.

4. **NOTE:**

If a new air suspension component is to be fitted, and no air leak has been detected at the pipe connectors, remove and discard the new air pipe connections supplied with the component.

If any of the air suspension components are found to be leaking e.g. air spring, compressor, reservoir or the solenoid valve block repair is effected by replacement only. If an air leak from the pipe connector has also been identified, a new air pipe connector, supplied with the air suspension component, must be installed.

5. **NOTE:**

Only Jaguar approved connectors have been tested to the correct pressure and temperature specifications.

NOTE:

Air pipes must only be cut using either Hose cutter 204-494, available from SPX LTD or Hose cutter YA1000A, available from Snap-On Tools.

NOTE:

If the color coded markings adjacent to the pipe connections are removed when cutting air pipes, the cut end of the air pipe must be clearly marked with a suitable colored tape or

paint mark.

If the source of the air leak is found to be a pipe connection cut 5 mm (0.2 in) off the end of the air pipe and fit a new connector.

6. **NOTE:**

   Air pipes must only be cut using either Hose cutter 204-494, available from SPX LTD or Hose cutter YA1000A, available from Snap-On Tools.

NOTE:

Only Jaguar approved air pipes have been tested to the correct pressure and temperature specifications.

If the source of the air leak is found to be in a section of pipe cut out the damaged section of air pipe and replace with new air pipe and air pipe connectors as required.

7. **NOTE:**

   If the repair has been unsuccessful repeat the above steps until the air leak is rectified.

Using the Jaguar approved diagnostic system ensure that the system is fully pressurized.

8. Using the recommended leak detection spray, spray around all of the air suspension components, working systematically to make sure that the source of the air leak has been found.

www.JagDocs.com

Ride Height Adjustments

Special Service Tools

Ride height gauge.
204-484

1. **NOTE:**

   Fit special tool 204-484 as illustrated.

NOTE:

Make sure that the ride height gauge is vertical as shown.

Using the Jaguar approved diagnostic system carry out the ride height adjustments.

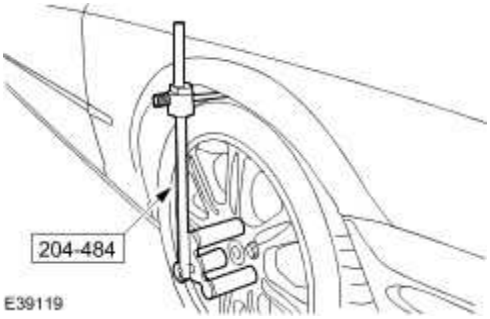

Vehicle Dynamic Suspension

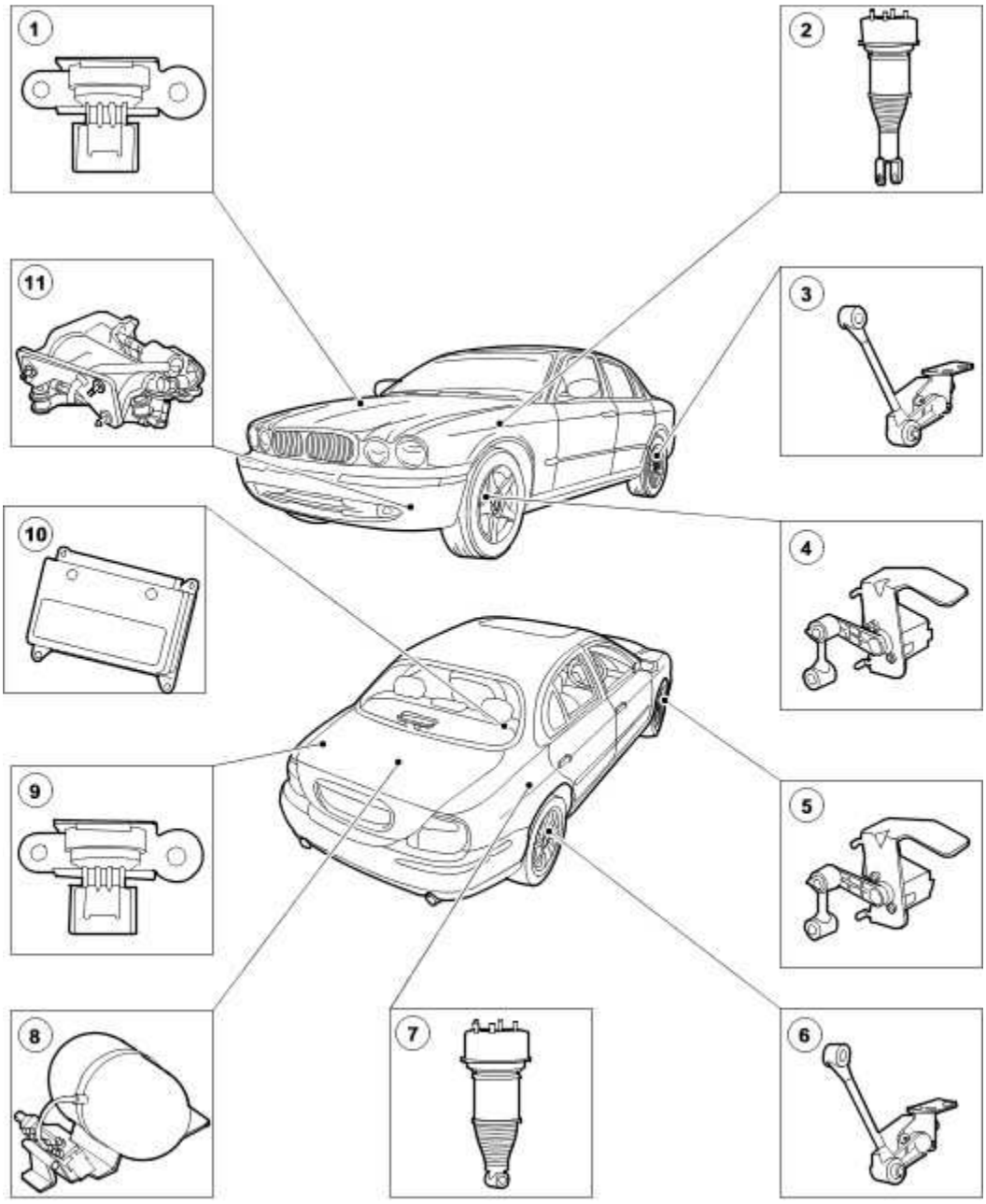

E37421

Item	Part Number	Description
1	—	Front vertical accelerometer

www.JagDocs.com

2	—	Front air spring
3	—	Left-hand rear suspension height sensor
4	—	Left-hand front suspension height sensor
5	—	Right-hand front suspension height sensor (not used on vehicles built after December 2003)
6	—	Right-hand rear suspension height sensor
7	—	Rear air spring
8	—	Solenoid valve block and air reservoir
9	—	Rear vertical accelerometer
10	—	Air suspension control module
11	—	Compressor

The vehicle dynamic suspension is a passive air suspension system providing vehicle levelling independent of load. The system also improves the drag coefficiency by automatically lowering the vehicle for high speed driving.

When driving at high speeds, the air suspension system will lower the vehicle to improve aerodynamics and vehicle stability. The suspension will automatically return the vehicle to the normal ride height when the vehicle slows.

NOTE:

Speed lowering is disabled when towing. Only Jaguar approved towing equipment will inhibit this feature.

The air suspension system ensures that the vehicle is always at the correct ride height for varying load conditions.

The air suspension system automatically adjusts the amount of air in the air springs to level the vehicle. Air is supplied either from an air reservoir or a compressor. The compressor will run periodically to fill the air reservoir.

The air suspension module (ASM) controls the operation of the solenoids in the valve block. The front air springs are operated as a pair, the rear air springs are operated independently of each other. The ASM adjusts one axle at a time, for example, when lifting the vehicle the rear axle is controlled first;

when lowering the vehicle the front axle is controlled first. This reduces headlamp glare during leveling operations.

The ASM uses two different filter rates. When stationery, a 'fast' filter allows the system to react quickly to payload changes. Whilst driving a 'slow' filter allows for compensation of the fuel level change but does not react to road inputs for example pot holes and speed bumps.

Suspension Height Sensors

Vehicles built before December 2003 have four suspension height sensors which are mounted on the front and rear subframe assemblies, two front and two rear. Vehicles built after December 2003 have only three (the right front sensor being deleted), although the functionality of the system remains the same. The suspension height sensors are linked to the suspension arms by drop link connections and secured by means of a spring clip.

NOTE:

There may be some early vehicles which will have four sensors fitted, but which have the three-sensor module, making the right front sensor redundant. To confirm the level of equipment, read the module part number from the **special applications** menu in **configuration** on the Jaguar approved diagnostic system. Part numbers before 'BJ' are four sensor, while 'BJ' and after are three sensor. If the Jaguar approved diagnostic system is not available, remove the rear seat and sound deadening and read the part number from the module.

NOTE:

Suspension height sensors require calibration if removed/refitted or replaced.

www.JagDocs.com

Air Springs

Two derivatives of the air spring are available, comfort and sport, the sport having slightly smaller working volumes for higher spring rates.

The air springs are complemented by two versions of damper assembly, passive and active.

CAUTION: When removing and refitting the air spring and damper assemblies, care must be taken to avoid damage to the internal seal assembly.

CAUTION: When working on the air spring and damper assembly, ensure that no twisting occurs between the air spring top mounting and damper body. Twisting may result in damage to the air spring inner components.

A pressure retaining valve (PRV) is located in each air spring which retains sufficient pressure to protect the air spring membrane during service and handling.

NOTE:

> De-pressurization and re-pressurization of the air suspension system should be performed using the Jaguar approved diagnostic system prior to, and after, any work being carried out.

Solenoid Valve Block

The solenoid valve block contains five individual solenoid valves (one per air spring and one for the vehicle reservoir). A pressure sensor is incorporated into the solenoid valve block and monitors air spring and reservoir pressure. The solenoid valve block is mounted on isolators to reduce valve operation noise. Pipe connections are provided for the front and rear air spring assemblies and also the reservoir and compressor. The compressor to valve block port and the rear air spring ports are 4 mm in diameter with the front air spring ports being 6 mm in diameter. Each of the solenoid valve block ports and air pipes are color coded (pink, blue, white, yellow, red and brown) for correct connection.

Reservoir

The reservoir has a volume of 4.5 liters with a maximum design pressure of 15 bar (218 psi). Dependent on load conditions, this store of reserve air is sufficient for two full lifts. The system automatically replenishes the reservoir by way of the compressor.

Air Suspension Module

The air suspension module (ASM) is accessed from the right-hand side of the vehicle, behind the back of the rear seat. The ASM can be recognized by the 4 individually colored connectors (gold, grey, yellow and pink) and the 'WABCO' logo on the front of the module. ASM calibration is required when either a replacement module is fitted, or if any height sensors have been removed/refitted or replaced.

NOTE:

> When installing a new air suspension module it will be necessary to configure the module into the customer mode using the Jaguar approved diagnostic system.

Compressor

The air compressor is located in the left-hand front wheel arch behind the bumper beam assembly. It contains an air filter, an integral regenerative air drier element plus an air exhaust solenoid valve. The compressor is isolated from the main body structure by 3 mounts, each incorporating a rubber bush and metal spring. The maximum pressure developed by the system is 15 bar (218 psi) with a compressor pressure relief valve fitted, set to relieve pressures above 17 Bar (247 psi). The

compressor only operates whilst the engine is running. To guard against the compressor overheating the ASM may shut down the compressor to allow cooling to take place. Re-activation of the compressor depends on vehicle activity and is generally no longer than 120 seconds.

www.JagDocs.com

Vehicle Dynamic Suspension

Operating modes

Before it will be possible to verify the customer concern, it will be necessary to understand the modes of the system to establish what the system should and should not do in each mode. The table below should help in understanding the operating modes.

Vehicle operating condition	Air suspension operating mode	Levelling status
Static, parked. No occupant or loading activity for 30 minutes	**Sleep** mode	• Compressor unpowered • Only lowering allowed
Static, parked. Occupant entry and/or loading activity within past 30 minutes	**Preliminary** mode	• Lifting with reservoir • Lowering permitted • Compressor unpowered
Static, parked with engine running	**Stance** mode	• Lifting with reservoir • Lowering permitted • Compressor unpowered unless reservoir pressure is below a preset minimum and the vehicle is below the compressor activation height
Driving	**Drive** mode	• Lowering permitted at all speeds
		When vehicle speed is below 40 km/h (25 mph): • Lifting with reservoir • Compressor unpowered unless reservoir pressure is below a preset minimum and the vehicle is below the compressor activation height
		When vehicle speed is above 40 km/h (25 mph): • Compressor powered to lift vehicle and refill reservoir

TRANSPORTATION MODE

The vehicle will arrive at the dealership in transportation mode, and will need to be reset to customer mode at PDI (this will be carried out by a Jaguar dealer).

Transportation mode keeps the vehicle in a raised condition to allow adequate clearance for transporter loading and unloading. If the vehicle has lowered, the compressor is used to lift the vehicle. Until a suitable height is reached, the message center will display **Vehicle too low**. The message, **Air Suspension Fault** will be displayed on the message center at all times whilst the vehicle is in transportation mode.

CUSTOMER MODE

The modes below are all enabled in this mode.

SLEEP MODE

The system shuts down into sleep mode 30 minutes after the vehicle is left, and "wakes up" to check the ride height every 24 hours. If the vehicle is not level, the system lowers until the vehicle attitude is correct. The system will **not** lift the vehicle while in sleep mode to conserve reservoir pressure and battery power.

PRELIMINARY MODE

When a door or luggage compartment is opened, or the engine is switched off from a standstill condition, (see below) this mode is enabled.

In Preliminary mode, the reservoir is used to lift the vehicle to level it to within a greater tolerance than in stance or drive modes (see below).

STANCE MODE

When the vehicle is stationary with the engine running, (standstill condition) the vehicle will be levelled to within a closer tolerance than in preliminary mode to ensure that the trim heights are correct before moving off.

Any lifting necessary will be done from the reservoir, unless the vehicle is below a preset minimum height and the reservoir pressure is below a preset minimum, in which case, the compressor be will used to lift the vehicle.

DRIVE MODE

When the vehicle speed is above the preset threshold, the compressor is always used to lift the vehicle. This threshold is also used to initiate recharging of the reservoir. The following functions are enabled in drive mode;

Speed Lowering Function

To reduce aerodynamic drag and enhance vehicle stability, the system lowers the vehicle at high road speeds.

www.JagDocs.com

Levelling Inhibit Function

When the system detects significant cornering, braking and acceleration, it inhibits levelling such that it will not attempt to compensate for vehicle attitude changes.

Inclination Function

The system enables this function when parking on an uneven surface, (or with a wheel on a kerb, for example) to ensure the vehicle attitude remains correct when driving off.

Rough Road Detection

When the system detects a rough road surface, the speed lowering function is inhibited, or cancelled, bringing the vehicle back up to standard ride height to aid passenger comfort.

Trailer Towing Function

When the system detects that the vehicle is towing, (via the connection of the trailer socket) the speed lowering function is inhibited.

NOTE:

This function will only be enabled by the Jaguar approved towing equipment.

Jacking Function

When the system detects that the vehicle is being jacked, or raised on a wheel-free lift, the vehicle enters jacking mode, which inhibits lowering to prevent air loss.

Jacking mode is exited when the vehicle is driven, or the ride height passes below a threshold value.

Inspection and Verification

1 . Verify the customer concern.

2 . Confirm which, if any, warning lights and/or messages were displayed on the instrument cluster. The following messages can be displayed:

- **vehicle too low**
- **air suspension fault**

3 . Visually inspect for obvious signs of mechanical or electrical damage.

Mechanical	Electrical
• Tire pressures • Suspension components (wear/damage/security) • Air springs (leakage/damage/tampering) • Reservoir • Compressor	• Fuse(s) • Wiring harness/electrical connectors • Controller area network circuits. For additional information, • Sensors

• Pipework and unions • Sensor fitment • Valve block	• Valve block • Air suspension control module (ASU)

4 . If an obvious cause for an observed or reported concern is found, correct the cause (if possible) before proceeding to the next step.

5 . Check the vehicle ride height.
Ride Height Adjustments

6 . If the cause is not visually evident use the Jaguar approved diagnostic system or a scan tool to retrieve the fault codes before proceeding to the diagnostic trouble code (DTC) index chart, or the symptom chart if no DTCs are set.

Symptom Chart

Symptom	Message	Possible Source	Action
Vehicle sits too high and does not lower	• Air suspension fault (permanent) • Vehicle too low (occasional)	• Vehicle is in **Transportation** mode	• Check for DTC C2780 • The Jaguar approved diagnostic system is required to reconfigure the vehicle into customer mode
	None	• Vehicle is in **Jacking** mode (this does **NOT** indicate a fault)	To verify, drive the vehicle to above 3 km/h (1.8 mph) to exit jacking mode and check for lowering. If the vehicle does not lower, the system must be tested using the Jaguar approved diagnostic system
Vehicle sits too low	Vehicle too low (flagged when any corner is more than 60 mm too low)	• Low spring pressure following chassis rework • Spring airline failure • Spring leakage	**Run the engine and listen for the compressor operating:** • If the vehicle attempts to lift for 45 seconds, then flags C2302, check that air is being delivered to the air springs by disconnecting the Voss fittings at the springs • If air is being delivered to the springs, check the springs for leakage • If air is not being

www.JagDocs.com

			delivered to the springs, verify where air flow is restricted or lost in the air harness • If the vehicle does not attempt to lift, the system must be tested using the Jaguar approved diagnostic system
	None	The reservoir is depleted, and the vehicle is not below the compressor activation height (this does **NOT** indicate a fault)	• If safe, drive the vehicle steadily to above 40 km/h (25 mph) for a minimum 5 minutes. Bring the vehicle to a halt and check if the vehicle has lifted • If the vehicle does not lift, the system must be tested using the Jaguar approved diagnostic system
Vehicle gradually lowers while stationary	None	• Air spring leak • Air harness leak • Voss fitting leak	Check the air harness, springs and fittings for leakage. Rectify as necessary
Vehicle attitude is not flat after levelling	None	• Height sensor linkage/clip displaced • Water ingress into the height sensor connector	• Visually inspect the height sensor linkage/clip. Rectify as necessary • Check the connectors. Rectify as necessary
Hard ride	None	• Tire pressures incorrect • Non-standard wheels/tires • Ride height incorrect • Harness fault • Air spring fault	Check/adjust the tire pressures. Make sure that the wheels and tires are to specification. Check the ride height. Ride Height Adjustments Check for DTCs indicating a harness or system fault, refer to the DTC index. Check the air springs (see visual inspection).
Soft ride	None	• Tire pressures incorrect	Check/adjust the tire pressures.

		• Ride height incorrect • Air spring fault	Check the ride height. Ride Height Adjustments Disconnect the electrical connector from the suspect air spring and recheck. If the ride is still soft, install a new air spring. Front Air Spring (60.32.08) Rear Air Spring - VIN Range: G00442->G45703 (60.32.10) Rear Air Spring - VIN Range: G45704->G99999 (60.32.10)

Diagnostic Trouble Code (DTC) index

CAUTION: When probing connectors to take measurements in the course of the pinpoint tests, use the adaptor kit, part number 3548-1358-00.

NOTE:

When performing electrical voltage or resistance tests, always use a digital multimeter (DMM) accurate to 3 decimal places, and with an up-to-date calibration certificate. When testing resistance, always take the resistance of the DMM leads into account.

NOTE:

Check and rectify basic faults before beginning diagnostic routines involving pinpoint tests.

DTC	Description	Possible Source	Action
B1312	Head lamp circuit malfunction	• Head lamp circuit; short circuit to B+	For headlamp circuit tests, GO to Pinpoint Test G256924p2.
B1342	Control module failure	• Control module failure	Contact dealer technical support for confirmation of control module failure, and/or raise an EPQR.
B1471	Head lamp circuit	• Head lamp circuit; open	For headlamp circuit tests, GO to Pinpoint Test

www.JagDocs.com

	malfunction	circuit, short to ground	G256924p2.
B1671	Control module circuit malfunction (high/low voltage)	• Control module power supply circuit; short to high voltage • Control module power supply circuit; open circuit, high resistance, short to ground • Charging system fault	For control module supply circuit tests, GO to Pinpoint Test G256924p3.
B2477	Module configuration failure	• Control module incorrectly configured to vehicle specification	Reconfigure the control module using the Jaguar approved diagnostic system.
B2804	Reservoir solenoid signal circuit malfunction	• Reservoir solenoid signal circuit; short to B+ • Reservoir solenoid failure	For solenoid circuit tests, GO to Pinpoint Test G256924p4.
B2807	Pressure sensor signal circuit malfunction	• Pressure sensor signal circuit; short to B+ • Pressure sensor failure	For pressure sensor signal circuit tests, GO to Pinpoint Test G256924p5.
B2808	Pressure sensor supply circuit malfunction	• Pressure sensor supply circuit; short to B+	For pressure sensor supply short circuit to B+ tests, GO to Pinpoint Test G256924p6.
B2809	Pressure sensor supply circuit malfunction	• Pressure sensor supply circuit; short to ground	For pressure sensor supply short circuit to ground tests, GO to Pinpoint Test G256924p7.
B2810	Air suspension vent solenoid circuit malfunction	• Vent solenoid circuit; open circuit, short to ground, short to B+ • Vent solenoid failure	For vent solenoid circuit tests, GO to Pinpoint Test G256924p8.
C1416	Right-hand front air spring solenoid circuit malfunction	• Air spring solenoid circuit; short to B+	For right-hand front air spring solenoid circuit tests, GO to Pinpoint Test G256924p9.
C1417	Right-hand front air spring	• Air spring solenoid circuit;	For right-hand front air spring solenoid circuit

	solenoid circuit malfunction	short to ground	tests, GO to Pinpoint Test G256924p9.
C1419	Right-hand front air spring solenoid circuit malfunction	• Air spring solenoid circuit; open circuit	For right-hand front air spring solenoid circuit tests, GO to Pinpoint Test G256924p9.
C1421	Left-hand front air spring solenoid circuit malfunction	• Air spring solenoid circuit; short to B+	For left-hand front air spring solenoid circuit tests, GO to Pinpoint Test G256924p10.
C1422	Left-hand front air spring solenoid circuit malfunction	• Air spring solenoid circuit; short to ground	For left-hand front air spring solenoid circuit tests, GO to Pinpoint Test G256924p10.
C1424	Left-hand front air spring solenoid circuit malfunction	• Air spring solenoid circuit; open circuit	For left-hand front air spring solenoid circuit tests, GO to Pinpoint Test G256924p10.
C1425	Right-hand rear air spring solenoid circuit malfunction	• Air spring solenoid circuit; short to ground	For right-hand rear air spring solenoid circuit tests, GO to Pinpoint Test G256924p11.
C1426	Right-hand rear air spring solenoid circuit malfunction	• Air spring solenoid circuit; short to B+	For right-hand rear air spring solenoid circuit tests, GO to Pinpoint Test G256924p11.
C1427	Right-hand rear air spring solenoid circuit malfunction	• Air spring solenoid circuit; open circuit	For right-hand rear air spring solenoid circuit tests, GO to Pinpoint Test G256924p11.
C1430	Left-hand rear air spring solenoid circuit malfunction	• Air spring solenoid circuit; open circuit	For left-hand rear air spring solenoid circuit tests, GO to Pinpoint Test G256924p12.
C1431	Left-hand rear air spring	• Air spring solenoid circuit;	For left-hand rear air spring solenoid circuit

www.JagDocs.com

	solenoid circuit malfunction	short to B+	tests, GO to Pinpoint Test G256924p12.
C1432	Left-hand rear air spring solenoid circuit malfunction	• Air spring solenoid circuit; short to ground	For left-hand rear air spring solenoid circuit tests, GO to Pinpoint Test G256924p12.
C1437	Rear vertical accelerometer signal circuit malfunction	• Rear vertical accelerometer signal circuit; short to ground	For rear vertical accelerometer signal circuit tests, GO to Pinpoint Test G256924p13.
C1438	Rear vertical accelerometer signal circuit malfunction	• Rear vertical accelerometer signal circuit; short to B+	For rear vertical accelerometer signal circuit tests, GO to Pinpoint Test G256924p13.
C1457	Front vertical accelerometer signal circuit malfunction	• Front vertical accelerometer signal circuit; short to ground	For front vertical accelerometer signal circuit tests, GO to Pinpoint Test G256924p14.
C1458	Front vertical accelerometer signal circuit malfunction	• Front vertical accelerometer signal circuit; short to B+	For front vertical accelerometer signal circuit tests, GO to Pinpoint Test G256924p14.
C1460	Acceleration sensor supply circuit malfunction	• Acceleration sensor supply circuit; open circuit, high resistance, short to ground, short to B+	For acceleration sensor supply circuit tests, GO to Pinpoint Test G256924p15.
C1723	Height sensor supply circuit malfunction	• Left-hand front height sensor supply circuit; open circuit, short to ground, short to B+ • Right-hand front height sensor supply circuit; open circuit, short to ground, short to B+ • Left-hand rear height	For height sensor supply circuit tests, GO to Pinpoint Test G256924p16.

		sensor supply circuit; short to ground, open circuit, short to B+ • Right-hand rear height sensor supply circuit; open circuit, short to ground, short to B+	
C1800	Air suspension reservoir solenoid drive circuit failure	• Reservoir solenoid drive circuit; open circuit, short to ground • Reservoir solenoid failure	For reservoir solenoid drive circuit tests, GO to Pinpoint Test G256924p4.
C1830	Air suspension compressor relay circuit malfunction	• Compressor relay drive circuit; open circuit, short to ground, short to B+	For suspension relay drive circuit tests, GO to Pinpoint Test G256924p17.
C1881	Right-hand front height sensor signal circuit malfunction (only on vehicles built before December 2003)	• Sensor signal circuit; open circuit, short to ground • Sensor failure	For right-hand front height sensor signal circuit tests, GO to Pinpoint Test G256924p18.
C1883	Right-hand front height sensor signal circuit malfunction (only on vehicles built before December 2003)	• Sensor signal circuit; short to B+ • Sensor failure	For right-hand front height sensor signal circuit tests, GO to Pinpoint Test G256924p18.
C1885	Right-hand rear height sensor signal circuit malfunction	• Sensor signal circuit; open circuit, short to ground • Sensor failure	For right-hand rear height sensor signal circuit tests, GO to Pinpoint Test G256924p19.
C1887	Right-hand rear height sensor signal circuit malfunction	• Sensor signal circuit; short to B+ • Sensor failure	For right-hand rear height sensor signal circuit tests, GO to Pinpoint Test G256924p19.
C1889	Left-hand front height sensor signal circuit malfunction	• Sensor signal circuit; open circuit, short to ground • Sensor failure	For left-hand front height sensor signal circuit tests, GO to Pinpoint Test G256924p20.

www.JagDocs.com

C1891	Left-hand front height sensor signal circuit malfunction	• Sensor signal circuit; short to B+ • Sensor failure	For left-hand front height sensor signal circuit tests, GO to Pinpoint Test G256924p20.
C1893	Left-hand rear height sensor signal circuit malfunction	• Sensor signal circuit; open circuit, short to ground • Sensor failure	For left-hand rear height sensor signal circuit tests, GO to Pinpoint Test G256924p21.
C1895	Left-hand rear height sensor signal circuit malfunction	• Sensor signal circuit; short to B+ • Sensor failure	For left-hand rear height sensor signal circuit tests, GO to Pinpoint Test G256924p21.
C1991	Module calibration failure	• Module calibration failure	Calibrate the control module using the Jaguar approved diagnostic system.
C1993	Pressure sensor signal circuit malfunction	• Pressure sensor signal circuit; open circuit, short to ground • Pressure sensor failure	For pressure sensor signal circuit tests, GO to Pinpoint Test G256924p22.
C2302	Levelling plausibility error	• Levelling plausibility error	Carry out mechanical checks (air leaks, etc). Refer to the service bulletins.
C2303	Reservoir plausibility error	• Reservoir plausibility error	Carry out mechanical checks (air leaks, etc). Refer to the service bulletins.
C2304	Air spring supply circuit malfunction	• Air spring supply circuit; short to ground	For air spring supply circuit tests, GO to Pinpoint Test G256924p23.
C2305	Air spring supply circuit malfunction	• Air spring supply circuit; short to B+	For air spring supply circuit tests, GO to Pinpoint Test G256924p23.

C2779	Air spring solenoid supply/drive circuit malfunction	• Air spring solenoid supply circuit; short to ground, short to B+ • Left-hand front air spring solenoid drive circuit; open circuit, short to ground, short to B+ • Right-hand front air spring solenoid drive circuit; open circuit, short to ground, short to B+ • Left-hand rear air spring solenoid drive circuit; open circuit, short to ground, short to B+ • Right-hand rear air spring solenoid drive circuit; open circuit, short to ground, short to B+	For air spring solenoid supply/drive circuit tests, GO to Pinpoint Test G256924p24.
C2780	Control module in manufacturer sub-state	• Control module programming	Programme the control module using the Jaguar approved diagnostic system.
U1900	CAN communication bus fault	• CAN communication error	For CAN circuit tests,
U2516	Air suspension module bus off	• CAN communication error	For CAN circuit tests,
U2518	RCCM CAN message missing	• CAN communication error	For CAN circuit tests,
U2521	ABS CAN message missing	• CAN communication error	For CAN circuit tests,
U2523	ECM CAN message missing	• CAN communication error	For CAN circuit tests,

Pinpoint tests

CAUTION: When probing connectors to take measurements in the course of the pinpoint tests, use the adaptor kit, part number 3548-1358-00.

www.JagDocs.com

NOTE:

When performing electrical voltage or resistance tests, always use a digital multimeter (DMM) accurate to 3 decimal places, and with an up-to-date calibration certificate. When testing resistance, always take the resistance of the DMM leads into account.

NOTE:

Vehicles built before December 2003 have four suspension height sensors which are mounted on the front and rear subframe assemblies, two front and two rear. Vehicles built after December 2003 have only three (the right front sensor being deleted), although the functionality of the system remains the same. There may be some early vehicles which will have four sensors fitted, but which have the three-sensor module, making the right front sensor redundant. To confirm the level of equipment, read the module part number from the **special applications** menu in **configuration** on the Jaguar approved diagnostic system. Part numbers before 'BJ' are four sensor, while 'BJ' and after are three sensor. If the Jaguar approved diagnostic system is not available, remove the rear seat and sound deadening and read the part number from the module.

NOTE:

Check and rectify basic faults before beginning diagnostic routines involving pinpoint tests.

PINPOINT TEST G256924p1 : CHECK FOR LEAKS FROM AIR HARNESS

G256924t1 : VISUALLY INSPECT THE AIR HARNESS CONNECTIONS

1. Make sure the system is pressurized, either from the reservoir, or by activating the compressor. 2. Clean around the area of the suspected leak. 3. Using GOTEC LDS, spray around the air suspension components until the source of the leak is found.

- **Was a leak found?**

-> Yes
REPAIR the leak as necessary. For additional information,
Air Leaks Test the system for normal operation.

-> No
Recheck system operation. Check for DTCs.

PINPOINT TEST G256924p2 : B1312, B1471; HEADLAMP CIRCUIT MALFUNCTION

G256924t2 : CHECK THE HEADLAMP TO ASU PWM SIGNAL CIRCUIT FOR HIGH RESISTANCE

1. Disconnect the battery negative terminal. 2. Disconnect the ASU electrical connector, CR89. 3. Disconnect the right-hand headlamp electrical connector, EC06. 4. Disconnect the left-hand headlamp electrical connector, EC57. 5. Measure the resistance between CR89, pin 03 (Y) and EC06, pin 02 (Y). 6. Measure the resistance between CR89, pin 03 (Y) and EC57, pin 02 (YB).

- **Is either resistance greater than 5 ohms?**

-> Yes
REPAIR the high resistance circuit. For additional information, refer to the wiring diagrams. CLEAR the DTC. TEST the system for normal operation.

-> No
GO to Pinpoint Test G256924t3.

G256924t3 : CHECK THE HEADLAMP TO ASU PWM SIGNAL CIRCUIT FOR SHORT TO GROUND

1. Reconnect the battery negative terminal. 2. Measure the resistance between CR89, pin 03 (Y) and GROUND.

- **Is the resistance less than 10,000 ohms?**

-> Yes
REPAIR the short circuit. For additional information, refer to the wiring diagrams. CLEAR the DTC. TEST the system for normal operation.

-> No
GO to Pinpoint Test G256924t4.

G256924t4 : CHECK THE HEADLAMP TO ASU PWM SIGNAL CIRCUIT FOR SHORT TO B+

1. Measure the voltage between CR89, pin 03 (Y) and GROUND.

- **Is the voltage greater than 3 volts?**

www.JagDocs.com

-> Yes
REPAIR the short circuit. For additional information, refer to the wiring diagrams. CLEAR the DTC. TEST the system for normal operation.

-> No
CONTACT dealer technical support for confirmation of possible control module failure, and/or raise an EPQR.

PINPOINT TEST G256924p3 : B1671; BATTERY VOLTAGE OUT OF RANGE

G256924t5 : CHECK THE POWER SUPPLY TO THE ASU

1. Disconnect the ASU electrical connector, CR88. 2. Measure the voltage between CR88, pin 01 (NW) and GROUND.

- **Is the voltage approximately 10 volts?**

-> Yes
RECHECK DTCs.

-> No
GO to Pinpoint Test G256924t6.

G256924t6 : CHECK THE ASU POWER SUPPLY CIRCUIT FOR HIGH RESISTANCE

1. Disconnect the battery negative terminal. 2. Remove fuse 52 of the rear power distribution box. 3. Measure the resistance between CR88, pin 01 (NW) and the output terminal of fuse 52.

- **Is the resistance greater than 5 ohms?**

-> Yes
REPAIR the high resistance circuit. For additional information, refer to the wiring diagrams. CLEAR the DTC. TEST the system for normal operation.

-> No
RECHECK the voltage to the ASU. If the voltage is high, check the charging system,
Charging System - 2.7L Diesel

PINPOINT TEST G256924p4 : B2804, C1800; RESERVOIR SOLENOID DRIVE CIRCUIT FAULT

G256924t7 : CHECK THE SOLENOID DRIVE CIRCUIT FOR SHORT TO B+

1. Disconnect the ASU electrical connector, CR91. 2. Disconnect the valve block electrical connector, CR22. 3. Measure the voltage between CR22, pin 05 (BO) and GROUND.

- **Is the voltage greater than 3 volts?**

-> Yes
REPAIR the short circuit. For additional information, refer to the wiring diagrams. CLEAR the DTC. TEST the system for normal operation.

-> No
GO to Pinpoint Test G256924t49.

G256924t49 : CHECK THE SOLENOID DRIVE CIRCUIT FOR SHORT TO GROUND

1. Measure the resistance between CR22, pin 05 (BO) and GROUND.

- **Is the resistance less than 10,000 ohms?**

-> Yes
REPAIR the short circuit. For additional information, refer to the wiring diagrams. CLEAR the DTC. TEST the system for normal operation.

-> No
GO to Pinpoint Test G256924t50.

G256924t50 : CHECK THE SOLENOID DRIVE CIRCUIT FOR HIGH RESISTANCE

1. Measure the resistance between CR22, pin 05 (BO) and CR91, pin 08 (BO).

- **Is the resistance greater than 5 ohms?**

-> Yes
REPAIR the high resistance circuit. For additional information, refer to the wiring diagrams. CLEAR the DTC. TEST the system for normal operation.

-> No
INSTALL a new valve block.
Air Suspension Solenoid Valve Block

www.JagDocs.com

PINPOINT TEST G256924p5 : B2807; PRESSURE SENSOR SIGNAL CIRCUIT FAULT

G256924t8 : CHECK THE PRESSURE SENSOR SIGNAL CIRCUIT FOR SHORT TO B+

1. Disconnect the ASU electrical connector, CR88. 2. Disconnect the valve block electrical connector, CR92. 3. Measure the voltage between CR92, pin 02 (G) and GROUND.

- **Is the voltage greater than 3 volts?**

-> Yes
REPAIR the short circuit. For additional information, refer to the wiring diagrams. CLEAR the DTC. TEST the system for normal operation.

-> No
INSTALL a new valve block.
Air Suspension Solenoid Valve Block

PINPOINT TEST G256924p6 : B2808; PRESSURE SENSOR SUPPLY CIRCUIT FAULT

G256924t9 : CHECK THE PRESSURE SENSOR SUPPLY CIRCUIT FOR SHORT TO B+

1. Disconnect the ASU electrical connector, CR88. 2. Disconnect the valve block electrical connector, CR92. 3. Measure the voltage between CR92, pin 03 (GY) and GROUND.

- **Is the voltage greater than 3 volts?**

-> Yes
REPAIR the short circuit. For additional information, refer to the wiring diagrams. CLEAR the DTC. TEST the system for normal operation.

-> No
INSTALL a new valve block.
Air Suspension Solenoid Valve Block

PINPOINT TEST G256924p7 : B2809; PRESSURE SENSOR SUPPLY CIRCUIT FAULT

G256924t10 : CHECK THE PRESSURE SENSOR SUPPLY CIRCUIT FOR SHORT TO GROUND

1. Disconnect the ASU electrical connector, CR88. 2. Disconnect the valve block electrical connector, CR92. 3. Measure the resistance between CR92, pin 03 (GY) and GROUND.

- **Is the resistance less than 10,000 ohms?**

-> Yes
REPAIR the short circuit. For additional information, refer to the wiring diagrams. CLEAR the DTC. TEST the system for normal operation.

-> No
INSTALL a new valve block.
Air Suspension Solenoid Valve Block

PINPOINT TEST G256924p8 : B2810; VENT SOLENOID CIRCUIT FAULT

G256924t11 : CHECK THE VENT SOLENOID SUPPLY CIRCUIT FOR HIGH RESISTANCE

1. Disconnect the battery negative terminal. 2. Disconnect the ASU electrical connector, CR91. 3. Disconnect the vent solenoid electrical connector, EC62. 4. Measure the resistance between CR91, pin 10 (YU) and EC62, pin 02 (YU).

- **Is the resistance greater than 5 ohms?**

-> Yes
REPAIR the high resistance circuit. For additional information, refer to the wiring diagrams. CLEAR the DTC. TEST the system for normal operation.

-> No
GO to Pinpoint Test G256924t12.

www.JagDocs.com

G256924t12 : CHECK THE VENT SOLENOID SUPPLY CIRCUIT FOR SHORT TO GROUND

1. Reconnect the battery negative terminal. 2. Measure the resistance between CR91, pin 10 (YU) and GROUND.

- **Is the resistance less than 10,000 ohms?**

-> Yes
REPAIR the short circuit. For additional information, refer to the wiring diagrams. CLEAR the DTC. TEST the system for normal operation.

-> No
GO to Pinpoint Test G256924t13.

G256924t13 : CHECK THE VENT SOLENOID SUPPLY CIRCUIT FOR SHORT TO B+

1. Measure the voltage between CR91, pin 10 (YU) and GROUND.

- **Is the voltage greater than 3 volts?**

-> Yes
REPAIR the short circuit. For additional information, refer to the wiring diagrams. CLEAR the DTC. TEST the system for normal operation.

-> No
GO to Pinpoint Test G256924t14.

G256924t14 : CHECK THE VENT SOLENOID SIGNAL CIRCUIT FOR HIGH RESISTANCE

1. Measure the resistance between CR91, pin 11 (U) and EC62, pin 01 (U).

- **Is the resistance greater than 5 ohms?**

-> Yes
REPAIR the high resistance circuit. For additional information, refer to the wiring diagrams. CLEAR the DTC. TEST the system for normal operation.

-> No
GO to Pinpoint Test G256924t15.

G256924t15 : CHECK THE VENT SOLENOID SIGNAL CIRCUIT FOR SHORT TO GROUND

1. Measure the resistance between CR91, pin 11 (U) and GROUND.

- **Is the resistance less than 10,000 ohms?**

-> Yes
REPAIR the short circuit. For additional information, refer to the wiring diagrams. CLEAR the DTC. TEST the system for normal operation.

-> No
GO to Pinpoint Test G256924t16.

G256924t16 : CHECK THE VENT SOLENOID SIGNAL CIRCUIT FOR SHORT TO B+

1. Measure the voltage between CR91, pin 11 (U) and GROUND.

- **Is the voltage greater than 3 volts?**

-> Yes
REPAIR the short circuit. For additional information, refer to the wiring diagrams. CLEAR the DTC. TEST the system for normal operation.

-> No
INSTALL a new compressor,
Air Suspension Compressor

PINPOINT TEST G256924p9 : C1416, C1417, C1419; RIGHT-HAND FRONT AIR SPRING DRIVE CIRCUIT MALFUNCTION

G256924t17 : CHECK THE RIGHT-HAND FRONT AIR SPRING DRIVE CIRCUIT FOR SHORT TO B+

1. Disconnect the right-hand front air spring electrical connector, EC12. 2. Measure the voltage between EC12, pin 02 (BG) and GROUND.

- **Is the voltage greater than 3 volts?**

-> Yes
REPAIR the short circuit. For additional information, refer to the wiring diagrams. CLEAR the DTC. TEST the system for normal operation.

-> No
GO to Pinpoint Test G256924t18.

www.JagDocs.com

G256924t18 : CHECK THE RIGHT-HAND FRONT AIR SPRING DRIVE CIRCUIT FOR SHORT TO GROUND

1. Measure the resistance between EC12, pin 02 (BG) and GROUND.

- **Is the resistance less than 10,000 ohms?**

-> Yes
REPAIR the short circuit. For additional information, refer to the wiring diagrams. CLEAR the DTC. TEST the system for normal operation.

-> No
GO to Pinpoint Test G256924t19.

G256924t19 : CHECK THE RIGHT-HAND FRONT AIR SPRING DRIVE CIRCUIT FOR HIGH RESISTANCE

1. Disconnect the battery negative terminal. 2. Disconnect the ASU electrical connector, CR89. 3. Measure the resistance between EC12, pin 02 (BG) and CR89, pin 10 (BG).

- **Is the resistance greater than 5 ohms?**

-> Yes
REPAIR the high resistance circuit. For additional information, refer to the wiring diagrams. CLEAR the DTC. TEST the system for normal operation.

-> No
INSTALL a new air spring solenoid, CLEAR the DTC. TEST the system for normal operation.

PINPOINT TEST G256924p10 : C1421, C1422, C1424; LEFT-HAND FRONT AIR SPRING DRIVE CIRCUIT MALFUNCTION

G256924t20 : CHECK THE LEFT-HAND FRONT AIR SPRING DRIVE CIRCUIT FOR SHORT TO B+

1. Disconnect the left-hand front air spring electrical connector, EC47. 2. Measure the voltage between EC47, pin 02 (BO) and GROUND.

- **Is the voltage greater than 3 volts?**

-> Yes
REPAIR the short circuit. For additional information, refer to the wiring diagrams. CLEAR the DTC.

TEST the system for normal operation.

-> No
GO to Pinpoint Test G256924t21.

G256924t21 : CHECK THE LEFT-HAND FRONT AIR SPRING DRIVE CIRCUIT FOR SHORT TO GROUND

1. Measure the resistance between EC47, pin 02 (BO) and GROUND.

- **Is the resistance less than 10,000 ohms?**

-> Yes
REPAIR the short circuit. For additional information, refer to the wiring diagrams. CLEAR the DTC. TEST the system for normal operation.

-> No
GO to Pinpoint Test G256924t22.

G256924t22 : CHECK THE LEFT-HAND FRONT AIR SPRING DRIVE CIRCUIT FOR HIGH RESISTANCE

1. Disconnect the battery negative terminal. 2. Disconnect the ASU electrical connector, CR89. 3. Measure the resistance between EC47, pin 02 (BO) and CR89, pin 01 (BO).

- **Is the resistance greater than 5 ohms?**

-> Yes
REPAIR the high resistance circuit. For additional information, refer to the wiring diagrams. CLEAR the DTC. TEST the system for normal operation.

-> No
INSTALL a new air spring solenoid, CLEAR the DTC. TEST the system for normal operation.

PINPOINT TEST G256924p11 : C1425, C1426, C1427; RIGHT-HAND REAR AIR SPRING DRIVE CIRCUIT MALFUNCTION

www.JagDocs.com

G256924t23 : CHECK THE RIGHT-HAND REAR AIR SPRING DRIVE CIRCUIT FOR SHORT TO B+

1. Disconnect the right-hand rear air spring electrical connector, CR23. 2. Measure the voltage between CR23, pin 02 (BG) and GROUND.

- **Is the voltage greater than 3 volts?**

-> Yes
REPAIR the short circuit. For additional information, refer to the wiring diagrams. CLEAR the DTC. TEST the system for normal operation.

-> No
GO to Pinpoint Test G256924t24.

G256924t24 : CHECK THE RIGHT-HAND REAR AIR SPRING DRIVE CIRCUIT FOR SHORT TO GROUND

1. Measure the resistance between CR23, pin 02 (BG) and GROUND.

- **Is the resistance less than 10,000 ohms?**

-> Yes
REPAIR the short circuit. For additional information, refer to the wiring diagrams. CLEAR the DTC. TEST the system for normal operation.

-> No
GO to Pinpoint Test G256924t25.

G256924t25 : CHECK THE RIGHT-HAND REAR AIR SPRING DRIVE CIRCUIT FOR HIGH RESISTANCE

1. Disconnect the battery negative terminal. 2. Disconnect the ASU electrical connector, CR89. 3. Measure the resistance between CR23, pin 02 (BG) and CR89, pin 11 (BG).

- **Is the resistance greater than 5 ohms?**

-> Yes
REPAIR the high resistance circuit. For additional information, refer to the wiring diagrams. CLEAR the DTC. TEST the system for normal operation.

-> No
INSTALL a new air spring solenoid, CLEAR the DTC. TEST the system for normal operation.

PINPOINT TEST G256924p12 : C1430, C1431, C1432; LEFT-HAND REAR AIR SPRING DRIVE CIRCUIT MALFUNCTION

G256924t26 : CHECK THE LEFT-HAND REAR AIR SPRING DRIVE CIRCUIT FOR SHORT TO B+

1. Disconnect the left-hand rear air spring electrical connector, TL33. 2. Measure the voltage between TL33, pin 02 (BK) and GROUND.

- **Is the voltage greater than 3 volts?**

-> Yes
REPAIR the short circuit. For additional information, refer to the wiring diagrams. CLEAR the DTC. TEST the system for normal operation.

-> No
GO to Pinpoint Test G256924t27.

G256924t27 : CHECK THE LEFT-HAND REAR AIR SPRING DRIVE CIRCUIT FOR SHORT TO GROUND

1. Measure the resistance between TL33, pin 02 (BK) and GROUND.

- **Is the resistance less than 10,000 ohms?**

-> Yes
REPAIR the short circuit. For additional information, refer to the wiring diagrams. CLEAR the DTC. TEST the system for normal operation.

-> No
GO to Pinpoint Test G256924t28.

G256924t28 : CHECK THE LEFT-HAND REAR AIR SPRING DRIVE CIRCUIT FOR HIGH RESISTANCE

1. Disconnect the battery negative terminal. 2. Disconnect the ASU electrical connector, CR89. 3. Measure the resistance between TL33, pin 02 (BK) and CR89, pin 02 (BK).

- **Is the resistance greater than 5 ohms?**

-> Yes
REPAIR the high resistance circuit. For additional information, refer to the wiring diagrams. CLEAR the

www.JagDocs.com

DTC. TEST the system for normal operation.

-> No
INSTALL a new air spring solenoid, CLEAR the DTC. TEST the system for normal operation.

PINPOINT TEST G256924p13 : C1437, C1438; REAR VERTICAL ACCELEROMETER SIGNAL CIRCUIT

G256924t29 : CHECK THE REAR ACCELEROMETER SIGNAL CIRCUIT FOR SHORT TO GROUND

1. Disconnect the ASU electrical connector, CR89. 2. Disconnect the rear accelerometer electrical connector, TL34. 3. Measure the resistance between TL34, pin 02 (GO) and GROUND.

- **Is the resistance less than 10,000 ohms?**

-> Yes
REPAIR the short circuit. For additional information, refer to the wiring diagrams. CLEAR the DTC. TEST the system for normal operation.

-> No
GO to Pinpoint Test G256924t30.

G256924t30 : CHECK THE REAR ACCELEROMETER SIGNAL CIRCUIT FOR SHORT TO B+

1. Measure the voltage between TL34, pin 02 (GO) and GROUND.

- **Is the voltage greater than 3 volts?**

-> Yes
REPAIR the short circuit. For additional information, refer to the wiring diagrams. CLEAR the DTC. TEST the system for normal operation.

-> No
INSTALL a new rear vertical accelerometer,
Rear Vertical Accelerometer (86.56.55) CLEAR the DTC. TEST the system for normal operation.

PINPOINT TEST G256924p14 : C1457, C1458; FRONT VERTICAL ACCELEROMETER SIGNAL CIRCUIT

G256924t31 : CHECK THE FRONT ACCELEROMETER SIGNAL CIRCUIT FOR SHORT TO GROUND

1. Disconnect the ASU electrical connector, CR89. 2. Disconnect the accelerometer electrical connector, EC13. 3. Measure the resistance between EC13, pin 02 (G) and GROUND.

- **Is the resistance less than 10,000 ohms?**

-> Yes
REPAIR the short circuit. For additional information, refer to the wiring diagrams. CLEAR the DTC. TEST the system for normal operation.

-> No
GO to Pinpoint Test G256924t32.

G256924t32 : CHECK THE FRONT ACCELEROMETER SIGNAL CIRCUIT FOR SHORT TO B+

1. Measure the voltage between EC13, pin 02 (G) and GROUND.

- **Is the voltage greater than 3 volts?**

-> Yes
REPAIR the short circuit. For additional information, refer to the wiring diagrams. CLEAR the DTC. TEST the system for normal operation.

-> No
INSTALL a new front vertical accelerometer,
Rear Vertical Accelerometer (86.56.55) CLEAR the DTC. TEST the system for normal operation.

PINPOINT TEST G256924p15 : C1460; ACCELEROMETER SENSOR SUPPLY CIRCUIT FAULT

G256924t33 : CHECK THE ACCELEROMETER SENSOR SUPPLY CIRCUIT FOR SHORT TO GROUND

1. Disconnect the ASU electrical connector, CR91. 2. Measure the resistance between CR91, pin 16 (Y) and GROUND.

- **Is the resistance less than 10,000 ohms?**

-> Yes
REPAIR the short circuit. For additional information, refer to the wiring diagrams. CLEAR the DTC. TEST the system for normal operation.

www.JagDocs.com

-> No
GO to Pinpoint Test G256924t34.

G256924t34 : CHECK THE ACCELEROMETER SENSOR SUPPLY CIRCUIT FOR SHORT TO B+

1. Measure the voltage between CR91, pin 16 (Y) and GROUND.

- **Is the voltage greater than 3 volts?**

-> Yes
REPAIR the short circuit. For additional information, refer to the wiring diagrams. CLEAR the DTC. TEST the system for normal operation.

-> No
GO to Pinpoint Test G256924t35.

G256924t35 : CHECK THE ACCELEROMETER SENSOR SUPPLY CIRCUIT FOR HIGH RESISTANCE

1. Disconnect the front accelerometer electrical connector, EC13. 2. Disconnect the rear accelerometer electrical connector, TL34. 3. Measure the resistance between CR91, pin 16 (Y) and EC13, pin 03 (Y). 4. Measure the resistance between CR91, pin 16 (Y) and TL34, pin 03 (Y).

- **Is either resistance greater than 5 ohms?**

-> Yes
REPAIR the high resistance circuit. For additional information, refer to the wiring diagrams. CLEAR the DTC. TEST the system for normal operation.

-> No
CHECK for DTCs indicating a sensor fault. Contact dealer technical support for confirmation of possible module failure, and/or raise an EPQR.

PINPOINT TEST G256924p16 : C1723; HEIGHT SENSOR(S) SUPPLY CIRCUIT(S) FAULT

G256924t36 : CHECK THE LEFT-HAND FRONT HEIGHT SENSOR SUPPLY CIRCUIT FOR SHORT TO GROUND

1. Disconnect the ASU electrical connector, CR90. 2. Measure the resistance between CR90, pin 01 (G) and GROUND.

- **Is the resistance less than 10,000 ohms?**

-> Yes
REPAIR the short circuit. For additional information, refer to the wiring diagrams. CLEAR the DTC. TEST the system for normal operation.

-> No
GO to Pinpoint Test G256924t37.

G256924t37 : CHECK THE LEFT-HAND FRONT HEIGHT SENSOR SUPPLY CIRCUIT FOR SHORT TO B+

1. Measure the voltage between CR90, pin 01 (G) and GROUND.

- **Is the voltage greater than 3 volts?**

-> Yes
REPAIR the short circuit. For additional information, refer to the wiring diagrams. CLEAR the DTC. TEST the system for normal operation.

-> No
GO to Pinpoint Test G256924t38.

G256924t38 : CHECK THE LEFT-HAND FRONT HEIGHT SENSOR SUPPLY CIRCUIT FOR HIGH RESISTANCE

1. Disconnect the left-hand front height sensor electrical connector, EC45. 2. Measure the resistance between CR90, pin 01 (G) and EC45, pin 05 (G).

- **Is the resistance greater than 5 ohms?**

-> Yes
REPAIR the high resistance circuit. For additional information, refer to the wiring diagrams. CLEAR the DTC. TEST the system for normal operation.

-> No
GO to Pinpoint Test G256924t39.

G256924t39 : CHECK THE RIGHT-HAND FRONT HEIGHT SENSOR SUPPLY CIRCUIT FOR SHORT TO GROUND

1. Measure the resistance between CR90, pin 04 (GO) and GROUND.

- **Is the resistance less than 10,000 ohms?**

www.JagDocs.com

-> Yes
REPAIR the short circuit. For additional information, refer to the wiring diagrams. CLEAR the DTC. TEST the system for normal operation.

-> No
GO to Pinpoint Test G256924t40.

G256924t40 : CHECK THE RIGHT-HAND FRONT HEIGHT SENSOR SUPPLY CIRCUIT FOR SHORT TO B+

1. Measure the voltage between CR90, pin 04 (GO) and GROUND.

- **Is the voltage greater than 3 volts?**

-> Yes
REPAIR the short circuit. For additional information, refer to the wiring diagrams. CLEAR the DTC. TEST the system for normal operation.

-> No
GO to Pinpoint Test G256924t41.

G256924t41 : CHECK THE RIGHT-HAND FRONT HEIGHT SENSOR SUPPLY CIRCUIT FOR HIGH RESISTANCE

1. Disconnect the right-hand front height sensor electrical connector, EC18. 2. Measure the resistance between CR90, pin 01 (G) and EC18, pin 05 (GO).

- **Is the resistance greater than 5 ohms?**

-> Yes
REPAIR the high resistance circuit. For additional information, refer to the wiring diagrams. CLEAR the DTC. TEST the system for normal operation.

-> No
GO to Pinpoint Test G256924t42.

G256924t42 : CHECK THE LEFT-HAND REAR HEIGHT SENSOR SUPPLY CIRCUIT FOR SHORT TO GROUND

1. Measure the resistance between CR90, pin 07 (BW) and GROUND.

- **Is the resistance less than 10,000 ohms?**

-> Yes
REPAIR the short circuit. For additional information, refer to the wiring diagrams. CLEAR the DTC. TEST the system for normal operation.

-> No
GO to Pinpoint Test G256924t43.

G256924t43 : CHECK THE LEFT-HAND REAR HEIGHT SENSOR SUPPLY CIRCUIT FOR SHORT TO B+

1. Measure the voltage between CR90, pin 07 (BW) and GROUND.

- **Is the voltage greater than 3 volts?**

-> Yes
REPAIR the short circuit. For additional information, refer to the wiring diagrams. CLEAR the DTC. TEST the system for normal operation.

-> No
GO to Pinpoint Test G256924t44.

G256924t44 : CHECK THE LEFT-HAND REAR HEIGHT SENSOR SUPPLY CIRCUIT FOR HIGH RESISTANCE

1. Disconnect the left-hand rear height sensor electrical connector, CV03. 2. Measure the resistance between CR90, pin 07 (BW) and CV03, pin 05 (BW).

- **Is the resistance greater than 5 ohms?**

-> Yes
REPAIR the high resistance circuit. For additional information, refer to the wiring diagrams. CLEAR the DTC. TEST the system for normal operation.

-> No
GO to Pinpoint Test G256924t45.

G256924t45 : CHECK THE RIGHT-HAND REAR HEIGHT SENSOR SUPPLY CIRCUIT FOR SHORT TO GROUND

1. Measure the resistance between CR90, pin 10 (YR) and GROUND.

- **Is the resistance less than 10,000 ohms?**

-> Yes
REPAIR the short circuit. For additional information, refer to the wiring diagrams. CLEAR the DTC. TEST the system for normal operation.

-> No

www.JagDocs.com

GO to Pinpoint Test G256924t46.

G256924t46 : CHECK THE RIGHT-HAND REAR HEIGHT SENSOR SUPPLY CIRCUIT FOR SHORT TO B+

1. Measure the voltage between CR90, pin 10 (YR) and GROUND.

- **Is the voltage greater than 3 volts?**

-> Yes
REPAIR the short circuit. For additional information, refer to the wiring diagrams. CLEAR the DTC. TEST the system for normal operation.

-> No
GO to Pinpoint Test G256924t47.

G256924t47 : CHECK THE RIGHT-HAND REAR HEIGHT SENSOR SUPPLY CIRCUIT FOR HIGH RESISTANCE

1. Disconnect the right-hand rear height sensor electrical connector, CV04. 2. Measure the resistance between CR90, pin 10 (YR) and CV04, pin 05 (YR).

- **Is the resistance greater than 5 ohms?**

-> Yes
REPAIR the high resistance circuit. For additional information, refer to the wiring diagrams. CLEAR the DTC. TEST the system for normal operation.

-> No
CHECK for DTCs indicating a sensor fault. Contact dealer technical support for confirmation of possible module failure, and/or raise an EPQR.

PINPOINT TEST G256924p17 : C1830; RELAY DRIVE CIRCUIT FAULT

G256924t51 : CHECK THE RELAY DRIVE CIRCUIT FOR SHORT TO B+

1. Remove the air suspension relay. 2. Measure the voltage between the relay base, pin 02, and GROUND.

- **Is the voltage greater than 3 volts?**

-> Yes
REPAIR the short circuit. For additional information, refer to the wiring diagrams. CLEAR the DTC. TEST the system for normal operation.

-> No
GO to Pinpoint Test G256924t48.

G256924t48 : CHECK THE RELAY DRIVE CIRCUIT FOR SHORT TO GROUND

1. Measure the resistance between the relay base, pin 02, and GROUND.

- **Is the resistance less than 10,000 ohms?**

-> Yes
REPAIR the short circuit. For additional information, refer to the wiring diagrams. CLEAR the DTC. TEST the system for normal operation.

-> No
GO to Pinpoint Test G256924t52.

G256924t52 : CHECK THE RELAY DRIVE CIRCUIT FOR HIGH RESISTANCE

1. Disconnect the battery negative terminal. 2. Disconnect the ASU electrical connector, CR91. 3. Measure the resistance between CR91, pin 12 (NR).

- **Is the resistance greater than 5 ohms?**

-> Yes
REPAIR the high resistance circuit. For additional information, refer to the wiring diagrams. CLEAR the DTC. TEST the system for normal operation.

-> No
INSTALL a new air suspension relay. CLEAR the DTC. TEST the system for normal operation. If the DTC is repeated, contact dealer technical support for confirmation of possible module failure, and/or raise an EPQR.

PINPOINT TEST G256924p18 : C1881, C1883; RIGHT-HAND FRONT HEIGHT SENSOR SIGNAL CIRCUIT FAULT

G256924t53 : CHECK THE RIGHT-HAND FRONT SIGNAL CIRCUIT FOR SHORT TO B+

1. Disconnect the right-hand front height sensor electrical connector, EC18. 2. Measure the voltage between EC18, pin 04 (GW) and GROUND.

- **Is the voltage greater than 3 volts?**

www.JagDocs.com

-> Yes
REPAIR the short circuit. For additional information, refer to the wiring diagrams. CLEAR the DTC. TEST the system for normal operation.

-> No
GO to Pinpoint Test G256924t54.

G256924t54 : CHECK THE RIGHT-HAND FRONT SIGNAL CIRCUIT FOR SHORT TO GROUND

1. Measure the resistance between EC18, pin 04 (GW) and GROUND.

- **Is the resistance less than 10,000 ohms?**

-> Yes
REPAIR the short circuit. For additional information, refer to the wiring diagrams. CLEAR the DTC. TEST the system for normal operation.

-> No
GO to Pinpoint Test G256924t55.

G256924t55 : CHECK THE RIGHT-HAND FRONT SIGNAL CIRCUIT FOR HIGH RESISTANCE

1. Disconnect the battery negative terminal. 2. Disconnect the ASU electrical connector, CR90. 3. Measure the resistance between CR90, pin 05 (GW) and EC18, pin 04 (GW).

- **Is the resistance greater than 5 ohms?**

-> Yes
REPAIR the high resistance circuit. For additional information, refer to the wiring diagrams. CLEAR the DTC. TEST the system for normal operation.

-> No
CHECK for DTCs indicating a sensor fault. Contact dealer technical support for confirmation of possible module failure, and/or raise an EPQR.

PINPOINT TEST G256924p19 : C1885, C1887; RIGHT-HAND REAR HEIGHT SENSOR SIGNAL CIRCUIT FAULT

G256924t56 : CHECK THE RIGHT-HAND REAR SIGNAL CIRCUIT FOR SHORT TO B+

1. Disconnect the right-hand rear height sensor electrical connector, CV04. 2. Measure the voltage between CV04, pin 04 (YG) and GROUND.

- **Is the voltage greater than 3 volts?**

-> Yes
REPAIR the short circuit. For additional information, refer to the wiring diagrams. CLEAR the DTC. TEST the system for normal operation.

-> No
GO to Pinpoint Test G256924t57.

G256924t57 : CHECK THE RIGHT-HAND REAR SIGNAL CIRCUIT FOR SHORT TO GROUND

1. Measure the resistance between CV04, pin 04 (YG) and GROUND.

- **Is the resistance less than 10,000 ohms?**

-> Yes
REPAIR the short circuit. For additional information, refer to the wiring diagrams. CLEAR the DTC. TEST the system for normal operation.

-> No
GO to Pinpoint Test G256924t58.

G256924t58 : CHECK THE RIGHT-HAND REAR SIGNAL CIRCUIT FOR HIGH RESISTANCE

1. Disconnect the battery negative terminal. 2. Disconnect the ASU electrical connector, CR90. 3. Measure the resistance between CR90, pin 11 (YG) and CV04, pin 04 (YG).

- **Is the resistance greater than 5 ohms?**

-> Yes
REPAIR the high resistance circuit. For additional information, refer to the wiring diagrams. CLEAR the DTC. TEST the system for normal operation.

-> No
CHECK for DTCs indicating a sensor fault. Contact dealer technical support for confirmation of possible module failure, and/or raise an EPQR.

www.JagDocs.com

PINPOINT TEST G256924p20 : C1889, C1891; LEFT-HAND FRONT HEIGHT SENSOR SIGNAL CIRCUIT FAULT

G256924t59 : CHECK THE LEFT-HAND FRONT SIGNAL CIRCUIT FOR SHORT TO B+

1. Disconnect the left-hand front height sensor electrical connector, EC45. 2. Measure the voltage between EC45, pin 04 (GU) and GROUND.

- **Is the voltage greater than 3 volts?**

-> Yes
REPAIR the short circuit. For additional information, refer to the wiring diagrams. CLEAR the DTC. TEST the system for normal operation.

-> No
GO to Pinpoint Test G256924t60.

G256924t60 : CHECK THE LEFT-HAND FRONT SIGNAL CIRCUIT FOR SHORT TO GROUND

1. Measure the resistance between EC45, pin 04 (GU) and GROUND.

- **Is the resistance less than 10,000 ohms?**

-> Yes
REPAIR the short circuit. For additional information, refer to the wiring diagrams. CLEAR the DTC. TEST the system for normal operation.

-> No
GO to Pinpoint Test G256924t61.

G256924t61 : CHECK THE LEFT-HAND FRONT SIGNAL CIRCUIT FOR HIGH RESISTANCE

1. Disconnect the battery negative terminal. 2. Disconnect the ASU electrical connector, CR90. 3. Measure the resistance between CR90, pin 02 (GU) and EC45, pin 04 (GU).

- **Is the resistance greater than 5 ohms?**

-> Yes
REPAIR the high resistance circuit. For additional information, refer to the wiring diagrams. CLEAR the DTC. TEST the system for normal operation.

-> No
CHECK for DTCs indicating a sensor fault. Contact dealer technical support for confirmation of possible module failure, and/or raise an EPQR.

PINPOINT TEST G256924p21 : C1893, C1895; LEFT-HAND REAR HEIGHT SENSOR SIGNAL CIRCUIT FAULT

G256924t62 : CHECK THE LEFT-HAND REAR SIGNAL CIRCUIT FOR SHORT TO B+

1. Disconnect the left-hand rear height sensor electrical connector, CV03. 2. Measure the voltage between CV03, pin 04 (BR) and GROUND.

- **Is the voltage greater than 3 volts?**

-> Yes
REPAIR the short circuit. For additional information, refer to the wiring diagrams. CLEAR the DTC. TEST the system for normal operation.

-> No
GO to Pinpoint Test G256924t63.

G256924t63 : CHECK THE LEFT-HAND REAR SIGNAL CIRCUIT FOR SHORT TO GROUND

1. Measure the resistance between CV03, pin 04 (BR) and GROUND.

- **Is the resistance less than 10,000 ohms?**

-> Yes
REPAIR the short circuit. For additional information, refer to the wiring diagrams. CLEAR the DTC. TEST the system for normal operation.

-> No
GO to Pinpoint Test G256924t64.

G256924t64 : CHECK THE LEFT-HAND REAR SIGNAL CIRCUIT FOR HIGH RESISTANCE

1. Disconnect the battery negative terminal. 2. Disconnect the ASU electrical connector, CR90. 3. Measure the resistance between CR90, pin 08 (BR) and CV03, pin 04 (BR).

www.JagDocs.com

- **Is the resistance greater than 5 ohms?**

-> Yes
REPAIR the high resistance circuit. For additional information, refer to the wiring diagrams. CLEAR the DTC. TEST the system for normal operation.

-> No
CHECK for DTCs indicating a sensor fault. Contact dealer technical support for confirmation of possible module failure, and/or raise an EPQR.

PINPOINT TEST G256924p22 : C1993; PRESSURE SENSOR SIGNAL CIRCUIT FAULT

G256924t65 : CHECK THE PRESSURE SENSOR SIGNAL CIRCUIT FOR SHORT TO GROUND

1. Disconnect the pressure sensor electrical connector, CR92. 2. Measure the resistance between CR92, pin 02 (G) and GROUND.

- **Is the resistance less than 10,000 ohms?**

-> Yes
REPAIR the short circuit. For additional information, refer to the wiring diagrams. CLEAR the DTC. TEST the system for normal operation.

-> No
GO to Pinpoint Test G256924t66.

G256924t66 : CHECK THE PRESSURE SENSOR SIGNAL CIRCUIT FOR HIGH RESISTANCE

1. Disconnect the battery negative terminal. 2. Disconnect the ASU electrical connector, CR90. 3. Measure the resistance between CR92, pin 02 (G) and CR90, pin 14 (G).

- **Is the resistance greater than 5 ohms?**

-> Yes
REPAIR the high resistance circuit. For additional information, refer to the wiring diagrams. CLEAR the DTC. TEST the system for normal operation.

-> No
INSTALL a new valve block,
Air Suspension Solenoid Valve Block CLEAR the DTC. TEST the system for normal operation.

PINPOINT TEST G256924p23 : C2304, C2305; AIR SPRING SUPPLY CIRCUIT FAULT

G256924t67 : CHECK THE LEFT-HAND FRONT AIR SPRING SUPPLY CIRCUIT FOR SHORT TO GROUND

1. Disconnect the left-hand front air spring electrical connector, EC47. 2. Measure the resistance between EC47, pin 01 (WR) and GROUND.

- **Is the resistance less than 10,000 ohms?**

-> Yes
REPAIR the short circuit. For additional information, refer to the wiring diagrams. CLEAR the DTC. TEST the system for normal operation.

-> No
GO to Pinpoint Test G256924t68.

G256924t68 : CHECK THE LEFT-HAND FRONT AIR SPRING SUPPLY CIRCUIT FOR SHORT TO B+

1. Measure the voltage between EC47, pin 01 (WR) and GROUND.

- **Is the voltage greater than 3 volts?**

-> Yes
REPAIR the short circuit. For additional information, refer to the wiring diagrams. CLEAR the DTC. TEST the system for normal operation.

-> No
GO to Pinpoint Test G256924t69.

G256924t69 : CHECK THE RIGHT-HAND FRONT AIR SPRING SUPPLY CIRCUIT FOR SHORT TO GROUND

1. Disconnect the right-hand front air spring electrical connector, EC12. 2. Measure the resistance between EC12, pin 01 (WU) and GROUND.

- **Is the resistance less than 10,000 ohms?**

-> Yes
REPAIR the short circuit. For additional information, refer to the wiring diagrams. CLEAR the DTC. TEST the system for normal operation.

www.JagDocs.com

-> No
GO to Pinpoint Test G256924t70.

G256924t70 : CHECK THE RIGHT-HAND FRONT AIR SPRING SUPPLY CIRCUIT FOR SHORT TO B+

1. Measure the voltage between EC12, pin 01 (WU) and GROUND.

- **Is the voltage greater than 3 volts?**

-> Yes
REPAIR the short circuit. For additional information, refer to the wiring diagrams. CLEAR the DTC. TEST the system for normal operation.

-> No
GO to Pinpoint Test G256924t71.

G256924t71 : CHECK THE LEFT-HAND REAR AIR SPRING SUPPLY CIRCUIT FOR SHORT TO GROUND

1. Disconnect the left-hand rear air spring electrical connector, TL33. 2. Measure the resistance between TL33, pin 01 (WG) and GROUND.

- **Is the resistance less than 10,000 ohms?**

-> Yes
REPAIR the short circuit. For additional information, refer to the wiring diagrams. CLEAR the DTC. TEST the system for normal operation.

-> No
GO to Pinpoint Test G256924t72.

G256924t72 : CHECK THE LEFT-HAND REAR AIR SPRING SUPPLY CIRCUIT FOR SHORT TO B+

1. Measure the voltage between TL33, pin 01 (WG) and GROUND.

- **Is the voltage greater than 3 volts?**

-> Yes
REPAIR the short circuit. For additional information, refer to the wiring diagrams. CLEAR the DTC. TEST the system for normal operation.

-> No

GO to Pinpoint Test G256924t73.

G256924t73 : CHECK THE RIGHT-HAND REAR AIR SPRING SUPPLY CIRCUIT FOR SHORT TO GROUND

1. Disconnect the right-hand rear air spring electrical connector, CR23. 2. Measure the resistance between CR23, pin 01 (WB) and GROUND.

- **Is the resistance less than 10,000 ohms?**

-> Yes
REPAIR the short circuit. For additional information, refer to the wiring diagrams. CLEAR the DTC. TEST the system for normal operation.

-> No
GO to Pinpoint Test G256924t74.

G256924t74 : CHECK THE RIGHT-HAND REAR AIR SPRING SUPPLY CIRCUIT FOR SHORT TO B+

1. Measure the voltage between CR23, pin 01 (WB) and GROUND.

- **Is the voltage greater than 3 volts?**

-> Yes
REPAIR the short circuit. For additional information, refer to the wiring diagrams. CLEAR the DTC. TEST the system for normal operation.

-> No
CHECK for DTCs indicating a air spring fault. Contact dealer technical support for confirmation of possible module failure, and/or raise an EPQR.

PINPOINT TEST G256924p24 : C2779; AIR SPRING SOLENOID SUPPLY/DRIVE CIRCUIT FAULT

G256924t75 : CHECK THE AIR SPRING SOLENOID SUPPLY CIRCUIT FOR SHORT TO GROUND

1. Disconnect the ASU electrical connector, CR91. 2. Measure the resistance between CR91, pin 01 (YG) and GROUND.

- **Is the resistance less than 10,000 ohms?**

www.JagDocs.com

-> Yes
REPAIR the short circuit. For additional information, refer to the wiring diagrams. CLEAR the DTC. TEST the system for normal operation.

-> No
GO to Pinpoint Test G256924t76.

G256924t76 : CHECK THE AIR SPRING SOLENOID SUPPLY CIRCUIT FOR SHORT TO B+

1. Measure the voltage between CR91, pin 01 (YG) and GROUND.

- **Is the voltage greater than 3 volts?**

-> Yes
REPAIR the short circuit. For additional information, refer to the wiring diagrams. CLEAR the DTC. TEST the system for normal operation.

-> No
GO to Pinpoint Test G256924t77.

G256924t77 : CHECK THE AIR SPRING SOLENOID SUPPLY CIRCUIT FOR HIGH RESISTANCE

1. Disconnect the air spring solenoid electrical connector, CR22. 2. Measure the resistance between CR91, pin 01 (YG) and CR22, pin 06 (YG).

- **Is the resistance greater than 5 ohms?**

-> Yes
REPAIR the high resistance circuit. For additional information, refer to the wiring diagrams. CLEAR the DTC. TEST the system for normal operation.

-> No
GO to Pinpoint Test G256924t78.

G256924t78 : CHECK THE LEFT-HAND FRONT AIR SPRING SOLENOID DRIVE CIRCUIT FOR SHORT TO GROUND

1. Measure the resistance between CR22, pin 01 (WR) and GROUND.

- **Is the resistance less than 10,000 ohms?**

-> Yes
REPAIR the short circuit. For additional information, refer to the wiring diagrams. CLEAR the DTC. TEST the system for normal operation.

-> No
GO to Pinpoint Test G256924t79.

G256924t79 : CHECK THE LEFT-HAND FRONT AIR SPRING SOLENOID DRIVE CIRCUIT FOR SHORT TO B+

1. Measure the voltage between CR22, pin 01 (WR) and GROUND.

- **Is the voltage greater than 3 volts?**

-> Yes
REPAIR the short circuit. For additional information, refer to the wiring diagrams. CLEAR the DTC. TEST the system for normal operation.

-> No
GO to Pinpoint Test G256924t80.

G256924t80 : CHECK THE LEFT-HAND FRONT AIR SPRING SOLENOID DRIVE CIRCUIT FOR HIGH RESISTANCE

1. Measure the resistance between CR22, pin 01 (WR) and CR91, pin 02 (WR).

- **Is the resistance greater than 5 ohms?**

-> Yes
REPAIR the high resistance circuit. For additional information, refer to the wiring diagrams. CLEAR the DTC. TEST the system for normal operation.

-> No
GO to Pinpoint Test G256924t81.

G256924t81 : CHECK THE RIGHT-HAND FRONT AIR SPRING SOLENOID DRIVE CIRCUIT FOR SHORT TO GROUND

1. Measure the resistance between CR22, pin 02 (WB) and GROUND.

- **Is the resistance less than 10,000 ohms?**

-> Yes
REPAIR the short circuit. For additional information, refer to the wiring diagrams. CLEAR the DTC. TEST the system for normal operation.

-> No
GO to Pinpoint Test G256924t82.

www.JagDocs.com

G256924t82 : CHECK THE RIGHT-HAND FRONT AIR SPRING SOLENOID DRIVE CIRCUIT FOR SHORT TO B+

1. Measure the voltage between CR22, pin 02 (WB) and GROUND.

- **Is the voltage greater than 3 volts?**

-> Yes
REPAIR the short circuit. For additional information, refer to the wiring diagrams. CLEAR the DTC. TEST the system for normal operation.

-> No
GO to Pinpoint Test G256924t83.

G256924t83 : CHECK THE RIGHT-HAND FRONT AIR SPRING SOLENOID DRIVE CIRCUIT FOR HIGH RESISTANCE

1. Measure the resistance between CR22, pin 02 (WB) and CR91, pin 03 (WB).

- **Is the resistance greater than 5 ohms?**

-> Yes
REPAIR the high resistance circuit. For additional information, refer to the wiring diagrams. CLEAR the DTC. TEST the system for normal operation.

-> No
GO to Pinpoint Test G256924t84.

G256924t84 : CHECK THE LEFT-HAND REAR AIR SPRING SOLENOID DRIVE CIRCUIT FOR SHORT TO GROUND

1. Measure the resistance between CR22, pin 03 (WU) and GROUND.

- **Is the resistance less than 10,000 ohms?**

-> Yes
REPAIR the short circuit. For additional information, refer to the wiring diagrams. CLEAR the DTC. TEST the system for normal operation.

-> No
GO to Pinpoint Test G256924t85.

G256924t85 : CHECK THE LEFT-HAND REAR AIR SPRING SOLENOID DRIVE CIRCUIT FOR SHORT TO B+

1. Measure the voltage between CR22, pin 03 (WU) and GROUND.

- **Is the voltage greater than 3 volts?**

-> Yes
REPAIR the short circuit. For additional information, refer to the wiring diagrams. CLEAR the DTC. TEST the system for normal operation.

-> No
GO to Pinpoint Test G256924t86.

G256924t86 : CHECK THE LEFT-HAND REAR AIR SPRING SOLENOID DRIVE CIRCUIT FOR HIGH RESISTANCE

1. Measure the resistance between CR22, pin 03 (WU) and CR91, pin 05 (WU).

- **Is the resistance greater than 5 ohms?**

-> Yes
REPAIR the high resistance circuit. For additional information, refer to the wiring diagrams. CLEAR the DTC. TEST the system for normal operation.

-> No
GO to Pinpoint Test G256924t87.

G256924t87 : CHECK THE RIGHT-HAND REAR AIR SPRING SOLENOID DRIVE CIRCUIT FOR SHORT TO GROUND

1. Measure the resistance between CR22, pin 04 (WG) and GROUND.

- **Is the resistance less than 10,000 ohms?**

-> Yes
REPAIR the short circuit. For additional information, refer to the wiring diagrams. CLEAR the DTC. TEST the system for normal operation.

-> No
GO to Pinpoint Test G256924t85.

G256924t88 : CHECK THE RIGHT-HAND REAR AIR SPRING SOLENOID DRIVE CIRCUIT FOR SHORT TO B+

1. Measure the voltage between CR22, pin 04 (WG) and GROUND.

- **Is the voltage greater than 3 volts?**

-> Yes
REPAIR the short circuit. For additional information, refer to the wiring diagrams. CLEAR the DTC.

www.JagDocs.com

TEST the system for normal operation.

-> No
GO to Pinpoint Test G256924t86.

G256924t89 : CHECK THE RIGHT-HAND REAR AIR SPRING SOLENOID DRIVE CIRCUIT FOR HIGH RESISTANCE

1. Measure the resistance between CR22, pin 04 (WG) and CR91, pin 06 (WG).

- **Is the resistance greater than 5 ohms?**

-> Yes
REPAIR the high resistance circuit. For additional information, refer to the wiring diagrams. CLEAR the DTC. TEST the system for normal operation.

-> No
INSTALL a new valve block,
Air Suspension Solenoid Valve Block CLEAR the DTC. TEST the system for normal operation.

Air Suspension Compressor

Removal

1 . Disconnect the battery ground cable.
For additional information, refer to Battery Disconnect and Connect

2 . Remove the radiator splash shield.
For additional information, refer to Radiator Splash Shield (76.22.90)

3 . Disconnect the electrical connector.

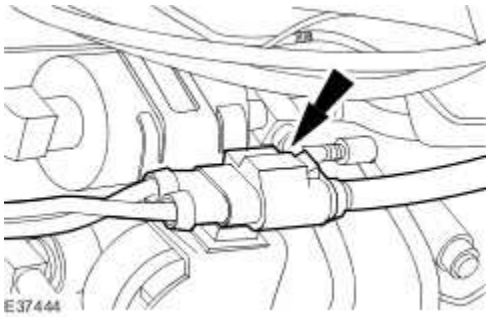

4 . **WARNING: Loosen the pipes no more than one full turn to allow the stored air pressure to vent for a minimum of three seconds.**

CAUTION: Using a suitable blanking plug, blank off the end of the air pipe to prevent dirt ingress.

NOTE:

Make a note of the correct routing of the air pipe.

Release the air pipe.

www.JagDocs.com

Remove the nut.

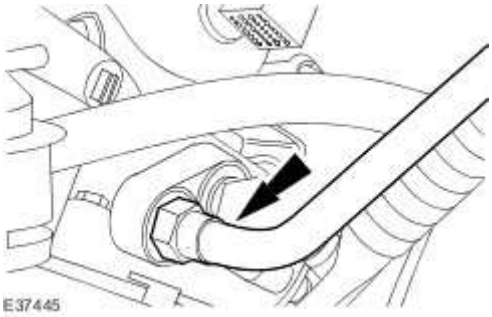

5 . Disconnect the electrical connector.

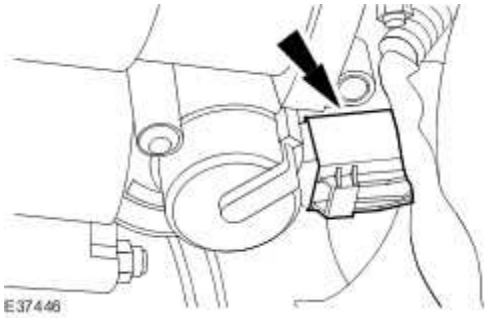

6 . **CAUTION: Make sure air feed pipe does not come detached from air compressor mounting bracket.**

Remove air feed pipe.

7 . **CAUTION: Mounting bushes may fall out on removal of the compressor.**

Remove the compressor.

- Remove the 3 nuts.
- Remove the compressor support brace.
- Collect the 6 bushes.

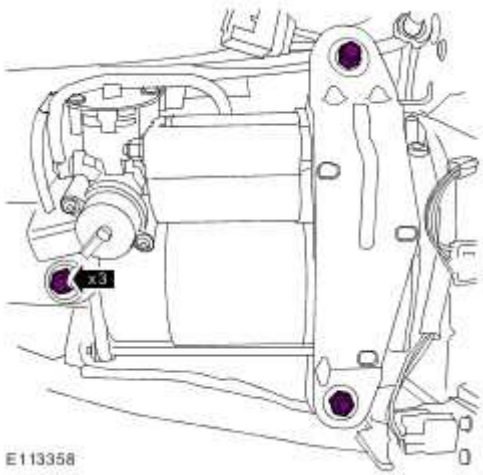

8 . Remove air pipe union.

1) Split, remove and discard olive.

2) Remove and discard brass nut.

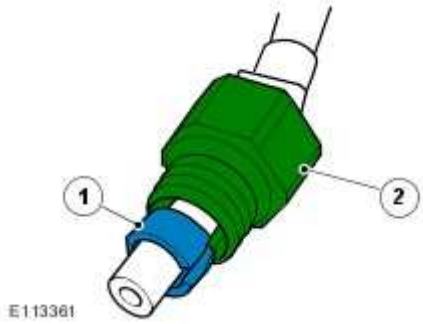

www.JagDocs.com

Installation

1. **CAUTION: Make sure mounting bushes and springs are in the correct orientation. Failure to follow this instruction will cause the compressor to become noisey and may cause damage to the vehicle.**

Locate compressor to mounting bracket.

- Install compressor support brace.
- Install the 3 nuts and tighten to 20 Nm.

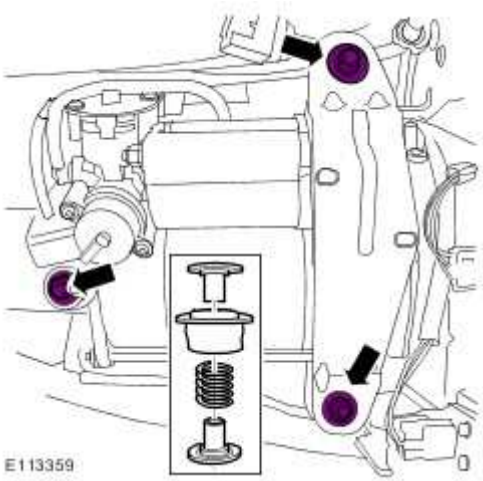

2. **CAUTION: Make sure the air feed pipe is not restricted and is in the correct orientation. Failure to carry out this instruction may cause damage to the vehicle.**

CAUTION: Failure to check pipe can result in pipe being trapped and restricting air flow to air suspension system.

Install air feed pipe to compressor filter.

3 . Connect the electrical connector.

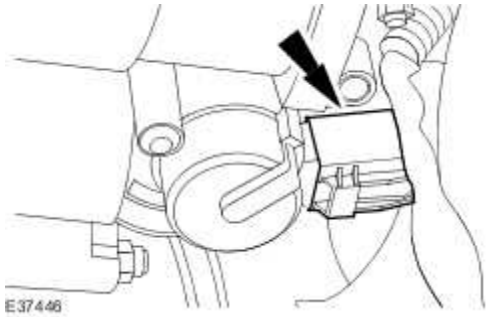

4 . **NOTE:**

Make sure the pipe is routed correctly.

Remove blanking plug from compressor.

- Push air pipe firmly into union.

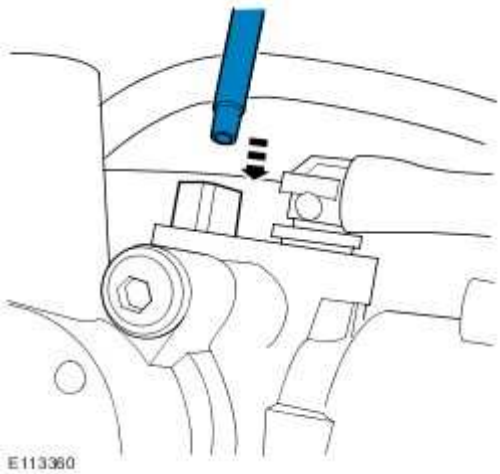

www.JagDocs.com

5 . Connect the electrical connector.

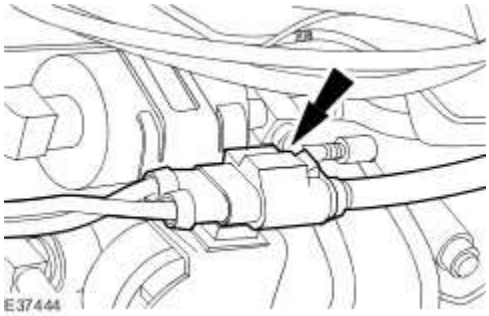

6 . Install the radiator splash shield.
For additional information, refer to Radiator Splash Shield (76.22.90)

7 . Connect the battery ground cable.
For additional information, refer to Battery Disconnect and Connect

Air Suspension Control Module (60.32.03)

Removal

NOTE:

Vehicles built before December 2003 have four suspension height sensors which are mounted on the front and rear subframe assemblies, two front and two rear. Vehicles built after December 2003 have only three (the right front sensor being deleted), although the functionality of the system remains the same.

NOTE:

The later module can be fitted in place of the four sensor module, but the right front sensor must be left in place, even though the system will not use it.

1 . **CAUTION: Electronic modules are sensitive to static electrical charges. If exposed to these charges, damage may result.**

Disconnect the battery ground cable.
For additional information, refer to Battery Disconnect and Connect

2 . Remove the luggage compartment floor covering.

1) Remove the luggage compartment floor covering securing screws.

2) Remove the luggage compartment floor covering.

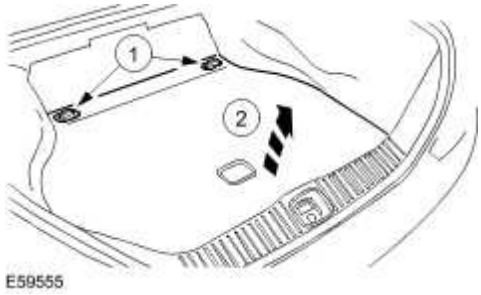

www.JagDocs.com

3 . **NOTE:**

Left-hand shown, right-hand similar.

Remove the luggage compartment side trim panel.

1) Remove the luggage compartment side trim retaining clip.

2) Remove the luggage compartment side trim panel.

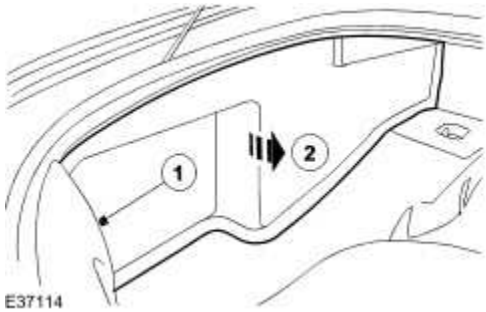

4 . Remove the luggage compartment front carpet.

1) Remove the fir tree clips

2) Disconnect the interior light electrical connector.

3) Remove the luggage compartment front carpet.

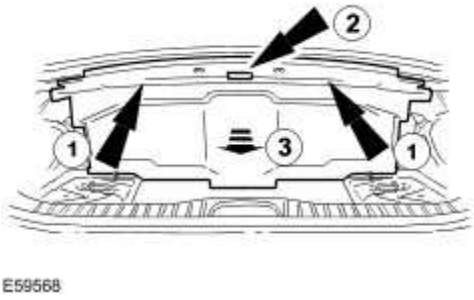

5 . Remove the rear seat backrest.
For additional information, refer to Rear Seat Backrest (76.70.38)

6 . Disconnect the air suspension control module electrical connectors.

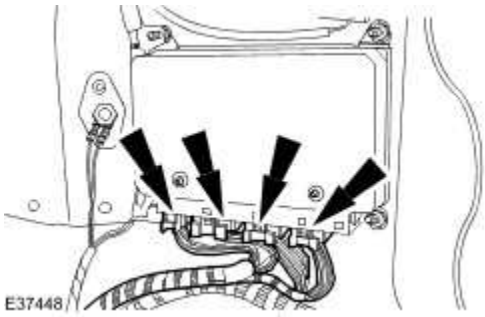

7 . **NOTE:**

Clean the vehicle of any debris after the rivets have been removed.

Remove the air suspension control module.

- Using a suitable tool, remove the four rivets.

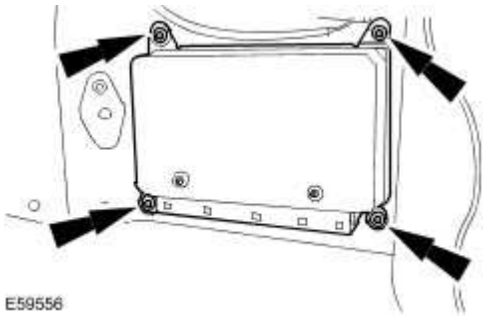

Installation

1 . **CAUTION: Make sure the rivets are correctly seated and the riveting device is positioned squarely onto the rivets before the rivets are secured. Failure to follow this instruction may result in damage to the vehicle.**

To install, reverse the removal procedure.

www.JagDocs.com

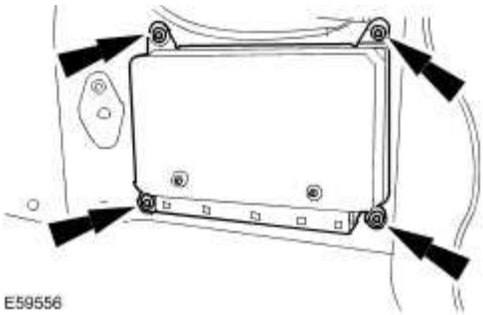

2 . Connect the battery ground cable.
For additional information, refer to Battery Connect (86.15.15)

3 . Re-calibrate the air suspension control module using the Jaguar approved diagnostic system.
For additional information, refer to Ride Height Adjustments

Air Suspension Reservoir

Removal

1 . Using the Jaguar approved diagnostic system depressurize the air suspension system.

2 . Disconnect the battery ground cable. <<414-01>>

3 . Remove the luggage compartment floor covering.

1) Remove the luggage compartment floor covering securing screws.

2) Remove the luggage compartment floor covering.

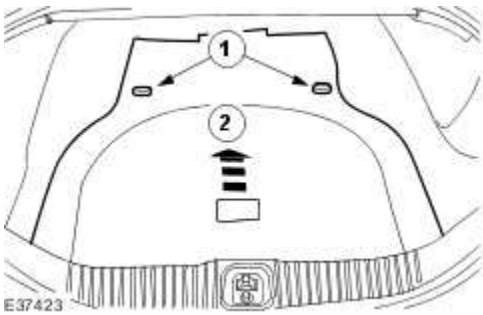

4 . **CAUTION: Before the spare wheel retainer is removed the lower locking nut should be loosened.**

Remove the spare wheel.

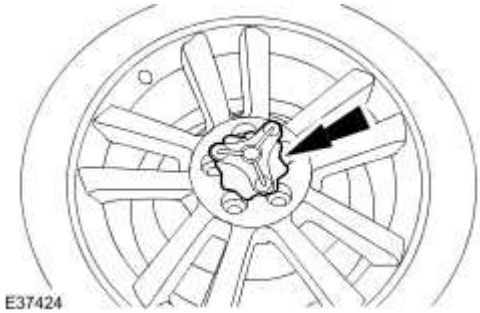

www.JagDocs.com

5 . Remove the reservoir insulator.

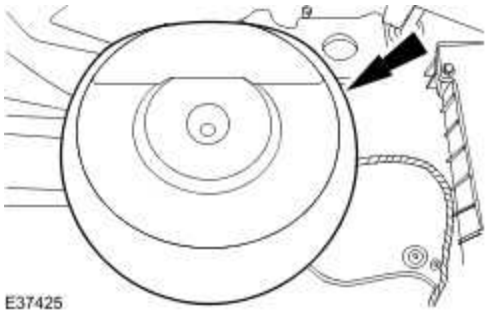

6 . Disconnect the electrical connector.

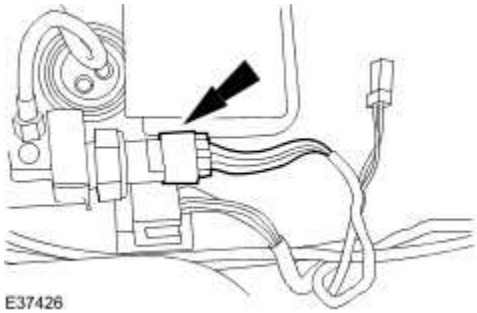

7 . Disconnect the electrical connector.

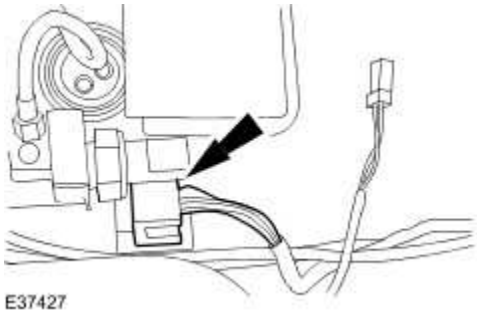

8 . **WARNING: Loosen the pipes no more than one full turn to allow the stored air pressure to vent for a minimum of three seconds.**

Remove the air pipes.

1) Detach the blue air pipe.

2) Detach the white air pipe.

3) Detach the yellow air pipe.

4) Detach the red air pipe.

5) Detach the brown air pipe.

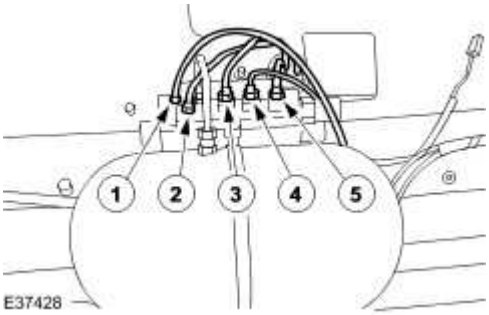

9 . Remove the reservoir.

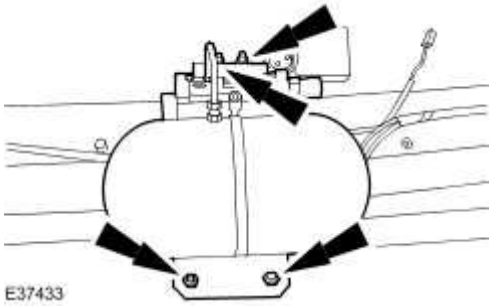

10 . **WARNING: Loosen the pipe no more than one full turn to allow the stored air pressure to vent for a minimum of one minute.**

Detach the pink air pipe.

www.JagDocs.com

11 . Remove the securing nuts.

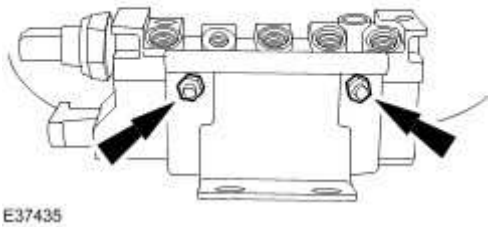

Installation

1 . To install, reverse the removal procedure.

Tighten to 5 Nm.

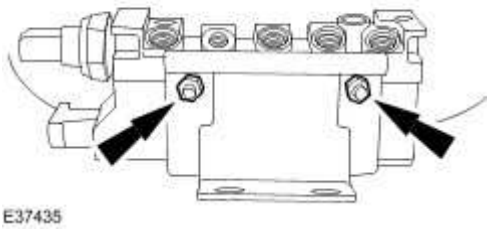

2 . Tighten to 5 Nm.

3 . Tighten to 7 Nm.

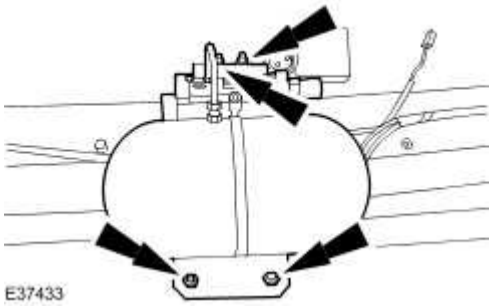

4 . Tighten to 5 Nm.

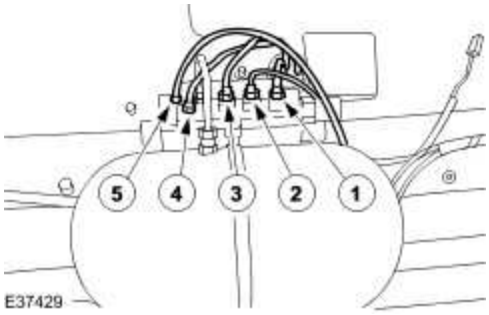

5 . Connect the battery ground cable. <<414-01>>

6 . Where required. Using the Jaguar approved diagnostic system pressurize the air suspension system.

7 . Start and run the engine for 2 minutes to make sure the vehicle has leveled.

www.JagDocs.com

Air Suspension Solenoid Valve Block

Removal

1 . Using the Jaguar approved diagnostic system depressurize the air suspension system.

2 . Disconnect the battery ground cable. <<414-01>>

3 . Remove the luggage compartment floor covering.

1) Remove the luggage compartment floor covering securing screws.

2) Remove the luggage compartment floor covering.

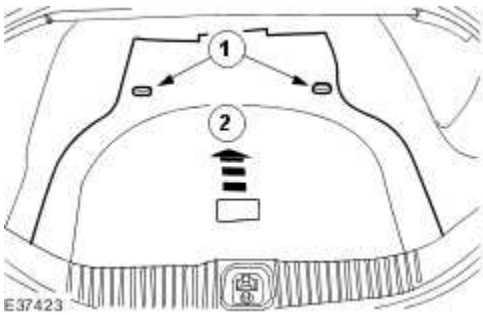

4 . **CAUTION: Before the spare wheel retainer is removed the lower locking nut should be loosened.**

Remove the spare wheel.

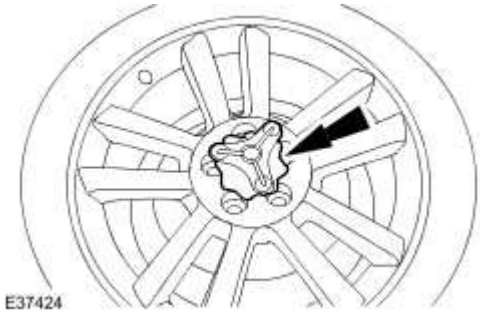

5 . Remove the reservoir insulator.

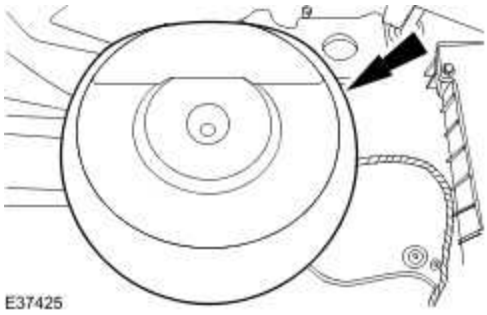

6 . Disconnect the electrical connector.

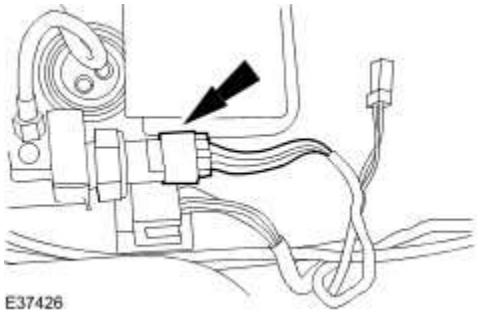

7 . Disconnect the electrical connector.

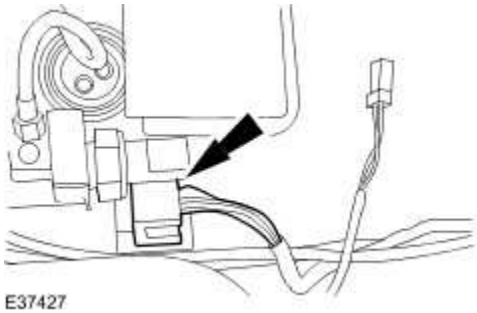

8 . **WARNING: Loosen the pipes no more than one full turn to allow the stored air pressure to vent for a minimum of three seconds.**

Remove the air pipes.

1) Detach the blue air pipe.

2) Detach the white air pipe.

www.JagDocs.com

3) Detach the yellow air pipe.

4) Detach the red air pipe.

5) Detach the brown air pipe.

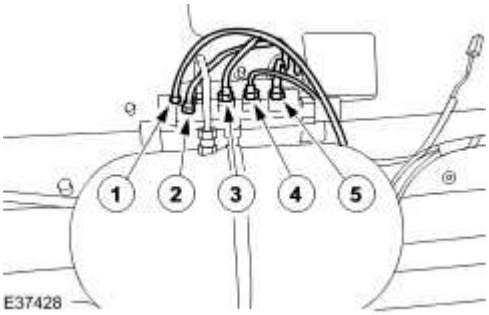

9. **WARNING: Loosen the pipe no more than one full turn to allow the stored air pressure to vent for a minimum of one minute.**

Detach the pink air pipe.

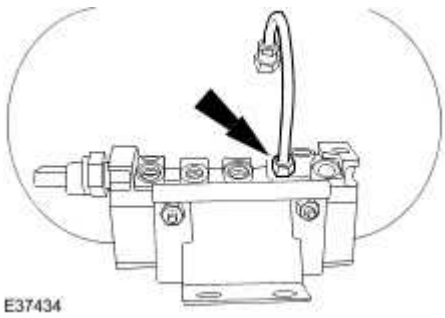

10 . Remove the solenoid valve block.

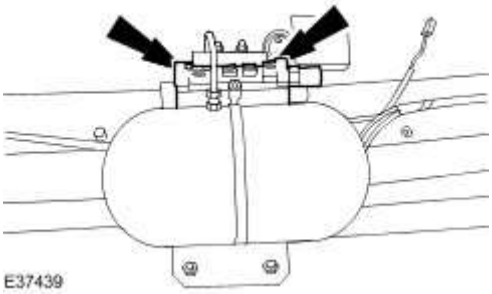

Installation

1 . To install, reverse the removal procedure.

Tighten to 5 Nm.

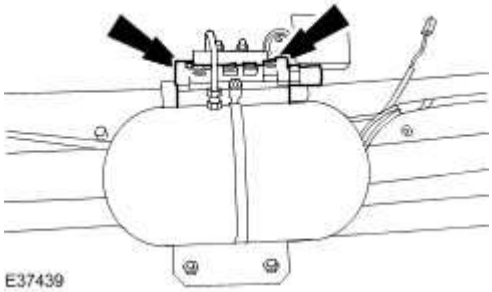

2 . Tighten to 5 Nm.

3 . Tighten to 5 Nm.

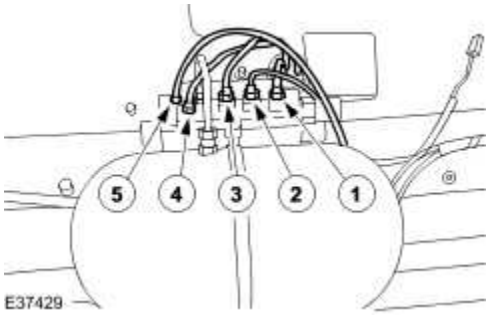

4 . Connect the battery ground cable. <<414-01>>

5 . Where required. Using the Jaguar approved diagnostic system pressurize the air suspension system.

6 . Start and run the engine for 2 minutes to make sure the vehicle has leveled.

www.JagDocs.com

Front Air Spring (60.32.08)

Removal

1 . Using the Jaguar approved diagnostic system depressurize the air suspension system.

2 . Remove the wheel and tire assembly.
For additional information, refer to Wheel and Tire (74.20.05)

3 . **NOTE:**

Left-hand shown, right-hand similar.

Disconnect the air spring electrical connector if fitted.

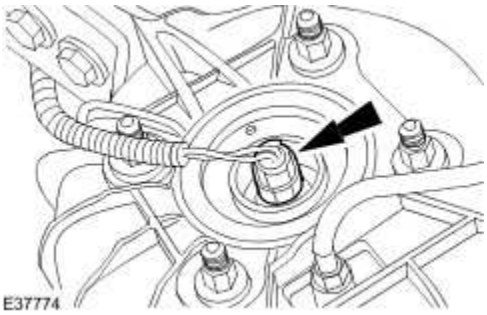

4 . **WARNING: Loosen the air pipe until the stored air pressure starts to vent. Wait for at least one minute for the air pressure to escape completely before fully removing the air pipe connector.**

NOTE:

Left-hand shown, right-hand similar.

Detach the air pipe.

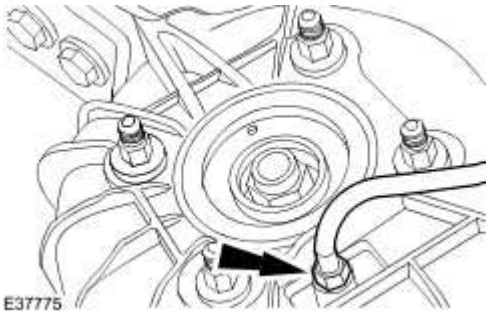

5 . **NOTE:**

Left-hand shown, right-hand similar.

Remove the air spring retaining nuts.

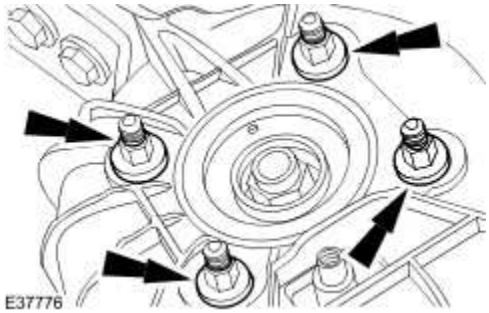

6 . Remove the stabilizer bar link.
For additional information, refer to Front Stabilizer Bar Link (60.10.02)

7 . Detach the front air suspension height sensor link rod.

www.JagDocs.com

8 . Detach the brake line from the inner fender securing clips

9 . **CAUTION: Prevent the air spring from rotating. Do not use extension bars when removing the air spring securing bolt. Failure to follow these instructions may result in damage to the air spring.**

NOTE:

Left-hand shown, right-hand similar.

Detach the air spring assembly.

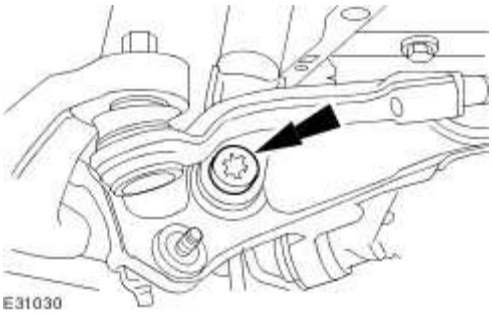

10 . **CAUTION: Prevent the upper ball joint ball pin hexagon from rotating. Failure to do so may result in damage to the upper ball joint boot.**

CAUTION: Make sure the wheel knuckle is supported. Failure to follow these instructions may result in damage to the vehicle.

NOTE:

Left-hand shown, right-hand similar.

Detach the upper arm.

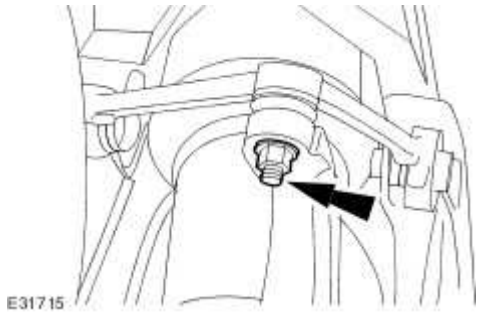

11 . Remove the air spring.

Installation

WARNING: Do not install an air spring if the pressure retaining valve has been removed or has become loose. Failure to follow this instruction may result in personal injury.

CAUTION: Do not install an air spring if the pressure retaining valve has been removed or has become loose. Failure to follow this instruction may result in damage to the vehicle.

NOTE:

New air springs have a shelf life of seven months from the date of manufacture. Do not install the air spring if the date marking exceeds this date.

1 . To install, reverse the removal procedure.

- Tighten to 90 Nm.

www.JagDocs.com

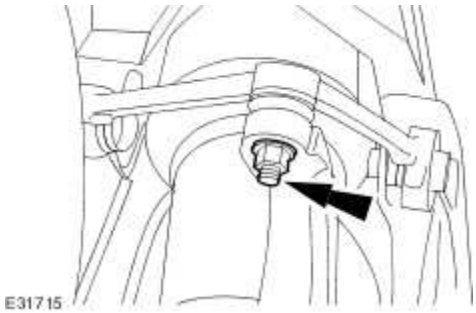

2. **CAUTION: Prevent the air spring from rotating. Do not use extension bars when tightening the air spring securing bolt. Failure to follow these instructions may result in damage to the air spring.**

NOTE:

Left-hand shown, right-hand similar.

Tighten to 175 Nm.

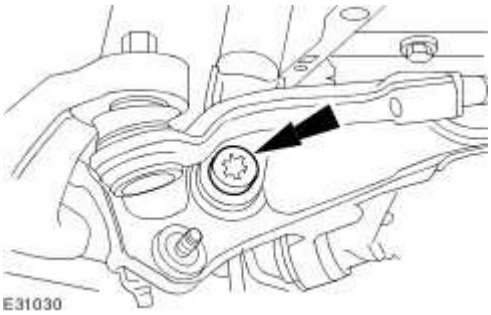

3 . **NOTE:**

Left-hand shown, right-hand similar.

Tighten to 25 Nm.

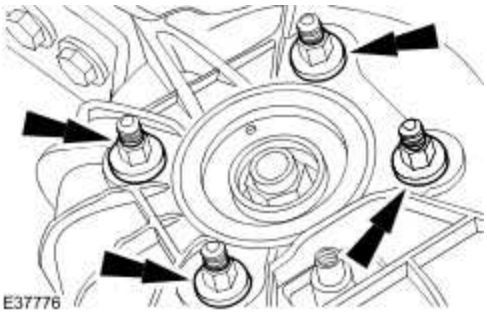

4. **CAUTION: Do not over tighten the air pipe union as it may result in the pressure retaining valve coming loose if removed again.**

NOTE:

Left-hand shown, right-hand similar.

Tighten to 5 Nm.

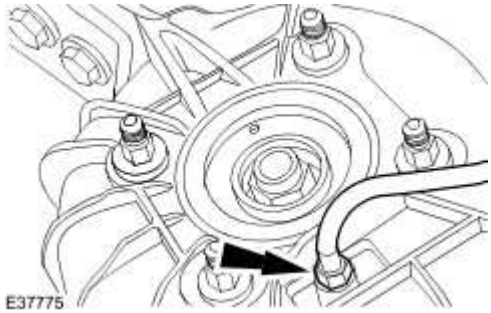

5. **NOTE:**

Make sure the air suspension system is repressurized using the Jaguar approved diagnostic system before lowering the vehicle to the ground.

Repressurize the air suspension system. For further information, refer to the Jaguar approved diagnostic system.

www.JagDocs.com

Front Vertical Accelerometer (86.56.53)

Removal

1 . Remove the wheel and tire assemble. <<204-04>>

2 . Remove the right-hand side front fender splash shield. <<501-02>>

3 . Disconnect the front vertical accelerometer electrical connector.

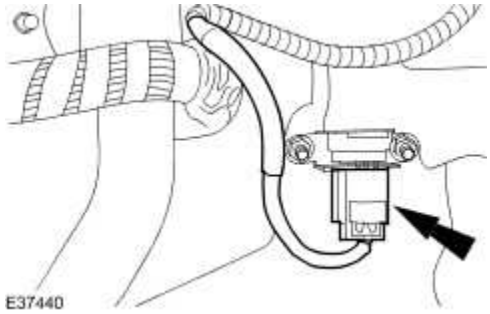

4 . **CAUTION: Make sure the vertical accelerometer is not dropped in transit as damage will be caused to internal components.**

Remove the front vertical accelerometer.

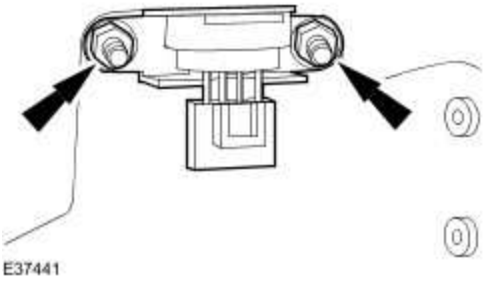

Installation

1 . To install, reverse the removal procedure.

Tighten to 4 Nm.

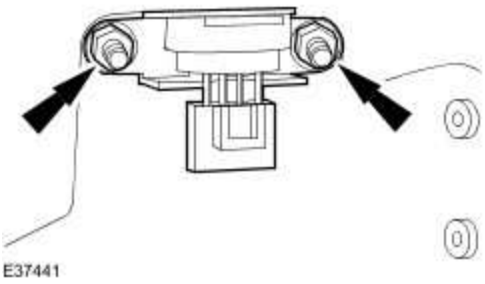

www.JagDocs.com

Rear Air Spring - VIN Range: G00442->G45703 (60.32.10)

Removal

1 . Using the Jaguar approved diagnostic system depressurize the air suspension.

2 . Disconnect the battery ground cable.
For additional information, refer to Battery Disconnect and Connect

3 . Remove the luggage compartment floor covering.

1) Remove the luggage compartment floor covering securing screws.

2) Remove the luggage compartment floor covering.

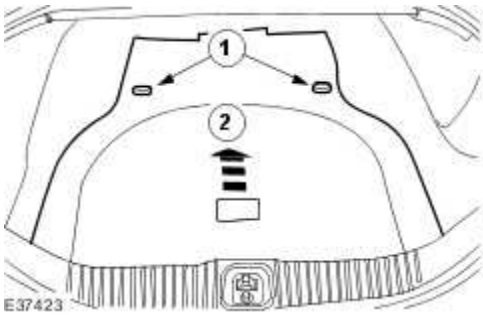

4 . **NOTE:**

Left-hand shown, right-hand similar.

Remove the luggage compartment side trim panel.

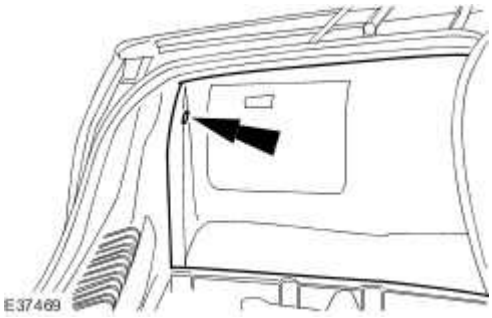

5 . **NOTE:**

Left-hand shown, right-hand similar.

Remove the air spring trim panel.

6 . **NOTE:**

Left-hand shown, right-hand similar.

Disconnect the air spring electrical connector.

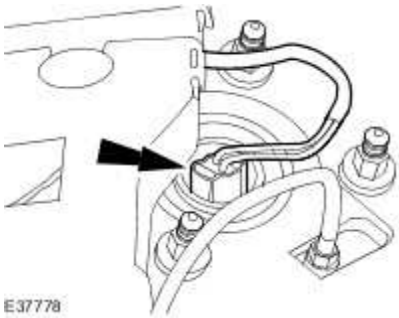

7 . **NOTE:**

Left-hand shown, right-hand similar.

Detach the air pipe.

www.JagDocs.com

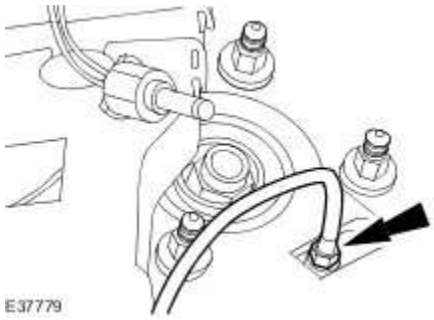

8 . **NOTE:**

Left-hand shown, right-hand similar.

Remove the air spring retaining nuts.

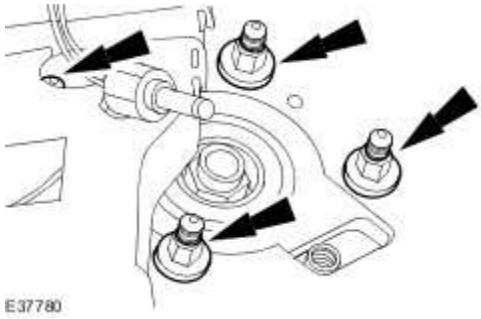

9 . Remove the rear wheel and tire assembly.
For additional information, refer to

10 . **NOTE:**

Left-hand shown, right-hand similar.

Detach the rear fender splash shield.

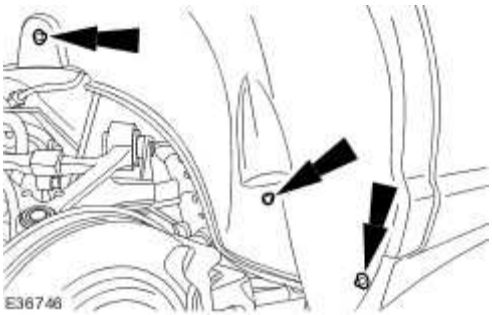

11 . **NOTE:**

Left-hand shown, right-hand similar.

Remove the rear fender splash shield.

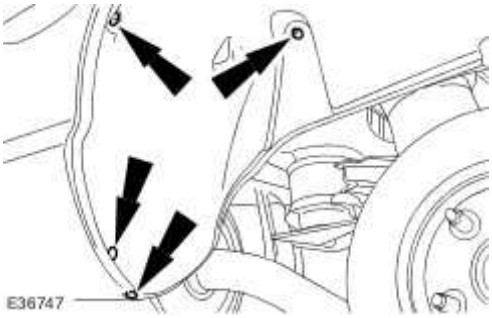

12 . **NOTE:**

Left-hand shown, right-hand similar.

Remove the air spring bolt.

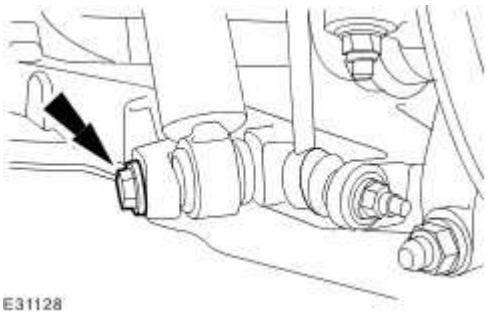

www.JagDocs.com

13 . **NOTE:**

Left-hand shown, right-hand similar.

Remove the air spring.

1) Displace the air spring lower mounting from the lower arm.

2) Displace the air spring from the upper mounting.

3) Position the air spring to the outside of the lower arm.

4) Remove the air spring.

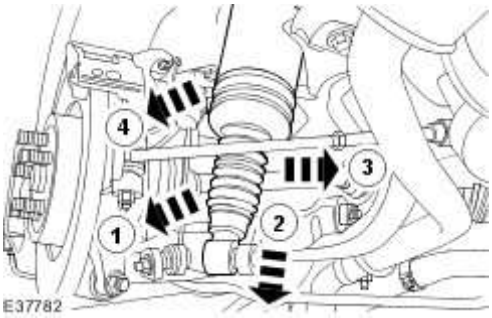

Installation

WARNING: Do not install an air spring if the pressure retaining valve has been removed or has become loose. Failure to follow this instruction may result in personal injury.

CAUTION: Do not install an air spring if the pressure retaining valve has been removed or has become loose. Failure to follow this instruction may result in damage to the vehicle.

NOTE:

New air springs have a shelf life of seven months from the date of manufacture. Do not install the air spring if the date marking exceeds this date.

1 . **NOTE:**

Left-hand shown, right-hand similar.

Install the air spring.

1) Install the air spring.

2) Position the air spring to the front of the lower arm.

3) Locate the air spring into the upper mount.

4) Locate the lower air spring mounting into the lower arm.

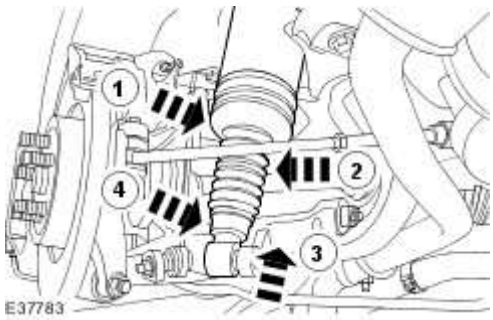

2 . **NOTE:**

Left-hand shown, right-hand similar.

Install the air spring bolt.

Tighten to 133 Nm.

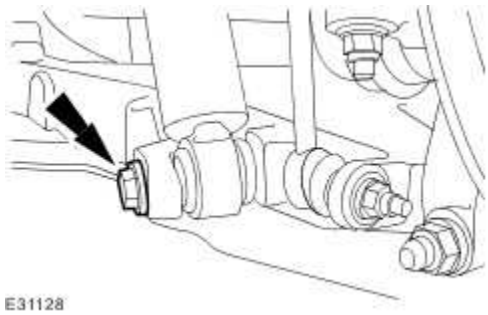

www.JagDocs.com

3 . **NOTE:**

Left-hand shown, right-hand similar.

Attach the rear fender splash shield.

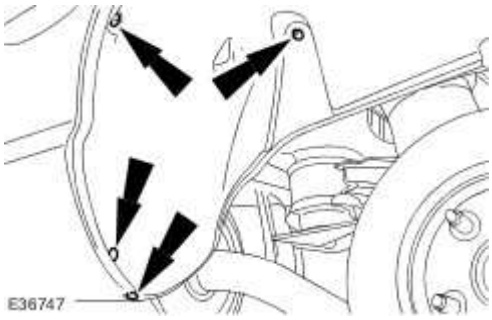

4 . **NOTE:**

Left-hand shown, right-hand similar.

Install the rear fender splash shield.

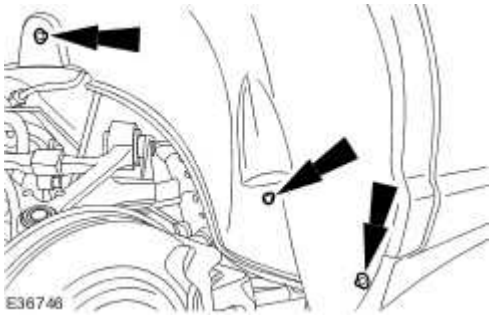

5 . **NOTE:**

Left-hand shown, right-hand similar.

Install the rear air spring retaining nuts.

- Tighten to 25 Nm.

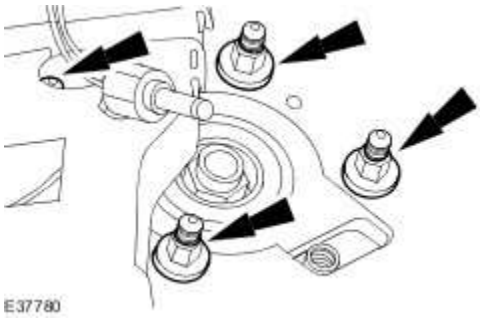

6 . **NOTE:**

Left-hand shown, right-hand similar.

Attach the air pipe.

- Tighten to 5 Nm.

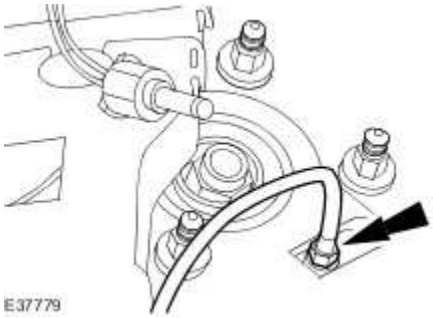

7 . **NOTE:**

Left-hand shown, right-hand similar.

Connect the air spring electrical connector.

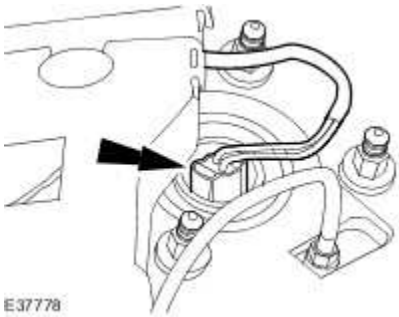

www.JagDocs.com

8 . **NOTE:**

Left-hand shown, right-hand similar.

Install the air spring trim panel.

9 . **NOTE:**

Left-hand shown, right-hand similar.

Install the luggage compartment side trim panel.

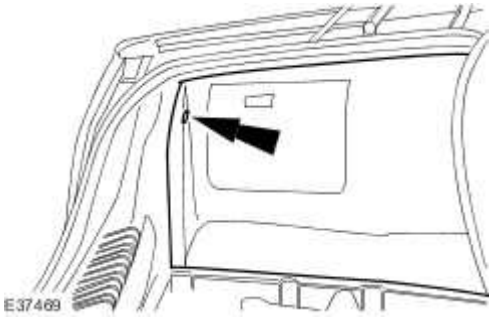

10 . Install the luggage compartment floor covering.

1) Install the luggage compartment floor covering.

2) Install the luggage compartment floor covering securing screws.

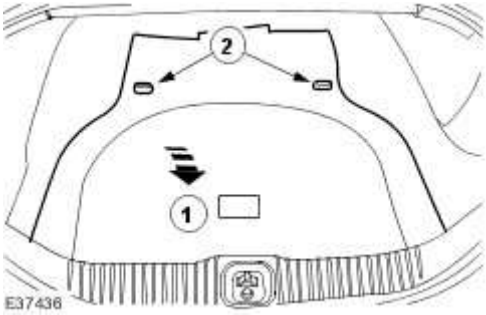

11 . Connect the battery ground cable.
For additional information, refer to Battery Connect (86.15.15)

12 **NOTE:**
.

Make sure that the air suspension system is repressurized using the Jaguar approved diagnostic system before lowering the vehicle to the ground.

Repressurize the air suspension system. For further information, refer to the Jaguar approved diagnostic system.

13 . Install the rear wheel and tire assembly.
For additional information, refer to

www.JagDocs.com

Rear Air Spring - VIN Range: G45704->G99999 (60.32.10)

Removal

1 . Using the Jaguar approved diagnostic system depressurize the air suspension system.

2 . Disconnect the battery ground cable.
For additional information, refer to Battery Disconnect and Connect

3 . Remove the luggage compartment floor covering.

1) Remove the luggage compartment floor covering securing screws.

2) Remove the luggage compartment floor covering.

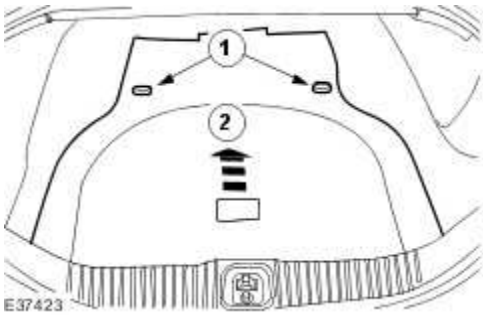

4 . **NOTE:**

Left-hand shown, right-hand similar.

Remove the luggage compartment side trim panel.

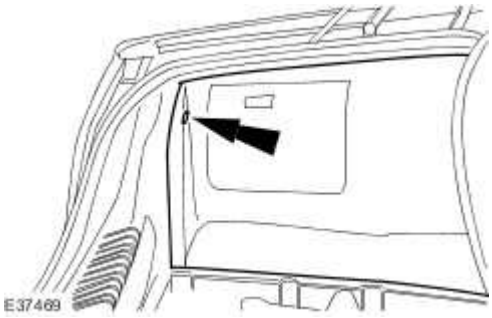

5 . **NOTE:**

Left-hand shown, right-hand similar.

Remove the air spring trim panel.

6 . **NOTE:**

Left-hand shown, right-hand similar.

Disconnect the air spring electrical connector.

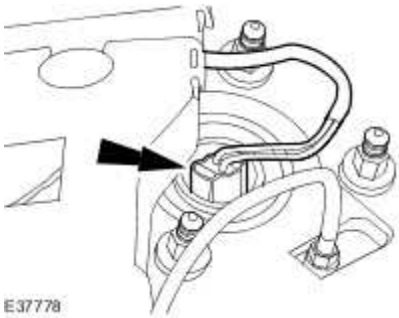

7 . **NOTE:**

Left-hand shown, right-hand similar.

Detach the air pipe.

www.JagDocs.com

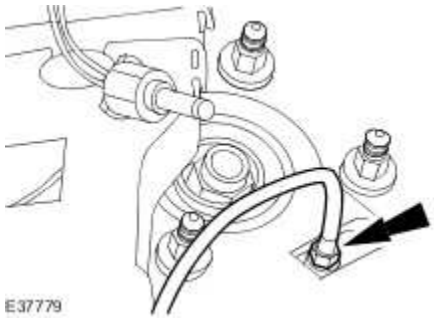

8 . **NOTE:**

Left-hand shown, right-hand similar.

Remove the air spring retaining nuts.

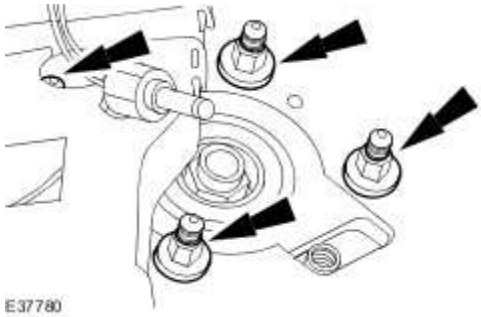

9 . Remove the rear wheel and tire assembly.
For additional information, refer to

10 . **NOTE:**

Left hand shown, right-hand similar.

Reposition the stabilizer bar link cover.

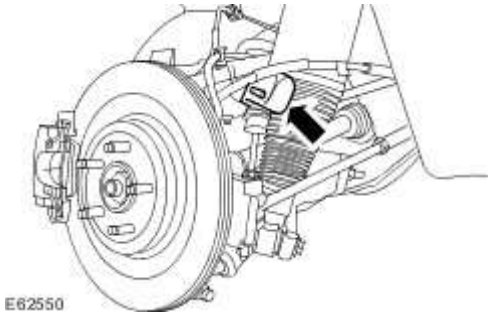

11 . **NOTE:**

Left hand shown, right-hand similar.

Detach the stabilizer bar link.

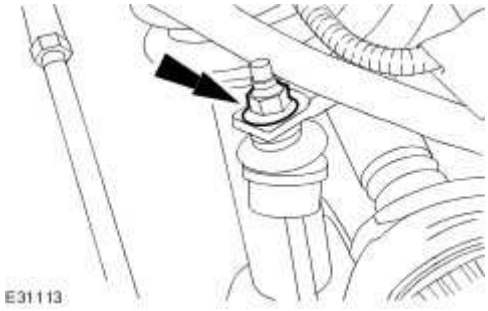

12 . **NOTE:**

Left hand shown, right-hand similar.

Remove the air spring retaining bolt.

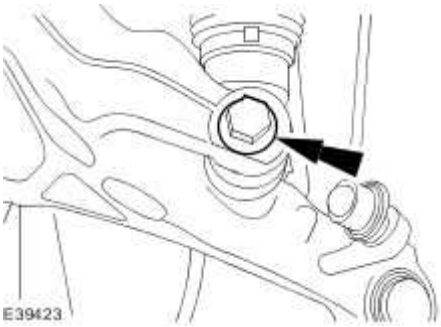

13 . **NOTE:**

Left hand shown, right-hand similar.

Remove the air spring.

www.JagDocs.com

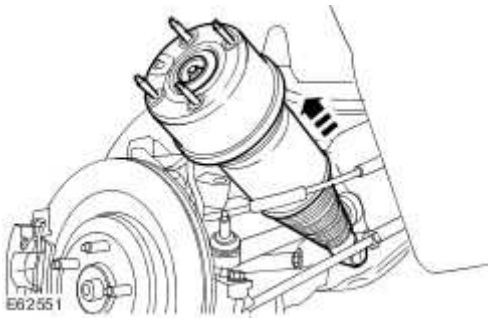

Installation

WARNING: Do not install an air spring if the pressure retaining valve has been removed or has become loose. Failure to follow this instruction may result in personal injury.

CAUTION: Do not install an air spring if the pressure retaining valve has been removed or has become loose. Failure to follow this instruction may result in damage to the vehicle.

NOTE:

New air springs have a shelf life of seven months from the date of manufacture. Do not install the air spring if the date marking exceeds this date.

1 . **NOTE:**

Left hand shown, right-hand similar.

Install the air spring.

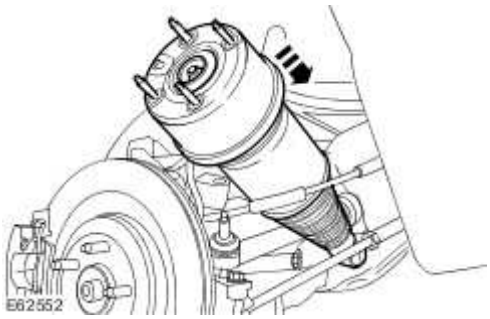

2 . **NOTE:**

Left hand shown, right-hand similar.

Tighten to 133 Nm.

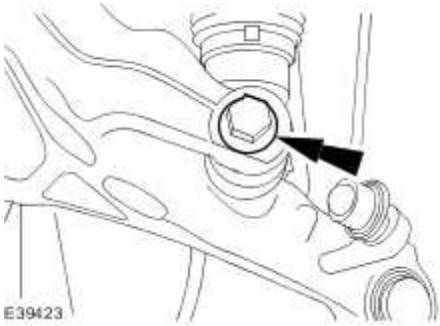

3 . **NOTE:**

Left hand shown, right-hand similar.

Tighten to 48 Nm.

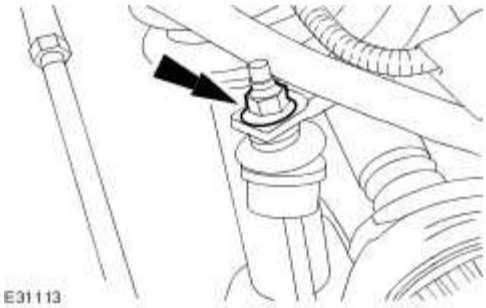

4 . **NOTE:**

Left hand shown, right-hand similar.

Reposition the stabilizer bar link cover.

www.JagDocs.com

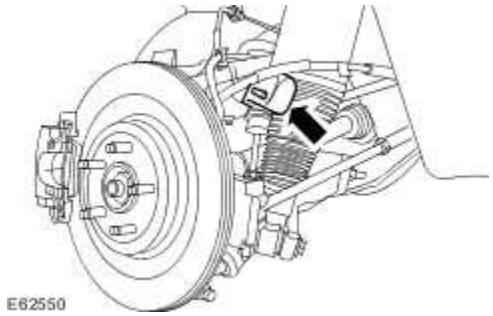

5 . **NOTE:**

Left-hand shown, right-hand similar.

Tighten to 25 Nm..

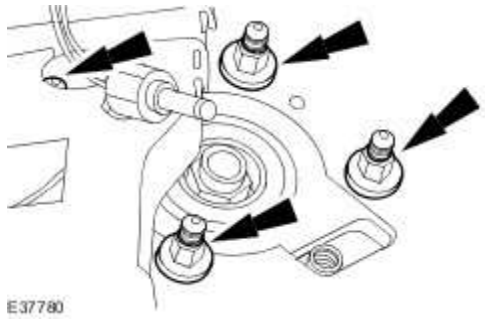

6 . **NOTE:**

Left-hand shown, right-hand similar.

Tighten to 5 Nm.

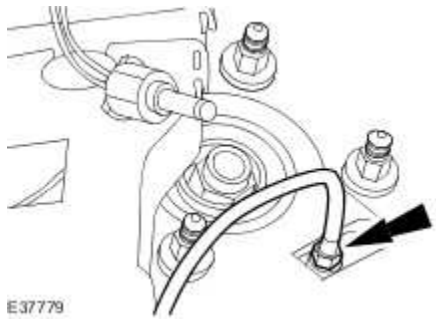

7 . **NOTE:**

Left-hand shown, right-hand similar.

Connect the air spring electrical connector.

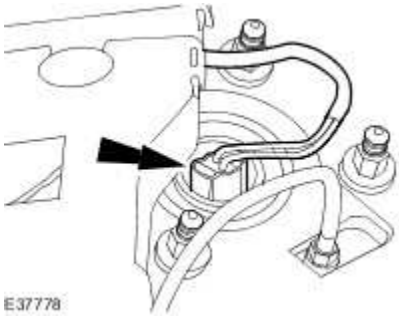

8 . **NOTE:**

Left-hand shown, right-hand similar.

Install the air spring trim panel.

9 . **NOTE:**

Left-hand shown, right-hand similar.

Install the luggage compartment side trim panel.

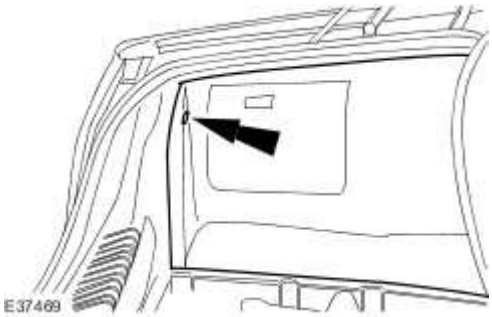

www.JagDocs.com

10 . Install the luggage compartment floor covering.

1) Install the luggage compartment floor covering.

2) Install the luggage compartment floor covering securing screws.

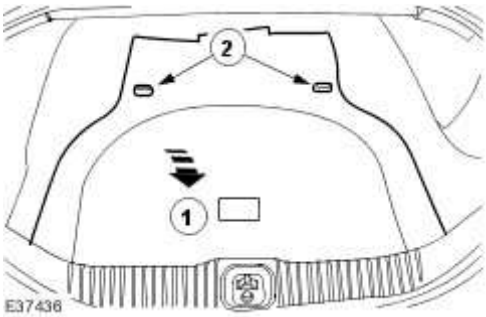

11 . Connect the battery ground cable.
For additional information, refer to Battery Connect (86.15.15)

12 **NOTE:**
.

Make sure that the air suspension system is repressurized using the Jaguar approved diagnostic system before lowering the vehicle to the ground.

Repressurize the air suspension system. For further information, refer to the Jaguar approved diagnostic system.

13 . Install the rear wheel and tire assembly.
For additional information, refer to

Rear Air Spring Lower Bushing (64.32.03)

Special Service Tools

Bushing Remover / installer
205-335

Bushing remover
204-533

Bushing installer
204-534

Removal

1 . Remove the rear air spring.
For additional information, refer to Rear Air Spring - VIN Range: G00442->G45703 (60.32.10)
For additional information, refer to Rear Air Spring - VIN Range: G45704->G99999 (60.32.10)

2 . **NOTE:**

With assistance make sure the tool is aligned.

Using the special tool, support the air spring.

www.JagDocs.com

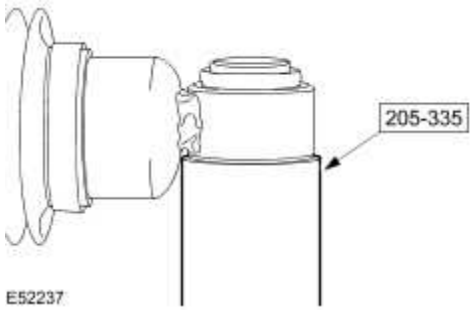

3 . **NOTE:**

With assistance make sure the tool is aligned.

Position and align the special tool to the air spring bush.

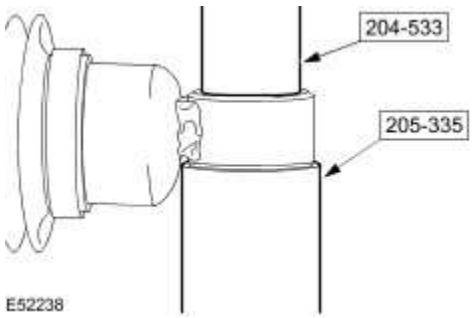

4 . **NOTE:**

With assistance make sure the tool is aligned.

Using special tools slowly push the bush from the air spring.

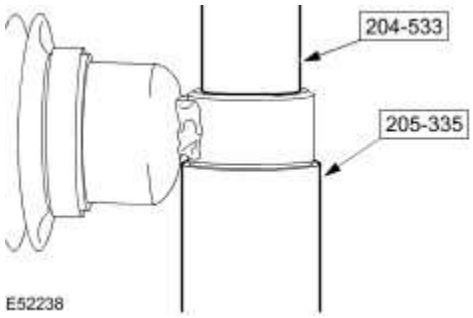

Installation

1 . **NOTE:**

Make sure the bush is clean and free from oil or grease.

NOTE:

Use a suitable lubricant to allow the bush to locate into the special tool.

Locate the new bush in the special tool.

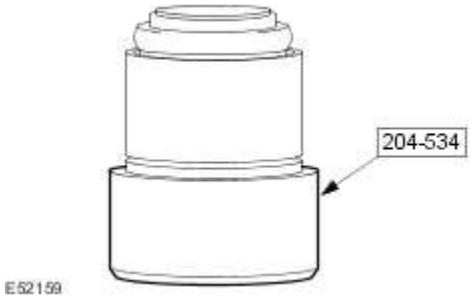

2 **NOTE:**
.

Make sure the damper is clean and free from grease or oil and is not damaged prior to pushing in the new bush.

NOTE:

Make sure the air spring and bush are placed in the correct orientation.

Using the special tools, align the bush to the air spring.

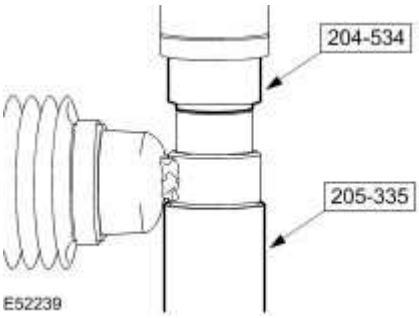

www.JagDocs.com

3 . **NOTE:**

Make sure correct alignment is maintained.

Slowly push the bush into the air spring until the tool reaches the stop.

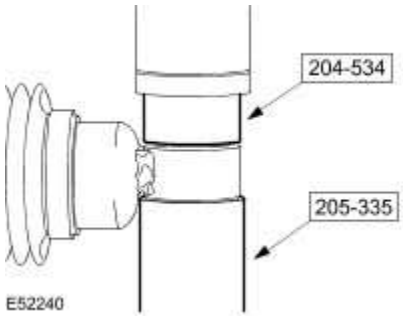

4 . Install the rear air spring.
For additional information, refer to Rear Air Spring - VIN Range: G00442->G45703 (60.32.10)
For additional information, refer to Rear Air Spring - VIN Range: G45704->G99999 (60.32.10)

Rear Vertical Accelerometer (86.56.55)

Removal

1 . Remove the luggage compartment floor covering.

1) Remove the luggage compartment floor covering securing screws.

2) Remove the luggage compartment floor covering.

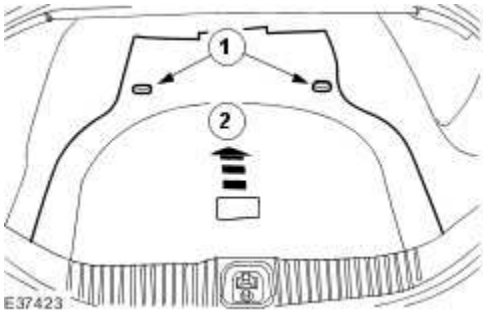

2 . Remove the luggage compartment side trim panel.

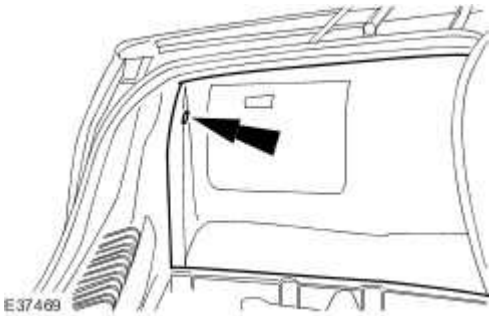

3 . Disconnect the rear vertical accelerometer electrical connector.

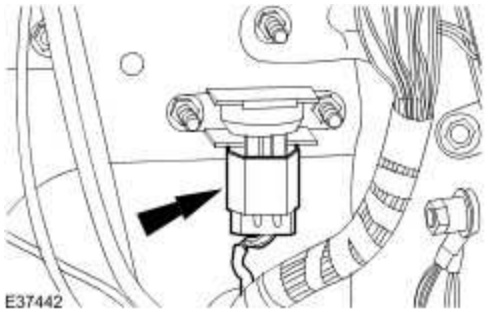

www.JagDocs.com

4 . **CAUTION: Make sure the vertical accelerometer is not dropped in transit as damage will be caused to internal components.**

Remove the rear vertical accelerometer.

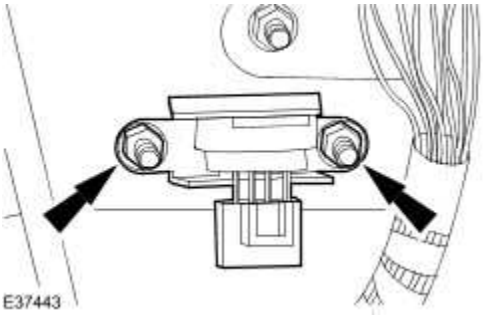

Installation

1 . To install, reverse the removal procedure.

Tighten to 4 Nm.

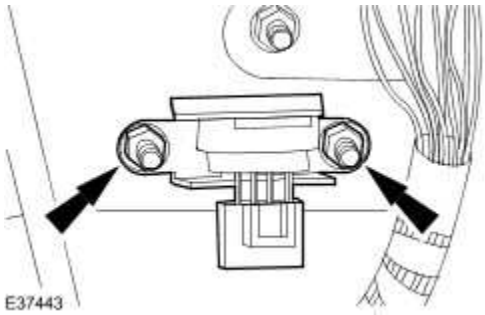

Suspension Height Sensor (60.32.05)

Removal

NOTE:

Vehicles built before December 2003 have four suspension height sensors which are mounted on the front and rear subframe assemblies, two front and two rear. Vehicles built after December 2003 have only three (the right front sensor being deleted), although the functionality of the system remains the same. There may be some early vehicles which will have four sensors fitted, but which have the three-sensor module, making the right front sensor redundant. To confirm the level of equipment, read the module part number from the special applications menu in configuration on the Jaguar approved diagnostic system. Part numbers before 'BJ' are four sensor, while 'BJ' and after are three sensor. If the Jaguar approved diagnostic system is not available, remove the rear seat and sound deadening and read the part number from the module.

NOTE:

The later module can be fitted in place of the four sensor module, but the right front sensor must be left in place, even though the system will not use it.

1 . Remove the wheel and tire assembles.
For additional information, refer to Wheel and Tire (74.20.05)

2 . **CAUTION: Do not spray solvents or cleaning agents inside the height sensor. Failure to follow this instruction may result in damage to the vehicle.**

CAUTION: Make sure the height sensor is thoroughly cleaned prior to disassembly. For additional information, refer to General Service Information

NOTE:

Front shown, rear similar.

Disconnect the front air suspension height sensor electrical connector.

www.JagDocs.com

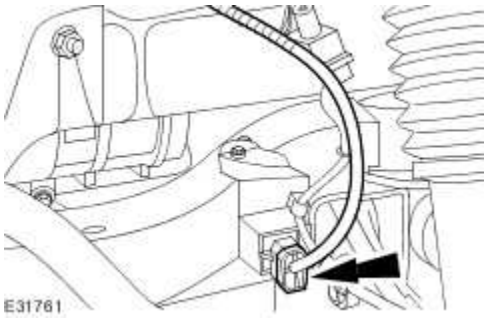

3 . **NOTE:**

This step is for front air suspension height sensors only.

Detach the wheel speed sensor harness.

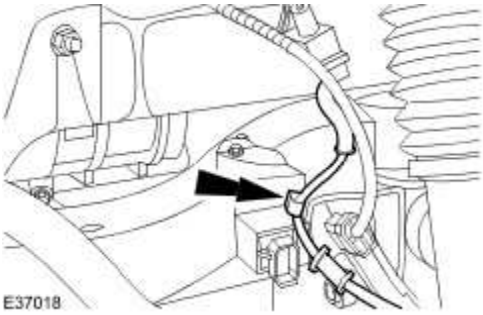

4 . **NOTE:**

Front shown, rear similar.

Detach the front air suspension height sensor link rod.

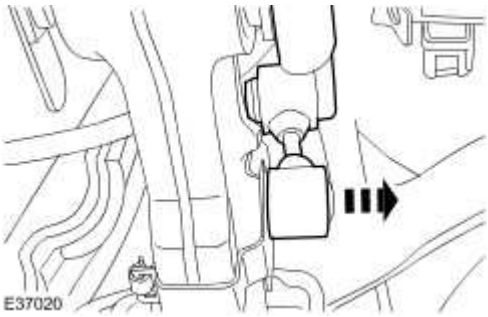

5 . **NOTE:**

Front shown, rear similar.

Remove the front air suspension height sensor.

- Remove the front air suspension height sensor retaining bolts.

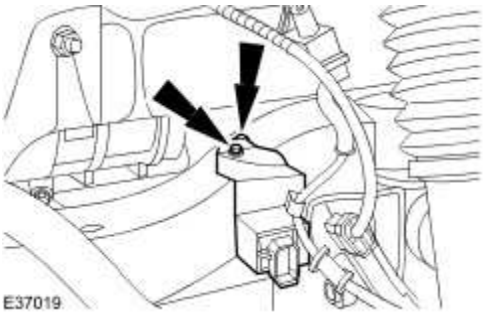

Installation

1 . To install, reverse the removal procedure.

- Tighten to 20 Nm.

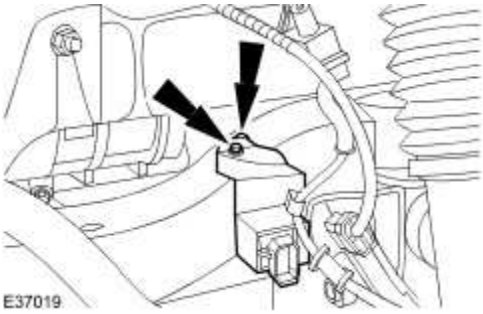

2 **NOTE:**

.

To aid installation of the electrical connector, apply a small amount of silicone based oil or grease to the connector seal.

NOTE:

Make sure the electrical connector latch is fully secured to the sensor.

www.JagDocs.com

Connect the front air suspension height sensor electrical connector.

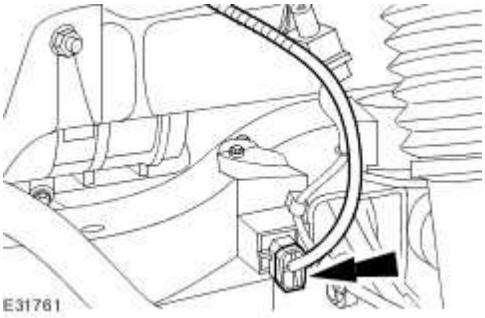

3 . Re-calibrate the suspension height sensor using the Jaguar approved diagnostic system. For additional information, refer to Ride Height Adjustments

205 : Driveline

205-00 : Driveline System – General Information

General procedures

Driveline Angle Inspection

Special Service Tools

Alignment Tool
205-535

1. Raise and support the vehicle. <<100-02>>

2. Remove the exhaust system. <<309-00>>

3. Remove the support bracket.

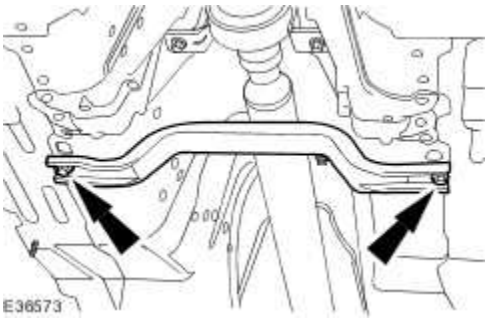

4. Remove the driveshaft heat shield.

www.JagDocs.com

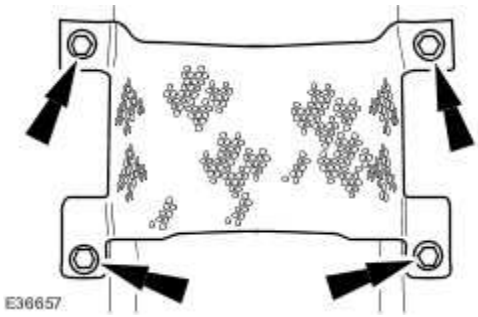

5. Loosen the driveshaft centre bearing retaining bolts two complete turns.

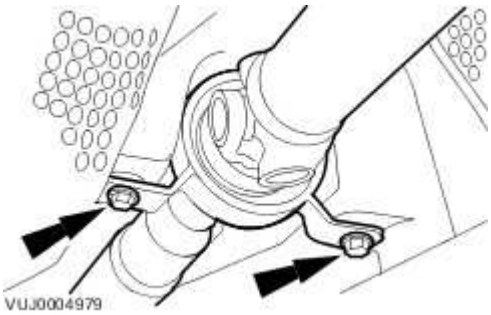

6.

CAUTION: Make sure the driveshaft centre bearing is correctly aligned to the driveshaft. Failure to follow these instructions may result in damage to the vehicle.

Using the special tool, align the driveshaft centre bearing.

- Tighten to 40 Nm.

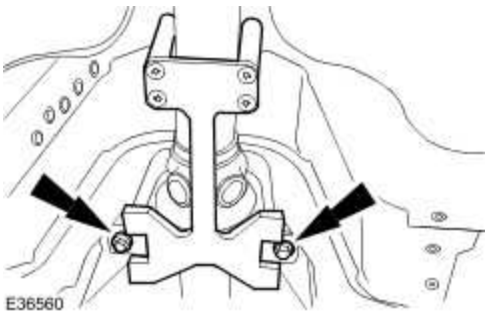

7. Install the driveshaft heat shield retaining bolts.

- Tighten to 7 Nm.

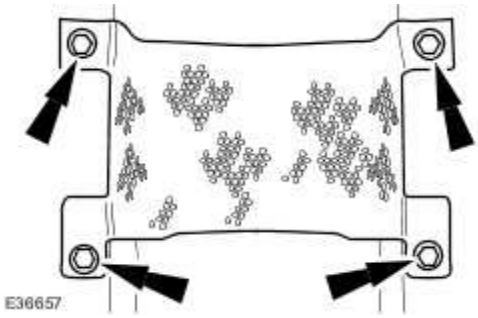

8. Install the support bracket.

- Tighten to 9 Nm.

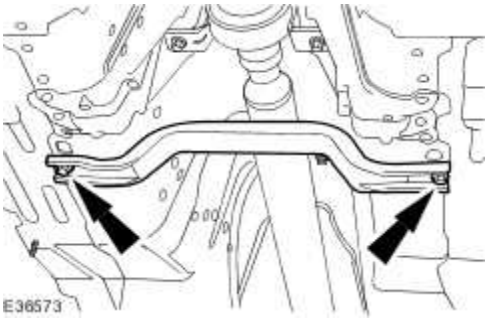

9. Install the exhaust system. <<309-00>>

www.JagDocs.com

Driveline System

The driveline transfers engine torque to the drive wheels. Power is transmitted through the transmission to the driveshaft and then to the rear drive axle which is connected to the rear drive halfshaft.

For additional information, refer to Halfshaft (205-05 Rear Drive Halfshafts)

For additional information, refer to Driveshaft (205-01 Driveshaft)

For additional information, refer to Axle Assembly (205-02 Rear Drive Axle/Differential)

The engine angle is built into the engine mounts. If the engine angle is out of specification, the engine mounts must be inspected for damage.

Driveline Vibration

Driveline vibration exhibits a higher frequency and lower amplitude than high-speed shake. Driveline vibration is directly related to the speed of the vehicle and is usually noticed at various speed ranges. Driveline vibration can be felt as a tremor in the floorpan or is heard as a rumble, hum, or boom. Driveline vibration can exist in all drive modes, but may exhibit different symptoms depending upon whether the vehicle is accelerating, decelerating, cruising, or coasting. Check the driveline angles if the vibration is particularly noticeable during acceleration or deceleration, especially at lower speeds. Check that the centre bearing washers between the body and bearing housing are 3mm minimum and 8mm maximum thickness.

In order to diagnose vibrations in the driveshaft, refer to the Jaguar approved diagnostic system for analysis/rectification.

Driveline Angle

Driveline angularity is the angular relationship between the engine crankshaft, the driveshaft, and the rear drive axle pinion. Factors determining driveline angularity include ride height, rear springs and engine mounts.

An incorrect driveline (pinion) angle can often be detected by the driving condition in which the vibration occurs.

- A vibration during coasting from 72 to 56 km/h (45 to 35 mph) is often caused by a high pinion angle.
- A vibration during acceleration from 56 to 72 km/h (35 to 45 mph) may indicate a low pinion angle.

When these conditions exist, check the driveline angles.

If the tires and driveline angle are not the cause, carry out the Noise, Vibration and Harshness (NVH) tests to determine whether the concern is caused by a condition in the driveline. For additional information, refer to Noise, Vibration and Harshness (NVH) (100-04 Noise, Vibration and Harshness)

Rear Drive Axle Identification Tag

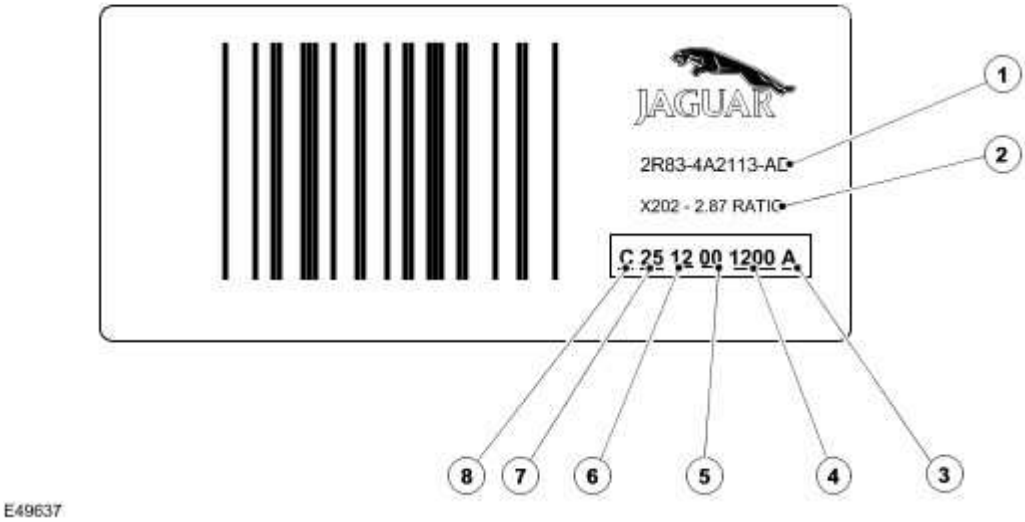

Item	Description
1	Part Number
2	Ratio and Vehicle Line
3	Rear Drive Axle Ratio • A and E = 2.87 Ratio • B and F = 3.07 Ratio • C and G = 3.31 Ratio • D = 2.69 Ratio
4	Time Built

www.JagDocs.com

5	Year Built
6	Month Built
7	Day Built
8	Plant Built • C = Castle Bromwich • B = Browns Lane • G = German Specification

Engine capacity	Transmission	Axle Ratio
4.2L V8 Supercharger	Automatic	2:87
4.2L V8	Automatic	2:87
3.5 V8	Automatic	3.07
3.0 V6	Automatic	3.31

The plant code denotes a particular rear drive axle design and specific ratio. In addition, the plant code will not change as long as that particular rear drive axle never undergoes an external design change. If, however, an internal design change takes place during the production life of the rear drive axle and that internal change affects parts interchangeability, a dash and numerical suffix is added to the plant code. This means that as an assembly both rear drive axles are interchangeable; however, internally they are different. Therefore, each requires different internal parts at the time of repair.

Driveline System

Inspection and Verification

CAUTION: Only serviceable items can be renewed or adjusted. Failure to follow this instruction may result in the warranty of the component being rejected.

Certain driveline trouble symptoms are also common to the engine, transmission, wheel bearings, tires, and other parts of the vehicle. For this reason, make sure that the cause of the trouble is in the driveline before adjusting, repairing, or installing any new components. For additional information, Noise, Vibration and Harshness (NVH)

1 . Verify the customer concern by carrying out a road test of the vehicle.

2 . Visually inspect for obvious signs of mechanical damage.

3 . If an obvious cause for an observed or reported concern is found, correct the cause (if possible) before proceeding to the next step.

4 . If the concern is not visually evident, verify the symptom and refer to the Symptom Chart.

Rear Drive Axle Noise

Gear Howl and Whine

Howling or whining of the ring gear and pinion is due to an incorrect gear pattern, gear damage or incorrect bearing preload.

Bearing Whine

Bearing whine is a high-pitched sound similar to a whistle. It is usually caused by worn/damaged pinion bearings, which are operating at driveshaft speed. Bearing noise occurs at all driving speeds. This distinguishes it from gear whine which is speed dependent.

www.JagDocs.com

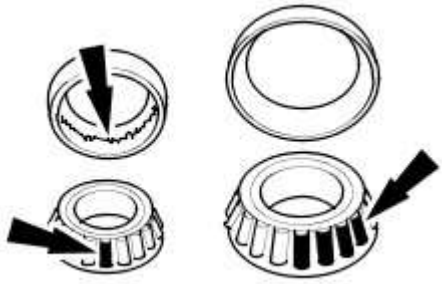

As noted, pinion bearings make a high-pitched, whistling noise, usually at all speeds. If however there is only one pinion bearing that is worn/damaged, the noise may vary in different driving phases.

A wheel bearing noise can be mistaken for a pinion bearing noise.

Chuckle

Chuckle that occurs on the coast driving phase is usually caused by excessive clearance between the differential gear hub and the differential case bore.

Damage to a gear tooth on the coast side can cause a noise identical to a chuckle. A very small tooth nick or ridge on the edge of a tooth can cause the noise.

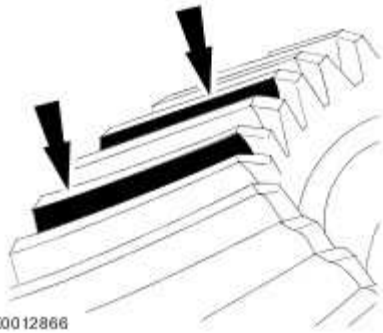

Knock

Knock, which can occur on all driving phases, has several causes including damaged teeth or gearset.

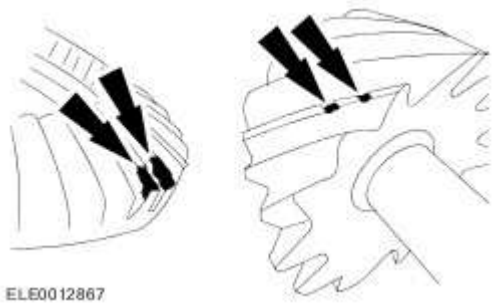

A gear tooth damaged on the drive side is a common cause of the knock.

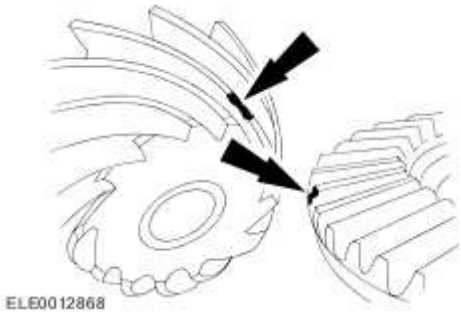

Clunk

Clunk is a metallic noise heard when the automatic transmission is engaged in REVERSE or DRIVE. The noise may also occur when the throttle is applied or released. Clunk is caused by transmission calibration, backlash in the driveline or loose suspension components and is felt or heard in the vicinity of the rear drive axle.

Bearing Rumble

Bearing rumble sounds like marbles being tumbled. This condition is usually caused by a worn/damaged wheel bearing. The lower pitch is because the wheel bearing turns at only about one-third of the driveshaft speed. Wheel bearing noise also may be high-pitched, similar to gear noise, but will be evident in all four driving modes.

Symptom Chart

Noise is at constant tone over a narrow vehicle speed range. Usually heard on light drive and coast conditions.

Possible Source(s):

- Rear drive axle.

Action(s) to take:

- For additional information, GO to Pinpoint Test G215971p1.
  .

www.JagDocs.com

Noise is the same on drive or coast

Possible Source(s):

- Road.
- Wheel bearing.

Action(s) to take:

- Normal conditions.
- CHECK and INSTALL a new wheel bearing as necessary. For additional information, Rear Wheel Bearing (64.15.14)

Possible Source(s):

- Worn or damaged driveshaft joint.

Action(s) to take:

- INSTALL new components as necessary.

Possible Source(s):

- Driveshaft center bearing.

Action(s) to take:

- INSTALL new components as necessary.

Noise is produced with the vehicle standing and driving

Possible Source(s):

- Engine.

Action(s) to take:

- For additional information, Engine - 3.0L/3.5L/4.2L

Possible Source(s):

- Transmission.

Action(s) to take:

- For additional information,

Noise is more pronounced while turning

Possible Source(s):

- Differential side gears and pinion gears.

Action(s) to take:

- For additional information,
  Rear Drive Axle and Differential

Loud clunk in the driveline when shifting from reverse to forward

Possible Source(s):

- Transmission out of calibration.
- Engine idle speed set too high.
- Engine mount.

Action(s) to take:

- Using the Jaguar approved diagnostic system, calibrate the transmission control module (TCM).
- Check and adjust the idle speed as necessary. For additional information,
  Electronic Engine Controls - VIN Range: G00442->G45703 or
  Electronic Engine Controls - VIN Range: G00442->G45703
- INSPECT and INSTALL new engine mounts as necessary.

Possible Source(s):

- Transmission Mount.

Action(s) to take:

- INSPECT and INSTALL new transmission mounts as necessary.

Possible Source(s):

www.JagDocs.com

- Transmission.

Action(s) to take:

- For additional information,

Possible Source(s):

- Suspension components.

Action(s) to take:

- INSPECT and INSTALL new suspension components as necessary.

Possible Source(s):

- Backlash in the driveline.

Action(s) to take:

- INSPECT and INSTALL new suspension components as necessary.

Clicking, popping, or grinding noises

Possible Source(s):

- Inadequate or contaminated lubrication in the rear drive halfshaft constant velocity (CV) joint.
- Another component contacting the rear drive halfshaft.
- Wheel bearings, brakes or suspension components.

Action(s) to take:

- INSPECT, CLEAN and LUBRICATE with new grease as necessary.
- INSPECT and REPAIR as necessary.
- INSPECT and INSTALL new components as necessary.

Vibration at highway speeds

Possible Source(s):

- Out-of-balance wheels or tires.

Action(s) to take:

- INSTALL new tire(s) as necessary.
  Wheel and Tire (74.20.05)

Possible Source(s):

- Driveline out of balance/misalignment.

Action(s) to take:

- For additional information, refer to the Jaguar approved diagnostic system.

Possible Source(s):

- Propshaft centre bearing touching body mounting point.

Action(s) to take:

- Check for correct spacer washer thickness. INSPECT and INSTALL new washers as necessary.

Shudder, Vibration During Acceleration

Possible Source(s):

- Powertrain/driveline misalignment.

Action(s) to take:

- CHECK for misalignment. INSTALL new components as necessary.

Possible Source(s):

- High constant velocity (CV) joint operating angles caused by incorrect ride height.

Action(s) to take:

- CHECK the ride height and VERIFY the correct spring rate. INSTALL new components as necessary.

Lubricant Leak

Possible Source(s):

www.JagDocs.com

- Vent.

Action(s) to take:

- Check oil level and correct as necessary.

Possible Source(s):

- Damaged seal.

Action(s) to take:

- INSTALL new components as necessary.

Possible Source(s):

- Rear drive axle filler plug.

Action(s) to take:

- INSTALL new components as necessary.

Possible Source(s):

- Rear drive axle rear cover joint.

Action(s) to take:

- INSTALL new components as necessary.

PINPOINT TEST G215971p1 : EXCESSIVE DRIVELINE NOISE

G215971t1 : CHECK NOISE FROM VEHICLE ON ROAD TEST

1. Road test vehicle to determine load and speed conditions when noise occurs. 2. Assess the noise with different gears selected.

- **Does the noise occur at the same vehicle speed?**

-> Yes
INSTALL a new final drive. TEST the system for normal operation.

-> No
REFER to Engine - 3.0L/3.5L/4.2L

Specifications

Torque Specifications

Description	Nm	lb-ft	lb-in
Centre bearing retaining bolts	48	36	-
Transmission flexible joint retaining bolts	108	80	-
Rear drive axle CV joint retaining bolts	73	54	-
Driveshaft heat shield retaining bolts	7	-	62

www.JagDocs.com

Driveshaft Runout and Balancing

1. For additional information, refer to the Jaguar Approved Diagnostic System.

Driveshaft

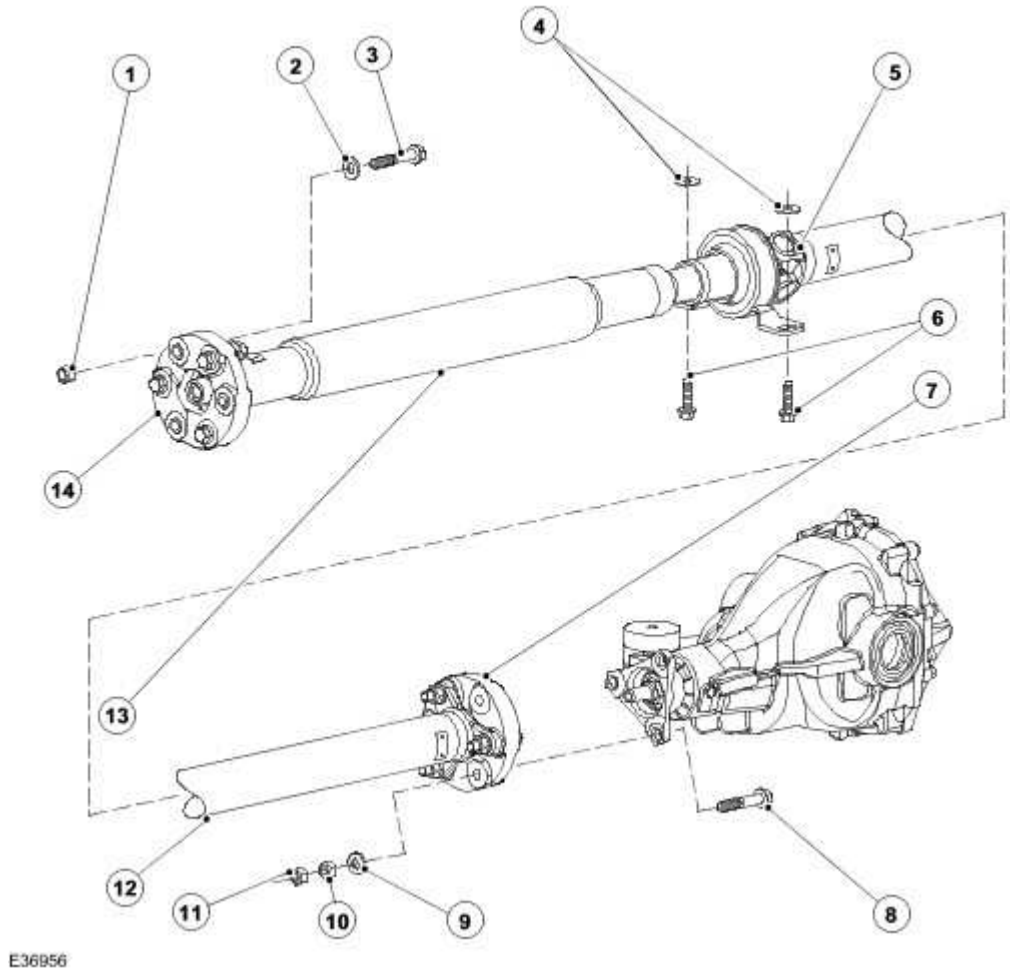

Item	Part Number	Description
1	—	Transmission flexible joint retaining nut
2	—	Transmission flexible joint washer
3	—	Transmission flexible joint retaining bolt
4	—	Centre bearing spacers
5	—	Universal joint

www.JagDocs.com

6	—	Centre bearing retaining bolts
7	—	Rear drive axle flexible joint
8	—	Rear drive axle flexible joint retaining bolt
9	—	Rear drive axle flexible joint washer
10	—	Rear drive axle flexible joint retaining nut
11	—	Rear drive axle flexible joint balance nut
12	—	Rear driveshaft tube
13	—	Collapsible front driveshaft tube
14	—	Transmission flexible joint

CAUTION: To preserve 'drive line' refinement, individual parts, other than fixings, MUST NOT be renewed. In the event of any balance or driveshaft component related concern, the complete assembly must be renewed. Under no circumstances may the flexible coupling be removed from the driveshaft (or its fixings be loosened). Do not drop or subject the driveshaft to damage.

NOTE:

All driveshaft assemblies are balanced. If undercoating the vehicle, protect the driveshaft, universal joints and the rear drive axle shafts to prevent over-spray of the undercoating material.

The driveshaft consists of the following:

- A two piece welded steel tube with a splined center slip joint.
- A universal joint.
- A center bearing.
- Two flexible joints.

Universal Joint

The universal joint is:

- a lubed-for-life design and requires no lubrication in service.

Driveshaft

For additional information, refer to<<205-00>>.

www.JagDocs.com

Driveshaft (47.15.01)

Removal

1 . Raise and support the vehicle.
For additional information, refer to Lifting

2 . Remove the exhaust system.
For additional information, refer to Exhaust System - 3.0L/3.5L/4.2L

3 . Remove the support bracket.

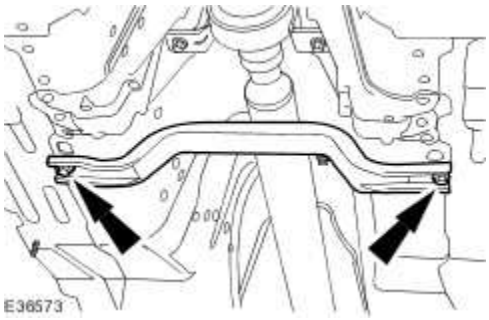

4 . Remove the driveshaft heat shield.

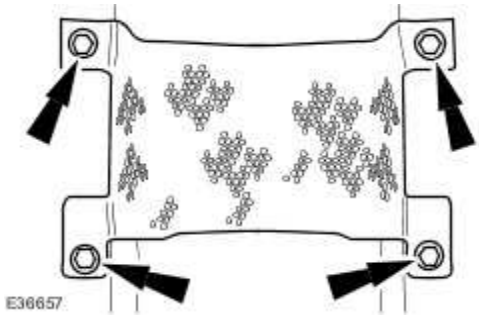

5 . **CAUTION: Under no circumstances must the flexible coupling (or its fixings) be loosened or removed from the driveshaft.**

Detach the driveshaft from the transmission flange.

- Mark the position of the driveshaft in relation to the transmission flange.
- Mark the position of each nut and bolt in relation to the transmission flexible joint.

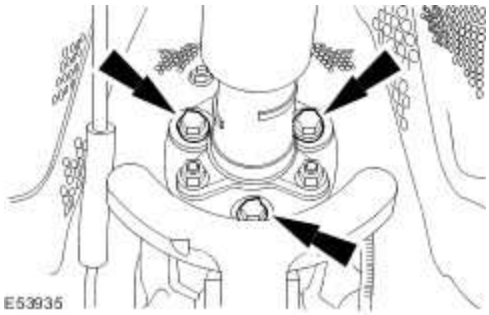

6. **CAUTION: Under no circumstances must the flexible coupling (or its fixings) be loosened or removed from the driveshaft.**

Detach the driveshaft from the rear drive axle flange.

- Mark the position of the driveshaft in relation to the rear drive axle flange.
- Mark the position of the balance nut in relation to the rear drive axle flange (if fitted).
- Mark the position of each nut and bolt in relation to the rear drive axle flexible joint.

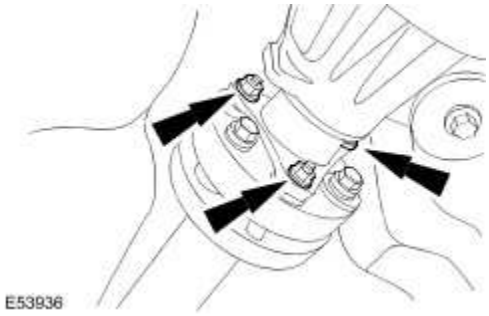

www.JagDocs.com

7 . **CAUTION: Support the driveshaft front and rear sections.**

NOTE:

Note the position of the driveshaft centre bearing spacers.

Remove the driveshaft.

- Remove the driveshaft centre bearing spacers.

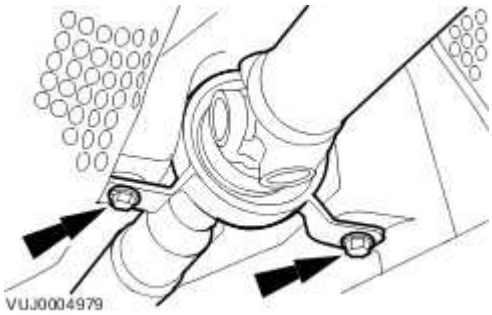

Installation

1 **NOTE:**

.

If a new driveshaft is installed, refer to Jaguar approved diagnostic system to establish the correct location for the balance nut if required.

NOTE:

Do not fully tighten the driveshaft centre bearing retaining bolts.

Tighten to 40 Nm.

- Install the driveshaft centre bearing spacers.

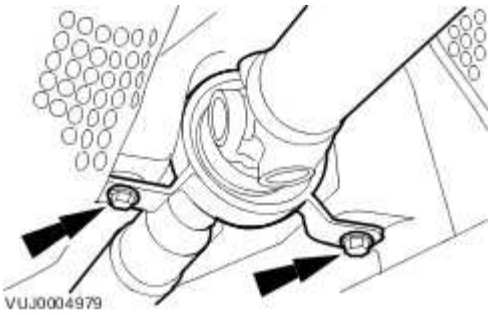

2 . Attach the driveshaft to the rear drive axle flange.

- Tighten to 88 Nm.
- If a balance nut is fitted, install onto the original bolt position.
- Tighten to 12 Nm.

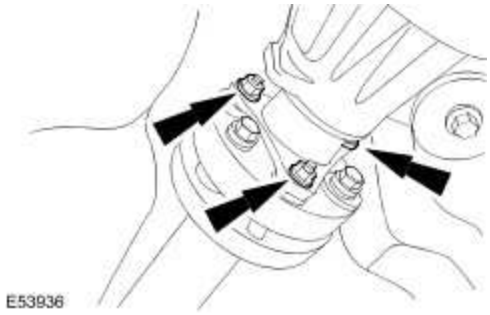

3 . Attach the driveshaft to the transmission flange.

- Tighten to 108 Nm.

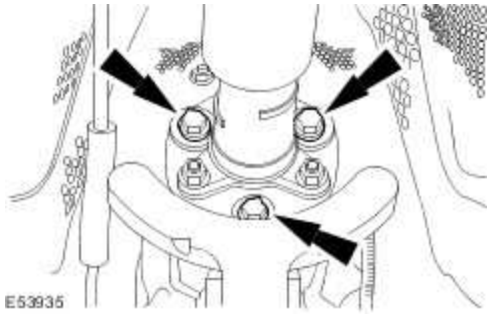

www.JagDocs.com

4 . **CAUTION: Make sure the driveshaft centre bearing is correctly aligned to the driveshaft. Failure to follow these instructions may result in damage to the vehicle.**

Carry out the Driveline Angle Inspection.
For additional information, refer to Driveline Angle Inspection

5 . Install the driveshaft heat shield retaining bolts.

Tighten to 7 Nm.

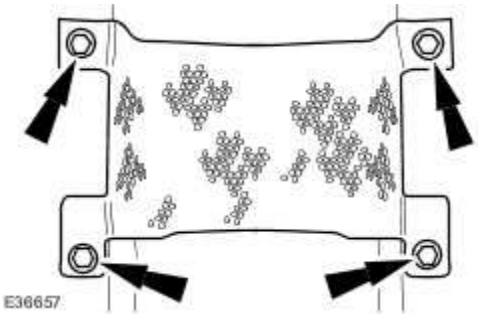

6 . Install the support bracket.

Tighten to 9 Nm.

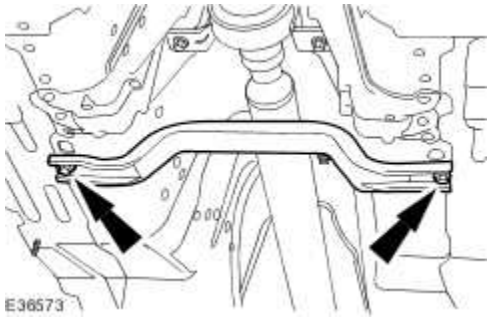

7 . Install the exhaust system.
For additional information, refer to Exhaust System - 3.0L/3.5L/4.2L

8 . Lower the vehicle.

Specifications

General Specifications

Item	Specification
Differential fluid type	M2C192A synthetic
Differential fluid capacity	1.3 liters

Torque Specifications

Description	Nm	lb-ft	lb-in
Axle front retaining bolt	90	55	–
Axle rear retaining bolts	A	–	–
Driveshaft flexible joint	88	65	–

A = refer to the procedure for correct torque sequence.

www.JagDocs.com

Rear Drive Axle and Differential

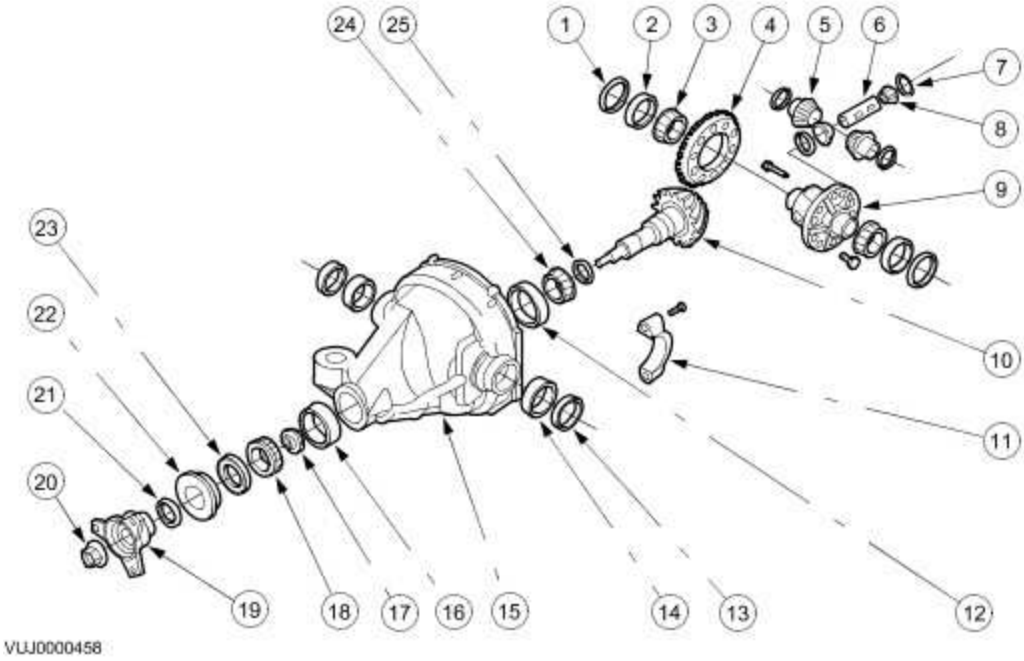

Item	Part Number	Description
1	—	Differential bearing shim
2	—	Differential bearing cup
3	—	Differential bearing
4	—	Ring gear
5	—	Differential side gear
6	—	Differential pinion shaft
7	—	Differential pinion thrust washer
8	—	Differential pinion gear
9	—	Differential gear case
10	—	Pinion
11	—	Differential bearing cap
12	—	Rear axle pinion bearing cup
13	—	Output shaft oil seals
14	—	Differential pilot bearing
15	—	Differential housing
16	—	Differential drive pinion cup
17	—	Differential drive pinion collapsible spacer

18	—	Pinion bearing
19	—	Pinion flange
20	—	Pinion nut
21	—	Dust shield
22	—	Rear axle drive pinion seal
23	—	Rear axle pinion shaft oil slinger
24	—	Pinion Bearing
25	—	Drive pinion bearing adjustment shim

The rear axle drive pinion receives power from the engine through the transmission and driveshaft. The drive pinion gear rotates the differential drive gear which is bolted to the differential housing outer flange. Inside the differential housing, two differential pinion gears are mounted on a differential shaft which is pinned to the differential housing. These differential pinion gears are engaged with the differential side gears to which the halfshafts are splined. As the differential gear turns, it rotates the halfshafts and rear wheels.

When it is necessary for one wheel and halfshaft to rotate faster than the other, the faster turning differential side gear causes the differential pinion gears to roll on the slower turning differential side gear. This allows differential action between the two halfshafts.

www.JagDocs.com

Rear Drive Axle and Differential

For additional information, refer to <<205-00>>

Axle Assembly - Vehicles Without: Differential Drain Plug (51.25.13)

Special Service Tools

Powertrain Assembly Jack.
HTJ1200-2

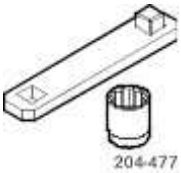

Replacer - Mounting Bolts Final Drive To Subframe.
204-477

Removal

1 . Remove both halfshafts.
For additional information, refer to Rear Halfshaft (47.10.13)

2 . Remove the exhaust system.
For additional information, refer to Front Muffler - 3.0L/3.5L/4.2L (30.10.18)

3 . **CAUTION: Under no circumstances must the flexible coupling (or its fixings) be loosened or removed from the driveshaft.**

Detach the driveshaft from the differential flange.

- Mark the position of the driveshaft in relation to the differential flange.

www.JagDocs.com

- Mark the position of the balance nut in relation to the differential flange (if fitted).
- Mark the position of each nut and bolt in relation to the driveshaft flexible joint.

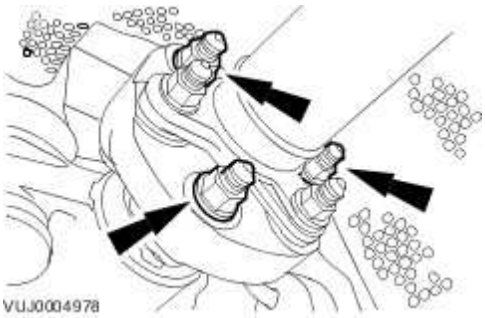

4. **CAUTION: When supporting the axle assembly, use a suitable packing material to prevent damage to the axle assembly.**

Using the special tool HTJ1200-02, support the axle assembly.

5 . Remove the axle assembly front retaining bolt.

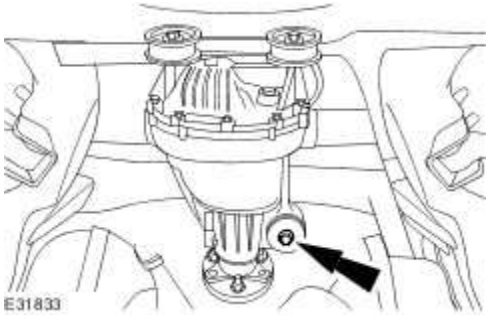

6. **NOTE:**

The axle assembly rear retaining bolts do not have to be fully removed for the axle assembly to be removed, slacken the rear retaining bolts alternately until the rear axle assembly is released.

Remove the axle assembly.

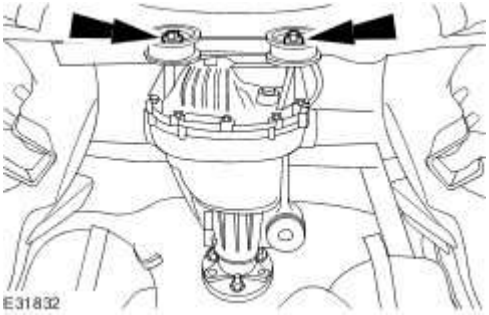

Installation

1 . **NOTE:**

Loosely tighten the axle assembly rear retaining bolts.

Install the axle assembly.

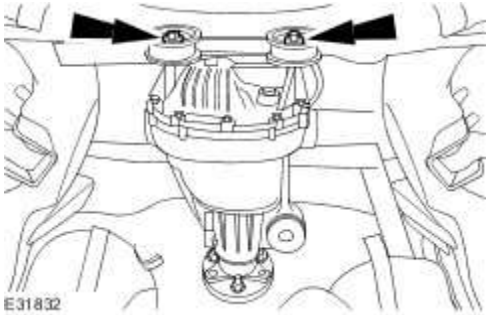

2 . **NOTE:**

Make sure the axle front retaining bolt washer and spacer are correctly installed.

Install the axle assembly front retaining bolt.

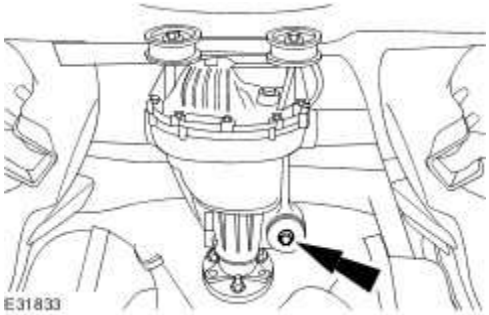

www.JagDocs.com

3. **CAUTION: When supporting the axle assembly, use a suitable packing material to prevent damage to the axle assembly.**

Remove the special tool HTJ1200-02, supporting the axle assembly.

4 . Install the special tool.

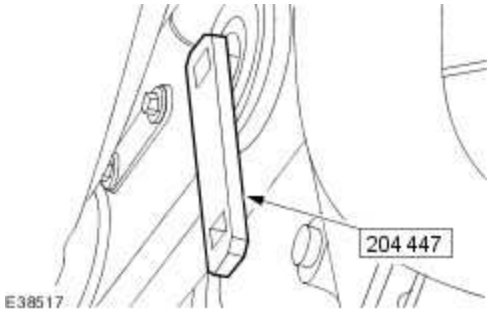

5. **CAUTION: Make sure the axle rear retaining bolts are tightened to the correct torque specification. Failure to follow this instruction may result in damage to the vehicle.**

Using the special tool and a torque wrench, tighten the axle rear retaining bolts.

- Tighten to 200 Nm.
- To make sure the axle rear retaining bolts are torqued to the correct specification, using the special tool and a torque wrench the following calculation steps must be followed.
  - Step 1. Multiply 200 Nm by the effective length of the torque wrench (1).
  - Step 2. Add the effective length of the special tool (2) to the effective length of the torque wrench (1).
  - Step 3. Divide the total of step 1 by the total of step 2.
  - Step 4. Set the torque wrench to the figure arrived at in step 3.

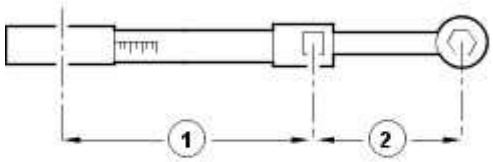

E37107

6 . Tighten to 90 Nm.

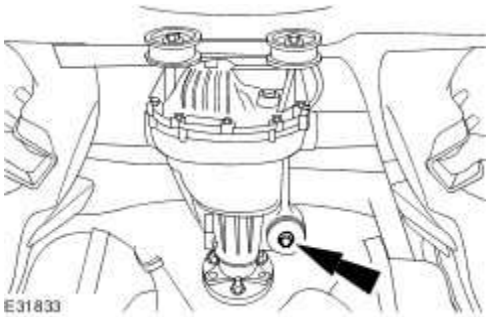

E31833

7 . **NOTE:**

Make sure the driveshaft nuts and bolts are correctly installed.

Tighten to 88 Nm.

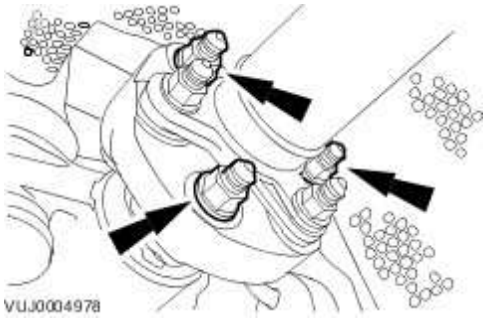

VUJ0004978

8 . Install the exhaust system.
For additional information, refer to Front Muffler - 3.0L/3.5L/4.2L (30.10.18)

9 . Install both halfshafts.
For additional information, refer to Rear Halfshaft (47.10.13)

www.JagDocs.com

Axle Assembly - Vehicles With: Differential Drain Plug (51.25.13)

No data

Axle Housing Bushing (64.25.30)

Special Service Tools

Forcing screw remover and installer
204-274

Forcing screw remover and installer
204-274

Bearing kit
JAG-061

Receiving Cup and mount plate
205-534

Remover Front Mount Bush
205-533

www.JagDocs.com

Installer front mount bush
204-245

Installer Front Mount Bush
204-243

Removal

1 . Remove the axle assembly.
For additional information, refer to

2 . Using the special tools, remove the axle housing bushing.

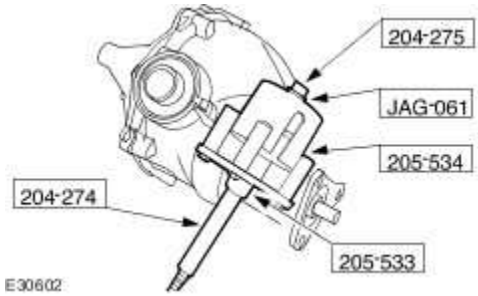

Installation

1 . The bushing should be installed with the raised molding at 45 degrees to the centre line of the pinion shaft.

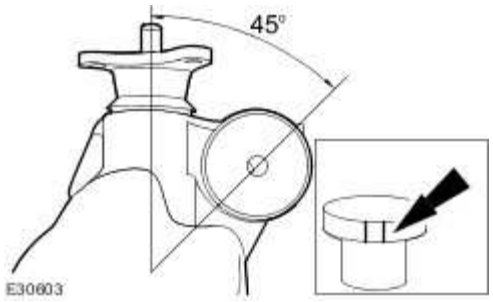

2 . Using the special tools, install the axle housing bushing.

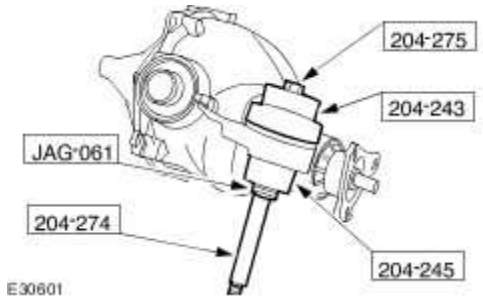

3 . Install the axle assembly.
For additional information, refer to

www.JagDocs.com

Drive Pinion Seal (51.20.01)

Special Service Tools

Flange holding tool
205-053

Pinion seal installer
204-264

Flange remover/replacer plate
204-265

Flange remover/replacer boss
204-266

Flange remover/replacer shaft center
204-267

Flange remover/replacer forcing screw
204-269

Removal

1 . Remove the driveshaft.
For additional information, refer to Driveshaft (47.15.01)

2 . **CAUTION: The following step must be carried out to make sure the correct drive pinion flange retaining nut torque is achieved.**

CAUTION: Only use a paint mark to match mark the drive pinion and flange.

Remove the drive pinion flange nut.

- Match mark the drive pinion nut to the drive pinion flange.
- Match mark the drive pinion flange to the drive pinion shaft.
- Loosen the drive pinion flange nut 180°.
- Tighten the drive pinion flange nut to the match mark.
- Note the force required to tighten to the match mark.
- Remove the drive pinion flange nut.

www.JagDocs.com

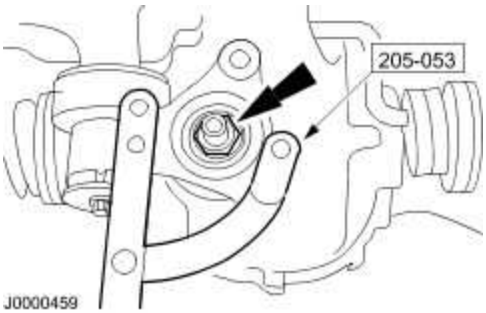

3 . Using the special tools, remove the drive pinion flange.

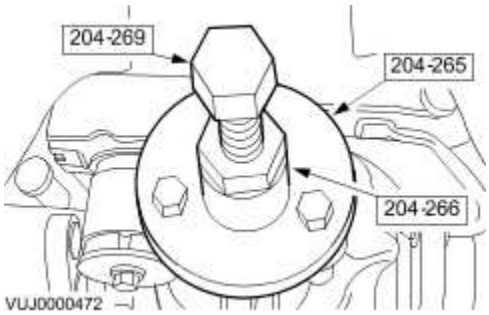

4 . Remove the drive pinion seal dust cover.

5 . Using a suitable tool, remove the drive pinion seal.

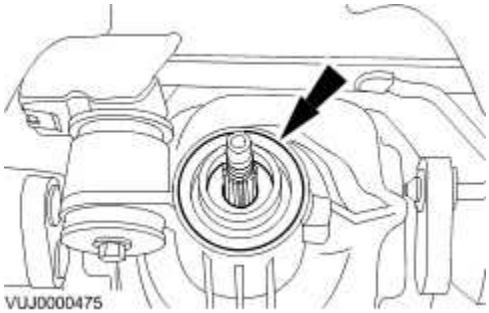

Installation

1 . **CAUTION: If the drive pinion seal becomes misaligned during installation, remove it and install a new one.**

NOTE:

Check the rear drive axle pinion flange, rear axle housing and drive pinion splines for damage.

Using the special tool, install the drive pinion seal.

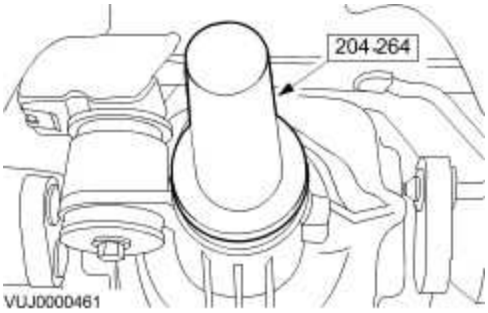

2 . Install the drive pinion seal dust cover.

3 . **CAUTION: Only use the correct special tools to install the drive pinion flange.**

Using the special tools, install the drive pinion flange.

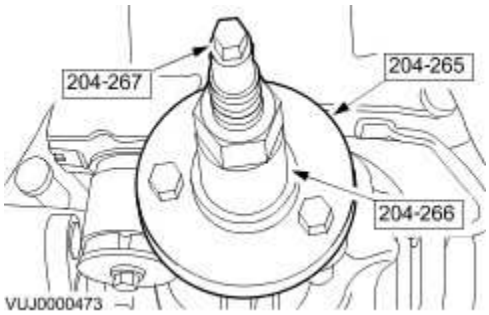

4 . Install a new drive pinion flange nut.

- Tighten the drive pinion flange nut to the force noted on removal.
- Tighten the drive pinion flange nut to a further 10%.

www.JagDocs.com

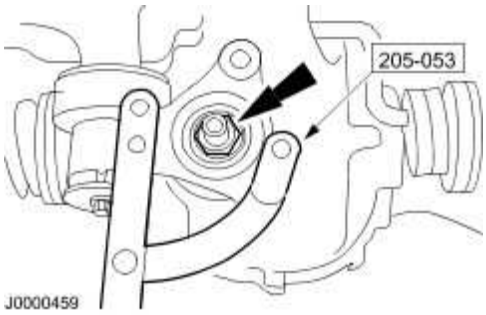

5. **CAUTION: Axle fluid should flow from the filler plug threaded hole when full. Failure to follow this instruction may result in damage to the axle.**

Check and top up the axle assembly fluid level as required.

- Tighten to 34 Nm.

6 . Install the driveshaft.
For additional information, refer to Driveshaft (47.15.01)

Specifications

Lubricants, Fluids, Sealers and Adhesives

Item	Specification
Constant velocity (CV) grease	Olistamoly LN 584 LO

Torque Specification

Description	Nm	lb-ft	lb-in
Anti-lock brake sensor retaining nut	9	–	80
Lower arm to wheel knuckle retaining nut	150	111	–
Outer tie rod ball joint retaining nut	55	41	–
Upper wish bone ball joint retaining nut	90	66	–
Wheel hub nut	300	221	–

Fill Capacities

Description	Vehicle	Grams
Grease for inner CV joint boot	Vehicles without supercharger	100
	Vehicles with supercharger	-
Grease for inner CV joint	Vehicles without supercharger	40
	Vehicles with supercharger	100
Grease for outer CV joint boot	Vehicles without supercharger	55
	Vehicles with supercharger	-
Grease for outer CV joint	Vehicles without supercharger	65
	Vehicles with supercharger	100

www.JagDocs.com

Rear Drive Halfshafts

Rear Drive Halfshafts

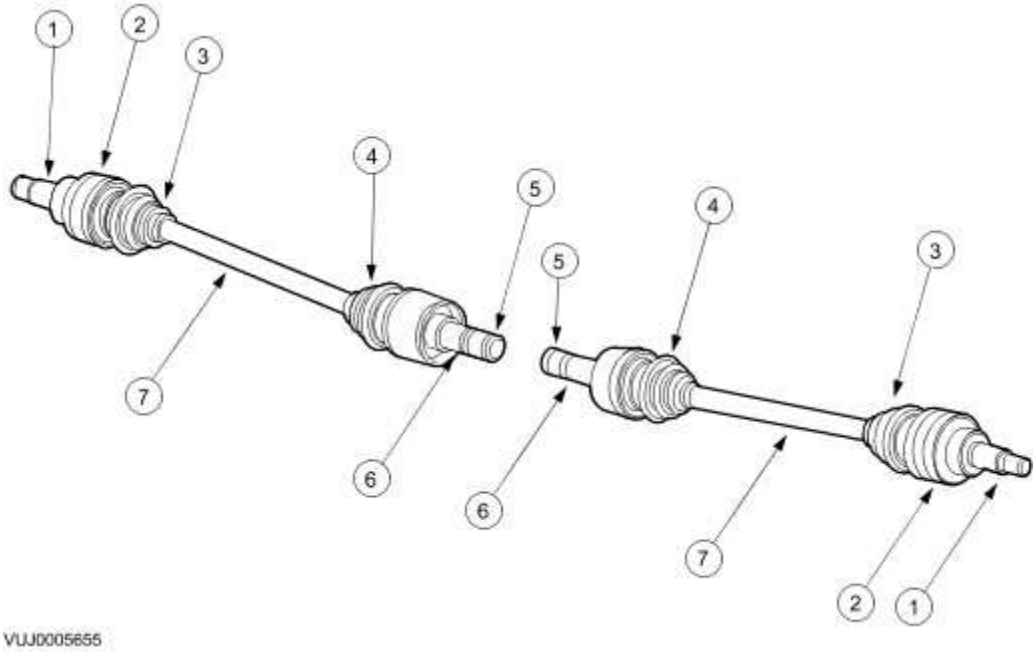

Item	Part Number	Description
1	—	Outer constant velocity (CV) joint
2	—	Anti-lock brake system (ABS) ring
3	—	Outer CV joint boot
4	—	Inner CV joint boot
5	—	Spring clip
6	—	Inner CV joint
7	—	Halfshaft

The rear drive halfshafts are of unequal lengths and both inner and outer joints are of the CV type.

The outer CV joints are fitted with an ABS ring which is continuously monitored by the wheel speed

sensor.

The inner and outer CV joints are linked by a solid halfshaft. The inner CV joints are retained in the rear drive axle with the aid of a spring clip.

Handling Rear Drive Halfshafts

The following points should be observed when handling rear drive halfshafts:

- Do not pull on the CV joints or the bar shaft.
- Do not allow the CV joints to exceed 18 degrees of travel.
- Check polished surfaces and splines for damage.
- Do not allow the CV joint boots to come into contact with sharp edges, hot vehicle components or the exhaust system.
- Do not drop the rear drive halfshafts, this may cause damage to the splined sections of the CV joints, the threaded sections of the CV joints or the interior of the boots which may not be visible.
- Do not support the rear drive halfshaft by holding the CV joint alone.

Underbody Protection and Corrosion Prevention

The CV joint boots should be covered during application of underbody protection or corrosion prevention. Foreign matter on the CV boots may cause premature ageing of the material. Foreign material on the rear drive halfshafts may cause imbalance.

www.JagDocs.com

Rear Drive Halfshafts

For additional information, refer to <<205-00>>.

Rear Halfshaft (47.10.13)

Special Service Tools

Halfshaft splitter handle
307-443

Halfshaft splitter
307-442

Halfshaft oil seal installer
205-532

Halfshaft seal protector
205-461

www.JagDocs.com

Hub puller
205-491

Adaptor nuts
205-491-01

Flange remover forcing screw
204-269

Removal

1 . Loosen the wheel hub nut.

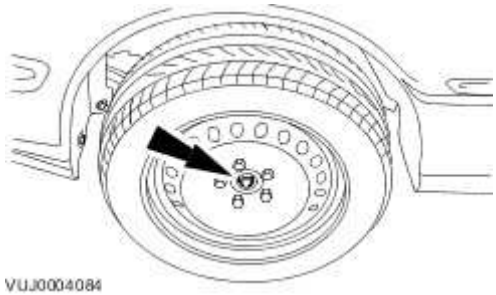

2 . Remove the brake disc.
   For additional information, refer to Brake Disc - Vehicles With: Standard Brakes, VIN Range: G00442->G45703 (70.10.11)
   For additional information, refer to Brake Disc - Vehicles With: High Performance Brakes, VIN Range: G00442->G45703 (70.10.11)
   For additional information, refer to Brake Disc - VIN Range: G45704->G99999 (70.10.11)

3 . Detach the anti-lock brake system (ABS) sensor.

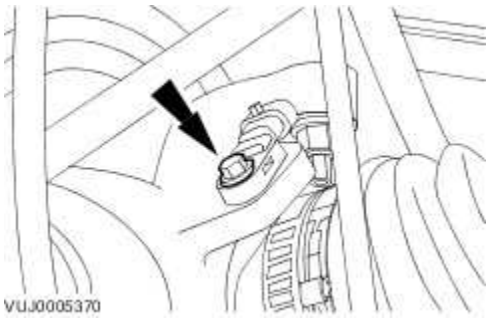

4 . Detach the outer tie rod.

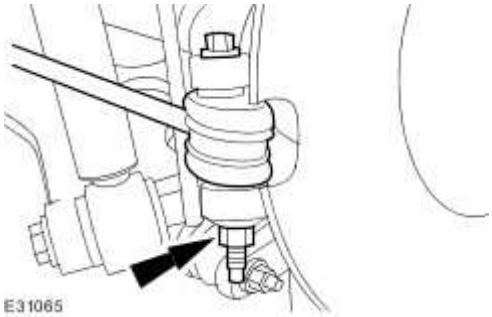

5 . Detach the lower arm from the wheel knuckle.

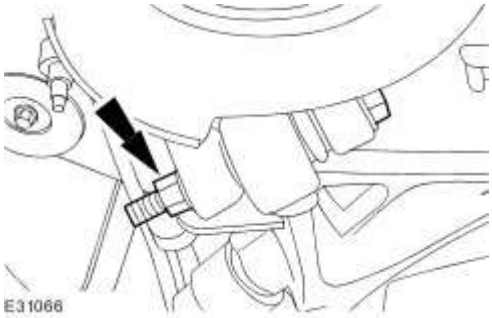

6 . Remove the wheel hub nut.

7 . Using the special tools, detach the halfshaft.

www.JagDocs.com

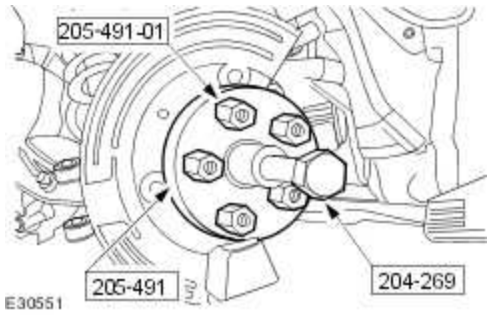

8 . Remove the wheel knuckle assembly.

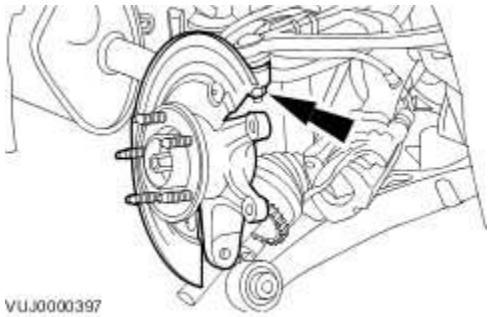

9 . **CAUTION: To avoid damage to the halfshaft constant velocity (CV) joints and boots, do not allow the CV joints to exceed 18 degrees of travel.**

NOTE:

The halfshaft is retained in the axle assembly by a retaining clip.

Using the special tools, remove the halfshaft.

- Remove and discard the retaining clip.

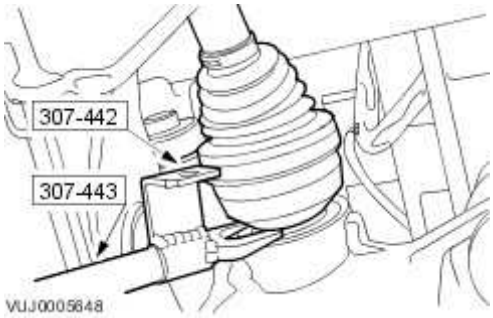

10 . Remove the halfshaft seal.

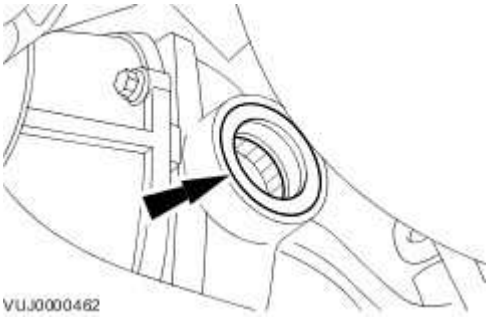

Installation

CAUTION: The final tightening of the rear suspension components must be carried out with the vehicle on its wheels.

1 . Using the special tool, install the halfshaft seal.

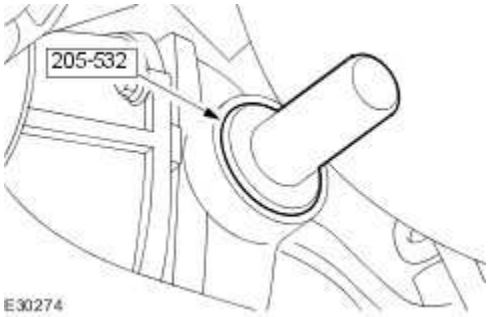

2 . Install a new retaining clip.

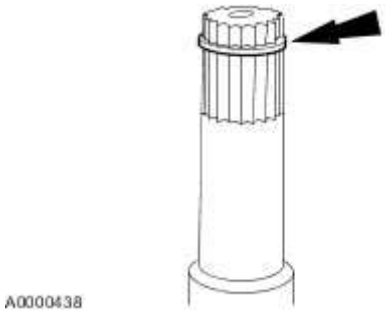

www.JagDocs.com

3. **CAUTION: The next four steps must be carried out within 5 minutes of applying the sealant.**

CAUTION: Install the halfshaft within 5 minutes of applying the sealant.

Apply a 3mm diameter bead of Loctite WSK-M2G349-A4 or equivalent meeting Jaguar specification to the halfshaft splines.

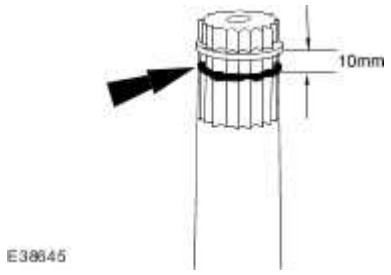

4. **CAUTION: Do not damage the axle shaft seal.**

CAUTION: To avoid damage to the halfshaft CV joints and boots, do not allow the CV joints to exceed 18 degrees of travel.

CAUTION: Make sure no damage occurs to the halfshaft seal when installing the halfshaft.

NOTE:

Do not fully engage the halfshaft into the axle assembly.

Install the halfshaft.

1) Install the special tool to the halfshaft seal.

2) Install the halfshaft.

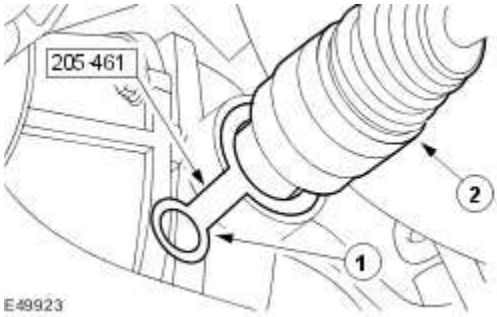

5 . Remove the special tool.

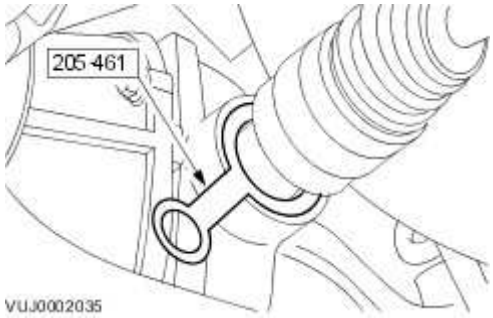

6 . **CAUTION: To avoid damage to the halfshaft CV joints and boots, do not allow the CV joints to exceed 18 degrees of travel.**

CAUTION: Make sure no damage occurs to the halfshaft seal when installing the halfshaft.

NOTE:

Make sure the retaining clip is correctly seated.

Attach the halfshaft.

www.JagDocs.com

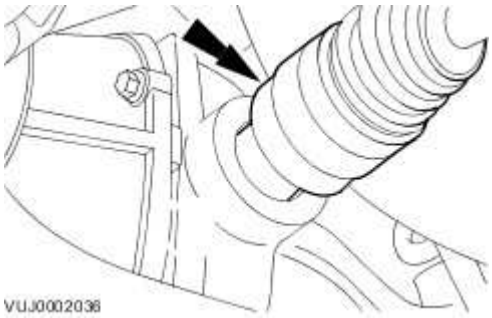

7 . **CAUTION: Axle fluid should flow from the filler plug threaded hole when full. Failure to follow this instruction may result in damage to the axle.**

Check and top up the axle assembly fluid level as required.

Tighten to 34 Nm.

8 . Install the wheel knuckle assembly.

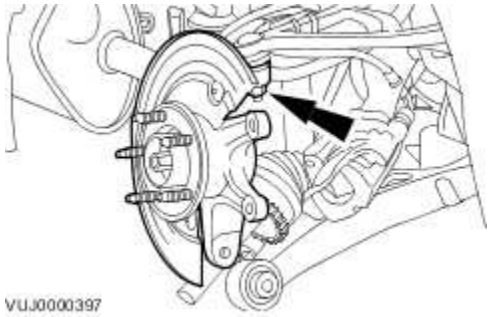

9 . **NOTE:**

Using the old wheel hub nut, tighten to 150 Nm.

Attach the wheel knuckle to the halfshaft.

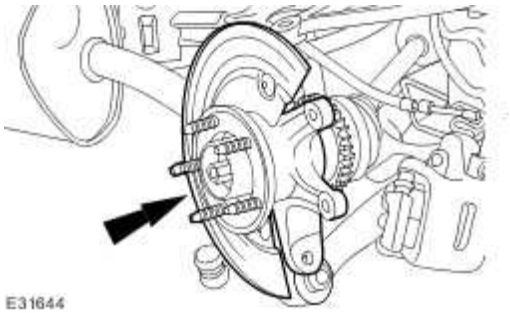

10 . Install the lower arm to the wheel knuckle.

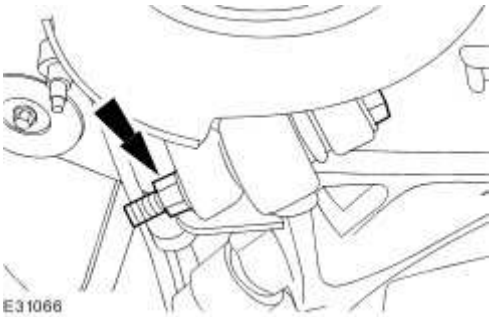

11 . Install the outer tie rod retaining nut.

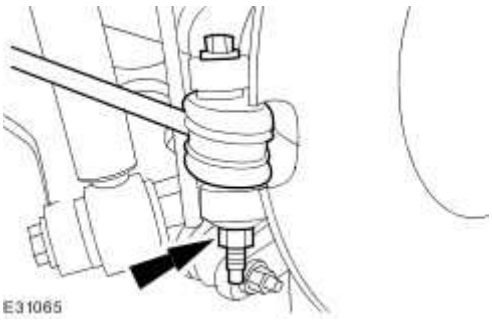

12 . Install the ABS sensor.

- Tighten to 9 Nm.

www.JagDocs.com

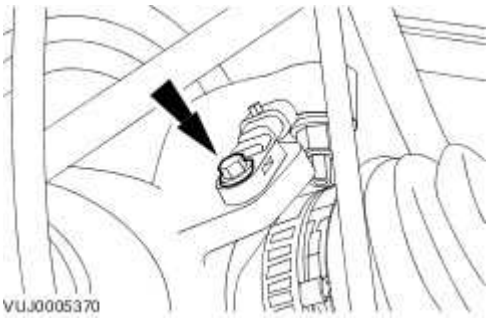

13 Install the brake disc.

. For additional information, refer to Brake Disc - Vehicles With: Standard Brakes, VIN Range: G00442->G45703 (70.10.11)

For additional information, refer to Brake Disc - Vehicles With: High Performance Brakes, VIN Range: G00442->G45703 (70.10.11)

For additional information, refer to Brake Disc - VIN Range: G45704->G99999 (70.10.11) or

For additional information, refer to Brake Disc - VIN Range: G45704->G99999 (70.10.11)

14 . Remove and discard the old wheel hub nut, install a new wheel hub nut.

Tighten to 300 Nm.

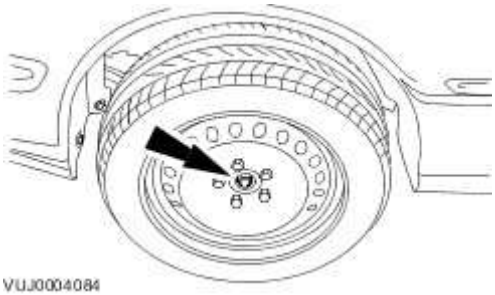

15

. **CAUTION: The final tightening of the rear suspension components must be carried out with the vehicle on its wheels.**

Tighten to 150 Nm.

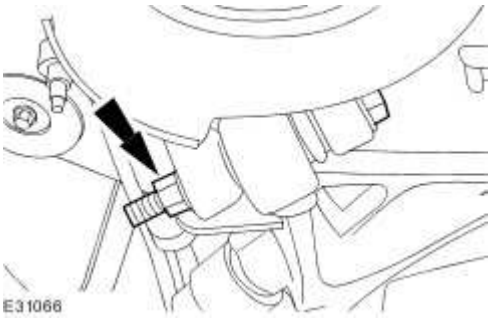

16. **CAUTION: The final tightening of the rear suspension components must be carried out with the vehicle on its wheels.**

Tighten to 55 Nm.

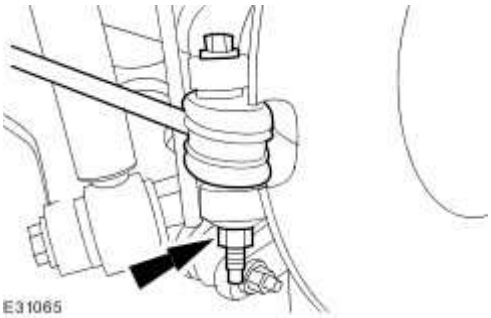

www.JagDocs.com

Inner Constant Velocity (CV) Joint Boot (47.10.33)

Removal

1 . Remove the halfshaft.
For additional information, refer to Rear Halfshaft (47.10.13)

2 . **CAUTION: Use suitable protective covers to protect the halfshaft.**

Using a suitable clamp, secure the halfshaft.

3 . **CAUTION: Make sure the inner constant velocity (CV) joint is not separated from the halfshaft.**

Remove and discard the inner CV joint boot retaining clip.

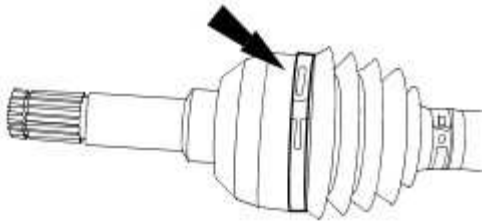

VUJ0005653

4 . **CAUTION: Make sure the CV joint ball bearings do not drop out of the CV joint.**

Using a suitable tool, remove the inner CV joint.

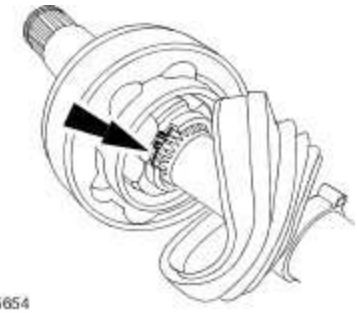

5 . Remove the inner CV joint boot.

- Remove and discard the retaining clip.

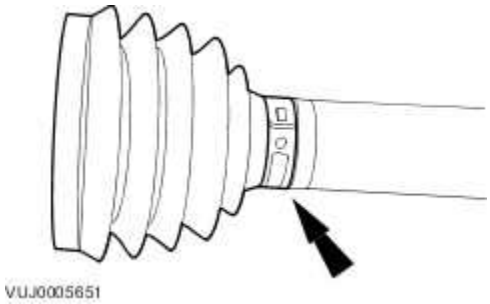

Installation

All vehicles

1 . Install the inner CV joint boot.

- Install a new retaining clip.
- Using a suitable tool, install the retaining clip.

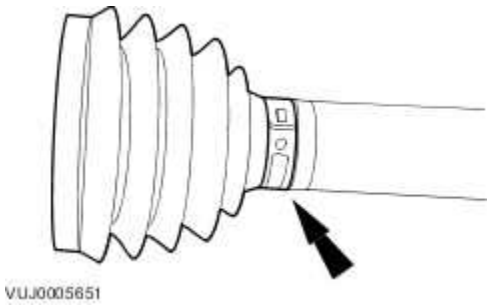

www.JagDocs.com

Vehicles without supercharger

2 . **CAUTION: Make sure the CV joint ball bearings do not drop out of the CV joint.**

NOTE:

Use a CV grease meeting Jaguar specification.

Fit the inner CV joint.

- Fill the CV joint with 40 grams of grease.
- Fill the CV joint boot with 100 grams of grease.

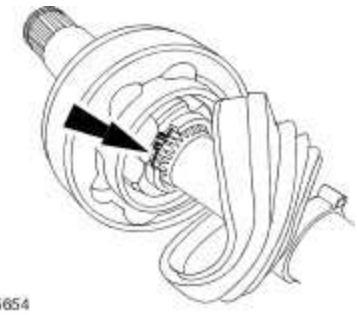

Vehicles with supercharger

3 . **CAUTION: Make sure the CV joint ball bearings do not drop out of the CV joint.**

NOTE:

Use a CV grease meeting Jaguar specification.

Fit the inner CV joint.

- Fill the CV joint with 100 grams of grease.

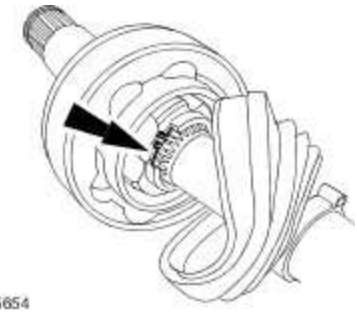

VUJ0005654

All vehicles

4 . **CAUTION: Make sure the CV joint is not separated from the halfshaft.**

NOTE:

Make sure enough air is present in the CV boot.

Install a new retaining clip.

- Using a suitable tool, install the retaining clip.

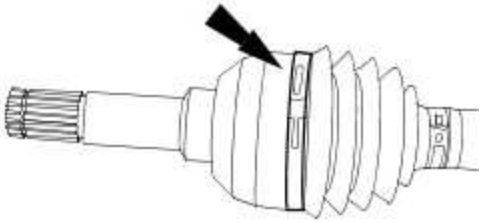

VUJ0005653

5 . Install a new retaining clip.

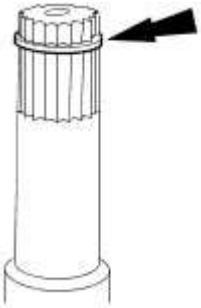

A0000438

www.JagDocs.com

6 . Remove the halfshaft from the clamp.

7 . Install the halfshaft.
For additional information, refer to Rear Halfshaft (47.10.13)

Outer Constant Velocity (CV) Joint Boot (47.10.32)

Removal

1 . Remove the Halfshaft.
For additional information, refer to Rear Halfshaft (47.10.13)

2 . **CAUTION: Use suitable protective covers to protect the halfshaft.**

Using a suitable clamp, secure the halfshaft.

3 . Remove the outer constant velocity (CV) joint boot retaining clip.

- Remove and discard the retaining clip.

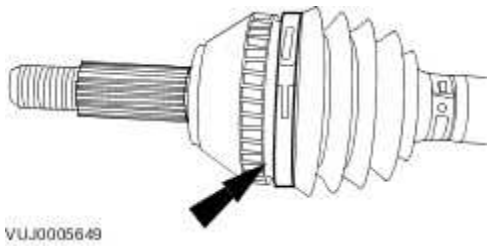

4 . **CAUTION: Do not damage the bearing retainer.**

NOTE:

The outer CV joint is retained to the shaft by a spring clip.

Using a suitable brass drift, remove the outer CV joint.

www.JagDocs.com

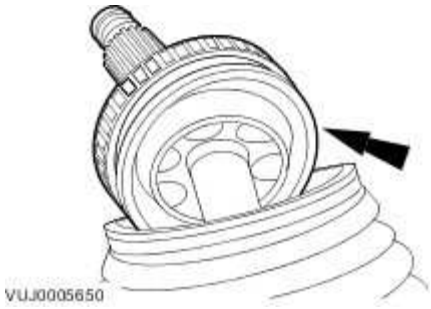

5 . Remove the retaining clip.

- Remove and discard the retaining clip.

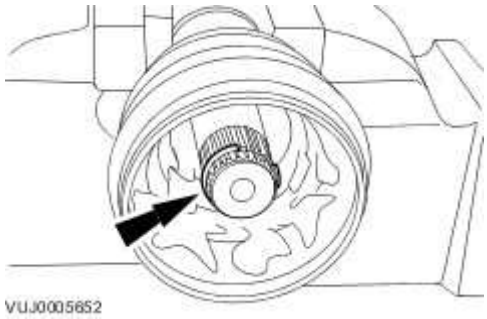

6 . Remove the outer CV joint boot.

- Remove and discard the retaining clip.

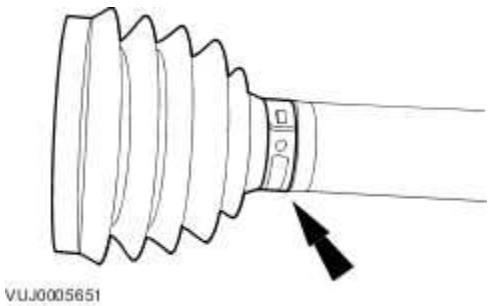

Installation

All vehicles

1 . Install the outer CV joint boot.

- Install the new retaining clip.
- Using a suitable tool, install the retaining clip.

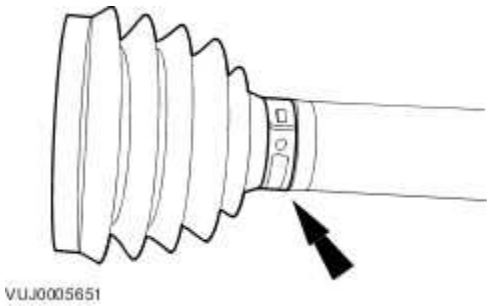

2 . Install the new retaining clip.

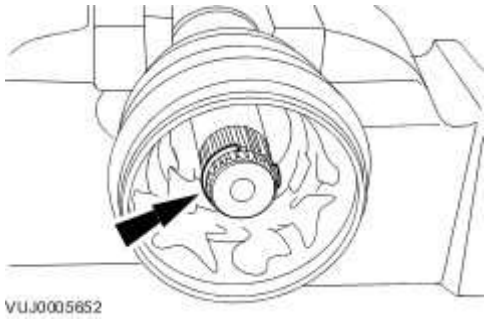

Vehicles without supercharger

3 . **CAUTION: Make sure the CV joint ball bearings do not drop out of the CV joint.**

NOTE:

Use a CV grease meeting Jaguar specification.

Fit the outer CV joint.

- Fill the CV joint with 55 grams of grease.

www.JagDocs.com

- Fill the CV joint boot with 65 grams of grease.

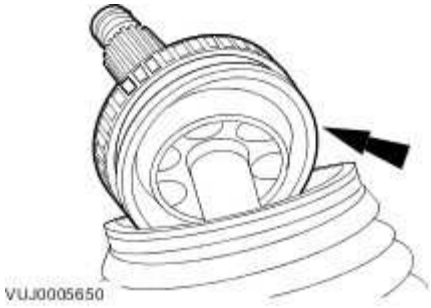

Vehicles with supercharger

4 . **CAUTION: Make sure the CV joint ball bearings do not drop out of the CV joint.**

NOTE:

Use a CV grease meeting Jaguar specification.

Fit the outer CV joint.

- Fill the CV joint with 100 grams of grease.

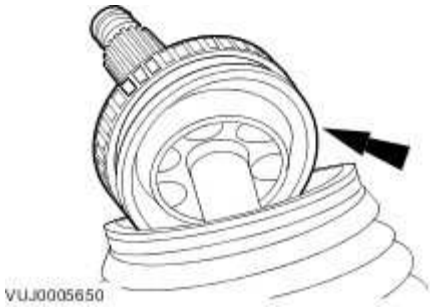

All vehicles

5 . **NOTE:**

Make sure enough air is present in the CV boot.

Install the new retaining clip.

Using a suitable tool, install the retaining clip.

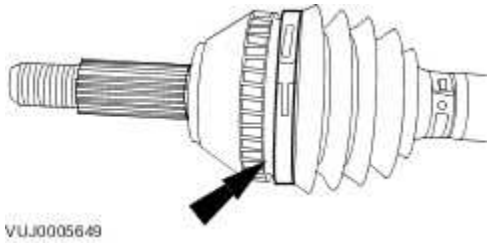

6 . Remove the halfshaft from the clamp.

7 . Install the halfshaft.
For additional information, refer to Rear Halfshaft (47.10.13)

www.JagDocs.com

206 : Brake System

206-00 : Brake System – General Information

Specifications

Specifications

Lubricants, Fluids, Sealers and Adhesives

CAUTION: Do not use brake fluid ITT Super Dot 4 on 2006my vehicles onwards. Failure to follow this instruction may result in damage to the vehicle.

NOTE:

Brake fluid ITT Super Dot 4 has now been superseded by Shell ESL Super Dot 4 which is the Jaguar recommended brake fluid. Shell ESL Super Dot 4 can be used on all model years.

Item	Specification
Brake fluid	ITT Super Dot 4
Brake fluid	Shell ESL Super Dot 4

Brake Lining and Disc Specifications

Item	Specification
Front brake disc diameter - Vehicles with 4.2L engine	320 mm (12.8 in)
Front brake disc diameter - Vehicles with Brembo brakes	365 mm (14.6 in)
New front brake disc nominal thickness - Vehicles with 3.0L, 3.5L or 4.2L engine	30 mm (1.2 in)
New front brake disc nominal thickness - Vehicles with Brembo brakes	32 mm (1.28 in)
Worn brake disc discard thickness - Vehicles with 3.0L, 3.5L or 4.2L engine	28 mm (1.14 in)
Worn front brake disc discard thickness - Vehicles with Brembo brakes	30 mm (1.2 in)
Rear brake disc diameter - Vehicles with 3.0L, 3.5L or 4.2L engine	288 mm (11.52 in)

Rear brake disc diameter - Vehicles with Brembo brakes	330 mm (13.2 in)
New rear brake disc nominal thickness - Vehicles with 3.0L, 3.5L or 4.2L engine	20 mm (0.8 in)
New rear brake disc nominal thickness - Vehicles with Brembo brakes	15 mm (0.6 in)
Worn rear brake disc minimum thickness - Vehicles with 3.0L, 3.5L or 4.2L engine	18 mm (0.72 in)
Worn rear brake disc minimum thickness - Vehicles with Brembo brakes	13 mm (0.52 in)
Maximum front and rear brake disc runout (installed) - Vehicles with 3.0L, 3.5L or 4.2L engine	0.076 mm (0.003 in)
Maximum front brake disc runout (installed) - Vehicles with Brembo brakes	0.070 mm (0.002 in)
Maximum rear brake disc runout (installed) - Vehicles with Brembo brakes	0.070 mm (0.002 in)
Maximum new front and rear brake disc thickness variation - Vehicles with 3.0L, 3.5L or 4.2L engine	0.005 mm (0.0002 in) in 360°
Maximum new front brake disc thickness variation - Vehicles with Brembo brakes	0.010 mm (0.0003 in) in 360°
Maximum new rear brake disc thickness variation - Vehicles with Brembo brakes	0.010 mm (0.0003 in) in 360°
Maximum used front and rear brake disc thickness variation - Vehicles with 3.0L, 3.5L or 4.2L engine	0.009 mm (0.0004 in) in 360°
Maximum front and rear hub face runout (installed) - Vehicles with 3.0L, 3.5L or 4.2L engine	0.05 mm (0.002 in)
Maximum front hub face runout (installed) - Vehicles with Brembo brakes	0.05 mm (0.002 in)
Maximum rear hub face runout (installed) - Vehicles with Brembo brakes	0.05 mm (0.002 in)
Front brake caliper piston diameter - twin piston - Vehicles with 3.0L, 3.5L or 4.2L engine	38 mm (1.52 in) and 45 mm (1.8 in)
Rear brake caliper piston diameter - Vehicles with 3.0L, 3.5L or 4.2L engine	43 mm (1.72 in)
Front brake caliper piston diameter - twin piston - Vehicles with Brembo brakes	38 mm (1.52 in) and 44 mm (1.8 in)
Rear brake caliper piston diameter - twin piston - Vehicles with Brembo brakes	28 mm (1.12 in) and 30 mm (1.2 in)

www.JagDocs.com

Specifications

Lubricants, Fluids, Sealers and Adhesives

CAUTION: Do not use brake fluid ITT Super Dot 4 on 2006MY vehicles onwards. Failure to follow this instruction may result in damage to the vehicle.

NOTE:

Brake fluid ITT Super Dot 4 has now been superseded by Shell ESL Super Dot 4 which is the Jaguar recommended brake fluid. Shell ESL Super Dot 4 can be used on all model years.

Item	Specification
Brake fluid	Shell ESL

Brake Lining and Disc Specifications

Item	Specification
Front brake disc diameter - Vehicles with standard brakes	326 mm (12.8 in)
Front brake disc diameter - Vehicles with high performance brakes	355 mm (14.0 in)
New front brake disc nominal thickness - Vehicles with standard brakes	30 mm (1.18 in)
New front brake disc nominal thickness - Vehicles with high performance brakes	32 mm (1.28 in)
Worn brake disc discard thickness - Vehicles with standard brakes	28 mm (1.14 in)
Worn front brake disc discard thickness - Vehicles with high performance brakes	30 mm (1.18 in)
Rear brake disc diameter	326 mm (12.8 in)
New rear brake disc nominal thickness	20 mm (0.79 in)
Worn rear brake disc minimum thickness	18 mm (0.72 in)
Maximum front brake disc runout (installed) - Vehicles with standard brakes	0.090 mm (0.004 in)
Maximum front brake disc runout (installed) - Vehicles with high performance brakes	0.090 mm (0.004 in)
Maximum rear brake disc runout (installed)	0.075 mm (0.003 in)
Maximum front hub face runout (installed)	0.015 mm (0.0006 in)
Maximum rear hub face runout (installed)	0.05 mm (0.002 in)
Front brake caliper piston diameter	60 mm (2.36 in)
Rear brake caliper piston diameter	45 mm (1.77 in)

Published: Mar 24, 2014

Brake Lining and Disc Specifications – Armoured XJ

Item	Specification
Front brake disc diameter	380 mm (14.96 in)
New front brake disc nominal thickness	36 mm (1.42 in)
Worn front brake disc discard thickness	33.6 mm (1.32 in)
Front brake pad discard thickness (including backing plate)	7.7 mm (0.30 in)
Rear brake disc diameter	330 mm (12.99 in)
New rear brake disc nominal thickness	28 mm (1.10 in)
Worn rear brake disc minimum thickness	25.6 mm (1.00)
Rear brake pad discard thickness (including backing plate)	7.7 mm (0.30 in)
Maximum front brake disc runout (installed)	0.090 mm (0.004 in)
Maximum rear brake disc runout (installed)	0.075 mm (0.003 in)
Maximum front hub face runout (installed)	0.015 mm (0.0006 in)
Maximum rear hub face runout (installed)	0.05 mm (0.002 in)
Front brake caliper piston diameter • Brake caliper piston 1 and 2 • Brake caliper piston 3 and 4 • Brake caliper piston 5 and 6	• 30.2 mm (1.18 in) • 34.9 mm (1.37 in) • 38.1 mm (1.50 in)
Rear brake caliper piston diameter	31.80 mm (1.25 in)

www.JagDocs.com

Brake Disc Runout Check

Check

1. Remove the wheel and tire. For additional information, refer to <<204-04>>.

2. **NOTE:**
   For vehicles with Brembo brakes, detach the parking brake caliper.

Detach the front or rear brake caliper.

3. Install all wheel nuts and tighten equally to 20 Nm.
   - Make sure that the brake disc is fully seated against the hub face.

4. Install a dial test indicator gauge and holding fixture to a suitable mounting point.

5. **NOTE:**
   If the runout is outside specification, check the hub face runout.

Using the dial test indicator, measure the inner and outer faces of the brake disc.

1. Position the gauge so that it contacts the disc 10 mm (0.4 in) from the outer edge.
2. Slowly rotate the hub/disc assembly. Note the reading.

6. If a front hub runout check is required, remove the front brake disc. For additional information, refer to <<206-03>>. If a rear hub runout check is required, remove the rear brake disc. For additional information, refer to <<206-04>>.

7. **NOTE:**
   The hub surface should be free from dirt and corrosion. Do not use abrasive cloths to clean hub faces.

Using the dial test indicator, measure the hub face runout.

1. Position the gauge so that it contacts the mounting tube between the stud and the chamfer.
2. Slowly rotate the hub and note the runout. For additional information, refer to the specification chart.

- If the front hub runout exceeds the specifications, install a new hub, brake disc and recheck. For additional information, refer to <<204-01>>. If the rear hub runout exceeds the specifications, install a new hub, brake disc and recheck. For additional information, refer to <<204-02>>.

8. If the front hub face is within specification, install a new brake disc. For additional information, refer to <<206-03>>. If the rear hub face is within specification, install a new disc. For additional information, refer to <<206-04>>.

9. Install the wheel and tire. For additional information, refer to <<204-04>>.

www.JagDocs.com

Brake System Bleeding - VIN Range: G00442->G45703 (70.25.03)

WARNING: Brake Fluid contains polyglycol ethers and polyglycols. Avoid contact with the eyes. Wash hands thoroughly after handling, as prolonged contact may cause irritation and dermatitis. If brake fluid contacts the eyes, flush the eyes with cold water or eyewash solution and seek medical attention. If taken internally do not induce vomiting, seek immediate medical attention. Failure to follow these instructions may result in personal injury.

CAUTION: Make sure that the vehicle is standing on a level surface or supported on a wheel free lift.

CAUTION: If brake fluid comes into contact with the paintwork, the affected area must be immediately washed down with cold water.

NOTE:

The system consists of separate circuits for each front and diagonally opposite rear wheel. Each front to rear circuit and each wheel circuit can be bled individually of each other.

NOTE:

The service ABS hydraulic control unit is supplied pre-filled with brake fluid. Therefore, a conventional bleed procedure should be adequate to remove all the air from the brake system.

1.

CAUTION: Make sure that the brake master cylinder reservoir filler cap does not become contaminated.

Remove the brake master cylinder reservoir filler cap.

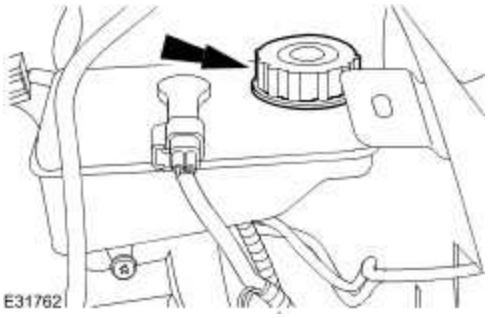

2. **NOTE:**

Always use fluid from a sealed container and dispose of used fluid safely.

Fill up the brake master cylinder reservoir to the MAX mark as necessary.

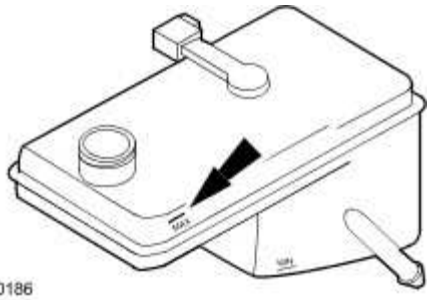

3. Install a bleed tube to the rear right-hand brake caliper bleed nipple.

4. Bleed the circuit.
   - Make sure the bleed tube is firmly attached to the bleed nipple.
   - Submerge the end of the bleed tube in a bleed jar containing a small quantity of approved brake fluid.
   - Position the bleed jar base at least 300 mm (12 in) above the bleed nipple to maintain fluid pressure and prevent air leaking past the bleed nipple threads.
   - Open the bleed nipple half a turn.
   - Slowly apply the brake pedal to its maximum travel (this forces brake fluid into the bleed jar).
   - Close the bleed nipple.
   - Return the brake pedal to the rest position.
   - Wait 2 seconds to allow the brake fluid to replenish the system.
   - Fill up the brake master cylinder reservoir to the MAX mark as necessary.
   - Continue to bleed the circuit until air-free brake fluid is pumped into the jar.
   - Fully tighten the bleed nipple.

5. Repeat the procedure for the rear left, front right and front left-hand brake circuits.

6. Fill up the brake master cylinder reservoir to the MAX mark.

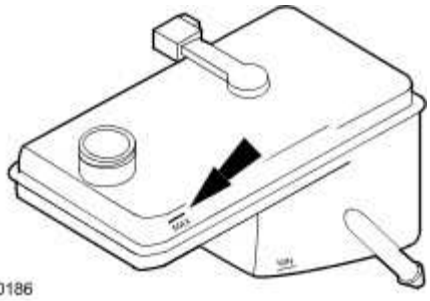

www.JagDocs.com

7. Install the brake master cylinder reservoir filler cap.

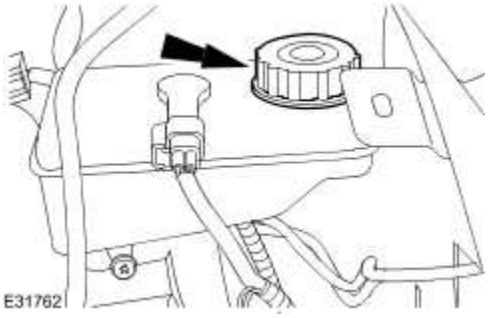

Additional Procedure to Bleed New Calipers with Integral Park Brake Mechanism

NOTE:

Due to the complexity of the fluid path within the integral park brake calipers, it may be difficult to achieve a satisfactory result using the procedure above when new calipers have been installed.

1. Using the Jaguar approved diagnostic system, put the park brake system into service mode.

2. Remove both rear wheels and tires. <<204-04>>

3. Bleed the braking system.

4. Disconnect the parking brake cable.
   - Release the tension.
   - Disconnect the park brake cable.

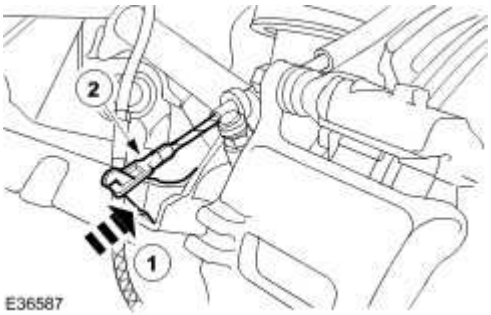

5. Detach the park brake cable.

1. Release the retaining tangs.
2. Detach the park brake cable.

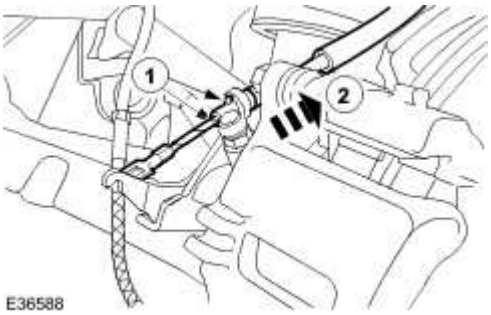

6. Detach the brake caliper from the anchor bracket.

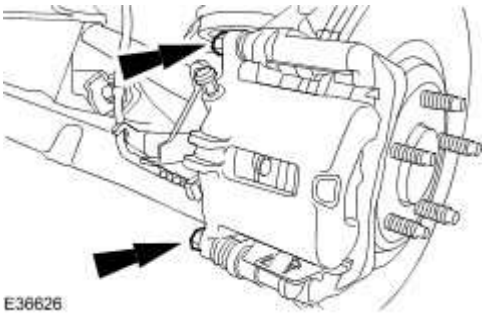

7. **NOTE:**
   The inner brake pad must have at least 7mm of friction material. If there is less then 7mm a new pad must be used.

Remove the outer brake pad.

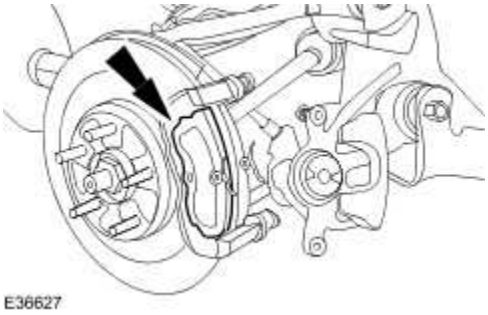

8. Attach the brake caliper with a protective cloth placed between the caliper fingers and the disc.

www.JagDocs.com

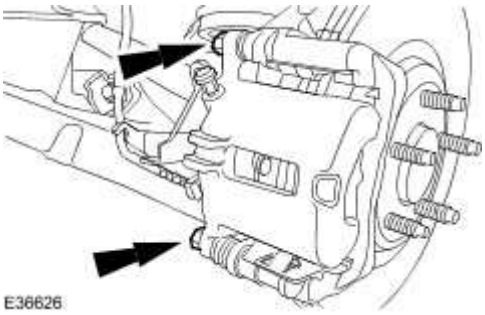

9. Slowly apply the brake pedal until the piston is extended to the brake disc.

10. Detach the brake caliper from the anchor bracket.

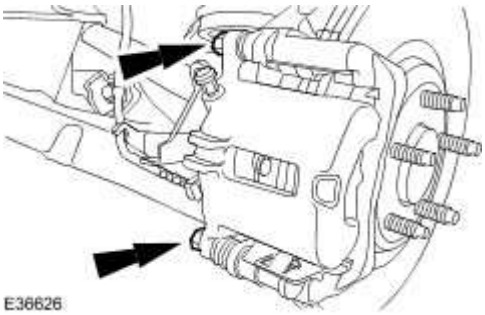

11. Bleed the caliper.
    - Make sure the bleed tube is firmly attached to the bleed nipple.
    - Submerge the end of the bleed tube in a bleed jar containing a small quantity of approved brake fluid.
    - Position the bleed jar base at least 300 mm (12 in) above the bleed nipple to maintain fluid pressure and prevent air leaking past the bleed nipple threads.
    - Position the brake caliper with the piston facing down and the bleed nipple at the top.
    - Open the bleed nipple half a turn.
    - Using the special tool, fully retract the caliper piston.
    - Close the bleed nipple.
    - Repeat the above procedure twice.
    - Fill up the brake master cylinder reservoir to the MAX mark as necessary.
    - Continue to bleed the caliper using the above procedure until air-free brake fluid is pumped into the jar.
    - Fully tighten the bleed nipple.
    - Make sure the piston grooves are aligned to fit the brake pad peg when the caliper is assembled.

12. Install the outer brake pad.

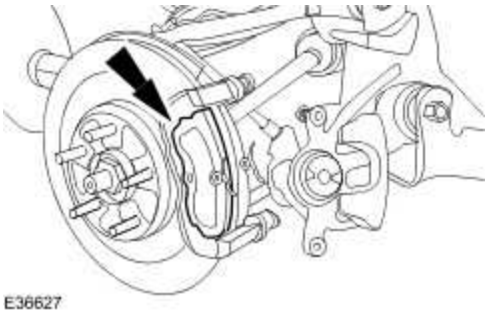

13. Install the brake caliper.
    - Install new brake caliper guide pin retaining bolts.
    - Tighten to 34 Nm.

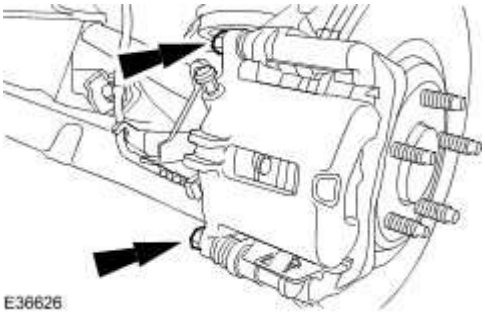

14. Attach the park brake cable.
    - Attach the park brake cable.
    - Fully seat the retaining tangs.

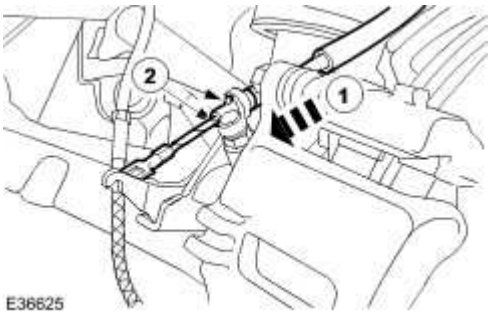

15. Connect the park brake cable.
    - Release the tension.
    - Connect the park brake cable.

www.JagDocs.com

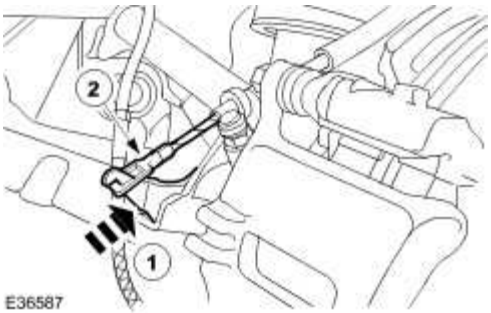

16. Bleed the braking system.

17. Install the wheels and tires. <<204-04>>

Brake System Bleeding - VIN Range: G45704->H99999 (70.25.03)

WARNING: Brake fluid contains polyglycol ethers and polyglycols. Avoid contact with the eyes. Wash hands thoroughly after handling, as prolonged contact may cause irritation and dermatitis. If brake fluid contacts the eyes, flush the eyes with cold water or eyewash solution and seek medical attention. If taken internally do not induce vomiting, seek immediate medical attention. Failure to follow these instructions may result in personal injury.

CAUTION: Make sure that the vehicle is standing on a level surface or supported on a wheel free lift.

CAUTION: If brake fluid comes into contact with the paintwork, the affected area must be immediately washed down with cold water.

NOTE:

The system consists of separate circuits for each front and diagonally opposite rear wheel. Each front to rear circuit and each wheel circuit can be bled individually of each other.

NOTE:

The service anti-lock braking system (ABS) hydraulic control unit is supplied pre-filled with brake fluid. Therefore, a conventional bleed procedure should be adequate to remove all the air from the brake system.

1.

CAUTION: Make sure that the brake master cylinder reservoir filler cap does not become contaminated.

Remove the brake master cylinder reservoir filler cap.

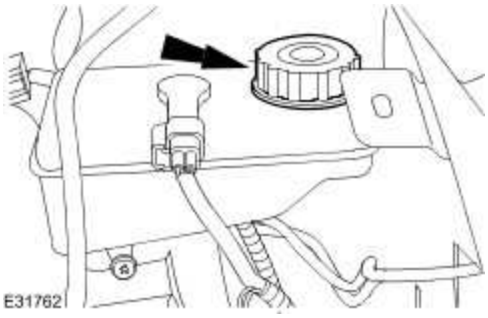

www.JagDocs.com

2. **NOTE:**

   Always use fluid from a sealed container and dispose of used fluid safely.

Fill up the brake master cylinder reservoir to the MAX mark as necessary.

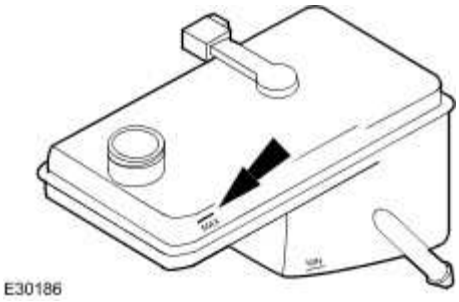

3. Install a bleed tube to the rear right-hand brake caliper bleed nipple.

4. Bleed the circuit.
   - Make sure the bleed tube is firmly attached to the bleed nipple.
   - Submerge the end of the bleed tube in a bleed jar containing a small quantity of approved brake fluid.
   - Position the bleed jar base at least 300 mm (12 in) above the bleed nipple to maintain fluid pressure and prevent air leaking past the bleed nipple threads.
   - Open the bleed nipple half a turn.
   - Slowly apply the brake pedal to its maximum travel (this forces brake fluid into the bleed jar).
   - Close the bleed nipple.
   - Return the brake pedal to the rest position.
   - Wait 2 seconds to allow the brake fluid to replenish the system.
   - Fill up the brake master cylinder reservoir to the MAX mark as necessary.
   - Continue to bleed the circuit until air-free brake fluid is pumped into the jar.
   - Fully tighten the bleed nipple.

5. Repeat the procedure for the rear left, front right and front left-hand brake circuits.

6. Fill up the brake master cylinder reservoir to the MAX mark.

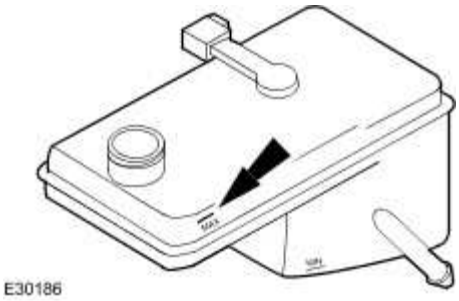

NOTE:

Due to the complexity of the fluid path within the integral park brake calipers, it may be difficult to achieve a satisfactory result using the procedure above when new calipers have been installed. Therefore carry out the following steps to make sure that the system is properly bled.

7. Remove both rear wheels and tires.
Wheel and Tire (74.20.05)

8. **NOTE:**

   Left-hand shown, right-hand similar.

Remove the logo badge.

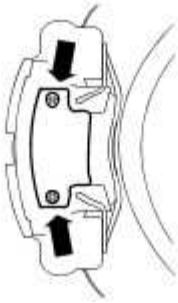

9. **NOTE:**

   Left-hand shown, right-hand similar.

Remove the anti-rattle spring.

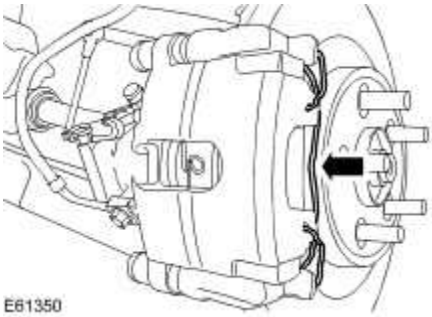

10. **NOTE:**

    Left-hand shown, right-hand similar.

Remove the brake caliper retaining bolt dust covers.

www.JagDocs.com

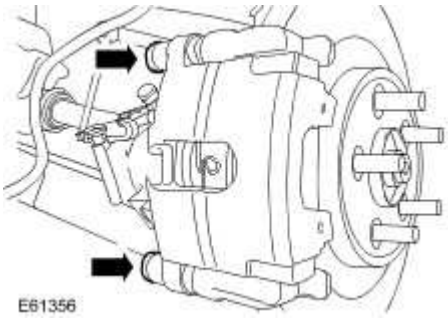

11. **NOTE:**
    Left-hand shown, right-hand similar.

Detach the brake caliper.

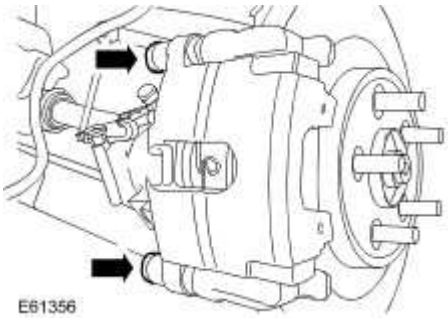

12. **NOTE:**
    The inner brake pad must have at least 7mm of friction material. If there is less then 7mm a new pad must be used.

NOTE:
Left-hand shown, right-hand similar.

Remove the outer brake pad.

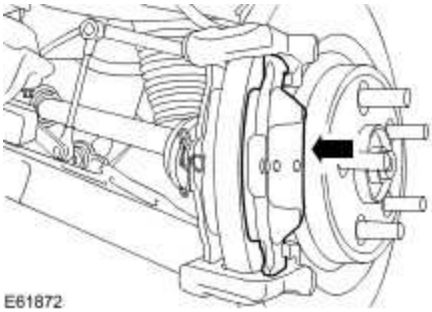

13. **NOTE:**
    Left-hand shown, right-hand similar.

Attach the brake caliper with a protective cloth placed between the caliper fingers and the disc.

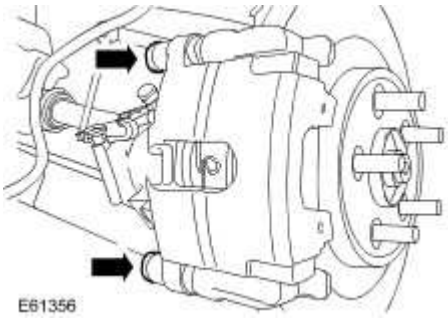

14. Slowly apply the brake pedal until the piston is extended to the brake disc.

15. **NOTE:**
    Left-hand shown, right-hand similar.

Detach the brake caliper.

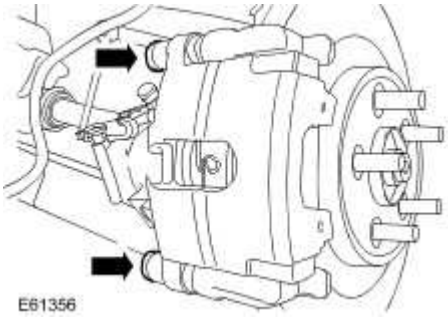

16. Bleed the caliper.
    - Make sure the bleed tube is firmly attached to the bleed nipple.
    - Submerge the end of the bleed tube in a bleed jar containing a small quantity of approved brake fluid.
    - Position the bleed jar base at least 300 mm (12 in) above the bleed nipple to maintain fluid pressure and prevent air leaking past the bleed nipple threads.
    - Position the brake caliper with the piston facing down and the bleed nipple at the top.
    - Open the bleed nipple half a turn.
    - Using a suitable tool, fully retract the caliper piston.
    - Close the bleed nipple.
    - Repeat the above procedure twice.
    - Fill up the brake master cylinder reservoir to the MAX mark as necessary.
    - Continue to bleed the caliper using the above procedure until air-free brake fluid is pumped into the jar.
    - Fully tighten the bleed nipple.

www.JagDocs.com

17. **NOTE:**
    Left-hand shown, right-hand similar.

Install the outer brake pad.

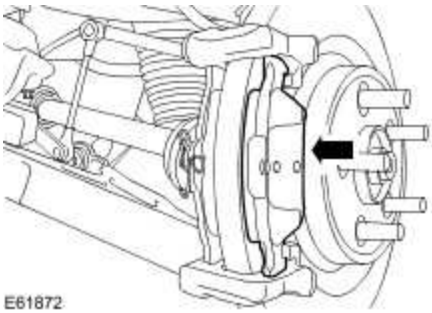

18. **NOTE:**
    Left-hand shown, right-hand similar.

Install the brake caliper.

- Tighten to 28 Nm.

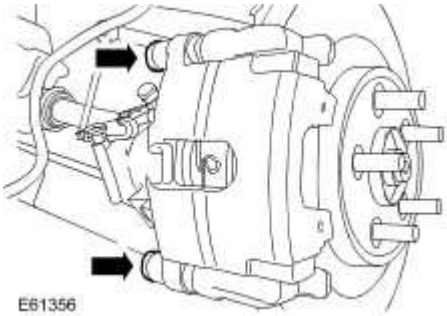

19. **NOTE:**
    Left-hand shown, right-hand similar.

Install the brake caliper retaining bolt dust covers.

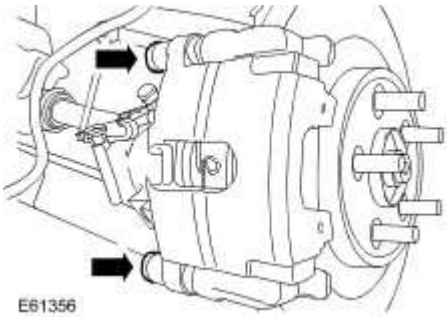

20. **NOTE:**
    Left-hand shown, right-hand similar.

Install the anti-rattle spring.

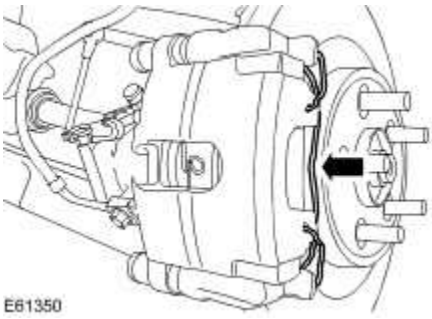

21. **NOTE:**
    Left-hand shown, right-hand similar.

Install the logo badge.

- Tighten to 5 Nm.

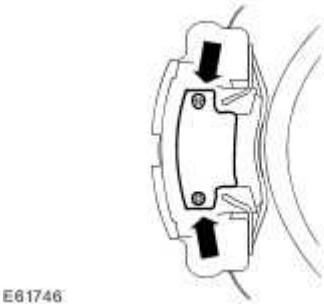

22. Install the wheels and tires.
[Wheel and Tire (74.20.05)](#)

23. **NOTE:**
    Always use fluid from a sealed container and dispose of used fluid safely.

Fill up the brake master cylinder reservoir to the MAX mark as necessary.

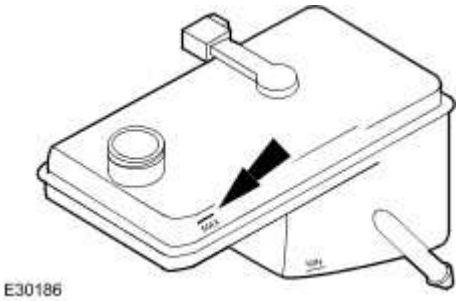

www.JagDocs.com

24.

CAUTION: Make sure that the brake master cylinder reservoir filler cap does not become contaminated.

Install the brake master cylinder reservoir filler cap.

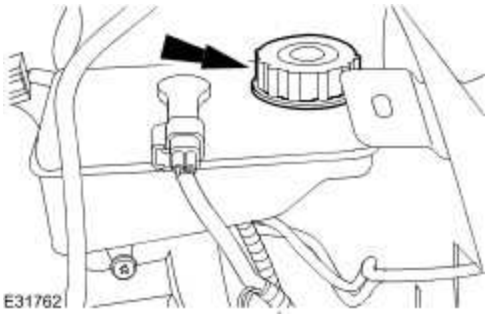

Published: Mar 12, 2014

Brake System Bleeding (70.25.03) – Armoured Vehicles

WARNING: Brake fluid contains polyglycol ethers and polyglycols. Avoid contact with the eyes. Wash hands thoroughly after handling, as prolonged contact may cause irritation and dermatitis. If brake fluid contacts the eyes, flush the eyes with cold water or eyewash solution and seek medical attention. If taken internally do not induce vomiting, seek immediate medical attention. Failure to follow these instructions may result in personal injury.

CAUTION: Make sure that the vehicle is standing on a level surface or supported on a wheel free lift. Failure to follow these instructions may result in damage to the vehicle.

CAUTION: If brake fluid comes into contact with the paintwork, the affected area must be immediately washed down with cold water. Failure to follow this instruction may result in damage to the vehicle.

NOTE:

The system consists of separate circuits for each front and diagonally opposite rear wheel. Each front to rear circuit and each wheel circuit can be bled individually of each other.

NOTE:

The front brake calipers and rear brake calipers have two bleed nipples each.

NOTE:

The service anti-lock braking system (ABS) hydraulic control unit is supplied pre-filled with brake fluid. Therefore, a conventional bleed procedure should be adequate to remove all the air from the brake system.

1.

CAUTION: Make sure that the brake master cylinder reservoir filler cap does not become contaminated. Failure to follow this instruction may result in damage to the vehicle.

Remove the brake master cylinder reservoir filler cap.

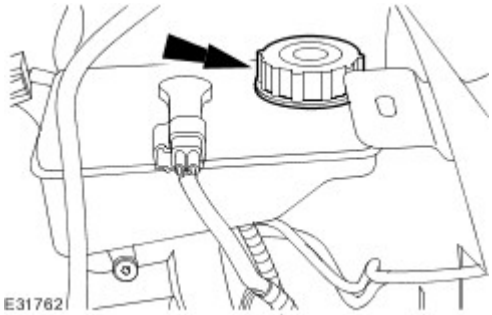

2. **NOTE:**

Always use fluid from a sealed container and dispose of used fluid safely.

www.JagDocs.com

Fill the brake master cylinder reservoir to the MAX mark as necessary.

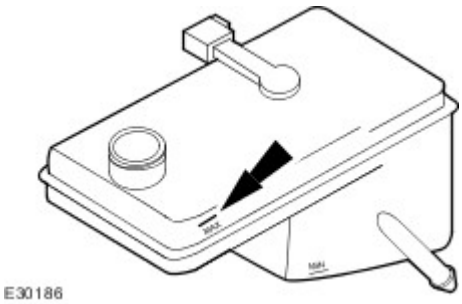

3. Remove the wheels and tires.

4.

CAUTION: Make a note of the position of the brake caliper bleed nipple shields. Failure to follow this instruction may result in damage to the vehicle.

Reposition the brake caliper bleed nipple shields.

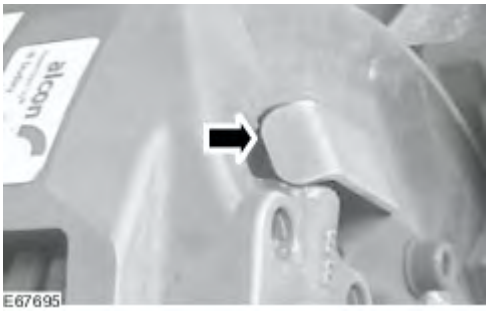

5. Install a bleed tube to the rear right-hand brake caliper bleed nipple.
   - Remove the bleed nipple rubber cover (s).

6. Bleed the circuit.
   - Make sure the bleed tube is firmly attached to the bleed nipple.
   - Submerge the end of the bleed tube in a bleed jar containing a small quantity of approved brake fluid.
   - Position the bleed jar base at least 300 mm (12 in) above the bleed nipple to maintain fluid pressure and prevent air leaking past the bleed nipple threads.
   - Open the bleed nipple half a turn.
   - Slowly apply the brake pedal to its maximum travel (this forces brake fluid into the bleed jar).
   - Close the bleed nipple.
   - Return the brake pedal to the rest position.
   - Wait 2 seconds to allow the brake fluid to replenish the system.
   - Fill up the brake master cylinder reservoir to the MAX mark as necessary.
   - Continue to bleed the circuit until air-free brake fluid is pumped into the jar.
   - Tighten the bleed nipple to 14 Nm.
   - Install the bleed nipple cover (s) and tighten to 5 Nm.

7.

CAUTION: Make sure that the fluid bleeding procedure is carried out on ALL of the brake caliper bleed nipples. Failure to follow this instruction may result in damage to the vehicle.

Repeat the procedure for the rear left, front right and front left-hand brake circuits.

8.

CAUTION: Make sure the brake caliper bleed nipple shields are correctly aligned. Failure to follow this instruction may result in damage to the vehicle.

Reposition the brake caliper bleed nipple shields.

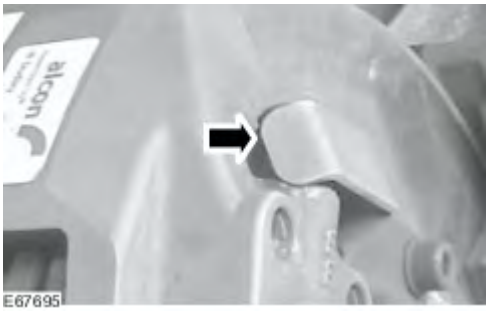

9. **NOTE:**

Always use fluid from a sealed container and dispose of used fluid safely.

Fill up the brake master cylinder reservoir to the MAX mark.

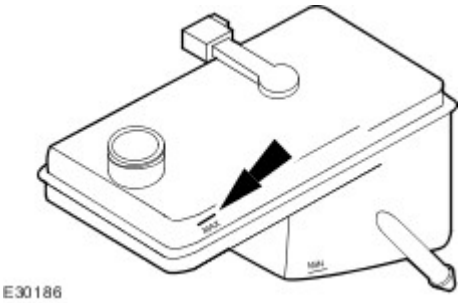

10. Install the wheels and tires.

www.JagDocs.com

11.

CAUTION: Make sure that the brake master cylinder reservoir filler cap does not become contaminated.

Install the brake master cylinder reservoir filler cap.

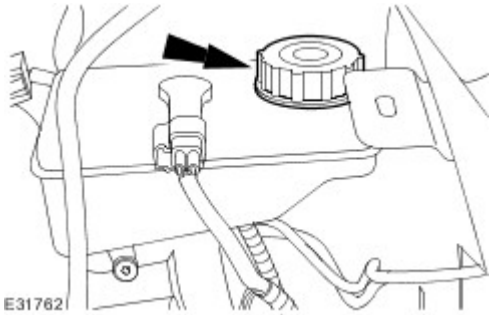

Brake System - VIN Range: G00442->G45703

WARNING: Brake fluid contains polyglycol ethers and polyglycols. Avoid contact with the eyes. Wash hands thoroughly after handling, as prolonged contact may cause irritation and dermatitis. If brake fluid contacts the eyes, flush the eyes with cold water or eyewash solution and seek medical attention. If taken internally do not induce vomiting, seek immediate medical attention. Failure to follow these instructions may result in personal injury.

The braking system is a diagonally split, dual circuit design featuring front and rear disc brakes.

The hydraulic system provides separate circuits for each pair of diagonally opposed wheels (left front, right rear and right front, left rear).

The standard front brake caliper has two retaining bolts that attach the brake caliper to the anchor plate. These are of double, sliding piston type which makes sure equal effort is applied through both brake pads. The anchor plate is attached to the wheel knuckle with two bolts. The standard rear brake calipers are single pistoned floating caliper type, which also incorporates the park brake mechanism. The standard brake disc is manufactured from cast iron and is of the vented type. It is retained on the hub by two retaining clips and the wheel studs.

The Brembo front and rear brake calipers have two retaining bolts that attach the brake caliper to the wheel knuckle. These are four piston fixed type which makes sure that equal effort is applied through both brake pads.The Brembo rear brakes have separate brake calipers for the parking brake. The Brembo brake disc is manufactured from cast iron and is of the vented type. It is retained on the hub by two retaining clips and the wheel studs. The brake pads in all cases are asbestos free.

Braided steel brake hoses are now fitted to reduce expansion under braking pressure and are of a light weight design.

The brake master cylinder is of a tandem design and is linked to a brake booster to reduce the brake pedal effort. The tandem design will make sure that in the event of one brake circuit failure the other will remain fully operational. The brake booster operating rod is connected directly to the brake pedal.

www.JagDocs.com

The parking brake module is located in the luggage compartment behind the right-hand rear luggage compartment trim panel and operates the rear brakes through a motor and cable system.

Brake System - VIN Range: G45704->G99999

WARNING: Brake fluid contains polyglycol ethers and polyglycols. Avoid contact with the eyes. Wash hands thoroughly after handling, as prolonged contact may cause irritation and dermatitis. If brake fluid contacts the eyes, flush the eyes with cold water or eyewash solution and seek medical attention. If taken internally do not induce vomiting, seek immediate medical attention. Failure to follow these instructions may result in personal injury.

The braking system is a diagonally split, dual circuit design featuring front and rear disc brakes.

The hydraulic system provides separate circuits for each pair of diagonally opposed wheels (left front, right rear and right front, left rear).

The standard front brake caliper has two retaining bolts that attach the brake caliper to the anchor plate. These are of single, sliding piston type. The anchor plate is attached to the wheel knuckle with two bolts. The standard brake disc is manufactured from cast iron and is of the vented type. It is retained on the hub by two retaining clips and the wheel studs.

The high performance front brake caliper has two retaining bolts that attach the brake caliper to the anchor plate. These are of single, sliding piston type. The anchor plate is attached to the wheel knuckle with two bolts. The high performance brake disc is manufactured from cast iron and is of the vented type. It is retained on the hub by two retaining clips and the wheel studs.

The rear brake calipers are single pistoned floating caliper type, which also incorporates the park brake mechanism. In addition, the high performance caliper has a logo badge which has to be removed when changing the brake pads. The brake disc is manufactured from cast iron and is of the vented type. It is retained on the hub by two retaining clips and the wheel studs.

The brake pads in all cases are asbestos free.

Braided steel brake hoses are fitted to reduce expansion under braking pressure and are of a light weight design.

The brake master cylinder is of a tandem design and is linked to a brake booster to reduce the brake pedal effort. The tandem design will make sure that in the event of one brake circuit failure the other will remain fully operational. The brake booster operating rod is connected directly to the brake pedal.

www.JagDocs.com

The parking brake module is located in the luggage compartment behind the right-hand rear luggage compartment trim panel and operates the rear brakes through a motor and cable system.

Brake System

Principles of Operations

The brake system operates by transferring effort applied to the brake pedal, by the driver to the brakes at each wheel.

The braking effort is distributed to each wheel, using a hydraulic system. The system is assisted using a vacuum brake booster that reduces pedal effort for a given hydraulic pressure. The parking brake operates on the rear wheels and is applied using a pull/push switch mounted on the floor console. The adjustable pedal system allows adjustment of the throttle, brake and clutch pedals by a switch fitted on the steering column shroud.

Inspection and Verification

NOTE:

> Prior to carrying out any diagnosis, make sure that the brake system warning indicator is functional.

Visually examine the front and rear wheel and tire assemblies for damage such as uneven wear patterns, tread worn out or sidewall damage. Verify the tires are the same size, type and, where possible, same manufacture. Replace the damaged wheel or excessively worn tire. For additional information, refer to <<204-04>>.

Wheels and tires must be cleared of any foreign matter and tire pressures adjusted to the correct specification.

If the tires exhibit uneven wear or feathering, the cause must be corrected. Check the steering and suspension components for damage or wear and, if necessary, check and adjust front wheel alignment. For additional information, refer to <<204-00>>.

Road Test

Visual Inspection Chart

Mechanical	Electrical
Brake master cylinder	Parking brake actuator

www.JagDocs.com

Brake caliper piston(s)	Parking brake module
Parking brake caliper piston(s)	Parking brake switch
Brake discs	Damaged or corroded wiring harness
Wheel bearings	Brake master cylinder fluid level switch
Brake pads	Adjustable pedal motor
Power brake booster	Adjustable pedal switch
Brake pedal linkage	
Brake booster vacuum hose	
Tires	
Debris	
Adjustable pedal drive cables	

Carry out a road test to compare actual vehicle braking performance with the performance standards expected by the driver. The ability of the test driver to make valid comparisons and detect performance deficiencies will depend on experience.

The driver should have a thorough knowledge of brake system operation and accepted general performance guidelines to make good comparisons and detect performance concerns.

An experienced brake technician will always establish a route that will be used for all brake diagnosis road tests. The roads selected will be reasonably smooth and level. Gravel or bumpy roads are not suitable because the surface does not allow the tires to grip the road equally. Crowned roads should be avoided because of the large amount of weight shifted to the low set of wheels on this type of road. Once the route is established and consistently used, the road surface variable can be eliminated from the test results.

Before a road test, obtain a complete description of the customer concerns or suspected condition. From the description, the technician's experience will allow the technician to match possible causes with symptoms. Certain components will be tagged as possible suspects while others will be eliminated by the evidence. More importantly, the customer description can reveal unsafe conditions which should be checked or corrected before the road test. The description will also help form the basic approach to the road test by narrowing the concern to specific components, vehicle speed or conditions.

Begin the road test with a general brake performance check. Keeping the description of the concern in mind, test the brakes at different vehicle speeds using both light and heavy pedal pressure. To determine if the concern is in the front or rear braking system, use the brake pedal and then use the parking brake control. If the condition (pull, vibration, pulsation) occurs only with the parking brake, the concern is in the rear brake system.

If the concern becomes evident during this check, verify it fits the description given before the road test. If the concern is not evident, attempt to duplicate the condition using the information from the description.

If a concern exists, use the Symptom Chart in order to isolate it to a specific sub-system and condition description. From this description, a list of possible sources can be used to further narrow the cause to a specific component or condition.

Brakes noisy

Possible Source(s):

- Brake pads.
- Brake discs.

Action(s) to take:

- GO to Pinpoint Test A.

Vibration when brakes are applied

Possible Source(s):

- Wheels require balancing.
- Wheel hub nuts.
- Brake caliper mounting bolts.
- Brake pads.
- Foreign material/scratches/corrosion on brake disc contact surfaces.
- Excessive brake disc thickness variation.
- Excessive brake disc runout.
- Wheel bearing wear or failure.

www.JagDocs.com

- Suspension bush wear or failure.
- Steering bush wear or failure.

Action(s) to take:

- Go to Pinpoint Test B.

The brakes pull or drift

Possible Source(s):

- Tire pressures/wear.
- Brake calipers.
- Brake pads.
- Brake discs.
- Wheel alignment adjustment.
- Wheel bearing.
- Suspension bushes and ball joints.

Action(s) to take:

- GO to Pinpoint Test C.

The pedal feels spongy

Possible Source(s):

- Air in brake system.
- Leak in hydraulic system.
- Brake booster/master cylinder.
- Brake pads.

Action(s) to take:

- GO to Pinpoint Test D.

The pedal goes down fast

Possible Source(s):

- Air in brake system.
- Leak in hydraulic system.
- Brake booster/master cylinder.
- Brake pads.

Action(s) to take:

- GO to Pinpoint Test E.

The pedal goes down slowly

Possible Source(s):

- Air in brake system.
- Brake booster/master cylinder.

Action(s) to take:

- Go to Pinpoint Test F.

Excessive brake pedal effort

Possible Source(s):

- Brake pads.
- Brake booster.

Action(s) to take:

- GO to Pinpoint Test G.

Brake lockup during light brake pedal force

Possible Source(s):

- Brake pads.

www.JagDocs.com

- Brake calipers.

Action(s) to take:

- GO to Pinpoint Test H.

Brakes drag

Possible Source(s):

- Parking brake control applied/malfunction.
- Seized parking brake cables.
- Seized caliper slide pins.
- Seized brake caliper.
- Brake booster.
- Pedal gear.

Action(s) to take:

- GO to Pinpoint Test I.

Excessive/Erratic brake pedal travel

Possible Source(s):

- Hydraulic system.
- Brake pads.
- Brake discs.
- Hub and bearing assembly.

Action(s) to take:

- GO to Pinpoint Test J.

The red brake warning indicator is always on

Possible Source(s):

- Fluid level.

Action(s) to take:

- FILL the system to specification. CHECK for leaks.

Possible Source(s):

- Brake fluid level sensor.

Action(s) to take:

- INSTALL a new brake master cylinder fluid reservoir. For additional information, refer to <<206-06>>.

Possible Source(s):

- Parking brake control.

Action(s) to take:

- For additional information,<<206-05>>

Possible Source(s):

- Electrical circuit.

Action(s) to take:

- For additional information,<<206-05>>

Slow or incomplete brake pedal return

Possible Source(s):

- Brake pedal binding.
- Brake booster/master cylinder.

Action(s) to take:

- GO to Pinpoint Test K.

www.JagDocs.com

PINPOINT TEST G189234p1 : BRAKES NOISY

G189234t1 : INSPECT BRAKE PADS

1. Inspect the condition of the front and rear brake pads. Check for damage to any anti-squeal shims.

- **Are the brake pads OK?**

-> Yes
GO to Pinpoint Test G189234t2.

-> No
CLEAN the front brake pads or INSTALL new front brake pads if necessary. For additional information, refer to <<206-03>>. CLEAN the rear brake pads or INSTALL new rear brake pads if necessary. For additional information, refer to <<206-04>>. Test vehicle for presence of brake squeal.

G189234t2 : INSPECT BRAKE DISCS

1. Inspect the brake discs for excessive corrosion, wear or disc thickness variation.

- **Does excessive corrosion, wear or disc thickness variation exist?**

-> Yes
INSTALL new front brake discs and brake pads. For additional information, refer to <<206-03>>. INSTALL new rear brake discs and brake pads. For additional information, refer to <<206-04>>. TEST the system for normal operation.

-> No
Vehicle is OK.

PINPOINT TEST G189234p2 : VIBRATION WHEN BRAKES ARE APPLIED

G189234t3 : ROAD TEST VEHICLE

1. Road test the vehicle between 40-80 km/h (25-50 mph) without applying brakes.

- **Is the vibration present?**

-> Yes
TEST for noise vibration and harshness. For additional information, refer to <<100-04>>. REPEAT road test if necessary.

-> No
GO to Pinpoint Test G189234t4.

G189234t4 : CHECK FOR BRAKE VIBRATION

1. Road test the vehicle between 40-80 km/h (25-50 mph) with light and medium application on the brake pedal.

- **Is a vibration present?**

-> Yes
CHECK the brake caliper mounting bolts and wheel hub nuts and TIGHTEN as necessary. CHECK the balance of all road wheels and REPAIR as necessary. CHECK the brake discs for excessive wear, runout, thickness variation or cracks.
INSTALL new brake discs and brake pads as necessary. GO to Pinpoint Test G189234t5.

-> No
Vehicle is OK.

G189234t5 : IS VIBRATION STILL PRESENT UNDER BRAKE APPLICATION?

1. Road test the vehicle between 40-80 km/h (25-50 mph) with light and medium application on the brake pedal.

- **Is a vibration present?**

-> Yes
CHECK for wear or failure of steering bushes. For additional information, refer to <<211-02>>. CHECK for wear or failure of steering ball joints. For additional information, refer to <<211-03>>. CHECK for wear or failure of front wheel bearings, suspension bushes and ball joints. For additional information, refer to <<204-01>>. CHECK for wear or failure of rear wheel bearings, suspension bushes and ball joints. For additional information, refer to <<204-02>>.

-> No
Vehicle is OK.

PINPOINT TEST G189234p3 : THE BRAKES PULL OR DRIFT

G189234t6 : ROAD TEST VEHICLE

1. Road test the vehicle and apply the brake pedal.

- **Does the vehicle pull or drift?**

www.JagDocs.com

-> Yes
GO to Pinpoint Test G189234t7.

-> No
Vehicle is OK.

G189234t7 : INSPECT TIRE PRESSURE

1. Check for excessive tire wear or incorrect pressures.

- **Are the tires at the correct pressure and in good condition?**

-> Yes
GO to Pinpoint Test G189234t8.

-> No
ADJUST the tire pressures or INSTALL new tires if excessively worn. TEST the system for normal operation.

G189234t8 : CHECK CALIPERS

1. Check the front brake caliper pistons for binding, leaking or sticking. For additional information, refer to <<206-03>>. Check the rear brake caliper pistons for binding, leaking or sticking. For additional information, refer to <<206-04>>.

- **Do the disc brake caliper pistons and pins bind, leak or stick?**

-> Yes
INSTALL new brake calipers as necessary. TEST the system for normal operation.

-> No
GO to Pinpoint Test G189234t9.

G189234t9 : INSPECT BRAKE DISCS

1. Check the brake discs for excessive damage, thickness variation or runout. For additional information, refer to General Procedures.

- **Does excessive damage or runout exist?**

-> Yes
INSTALL new brake discs and brake pads as necessary. TEST the system for normal operation.

-> No
GO to Pinpoint Test G189234t10.

G189234t10 : INSPECT THE FRONT HUB AND WHEEL BEARING ASSEMBLY

1. Check the front hub and wheel bearing assembly. For additional information, refer to <<204-00>>.

- **Are the wheel bearings OK?**

-> Yes
GO to Pinpoint Test G189234t11.

-> No
INSTALL new wheel bearings. For additional information, refer to <<204-01>>. TEST the system for normal operation.

G189234t11 : CHECK SUSPENSION BUSHES AND BALL JOINTS.

1. Check all suspension bushes and ball joints.

- **Are the suspension bushes and ball joints OK?**

-> Yes
GO to Pinpoint Test G189234t12.

-> No
INSTALL new front suspension bushes and ball joints as required. For additional information, refer to <<204-01>>. INSTALL new rear suspension bushes and ball joints as required. For additional information, refer to <<204-02>>.

G189234t12 : CHECK VEHICLE ALIGNMENT

1. Check the vehicle alignment. For additional information, refer to <<502-00>>.

- **Is the alignment within specification?**

-> Yes
Vehicle is OK.

-> No
Adjust the alignment as necessary. For additional information, refer to <<502-00>>.

PINPOINT TEST G189234p4 : THE PEDAL FEELS SPONGY

G189234t13 : CHECK FOR SPONGY PEDAL (ENGINE OFF)

1. Check for a firm brake pedal.

- **Is the brake pedal effort and brake pedal travel normal?**

www.JagDocs.com

-> Yes
Vehicle is OK.

-> No
GO to Pinpoint Test G189234t14.

G189234t14 : CHECK BRAKE PEDAL RESERVE (ENGINE OFF)

1. Pump the brake pedal 10 times and hold on the final application.

- **Does the brake pedal feel firm on final application?**

-> Yes
GO to Pinpoint Test G189234t15.

-> No
BLEED the brake system. For additional information, refer to General Procedures. TEST the system for normal operation.

G189234t15 : CHECK BRAKE PEDAL RESERVE (ENGINE ON)

1. Engine is idle. 2. Apply the brake pedal lightly three or four times. 3. Wait 15 seconds for the vacuum to recover. 4. Push down on the brake pedal until it stops moving downward or an increased resistance to the brake pedal travel occurs. 5. Hold the brake pedal in the applied position while increasing the engine speed to 2000 revs/min. 6. Release the accelerator pedal.

- **Does the brake pedal move downward as the engine speed returns to idle?**

-> Yes
GO to Pinpoint Test G189234t16.

-> No
CHECK the vacuum to brake booster. For additional information, refer to <<206-07>>.

G189234t16 : CHECK BRAKE FLUID LEVEL

1. Check the brake master cylinder reservoir fluid level.

- **Is the fluid level OK?**

-> Yes
BLEED the brake system. For additional information, refer to General Procedures. TEST the system for normal operation.

-> No
CHECK brake master cylinder reservoir sealing points. For additional information, refer to Brake

Master Cylinder in this section. ADD fluid and BLEED the brake system. For additional information, refer to General Procedures. TEST the system for normal operation. REPEAT road test if necessary.

PINPOINT TEST G189234p5 : THE PEDAL GOES DOWN FAST

G189234t17 : ROAD TEST VEHICLE

1. Road test and apply the brake pedal.

- **Is the brake pedal effort and brake pedal travel normal?**

-> Yes
Vehicle is OK.

-> No
GO to Pinpoint Test G189234t18.

G189234t18 : CHECK BRAKE FLUID LEVEL

1. Check the brake master cylinder reservoir fluid level.

- **Is the fluid level within specification?**

-> Yes
GO to Pinpoint Test G189234t19.

-> No
CHECK the brake master cylinder reservoir sealing points. For additional information, refer to Brake Master Cylinder Component Test in this section. ADD fluid and BLEED brake system. For additional information, refer to General Procedures. TEST the system for normal operation. REPEAT road test if necessary.

G189234t19 : CHECK BRAKE PEDAL TRAVEL-PRESSURIZE SYSTEM

1. Pump the brake pedal rapidly (five times).

- **Does the brake pedal travel build up and then hold?**

-> Yes
BLEED the brake system. Refer to the General Procedures. TEST the system for normal operation. REPEAT road test. For additional information, refer to <<206-06>>

-> No
GO to Pinpoint Test G189234t20.

www.JagDocs.com

G189234t20 : CHECK FOR BRAKE SYSTEM LEAKS

1. Check for external brake system leaks. For additional information, refer to Brake master cylinder in this section.

- **Are leaks found?**

-> Yes
REPAIR as necessary, ADD fluid and BLEED brake system. For additional information, refer to General Procedures. TEST the system for normal operation. REPEAT road test.

-> No
System is OK.

PINPOINT TEST G189234p6 : THE PEDAL GOES DOWN SLOWLY

G189234t21 : ROAD TEST VEHICLE - CHECK BRAKE PEDAL OPERATION

1. Check if the condition occurs during actual stopping application by applying the brake pedal while the vehicle is moving.

- **Does the condition occur when the vehicle is moving?**

-> Yes
GO to Pinpoint Test G189234t22.

-> No
GO to Pinpoint Test G189234t23.

G189234t22 : CHECK FOR BRAKE SYSTEM LEAKS

1. Check for external brake system leaks. For additional information, refer to Brake master cylinder in this section.

- **Are there any external brake system leaks?**

-> Yes
REPAIR as necessary. ADD fluid and BLEED the brake system. For additional information, refer to General Procedures. TEST the system for normal operation.

-> No
GO to Pinpoint Test G189234t23.

G189234t23 : CARRY OUT A BRAKE MASTER CYLINDER BYPASS TEST

1. Test for brake master cylinder bypass condition. Refer to Brake master cylinder component test in this section.

- **Are any concerns found?**

-> Yes
INSTALL a new brake master cylinder, ADD fluid and BLEED the brake system. For additional information, refer to General Procedures. TEST the system for normal operation.

-> No
System is OK.

PINPOINT TEST G189234p7 : EXCESSIVE BRAKE PEDAL EFFORT

G189234t24 : CHECK BRAKE PADS

1. Check the brake pads for wear, contamination, correct installation, damage and type.

- **Are any concerns found?**

-> Yes
INSTALL the front brake pads correctly or INSTALL new front brake pads if necessary. For additional information, refer to <<206-03>>. INSTALL the rear brake pads correctly or INSTALL new rear brake pads if necessary. For additional information, refer to <<206-04>>. REPEAT road test.

-> No
GO to Pinpoint Test G189234t25.

G189234t25 : CHECK VACUUM

1. Disconnect the vacuum booster hose from the brake booster. 2. Connect a vacuum/pressure tester to the vacuum hose. 3. Run the engine at normal operating temperature. 4. Record the vacuum reading.

- **Is the reading 40.5kPa (12 in-Hg) or greater?**

-> Yes
GO to Pinpoint Test G189234t26.

-> No
LOCATE and REPAIR the source of low vacuum. TEST the system for normal operation.

www.JagDocs.com

G189234t26 : INSPECT SYSTEM

1. Switch the engine off. 2. Reconnect the vacuum hose. 3. Inspect the brake booster, rubber grommet, and all vacuum plumbing for cracks, holes, damaged connections, or missing clamps. 4. Pump the brake pedal several times to exhaust the vacuum. Push down on the brake pedal and hold.

- **Does the brake pedal move down when the engine is started?**

-> Yes
Vacuum system is OK.

-> No
GO to Pinpoint Test G189234t27.

G189234t27 : CHECK POWER BRAKE BOOSTER VALVE

1. Check the brake booster valve. For additional information, refer to Brake Booster in this section.

- **Is the power brake booster valve OK?**

-> Yes
CHECK the brake booster. For additional information, refer to Brake Booster in this section. INSTALL a new brake booster if necessary. TEST the system for normal operation.

-> No
INSTALL a new brake booster valve. TEST the system for normal operation.

PINPOINT TEST G189234p8 : BRAKE LOCKUP DURING LIGHT BRAKE PEDAL FORCE

G189234t28 : TEST BRAKE LOCKUP

1. Road test the vehicle and apply the brake pedal lightly.

- **Do the brakes lockup?**

-> Yes
GO to Pinpoint Test G189234t29.

-> No
Vehicle is OK.

G189234t29 : INSPECT BRAKE PADS

1. Inspect brake pads for contamination, correct installation, damage and type.

- **Are any concerns found?**

-> Yes
CHECK the front brake pads. For additional information, refer to <<206-03>>. CHECK the rear brake pads. For additional information, refer to <<206-04>>. INSTALL new brake pads as necessary. REPEAT road test.

-> No
GO to Pinpoint Test G189234t30.

G189234t30 : INSPECT BRAKE CALIPERS

1. Inspect brake calipers for binding, leaking or sticking.

- **Are any concerns found?**

-> Yes
CHECK the front brake calipers. For additional information, refer to <<206-03>>. CHECK the rear brake calipers. For additional information, refer to <<206-04>>. INSTALL the brake calipers correctly or INSTALL new brake calipers as necessary. TEST the system for normal operation. REPEAT road test if necessary.

-> No
Vehicle is OK.

PINPOINT TEST G189234p9 : BRAKES DRAG

G189234t31 : ROAD TEST VEHICLE

1. Road test the vehicle and apply the brakes.

- **Are the brakes functioning correctly?**

-> Yes
Vehicle is OK.

-> No
GO to Pinpoint Test G189234t32.

G189234t32 : CHECK BRAKE CALIPERS

1. Check the front caliper pistons for binding, leaking or sticking. For additional information, refer to <<206-03>>. Check the rear caliper pistons for binding, leaking or sticking. For additional information, refer to <<206-04>>.

www.JagDocs.com

- **Do the disc brake caliper pistons and pins bind, leak or stick?**

-> Yes
INSPECT the brake calipers and parking brake cables. INSTALL new components as necessary. Road test vehicle.

-> No
GO to Pinpoint Test G189234t33.

G189234t33 : CHECK BRAKE BOOSTER

1. Check the brake booster connecting rod alignment and travel. For additional information, refer to <<206-07>>.

- **Is the connecting rod OK?**

-> Yes
Vehicle is OK.

-> No
INSTALL a new brake booster. For additional information, refer to <<206-07>>. TEST the system for normal operation.

PINPOINT TEST G189234p10 : EXCESSIVE/ERRATIC BRAKE PEDAL TRAVEL

G189234t34 : TEST ON ROUGH ROAD

1. Road test the vehicle on rough road conditions. 2. Apply the brakes slowly.

- **Is the brake pedal effort and brake pedal travel normal?**

-> Yes
Vehicle is OK.

-> No
GO to Pinpoint Test G189234t35.

G189234t35 : CHECK BRAKE FLUID LEVEL

1. Check the brake master cylinder reservoir fluid level.

- **Is the fluid level OK?**

-> Yes
GO to Pinpoint Test G189234t36.

-> No
CHECK brake master cylinder reservoir sealing points. For additional information, refer to Brake master cylinder in this section. ADD brake fluid and BLEED the brake system. For additional information, refer to General Procedures. TEST the system for normal operation. REPEAT road test if necessary.

G189234t36 : CHECK BRAKE PEDAL RESERVE

1. Engine is idle. 2. Apply the brake pedal lightly three or four times. 3. Wait 15 seconds for the vacuum to replenish. 4. Push down on the brake pedal until it stops moving downward or an increased resistance to the brake pedal travel occurs. 5. Hold the brake pedal in the applied position while increasing the engine speed to 2000 revs/min. 6. Release the accelerator pedal.

- **Does the brake pedal move downward as the engine speed returns to idle?**

-> Yes
GO to Pinpoint Test G189234t37.

-> No
CHECK the vacuum to the brake booster. For additional information, refer to <<206-07>>.

G189234t37 : CHECK THE FRONT HUB AND BEARING ASSEMBLY

1. Check the front hub and bearing assembly. For additional information, refer to <<204-00>>

- **Are the front wheel bearings loose?**

-> Yes
INSTALL a new front wheel bearing if damaged. For additional information, refer to<<204-00>> TEST the system for normal operation.

-> No
CHECK the front brake discs for thickness variances. For additional information, refer to General Procedures.

PINPOINT TEST G189234p11 : SLOW OR INCOMPLETE BRAKE PEDAL RETURN

www.JagDocs.com

G189234t38 : CHECK FOR BRAKE PEDAL RETURN

1. Run the engine at fast idle while making several brake applications. 2. Pull the brake pedal rearward with approximately 44.5 N (10lb) force. 3. Release the brake pedal and measure the distance to the toe board. 4. Make a hard brake application. 5. Release the brake pedal and measure the brake pedal to toe board distance. The brake pedal should return to its original position.

- **Does the brake pedal return to its original position?**

-> Yes
Vehicle is OK.

-> No
GO to Pinpoint Test G189234t39.

G189234t39 : CHECK FOR BRAKE PEDAL BINDING

1. Check the brake pedal to make sure it is operating freely.

- **Is the brake pedal operating freely?**

-> Yes
INSTALL a new brake booster. For additional information, refer to <<206-07>>. TEST the system for normal operation.

-> No
REPAIR or INSTALL new brake pedal. TEST the system for normal operation.

Component Tests

Brake Booster

1 . Check all hoses and connections. All unused vacuum connectors should be capped. Hoses and their connections should be correctly secured and in good condition with no holes and no collapsed areas. Inspect the valve on the brake booster for damage.

2 . Check the hydraulic brake system for leaks or low fluid.

3 . With the transmission in PARK (automatic transmissions) or in NEUTRAL (manual transmissions), stop the engine and apply the parking brake. Pump the brake pedal several times to exhaust all vacuum in the system.

4 . With the engine switched off and all vacuum in the system exhausted, apply the brake pedal and hold it down. Start the engine. If the vacuum system is operating, the brake pedal will tend to move downward under constant foot pressure. If no motion is felt, the vacuum booster system is not functioning.

5 . Remove the vacuum hose from the brake booster. Manifold vacuum should be available at the

brake booster end of the hose with the engine at idle speed and the transmission in PARK or NEUTRAL. Make sure that all unused vacuum outlets are correctly capped, hose connectors are correctly secured and vacuum hoses are in good condition. When it is established that manifold vacuum is available to the brake booster, connect the vacuum hose to the brake booster and repeat Step 3. If no downward movement of the brake pedal is felt, install a new brake booster.

6 . Operate the engine for a minimum of 10 seconds at a fast idle. Stop the engine and allow the vehicle to stand for 10 minutes. Then, apply the brake pedal with approximately 89 N (20lb) of force. The pedal feel (brake application) should be the same as that noted with the engine running. If the brake pedal feels hard (no power assist), install a new valve and then repeat the test. If the brake pedal still feels hard, install a new brake booster. If the brake pedal movement feels spongy, bleed the brake system.

Brake Master Cylinder

Usually, the first and strongest indicator of anything wrong in the brake system is a feeling through the brake pedal. In diagnosing the condition of the brake master cylinder, check pedal feel as evidence of a brake concern. Check for brake warning lamp illumination and the brake fluid level in the brake master cylinder reservoir.

Normal Conditions

The following conditions are considered normal and are not indications that the brake master cylinder is in need of repair.

- New brake systems are designed to produce a pedal effort that is not as hard as in the past. Complaints of light pedal efforts should be compared to the pedal efforts of another vehicle of the same model and year.
- The fluid level will fall with brake pad wear.

Abnormal Conditions

NOTE:

Prior to carrying out any diagnosis, make sure the brake system warning indicator is functional.

Changes in the brake pedal feel or brake pedal travel are indicators that something could be wrong in the brake system. The diagnostic procedure and techniques use brake pedal feel, warning indicator illumination and low brake fluid level as indicators to diagnosing brake system concerns. The following conditions are considered abnormal and indicate that the brake master cylinder is in need of repair:

- Brake pedal goes down fast. This could be caused by an external or internal leak.
- Brake pedal goes down slowly. This could be caused by an internal or external leak.

www.JagDocs.com

- Brake pedal is low or feels spongy. This condition may be caused by no fluid in the brake master cylinder, reservoir cap vent holes clogged or air in the hydraulic system.

- Brake pedal effort is excessive. This may be caused by a bind or obstruction in the pedal/linkage, a faulty non return valve, booster or insufficient booster vacuum.

- Rear brakes lock up during light pedal force. This may be caused by damaged brake pads, a partially applied parking brake, a damaged ABS sensor or bearing failure.

- Brake pedal effort erratic. This condition could be caused by the brake booster or incorrectly installed brake pads.

- Brake warning indicator is on. This may be caused by low fluid level or float assembly damaged.

Non Pressure Leaks

Any reduced fluid volume in the brake master cylinder reservoir condition may be caused by two types of none pressure external leaks.

Type 1: An external leak may be occur at the brake master cylinder reservoir cap because of incorrect positioning of gasket and cap. Reposition cap and gasket.

Type 2: An external leak may occur at the brake master reservoir mounting seals. Repair such a leak by installing new seals and make sure that the brake master reservoir retaining bolt is correctly installed.

Type 3: An external leak may occur in the manual transmission clutch operating system. For additional information, refer to <<308-00>>.

Specifications

Lubricants, Fluids, sealers and Adhesives

CAUTION: Do not use brake fluid ITT Super Dot 4 on 2006my vehicles onwards. Failure to follow this instruction may result in damage to the vehicle.

NOTE:

Brake fluid ITT Super Dot 4 has now been superseded by Shell ESL Super Dot 4 which is the Jaguar recommended brake fluid. Shell ESL Super Dot 4 can be used on all model years.

Item	Specification
Brake fluid	ITT Super Dot 4
Brake fluid	Shell ESL Super Dot 4
Brake caliper slide pin grease	Klueber GLK1

Torque Specifications

Description	Nm	lb-ft	lb-in
Brake caliper anchor plate - Vehicles with 3.0L, 3.5L or 4.2L engine	103	76	-
Brake caliper retaining bolts - Vehicles with Brembo brakes	212	156	-
Brake caliper retaining bolts - Vehicles with 3.0L, 3.5L or 4.2L engine	34	25	-
Brake hose retaining bolt	35	26	-

www.JagDocs.com

Specifications

No data

Front Disc Brake - VIN Range: G00442->G45703

Vehicles without Brembo brakes

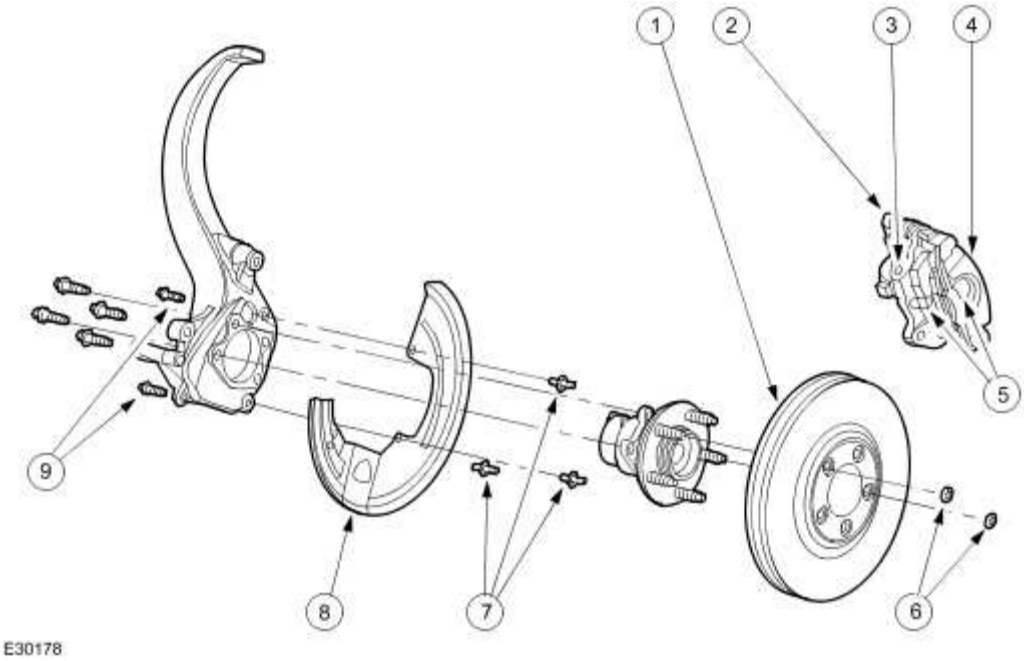

Item	Part Number	Description
1	—	Brake disc
2	—	Brake caliper guide pin retaining bolt
3	—	Brake caliper anchor plate
4	—	Brake caliper
5	—	Brake pads
6	—	Brake disc retaining clips
7	—	Brake disc shield retaining rivets
8	—	Brake disc shield

www.JagDocs.com

9	—	Brake caliper anchor plate retaining bolts

For vehicles without Brembo brakes, the brake system consists of the following components:

- Brake pads
- Double piston, floating calipers
- Brake discs
- Brake caliper anchor plates
- Steel braided brake hoses

The brake caliper has two retaining bolts that attach the brake caliper to the anchor plate. These are of double, sliding piston type which makes sure equal effort is applied through both brake pads. The anchor plate is attached to the wheel knuckle with two bolts. The hydraulic system provides separate circuits for each pair of diagonally opposed wheels (i.e. left front, right rear and right front, left rear).

The brake disc is manufactured from cast iron and is of the vented type. It is retained on the hub by two retaining clips and the wheel studs.

Vehicles with Brembo brakes

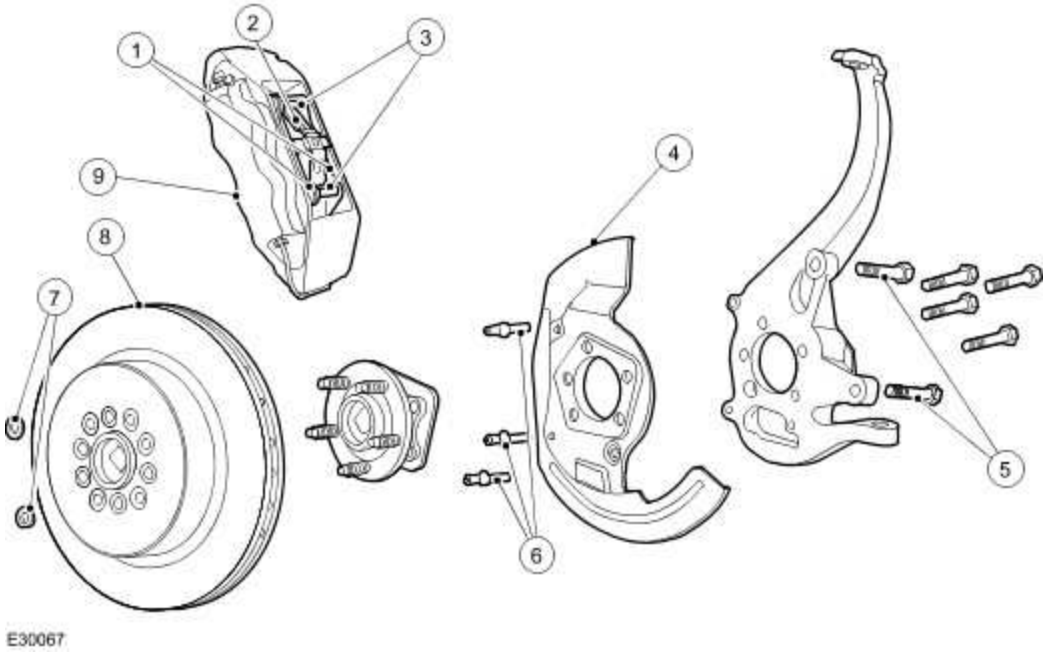

Item	Part Number	Description
1	—	Brake pads
2	—	Brake pad anti-rattle spring
3	—	Brake pad retaining pins

4	—	Brake disc shield
5	—	Brake caliper retaining bolts
6	—	Brake disc shield retaining rivets
7	—	Brake disc retaining clips
8	—	Brake disc
9	—	Brake caliper

For vehicles with Brembo brakes, the brake system consists of the following components:

- Brake pads
- Four piston, fixed calipers
- Drilled brake discs
- Steel braided brake hoses

The brake caliper has two retaining bolts that attach the brake caliper to the wheel knuckle. These are of four piston fixed type which makes sure that equal effort is applied through both brake pads. The hydraulic system provides separate circuits for each pair of diagonally opposed wheels (i.e. left front, right rear and right front, left rear).

The brake disc is manufactured from cast iron and is of the vented type. It is retained on the hub by two retaining clips and the wheel studs.

www.JagDocs.com

Front Disc Brake - VIN Range: G45704->G99999

Vehicles with standard brakes

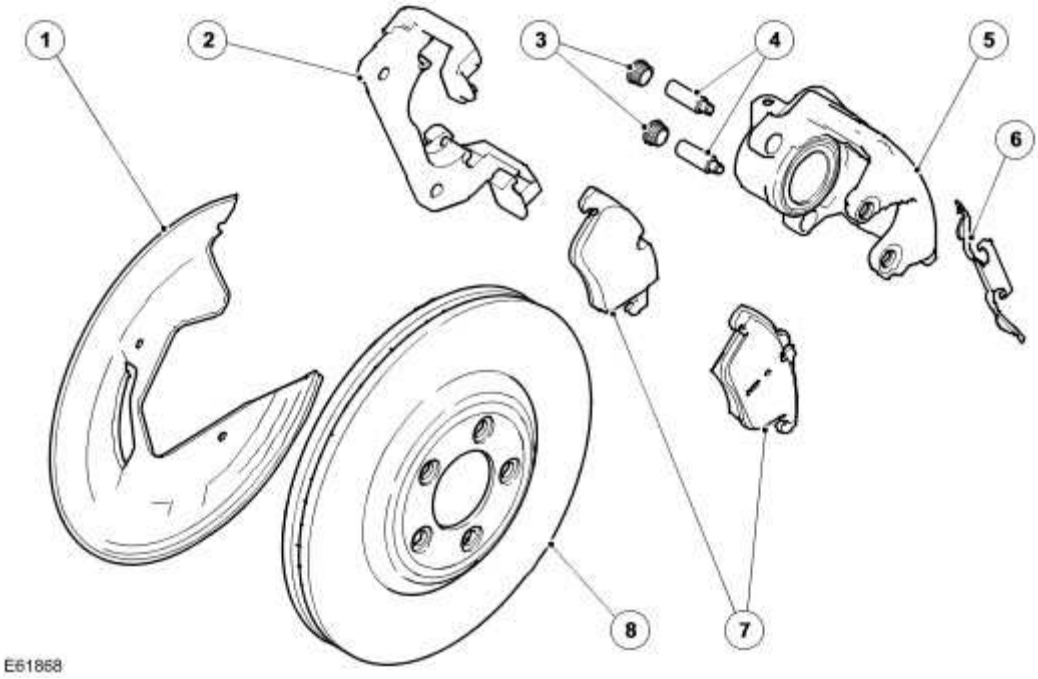

Item	Part Number	Description
1	—	Brake disc shield
2	—	Brake caliper anchor plate
3	—	Brake caliper retaining bolt dust covers
4	—	Brake caliper retaining bolts
5	—	Brake caliper
6	—	Anti-rattle spring
7	—	Brake pads
8	—	Brake disc

For vehicles with standard brakes, the brake system consists of the following components:

- Brake pads
- Single piston, floating calipers

- Brake discs
- Brake caliper anchor plates
- Steel braided brake hoses

The brake caliper has two retaining bolts that attach the brake caliper to the anchor plate. These are of single, sliding piston type. The anchor plate is attached to the wheel knuckle with two bolts. The hydraulic system provides separate circuits for each pair of diagonally opposed wheels (i.e. left front, right rear and right front, left rear).

The brake disc is manufactured from cast iron and is of the vented type. It is retained on the hub by two retaining clips and the wheel studs.

Vehicles with high performance brakes

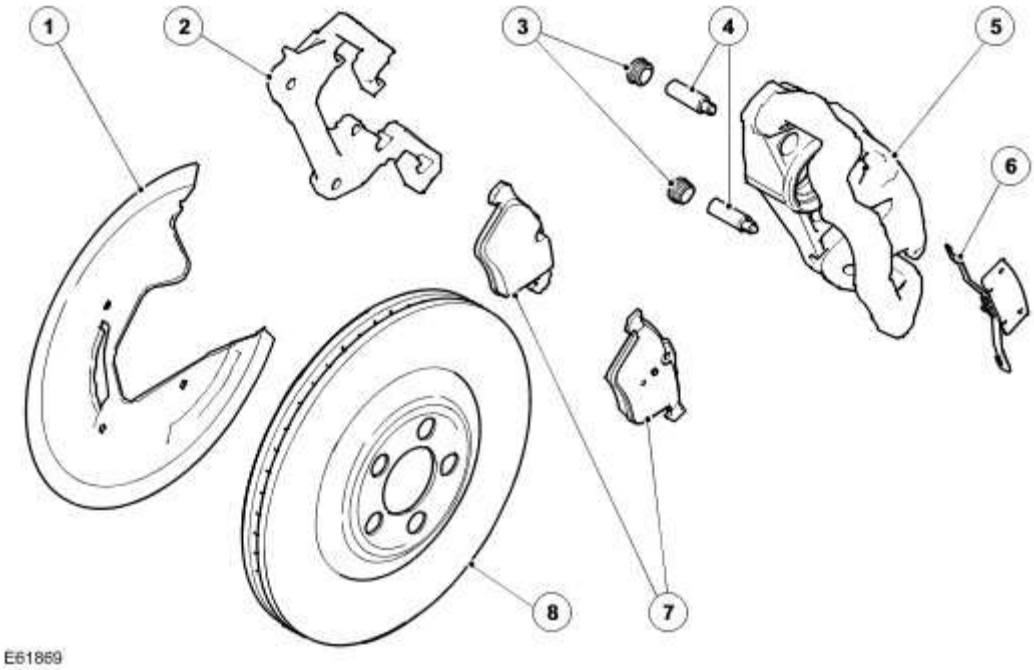

Item	Part Number	Description
1	—	Brake disc shield
2	—	Brake caliper anchor plate
3	—	Brake caliper retaining bolt dust covers
4	—	Brake caliper retaining bolts
5	—	Brake caliper
6	—	Anti-rattle spring

www.JagDocs.com

7	—	Brake pads
8	—	Brake disc

For vehicles with high performance brakes, the brake system consists of the following components:

- Brake pads
- Single piston, fixed calipers
- Brake discs
- Steel braided brake hoses

The brake caliper has two retaining bolts that attach the brake caliper to the anchor plate. These are of single, sliding piston type. The anchor plate is attached to the wheel knuckle with two bolts. The hydraulic system provides separate circuits for each pair of diagonally opposed wheels (i.e. left front, right rear and right front, left rear).

The brake disc is manufactured from cast iron and is of the vented type. It is retained on the hub by two retaining clips and the wheel studs.

Front Disc Brake

STANDARD BRAKES - COMPONENT LOCATION

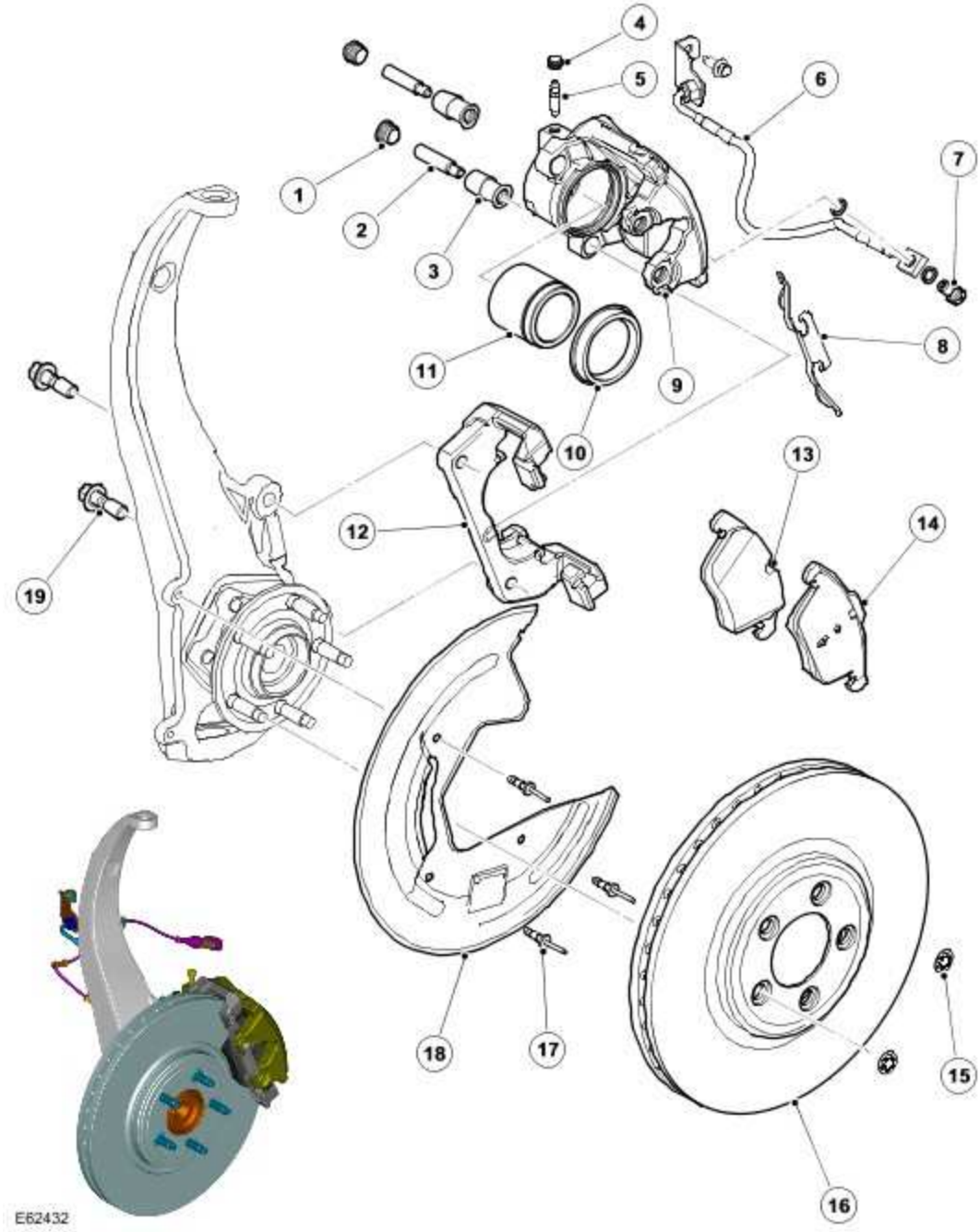

Item	Part Number	Description
1		Guide pin dust cover (2 off)
2		Guide pin (2 off)

www.JagDocs.com

3		Guide pin bush (2 off)
4		Bleed screw dust cap
5		Bleed screw
6		Brake hose
7		Bolt - brake hose to caliper
8		Anti-rattle spring
9		Brake caliper housing
10		Piston dust cover
11		Piston
12		Caliper carrier
13		Inboard brake pad
14		Outboard brake pad
15		Retaining washers (2 off)
16		Brake disc
17		Rivets (3 off)
18		Brake dust shield
19		Caliper carrier bolts (2 off)

INTRODUCTION

The front standard type braking system used on the naturally aspirated vehicles features 326 x 20 mm (12.83 x 0.79 in) diameter ventilated brake discs and cast iron, single piston, sliding calipers.

The caliper is mounted within a fixed carrier that is secured to the front wheel knuckle with 2 bolts. When hydraulic pressure is supplied to the caliper, the piston extends to force the inner pad against the brake disc. The caliper reacts and slides along 2 guide pins to bring the outer pad into contact with the brake disc.

Each inboard brake pad is installed with a pressed steel anti-rattle spring.

NOTE:

There is no wear indicator installed to the front brake pads.

The brake disc is manufactured from cast iron and is of the vented type. The disc is retained on the wheel hub by 2 retaining washers and the wheel nuts.

PERFORMANCE BRAKES - COMPONENT LOCATION

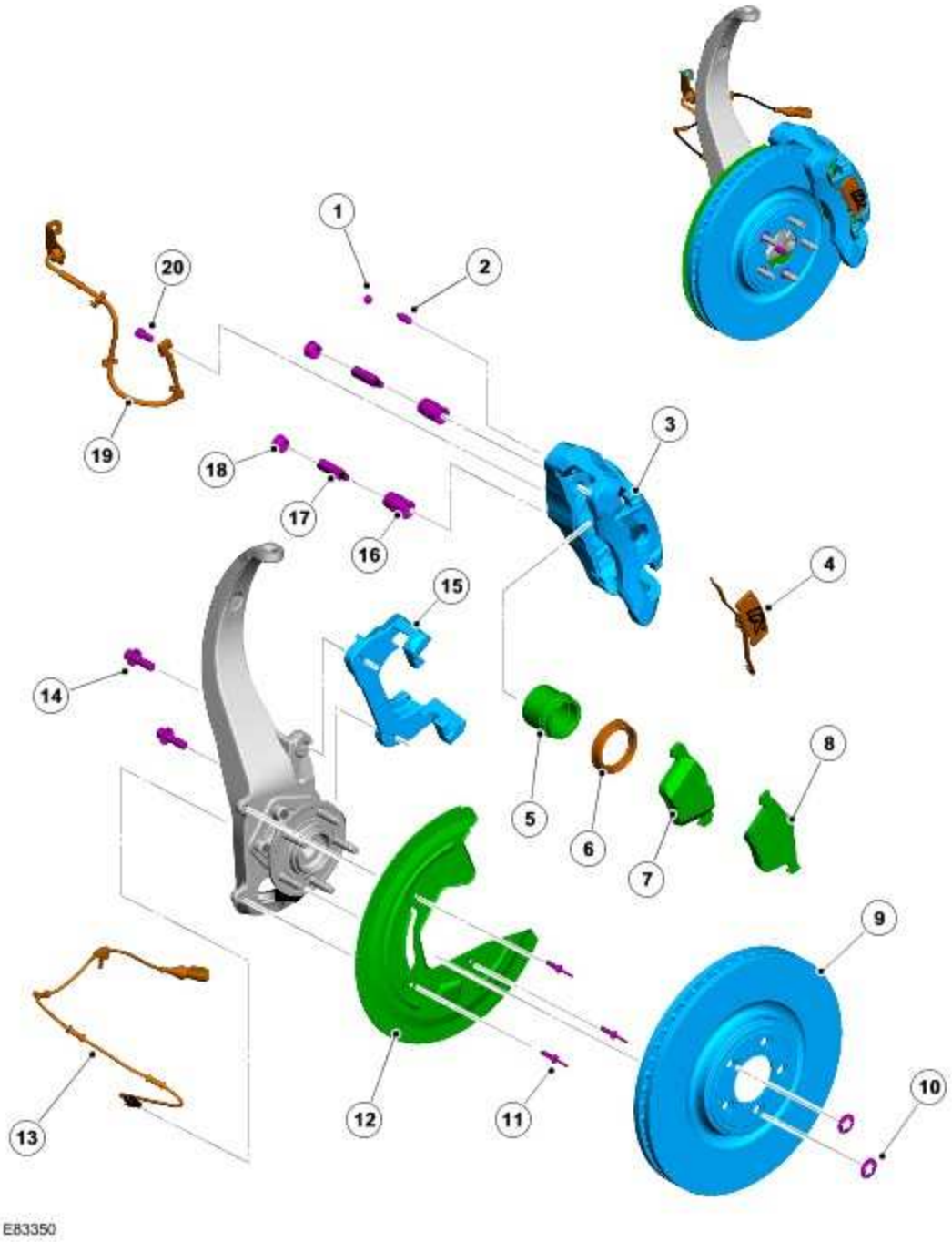

www.JagDocs.com

Item	Part Number	Description
1		Bleed screw dust cap
2		Bleed screw
3		Brake caliper housing
4		Anti-rattle spring (with 'R' type badge)
5		Piston
6		Piston dust cover
7		Inboard brake pad
8		Outboard brake pad
9		Brake disc
10		Retaining washers (2 off)
11		Rivets (3 off)
12		Brake dust shield
13		Anti-lock Brake System (ABS) sensor cable
14		Caliper carrier bolts (2 off)
15		Caliper carrier
16		Guide pin bush (2 off)
17		Guide pin (2 off)
18		Guide pin dust cover (2 off)
19		Brake hose
20		Bolt - brake hose to caliper

INTRODUCTION

The front performance type braking system used on the supercharged vehicle features 355 x 32 mm (13.98 x 1.26 in) diameter ventilated brake discs, and composite aluminum and cast iron, single piston, sliding calipers.

In addition, the brake calipers on the supercharged vehicle are painted and a logo badge is formed on the anti-rattle spring.

The caliper is mounted within a fixed carrier that is secured to the front wheel knuckle with 2 bolts. When hydraulic pressure is supplied to the caliper, the piston extends to force the inner pad against the brake disc. The caliper reacts and slides along 2 guide pins to bring the outer pad into contact with the brake disc.

Each inboard brake pad is installed with a pressed steel anti-rattle spring.

NOTE:

There is no wear indicator installed to the front brake pads.

The brake disc is manufactured from cast iron and is of the vented type. The disc is retained on the wheel hub by 2 retaining washers and the wheel nuts.

www.JagDocs.com

Published: Mar 12, 2014

Front Disc Brake – Armoured Vehicles

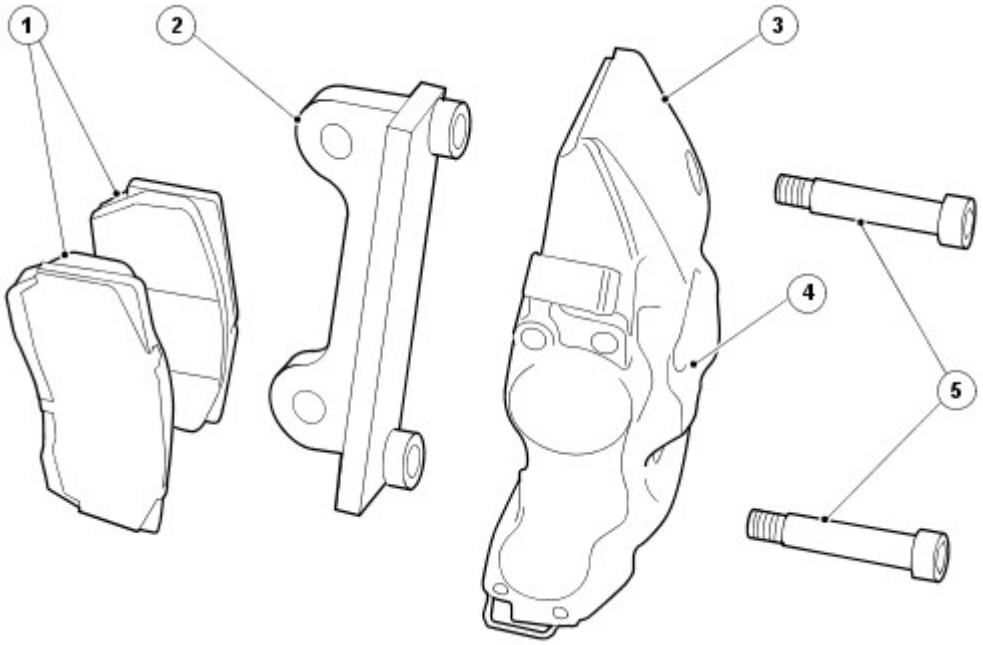

E66786

Item	Part Number	Description
1	—	Brake pads
2	—	Brake caliper anchor plate
3	—	Brake caliper
4	—	Anti-rattle spring
5	—	Brake caliper retaining bolts

CAUTION: The brake caliper is aligned / centralized to the brake disc when the vehicle is built. The vehicle may have shims fitted between the brake caliper anchor plate and the wheel knuckle. Care must be taken not to disturb this alignment. When removing the caliper; remove only the bolts that secure the brake caliper to the brake caliper anchor plate. DO NOT loosen any other caliper bolts. This alignment / centralization MUST be checked / set when the wheel knuckle is replaced. Failure to follow this instruction may result in damage to the vehicle.

The front disc brake system consists of the following components:

- Brake pads
- Six piston, apposed brake calipers
- Ventilated brake discs
- Brake caliper anchor plates
- Steel braided brake hoses
- Tamper proof brake bleeding screw shields

The brake caliper has two retaining bolts that attach the brake caliper to the brake caliper anchor plate. The brake caliper anchor plate is attached to the wheel knuckle with two bolts. The hydraulic system provides separate circuits for each pair of diagonally opposed wheels (i.e. left front, right rear and right front, left rear).

The brake disc is manufactured from cast iron and is of the grooved vented type. It is retained on the hub by two retaining clips and the wheel studs.

Each brake caliper features two brake bleeding screws, which are fitted with tamper proof brake bleeding screw shields, these shields must be fitted correctly to prevent unauthorized access when the wheels and tires are installed.

www.JagDocs.com

Front Disc Brake

For additional information, refer to<<206-00>>.

Brake Caliper - Vehicles With: Standard Brakes, VIN Range: G00442->G45703 (70.55.02)

Special Service Tools

Brake pedal hold-down tool
JDS 9013

Removal

1 . Remove the brake pads.
For additional information, refer to

2 . **CAUTION: Brake fluid contains polyglycol ethers and polyglycols. Avoid contact with the eyes. Wash hands thoroughly after handling, as prolonged contact may cause irritation and dermatitis. If brake fluid contacts the eyes, flush the eyes with cold water or eyewash solution and seek medical attention. If taken internally do not induce vomiting, seek immediate medical attention. Failure to follow these instructions may result in personal injury.**

CAUTION: If brake fluid comes into contact with the paintwork, the affected area must be immediately washed down with cold water.

CAUTION: The brake caliper must be supported at all times.

www.JagDocs.com

CAUTION: Cap the brake hose to prevent loss of fluid and dirt ingress.

NOTE:

To prevent the loss of brake fluid, apply the brake pedal hold-down tool and adjust to hold the brake pedal down 40 mm (1.6 in).

Detach the brake hose.

- Remove and discard the sealing washers.

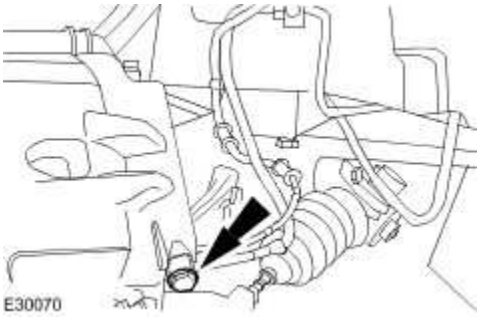

3 . Remove the brake caliper.

- Remove and discard the brake caliper upper retaining bolt.

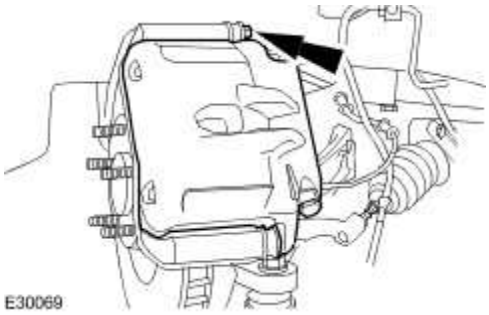

Installation

1 . **CAUTION: If brake fluid comes into contact with the paintwork, the affected area**

must be immediately washed down with cold water.

Install the brake caliper.

- Install a new brake caliper upper retaining bolt.
- Tighten to 34 Nm.

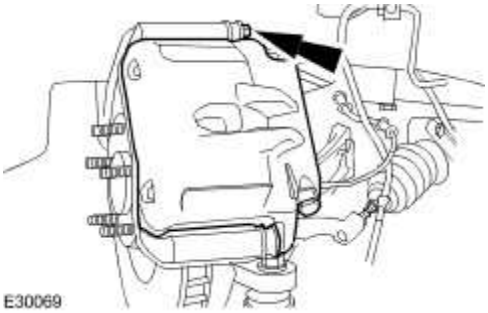

2 . Attach the brake hose.

- Install new sealing washers.
- Tighten to 35 Nm.

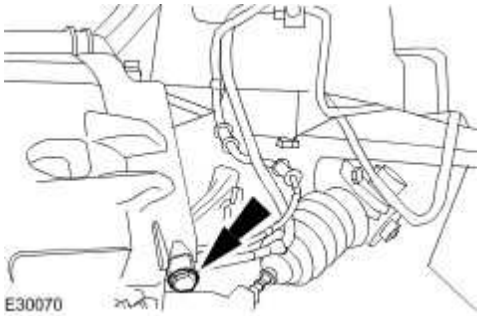

3 . Remove the brake pedal hold-down tool.

4 . Install the brake pads.
For additional information, refer to

5 . Bleed the brake system.
For additional information, refer to

www.JagDocs.com

Brake Caliper - Vehicles With: Standard Brakes, VIN Range: G45704->G99999 (70.55.02)

Special Service Tools

Brake pedal hold-down tool
JDS 9013

Removal

1 . Remove both front wheels and tires.
For additional information, refer to Wheel and Tire (74.20.05)

2 . **NOTE:**

Left-hand shown, right-hand similar.

Remove the anti-rattle spring.

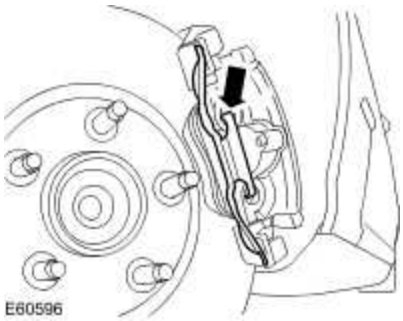

3 . **WARNING: Brake fluid contains polyglycol ethers and polyglycols. Avoid contact with the eyes. Wash hands thoroughly after handling, as prolonged contact may cause irritation and dermatitis. If brake fluid contacts the eyes, flush the eyes with cold water or eyewash solution and seek medical attention. If taken internally do not induce vomiting, seek immediate medical attention. Failure to follow these instructions may result in**

personal injury.

CAUTION: If brake fluid comes into contact with the paintwork, the affected area must be immediately washed down with cold water.

CAUTION: Cap the brake hose to prevent loss of fluid and dirt ingress.

NOTE:

To prevent the loss of brake fluid, apply the brake pedal hold-down tool and adjust to hold the brake pedal down 40 mm (1.6 in).

NOTE:

Left-hand shown, right-hand similar.

Detach the brake hose.

- Remove and discard the sealing washers.

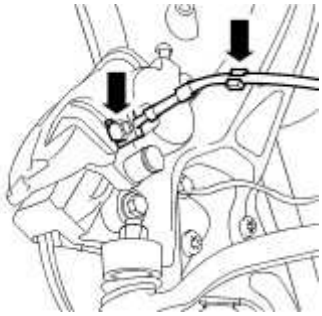

E60620

4 . **NOTE:**

Left-hand shown, right-hand similar.

Remove the brake caliper retaining bolt dust covers.

www.JagDocs.com

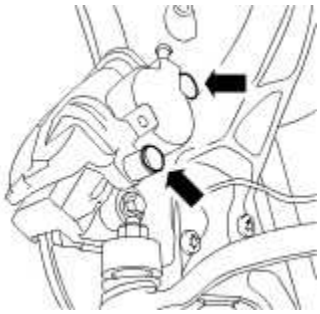

5 . **NOTE:**

Left-hand shown, right-hand similar.

Remove the brake caliper retaining bolts.

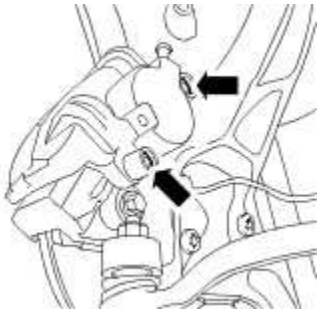

6 . **NOTE:**

Left-hand shown, right-hand similar.

Remove the brake caliper.

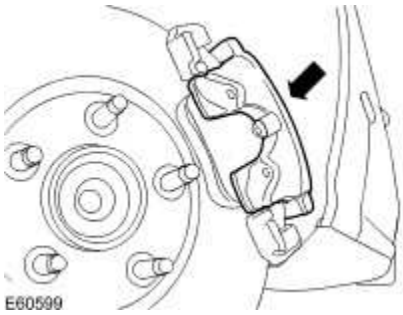

7 . **CAUTION: Do not allow the brake caliper to hang on the hydraulic hose, as this will**

damage the hose. Failure to follow this instruction will result in damage to the hose.

NOTE:

Left-hand shown, right-hand similar.

Remove the brake pad from the caliper piston.

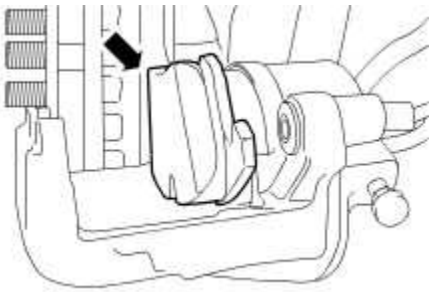

E60601

8 . **NOTE:**

Left-hand shown, right-hand similar.

Remove the brake pad.

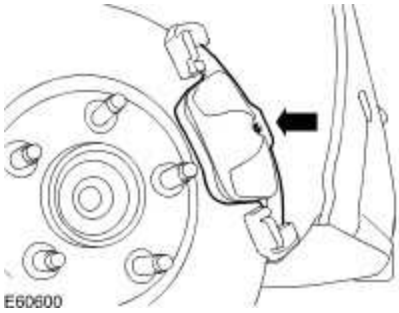

E60600

Installation

1 . **WARNING: Do not use compressed air to disperse brake dust into the atmosphere.**

CAUTION: Brake pads must always be replaced in axle sets.

www.JagDocs.com

CAUTION: Make sure the brake disc faces are clean before installation.

NOTE:

Left-hand shown, right-hand similar.

Install the brake pad.

- Using a suitable tool, fully retract the brake caliper piston.

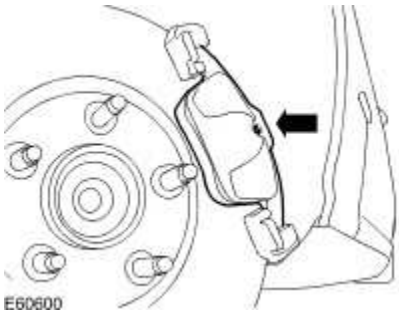

2 . **NOTE:**

Make sure the brake pad is correctly installed to the caliper piston.

NOTE:

Left-hand shown, right-hand similar.

Install the brake pad to the caliper piston.

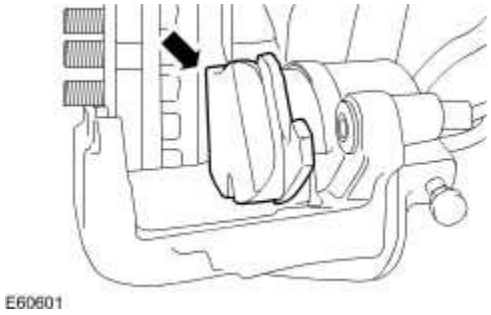

3 . **NOTE:**

Left-hand shown, right-hand similar.

Install the brake caliper.

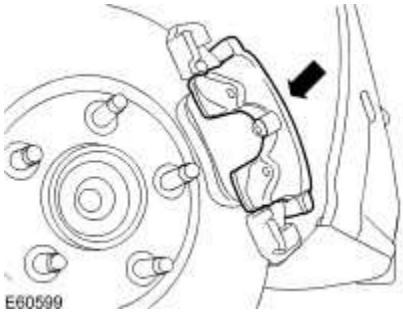

4 . **NOTE:**

Left-hand shown, right-hand similar.

Install the brake caliper retaining bolts.

Tighten to 28 Nm.

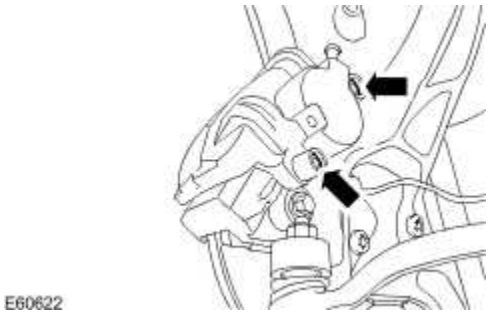

5 . **NOTE:**

Left-hand shown, right-hand similar.

Install the brake caliper retaining bolt dust covers.

www.JagDocs.com

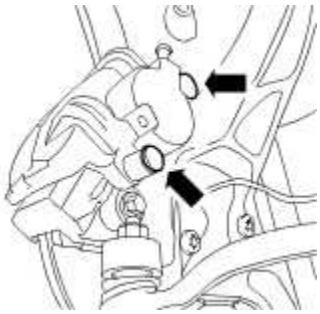

E60621

6 . **NOTE:**

Left-hand shown, right-hand similar.

Attach the brake hose.

- Install new sealing washers.
- Tighten to 35 Nm.

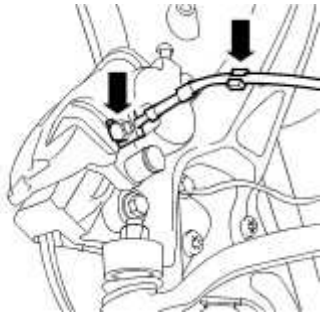

E60620

7 . **NOTE:**

Left-hand shown, right-hand similar.

Install the anti-rattle spring.

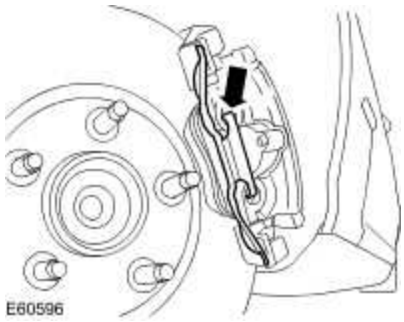

8 . Remove the brake pedal hold-down tool.

9 . Bleed the brake system.
For additional information, refer to Brake System Bleeding - VIN Range: G45704->H99999 (70.25.03)

10 . Install both front wheels and tires.
For additional information, refer to Wheel and Tire (74.20.05)

www.JagDocs.com

Brake Caliper - Vehicles With: High Performance Brakes, VIN Range: G00442->G45704 (70.55.02)

Special Service Tools

Brake pedal hold-down tool
JDS 9013

Removal

1. Remove the brake pads.
   For additional information, refer to Brake Pads - Vehicles With: High Performance Brakes, VIN Range: G00442->G45703 (70.40.02)

2. **CAUTION: Brake fluid contains polyglycol ethers and polyglycols. Avoid contact with the eyes. Wash hands thoroughly after handling, as prolonged contact may cause irritation and dermatitis. If brake fluid contacts the eyes, flush the eyes with cold water or eyewash solution and seek medical attention. If taken internally do not induce vomiting, seek immediate medical attention. Failure to follow these instructions may result in personal injury.**

   CAUTION: If brake fluid comes into contact with the paintwork, the affected area must be immediately washed down with cold water.

   NOTE:

   To prevent the loss of brake fluid, apply the brake pedal hold-down tool and adjust to hold the brake pedal down 40 mm (1.6 in).

NOTE:

Cap the brake hose to prevent loss of fluid and prevent dirt ingress.

Detach the brake hose.

- Remove and discard the sealing washers.

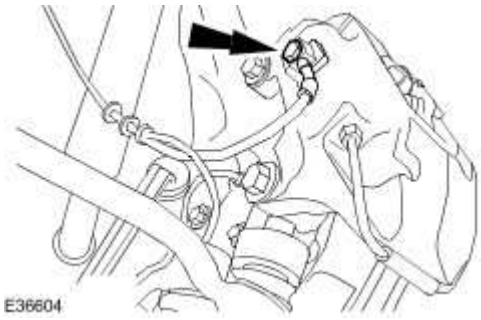

3 . Remove the brake caliper.

- Remove and discard the brake caliper retaining bolts.

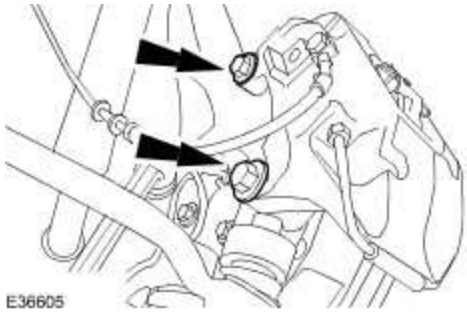

www.JagDocs.com

Installation

1 . Install the brake caliper.

- Install new brake caliper retaining bolts.
- Tighten to 212 Nm.

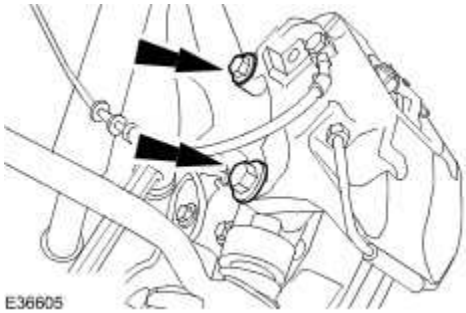

2 . Attach the brake hose.

- Install new sealing washers.
- Tighten to 35 Nm.

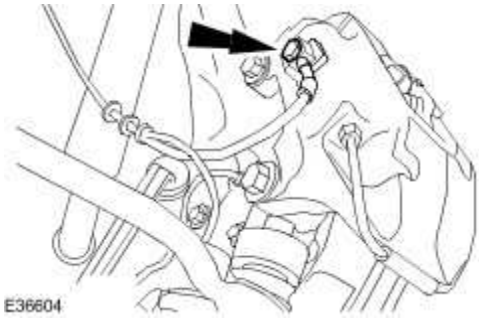

3 . Remove the brake pedal hold-down tool.

4 Install the brake pads.
. For additional information, refer to Brake Pads - Vehicles With: High Performance Brakes, VIN Range: G00442->G45703 (70.40.02)

5 Bleed the brake system.
. For additional information, refer to Brake System Bleeding - VIN Range: G00442->G45703 (70.25.03)

Brake Caliper - Vehicles With: High Performance Brakes, VIN Range: G45704->G99999 (70.55.02)

Special Service Tools

Brake pedal hold-down tool
JDS 9013

Removal

1 . Remove both front wheels and tires.
For additional information, refer to Wheel and Tire (74.20.05)

2 . **NOTE:**

Left-hand shown, right-hand similar.

Remove the anti-rattle spring.

3 . **WARNING: Brake fluid contains polyglycol ethers and polyglycols. Avoid contact with the eyes. Wash hands thoroughly after handling, as prolonged contact may cause irritation and dermatitis. If brake fluid contacts the eyes, flush the eyes with cold water or eyewash solution and seek medical attention. If taken internally do not induce vomiting, seek immediate medical attention. Failure to follow these instructions may result in personal injury.**

CAUTION: If brake fluid comes into contact with the paintwork, the affected area must be immediately washed down with cold water.

CAUTION: Cap the brake hose to prevent loss of fluid and dirt ingress.

www.JagDocs.com

NOTE:

To prevent the loss of brake fluid, apply the brake pedal hold-down tool and adjust to hold the brake pedal down 40 mm (1.6 in).

NOTE:

Left-hand shown, right-hand similar.

Detach the brake hose.

- Remove and discard the sealing washers.

4 . **NOTE:**

Left-hand shown, right-hand similar.

Remove the brake caliper retaining bolt dust covers.

5 . **NOTE:**

Left-hand shown, right-hand similar.

Remove the brake caliper retaining bolts.

6 . **NOTE:**

Left-hand shown, right-hand similar.

Remove the brake caliper.

7 . **CAUTION: Do not allow the brake caliper to hang on the hydraulic hose, as this will damage the hose. Failure to follow this instruction will result in damage to the hose.**

NOTE:

Left-hand shown, right-hand similar.

Remove the brake pad from the caliper piston.

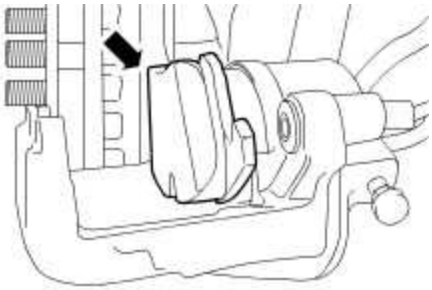

E60601

8 . **NOTE:**

Left-hand shown, right-hand similar.

Remove the brake pad.

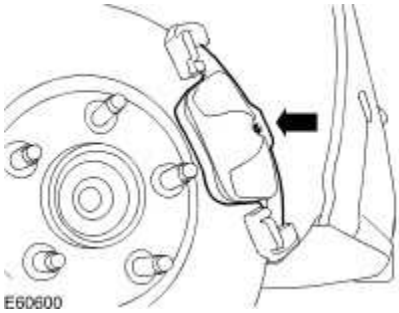

E60600

www.JagDocs.com

Installation

1 . **WARNING: Do not use compressed air to disperse brake dust into the atmosphere.**

CAUTION: Brake pads must always be replaced in axle sets.

CAUTION: Make sure the brake disc faces are clean before installation.

NOTE:

Left-hand shown, right-hand similar.

Install the brake pad.

- Using a suitable tool, fully retract the brake caliper piston.

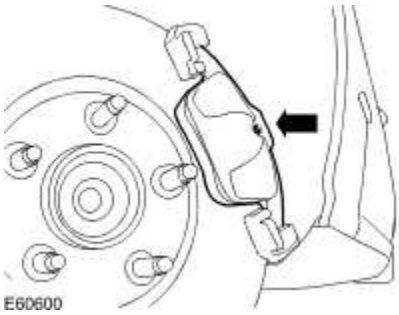

2 . **NOTE:**

Make sure the brake pad is correctly installed to the caliper piston.

NOTE:

Left-hand shown, right-hand similar.

Install the brake pad to the caliper piston.

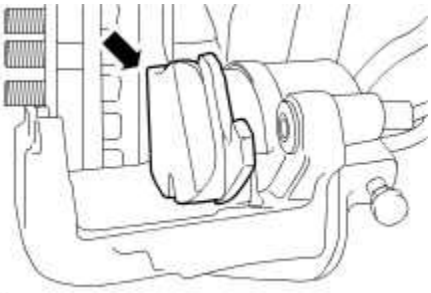

E60601

3 . **NOTE:**

Left-hand shown, right-hand similar.

Install the brake caliper.

4 . **NOTE:**

Left-hand shown, right-hand similar.

Install the brake caliper retaining bolts.

- Tighten to 58 Nm.

5 . **NOTE:**

Left-hand shown, right-hand similar.

Install the brake caliper retaining bolt dust covers.

www.JagDocs.com

6 . **NOTE:**

Left-hand shown, right-hand similar.

Attach the brake hose.

- Install new sealing washers.
- Tighten to 35 Nm.

7 . **NOTE:**

Left-hand shown, right-hand similar.

Install the anti-rattle spring.

8 . Remove the brake pedal hold-down tool.

9 . Bleed the brake system.
For additional information, refer to Brake System Bleeding - VIN Range: G45704->H99999 (70.25.03)

10 . Install both front wheels and tires.
For additional information, refer to Wheel and Tire (74.20.05)

Published: Mar 12, 2014

Brake Caliper (70.55.02) – Armoured Vehicles

Special Service Tools

Brake pedal hold-down tool
JDS 9013

Removal

CAUTION: The brake caliper is aligned / centralized to the brake disc when the vehicle is built. The vehicle may have shims fitted between the brake caliper anchor plate and the wheel knuckle. Care must be taken not to disturb this alignment. When removing caliper; remove only the bolts that secure the brake caliper to the brake caliper anchor plate. DO NOT loosen any other caliper bolts. This alignment / centralization MUST be checked / set when the wheel knuckle is replaced. Failure to follow this instruction may result in damage to the vehicle.

1. Remove the brake pads.
   For additional information, refer to Brake Pads (70.40.02)

2. **CAUTION: Brake fluid contains polyglycol ethers and polyglycols. Avoid contact with the eyes. Wash hands thoroughly after handling, as prolonged contact may cause irritation and dermatitis. If brake fluid contacts the eyes, flush the eyes with cold water or eyewash solution and seek medical attention. If taken internally do not induce vomiting, seek immediate medical attention. Failure to follow these instructions may result in personal injury.**

   CAUTION: If brake fluid comes into contact with the paintwork, the affected area must be immediately washed down with cold water.

   CAUTION: Do not allow the brake caliper to hang on the hydraulic hose, as this will damage the hose. Failure to follow this instruction will result in damage to the hose.

   NOTE:
   To prevent the loss of brake fluid, apply the brake pedal hold-down tool and adjust to hold the brake pedal down 40 mm (1.6 in).

   NOTE:
   Cap the brake hose to prevent loss of fluid and prevent dirt ingress.

   Detach the brake hose.
   - Remove and discard the sealing washers.

www.JagDocs.com

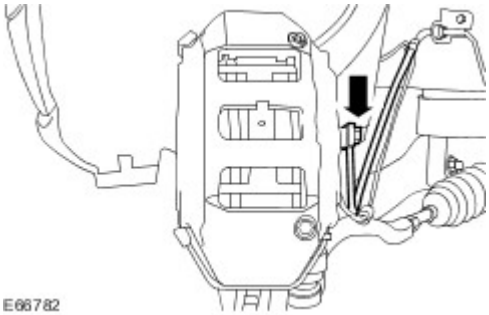

3. **CAUTION: The brake caliper is aligned to the brake disc when it is first installed to the vehicle, therefore, care must be taken not to disturb this alignment. When removing the caliper; remove the bolts that secure the brake caliper to the brake caliper anchor plate only. DO NOT loosen any other caliper bolts. Failure to follow this instruction may result in damage to the vehicle.**

CAUTION: Brake fluid contains polyglycol ethers and polyglycols. Avoid contact with the eyes. Wash hands thoroughly after handling, as prolonged contact may cause irritation and dermatitis. If brake fluid contacts the eyes, flush the eyes with cold water or eyewash solution and seek medical attention. If taken internally do not induce vomiting, seek immediate medical attention. Failure to follow these instructions may result in personal injury.

CAUTION: If brake fluid comes into contact with the paintwork, the affected area must be immediately washed down with cold water.

NOTE:

To prevent the loss of brake fluid, apply the brake pedal hold-down tool and adjust to hold the brake pedal down 40 mm (1.6 in).

NOTE:

Cap the brake hose to prevent loss of fluid and prevent dirt ingress.

Remove the brake caliper.

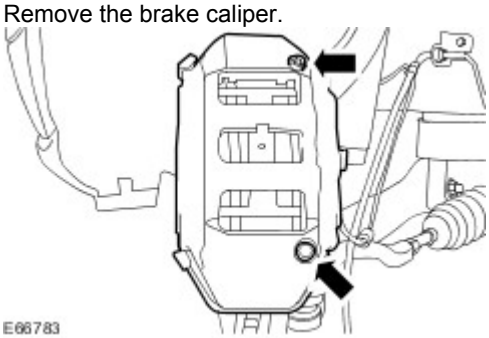

Installation

1 . Install the brake caliper.

- Tighten to 101 Nm.

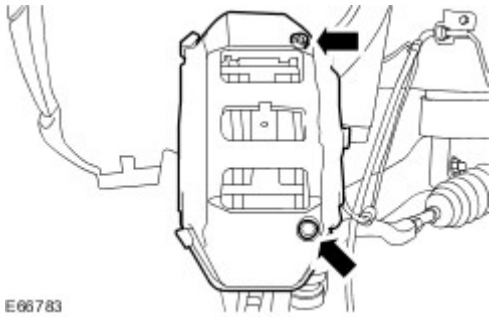

2 . Attach the brake hose.

- Install new sealing washers.
- Tighten to 35 Nm.

3 . Remove the brake pedal hold-down tool.

4 . Install the brake pads.
For additional information, refer to Brake Pads (70.40.02)

5 . Bleed the brake system.
For additional information, refer to

www.JagDocs.com

Brake Disc - Vehicles With: Standard Brakes, VIN Range: G00442->G45703 (70.10.10)

Removal

1 . Remove the brake pads.
For additional information, refer to

2 . **CAUTION: The brake caliper must be supported at all times.**

Detach the brake caliper and brake caliper anchor plate and secure to one side.

- Remove and discard the brake caliper retaining bolts.

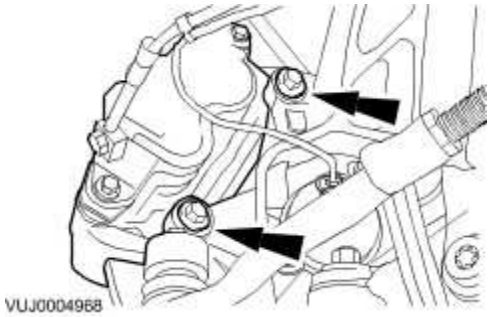

3 **NOTE:**
.

If the same brake disc is to be installed, the tip of a hub must be marked with a corresponding part of the brake disc for alignment.

Remove the brake disc.

- Remove and discard the brake disc retaining clips.

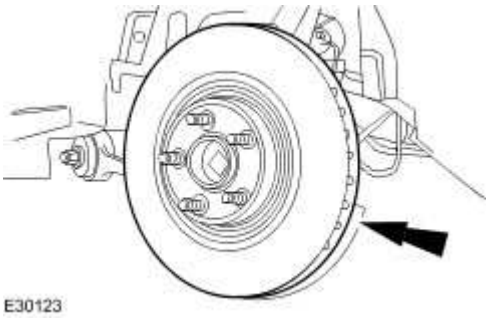

Installation

1 . To install, reverse the removal procedure.

Tighten to 103 Nm.

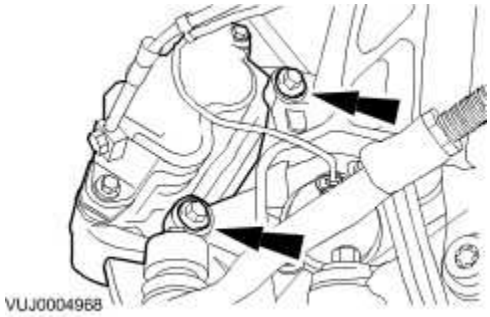

www.JagDocs.com

Brake Disc - Vehicles With: Standard Brakes, VIN Range: G45704->G99999 (70.10.10)

Removal

1 Remove the brake pads.
. For additional information, refer to [Brake Pads - Vehicles With: Standard Brakes, VIN Range: G45704->G99999 (70.40.02)]

2 . **NOTE:**

Left-hand shown, right-hand similar.

Remove the brake caliper anchor plate.

- Remove and discard the brake caliper anchor plate retaining bolts.

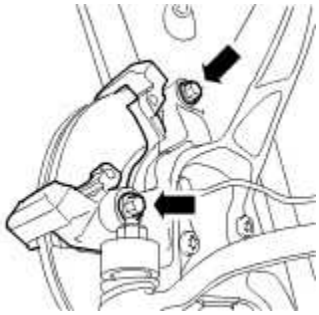

E60604

3 **NOTE:**
.

If the same brake disc is to be installed, the tip of a hub must be marked with a corresponding part of the brake disc for alignment.

NOTE:

Left-hand shown, right-hand similar.

Remove the brake disc.

Remove and discard the brake disc retaining clips.

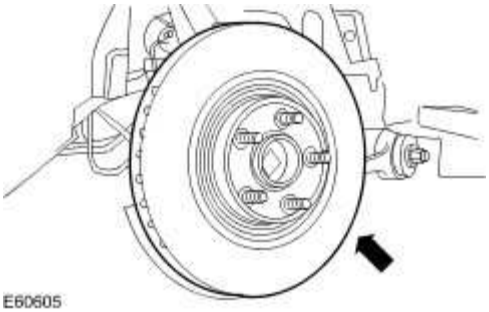

Installation

1 . **CAUTION: Brake discs must always be replaced in axle sets.**

NOTE:

Left-hand shown, right-hand similar.

To install, reverse the removal procedure.

Tighten to 115 Nm.

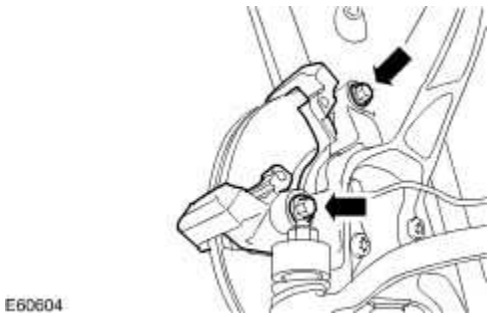

www.JagDocs.com

Brake Disc - Vehicles With: High Performance Brakes, VIN Range: G00442->G45703 (70.10.10)

Removal

1 Remove the brake pads.
. For additional information, refer to [Brake Pads - Vehicles With: High Performance Brakes, VIN Range: G00442->G45703 (70.40.02)]

2 . **CAUTION: The brake caliper must be supported at all times.**

Detach the brake caliper and secure to one side.

- Remove and discard the brake caliper retaining bolts.

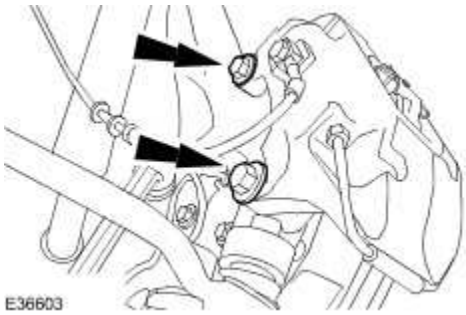

3 **NOTE:**
.

If the same brake disc is to be installed, the tip of a hub must be marked with a corresponding part of the brake disc for alignment.

Remove the brake disc.

- Remove and discard the brake disc retaining clips.

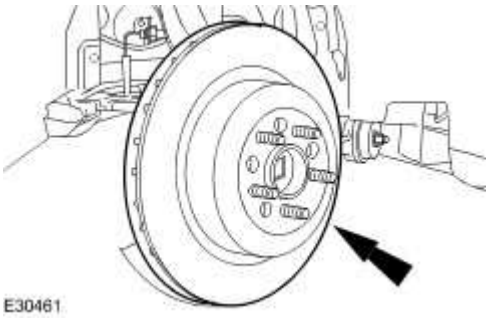

Installation

1 . To install, reverse the removal procedure.

Tighten to 212 Nm.

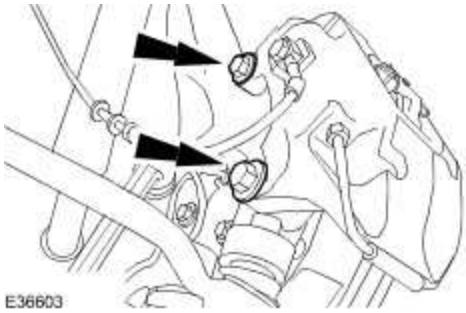

www.JagDocs.com

Brake Disc - Vehicles With: High Performance Brakes, VIN Range: G45704->G99999 (70.10.10)

Removal

1 Remove the brake pads.
. For additional information, refer to [Brake Pads - Vehicles With: High Performance Brakes, VIN Range: G45704->G99999 (70.40.02)]

2 . **NOTE:**

Left-hand shown, right-hand similar.

Remove the brake caliper anchor plate.

- Remove and discard the brake caliper anchor plate retaining bolts.

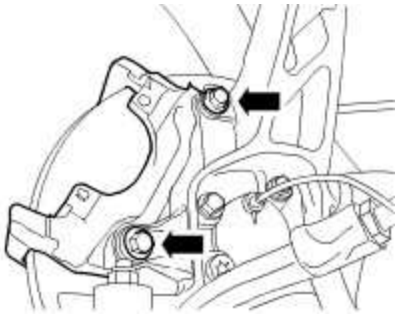

3 **NOTE:**
.

If the same brake disc is to be installed, the tip of a hub must be marked with a corresponding part of the brake disc for alignment.

NOTE:

Left-hand shown, right-hand similar.

Remove the brake disc.

Remove and discard the brake disc retaining clips.

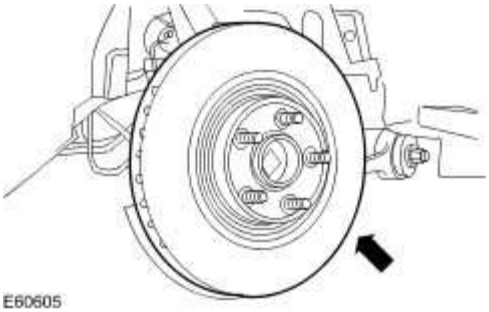

Installation

1 . **CAUTION: Brake discs must always be replaced in axle sets.**

NOTE:

Left-hand shown, right-hand similar.

To install, reverse the removal procedure.

Tighten to 115 Nm.

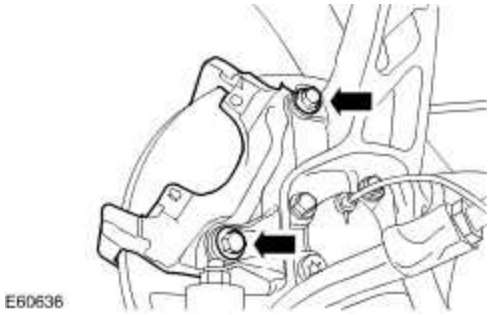

www.JagDocs.com

Published: Mar 12, 2014

Brake Disc (70.10.10) – Armoured Vehicles

Removal

CAUTION: Brake discs must be renewed in axle sets. Failure to follow this instruction may result in damage to the vehicle.

CAUTION: If new brake discs are installed, new brake pads must also be installed. Failure to follow this instruction may result in damage to the vehicle.

1 . Remove the brake pads.
For additional information, refer to Brake Pads (70.40.02)

2 **NOTE:**

· If the same brake disc is to be installed, the tip of a hub must be marked with a corresponding part of the brake disc for alignment.

Remove the brake disc.

Remove and discard the brake disc retaining clips.

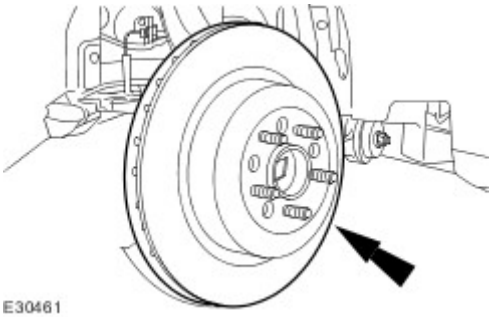

Installation

1 . To install, reverse the removal procedure.

Brake Disc Shield - Vehicles With: Standard Brakes (70.10.18)

Removal

1 Remove the front brake disc.

. For additional information, refer to Brake Disc - Vehicles With: Standard Brakes, VIN Range: G00442->G45703 (70.10.10)
For additional information, refer to Brake Disc - Vehicles With: Standard Brakes, VIN Range: G45704->G99999 (70.10.10)

2 . Remove the brake disc shield.

- Remove and discard the brake disc shield retaining rivets.

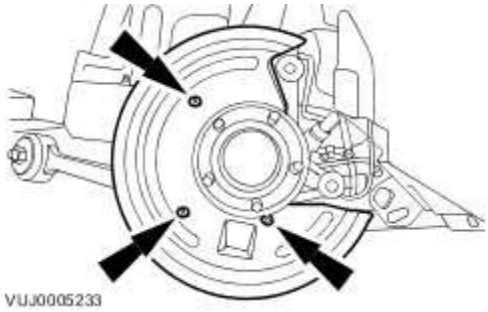

Installation

1 . To install, reverse the removal procedure.

- Install new brake disc shield retaining rivets.

www.JagDocs.com

Brake Disc Shield - Vehicles With: High Performance Brakes (70.10.18)

Removal

1 . Remove the wheel bearing and wheel hub.
For additional information, refer to Front Wheel Bearing and Wheel Hub (60.25.03)

2 . Remove the brake disc shield.

- Remove and discard the brake disc shield retaining rivets.

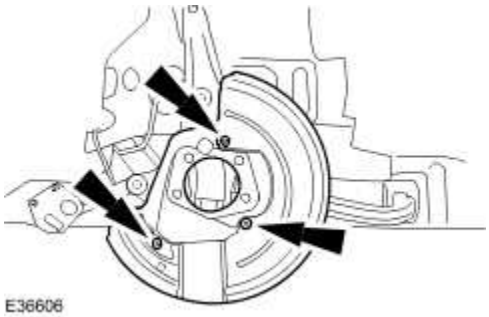

Installation

1 . To install, reverse the removal procedure.

- Install new brake disc shield retaining rivets.

Brake Pads - Vehicles With: Standard Brakes, VIN Range: G00442->G45703 (70.40.02)

Removal

1 . Remove both front wheels and tires. <<204-04>>

2 . Detach the anti-lock brake (ABS) sensor wiring harness from the retaining clips.

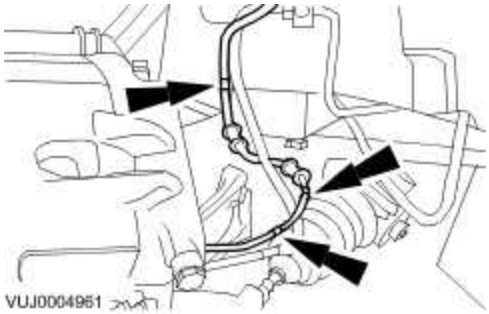

3 . Rotate the brake caliper upwards.

1) Remove and discard the brake caliper lower retaining bolt.

2) Rotate the brake caliper upwards.

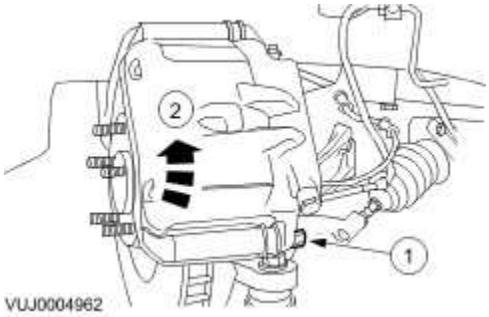

4 . Remove the brake pads.

www.JagDocs.com

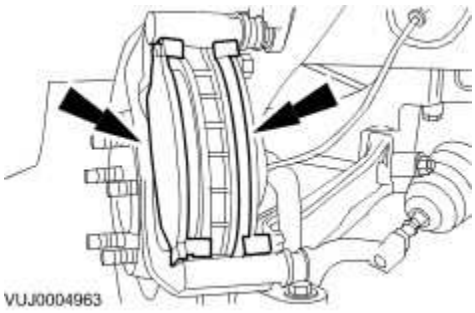

Installation

1. **WARNING: Do not use compressed air to disperse brake dust into the atmosphere.**

CAUTION: If the pistons are pushed back into the housing, brake fluid will be forced back into the brake fluid reservoir.

CAUTION: Make sure the brake disc faces are clean before installation.

CAUTION: Brake pads must always be replaced in axle sets.

To install, reverse the removal procedure.

- Using a suitable tool, fully retract the brake caliper pistons.
- Install a new brake caliper lower retaining bolt.
- Tighten to 34 Nm.

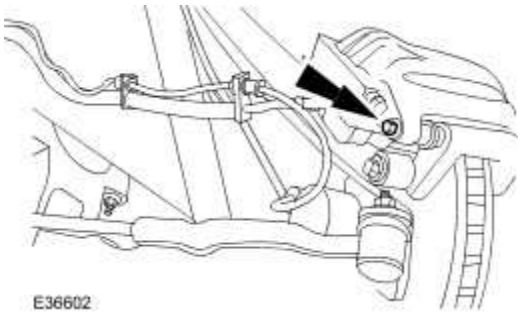

www.JagDocs.com

Brake Pads - Vehicles With: Standard Brakes, VIN Range: G45704->G99999 (70.40.02)

Removal

1 . Remove both front wheels and tires.
For additional information, refer to Wheel and Tire (74.20.05)

2 . **NOTE:**

Left-hand shown, right-hand similar.

Remove the anti-rattle spring.

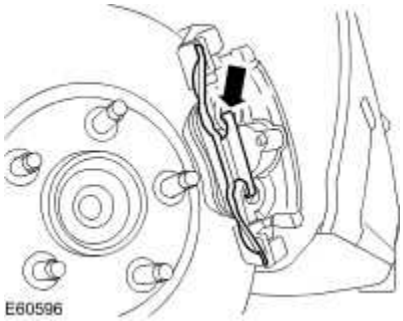

3 . **NOTE:**

Left-hand shown, right-hand similar.

Remove the brake caliper retaining bolt dust covers.

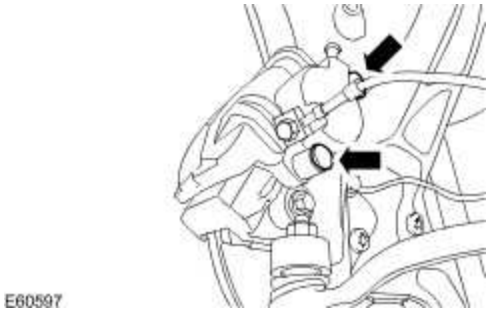

4. **CAUTION: Do not allow the brake caliper to hang on the hydraulic hose, as this will damage the hose. Failure to follow this instruction will result in damage to the hose.**

NOTE:

Left-hand shown, right-hand similar.

Remove the brake caliper retaining bolts.

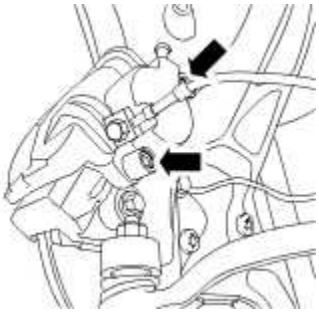

E60598

5. **CAUTION: Do not allow the brake caliper to hang on the hydraulic hose, as this will damage the hose. Failure to follow this instruction will result in damage to the hose.**

NOTE:

Left-hand shown, right-hand similar.

Detach the brake caliper.

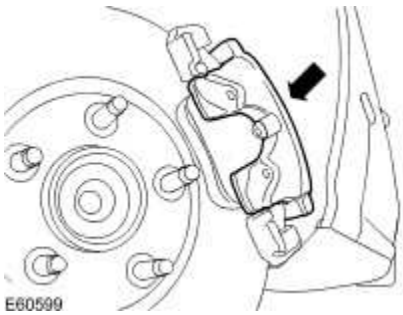

E60599

6. **CAUTION: Do not allow the brake caliper to hang on the hydraulic hose, as this will**

www.JagDocs.com

damage the hose. Failure to follow this instruction will result in damage to the hose.

NOTE:

Left-hand shown, right-hand similar.

Remove the brake pad.

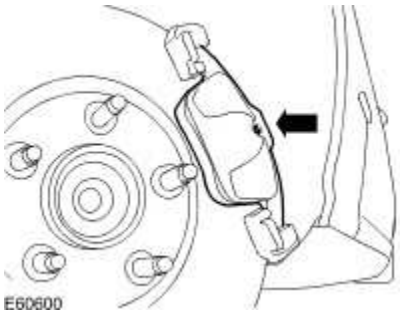

7 . **NOTE:**

Left-hand shown, right-hand similar.

Remove the brake pad from the caliper piston.

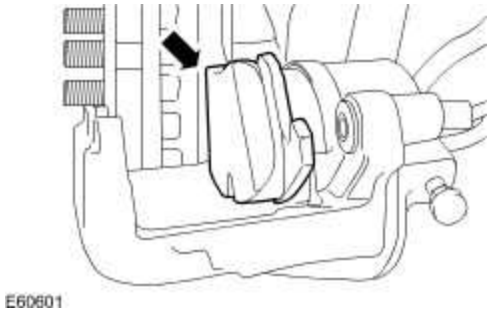

Installation

1 . **WARNING: Do not use compressed air to disperse brake dust into the atmosphere.**

CAUTION: If the pistons are pushed back into the housing, brake fluid will be forced

back into the brake fluid reservoir.

CAUTION: Make sure the brake disc faces are clean before installation.

CAUTION: Brake pads must always be replaced in axle sets.

NOTE:

Make sure that the inboard brake pad is correctly installed to the caliper piston.

NOTE:

Left-hand shown, right-hand similar.

To install, reverse the removal procedure.

- Using a suitable tool, fully retract the brake caliper pistons.
- Tighten to 28 Nm.

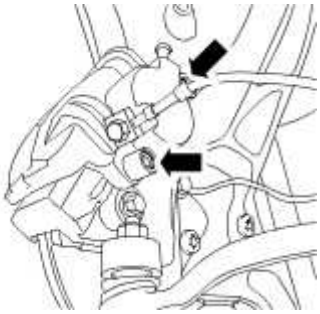

E60598

www.JagDocs.com

Brake Pads - Vehicles With: High Performance Brakes, VIN Range: G00442->G45703 (70.40.02)

Removal

1 . Raise front of vehicle and support on stands.
For additional information, refer to Jacking

2 . Remove front wheels.
For additional information, refer to Wheel and Tire (74.20.05)

3 . **CAUTION: Remove brake fluid spillage immediately from paint work, with clean water.**

Loosen brake fluid reservoir-cap.

Position a cloth around the reservoir to collect any fluid spillage.

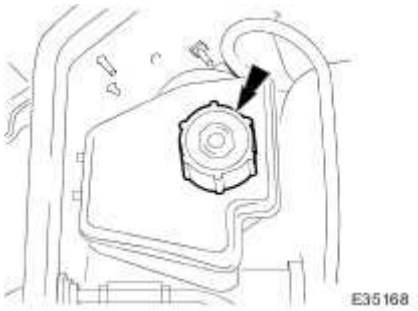

4 . Remove brake pads from caliper.

1) Remove 'R' clips.

2) Withdraw pins from caliper.

3) Remove anti-rattle spring.

4) Discard brake pads.

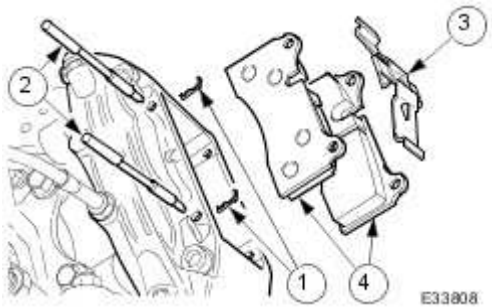

5 . Clean all mating surfaces and remove brake dust, see WARNING above.

6 . Repeat above procedure to remove opposite side brake pads.

Installation

1 . **CAUTION: Make sure grease does not contact brake-pad friction surface or brake disc.**

To prevent brake squeal apply grease to the shoulders of the brake-pad backplate.
For additional information, refer to Specifications

- Apply a uniform layer of grease to backplate shoulders, making sure the whole shoulder is covered.

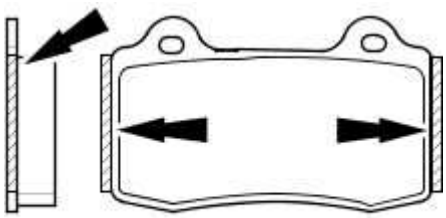

www.JagDocs.com

2. **CAUTION: Make sure the brake pads are fitted with the direction arrow following the direction of wheel rotation.**

Make sure the brake pads are fitted with the direction arrow following the direction of wheel rotation.

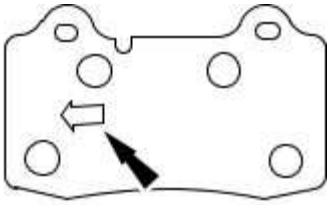

E52793

3. **CAUTION: Retracting the caliper piston may cause the fluid reservoir to over-flow. Remove brake fluid spillage immediately from paint work, with clean water.**

CAUTION: Make sure the brake pads are installed to the correct orientation.

CAUTION: Make sure the brake pads are fitted with the direction arrow following the direction of wheel rotation.

CAUTION: Note condition of pins and 'R' clips and replace if necessary.

Install brake pads into caliper.

- Slowly retract caliper pistons into caliper.

2) Install pads.

3) Position anti-rattle spring.

4) Install pins.

5) Install 'R' clips.

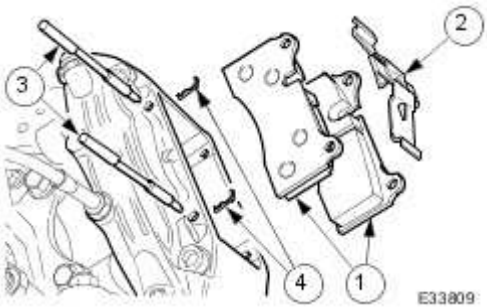

4 . Repeat above procedure to install opposite side brake pads.

5 . Fit wheels.
For additional information, refer to Wheel and Tire (74.20.05)

6 . Remove stands and lower vehicle.
For additional information, refer to Jacking

7 . **CAUTION: Remove brake fluid spillage immediately from paint work, with clean water.**

Check brake fluid level.

- Check brake fluid level is at the maximum mark.
- Remove cloth.
- Fit cap.

www.JagDocs.com

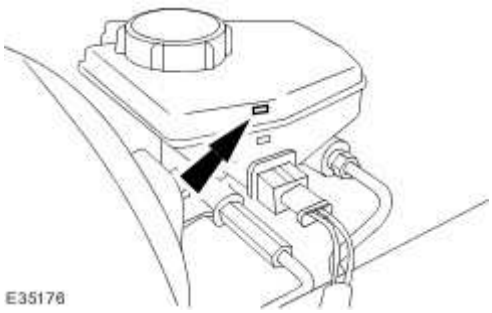

8 . Remove paint work protection covers, and close engine compartment.

9 . Start the engine and repeatedly press the brake pedal until brake pressure is evident.

Brake Pads - Vehicles With: High Performance Brakes, VIN Range: G45704->G99999 (70.40.02)

Removal

1 . Remove both front wheels and tires.
For additional information, refer to Wheel and Tire (74.20.05)

2 . **NOTE:**

Left-hand shown, right-hand similar.

Remove the anti-rattle spring.

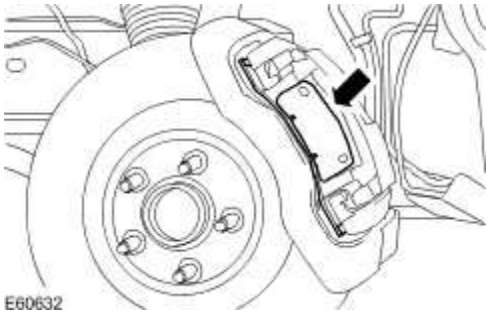

3 . **NOTE:**

Left-hand shown, right-hand similar.

Remove the brake caliper retaining bolt dust covers.

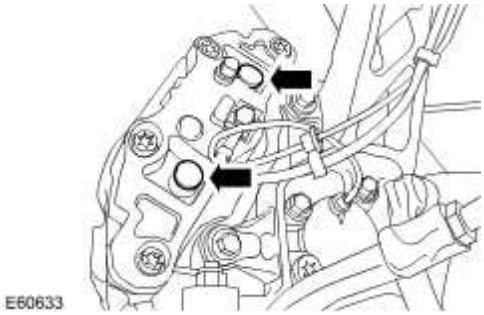

www.JagDocs.com

4 . **NOTE:**

Left-hand shown, right-hand similar.

Remove the brake caliper retaining bolts.

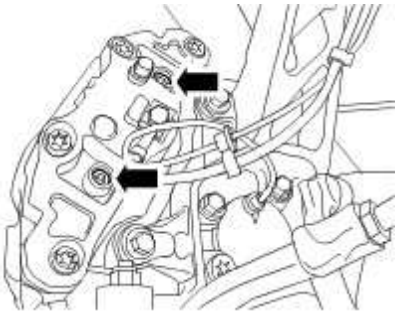

5 . **CAUTION: Do not allow the brake caliper to hang on the hydraulic hose, as this will damage the hose. Failure to follow this instruction will result in damage to the hose.**

NOTE:

Left-hand shown, right-hand similar.

Detach the brake caliper.

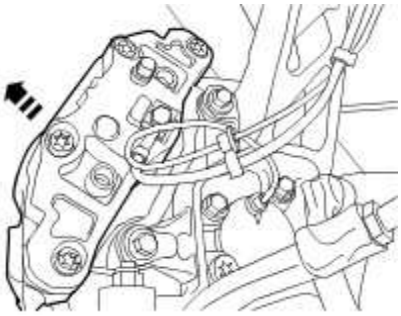

6 . **CAUTION: Do not allow the brake caliper to hang on the hydraulic hose, as this will damage the hose. Failure to follow this instruction will result in damage to the hose.**

NOTE:

Left-hand shown, right-hand similar.

Remove the brake pad from the caliper piston.

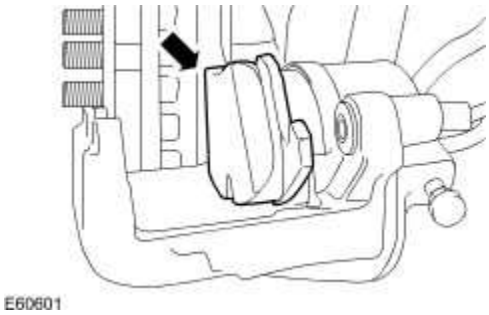

7 . **NOTE:**

Left-hand shown, right-hand similar.

Remove the brake pad.

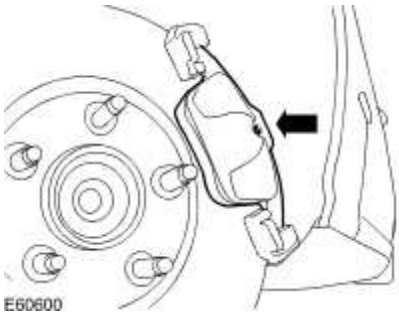

Installation

1 . **WARNING: Do not use compressed air to disperse brake dust into the atmosphere.**

CAUTION: If the pistons are pushed back into the housing, brake fluid will be forced back into the brake fluid reservoir.

www.JagDocs.com

CAUTION: Make sure the brake disc faces are clean before installation.

CAUTION: Brake pads must always be replaced in axle sets.

NOTE:

Make sure that the inboard brake pad is correctly installed to the caliper piston.

NOTE:

Left-hand shown, right-hand similar.

To install, reverse the removal procedure.

- Using a suitable tool, fully retract the brake caliper pistons.
- Tighten to 58 Nm.

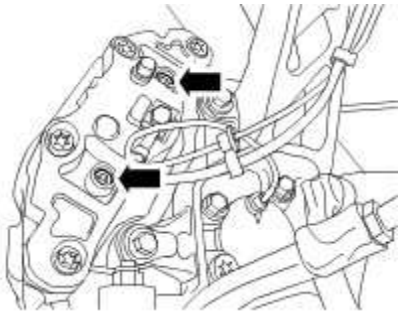

E60634

Published: Mar 12, 2014

Brake Pads (70.40.02) – Armoured Vehicles

Removal

WARNING: BRAKE DUST, IF INHALED CAN DAMAGE YOUR HEALTH. ALWAYS REMOVE BRAKE DUST USING A VACUUM BRUSH. DO NOT USE A COMPRESSED-AIR LINE TO DISPERSE BRAKE DUST INTO THE ATMOSPHERE. Failure to follow this instruction may result in personal injury.

CAUTION: Brake pads must always be replaced in axle sets. Failure to follow this instruction may result in damage to the vehicle.

CAUTION: The brake caliper is aligned / centralized to the brake disc when the vehicle is built. The vehicle may have shims fitted between the brake caliper anchor plate and the wheel knuckle. Care must be taken not to disturb this alignment. When removing caliper; remove only the bolts that secure the brake caliper to the brake caliper anchor plate. DO NOT loosen any other caliper bolts. This alignment / centralization MUST be checked / set when the wheel knuckle is replaced. Failure to follow this instruction may result in damage to the vehicle.

1. Remove both front wheels and tires.
   For additional information, refer to

2. **CAUTION: Remove brake fluid spillage immediately from paint work, with clean water. Failure to follow this instruction may result in damage to the vehicle.**

   Loosen brake fluid reservoir cap.

   - Position a cloth around the reservoir to collect any fluid spillage.

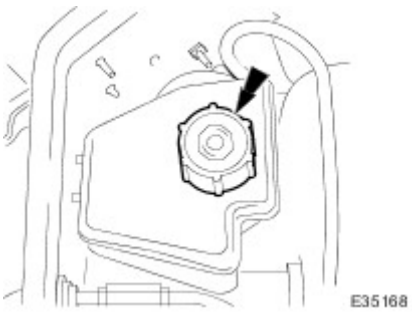

www.JagDocs.com

3. **CAUTION: Do not allow the brake caliper to hang on the hydraulic hose, as this will damage the hose. Failure to follow this instruction will result in damage to the hose.**

NOTE:

Left-hand shown, right-hand similar.

Detach the brake caliper.

Remove the brake caliper retaining bolts.

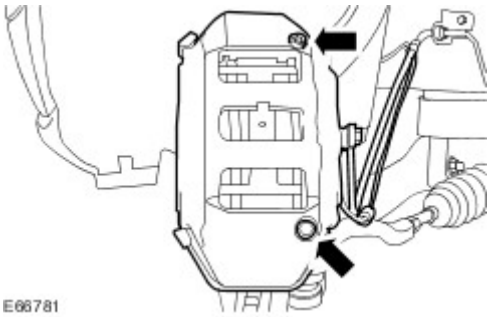

4. **CAUTION: Do not allow the brake caliper to hang on the hydraulic hose, as this will damage the hose. Failure to follow this instruction will result in damage to the hose.**

NOTE:

Left-hand shown, right-hand similar.

Remove the brake pads from the brake caliper.

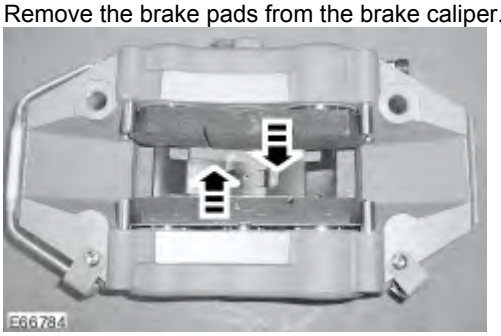

Installation

1. **WARNING: Do not use compressed air to disperse brake dust into the atmosphere. Failure to follow this instruction may result in personal injury.**

CAUTION: Make sure that the anti-rattle spring is correctly installed. Failure to follow this instruction may result in damage to the vehicle.

CAUTION: If the brake caliper pistons are pushed back into the housing, brake fluid will be forced back into the brake fluid reservoir. Remove brake fluid spillage immediately from paint work, with clean water. Failure to follow this instruction may result in personal injury.

CAUTION: Make sure the brake disc faces are clean before installation. Failure to follow this instruction may result in damage to the vehicle.

CAUTION: Brake pads must always be replaced in axle sets. Failure to follow this instruction may result in damage to the vehicle.

NOTE:

Left-hand shown, right-hand similar.

To install, reverse the removal procedure.

- Using a suitable tool, fully retract the brake caliper pistons.
- Tighten to 101 Nm.

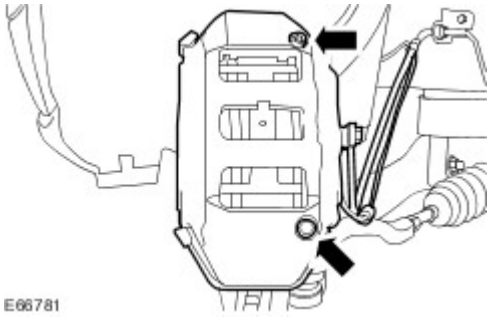

www.JagDocs.com

Specifications

Lubricants, Fluids, sealers and Adhesives

CAUTION: Do not use brake fluid ITT Super Dot 4 on 2006my vehicles onwards. Failure to follow this instruction may result in damage to the vehicle.

NOTE:

Brake fluid ITT Super Dot 4 has now been superseded by Shell ESL Super Dot 4 which is the Jaguar recommended brake fluid. Shell ESL Super Dot 4 can be used on all model years.

Item	Specification
Brake fluid	ITT Super Dot 4
Brake fluid	Shell ESL Super Dot 4
Brake caliper slide pin grease	Klueber GLK1

Torque Specifications

Description	Nm	lb-ft	lb-in
Brake hose to brake caliper - Vehicles with 3.0L, 3.5L or 4.2L engine	35	26	-
Brake hose to brake caliper - Vehicles with Brembo brakes	35	26	-
Brake caliper anchor plate - Vehicles with 3.0L, 3.5L or 4.2L engine	103	76	-
Brake caliper retaining bolts - Vehicles with Brembo brakes	70	51	-
Brake caliper retaining bolts - Vehicles with 3.0L, 3.5L or 4.2L engine	34	25	-

Specifications

No data

www.JagDocs.com

Rear Disc Brake - VIN Range: G00442->G45703

Vehicles without Brembo brakes

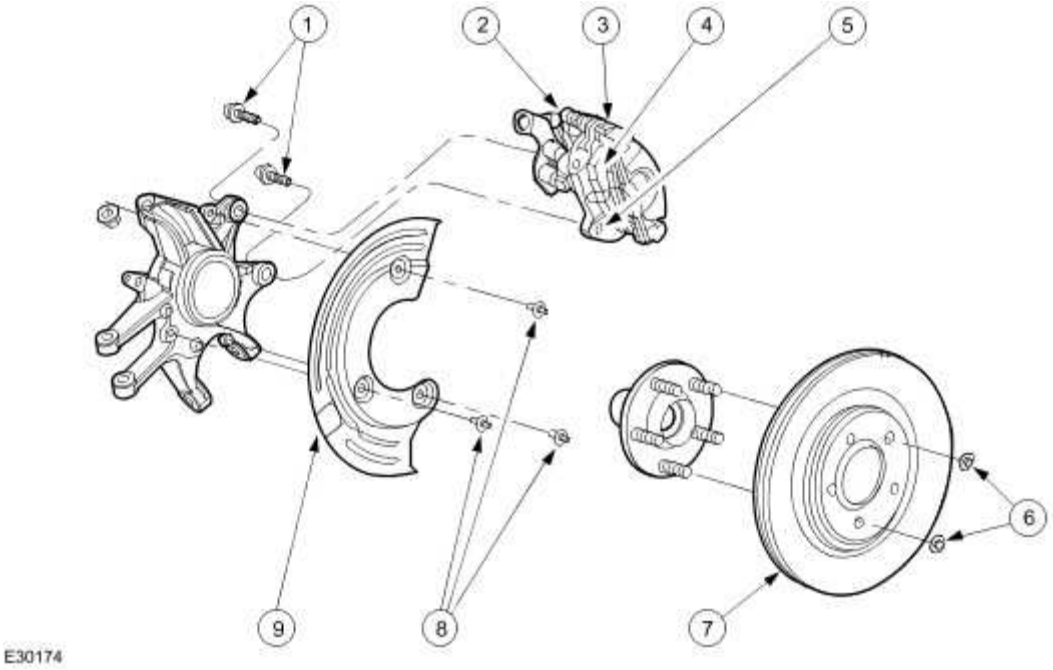

Item	Part Number	Description
1	—	Brake caliper anchor plate retaining bolts
2	—	Brake caliper guide pin retaining bolt
3	—	Brake caliper
4	—	Brake pads
5	—	Brake caliper anchor plate
6	—	Brake disc retaining clips
7	—	Brake disc
8	—	Brake disc shield retaining rivets
9	—	Brake disc shield

For vehicles without Brembo brakes, the brake system consists of the following components:

- Brake pads
- Single piston, floating calipers
- Brake discs
- Brake caliper anchor plates
- Steel braided brake hoses

The brake caliper has two retaining bolts that attach the brake caliper to the anchor plate. These are of single, sliding piston type which makes sure equal effort is applied through both brake pads. The anchor plate is attached to the wheel knuckle with two bolts. The hydraulic system provides separate circuits for each pair of diagonally opposed wheels (i.e. left front, right rear and right front, left rear).

The brake disc is manufactured from cast iron and is of the vented type. It is retained on the hub by two retaining clips and the wheel studs.

The rear brake caliper incorporates the parking brake of which is self adjusting according to brake pad wear.

Vehicles with Brembo brakes

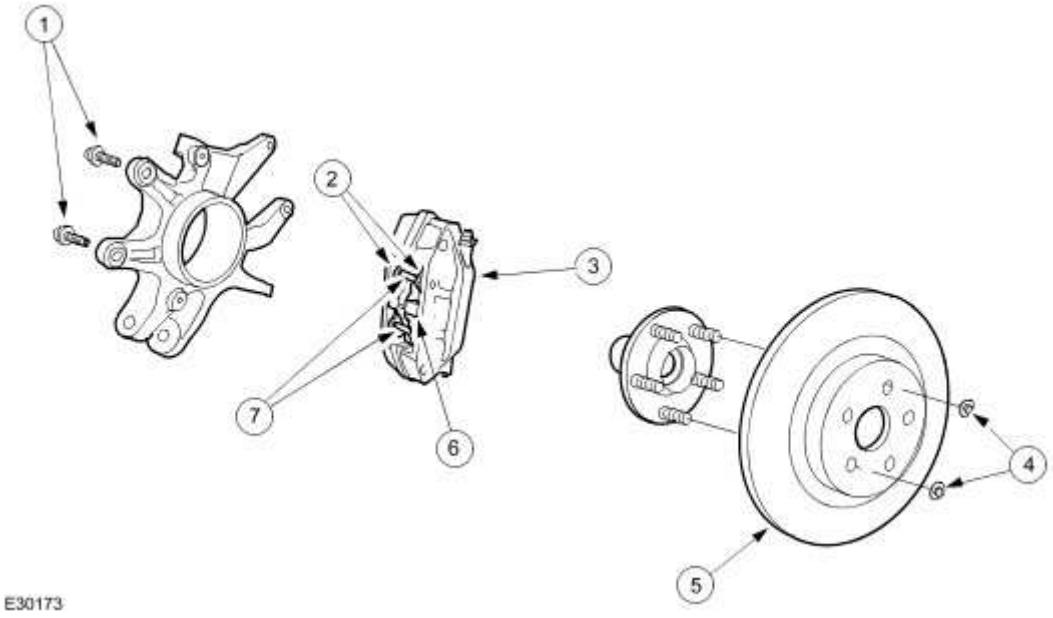

Item	Part Number	Description
1	—	Brake caliper retaining bolts
2	—	Brake pads

www.JagDocs.com

3	—	Brake caliper
4	—	Brake disc retaining clips
5	—	Brake disc
6	—	Brake pad anti-rattle spring
7	—	Brake pad retaining pins

For vehicles with Brembo brakes, the brake system consists of the following components:

- Brake pads
- Four piston, fixed calipers
- Brake discs
- Steel braided brake hoses

The brake caliper has two retaining bolts that attach the brake caliper to the wheel knuckle. These are of four piston fixed type which makes sure that equal effort is applied through both brake pads. The hydraulic system provides separate circuits for each pair of diagonally opposed wheels (i.e. left front, right rear and right front, left rear).

The brake disc is manufactured from cast iron and is of the solid type. It is retained on the hub by two retaining clips and the wheel studs.

Rear Disc Brake - VIN Range: G45704->G99999

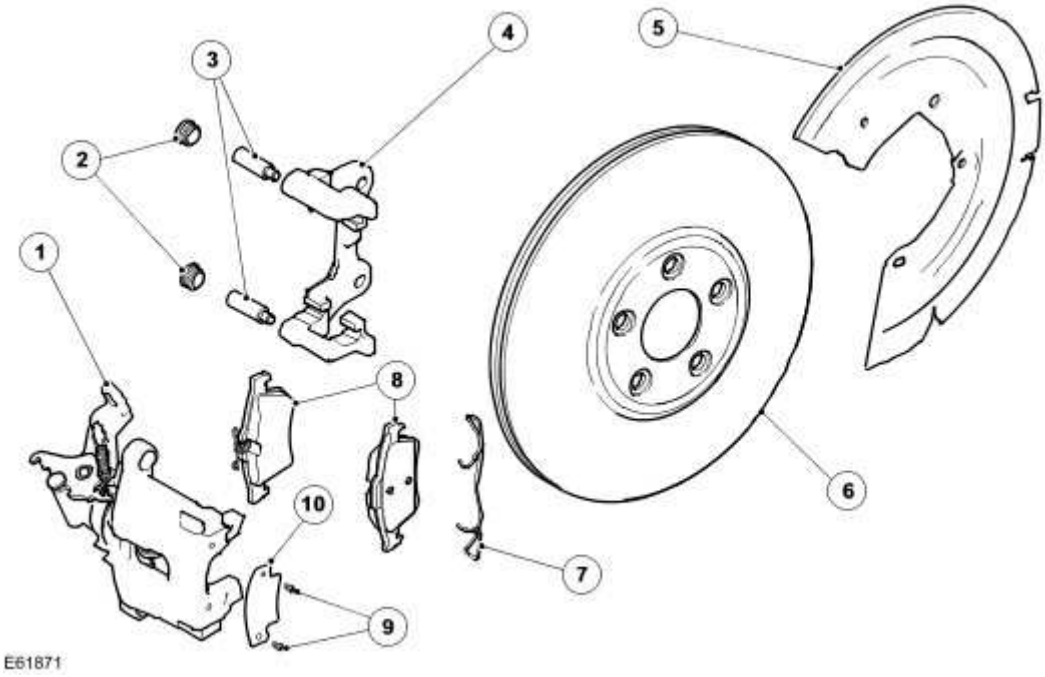

Item	Part Number	Description
1	—	Brake caliper
2	—	Brake caliper retaining bolt dust covers
3	—	Brake caliper retaining bolts
4	—	Brake caliper anchor plate
5	—	Brake disc shield
6	—	Brake disc
7	—	Anti-rattle spring
8	—	Brake pads
9	—	Logo badge retaining screws (if equipped)
10	—	Logo badge (if equipped)

The brake system consists of the following components:

- Brake pads
- Single piston, floating calipers
- Brake discs
- Brake caliper anchor plates
- Steel braided brake hoses

The brake caliper has two retaining bolts that attach the brake caliper to the anchor plate. These are of single, sliding piston type. In addition, the high performance caliper has a logo

www.JagDocs.com

bagde which has to be removed when changing the brake pads.The anchor plate is attached to the wheel knuckle with two bolts. The hydraulic system provides separate circuits for each pair of diagonally opposed wheels (i.e. left front, right rear and right front, left rear).

The brake disc is manufactured from cast iron and is of the vented type. It is retained on the hub by two retaining clips and the wheel studs.

The rear brake caliper incorporates the parking brake of which is self adjusting according to brake pad wear.

Rear Disc Brake

COMPONENT LOCATION

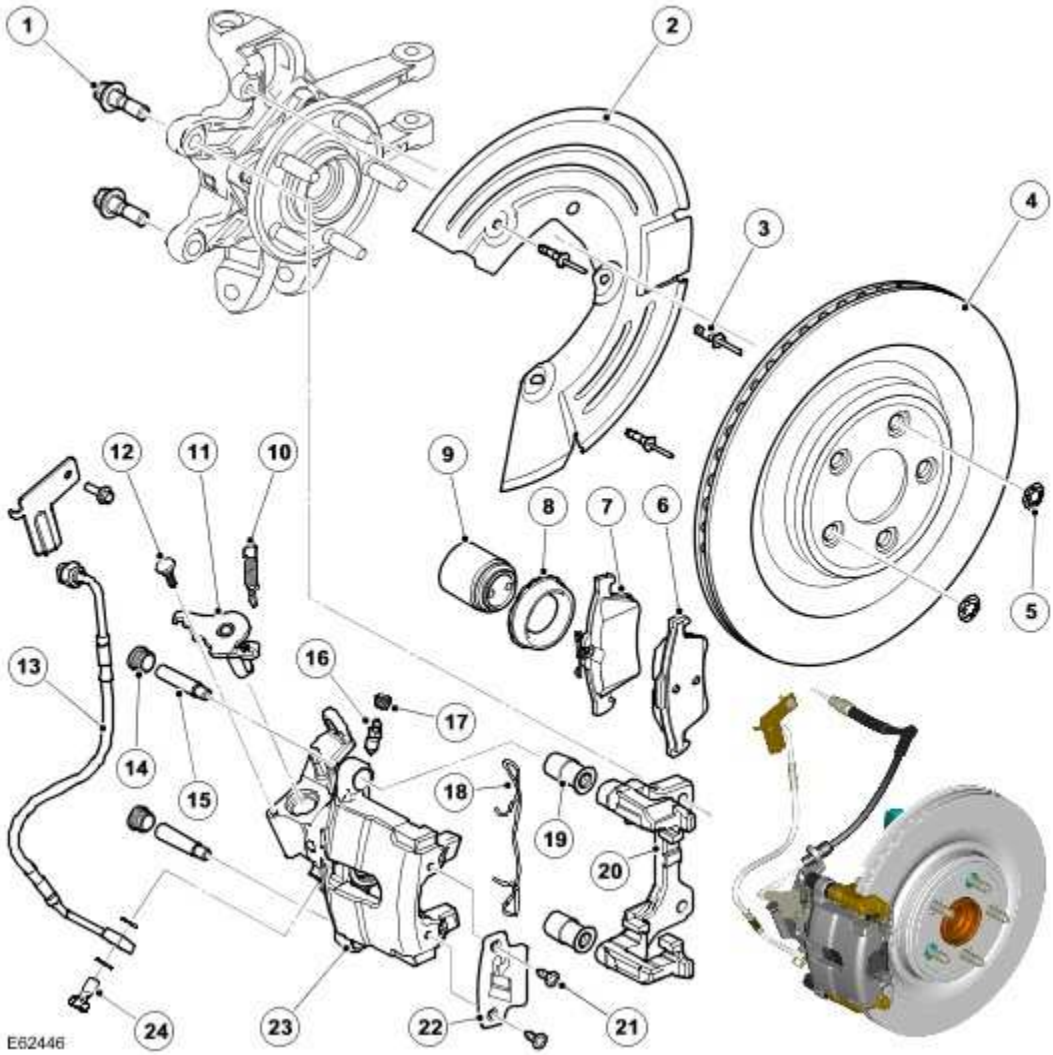

Item	Part Number	Description
1		Caliper carrier bolts (2 off)
2		Brake dust shield
3		Rivets (3 off)
4		Brake disc
5		Retaining washers (2 off)
6		Outboard brake pad

www.JagDocs.com

7		Inboard brake pad
8		Piston dust cover
9		Piston
10		Parking brake return spring
11		Parking brake lever
12		Parking brake lever stop
13		Brake hose
14		Guide pin dust cover (2 off)
15		Guide pins (2 off)
16		Bleed screw
17		Bleed screw dust cap
18		Anti-rattle spring
19		Guide pin bush (2 off)
20		Caliper carrier
21		Screw (2 off) - (supercharged model)
22		'R' type logo badge (supercharged model)
23		Brake caliper housing
24		Bolt - brake hose to caliper

INTRODUCTION

The rear braking system on both the naturally aspirated and supercharged vehicles features 326 x 20 mm (12.83 x 0.79 in) diameter ventilated brake discs with aluminum, single acting piston, sliding calipers.

The brake calipers on the supercharged vehicle are painted and also include a logo badge. The logo badge must be removed in order to renew the brake pads.

The caliper is mounted within a fixed carrier that is secured to the rear wheel knuckle with 2 bolts. When hydraulic pressure is supplied to the caliper, the piston extends to force the inner pad against the brake disc. The caliper reacts and slides along 2 guide pins to bring the outer pad into contact with the brake disc.

Each inboard brake pad is installed with a wire type anti-rattle spring.

NOTE:

There is no wear indicator installed to the rear brake pads.

The brake disc is manufactured from cast iron and is of the vented type. The disc is retained on the wheel hub by 2 retaining washers and the wheel nuts.

Also incorporated into each rear brake caliper carrier is the parking brake mechanism. For additional information, refer to Parking Brake (206-05)

Repairs

CAUTION: Whilst carrying out rear parking brake related service procedures, the tension on the rear parking brake release actuator will need to be released. Failure to follow this instruction may result in the parking brake functioning incorrectly or becoming inoperative.

Before carrying out any work on the rear brakes, the Jaguar approved diagnostic system must be connected and the 'parking brake un-jam' routine run.

When all work is carried out on the rear brakes, the parking brake system will require resetting. For additional information, refer to Parking Brake (206-05)

www.JagDocs.com

Published: Mar 12, 2014

Rear Disc Brake – Armoured Vehicles

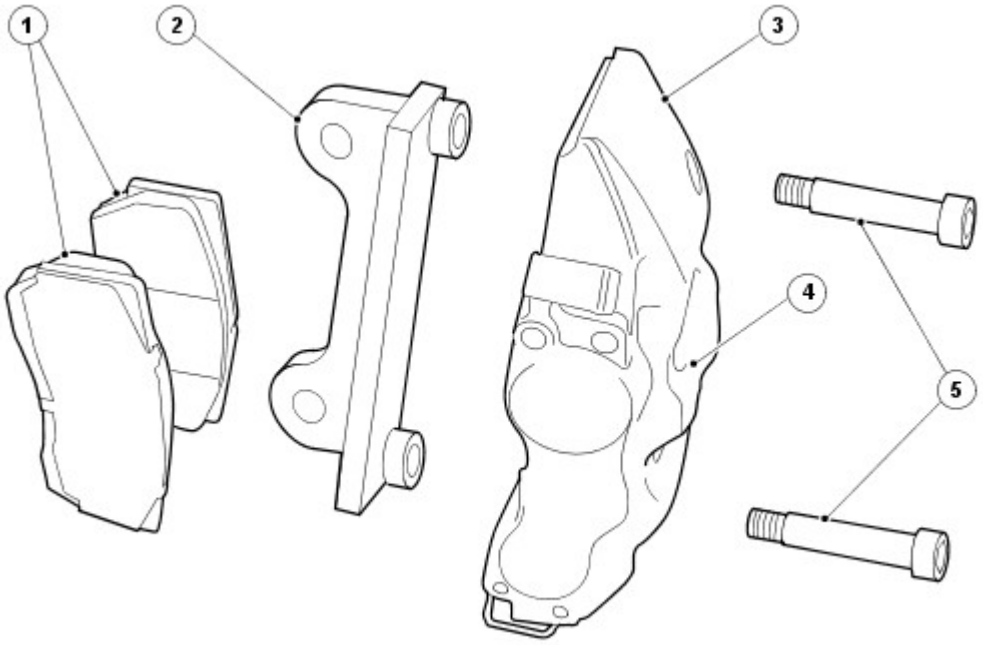

E66786

Item	Part Number	Description
1	—	Brake pads
2	—	Brake caliper anchor plate
3	—	Brake caliper
4	—	Anti-rattle spring
5	—	Brake caliper retaining bolts

CAUTION: The brake caliper is aligned / centralized to the brake disc when the vehicle is built. The vehicle may have shims fitted between the brake caliper anchor plate and the wheel knuckle. Care must be taken not to disturb this alignment. When removing caliper; remove only the bolts that secure the brake caliper to the brake caliper anchor plate. DO NOT loosen any other caliper bolts. This alignment / centralization MUST be checked / set when the wheel knuckle is replaced. Failure to follow this instruction may result in damage to the vehicle.

The rear disc brake system consists of the following components:

- Brake pads
- Four piston, apposed brake calipers
- Ventilated brake discs
- Brake caliper anchor plates
- Steel braided brake hoses
- Tamper proof brake bleeding screw shields

The brake caliper has two retaining bolts that attach the brake caliper to the brake caliper anchor plate. The brake caliper anchor plate is attached to the wheel knuckle with two bolts. The hydraulic system provides separate circuits for each pair of diagonally opposed wheels (i.e. left front, right rear and right front, left rear).

The brake disc is manufactured from cast iron and is of the grooved vented type. It is retained on the hub by two retaining clips and the wheel studs.

Each brake caliper features two brake bleeding screws, which are fitted with tamper proof brake bleeding screw shields, these sheilds must be fitted correctly to prevent unauthorised access when the wheels and tires are installed.

www.JagDocs.com

Rear Disc Brake

For additional information, refer to<<206-00>>.

Brake Caliper - Vehicles With: Standard Brakes, VIN Range: G00442->G45703 (70.55.03)

Special Service Tools

Brake pedal hold-down tool
JDS 9013

Removal

1 Carry out the parking brake cable tension release procedure.
. For additional information, refer to Parking Brake Cable Tension Release - VIN Range: G00442->G45703

2 . Remove both rear wheels and tires.
For additional information, refer to Wheel and Tire (74.20.05)

3 . Detach the parking brake cable.

1) Reposition the brake caliper lever.

2) Detach the parking brake cable.

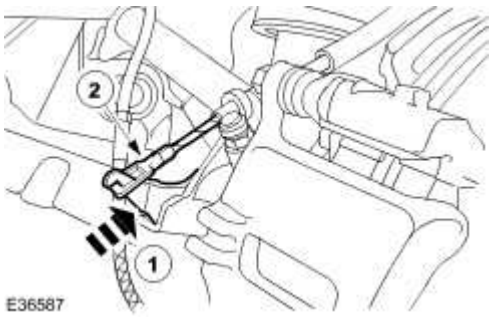

www.JagDocs.com

4 . Detach the parking brake cable.

1) Release the retaining tangs.

2) Detach the parking brake cable.

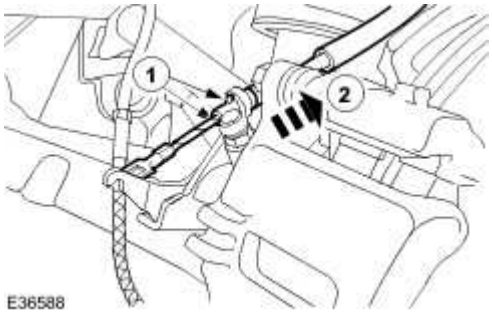

5 . **CAUTION: Brake fluid contains polyglycol ethers and polyglycols. Avoid contact with the eyes. Wash hands thoroughly after handling, as prolonged contact may cause irritation and dermatitis. If brake fluid contacts the eyes, flush the eyes with cold water or eyewash solution and seek medical attention. If taken internally do not induce vomiting, seek immediate medical attention. Failure to follow these instructions may result in personal injury.**

CAUTION: If brake fluid comes into contact with the paintwork, the affected area must be immediately washed down with cold water.

CAUTION: The brake caliper must be supported at all times.

CAUTION: Cap the brake hose to prevent loss of fluid and prevent dirt ingress.

NOTE:

To prevent the loss of brake fluid, apply the brake pedal hold-down tool and adjust to hold the brake pedal down 40 mm (1.6 in).

Detach the brake hose.

Remove and discard the sealing washers.

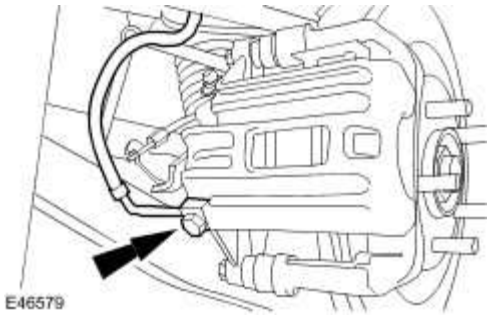

6 . **NOTE:**

Left-hand shown, right-hand similar.

Remove the brake caliper.

1) Remove and discard the brake caliper retaining bolts.

2) Remove the brake caliper.

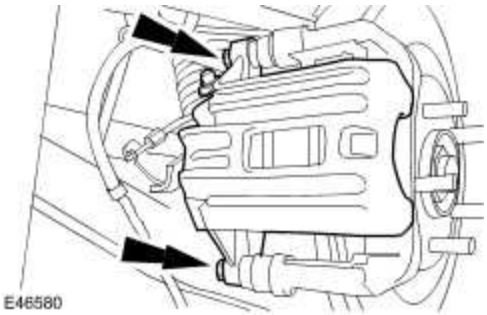

Installation

1 . **CAUTION: If brake fluid comes into contact with the paintwork, the affected area**

www.JagDocs.com

must be immediately washed down with cold water.

Install the brake caliper.

- Install new brake caliper upper retaining bolts.
- Tighten to 34 Nm.

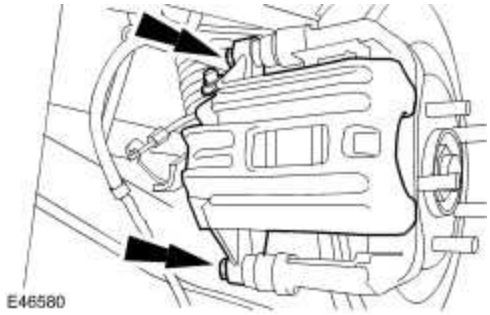

2 . Attach the brake hose.

- Install new sealing washers.
- Tighten to 35 Nm.

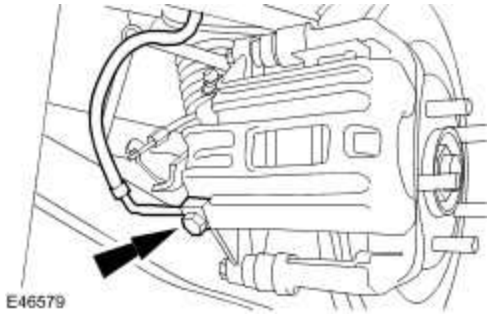

3 . Attach the parking brake cable.

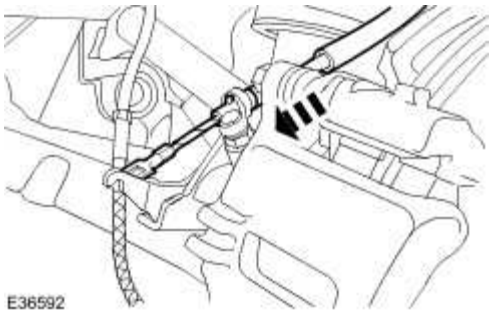

4 . Attach the parking brake cable.

1) Reposition the brake caliper lever.

2) Attach the parking brake cable.

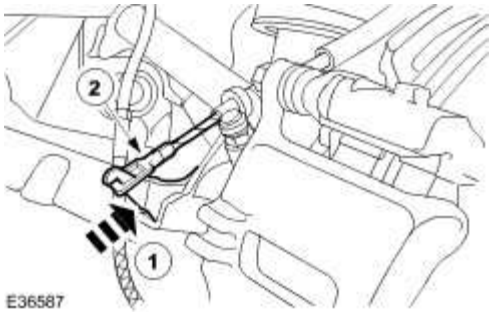

5 . Remove the brake pedal hold-down tool.

6 Bleed the brake system.
. For additional information, refer to Brake System Bleeding - VIN Range: G00442->G45703 (70.25.03)

7 . Install both rear wheels and tires.
For additional information, refer to Wheel and Tire (74.20.05)

www.JagDocs.com

Brake Caliper - Vehicles With: High Performance Brakes, VIN Range: G00442->G45703 (70.55.03)

Special Service Tools

Brake pedal hold-down tool
JDS 9013

Removal

1. Remove the brake pads.
   For additional information, refer to Brake Pads - Vehicles With: High Performance Brakes, VIN Range: G00442->G45703 (70.40.03)

2. **CAUTION: Brake fluid contains polyglycol ethers and polyglycols. Avoid contact with the eyes. Wash hands thoroughly after handling, as prolonged contact may cause irritation and dermatitis. If brake fluid contacts the eyes, flush the eyes with cold water or eyewash solution and seek medical attention. If taken internally do not induce vomiting, seek immediate medical attention. Failure to follow these instructions may result in personal injury.**

   CAUTION: If brake fluid comes into contact with the paintwork, the affected area must be immediately washed down with cold water.

   NOTE:

   To prevent the loss of brake fluid, apply the brake pedal hold-down tool and adjust to hold the brake pedal down 40 mm (1.6 in).

NOTE:

Cap the brake hose to prevent loss of fluid and prevent dirt ingress.

Detach the brake hose.

- Remove and discard the sealing washers.

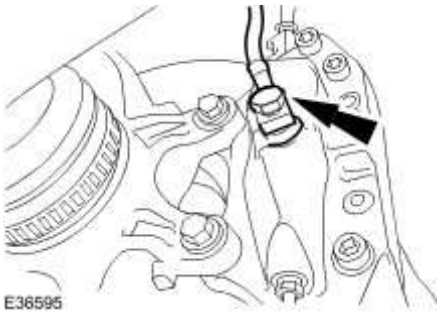

3 . Remove the brake caliper.

- Remove and discard the brake caliper retaining bolts.

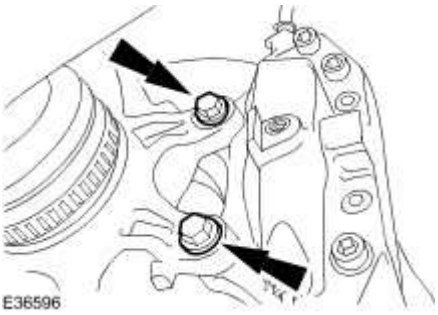

Installation

1 . Install the brake caliper.

- Install new brake caliper retaining bolts.
- Tighten to 70 Nm.

www.JagDocs.com

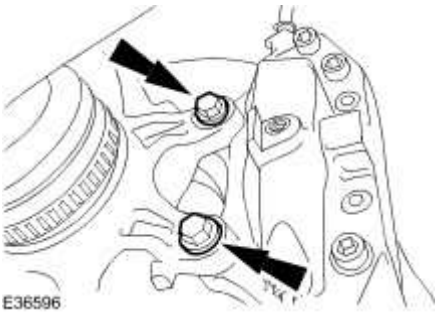

2 . Attach the brake hose.

- Install new sealing washers.
- Tighten to 35 Nm.

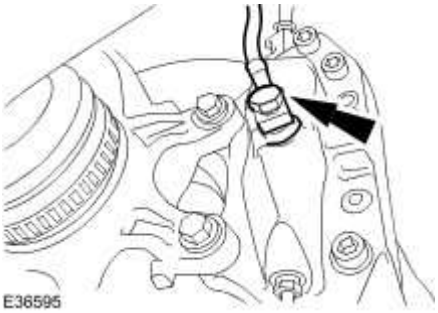

3 . Remove the brake pedal hold-down tool.

4 Install the brake pads.

. For additional information, refer to Brake Pads - Vehicles With: High Performance Brakes, VIN Range: G00442->G45703 (70.40.03)

5 Bleed the brake system.

. For additional information, refer to Brake System Bleeding - VIN Range: G00442->G45703 (70.25.03)

Brake Caliper - VIN Range: G45704->G99999 (70.55.03)

Special Service Tools

Brake pedal hold-down tool
JDS 9013

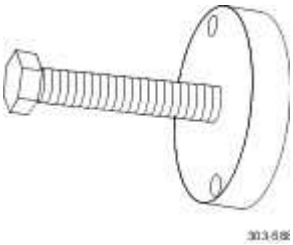

Crankshaft pulley/damper remover
303-588

Brake caliper piston retractor tool
206-080

Brake caliper piston retractor tool
206-081

Removal

All vehicles

1 Carry out the parking brake cable tension release procedure.

www.JagDocs.com

. For additional information, refer to Parking Brake Cable Tension Release - VIN Range: G45704->G99999

2 . Remove both rear wheels and tires.
For additional information, refer to

3 . **NOTE:**

Left-hand shown, right-hand similar.

Detach the parking brake cable.

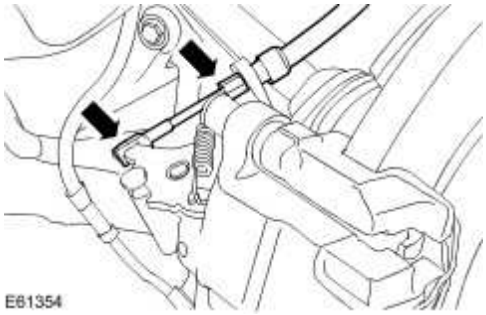

Vehicles with high performance brakes

4 . **NOTE:**

Left-hand shown, right-hand similar.

Remove the logo badge.

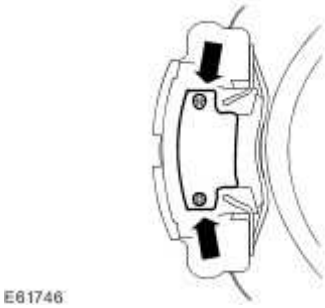

All vehicles

5 . **NOTE:**

Left-hand shown, right-hand similar.

Remove the anti-rattle spring.

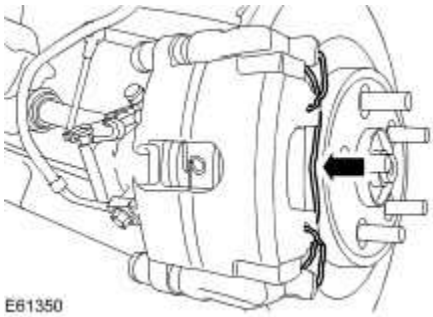

6 . **CAUTION: Brake fluid contains polyglycol ethers and polyglycols. Avoid contact with the eyes. Wash hands thoroughly after handling, as prolonged contact may cause irritation and dermatitis. If brake fluid contacts the eyes, flush the eyes with cold water or eyewash solution and seek medical attention. If taken internally do not induce vomiting, seek immediate medical attention. Failure to follow these instructions may result in personal injury.**

CAUTION: If brake fluid comes into contact with the paintwork, the affected area must be immediately washed down with cold water.

CAUTION: Cap the brake hose to prevent loss of fluid and prevent dirt ingress.

NOTE:

To prevent the loss of brake fluid, apply the brake pedal hold-down tool and adjust to hold the brake pedal down 40 mm (1.6 in).

NOTE:

Left-hand shown, right-hand similar.

www.JagDocs.com

Detach the brake hose.

Remove and discard the sealing washers.

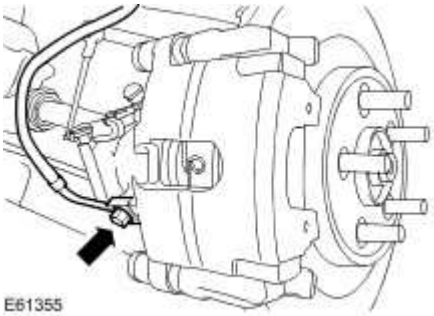

7 . **NOTE:**

Left-hand shown, right-hand similar.

Remove the brake caliper retaining bolt dust covers.

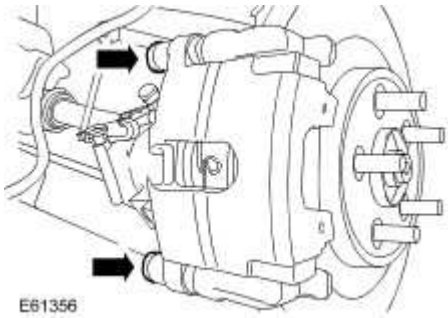

8 . **NOTE:**

Left-hand shown, right-hand similar.

Remove the brake caliper.

1) Remove the brake caliper retaining bolts.

2) Remove the brake caliper.

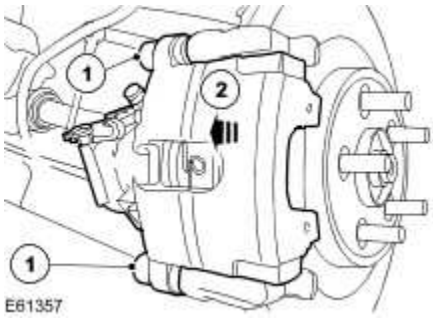

9 . **NOTE:**

Left-hand shown, right-hand similar.

Remove the brake pads.

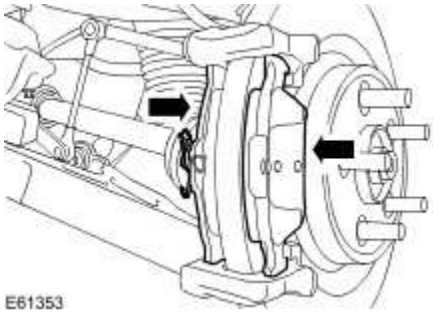

Installation

All vehicles

1 . **WARNING: Do not use compressed air to disperse brake dust into the atmosphere.**

CAUTION: Brake pads must always be replaced in axle sets.

CAUTION: Make sure the brake disc faces are clean before installation.

www.JagDocs.com

NOTE:

Make sure that the brake pad with the anti-rattle spring is installed to the inboard side of the brake disc.

NOTE:

Left-hand shown, right-hand similar.

Install the brake pads.

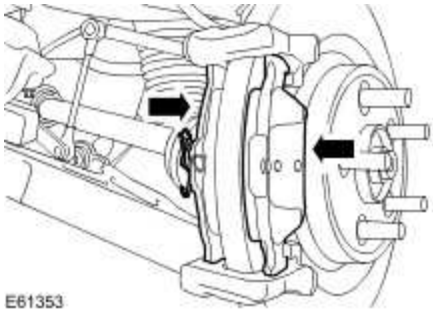

2. **CAUTION: As the piston is pushed back into the caliper housing, the brake fluid level in the reservoir will rise. Do not allow the reservoir to overflow.**

CAUTION: If brake fluid comes into contact with the paintwork, the affected area must be immediately washed down with cold water.

NOTE:

Only the extraction bolt from special tool 303-588 is used.

NOTE:

Only the forcing plate from special tool 206-080 is used.

NOTE:

Right-hand shown, left-hand similar.

Using the special tools, fully retract the brake caliper piston.

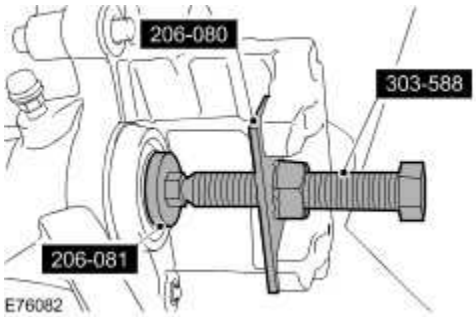

3 . **NOTE:**

Left-hand shown, right-hand similar.

Install the brake caliper retaining bolts.

1) Install the brake caliper.

2) Tighten to 28 Nm.

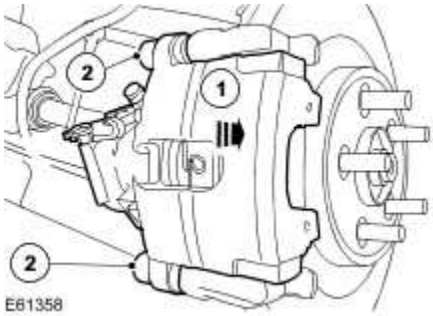

4 . **NOTE:**

Left-hand shown, right-hand similar.

Install the brake caliper retaining bolt dust covers.

www.JagDocs.com

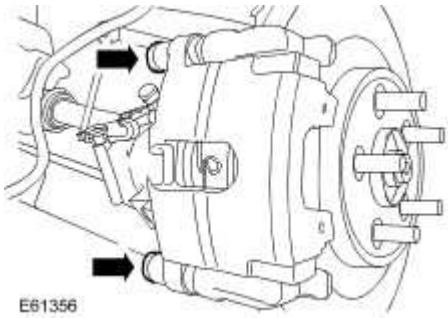

5 . **NOTE:**

Left-hand shown, right-hand similar.

Attach the brake hose.

- Install new sealing washers.
- Tighten to 35 Nm.

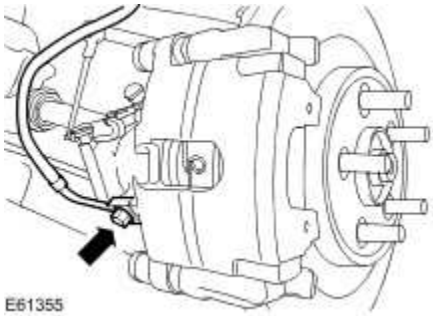

6 . **NOTE:**

Left-hand shown, right-hand similar.

Install the anti-rattle spring.

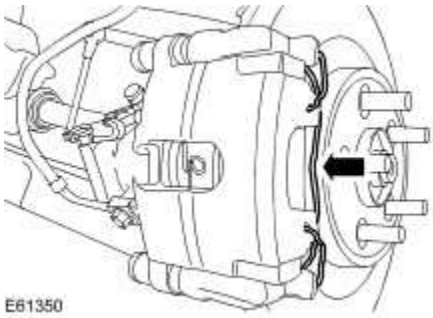

Vehicles with high performance brakes

7 . **NOTE:**

Left-hand shown, right-hand similar.

Install the logo badge.

Tighten to 5 Nm.

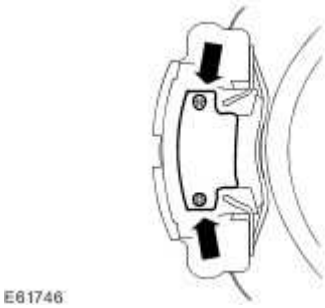

All vehicles

8 . Attach the parking brake cable.

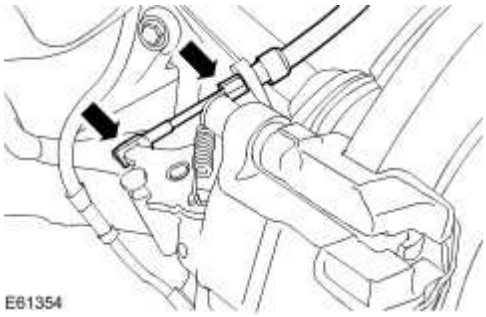

9 . Remove the brake pedal hold-down tool.

www.JagDocs.com

10 . Bleed the brake system.
For additional information, refer to

11 . Install both rear wheels and tires.
For additional information, refer to

Published: Mar 12, 2014

Brake Caliper (70.55.03) – Armoured Vehicles

Special Service Tools

Brake pedal hold-down tool
JDS 9013

Removal

CAUTION: The brake caliper is aligned / centralized to the brake disc when the vehicle is built. The vehicle may have shims fitted between the brake caliper anchor plate and the wheel knuckle. Care must be taken not to disturb this alignment. When removing caliper; remove only the bolts that secure the brake caliper to the brake caliper anchor plate. DO NOT loosen any other caliper bolts. This alignment / centralization MUST be checked / set when the wheel knuckle is replaced. Failure to follow this instruction may result in damage to the vehicle.

1 . Remove the brake pads.
For additional information, refer to Brake Pads (70.40.02)

2 .

CAUTION: Brake fluid contains polyglycol ethers and polyglycols. Avoid contact with the eyes. Wash hands thoroughly after handling, as prolonged contact may cause irritation and dermatitis. If brake fluid contacts the eyes, flush the eyes with cold water or eyewash solution and seek medical attention. If taken internally do not induce vomiting, seek immediate medical attention. Failure to follow these instructions may result in personal injury.

CAUTION: If brake fluid comes into contact with the paintwork, the affected area must be immediately washed down with cold water.

CAUTION: Do not allow the brake caliper to hang on the hydraulic hose, as this will damage the hose. Failure to follow this instruction will result in damage to the hose.

NOTE:

To prevent the loss of brake fluid, apply the brake pedal hold-down tool and adjust to hold the brake pedal down 40 mm (1.6 in).

NOTE:

Cap the brake hose to prevent loss of fluid and prevent dirt ingress.

Detach the brake hose.

- Remove and discard the sealing washers.

www.JagDocs.com

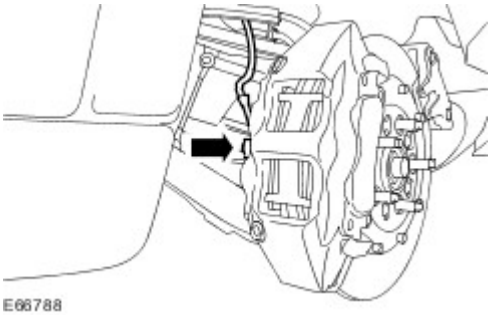

3.

CAUTION: Brake fluid contains polyglycol ethers and polyglycols. Avoid contact with the eyes. Wash hands thoroughly after handling, as prolonged contact may cause irritation and dermatitis. If brake fluid contacts the eyes, flush the eyes with cold water or eyewash solution and seek medical attention. If taken internally do not induce vomiting, seek immediate medical attention. Failure to follow these instructions may result in personal injury.

CAUTION: If brake fluid comes into contact with the paintwork, the affected area must be immediately washed down with cold water.

CAUTION: Do not allow the brake caliper to hang on the hydraulic hose, as this will damage the hose. Failure to follow this instruction will result in damage to the hose.

NOTE:

To prevent the loss of brake fluid, apply the brake pedal hold-down tool and adjust to hold the brake pedal down 40 mm (1.6 in).

NOTE:

Cap the brake hose to prevent loss of fluid and prevent dirt ingress.

Remove the brake caliper.

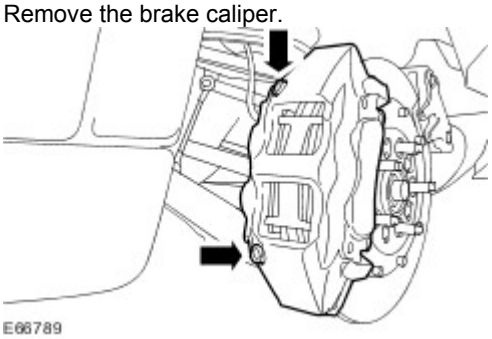

Installation

1 . **CAUTION: Do not allow the brake caliper to hang on the hydraulic hose, as this will damage the hose. Failure to follow this instruction will result in damage to the hose.**

Install the brake caliper.

- Tighten to 101 Nm.

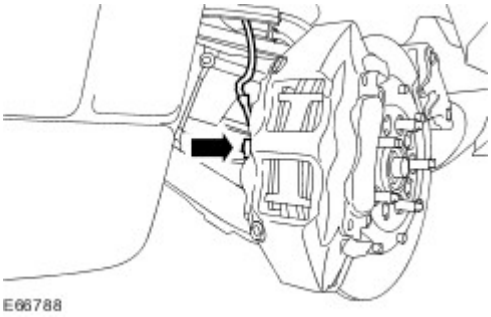

2 . Attach the brake hose.

- Install new sealing washers.
- Tighten to 35 Nm.

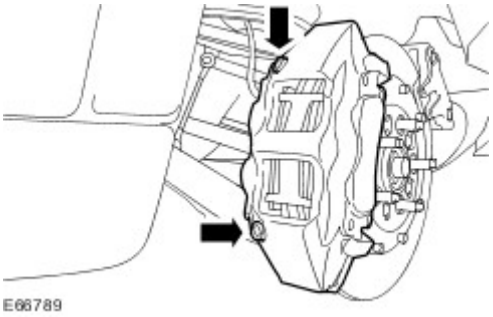

3 . Remove the brake pedal hold-down tool.

4 . Install the brake pads.
For additional information, refer to Brake Pads (70.40.02)

5 . Bleed the brake system.

www.JagDocs.com

Brake Disc - Vehicles With: Standard Brakes, VIN Range: G00442->G45703 (70.10.11)

Removal

1 Remove the brake pads.
. For additional information, refer to Brake Pads - Vehicles With: Standard Brakes, VIN Range: G00442->G45703 (70.40.03)

2 . **CAUTION: The brake caliper must be supported at all times.**

Detach brake caliper anchor plate.

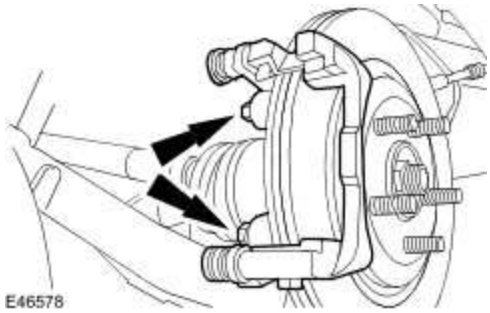

3 **NOTE:**
.

If the same brake disc is to be installed, the tip of a hub must be marked with a corresponding part of the brake disc for alignment.

Remove the brake disc.

- Remove and discard the brake disc retaining clips.

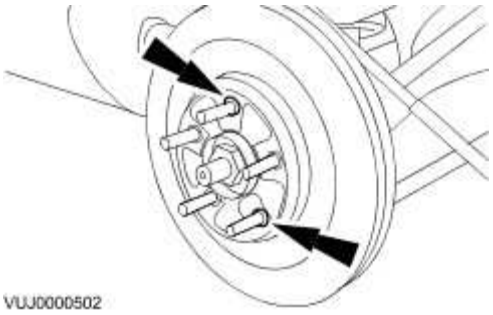

Installation

1 . To install, reverse the removal procedure.

- Install new brake disc retaining clips.

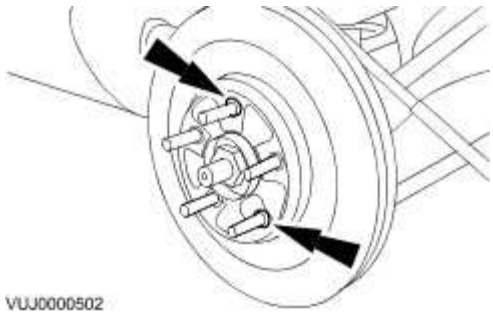

2 . Tighten to 103 Nm.

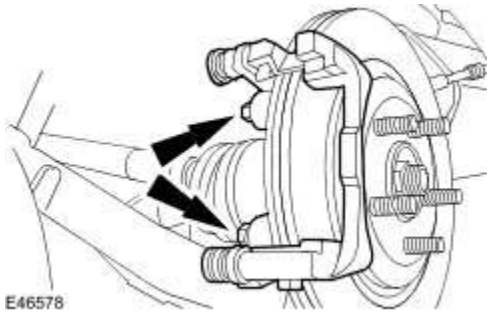

www.JagDocs.com

Brake Disc - Vehicles With: High Performance Brakes, VIN Range: G00442->G45703 (70.10.11)

Removal

1 . Remove the parking brake pads. <<206-05>>

2 . Remove the brake pads.

1) Remove the brake pad retaining pins.

2) Remove the brake pad anti-rattle spring plate.

3) Remove the brake pads.

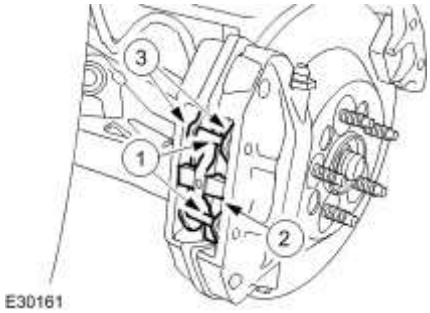

3 . **CAUTION: The brake caliper must be supported at all times.**

Detach the brake caliper and secure to one side.

- Remove and discard the brake caliper retaining bolts.

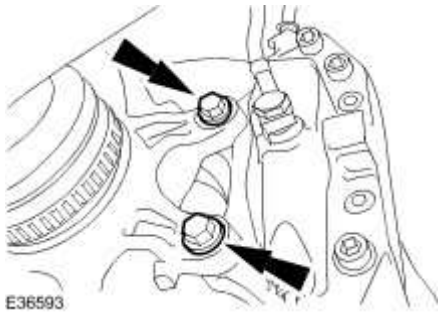

4 **NOTE:**

.

If the same brake disc is to be installed, the tip of a hub must be marked with a corresponding part of the brake disc for alignment.

Remove the brake disc.

- Remove and discard the brake disc retaining clips.

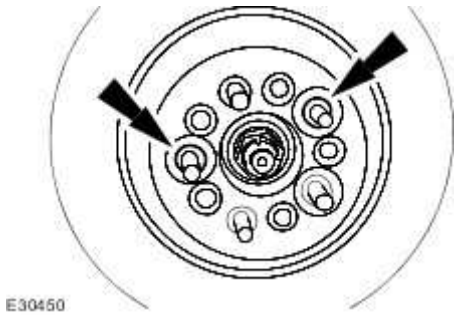

Installation

1 . **NOTE:**

Install new brake caliper retaining bolts.

To install, reverse the removal procedure.

- Tighten to 103 Nm.

www.JagDocs.com

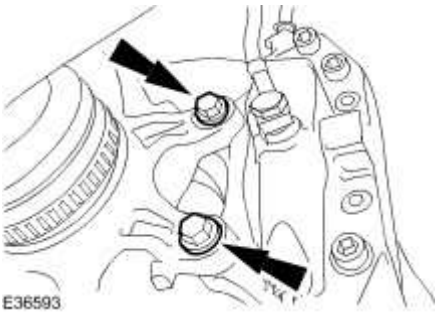
E36593

Brake Disc - VIN Range: G45704->G99999 (70.10.11)

Removal

1 . Remove the brake pads.
For additional information, refer to Brake Pads - VIN Range: G45704->G99999 (70.40.03)

2 . **CAUTION: The brake caliper must be supported at all times.**

NOTE:

Left-hand shown, right-hand similar.

Remove the brake caliper anchor plate.

- Remove and discard the brake caliper anchor plate retaining bolts.

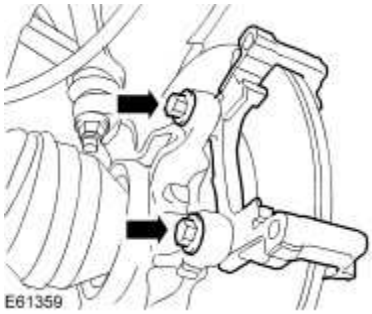

3 **NOTE:**
.

If the same brake disc is to be installed, the tip of a hub must be marked with a corresponding part of the brake disc for alignment.

NOTE:

Left-hand shown, right-hand similar.

www.JagDocs.com

Remove the brake disc.

- Remove and discard the brake disc retaining clips.

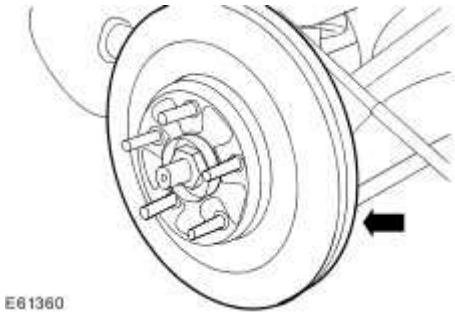

Installation

1 . **WARNING: Do not use compressed air to disperse brake dust into the atmosphere.**

CAUTION: Brake discs must always be replaced in axle sets.

CAUTION: Make sure the brake disc faces are clean before installation.

NOTE:

Left-hand shown, right-hand similar.

To install, reverse the removal procedure.

- Tighten to 103 Nm.

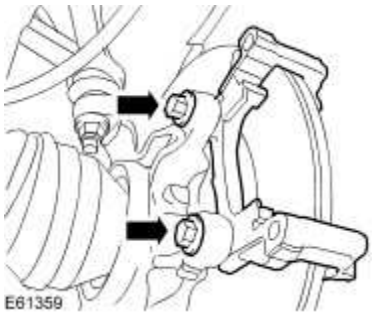

www.JagDocs.com

Published: Mar 12, 2014

Brake Disc (70.10.11) – Armoured Vehicles

Removal

CAUTION: Brake discs must be renewed in axle sets. Failure to follow this instruction may result in damage to the vehicle.

CAUTION: If new brake discs are installed, new brake pads must also be installed. Failure to follow this instruction may result in damage to the vehicle.

1 . Remove the brake pads.
For additional information, refer to

2 **NOTE:**

· If the same brake disc is to be installed, the tip of a hub must be marked with a corresponding part of the brake disc for alignment.

Remove the brake disc.

Remove and discard the brake disc retaining clips.

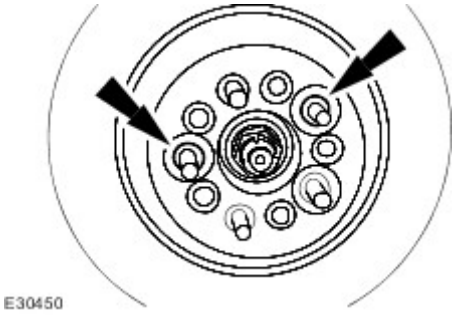

Installation

1 . To install, reverse the removal procedure.

Brake Pads - Vehicles With: Standard Brakes, VIN Range: G00442->G45703 (70.40.03)

Special Service Tools

Brake caliper piston retractor tool
206-080

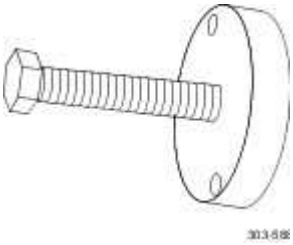

Crankshaft pulley/damper remover
303-588

Removal

1. **CAUTION: Whilst carrying out rear parking brake related service procedures, the tension on the rear parking brake release actuator will need to be released. Failure to follow this instruction may result in the parking brake to function incorrectly or become inoperative.**

   Carry out the parking brake cable tension release.
   For additional information, refer to Parking Brake - VIN Range: G00442->G45170

2. Remove both rear wheels and tires.
   For additional information, refer to

www.JagDocs.com

3 . **NOTE:**

Left-hand shown, right-hand similar.

Detach the brake caliper.

1) Remove and discard the brake caliper retaining bolts.

2) Detach the brake caliper.

4 . **CAUTION: The brake caliper must be supported at all times.**

NOTE:

Left-hand shown, right-hand similar.

Using a suitable tie strap, secure the caliper to one side.

5 . **NOTE:**

Left-hand shown, right-hand similar.

Remove the brake pads.

- Remove the brake pad anti-rattle spring plates.

Installation

1. **WARNING: Do not use compressed air to disperse brake dust into the atmosphere.**

CAUTION: If the pistons are pushed back into the housing, brake fluid will be forced back into the brake fluid reservoir.

CAUTION: Make sure that the brake disc faces are clean before installation.

CAUTION: Brake pads must always be replaced in axle sets.

NOTE:

Remove the forcing screw from the crankshaft pulley/damper remover and install to the brake caliper piston retractor tool.

NOTE:

Left-hand shown, right-hand similar.

Using the special tools, fully retract the brake caliper piston.

2. **NOTE:**

Left-hand shown, right-hand similar.

Make sure the brake caliper piston location mark is in the correct position so that the locator pin on the brake pad locates correctly into the brake caliper piston.

www.JagDocs.com

3 **NOTE:**

.

Remove the forcing screw from the brake caliper piston retractor tool and install to the crankshaft pulley/damper remover.

NOTE:

Left-hand shown, right-hand similar.

Install new brake pads.

- Install the brake pad anti-rattle spring plates.

4 . **CAUTION: The brake caliper must be supported at all times.**

NOTE:

Left-hand shown, right-hand similar.

Remove the tie strap.

5 . **NOTE:**

Left-hand shown, right-hand similar.

Attach the caliper.

- Install new brake caliper lower retaining bolts.
- Tighten to 34 Nm.

6 . Install both rear wheels and tires.
For additional information, refer to

7
. **CAUTION: Calibrate the electric park brake using Jaguar approved diagnostic system. If the Jaguar approved diagnostic system is not available disconnect the battery for approximately 30 seconds, the vehicle will then prompt the driver to carry out the calibration procedure as per the vehicle hand book on re-connection.**

Calibrate the electric parking brake module using the Jaguar approved diagnostic system.

8 **NOTE:**
.

Do not start the engine or operate the electronic park brake before depressing the brake pedal.

Repeatedly depress the brake pedal until brake pressure is evident.

www.JagDocs.com

Brake Pads - Vehicles With: High Performance Brakes, VIN Range: G00442->G45703 (70.40.03)

Removal

1. **CAUTION: Whilst carrying out rear parking brake related service procedures, the tension on the rear parking brake release actuator will need to be released. Failure to follow this instruction may result in the parking brake to function incorrectly or become inoperative.**

   Carry out the parking brake cable tension release.
   For additional information, refer to

2. **WARNING: BRAKE DUST, IF INHALED CAN DAMAGE YOUR HEALTH. ALWAYS REMOVE BRAKE DUST USING A VACUUM BRUSH. DO NOT USE A COMPRESSED-AIR LINE TO DISPERSE BRAKE DUST INTO THE ATMOSPHERE. Failure to follow this instruction may result in personal injury.**

   CAUTION: Brake pads must always be replaced in axle sets.

   CAUTION: Replacement of nuts and bolts: Various thread-locking devices are used on nuts and bolts throughout the vehicle. These devices restrict the number of times a nut or bolt can be used.
   For additional information, refer to General Service Information

   CAUTION: The High performance brake caliper is aligned to the brake disc when it is first installed to the vehicle, therefore, care must be taken not to disturb this alignment. When removing the caliper; remove the bolts that secure the anchor bracket to the vertical link only. DO NOT loosen any other caliper bolts.

Open engine compartment and fit paint work protection covers to fenders.

3 . Raise rear of vehicle and support on stands.
For additional information, refer to Jacking

4 . Remove rear wheels.
For additional information, refer to

5 . **CAUTION: Remove brake fluid spillage immediately from paint work, with clean water.**

Loosen brake fluid reservoir-cap.

Position a cloth around the reservoir to collect any fluid spillage.

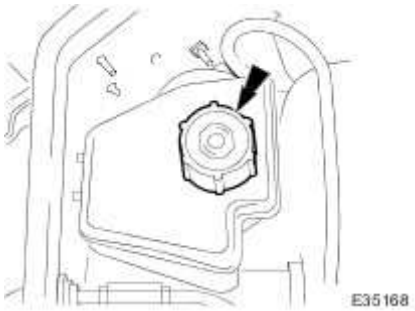

6 . Remove brake pads from caliper.

1) Withdraw pins from caliper.

2) Remove anti-rattle spring.

3) Remove brake pads.

www.JagDocs.com

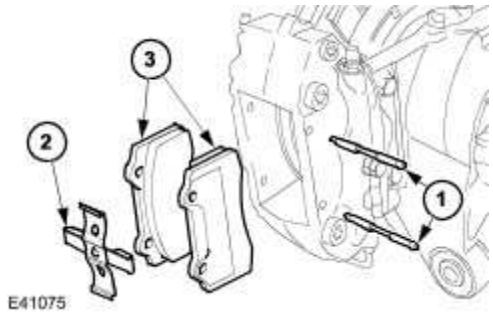

7 . Clean all mating surfaces and remove brake dust, see WARNING above.

8 . Repeat above procedure to remove opposite side brake pads.

Installation

1 . **CAUTION: Make sure grease does not contact brake-pad friction surface or brake disc.**

To prevent brake squeal apply grease to the shoulders of the brake-pad backplate.
For additional information, refer to

- Apply a uniform layer of grease to backplate shoulders, making sure the whole shoulder is covered.

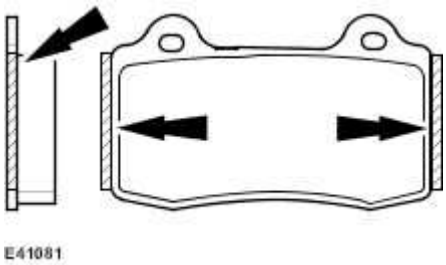

2 . **CAUTION: Make sure the brake pads are fitted with the direction arrow following the direction of wheel rotation.**

Make sure the brake pads are fitted with the direction arrow following the direction of wheel rotation.

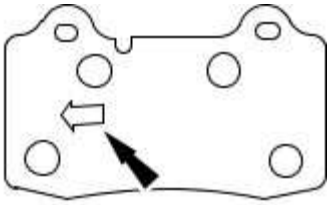

E52793

3. **CAUTION: Retracting the caliper piston may cause the fluid reservoir to over-flow. Remove brake fluid spillage immediately from paint work with clean water.**

CAUTION: Make sure the brake pads are installed to the correct orientation.

CAUTION: Make sure the brake pads are fitted with the direction arrow following the direction of wheel rotation.

CAUTION: Note the condition of pins and replace if necessary.

NOTE:

Slowly retract caliper pistons.

Install brake pads.

1) Install pads.

2) Position anti-rattle spring.

3) Install pins - make sure pin collets are fully engaged into caliper.

www.JagDocs.com

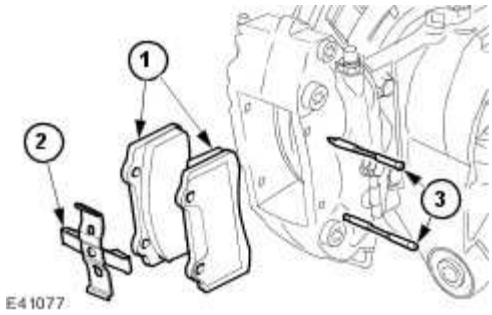

4 . Repeat above procedure to install opposite side brake pads.

5 . Fit wheels.
For additional information, refer to

6 . Remove stands and lower vehicle.
For additional information, refer to Jacking

7 . **CAUTION: Remove brake fluid spillage immediately from paint work, with clean water.**

Check brake fluid level.

- Check brake fluid level is at the maximum mark.
- Remove cloth.
- Fit cap.

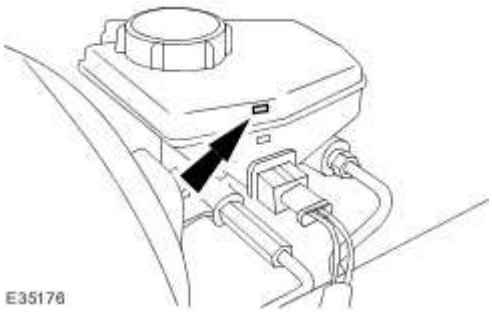

8 . Remove paint work protection covers, and close engine compartment.

9 . **CAUTION: Calibrate the electric park brake using Jaguar approved diagnostic system. If the Jaguar approved diagnostic system is not available disconnect the battery for approximately 30 seconds, the vehicle will then prompt the driver to carry out the calibration procedure as per the vehicle hand book on re-connection.**

Calibrate the electric parking brake module using the Jaguar approved diagnostic system.

10 . Start the engine and repeatedly press the brake pedal until brake pressure is evident.

www.JagDocs.com

Brake Pads - VIN Range: G45704->G99999 (70.40.03)

Special Service Tools

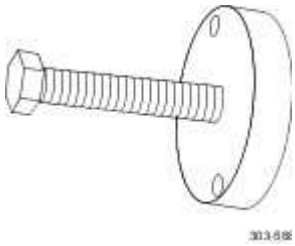

Crankshaft pulley/damper remover
303-588

Brake caliper piston retractor tool
206-080

Brake caliper piston retractor tool
206-081

Removal

All vehicles

1. **CAUTION: Whilst carrying out rear parking brake related service procedures, the tension on the rear parking brake release actuator will need to be released. Failure to follow this instruction may result in the parking brake to function incorrectly or become inoperative.**

   Carry out the parking brake cable tension release.
   For additional information, refer to

2 . Remove both rear wheels and tires.
For additional information, refer to

Vehicles with high performance brakes

3 . Remove the logo badge.

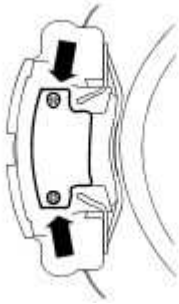

All vehicles

4 . **NOTE:**

Left-hand shown, right-hand similar.

Remove the anti-rattle spring.

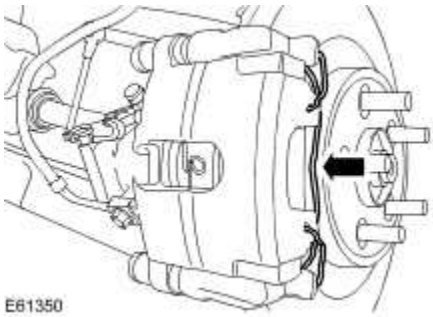

5 . **NOTE:**

Left-hand shown, right-hand similar.

Remove the brake caliper retaining bolt dust covers.

www.JagDocs.com

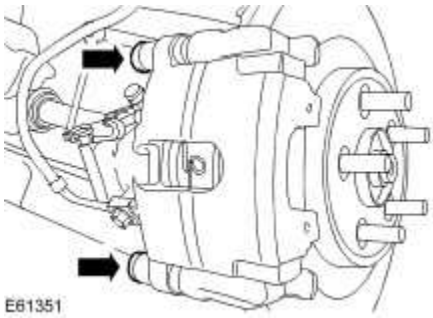

6 . **CAUTION: The brake caliper must be supported at all times.**

NOTE:

Left-hand shown, right-hand similar.

Detach the brake caliper.

1) Remove the brake caliper retaining bolts.

2) Detach the brake caliper.

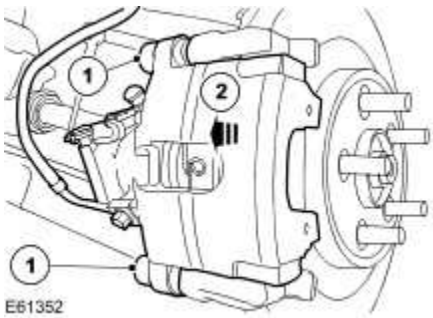

7 . **NOTE:**

Left-hand shown, right-hand similar.

Remove the brake pads.

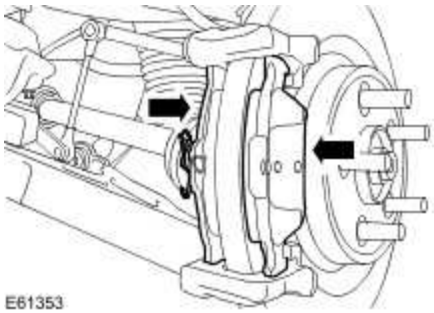

Installation

1. **CAUTION: As the piston is pushed back into the caliper housing, the brake fluid level in the reservoir will rise. Do not allow the reservoir to overflow.**

CAUTION: If brake fluid comes into contact with the paintwork, the affected area must be immediately washed down with cold water.

NOTE:

Only the extraction bolt from special tool 303-588 is used.

NOTE:

Only the forcing plate from special tool 206-080 is used.

NOTE:

Right-hand shown, left-hand similar.

Using the special tools, fully retract the brake caliper piston.

www.JagDocs.com

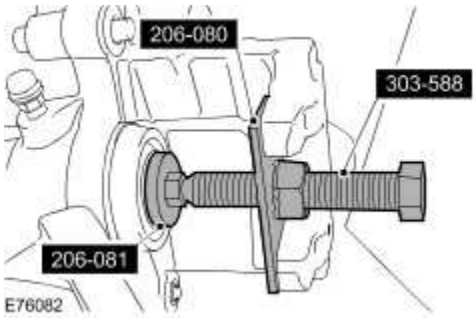

2. **WARNING: Do not use compressed air to disperse brake dust into the atmosphere.**

CAUTION: Make sure the brake disc faces are clean before installation.

CAUTION: Brake pads must always be replaced in axle sets.

NOTE:

Make sure that the brake pad with the anti-rattle spring is installed to the inboard side of the brake disc.

NOTE:

Left-hand shown, right-hand similar.

To install, reverse the removal procedure.

- Tighten to 28 Nm.

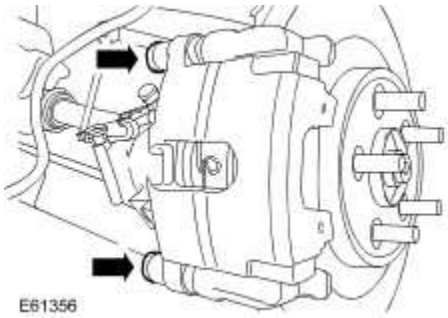

3 . Tighten to 5 Nm.

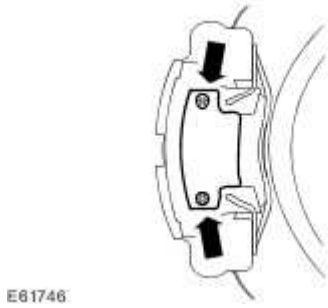

4 . **CAUTION: Calibrate the electric park brake using Jaguar approved diagnostic system. If the Jaguar approved diagnostic system is not available disconnect the battery for approximately 30 seconds, the vehicle will then prompt the driver to carry out the calibration procedure as per the vehicle hand book on re-connection.**

Calibrate the electric parking brake module using the Jaguar approved diagnostic system.

5 **NOTE:**
.

Do not start the engine or operate the electronic park brake before depressing the brake pedal.

Repeatedly depress the brake pedal until brake pressure is evident.

www.JagDocs.com

Published: Mar 12, 2014

Brake Pads (70.40.03) – Armoured Vehicles

Removal

WARNING: BRAKE DUST, IF INHALED CAN DAMAGE YOUR HEALTH. ALWAYS REMOVE BRAKE DUST USING A VACUUM BRUSH. DO NOT USE A COMPRESSED-AIR LINE TO DISPERSE BRAKE DUST INTO THE ATMOSPHERE. Failure to follow this instruction may result in personal injury.

CAUTION: Brake pads must always be replaced in axle sets. Failure to follow this instruction may result in damage to the vehicle.

CAUTION: The brake caliper is aligned / centralized to the brake disc when the vehicle is built. The vehicle may have shims fitted between the brake caliper anchor plate and the wheel knuckle. Care must be taken not to disturb this alignment. When removing caliper; remove only the bolts that secure the brake caliper to the brake caliper anchor plate. DO NOT loosen any other caliper bolts. This alignment / centralization MUST be checked / set when the wheel knuckle is replaced. Failure to follow this instruction may result in damage to the vehicle.

1 . Remove both rear wheel and tires.
For additional information, refer to

2 .

CAUTION: Remove brake fluid spillage immediately from paint work, with clean water. Failure to follow this instruction may result in damage to the vehicle.

Loosen brake fluid reservoir cap.

- Position a cloth around the reservoir to collect any fluid spillage.

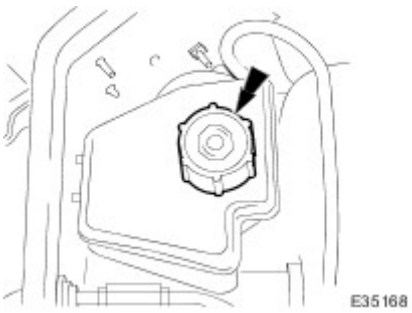

3 .

CAUTION: Do not allow the brake caliper to hang on the hydraulic hose, as this will damage the hose. Failure to follow this instruction will result in damage to the hose.

NOTE:

Left-hand shown, right-hand similar.

Detach the brake caliper.

- Remove the brake caliper retaining bolts.

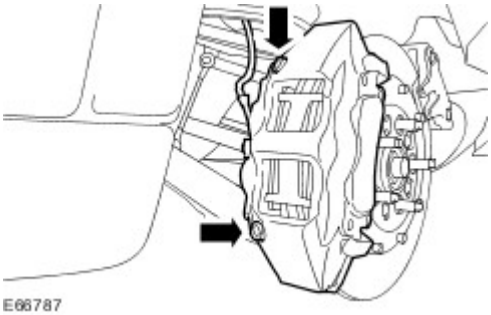

4. **CAUTION: Do not allow the brake caliper to hang on the hydraulic hose, as this will damage the hose. Failure to follow this instruction will result in damage to the hose.**

NOTE:

Left-hand shown, right-hand similar.

Remove the brake pads from the brake caliper.

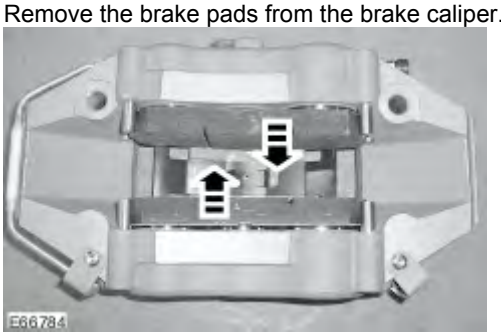

Installation

1. **WARNING: Do not use compressed air to disperse brake dust into the atmosphere. Failure to follow this instruction may result in personal injury.**

CAUTION: Make sure that the anti-rattle spring is correctly installed. Failure to follow this instruction may result in damage to the vehicle.

CAUTION: If the brake caliper pistons are pushed back into the housing, brake fluid will be forced back into the brake fluid reservoir. Remove brake fluid spillage immediately from paint work, with clean water. Failure to follow this instruction may result in personal injury.

CAUTION: Make sure the brake disc faces are clean before installation. Failure to follow this instruction may result in damage to the vehicle.

CAUTION: Brake pads must always be replaced in axle sets. Failure to follow this instruction may result in damage to the vehicle.

NOTE:

Left-hand shown, right-hand similar.

www.JagDocs.com

To install, reverse the removal procedure.

- Using a suitable tool, fully retract the brake caliper pistons.
- Tighten to 101 Nm.

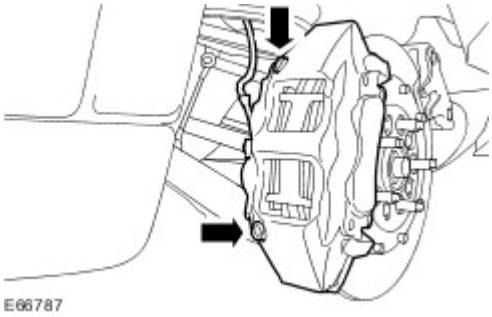

Specifications

Description	Nm	lb-ft	lb-in
Parking brake caliper retaining bolts - vehicles with Brembo brakes	70	52	-
Parking brake module retaining nuts	4	-	35
Parking brake release actuator retaining bolts	20	15	-

Specifications – Armoured XJ

Description	Nm	lb-ft	lb-in
Parking brake caliper to wheel hub retaining bolts	70	51	-
Parking brake caliper body retaining bolts	80	59	-

www.JagDocs.com

Specifications

No data

Parking Brake Cable Tension Release - VIN Range: G00442->G45703

Special Service Tools

Electric parking brake release tool
206-082

CAUTION: The warranty of the electric parking brake release tool will be invalidated if the casing has been removed.

1.

WARNING: Always use the Jaguar Approved Diagnostic System to release the parking brake cable tension, when carrying out repair operations on the electric park brake which require the cable tension to be released.

Connect the Jaguar approved diagnostic system to release the parking brake cable tension.

WARNING: The procedure below should only be used in emergency situations, to release the electric parking brake. All calibration of the parking brake system will be lost, and the parking brake will need to be re-calibrated to function correctly.

NOTE:

The tool shown must only be used in the event of an emergency.

2. Move the selector lever to the ' P' position.

3. Release the parking brake.

www.JagDocs.com

4. Remove the luggage compartment floor covering.

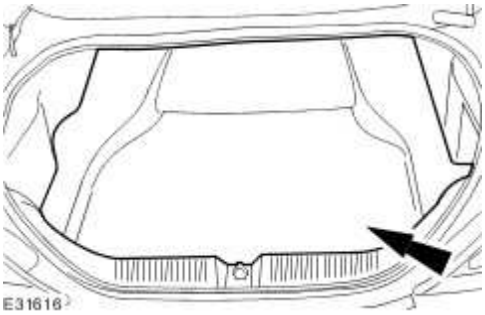

5. **NOTE:**

   Left-hand shown, right-hand similar.

Remove the luggage compartment side trim panel.

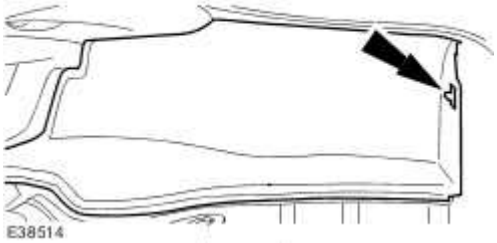

6. Disconnect the parking brake module electrical connector

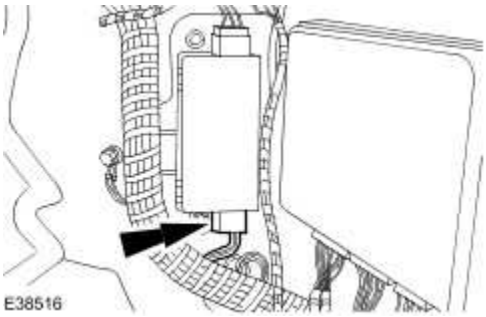

7. Connect the special tool to the parking brake module wiring harness electrical connector.

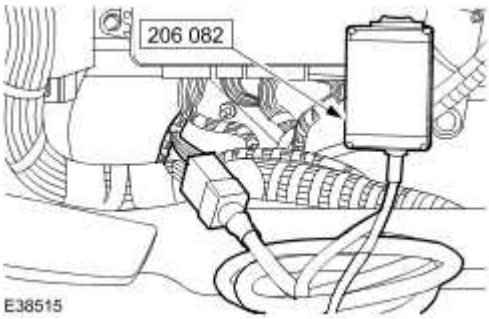

8. **NOTE:**

   Operate the parking brake release tool until an audible noise is heard from the parking brake release actuator.

Release the parking brake cable tension.

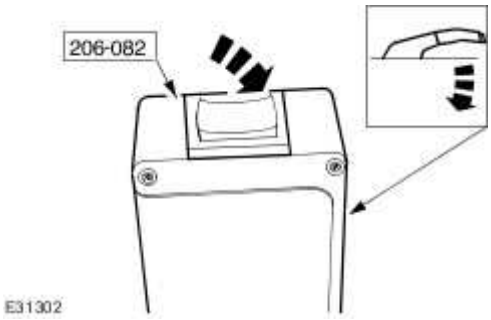

9. Remove the special tool and carry out any necessary repair to the system.

10. Connect the parking brake module electrical connector.

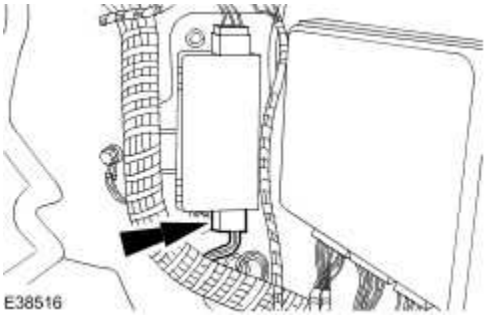

11. **NOTE:**

    Left-hand shown, right-hand similar.

Install the luggage compartment side trim panel.

www.JagDocs.com

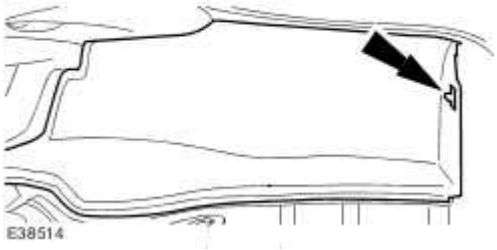

12. Remove the luggage compartment floor covering.

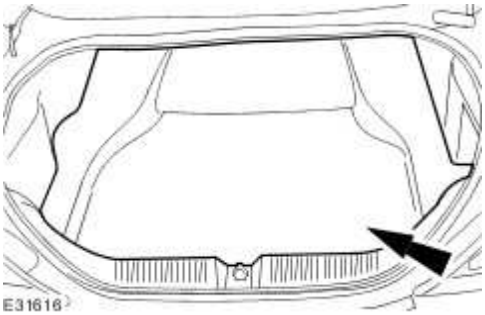

13. **NOTE:**

The brake pedal must be applied when calibrating the parking brake switch.

Apply the parking brake.

14.

CAUTION: Calibrate the electric park brake using Jaguar approved diagnostic system. If the Jaguar approved diagnostic system is not available disconnect the battery for approximately 30 seconds, the vehicle will then prompt the driver to carry out the calibration procedure as per the vehicle hand book on re-connection.

Calibrate the electric parking brake module using the Jaguar approved diagnostic system.

Parking Brake Cable Tension Release - VIN Range: G45704->G99999

Special Service Tools

Electric parking brake release tool
206-082

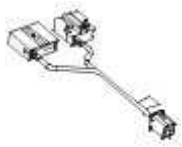

Electric parking brake release tool
206-082-01

CAUTION: The warranty of the electric parking brake release tool will be invalidated if the casing has been removed.

1.

WARNING: Always use the Jaguar Approved Diagnostic System to release the parking brake cable tension, when carrying out repair operations on the electric park brake which require the cable tension to be released.

Connect the Jaguar approved diagnostic system to release the parking brake cable tension.

WARNING: The procedure below should only be used in emergency situations, to release the electric parking brake. All calibration of the parking brake system will be lost, and the parking brake will need to be re-calibrated to function correctly.

www.JagDocs.com

NOTE:

The tool shown must only be used in the event of an emergency.

2. Move the selector lever to the ' P' position.

3. Release the parking brake.

4. Remove the luggage compartment floor covering.

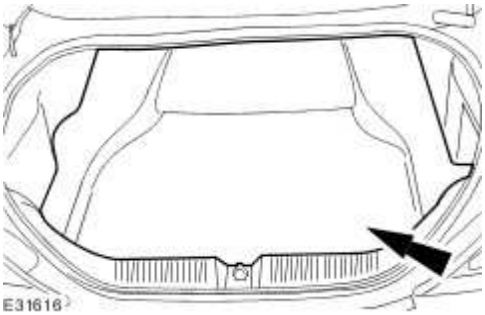

5. Remove the luggage compartment side trim panel.

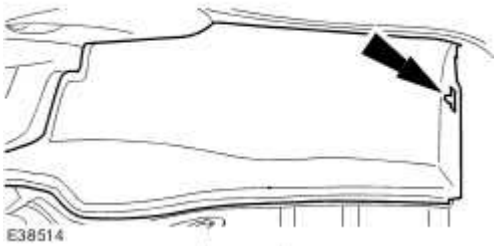

6. Detach the rear electronic module (REM).

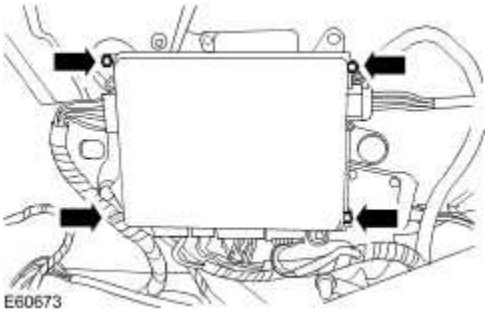

7.

CAUTION: Disconnect the parking brake module electrical connectors in the sequence

shown. Failure to follow this instruction may result in diagnostic trouble codes being stored in the module.

Disconnect the parking brake module electrical connectors.

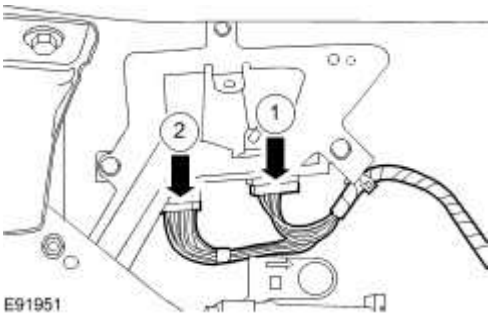

8. Connect the special tools to the parking brake module wiring harness electrical connectors.

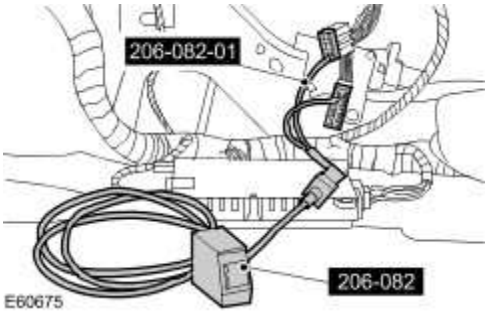

9. **NOTE:**

   Operate the parking brake release tool until an audible noise is heard from the parking brake release actuator.

Release the parking brake cable tension.

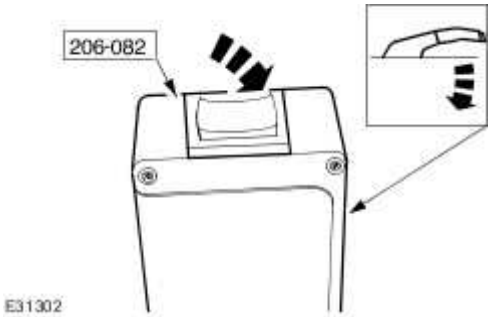

10. Remove the special tool and carry out any necessary repair to the system.

www.JagDocs.com

11. Disconnect the special tools from the parking brake module wiring harness electrical connectors.

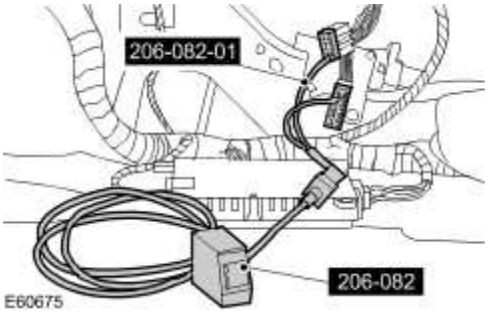

12.

CAUTION: Connect the parking brake module electrical connectors in the sequence shown. Failure to follow this instruction may result in diagnostic trouble codes being stored in the module.

Connect the parking brake module electrical connectors.

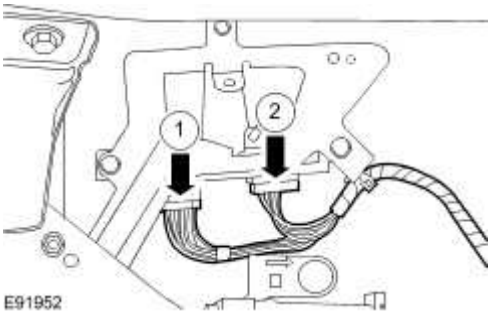

13. Attach the REM.

- Tighten to 6 Nm.

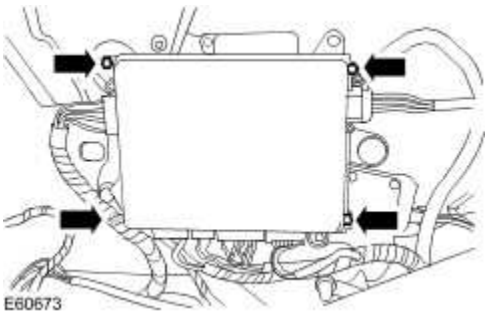

14. Install the luggage compartment side trim panel.

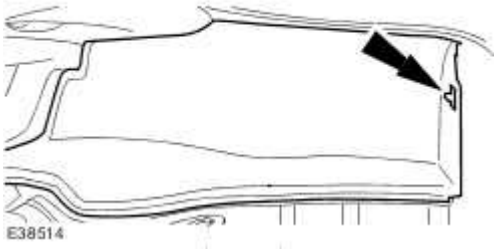

15. Install the luggage compartment floor covering.

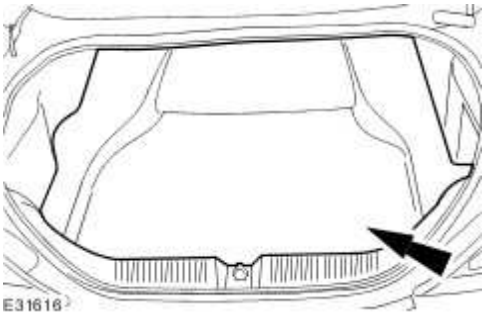

16. **NOTE:**

The brake pedal must be applied when calibrating the parking brake switch.

Apply the parking brake.

17.

CAUTION: Calibrate the electric park brake using Jaguar approved diagnostic system. If the Jaguar approved diagnostic system is not available disconnect the battery for approximately 30 seconds, the vehicle will then prompt the driver to carry out the calibration procedure as per the vehicle hand book on re-connection.

Calibrate the electric parking brake module using the Jaguar approved diagnostic system.

www.JagDocs.com

Parking Brake - VIN Range: G00442->G45703

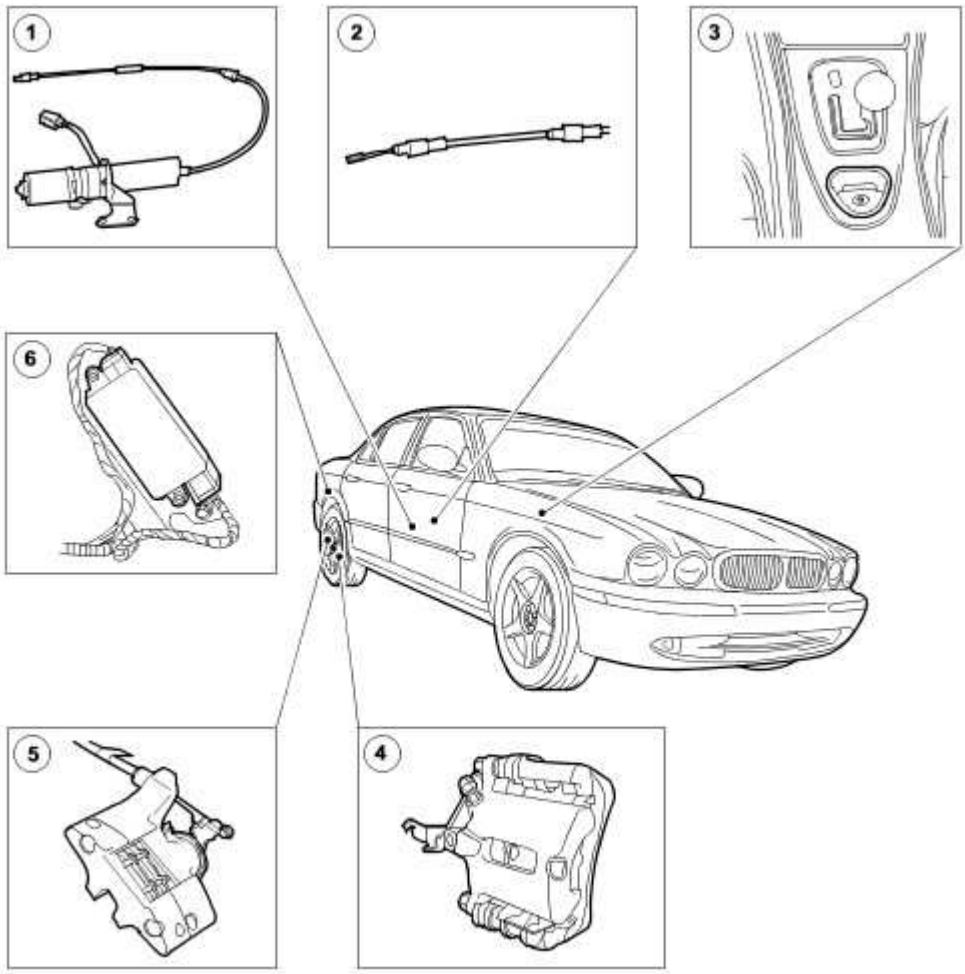

E38590

Item	Part Number	Description
1	—	Parking brake actuator
2	—	Parking brake cable
3	—	Parking brake switch
4	—	Parking brake caliper (vehicles without Brembo brakes)

5	—	Parking brake caliper (vehicles with Brembo brakes)
6	—	Parking brake module

Electric Park Brake

The electric park brake (EPB) system is operated by a floor console mounted switch. The rear calipers are activated by cables from an electric motor and actuator unit which is mounted on the rear subframe. Overall control of the EPB is from a control module which is located in the luggage compartment behind the right-hand rear luggage compartment trim panel. On vehicles with Brembo brakes separate parking brake calipers are fitted.

EPB Operation

To apply the parking brake, pull the parking brake switch upwards and release. The switch will then return to the neutral position and the parking brake low fluid warning light will illuminate on the instrument cluster. To release the parking brake set the ignition switch to position 2 or with the engine running, apply the footbrake and press the parking brake switch down. The parking brake is automatically released when the selector is moved from the 'P' position.

If the vehicle is stationary and the gear selector is in 'D' or 'R' and the parking brake is applied, then the parking brake will automatically release when the accelerator pedal is depressed.

The parking brake is automatically applied when the key is removed from the ignition switch. If the parking brake is required to be permanently released press and hold the parking brake switch down and at the same time remove the key. If the parking brake is operated while the vehicle is in motion the message 'PARKBRAKE ON' will be displayed on the message centre. The warning lamp in the instrument cluster will be illuminated and a warning chime will sound.

If the battery has been discharged or disconnected a message 'APPLY PARKBRAKE' will be displayed when the ignition is next switched on. Apply the footbrake and pull the parking brake switch up to apply the parking brake. This is required to reset the parking brake system which will now function correctly.

www.JagDocs.com

Parking Brake - VIN Range: G45704->G99999

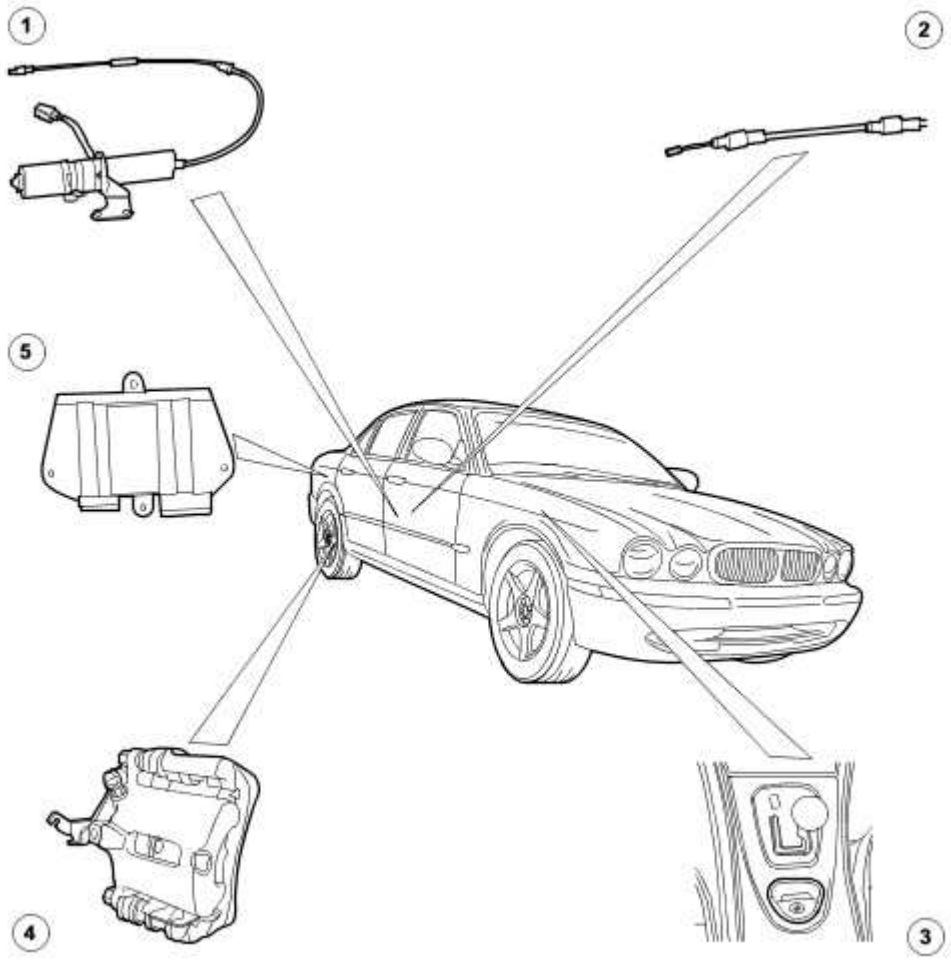

E60940

Item	Part Number	Description
1	—	Parking brake actuator
2	—	Parking brake cable
3	—	Parking brake switch
4	—	Brake caliper
5	—	Parking brake module

Electric Park Brake

The electric park brake (EPB) system is operated by a floor console mounted switch. The rear calipers are activated by cables from an electric motor and actuator unit which is mounted on the rear subframe. Overall control of the EPB is from a control module which is located in the luggage compartment behind the right-hand rear luggage compartment trim panel and above and behind the rear electronic module (REM).

EPB Operation

To apply the parking brake, pull the parking brake switch upwards and release. The switch will then return to the neutral position and the parking brake low fluid warning light will illuminate on the instrument cluster. To release the parking brake set the ignition switch to position 2 or with the engine running, apply the footbrake and press the parking brake switch down. The parking brake is automatically released when the selector is moved from the 'P' position.

If the vehicle is stationary and the gear selector is in 'D' or 'R' and the parking brake is applied, then the parking brake will automatically release when the accelerator pedal is depressed.

The parking brake is automatically applied when the key is removed from the ignition switch. If the parking brake is required to be permanently released press and hold the parking brake switch down and at the same time remove the key. If the parking brake is operated while the vehicle is in motion the message 'PARKBRAKE ON' will be displayed on the message centre. The warning lamp in the instrument cluster will be illuminated and a warning chime will sound.

If the battery has been discharged or disconnected a message 'APPLY PARKBRAKE' will be displayed when the ignition is next switched on. Apply the footbrake and pull the parking brake switch up to apply the parking brake. This is required to reset the parking brake system which will now function correctly.

www.JagDocs.com

Published: Mar 12, 2014

Parking Brake – Armoured Vehicles

CAUTION: The spacer must be correctly aligned to the parking brake caliper. Failure to follow this instruction may result in damage to the vehicle.

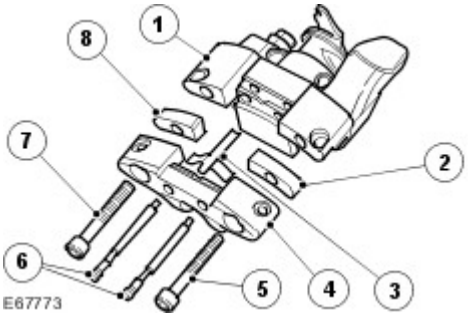

Item	Part Number	Description
1		Parking brake caliper
2		Spacer
3		Parking brake pad retaining spring
4		Parking brake caliper
5		Parking brake caliper body retaining bolt
6		Parking brake pad retaining pin
7		Parking brake caliper body retaining bolt
8		Spacer

Parking Brake Caliper Modification

The parking brake caliper has been modified to include additional spacers. The spacers are installed between the two halves of the parking brake caliper body. If a new parking brake caliper is to be installed a new parking brake caliper spacer kit must also be installed.

Parking Brake - VIN Range: G00442->G45170

Inspection and Verification

1 . Verify the customer concern.

2 . Visually inspect for obvious signs of mechanical or electrical damage.

Mechanical	Electrical
Parking brake cable	Fuse(s)
Parking brake actuator	Wiring harness/electrical connectors
Parking brake caliper	Check for bent/corroded pins
Parking brake pads	Parking brake switch
Drop link caps	Parking brake module

3 . If an obvious cause for an observed or reported concern is found, correct the cause (if possible) before proceeding to the next step.

4 . If the cause is not visually evident and the Jaguar approved diagnostic system is not available, use a suitable code reader to retrieve any fault codes before proceeding to the Diagnostic Trouble Code (DTC) Index Chart (or the Symptom Chart if no DTCs are set), for actions to take.

Symptom Chart

Symptom	Possible Sources	Action
The parking brake will not engage or release	• Cables fouled, trapped or damaged • Cables incorrectly routed or fixed • Rear lining wear • Service brake incorrectly adjusted following lining change • Caliper malfunction	• Check the rear and primary cables for fouling, trapping or damage • Check the cable routing between caliper and subframe mountings. Make sure the cables sit above the rear anti-roll bar drop link caps, and that the drop link caps are not damaged • Check that the rear cable end fitting connector is correctly fitted into the caliper bracket, and is not damaged

www.JagDocs.com

	• Actuator malfunction	• Check that the rear cable end fitting connector is correctly fitted into the subframe bracket and is not damaged • Check the 'C' clip between the cable and the subframe for fit/damage • Check that the cable is correctly located into the reaction and connector brackets • Inspect the rear brake linings (parkbrake caliper linings for vehicles with supercharger) for wear • Check the parkbrake cable for correct adjustment • Fully retract the cables. Pump the brake pedal hard five times • Check the condition of the rear caliper (parkbrake caliper for vehicles with supercharger). Make sure the caliper return spring is correctly fitted • Check the actuator for damage and/or excessive noise in normal operation • For additional information, Parking Brake Cable Tension Release - VIN Range: G00442->G45703 Parking Brake Pads - Vehicles With: High Performance Brakes (70.40.04) Parking Brake Rear Cables Parking Brake Module - VIN Range: G00442->G45703 (70.35.47) Parking Brake Release Actuator - VIN Range: G00001->G03445 (70.35.45)

Driver Information Chart

Warning	Message	Possible Source	Action
Yellow priority light	Apply parkbrake	Parkbrake not calibrated	Depress footbrake and apply parkbrake at the same time (the parkbrake should now be correctly calibrated. Check for correct function)
Yellow priority light/Red, flashing priority light	Parkbrake fault	• Parkbrake **Apply** switch circuit failure • Parkbrake **Apply** switch circuit short to ground • Parkbrake **Release** switch circuit failure • Parkbrake **Release** switch	Check DTCs. Refer to the DTC index for relevant pinpoint test

		circuit short to ground • Parkbrake **Apply** and **Release** switch contacts energized simultaneously • Parkbrake motor output short to ground • Parkbrake motor output open circuit • Parkbrake motor output battery short to ground	
Warning chime	Parkbrake on	Parkbrake applied with vehicle in motion	Release parkbrake

Diagnostic Trouble Code (DTC) index

DTC	Description	Possible Source	Action
B1342	Control module failure	• Power supply to module failure • Ground to module failure • Control module failure	For EPB control module power and ground tests, GO to Pinpoint Test G295394p1.
C1094	Parkbrake **Apply** switch circuit failure	• Connector pin(s) bent • Connector loose or corroded • Harness fault	For EPB switch circuit tests, GO to Pinpoint Test G295394p2.
C1769	Parkbrake **Apply** switch circuit short to ground	• Connector pin(s) bent • Connector loose or corroded • Harness fault	For EPB switch circuit tests, GO to Pinpoint Test G295394p2.
C1782	Parkbrake **Release** switch circuit failure	• Connector pin(s) bent • Connector loose or corroded • Harness fault	For EPB switch circuit tests, GO to Pinpoint Test G295394p2.
C1783	Parkbrake **Release** switch circuit short to ground	• Connector pin(s) bent • Connector loose or corroded • Harness fault	For EPB switch circuit tests, GO to Pinpoint Test G295394p2.
C1989	Parkbrake **Apply** and **Release** switch contacts energized simultaneously	• Connector pin(s) bent • Connector loose or corroded	For EPB switch tests, GO to Pinpoint Test

www.JagDocs.com

		• Harness fault	G295394p3.
C1784	Parkbrake motor output short to ground	• Fuse failure • Connector pin(s) bent • Connector loose or corroded • Harness fault	For EPB motor circuit tests, GO to Pinpoint Test G295394p4.
C1785	Parkbrake motor output open circuit	• Fuse failure • Connector pin(s) bent • Connector loose or corroded • Harness fault	For EPB motor circuit tests, GO to Pinpoint Test G295394p4.
C1786	Parkbrake motor output battery short to ground	• Fuse failure • Connector pin(s) bent • Connector loose or corroded • Harness fault	For EPB motor circuit tests, GO to Pinpoint Test G295394p4.
C1799	Hall effect sensor circuit failure	• Hall effect circuit open circuit • Hall effect circuit short circuit to ground	For hall effect sensor circuit tests, GO to Pinpoint Test G295394p5.
C1801	Greater than expected motor current draw reached before expected travel (motor current draw compared to expected number of turns)	• Cables fouled, trapped or damaged • Cables incorrectly routed or fixed • Rear lining wear • Service brake not correctly adjusted following lining change • Caliper malfunction • Actuator malfunction	Refer to the symptom chart for actions regarding mechanical operation
C1802	Greater than expected travel for measured current draw (motor current draw compared to expected number of turns)	• Cables incorrectly routed or fixed • Rear lining wear • Service brake not correctly adjusted following lining change • Caliper malfunction • Actuator malfunction	Refer to the symptom chart for actions regarding mechanical operation
C1803	Less than expected travel for parkbrake release	• Cables fouled, trapped or damaged • Cables incorrectly	Refer to the symptom chart for actions regarding mechanical

		routed or fixed • Rear lining wear • Service brake not correctly adjusted following lining change • Caliper malfunction • Actuator malfunction	operation

Pinpoint Tests

CAUTION: When probing connectors to take measurements in the course of the pinpoint tests, use the adaptor kit, part number 3548-1358-00.

NOTE:

Inspect connectors for signs of water ingress, and pins for damage and/or corrosion.

NOTE:

When performing electrical voltage or resistance tests, always use a digital multimeter (DMM) accurate to 3 decimal places, and with an up-to-date calibration certificate. When testing resistance, always take the resistance of the DMM leads into account.

NOTE:

Check and rectify basic faults before beginning diagnostic routines involving pinpoint tests.

PINPOINT TEST G295394p1 : DTC B1342; CONTROL MODULE FAILURE

G295394t1 : CHECK THE POWER SUPPLY TO THE EPB CONTROL MODULE

1. Disconnect the EPB control module electrical connector, CR50. 2. Measure the voltage between CR50, pin 01 (NW) and GROUND.

- **Is the voltage less than 10 volts?**

-> Yes

REPAIR the circuit between the EPB control module and battery. This circuit includes the battery junction box (fuse 32). For additional information, refer to the wiring diagrams. CLEAR the DTC. TEST

www.JagDocs.com

the system for normal operation.

-> No
GO to Pinpoint Test G295394t2.

G295394t2 : CHECK THE GROUND TO THE EPB CONTROL MODULE

1. Measure the resistance between CR50, pin 04 (B) and GROUND.

- **Is the resistance greater than 5 ohms?**

-> Yes
REPAIR the high resistance circuit. For additional information, refer to the wiring diagrams. CLEAR the DTC. TEST the system for normal operation.

-> No
Contact dealer technical support for advice on possible EPB control module failure.

PINPOINT TEST G295394p2 : DTC C1094, C1769, C1782, C1783; PARK BRAKE APPLY SWITCH CIRCUIT FAILURE/SHORT TO GROUND, PARK BRAKE RELEASE SWITCH CIRCUIT FAILURE/SHORT TO GROUND

G295394t3 : CHECK THE SIGNAL GROUND TO THE EPB SWITCHPACK

1. Measure the resistance between TL82, pin 02 (BK) and GROUND.

- **Is the resistance greater than 5 ohms?**

-> Yes
GO to Pinpoint Test G295394t4.

-> No
GO to Pinpoint Test G295394t5.

G295394t4 : CHECK THE SIGNAL GROUND CIRCUIT TO THE EPB SWITCHPACK FOR HIGH RESISTANCE

1. Disconnect the battery negative terminal. 2. Disconnect the EPB control module electrical connector, CR32. 3. Measure the resistance between TL82, pin 06 (WU) and CR32, pin 12 (WU).

- **Is the resistance greater than 5 ohms?**

-> Yes
REPAIR the high resistance circuit. For additional information, refer to the wiring diagrams. CLEAR the DTC. TEST the system for normal operation.

-> No
GO to Pinpoint Test G295394t5.

G295394t5 : CHECK THE VOLTAGE FROM THE EPB CONTROL MODULE TO THE SWITCHPACK

1. Reconnect the battery negative terminal. 2. Reconnect the EPB control module electrical connector, CR32. 3. Turn the ignition switch to the **ON** position. 4. Measure the voltage between TL82, pin 08 (WU) and GROUND. 5. Measure the voltage between TL82, pin 04 (RW) and GROUND.

- **Is either voltage less than 3 volts?**

-> Yes
GO to Pinpoint Test G295394t6.

-> No
Check the EPB switch function. CLEAR the DTC. TEST the system for normal operation.

G295394t6 : CHECK THE EPB CONTROL MODULE TO SWITCHPACK CIRCUITS FOR HIGH RESISTANCE

1. Disconnect the battery negative terminal. 2. Disconnect the EPB control module electrical connector, CR32. 3. Measure the resistance between TL82, pin 08 (WU) and CR32, pin 05 (WU). 4. Measure the resistance between TL82, pin 04 (RW) and CR32, pin 06 (RW).

- **Is either resistance greater than 5 ohms?**

-> Yes
REPAIR the high resistance circuit. For additional information, refer to the wiring diagrams. CLEAR the DTC. TEST the system for normal operation.

-> No
GO to Pinpoint Test G295394t7.

www.JagDocs.com

G295394t7 : CHECK THE EPB CONTROL MODULE TO SWITCHPACK CIRCUITS FOR SHORT TO GROUND

1. Reconnect the battery negative terminal. 2. Measure the resistance between TL82, pin 08 (WU) and GROUND. 3. Measure the resistance between TL82, pin 04 (RW) and GROUND.

- **Is either resistance less than 10,000 ohms?**

-> Yes
REPAIR the short circuit. For additional information, refer to the wiring diagrams. CLEAR the DTC. TEST the system for normal operation.

-> No
Contact dealer technical support for advice on possible EPB control module failure.

PINPOINT TEST G295394p3 : DTC C1989; PARK BRAKE APPLY AND RELEASE SWITCH CONTACTS ENERGIZED SIMULTANEOUSLY

G295394t8 : CHECK PARK BRAKE APPLY SWITCH FUNCTION

1. Disconnect the EPB switchpack electrical connector, TL82. 2. Connect an ohmmeter between pins 06 and 08 of the switch. 3. Operate the switch to the **Apply** position.

- **Does the ohmmeter switch between open and closed circuit as the switch is operated?**

-> Yes
GO to Pinpoint Test G295394t9.

-> No
INSTALL a new switchpack.
Parking Brake Switch (70.35.46) CLEAR the DTC. TEST the system for normal operation.

G295394t9 : CHECK PARK BRAKE RELEASE SWITCH FUNCTION

1. Connect an ohmmeter between pins 04 and 06 of the switch. 2. Operate the switch to the **Release** position.

- **Does the ohmmeter switch between open and closed circuit as the switch is operated?**

-> Yes
GO to Pinpoint Test G295394t10.

-> No
INSTALL a new switchpack.
Parking Brake Switch (70.35.46) CLEAR the DTC. TEST the system for normal operation.

G295394t10 : CHECK THE PARK BRAKE SWITCH FOR SHORT CIRCUIT

1. Connect an ohmmeter between pins 04 and 08 of the switch.

- **Is the resistance less than 10,000 ohms?**

-> Yes
INSTALL a new switchpack.
Parking Brake Switch (70.35.46) CLEAR the DTC. TEST the system for normal operation.

-> No
Recheck DTCs. Contact dealer technical support for advice on possible EPB control module failure.

PINPOINT TEST G295394p4 : DTC C1784, C1785, C1786; EPB MOTOR OUTPUT OPEN/SHORT CIRCUIT

G295394t11 : CHECK THE EPB MOTOR + CIRCUIT FOR OPEN CIRCUIT

1. Disconnect the battery negative terminal. 2. Disconnect the EPB motor electrical connector, CV07. 3. Disconnect the EPB control module electrical connector, CR50. 4. Measure the resistance between CV07, pin 01 (RW) and CR50, pin 03 (RW).

- **Is the resistance greater than 5 ohms?**

-> Yes
REPAIR the high resistance circuit. For additional information, refer to the wiring diagrams. CLEAR the DTC. TEST the system for normal operation.

-> No
GO to Pinpoint Test G295394t12.

G295394t12 : CHECK THE EPB MOTOR - CIRCUIT FOR OPEN CIRCUIT

1. Measure the resistance between CV07, pin 06 (GW) and CR50, pin 02 (GW).

- **Is the resistance greater than 5 ohms?**

-> Yes
REPAIR the high resistance circuit. For additional information, refer to the wiring diagrams. CLEAR the DTC. TEST the system for normal operation.

www.JagDocs.com

-> No
GO to Pinpoint Test G295394t13.

G295394t13 : CHECK THE EPB MOTOR + CIRCUIT FOR SHORT TO GROUND

1. Reconnect the battery negative terminal. 2. Measure the resistance between CV07, pin 01 (RW) and GROUND.

- **Is the resistance less than 10,000 ohms?**

-> Yes
REPAIR the short circuit. For additional information, refer to the wiring diagrams. CLEAR the DTC. TEST the system for normal operation.

-> No
GO to Pinpoint Test G295394t14.

G295394t14 : CHECK THE EPB MOTOR - CIRCUIT FOR SHORT TO GROUND

1. Measure the resistance between CV07, pin 06 (GW) and GROUND.

- **Is the resistance less than 10,000 ohms?**

-> Yes
REPAIR the short circuit. For additional information, refer to the wiring diagrams. CLEAR the DTC. TEST the system for normal operation.

-> No
GO to Pinpoint Test G295394t15.

G295394t15 : CHECK THE EPB MOTOR + AND - FOR SHORT CIRCUIT TO EACH OTHER

1. Measure the resistance between CV07, pins 06 (GW) and 01 (RW).

- **Is the resistance less than 10,000 ohms?**

-> Yes
REPAIR the short circuit. For additional information, refer to the wiring diagrams. CLEAR the DTC. TEST the system for normal operation.

-> No
GO to Pinpoint Test G295394t16.

G295394t16 : CHECK THE EPB MOTOR FOR OPEN CIRCUIT

1. Check for continuity between pins 01 and 06 of the motor.

- **Is the circuit continuous?**

-> Yes

Contact dealer technical support for advice on possible EPB control module failure.

-> No

INSTALL a new EPB motor.

Parking Brake Release Actuator - VIN Range: G00001->G03445 (70.35.45) CLEAR the DTC. TEST the system for normal operation.

PINPOINT TEST G295394p5 : DTC C1799; HALL EFFECT SENSOR FAILURE

G295394t17 : CHECK THE HALL EFFECT SENSOR POWER SUPPLY

1. Disconnect the EPB motor electrical connector, CV07. 2. Measure the voltage between CV07, pin 03 (Y) and GROUND.

- **Is the voltage less than 3 volts?**

-> Yes

GO to Pinpoint Test G295394t18.

-> No

GO to Pinpoint Test G295394t19.

G295394t18 : CHECK THE HALL EFFECT SENSOR POWER SUPPLY CIRCUIT FOR HIGH RESISTANCE

1. Disconnect the battery negative terminal. 2. Disconnect the EPB control module electrical connector, CR32. 3. Measure the resistance between CV07, pin 03 (Y) and CR32, pin 10 (Y).

- **Is the resistance greater than 5 ohms?**

-> Yes

REPAIR the high resistance circuit. For additional information, refer to the wiring diagrams. CLEAR the DTC. TEST the system for normal operation.

-> No

www.JagDocs.com

GO to Pinpoint Test G295394t19.

G295394t19 : CHECK THE HALL EFFECT SENSOR SIGNAL GROUND

1. Reconnect the battery negative terminal. 2. Measure the resistance between CV07, pin 05 (WU) and GROUND.

- **Is the resistance greater than 5 ohms?**

-> Yes
GO to Pinpoint Test G295394t20.

-> No
GO to Pinpoint Test G295394t21.

G295394t20 : CHECK THE HALL EFFECT SENSOR SIGNAL GROUND CIRCUIT FOR HIGH RESISTANCE

1. Measure the resistance between CV07, pin 05 (WU) and CR32, pin 12 (WU).

- **Is the resistance greater than 5 ohms?**

-> Yes
REPAIR the high resistance circuit. For additional information, refer to the wiring diagrams. CLEAR the DTC. TEST the system for normal operation.

-> No
GO to Pinpoint Test G295394t21.

G295394t21 : CHECK THE HALL EFFECT SENSOR INPUT CIRCUIT FOR HIGH RESISTANCE

1. Measure the resistance between CV07, pin 04 (YB) and CR32, pin 04 (YB).

- **Is the resistance greater than 5 ohms?**

-> Yes
REPAIR the high resistance circuit. For additional information, refer to the wiring diagrams. CLEAR the DTC. TEST the system for normal operation.

-> No
INSTALL a new hall effect sensor. (The hall effect sensor is not available separately).
Parking Brake Release Actuator - VIN Range: G00001->G03445 (70.35.45) CLEAR the DTC. TEST the system for normal operation. If the DTC is repeated, contact dealer technical support for advice on possible EPB module failure.

Parking Brake - VIN Range: G45171->G99999

Principles of Operation

For a detailed description of the Parking Brake and Actuation, refer to the relevant Description and Operation sections in the workshop manual.

Parking Brake - VIN Range: G45704->G99999

Inspection and Verification

1 . Verify the customer concern.

2 . Visually inspect for obvious signs of mechanical or electrical damage.

Mechanical	Electrical
• Parking brake cable • Parking brake actuator • Parking brake caliper • Parking brake pads • Drop link caps	• Fuses/Relays • Damaged, Loose or Corroded Connector(s) • Damage to Wiring Loom/Incorrect Location, Stretched or Taught

3 . If an obvious cause for an observed or reported concern is found, correct the cause (if possible) before proceeding to the next step.

4 . If the cause is not visually evident use the Jaguar approved diagnostic system or a scan tool to retrieve the fault codes before proceeding to the diagnostic trouble code (DTC) Index.

Symptom Chart

Symptom	Possible Sources	Action
The parking brake will not engage or release	• Cables fouled, trapped or damaged • Cables incorrectly routed or fixed • Rear lining wear • Service brake incorrectly adjusted following lining change • Caliper malfunction • Actuator malfunction	• Check the rear and primary cables for fouling, trapping or damage • Check the cable routing between caliper and subframe mountings. Make sure the cables sit above the rear anti-roll bar drop link caps, and that the drop link caps are not damaged • Check that the rear cable end fitting connector is correctly fitted into the caliper bracket, and is not damaged • Check that the rear cable end fitting connector is correctly fitted into the subframe bracket and is not damaged • Check the 'C' clip between the cable and the

www.JagDocs.com

		subframe for fit/damage • Check that the cable is correctly located into the reaction and connector brackets • Inspect the rear brake linings (parking brake caliper linings for vehicles with supercharger) for wear • Check the parking brake cable for correct adjustment • Fully retract the cables. Pump the brake pedal hard five times • Check the condition of the rear caliper (parking brake caliper for vehicles with supercharger). Make sure the caliper return spring is correctly fitted • Check the actuator for damage and/or excessive noise in normal operation • For additional information, Parking Brake Cable Tension Release - VIN Range: G45704->G99999 Parking Brake Pads - Vehicles With: High Performance Brakes (70.40.04) Parking Brake Rear Cables Parking Brake Module - VIN Range: G45704->G99999 (70.35.47) Parking Brake Release Actuator - VIN Range: G03446->H99999 (70.35.45)

DTC index

CAUTION: When probing connectors to take measurements in the course of the pinpoint tests, use the adaptor kit, part number 3548-1358-00

NOTE:

If the control module/component is suspect and the vehicle remains under manufacturer warranty, refer to the Warranty Policy and Procedures manual (section B1.2), or determine if any prior approval program is in operation, prior to the installation of a new module.

NOTE:

Generic scan tools may not read the codes listed, or may read only 5 digit codes. Match the five digits from the scan tool to the first five digits of the seven digit code listed to identify the fault (the last two digits give additional information read by the manufacturer approved diagnostic system).

NOTE:

When performing voltage or resistance tests, always use a digital multimeter (DMM) accurate to three decimal places and with a current calibration certificate. When testing resistance, always take the resistance of the DMM leads into account.

NOTE:

Check and rectify basic faults before beginning diagnostic routines that involve pinpoint tests.

NOTE:

Inspect connectors for signs of water ingress, and pins for damage and/or corrosion.

NOTE:

If DTCs are recorded and, after performing the pinpoint tests, a fault is not present, an intermittent concern may be the cause. Always check for loose connections and corroded terminals.

DTC	Description	Possible cause	Action
B131700	Battery Voltage High	• Parking brake module - supply voltage high (above 18 volts) Generator voltage is regulated by the engine control module	Refer to electrical circuit diagrams and check parking brake module power circuit for fault
B131800	Battery Voltage Low	• Parking brake module - supply voltage low (below 8 volts) Generator voltage is regulated by the engine control module	Refer to electrical circuit diagrams and check parking brake module power and ground circuit for fault
B134200	ECU is defective	• Parking brake module - internal fault	Suspect the module, check and install a parking brake module as required, refer to the new module installation note at the top of the DTC Index

www.JagDocs.com

B135264	Ignition Key-In Circuit Failure	• Parking brake module, ignition key-in circuit fault (Failed plausibility check with CAN data)	Refer to electrical circuit diagrams and check parking brake module, ignition key-in circuit for fault
B247700	Module Configuration Failure	• Parking brake module - configuration failure	The module can be configured using the new module configuration procedure
C109400	Park Brake Apply Switch Circuit Failure	• Parking brake module, primary park brake apply switch - short to power or open circuit	Carry out any pinpoint tests associated with this DTC using the manufacturer approved diagnostic system. Refer to electrical circuit diagrams and check, parking brake module, primary park brake apply switch for short to power or open circuit
C140800	Park Brake Release Switch Circuit Out of Range	• Parking brake module, park brake release switch - voltage out of range	Carry out any pinpoint tests associated with this DTC using the manufacturer approved diagnostic system. Refer to electrical circuit diagrams and check park brake release switch circuit, for primary release switch circuit tests, GO to Pinpoint Test G531320p8.
C140900	Park Brake Apply Switch Circuit Out of Range	• Primary apply switch circuit - short to power or high resistance	Carry out any pinpoint tests associated with this DTC using the manufacturer approved diagnostic system. Refer to electrical circuit diagrams and check primary apply switch circuit for short to power or high resistance, for primary apply switch circuit tests, GO to Pinpoint Test G531320p9.
C176900	Park Brake Apply Switch Circuit Short to Ground	• Primary apply switch circuit - short to ground	Carry out any pinpoint tests associated with this DTC using the manufacturer approved diagnostic system. Refer to electrical circuit diagrams and check primary apply switch circuit for short to ground, for primary apply switch circuit tests, GO to Pinpoint Test

			G531320p10.
C178200	Park Brake Release Switch Circuit Failure	• Primary release switch circuit - short circuit to power or open circuit	Carry out any pinpoint tests associated with this DTC using the manufacturer approved diagnostic system. Refer to electrical circuit diagrams and check primary release switch circuit for short circuit to power or open circuit, for primary release switch circuit tests, GO to Pinpoint Test G531320p29.
C178300	Park Brake Release Switch Short to Ground	• Primary release switch circuit - short to ground	Carry out any pinpoint tests associated with this DTC using the manufacturer approved diagnostic system. Refer to electrical circuit diagrams and check primary release switch circuit for short circuit to ground, for primary release switch circuit tests, GO to Pinpoint Test G531320p12.
C178400	Electric Park Brake Motor Output Short to Ground	• Park brake motor output circuit - short to ground	Carry out any pinpoint tests associated with this DTC using the manufacturer approved diagnostic system. Refer to electrical circuit diagrams and check park brake motor output for short circuit to ground, GO to Pinpoint Test G531320p13.
C178500	Electric Park Brake Motor Output Open Circuit	• Park brake motor output circuit - open circuit	Carry out any pinpoint tests associated with this DTC using the manufacturer approved diagnostic system. Refer to electrical circuit diagrams and check park brake motor output for open circuit, GO to Pinpoint Test G531320p24.
C178600	Electric Park Brake Motor Output Power Short to Ground	• Park brake motor output - short circuit to power	Carry out any pinpoint tests associated with this DTC using the manufacturer approved diagnostic system. Refer to electrical circuit diagrams and check park brake

www.JagDocs.com

			motor output for short circuit to power, GO to Pinpoint Test G531320p16.
C179900	Hall Effect Circuit Failure	• Hall effect sensor - circuit fault • Hall effect sensor - mechanical fault	Carry out any pinpoint tests associated with this DTC using the manufacturer approved diagnostic system. Refer to electrical circuit diagrams and check hall effect sensor for circuit fault, for hall effect sensor tests, GO to Pinpoint Test G531320p17. Refer to the symptom chart for actions regarding mechanical operation faults.
C180100	Motor Engage Current Reached Before Full Apply Travel Distance	• Cables fouled, trapped or damaged • Cables incorrectly routed or fixed • Rear lining wear • Service brake not correctly adjusted following lining change • Caliper malfunction • Actuator malfunction	Refer to the symptom chart for actions regarding mechanical operation faults.
C180200	Motor Engage Current Not Reached or Travelled Too Far Apply	• Cables incorrectly routed or fixed • Rear lining wear • Service brake not correctly adjusted following lining change • Caliper malfunction • Actuator malfunction	Refer to the symptom chart for actions regarding mechanical operation faults.
C180300	Less than expected travel for parking brake release	• Cables fouled, trapped or damaged • Cables incorrectly routed or fixed • Rear lining wear • Service brake not correctly adjusted following lining change • Caliper malfunction • Actuator malfunction	Carry out any pinpoint tests associated with this DTC using the manufacturer approved diagnostic system. For motor release tests, GO to Pinpoint Test G531320p19. Refer to the symptom chart for actions regarding mechanical operation faults.

C198900	Park Brake Apply and Release Switch Contacts Energized Simultaneously	• Park brake apply and release switch contacts energized simultaneously	Carry out any pinpoint tests associated with this DTC using the manufacturer approved diagnostic system. Refer to electrical circuit diagrams and check park brake apply and release switch circuits for fault GO to Pinpoint Test G531320p21.
C1D0062	Park Brake Apply Switch	• Park brake switch - fault	Suspect park brake switch mechanism fault, check operation, replace as required
C1D0064	Park Brake Apply Switch	• Park brake switch - fault	Suspect park brake switch mechanism fault, check operation, replace as required
C1D0066	Park Brake Apply Switch	• Park brake switch - fault (More then 30 Applies and 30 Releases initiated in a 60 second time period while in static mode)	Refer to electrical circuit diagrams and check park brake apply and release switch circuits for fault. suspect park brake switch mechanism fault, check operation, replace as required.(Park Brake Switch Fault, will be entered to lock out further abuse of the system. Full functionality will be restored upon ignition reset)
C1D0711	Secondary Park Brake Apply Switch	• Parking brake module secondary apply switch circuit - short to ground	Carry out any pinpoint tests associated with this DTC using the manufacturer approved diagnostic system. Refer to electrical circuit diagrams and check, secondary apply switch circuit for short to ground, for secondary apply switch tests, GO to Pinpoint Test G531320p5.
C1D0715	Secondary Park Brake Apply Switch	• Parking brake module secondary apply switch circuit - short to power or open circuit	Carry out any pinpoint tests associated with this DTC using the manufacturer approved diagnostic system. Refer to electrical circuit diagrams and check, secondary apply switch circuit for short to power or open circuit, for

www.JagDocs.com

			secondary apply switch tests, GO to Pinpoint Test G531320p7.
C1D071C	Secondary Park Brake Apply Switch	• Parking brake module secondary apply switch circuit - voltage out of range	Carry out any pinpoint tests associated with this DTC using the manufacturer approved diagnostic system. Refer to electrical circuit diagrams and check, secondary apply switch circuit for fault, for secondary apply switch tests, GO to Pinpoint Test G531320p2.
C1D0811	Secondary Park Brake Release Switch	• Parking brake module secondary release switch circuit - short circuit to ground	Carry out any pinpoint tests associated with this DTC using the manufacturer approved diagnostic system. Refer to electrical circuit diagrams and check, secondary release switch circuit for short circuit to ground, for secondary release switch tests, GO to Pinpoint Test G531320p20.
C1D0815	Secondary Park Brake Release Switch	• Parking brake module secondary release switch circuit - short circuit to power or open circuit	Carry out any pinpoint tests associated with this DTC using the manufacturer approved diagnostic system. Refer to electrical circuit diagrams and check, secondary release switch circuit for short to power or open circuit For secondary release switch tests, GO to Pinpoint Test G531320p18.
C1D081C	Secondary Park Brake Release Switch	• Parking brake module secondary release switch circuit - voltage out of range	Carry out any pinpoint tests associated with this DTC using the manufacturer approved diagnostic system. Refer to electrical circuit diagrams and check, secondary release switch circuit for short circuit to power or high resistance, for secondary release switch tests, GO to Pinpoint Test G531320p4.
C1D1000	FET Over Current/Over	• Parking brake module -	Suspect the module, check and install a parking brake module as

	Temperature	internal fault	required, refer to the new module installation note at the top of the DTC Index
C1D1162	Park Brake Release Switch	• Parking brake switch - internal fault	Suspect parking brake switch mechanical fault, check and install a parking brake switch as required
C1D1164	Park Brake Release Switch	• Parking brake switch - internal fault	Suspect parking brake switch mechanical failure, check and install a parking brake switch as required
C1D1464	Ignition Status	• Parking brake module - ignition status circuit fault	Refer to electrical circuit diagrams and check, parking brake module ignition status circuit for fault
C1D1564	Brake Switch Status	• Parking brake module, brake switch circuit fault (Failed plausibility check with CAN data)	Carry out any pinpoint tests associated with this DTC using the manufacturer approved diagnostic system. Refer to electrical circuit diagrams and check footbrake switch circuit for fault, for footbrake switch tests, GO to Pinpoint Test G531320p22.
C1D1614	High Power Battery Feed	• High power feed circuit - short to ground or high resistance	Refer to electrical circuit diagrams and check parking brake module high power feed circuit for short circuit to ground or high resistance, for power feed tests, GO to Pinpoint Test G531320p11.
C1D2092	Vehicle Deceleration	• Key-Out-Apply after implausible vehicle speed (Implausible vehicle speed is defined as a change from High Speed Dynamic Mode to Static Mode without passing through Low Speed Dynamic Mode)	Check DSC (ABS) module for stored fault codes
U000100	High Speed CAN Communication Bus - Can	• Parking brake module - CAN Bus circuit fault	Refer to electrical circuit diagrams and check parking brake module

www.JagDocs.com

	Transmit/Receive Error		CAN Bus circuit fault
U000188	High Speed CAN Communication Bus - CAN Bus off	• Parking brake module - CAN Bus circuit fault	Refer to electrical circuit diagrams and check parking brake module CAN Bus circuit fault
U010000	Lost Communication With ECM/PCM	• Parking brake module - CAN Bus circuit fault	Refer to electrical circuit diagrams and check parking brake module CAN Bus circuit to engine control module for fault
U010100	Lost Communication with TCM	• Parking brake module - CAN Bus circuit fault	Refer to electrical circuit diagrams and check parking brake module CAN Bus circuit to transmission control module for fault
U012100	Lost Communication With Anti-Lock Brake System (ABS) Control Module	• Parking brake module - CAN Bus circuit fault	Refer to electrical circuit diagrams and check parking brake module CAN Bus circuit to (DSC) anti-lock brake system control module for fault
U015500	Lost Communication With Instrument Panel Cluster (IPC) Control Module	• Parking brake module - CAN Bus circuit fault	Refer to electrical circuit diagrams and check parking brake module CAN Bus circuit to instrument panel cluster for fault
U040100	Invalid Data Received From ECM/PCM	• Parking brake module - CAN Bus circuit fault (At least one message from the ECM/PCM was invalid for 250 ms or longer)	Refer to electrical circuit diagrams and check parking brake module CAN Bus circuit to engine control module for fault
U040200	Invalid Data Received From Transmission Control Module	• Parking brake module - CAN Bus circuit fault (At least one message from the TCM was invalid for 250 ms or longer)	Refer to electrical circuit diagrams and check parking brake module CAN Bus circuit to transmission control module for fault
U041500	Invalid Data Received From Anti-Lock Brake System Control Module	• Parking brake module - CAN Bus circuit fault (At least one message from the ABS was invalid for 250 ms or longer)	Refer to electrical circuit diagrams and check parking brake module CAN Bus circuit to anti-lock brake system control module for fault

Pinpoint Tests

PINPOINT TEST G531320p1 : PRIMARY PARKING BRAKE APPLY SWITCH CIRCUIT FAILURE

G531320t1 : CHECK THE PRIMARY APPLY SIGNAL CIRCUIT FOR SHORT CIRCUIT TO POWER

1. Key off. 2.

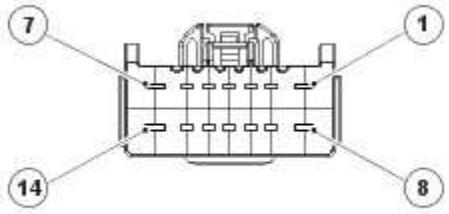

E55103

Electric parking brake module connector 1 (CR50) disconnected. 3.

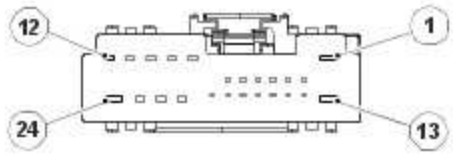

E55104

Electric parking brake module connector 2 (CR32) connector disconnected. 4. Key on, engine off. 5. Measure the resistance between:

CR50, harness side	Vehicle battery
Electric parking brake switch apply 1 - signal - Pin 10	Positive terminal

- **Is the resistance greater than 100 Kohms?**

-> Yes

GO to Pinpoint Test G531320t2.

-> No

www.JagDocs.com

GO to Pinpoint Test G531320t8.

G531320t2 : CHECK THE PRIMARY RELEASE SIGNAL CIRCUIT FOR SHORT CIRCUIT TO POWER

1. Measure the resistance between:

CR50 connector, harness side	Vehicle battery
Electric parking brake switch apply 1 - signal - Pin 11	Positive terminal

- **Is the resistance greater than 100 Kohms?**

-> Yes
GO to Pinpoint Test G531320t3.

-> No
GO to Pinpoint Test G531320t9.

G531320t3 : CHECK THE SECONDARY APPLY SIGNAL CIRCUIT FOR SHORT CIRCUIT TO POWER

1. Measure the resistance between:

CR32 connector, harness side	Vehicle battery
Electric parking brake switch apply 2 - signal - Pin 02	Positive terminal

- **Is the resistance greater than 100 Kohms?**

-> Yes
GO to Pinpoint Test G531320t4.

-> No
GO to Pinpoint Test G531320t10.

G531320t4 : CHECK THE SECONDARY RELEASE SIGNAL CIRCUIT FOR SHORT CIRCUIT TO POWER

1. Measure the resistance between:

CR32 connector, harness side	Vehicle battery
Electric parking brake switch release 2 - signal - Pin 14	Positive terminal

- **Is the resistance greater than 100 Kohms?**

-> Yes
GO to Pinpoint Test G531320t5.

-> No
GO to Pinpoint Test G531320t11.

G531320t5 : CHECK THE PRIMARY APPLY SIGNAL CIRCUIT FOR OPEN CIRCUIT

1.

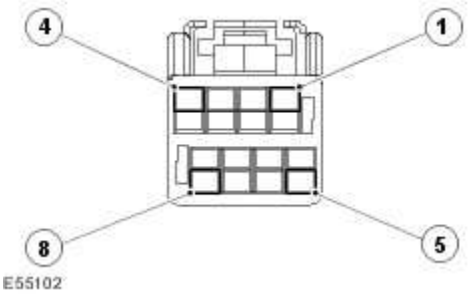

Electric parking brake switch (TL82) connector disconnected. 2. Measure the resistance between:

CR50 connector, harness side	TL82 connector, harness side
Electric parking brake switch apply 1 - signal - Pin 10	Electric parking brake switch apply 1 - signal - Pin 08

- **Is the resistance less than 10 ohms?**

-> Yes
GO to Pinpoint Test G531320t6.

-> No
REPAIR the open circuit. For additional information, refer to the wiring diagrams.

www.JagDocs.com

G531320t6 : CHECK THE SWITCH RETURN CIRCUIT FOR OPEN CIRCUIT

1. Measure the resistance between:

CR32 connector, harness side	TL82 connector, harness side
Electric parking brake switch - switch return - Pin 06	Electric parking brake switch - switch return - Pin 06

- **Is the resistance less than 10 ohms?**

-> Yes

GO to Pinpoint Test G531320t7.

-> No

REPAIR the open circuit. For additional information, refer to the wiring diagrams.

G531320t7 : CHECK THE ELECTRIC PARKING BRAKE SWITCH

1. Measure the resistance between:

TL82 connector, component side	TL82 connector, component side
Electric parking brake switch apply 1 - signal - Pin 08	Electric parking brake switch - switch return - Pin 06

- **Is the resistance between 595 ohms - 611 ohms?**

-> Yes

An intermittent fault may be present in the wiring harness. Visually check for chaffed wires or other physical damage to the harness. If no fault is found in the circuit, suspect the following component(s): - EPB Module - EPB module connector, CR50 - EPB module connector, CR32

-> No

INSTALL a new EPB switch.

Parking Brake Switch (70.35.46)

G531320t8 : CHECK IF THE SHORT CIRCUIT IS IN THE HARNESS OR THE SWITCH

1.

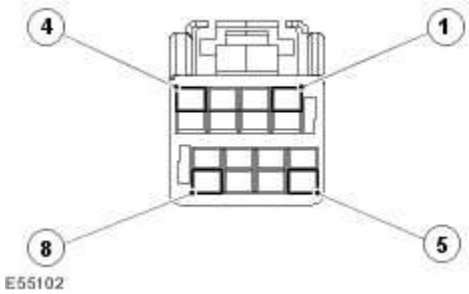

Electric parking brake switch (TL82) connector disconnected. 2. Measure the resistance between:

CR50 connector, harness side	Vehicle battery
Electric parking brake switch apply 1 - signal - Pin 10	Positive terminal

- **Is the resistance greater than 100 Kohms?**

-> Yes

INSTALL a new EPB switch.

Parking Brake Switch (70.35.46)

-> No

REPAIR the short circuit. For additional information, refer to the wiring diagrams.

G531320t9 : CHECK IF THE SHORT CIRCUIT IS IN THE HARNESS OR THE SWITCH

1.

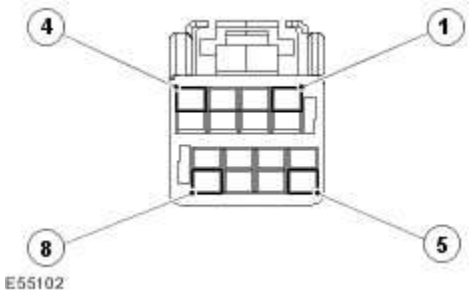

Electric parking brake switch (TL82) connector disconnected. 2. Measure the resistance between:

CR50 connector, harness side	Vehicle battery
Electric parking brake switch release 1 - signal - Pin 11	Positive terminal

www.JagDocs.com

- **Is the resistance greater than 100 Kohms?**

-> Yes
INSTALL a new EPB switch.
Parking Brake Switch (70.35.46)

-> No
REPAIR the short circuit. For additional information, refer to the wiring diagrams.

G531320t10 : CHECK IF THE SHORT CIRCUIT IS IN THE HARNESS OR THE SWITCH

1.

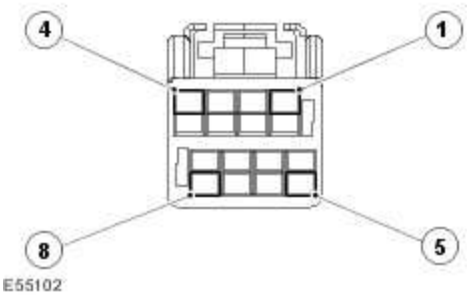

Electric parking brake switch (TL82) connector disconnected. 2. Measure the resistance between:

CR32 connector, harness side	Vehicle battery
Electric parking brake switch apply 2 - signal - Pin 02	Positive terminal

- **Is the resistance greater than 100 Kohms?**

-> Yes
INSTALL a new EPB switch.
Parking Brake Switch (70.35.46)

-> No
REPAIR the short circuit. For additional information, refer to the wiring diagrams.

G531320t11 : CHECK IF THE SHORT CIRCUIT IS IN THE HARNESS OR THE SWITCH

1.

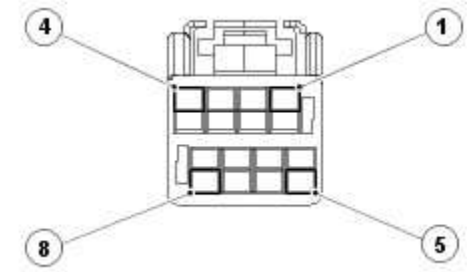

E55102

Electric parking brake switch (TL82) connector disconnected. 2. Measure the resistance between:

CR32 connector, harness side	Vehicle battery
Electric parking brake switch release 2 - signal - Pin 14	Positive terminal

- **Is the resistance greater than 100 Kohms?**

-> Yes

INSTALL a new EPB switch.

Parking Brake Switch (70.35.46)

-> No

REPAIR the short circuit. For additional information, refer to the wiring diagrams.

PINPOINT TEST G531320p2 : SECONDARY APPLY SWITCH CIRCUIT VOLTAGE OUT OF RANGE

G531320t12 : CHECK THE SECONDARY SWITCH CIRCUIT RESISTANCE

1. Key off. 2.

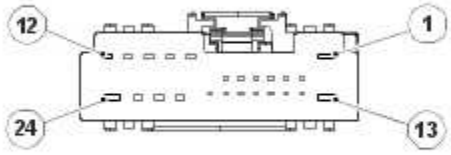

E55104

Electric parking brake module connector 2 (CR32) disconnected. 3. Key on, engine off. 4. Measure the resistance between:

www.JagDocs.com

CR32 connector, harness side	CR32 connector, harness side
Electric parking brake switch apply 2 - signal - Pin 02	Electric parking brake switch - switch return - Pin 06

- **Is the resistance between 595 ohms - 611 ohms?**

-> Yes
An intermittent fault may be present in the wiring harness. Visually check for chaffed wires or other physical damage to the harness. If no fault is found in the circuit, suspect the following component(s): - EPB fault - EPB module connector, CR32

-> No
INSTALL a new EPB switch.
Parking Brake Switch (70.35.46)

PINPOINT TEST G531320p4 : SECONDARY RELEASE SWITCH CIRCUIT VOLTAGE OUT OF RANGE

G531320t21 : CHECK THE SECONDARY SWITCH CIRCUIT RESISTANCE

1. Key off. 2.

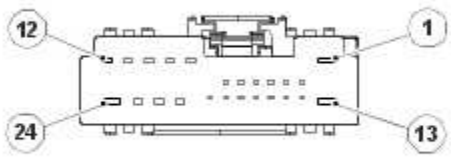

E55104

Electric parking brake connector 2 (CR32) disconnected. 3. Key on, engine off. 4. Measure the resistance between:

CR32 connector, harness side	CR32 connector, harness side
Electric parking brake switch release 2 - signal - Pin 14	Electric parking brake switch - switch return - Pin 06

- **Is the resistance between 595 ohms - 611 ohms?**

-> Yes
An intermittent fault may be present in the wiring harness. Visually check for chaffed wires or other physical damage to the harness. If no fault is found in the circuit, suspect the following component(s): - EPB module - EPB module connector, CR32

-> No
INSTALL a new EPB switch.
Parking Brake Switch (70.35.46)

PINPOINT TEST G531320p5 : SECONDARY APPLY SWITCH CIRCUIT SHORT CIRCUIT TO GROUND

G531320t22 : CHECK THE SECONDARY APPLY SIGNAL CIRCUIT FOR SHORT CIRCUIT TO GROUND

1. Key off. 2.

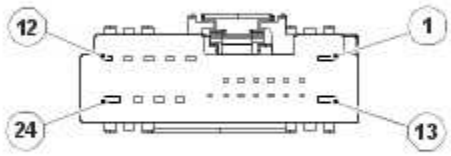

E55104

Electric parking brake connector 2 (CR32) disconnected. 3. Key on, engine off. 4. Measure the resistance between:

CR32 connector, harness side	Vehicle battery
Electric parking brake switch apply 2 - signal - Pin 02	Negative terminal

- **Is the resistance greater than 100 Kohms?**

-> Yes
An intermittent fault may be present in the wiring harness. Visually check for chaffed wires or other physical damage to the harness. If no fault is found in the circuit, suspect the following component(s): - EPB module - EPB module connector, CR32

-> No
GO to Pinpoint Test G531320t23.

www.JagDocs.com

G531320t23 : CHECK IF THE SHORT CIRCUIT IS IN THE HARNESS OR THE SWITCH

1.

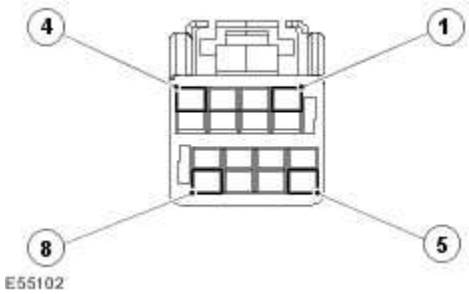

Electric parking brake switch (TL82) connector disconnected. 2. Measure the resistance between:

CR32 connector, harness side	Vehicle battery
Electric parking brake switch apply 2 - signal - Pin 02	Negative terminal

- **Is the resistance greater than 100 Kohms?**

-> Yes

INSTALL a new EPB switch.

Parking Brake Switch (70.35.46)

-> No

REPAIR the short circuit. For additional information, refer to the wiring diagrams.

PINPOINT TEST G531320p7 : SECONDARY APPLY HARNESS SHORT CIRCUIT TO BATTERY OR OPEN CIRCUIT

G531320t31 : CHECK THE PRIMARY APPLY SIGNAL CIRCUIT FOR SHORT CIRCUIT TO POWER

1. Key off. 2.

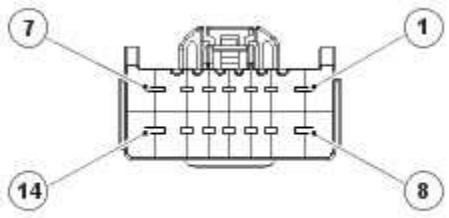

E55103

Electric parking brake module connector 1 (CR50) disconnected. 3.

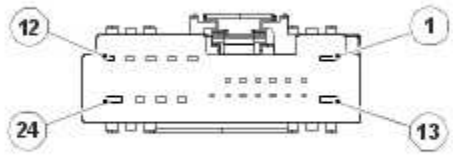

E55104

Electric parking brake module connector 2 (CR32) disconnected. 4. Key on, engine off. 5. Measure the resistance between:

CR50 connector, harness side	Vehicle battery
Electric parking brake switch apply 1 - signal - Pin 10	Positive terminal

- **Is the resistance greater than 100 Kohms?**

-> Yes

GO to Pinpoint Test G531320t32.

-> No

GO to Pinpoint Test G531320t38.

G531320t32 : CHECK THE PRIMARY RELEASE SIGNAL CIRCUIT FOR SHORT CIRCUIT TO POWER

1. Measure the resistance between:

CR50 connector, harness side	Vehicle battery

www.JagDocs.com

Electric parking brake switch release 1 - signal - Pin 11	Positive terminal

- **Is the resistance greater than 100 Kohms?**

-> Yes
GO to Pinpoint Test G531320t33.

-> No
GO to Pinpoint Test G531320t39.

G531320t33 : CHECK THE SECONDARY APPLY SIGNAL CIRCUIT FOR SHORT CIRCUIT TO POWER

1. Measure the resistance between:

CR32 connector, harness side	Vehicle battery
Electric parking brake switch apply 2 - signal - Pin 02	Positive terminal

- **Is the resistance greater than 100 Kohms?**

-> Yes
GO to Pinpoint Test G531320t34.

-> No
GO to Pinpoint Test G531320t40.

G531320t34 : CHECK THE SECONDARY RELEASE SIGNAL CIRCUIT FOR SHORT CIRCUIT TO POWER

1. Measure the resistance between:

CR32 connector, harness side	Vehicle battery
Electric parking brake switch release 2 - signal - Pin 14	Positive terminal

- **Is the resistance greater than 100 Kohms?**

-> Yes
GO to Pinpoint Test G531320t35.

-> No
GO to Pinpoint Test G531320t41.

G531320t35 : CHECK THE SECONDARY APPLY SIGNAL CIRCUIT FOR OPEN CIRCUIT

1.

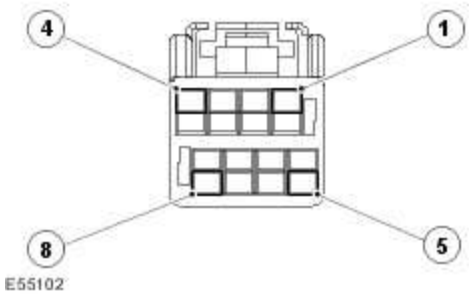

Electric parking brake switch (TL82) connector disconnected. 2. Measure the resistance between:

CR32 connector, harness side	TL82 connector, harness side
Electric parking brake switch apply 2 - signal - Pin 02	Electric parking brake switch apply 2 - signal - Pin 07

- **Is the resistance less than 10 ohms?**

-> Yes
GO to Pinpoint Test G531320t36.

-> No
REPAIR the open circuit. For additional information, refer to the wiring diagrams.

G531320t36 : CHECK THE SWITCH RETURN SIGNAL CIRCUIT FOR OPEN CIRCUIT

1. Measure the resistance between:

CR32 connector, harness side	TL82 connector, harness side
Electric parking brake switch - switch return - Pin 06	Electric parking brake switch - switch return - Pin 06

www.JagDocs.com

- **Is the resistance less than 10 ohms?**

-> Yes
GO to Pinpoint Test G531320t37.

-> No
REPAIR the open circuit. For additional information, refer to the wiring diagrams.

G531320t37 : CHECK THE ELECTRIC PARKING BRAKE SWITCH

1. Measure the resistance between:

TL82 connector, component side	TL82 connector, component side
Electric parking brake switch apply 2 - signal - Pin 07	Electric parking brake switch - switch return - Pin 06

- **Is the resistance between 595 ohms - 611 ohms?**

-> Yes
An intermittent fault may be present in the wiring harness. Visually check for chaffed wires or other physical damage to the harness. If no fault is found in the circuit, suspect the following component(s): - EPB module - EPB module connector, CR50 - EPB module connector, CR32

-> No
INSTALL a new EPB switch.
Parking Brake Switch (70.35.46)

G531320t38 : CHECK IF THE SHORT CIRCUIT IS IN THE HARNESS OR THE SWITCH

1.

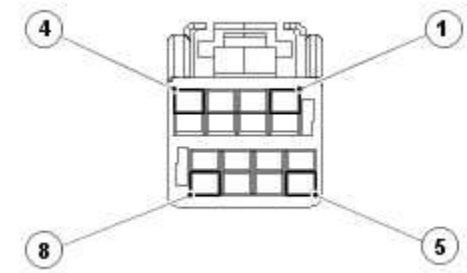

E55102

Electric parking brake switch (TL82) connector disconnected. 2. Measure the resistance between:

CR50 connector, harness side	Vehicle battery
Electric parking brake switch apply 1 - signal - Pin 10	Positive terminal

- **Is the resistance greater than 100 Kohms?**

-> Yes
INSTALL a new EPB switch.
Parking Brake Switch (70.35.46)

-> No
REPAIR the short circuit. For additional information, refer to the wiring diagrams.

G531320t39 : CHECK IF THE SHORT CIRCUIT IS IN THE HARNESS OR THE SWITCH

1.

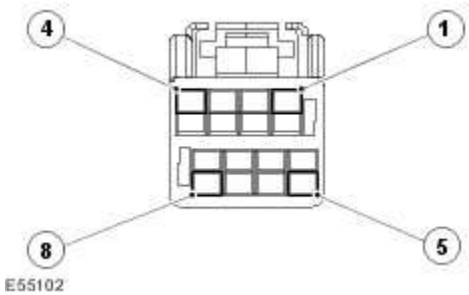

Electric parking brake switch (TL82) connector disconnected. 2. Measure the resistance between:

CR50 connector, harness side	Vehicle battery
Electric parking brake switch release 1 - signal - Pin 11	Positive terminal

- **Is the resistance greater than 100 Kohms?**

-> Yes
INSTALL a new EPB switch.
Parking Brake Switch (70.35.46)

-> No
REPAIR the short circuit. For additional information, refer to the wiring diagrams.

www.JagDocs.com

G531320t40 : CHECK IF THE SHORT CIRCUIT IS IN THE HARNESS OR THE SWITCH

1.

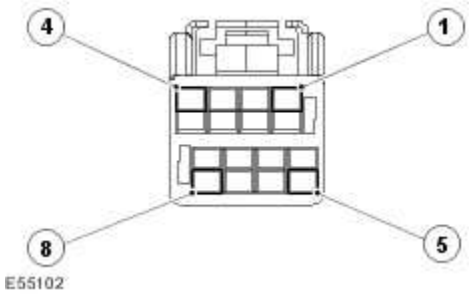

Electric parking brake switch (TL82) connector disconnected. 2. Measure the resistance between:

CR32 connector, harness side	Vehicle battery
Electric parking brake switch apply 2 - signal - Pin 02	Positive terminal

- **Is the resistance greater than 100 Kohms?**

-> Yes

INSTALL a new EPB switch.

Parking Brake Switch (70.35.46)

-> No

REPAIR the short circuit. For additional information, refer to the wiring diagrams.

G531320t41 : CHECK IF THE SHORT CIRCUIT IS IN THE HARNESS OR THE SWITCH

1.

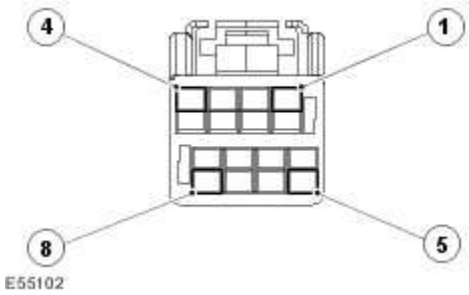

Electric parking brake switch (TL82) connector disconnected. 2. Measure the resistance between:

CR32 connector, harness side	Vehicle battery
Electric parking brake switch release 2 - signal - Pin 14	Positive terminal

- **Is the resistance greater than 100 Kohms?**

-> Yes
INSTALL a new EPB switch.
Parking Brake Switch (70.35.46)

-> No
REPAIR the short circuit. For additional information, refer to the wiring diagrams.

PINPOINT TEST G531320p8 : PRIMARY RELEASE SWITCH CIRCUIT OUT OF RANGE

G531320t42 : CHECK THE PRIMARY RELEASE SWITCH CIRCUIT RESISTANCE

1. Key off. 2.

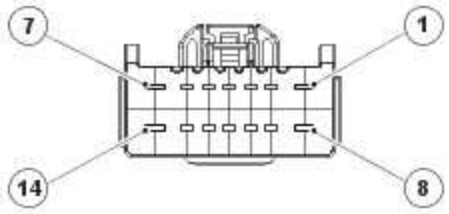

E55103

Electric parking brake module connector 1 (CR50) disconnected. 3.

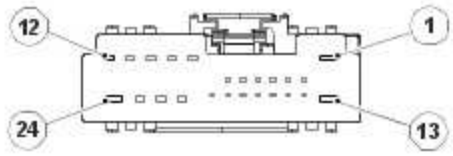

E55104

Electric parking brake module connector 2 (CR32) disconnected. 4. Key on, engine off. 5. Measure the resistance between:

CR50 connector, harness side	CR32 connector, harness side
Electric parking brake switch release 1 - signal - Pin 11	Electric parking brake switch - switch return - Pin 06

- **Is the resistance between 595 ohms - 611 ohms?**

www.JagDocs.com

-> Yes
An intermittent fault may be present in the wiring harness. Visually check for chaffed wires or other physical damage to the harness. If no fault is found in the circuit, suspect the following component(s): - EPB module - EPB module connector, CR50

-> No
INSTALL a new EPB switch.
Parking Brake Switch (70.35.46)

PINPOINT TEST G531320p9 : PRIMARY APPLY SWITCH CIRCUIT OUT OF RANGE

G531320t43 : CHECK THE PRIMARY APPLY SWITCH CIRCUIT RESISTANCE

1. Key off. 2.

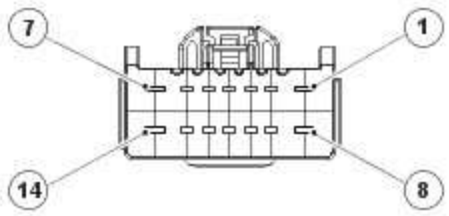

E55103

Electric parking brake module connector 1 (CR50) disconnected. 3.

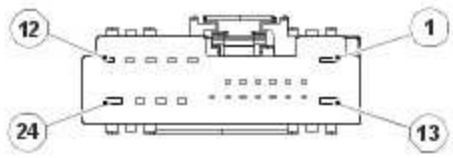

E55104

Electric parking brake module connector 2 (CR32) disconnected. 4. Key on, engine off. 5. Measure the resistance between:

CR50 connector, harness side	CR32 connector, harness side
Electric parking brake switch apply 1 - signal - Pin 10	Electric parking brake switch - switch return - Pin 06

- **Is the resistance between 595 ohms - 611 ohms?**

-> Yes
An intermittent fault may be present in the wiring harness. Visually check for chaffed wires or other physical damage to the harness. If no fault is found in the circuit, suspect the following component(s): - EPB module - EPB module connector, CR50

-> No
INSTALL a new EPB switch.
Parking Brake Switch (70.35.46)

PINPOINT TEST G531320p10 : PRIMARY APPLY SWITCH CIRCUIT SHORT CIRCUIT TO GROUND

G531320t44 : CHECK THE PRIMARY APPLY SIGNAL CIRCUIT FOR SHORT CIRCUIT TO GROUND

1. Key off. 2.

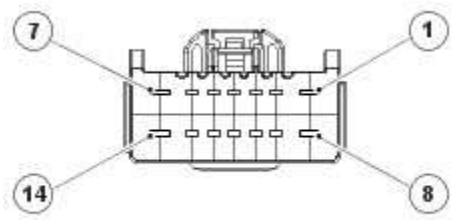

E55103

Electric parking brake module connector 1 (CR50) disconnected. 3. Key on, engine off. 4. Measure the resistance between:

CR50 connector, harness side	Vehicle battery
Electric parking brake switch apply 1 - signal - Pin 10	Negative terminal

- **Is the resistance greater than 100 Kohms?**

-> Yes
An intermittent fault may be present in the wiring harness. Visually check for chaffed wires or other physical damage to the harness. If no fault is found in the circuit, suspect the following component(s): - EPB module - EPB module connector, CR50

-> No
GO to Pinpoint Test G531320t45.

www.JagDocs.com

G531320t45 : CHECK IF THE SHORT CIRCUIT IS IN THE HARNESS OR THE SWITCH

1.

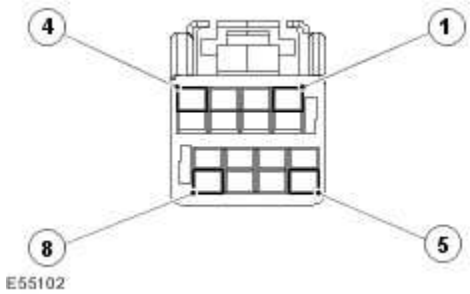

Electric parking brake switch (TL82) connector disconnected. 2. Measure the resistance between:

CR50 connector, harness side	Vehicle battery
Electric parking brake switch apply 1 - signal - Pin 10	Negative terminal

- **Is the resistance greater than 100 Kohms?**

-> Yes

INSTALL a new EPB switch.

Parking Brake Switch (70.35.46)

-> No

REPAIR the short circuit. For additional information, refer to the wiring diagrams.

PINPOINT TEST G531320p11 : HIGH POWER BATTERY FEED CIRCUIT SHORT CIRCUIT TO GROUND OR OPEN CIRCUIT

G531320t46 : CHECK THE HIGH POWER SUPPLY CIRCUIT

1.

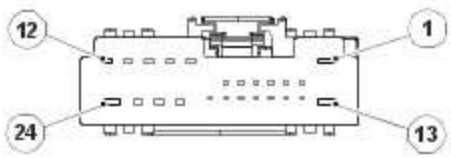

E55104

Electric parking brake module connector 2 (CR32) disconnected. 2. Measure the voltage between:

CR32 connector, harness side	Vehicle battery
Electric parking brake module - battery supply - Pin 01	Negative terminal

- **Is the voltage between 9 volts - 15 volts?**

-> Yes

An intermittent fault may be present in the wiring harness. Visually check for chaffed wires or other physical damage to the harness. If no fault is found in the circuit, suspect the following component(s): - EPB module

-> No

No supply to the EPB circuit. check and repair the circuit as necessary. For additional information, refer to the wiring diagrams.

PINPOINT TEST G531320p12 : PRIMARY RELEASE SWITCH CIRCUIT SHORT CIRCUIT TO GROUND

G531320t47 : CHECK THE PRIMARY RELEASE SIGNAL CIRCUIT FOR SHORT TO GROUND

1. Key off. 2.

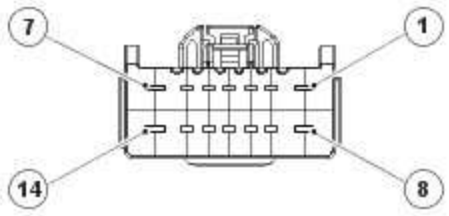

E55103

www.JagDocs.com

Electric parking brake module connector 1 (CR50) disconnected. 3. Key on, engine off. 4. Measure the resistance between:

CR50 connector, harness side	Vehicle battery
Electric parking brake switch release 1 - signal - Pin 11	Negative terminal

- **Is the resistance greater than 100 Kohms?**

-> Yes
An intermittent fault may be present in the wiring harness. Visually check for chaffed wires or other physical damage to the harness. If no fault is found in the circuit, suspect the following component(s): - EPB module - EPB module connector, CR50

-> No
GO to Pinpoint Test G531320t48.

G531320t48 : CHECK IF THE SHORT CIRCUIT IS IN THE HARNESS OR THE SWITCH

1.

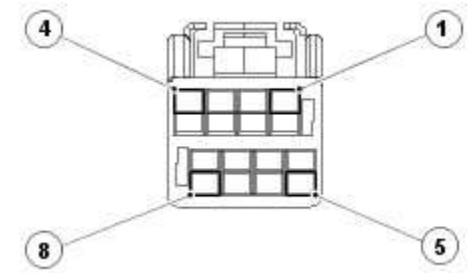

E55102

Electric parking brake switch (TL82) connector disconnected. 2. Measure the resistance between:

CR50 connector, harness side	Vehicle battery
Electric parking brake switch release 1 - signal - Pin 11	Negative terminal

- **Is the resistance greater than 100 Kohms?**

-> Yes
INSTALL a new EPB switch.
Parking Brake Switch (70.35.46)

-> No

REPAIR the short circuit. For additional information, refer to the wiring diagrams.

PINPOINT TEST G531320p13 : PARKING BRAKE ACTUATOR OUTPUT SHORT CIRCUIT TO GROUND

G531320t49 : CHECK THE ACTUATOR NEGATIVE SIGNAL CIRCUIT FOR SHORT CIRCUIT TO GROUND

1. Key off. 2.

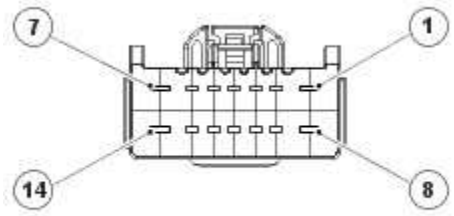

E55103

Electric parking brake switch (TL82) connector disconnected. 3. Key on, engine off. 4. Measure the resistance between:

CR50 connector, harness side	Vehicle battery
Electric parking brake actuator - negative - Pin 07	Negative terminal

- **Is the resistance greater than 100 Kohms?**

-> Yes

GO to Pinpoint Test G531320t50.

-> No

GO to Pinpoint Test G531320t51.

G531320t50 : CHECK THE ACTUATOR POSITIVE SIGNAL CIRCUIT FOR SHORT CIRCUIT TO GROUND

1. Measure the resistance between:

CR50 connector, harness side	Vehicle battery

www.JagDocs.com

Electric parking brake actuator - positive - Pin 14	Negative terminal

- **Is the resistance greater than 100 Kohms?**

-> Yes
An intermittent fault may be present in the wiring harness. Visually check for chaffed wires or other physical damage to the harness. If no fault is found in the circuit, suspect the following component(s): - EPB module - EPB module connector, CR50

-> No
GO to Pinpoint Test G531320t52.

G531320t51 : CHECK IF THE SHORT CIRCUIT IS IN THE HARNESS OR THE ACTUATOR

1.

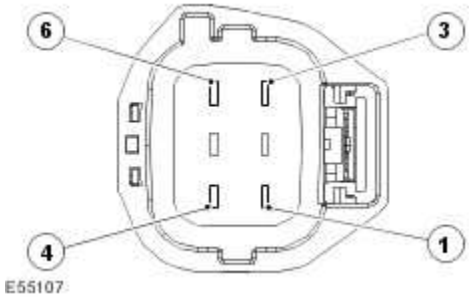

EPB actuator connector disconnected. 2. Measure the resistance between:

CR50 connector, harness side	Vehicle battery
Electric parking brake actuator - negative - Pin 07	Negative terminal

- **Is the resistance greater than 100 Kohms?**

-> Yes
INSTALL a new EPB actuator.
Parking Brake Release Actuator - VIN Range: G03446->H99999 (70.35.45)

-> No
REPAIR the short circuit. For additional information, refer to the wiring diagrams.

G531320t52 : CHECK IF THE SHORT CIRCUIT IS IN THE HARNESS OR THE ACTUATOR

1.

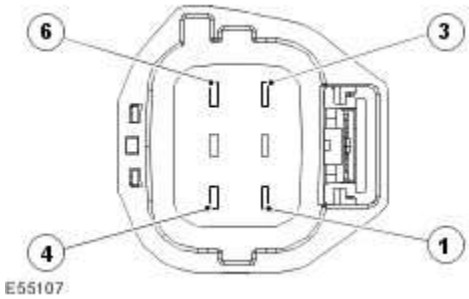

EPB actuator connector disconnected. 2. Measure the resistance between:

CR50 connector, harness side	Vehicle battery
Electric parking brake actuator - positive - Pin 14	Negative terminal

- **Is the resistance greater than 100 Kohms?**

-> Yes

INSTALL a new EPB actuator.

Parking Brake Release Actuator - VIN Range: G03446->H99999 (70.35.45)

-> No

REPAIR the short circuit. For additional information, refer to the wiring diagrams.

PINPOINT TEST G531320p15 : HIGH POWER GROUND FEED OPEN CIRCUIT

G531320t61 : CHECK THE MODULE GROUND CIRCUIT FOR CONTINUITY

1.

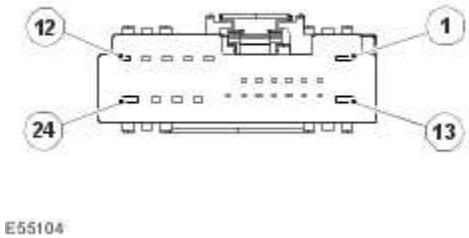

Electric parking brake module connector 2 (CR32) disconnected. 2. Measure the resistance between:

www.JagDocs.com

CR32 connector, harness side	Vehicle battery
Electric parking brake module - ground - Pin 13	Negative terminal

- **Is the resistance less than 10 ohms?**

-> Yes
An intermittent fault may be present in the wiring harness. Visually check for chaffed wires or other physical damage to the harness. If no fault is found in the circuit, suspect the following component(s): - EPB Module

-> No
REPAIR the open circuit. For additional information, refer to the wiring diagrams.

PINPOINT TEST G531320p16 : ACTUATOR OUTPUT SHORT CIRCUIT TO BATTERY

G531320t62 : CHECK THE ACTUATOR NEGATIVE SIGNAL CIRCUIT FOR SHORT CIRCUIT TO POWER

1. Key off. 2.

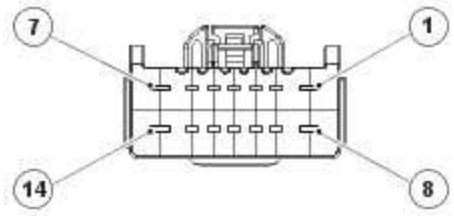

E55103

Electric parking brake module connector 1 (CR50) disconnected. 3. Key on, engine off. 4. Measure the resistance between:

CR50 connector, harness side	Vehicle battery
Electric parking brake actuator - negative - Pin 07	Positive terminal

- **Is the resistance greater than 100 Kohms?**

-> Yes
GO to Pinpoint Test G531320t63.

-> No
GO to Pinpoint Test G531320t64.

G531320t63 : CHECK THE ACTUATOR POSITIVE SIGNAL CIRCUIT FOR SHORT CIRCUIT TO POWER

1. Measure the resistance between:

CR50 connector, harness side	Vehicle battery
Electric parking brake actuator - positive - Pin 14	Positive terminal

- **Is the resistance greater than 100 Kohms?**

-> Yes
An intermittent fault may be present in the wiring harness. Visually check for chaffed wires or other physical damage to the harness. If no fault is found in the circuit, suspect the following component(s): - EPB module - EPB module connector, CR50

-> No
GO to Pinpoint Test G531320t65.

G531320t64 : CHECK IF THE SHORT CIRCUIT IS IN THE HARNESS OR THE ACTUATOR

1.

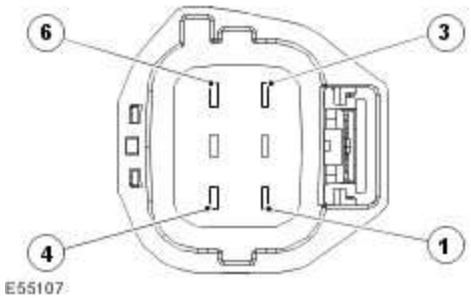

EPB actuator connector disconnected. 2. Measure the resistance between:

CR50 connector, harness side	Vehicle battery
Electric parking brake actuator - negative - Pin 07	Positive terminal

www.JagDocs.com

- **Is the resistance greater than 100 Kohms?**

-> Yes
INSTALL a new EPB actuator.
Parking Brake Release Actuator - VIN Range: G03446->H99999 (70.35.45)

-> No
REPAIR the short circuit. For additional information, refer to the wiring diagrams.

G531320t65 : CHECK IF THE SHORT CIRCUIT IS IN THE HARNESS OR THE ACTUATOR

1.

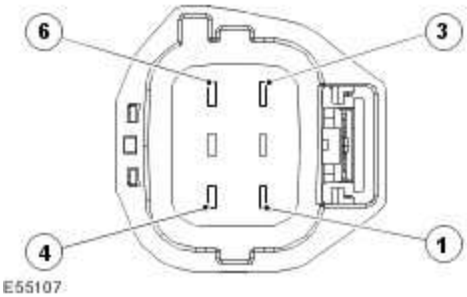

EPB actuator connector disconnected. 2. Measure the resistance between:

CR50 connector, harness side	Vehicle battery
Electric parking brake actuator - positive - Pin 14	Positive terminal

- **Is the resistance greater than 100 Kohms?**

-> Yes
INSTALL a new EPB actuator.
Parking Brake Release Actuator - VIN Range: G03446->H99999 (70.35.45)

-> No
REPAIR the short circuit. For additional information, refer to the wiring diagrams.

PINPOINT TEST G531320p17 : ACTUATOR HALL EFFECT SENSOR CIRCUIT FAILURE

G531320t66 : CHECK THE HALL EFFECT 5 VOLT SUPPLY CIRCUIT FOR SHORT CIRCUIT TO GROUND

1. Key off. 2.

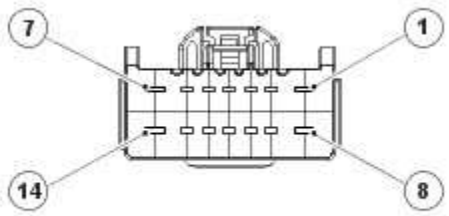

E55103

Electric parking brake module connector 1 (CR50) disconnected. 3.

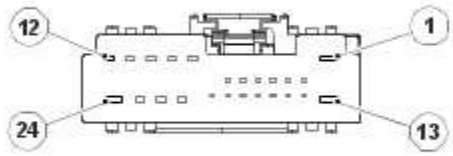

E55104

Electric parking brake module connector 2 (CR32) disconnected. 4. Key on, engine off. 5. Measure the resistance between:

CR50 connector, harness side	Vehicle battery
Electric parking brake hall effect - signal - Pin 12	Negative terminal

- **Is the resistance greater than 100 Kohms?**

-> Yes

GO to Pinpoint Test G531320t67.

-> No

GO to Pinpoint Test G531320t74.

G531320t67 : CHECK THE HALL EFFECT 5 VOLT SUPPLY CIRCUIT FOR SHORT CIRCUIT TO POWER

1. Measure the resistance between:

CR50 connector, harness side	Vehicle battery

www.JagDocs.com

Electric parking brake hall effect - signal - Pin 12	Positive terminal

- **Is the resistance greater than 100 Kohms?**

-> Yes
GO to Pinpoint Test G531320t68.

-> No
GO to Pinpoint Test G531320t75.

G531320t68 : CHECK THE ACTUATOR SIGNAL CIRCUIT FOR SHORT CIRCUIT TO GROUND

1. Measure the resistance between:

CR32 connector, harness side	Vehicle battery
Electric parking brake actuator - signal - Pin 10	Negative terminal

- **Is the resistance greater than 100 Kohms?**

-> Yes
GO to Pinpoint Test G531320t69.

-> No
GO to Pinpoint Test G531320t76.

G531320t69 : CHECK THE ACTUATOR SIGNAL CIRCUIT FOR SHORT CIRCUIT TO POWER

1. Measure the resistance between:

CR32 connector, harness side	Vehicle battery
Electric parking brake actuator - signal - Pin 10	Negative terminal

- **Is the resistance greater than 100 Kohms?**

-> Yes
GO to Pinpoint Test G531320t70.

-> No
GO to Pinpoint Test G531320t77.

G531320t70 : CHECK THE SENSOR RETURN CIRCUIT FOR SHORT CIRCUIT TO BATTERY

1. Measure the resistance between:

CR50 connector, harness side	Vehicle battery
Electric parking brake hall effect - ground - Pin 13	Positive terminal

- **Is the resistance greater than 100 Kohms?**

-> Yes
GO to Pinpoint Test G531320t71.

-> No
GO to Pinpoint Test G531320t78.

G531320t71 : CHECK THE SENSOR RETURN CIRCUIT FOR OPEN CIRCUIT

1.

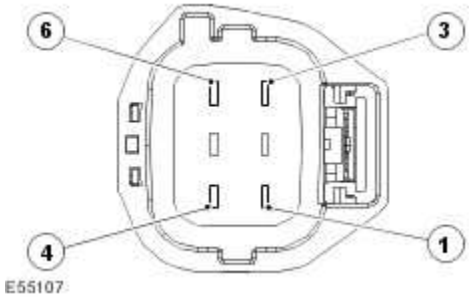

EPB actuator connector disconnected. 2. Measure the resistance between:

CR50 connector, harness side	EPB actuator connector, harness side
Electric parking brake hall effect - ground - Pin 13	Electric parking brake hall effect - ground - Pin 05

www.JagDocs.com

- **Is the resistance less than 10 ohms?**

-> Yes
GO to Pinpoint Test G531320t72.

-> No
REPAIR the open circuit. For additional information, refer to the wiring diagrams.

G531320t72 : CHECK THE HALL EFFECT 5 VOLT SUPPLY CIRCUIT FOR OPEN CIRCUIT

1. Measure the resistance between:

CR50 connector, harness side	EPB actuator connector, harness side
Electric parking brake hall effect - signal. - Pin 12	Electric parking brake hall effect - signal - Pin 03

- **Is the resistance less than 10 ohms?**

-> Yes
GO to Pinpoint Test G531320t73.

-> No
REPAIR the open circuit. For additional information, refer to the wiring diagrams.

G531320t73 : CHECK THE ACTUATOR SIGNAL CIRCUIT FOR OPEN CIRCUIT

1. Measure the resistance between:

CR32 connector, harness side	EPB actuator connector, harness side
Electric parking brake actuator - signal - Pin 10	Electric parking brake actuator - signal - Pin 04

- **Is the resistance less than 10 ohms?**

-> Yes
An intermittent fault may be present in the wiring harness. Visually check for chaffed wires or other physical damage to the harness. If no fault is found in the circuit, suspect the following component(s): - EPB module - EPB actuator - EPB module connector, CR50 - EPB module connector, CR32 - EPB actuator connector

-> No

REPAIR the open circuit. For additional information, refer to the wiring diagrams.

G531320t74 : CHECK IF THE SHORT CIRCUIT IS IN THE HARNESS OR THE ACTUATOR

1.

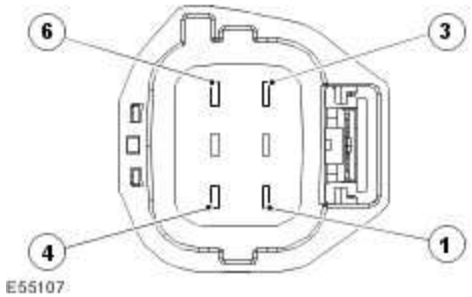

EPB actuator connector disconnected. 2. Measure the resistance between:

CR50 connector, harness side	Vehicle battery
Electric parking brake hall effect - signal - Pin 12	Negative terminal

- **Is the resistance greater than 100 Kohms?**

-> Yes

INSTALL a new EPB actuator.

[Parking Brake Release Actuator - VIN Range: G03446->H99999 (70.35.45)]

-> No

REPAIR the short circuit. For additional information, refer to the wiring diagrams.

G531320t75 : CHECK IF THE SHORT CIRCUIT IS IN THE HARNESS OR THE ACTUATOR

1.

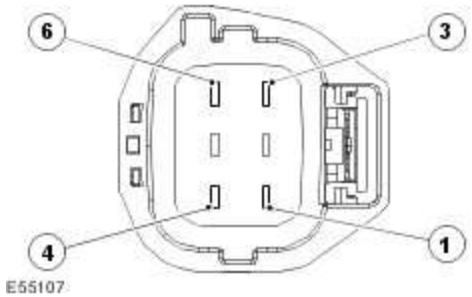

EPB actuator connector disconnected. 2. Measure the resistance between:

CR50 connector, harness side	Vehicle battery

www.JagDocs.com

Electric parking brake hall effect - signal - Pin 12	Positive terminal

- **Is the resistance greater than 100 Kohms?**

-> Yes
INSTALL a new EPB actuator.
Parking Brake Release Actuator - VIN Range: G03446->H99999 (70.35.45)

-> No
REPAIR the short circuit. For additional information, refer to the wiring diagrams.

G531320t76 : CHECK IF THE SHORT CIRCUIT IS IN THE HARNESS OR THE ACTUATOR

1.

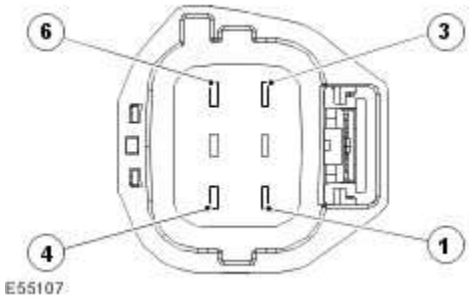

EPB actuator connector disconnected. 2. Measure the resistance between:

CR32 connector, harness side	Vehicle battery
Electric parking brake actuator - signal - Pin 10	Negative terminal

- **Is the resistance greater than 100 Kohms?**

-> Yes
INSTALL a new EPB actuator.
Parking Brake Release Actuator - VIN Range: G03446->H99999 (70.35.45)

-> No
REPAIR the short circuit. For additional information, refer to the wiring diagrams.

G531320t77 : CHECK IF THE SHORT CIRCUIT IS IN THE HARNESS OR THE ACTUATOR

1.

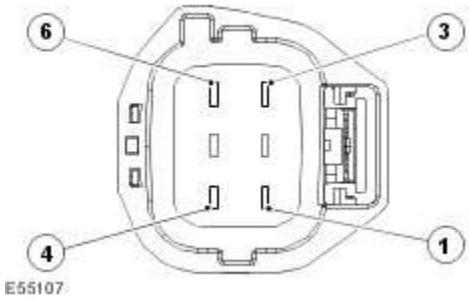

EPB actuator connector disconnected. 2. Measure the resistance between:

CR32 connector, harness side	Vehicle battery
Electric parking brake actuator - signal - Pin 10	Positive terminal

- **Is the resistance greater than 100 Kohms?**

-> Yes

INSTALL a new EPB actuator.

Parking Brake Release Actuator - VIN Range: G03446->H99999 (70.35.45)

-> No

REPAIR the short circuit. For additional information, refer to the wiring diagrams.

G531320t78 : CHECK IF THE SHORT CIRCUIT IS IN THE HARNESS OR THE ACTUATOR

1.

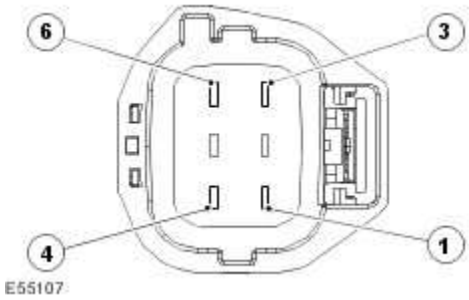

EPB actuator connector disconnected. 2. Measure the resistance between:

CR50 connector, harness side	Vehicle battery
Electric parking brake hall effect - ground - Pin 13	Positive terminal

www.JagDocs.com

- **Is the resistance greater than 100 Kohms?**

-> Yes
INSTALL a new EPB actuator.
Parking Brake Release Actuator - VIN Range: G03446->H99999 (70.35.45)

-> No
REPAIR the short circuit. For additional information, refer to the wiring diagrams.

PINPOINT TEST G531320p18 : SECONDARY RELEASE HARNESS SHORT CIRCUIT TO BATTERY OR OPEN CIRCUIT

G531320t79 : CHECK THE PRIMARY APPLY SIGNAL CIRCUIT FOR SHORT CIRCUIT TO POWER

1. Key off. 2.

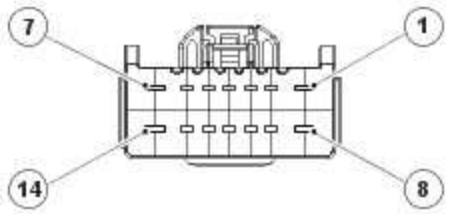

E55103

Electric parking brake module connector 1 (CR50) disconnected. 3.

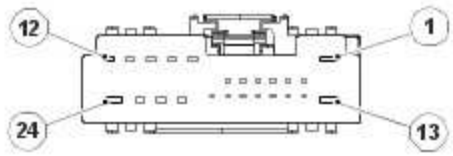

E55104

Electric parking brake module connector 2 (CR32) disconnected. 4. Key on, engine off. 5. Measure the resistance between:

CR50 connector, harness side	Vehicle battery
Electric parking brake switch apply 1 - signal - Pin 10	Positive terminal

- **Is the resistance greater than 100 Kohms?**

-> Yes
GO to Pinpoint Test G531320t80.

-> No
GO to Pinpoint Test G531320t86.

G531320t80 : CHECK THE PRIMARY RELEASE SIGNAL CIRCUIT FOR SHORT CIRCUIT TO POWER

1. Measure the resistance between:

CR50 connector, harness side	Vehicle battery
Electric parking brake switch release 1 - signal - Pin 11	Positive terminal

- **Is the resistance greater than 100 Kohms?**

-> Yes
GO to Pinpoint Test G531320t81.

-> No
GO to Pinpoint Test G531320t87.

G531320t81 : CHECK THE SECONDARY APPLY SIGNAL CIRCUIT FOR SHORT CIRCUIT TO POWER

1. Measure the resistance between:

CR32 connector, harness side	Vehicle battery
Electric parking brake switch apply 2 - signal - Pin 02	Positive terminal

- **Is the resistance greater than 100 Kohms?**

-> Yes
GO to Pinpoint Test G531320t82.

www.JagDocs.com

-> No
GO to Pinpoint Test G531320t88.

G531320t82 : CHECK THE SECONDARY RELEASE SIGNAL CIRCUIT FOR SHORT CIRCUIT TO POWER

1. Measure the resistance between:

CR32 connector, harness side	Vehicle battery
Electric parking brake switch release 2 - signal - Pin 14	Positive terminal

- **Is the resistance greater than 100 Kohms?**

-> Yes
GO to Pinpoint Test G531320t83.

-> No
GO to Pinpoint Test G531320t89.

G531320t83 : CHECK THE SECONDARY RELEASE SIGNAL CIRCUIT FOR OPEN CIRCUIT

1.

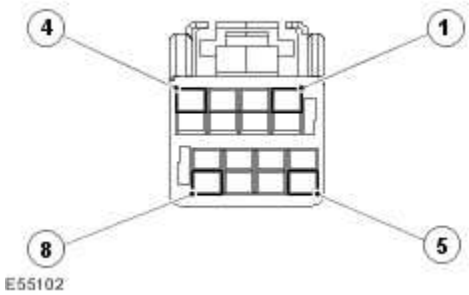

Electric parking brake switch (TL82) connector disconnected. 2. Measure the resistance between:

CR32 connector, harness side	TL82 connector, harness side
Electric parking brake switch release 2 - signal - Pin 14	Electric parking brake switch release 2 - signal - Pin 05

- **Is the resistance less than 10 ohms?**

-> Yes
GO to Pinpoint Test G531320t84.

-> No
REPAIR the open circuit. For additional information, refer to the wiring diagrams.

G531320t84 : CHECK THE SWITCH RETURN SIGNAL CIRCUIT FOR OPEN CIRCUIT

1. Measure the resistance between:

CR32 connector, harness side	TL82 connector, harness side
Electric parking brake switch - switch return - Pin 06	Electric parking brake switch - switch return - Pin 06

- **Is the resistance less than 10 ohms?**

-> Yes
GO to Pinpoint Test G531320t85.

-> No
REPAIR the open circuit. For additional information, refer to the wiring diagrams.

G531320t85 : CHECK THE ELECTRIC PARKING BRAKE SWITCH

1. Measure the resistance between:

TL82 connector, component side	TL82 connector, component side
Electric parking brake switch release 2 - signal - Pin 05	Electric parking brake switch - switch return - Pin 06

- **Is the resistance between 595 ohms - 611 ohms?**

-> Yes
An intermittent fault may be present in the wiring harness. Visually check for chaffed wires or other physical damage to the harness. If no fault is found in the circuit, suspect the following component(s): - EPB module - EPB module connector, CR50 - EPB module connector, CR32

-> No

www.JagDocs.com

INSTALL a new EPB switch.
Parking Brake Switch (70.35.46)

G531320t86 : CHECK IF THE SHORT CIRCUIT IS IN THE HARNESS OR THE SWITCH

1.

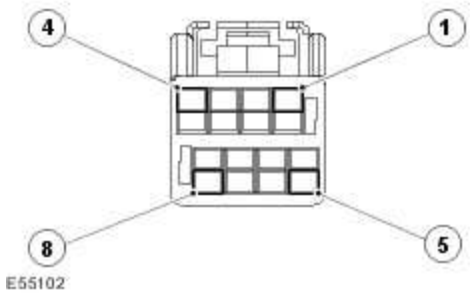

Electric parking brake switch (TL82) connector disconnected. 2. Measure the resistance between:

CR50 connector, harness side	Vehicle battery
Electric parking brake switch apply 1 - signal - Pin 10	Positive terminal

- **Is the resistance greater than 100 Kohms?**

-> Yes
INSTALL a new EPB switch.
Parking Brake Switch (70.35.46)

-> No
REPAIR the short circuit. For additional information, refer to the wiring diagrams.

G531320t87 : CHECK IF THE SHORT CIRCUIT IS IN THE HARNESS OR THE SWITCH

1.

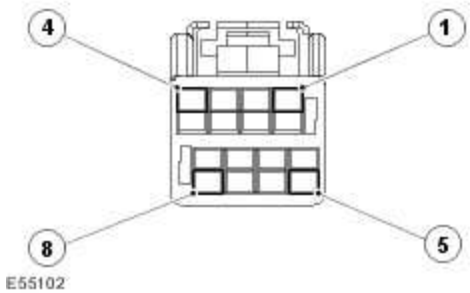

Electric parking brake switch (TL82) connector disconnected. 2. Measure the resistance between:

CR50 connector, harness side	Vehicle battery

Electric parking brake switch release 1 - signal - Pin 11	Positive terminal

- **Is the resistance greater than 100 Kohms?**

-> Yes
INSTALL a new EPB switch.
Parking Brake Switch (70.35.46)

-> No
REPAIR the short circuit. For additional information, refer to the wiring diagrams.

G531320t88 : CHECK IF THE SHORT CIRCUIT IS IN THE HARNESS OR THE SWITCH

1.

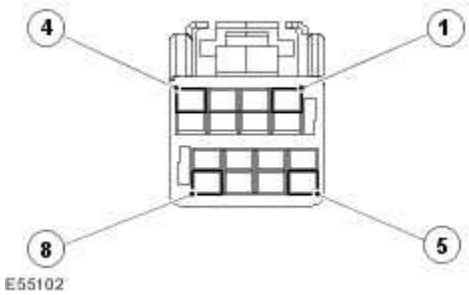

Electric parking brake switch (TL82) connector disconnected. 2. Measure the resistance between:

CR32 connector, harness side	Vehicle battery
Electric parking brake switch apply 2 - signal - Pin 02	Positive terminal

- **Is the resistance greater than 100 Kohms?**

-> Yes
INSTALL a new EPB switch.
Parking Brake Switch (70.35.46)

-> No
REPAIR the short circuit. For additional information, refer to the wiring diagrams.

www.JagDocs.com

G531320t89 : CHECK IF THE SHORT CIRCUIT IS IN THE HARNESS OR THE SWITCH

1.

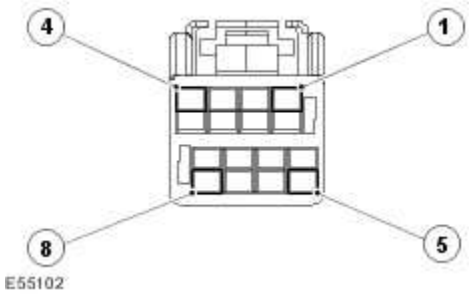

Electric parking brake switch (TL82) connector disconnected. 2. Measure the resistance between:

CR32 connector, harness side	Vehicle battery
Electric parking brake switch release 2 - signal - Pin 14	Positive terminal

- **Is the resistance greater than 100 Kohms?**

-> Yes

INSTALL a new EPB switch.

Parking Brake Switch (70.35.46)

-> No

REPAIR the short circuit. For additional information, refer to the wiring diagrams.

PINPOINT TEST G531320p19 : ACTUATOR DOES NOT FULLY RELEASE

G531320t90 : CHECK THE HIGH CURRENT GROUND CIRCUIT FOR AN OPEN CIRCUIT IN THE HARNESS

1. Key off. 2.

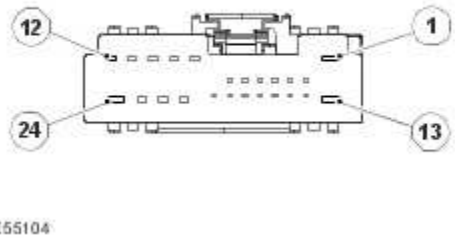

Electric parking brake connector 2 (CR32) disconnected. 3. Measure the resistance between:

CR32 connector, harness side	Vehicle battery
Electric parking brake module - ground - Pin 13	Negative terminal

- **Is the resistance less than 10 ohms?**

-> Yes
An intermittent fault may be present in the wiring harness. Visually check for chaffed wires or other physical damage to the harness. If no fault is found in the circuit, suspect the following component(s): - EPB module - EPB module connector, CR32

-> No
REPAIR the open circuit. For additional information, refer to the wiring diagrams.

PINPOINT TEST G531320p20 : SECONDARY RELEASE SWITCH CIRCUIT SHORT CIRCUIT TO GROUND

G531320t91 : CHECK THE SECONDARY RELEASE SIGNAL CIRCUIT FOR SHORT CIRCUIT TO GROUND

1. Key off. 2.

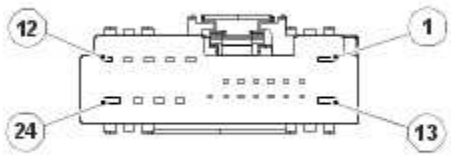

E55104

Electric parking brake connector 1 (CR50) disconnected. 3. Key on, engine off. 4. Measure the resistance between:

CR32 connector, harness side	Vehicle battery
Electric parking brake switch release 2 - signal - Pin 14	Negative terminal

- **Is the resistance greater than 100 Kohms?**

www.JagDocs.com

-> Yes
An intermittent fault may be present in the wiring harness. Visually check for chaffed wires or other physical damage to the harness. If no fault is found in the circuit, suspect the following component(s): - EPB module - EPB module connector, CR32

-> No
GO to Pinpoint Test G531320t92.

G531320t92 : CHECK IF THE SHORT CIRCUIT IS IN THE HARNESS OR THE SWITCH

1.

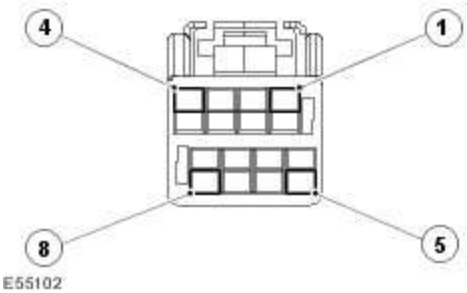

Electric parking brake switch connector (TL82) disconnected. 2. Measure the resistance between:

CR32 connector, harness side	Vehicle battery
Electric parking brake switch release 2 - signal - Pin 14	Negative terminal

- **Is the resistance greater than 100 Kohms?**

-> Yes
INSTALL a new EPB switch.
Parking Brake Switch (70.35.46)

-> No
REPAIR the short circuit. For additional information, refer to the wiring diagrams.

PINPOINT TEST G531320p21 : APPLY AND RELEASE SWITCH CONTACTS ENERGIZED SIMULTANEOUSLY

G531320t93 : CHECK THE PRIMARY EPB APPLY AND RELEASE CIRCUIT FOR SHORT CIRCUIT FAULTS

1. Key off. 2.

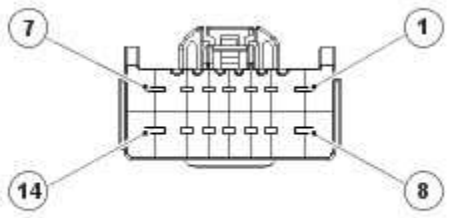

E55103

Electric parking brake connector 1 (CR50) disconnected. 3.

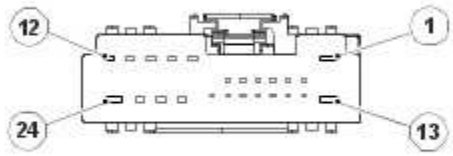

E55104

Electric parking brake connector 2 (CR32) disconnected. 4. Make sure the parking brake switch is not in the apply or release position. 5. Measure the resistance between:

CR50 connector, harness side	CR50 connector, harness side
Electric parking brake switch apply 1 - signal - Pin 10	Electric parking brake switch release 1 - signal - Pin 11

- **Is the resistance between 1.19 Kohms - 1.222 Kohms?**

-> Yes

GO to Pinpoint Test G531320t94.

-> No

GO to Pinpoint Test G531320t95.

G531320t94 : CHECK THE SECONDARY EPB APPLY AND RELEASE CIRCUIT FOR SHORT CIRCUIT FAULTS

1. Make sure the parking brake switch is not in the apply or release position. 2. Measure the resistance between:

www.JagDocs.com

CR32 connector, harness side	CR32 connector, harness side
Electric parking brake switch apply 2 - signal - Pin 02	Electric parking brake switch release 2 - signal - Pin 14

- **Is the resistance between 1.19 Kohms - 1.222 Kohms?**

-> Yes
An intermittent fault may be present in the wiring harness. Visually check for chaffed wires or other physical damage to the harness. If no fault is found in the circuit, suspect the following component(s): - EPB module - EPB module connector, CR50 - EPB module connector, CR32

-> No
GO to Pinpoint Test G531320t96.

G531320t95 : CHECK IF THE SHORT CIRCUIT IS IN THE HARNESS OR THE SWITCH

1.

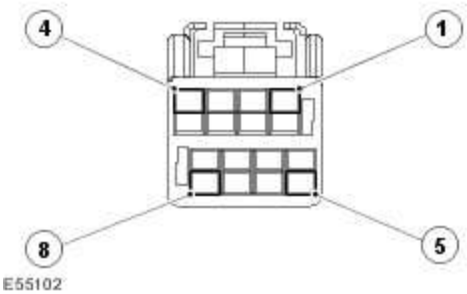

Electric parking brake switch (TL82) connector disconnected. 2. Measure the resistance between:

CR50 connector, harness side	CR50 connector, harness side
Electric parking brake switch apply 1 - signal - Pin 10	Electric parking brake switch release 1 - signal - Pin 11

- **Is the resistance greater than 100 Kohms?**

-> Yes
INSTALL a new EPB switch.
Parking Brake Switch (70.35.46)

-> No
REPAIR the short circuit. For additional information, refer to the wiring diagrams.

G531320t96 : CHECK IF THE SHORT CIRCUIT IS IN THE HARNESS OR THE SWITCH

1.

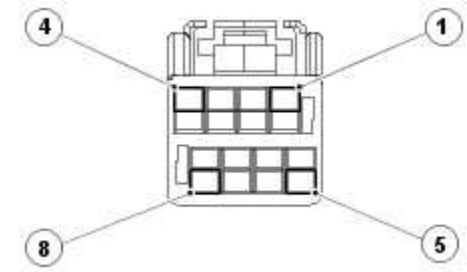

E55102

Electric parking brake switch (TL82) connector disconnected. 2. Measure the resistance between:

CR32 connector, harness side	CR32 connector, harness side
Electric parking brake switch apply 2 - signal - Pin 02	Electric parking brake switch release 2 - signal - Pin 14

- **Is the resistance greater than 100 Kohms?**

-> Yes

INSTALL a new EPB switch.

Parking Brake Switch (70.35.46)

-> No

REPAIR the short circuit. For additional information, refer to the wiring diagrams.

PINPOINT TEST G531320p22 : BRAKE SWITCH INPUT STATUS PLAUSIBILITY FAILURE

G531320t97 : CHECK THE BRAKE SWITCH CIRCUIT FOR SHORT CIRCUIT TO POWER IN HARNESS

1. Key off. 2.

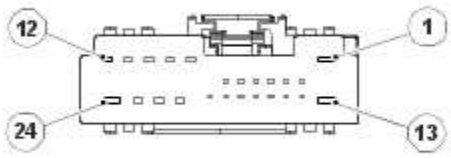

E55104

www.JagDocs.com

Electric parking brake module connector 2 (CR32) disconnected. 3. Key on, engine off. 4. Make sure the brake pedal is not pressed. 5. Measure the resistance between:

CR32 connector, harness side	Vehicle battery
Brake switch - signal - Pin 07	Positive terminal

- **Is the resistance greater than 100 Kohms?**

-> Yes
GO to Pinpoint Test G531320t98.

-> No
GO to Pinpoint Test G531320t99.

G531320t98 : CHECK THE BRAKE SWITCH CIRCUIT FOR SHORT CIRCUIT TO GROUND IN THE HARNESS

1. Measure the resistance between:

CR32 connector, harness side	Vehicle battery
Brake switch - signal - Pin 07	Negative terminal

- **Is the resistance greater than 100 Kohms?**

-> Yes
The following items have not been fully tested : - EPB module - Brake switch - ECM

-> No
REPAIR the short circuit. For additional information, refer to the wiring diagrams.

G531320t99 : CHECK THE BRAKE SWITCH CIRCUIT FOR SHORT CIRCUIT TO POWER IN THE HARNESS

1.

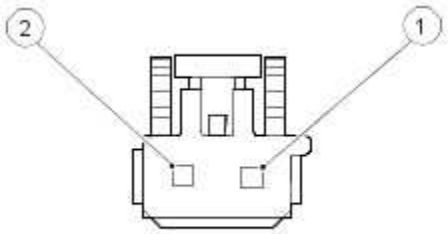

E55108

Brake pressure sensor (BPS) connector disconnected. 2. Measure the resistance between:

CR32 connector, harness side	Vehicle battery
Brake switch - signal - Pin 07	Positive terminal

- **Is the resistance greater than 100 Kohms?**

-> Yes

INSTALL a new BPS.

-> No

REPAIR the short circuit. For additional information, refer to the wiring diagrams.

PINPOINT TEST G531320p24 : ACTUATOR OUTPUT OPEN CIRCUIT

G531320t102 : CHECK THE ACTUATOR CIRCUIT RESISTANCE

1. Key off. 2.

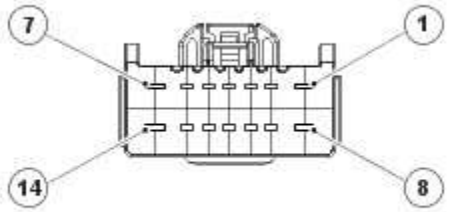

E55103

Electric parking brake module connector 1 (CR50) disconnected. 3. Key on, engine off. 4. Measure the resistance between:

CR50 connector, harness side	CR50 connector, harness side

www.JagDocs.com

Electric parking brake actuator - positive - Pin 14	Electric parking brake actuator - negative - Pin 07

- **Is the resistance between 0.5 ohms - 1 ohms?**

-> Yes
An intermittent fault may be present in the wiring harness. Visually check for chaffed wires or other physical damage to the harness. If no fault is found in the circuit, suspect the following component(s): - EPB module - EPB module connector, CR50

-> No
GO to Pinpoint Test G531320t103.

G531320t103 : CHECK THE ACTUATOR SIGNAL CIRCUIT FOR OPEN CIRCUIT

1.

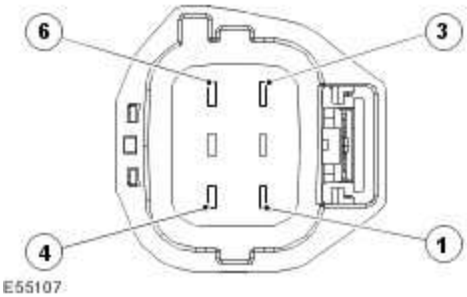

EPB actuator connector disconnected. 2. Measure the resistance between:

CR50 connector, harness side	EPB actuator connector, harness side
Electric parking brake actuator - positive - Pin 14	Electric parking brake actuator - positive - Pin 01

- **Is the resistance less than 10 ohms?**

-> Yes
GO to Pinpoint Test G531320t104.

-> No
REPAIR the open circuit. For additional information, refer to the wiring diagrams.

G531320t104 : CHECK THE ACTUATOR RETURN CIRCUIT FOR OPEN CIRCUIT

1. Measure the resistance between:

CR50 connector, harness side	EPB actuator connector, harness side
Electric parking brake actuator - negative - Pin 07	Electric parking brake actuator - negative - Pin 06

- **Is the resistance less than 10 ohms?**

-> Yes
GO to Pinpoint Test G531320t105.

-> No
REPAIR the open circuit. For additional information, refer to the wiring diagrams.

G531320t105 : CHECK THE ACTUATOR CIRCUIT RESISTANCE

1. Measure the resistance between:

EPB actuator connector, component side	EPB actuator connector, component side
Electric parking brake actuator - positive - Pin 01	Electric parking brake actuator - negative - Pin 06

- **Is the resistance between 0.5 ohms - 1 ohm?**

-> Yes
REPAIR the open circuit. For additional information, refer to the wiring diagrams.

-> No
INSTALL a new EPB actuator.
Parking Brake Release Actuator - VIN Range: G03446->H99999 (70.35.45)

PINPOINT TEST G531320p29 : PRIMARY PARKING BRAKE RELEASE SWITCH CIRCUIT FAULT

www.JagDocs.com

G531320t134 : CHECK THE PRIMARY RELEASE SWITCH SIGNAL CIRCUIT FOR SHORT CIRCUIT TO POWER

1. Key off. 2.

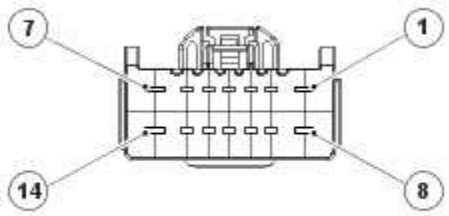

E55103

Electric parking brake module connector 1 (CR50) disconnected. 3.

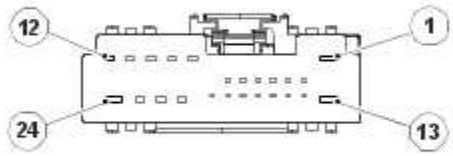

E55104

Electric parking brake module connector 2 (CR32) disconnected. 4. Key on, engine off. 5. Measure the resistance between:

CR50 connector, harness side	Vehicle battery
Primary release switch signal 1 - pin 11	Positive terminal

- **Is the resistance greater than 100 Kohms?**

-> Yes

GO to Pinpoint Test G531320t135.

-> No

GO to Pinpoint Test G531320t141.

G531320t135 : CHECK THE PRIMARY APPLY SWITCH SIGNAL CIRCUIT FOR SHORT CIRCUIT TO POWER

1. Measure the resistance between:

CR50 connector, harness side	Vehicle battery

Primary apply switch signal 1 - pin 10	Positive terminal

- **Is the resistance greater than 100 Kohms?**

-> Yes
GO to Pinpoint Test G531320t136.

-> No
GO to Pinpoint Test G531320t142.

G531320t136 : CHECK THE SECONDARY APPLY SWITCH SIGNAL CIRCUIT FOR SHORT CIRCUIT TO POWER

1. Measure the resistance between:

CR32 connector, harness side	Vehicle battery
Secondary apply switch signal 2 - pin 02	Positive terminal

- **Is the resistance greater than 100 Kohms?**

-> Yes
GO to Pinpoint Test G531320t137.

-> No
GO to Pinpoint Test G531320t143.

G531320t137 : CHECK THE SECONDARY RELEASE SWITCH SIGNAL CIRCUIT FOR SHORT CIRCUIT TO POWER

1. Measure the resistance between:

CR32 connector, harness side	Vehicle battery
Secondary release switch signal 2 - pin 14	Positive terminal

- **Is the resistance greater than 100 Kohms?**

www.JagDocs.com

-> Yes
GO to Pinpoint Test G531320t138.

-> No
GO to Pinpoint Test G531320t144.

G531320t138 : CHECK THE PRIMARY RELEASE SWITCH SIGNAL CIRCUIT FOR HIGH RESISTANCE

1.

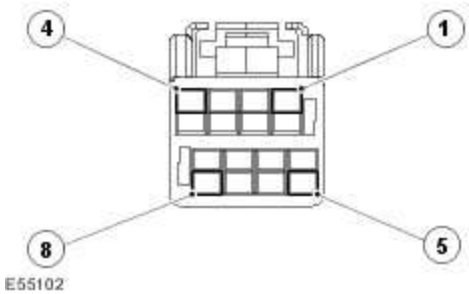

Electric parking brake switch (TL82) connector disconnected. 2. Measure the resistance between:

CR50 connector, harness side	TL82 connector, harness side
Primary release switch signal 1 - pin 11	Primary release switch signal 1 - pin 04

- **Is the resistance less than 10 ohms?**

-> Yes
GO to Pinpoint Test G531320t139.

-> No
REPAIR the high resistance circuit. For additional information, refer to the wiring diagrams.

G531320t139 : CHECK THE APPLY SWITCH RETURN CIRCUIT FOR HIGH RESISTANCE

1. Measure the resistance between:

CR32 connector, harness side	TL82 connector, harness side
Switch return - pin 06	Switch return - pin 06

- **Is the resistance less than 10 ohms?**

-> Yes
GO to Pinpoint Test G531320t140.

-> No
INSTALL a new parking brake switch.
Parking Brake Switch (70.35.46)

G531320t140 : CHECK THE SWITCH RESISTANCE

1. Measure the resistance between:

TL82 connector, component side	TL82 connector, component side
Switch release signal 1 - pin 04	Switch return - pin 06

- **Is the resistance between 595 and 611 ohms?**

-> Yes
An intermittent fault may be present in the wiring harness. Visually check for chaffed wires or other physical damage to the harness. If no fault is found in the circuit, suspect the following component(s): - CR50 - CR32 - EPB module

-> No
INSTALL a new parking brake switch.
Parking Brake Switch (70.35.46)

G531320t141 : CHECK IF THE SHORT CIRCUIT IS IN THE HARNESS OR THE SWITCH

1.

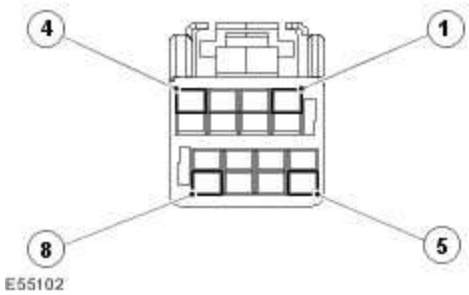

Electric parking brake switch (TL82) connector disconnected. 2. Measure the resistance between:

CR50 connector, component side	Vehicle battery

www.JagDocs.com

Release switch signal 1 - pin 11	Positive terminal

- **Is the resistance greater than 100 Kohms?**

-> Yes
INSTALL a new parking brake switch.
Parking Brake Switch (70.35.46)

-> No
REPAIR the short circuit. For additional information, refer to the wiring diagrams.

G531320t142 : CHECK IF THE SHORT CIRCUIT IS IN THE HARNESS OR THE SWITCH

1.

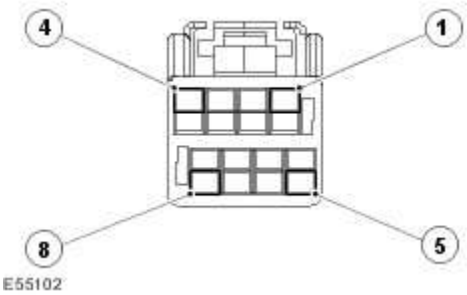

Electric parking brake switch (TL82) connector disconnected. 2. Measure the resistance between:

CR50 connector, component side	Vehicle battery
Apply switch signal 1 - pin 10	Positive terminal

- **Is the resistance greater than 100 Kohms?**

-> Yes
INSTALL a new parking brake switch.
Parking Brake Switch (70.35.46)

-> No
REPAIR the short circuit. For additional information, refer to the wiring diagrams.

G531320t143 : CHECK IF THE SHORT CIRCUIT IS IN THE HARNESS OR THE SWITCH

1.

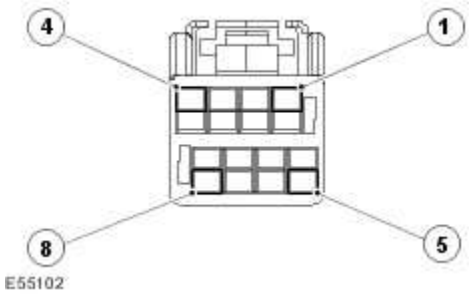

Electric parking brake switch (TL82) connector disconnected. 2. Measure the resistance between:

CR32 connector, component side	Vehicle battery
Apply switch signal 2 - pin 02	Positive terminal

- **Is the resistance greater than 100 Kohms?**

-> Yes

INSTALL a new parking brake switch.

Parking Brake Switch (70.35.46)

-> No

REPAIR the short circuit. For additional information, refer to the wiring diagrams.

G531320t144 : CHECK IF THE SHORT CIRCUIT IS IN THE HARNESS OR THE SWITCH

1.

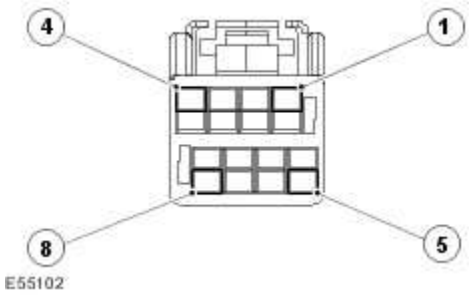

Electric parking brake switch (TL82) connector disconnected. 2. Measure the resistance between:

CR32 connector, component side	Vehicle battery
Release switch signal 2 - pin 14	Positive terminal

www.JagDocs.com

- **Is the resistance greater than 100 Kohms?**

-> Yes
INSTALL a new parking brake switch.
Parking Brake Switch (70.35.46)

-> No
REPAIR the short circuit. For additional information, refer to the wiring diagrams.

arking Brake Module - VIN Range: G00442->G45703 (70.35.47)

Removal

1 . Remove the luggage compartment floor covering.

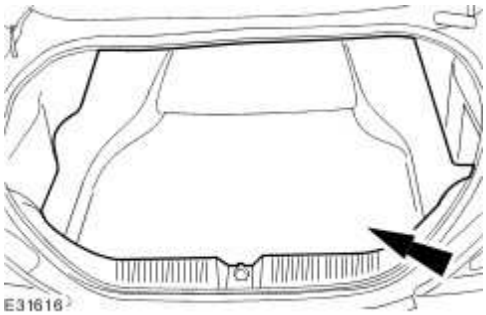

2 . Remove the luggage compartment side trim panel.

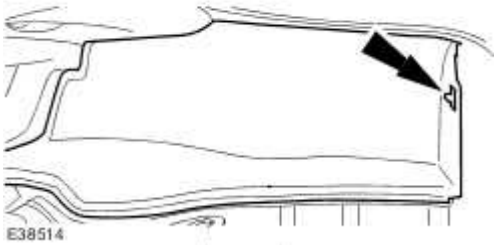

3 . Disconnect the parking brake module electrical connector.

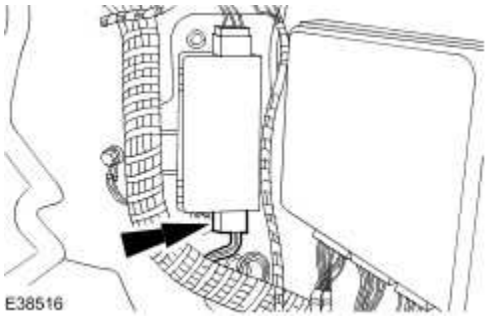

4 . Disconnect the parking brake module electrical connector.

www.JagDocs.com

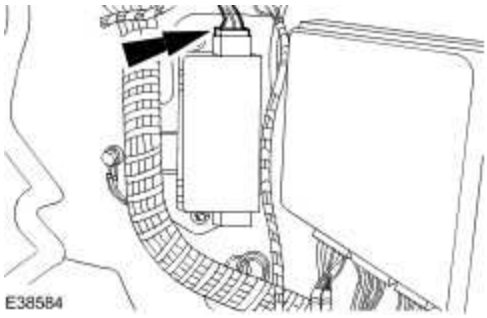

5 . Remove the parking brake module.

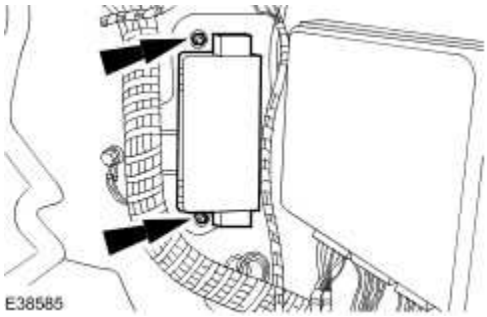

Installation

1 **NOTE:**

.

If a new parking brake module is installed it must be configured using the Jaguar approved diagnostic system.

To install, reverse the removal procedure.

Tighten to 4 Nm.

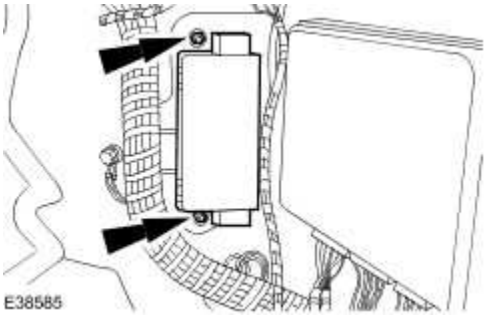

Parking Brake Module - VIN Range: G45704->G99999 (70.35.47)

Removal

1 . Remove the luggage compartment floor covering.

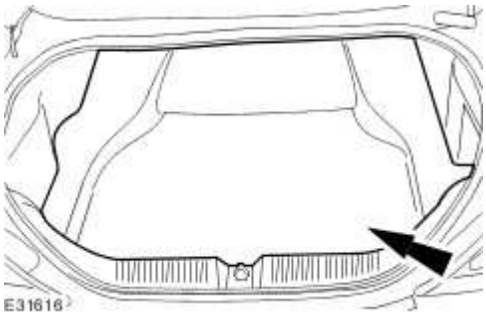

2 . Remove the luggage compartment side trim panel.

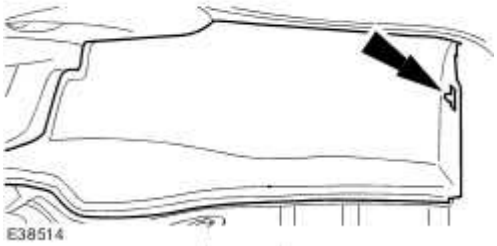

3 . Detach the rear electronic module (REM).

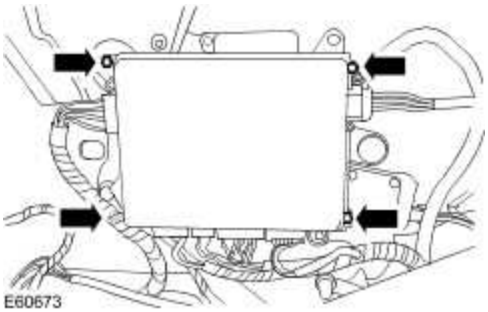

4 . Disconnect the parking brake module electrical connectors.

www.JagDocs.com

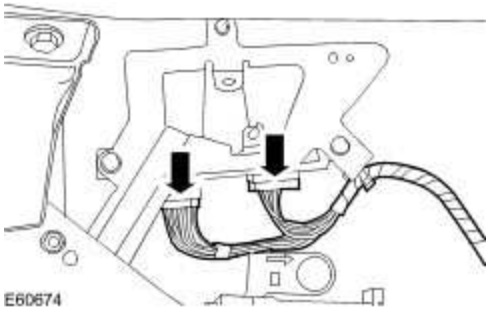

5 . Detach the parking brake module.

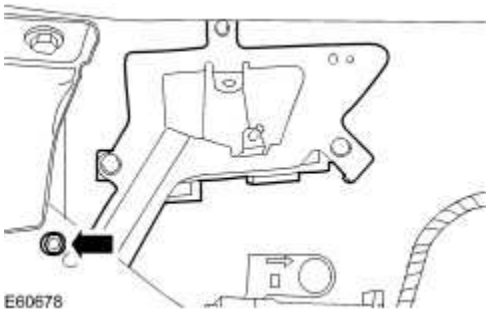

6 . Remove the parking brake module.

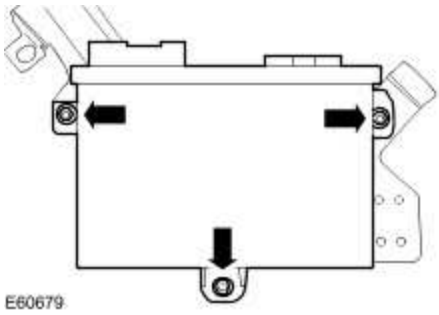

Installation

1 **NOTE:**

.

If a new parking brake module is installed it must be configured using the Jaguar approved diagnostic system.

To install, reverse the removal procedure.

- Tighten to 4 Nm.

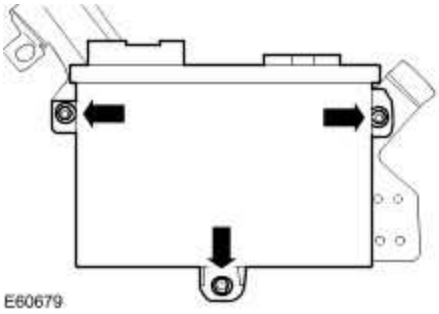

2 . Tighten to 10 Nm.

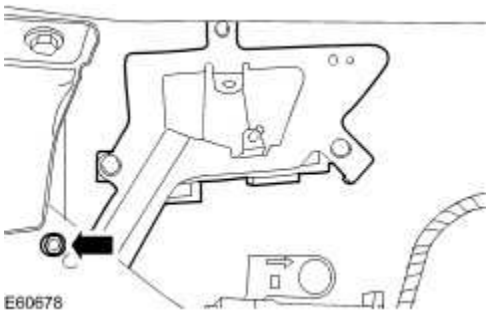

www.JagDocs.com

Parking Brake Pads - Vehicles With: High Performance Brakes (70.40.04)

Special Service Tools

Brake caliper piston retractor.
206-081

Removal

1 . Carry out the parking brake cable tension release.
For additional information, refer to

2 . Remove both rear wheels and tires. <<204-04>>

3 . Detach the parking brake cable.

1) Reposition the parking brake caliper lever.

2) Detach the parking brake cable.

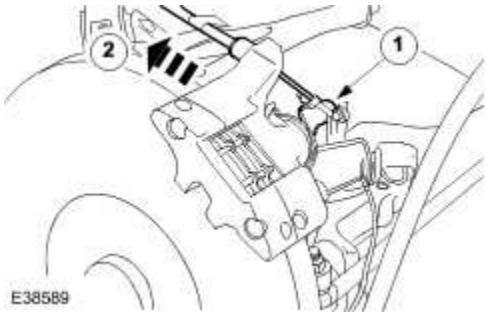

4 . Remove the parking brake pads.

1) Remove the parking brake pad retaining pins.

2) Remove the parking brake pad anti-rattle spring plate.

3) Remove the parking brake pads.

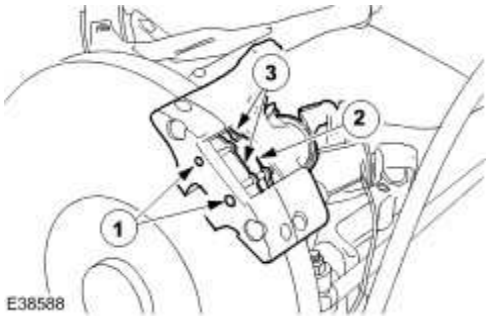

5 . **NOTE:**

Note using special tool 206-081 retract the parking brake caliper piston.

Remove the parking brake caliper.

- Remove and discard the parking brake caliper retaining bolts.

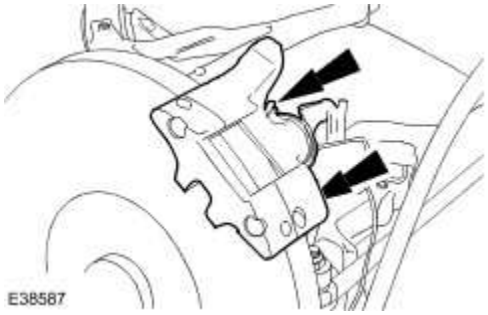

Installation

1 . **CAUTION: Make sure the brake disc faces are clean before installation.**

CAUTION: Brake pads must always be replaced in axle sets.

www.JagDocs.com

CAUTION: Install new parking brake caliper retaining bolts.

CAUTION: After installing the parking brake caliper, manually operate the parking brake caliper lever until the parking brake caliper piston is set to the correct position and the clearances between the pads, discs and parking brake caliper piston have been removed.

To install, reverse the removal procedure.

2 . Tighten to 70 Nm.

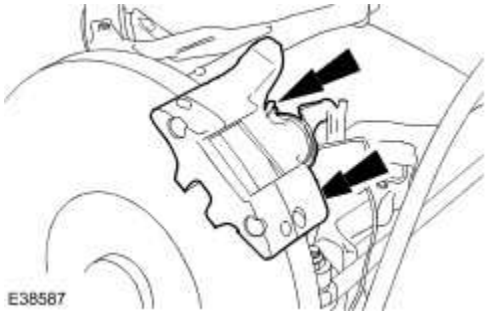

Parking Brake Rear Cables

Removal

All vehicles

1 . Carry out the parking brake cable release.
For additional information, refer to

2 . Remove both rear wheels and tires. <<204-04>>

3 . Detach the parking brake cable.

1) For right-hand side connector bracket:

- reposition the retaining tang.
- detach the parking brake cable.

2) For left-hand side reaction bracket, detach the parking brake cable.

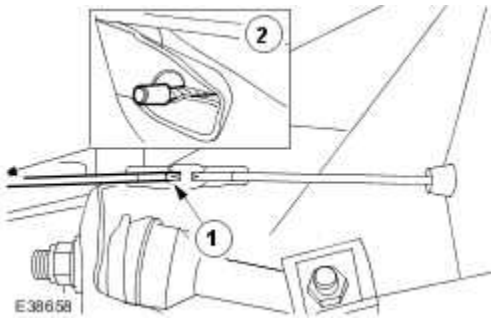

Vehicles with supercharger

4 . Detach the parking brake cable.

1) Reposition the parking brake caliper lever.

2) Detach the parking brake cable.

www.JagDocs.com

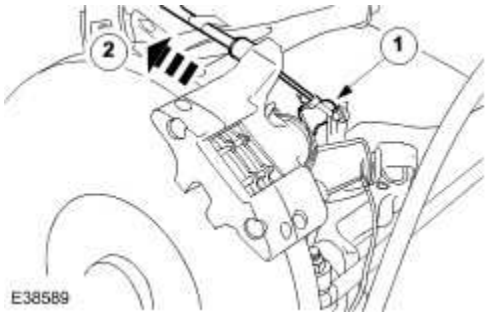

5 . Remove the parking brake cable retaining tie strap.

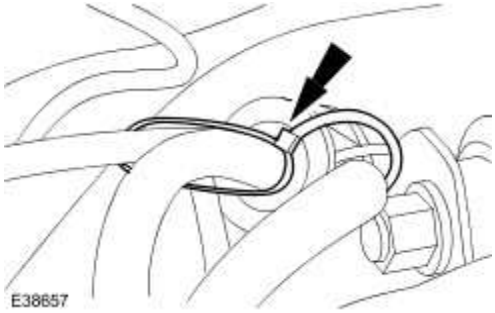

Vehicles without supercharger

6 . Detach the parking brake cable.

1) Reposition the parking brake caliper lever.

2) Detach the parking brake cable.

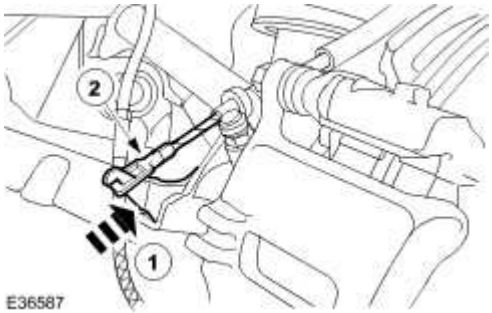

All vehicles

7 . Remove the parking brake cable.

- Detach the parking brake cable retaining tangs.

Remove the parking brake cable.

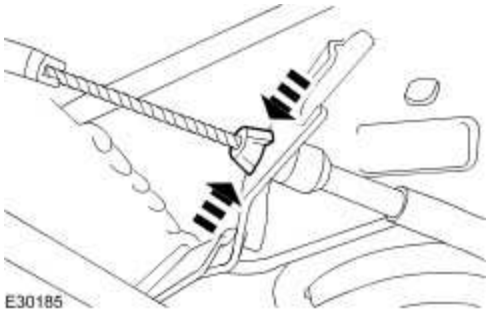

Installation

1 . To install, reverse the removal procedure.

www.JagDocs.com

Parking Brake Release Actuator - VIN Range: G00001->G03445 (70.35.45)

Removal

1 Carry out the parking brake cable tension release.
. For additional information, refer to Parking Brake Cable Tension Release - VIN Range: G00442->G45703

2 . Raise and support the vehicle.
For additional information, refer to

3 . Disconnect the parking brake release actuator electrical connector.

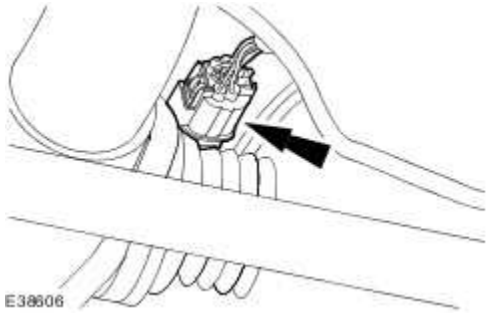

4 . Detach the parking brake cable.

1) For right-hand side connector bracket:

- reposition the retaining tang.
- detach the parking brake cable.

4) For left-hand side reaction bracket, detach the parking brake cable.

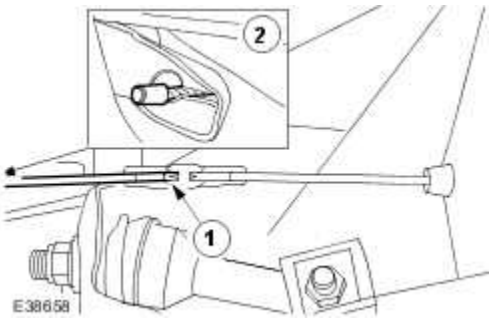

5 . Remove the parking brake release actuator retaining bolts.

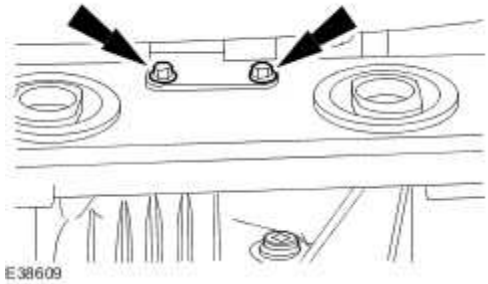

6 . Detach the parking brake release actuator cable.

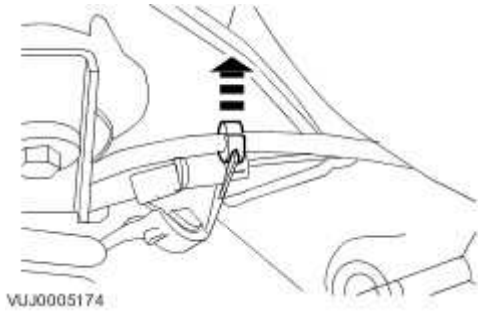

7 . Remove the parking brake release actuator.

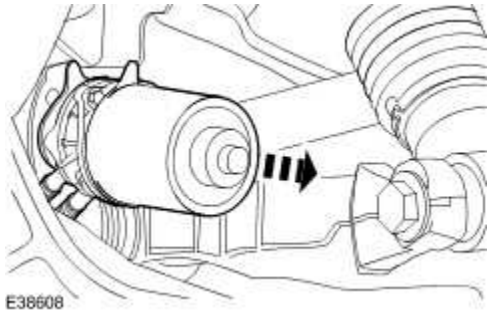

www.JagDocs.com

Installation

1 . **NOTE:**

Make sure the parking brake cable is correctly routed.

To install, reverse the removal procedure.

Tighten to 20 Nm.

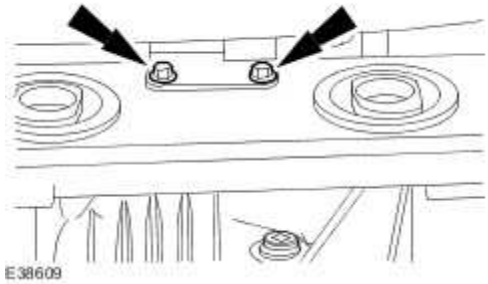

2 . **CAUTION: Calibrate the electric park brake using Jaguar approved diagnostic system. If the Jaguar approved diagnostic system is not available disconnect the battery for approximately 30 seconds, the vehicle will then prompt the driver to carry out the calibration procedure as per the vehicle hand book on re-connection.**

Calibrate the electric parking brake module using the Jaguar approved diagnostic system.

Parking Brake Release Actuator - VIN Range: G03446->H99999 (70.35.45)

Special Service Tools

Powertrain assembly jack
HTJ1200-02

Removal

1 Carry out the parking brake cable tension release.
. For additional information, refer to Parking Brake Cable Tension Release - VIN Range: G45704->G99999

2 . Drain the fuel tank.
For additional information, refer to Fuel Tank Draining - VIN Range: G45704->G99999

3 . Raise and support the vehicle.
For additional information, refer to

4 . Disconnect the parking brake release actuator electrical connector.

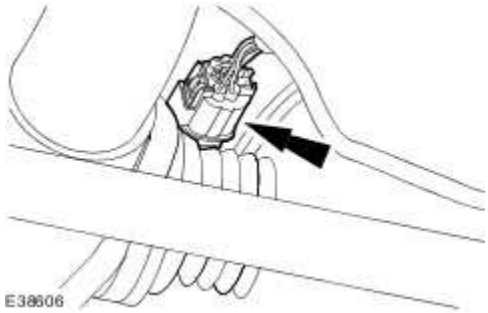

5 . **NOTE:**

Left-hand shown, right-hand similar.

www.JagDocs.com

Detach the air springs.

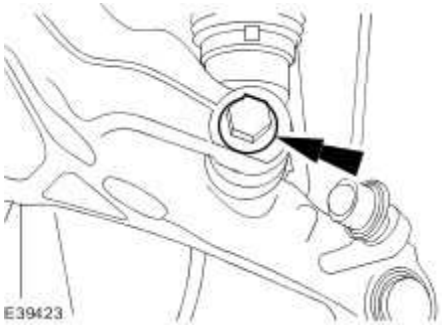

6 . Detach the fuel tank filler pipe.

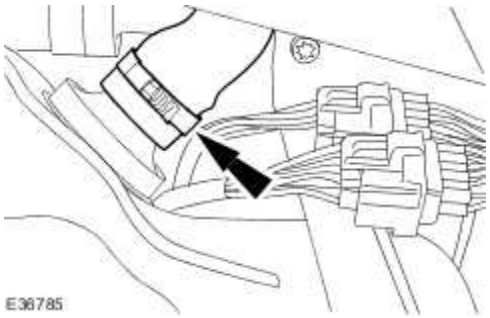

7 . **NOTE:**

Right-hand shown, left-hand similar.

Detach the muffler and tail pipe from the hanger insulator.

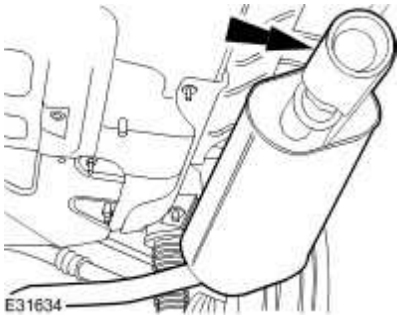

8 . Install the special tool to support the rear subframe.

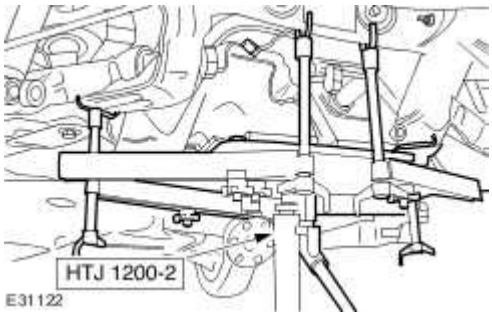

9 . **NOTE:**

Left-hand shown, right-hand similar.

Remove the noise, vibration and harshness brace retaining bolts.

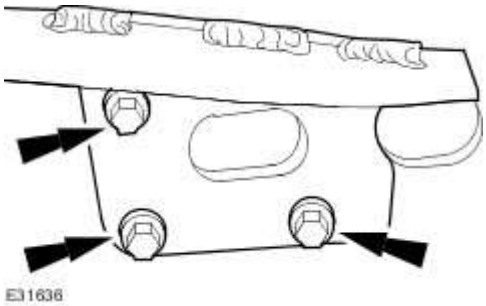

10 . **NOTE:**

Left-hand shown, right-hand similar.

Remove and discard the rear subframe rear retaining bolts.

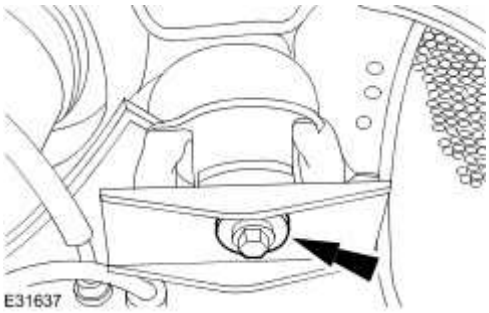

www.JagDocs.com

11 . **NOTE:**

Left-hand shown, right-hand similar.

Remove the noise, vibration and harshness brace.

- Remove and discard the rear subframe front retaining bolts.

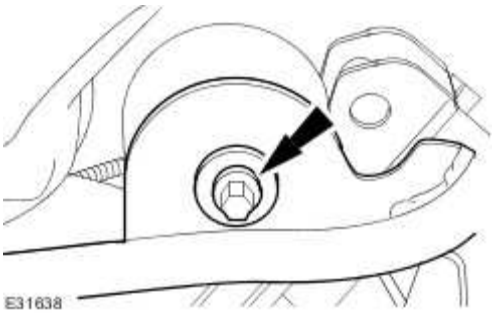

12 . Lower the subframe to a maximum of 60 mm.

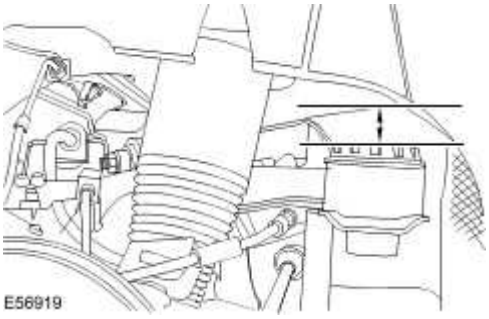

13 . Remove and discard the cross brace retaining bolts.

- Reposition the cross brace.

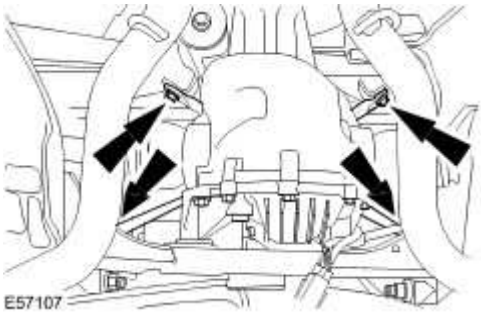

14 . Remove the parking brake release actuator retaining bolts.

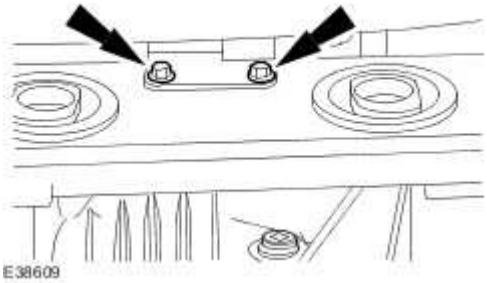

15 . Detach the parking brake release actuator cable.

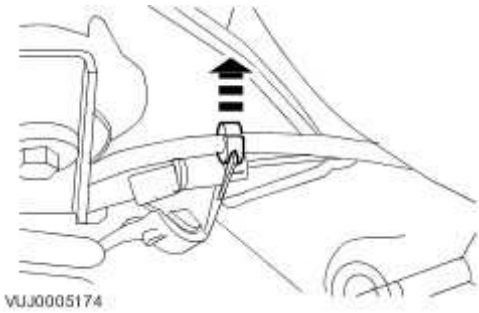

16 . Detach the parking brake release actuator cable.

1) For right-hand side connector bracket:

- Reposition the retaining tang.
- Detach the parking brake cable.

4) For left-hand side reaction bracket, detach the parking brake cable.

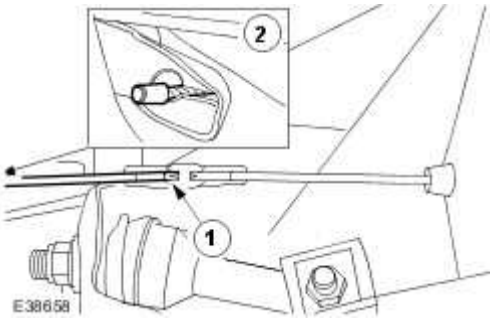

www.JagDocs.com

17 . Remove the parking brake release actuator.

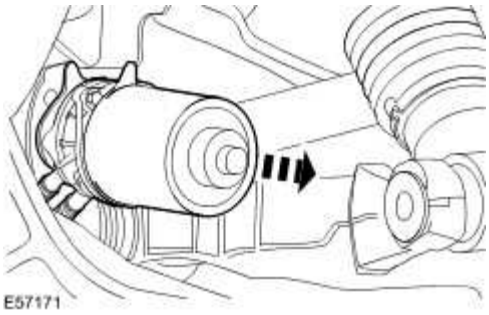

Installation

1 . **NOTE:**

Make sure the parking brake cable is correctly routed.

Install the parking brake release actuator.

- Tighten to 20 Nm .

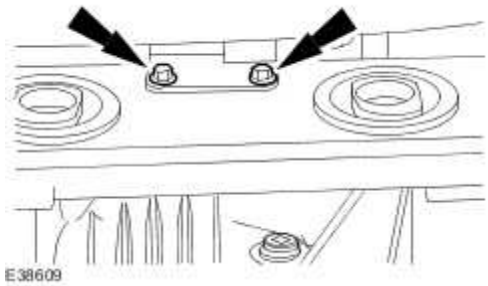

2 . Attach the parking brake release actuator cable.

1) For right-hand side connector bracket:

- Reposition the retaining tang.
- Detach the parking brake cable.

4) For left-hand side reaction bracket, detach the parking brake cable.

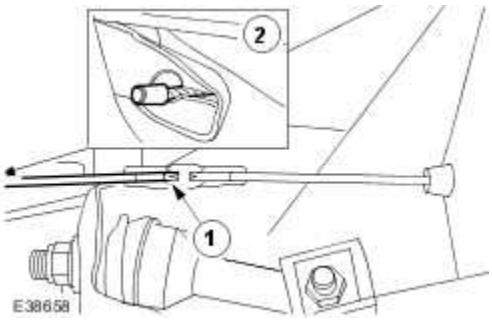

3 . Reposition the cross brace.

- Install new cross brace retaining bolts.
  - Tighten rear M8 to 35 Nm.
  - Tighten front M10 to 70 Nm.

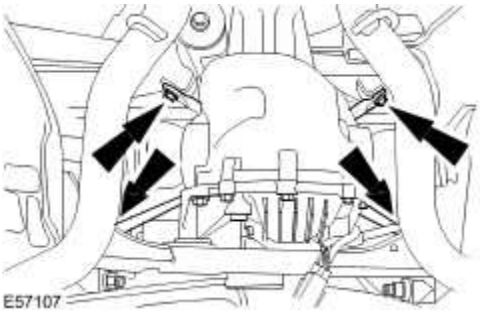

4 . Raise special tool and align subframe.

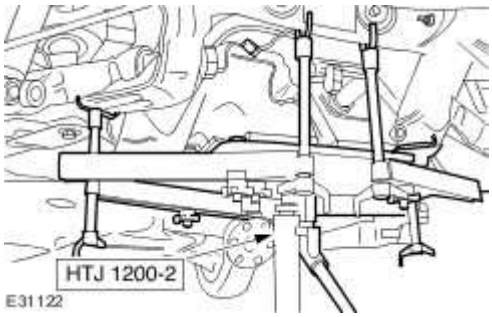

5 . **NOTE:**

Left-hand shown, right-hand similar.

www.JagDocs.com

Install the noise, vibration and harshness brace.

Tighten to 47 Nm

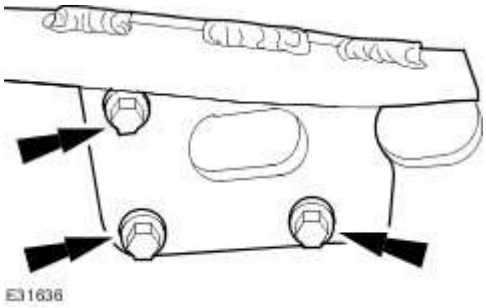

6 . **NOTE:**

Left-hand shown, right-hand similar.

Install, but do not fully tighten the new rear subframe front retaining bolts.

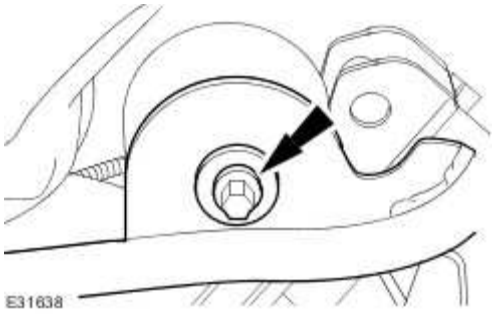

7 . **NOTE:**

Left-hand shown, right-hand similar.

Install and fully tighten the new rear subframe retaining bolts.

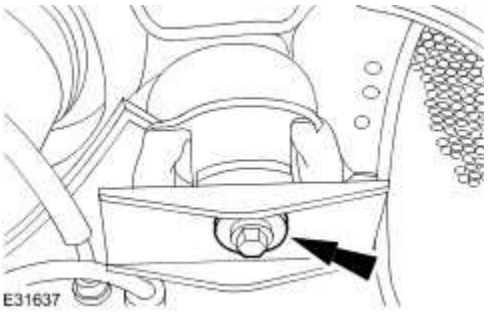

8 . Tighten rear subframe retaining bolts to 125 Nm.

9 . Remove the special tool supporting the rear subframe.

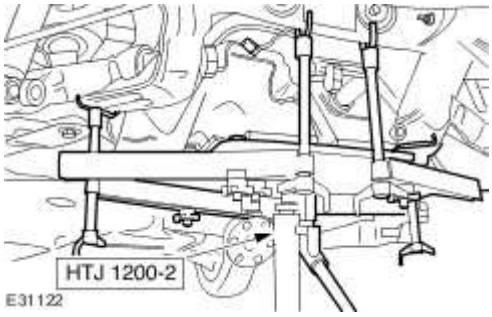

10 . **NOTE:**

Right-hand shown, left-hand similar.

Attach the muffler and tailpipe to the hanger insulator.

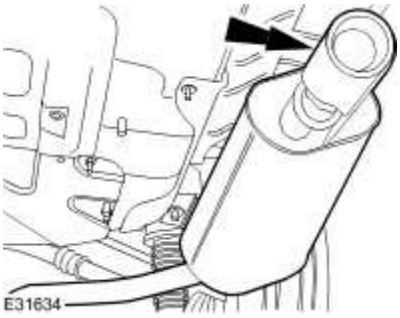

11 . Attach the fuel tank filler pipe.

www.JagDocs.com

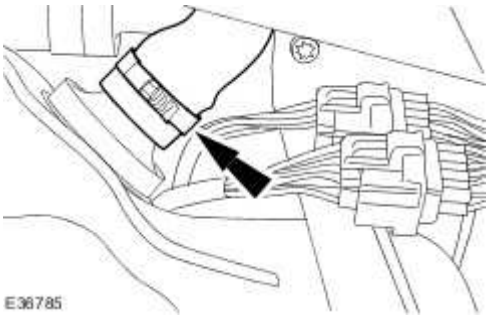

12 . **NOTE:**

Right-hand shown, left-hand similar.

Attach the rear air springs.

Tighten to 133 Nm.

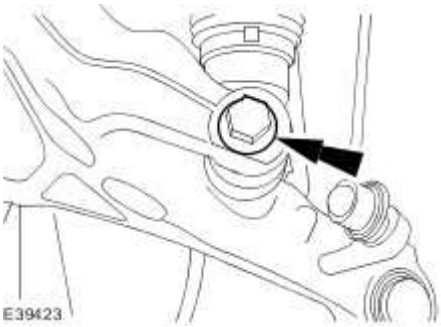

13 . Connect the parking brake release actuator electrical connector.

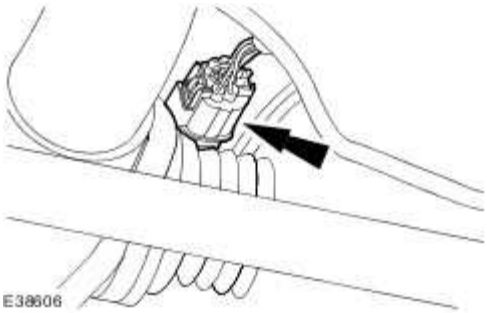

14 . Lower the vehicle.

15 . **CAUTION: Calibrate the electric park brake using Jaguar approved diagnostic system. If the Jaguar approved diagnostic system is not available disconnect the battery for approximately 30 seconds, the vehicle will then prompt the driver to carry out the calibration procedure as per the vehicle hand book on re-connection.**

Calibrate the electric parking brake module using the Jaguar approved diagnostic system.

16 . Refill the fuel tank.

www.JagDocs.com

Parking Brake Switch (70.35.46)

Installation

1 . To install, reverse the removal procedure.

Specifications

Lubricants, Fluids, Sealers and Adhesives

CAUTION: Do not use brake fluid ITT Super Dot 4 on 2006my vehicles onwards. Failure to follow this instruction may result in damage to the vehicle.

NOTE:

Brake fluid ITT Super Dot 4 has now been superseded by Shell ESL Super Dot 4 which is the Jaguar recommended brake fluid. Shell ESL Super Dot 4 can be used on all model years.

Item	Specification
Brake fluid	ITT Super Dot 4
Brake fluid	Shell ESL Super Dot 4

Torque Specifications

Description	Nm	lb-ft	lb-in
Brake master cylinder to brake booster retaining nuts.	25	18	-
HCU to brake master cylinder brake tubes	17	13	-
Brake master cylinder reservoir retaining bolts	8	-	71

www.JagDocs.com

Hydraulic Brake Actuation

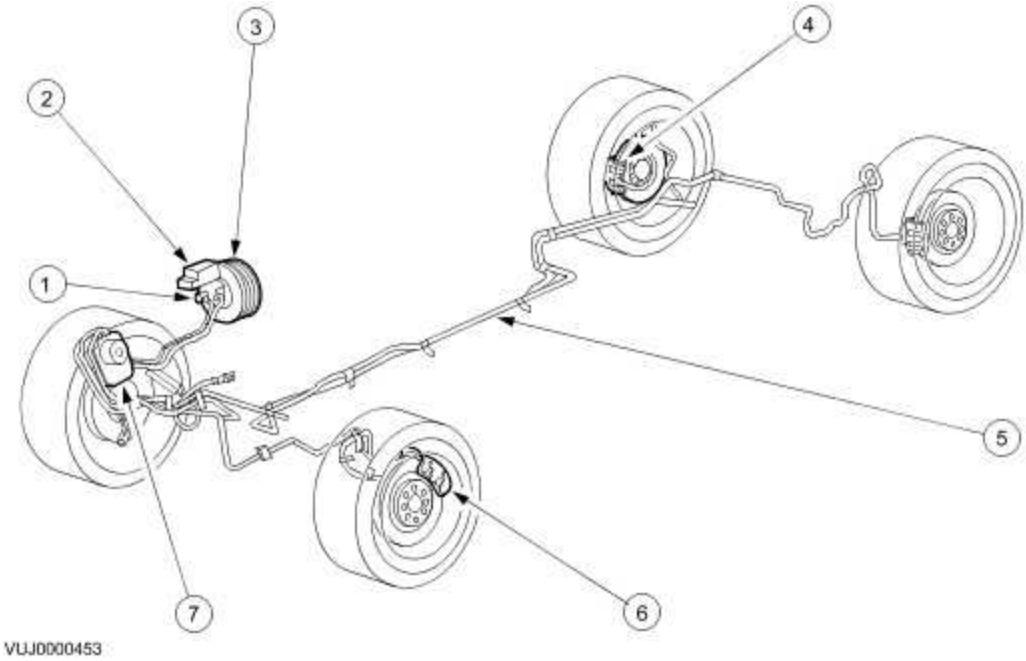

Item	Part Number	Description
1	—	Brake master cylinder
2	—	Brake fluid reservoir
3	—	Brake booster
4	—	Rear brake caliper
5	—	Brake lines
6	—	Front brake caliper
7	—	Hydraulic control unit

WARNING: Brake fluid contains polyglycol ethers and polyglycols. Avoid contact with the eyes. Wash hands thoroughly after handling, as prolonged contact may cause irritation and dermatitis. If brake fluid contacts the eyes, flush the eyes with cold water or eyewash solution and seek medical attention. If taken internally, do not induce vomiting, seek immediate medical

attention. Failure to follow these instructions may result in personal injury.

The hydraulic brake system is of a pedal operated, diagonally split dual line brake system that consists of the following components:

- A brake booster.
- A brake master cylinder.
- Front brake discs.
- Front brake disc calipers.
- Rear brake discs.
- Rear brake disc calipers.
- Brake tubes and hoses.
- Anti-lock brake system (ABS).

Brake Master Cylinder

The brake master cylinder is a dual piston type. The master cylinder operates as follows:

- When the brake pedal is applied, pressure is applied by mechanical linkage to the primary and secondary systems.
- Brake master cylinder pistons apply hydraulic pressure to the two circuits.

The master cylinder consists of the following components:

- Primary and secondary pistons.
- Brake master cylinder fluid reservoir with integral fluid level warning indicator.

Adjustable Pedals

The adjustable pedal system comprises of a throttle pedal assembly with an adjustment motor and drive cables. The drive cables are attached to the brake and clutch adjustment mechanisms. The pedals move forward and rearward together. Two seperate pedal positions can be set and stored in the memory for driver recall. The pedal position adjustment is by a switch fitted on the steering column shroud.

www.JagDocs.com

Hydraulic Brake Actuation

COMPONENT LOCATION

WARNING: Brake fluid contains polyglycol ethers and polyglycols. Avoid contact with the eyes. Wash hands thoroughly after handling, as prolonged contact may cause irritation and dermatitis. If brake fluid contacts the eyes, flush the eyes with cold water or eyewash solution and seek medical attention. If taken internally, do not induce vomiting, seek immediate medical attention. Failure to follow these instructions may result in personal injury.

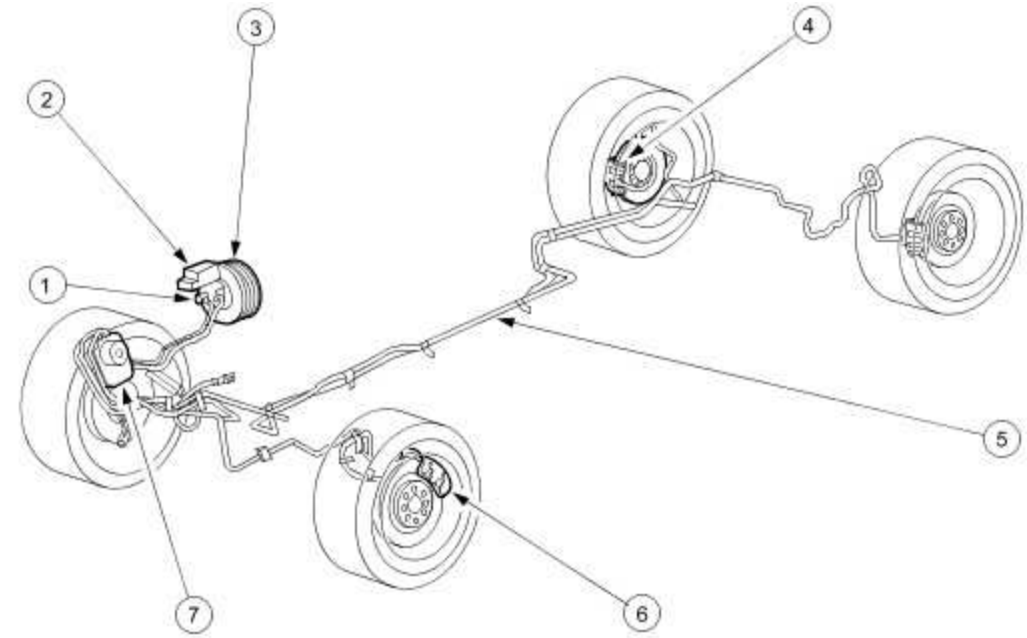

Item	Part Number	Description
1		Brake master cylinder
2		Brake fluid reservoir
3		Brake booster
4		Rear brake caliper
5		Brake lines
6		Front brake caliper
7		Hydraulic control unit

OVERVIEW

The hydraulic brake system is of a pedal-operated, diagonally split dual line brake system that consists of the following components:

- A brake booster
- A brake master cylinder
- Front brake discs
- Front brake disc calipers
- Rear brake discs
- Rear brake disc calipers
- Brake tubes and hoses
- Anti-lock brake system (ABS)

BRAKE MASTER CYLINDER

The brake master cylinder is a dual piston type. The master cylinder operates as follows:

- When the brake pedal is applied, pressure is applied by mechanical linkage to the primary and secondary systems
- Brake master cylinder pistons apply hydraulic pressure to the two circuits

The master cylinder consists of the following components:

- Primary and secondary pistons
- Brake master cylinder fluid reservoir with integral fluid level warning indicator

ADJUSTABLE PEDALS

The adjustable pedal system comprises of a throttle pedal assembly with an adjustment motor and drive cables. The drive cables are attached to the brake adjustment mechanisms. The pedals move forward and rearward together. Two separate pedal positions can be set and stored in the memory for driver recall. The pedal position adjustment is by a switch fitted on the steering column shroud.

www.JagDocs.com

Hydraulic Brake Actuation

For additional information, refer to <<206-00>>.

Brake Fluid Reservoir (70.30.16)

Removal

1 . **CAUTION: If brake fluid comes into contact with the paintwork, the affected area must be immediately washed down with cold water.**

NOTE:

Make sure the brake fluid reservoir filler cap does not become contaminated.

Remove the brake fluid reservoir filler cap.

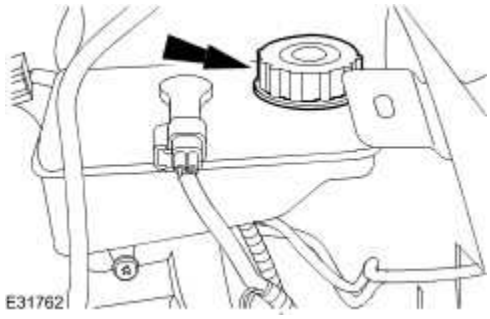

2 . Disconnect the brake fluid level sensor electrical connector.

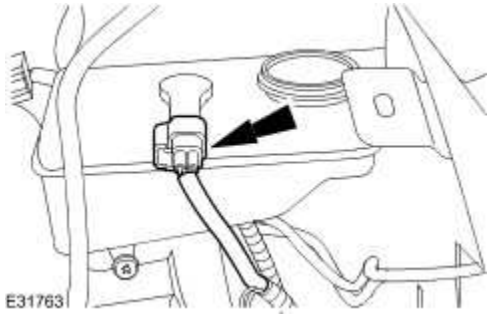

3 . Using a suitable suction device drain the brake fluid reservoir.

www.JagDocs.com

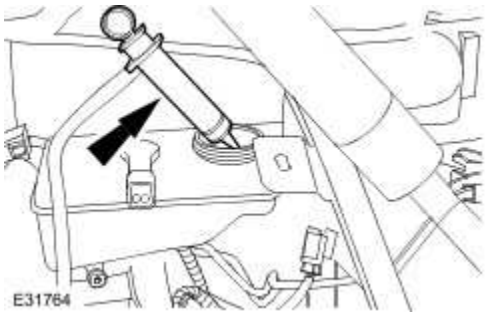

4 . **NOTE:**

Remove and discard the O-ring seals.

Remove the brake fluid reservoir from the master cylinder.

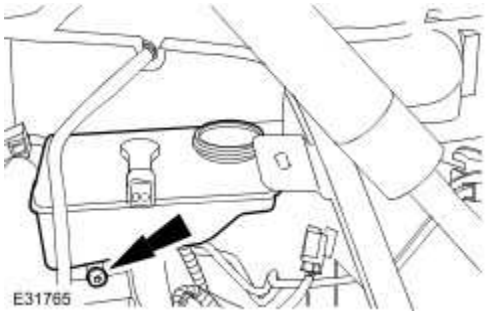

Installation

1 . **NOTE:**

Install new O-ring seals.

To install, reverse the removal procedure.

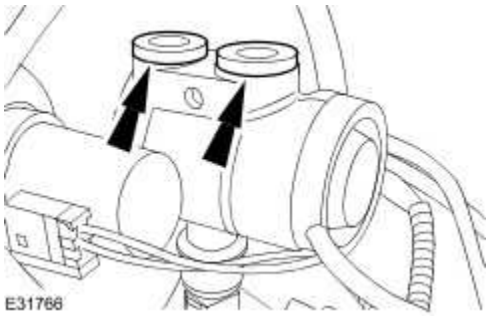

2 . Tighten to 8 Nm.

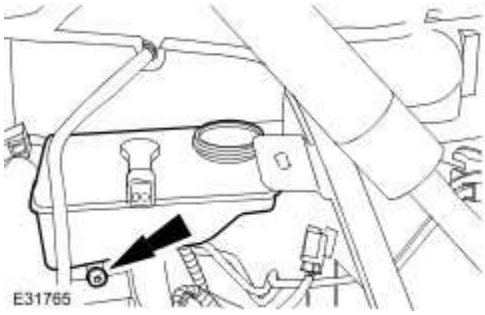

3 . After installation, bleed the brake system. <<206-00>>

www.JagDocs.com

Brake Master Cylinder - 3.0L/3.5L/4.2L (70.30.08)

Removal

1. **CAUTION: If brake fluid comes into contact with the paintwork, the affected area must be immediately washed down with cold water.**

NOTE:

Make sure that the brake fluid reservoir filler cap does not become contaminated.

Remove the brake fluid reservoir.
For additional information, refer to Brake Fluid Reservoir (70.30.16)

2 . Remove the brake booster/vacuum pipe.

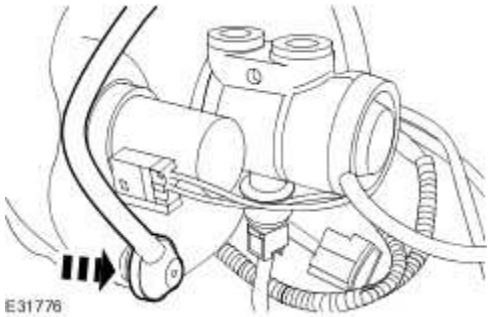

3 . **CAUTION: Cap the brake hose to prevent loss of fluid and dirt ingress.**

Disconnect the master cylinder brake pipes.

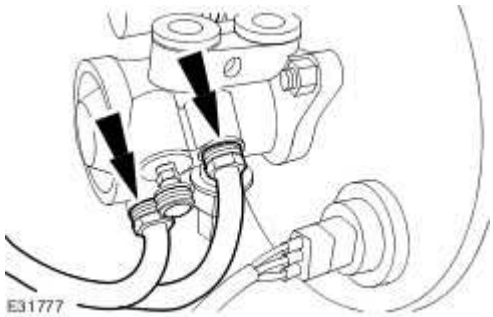

4 . Remove the dynamic stability control sensor electrical connector.

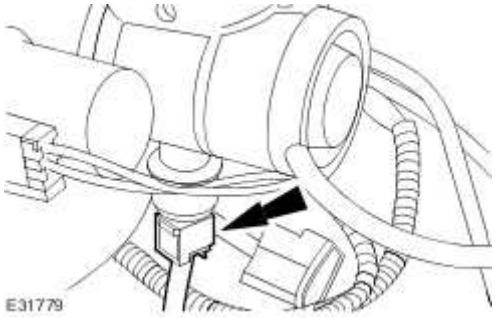

5 . Remove the dynamic stability control sensor.

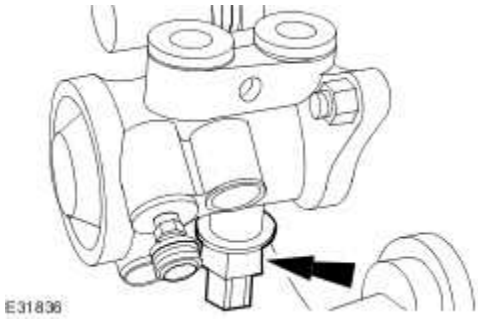

6 . Remove the brake master cylinder.

- Remove and discard the O-ring seal.

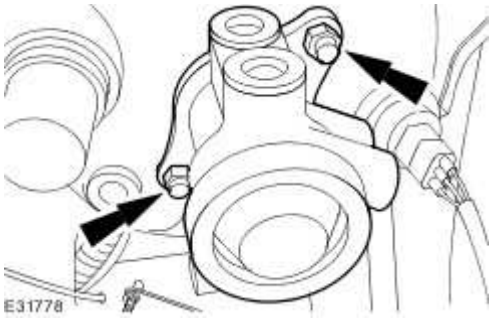

Installation

1 . To install, reverse the removal procedure.

www.JagDocs.com

- Install a new O-ring seal.
- Tighten to 25 Nm.

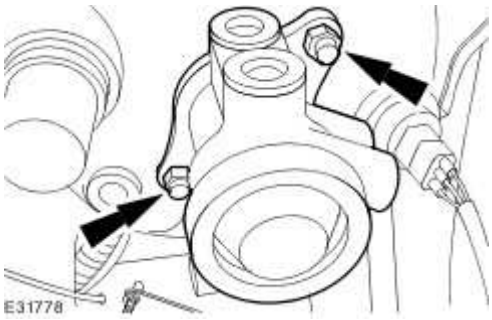

2 . Tighten to 17 Nm.

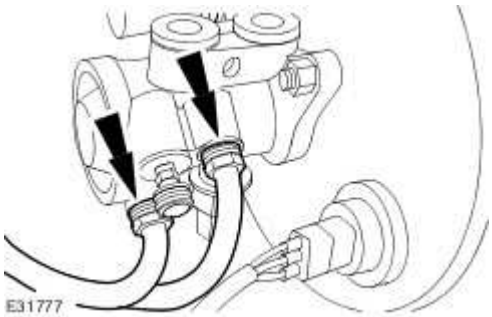

3 After installation, bleed the brake system.

. For additional information, refer to Brake System Bleeding - VIN Range: G00442->G45703 (70.25.03)

For additional information, refer to Brake System Bleeding - VIN Range: G45704->H99999 (70.25.03)

Brake Master Cylinder - 2.7L Diesel (70.30.08)

Removal

1 . Remove the brake fluid reservoir.
For additional information, refer to Brake Fluid Reservoir (70.30.16)

2 . Disconnect the brake booster vacuum pipe.

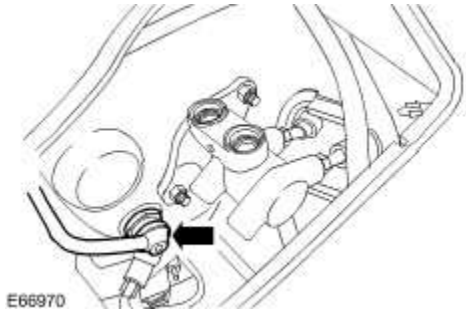

3 . **CAUTION: If brake fluid comes into contact with the paintwork, the affected area must be immediately washed down with cold water.**

NOTE:

Cap the exposed ports to prevent dirt ingress and loss of fluid.

Disconnect the brake master cylinder brake pipes.

www.JagDocs.com

4 . Remove the brake master cylinder.

- Remove and discard the O-ring seal.

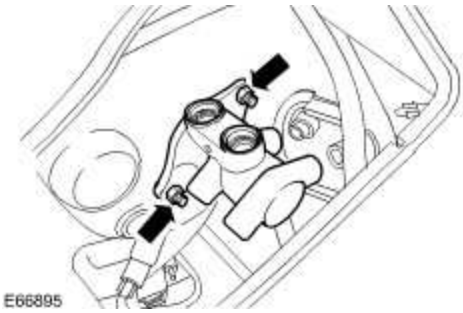

Installation

1 . To install, reverse the removal procedure.

- Install a new O-ring seal.
- Tighten to 25 Nm.

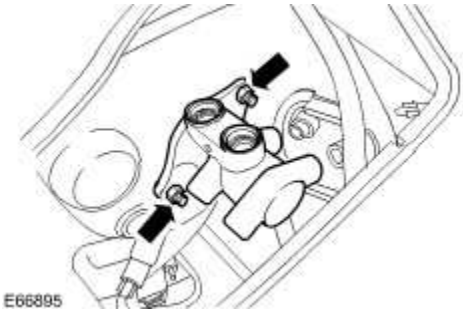

2 . Tighten to 17 Nm.

Specifications

Torque Specifications

Description	Nm	lb-ft	lb-in
Brake booster retaining nuts	25	18	-
Brake vacuum pump retaining bolts	23	17	-
Brake vacuum pump retaining stud	13	10	-
Brake vacuum pump retaining nut	13	10	-

www.JagDocs.com

Brake Booster

WARNING: Brake fluid contains polyglycol ethers and polyglycols. Avoid contact with the eyes. Wash hands thoroughly after handling, as prolonged contact may cause irritation and dermatitis. If brake fluid contacts the eyes, flush the eyes with cold water or eyewash solution and seek medical attention. If taken internally, do not induce vomiting, seek immediate medical attention. Failure to follow these instructions may result in personal injury.

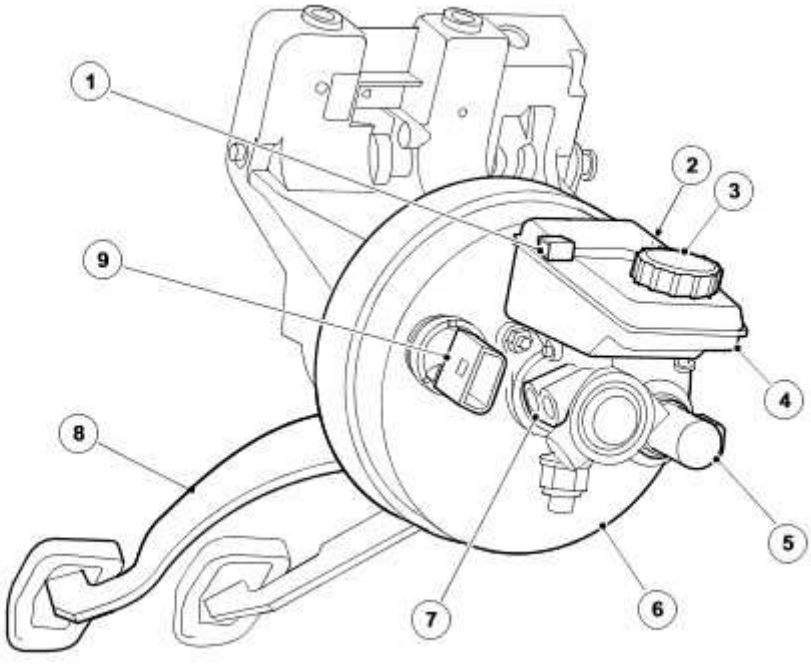

Item	Part Number	Description
1	—	Brake fluid level sensor
2	—	Non return valve/vacuum supply
3	—	Brake fluid reservoir cap
4	—	Brake fluid reservoir
5	—	Brake master cylinder active booster solenoid (Vehicles built up to VIN:G45703)
5	—	Brake vacuum sensor (3.0L and 3.5L Vehicles built after VIN:G45704)
6	—	Brake booster
7	—	Brake master cylinder
8	—	Brake pedal

9	—	Brake pedal travel sensor

The diaphragm-type power brake booster:

- Is self contained.
- Is mounted on the engine side of the bulkhead.
- Uses engine intake manifold vacuum and atmospheric pressure for its assistance.
- Utilizes a non-return valve to preserve vacuum.

www.JagDocs.com

Brake Booster

COMPONENT LOCATION

WARNING: Brake fluid contains polyglycol ethers and polyglycols. Avoid contact with the eyes. Wash hands thoroughly after handling, as prolonged contact may cause irritation and dermatitis. If brake fluid contacts the eyes, flush the eyes with cold water or eyewash solution and seek medical attention. If taken internally, do not induce vomiting, seek immediate medical attention. Failure to follow these instructions may result in personal injury.

Item	Part Number	Description
1		Brake fluid reservoir cap
2		Brake fluid level sensor
3		Brake fluid reservoir
4		Brake booster
5		Brake pedal
6		Brake vacuum sensor (3.0L and 3.5L)
7		Non return valve/vacuum supply
8		Brake master cylinder

OVERVIEW

The diaphragm-type power brake booster is self contained and is mounted on the engine side of the bulkhead. It uses engine intake manifold vacuum and atmospheric pressure for its assistance and utilizes a non-return valve to preserve vacuum.

Power Brake System

For additional information, refer to <<206-00>>.

www.JagDocs.com

Brake Booster (70.50.17)

Removal

All vehicles

1 . Remove the brake master cylinder.
For additional information, refer to Brake Master Cylinder - 3.0L/3.5L/4.2L (70.30.08)

Vehicles built up to VIN:G45703

2 . Disconnect the brake booster pedal travel sensor and brake booster solenoid electrical connectors.

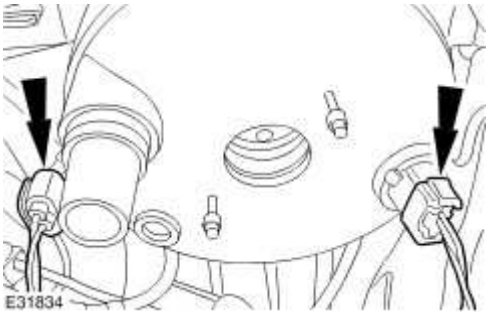

Vehicles built from VIN:G45704

NOTE:

Vehicles with 3.0L and 3.5L engines.

3 . Disconnect the brake booster vacuum sensor electrical connector.

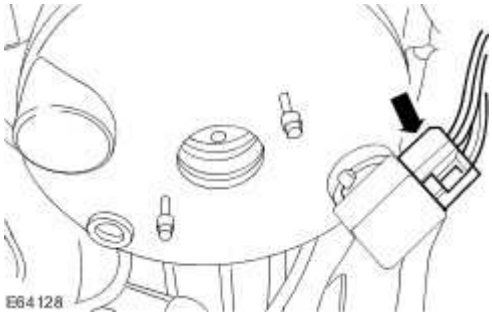

All vehicles

4 . Remove the brake booster retaining nut.

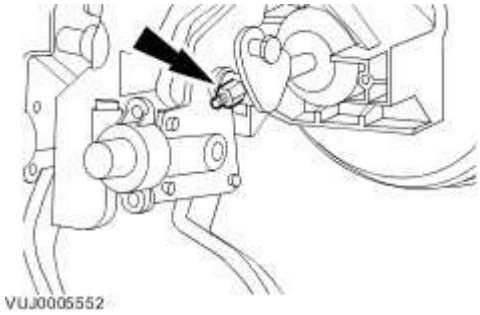

5 **NOTE:**

.

The non-return valve and vacuum pipe assembly should be removed with the brake booster.

NOTE:

Remove and discard the brake booster/pedal box gasket.

Remove the brake booster.

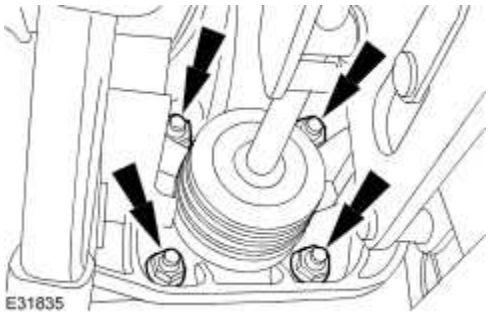

Installation

1 **NOTE:**

.

When renewing the brake booster, the non-return valve and vacuum pipe assembly should be installed prior to the brake booster installation.

www.JagDocs.com

NOTE:

Replace the brake booster/pedal box gasket.

To install, reverse the removal procedure.

- Tighten to 25 Nm.

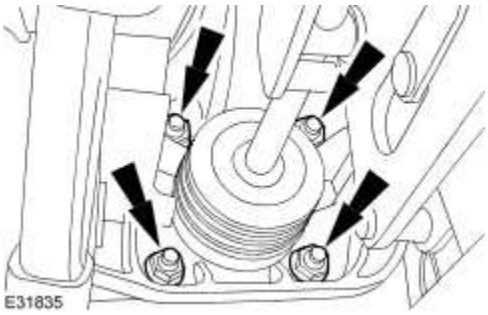

Brake Vacuum Pump

Removal

1 . Remove the oil filler cap.

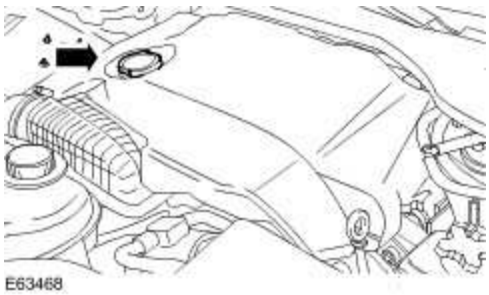

2 . Remove the engine cover.

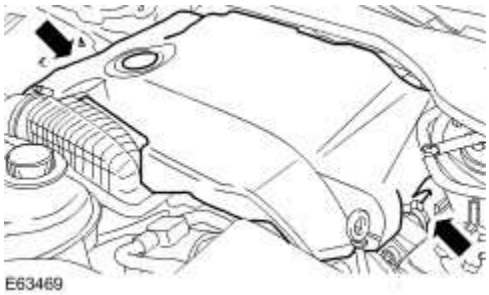

3 . Install the engine oil filler cap to prevent foreign material entering the valve cover.

4 . Remove the injector sound proofing.

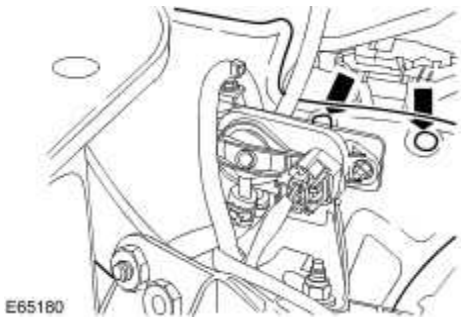

5 . **CAUTION: Make a note of the connection orientation of the high and low pressure hoses to the sensor ports. Make sure the hoses are located to the correct sensor port when**

www.JagDocs.com

installed. Failure to follow these instructions may result in damage to the vehicle.

Detach the diesel particulate filter differential pressure sensor high-pressure and low-pressure hoses.

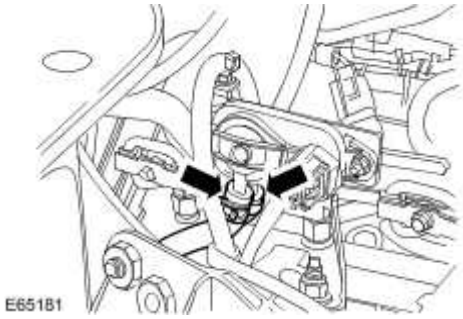

6 . Detach the diesel particulate filter high-pressure and low-pressure pipes.

- Remove the retaining nut.

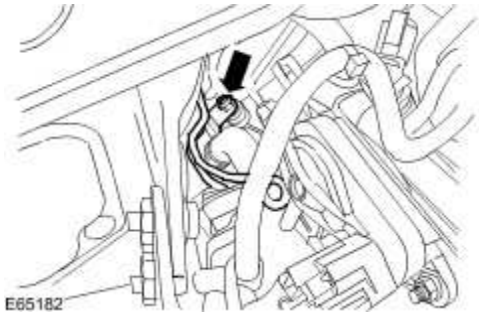

7 . Disconnect the pipes from the brake vacuum pump.

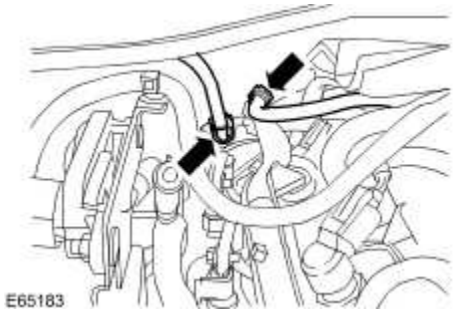

8 . Remove the right-hand catalytic converter.
For additional information, refer to Catalytic Converter - 2.7L Diesel (17.50.05)

9 Detach the diesel particulate filter high-pressure and low-pressure pipes from the
. transmission housing.

- Remove the retaining bolt.
- Detach the retaining clip.

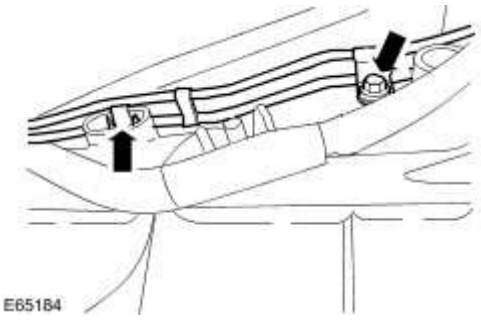

10 Detach the diesel particulate filter high-pressure and low-pressure pipes from the retaining
. bracket.

- Remove the retaining bolt.

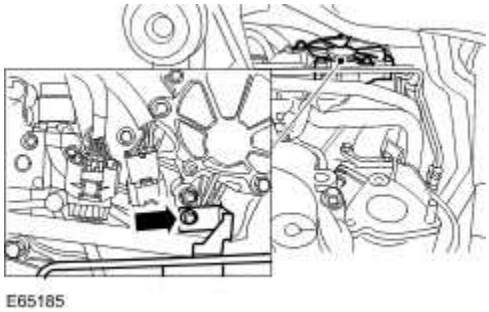

11 . Detach the transmission harness connector from the mounting bracket.

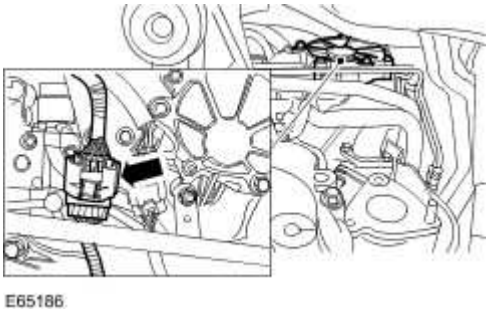

www.JagDocs.com

12 . Remove the crankcase vent oil seperator pipe retaining nut.

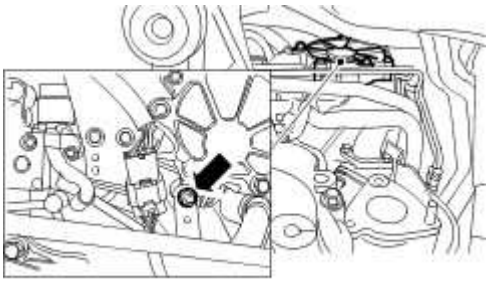

E65187

13 . Remove the brake vacuum pump retaining stud.

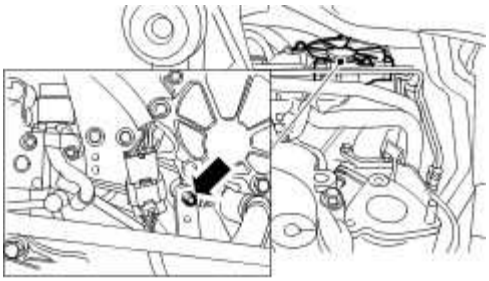

E65188

14 . Remove the crankcase vent oil seperator pipe retaining bolt.

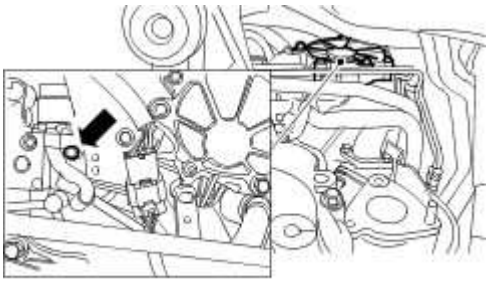

E65189

15 . Remove the right-hand high pressure fuel pipe bracket retaining bolt.

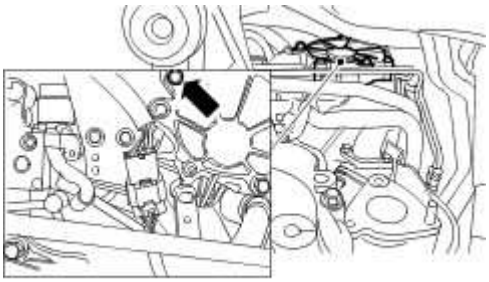

E65190

16 . Remove the brake vacuum pump.

- Remove the retaining bolts.

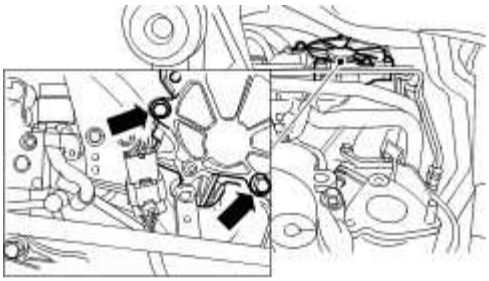

E65191

Installation

1 Apply silicone gasket sealant or equivalent meeting Jaguar specification.

.

- The application of sealant must be 10mm square in the two places shown. Install the brake vacuum pump immediately after applying the sealant.

- The brake vacuum pump should be fitted directly to the engine without smearing the sealant.

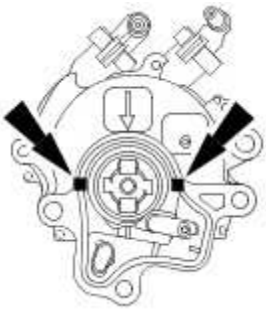

E53361

2 . **CAUTION: Make sure the drive coupling is aligned with the camshaft coupling.**

Install the brake vacuum pump.

- Install the retaining bolts.

www.JagDocs.com

Tighten to 23 Nm.

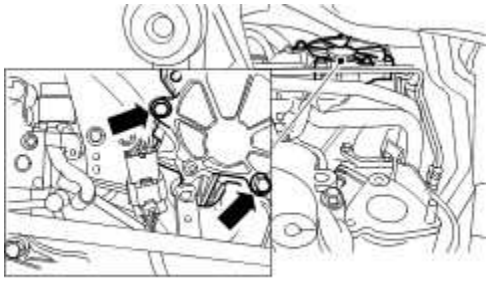

E65191

3 . Install the right-hand high pressure fuel pipe bracket retaining bolt.

Tighten to 10 Nm.

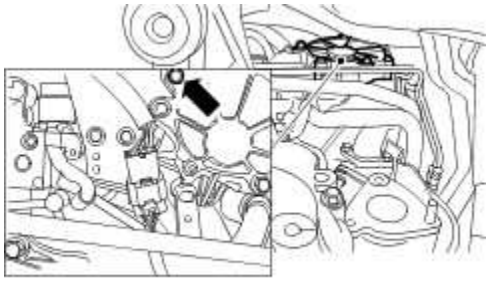

E65190

4 . Install the crankcase vent oil seperator pipe retaining bolt.

Tighten to 10 Nm.

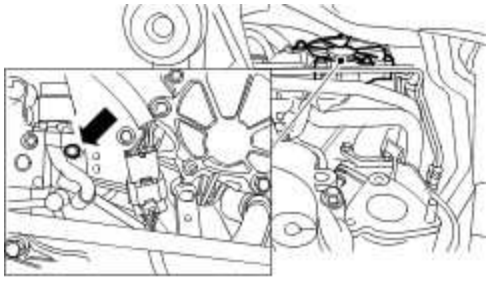

E65189

5 . Install the brake vacuum pump retaining stud.

- Tighten to 13 Nm.

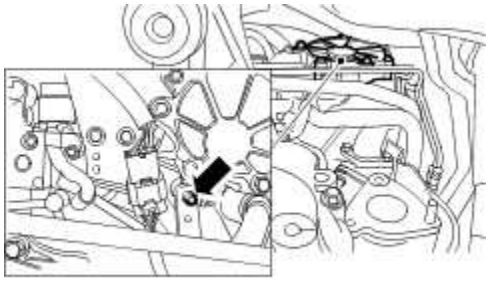

E65188

6 . Install the crankcase vent oil seperator pipe retaining nut.

- Tighten to 13 Nm.

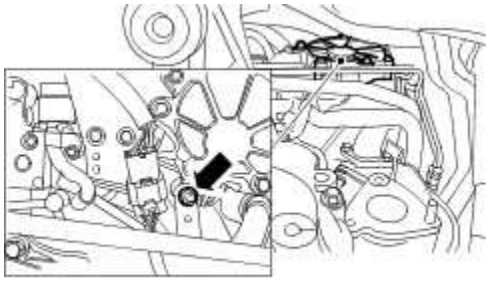

E65187

7 . Attach the transmission harness connector to the mounting bracket.

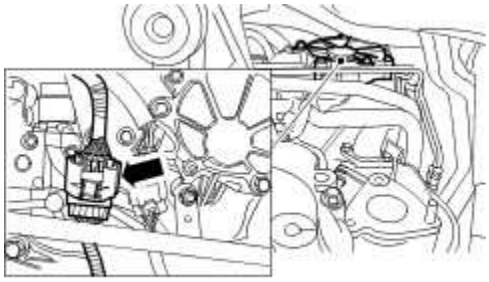

E65186

8 . Attach the diesel particulate filter pressure pipes to the retaining bracket.

- Install the retaining bolt.
- Tighten to 10 Nm.

www.JagDocs.com

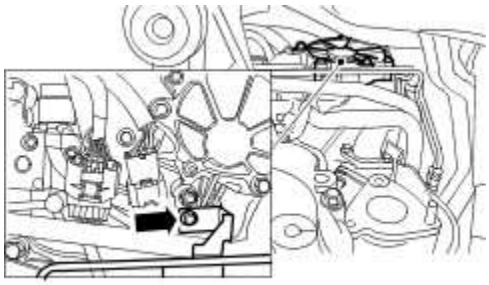

E65185

9 . Attach the diesel particulate filter pressure pipes to the transmission housing.

- Install the retaining bolt.
- Tighten to 10 Nm.

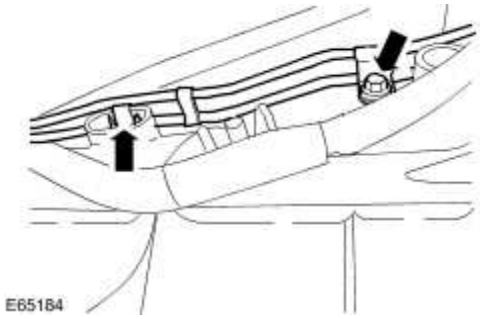

E65184

10 . Install the right-hand catalytic converter.
For additional information, refer to Catalytic Converter - 2.7L Diesel (17.50.05)

11 . Connect the pipes to the brake vacuum pump.

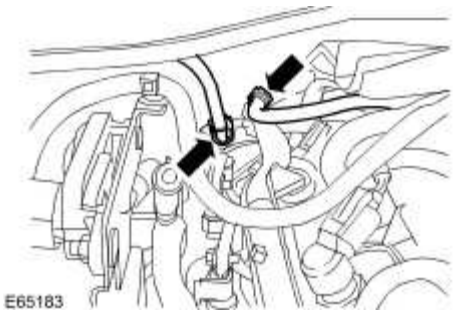

E65183

12 . Attach the diesel particulate filter pressure pipes.

- Install the retaining nut.
- Tighten to 10 Nm.

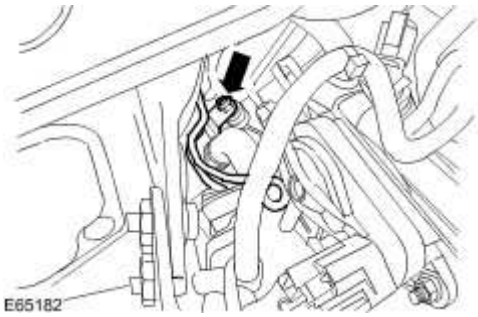

13 . **CAUTION: Make sure the high and low pressure hoses are fully installed and the retaining clips are positioned in their original position.**

Attach the diesel particulate filter differential pressure sensor high-pressure and low-pressure hoses.

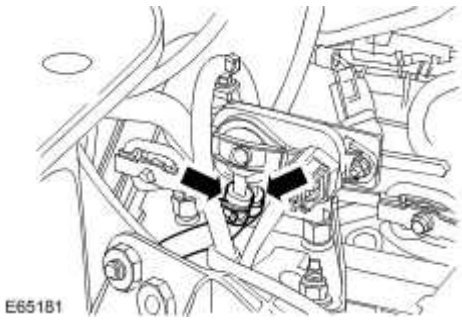

14 . Install the injector sound proofing.

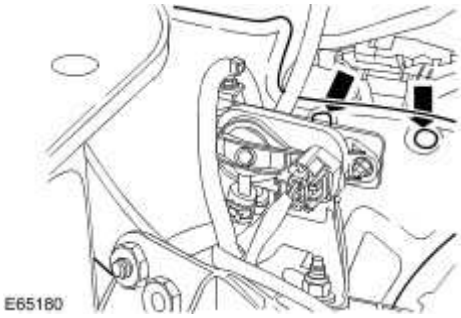

www.JagDocs.com

15 . Remove the engine oil filler cap.

16 . Install the engine cover.

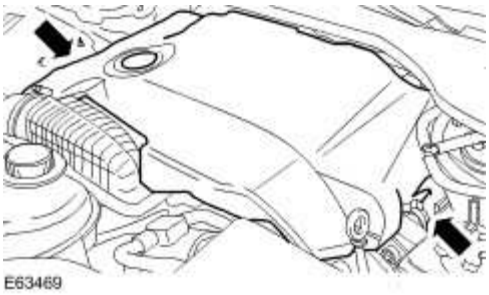

17 . Install the oil filler cap.

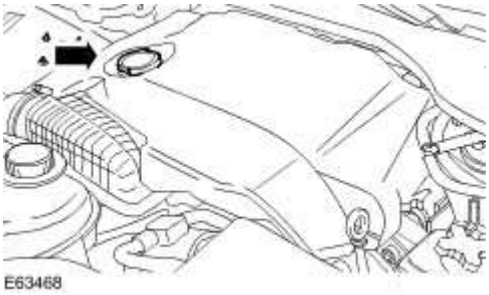

Specifications

Lubricants, Fluids, Sealers and Adhesives

CAUTION: Do not use brake fluid ITT Super Dot 4 on 2006my vehicles onwards. Failure to follow this instruction may result in damage to the vehicle.

NOTE:

Brake fluid ITT Super Dot 4 has now been superseded by Shell ESL Super Dot 4 which is the Jaguar recommended brake fluid. Shell ESL Super Dot 4 can be used on all model years.

Item	Specification
Brake fluid	ITT Super Dot 4
Brake fluid	Shell ESL Super Dot 4

Torque Specifications

Description	Nm	lb-ft	lb-in
Brake master cylinder pressure transducer	30	22	–
Brake line connections to brake pressure control valve block	17	13	–
Yaw rate sensor retaining nuts	7	–	62
Hydraulic control unit (HCU) mounting bolts	9	–	80
Rear wheel speed sensor retaining bolt	9	–	80

www.JagDocs.com

Anti-Lock Control - Stability Assist - VIN Range: G00442->G45703

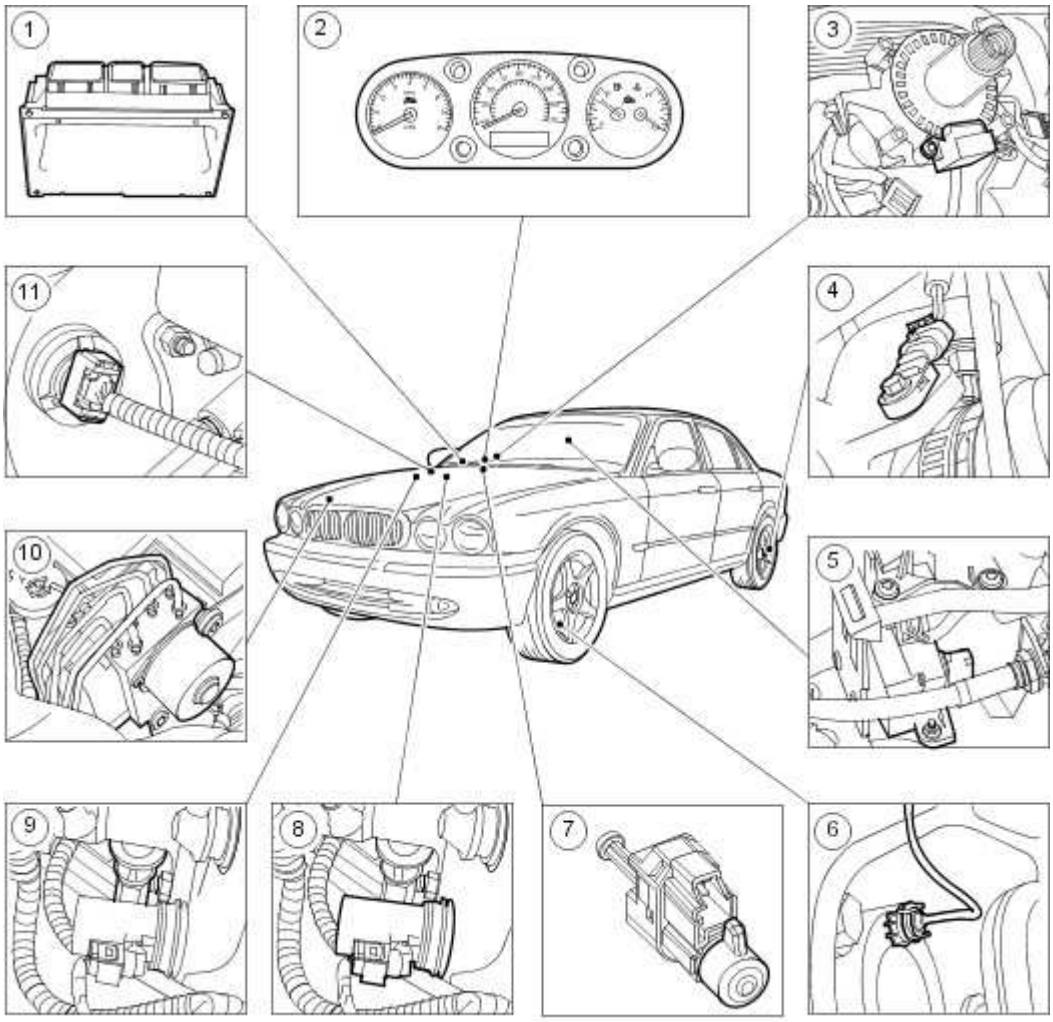

E31827

Item	Part Number	Description
1	—	Engine control module
2	—	Instrument cluster
3	—	Steering wheel angle sensor
4	—	Wheel speed sensor - rear

5	—	Yaw/lateral rate sensor
6	—	Wheel speed sensor - front
7	—	Brake pedal switch
8	—	Brake pedal travel sensor
9	—	Brake master cylinder primary pressure transducer
10	—	ABS/DSC hydraulic control modulator
11	—	Master cylinder active booster solenoid

The anti-lock brake system (ABS) modulates brake pressure on each wheel independently to maintain vehicle stability during braking. The ABS continually monitors the rotational velocity of each wheel anytime the ignition switch is in the run position and determines if a tire is skidding when the brakes are applied. Only then does the ABS intervene to modulate the brake pressure to the skidding wheel. The modulation continues until the wheel rotates freely. The brake pressure is then restored and the modulate/restore cycle is repeated whenever skidding is detected. This cycle occurs at a rate of several times per second.

The ABS module is capable of detecting the following system conditions:

- hydraulic valve failure
- wheel speed sensor failure
- ABS power relay short circuit
- interconnect failures to the ABS sensors, power and ground to the ABS module
- over/under voltage conditions

The ABS provides self-diagnostics and displays failure messages via the ABS indicator in the instrument cluster. Failure of the ABS module, for whatever reason, will not compromise the normal operation of the brake system.

The Dynamic Stability Control (DSC) system includes the:

- anti-lock brake system.
- yaw/lateral control.
- full speed traction control.

The DSC system manages the braking system to enhance the driver control of the vehicle.

The DSC system continually monitors the steering wheel angle, master cylinder brake pressure, front and rear wheel speeds, vehicle yaw and lateral rate acceleration.

The yaw/lateral rate sensor supplies a signal to the DSC module, via a serial link, which monitors the

www.JagDocs.com

vehicles rate of acceleration from its central axis in a sideways direction, and also the vehicles angular rotation around it's central axis.

The driver input parameters are continually monitored via the brake master cylinder dynamic stability control sensor, the brake pedal travel sensor and the steering wheel angle sensor.

DSC is enabled/disabled via the traction control ON/OFF switch.

Self-diagnosis of the DSC system is provided via the instrument cluster message centre.

Traction control is an additional function added to the ABS/DSC system. The vehicles driven wheels are continually monitored for wheel spin relative to the calculated reference speed and to each other. If wheel spin is detected, the traction control function intervenes independently of the driver, applying brake pressure to the slipping wheel and reducing the engine drive torque supply. Meanwhile, brake pressure is modulated by the traction control until traction is re-established. Traction control brake actuation is diminished above 40 km/h (25 mph). Above this speed traction control relies primarily on engine torque reduction.

Traction control is enabled/disabled via the traction control ON/OFF switch. When the switch is in the (OFF) position, the amber traction control warning lamp solidly illuminates within the instrument cluster message centre. The traction control is automatically activated when the ignition is switched on. Self-diagnosis of the traction control system is also provided via the instrument cluster message centre.

The traction control brake intervention is automatically disabled whenever the brakes exceed a temperature limit. The traction brake intervention will remain disabled until the brakes have cooled, irrespective of ignition switch position or ignition switch cycling.

Brake Vacuum Assist (3.0L V6 and 3.5L V8 Vehicles Only)

Operation of Brake Vacuum Assist is possible at the start of an ignition cycle when the engine is cold and low vacuum levels are generated by the engine. Its operation will result in vibrating pedal and some modulator noise. This may appear to be similar to unexpected ABS (anti-lock brake system) function, at lower than expected speed or light braking effort. As the engine warms up, Brake Vacuum Assist operation should become less frequent, though it can be active in other circumstances where vacuum levels are lower than required; for example, at higher altitudes or during frequent, heavy braking.

Additionally, noise levels during Brake Vacuum Assist may be variable, with initial system activity louder than normal activity. In some circumstances initial activity louder than normal may be interpreted as a 'thump' noise, particularly if there is no significant Brake Vacuum Assist functionality that immediately follows.

In these cases, this system behaviour is not unexpected, and should not be a cause for fault investigation.

Anti-Lock Control - Stability Assist - VIN Range: G45704->G99999

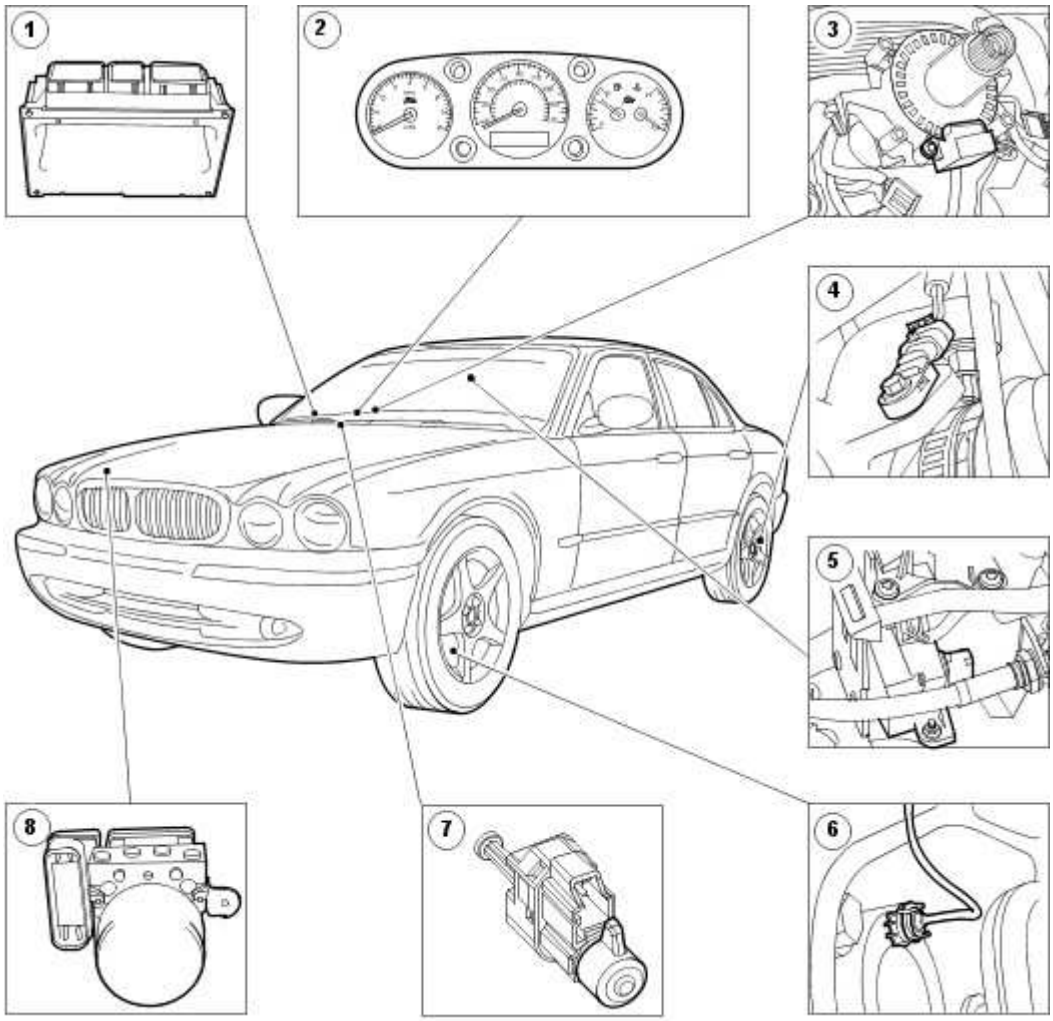

Item	Part Number	Description
1	—	Engine control module (ECM)
2	—	Instrument cluster and message centre
3	—	Steering wheel rotation sensor
4	—	Wheel speed sensor - rear
5	—	Lateral/yaw rate sensor

www.JagDocs.com

6	—	Wheel speed sensor - front
7	—	Brake pedal switch
8	—	Anti-lock brake system (ABS)/Dynamic stability control hydraulic control modulator (HCU)

The ABS modulates brake pressure on each wheel independently to maintain vehicle stability during braking. The ABS continually monitors the rotational velocity of each wheel during driving and determines if a tire is skidding when the brakes are applied. Only then does the ABS intervene to modulate the brake pressure to the skidding wheel. The modulation continues until the wheel rotates freely. The brake pressure is then restored and the modulate/restore cycle is repeated whenever skidding is detected. This cycle occurs at a rate of several times per second.

The ABS/dynamic stability control module is capable of detecting the following system conditions:

- hydraulic valve failure
- wheel speed sensor failure
- ABS power relay short circuit
- interconnect failures to the ABS sensors, power and ground to the ABS module
- over/under voltage conditions.

The ABS provides self-diagnostics and displays failure messages through the ABS warning indicator in the instrument cluster. Failure of the ABS module, for whatever reason, will not compromise the normal operation of the brake system.

The dynamic stability control system includes the:

- anti-lock brake system
- lateral/yaw control
- full speed traction control.

The dynamic stability control system manages the braking system to enhance the driver control of the vehicle.

The dynamic stability control system continually monitors the steering wheel angle, master cylinder brake pressure, front and rear wheel speeds and vehicle lateral/yaw rate acceleration.

The dynamic stability control module supports speed control and stability assist functions.

The lateral/yaw rate sensor supplies a signal to the dynamic stability control module, via a serial link, which monitors the vehicles rate of acceleration from its central axis in a sideways direction, and also the vehicles angular rotation around it's central axis.

The driver input parameters are continually monitored by the steering wheel rotation sensor and the

HCU master cylinder pressure sensor.

Dynamic stability control is enabled/disabled through the traction control ON/OFF switch.

Self-diagnosis of the dynamic stability control system is provided through the instrument cluster and message center.

Traction control is an additional function added to the ABS/dynamic stability control system. The vehicles driven wheels are continually monitored for wheel spin relative to the calculated reference speed and to each other. If wheel spin is detected, the traction control function intervenes independently of the driver, applying brake pressure to the spinning wheel and reducing the engine drive torque supply. Meanwhile, brake pressure is modulated by the traction control until traction is re-established. Traction control brake actuation is diminished above 40 kph (25 mile/h). Above this speed, traction control relies primarily on engine torque reduction.

Traction control is enabled/disabled through the traction control ON/OFF switch. When the switch is in the OFF position, the amber traction control warning lamp solidly illuminates within the instrument cluster message center. The traction control is automatically activated when the ignition is switched on. Self-diagnosis of the traction control system is also provided through the instrument cluster and message center.

The traction control brake intervention is automatically disabled whenever the brakes exceed a temperature limit. The traction brake intervention will remain disabled until the brakes have cooled.

Hydraulic Control Modulator Brake Tube Location - Left-hand Drive

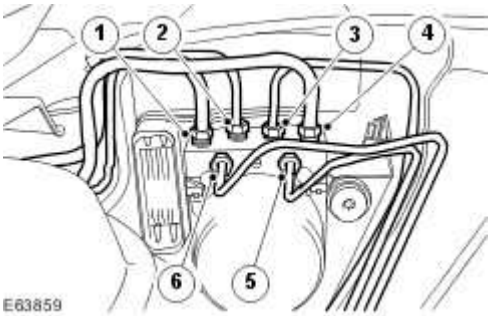

Item	Part Number	Description
1	—	Secondary circuit
2	—	Front left-hand
3	—	Front right-hand
4	—	Primary circuit
5	—	Rear left-hand

www.JagDocs.com

6	—	Rear right-hand

Hydraulic control Modulator Brake Tube Location - Right-hand Drive

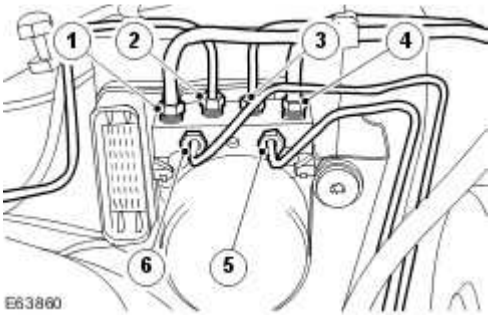

Item	Part Number	Description
1	—	Secondary circuit
2	—	Front left-hand
3	—	Front right-hand
4	—	Primary circuit
5	—	Rear left-hand
6	—	Rear right-hand

Brake Vacuum Assist (3.0L V6 and 3.5L V8 Vehicles Only)

Operation of Brake Vacuum Assist is possible at the start of an ignition cycle when the engine is cold and low vacuum levels are generated by the engine. Its operation will result in vibrating pedal and some modulator noise. This may appear to be similar to unexpected ABS (anti-lock brake system) function, at lower than expected speed or light braking effort. As the engine warms up, Brake Vacuum Assist operation should become less frequent, though it can be active in other circumstances where vacuum levels are lower than required; for example, at higher altitudes or during frequent, heavy braking.

Additionally, noise levels during Brake Vacuum Assist may be variable, with initial system activity louder than normal activity. In some circumstances initial activity louder than normal may be interpreted as a 'thump' noise, particularly if there is no significant Brake Vacuum Assist functionality that immediately follows.

In these cases, this system behaviour is not unexpected, and should not be a cause for fault investigation.

Anti-Lock Control - Stability Assist

COMPONENT LOCATION

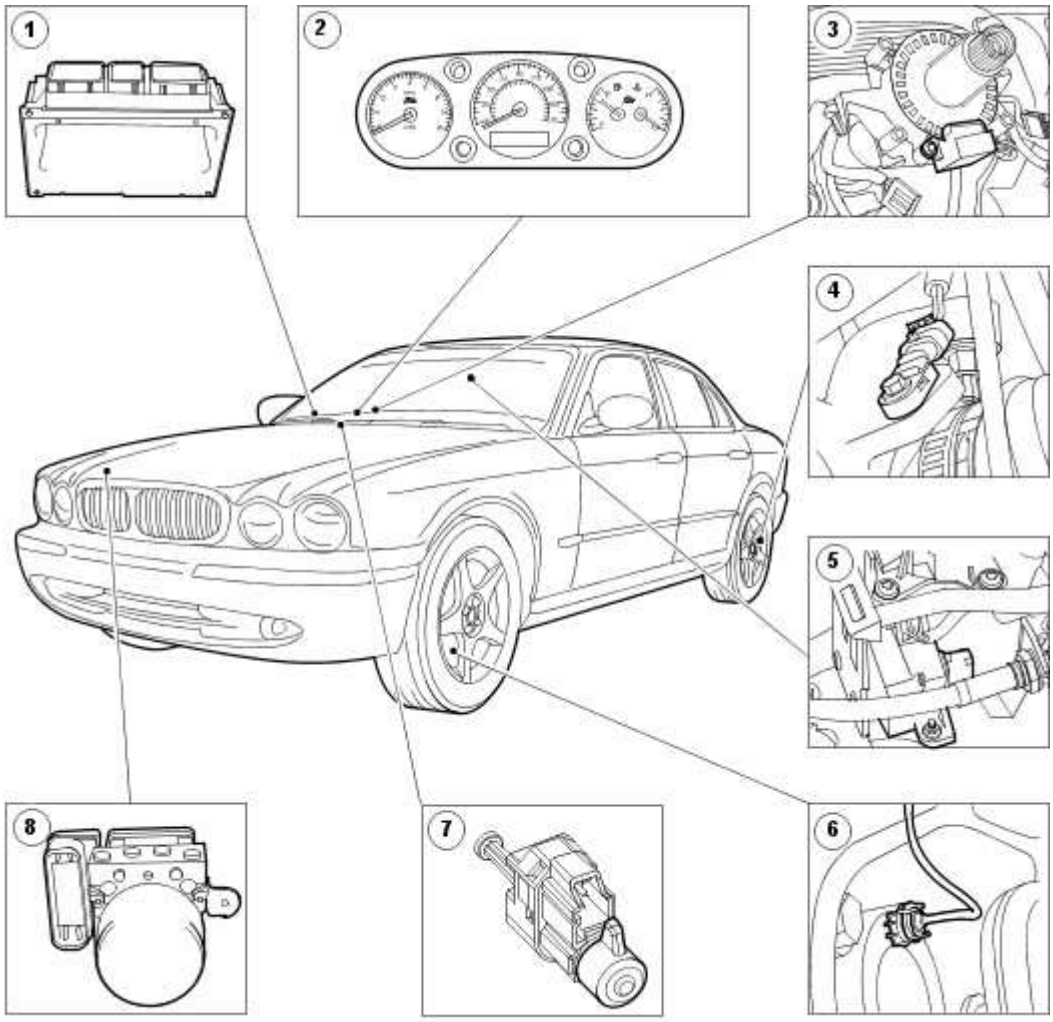

E63857

Item	Part Number	Description
1		Engine Control Module (ECM)
2		Instrument cluster and message centre
3		Steering angle sensor
4		Wheel speed sensor - rear
5		Lateral/yaw rate sensor
6		Wheel speed sensor - front

www.JagDocs.com

7		Brake pedal switch
8		Anti-lock Brake System (ABS)/Dynamic Stability Control (DSC) module

INTRODUCTION

The ABS modulates brake pressure on each wheel independently to maintain vehicle stability during braking. The ABS continually monitors the rotational velocity of each wheel during driving and determines if a tire is skidding when the brakes are applied. Only then does the ABS intervene to modulate the brake pressure to the skidding wheel. The modulation continues until the wheel rotates freely. The brake pressure is then restored and the modulate/restore cycle is repeated whenever skidding is detected. This cycle occurs at a rate of several times per second.

The ABS control module is capable of detecting the following system conditions:

- Hydraulic valve failure
- Wheel speed sensor failure
- ABS power relay short circuit
- Interconnect failures to the ABS sensors, power and ground to the ABS module
- Over/under voltage conditions

The ABS provides self-diagnostics and displays failure messages through the ABS warning indicator in the instrument cluster. Failure of the ABS module, for whatever reason, will not compromise the normal operation of the brake system.

The DSC system includes the:

- anti-lock brake system
- lateral/yaw control
- full speed traction control

The DSC system manages the braking system to enhance the driver control of the vehicle.

The DSC system continually monitors the steering wheel angle, master cylinder brake pressure, front and rear wheel speeds and vehicle lateral/yaw rate acceleration.

The lateral/yaw rate sensor supplies a signal to the DSC module, via a serial link, which monitors the vehicles rate of acceleration from its central axis in a sideways direction, and also the vehicles angular rotation around its central axis.

The driver input parameters are continually monitored by the steering wheel rotation sensor and the hydraulic control unit master cylinder pressure sensor.

The DSC is enabled/disabled through the traction control ON/OFF switch.

Self-diagnosis of the DSC system is provided through the instrument cluster and message center.

Traction control is an additional function added to the ABS/DSC system. The vehicles driven wheels are continually monitored for wheel spin relative to the calculated reference speed and to each other. If wheel spin is detected, the traction control function intervenes independently of the driver, applying brake pressure to the spinning wheel and reducing the engine drive torque supply. Meanwhile, brake pressure is modulated by the traction control until traction is re-established. Traction control brake actuation is diminished above 40 kph (25 mile/h). Above this speed, traction control relies primarily on engine torque reduction.

Traction control is enabled/disabled through the traction control ON/OFF switch. When the switch is in the OFF position, the amber traction control warning lamp solidly illuminates within the instrument cluster message center. The traction control is automatically activated when the ignition is switched on. Self-diagnosis of the traction control system is also provided through the instrument cluster and message center.

The traction control brake intervention is automatically disabled whenever the brakes exceed a temperature limit. The traction brake intervention will remain disabled until the brakes have cooled.

Hydraulic Control Modulator Brake Tube Location - Left-hand Drive

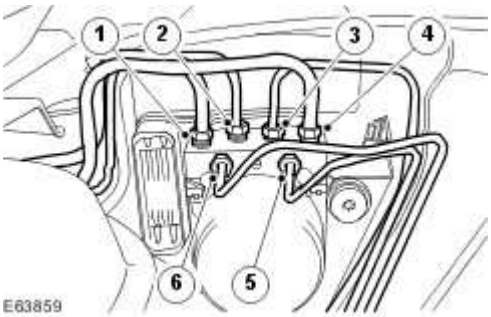

Item	Part Number	Description
1		Secondary circuit
2		Front left-hand
3		Front right-hand
4		Primary circuit
5		Rear left-hand
6		Rear right-hand

www.JagDocs.com

Hydraulic control Modulator Brake Tube Location - Right-hand Drive

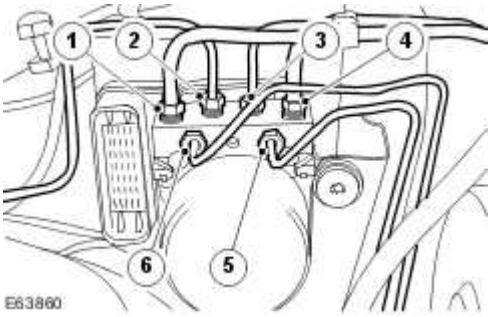

Item	Part Number	Description
1		Secondary circuit
2		Front left-hand
3		Front right-hand
4		Primary circuit
5		Rear left-hand
6		Rear right-hand

Brake Vacuum Assist (3.0L V6 and 3.5L V8 Vehicles Only)

Operation of Brake Vacuum Assist is possible at the start of an ignition cycle when the engine is cold and low vacuum levels are generated by the engine. Its operation will result in vibrating pedal and some modulator noise. This may appear to be similar to unexpected ABS (anti-lock brake system) function, at lower than expected speed or light braking effort. As the engine warms up, Brake Vacuum Assist operation should become less frequent, though it can be active in other circumstances where vacuum levels are lower than required; for example, at higher altitudes or during frequent, heavy braking.

Additionally, noise levels during Brake Vacuum Assist may be variable, with initial system activity louder than normal activity. In some circumstances initial activity louder than normal may be interpreted as a 'thump' noise, particularly if there is no significant Brake Vacuum Assist functionality that immediately follows.

In these cases, this system behaviour is not unexpected, and should not be a cause for fault investigation.

Anti-Lock Control - Stability Assist - VIN Range: G00442->G45703

Principle of operation

The anti-lock control - stability assist system includes the:

- anti-lock brake system (ABS)
- yaw/acceleration control
- emergency brake assist
- traction control

Anti-lock Brake System (ABS)

The anti-lock brake system (ABS) modulates brake pressure on each wheel independently to maintain vehicle stability during braking. The ABS continually monitors the rotational velocity of each wheel anytime the ignition switch is in the run position and determines if a tire is skidding when the brakes are applied. Only then does the ABS intervene to modulate the brake pressure to the skidding wheel. The modulation continues until the wheel rotates freely. The brake pressure is then restored and the modulate/restore cycle is repeated whenever skidding is detected. This cycle occurs at a rate of several times per second.

The ABS module is capable of detecting the following system conditions:

- hydraulic valve failure
- wheel speed sensor failure
- ABS power relay short circuit
- interconnect failures to the ABS sensors, power and ground to the ABS module
- over/under voltage conditions

The ABS provides self-diagnostics and displays failure messages via the ABS indicator in the instrument cluster. Failure of the ABS module, for whatever reason, will not compromise the normal operation of the brake system.

Traction Control

Traction control is an additional function added to the anti-lock control - stability assist system. The vehicles driven wheels are continually monitored for wheel spin relative to the calculated reference speed and to each other. If wheel spin is detected, the traction control function intervenes, applying brake pressure to the slipping wheel and reducing the engine drive torque supply. Meanwhile, brake pressure is modulated by the traction control until traction is re-established. Traction control brake actuation is diminished above 40 km/h (25 mph). Above this speed traction control relies primarily on engine torque reduction.

The traction control brake intervention is automatically disabled whenever the brakes exceed a

www.JagDocs.com

temperature limit. The traction control brake intervention will remain disabled until the brakes have cooled, irrespective of ignition switch position or ignition switch cycling.

Stability Assist

Dynamic stability control (DSC) maximizes vehicle stability under all conditions. The DSC system compares actual vehicle course to that intended by the driver. If the intended course differs from the actual course due to over steer or under steer conditions, the DSC system will brake individual wheels and reduce engine torque to bring the vehicle back to the driver's intended direction. By using a combined yaw rate sensor and lateral accelerometer, the vehicles rotational motion around its vertical axis and centrifugal forces generated while cornering are calculated to determine the vehicle's actual behavior. Using additional sensors for detecting steering wheel position and road wheel speed enables the system to recognize the driver's intentions.

Dynamic stability control is enabled/disabled via the DSC **ON/OFF** switch. When the switch is in the **OFF** position, the amber DSC warning lamp solidly illuminates within the instrument cluster message center. The DSC is automatically activated when the ignition is switched on. The DSC also provides failure messages via the instrument cluster message center.

Emergency Brake Assist

The emergency brake assist function allows the driver to enter ABS with greater speed and efficiency so that maximum braking is achieved sooner. Using the information received from the wheel speed sensors, brake pedal travel switch, master cylinder pressure transducer, master cylinder active booster solenoid and the yaw rate sensor and accelerometer, the ABS module detects whether more braking pressure can be applied in relation to how much braking pressure the driver is applying in an emergency braking situation.

Inspection and Verification

1 . Verify the customer concern.

2 . Confirm if the ABS warning light was illuminated, or still is.

NOTE:

> An intermittent fault may allow the warning light to go off. This does not necessarily mean the fault is not present. Some warnings will appear to clear when the ignition is cycled. This is often because the warning has flagged as a result of one of the vehicle's on-board diagnostic routines having run to detect the fault. If the same routine is not run when the ignition is switched **ON**, the warning will not reflag until the routine does run.

3 . Visually inspect for obvious signs of mechanical or electrical damage.

Mechanical	Electrical
• Brake fluid level • Vacuum system	• Warning light operation • Fuses (see table)

• Wheel speed sensor fitment • Wheel speed sensor air gap • Wheel speed sensor tone ring(s) (missing or damaged teeth/contamination) • Yaw rate/lateral accelerometer sensor cluster fitment • Incorrect wheel or tire size	• Wheel speed sensors • Connectors/Pins • Harnesses • Steering wheel angle sensor • Yaw/lateral rate sensor cluster • ABS/DSC module

4 . If an obvious cause for an observed or reported concern is found, correct the cause (if possible) before proceeding to the next step.

5 . If the cause is not visually evident and the Jaguar approved diagnostic system is not available, use a fault code reader to retrieve the fault codes before proceeding to the diagnostic trouble code (DTC) index chart.

Fuse Identification Table

Location	Fuse Number	Rating	Circuit
Engine bay fuse box	20	30 Amp	ABS/Stability assist control pump battery supply
Engine bay fuse box	22	30 Amp	ABS/Stability assist control module battery supply
Cabin fuse box	17	5 Amp	ABS/Stability assist control module ignition supply
Primary junction box	44	5 Amp	Brake light switch battery supply

Brake Pedal Position Switch Calibration

The brake pedal position switch procedure is under review. For further information, contact dealer technical support.

Diagnostic Trouble Code (DTC) Index

DTC	Description	Possible Source	Action
C1093	Traction control disable CAN failure	• Traction control disable CAN message failure	For CAN module circuit tests, <<418-00>>
C1095	Pump motor circuit failure	• Pump motor B+ power supply circuit; high resistance, open circuit, short circuit to GROUND, short circuit to B+ • Pump motor failure	For ABS/DSC module circuit tests, GO to Pinpoint Test G307559p1.

www.JagDocs.com

C1141	Left-hand front wheel speed sensor tone ring damaged/missing tooth	• Damaged/ missing tooth on tone ring	Refer to visual inspection chart. Inspect tone ring for damage.
C1142	Right-hand front wheel speed sensor tone ring damaged/missing tooth	• Damaged/ missing tooth on tone ring	Refer to visual inspection chart. Inspect tone ring for damage.
C1143	Left-hand rear wheel speed sensor tone ring damaged/missing tooth	• Damaged/ missing tooth on tone ring	Refer to visual inspection chart. Inspect tone ring for damage.
C1144	Right-hand rear wheel speed sensor tone ring damaged/missing tooth	• Damaged/ missing tooth on tone ring	Refer to visual inspection chart. Inspect tone ring for damage.
C1145	Right-hand front wheel speed sensor (WSS) circuit failure	• Wheel speed sensor circuit; open circuit, short circuit • Wheel speed sensor to control module circuit; high resistance, open circuit, short circuit to GROUND • Wheel speed sensor failure	For right hand front WSS circuit tests, GO to Pinpoint Test G307559p2.
C1155	Left-hand front wheel speed sensor (WSS) circuit failure	• Wheel speed sensor circuit; open circuit, short circuit • Wheel speed sensor to control module circuit; high resistance, open circuit, short circuit to GROUND • Wheel speed sensor failure	For left hand front WSS circuit tests, GO to Pinpoint Test G307559p3.
C1165	Right-hand rear wheel speed sensor (WSS) circuit failure	• Wheel speed sensor circuit; open circuit, short circuit • Wheel speed sensor to control module circuit; high resistance, open circuit, short circuit to GROUND • Wheel speed sensor failure	For right hand rear WSS circuit tests, GO to Pinpoint Test G307559p4.
C1175	Left-hand rear wheel speed sensor (WSS)	• Wheel speed sensor circuit; open circuit, short circuit • Wheel speed sensor to	For left -hand rear WSS circuit tests, GO to Pinpoint Test

	circuit failure	control module circuit; high resistance, open circuit, short circuit to GROUND • Wheel speed sensor failure	G307559p5.
C1233	Left-hand front wheel speed sensor (WSS) signal failure	• Wheel speed sensor gap too large • Missing tone ring or sensor • Incorrect tone ring • Incorrect wheel size	Check the wheel speed sensor for correct fitment. Front Wheel Speed Sensor (70.60.03)
C1234	Right-hand front wheel speed sensor (WSS) signal failure	• Wheel speed sensor gap too large • Missing tone ring or sensor • Incorrect tone ring • Incorrect wheel size	Check the wheel speed sensor for correct fitment. Front Wheel Speed Sensor (70.60.03)
C1235	Right-hand rear wheel speed sensor (WSS) signal failure	• Wheel speed sensor gap too large • Missing tone ring or sensor • Incorrect tone ring • Incorrect wheel size	Check the wheel speed sensor for correct fitment. Rear Wheel Speed Sensor (70.60.04)
C1236	Left-hand rear wheel speed sensor (WSS) signal failure	• Wheel speed sensor gap too large • Missing tone ring or sensor • Incorrect tone ring • Incorrect wheel size	Check the wheel speed sensor for correct fitment. Rear Wheel Speed Sensor (70.60.04)
C1267	ABS/DSC function temporarily disabled	• HF interference • Supply voltages to valve solenoids or sensors out of range • EEPROM read/write failure • ABS/DSC module failure	Contact dealer technical support for advice on possible ABS/DSC module failure. Refer to inspection and verification for information on warning light behavior
C1277	Steering angle sensor (SA sensor) circuit A/B failure	• SA sensor circuit(s) open circuit, short circuit, short circuit to GROUND or B+ • SA sensor damaged • Sensor wiring damaged • Sensor loose, not mounted correctly	For SA sensor circuit tests, GO to Pinpoint Test G307559p6.
C1279	Yaw rate sensor circuit failure	• Yaw rate/lateral accelerometer sensor cluster circuit(s) open/short circuit, short circuit to	For lateral/yaw rate sensor circuit tests, GO to Pinpoint Test G307559p7.

www.JagDocs.com

		GROUND or B+ • Yaw rate/lateral accelerometer sensor cluster failure	
C1280	Yaw rate sensor signal failure	• Sensor loose, not mounted correctly • Yaw rate/lateral accelerometer sensor cluster failure	Refer to visual inspection chart. Check sensor fitment. Refer to dealer technical support for advice on possible sensor failure.
C1281	Lateral accelerometer sensor circuit failure	• Connector pins bent or corroded • Sensor wiring damaged • Yaw rate/lateral accelerometer sensor cluster failure	For lateral/yaw rate sensor circuit tests, GO to Pinpoint Test G307559p7.
C1282	Lateral accelerometer sensor signal failure	• Sensor loose, not mounted correctly • Yaw rate/lateral accelerometer sensor cluster failure	Refer to visual inspection chart. Check sensor fitment. Refer to dealer technical support for advice on possible sensor failure.
C1285	Booster solenoid circuit failure	• Booster solenoid circuit open circuit, short circuit to GROUND • Booster solenoid failure	For booster solenoid circuit tests, GO to Pinpoint Test G307559p8.
C1286	Booster mechanical failure	• Brake light switch incorrectly calibrated • Pedal force switch open circuit, short circuit to GROUND • Pedal force switch failure • Active brake booster mechanical failure • ABS/DSC module failure	Contact dealer technical support for advice on brake pedal position switch calibration procedure. For pedal force switch tests, GO to Pinpoint Test G307559p10. Contact dealer technical support for advice on possible active brake booster or ABS/DSC module failure.
C1287	Booster pedal force switch circuit failure	• Booster pedal force switch open circuit, short circuit to GROUND or B+ • Booster pedal force switch failure	For pedal force switch tests, GO to Pinpoint Test G307559p10.

C1288	Pressure sensor main/primary input circuit failure	• Brake pressure circuit open circuit, short circuit to GROUND or B+ • Connector pins bent or corroded • Damaged harness/wiring • Sensor failure • ABS/DSC module failure	For pressure sensor circuit tests, GO to Pinpoint Test G307559p11.
C1295	Steering angle sensor internal failure	• Steering angle signal open circuit, short circuit to GROUND or B+, high resistance • Sensor loose • Encoder ring contaminated • Sensor failure	For SA sensor circuit tests, GO to Pinpoint Test G307559p6. Check sensor fitment, check encoder ring for debris.
C1306	Steering angle sensor– no center found during initialization	• Steering angle sensor — no center found within time limits	Check for associated DTCs. Reinitialize the sensor by turning the ignition to the **OFF** position, then back **ON** without turning the steering wheel.
C1307	Steering wheel angle sensor encoder ring failure	• Loose or damaged encoder ring • Steering angle sensor failure • Signal wires shorted together	Check the security and condition of the steering angle sensor encoder ring. Check encoder ring for debris. For SA sensor circuit tests, GO to Pinpoint Test G307559p6.
C1440	Brake pressure sensor signal fault	• Pressure sensor signal circuit open circuit, short circuit to GROUND or B+ • Brake pressure sensor failure	For pressure sensor circuit tests, GO to Pinpoint Test G307559p11.
C1446	Brake switch circuit failure	• Brake light switch signal failure • Mechanical switch failure	For brake light switch circuit tests, GO to Pinpoint Test G307559p12.
C1730	Sensor supply voltage out of range (+5 volt)	• Sensor supply voltage circuit short circuit to GROUND or B+ • Defective sensor • ABS/DSC module failure	For sensor power and GROUND circuit tests,<<418-00>> Contact dealer technical support for advice on possible ABS/DSC module failure.

www.JagDocs.com

C1777	Vacuum pressure circuit failure	• Mechanical failure in active booster unit • ABS/DSC module failure	CLEAR the DTC. TEST the system for normal operation. If the DTC is repeated, contact dealer technical support for advice on possible active booster or ABS/DSC module failure.
C1994	DSC continuous operation fault	• Yaw rate sensor cluster failure	Contact dealer technical support for advice on possible yaw rate sensor cluster failure.
C1997	Pressure controller failure	• Booster solenoid open/short circuit, short circuit to GROUND or B+, high resistance • Booster solenoid failure • Pressure sensor signal open/short circuit, short circuit to GROUND or B+, high resistance • Pressure sensor failure	For booster solenoid circuit tests, GO to Pinpoint Test G307559p8. For pressure sensor circuit tests, GO to Pinpoint Test G307559p11.
C2778	Yaw rate/Lateral accelerometer sensor cluster power supply failure	• Sensor power supply voltage open circuit, short circuit to GROUND or B+ • ABS/DSC module failure	For lateral/yaw rate sensor circuit tests, GO to Pinpoint Test G307559p7. Contact dealer technical support for advice on possible ABS/DSC module failure.
C2783	Sensor cluster incorrect	• Incorrect yaw rate/lateral accelerometer sensor cluster fitted	Contact dealer technical support for advice on possible yaw rate sensor cluster failure.
C2785	Yaw rate/Lateral accelerometer sensor(s) out of calibration	• Yaw rate/Lateral accelerometer sensor cluster not calibrated	Contact dealer technical support for advice on recalibration of the yaw rate sensor cluster.
B1231	Longitudinal acceleration threshold exceeded	• Check brake hydraulic/mechanical function/condition • Pressure sensor failure • ACC failure • Hydraulic unit failure • Mechanical failure in booster actuation unit	Carry out a full vehicle DTC check. Check for DTC P1696 as an indication of an ACC system fault. For pressure sensor circuit tests, GO to Pinpoint Test G307559p11. For vacuum circuit tests refer

		• Brake booster vacuum low • Brake booster failure	to inspection and verification. Contact dealer technical support for further advice.
B1317	Supply voltage out of range (HIGH)	• Charging system failure • ABS/DSC module GROUND fault	Check the battery condition and charging system, <<414-00>> <<414-01>>
B1318	Supply voltage out of range (LOW)	• Battery failure, loose connections • Charging system failure • ABS/DSC module positive supply fault	Check the battery condition and charging system, <<414-00>> <<414-01>>
B1342	ABC/DSC module failure	• ABS/DSC module failure	Contact dealer technical support for advice on possible ABS/DSC module failure
B2141	NVM configuration failure	• No or invalid vehicle configuration information received from the ECM and stored in EEPROM	Reconfigure the ECM <<418-00>>
B2736	Pedal travel sensor circuit failure	• Pedal travel sensor circuit: open circuit, short circuit to GROUND or B+, high resistance, signal wires short circuit to each other	For pedal travel sensor tests, GO to Pinpoint Test G307559p9.
B2739	Pedal travel sensor signal circuit failure	• Connector pins bent or corroded • Pedal travel sensor signal failure; open circuit, short circuit to GROUND or B+, high resistance • Pedal travel sensor failure • ABS/DSC module failure	For pedal travel sensor tests, GO to Pinpoint Test G307559p9.
B2741	Yaw rate/Lateral accelerometer sensor cluster fault	• Yaw rate/Lateral accelerometer sensor cluster failure	Contact dealer technical support for advice on possible yaw rate sensor failure.
U1901	Local CAN yaw rate/lateral accelerometer sensor cluster communication	• Local CAN fault • Control module internal local CAN failure • Yaw rate/Lateral accelerometer sensor	For CAN module circuit tests, <<418-00>> Contact dealer technical support for advice on possible yaw rate sensor

www.JagDocs.com

	fault	cluster failure	failure.
U2012	Communication bus error	• CAN failure • Control module internal CAN failure	For CAN circuit tests, <<418-00>>
U2202	Invalid configuration data received	• ABS/DSC incorrectly configured to VID block	Contact dealer technical support for advice on reconfiguration of modules.
U2515	Missing message for adaptive cruise control ACC	• CAN message is not received at specified rate or is missing	For CAN module circuit tests, <<418-00>>
U2522	CAN message timeout from TCM	• CAN message is not received at specified rate or is missing	For CAN module circuit tests, <<418-00>>
U2523	CAN message timeout from ECM	• CAN message is not received at specified rate or is missing	For CAN module circuit tests, <<418-00>>
U2527	Local CAN transmit error	• Local CAN failure	For CAN module circuit tests, <<418-00>>

Pinpoint Tests

CAUTION: When probing connectors to take measurements in the course of the pinpoint tests, use the adaptor kit, part number 3548-1358-00.

NOTE:

When performing electrical voltage or resistance tests, always use a digital multimeter (DMM) accurate to 3 decimal places, and with an up-to-date calibration certificate. When testing resistance, always take the resistance of the DMM leads into account.

NOTE:

Check and rectify basic faults before beginning diagnostic routines involving pinpoint tests.

PINPOINT TEST G307559p1 : C1095; PUMP MOTOR FAULT

G307559t1 : CHECK THE BATTERY POWER SUPPLY (1) TO THE ABS/DSC MODULE

1. Turn the ignition switch to the **OFF** position. 2. Disconnect the ABS/DSC module electrical connector EC30. 3. Measure the voltage between EC30, pin 01 (NR) and GROUND.

- **Is the voltage less than 10 volts?**

-> Yes
REPAIR the circuit. This circuit includes the engine compartment fuse box (fuse 20). For additional information, refer to the wiring diagrams. CLEAR the DTC. TEST the system for normal operation.

-> No
GO to Pinpoint Test G307559t3.

G307559t3 : CHECK THE BATTERY POWER SUPPLY (2) TO THE ABS/DSC MODULE

1. Measure the voltage between EC30, pin 32 (NW) and GROUND.

- **Is the voltage less than 10 volts?**

-> Yes
REPAIR the circuit. This circuit includes the engine compartment fuse box (fuse 22). For additional information, refer to the wiring diagrams. CLEAR the DTC. TEST the system for normal operation.

-> No
GO to Pinpoint Test G307559t7.

G307559t7 : CHECK THE GROUND TO THE ABS/DSC MODULE

1. Measure the resistance between EC30, pins 16 and 47 (B) and GROUND.

- **Is the resistance greater than 5 ohms?**

-> Yes
REPAIR the high resistance circuit. For additional information, refer to the wiring diagrams. CLEAR the DTC. TEST the system for normal operation.

-> No
Contact dealer technical support for advice on possible ABS/DSC module failure.

www.JagDocs.com

PINPOINT TEST G307559p2 : C1145; RIGHT HAND FRONT WHEEL SPEED SENSOR (WSS) ELECTRICAL FAILURE

G307559t8 : CHECK THE WSS TO ABS/DSC MODULE SIGNAL CIRCUIT FOR HIGH RESISTANCE

1. Turn the ignition switch to the **OFF** position. 2. Disconnect the ABS/DSC module electrical connector EC30. 3. Disconnect the WSS electrical connector EC15. 4. Measure the resistance between EC30, pin 34 (WU) and EC15, pin 02 (WU).

- **Is the resistance greater than 5 ohms?**

-> Yes
REPAIR the high resistance circuit. For additional information, refer to the wiring diagrams. CLEAR the DTC. TEST the system for normal operation.

-> No
GO to Pinpoint Test G307559t9.

G307559t9 : CHECK THE WSS TO ABS/DSC MODULE SIGNAL CIRCUIT FOR SHORT TO GROUND

1. Measure the resistance between EC30, pin 34 (WU) and GROUND.

- **Is the resistance less than 10,000 ohms?**

-> Yes
REPAIR the short circuit. For additional information, refer to the wiring diagrams. CLEAR the DTC. TEST the system for normal operation.

-> No
GO to Pinpoint Test G307559t10.

G307559t10 : CHECK THE WSS TO ABS/DSC MODULE SUPPLY CIRCUIT FOR HIGH RESISTANCE

1. Measure the resistance between EC30, pin 33 (NG) and EC15, pin 01 (NG).

- **Is the resistance greater than 5 ohms?**

-> Yes
REPAIR the high resistance circuit. For additional information, refer to the wiring diagrams. CLEAR the DTC. TEST the system for normal operation.

-> No
GO to Pinpoint Test G307559t2.

G307559t2 : CHECK THE WSS TO ABS/DSC MODULE SUPPLY CIRCUIT FOR SHORT TO GROUND

1. Measure the resistance between EC30, pin 33 (NG) and GROUND.

- **Is the resistance less than 10,000 ohms?**

-> Yes
REPAIR the short circuit. For additional information, refer to the wiring diagrams. CLEAR the DTC. TEST the system for normal operation.

-> No
INSTALL a new right-hand front wheel speed sensor.
Front Wheel Speed Sensor (70.60.03) CLEAR the DTC. TEST the system for normal operation. If the DTC is repeated, contact dealer technical support for advice on possible ABS/DSC module failure.

PINPOINT TEST G307559p3 : C1155; LEFT HAND FRONT WHEEL SPEED SENSOR (WSS) ELECTRICAL FAILURE

G307559t11 : CHECK THE WSS TO ABS/DSC MODULE SIGNAL CIRCUIT FOR HIGH RESISTANCE

1. Turn the ignition switch to the **OFF** position. 2. Disconnect the ABS/DSC module electrical connector EC30. 3. Disconnect the WSS electrical connector EC44. 4. Measure the resistance between EC30, pin 45 (WG) and EC44, pin 2 (WG).

- **Is the resistance greater than 5 ohms?**

-> Yes
REPAIR the high resistance circuit. For additional information, refer to the wiring diagrams. CLEAR the DTC. TEST the system for normal operation.

-> No
GO to Pinpoint Test G307559t12.

G307559t12 : CHECK THE WSS TO ABS/DSC MODULE SIGNAL CIRCUIT FOR SHORT TO GROUND

1. Measure the resistance between EC30, pin 46 (NG) and GROUND.

www.JagDocs.com

- **Is the resistance less than 10,000 ohms?**

-> Yes
REPAIR the short circuit. For additional information, refer to the wiring diagrams. CLEAR the DTC. TEST the system for normal operation.

-> No
GO to Pinpoint Test G307559t13.

G307559t13 : CHECK THE WSS TO ABS/DSC MODULE SUPPLY CIRCUIT FOR HIGH RESISTANCE

1. Measure the resistance between EC30, pin 46 (NG) and EC44, pin 01 (NG).

- **Is the resistance greater than 5 ohms?**

-> Yes
REPAIR the high resistance circuit. For additional information, refer to the wiring diagrams. CLEAR the DTC. TEST the system for normal operation.

-> No
GO to Pinpoint Test G307559t5.

G307559t5 : CHECK THE WSS TO ABS/DSC MODULE SUPPLY CIRCUIT FOR SHORT TO GROUND

1. Measure the resistance between EC30, pin 46 (NG) and GROUND.

- **Is the resistance less than 10,000 ohms?**

-> Yes
REPAIR the short circuit. For additional information, refer to the wiring diagrams. CLEAR the DTC. TEST the system for normal operation.

-> No
INSTALL a new left-hand front wheel speed sensor.
Front Wheel Speed Sensor (70.60.03) CLEAR the DTC. TEST the system for normal operation. If the DTC is repeated, contact dealer technical support for advice on possible ABS/DSC module failure.

PINPOINT TEST G307559p4 : C1165; RIGHT HAND REAR WHEEL SPEED SENSOR (WSS) ELECTRICAL FAILURE

G307559t14 : CHECK THE WSS TO ABS/DSC MODULE SIGNAL CIRCUIT FOR HIGH RESISTANCE

1. Turn the ignition switch to the **OFF** position. 2. Disconnect the ABS/DSC module electrical connector EC30. 3. Disconnect the WSS electrical connector CV08. 4. Measure the resistance between EC30, pin 43 (W) and CV08, pin 02 (W).

- **Is the resistance greater than 5 ohms?**

-> Yes
REPAIR the high resistance circuit. For additional information, refer to the wiring diagrams. CLEAR the DTC. TEST the system for normal operation.

-> No
GO to Pinpoint Test G307559t15.

G307559t15 : CHECK THE WSS TO ABS/DSC MODULE SIGNAL CIRCUIT FOR SHORT TO GROUND

1. Measure the resistance between EC30, pin 43 (W) and GROUND.

- **Is the resistance less than 10,000 ohms?**

-> Yes
REPAIR the short circuit. For additional information, refer to the wiring diagrams. CLEAR the DTC. TEST the system for normal operation.

-> No
GO to Pinpoint Test G307559t16.

G307559t16 : CHECK THE WSS TO ABS/DSC MODULE SUPPLY CIRCUIT FOR HIGH RESISTANCE

1. Measure the resistance between EC30, pin 42 (N) and CV08, pin 01 (R).

- **Is the resistance greater than 5 ohms?**

-> Yes
REPAIR the high resistance circuit. For additional information, refer to the wiring diagrams. CLEAR the DTC. TEST the system for normal operation.

-> No
GO to Pinpoint Test G307559t65.

www.JagDocs.com

G307559t65 : CHECK THE WSS TO ABS/DSC MODULE SUPPLY CIRCUIT FOR SHORT TO GROUND

1. Measure the resistance between EC30, pin 42 (N) and GROUND.

- **Is the resistance less than 10,000 ohms?**

-> Yes
REPAIR the short circuit. For additional information, refer to the wiring diagrams. CLEAR the DTC. TEST the system for normal operation.

-> No
INSTALL a new right-hand rear wheel speed sensor.
Rear Wheel Speed Sensor (70.60.04) CLEAR the DTC. TEST the system for normal operation. If the DTC is repeated, contact dealer technical support for advice on possible ABS/DSC module failure.

PINPOINT TEST G307559p5 : C1175; LEFT HAND REAR WHEEL SPEED SENSOR (WSS) ELECTRICAL FAILURE

G307559t17 : CHECK THE WSS TO ABS/DSC MODULE SIGNAL CIRCUIT FOR HIGH RESISTANCE

1. Turn the ignition switch to the **OFF** position. 2. Disconnect the ABS/DSC module electrical connector EC30. 3. Disconnect the WSS electrical connector CV06. 4. Measure the resistance between EC30, pin 36 (WR) and CV06, pin 02 (W).

- **Is the resistance greater than 5 ohms?**

-> Yes
REPAIR the high resistance circuit. For additional information, refer to the wiring diagrams. CLEAR the DTC. TEST the system for normal operation.

-> No
GO to Pinpoint Test G307559t18.

G307559t18 : CHECK THE WSS TO ABS/DSC MODULE SIGNAL CIRCUIT FOR SHORT TO GROUND

1. Measure the resistance between EC30, pin 36 (WR) and GROUND.

- **Is the resistance less than 10,000 ohms?**

-> Yes
REPAIR the short circuit. For additional information, refer to the wiring diagrams. CLEAR the DTC.

TEST the system for normal operation.

-> No
GO to Pinpoint Test G307559t19.

G307559t19 : CHECK THE WSS TO ABS/DSC MODULE SUPPLY CIRCUIT FOR HIGH RESISTANCE

1. Measure the resistance between EC30, pin 37 (NR) and CV06, pin 01 (R).

- **Is the resistance greater than 5 ohms?**

-> Yes
REPAIR the high resistance circuit. For additional information, refer to the wiring diagrams. CLEAR the DTC. TEST the system for normal operation.

-> No
GO to Pinpoint Test G307559t66.

G307559t66 : CHECK THE WSS TO ABS/DSC MODULE SUPPLY CIRCUIT FOR SHORT TO GROUND

1. Measure the resistance between EC30, pin 37 (NR) and GROUND.

- **Is the resistance less than 10,000 ohms?**

-> Yes
REPAIR the short circuit. For additional information, refer to the wiring diagrams. CLEAR the DTC. TEST the system for normal operation.

-> No
INSTALL a new left-hand rear wheel speed sensor.
Rear Wheel Speed Sensor (70.60.04) CLEAR the DTC. TEST the system for normal operation. If the DTC is repeated, contact dealer technical support for advice on possible ABS/DSC module failure.

PINPOINT TEST G307559p6 : C1277, C1295; STEERING ANGLE SENSOR (SA SENSOR) 'A' AND 'B' CIRCUIT FAILURE

www.JagDocs.com

G307559t20 : CHECK THE VOLTAGE SUPPLY TO THE STEERING ANGLE SENSOR

1. Disconnect the steering angle sensor electrical connector IP37. 2. Turn the ignition switch to the **ON** position. 3. Measure the voltage between IP37, pin 04 (R) and GROUND.

- **Is the voltage less than 10 volts?**

-> Yes
GO to Pinpoint Test G307559t21.

-> No
GO to Pinpoint Test G307559t22.

G307559t21 : CHECK THE STEERING ANGLE SENSOR VOLTAGE SUPPLY CIRCUIT FOR HIGH RESISTANCE

1. Turn the ignition switch to the **OFF** position. 2. Disconnect the ABS/DSC module electrical connector EC30. 3. Measure the continuity between EC30, pin 07 (R) and IP37, pin 04 (R).

- **Is the resistance greater than 5 ohms?**

-> Yes
REPAIR the high resistance circuit. This circuit includes the splice IPS14. For additional information, refer to the wiring diagrams. CLEAR the DTC. TEST the system for normal operation.

-> No
Contact dealer technical support for advice on possible ABS/DSC module failure.

G307559t22 : CHECK THE STEERING ANGLE SENSOR GROUND SUPPLY CIRCUIT

1. Turn the ignition switch to the **OFF** position. 2. Reconnect the ABS/DSC module electrical connector EC30. 3. Disconnect the yaw/lateral rate sensor electrical connector IP23. 4. Turn the ignition switch to the **ON** position. 5. Measure the resistance between IP37, pin 01 (B) and GROUND.

- **Is the resistance greater than 5 ohms?**

-> Yes
REPAIR the high resistance circuit. This circuit includes the splice IPS10. For additional information, refer to the wiring diagrams. CLEAR the DTC. TEST the system for normal operation.

-> No
GO to Pinpoint Test G307559t23.

G307559t23 : CHECK THE STEERING ANGLE SENSOR SIGNAL CIRCUIT 'A' FOR HIGH RESISTANCE

1. Turn the ignition switch to the **OFF** position. 2. Disconnect the ABS/DSC module electrical connector EC30. 3. Measure the resistance between EC30, pin 03 (Y) and IP37 pin 02 (Y).

- **Is the resistance greater than 5 ohms?**

-> Yes
GO to Pinpoint Test G307559t24.

-> No
REPAIR the high resistance circuit. For additional information, refer to the wiring diagrams. CLEAR the DTC. TEST the system for normal operation.

G307559t24 : CHECK THE STEERING ANGLE SENSOR SIGNAL CIRCUIT 'B' FOR HIGH RESISTANCE

1. Measure the resistance between EC30, pin 06 (U) and IP37, pin 03 (U).

- **Is the resistance greater than 5 ohms?**

-> Yes
GO to Pinpoint Test G307559t25.

-> No
REPAIR the high resistance circuit. For additional information, refer to the wiring diagrams. CLEAR the DTC. TEST the system for normal operation.

G307559t25 : CHECK THE STEERING ANGLE SENSOR SIGNAL CIRCUIT 'A' FOR SHORT TO GROUND

1. Measure the resistance between IP37, pin 02 (Y) and GROUND.

- **Is the resistance less than 10,000 ohms?**

-> Yes
REPAIR the short circuit. For additional information, refer to the wiring diagrams. CLEAR the DTC. TEST the system for normal operation.

-> No
GO to Pinpoint Test G307559t26.

G307559t26 : CHECK THE STEERING ANGLE SENSOR SIGNAL CIRCUIT 'B' FOR SHORT TO GROUND

1. Measure the resistance between IP37, pin 03 (B) and GROUND.

www.JagDocs.com

- **Is the resistance less than 10,000 ohms?**

-> Yes
REPAIR the short circuit. For additional information, refer to the wiring diagrams. CLEAR the DTC. TEST the system for normal operation.

-> No
GO to Pinpoint Test G307559t27.

G307559t27 : CHECK THE STEERING ANGLE SENSOR SIGNAL CIRCUITS 'A' AND 'B' FOR SHORT TO EACH OTHER

1. Measure the resistance between IP37, pin 03 (B) IP37, pin 02 (Y).

- **Is the resistance less than 5 ohms?**

-> Yes
REPAIR the short circuit. For additional information, refer to the wiring diagrams. CLEAR the DTC. TEST the system for normal operation.

-> No
INSTALL a new steeering angle sensor. CLEAR the DTC. TEST the system for normal operation. If the DTC is repeated, contact dealer technical support for advice on possible ABS/DSC module failure.

PINPOINT TEST G307559p7 : C1279, C1281, C2778, C2785, B2741; LATERAL/YAW RATE CIRCUIT FAILURE

G307559t28 : CHECK THE VOLTAGE SUPPLY TO THE LATERAL/YAW RATE SENSOR

1. Disconnect the yaw/lateral rate sensor electrical connector IP23. 2. Turn the ignition switch to the **ON** position. 3. Measure the voltage between IP23, pin 03 (R) and GROUND.

- **Is the voltage less than 10 volts?**

-> Yes
GO to Pinpoint Test G307559t29.

-> No
GO to Pinpoint Test G307559t4.

G307559t29 : CHECK THE YAW/LATERAL RATE SENSOR VOLTAGE SUPPLY CIRCUIT FOR HIGH RESISTANCE

1. Turn the ignition switch to the **OFF** position. 2. Disconnect the ABS/DSC module electrical connector EC30. 3. Measure the resistance between IP23, pin 03 (R) and EC30, pin 07 (R).

- **Is the resistance greater than 5 ohms?**

-> Yes
REPAIR the high resistance circuit. This circuit includes the splice IPS14. For additional information, refer to the wiring diagrams. CLEAR the DTC. TEST the system for normal operation.

-> No
GO to Pinpoint Test G307559t30.

G307559t30 : CHECK THE YAW/LATERAL RATE SENSOR VOLTAGE SUPPLY CIRCUIT FOR SHORT TO GROUND

1. Measure the resistance between IP23, pin 03 (R) and GROUND.

- **Is the resistance less than 10,000 ohms?**

-> Yes
REPAIR the short circuit. This circuit includes the splice IPS14. For additional information, refer to the wiring diagrams. CLEAR the DTC. TEST the system for normal operation.

-> No
Contact dealer technical support for advice on possible ABS/DSC module failure.

G307559t4 : CHECK THE GROUND TO THE YAW/LATERAL RATE SENSOR

1. Measure the resistance between IP23, pin 05 (BK) and GROUND.

- **Is the resistance greater than 5 ohms?**

-> Yes
GO to Pinpoint Test G307559t67.

-> No
GO to Pinpoint Test G307559t32.

G307559t67 : CHECK THE YAW/LATERAL RATE SENSOR GROUND CIRCUIT FOR HIGH RESISTANCE

1. Turn the ignition switch to the **OFF** position. 2. Disconnect the ABS/DSC module electrical connector EC30. 3. Measure the resistance between IP23, pin 05 (BK) and EC30, pin 05 (BK).

www.JagDocs.com

- **Is the resistance greater than 5 ohms?**

-> Yes
REPAIR the high resistance circuit. This circuit includes the splice IPS10. For additional information, refer to the wiring diagrams. CLEAR the DTC. TEST the system for normal operation.

-> No
GO to Pinpoint Test G307559t32.

G307559t32 : CHECK THE YAW/LATERAL RATE SENSOR GROUND CIRCUIT FOR SHORT TO B+

1. Measure the voltage between IP23, pin 05 (BK) and GROUND.

- **Is the voltage greater than 3 volts?**

-> Yes
REPAIR the short circuit. This circuit includes the splice IPS10. For additional information, refer to the wiring diagrams. CLEAR the DTC. TEST the system for normal operation.

-> No
Contact dealer technical support for advice on possible ABS/DSC module failure.

PINPOINT TEST G307559p8 : C1285; ACTIVE BOOSTER SOLENOID CIRCUIT FAILURE

G307559t33 : CHECK THE ACTIVE BOOSTER SOLENOID SUPPLY VOLTAGE

1. Disconnect the booster solenoid electrical connector, EC03. 2. Turn the ignition switch to the **ON** position. 3. Measure the voltage between EC03, pin 04 (RW) and GROUND.

- **Is the voltage less than 10 volts?**

-> Yes
GO to Pinpoint Test G307559t34.

-> No
GO to Pinpoint Test G307559t36.

G307559t34 : CHECK THE ACTIVE BOOSTER SOLENOID SUPPLY CIRCUIT FOR HIGH RESISTANCE

1. Turn the ignition switch to the **OFF** position. 2. Disconnect the ABS/DSC module electrical connector EC30. 3. Measure the resistance between EC03, pin 04 (RW) and EC30, pin 17 (RW).

- **Is the resistance greater than 5 ohms?**

-> Yes
REPAIR the high resistance circuit. For additional information, refer to the wiring diagrams. CLEAR the DTC. TEST the system for normal operation.

-> No
GO to Pinpoint Test G307559t35.

G307559t35 : CHECK THE ACTIVE BOOSTER SOLENOID SUPPLY CIRCUIT FOR SHORT TO GROUND

1. Measure the resistance between EC03 pin 04 (RW) and GROUND.

- **Is the resistance less than 10,000 ohms?**

-> Yes
REPAIR the short circuit. For additional information, refer to the wiring diagrams. CLEAR the DTC. TEST the system for normal operation.

-> No
Contact dealer technical support for advice on possible ABS/DSC module failure.

G307559t36 : CHECK THE ACTIVE BOOSTER SOLENOID SIGNAL CIRCUIT FOR HIGH RESISTANCE

1. Disconnect the ABS/DSC module electrical connector EC30. 2. Measure the resistance between EC03, pin 03 (BW) and EC30, pin 31 (BW).

- **Is the resistance greater than 5 ohms?**

-> Yes
REPAIR the high resistance circuit. For additional information, refer to the wiring diagrams. CLEAR the DTC. TEST the system for normal operation.

-> No
GO to Pinpoint Test G307559t37.

G307559t37 : CHECK THE ACTIVE BOOSTER SOLENOID SIGNAL CIRCUIT FOR SHORT TO GROUND

1. Measure the resistance between EC03, pin 03 (BW) and GROUND.

www.JagDocs.com

- **Is the resistance less than 10,000 ohms?**

-> Yes
REPAIR the short circuit. For additional information, refer to the wiring diagrams. CLEAR the DTC. TEST the system for normal operation.

-> No
Contact dealer technical support for advice on possible active booster failure. CLEAR the DTC. TEST the system for normal operation. If the DTC is repeated, contact dealer technical support for advice on possible ABS/DSC module failure.

PINPOINT TEST G307559p10 : C1286,C1287; PEDAL FORCE SWITCH CIRCUIT FAILURE

G307559t31 : CHECK THE PEDAL FORCE SWITCH FUNCTION NORMALLY CLOSED

1. Disconnect the brake pedal force switch electrical connector EC03. 2. With the brake pedal in the rest position, measure the resistance between pins 02 and 05 of the switch.

- **Is the resistance greater than 5 ohms?**

-> Yes
Contact dealer technical support for advice on possible active booster failure. CLEAR the DTC. TEST the system for normal operation.

-> No
GO to Pinpoint Test G307559t68.

G307559t68 : CHECK THE PEDAL FORCE SWITCH FUNCTION NORMALLY OPEN

1. With the brake pedal depressed, measure the resistance between pins 03 and 05 of the switch.

- **Is the resistance greater than 5 ohms?**

-> Yes
Contact dealer technical support for advice on possible active booster failure. CLEAR the DTC. TEST the system for normal operation.

-> No
GO to Pinpoint Test G307559t38.

G307559t38 : CHECK THE PEDAL FORCE SWITCH SUPPLY VOLTAGE

1. Turn the ignition switch to the **ON** position. 2. Measure the voltage between EC03, pin 05 (WG) and GROUND.

- **Is the voltage less than 10 volts?**

-> Yes
GO to Pinpoint Test G307559t39.

-> No
GO to Pinpoint Test G307559t41.

G307559t39 : CHECK THE PEDAL FORCE SWITCH SUPPLY CIRCUIT FOR HIGH RESISTANCE

1. Turn the ignition switch to the **OFF** position. 2. Disconnect the ABS/DSC module electrical connector EC30. 3. Measure the resistance between EC03, pin 05 (WG) and EC30, pin 28 (wG).

- **Is the resistance greater than 5 ohms?**

-> Yes
GO to Pinpoint Test G307559t40.

-> No
REPAIR the high resistance circuit. For additional information, refer to the wiring diagrams. CLEAR the DTC. TEST the system for normal operation.

G307559t40 : CHECK THE PEDAL FORCE SWITCH SUPPLY CIRCUIT FOR SHORT TO GROUND

1. Measure the resistance between EC03, pin 5 (WG) and GROUND.

- **Is the resistance less than 10,000 ohms?**

-> Yes
REPAIR the short circuit. For additional information, refer to the wiring diagrams. CLEAR the DTC. TEST the system for normal operation.

-> No
Contact dealer technical support for advice on possible ABS/DSC module failure.

G307559t41 : CHECK THE BRAKE PEDAL FORCE SWITCH SIGNAL (NC) CIRCUIT FOR HIGH RESISTANCE

1. Measure the resistance between EC03, pin 02 (YR) and EC30, pin 30 (YR).

www.JagDocs.com

- **Is the resistance greater than 5 ohms?**

-> Yes
REPAIR the high resistance circuit. For additional information, refer to the wiring diagrams. CLEAR the DTC. TEST the system for normal operation.

-> No
GO to Pinpoint Test G307559t42.

G307559t42 : CHECK THE BRAKE PEDAL FORCE SWITCH SIGNAL CIRCUIT (NC) FOR SHORT TO GROUND

1. Measure the resistance between EC03, pin 02 (YR) and GROUND.

- **Is the resistance less than 10,000 ohms?**

-> Yes
REPAIR the short circuit. For additional information, refer to the wiring diagrams. CLEAR the DTC. TEST the system for normal operation.

-> No
GO to Pinpoint Test G307559t43.

G307559t43 : CHECK THE BRAKE PEDAL FORCE SWITCH SIGNAL CIRCUIT (NO) FOR HIGH RESISTANCE

1. Measure the resistance between EC03, pin 01 (YU) and EC30, pin 31 (YU).

- **Is the resistance greater than 5 ohms?**

-> Yes
REPAIR the high resistance circuit. For additional information, refer to the wiring diagrams. CLEAR the DTC. TEST the system for normal operation.

-> No
GO to Pinpoint Test G307559t44.

G307559t44 : CHECK THE BRAKE PEDAL FORCE SWITCH SIGNAL CIRCUIT (NO) FOR SHORT TO GROUND

1. Measure the resistance between EC03, pin 02 (YR) and GROUND.

- **Is the resistance less than 10,000 ohms?**

-> Yes
REPAIR the short circuit. For additional information, refer to the wiring diagrams. CLEAR the DTC.

TEST the system for normal operation.

-> No
Contact dealer technical support for advice on possible active booster failure. CLEAR the DTC. TEST the system for normal operation. If the DTC is repeated, contact dealer technical support for advice on possible ABS/DSC module failure.

PINPOINT TEST G307559p11 : B1231, C1288, C1440, C1997; PRESSURE SENSOR MAIN/PRIMARY 5 VOLT SUPPLY CIRCUIT FAILURE

G307559t45 : CHECK THE PRESSURE SENSOR 5 VOLT SUPPLY

1. Turn the ignition switch to the **OFF** position. 2. Disconnect the pressure sensor electrical connector EC34. 3. Turn the ignition switch to the **ON** position. 4. Measure the voltage between EC34, pin 01 (BG) and GROUND. 5. Measure the voltage between EC34, pin 03 (YU) and GROUND.

- **Is either voltage less than 5 volts?**

-> Yes
GO to Pinpoint Test G307559t46.

-> No
GO to Pinpoint Test G307559t6.

G307559t46 : CHECK THE PRESSURE SENSOR 5 VOLT SUPPLY CIRCUIT FOR HIGH RESISTANCE

1. Turn the ignition switch to the **OFF** position. 2. Disconnect the ABS/DSC module electrical connector EC30. 3. Measure the resistance between the EC34, pin 03 (YU) and EC30, pin 18 (GU).

- **Is the resistance greater than 5 ohms?**

-> Yes
REPAIR the high resistance circuit. For additional information, refer to the wiring diagrams. CLEAR the DTC. TEST the system for normal operation.

-> No
GO to Pinpoint Test G307559t48.

www.JagDocs.com

G307559t48 : CHECK THE PRESSURE SENSOR 5 VOLT SUPPLY CIRCUIT FOR SHORT TO GROUND

1. Measure the resistance between EC34, pin 03 (YU) and GROUND.

- **Is the resistance less than 10,000 ohms?**

-> Yes
REPAIR the short circuit. For additional information, refer to the wiring diagrams. CLEAR the DTC. TEST the system for normal operation.

-> No
GO to Pinpoint Test G307559t49.

G307559t6 : CHECK THE GROUND TO THE PRESSURE SENSOR

1. Measure the resistance between EC34, pin 01 (BG) and GROUND.

- **Is the resistance greater than 5 ohms?**

-> Yes
GO to Pinpoint Test G307559t47.

-> No
Contact dealer technical support for advice on possible ABS/DSC module failure.

G307559t47 : CHECK THE PRESSURE SENSOR GROUND CIRCUIT FOR HIGH RESISTANCE

1. Measure the resistance between EC34, pin 01 (BG) and EC30, pin 19 (BG).

- **Is the resistance greater than 5 ohms?**

-> Yes
REPAIR the high resistance circuit. For additional information, refer to the wiring diagrams. CLEAR the DTC. TEST the system for normal operation.

-> No
Contact dealer technical support for advice on possible ABS/DSC module failure.

G307559t49 : CHECK THE PRESSURE SENSOR GROUND CIRCUIT FOR SHORT TO B+

1. Measure the voltage between the pressure sensor electrical connector EC34, pin 01 (BG) and GROUND.

- **Is the voltage greater than 3 volts?**

-> Yes
REPAIR the circuit. For additional information, refer to the wiring diagrams. CLEAR the DTC. TEST the system for normal operation.

-> No
GO to Pinpoint Test G307559t50.

G307559t50 : CHECK THE PRESSURE SENSOR SIGNAL CIRCUIT FOR HIGH RESISTANCE

1. Measure the resistance between EC34, pin 02 (GU) and EC30, pin 20 (GU).

- **Is the resistance greater than 5 ohms?**

-> Yes
REPAIR the high resistance circuit. For additional information, refer to the wiring diagrams. CLEAR the DTC. TEST the system for normal operation.

-> No
GO to Pinpoint Test G307559t51.

G307559t51 : CHECK THE PRESSURE SENSOR SIGNAL CIRCUIT FOR SHORT TO GROUND

1. Measure the resistance between EC34, pin 02 (GU) and GROUND.

- **Is the resistance less than 10,000 ohms?**

-> Yes
REPAIR the short circuit. For additional information, refer to the wiring diagrams. CLEAR the DTC. TEST the system for normal operation.

-> No
GO to Pinpoint Test G307559t52.

G307559t52 : CHECK THE PRESSURE SENSOR SIGNAL CIRCUIT FOR SHORT TO B+

1. Measure the voltage between EC34, pin 02 (GU) and GROUND.

- **Is the voltage greater than 5 volts?**

-> Yes
REPAIR the short circuit. For additional information, refer to the wiring diagrams. CLEAR the DTC. TEST the system for normal operation.

www.JagDocs.com

-> No
INSTALL a new pressure sensor. CLEAR the DTC. TEST the system for normal operation. If the DTC is repeated, contact dealer technical support for advice on possible ABS/DSC module failure.

PINPOINT TEST G307559p9 : C2736, B2736, B2739; PEDAL TRAVEL SENSOR CIRCUIT FAILURE

G307559t53 : CHECK THE PEDAL TRAVEL SENSOR SUPPLY VOLTAGE

1. Disconnect the brake pedal travel sensor electrical connector EC10. 2. Turn the ignition switch to the **ON** position. 3. Measure the voltage between EC10, pin 01 (G) and GROUND.

- **Is the voltage less than 10 volts?**

-> Yes
GO to Pinpoint Test G307559t54.

-> No
GO to Pinpoint Test G307559t56.

G307559t54 : CHECK THE PEDAL TRAVEL SENSOR SUPPLY CIRCUIT FOR HIGH RESISTANCE

1. Turn the ignition switch to the **OFF** position. 2. Disconnect the ABS/DSC module electrical connector EC30. 3. Measure the resistance between EC10, pin 01 (G) and EC30, pin 26 (G).

- **Is the resistance greater than 5 ohms?**

-> Yes
REPAIR the high resistance circuit. For additional information, refer to the wiring diagrams. CLEAR the DTC. TEST the system for normal operation.

-> No
GO to Pinpoint Test G307559t55.

G307559t55 : CHECK THE PEDAL TRAVEL SENSOR SUPPLY CIRCUIT FOR SHORT TO GROUND

1. Measure the resistance between EC10, pin 01 (G) and GROUND.

- **Is the resistance less than 10,000 ohms?**

-> Yes
REPAIR the short circuit. For additional information, refer to the wiring diagrams. CLEAR the DTC. TEST the system for normal operation.

-> No
Contact dealer technical support for advice on possible ABS/DSC module failure.

G307559t56 : CHECK THE PEDAL TRAVEL SENSOR GROUND CIRCUIT FOR HIGH RESISTANCE

1. Measure the resistance between EC10, pin 02 (B) and EC30, pin 24 (B).

- **Is the resistance greater than 5 ohms?**

-> Yes
REPAIR the high resistance circuit. For additional information, refer to the wiring diagrams. CLEAR the DTC. TEST the system for normal operation.

-> No
GO to Pinpoint Test G307559t57.

G307559t57 : CHECK THE PEDAL TRAVEL SENSOR GROUND SUPPLY CIRCUIT

1. Turn the ignition switch to the **OFF** position. 2. Reconnect the ABS/DSC module electrical connector EC30. 3. Turn the ignition switch to the **ON** position. 4. Measure the resistance between EC10, pin 02 (B) and GROUND.

- **Is the resistance greater than 5 ohms?**

-> Yes
Contact dealer technical support for advice on possible ABS/DSC module failure.

-> No
GO to Pinpoint Test G307559t58.

G307559t58 : CHECK THE PEDAL TRAVEL SENSOR GROUND CIRCUIT FOR SHORT TO B+

1. Measure the voltage between EC10, pin 02 (B) and GROUND.

- **Is the voltage greater than 3 volts?**

-> Yes
REPAIR the short circuit. For additional information, refer to the wiring diagrams. CLEAR the DTC. TEST the system for normal operation.

www.JagDocs.com

-> No
GO to Pinpoint Test G307559t59.

G307559t59 : CHECK THE PEDAL TRAVEL SENSOR SIGNAL CIRCUIT FOR HIGH RESISTANCE

1. Turn the ignition switch to the **OFF** position. 2. Disconnect the ABS/DSC module electrical connector EC30. 3. Measure the resistance between EC10, pin 03 (U) and EC30, pin 40 (U).

- **Is the resistance greater than 5 ohms?**

-> Yes
REPAIR the high resistance circuit. For additional information, refer to the wiring diagrams. CLEAR the DTC. TEST the system for normal operation.

-> No
GO to Pinpoint Test G307559t60.

G307559t60 : CHECK THE PEDAL TRAVEL SENSOR SIGNAL CIRCUIT FOR SHORT TO GROUND

1. Measure the resistance between EC10, pin 03 (U) and GROUND.

- **Is the resistance less than 10,000 ohms?**

-> Yes
REPAIR the short circuit. For additional information, refer to the wiring diagrams. CLEAR the DTC. TEST the system for normal operation.

-> No
GO to Pinpoint Test G307559t61.

G307559t61 : CHECK THE PEDAL TRAVEL SENSOR SIGNAL SIGNAL CIRCUIT FOR SHORT TO B+

1. Measure the voltage between EC10, pin 03 (U) and GROUND.

- **Is the voltage greater than 3 volts?**

-> Yes
REPAIR the short circuit. For additional information, refer to the wiring diagrams. CLEAR the DTC. TEST the system for normal operation.

-> No
Contact dealer technical support for advice on possible active booster failure. <<206-07>>CLEAR the

DTC. TEST the system for normal operation. If the DTC is repeated, contact dealer technical support for advice on possible ABS/DSC module failure.

PINPOINT TEST G307559p12 : C1446; BRAKE LIGHT SWITCH CIRCUIT FAILURE

G307559t62 : CHECK THE BRAKE LIGHT SWITCH OUTPUT VOLTAGE

1. Turn the ignition switch to the **OFF** position. 2. Disconnect the rear electronic module (REM) electrical connector CR13. 3. Turn the ignition switch to the **ON** position. 4. Depress the brake pedal. 5. Measure the voltage between CR13, pin 13 (GO) and GROUND.

- **Is the voltage less than 10 volts?**

-> Yes
GO to Pinpoint Test G307559t63.

-> No
INSTALL a new rear electronic module (REM). CLEAR the DTC. TEST the system for normal operation.

G307559t63 : CHECK THE BRAKE LIGHT SWITCH SUPPLY VOLTAGE

1. Disconnect the brake light switch electrical connector CR78. 2. Measure the voltage between CR78, pin 01 (NG) and GROUND.

- **Is the voltage less than 10 volts?**

-> Yes
REPAIR the circuit between the battery and the brake light switch electrical connector CR78, pin 01 (NG). This circuit includes the primary junction box (fuse 44). For additional information, refer to the wiring diagrams. CLEAR the DTC. TEST the system for normal operation.

-> No
GO to Pinpoint Test G307559t64.

G307559t64 : CHECK THE CONTINUITY OF THE BRAKE LIGHT SWITCH OUTPUT CIRCUIT

1. Measure the resistance between CR78, pin 02 (GO), and CR13, pin 13 (GO).

- **Is the resistance greater than 5 ohms?**

-> Yes
REPAIR the high resistance circuit. For additional information, refer to the wiring diagrams. CLEAR the

www.JagDocs.com

DTC. TEST the system for normal operation.

-> No
INSTALL a new brake light switch. CLEAR the DTC. TEST the system for normal operation.

Anti-Lock Control - Stability Assist - VIN Range: G45704->G99999

Overview

There are some changes for 2006 my, the most obvious of which when diagnosing the system is the change to 7-digit diagnostic trouble codes (DTCs) from the familiar 5-digit.

Refer to the DTC index in this section for guidance on how to use these codes with the Jaguar approved diagnostic system or a scan tool.

For information on the operation of the system,
Anti-Lock Control - Stability Assist - VIN Range: G45704->G99999

Inspection and Verification

1 . Verify the customer concern.

2 . Confirm if the ABS warning light was illuminated, or still is.

NOTE:

> An intermittent fault may allow the warning light to go off. This does not necessarily mean the fault is not present. Some warnings will appear to clear when the ignition is cycled. This is often because the warning has flagged as a result of one of the vehicle's on-board diagnostic routines having run to detect the fault. If the same routine is not run when the ignition is switched **ON**, the warning will not reflag until the routine does run.

3 . Visually inspect for obvious signs of mechanical or electrical damage.

Mechanical	Electrical
• Brake fluid level • Vacuum system • Wheel speed sensor (WSS) fitment • WSS air gap • WSS ring(s) (missing or damaged teeth/contamination) • Steering wheel rotation sensor • Yaw rate sensor and accelerometer cluster fitment • Incorrect wheel or tire size	• Warning light operation • Fuses (see table) • Wheel speed sensors • Connectors/Pins • Harnesses • Steering wheel rotation sensor • Yaw rate sensor and accelerometer cluster • Booster pressure sensor • Hydraulic control module (HCU)

4 . If an obvious cause for an observed or reported concern is found, correct the cause (if possible) before proceeding to the next step.

www.JagDocs.com

5 . If the cause is not visually evident use the Jaguar approved diagnostic system or a scan tool to retrieve the fault codes before proceeding to the DTC index chart.

Fuse Identification Table

Location	Fuse Number	Rating	Circuit
Front power distribution fuse box	20	30 Amp	HCU pump battery supply
Front power distribution fuse box	03	5 Amp	HCU module battery supply
Front power distribution fuse box	22	15 Amp	HCU valve battery supply
Primary junction fuse box	17	5 Amp	HCU module ignition supply

DTC Index

NOTE:

Generic scan tools may not read the codes listed, or may read only 5-digit codes. Match the 5 digits from the scan tool to the first 5 digits of the 7-digit code listed to identify the fault (the last 2 digits give extra information read by the manufacturer-approved diagnostic system).

DTC	Description	Possible cause	Action
C000101	Traction control switch (TCS) control channel A valve 1	• Internal HCU fault	Refer to the warranty policy and procedures manual if a module is suspect.
C000201	Traction control switch (TCS) control channel A valve 2	• Internal HCU fault	Refer to the warranty policy and procedures manual if a module is suspect.
C000301	Traction control switch (TCS) control channel B valve 1	• Internal HCU fault	Refer to the warranty policy and procedures manual if a module is suspect.
C000401	Traction control switch (TCS) control channel B	• Internal HCU fault	Refer to the warranty policy and procedures manual if a module is

	valve 2		suspect.
C001001	Left hand front outlet control	• Internal HCU fault	Refer to the warranty policy and procedures manual if a module is suspect.
C001101	Left hand front outlet control	• Internal HCU fault	Refer to the warranty policy and procedures manual if a module is suspect.
C00117A	Left hand front outlet control	• Fluid leak • Seal failure	Check the brake fluid condition. Check the hydraulic system for leaks.
C001401	Right hand front inlet control	• Internal HCU fault	Refer to the warranty policy and procedures manual if a module is suspect.
C001501	Right hand front outlet control	• Internal HCU fault	Refer to the warranty policy and procedures manual if a module is suspect.
C00157A	Right hand front outlet control	• Internal HCU fault	Check the brake fluid condition. Check the hydraulic system for leaks.
C001801	Left hand rear inlet control	• Internal HCU fault	Refer to the warranty policy and procedures manual if a module is suspect.
C001901	Left hand rear outlet control	• Internal HCU fault	Refer to the warranty policy and procedures manual if a module is suspect.
C001C01	Right hand rear inlet control	• Internal HCU fault	Refer to the warranty policy and procedures manual if a module is suspect.
C001D01	Right hand rear outlet control	• Internal HCU fault	Refer to the warranty policy and procedures manual if a module is suspect.
C002001	ABS pump motor control - excessive	• Power supply to pump motor: short circuit • Power supply to pump motor: incorrect voltage	Refer to the warranty policy and procedures manual if a module is

www.JagDocs.com

	volt drop	• Pump ground circuit fault • Mechanical pump fault	suspect.
C00201C	ABS pump motor control - voltage out of range	• Power supply to pump motor: high resistance • Power supply to pump motor: short circuit • Pump ground circuit fault • Internal solid-state fault caused by ground circuit fault	Refer to the warranty policy and procedures manual if a module is suspect.
C002071	ABS pump motor control - actuator stuck	• Power supply to pump motor: high resistance • Power supply to pump motor: short circuit • Mechanical pump fault	For power supply circuit tests, GO to Pinpoint Test G531322p3. If the power and ground circuits are OK, refer to the warranty policy and procedures manual if a module is suspect. No physical test of the pump is possible.
C002201	Brake booster fault	• Vacuum circuit fault • Booster fault	For a mechanical check of the vacuum booster function. GO to Pinpoint Test G531322p1.
C003007	Left hand front wheel speed sensor (WSS) ring	• Contamination or debris on the WSS ring • WSS ring distorted • Excessive vibration	Check the WSS ring for damage/contamination (the sensor ring is part of the hub and can only be inspected by removing the sensor). Front Wheel Speed Sensor (70.60.03) Check the steering and suspension for excessive play which could cause vibration.
C003101	Left hand front wheel speed sensor (WSS) - signal current out of range	• WSS signal circuit: short circuit to ground • WSS signal circuit: short circuit to power • WSS signal circuit: high resistance	For left hand front WSS tests, GO to Pinpoint Test G531322p4.
C003107	Left hand front wheel speed sensor (WSS) - mechanical fault	• WSS faulty/incorrectly installed • WSS or ring missing/damaged • Excessive gap between sensor and ring	Check the condition and fitment of the WSS. Front Wheel Speed Sensor (70.60.03) Check the WSS ring for damage/contamination. Check the

		• Incorrect ring (number of teeth)	steering and suspension for excessive play. Check the WSS ring for correct specification.
C003307	Right hand front wheel speed sensor ring	• Contamination or debris on the WSS ring • WSS ring distorted • Excessive vibration	Check the WSS ring for damage/contamination (the sensor ring is part of the hub and can only be inspected by removing the sensor). Front Wheel Speed Sensor (70.60.03) Check the steering and suspension for excessive play which could cause vibration.
C003401	Right hand front wheel speed sensor (WSS) - signal current out of range	• WSS signal circuit: short circuit to ground • WSS signal circuit: short circuit to power • WSS signal circuit: high resistance	For right hand front WSS tests, GO to Pinpoint Test G531322p5.
C003407	Right hand front wheel speed sensor (WSS) - mechanical fault	• WSS faulty/incorrectly installed • WSS or ring missing/damaged • Excessive gap between sensor and ring • Incorrect ring (number of teeth)	Check the condition and fitment of the WSS. Front Wheel Speed Sensor (70.60.03) Check the WSS ring for damage/contamination. Check the steering and suspension for excessive play. Check the WSS ring for correct specification.
C003607	Left hand rear wheel speed sensor (WSS) ring	• Contamination or debris on the WSS ring • WSS ring distorted • Excessive vibration	Check the WSS ring for damage/contamination. Check the suspension for excessive play which could cause vibration.
C003701	Left hand rear wheel speed sensor (WSS) - signal current out of range	• WSS signal circuit: short circuit to ground • WSS signal circuit: short circuit to power • WSS signal circuit: high resistance	For left hand rear WSS tests, GO to Pinpoint Test G531322p6.
C003707	Left hand rear wheel speed sensor (WSS) -	• WSS faulty/incorrectly installed • WSS or ring missing/damaged • Excessive gap between	Check the condition and fitment of the WSS. Rear Wheel Speed Sensor (70.60.04) Check the WSS ring for

www.JagDocs.com

	mechanical fault	sensor and ring • Incorrect ring (number of teeth)	damage/contamination. Check the suspension for excessive play. Check the WSS ring for correct specification.
C003907	Right hand rear wheel speed sensor (WSS) ring	• Contamination or debris on the WSS ring • WSS ring distorted • Excessive vibration	Check the WSS ring for damage/contamination. Check the suspension for excessive play which could cause vibration.
C003A01	Right hand rear wheel speed sensor (WSS) - signal current out of range	• WSS signal circuit: short circuit to ground • WSS signal circuit: short circuit to power • WSS signal circuit: high resistance	For right hand rear WSS tests, GO to Pinpoint Test G531322p7.
C003A07	Right hand rear wheel speed sensor (WSS) - mechanical fault	• WSS faulty/incorrectly installed • WSS or ring missing/damaged • Excessive gap between sensor and ring • Incorrect ring (number of teeth)	Check the condition and fitment of the WSS. Rear Wheel Speed Sensor (70.60.04) Check the WSS ring for damage/contamination. Check the suspension for excessive play. Check the WSS ring for correct specification.
C004064	Brake pedal switch	• Brake pedal switch circuit: short circuit to ground • Brake pedal switch circuit: short circuit to power • Brake pedal switch circuit: high resistance • Brake pedal switch failure	For brake switch circuit tests, GO to Pinpoint Test G531322p2.
C004401	Brake pressure sensor A	• Sensor failure The sensor is internal to the control module	Refer to the warranty policy and procedures manual if a module is suspect.
C004428	Brake pressure sensor	• Sensor failure The sensor is internal to the control module	Refer to the warranty policy and procedures manual if a module is suspect.
C004464	Brake pressure	• Sensor failure The sensor is internal to the control	Refer to the warranty policy and

	sensor	module	procedures manual if a module is suspect.
C00447A	Brake pressure sensor - cross check failure	• Internal hydraulic leak/seal failure	Refer to the warranty policy and procedures manual if a module is suspect.
C004701	Booster pressure sensor	• Booster pressure sensor circuit: short circuit to ground • Booster pressure sensor circuit: short circuit to power • Booster pressure sensor circuit: high resistance • Booster pressure sensor failure	For booster pressure sensor tests, GO to Pinpoint Test G531322p8.
C004728	Booster pressure sensor	• Booster pressure sensor circuit: short circuit to ground • Booster pressure sensor circuit: short circuit to power • Booster pressure sensor circuit: high resistance • Booster pressure sensor failure	For booster pressure sensor tests, GO to Pinpoint Test G531322p8.
C004762	Booster pressure sensor	• Brake hydraulic circuit failure • Booster pressure sensor failure	Check the brake hydraulic circuits. Check the master cylinder, etc. Brake System
C004764	Booster pressure sensor	• Booster pressure sensor circuit: short circuit to ground • Booster pressure sensor circuit: short circuit to power • Booster pressure sensor circuit: high resistance • Booster pressure sensor failure	For booster pressure sensor tests, GO to Pinpoint Test G531322p8.
C005101	Steering wheel rotation sensor	• Sensor power circuit fault • Sensor ground circuit fault • Sensor signal circuit fault	For steering wheel rotation sensor tests, GO to Pinpoint Test G531322p9.

www.JagDocs.com

		• Steering wheel rotation sensor fault	
C005102	Steering wheel rotation sensor	• Sensor power circuit fault • Sensor ground circuit fault • Sensor signal circuit fault • Sensor loose/incorrectly installed • Encoder wheel misaligned or faulty • Steering wheel rotation sensor fault	Check the sensor and encoder wheel for correct fitment/alignment. Steering Wheel Rotation Sensor (86.56.58) For steering wheel rotation sensor tests, GO to Pinpoint Test G531322p9.
C005128	Steering wheel rotation sensor - offset monitoring	• Sensor loose/incorrectly installed • Vehicle track incorrectly adjusted	Check the sensor and encoder wheel for correct fitment/alignment. Steering Wheel Rotation Sensor (86.56.58) Check the steering and suspension for damage/wear which would affect the track.
C005167	Steering wheel rotation sensor	• Center position not learnt/lost • Implausible signals from other sensors (yaw rate, lateral acceleration, wheel speed sensors)	Cycle the ignition off and on, drive the vehicle in a straight line for three seconds at a speed higher than 50 Kmh (31 Mph) to learn the center position. Check the sensors listed for correct fitment/damage. Check for DTCs indicating a sensor fault.
C005192	Steering wheel rotation sensor	• Sensor apertures blocked • Encoder wheel misaligned or faulty • Sensor fault	Check the sensor and encoder wheel for correct fitment/alignment and condition. Steering Wheel Rotation Sensor (86.56.58)
C005195	Steering wheel rotation sensor	• Sensor incorrectly assembled Circuit incorrectly connected	For steering wheel rotation sensor tests, GO to Pinpoint Test G531322p9.
C005196	Steering wheel rotation sensor	• Sensor circuit(s): short circuit to each other • Sensor fault	For steering wheel rotation sensor tests, GO to Pinpoint Test G531322p9.
C006101	Yaw rate sensor and	• Sensor fault	Install a new sensor. Yaw Rate Sensor and Accelerometer

	accelerometer		(86.56.64)
C006128	Yaw rate sensor and accelerometer	• Sensor incorrectly calibrated • Sensor fault	Carry out the yaw rate sensor reset special application using the Jaguar approved diagnostic system. Clear the DTC and drive the vehicle to a speed greater than 20 kmh (12.5 mph) for more than 3 seconds to confirm the fix.
C006164	Yaw rate sensor and accelerometer	• Sensor loose/incorrectly installed • Sensor ground circuit: high resistance • Sensor fault	Check the sensor for correct installation. Yaw Rate Sensor and Accelerometer (86.56.64) For yaw rate sensor and accelerometer tests, GO to Pinpoint Test G531322p10.
C006301	Yaw rate sensor and accelerometer	• Sensor fault	Install a new sensor. Yaw Rate Sensor and Accelerometer (86.56.64)
C006328	Yaw rate sensor and accelerometer	• Sensor incorrectly calibrated • Sensor fault	Carry out the yaw rate sensor reset special application using the Jaguar approved diagnostic system. Clear the DTC and drive the vehicle to a speed greater than 20 kmh (12.5 mph) for more than 3 seconds to confirm the fix.
C006364	Yaw rate sensor and accelerometer	• Sensor loose/incorrectly installed • Sensor ground circuit: high resistance • Sensor fault	Check the sensor for correct installation. Yaw Rate Sensor and Accelerometer (86.56.64) For yaw rate sensor and accelerometer tests, GO to Pinpoint Test G531322p10.
C006A01	Yaw rate sensor and accelerometer	• Sensor supply circuit: high resistance • Sensor fault	For yaw rate sensor and accelerometer tests, GO to Pinpoint Test G531322p10.
C006A04	Yaw rate sensor and accelerometer	• Sensor supply circuit: short circuit to power • Sensor supply circuit: short circuit to ground • Sensor supply circuit: high resistance	For yaw rate sensor and accelerometer tests, GO to Pinpoint Test G531322p10.

www.JagDocs.com

		• Sensor failure	
C006A16	Yaw rate sensor and accelerometer - low voltage detected	• Sensor supply circuit: short circuit to power • Sensor supply circuit: short circuit to ground • Sensor supply circuit: high resistance • Sensor failure	For yaw rate sensor and accelerometor tests, GO to Pinpoint Test G531322p10.
C006A17	Yaw rate sensor and accelerometer - high voltage detected	• Sensor supply circuit: short circuit to power • Sensor failure	For yaw rate sensor and accelerometor tests, GO to Pinpoint Test G531322p10.
C006A47	Yaw rate sensor and accelerometer	• Watchdog/Safety failure	Install a new sensor. Yaw Rate Sensor and Accelerometer (86.56.64)
C006A95	Yaw rate sensor and accelerometer	• Incorrect part fitted	Install a new sensor. Yaw Rate Sensor and Accelerometer (86.56.64)
C006B00	Yaw rate sensor and accelerometer	• Sensor failure	Install a new sensor. Yaw Rate Sensor and Accelerometer (86.56.64)
C008247	Hydraulic control module fault	• Internal HCU failure	Refer to the warranty policy and procedures manual if a module is suspect.
C008248	Hydraulic control module fault	• Internal HCU failure	Refer to the warranty policy and procedures manual if a module is suspect.
C008249	Hydraulic control module fault	• Internal HCU failure	Refer to the warranty policy and procedures manual if a module is suspect.
C008254	Yaw rate sensor and accelerometer	• Calibration failure	Carry out the yaw rate sensor reset special application using the Jaguar approved diagnostic system. Clear the DTC and retest.

C110801	Internal pressure sensor fault	• Internal HCU failure	Refer to the warranty policy and procedures manual if a module is suspect.
C110964	Traction control switch (TCS) error	• J-Gate module error	Check for transmission DTCs.
C113301	Internal pressure sensor fault	• Internal HCU failure	Refer to the warranty policy and procedures manual if a module is suspect.
C113328	Left hand front brake pressure sensor	• Internal HCU failure	Refer to the warranty policy and procedures manual if a module is suspect.
C113364	Left hand front brake pressure sensor	• Internal HCU failure	Refer to the warranty policy and procedures manual if a module is suspect.
C113401	Right hand front brake pressure sensor	• Internal HCU failure	Refer to the warranty policy and procedures manual if a module is suspect.
C113428	Right hand front brake pressure sensor	• Internal HCU failure	Refer to the warranty policy and procedures manual if a module is suspect.
C113464	Right hand front brake pressure sensor	• Internal HCU failure	Refer to the warranty policy and procedures manual if a module is suspect.
B10DF46	Master cylinder isolation valve	• Valve not calibrated Internal HCU fault	The valve values cannot be calibrated in service. Refer to the warranty policy and procedures manual if a module is suspect.
U000100	CAN communication bus	• Isolated CAN communication error • CAN circuit fault • Internal HCU failure	Clear the DTCs, retest. If CAN fault codes reset,
U000168	CAN communication software error	• Isolated CAN communication error • Internal HCU failure	Clear the DTCs, retest. If CAN fault codes reset,

www.JagDocs.com

U010000	Lost communication with ECM	• Isolated CAN communication error • CAN circuit fault	Clear the DTCs, retest. If CAN fault codes reset,
U010400	Lost communication with speed control module	• Isolated CAN communication error • CAN circuit fault	Clear the DTCs, retest. If CAN fault codes reset,
U012500	Lost communication with yaw rate sensor and accelerometer	• Isolated CAN communication error • Local CAN circuit fault • Sensor failure	Clear the DTCs, retest. If CAN fault codes reset,
U012588	Lost communication with yaw rate sensor and accelerometer	• Isolated CAN communication error • Local CAN circuit fault • Sensor failure	Clear the DTCs, retest. If CAN fault codes reset,
U01550	Lost communication with instrument pack module	• Isolated CAN communication error • CAN circuit fault	Clear the DTCs, retest. If CAN fault codes reset,
U030000	Control module software incompatibility	• Configuration data not received from EMS • Configuration data received is not compatible with the DSC module	Confirm that the configuration data for the EMS is correct. Confirm that the correct DSC module is installed.
U030005	Control module software error	• Internal HCU software error	Refer to the warranty policy and procedures manual if a module is suspect.
U030055	Stored vehicle configuration data does not match	• Configuration data received is different from the previous key cycle • Control module swapped from another vehicle	Confirm the vehicle configuration. Reconfigure the module using the Jaguar approved diagnostic system
U030087	Received vehicle configuration data	• Configuration data received is different from the modules seen on the	Confirm the vehicle configuration. Reconfigure the module using the

	does not match	network • Control module swapped from another vehicle	Jaguar approved diagnostic system
U040164	Invalid data received from the ECM	• Invalid data	Check for engine management DTCs. Electronic Engine Controls - VIN Range: G45704->G99999 or Electronic Engine Controls - VIN Range: G45704->G99999
U040192	Torque request denied by the ECM	• Engine management fault detected	Check for engine management DTCs. Electronic Engine Controls - VIN Range: G45704->G99999 or Electronic Engine Controls - VIN Range: G45704->G99999
U040200	TCM messages not received in the specified time	• Isolated CAN communication error • CAN circuit fault	Clear the DTCs, retest. If CAN fault codes reset,
U040264	Invalid data received from the TCM	• Invalid data received from the TCM	Check for transmission DTCs.
U040592	Fault declared by the speed control module	• ACC fault detected by the speed control module	Check for speed control DTCs. Speed Control - VIN Range: G45704->G99999
U042300	Missing reverse gear signal	• Isolated CAN communication error • CAN circuit fault	Clear the DTCs, retest. If CAN fault codes reset,
U210868	Speed control vehicle deceleration implausible	• Braking requested by speed control exceeds allowed threshold	Check for speed control DTCs. Speed Control - VIN Range: G45704->G99999
U300316	Battery voltage low	• HCU supply circuit fault(s) • Internal HCU failure	For module supply and ground tests, GO to Pinpoint Test G531322p3.
U300317	Battery voltage	• HCU supply circuit fault(s)	For module supply and ground tests,

www.JagDocs.com

	high	• Charging system fault(s)	GO to Pinpoint Test G531322p3.

Pinpoint tests

PINPOINT TEST G531322p1 : BRAKE VACUUM ASSIST FUNCTION

G531322t1 : CHECK THE BRAKE PEDAL TRAVEL WITH THE ENGINE OFF

1. Key off. 2. Pump the brake pedal six times and hold firm pressure on the pedal.

- **Did the pedal travel decrease and the pedal go hard as it was pumped?**

-> Yes
GO to Pinpoint Test G531322t2.

-> No
CHECK the vacuum circuit to the brake booster. Start the engine and idle for three minutes, switch off then repeat the test. If the pedal travel does not decrease, suspect the brake booster.

G531322t2 : CHECK THE BRAKE PEDAL TRAVEL WITH THE ENGINE RUNNING

1. With firm pressure still held on the brake pedal, start the engine.

- **Did the pedal travel increase as the engine started?**

-> Yes
The vacuum function of the brake booster is operating normally. Check for DTCs indicating a fault elsewhere in the system.

-> No
CHECK the vacuum circuit to the brake booster.

PINPOINT TEST G531322p2 : BRAKE SWITCH

G531322t3 : CHECK THE OPERATION OF THE BRAKE SWITCH (PEDAL RELEASED)

1.

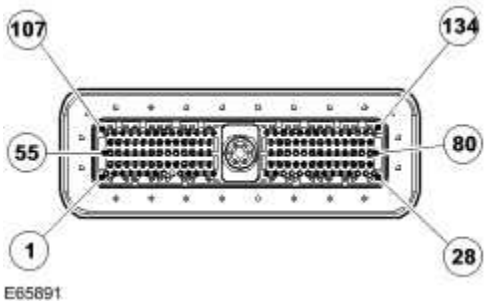

Circuit	Pin
Brake light switch	41

2.

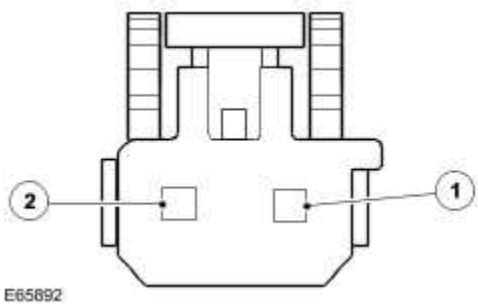

Circuit	Pin
Power supply	01
Signal	02

3. Key off. 4. Disconnect the brake switch electrical connector, CR078. 5. Make sure the brake pedal is not pressed. 6. Measure the resistance between:

Brake switch connector CR078, component side	Brake switch connector CR078, component side
Pin 01	Pin 02

- **Is the resistance greater than 10 ohms?**

-> Yes

GO to Pinpoint Test G531322t4.

www.JagDocs.com

-> No
INSTALL a new brake switch. CLEAR the DTC, test the system for normal operation.

G531322t4 : CHECK THE OPERATION OF THE BRAKE SWITCH (PEDAL PRESSED)

1. Press the brake pedal. 2. Measure the resistance between:

Brake switch connector CR078, component side	Brake switch connector CR078, component side
Pin 01	Pin 02

- **Is the resistance greater than 10 ohms?**

-> Yes
INSTALL a new brake switch. CLEAR the DTC, test the system for normal operation.

-> No
GO to Pinpoint Test G531322t5.

G531322t5 : CHECK THE POWER SUPPLY TO THE BRAKE PEDAL SWITCH

1. Key on, engine off. 2. Measure the voltage between:

Brake switch connector CR078, harness side	Battery
Pin 01	Negative terminal

- **Is the voltage less than 10 volts?**

-> Yes
REPAIR the circuit between the brake switch and battery. This circuit includes fuse 35 of the primary junction box. For additional information, refer to the wiring diagrams. CLEAR the DTC, test the system for normal operation.

-> No
GO to Pinpoint Test G531322t6.

G531322t6 : CHECK THE BRAKE SWITCH SIGNAL CIRCUIT FOR SHORT CIRCUIT TO GROUND

1. Key off. 2. Measure the resistance between:

Brake switch connector CR078, harness side	Battery
Pin 02	Negative terminal

- **Is the resistance less than 100 Kohms?**

-> Yes

REPAIR the short circuit. For additional information, refer to the wiring diagrams. CLEAR the DTC, test the system for normal operation.

-> No

GO to Pinpoint Test G531322t7.

G531322t7 : CHECK THE BRAKE SWITCH SIGNAL CIRCUIT FOR SHORT CIRCUIT TO POWER

1. Measure the resistance between:

Brake switch connector CR078, harness side	Battery
Pin 02	Positive terminal

- **Is the resistance less than 100 Kohms?**

-> Yes

REPAIR the short circuit. For additional information, refer to the wiring diagrams. CLEAR the DTC, test the system for normal operation.

-> No

GO to Pinpoint Test G531322t8.

G531322t8 : CHECK THE BRAKE SWITCH SIGNAL CIRCUIT FOR HIGH RESISTANCE

1. Disconnect the ECM electrical connector, EC300. 2. Measure the resistance between:

Brake switch connector CR078, harness side	ECM connector EC300, harness side

www.JagDocs.com

Pin 02	Pin 41

- **Is the resistance less than 10 ohms?**

-> Yes
CHECK for CAN DTCs indicating a network fault.

-> No
REPAIR the high resistance circuit. For additional information, refer to the wiring diagrams. CLEAR the DTC. TEST the system for normal operation.

PINPOINT TEST G531322p3 : MODULE SUPPLIES AND GROUNDS

G531322t9 : CHECK THE MODULE PUMP SUPPLY

1.

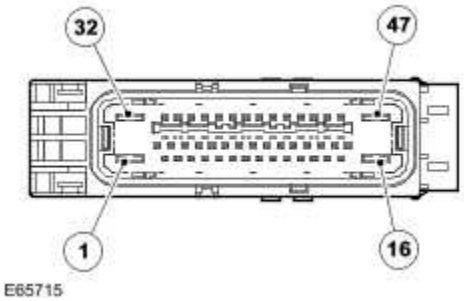

Circuit	Pin
Pump supply	01
Valves supply	32
Batt supply	02
Ignition supply	08
Pump ground	47
Valve ground	16

2. Key off. 3. Disconnect the ABS module connector, EC030. 4. Measure the voltage between:

EC030, harness side	Battery
Pump supply, pin 01	Negative terminal

- **Is the voltage between 9 and 15 volts?**

-> Yes
GO to Pinpoint Test G531322t10.

-> No
REPAIR the supply circuit as necessary. This circuit includes fuse 20 of the front power distribution box. For additional information, refer to the wiring diagrams. Clear the DTC, test the system for normal operation.

G531322t10 : CHECK THE MODULE VALVES SUPPLY

1. Measure the voltage between:

EC030, harness side	Battery
Valves supply, pin 32	Negative terminal

- **Is the voltage between 9 and 15 volts?**

-> Yes
GO to Pinpoint Test G531322t11.

-> No
REPAIR the supply circuit as necessary. This circuit includes fuse 04 of the front power distribution box. For additional information, refer to the wiring diagrams. Clear the DTC, test the system for normal operation.

G531322t11 : CHECK THE MODULE BATT SUPPLY

1. Measure the voltage between:

EC030, harness side	Battery
Batt supply, pin 02	Negative terminal

www.JagDocs.com

- **Is the voltage between 9 and 15 volts?**

-> Yes
GO to Pinpoint Test G531322t12.

-> No
REPAIR the supply circuit as necessary. This circuit includes fuse 01 of the front power distribution box. For additional information, refer to the wiring diagrams. Clear the DTC, test the system for normal operation.

G531322t12 : CHECK THE MODULE IGNITION SUPPLY

1. Key on, engine off. 2. Measure the voltage between:

EC030, harness side	Battery
Ignition supply, pin 08	Negative terminal

- **Is the voltage between 9 and 15 volts?**

-> Yes
GO to Pinpoint Test G531322t13.

-> No
REPAIR the supply circuit as necessary. This circuit includes fuse 03 of the primary junction box. For additional information, refer to the wiring diagrams. Clear the DTC, test the system for normal operation.

G531322t13 : CHECK THE PUMP GROUND

1. Key off. 2. Measure the resistance between:

EC030, harness side	Battery
Pump ground, pin 47	Negative terminal

- **Is the resistance less than 10 ohms?**

-> Yes
GO to Pinpoint Test G531322t14.

-> No

REPAIR the ground circuit as necessary. For additional information, refer to the wiring diagrams. Clear the DTC, test the system for normal operation.

G531322t14 : CHECK THE VALVE GROUND

1. Measure the resistance between:

EC030, harness side	Battery
Valve ground, pin 16	Negative terminal

- **Is the resistance less than 10 ohms?**

-> Yes
Refer to the warranty policy and procedures manual if a module is suspect.

-> No
REPAIR the ground circuit as necessary. For additional information, refer to the wiring diagrams. Clear the DTC, test the system for normal operation.

PINPOINT TEST G531322p4 : LEFT HAND FRONT WHEEL SPEED SENSOR (WSS)

G531322t15 : CHECK THE WSS RETURN CIRCUIT FOR SHORT CIRCUIT TO GROUND

1.

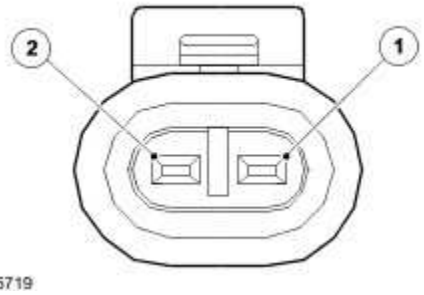

Circuit	Pin
WSS signal	01
WSS return	02

www.JagDocs.com

2.

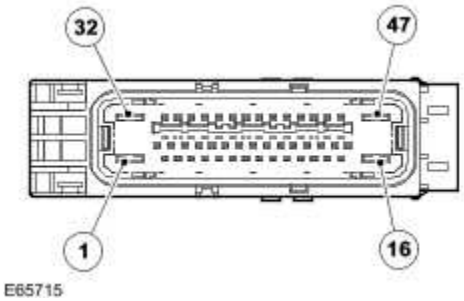

Circuit	Pin
Left hand front WSS signal	46
Left hand front WSS return	45

3. Key off. 4. Disconnect the WSS connector, EC044. 5. Disconnect the ABS module connector, EC030. 6. Key on, engine off. 7. Measure the resistance between:

EC044, harness side	Battery
Pin 02	Negative terminal

- **Is the resistance greater than 100 Kohms?**

-> Yes
GO to Pinpoint Test G531322t16.

-> No
REPAIR the short circuit. For additional information, refer to the wiring diagrams. Clear the DTC, test the system for normal operation by driving the vehicle at more than 20 kph (12.5 mph) for more than 3 minutes.

G531322t16 : CHECK THE WSS RETURN CIRCUIT FOR SHORT CIRCUIT TO POWER

1. Measure the resistance between:

EC044, harness side	Battery
Pin 02	Positive terminal

- **Is the resistance greater than 100 Kohms?**

-> Yes
GO to Pinpoint Test G531322t17.

-> No
REPAIR the short circuit. For additional information, refer to the wiring diagrams. Clear the DTC, test the system for normal operation by driving the vehicle at more than 20 kph (12.5 mph) for more than 3 minutes.

G531322t17 : CHECK THE WSS RETURN CIRCUIT FOR HIGH RESISTANCE

1. Measure the resistance between:

EC044, harness side	EC030, harness side
Pin 02	Pin 45

- **Is the resistance less than 10 ohms?**

-> Yes
GO to Pinpoint Test G531322t18.

-> No
REPAIR the high resistance circuit. For additional information, refer to the wiring diagrams. Clear the DTC, test the system for normal operation by driving the vehicle at more than 20 kph (12.5 mph) for more than 3 minutes.

G531322t18 : CHECK THE WSS SIGNAL CIRCUIT FOR SHORT CIRCUIT TO POWER

1. Measure the resistance between:

EC044, harness side	Battery
Pin 01	Positive terminal

- **Is the resistance greater than 100 Kohms?**

-> Yes
GO to Pinpoint Test G531322t19.

www.JagDocs.com

-> No
REPAIR the short circuit. For additional information, refer to the wiring diagrams. Clear the DTC, test the system for normal operation by driving the vehicle at more than 20 kph (12.5 mph) for more than 3 minutes.

G531322t19 : CHECK THE WSS SIGNAL CIRCUIT FOR SHORT CIRCUIT TO GROUND

1. Measure the resistance between:

EC044, harness side	Battery
Pin 01	Negative terminal

- **Is the resistance greater than 100 Kohms?**

-> Yes
GO to Pinpoint Test G531322t20.

-> No
REPAIR the short circuit. For additional information, refer to the wiring diagrams. Clear the DTC, test the system for normal operation by driving the vehicle at more than 20 kph (12.5 mph) for more than 3 minutes.

G531322t20 : CHECK THE WSS SIGNAL CIRCUIT FOR HIGH RESISTANCE

1. Measure the resistance between:

EC044, harness side	EC030, harness side
Pin 01	Pin 46

- **Is the resistance less than 10 ohms?**

-> Yes
GO to Pinpoint Test G531322t21.

-> No
REPAIR the high resistance circuit. For additional information, refer to the wiring diagrams. Clear the DTC, test the system for normal operation by driving the vehicle at more than 20 kph (12.5 mph) for more than 3 minutes.

G531322t21 : CHECK THE WSS SIGNAL AND RETURN CIRCUITS FOR SHORT CIRCUIT TO EACH OTHER

1. Measure the resistance between:

EC044, harness side	EC044, harness side
Pin 01	Pin 02

- **Is the resistance greater than 100 Kohms?**

-> Yes

An intermittent fault may be present in the wiring harness. Visually check for chaffed wires or other physical damage to the harness. If no fault is found in the harness, suspect the following components: - WSS connector - WSS - ABS module connector - ABS module

-> No

REPAIR the short circuit. For additional information, refer to the wiring diagrams. Clear the DTC, test the system for normal operation by driving the vehicle at more than 20 kph (12.5 mph) for more than 3 minutes.

PINPOINT TEST G531322p5 : RIGHT HAND FRONT WHEEL SPEED SENSOR (WSS)

G531322t22 : CHECK THE WSS RETURN CIRCUIT FOR SHORT CIRCUIT TO GROUND

1.

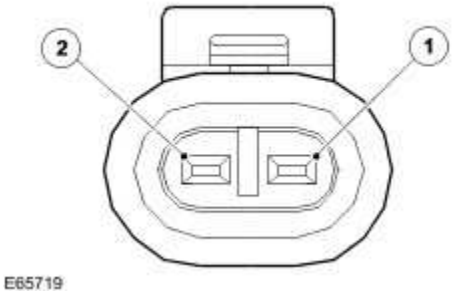

Circuit	Pin
WSS signal	01
WSS return	02

www.JagDocs.com

2.

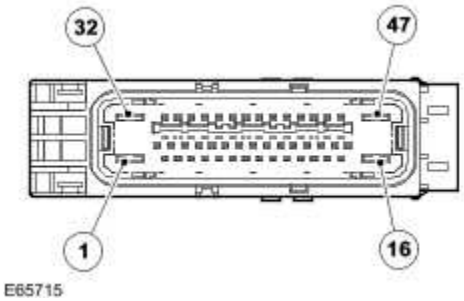

Circuit	Pin
Right hand front WSS signal	33
Right hand front WSS return	34

3. Key off. 4. Disconnect the WSS connector, EC015. 5. Disconnect the ABS module connector, EC030. 6. Key on, engine off. 7. Measure the resistance between:

EC015, harness side	Battery
Pin 02	Negative terminal

- **Is the resistance greater than 100 Kohms?**

-> Yes
GO to Pinpoint Test G531322t88.

-> No
REPAIR the short circuit. For additional information, refer to the wiring diagrams. Clear the DTC, test the system for normal operation by driving the vehicle at more than 20 kph (12.5 mph) for more than 3 minutes.

G531322t88 : CHECK THE WSS RETURN CIRCUIT FOR SHORT CIRCUIT TO POWER

1. Measure the resistance between:

EC015, harness side	Battery
Pin 02	Positive terminal

- **Is the resistance greater than 100 Kohms?**

-> Yes
GO to Pinpoint Test G531322t89.

-> No
REPAIR the short circuit. For additional information, refer to the wiring diagrams. Clear the DTC, test the system for normal operation by driving the vehicle at more than 20 kph (12.5 mph) for more than 3 minutes.

G531322t89 : CHECK THE WSS RETURN CIRCUIT FOR HIGH RESISTANCE

1. Measure the resistance between:

EC015, harness side	EC030, harness side
Pin 02	Pin 34

- **Is the resistance less than 10 ohms?**

-> Yes
GO to Pinpoint Test G531322t90.

-> No
REPAIR the high resistance circuit. For additional information, refer to the wiring diagrams. Clear the DTC, test the system for normal operation by driving the vehicle at more than 20 kph (12.5 mph) for more than 3 minutes.

G531322t90 : CHECK THE WSS SIGNAL CIRCUIT FOR SHORT CIRCUIT TO POWER

1. Measure the resistance between:

EC015, harness side	Battery
Pin 01	Positive terminal

- **Is the resistance greater than 100 Kohms?**

-> Yes
GO to Pinpoint Test G531322t91.

www.JagDocs.com

-> No
REPAIR the short circuit. For additional information, refer to the wiring diagrams. Clear the DTC, test the system for normal operation by driving the vehicle at more than 20 kph (12.5 mph) for more than 3 minutes.

G531322t91 : CHECK THE WSS SIGNAL CIRCUIT FOR SHORT CIRCUIT TO GROUND

1. Measure the resistance between:

EC015, harness side	Battery
Pin 01	Negative terminal

- **Is the resistance greater than 100 Kohms?**

-> Yes
GO to Pinpoint Test G531322t92.

-> No
REPAIR the short circuit. For additional information, refer to the wiring diagrams. Clear the DTC, test the system for normal operation by driving the vehicle at more than 20 kph (12.5 mph) for more than 3 minutes.

G531322t92 : CHECK THE WSS SIGNAL CIRCUIT FOR HIGH RESISTANCE

1. Measure the resistance between:

EC015, harness side	EC030, harness side
Pin 01	Pin 33

- **Is the resistance less than 10 ohms?**

-> Yes
GO to Pinpoint Test G531322t93.

-> No
REPAIR the high resistance circuit. For additional information, refer to the wiring diagrams. Clear the DTC, test the system for normal operation by driving the vehicle at more than 20 kph (12.5 mph) for more than 3 minutes.

G531322t93 : CHECK THE WSS SIGNAL AND RETURN CIRCUITS FOR SHORT CIRCUIT TO EACH OTHER

1. Measure the resistance between:

EC015, harness side	EC015, harness side
Pin 01	Pin 02

- **Is the resistance greater than 100 Kohms?**

-> Yes

An intermittent fault may be present in the wiring harness. Visually check for chaffed wires or other physical damage to the harness. If no fault is found in the harness, suspect the following components: - WSS connector - WSS - ABS module connector - ABS module

-> No

REPAIR the short circuit. For additional information, refer to the wiring diagrams. Clear the DTC, test the system for normal operation by driving the vehicle at more than 20 kph (12.5 mph) for more than 3 minutes.

PINPOINT TEST G531322p6 : LEFT HAND REAR WHEEL SPEED SENSOR (WSS)

G531322t23 : CHECK THE WSS RETURN CIRCUIT FOR SHORT CIRCUIT TO GROUND

1.

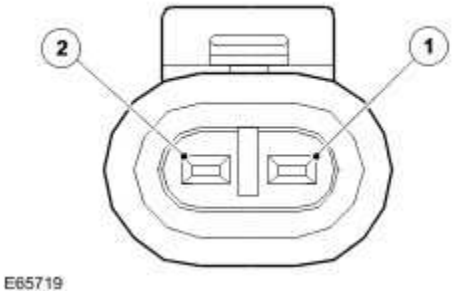

Circuit	Pin
WSS return	01
WSS signal	02

www.JagDocs.com

2.

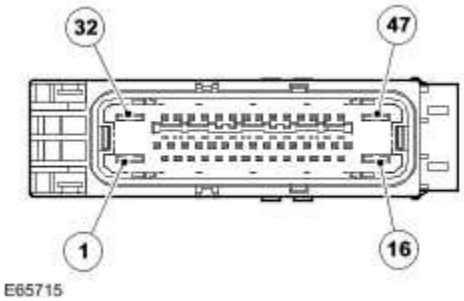

Circuit	Pin
Left hand rear WSS signal	36
Left hand rear WSS return	37

3. Key off. 4. Disconnect the WSS connector, CV006. 5. Disconnect the ABS module connector, EC030. 6. Key on, engine off. 7. Measure the resistance between:

CV006, harness side	Battery
Pin 01	Negative terminal

- **Is the resistance greater than 100 Kohms?**

-> Yes
GO to Pinpoint Test G531322t94.

-> No
REPAIR the short circuit. For additional information, refer to the wiring diagrams. Clear the DTC, test the system for normal operation by driving the vehicle at more than 20 kph (12.5 mph) for more than 3 minutes.

G531322t94 : CHECK THE WSS RETURN CIRCUIT FOR SHORT CIRCUIT TO POWER

1. Measure the resistance between:

CV006, harness side	Battery
Pin 01	Positive terminal

- **Is the resistance greater than 100 Kohms?**

-> Yes
GO to Pinpoint Test G531322t95.

-> No
REPAIR the short circuit. For additional information, refer to the wiring diagrams. Clear the DTC, test the system for normal operation by driving the vehicle at more than 20 kph (12.5 mph) for more than 3 minutes.

G531322t95 : CHECK THE WSS RETURN CIRCUIT FOR HIGH RESISTANCE

1. Measure the resistance between:

CV006, harness side	EC030, harness side
Pin 01	Pin 37

- **Is the resistance less than 10 ohms?**

-> Yes
GO to Pinpoint Test G531322t96.

-> No
REPAIR the high resistance circuit. For additional information, refer to the wiring diagrams. Clear the DTC, test the system for normal operation by driving the vehicle at more than 20 kph (12.5 mph) for more than 3 minutes.

G531322t96 : CHECK THE WSS SIGNAL CIRCUIT FOR SHORT CIRCUIT TO POWER

1. Measure the resistance between:

CV006, harness side	Battery
Pin 02	Positive terminal

- **Is the resistance greater than 100 Kohms?**

-> Yes
GO to Pinpoint Test G531322t97.

www.JagDocs.com

-> No
REPAIR the short circuit. For additional information, refer to the wiring diagrams. Clear the DTC, test the system for normal operation by driving the vehicle at more than 20 kph (12.5 mph) for more than 3 minutes.

G531322t97 : CHECK THE WSS SIGNAL CIRCUIT FOR SHORT CIRCUIT TO GROUND

1. Measure the resistance between:

CV006, harness side	Battery
Pin 02	Negative terminal

- **Is the resistance greater than 100 Kohms?**

-> Yes
GO to Pinpoint Test G531322t98.

-> No
REPAIR the short circuit. For additional information, refer to the wiring diagrams. Clear the DTC, test the system for normal operation by driving the vehicle at more than 20 kph (12.5 mph) for more than 3 minutes.

G531322t98 : CHECK THE WSS SIGNAL CIRCUIT FOR HIGH RESISTANCE

1. Measure the resistance between:

CV006, harness side	EC030, harness side
Pin 02	Pin 36

- **Is the resistance less than 10 ohms?**

-> Yes
GO to Pinpoint Test G531322t99.

-> No
REPAIR the high resistance circuit. For additional information, refer to the wiring diagrams. Clear the DTC, test the system for normal operation by driving the vehicle at more than 20 kph (12.5 mph) for more than 3 minutes.

G531322t99 : CHECK THE WSS SIGNAL AND RETURN CIRCUITS FOR SHORT CIRCUIT TO EACH OTHER

1. Measure the resistance between:

CV006, harness side	CV006, harness side
Pin 01	Pin 02

- **Is the resistance greater than 100 Kohms?**

-> Yes

An intermittent fault may be present in the wiring harness. Visually check for chaffed wires or other physical damage to the harness. If no fault is found in the harness, suspect the following components: - WSS connector - WSS - ABS module connector - ABS module

-> No

REPAIR the short circuit. For additional information, refer to the wiring diagrams. Clear the DTC, test the system for normal operation by driving the vehicle at more than 20 kph (12.5 mph) for more than 3 minutes.

PINPOINT TEST G531322p7 : RIGHT HAND REAR WHEEL SPEED SENSOR (WSS)

G531322t24 : CHECK THE WSS RETURN CIRCUIT FOR SHORT CIRCUIT TO GROUND

1.

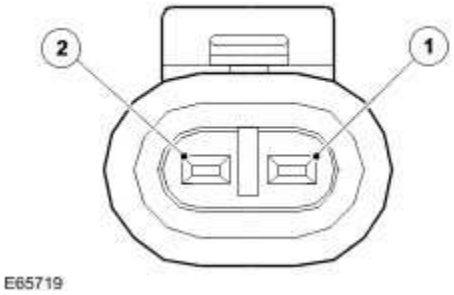

Circuit	Pin
WSS return	01
WSS signal	02

www.JagDocs.com

2.

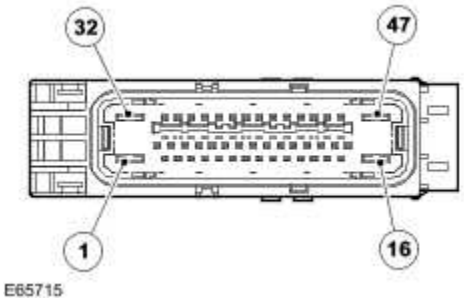

Circuit	Pin
Right hand rear WSS return	42
Right hand rear WSS signal	43

3. Key off. 4. Disconnect the WSS connector, CV008. 5. Disconnect the ABS module connector, EC030. 6. Key on engine off. 7. Measure the resistance between:

CV008, harness side	Battery
Pin 01	Negative terminal

- **Is the resistance greater than 100 Kohms?**

-> Yes
GO to Pinpoint Test G531322t100.

-> No
REPAIR the short circuit. For additional information, refer to the wiring diagrams. Clear the DTC, test the system for normal operation by driving the vehicle at more than 20 kph (12.5 mph) for more than 3 minutes.

G531322t100 : CHECK THE WSS RETURN CIRCUIT FOR SHORT CIRCUIT TO POWER

1. Measure the resistance between:

CV008, harness side	Battery
Pin 01	Positive terminal

- **Is the resistance greater than 100 Kohms?**

-> Yes
GO to Pinpoint Test G531322t101.

-> No
REPAIR the short circuit. For additional information, refer to the wiring diagrams. Clear the DTC, test the system for normal operation by driving the vehicle at more than 20 kph (12.5 mph) for more than 3 minutes.

G531322t101 : CHECK THE WSS RETURN CIRCUIT FOR HIGH RESISTANCE

1. Measure the resistance between:

CV008, harness side	EC030, harness side
Pin 01	Pin 42

- **Is the resistance less than 10 ohms?**

-> Yes
GO to Pinpoint Test G531322t102.

-> No
REPAIR the high resistance circuit. For additional information, refer to the wiring diagrams. Clear the DTC, test the system for normal operation by driving the vehicle at more than 20 kph (12.5 mph) for more than 3 minutes.

G531322t102 : CHECK THE WSS SIGNAL CIRCUIT FOR SHORT CIRCUIT TO POWER

1. Measure the resistance between:

CV008, harness side	Battery
Pin 02	Positive terminal

- **Is the resistance greater than 100 Kohms?**

-> Yes
GO to Pinpoint Test G531322t103.

www.JagDocs.com

-> No
REPAIR the short circuit. For additional information, refer to the wiring diagrams. Clear the DTC, test the system for normal operation by driving the vehicle at more than 20 kph (12.5 mph) for more than 3 minutes.

G531322t103 : CHECK THE WSS SIGNAL CIRCUIT FOR SHORT CIRCUIT TO GROUND

1. Measure the resistance between:

CV008, harness side	Battery
Pin 02	Negative terminal

- **Is the resistance greater than 100 Kohms?**

-> Yes
GO to Pinpoint Test G531322t104.

-> No
REPAIR the short circuit. For additional information, refer to the wiring diagrams. Clear the DTC, test the system for normal operation by driving the vehicle at more than 20 kph (12.5 mph) for more than 3 minutes.

G531322t104 : CHECK THE WSS SIGNAL CIRCUIT FOR HIGH RESISTANCE

1. Measure the resistance between:

CV008, harness side	EC030, harness side
Pin 02	Pin 43

- **Is the resistance less than 10 ohms?**

-> Yes
GO to Pinpoint Test G531322t105.

-> No
REPAIR the high resistance circuit. For additional information, refer to the wiring diagrams. Clear the DTC, test the system for normal operation by driving the vehicle at more than 20 kph (12.5 mph) for more than 3 minutes.

G531322t105 : CHECK THE WSS SIGNAL AND RETURN CIRCUITS FOR SHORT CIRCUIT TO EACH OTHER

1. Measure the resistance between:

CV008, harness side	CV008, harness side
Pin 01	Pin 02

- **Is the resistance greater than 100 Kohms?**

-> Yes

An intermittent fault may be present in the wiring harness. Visually check for chaffed wires or other physical damage to the harness. If no fault is found in the harness, suspect the following components: - WSS connector - WSS - ABS module connector - ABS module

-> No

REPAIR the short circuit. For additional information, refer to the wiring diagrams. Clear the DTC, test the system for normal operation by driving the vehicle at more than 20 kph (12.5 mph) for more than 3 minutes.

PINPOINT TEST G531322p8 : BOOSTER PRESSURE SENSOR

G531322t25 : CHECK THE POWER SUPPLY TO THE BOOSTER PRESSURE SENSOR

1.

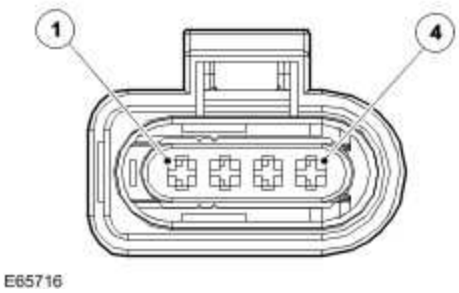

Circuit	Pin
Power supply	03
Signal A	04

www.JagDocs.com

Signal B	01
Ground	02

2.

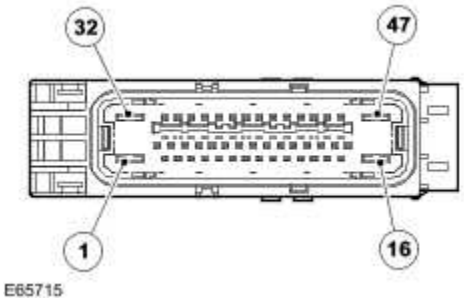

Circuit	Pin
Power supply	26
Signal A	38
Signal B	30
Ground	27

3. Key off. 4. Disconnect the booster pressure sensor connector, EC095. 5. Key on, engine off. 6. Measure the voltage between:

EC095, harness side	Battery
Pin 03	Negative terminal

- **Is the voltage greater than 4 volts?**

-> Yes
GO to Pinpoint Test G531322t28.

-> No
GO to Pinpoint Test G531322t26.

G531322t26 : CHECK THE BOOSTER PRESSURE SENSOR POWER SUPPLY CIRCUIT FOR SHORT CIRCUIT TO GROUND

1. Measure the resistance between:

EC095, harness side	Battery
Pin 03	Negative terminal

- **Is the resistance greater than 10 Kohms?**

-> Yes
GO to Pinpoint Test G531322t27.

-> No
REPAIR the short circuit. For additional information, refer to the wiring diagrams. Clear the DTC, test the system for normal operation by applying and releasing the brake pedal firmly three times with the engine running.

G531322t27 : CHECK THE BOOSTER PRESSURE SENSOR POWER SUPPLY CIRCUIT FOR HIGH RESISTANCE

1. Key off. 2. Disconnect the ABS module connector, EC030. 3. Measure the resistance between:

EC095, harness side	EC030, harness side
Pin 03	Pin 26

- **Is the resistance less than 10 ohms?**

-> Yes
An intermittent fault may be present in the wiring harness. Visually check for chaffed wires or other physical damage to the harness.

-> No
REPAIR the high resistance circuit. For additional information, refer to the wiring diagrams. Clear the DTC, test the system for normal operation by applying and releasing the brake pedal firmly three times with the engine running.

G531322t28 : CHECK THE GROUND CIRCUIT TO THE BOOSTER PRESSURE SENSOR

1. Measure the resistance between:

www.JagDocs.com

EC095, harness side	Battery
Pin 02	Negative terminal

- **Is the resistance less than 10 ohms?**

-> Yes
GO to Pinpoint Test G531322t32.

-> No
GO to Pinpoint Test G531322t29.

G531322t29 : CHECK THE BOOSTER PRESSURE SENSOR GROUND CIRCUIT FOR SHORT CIRCUIT TO POWER

1. Measure the resistance between:

EC095, harness side	Battery
Pin 02	Positive terminal

- **Is the resistance greater than 10 Kohms?**

-> Yes
GO to Pinpoint Test G531322t31.

-> No
GO to Pinpoint Test G531322t30.

G531322t30 : CHECK WHETHER THE SHORT CIRCUIT IS IN THE HARNESS OR THE MODULE

1. Key off. 2. Disconnect the ABS module connector, EC030. 3. Key on, engine off. 4. Measure the resistance between:

EC095, harness side	Battery
Pin 02	Positive terminal

- **Is the resistance greater than 10 Kohms?**

-> Yes
Refer to the warranty policy and procedures manual if a module is suspect.

-> No
REPAIR the short circuit. For additional information, refer to the wiring diagrams. Clear the DTC, test the system for normal operation by applying and releasing the brake pedal firmly three times with the engine running.

G531322t31 : CHECK THE BOOSTER PRESSURE SENSOR GROUND CIRCUIT FOR HIGH RESISTANCE

1. Key off. 2. Disconnect the ABS module connector, EC030. 3. Key on, engine off. 4. Measure the resistance between:

EC095, harness side	EC030, harness side
Pin 02	Pin 27

- **Is the resistance less than 10 ohms?**

-> Yes
An intermittent fault may be present in the wiring harness. Visually check for chaffed wires or other physical damage to the harness. If no fault is found in the harness, suspect the following components: - Booster pressure sensor connector - ABS module connector - ABS module

-> No
REPAIR the high resistance circuit. For additional information, refer to the wiring diagrams. Clear the DTC, test the system for normal operation by applying and releasing the brake pedal firmly three times with the engine running.

G531322t32 : CHECK THE BOOSTER PRESSURE SENSOR SIGNAL A CIRCUIT FOR SHORT CIRCUIT TO GROUND

1. Measure the resistance between:

EC095, harness side	Battery
Pin 04	Negative terminal

- **Is the resistance greater than 10 Kohms?**

www.JagDocs.com

-> Yes
GO to Pinpoint Test G531322t34.

-> No
GO to Pinpoint Test G531322t33.

G531322t33 : CHECK WHETHER THE SHORT CIRCUIT IS IN THE HARNESS OR THE MODULE

1. Key off. 2. Disconnect the ABS module connector, EC030. 3. Key on, engine off. 4. Measure the resistance between:

EC095, harness side	Battery
Pin 04	Negative terminal

- **Is the resistance greater than 10 Kohms?**

-> Yes
Refer to the warranty policy and procedures manual if a module is suspect.

-> No
REPAIR the short circuit. For additional information, refer to the wiring diagrams. Clear the DTC, test the system for normal operation by applying and releasing the brake pedal firmly three times with the engine running.

G531322t34 : CHECK THE BOOSTER PRESSURE SENSOR SIGNAL A CIRCUIT FOR SHORT CIRCUIT TO POWER

1. Measure the resistance between:

EC095, harness side	Battery
Pin 04	Positive terminal

- **Is the resistance greater than 10 Kohms?**

-> Yes
GO to Pinpoint Test G531322t36.

-> No

GO to Pinpoint Test G531322t35.

G531322t35 : CHECK WHETHER THE SHORT CIRCUIT IS IN THE HARNESS OR THE MODULE

1. Key off. 2. Disconnect the ABS module connector, EC030. 3. Key on, engine off. 4. Measure the resistance between:

EC095, harness side	Battery
Pin 04	Positive terminal

- **Is the resistance greater than 10 Kohms?**

-> Yes
Refer to the warranty policy and procedures manual if a module is suspect.

-> No
REPAIR the short circuit. For additional information, refer to the wiring diagrams. Clear the DTC, test the system for normal operation by applying and releasing the brake pedal firmly three times with the engine running.

G531322t36 : CHECK THE BOOSTER PRESSURE SENSOR SIGNAL B CIRCUIT FOR SHORT CIRCUIT TO GROUND

1. Measure the resistance between:

EC095, harness side	Battery
Pin 01	Negative terminal

- **Is the resistance greater than 10 Kohms?**

-> Yes
GO to Pinpoint Test G531322t38.

-> No
GO to Pinpoint Test G531322t37.

www.JagDocs.com

G531322t37 : CHECK WHETHER THE SHORT CIRCUIT IS IN THE HARNESS OR THE MODULE

1. Key off. 2. Disconnect the ABS module connector, EC030. 3. Key on, engine off. 4. Measure the resistance between:

EC095, harness side	Battery
Pin 01	Negative terminal

- **Is the resistance greater than 10 Kohms?**

-> Yes
Refer to the warranty policy and procedures manual if a module is suspect.

-> No
REPAIR the short circuit. For additional information, refer to the wiring diagrams. Clear the DTC, test the system for normal operation by applying and releasing the brake pedal firmly three times with the engine running.

G531322t38 : CHECK THE BOOSTER PRESSURE SENSOR SIGNAL B CIRCUIT FOR SHORT CIRCUIT TO POWER

1. Measure the resistance between:

EC095, harness side	Battery
Pin 01	Positive terminal

- **Is the resistance greater than 10 Kohms?**

-> Yes
GO to Pinpoint Test G531322t40.

-> No
GO to Pinpoint Test G531322t39.

G531322t39 : CHECK WHETHER THE SHORT CIRCUIT IS IN THE HARNESS OR THE MODULE

1. Key off. 2. Disconnect the ABS module connector, EC030. 3. Key on, engine off. 4. Measure the resistance between:

EC095, harness side	Battery
Pin 01	Positive terminal

- **Is the resistance greater than 10 Kohms?**

-> Yes
Refer to the warranty policy and procedures manual if a module is suspect.

-> No
REPAIR the short circuit. For additional information, refer to the wiring diagrams. Clear the DTC, test the system for normal operation by applying and releasing the brake pedal firmly three times with the engine running.

G531322t40 : CHECK THE BOOSTER PRESSURE SENSOR SIGNAL A CIRCUIT FOR HIGH RESISTANCE

1. Key off. 2. Disconnect the ABS module connector, EC030. 3. Key on, engine off. 4. Measure the resistance between:

EC095, harness side	EC030, harness side
Pin 04	Pin 38

- **Is the resistance less than 10 ohms?**

-> Yes
GO to Pinpoint Test G531322t41.

-> No
REPAIR the high resistance circuit. For additional information, refer to the wiring diagrams. Clear the DTC, test the system for normal operation by applying and releasing the brake pedal firmly three times with the engine running.

G531322t41 : CHECK THE BOOSTER PRESSURE SENSOR SIGNAL B CIRCUIT FOR HIGH RESISTANCE

1. Measure the resistance between:

EC095, harness side	EC030, harness side
Pin 01	Pin 30

www.JagDocs.com

- **Is the resistance less than 10 ohms?**

-> Yes
GO to Pinpoint Test G531322t42.

-> No
REPAIR the high resistance circuit. For additional information, refer to the wiring diagrams. Clear the DTC, test the system for normal operation by applying and releasing the brake pedal firmly three times with the engine running.

G531322t42 : CHECK THE BOOSTER PRESSURE SENSOR SIGNAL A AND B CIRCUITS FOR SHORT CIRCUIT TO EACH OTHER

1. Measure the resistance between:

EC095, harness side	EC095, harness side
Pin 01	Pin 04

- **Is the resistance greater than 10 Kohms?**

-> Yes
An intermittent fault may be present in the wiring harness. Visually check for chaffed wires or other physical damage to the harness.

-> No
REPAIR the short circuit. For additional information, refer to the wiring diagrams. Clear the DTC, test the system for normal operation by applying and releasing the brake pedal firmly three times with the engine running.

PINPOINT TEST G531322p9 : STEERING WHEEL ROTATION SENSOR

G531322t43 : CHECK THE POWER SUPPLY TO THE STEERING WHEEL ROTATION SENSOR

1.

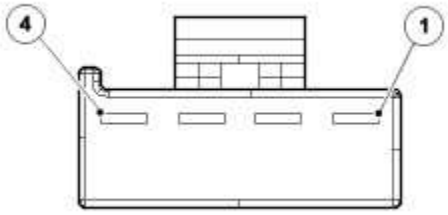

E65720

Circuit	Pin
Sensor power	01
Signal B	02
Signal A	03
Sensor return	04

2.

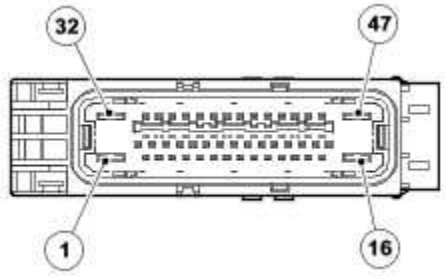

E65715

Circuit	Pin
Sensor power	05
Signal B	09
Signal A	41
Sensor return	40

3. Key off. 4. Disconnect the steering wheel rotation sensor connector, IP037. 5. Key on, engine off. 6. Measure the voltage between:

www.JagDocs.com

IP037, harness side	Battery
01	Negative terminal

- **Is the voltage greater than 4 volts?**

-> Yes
GO to Pinpoint Test G531322t46.

-> No
GO to Pinpoint Test G531322t44.

G531322t44 : CHECK THE STEERING WHEEL ROTATION SENSOR POWER SUPPLY CIRCUIT FOR SHORT CIRCUIT TO GROUND

1. Measure the resistance between:

IP037, harness side	Battery
01	Positive terminal

- **Is the resistance greater than 10 Kohms?**

-> Yes
GO to Pinpoint Test G531322t45.

-> No
REPAIR the short circuit. For additional information, refer to the wiring diagrams. Clear the DTC, test the system for normal operation by turning the steering from the center position to full right hand lock, to full left hand lock and back to the center position before road testing the vehicle on roads requiring steering input.

G531322t45 : CHECK THE STEERING WHEEL ROTATION SENSOR POWER SUPPLY CIRCUIT FOR HIGH RESISTANCE

1. Key off. 2. Disconnect the ABS module connector, EC030. 3. Measure the resistance between:

FH110, harness side	EC030, harness side
Pin 01	Pin 05

- **Is the resistance less than 10 ohms?**

-> Yes
An intermittent fault may be present in the wiring harness. Visually check for chaffed wires or other physical damage to the harness.

-> No
REPAIR the high resistance circuit. For additional information, refer to the wiring diagrams. Clear the DTC, test the system for normal operation by turning the steering from the center position to full right hand lock, to full left hand lock and back to the center position before road testing the vehicle on roads requiring steering input.

G531322t46 : CHECK THE GROUND CIRCUIT TO THE STEERING WHEEL ROTATION SENSOR

1. Measure the resistance between:

FH110, harness side	Battery
Pin 04	Negative terminal

- **Is the resistance less than 10 ohms?**

-> Yes
GO to Pinpoint Test G531322t50.

-> No
GO to Pinpoint Test G531322t47.

G531322t47 : CHECK THE STEERING WHEEL ROTATION SENSOR GROUND CIRCUIT FOR SHORT CIRCUIT TO POWER

1. Measure the resistance between:

FH110, harness side	Battery
Pin 04	Positive terminal

- **Is the resistance greater than 10 Kohms?**

www.JagDocs.com

-> Yes
GO to Pinpoint Test G531322t49.

-> No
GO to Pinpoint Test G531322t48.

G531322t48 : CHECK WHETHER THE SHORT CIRCUIT IS IN THE HARNESS OR THE MODULE

1. Key off. 2. Disconnect the ABS module connector, EC030. 3. Key on, engine off. 4. Measure the resistance between:

FH110, harness side	Battery
Pin 04	Positive terminal

- **Is the resistance greater than 10 Kohms?**

-> Yes
Refer to the warranty policy and procedures manual if a module is suspect.

-> No
REPAIR the short circuit. For additional information, refer to the wiring diagrams. Clear the DTC, test the system for normal operation by turning the steering from the center position to full right hand lock, to full left hand lock and back to the center position before road testing the vehicle on roads requiring steering input.

G531322t49 : CHECK THE STEERING WHEEL ROTATION SENSOR GROUND CIRCUIT FOR HIGH RESISTANCE

1. Key off. 2. Disconnect the ABS module connector, EC030. 3. Measure the resistance between:

FH110, harness side	EC030, harness side
Pin 04	Pin 40

- **Is the resistance less than 10 ohms?**

-> Yes
An intermittent fault may be present in the wiring harness. Visually check for chaffed wires or other physical damage to the harness.

-> No
REPAIR the high resistance circuit. For additional information, refer to the wiring diagrams. Clear the DTC, test the system for normal operation by turning the steering from the center position to full right hand lock, to full left hand lock and back to the center position before road testing the vehicle on roads requiring steering input.

G531322t50 : CHECK THE STEERING WHEEL ROTATION SENSOR SIGNAL A CIRCUIT FOR SHORT CIRCUIT TO GROUND

1. Measure the resistance between:

FH110, harness side	Battery
Pin 03	Negative terminal

- **Is the resistance greater than 10 Kohms?**

-> Yes
GO to Pinpoint Test G531322t52.

-> No
GO to Pinpoint Test G531322t51.

G531322t51 : CHECK WHETHER THE SHORT CIRCUIT IS IN THE HARNESS OR THE MODULE

1. Key off. 2. Disconnect the ABS module connector, EC030. 3. Key on, engine off. 4. Measure the resistance between:

FH110, harness side	Battery
Pin 03	Negative terminal

- **Is the resistance greater than 10 Kohms?**

-> Yes
Refer to the warranty policy and procedures manual if a module is suspect.

-> No
REPAIR the short circuit. For additional information, refer to the wiring diagrams. Clear the DTC, test the system for normal operation by turning the steering from the center position to full right hand

www.JagDocs.com

lock, to full left hand lock and back to the center position before road testing the vehicle on roads requiring steering input.

G531322t52 : CHECK THE STEERING WHEEL ROTATION SENSOR SIGNAL A CIRCUIT FOR SHORT CIRCUIT TO POWER

1. Measure the resistance between:

FH110, harness side	Battery
Pin 03	Positive terminal

- **Is the resistance greater than 10 Kohms?**

-> Yes
GO to Pinpoint Test G531322t54.

-> No
GO to Pinpoint Test G531322t53.

G531322t53 : CHECK WHETHER THE SHORT CIRCUIT IS IN THE HARNESS OR THE MODULE

1. Key off. 2. Disconnect the ABS module connector, EC030. 3. Key on, engine off. 4. Measure the resistance between:

FH110, harness side	Battery
Pin 03	Positive terminal

- **Is the resistance greater than 10 Kohms?**

-> Yes
Refer to the warranty policy and procedures manual if a module is suspect.

-> No
REPAIR the short circuit. For additional information, refer to the wiring diagrams. Clear the DTC, test the system for normal operation by turning the steering from the center position to full right hand lock, to full left hand lock and back to the center position before road testing the vehicle on roads requiring steering input.

G531322t54 : CHECK THE STEERING WHEEL ROTATION SENSOR SIGNAL B CIRCUIT FOR SHORT CIRCUIT TO GROUND

1. Measure the resistance between:

FH110, harness side	Battery
Pin 02	Negative terminal

- **Is the resistance greater than 10 Kohms?**

-> Yes
GO to Pinpoint Test G531322t56.

-> No
GO to Pinpoint Test G531322t55.

G531322t55 : CHECK WHETHER THE SHORT CIRCUIT IS IN THE HARNESS OR THE MODULE

1. Key off. 2. Disconnect the ABS module connector, EC030. 3. Key on, engine off. 4. Measure the resistance between:

FH110, harness side	Battery
Pin 02	Negative terminal

- **Is the resistance greater than 10 Kohms?**

-> Yes
Refer to the warranty policy and procedures manual if a module is suspect.

-> No
REPAIR the short circuit. For additional information, refer to the wiring diagrams. Clear the DTC, test the system for normal operation by turning the steering from the center position to full right hand lock, to full left hand lock and back to the center position before road testing the vehicle on roads requiring steering input.

G531322t56 : CHECK THE STEERING WHEEL ROTATION SENSOR SIGNAL B CIRCUIT FOR SHORT CIRCUIT TO POWER

1. Measure the resistance between:

www.JagDocs.com

FH110, harness side	Battery
Pin 02	Positive terminal

- **Is the resistance greater than 10 Kohms?**

-> Yes
GO to Pinpoint Test G531322t58.

-> No
GO to Pinpoint Test G531322t57.

G531322t57 : CHECK WHETHER THE SHORT CIRCUIT IS IN THE HARNESS OR THE MODULE

1. Key off. 2. Disconnect the ABS module connector, EC030. 3. Key on, engine off. 4. Measure the resistance between:

FH110, harness side	Battery
Pin 02	Positive terminal

- **Is the resistance greater than 10 Kohms?**

-> Yes
Refer to the warranty policy and procedures manual if a module is suspect.

-> No
REPAIR the short circuit. For additional information, refer to the wiring diagrams. Clear the DTC, test the system for normal operation by turning the steering from the center position to full right hand lock, to full left hand lock and back to the center position before road testing the vehicle on roads requiring steering input.

G531322t58 : CHECK THE STEERING WHEEL ROTATION SENSOR SIGNAL A CIRCUIT FOR HIGH RESISTANCE

1. Key off. 2. Disconnect the ABS module connector, EC030. 3. Key on, engine off. 4. Measure the resistance between:

FH110, harness side	EC030, harness side

Pin 03	Pin 41

- **Is the resistance less than 10 ohms?**

-> Yes
GO to Pinpoint Test G531322t59.

-> No
REPAIR the high resistance circuit. For additional information, refer to the wiring diagrams. Clear the DTC, test the system for normal operation by turning the steering from the center position to full right hand lock, to full left hand lock and back to the center position before road testing the vehicle on roads requiring steering input.

G531322t59 : CHECK THE STEERING WHEEL ROTATION SENSOR SIGNAL B CIRCUIT FOR HIGH RESISTANCE

1. Measure the resistance between:

FH110, harness side	EC030, harness side
Pin 02	Pin 41

- **Is the resistance less than 10 ohms?**

-> Yes
GO to Pinpoint Test G531322t60.

-> No
REPAIR the high resistance circuit. For additional information, refer to the wiring diagrams. Clear the DTC, test the system for normal operation by turning the steering from the center position to full right hand lock, to full left hand lock and back to the center position before road testing the vehicle on roads requiring steering input.

G531322t60 : CHECK THE STEERING WHEEL ROTATION SENSOR SIGNAL A AND B CIRCUITS FOR SHORT CIRCUIT TO EACH OTHER

1. Measure the resistance between:

FH110, harness side	FH110, harness side
Pin 02	Pin 03

www.JagDocs.com

- **Is the resistance greater than 100 Kohms?**

-> Yes
An intermittent fault may be present in the wiring harness. Visually check for chaffed wires or other physical damage to the harness.

-> No
REPAIR the short circuit. For additional information, refer to the wiring diagrams. Clear the DTC, test the system for normal operation by turning the steering from the center position to full right hand lock, to full left hand lock and back to the center position before road testing the vehicle on roads requiring steering input.

PINPOINT TEST G531322p10 : YAW RATE SENSOR AND ACCELEROMETER

G531322t61 : CHECK THE POWER SUPPLY TO THE YAW RATE SENSOR AND ACCELEROMETER

1.

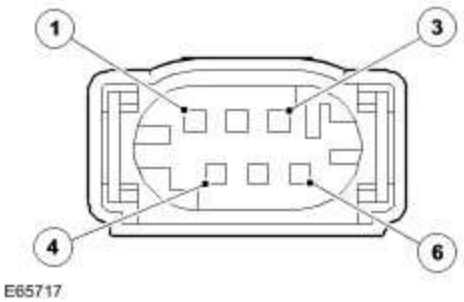

Circuit	Pin
CAN negative	01
CAN positive	02
Sensor power	03
Sensor ground	05

2.

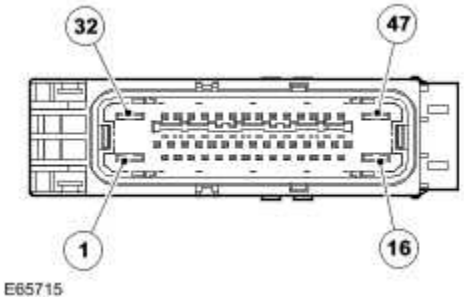

Circuit	Pin
CAN negative	19
CAN positive	18
Sensor power	22
Sensor ground	29

3. Key off. 4. Disconnect the yaw rate sensor and accelerometer connector, IP023 5. Key on, engine off. 6. Measure the resistance between:

IP023, harness side	Battery
Pin 03	Negative terminal

- **Is the voltage greater than 4 volts?**

-> Yes
GO to Pinpoint Test G531322t64.

-> No
GO to Pinpoint Test G531322t62.

G531322t62 : CHECK THE YAW RATE SENSOR AND ACCELEROMETER POWER SUPPLY CIRCUIT FOR SHORT CIRCUIT TO GROUND

1. Measure the resistance between:

IP023, harness side	Battery

www.JagDocs.com

Pin 03	Negative terminal

- **Is the resistance greater than 10 Kohms?**

-> Yes
GO to Pinpoint Test G531322t63.

-> No
REPAIR the short circuit. For additional information, refer to the wiring diagrams. Clear the DTC, test the system for normal operation by driving the vehicle to a speed greater than 20 Kph (12.5 mph) for more than 3 seconds.

G531322t63 : CHECK THE YAW RATE SENSOR AND ACCELEROMETER POWER SUPPLY CIRCUIT FOR HIGH RESISTANCE

1. Key off. 2. Disconnect the ABS module connector, EC030. 3. Measure the resistance between:

IP023, harness side	EC030, harness side
Pin 03	Pin 22

- **Is the resistance less than 10 ohms?**

-> Yes
An intermittent fault may be present in the wiring harness. Visually check for chaffed wires or other physical damage to the harness.

-> No
REPAIR the high resistance circuit. For additional information, refer to the wiring diagrams. Clear the DTC, test the system for normal operation by driving the vehicle to a speed greater than 20 Kph (12.5 mph) for more than 3 seconds.

G531322t64 : CHECK THE GROUND CIRCUIT TO THE YAW RATE SENSOR AND ACCELEROMETER

1. Measure the resistance between:

IP023, harness side	Battery
Pin 05	Negative terminal

- **Is the resistance less than 10 ohms?**

-> Yes
GO to Pinpoint Test G531322t68.

-> No
GO to Pinpoint Test G531322t65.

G531322t65 : CHECK THE YAW RATE SENSOR AND ACCELEROMETER GROUND CIRCUIT FOR SHORT CIRCUIT TO POWER

1. Measure the resistance between:

IP023, harness side	Battery
Pin 05	Positive terminal

- **Is the resistance greater than 10 Kohms?**

-> Yes
GO to Pinpoint Test G531322t67.

-> No
GO to Pinpoint Test G531322t66.

G531322t66 : CHECK WHETHER THE SHORT CIRCUIT IS IN THE HARNESS OR THE MODULE

1. Key off. 2. Disconnect the ABS module connector, EC030. 3. Key on, engine off. 4. Measure the resistance between:

IP023, harness side	Battery
Pin 05	Positive terminal

- **Is the resistance greater than 10 Kohms?**

-> Yes
Refer to the warranty policy and procedures manual if a module is suspect.

www.JagDocs.com

-> No
REPAIR the short circuit. For additional information, refer to the wiring diagrams. Clear the DTC, test the system for normal operation by driving the vehicle to a speed greater than 20 Kph (12.5 mph) for more than 3 seconds.

G531322t67 : CHECK THE YAW RATE SENSOR AND ACCELEROMETER GROUND CIRCUIT FOR HIGH RESISTANCE

1. Key off. 2. Disconnect the ABS module connector, EC030. 3. Key on, engine off. 4. Measure the resistance between:

IP023, harness side	EC030, harness side
Pin 05	Pin 29

- **Is the resistance less than 10 ohms?**

-> Yes
An intermittent fault may be present in the wiring harness. Visually check for chaffed wires or other physical damage to the harness.

-> No
REPAIR the high resistance circuit. For additional information, refer to the wiring diagrams. Clear the DTC, test the system for normal operation by driving the vehicle to a speed greater than 20 Kph (12.5 mph) for more than 3 seconds.

G531322t68 : CHECK THE YAW RATE SENSOR AND ACCELEROMETER CAN - CIRCUIT FOR SHORT CIRCUIT TO GROUND

1. Measure the resistance between:

IP023, harness side	Battery
Pin 01	Negative terminal

- **Is the resistance greater than 10 Kohms?**

-> Yes
GO to Pinpoint Test G531322t70.

-> No
GO to Pinpoint Test G531322t69.

G531322t69 : CHECK WHETHER THE SHORT CIRCUIT IS IN THE HARNESS OR THE MODULE

1. Key off. 2. Disconnect the ABS module connector, EC030. 3. Key on, engine off. 4. Measure the resistance between:

IP023, harness side	Battery
Pin 01	Negative terminal

- **Is the resistance greater than 10 Kohms?**

-> Yes
Refer to the warranty policy and procedures manual if a module is suspect.

-> No
REPAIR the short circuit. For additional information, refer to the wiring diagrams. Clear the DTC, test the system for normal operation by driving the vehicle to a speed greater than 20 Kph (12.5 mph) for more than 3 seconds.

G531322t70 : CHECK THE YAW RATE SENSOR AND ACCELEROMETER CAN - CIRCUIT FOR SHORT CIRCUIT TO POWER

1. Measure the resistance between:

IP023, harness side	Battery
Pin 01	Positive terminal

- **Is the resistance greater than 10 Kohms?**

-> Yes
GO to Pinpoint Test G531322t72.

-> No
GO to Pinpoint Test G531322t71.

G531322t71 : CHECK WHETHER THE SHORT CIRCUIT IS IN THE HARNESS OR THE MODULE

1. Key off. 2. Disconnect the ABS module connector, EC030. 3. Key on, engine off. 4. Measure the resistance between:

www.JagDocs.com

IP023, harness side	Battery
Pin 01	Positive terminal

- **Is the resistance greater than 10 Kohms?**

-> Yes
Refer to the warranty policy and procedures manual if a module is suspect.

-> No
REPAIR the short circuit. For additional information, refer to the wiring diagrams. Clear the DTC, test the system for normal operation by driving the vehicle to a speed greater than 20 Kph (12.5 mph) for more than 3 seconds.

G531322t72 : CHECK THE YAW RATE SENSOR AND ACCELEROMETER CAN + CIRCUIT FOR SHORT CIRCUIT TO GROUND

1. Measure the resistance between:

IP023, harness side	Battery
Pin 02	Negative terminal

- **Is the resistance greater than 10 Kohms?**

-> Yes
GO to Pinpoint Test G531322t74.

-> No
GO to Pinpoint Test G531322t73.

G531322t73 : CHECK WHETHER THE SHORT CIRCUIT IS IN THE HARNESS OR THE MODULE

1. Key off. 2. Disconnect the ABS module connector, EC030. 3. Key on, engine off. 4. Measure the resistance between:

IP023, harness side	Battery
Pin 02	Negative terminal

- **Is the resistance greater than 10 Kohms?**

-> Yes
Refer to the warranty policy and procedures manual if a module is suspect.

-> No
REPAIR the short circuit. For additional information, refer to the wiring diagrams. Clear the DTC, test the system for normal operation by driving the vehicle to a speed greater than 20 Kph (12.5 mph) for more than 3 seconds.

G531322t74 : CHECK THE YAW RATE SENSOR AND ACCELEROMETER CAN + CIRCUIT FOR SHORT CIRCUIT TO POWER

1. Measure the resistance between:

IP023, harness side	Battery
Pin 02	Positive terminal

- **Is the resistance greater than 10 Kohms?**

-> Yes
GO to Pinpoint Test G531322t76.

-> No
GO to Pinpoint Test G531322t75.

G531322t75 : CHECK WHETHER THE SHORT CIRCUIT IS IN THE HARNESS OR THE MODULE

1. Key off. 2. Disconnect the ABS module connector, EC030. 3. Key on, engine off. 4. Measure the resistance between:

IP023, harness side	Battery
Pin 02	Positive terminal

- **Is the resistance greater than 10 Kohms?**

-> Yes
Refer to the warranty policy and procedures manual if a module is suspect.

www.JagDocs.com

-> No
REPAIR the short circuit. For additional information, refer to the wiring diagrams. Clear the DTC, test the system for normal operation by driving the vehicle to a speed greater than 20 Kph (12.5 mph) for more than 3 seconds.

G531322t76 : CHECK THE YAW RATE SENSOR AND ACCELEROMETER CAN - CIRCUIT FOR HIGH RESISTANCE

1. Key off. 2. Disconnect the ABS module connector, EC030. 3. Key on, engine off. 4. Measure the resistance between:

IP023, harness side	EC030, harness side
Pin 01	Pin 19

- **Is the resistance less than 10 ohms?**

-> Yes
GO to Pinpoint Test G531322t77.

-> No
REPAIR the high resistance circuit. For additional information, refer to the wiring diagrams. Clear the DTC, test the system for normal operation by driving the vehicle to a speed greater than 20 Kph (12.5 mph) for more than 3 seconds.

G531322t77 : CHECK THE YAW RATE SENSOR AND ACCELEROMETER CAN + CIRCUIT FOR HIGH RESISTANCE

1. Measure the resistance between:

IP023, harness side	EC030, harness side
Pin 02	Pin 18

- **Is the resistance less than 10 ohms?**

-> Yes
GO to Pinpoint Test G531322t78.

-> No
REPAIR the high resistance circuit. For additional information, refer to the wiring diagrams. Clear the

DTC, test the system for normal operation by driving the vehicle to a speed greater than 20 Kph (12.5 mph) for more than 3 seconds.

G531322t78 : CHECK THE YAW RATE SENSOR AND ACCELEROMETER CAN + AND - CIRCUITS FOR SHORT CIRCUIT TO EACH OTHER

1. Measure the resistance between:

IP023, harness side	IP023, harness side
Pin 02	Pin 01

- **Is the resistance greater than 10 Kohms?**

-> Yes
An intermittent fault may be present in the wiring harness. Visually check for chaffed wires or other physical damage to the harness.

-> No
REPAIR the short circuit. For additional information, refer to the wiring diagrams. Clear the DTC, test the system for normal operation by driving the vehicle to a speed greater than 20 Kph (12.5 mph) for more than 3 seconds.

www.JagDocs.com

Anti-Lock Brake System (ABS) Module (70.60.02)

Removal

1 . Disconnect the battery ground cable. <<414-01>>

2 . Disconnect the hydraulic control unit electrical connector.

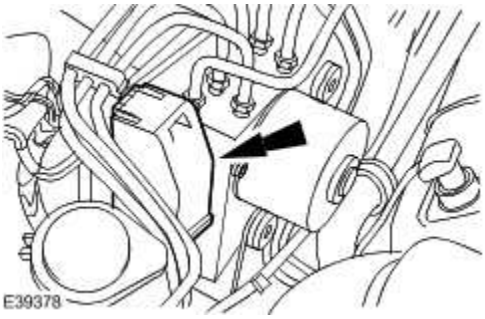

3 . Detach the engine compartment battery junction box.

4 . Remove the ABS module.

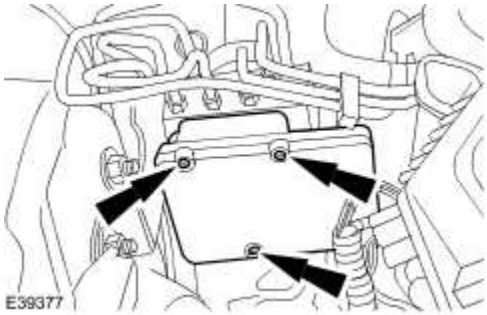

Installation

1 . To install, reverse the removal procedure.

Brake Master Cylinder Pressure Transducer

Removal

1. **WARNING: Brake fluid contains polyglycol ethers and polyglycols. Avoid contact with the eyes. Wash hands thoroughly after handling, as prolonged contact may cause irritation and dermatitis. If brake fluid contacts the eyes, flush the eyes with cold water or eyewash solution and seek medical attention. If taken internally do not induce vomiting, seek immediate medical attention. Failure to follow these instructions may result in personal injury.**

   Disconnect the battery ground cable. <<414-01>>

2. Disconnect the brake master cylinder primary pressure transducer electrical connector.

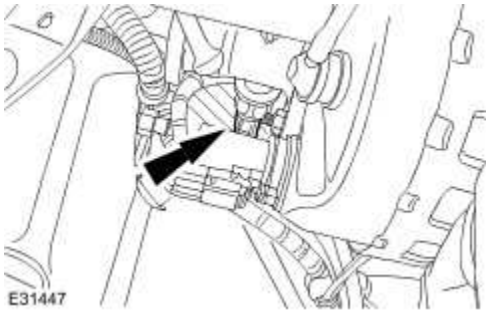

3. **CAUTION: If brake fluid is spilt on the paintwork, the effected area must be immediately washed down with cold water.**

   Remove the brake master cylinder primary pressure transducer.

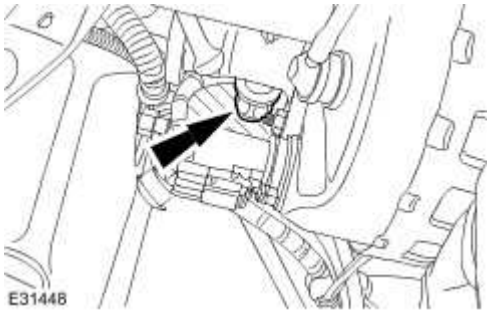

www.JagDocs.com

Installation

1 . To install, reverse the removal procedure.

Tighten 30 Nm.

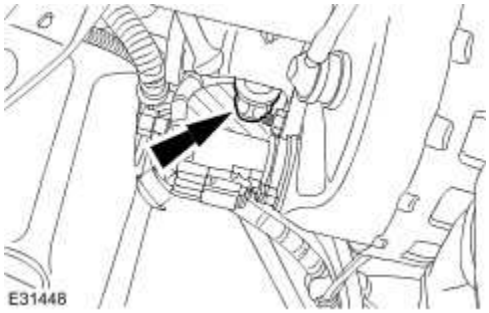

2 . Bleed the ABS brake system. <<206-00>>

Brake Pedal Travel Sensor - VIN Range: G00442->G49700

Removal

WARNING: Failure to carry out procedure may result in damage to the vehicle.

1 . Depress brake pedal 20 times to remove vacuum from brake booster.

2 . Remove the brake pedal travel sensor.

- Disconnect the brake pedal travel sensor electrical connector.
- Using a suitable pick, remove the spring clip.

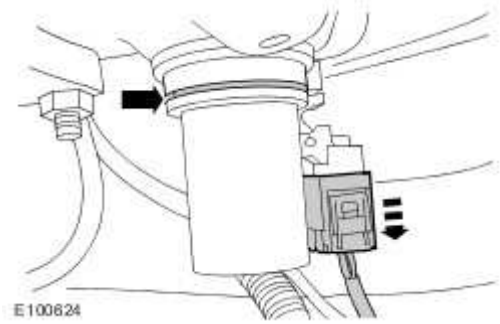

Installation

1 . Fit new spring clip to sensor housing, ensuring correct alignment.

2 . Lubricate new seal with water and fit seal to the sensor.

3 . Fit and fully seat new brake pedal travel sensor.

- Connect the brake pedal travel sensor electrical connector.

www.JagDocs.com

Front Wheel Speed Sensor (70.60.03)

Removal

1 . Raise and support the vehicle. <<100-02>>

2 . **CAUTION: Make sure the ignition is in the 'OFF' position before disconnecting the front wheel speed sensor electrical connector.**

Detach the front wheel speed sensor.

1) Remove the front wheel speed sensor retaining clip.

2) Detach the front wheel speed sensor.

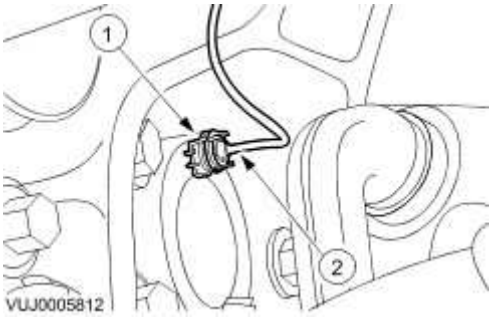

3 . Detach the front wheel speed sensor harness.

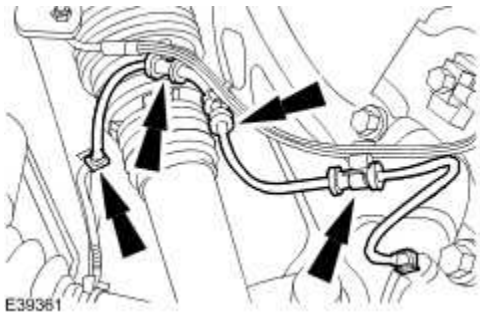

4 . Remove the front wheel speed sensor.

Disconnect the electrical connector.

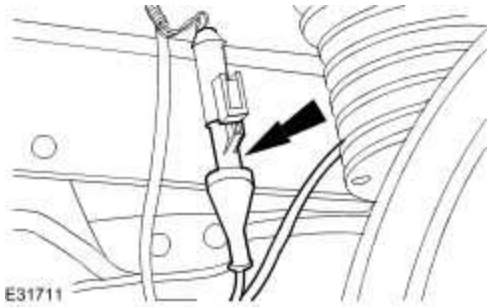

Installation

1. **CAUTION: Make sure the wheel speed sensor locating tang is correctly seated in the hub assembly.**

CAUTION: Make sure the front wheel speed sensor harness is correctly routed around the front suspension components.

To install, reverse the removal procedure.

www.JagDocs.com

Hydraulic Control Unit (HCU) - VIN Range: G00442->G45703 (70.60.18)

Special Service Tools

Brake pedal hold-down tool
JDS 9013

Removal

1 . **WARNING: Brake fluid contains polyglycol ethers and polyglycols. Avoid contact with the eyes. Wash hands thoroughly after handling, as prolonged contact may cause irritation and dermatitis. If brake fluid contacts the eyes, flush the eyes with cold water or eyewash solution and seek medical attention. If taken internally do not induce vomiting, seek immediate medical attention. Failure to follow these instructions may result in personal injury.**

NOTE:

To prevent the loss of brake fluid, apply the brake pedal hold-down tool and adjust to hold the brake pedal down 60 mm (2.4 in).

Disconnect the battery ground cable.<<414-01>>

2 . Raise and support the vehicle. <<100-02>>

3 . Connect a bleed pipe bottle to the caliper bleed nipple and loosen the caliper bleed nipple.

4 . Install pedal hold-down tool.

- Install the tool between the pedal and the seat frame.

- Turn the tool hand-wheel to depress and hold the pedal 60 mm (2.4 in) from the 'Off' position
- This will prevent loss of fluid from the reservoir through disconnected brake pipes.

5 . Remove the bleed pipe and bottle.

- Tighten the caliper bleed nipple.
- Disconnect and remove the bleed pipe and bottle.
- Install the bleed nipple dust cap.

6 . **CAUTION: If brake fluid is spilt on the paintwork, the effected area must be immediately washed down with cold water.**

Disconnect the hydraulic control unit brake tubes.

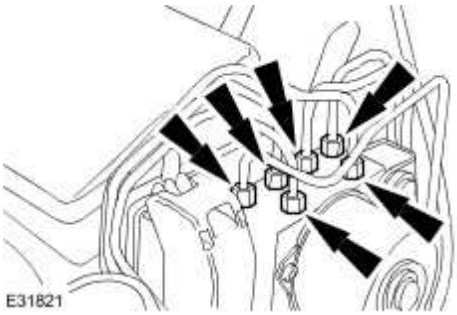

7 . Disconnect the hydraulic control unit electrical connector.

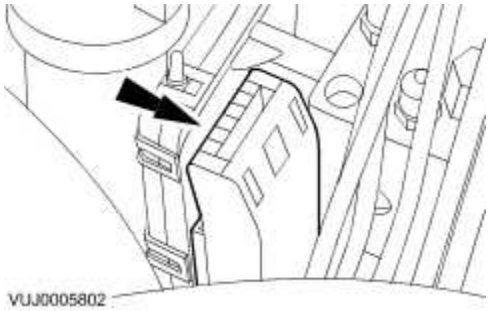

www.JagDocs.com

8 . Remove the hydraulic control unit.

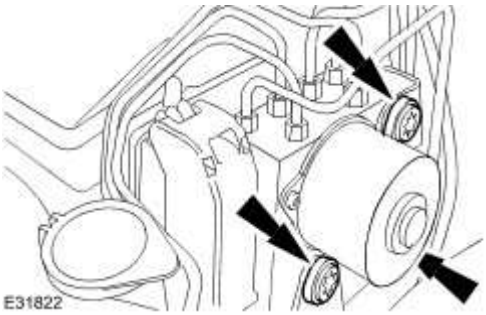

Installation

1 . To install, reverse the removal procedure.

Tighten to 9 Nm.

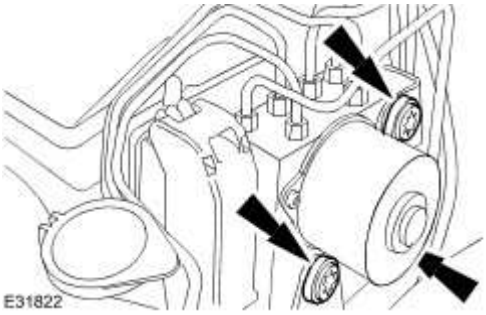

2 . Tighten to 17 Nm.

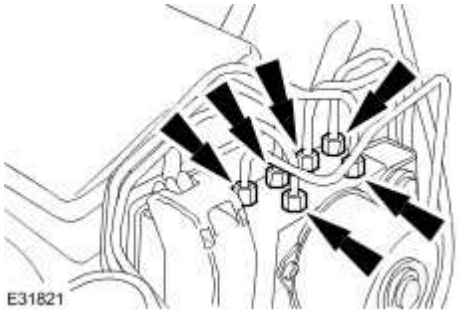

3 . Bleed the ABS brake system. <<206-00>>

Hydraulic Control Unit (HCU) - VIN Range: G45704->G99999 (70.60.18)

Special Service Tools

Brake pedal hold-down tool
JDS 9013

Removal

All vehicles

1. **WARNING: Brake fluid contains polyglycol ethers and polyglycols. Avoid contact with the eyes. Wash hands thoroughly after handling, as prolonged contact may cause irritation and dermatitis. If brake fluid contacts the eyes, flush the eyes with cold water or eyewash solution and seek medical attention. If taken internally do not induce vomiting, seek immediate medical attention. Failure to follow these instructions may result in personal injury.**

NOTE:

To prevent the loss of brake fluid, apply the brake pedal hold-down tool and adjust to hold the brake pedal down 60 mm (2.4 inch).

Disconnect the battery ground cable.
For additional information, refer to Battery Disconnect and Connect

2. Raise and support the vehicle.
For additional information, refer to Lifting

3. Connect brake bleed pipes and bottles to the left-hand front and the left-hand rear brake caliper bleed nipples and loosen the brake caliper bleed nipples.

www.JagDocs.com

4 Install pedal hold-down tool.

.

- Install the tool between the brake pedal and the seat frame.
- Turn the tool hand-wheel to press and hold the brake pedal 60 mm (2.4 inch) from the 'Off' position
- This will prevent loss of fluid from the reservoir through disconnected brake tubes.

Vehicles with standard brakes

5 . Remove the bleed pipes and bottles.

- Tighten the left-hand front caliper bleed nipple.
  - Tighten to 8 Nm.
- Tighten the left-hand rear brake caliper bleed nipple.
  - Tighten to 14 Nm.
- Disconnect and remove the brake bleed pipes and bottles.
- Install the bleed nipple dust caps.

Vehicles with high performance brakes

6 . Remove the bleed pipes and bottles.

- Tighten the left-hand front caliper bleed nipple.
  - Tighten to 14 Nm.
- Tighten the left-hand rear brake caliper bleed nipple.
  - Tighten to 14 Nm.
- Disconnect and remove the brake bleed pipes and bottles.
- Install the bleed nipple dust caps.

All vehicles

7 . Disconnect the hydraulic control unit (HCU) electrical connector.

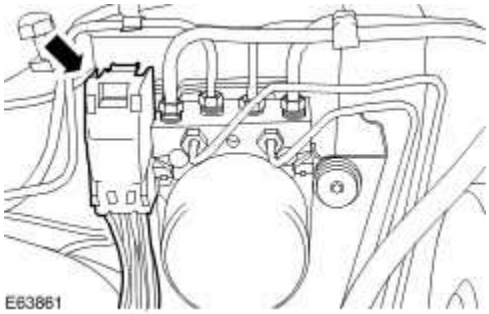

Right-hand drive vehicles

8 . **CAUTION: If brake fluid is spilt on the paintwork, the effected area must be immediately washed down with cold water. Failure to follow this instruction may result in damage to the vehicle.**

CAUTION: To minimise brake fluid loss the brake tubes must be disconnected in the order shown. Failure to follow this instruction may result in damage to the vehicle.

CAUTION: Cap the exposed brake tubes and ports to prevent loss of fluid and dirt ingress. Failure to follow this instruction may result in damage to the vehicle.

NOTE:

Using a suitable tool mark the position of the brake tubes to the HCU.

Disconnect the HCU brake tubes.

1) Disconnect the HCU primary and secondary circuit brake tubes.

2) Disconnect the HCU outlet brake tubes.

www.JagDocs.com

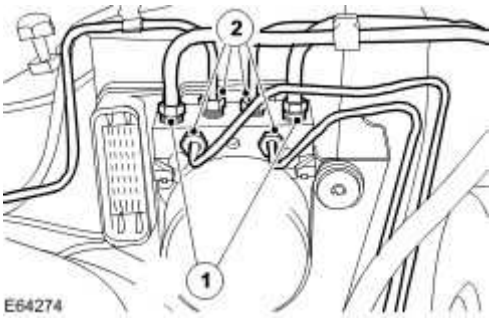

Left-hand drive vehicles

9. **CAUTION: If brake fluid is spilt on the paintwork, the effected area must be immediately washed down with cold water. Failure to follow this instruction may result in damage to the vehicle.**

CAUTION: To minimise brake fluid loss the brake tubes must be disconnected in the order shown. Failure to follow this instruction may result in damage to the vehicle.

CAUTION: Cap the exposed brake tubes and ports to prevent loss of fluid and dirt ingress. Failure to follow this instruction may result in damage to the vehicle.

NOTE:

Using a suitable tool mark the position of the brake tubes to the HCU.

Disconnect the HCU brake tubes.

1) Disconnect the HCU primary and secondary circuit brake tubes.

2) Disconnect the HCU outlet brake tubes.

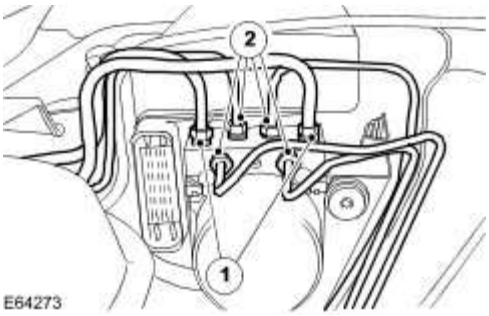

All vehicles

10 . Remove the HCU.

Installation

1 **NOTE:**

.

A new HCU does not come supplied with the HCU base bracket. The HCU base bracket should be removed and installed to the new HCU. The HCU base bracket securing bolts must be torqued if a new HCU is being installed to the vehicle.

- Tighten the three HCU base bracket securing bolts to 9 Nm.

To install, reverse the removal procedure.

2 . Tighten to 9 Nm.

www.JagDocs.com

3. **CAUTION: Make sure the brake tubes are installed to the correct ports. Failure to follow this instruction may result in damage to the vehicle.**

Tighten to 17 Nm.

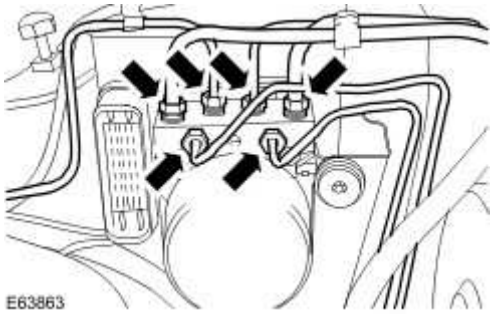

4. Bleed the anti-lock brake system (ABS).
   For additional information, refer to Brake System Bleeding - VIN Range: G45704->H99999 (70.25.03)

Rear Wheel Speed Sensor (70.60.04)

Removal

1 . Raise and support the vehicle. <<100-02>>

2 . **CAUTION: Make sure the ignition is in the 'OFF' position before disconnecting the rear wheel speed sensor electrical connector.**

Disconnect the rear wheel speed sensor electrical connector.

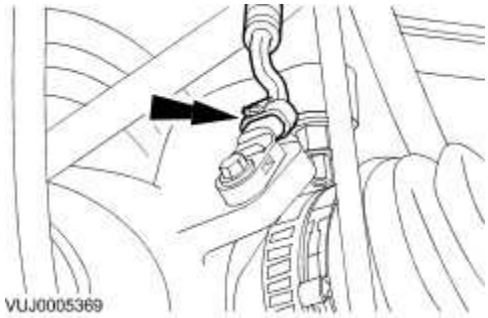

3 . Remove the rear wheel speed sensor.

- Remove the securing bolt.

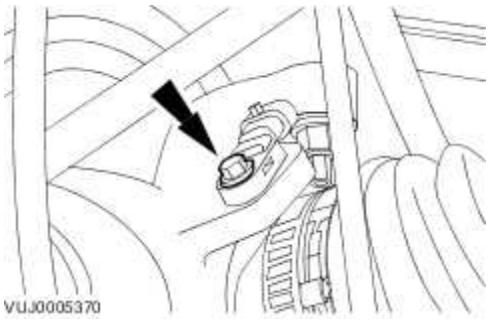

Installation

1 . To install, reverse the removal procedure.

- Tighten to 9 Nm.

www.JagDocs.com

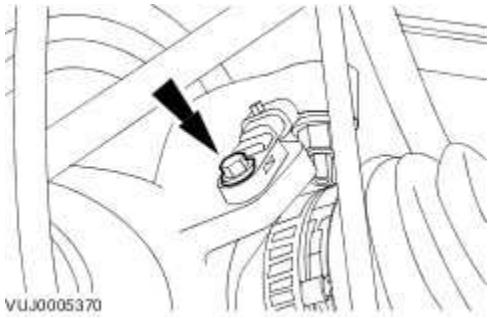
VUJ0005370

Steering Wheel Rotation Sensor (86.56.58)

Removal

1 . Disconnect the battery ground cable. <<414-01>>

2 . Remove the steering wheel. <<211-04>>

3 . Disconnect the steering wheel rotation sensor electrical connector.

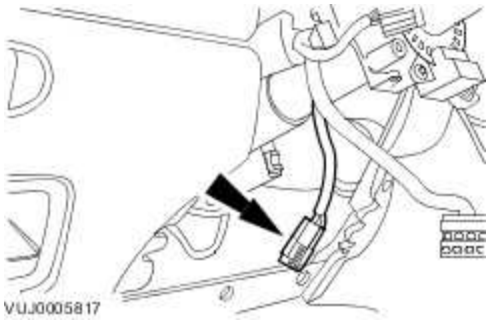

4 . Disconnect the steering wheel rotation sensor electrical wiring harness from steering column.

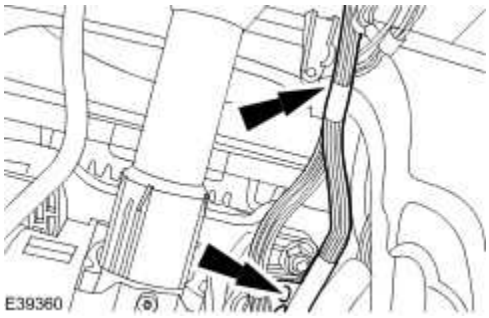

5 . Remove the steering wheel rotation sensor.

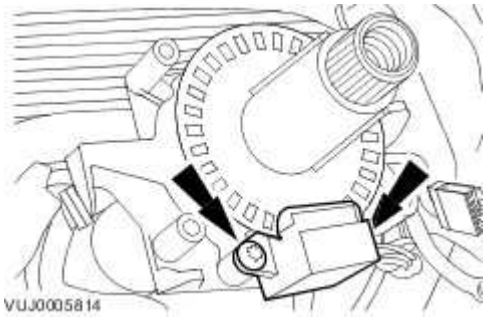

www.JagDocs.com

Installation

1 . **NOTE:**

Note the correct routing of the steering wheel rotation sensor electrical wiring harness.

To install, reverse the removal procedure.

Yaw Rate Sensor and Accelerometer (86.56.64)

Removal

1 . Disconnect the battery ground cable. <<414-01>>

2 . Remove the floor console. <<501-12>>

3 . Remove the air duct.

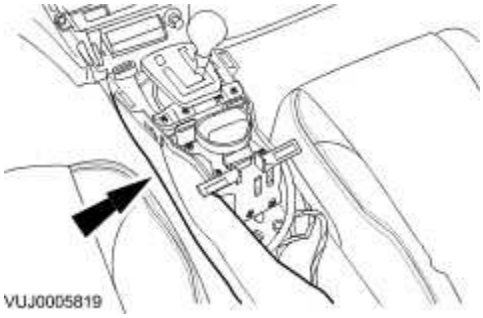

4 . Disconnect the lateral/yaw rate sensor electrical connector.

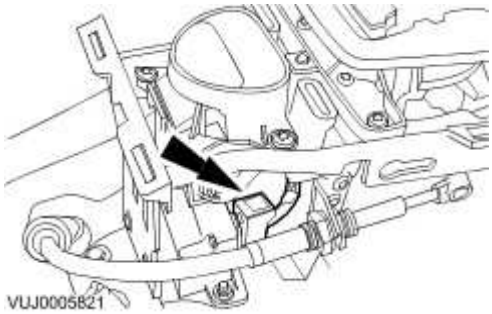

5 . Remove the lateral/yaw rate sensor.

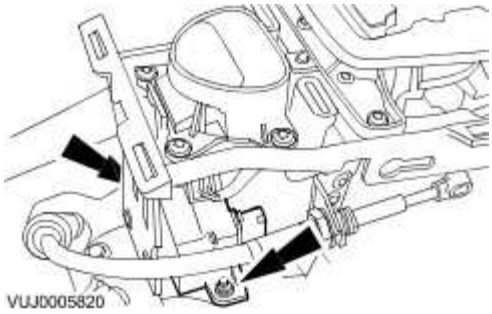

www.JagDocs.com

Installation

1 . **NOTE:**

If sensor appears damaged or is dropped during installation do not fit to vehicle.

NOTE:

Make sure the lateral/yaw rate sensor is fitted the correct way around.

To install, reverse the removal procedure.

- Tighten to 7 Nm.

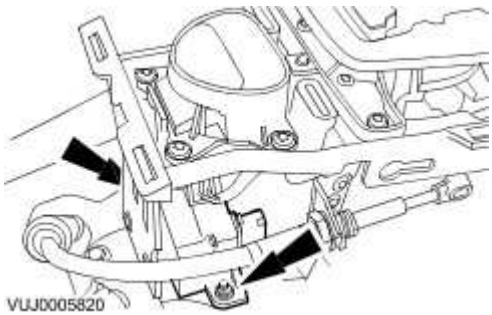

211 : Steering System

211-00 : Steering System – General Information

Specifications

Specifications

Steering Linkage Specifications

Steering Linkage Free Play	Measurement (mm)	Measurement (in)
Free play (measured at the steering wheel rim)	0-6	0-0.24

Power Steering Pump Specifications

Item	Specification
Power steering pump relief pressure	106-114 bar

Lubricants, Fluids, Sealers and Adhesives

Item	Specification
Power steering fluid	Dextron 3

www.JagDocs.com

Power Steering System Bleeding (57.15.02)

1. **NOTE:**
   When filling the reservoir, make sure that the fluid is clean and not agitated prior to use. The fluid should be poured slowly into the reservoir to minimize the possibility of aeration.

Fill the reservoir to the MAX mark.

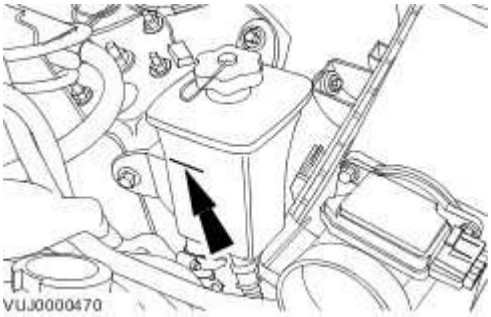

2. **NOTE:**
   Do not start the engine.

Turn the steering from lock to lock.

3. Check the fluid level. Fill the reservoir to the MAX mark if necessary.

4. Start the engine and turn the steering from lock to lock.

5. Switch the engine off.

6. Check the fluid level. Fill the reservoir to the MAX mark if necessary.

7. Start the engine, turn the steering wheel from lock to lock. If excessive noise is apparent or shudder is evident through the steering wheel, repeat the bleed procedure.

Steering Column Lower Shaft Setting

1. Centralize the steering wheel.

2. Loosen the steering column lower shaft pinch bolt.

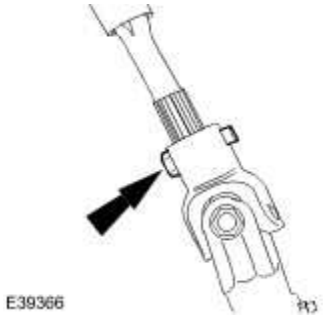

3. Fully extend the steering column lower shaft swinging link.

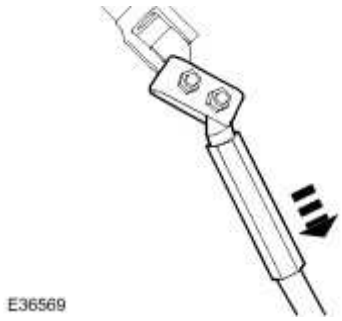

4. Mark the position of the steering column lower shaft relative to the universal joint.

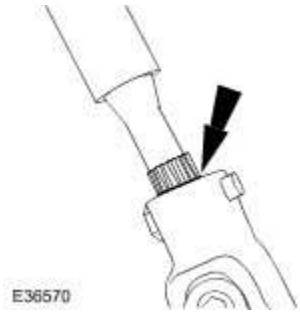

5. Fully retract the steering column lower shaft swinging link.

www.JagDocs.com

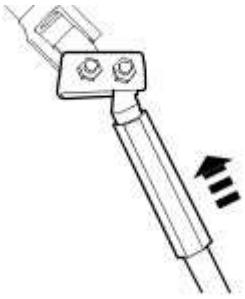

E36571

6. Move the steering column lower shaft until the measurment between the mark on the steering column lower shaft and the top of the universal joint is 7mm.

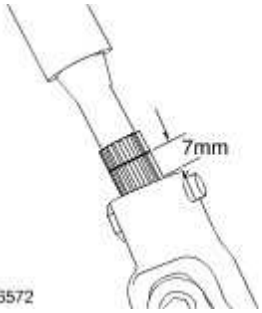

E36572

7. Tighten to 35 Nm.

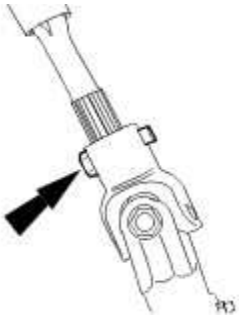

E39366

Power Steering System Flushing (57.15.08)

NOTE:

If heavy steering or contamination within the power steering system is found, it is necessary to carry out the system flush procedure as detailed below. If any components have been replaced in the power steering system the procedure below must be carried out in full.

NOTE:

Some variation in the illustrations may occur, but the essential information is always correct.

1. Remove the power steering fluid reservoir cap.

2. Using a suitable syringe, remove the power steering fluid from the power steering fluid reservoir.

3.

CAUTION: Be prepared to collect escaping fluids.

NOTE:

Note the orientation of the clip.

Detach the power steering fluid reservoir.

- Detach but do not remove the power steering fluid reservoir.
- Release the power steering fluid return hose from the power steering fluid reservoir.
- If a quick release coupling is fitted to the power steering return hose, release the power steering fluid return hose from the coupling by removing the clip.

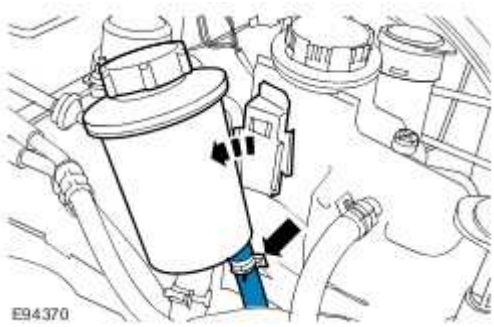

4.

CAUTION: Be prepared to collect escaping fluids.

www.JagDocs.com

NOTE:

Make sure that all openings are sealed. Use new blanking caps.

Using a suitable blanking cap, cap the power steering reservoir return pipe.

5.

CAUTION: Be prepared to collect escaping fluids.

NOTE:

Make sure the extended pipe is not kinked or twisted and is correctly secured with hose clips.

Attach a suitable pipe to the power steering return hose to allow the fluid to drain.

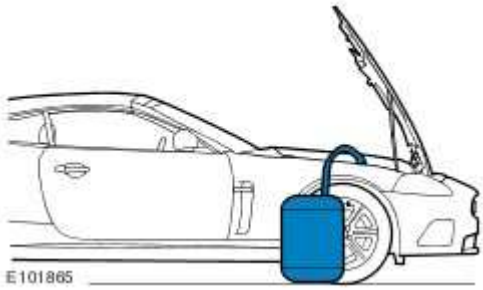

6. **NOTE:**

The suitable funnel should have the a capacity of 4 litres and O-ring seal

NOTE:

The suitable funnel must be tightly sealed to the power steering fluid reservoir to avoid fluid leakage.

Install a suitable funnel onto the power steering fluid reservoir.

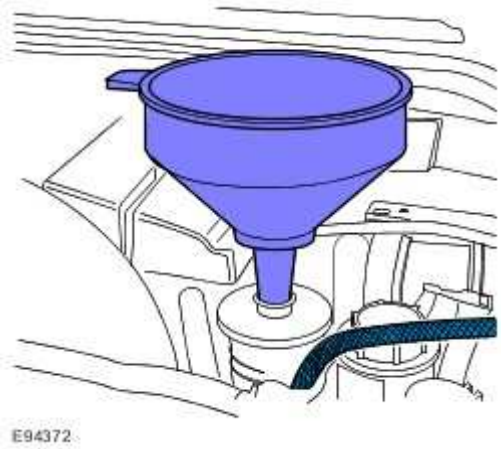

7.

WARNING: Do not work on or under a vehicle supported only by a jack. Always support the vehicle on safety stands.

Raise and support the vehicle with the wheels just clear of the ground.

8.

CAUTION: Steps 8 and 9 must be carried out within 2 - 3 seconds of each other. Failure to follow this instruction may result in damage to the power steering system.

CAUTION: Be prepared to collect escaping fluids.

Using the suitable funnel, top up the power steering system with the specified fluid. Make sure the fluid level is maintained at two thirds full in the funnel.

9.

CAUTION: Be prepared to collect escaping fluids.

CAUTION: Do not allow the power steering fluid level in the power steering fluid reservoir to fall below the minimum power steering fluid level. Failure to follow this instruction may result in damage to the power steering system.

CAUTION: Make sure the engine is switched off as soon as the full 4 litres of power steering fluid has entered the power steering fluid reservoir.

www.JagDocs.com

Flush the power steering system.

- Start the engine
- With assistance turn the steering slowly lock to lock 3 times at approximately 1 revolution every 5 seconds.
- Continue to flush the power steering system until 4 litres of power steering fluid has been added to the power steering reservoir. This should take approximately 30 seconds.

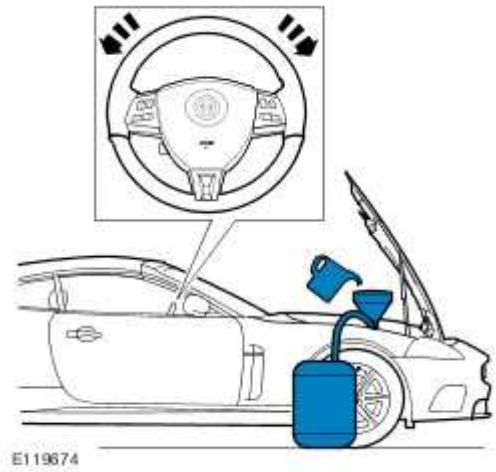

10.

CAUTION: Be prepared to collect escaping fluids.

Remove the suitable funnel.

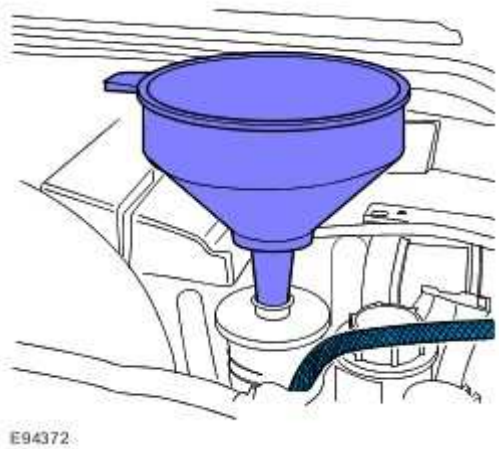

11.

CAUTION: Be prepared to collect escaping fluids.

Remove the suitable pipe to the power steering return hose.

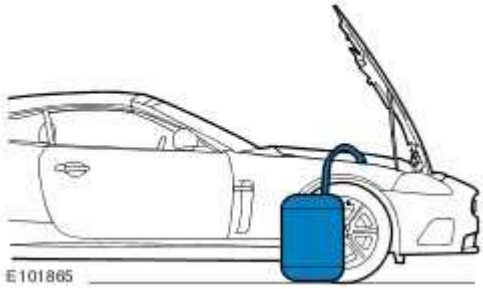

12.

CAUTION: Be prepared to collect escaping fluids.

NOTE:

Note the orientation of the clip.

If a quick release coupling is fitted to the power steering return hose, connect the power steering fluid return hose to the coupling by installing the clip.

13. Install a new power steering fluid reservoir.

www.JagDocs.com

Steering System

The power steering system is a rack and pinion design, with an engine-driven pump providing the steering assistance. The system features variable steering assistance with vehicle speed and a variable ratio steering rack.

Absolute cleanliness must be observed when replenishing the fluid or dismantling any part of the system. New fluid from a sealed container must be used.

NOTE:

If the steering gear, pump or cooler are being replaced for leakage or noise related issues and there is no evidence of fluid contamination, there is no need to replace the reservoir.

In some cases where the fluid clearly contains particulate matter, and the system continues to function, flush the system with fresh fluid and replace the reservoir, as there is the possibility that the reservoir internal filter may be damaged or faulty.

Steering System

Inspection and Verification

1 . Verify the customer concern by driving the vehicle.

2 . Visually inspect for obvious signs of mechanical or electrical damage.

Mechanical Checks
• Incorrect tire pressure, loose wheel nuts, incorrect wheel alignment • Loose tie-rods • Loose damper and spring assemblies or ball joint • Loose steering column shaft universal joints • Loose pinch bolts on steering column shaft • Loose steering gear assembly • Check for external damage to the steering gear. Damaged tie-rods **CAUTION: If a steering gear assembly is returned under warranty with leaking seals, there is also damage to the steering gear boot/boots the steering gear warranty will be inva This is due to the steering gear seals being damaged due to foreign materials entering the st gear boot and damaging the steering gear seals thereafter.** • Damaged steering gear boot • Damaged accessory drive belt • Binding or misaligned steering column, pump or steering gear • Incorrect fluid level • Hose leaks or line restrictions • Hose fouling bodywork

www.JagDocs.com

Electrical Checks/Tests
• Make sure all connectors are in place (steering gear Servotronic solenoid and steering control module (SCM) - if applicable) • Make sure all the fuses are in place and not blown • DISCONNECT the steering gear transducer and the steering should become heavy • TEST electrical values: Power Supply to the SCM = 12 Volts Steering gear transducer resistance 7.0 to 7.5 Ohms is normal Steering gear transducer voltage = 6 Volts Steering gear transducer current = 840 mA at 0 mph reducing to 0 mA at maximum speed • RECONNECT all electrical items disturbed during testing

3 . If an obvious cause for an observed or reported concern is found, correct the cause (if possible) before proceeding to the next step.

4 . Check the power steering fluid condition. For additional information, REFER to Power Steering Fluid Condition Check in this section.

5 . If the concern is not visually evident, verify the symptom and REFER to Steering Fault Diagnosis by Symptom Charts in this section.

Steering Relay Harness Connector

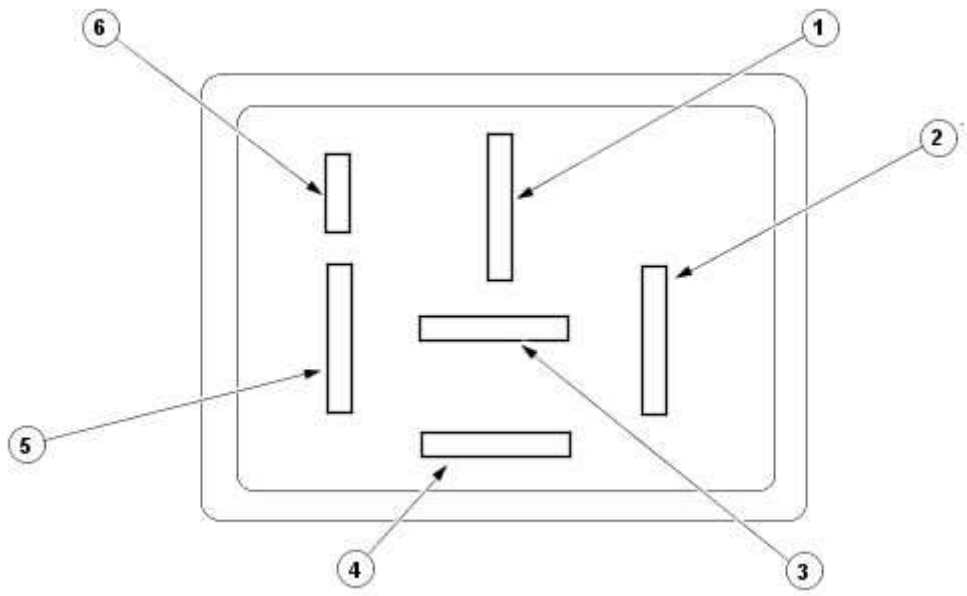

E39815

Item	Description
1	Steering transducer ground
2	Ignition feed
3	Steering transducer feed
4	Ground
5	Speed sensor signal
6	Serial interface

Steering Linkage Inspection and Backlash (Freeplay) Check

CAUTION: Steering gear boots must be handled carefully to avoid damage. Use new clamps when installing steering gear boots.

Inspect the boots for cuts, deterioration, twisting or distortion. Check the steering gear boots to make sure they are tight. Install new boots or clamps as necessary.

NOTE:

The following steps must be carried out with assistance.

1 . With the wheels in the straight ahead position, gently turn the steering wheel to the left and the right to check for free play.

2 . Free play should be between 0 and 6 mm (0 and 0.24 in) at the steering wheel rim. If the free play exceeds this limit, either the ball joints are worn, the lower steering column joints are worn or the backlash of the steering gear is excessive.

CAUTION: DO NOT attempt to adjust the steering gear yoke. Failure to follow this instruction will result in the steering gear warranty to become invalid.

3 . The backlash of the steering gear cannot be adjusted, install a new steering gear. For additional information, <<211-02>>

4 . Grasp the steering wheel firmly and move it up and down and to the left and right without turning the wheel to check for column bearing wear, steering wheel or steering column. For additional information, <<211-04>>

www.JagDocs.com

Power Steering Fluid Condition Check

1 . Run the engine for 2 minutes.

2 . Check the power steering fluid system level.

3 . Observe the color and the odor. The color under normal circumstances should be dark reddish, not brown or black.

4 . Allow the fluid to drip onto a facial tissue and examine the stain.

5 . If evidence of solid material is found, the power steering fluid system should be drained for further inspection.

6 . If fluid contamination or steering component failure is confirmed by the sediment in the power steering fluid system, REFER to Steering Fault Diagnosis by Symptom Charts in this section.

Power Steering Pressure Test

Test Equipment

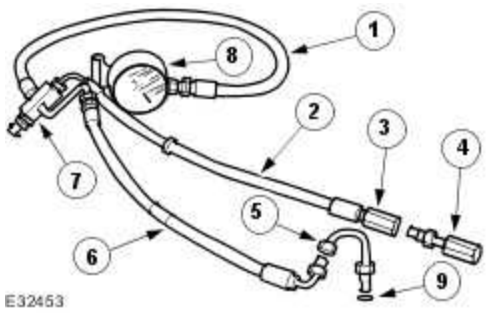

Item	Special Tool Number	Description
1	211-011	Pressure Gauge Hose
2	211-011-08	Pump Return Hose
3	211-011-07	Pump Return Hose Connector
4	211-011-03/2	Test Equipment to High Pressure Hose Adaptor
5	211-011-03/1	Pump High Pressure Outlet to Hose Adaptor
6	211-011-02	Pump Adaptor to Control Valve Hose
7	211-011-01	Control Valve

8	211-011	Pressure Gauge
9	-	'O' Ring Seal

The measurement of the maximum system pressure, (which is governed by the pressure relief valve) is achieved by inserting the Service Tool (pressure gauge and adaptors) into the fluid circuit of the power steering system. Run the engine at idle speed, turn the steering from lock to lock and read the maximum pressure recorded on the gauge.

Installing Test Equipment

To install the pressure test equipment:

- Place a suitable drain tray below the power steering pump.
- Install a hose clamp on the reservoir to pump hose prior to disconnecting any hoses, to avoid unnecessary loss of fluid.
- Disconnect the hose from the power steering pump high pressure outlet.
- Install the pump outlet to hose adaptor (5). Do not omit the 'O' ring seal (9).
- Connect the power steering pump adaptor to control valve hose (6) of the test equipment.
- Install the adaptor (4) in the high pressure hose previously removed from the power steering pump outlet.
- Connect the connector (3) of the test equipment hose (2) to the adaptor (4).
- Remove the hose clamp from the reservoir hose.
- Start the engine.

With the control valve (7) OPEN and the engine idling, the following system pressures may be checked:

- During turning.
- When the steering is held on full lock.
- With the steering at rest.

CAUTION: To avoid excessive heating of the power steering pump, do not close the valve for longer than 5 seconds maximum.

CAUTION: Do not drive the vehicle with the test equipment installed.

With the control valve (7) CLOSED the power steering pump maximum output pressure can be checked.

Removing Test Equipment

To remove the test equipment:

- Install a hose clamp on the reservoir to power steering pump hose.

www.JagDocs.com

- Removing the test equipment is a reversal of the installation instructions.
- Install a new 'O' ring seal (9) to the power steering pump high pressure outlet to hose connection.
- Install the original hose to the power steering pump.
- Remove the clamp from the reservoir to the power steering pump hose.
- Top-up the reservoir fluid.
- Bleed the power steering system. For additional information, Power Steering System Bleeding (57.15.02)

Steering Fault Diagnosis by Symptom Charts

Leakage

Condition	Possible Sources	Action
• Fluid leakage	Confirm the position of the fluid leak.	• CLEAN the area of the leak. • Inspect the area and confirm the exact position of leak. • Make sure the fluid is not from another system on the vehicle.
	• Overfilled system.	• CORRECT the fluid level as necessary.
	• Component leak.	**NOTE:** Record the position of the leak and some indication of the rate of the leak on the Warranty Return Record Sheet. • LOCATE the suspect component or CHECK hose connections and repair as necessary.
	• Damaged fluid cap.	• INSTALL a new fluid cap.
	• Loose or damaged hose fittings.	• TIGHTEN or INSTALL a new hose as necessary.
	• Leakage at power steering pump.	• INSTALL a new power steering pump as necessary. For additional information, <<211-02>>
• Fluid leakage	• Leakage at steering hose to steering gear connection.	• CHECK steering hose to steering gear connection for leakage. CHECK and TIGHTEN the steering hose to steering gear connection retaining bolts/bolts as

		necessary.
	• Power steering fluid leakage at O-ring seals.	• CHECK the power steering system for signs of steering fluid loss from O-ring seals. • INSTALL new O-ring seals as necessary. • BLEED the power steering system. For additional information, <<211-00>>
	• Power steering fluid leakage from transfer pipes.	• CHECK the power steering system for signs of steering fluid loss from the transfer pipes. • CHECK and TIGHTEN the transfer pipes if required, INSTALL new transfer pipes as necessary. • BLEED the power steering system. For additional information, <<211-00>>
	• Power steering fluid leakage from the steering gear.	• CHECK the power steering gear for signs of fluid loss. • INSTALL a new steering gear as necessary. For additional information, <<211-02>>
	• Power steering fluid leakage from steering gear boot.	• CHECK the power steering gear for signs of fluid loss. • INSTALL a new steering gear as necessary. For additional information, <<211-02>>

www.JagDocs.com

Functional

Condition	Possible Sources	Action
• Free play at steering wheel	• Excess play in the steering linkage.	• CHECK the steering linkage for excess play. For additional information, REFER to the Steering Linkage Inspection and Backlash (Freeplay) Check in this section.
	• Steering wheel loose.	• CHECK and TIGHTEN the steering wheel retaining bolt/bolts as necessary. For additional information, <<211-04>>

	• Lower steering column pinch bolt loose.	• CHECK and TIGHTEN the lower steering column pinch bolts as necessary. For additional information, <<211-04>>
	• Excessive wear in lower steering column.	• CHECK for lower steering column for wear in the universal joints. If wear is present, INSTALL a new lower steering column as necessary.
	• Wear in suspension joints.	**CAUTION: DO NOT attempt to adjust the steering gear yoke. Failure to follow this instruction will result in the steering gear warranty to become invalid.** • CHECK for excess wear in the front suspension joints. For additional information, <<204-00>>
• Vehicle wanders from side to side on the road, when the vehicle is driven straight ahead and the steering wheel is held in a firm position	• Incorrect tire pressure or tire size.	• CHECK and ADJUST the tire pressure. For additional information, <<204-04>> • INSTALL a new tire as necessary. For additional information, <<204-04>>
	• Vehicle is unevenly or excessively loaded.	• ADJUST the load evenly.
	• Loose/worn tie-rods.	• INSTALL a new tie-rod end. For additional information, <<211-03>>
	• Steering gear bolts loose or damaged.	• TIGHTEN or INSTALL new bolts.
	• Loose or worn suspension ball joint(s).	• INSTALL a new suspension ball joint assembly. For additional information, <<204-01>>
	• Steering column	• TIGHTEN the steering column

	universal joint pinch bolt loose.	universal joint pinch bolt. For additional information, <<211-04>>
	• Incorrect toe adjustment.	• ADJUST as necessary. For additional information, <<204-00>>
	• Loose or worn rear suspension.	• TIGHTEN loose, or INSTALL new rear suspension components. For additional information, <<204-02>>
• Vehicle tends to pull to one side when driven on a level surface	• Incorrect tire pressure. • Incorrect tire size or different tire/tread type. • Uneven tire wear	• CHECK and ADJUST the tire pressure. For additional information, <<204-04>> • INSTALL a new tire as necessary. For additional information, <<204-04>>
	• Vehicle is unevenly loaded or overloaded.	• Adjust the load.
	• Incorrect toe adjustment.	• ADJUST as necessary. For additional information, <<204-00>>
	• Damaged front suspension components.	• INSTALL new front suspension components as necessary. For additional information, <<204-01>>
	• Damaged rear suspension components.	• INSTALL new rear suspension components as necessary. For additional information, <<204-02>>
	• Steering gear valve effort out of balance.	• SHIFT the transmission into NEUTRAL while driving at no more than 30 miles/hour (50 km/h) and turn the ignition to position I (engine OFF-coasting). If the vehicle does not pull with the engine off, INSTALL a new steering gear. For additional information, <<211-02>>

www.JagDocs.com

		• If the vehicle does drift with the engine off, CROSS SWITCH front wheel assemblies. • If the vehicle pulls to the opposite side, SWITCH wheels that were on the rear to the same side on the front. • If the vehicle pull direction is not changed, CHECK the front suspension components and toe adjustments. For additional information, <<204-01>>
	• Check the front and rear brakes for correct operation.	• ADJUST as necessary. For additional information, <<206-00>>
	• Check for bent rear suspension components and for damaged coil springs in the front suspension.	• INSTALL new rear suspension components as necessary. For additional information, <<204-02>> • INSTALL new front suspension components as necessary. For additional information, <<204-01>>
	• Check the rear suspension for loose or worn suspension components.	• TIGHTEN or INSTALL new components as necessary. For additional information, <<204-02>>
	• Incorrect underbody alignment.	• CHECK underbody alignment. For additional information, <<502-00>>
• Poor returnability of the steering	• Lower steering column interference.	• CHECK the steering column is free from interference from the engine harness, sound proofing or the floor covering.
	• Incorrect tire pressure.	• CHECK and ADJUST the tire pressure. For additional information, <<204-04>>
	• Incorrect tire size or type.	• INSTALL a new tire as necessary. For additional information, <<204-04>>

	• Steering column upper shroud fouling on the steering wheel.	• CHECK steering column upper shroud for fouling. ADJUST as necessary.
	• Steering column universal joints binding.	• INSTALL a new steering column. For additional information, <<211-04>>
	• Steering column shaft floor seal binding.	• CHECK the steering column shaft floor seal for correct fitment and REFIT as necessary.
	• Steering column shaft floor seal may be torn.	• INSTALL a new steering column shaft floor seal as necessary.
	• Binding or damaged tie-rods.	• CHECK tie-rod end for excessive wear or tightness in ball joint. INSTALL a new tie-rod end. For additional information, <<211-03>>
	• Damaged or worn front suspension components.	• INSTALL new front suspension components as necessary. For additional information, <<204-01>>
	• Incorrect toe adjustment.	• ADJUST as necessary. For additional information, <<204-00>>
• Excessive steering efforts required during low speed manoeuvring and/or during parking manoeuvres	• Low power steering fluid.	• CHECK steering system for signs of steering fluid loss. • BLEED the power steering system. For additional information, <<211-00>>
	• Damaged accessory drive belt tensioner.	• INSTALL a new accessory drive belt tensioner.
	• Hose or cooler line restriction.	• CHECK hose or cooler lines for correct routing. • INSTALL a new hose as necessary.

www.JagDocs.com

	• Fluid aeration.	• BLEED the system. For additional information,
	• Steering transducer not closed - no feed voltage.	• CHECK the steering transducer circuit. For additional information, REFER to the wiring diagrams. • Carry out the electrical checks and tests. For additional information, REFER to the Electrical Checks and Tests in this section.
	• Steering transducer not closed - cable fault.	• CHECK the steering transducer circuit. For additional information, REFER to the wiring diagrams. • Carry out the electrical checks and tests. For additional information, REFER to the Electrical Checks and Tests in this section.
	• Steering control module (SCM) defective.	• CHECK the SCM and INSTALL a new SCM as necessary.
	• Power steering fluid delivery pressure or flow too low.	• CHECK the power steering pressure. For additional information, REFER to the Power Steering Pressure Test in this section. • INSTALL a new power steering pump as necessary. For additional information, <<211-02>>
	• Internal steering gear leakage.	• CHECK the power steering pressure. For additional information, REFER to the Power Steering Pressure Test in this section. • INSTALL a new steering gear as necessary. For additional information, <<211-02>>
• Steering operation is very heavy when	• Steering transducer	• CHECK steering transducer and INSTALL a new steering

driving, but when stationary manoeuvring is good	open early.	transducer as necessary. • Carry out the electrical checks and tests. For additional information, REFER to the Electrical Checks and Tests in this section.
	• Steering transducer open early, steering control module (SCM) fault.	• CHECK SCM and INSTALL a new SCM as necessary.
	• Steering transducer open early, speedo signal error.	• CHECK speedo circuit. For additional information, REFER to the wiring diagrams.
• Steering operation is very light when driving, but when stationary manoeuvring is good	• Steering transducer not open, (no power steering fluid flow).	• CHECK the power steering fluid condition. For additional information, REFER to the Power Steering Fluid condition check in this section.
	• Steering transducer not open, steering control module (SCM) fault.	• CHECK the SCM and INSTALL a new SCM as necessary. • Carry out the electrical checks and tests. For additional information, REFER to the Electrical Checks and Tests in this section.
	• Steering transducer not open, speedo signal error.	• CHECK the speedo circuit. For additional information, REFER to the wiring diagrams.
	• CHECK the power steering fluid low pressure pipe for restricted flow.	• INSTALL a new power steering fluid low pressure pipe.
• Steering heavy operation during rapid manoeuvring	• Air in power steering system.	• CHECK for an air leak into the power steering system and repair as necessary. • BLEED the power steering system. For additional information, Power Steering System Bleeding (57.15.02)

www.JagDocs.com

	• Fluid loss at the power steering pump shaft seal.	• CHECK the power steering pump for signs of steering fluid loss. • INSTALL a new power steering pump as necessary. For additional information, <<211-02>>
	• Power steering fluid delivery pressure or flow too low.	• CHECK the power steering pump for signs of steering fluid loss. • CHECK the power steering pressure. For additional information, REFER to the Power Steering Pressure Test in this section. • INSTALL a new power steering pump as necessary. For additional information, <<211-02>>
• Steering heavy operation in one direction	• Lower steering column interference.	• CHECK the steering column is free from interference from the engine harness, sound proofing or the floor covering.
	• Incorrect steering geometry.	• CHECK the front wheel alignment. For additional information, <<204-00>>
	• Faulty rotary valve/seal.	• CHECK the power steering pressure. For additional information, REFER to the Power Steering Pressure Test in this section. • INSTALL a new steering gear as necessary. For additional information, <<211-02>>
	• Tire fouling on the wheel arch liner.	• CHECK for clearance between the tire and the wheel arch liner. • Remove and refit the wheel arch liner or INSTALL a new wheel arch liner as necessary.
• Steering heavy operation in both	• Low power steering fluid.	• CHECK steering system for signs of steering fluid loss. • BLEED the power steering

directions		system. For additional information, <<211-00>>
	• Air in power steering system.	• CHECK the power steering pump for signs of steering fluid loss. • INSTALL a new power steering pump as necessary. For additional information, <<211-02>>
	• Fluid loss at the power steering pump shaft seal.	• CHECK the power steering pump for signs of steering fluid loss. • INSTALL a new power steering pump as necessary. For additional information, <<211-02>>
	• Power steering fluid delivery pressure or flow too low.	• CHECK the power steering pump for signs of steering fluid loss. • CHECK the power steering pressure. For additional information, REFER to the Power Steering Pressure Test in this section. • INSTALL a new power steering pump as necessary. For additional information, <<211-02>>
• Steering operation varies from heavy to light when driving at constant speed	• Lower steering column interference.	• CHECK the steering column is free from interference from the engine harness, sound proofing or the floor covering.
	• Incorrect speedometer signal.	• CHECK the speedo circuit. For additional information, refer to the wiring diagrams.
	• Steering transducer cable/connection faulty or grounded.	• CHECK the steering transducer circuit. For additional information, refer to the wiring diagrams. • Carry out the electrical checks and tests. For additional information, REFER to the Electrical Checks and Tests in

www.JagDocs.com

		this section.
• Steering wheel varies from light to heavy two times per revolution	• Lower steering column interference.	• CHECK the steering column is free from interference from the engine harness, sound proofing or the floor covering.
	• Steering column universal joints binding.	• INSTALL a new steering column. For additional information, <<211-04>>
	• Seized or damaged steering components.	• CHECK for wear or failure of suspension bushes and ball joints. For additional information, <<204-00>>

Noise

Condition	Possible Sources	Action
• Accessory drive belt squeal	• Incorrect accessory drive belt tension or accessory drive belt glazed.	• CHECK accessory drive belt condition and INSTALL a new accessory drive belt as necessary. For additional information, <<303-05>>
• Chirp noise in the steering pump	• Loose or worn accessory drive belt.	• CHECK accessory drive belt condition and INSTALL a new accessory drive belt as necessary. For additional information, <<303-05>>
• Power steering pump noisy	• Low power steering fluid.	• CHECK steering system for signs of steering fluid loss. • BLEED the power steering system. For additional information, <<211-00>>
	• Power steering pump worn or otherwise defective.	• CHECK for leaks. REPAIR as necessary. • CHECK the power steering pressure. For additional information, REFER to the Power Steering Pressure Test in this section. • INSTALL a new power steering pump as necessary. For

		additional information, <<211-02>>
• Whine type noise	• Aerated fluid.	• BLEED the power steering system. For additional information, Power Steering System Bleeding (57.15.02)
	• Power steering pump.	• CHECK for leaks. REPAIR as necessary. • INSTALL a new power steering pump as necessary. For additional information, <<211-02>>
• Noise during steering gear movement	• Low power steering fluid.	• CHECK steering system for signs of steering fluid loss. • BLEED the power steering system. For additional information, <<211-00>>
	• Water contamination to the power steering fluid.	• DRAIN the power steering system. • BLEED the power steering system. For additional information, <<211-00>>
	• Cavitation due to restricted power steering feed hose.	• CHECK and reposition power steering feed hoses and INSTALL new hoses as necessary.
• Continuous noise	• Low power steering fluid.	• CHECK steering system for signs of steering fluid loss. • BLEED the power steering system. For additional information, <<211-00>>
	• Power steering pump drive loose.	• CHECK power steering coupling and power steering pump. • INSTALL a new power steering coupling or power steering pump as necessary. For additional information, <<211-02>>
	• Incorrect accessory	• CHECK accessory drive belt

www.JagDocs.com

	drive belt tension or accessory drive belt glazed.	condition and INSTALL a new accessory drive belt as necessary. For additional information, <<303-05>>
	• Power steering pump drive pulley loose.	• CHECK and TIGHTEN the power steering pump drive pulley retaining bolts as necessary. For additional information, <<303-03>>
	• Power steering pump retaining bolts loose.	• CHECK the power steering pump retaining bolts and TIGHTEN as necessary.
	• Power steering hose/pipe in contact with the vehicles body.	• CHECK and reposition power steering hoses/pipes, INSTALL new hoses/pipes as necessary.
	• Power steering hose restricted/twisted.	• CHECK and reposition power steering hose, replace hose as necessary.

Vibration

Condition	Possible Sources	Action
• Feedback (knocking noises in the steering gear) - condition where roughness is felt in the steering wheel by the driver when the vehicle is driven over rough surfaces	• Loose/worn tie-rods.	• INSTALL a new tie-rod end. For additional information, <<211-03>>
	• Steering gear retaining bolts loose or damaged.	**CAUTION: DO NOT attempt to adjust the steering gear yoke. Failure to follow this instruction will result in the steering gear warranty to become invalid.** • CHECK and TIGHTEN the steering gear retaining bolts. • INSTALL new retaining bolts as necessary. For additional information, <<211-02>>

	• Loose suspension bushing, bolts or ball joints.	• TIGHTEN or INSTALL new components as necessary. For additional information, <<204-01>>
	• Steering column retaining bolts loose.	**CAUTION: DO NOT attempt to adjust the steering gear yoke. Failure to follow this instruction will result in the steering gear warranty to become invalid.** • CHECK and TIGHTEN the steering column retaining bolts/nuts and pinch bolts if required. For additional information, <<211-04>>
	• Excessive wear in steering column assembly.	• CHECK for steering column for wear in the universal joints and bearings. If wear is present, INSTALL a new steering column as necessary. For additional information, <<211-04>>
• Nibble (Shimmy) Oscillation of the steering wheel (not vertical which is SHAKE). This is driven by road wheel imbalance.	• Road wheel imbalance.	• CHECK for road wheel imbalance. • CHECK for relevant SERVICE BULLETINS/SERVICE ACTIONS for the vehicle on Jaguar Communications Online (JCOL) or in hard copy form.
	• Steering wheel replacement.	• CHECK for relevant SERVICE BULLETINS/SERVICE ACTIONS for the vehicle on Jaguar Communications Online (JCOL) or in hard copy form.
	• Rack replacement.	• CHECK for relevant SERVICE BULLETINS/SERVICE ACTIONS for the vehicle on Jaguar Communications Online (JCOL) or in hard copy form.

www.JagDocs.com

Description of General Steering System Noises

Boom
Rhythmic sound like a drum roll or distant thunder. May cause pressure on the ear drum.

Buzz
Low-pitched sound, like a bee. Usually associated with vibrations.

Chatter
Rapidly repeating metallic sound.

Chuckle
Rapid noise that sounds like a stick against the spokes of a spinning bicycle wheel.

Chirp
High pitched rapidly repeating sound, like chirping birds.

Click
Light sound, like a ball point pen being clicked.

Click/Thump
Heavy metal-to-metal sound, like a hammer striking steel.

Grind
Abrasive sound, like a grinding wheel or sandpaper rubbing against wood.

Groan/Moan
Continuous, low-pitched humming sound.

Groan/Howl
Low, guttural sound, like an angry dog.

Hiss
Continuous sound like air escaping from a tire valve.

Hum
Continuous sound of varying frequencies, like a wire humming in the wind.

Knock
Heavy, loud repeating sound like a knock on a door.

Ping
Similar to knock, except at higher frequency.

Rattle
A sound suggesting looseness, such as marbles rolling around in a can.

Roar
Deep, long, prolonged sound like an animal, or winds and ocean waves.

Rumble
Low, heavy continuous sound like that made by wagons or thunder.

Scrape
Grating noise like one hard plastic rubbing part rubbing against another.

Squeak
High-pitched sound like rubbing a clean window.

Squeal
Continuous, high-pitched sound like running finger nails across a chalkboard.

Tap
Light, hammering sound like tapping pencil on edge of table. May be rhythmic or intermittent.

Weep
Continuous mid-range sound (lower frequency than squeal, higher frequency than groan).

Whir/Whine
High-pitched buzzing sound, like an electric motor or drill.

Whistle
Sharp, shrill sound, like wind passing a small opening.

Description of Specific Steering System Noise Types

Belt Squeal
Belt squeal is a high frequency air-borne noise generated by slippage of the ribbed Vee belt on the power steering pump pulley. Squeal increases with system loading and at the end of lock.

Clonk
Clonk is a structure-borne noise heard as a loose-sounding rattle or vibration coming from the steering column. Clonk can be identified by driving and turning over cobblestones, rough roads, or high frequency bumps such as 25-50 mm tall tar strips. Clonk requires a tie-rod load impact.

Column Knock
Column knock is a loose-sounding rattle or vibration generated by the steering column shaft contacting other portions of the column assembly. The noise is both audible and tactile. Column knock is generated by driving over cobblestones or rough pavement. It is not necessary to turn the steering wheel to create this noise.

www.JagDocs.com

Column Rattle

Column rattle is a metallic sounding noise created when applying a highly impulsive force to the steering wheel. Column rattle is often used to combine the more general group of column noises including clonk and column knock. Column rattle noises can be caused by clonk, knock, loose column components, bonus parts etc. A series of parked, straight-line driving, and cornering test should be carried out to isolate the source/sources.

Grinding/Scrape

Grinding is a low frequency noise in the column when the steering wheel is turned. Is generally caused by interference between moving components such as the steering wheel to steering column shroud.

Grunt (Squawk)

Grunt is a "honking" sound elicited when coming off one of the steering stops. Grunt is generally excited during parking manoeuvres with a low to medium speed steering input.

Hiss (Swish)

Hiss or Valve Hiss is a high-frequency sound coming from the steering gear when the system is loaded. It is a rushing or "swish" noise that doesn't change frequency with RPM. Hiss is the general noise generated by the flow of hydraulic fluid through restrictions in the steering system. Restrictions include the rotary steering valve, power steering tubes, connectors, tuning orifices, etc. Hiss can be air-borne and structure-borne, but the structure-borne path through the steering intermediate shaft is usually dominant.

Moan (Groan)

Moan is the general structure-borne noise of the steering system. Moan is primarily transmitted to the driver via the body structure through the pump mount, engine mounts, power steering lines and power steering brackets. On some vehicles, moan is a load humming noise, often present when the wheel is turned and the system is loaded. It may change frequency with engine RPM and if the system is loaded or unloaded.

Rack Knock (Rack Slap)

CAUTION: DO NOT attempt to adjust the steering gear yoke. Failure to follow this instruction will result in the steering gear warranty to become invalid.

Rack Knock is a rattle sound and steering wheel vibration caused by separation of the steering gear and pinion while driving over bumps. It is a structure-borne noise transmitted through the intermediate shaft and column. Rack knock can also be heard as a "thump" or impact noise that occurs with the vehicle stationary when the steering wheel is released from a loaded position and allowed to return to rest. Noise occurs with the engine on or off.

Rattles

Rattles are noises caused by knocking or hitting with components in the steering system. Steering rattles can occur in the engine compartment, the suspension, or the passenger compartment . Rattles can be caused by loose parts, movable and flexible parts, and improper clearances.

Squeaks/Scrapes

Squeaks/Scrapes are noises due to friction or component rubbing anywhere in the steering system. Squeaks/Scrapes have appeared in steering linkages and joints, in column components and in column and steering wheel trim parts.

Weep

Weep is an air-borne noise, occasionally generated when turning the steering across lock at a constant rate. When present on a vehicle the noise, once initiated can often be maintained across a large proportion of the available steering movement.

Whistle

Whistle is similar to hiss but is louder and of a higher frequency. It is also more of a pure tone noise than hiss. Whistle is air-borne and is generated by a high flow rate of hydraulic fluid through a small restriction.

Zip

Zip noise is the air-borne noise generated by power steering pump cavitation when power steering fluid does not flow freely through the suction hose from the reservoir to the pump. Zip primarily occurs during cold weather at start-up.

Steering System Vibrations and Harshness

Buzz

Buzz is a tactile rotary vibration felt in the steering wheel for slow steering inputs. Buzz can also be called a grinding feel and it is closely related to grunt and is caused by high system gain with low damping. Buzz is generally excited during parking manoeuvres with low to medium speed steering input.

Buzz (Electrical)

A different steering buzz can be caused by pulse width modulated (PWM) electric actuators used in variable assist steering systems. This buzz is felt by turning the ignition key to run without starting the engine and holding onto the steering wheel. In extreme cases, the buzz can be felt with the engine running also.

Column/Steering Wheel Shake

Column shake is a low frequency vertical vibration excited by primary engine vibrations.

Nibble (Shimmy)

Steering nibble is a rotary oscillation or vibration of the steering wheel, which can be excited at a specific vehicle speed. Nibble is driven by wheel and tire imbalance exciting a suspension recession mode, which then translates into steering gear travel and finally steering wheel nibble.

www.JagDocs.com

Shudder (Judder)

Shudder is a low frequency oscillation of the entire steering system (tire, wheels, steering gear and linkage, etc.) when the vehicle is steered during static-park or at low speeds. Shudder is very dependent on road surface.

Torque Ripple

Torque ripple is a concern with Electric Power Steering (EPS) systems. Torque ripple is most evident at static-park steering the wheel very slowly from lock to lock. Torque ripple is primarily caused by motor commutation.

Torque/Velocity Variation (Phasing/Effort Cycling)

Steering wheel torque variation occurring twice in one revolution is normally as a result of problems with the lower steering column (intermediate shaft), but foul conditions generally result in either constant stiffness or single point stiffness. Depending upon the orientation of the joints, the steering can feel asymmetric (torque falling off in one direction and rising in the other) or else it can simply have pronounced peaks and troughs as the steering moves from lock to lock.

Wheel Fight (Kick Back)

Wheel fight is excess feedback of sudden road forces through the steering system and back to the driver. It is evaluated at all vehicle speeds over cobblestones, rough roads, and potholes. The tires, wheels, and suspension generate forces into the steering systems. Steering friction, hydraulic damping, hydraulic compliance, mechanical compliance, steering ratio, and assist gain all affect how much is transmitted to the driver.

Steering Linkage

CAUTION: Steering gear boots must be handled carefully to avoid damage. Use new clamps when installing steering gear boots.

Inspect the boots for cuts, deterioration, twisting or distortion. Check the steering gear boots to make sure they are tight. Install new boots or clamps as necessary.

NOTE:

The following steps must be carried out with assistance.

1 . With the wheels in the straight ahead position, gently turn the steering wheel to the left and the right to check for free play.

2 . Free play should be between 0 and 6 mm (0 and 0.24 in) at the steering wheel rim. If the free play exceeds this limit, either the ball joints are worn, the lower steering column joints are worn or the backlash of the steering gear is excessive.

3 .

CAUTION: DO NOT attempt to adjust the steering gear yoke. Failure to follow this instruction will result in the steering gear warranty to become invalid.

The backlash of the steering gear cannot be adjusted, install a new steering gear. For additional information, <<211-02>>

4 . Grasp the steering wheel firmly and move it up and down and to the left and right without turning the wheel to check for column bearing wear, steering wheel or steering column. For additional information, <<211-04>>

www.JagDocs.com

Specifications

Torque Specifications

Description	Nm	lb-ft	lb-in
Power steering fluid cooler retaining bolts	7	-	62
Power steering pump retaining bolts	25	18	-
Lower steering column slider pinch bolt	30	22	-
Lower steering column to steering gear pinch bolt	30	22	-
Steering gear retaining bolts	100	74	-
Power steering pump supply line - vehicles with petrol engines	15	11	-
Power steering pump supply line - vehicles with 2.7L diesel engine	22	16	-
Power steering control valve actuator retaining bolt	2	-	18
Steering gear supply and return lines retaining bolt	10	7	-
Power steering fluid reservoir retaining bolts	10	7	-

Power Steering

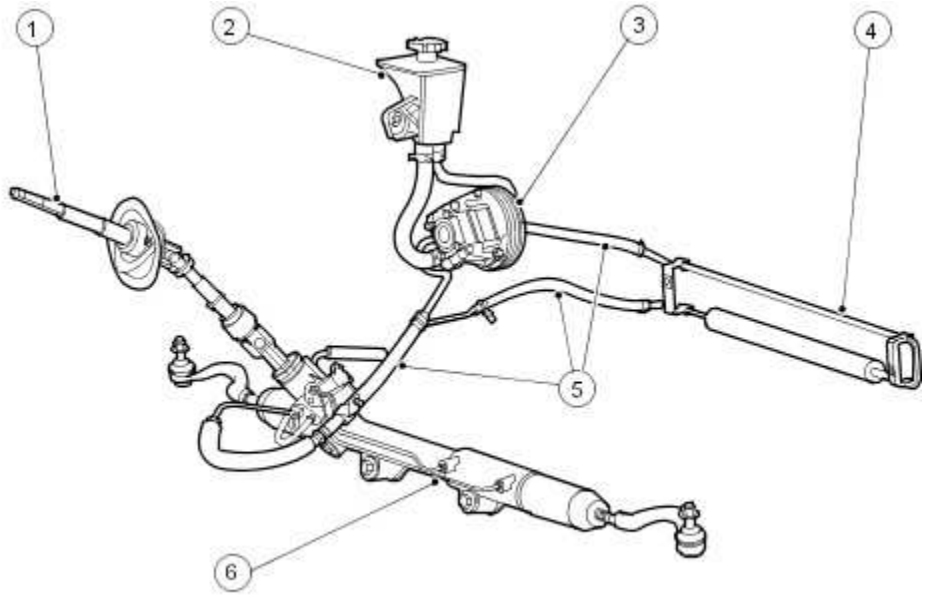

E30165

Item	Part Number	Description
1	—	Lower steering column
2	—	Power steering fluid reservoir
3	—	Power steering pump
4	—	Power steering fluid cooler
5	—	Power steering lines
6	—	Steering gear

The vehicle uses a rack and pinion type, variable ratio steering gear with speed proportional servotronic. The power steering pump is belt driven on all model variants and the power steering oil cooler is of a tube and fin type and is mounted to the front of the cooling pack.

A variable steering rack ratio reduces the amount of turns from lock to lock to improve parking maneuvers without loosing any steering feel at higher speeds.

The steering assistance decreases smoothly at a calibrated rate to increase the steering efforts required as vehicle speed increases. The steering efforts are controlled by the actuator position, which in turn is controlled electronically by the speed proportional servotronic curve which is incorporated within the Generic Electronic Module (GEM).

Absolute cleanliness must be observed when replenishing the fluid or dismantling any part of the system. New fluid from a sealed container must be used.

www.JagDocs.com

NOTE:

If the steering gear, pump or cooler are being replaced for leakage or noise related issues and there is no evidence of fluid contamination, there is no need to replace the reservoir.

In some cases where the fluid clearly contains particulate matter, and the system continues to function, flush the system with fresh fluid and replace the reservoir, as there is the possibility that the reservoir internal filter may be damaged or faulty.

Power Steering Pump to Steering Gear Pressure Line – Armoured XJ

Due to the installation of the uprated power steering pump the power steering pump to steering gear pressure line has to be modified to enable it to be connect to the power steering pump.

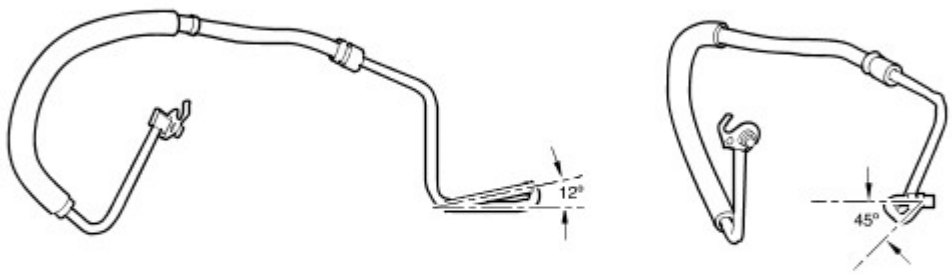

E66780

Power Steering

For additional information, refer to<<211-00>>.

www.JagDocs.com

Power Steering Control Valve Actuator (57.10.32)

Removal

1 . Remove the air deflector. <<501-02>>

2 . Disconnect the actuator electrical connector.

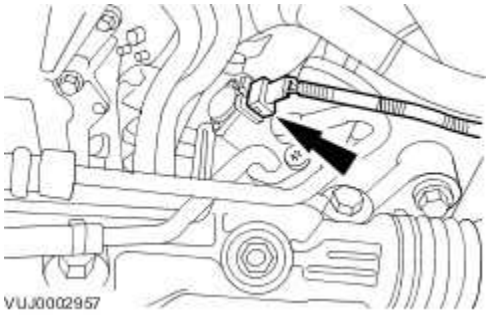

3 . Remove the actuator.

- Drain the fluid into a suitable container.
- Remove and discard the O-ring seals and filter.

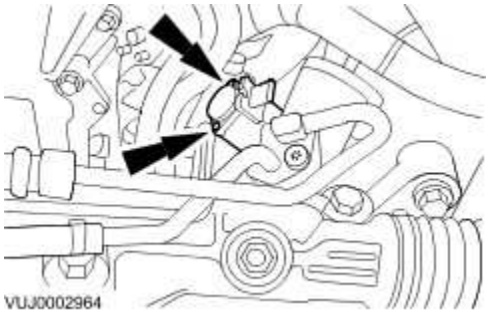

Installation

1 . To install, reverse the removal procedure.

Install new O-ring seals and filter.

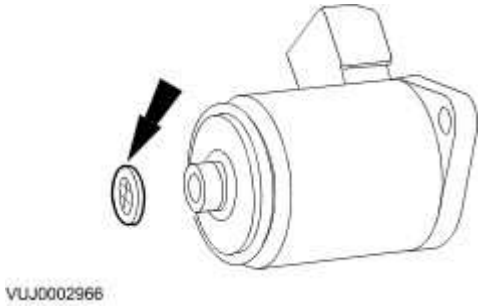

2. **CAUTION: Make sure both the retaining bolts are tightened an even number of turns.**

Tighten to 3 Nm.

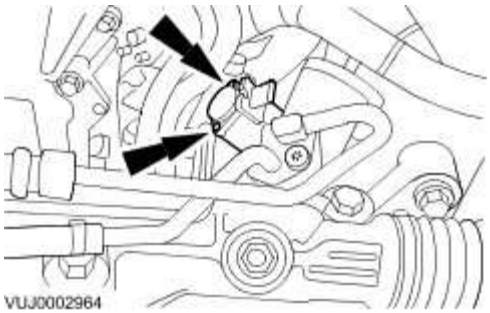

3 . Install the air deflector. <<501-02>>

4 . Bleed the power steering system. <<211-00>>

www.JagDocs.com

Power Steering Fluid Cooler (57.15.11)

Removal

All vehicles

1 Remove the Front Bumper Cover.

. For additional information, refer to Front Bumper Cover - VIN Range: G00442->H18679 (76.22.78)

2 . Remove the lower cowl.

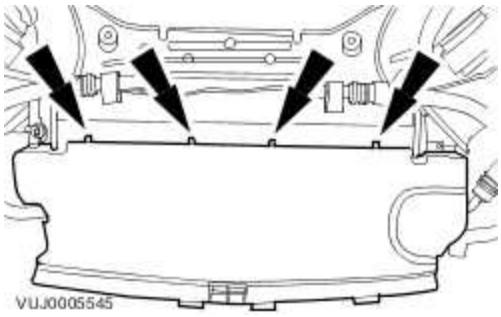

3 . **CAUTION: If power steering fluid comes into contact with the paintwork, the affected area must be immediately washed down with cold water.**

CAUTION: Cap the power steering line to prevent loss of fluid and prevent dirt ingress.

Disconnect the power steering fluid cooler lines.

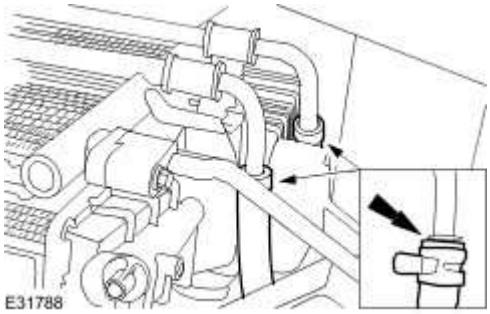

Vehicles with supercharger

4 . Remove the power steering fluid cooler.

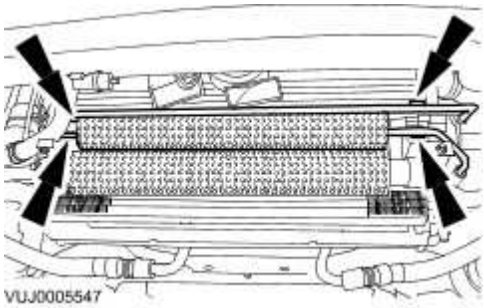

Vehicles without supercharger

5 . **NOTE:**

Left-hand shown, right-hand similar.

Remove the power steering fluid cooler.

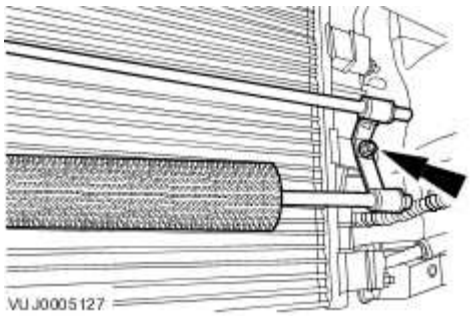

Installation

1 . To install, reverse the removal procedure.

Tighten to 7 Nm.

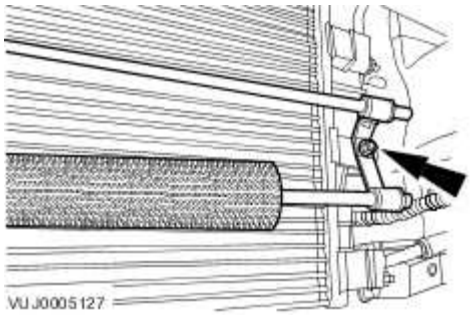

www.JagDocs.com

2 **NOTE:**

.

If the cooler is being replaced for leakage or noise related issues and there is no evidence of fluid contamination, there is no need to replace the reservoir.

In some cases where the fluid clearly contains particulate matter, and the system continues to function, flush the system with fresh fluid and replace the reservoir, as there is the possibility that the reservoir internal filter may be damaged or faulty.

Power Steering Fluid Reservoir - 3.0L/3.5L/4.2L (57.15.08)

Removal

1. **CAUTION: If power steering fluid comes into contact with the paintwork, the affected area must be immediately washed down with cold water.**

CAUTION: Cap the power steering lines to prevent loss of fluid and dirt ingress.

Detach the power steering fluid reservoir.

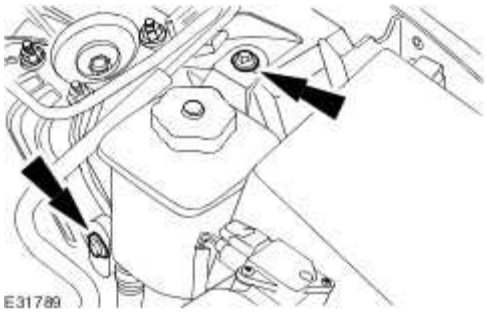

2. **CAUTION: If power steering fluid comes into contact with the paintwork, the affected area must be immediately washed down with cold water.**

CAUTION: Cap the power steering lines to prevent loss of fluid and prevent dirt ingress.

NOTE:

Drain fluid into a suitable container.

Remove the power steering fluid reservoir.

www.JagDocs.com

Detach the power steering fluid reservoir lines.

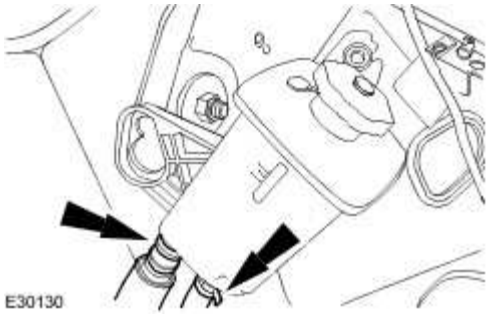

Installation

1 . To install, reverse the removal procedure.

2 . Bleed the power steering system. <<211-00>>

Power Steering Fluid Reservoir - 2.7L Diesel (57.15.08)

Removal

1 . Remove the air cleaner.
For additional information, refer to Air Cleaner (19.10.05)

2 . **CAUTION: If power steering fluid comes into contact with the paintwork, the affected area must be immediately washed down with cold water.**

NOTE:

Clamp the power steering lines to prevent loss of fluid and dirt ingress.

NOTE:

Drain the fluid into a suitable container.

Detach the power steering fluid reservoir lines.

3 . Detach the air pipe from the reservoir.

4 . Remove the power steering fluid reservoir.

- Remove the power steering fluid reservoir retaining bolt.

www.JagDocs.com

Installation

1. **CAUTION: If power steering fluid comes into contact with the paintwork, the affected area must be immediately washed down with cold water.**

   To install, reverse the removal procedure.

   - Tighten to 10 Nm.

2. Bleed the power steering system.
   For additional information, refer to Power Steering System Bleeding (57.15.02)

Power Steering Pump - 3.0L (57.20.14)

Removal

1 Remove the accessory drive belt.
. For additional information, refer to Accessory Drive Belt - 3.0L, VIN Range: G00442->G45703 (12.10.40)
For additional information, refer to Accessory Drive Belt - 3.0L, VIN Range: G45704->G99999 (12.10.40)

2 . Remove the air cleaner.
For additional information, refer to Air Cleaner (19.10.05)

3 . Remove the left-hand front wheel and tire.
For additional information, refer to Wheel and Tire (74.20.05)

4 . Remove the air deflector.
For additional information, refer to Air Deflector (76.11.41)

5 . Remove the power steering pump lower retaining bolts.

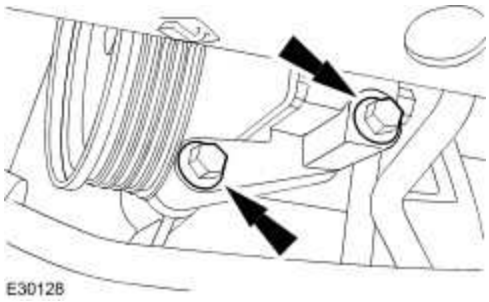

6 . Lower the vehicle.

7
. **CAUTION: Cap the power steering line to prevent loses of fluid and prevent dirt ingress.**

www.JagDocs.com

CAUTION: If power steering fluid comes into contact with the paintwork, the affected area must be immediately washed down with cold water.

NOTE:

Drain the fluid into a suitable container.

Disconnect the power steering reservoir to power steering pump supply line.

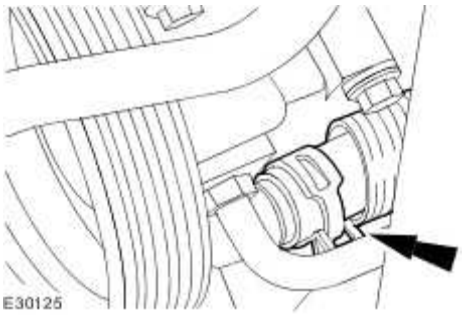

8. **CAUTION: Cap the power steering lines to prevent loses of fluid and prevent dirt ingress.**

CAUTION: If power steering fluid comes into contact with the paintwork, the affected area must be immediately washed down with cold water.

NOTE:

Drain the fluid into a suitable container.

Disconnect the power steering pump to steering gear supply line.

- Remove and discard the O-ring seal.

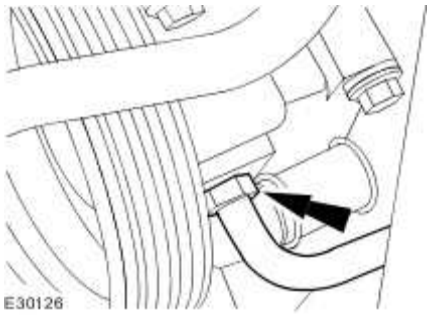

9 . Remove the power steering pump.

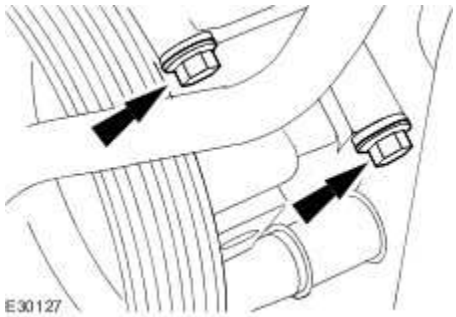

Installation

1 . To install, reverse the removal procedure.

Tighten to 25 Nm.

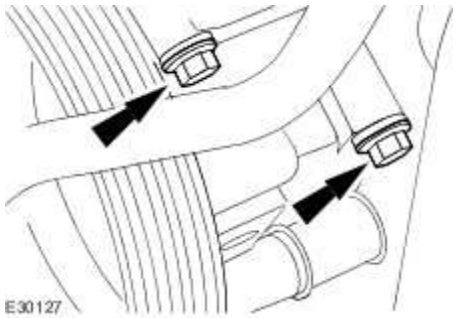

2 . **NOTE:**

Install a new O-ring seal.

Tighten to 15 Nm.

www.JagDocs.com

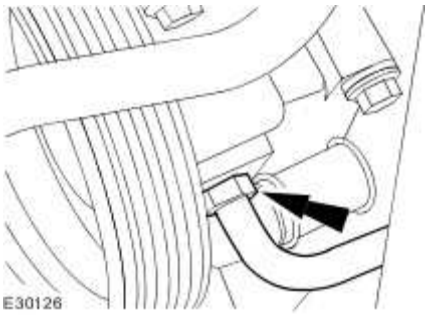

3 . Tighten to 25 Nm.

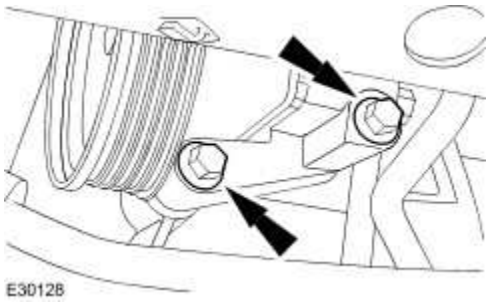

4 **NOTE:**

.

If the pump is being replaced for leakage or noise related issues and there is no evidence of fluid contamination, there is no need to replace the reservoir.

In some cases where the fluid clearly contains particulate matter, and the system continues to function, flush the system with fresh fluid and replace the reservoir, as there is the possibility that the reservoir internal filter may be damaged or faulty.

Published: Feb 19, 2008

Power Steering Pump - 4.2L NA V8 - AJV8/4.2L SC V8 - AJV8/3.5L NA V8 - AJV8 (57.20.14)

Special Service Tools

Engine support beam.
303-021

Engine lifting brackets
303-749

Removal

All vehicles

1 . Remove the air cleaner assembly.
For additional information, refer to Air Cleaner (19.10.05)

2 . Detach the accessory drive belt.
For additional information, refer to Accessory Drive Belt - 4.2L NA V8 - AJV8/4.2L SC V8 - AJV8/3.5L NA V8 - AJV8 (12.10.40)

3 . Remove the left-hand front wheel and tire.
For additional information, refer to Wheel and Tire (74.20.05)

4 . Remove the air deflector.
For additional information, refer to Air Deflector (76.11.41)

5 . Remove the left-hand engine mount nut.

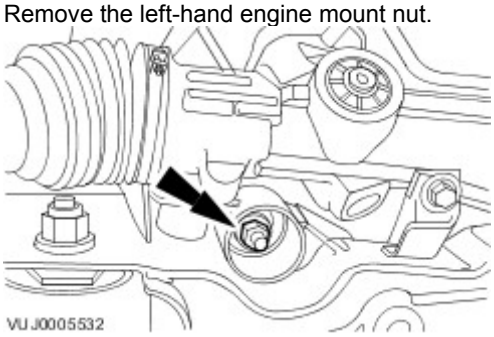

www.JagDocs.com

6 .

CAUTION: Cap the power steering line to prevent loss of fluid and prevent dirt ingress.

CAUTION: If power steering fluid comes into contact with the paintwork, the affected area must be immediately washed down with cold water.

NOTE:

Drain the fluid into a suitable container.

Disconnect the power steering reservoir to power steering pump supply line.

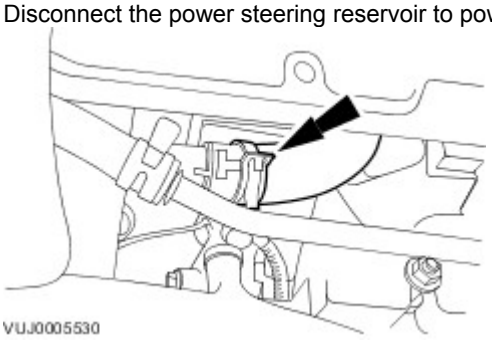

7 . Remove the air conditioning (A/C) compressor upper bolt.

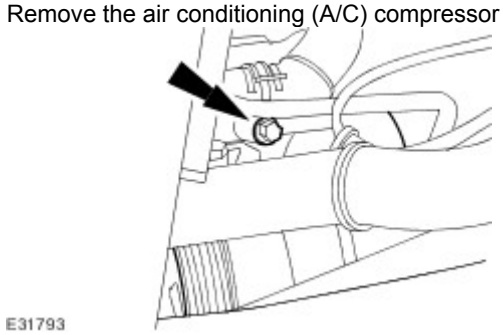

8 . Lower the vehicle.

Vehicles without supercharger

9 . Remove the throttle body.
For additional information, refer to Throttle Body - 4.2L NA V8 - AJV8/3.5L NA V8 - AJV8, VIN Range: G00442->G45703 (19.70.04)
For additional information, refer to Throttle Body - 4.2L NA V8 - AJV8/3.5L NA V8 - AJV8, VIN Range: G45704->G99999 (19.70.04)

All vehicles

10 . Install the left-hand engine lifting eye.

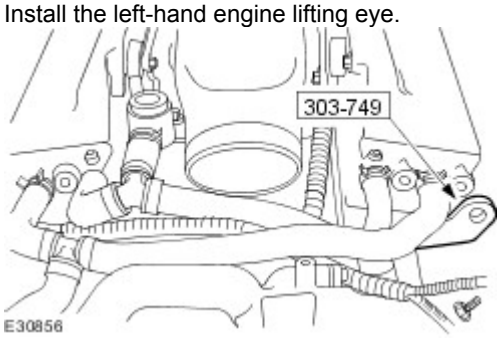

11 . Using the special tools, raise the engine to a suitable height.

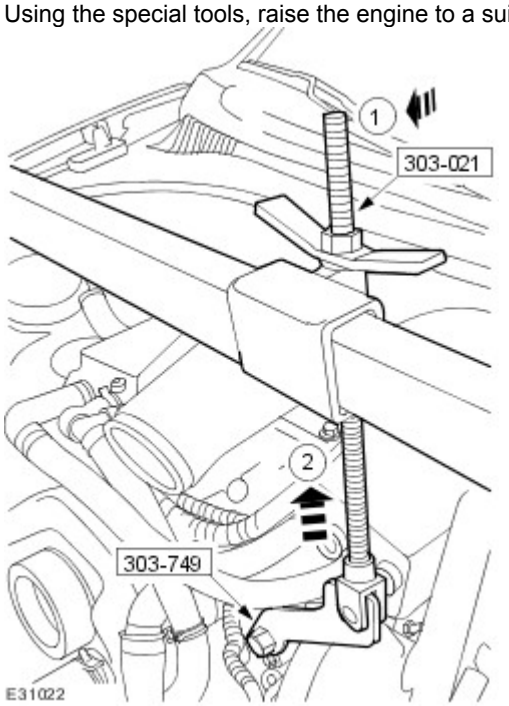

12 . Raise the vehicle.

13 . Detach the A/C compressor.

- Remove the 2 A/C compressor lower bolts.

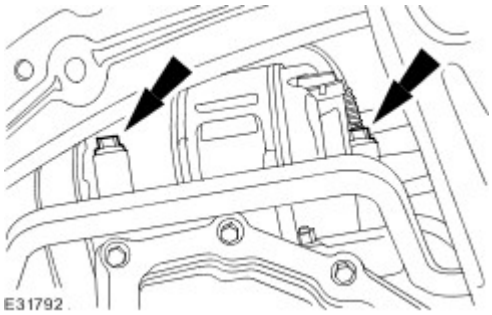

www.JagDocs.com

14 . Remove the 2 power steering pump lower bolts.

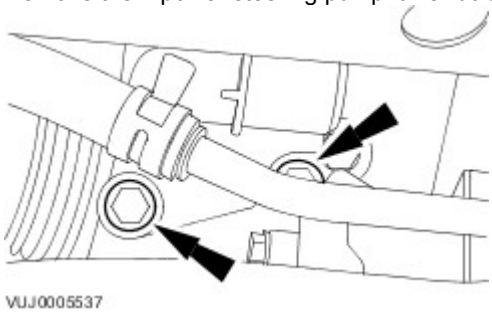

15 . Lower the vehicle.

16 .

CAUTION: Cap the power steering lines to prevent loss of fluid and prevent dirt ingress.

CAUTION: If power steering fluid comes into contact with the paintwork, the affected area must be immediately washed down with cold water.

NOTE:

Drain the fluid into a suitable container.

Disconnect the power steering pump to steering gear pressure line.

Remove and discard the O-ring seal.

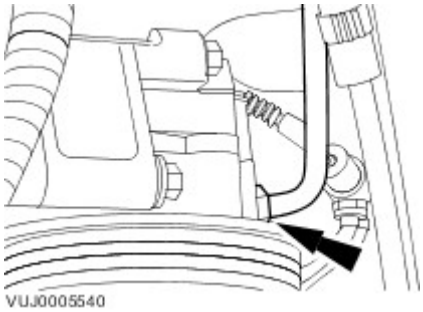

17 .

CAUTION: Care must be taken to make sure that the coolant hoses and A/C pipes are not damaged during the removal of the power steering pump.

NOTE:

The power steering pump rear upper bolt cannot be removed with the power steering pump located on the dowels. The power steering pump must be detached and rotated to allow the bolt to be removed.

Remove the power steering pump.

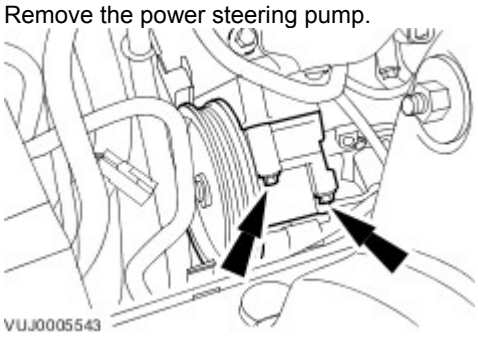

Installation

1 . **CAUTION: Care must be taken to make sure that the coolant hoses and A/C pipes are not damaged during the installation of the power steering pump.**

NOTE:

The power steering pump rear upper bolt must be installed before the power steering pump is located on the dowels.

To install, reverse the removal procedure.

2 . Tighten to 25 Nm.

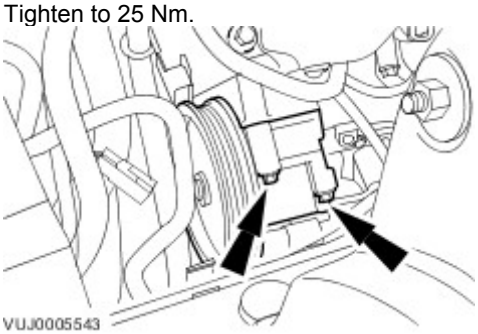

3 . Install a new O-ring seal.

Tighten to 15 Nm.

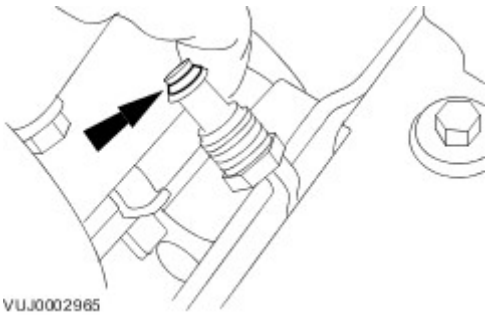

4 . Tighten to 25 Nm.

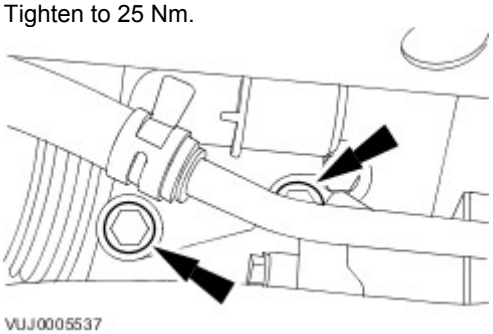

www.JagDocs.com

5 . Tighten to 25 Nm.

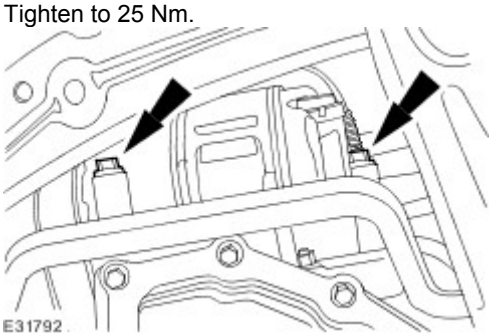

6 . Tighten to 25 Nm.

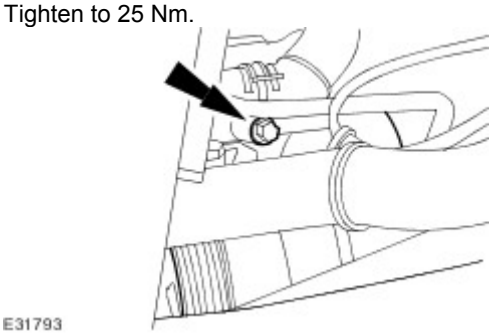

7 . Tighten to 63 Nm.

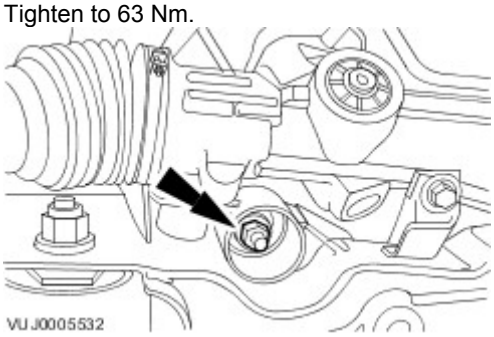

8 **NOTE:**

· If the pump is being replaced for leakage or noise related issues and there is no evidence of fluid contamination, there is no need to replace the reservoir.

In some cases where the fluid clearly contains particulate matter, and the system continues to function, flush the system with fresh fluid and replace the reservoir, as there is the possibility that the reservoir internal filter may be damaged or faulty.

9 . Bleed the power steering system.
For additional information, refer to Power Steering System Bleeding (57.15.02)

Power Steering Pump - 2.7L Diesel (57.20.14)

Special Service Tools

Accessory Belt Detensioner
303-703

Removal

1 . Remove the air cleaner assembly.
For additional information, refer to

2 . Remove the air deflector.
For additional information, refer to

3 Detach the accessory drive belt.
.

1) Using the special tool, rotate the accessory drive belt tensioner counter clockwise.

2) Detach the accessory drive belt.

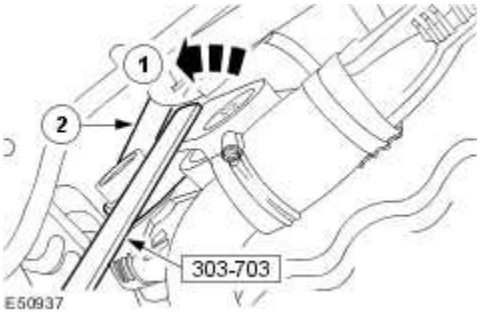

www.JagDocs.com

4 . Lower the vehicle.

5 . Detach the accessory drive belt from the power steering pump pulley.

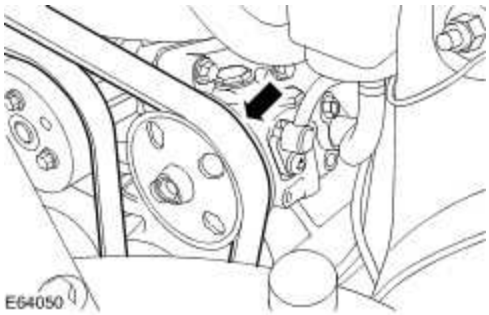

6 . **CAUTION: Cap the power steering lines to prevent loss of fluid and dirt ingress.**

CAUTION: If power steering fluid comes into contact with the paintwork, the affected area must be immediately washed down with cold water.

Disconnect the power steering pump to steering gear pressure line.

Remove and discard the O-ring seal.

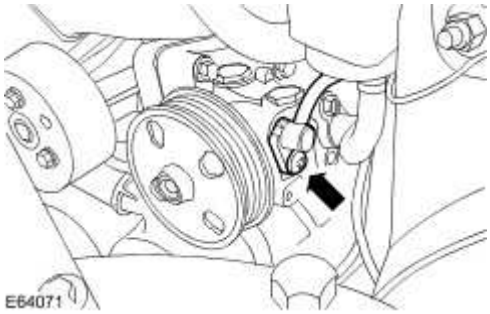

7 . Remove the power steering pump retaining bolts.

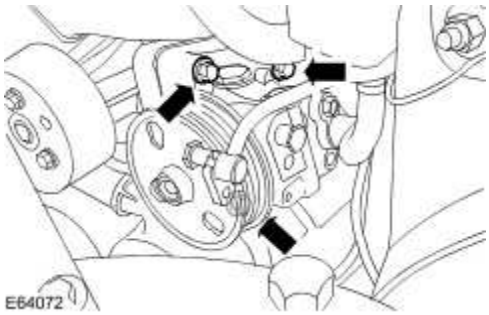

8 . Reposition the power steering pump forwards.

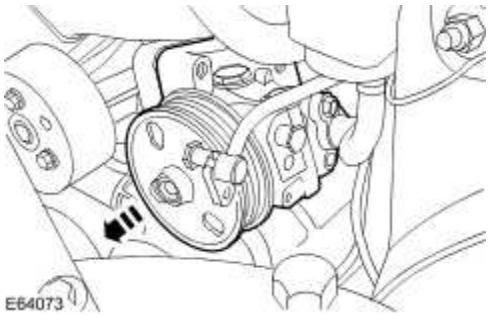

9
. **CAUTION: Cap the power steering lines to prevent loss of fluid and dirt ingress.**

CAUTION: If power steering fluid comes into contact with the paintwork, the affected area must be immediately washed down with cold water.

Remove the power steering pump.

Detach the hose.

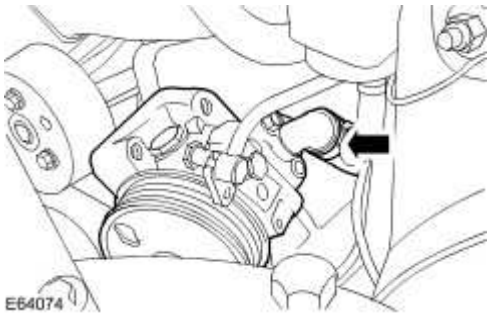

www.JagDocs.com

Installation

1 . To install, reverse the removal procedure.

- Tighten to 22 Nm.

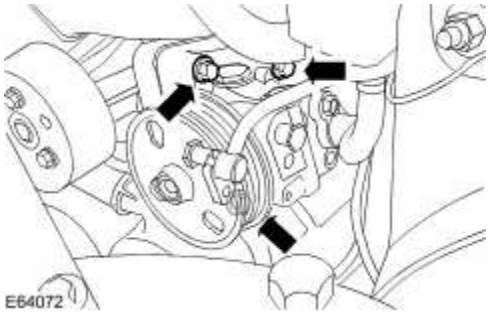

2 . Tighten to 22 Nm.

- Install new O-ring seal.
- Lubricate the new O-ring seal with power steering fluid.

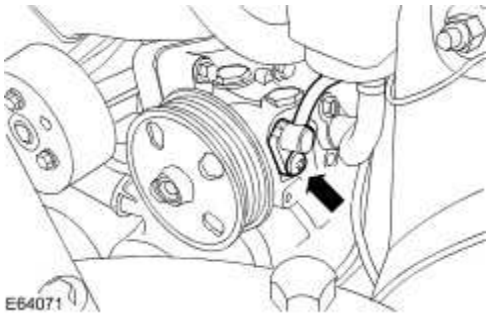

3 **NOTE:**

.

If the pump is being replaced for leakage or noise related issues and there is no evidence of fluid contamination, there is no need to replace the reservoir.

In some cases where the fluid clearly contains particulate matter, and the system continues to function, flush the system with fresh fluid and replace the reservoir, as there is the possibility that the reservoir internal filter may be damaged or faulty.

Steering Gear Bushing (57.10.30)

Special Service Tools

Steering gear lower bush remover and installer.
204-273

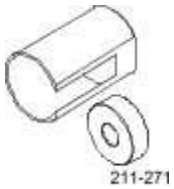

Steering gear upper bush remover and installer.
211-271

Steering gear bush remover and installer (Nut)
204-274

Bearings
JAG-061

Steering gear bush remover and installer (Bolt)
204-275

www.JagDocs.com

Removal

1 . Center the steering wheel.

- Lock in position and remove the ignition key.

2 . Remove the air deflector. <<501-02>>

3 . Disconnect the power steering control valve actuator electrical connector.

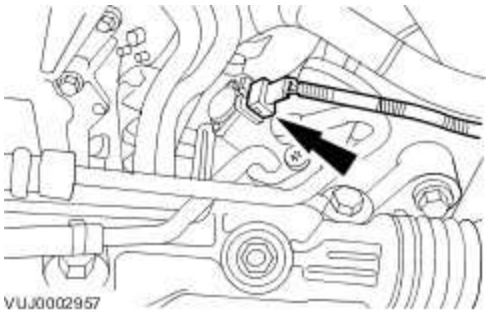

4 . Detach the lower steering column.

- Remove the steering gear shaft pinch bolt.

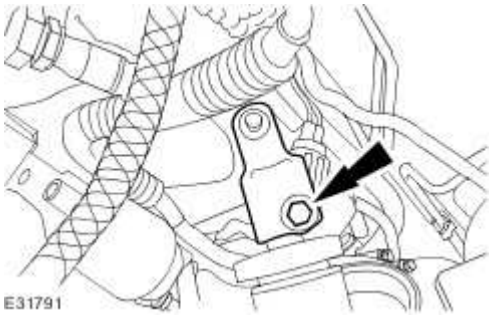

5 . Detach the steering gear.

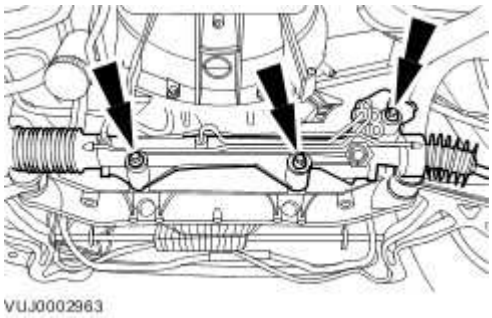

6 . Using the special tools, remove the steering gear lower bushes.

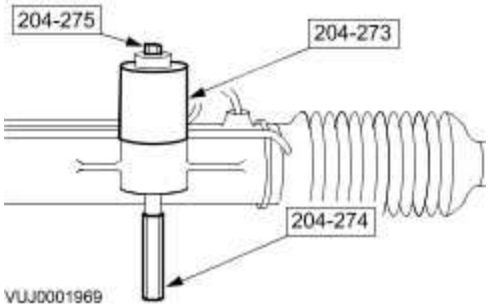

7 . Using the special tools, remove the steering gear upper bush.

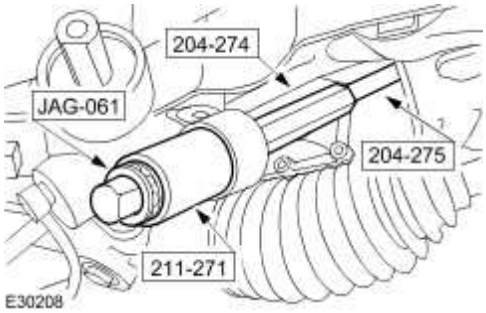

Installation

1 . **NOTE:**

Apply a thin film of lubricant to the steering gear bushes.

Using the special tools, install the steering gear lower bushes.

www.JagDocs.com

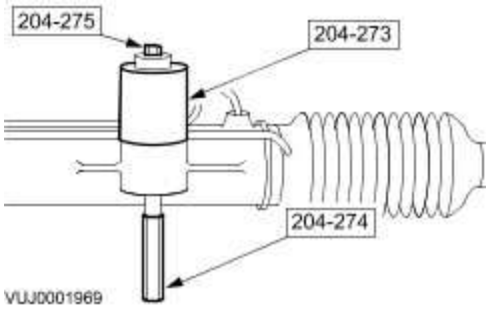

2 . **NOTE:**

Apply a thin film of lubricant to the steering gear bush.

Using the special tools, install the steering gear upper bush.

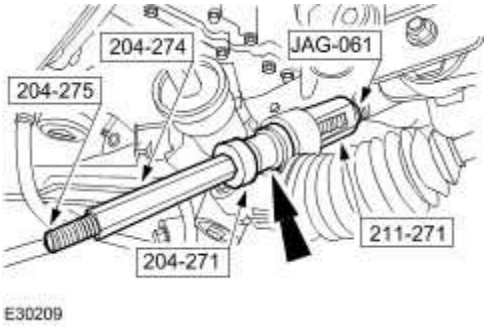

3 . Install the steering gear.

Tighten to 100 Nm.

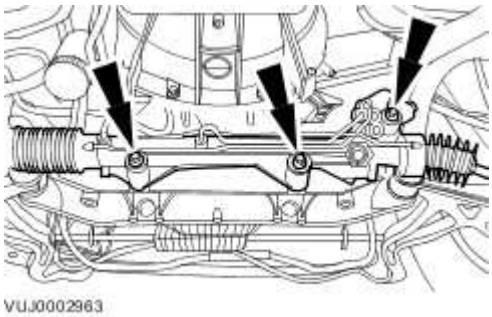

4 . Attach the lower steering column.

- Install the steering gear shaft pinch bolt.
- Tighten to 35 Nm.

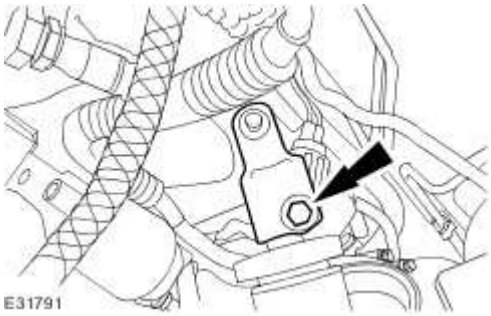

5 . Connect the power steering control valve actuator electrical connector.

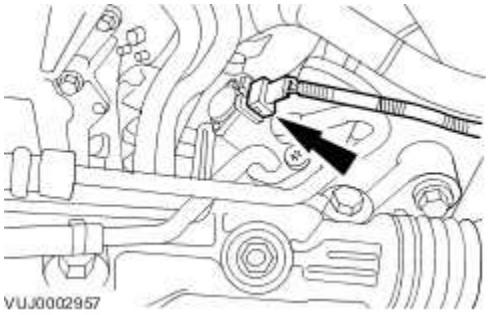

6 . Install the air deflector. <<501-02>>

www.JagDocs.com

Specifications

Torque Specifications

Description	Nm	lb-ft	lb-in
Tie-rod end retaining nut	75	55	-
Tie-rod end lock nut	55	41	-

Steering Linkage

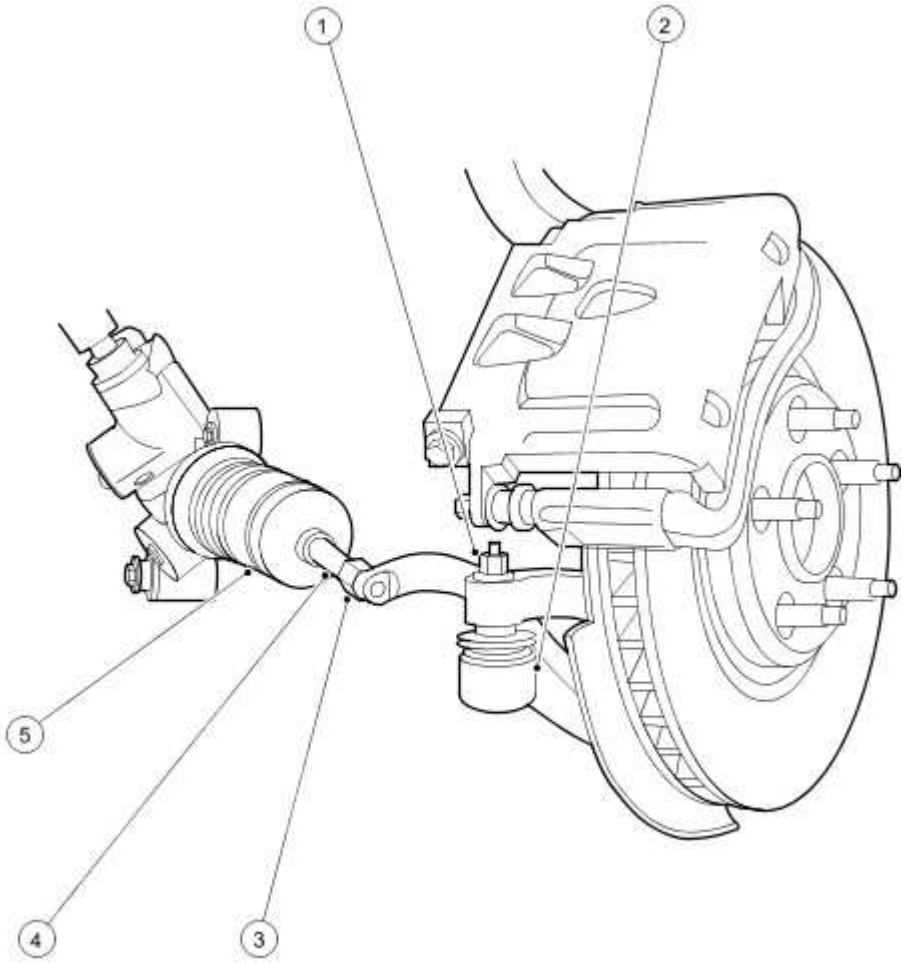

E30455

Item	Part Number	Description
1	—	Tie-rod end retaining nut
2	—	Tie-rod end
3	—	Tie-rod end lock nut
4	—	Tie-rod
5	—	Tie-rod end boot

The left and right-hand tie-rod assemblies:

- Transmit steering forces from the steering gear to the wheel knuckles.
- Provide front road wheel toe setting by adjustment of the threaded outer tie-rod ends.

www.JagDocs.com

NOTE:

Steering geometry adjustments must only be carried out with the vehicle on turn plates to allow the wheels to move during adjustment.

The left and right-hand steering rack boots:

- Are installed between the steering rack and the tie-rod ends.
- Are of the concertina type.
- Are to prevent the ingress of foreign matter.

Steering Linkage

For additional information, refer to<<211-00>>

www.JagDocs.com

Steering Gear Boot (57.10.29)

Removal

1 . Remove the tie rod end.
For additional information, refer to

2 . Remove and discard the tie-rod boot outer retaining clamp.

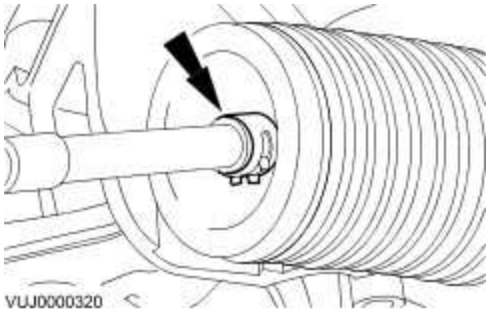

3 . Remove and discard the tie-rod boot inner retaining clamp.

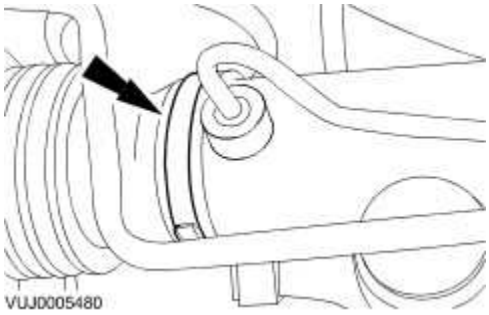

4 . **CAUTION: Make sure the area is washed down thoroughly before removing the steering gear boot.**

Remove the tie-rod boot.

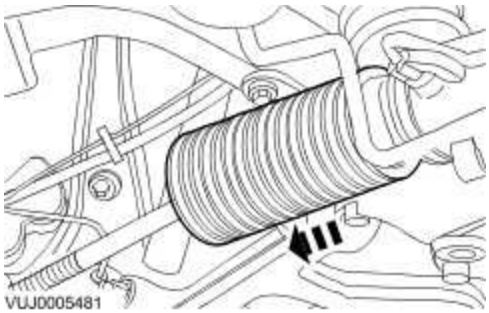

Installation

1 . **CAUTION: Make sure the tie-rod is clean before installing the steering gear boot.**

NOTE:

Install new retaining clamps.

To install, reverse the removal procedure.

www.JagDocs.com

Tie Rod End (57.55.02)

Removal

1 . Remove the front wheel and tire. <<204-04>>

2 . Loosen the tie-rod end lock nut.

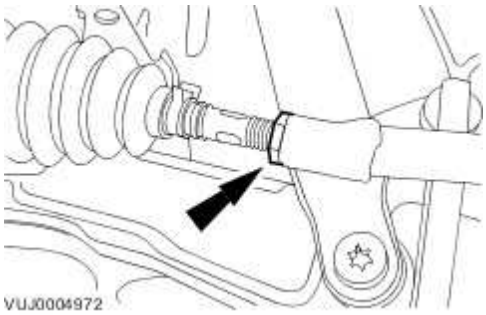

3 . **CAUTION: Prevent the tie-rod end ball joint ball pin from rotating. Failure to do so may result in damage to the tie-rod end ball joint boot.**

Remove the tie-rod end retaining nut.

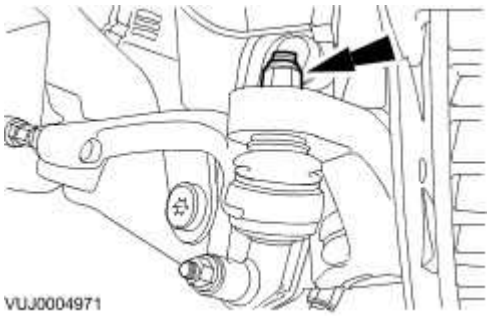

4 . **NOTE:**

Make a note of the number of turns required to remove the tie-rod end.

Remove the tie-rod end.

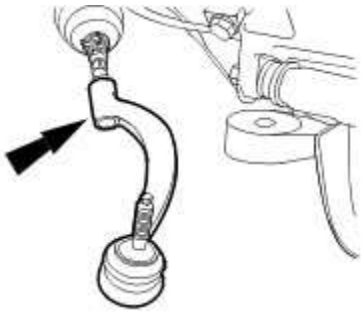

Installation

1 **NOTE:**

.

Make sure the tie-rod end is installed on the tie-rod by the same amount of turns used to remove it.

Install the tie-rod end.

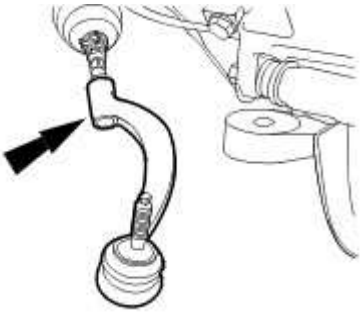

2

. **CAUTION: Prevent the tie-rod end ball joint ball pin from rotating. Failure to do so may result in damage to the tie-rod end ball joint boot.**

CAUTION: Make sure the mating surfaces are free from dirt and lubricant.

Install the tie-rod end retaining nut.

- Tighten to 75 Nm.

www.JagDocs.com

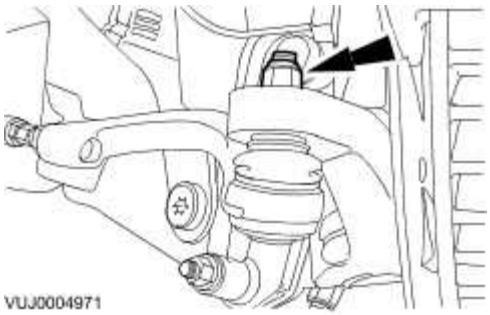

3 . Tighten the tie-rod end lock nut.

Tighten to 55 Nm.

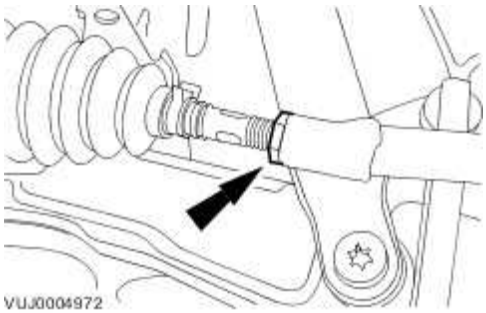

4 . Check the front toe adjustment. <<204-00>>

Specifications

Torque Specifications

Description	Nm	lb-ft	lb-in
Steering wheel retaining bolt	65	48	-
Upper steering column pinch bolt	35	26	-
Lower steering column pinch bolt	35	26	-
Upper steering column retaining nuts	30*	22	-
Lower steering column retaining nuts	9	-	80
Tilt solenoid retaining bolts	1	-	9
Telescopic solenoid retaining bolts	1	-	9
Telescopic housing retaining bolts	8	-	71
Steering column lower shroud retaining screws	3	-	27

*If you are re-using this fixing on a vehicle built prior to VIN H16709, then tighten to 25 Nm. If you are replacing a fixing, then you must tighten to 30 Nm.

www.JagDocs.com

Steering Column

Upper column

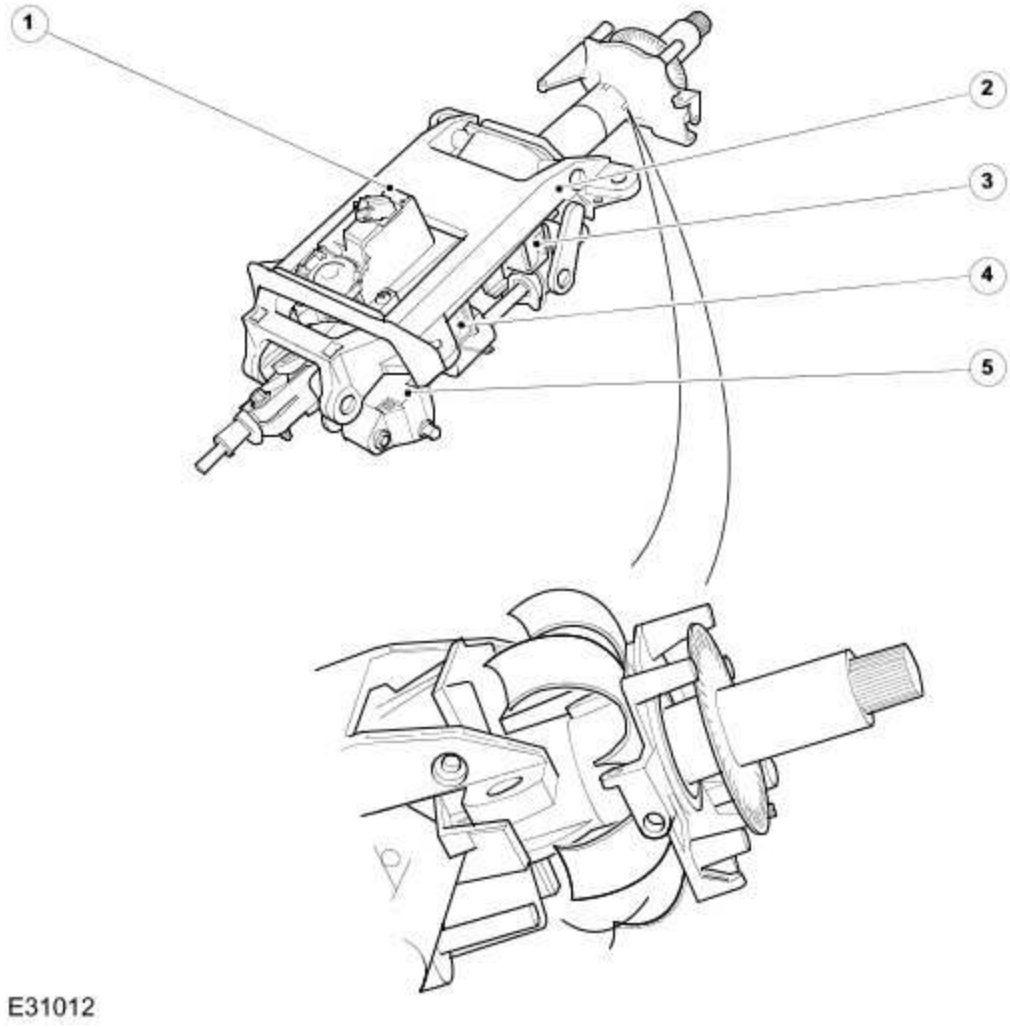

Item	Part Number	Description
1	—	Steering column lock actuator
2	—	Steering column
3	—	Telescope solenoid
4	—	Tilt solenoid
5	—	Tilt/Telescopic motor

Lower column

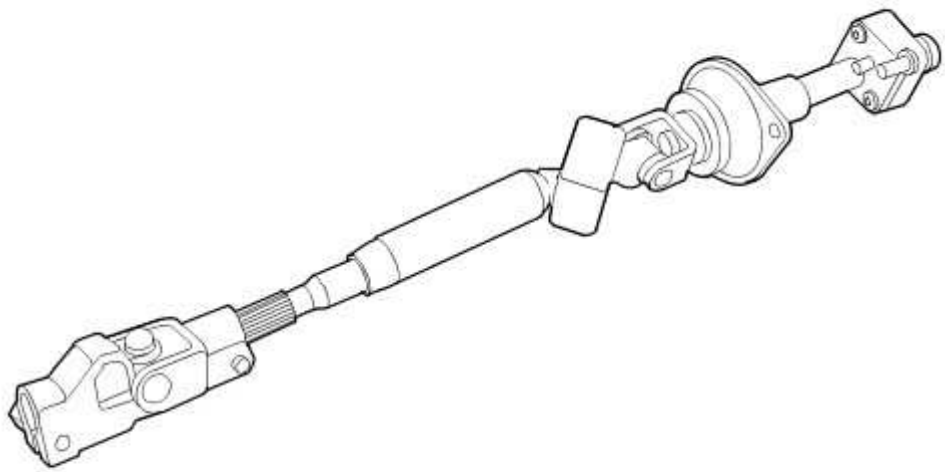

E31786

The steering lock actuator is secured to the lower part of the adjustable steering column and consists of a locking pin and an electric motor. The electric motor has a hall effect sensor which detects lock and unlock states, this makes the lock actuator more sensitive for the time taken to lock and unlock. A bus controller chip has also been added to cope with the high integrity bus traffic. The column is locked and unlocked by inserting and removing the ignition key respectively. The instrument cluster provides control for the column adjustment by means of a power tilt/telescope switch on the side of the steering column lower shroud, memory recall and easy entry or exit.

The upper column is a tilt and telescopic type consisting of one electric motor to tilt and telescope the steering column. The steering column has 50 mm of telescopic movement and 5 degrees of tilt adjust. The power tilt and telescope function allows the driver to manually set the steering column position by using the power tilt/telescope switch, regardless of the ignition switch position. When moving the column, the switch will only allow one directional movement at a time.

Crash load absorption is provided by a unique peeling tube mechanism. If an accident occurs and the driver is not wearing a safety belt the steering column must be replaced. The steering column must also be replaced if the air bag is deployed.

The upper steering column will need to be calibrated if the column or the instrument cluster is renewed. Calibration is carried out using the Jaguar approved diagnostic system. No routine maintenance of the steering wheel and driver airbag is required. Any setting of steering wheel for misalignment must be achieved by adjusting the tie rods.

The lower steering column has the advantage of having a swing link mechanism, this is fitted to provide movement to occur in the steering system when travelling over bumps and obstacles. This

www.JagDocs.com

system improves the driver feel of the steering system as vibrations through the suspension assembly are greatly decreased.

The lower steering column swing link will need to be calibrated if the lower slider pinch bolt has been released or removed and if the lower column is replaced. No routine maintenance of the swing link or lower universal joint is required as these components are sealed with a special lubricant and high temperature resistant seals.

Steering Column

For additional information, refer to <<211-00>>.

www.JagDocs.com

Ignition Switch Lock Cylinder (57.40.29)

Removal

Vehicles with ignition switch lock cylinder interlock cable

1. **CAUTION: When disconnecting the 'J' gate make sure that no damage occures to the interlock cable.**

Remove the transmission selector lever. <<307-05>>

All vehicles

2 . Remove the instrument panel lower trim.

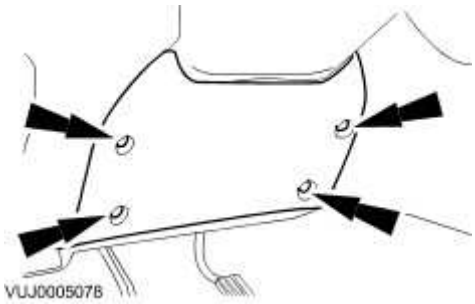

3 . Remove the steering column lower shroud.

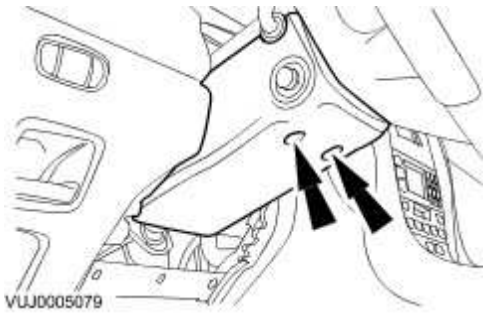

4. **CAUTION: If excessive force is used to remove the ignition switch lock cylinder**

shroud damage may occur to the instrument panel.

Remove the ignition switch lock cylinder shroud.

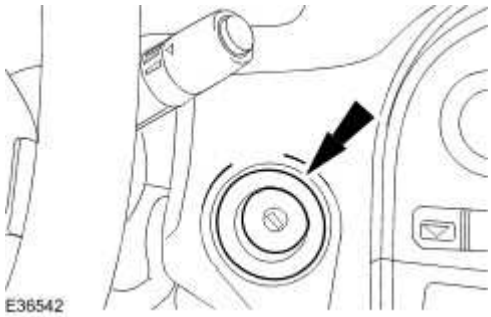

5 . **CAUTION: If excessive force is used to remove the ignition switch lock cylinder housing damage may occur to the instrument panel.**

Using a suitable tool, detach the ignition switch lock cylinder housing.

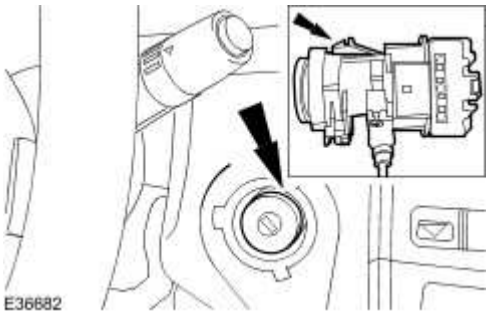

6 . Disconnect the electrical connector.

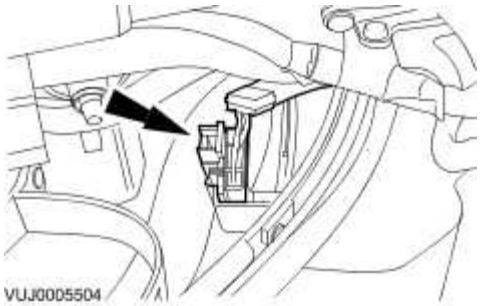

www.JagDocs.com

Vehicles with ignition switch lock cylinder interlock cable

7 . **CAUTION: Make sure the ignition switch lock cylinder interlock cable is not crimped.**

Remove the ignition switch lock cylinder housing.

- Disconnect the electrical connector.

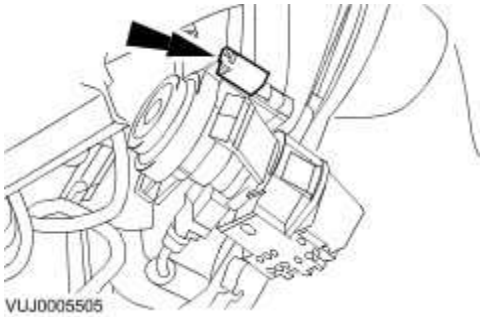

All vehicles

8 . Remove the ignition switch lock cylinder housing.

- Disconnect the electrical connector.

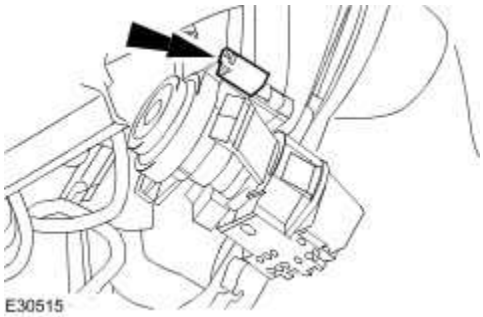

9 . Remove the ignition switch lock cylinder.

1) Turn ignition key to position one.

2) Release the retaining plunger.

3) Remove the ignition switch lock cylinder.

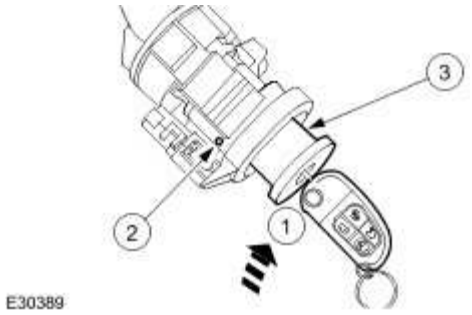

Installation

1 . To install, reverse the removal procedure.

Tighten to 3 Nm.

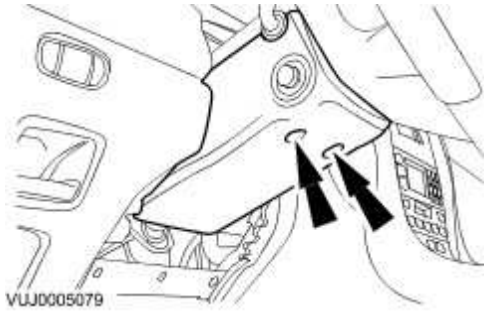

www.JagDocs.com

Steering Column (57.40.01)

Removal

1 . If possible make sure that the steering column is fully lowered and fully extended.

2 . Remove the clockspring.
For additional information, refer to Clockspring (86.65.92)

3 . Disconnect the steering wheel rotation sensor electrical connector.

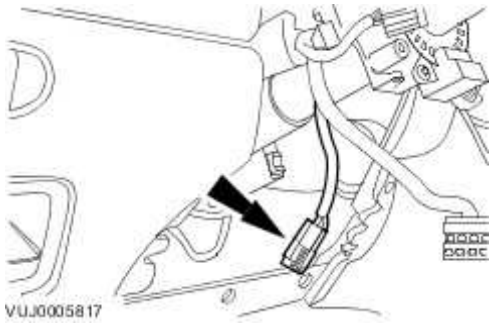

4 . Remove the steering wheel rotation sensor.

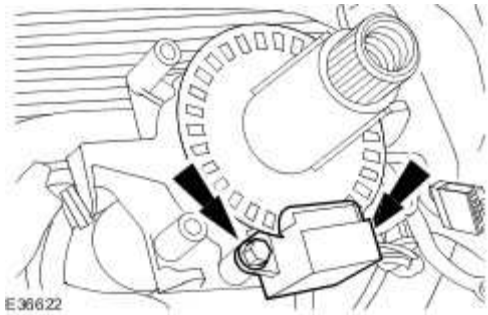

5 . Detach the left-hand multifunction switch wiring harness.

6 . Detach the left-hand multifunction switch wiring harness.

7 . Detach the right-hand multifunction switch wiring harness.

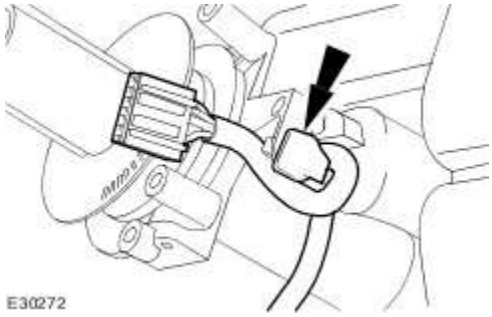

8 . Detach the right-hand multifunction switch wiring harness.

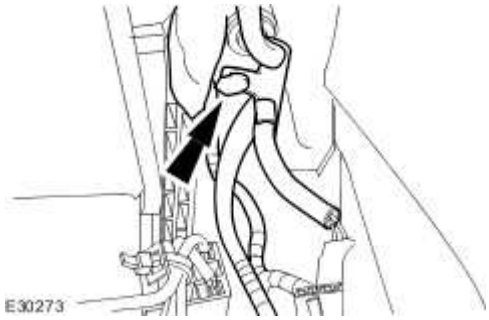

9 . Disconnect the steering column electrical connector.

www.JagDocs.com

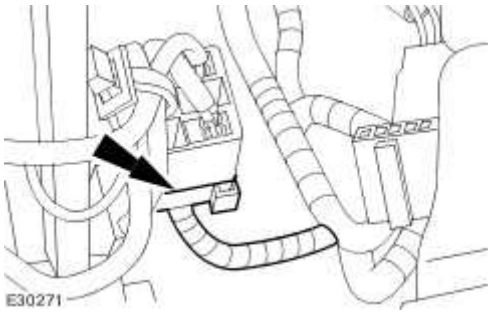

10 . Remove the steering column pinch bolt.

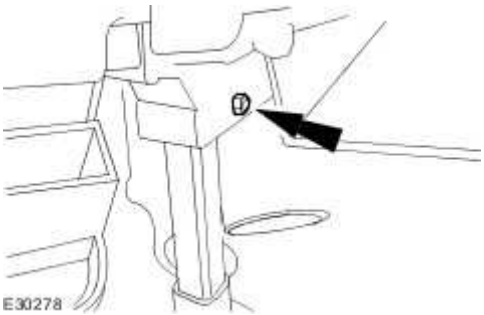

11 . Detach the steering column.

- Support the weight of the steering column.

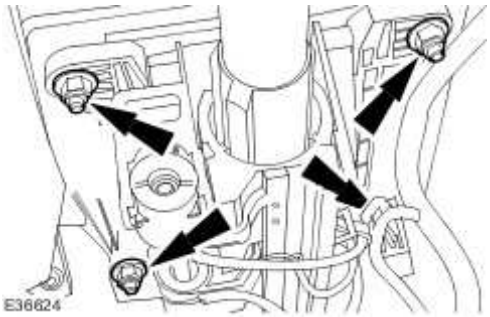

12 . Remove the steering column.

- Disconnect the steering column lock actuator electrical connector.

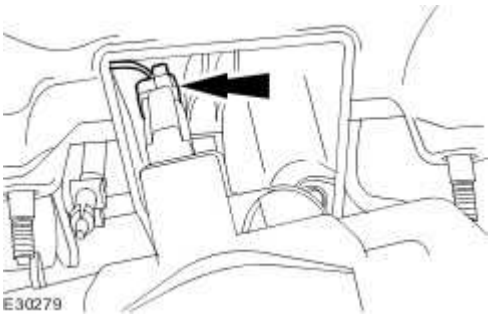

Installation

1 . Install the steering column.

- Connect the steering column lock actuator electrical connector.

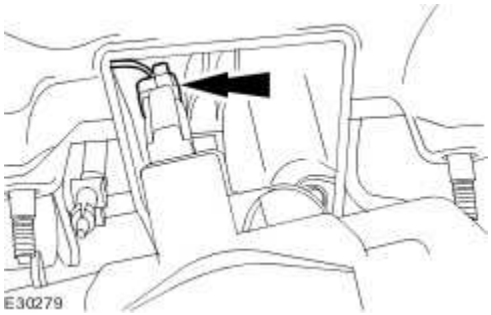

2 . **NOTE:**

Tighten the retaining nuts in the sequence shown.

Attach the steering column.

- Tighten to 30 Nm.

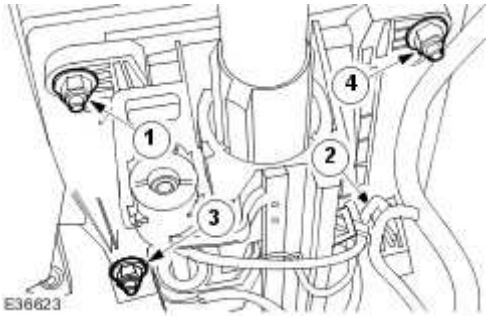

www.JagDocs.com

NOTE:

If you are re-using this fixing on a vehicle built prior to VIN H16708, then tighten to 25 Nm. If you are replacing a fixing, then you must tighten to 30 Nm.

3 . **CAUTION: Make sure the pinch bolt is correctly installed.**

Tighten to 35 Nm.

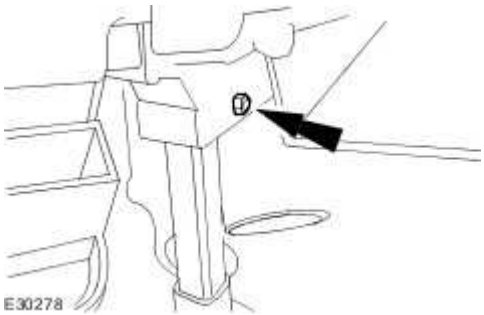

4 . Connect the steering column electrical connector.

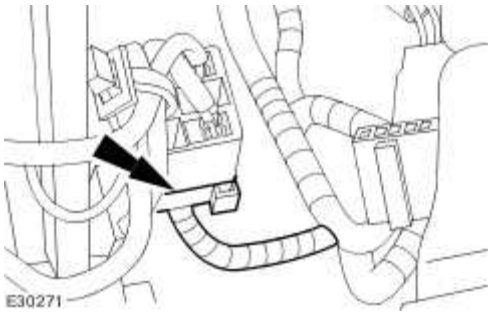

5 . Attach the left-hand multifunction switch wiring harness.

6 . Attach the left-hand multifunction switch wiring harness.

7 . Attach the right-hand multifunction switch wiring harness.

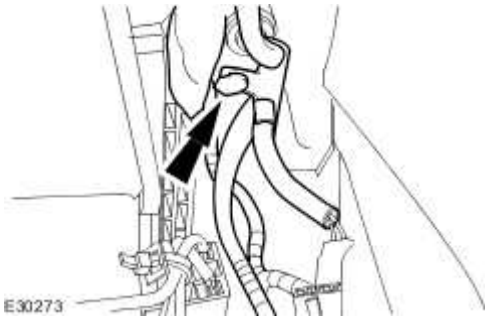

8 . Attach the right-hand multifunction switch wiring harness.

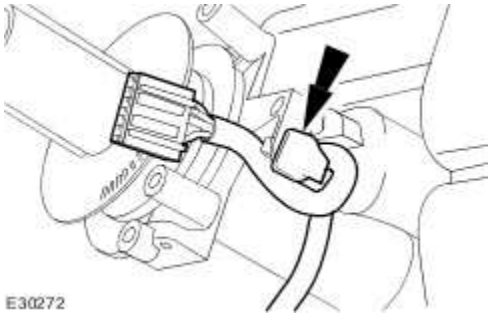

9 . Install the steering wheel rotation sensor.

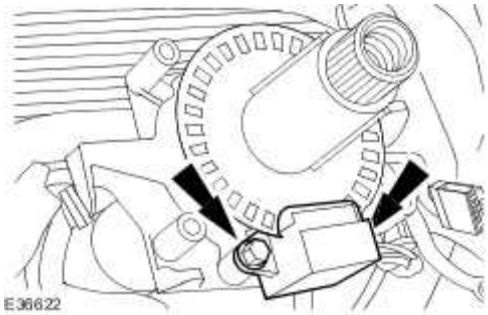

www.JagDocs.com

10 . Connect the steering wheel rotation sensor electrical connector.

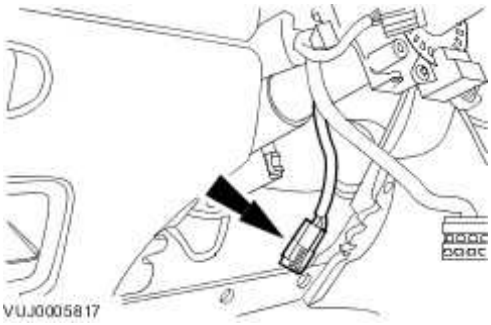

11 . Install the clockspring.
For additional information, refer to Clockspring (86.65.92)

12 . Reposition the steering column back to its original position.

Steering Column Lower Shaft (57.40.05)

Removal

1 . Centralize the steering wheel.

- Lock in position and remove the ignition key.

2 . Remove the air deflector.

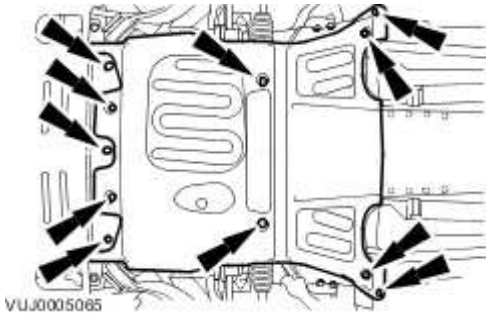

3 . Detach the lower steering column universal joint from the steering gear.

- Remove the retaining bolt.

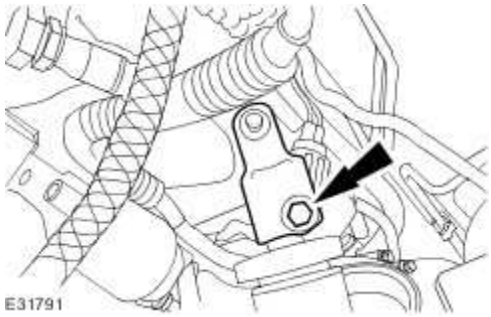

4 . Remove the upper steering column pinch bolt.

www.JagDocs.com

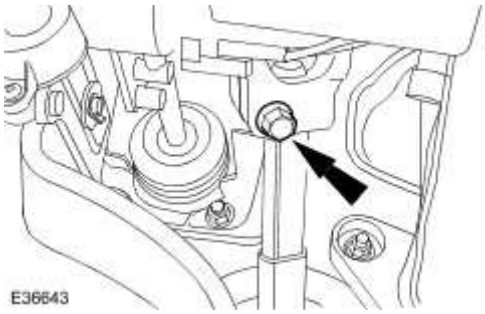

5 . Detach the lower steering column shaft from the upper steering column.

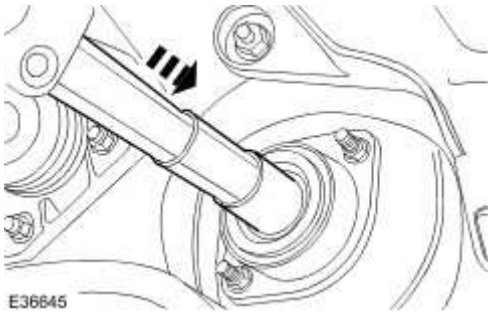

6 . Remove the lower steering column support bearing retaining nuts.

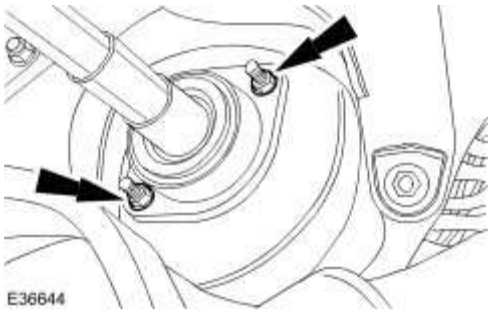

7 . Remove the lower steering column.

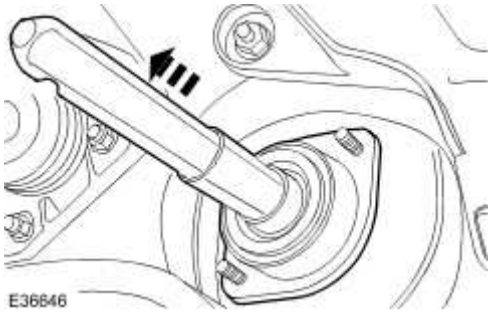

Installation

1 . To install, reverse the removal procedure.

Tighten to 9 Nm.

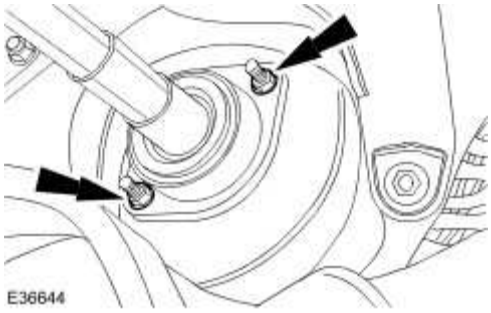

2 . Tighten to 35 Nm.

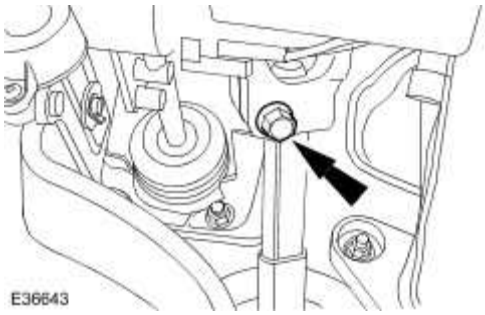

3 . Tighten to 35 Nm.

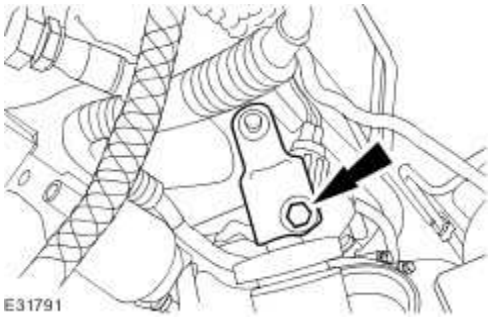

4 . Carry out the lower steering column setting procedure. <<211-00>>

www.JagDocs.com

Steering Wheel (57.60.01)

Special Service Tools

E43628

Locking Tool
211-326

Removal

1 . Remove the driver air bag module.
For additional information, refer to Driver Air Bag Module (76.73.39)

2 . Disconnect the electrical connector.

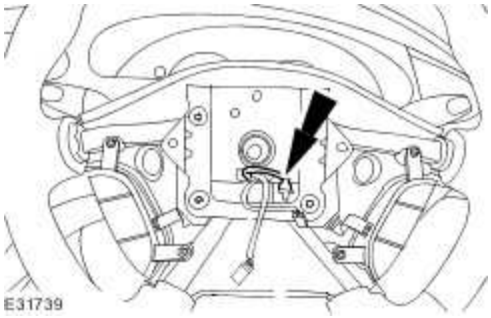

E31739

3 . **CAUTION: Position the front wheels in a straight ahead position and centralize steering wheel. Failure to follow this instruction may result in damage to the clockspring.**

CAUTION: Make sure no damage is occured to the electrical connectors. Failure to follow this instruction may result in damage to the vehicle.

Remove the steering wheel.

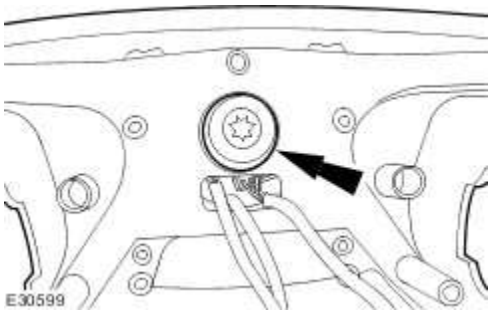

4. **CAUTION: Failing to install the special tool to the clockspring may result in damage to the vehicle.**

CAUTION: Do not allow the clockspring to unwind.

Install the special tool to the clockspring.

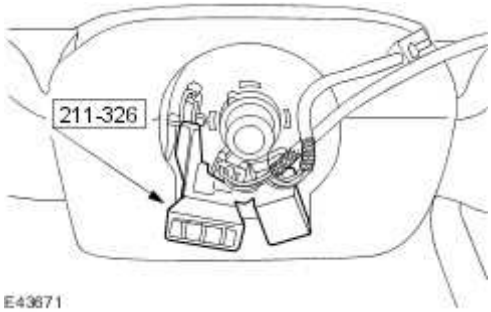

Installation

1 . To install, reverse the removal procedure.

2. **CAUTION: Make sure that the arrow on the cassette is centered and pointing vertically prior to the steering wheel installation. On removal of the special tool, keep the clockspring cables taught to prevent the cassette moving from the set position. Do not allow the clockspring to unwind. Failure to follow this instruction may result in damage to the component.**

www.JagDocs.com

Install the steering wheel.

3. **CAUTION: Check the alignment arrow is still in the vertical position with the wheels straight ahead to make sure that the directional indicator cancellation is central.**

Tighten to 65 Nm.

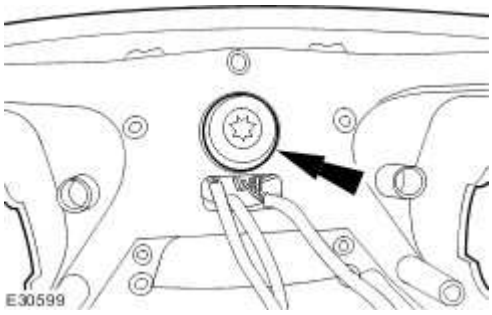

Steering Column

Disassembly

1 . Remove the Steering Column Lock Actuator. <<211-05>>

2 . Detach the wiring harness .

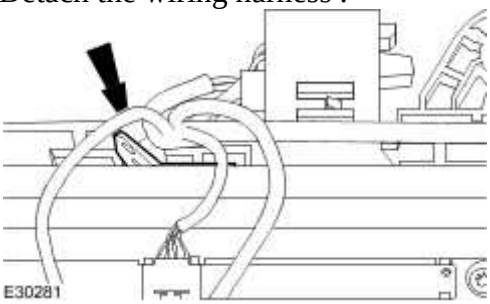

3 . Detach the steering column electrical connector housing.

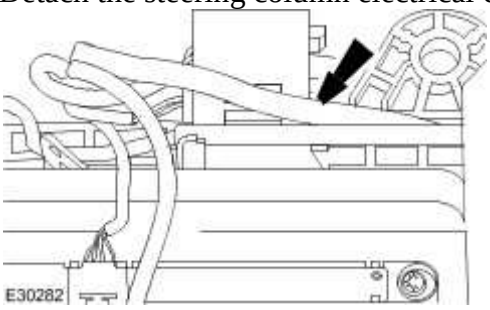

4 . Remove the steering column electrical connector housing.

- Disconnect the electrical connectors.

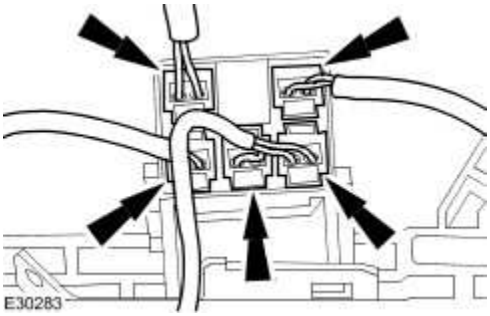

5 . **NOTE:**

Remove and discard the tilt solenoid retaining bolts.

www.JagDocs.com

Remove the tilt solenoid.

- Detach the tilt solenoid wiring harness.

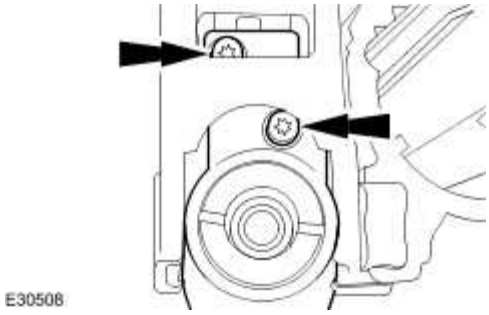

6 . **NOTE:**

Remove and discard the telescopic solenoid retaining bolts.

Remove the telescopic solenoid.

- Remove and discard the retaining strap.

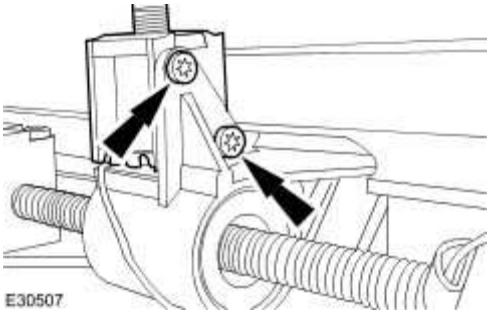

7 . Remove the tilt/telescopic motor retaining pin.

- Remove and discard the retaining pin and washers.

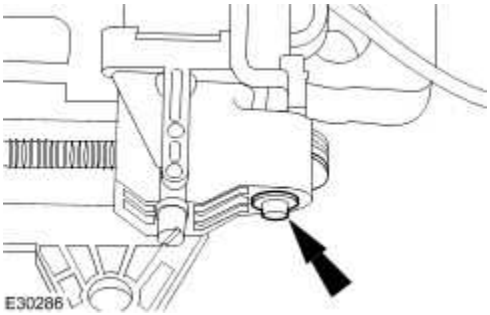

8 . Remove and discard the telescopic housing retaining bolts.

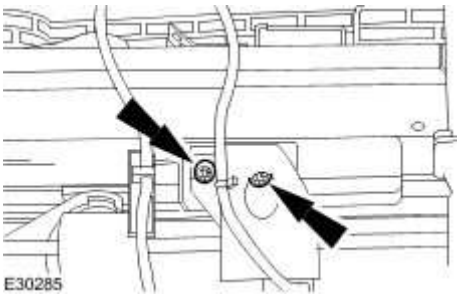

9 . **CAUTION: Make sure the potentiometer sliders are fully disconnected. Failure to follow this instruction may result in component damage.**

Reposition the tilt/telescopic motor.

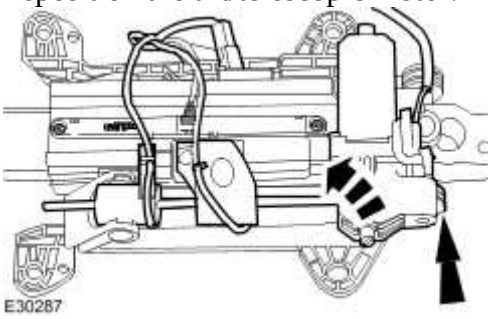

10 . **NOTE:**

The tilt/telescopic motor will only need to be rotated if the motor is inoperative.

Rotate the tilt/telescopic motor as shown.

- Press the telescopic solenoid engagement pin.

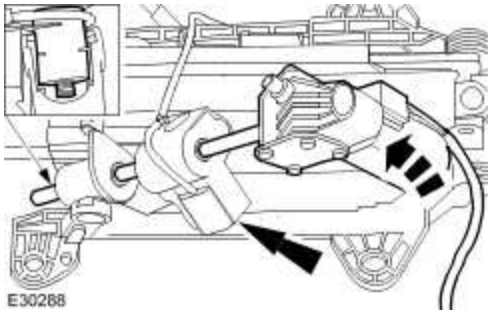

11 . Remove the tilt/telescopic motor.

www.JagDocs.com

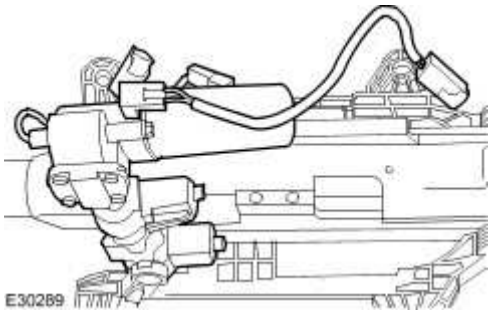

Assembly

1 . **CAUTION: Make sure the potentiometer sliders are correctly located. Failure to follow this instruction may result in component damage.**

Install the tilt/telescopic motor.

- Reposition the tilt/telescopic motor to the steering column.

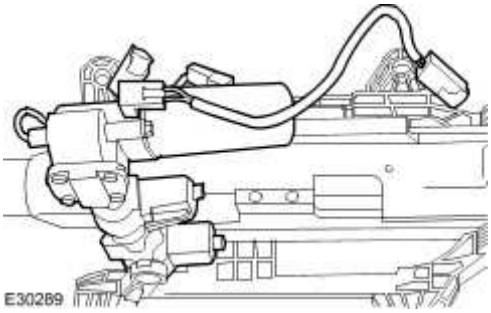

2 . Install new telescopic housing retaining bolts.

- Tighten to 8 Nm.

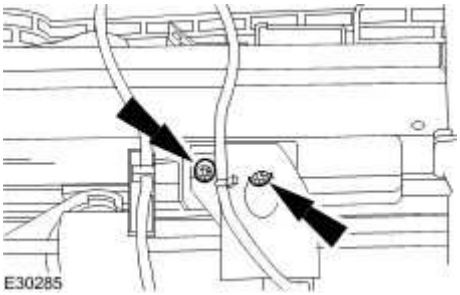

3 . Install the supplied spacer between the tilt/telescopic motor and steering column.

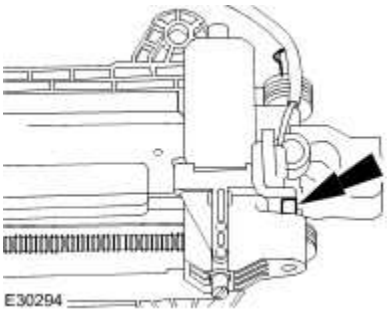

4 . Install a new tilt/telescopic motor retaining pin and washers.

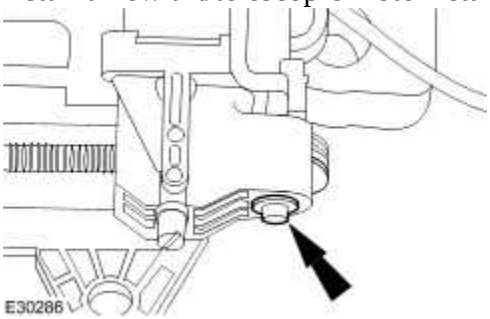

5 . **NOTE:**

Install new tilt solenoid retaining bolts.

Install the tilt solenoid.

- Tighten to 1 Nm.
- Attach the tilt solenoid wiring harness.

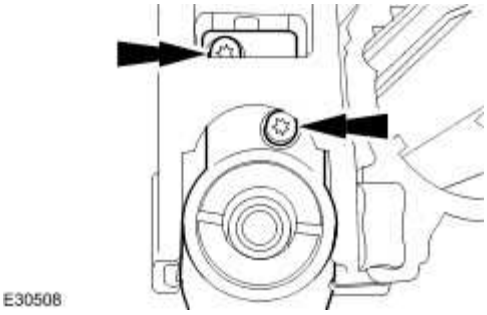

6 . **NOTE:**

Install new telescopic solenoid retaining bolts.

Install the telescopic solenoid.

- Tighten to 1 Nm.
- Install a new retaining strap.

www.JagDocs.com

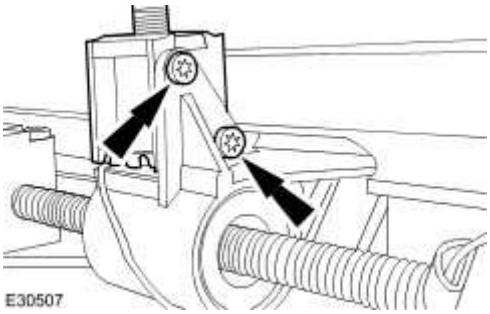

7 . Install the steering column electrical connector housing.

- Connect the electrical connectors.

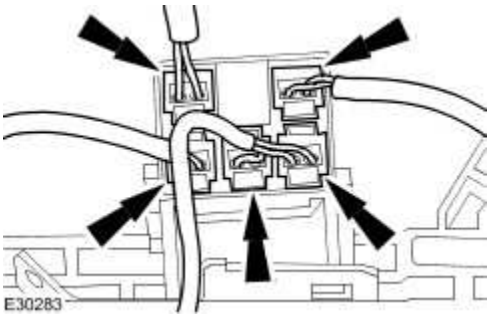

8 . Attach the steering column electrical connector housing.

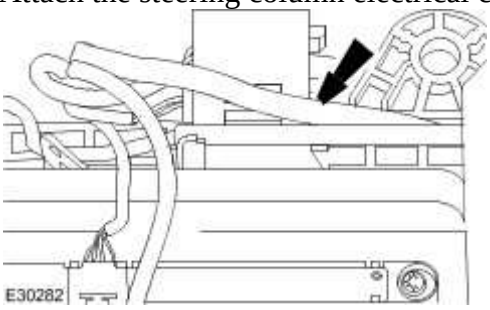

9 . Attach the wiring harness.

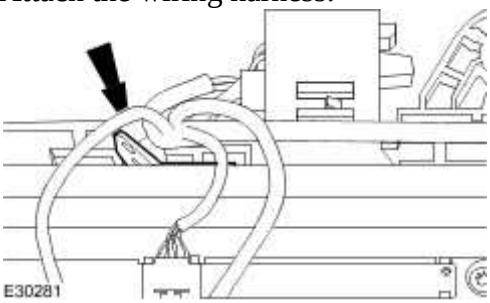

10 . Install the Steering Column Lock Actuator. <<211-05>>

211-05 :Steering Column Switches

Description and operation

Steering Column Switches

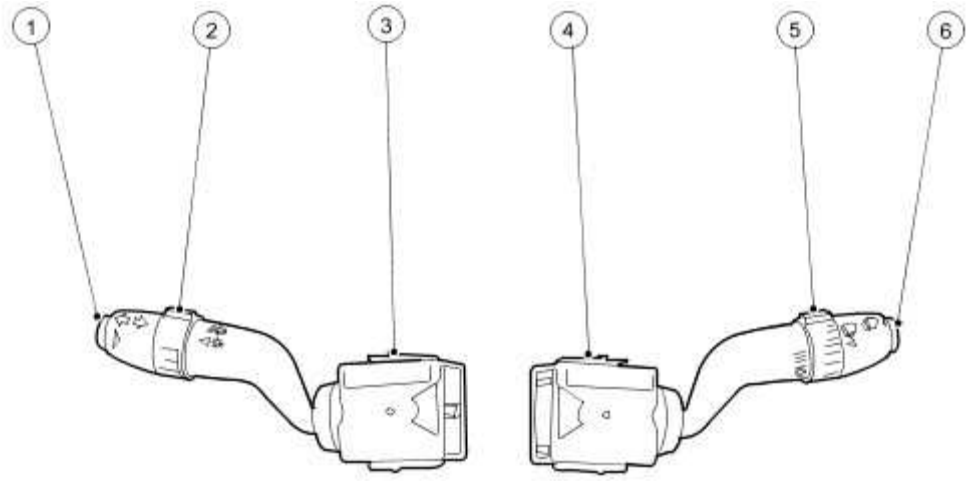

VUJ0005378

Item	Part Number	Description
1		Trip Button
2		Side Lamps/Head Lamps/Auto Lamps and Exit Delay Collar
3		Direction Indicator/Main Beam Switch
4		Wiper Switch
5		Intermittent Wipe Time Delay Collar
6		Wash/Wipe Button

The multifunction switch is situated on the steering column and consists of the wiper switch and the direction indicator/main beam switch.

www.JagDocs.com

Multifunction switch left-hand

The Multifunction switch left-hand is on the left-hand side of the steering column and controls the following functions.

Direction Indicators

The direction indicators:

- operate when the ignition switch is in position II.
- are operated by moving the multifunction switch up or down until it latches in position, to indicate a right or left turn respectively.
- can be operated while the multifunction switch is held against spring pressure before reaching the latch position.
- cancel automatically upon completion of a turn. The multifunction switch then returns to the center position.

An audible ticking and a flashing green warning lamp on the instrument cluster indicate that the direction indicators are operating. If an indicator bulb fails, the warning lamp and ticking operate at twice the normal rate and a message will appear on the instrument cluster message center.

Side Lamps

The Side Lamp function is operated by rotating the multifunction switch collar one position counter clockwise this will then activate the side lamps.

Head Lamps

The Head Lamp function is operated by rotating the multifunction switch collar two positions counter clockwise this will then activate the head lamps.

Main Beam

The Main Beam multifunction switch has one pull and one push position. Pulling the main beam multifunction switch toward the driver will cause the main beam lamps to flash. The main beam lamps can be flashed with the ignition on or off and will remain activated as long as the multifunction switch is held.

Pushing the multifunction switch away from the driver to the latch position will operate main beam lamps continuously if the head lamps are on.

Auto Lamps

The Auto Lamp function is operated by rotating the multifunction switch collar to the auto position. The head lamps will then operate automatically when the sunload sensor detects low light levels.

Exit Delay

The Exit Delay time can be varied by rotating the multifunction switch collar. Turning the collar clockwise will decrease the exit delay time and turning the collar counter clockwise will increase the exit delay time. The head lamps will stay for a set period of time ranging from 10 seconds to 2 minutes.

Trip Function

If the Trip Function switch is pressed once, a menu in the instrument cluster message center will be displayed and cycle though an option menu. Pushing and holding the switch resets the mileage calculated in a trip cycle. The trip mileage is displayed in the instrument cluster message center.

Multifunction switch right-hand

The Multifunction switch right-hand is on the right-hand side of the steering column and controls the following functions.

Flick Wipe

Flick wipe operation:

- is obtained by pulling the multifunction switch towards the driver.
- features a single wipe at normal speed if the multifunction switch is released immediately.
- features continuous wipe action at fast speed while the multifunction switch position is held.

Intermittent Wipe

In the intermittent wipe position:

- the wiper operates intermittently, with a variable time delay between wipes.
- the time delay can be varied by rotating the multifunction switch collar, turning the collar clockwise will increase the wiper time delay and turning the collar counter clockwise will decrease the wiper time delay. The switch has 7 positions and wiper delay varies between 2-20 seconds wiper delay.

Slow Speed Wiper

In the slow speed position:

- the wiper operates continuously at slow speed.

High Speed Wiper

In the high speed position:

- the wiper operates continuously at high speed.

Windscreen Wash/Wipe

The wash/wipe function:

- is operated by the button at the end of the multifunction switch.
- operates the washers and wiper, while the button is pressed, for up to 20 seconds.
- provides an additional three sweeps of the wiper after the button is released.
- wash function is disabled if the Washer Fluid Low message is displayed, but wipe operation is still available.

Head lamp Power Wash (if equipped)

The headlamp power wash function:

www.JagDocs.com

- operates only when the head lamps are on and the windscreen wash/wipe button is pressed.
- provides two short bursts of approximately 3 seconds apart to the head lamps.
- the powerwash cycle will continue for up to 20 seconds if the wash/wipe button is held.

The headlamp powerwash will operate the first time the wash/wipe button is pressed and thereafter every sixth succeeding wash/wipe operation.

Moisture Sensitive Wiping

The moisture sensitive wiping function:

- operates if the collar on the multifunction is set to the auto position.
- operates if moisture on the windscreen is detected.
- operates the wipers at varied speeds depending on the amount of moisture detected on the windscreen.
- operates the wipers at varied speeds depending on the speed of the vehcle.

Steering Column Switches

Principles of Operation

For a detailed description of the Steering Column Switches, refer to the relevant Description and Operation sections in the workshop manual.
Steering Column Switches

Inspection and Verification

1 . Verify the customer concern.

2 . Visually inspect for obvious signs of electrical damage.

Visual Inspection Chart

Electrical
• Fuses/Relays • Damaged, Loose or Corroded Connector(s) • Damage to Wiring Loom/Incorrect Location, Stretched or Taught

1 . If an obvious cause for an observed or reported concern is found, correct the cause (if possible) before proceeding to the next step.

2 . If the cause is not visually evident, verify the symptom and refer to the Jaguar approved diagnostic system.

DTC Index

Steering Column Lock Module

CAUTION: When probing connectors to take measurements in the course of the pinpoint tests, use the adaptor kit, part number 3548-1358-00.

NOTE:

If the control module/component is suspect and the vehicle remains under manufacturer warranty, refer to the Warranty Policy and Procedures manual (section B1.2), or determine if any prior approval program is in operation, prior to the installation of a new module/component.

www.JagDocs.com

NOTE:

When performing voltage or resistance tests, always use a digital multimeter (DMM) accurate to three decimal places and with a current calibration certificate. When testing resistance, always take the resistance of the DMM leads into account.

NOTE:

Check and rectify basic faults before beginning diagnostic routines that involve pinpoint tests.

NOTE:

Inspect connectors for signs of water ingress, and pins for damage and/or corrosion.

NOTE:

If DTCs are recorded and, after performing the pinpoint tests, a fault is not present, an intermittent concern may be the cause. Always check for loose connections and corroded terminals.

DTC	Description	Possible Causes	Action
B1342	ECU is defective	• Steering column lock module - failure	Steering column lock module electronic failure. Suspect faulty module, check and install as required, refer to the new module installation note at the top of the DTC Index
B2162	Instrument Cluster ID does not match	• Stored vehicle identification details incorrect	Steering column lock module electronic failure. Configure steering column lock module (Must enable SCLM and instrument cluster to transfer ID) i.e. Configure as for replacement new module
B2168	Unable to confirm unlocked condition	• Steering column lock module - failure (cannot complete unlock command)	Steering column lock module mechanical failure. Suspect faulty module, check and install as required, refer to the new module installation note at the top of the DTC Index

B2169	Unable to confirm locked condition	• Steering column lock module - failure (cannot complete lock command)	Steering column lock module mechanical failure. Suspect faulty module, check and install as required, refer to the new module installation note at the top of the DTC Index
B2375	Hall Sensor Failed in Unlocking Direction	• Steering column lock module - hall sensor failure	Steering column lock module failure. Suspect faulty module, check and install as required, refer to the new module installation note at the top of the DTC Index
B2376	Lock Cycle - Timing Invalid	• Steering column lock module - failure (Lock : Time between Unlock Edge to Lock edge is too short)	Steering column lock module failure. Suspect faulty module, check and install as required, refer to the new module installation note at the top of the DTC Index
B2377	Unlock Cycle - Timing Invalid	• Steering column lock module - failure (Unlock : Time between Lock Edge to Unlock edge is too short)	Steering column lock module failure. Suspect faulty module, check and install as required, refer to the new module installation note at the top of the DTC Index
B2378	Hall Sensor Failed in Locking Direction	• Steering column lock module - hall sensor failure	Steering column lock module failure. Suspect faulty module, check and install as required, refer to the new module installation note at the top of the DTC Index
B2379	SCLM not configured (inhibited mode)	• Steering column lock module is not configured (set after first unlock command)	Configure steering column lock module (Must enable SCLM and instrument cluster to transfer ID)

www.JagDocs.com

Steering Column Lock Actuator (57.40.41)

Special Service Tools

5 point security torx bit
418-535

Removal

1 . Remove the steering column. <<211-04>>

2 Remove the steering column lock actuator.

.

- Using the special tool, remove the steering column lock actuator retaining bolts.

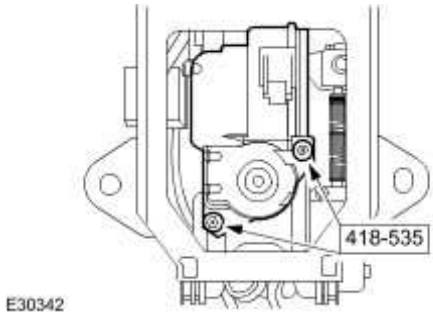

Installation

1 . To install, reverse the removal procedure.

- Tighten to 9 Nm.

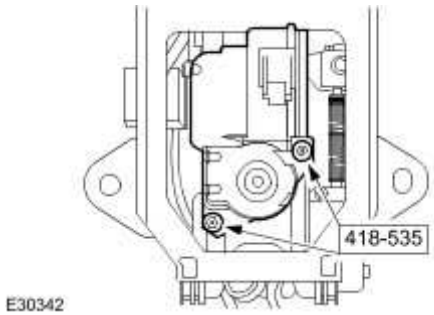

www.JagDocs.com

Steering Column Multifunction Switch LH (86.65.78)

Removal

1 Remove the steering column lower cowl.

.

- Remove the 2 screws.
- If installed, disconnect the steering column and foot pedal control switch electrical connector.

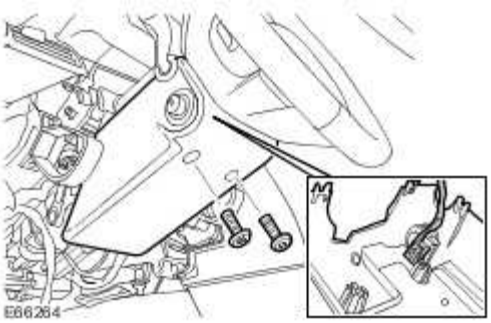

2 . Remove the steering column upper cowl.

- Remove the 3 screws.

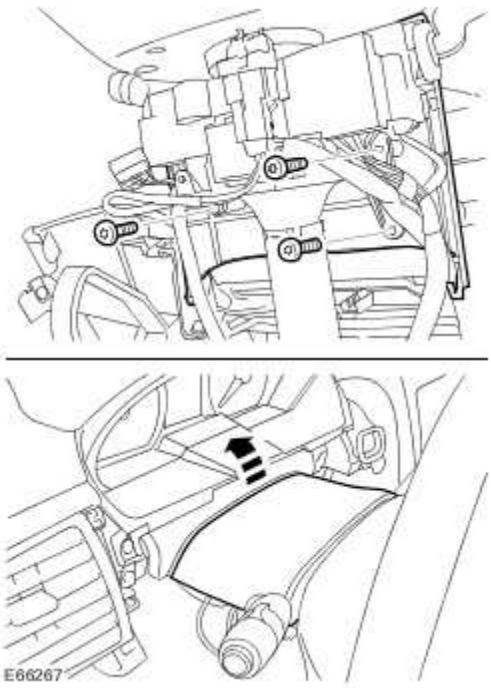

3 . Remove the steering column multifunction switch.

- Depress the 2 clips.
- Disconnect the electrical connector.

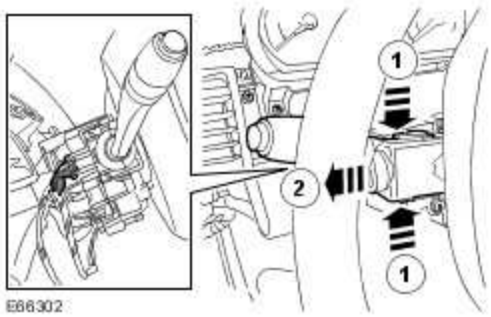

Installation

1 . **CAUTION: Make sure the electrical harness is not trapped during the installation.**

To install, reverse the removal procedure.

www.JagDocs.com

Steering Column Multifunction Switch RH (86.65.41)

Removal

1 . Remove the instrument panel lower trim.

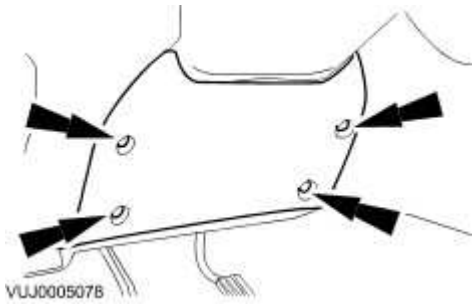

2 . Detach the steering column lower shroud.

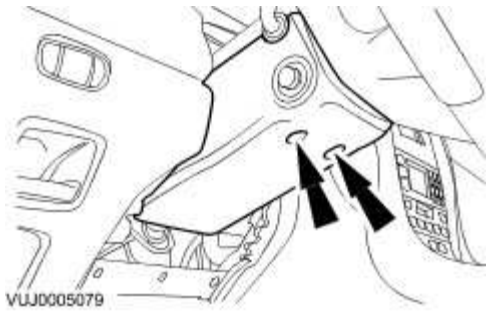

3 . Remove the steering column upper shroud.

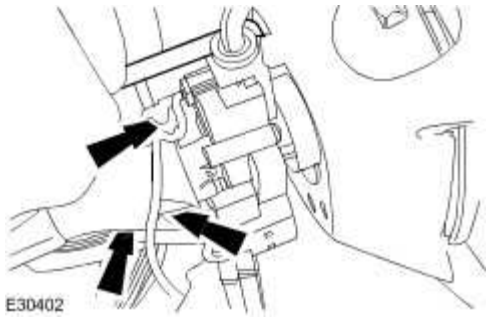

4 . Disconnect the steering column multifunction switch RH electrical connector.

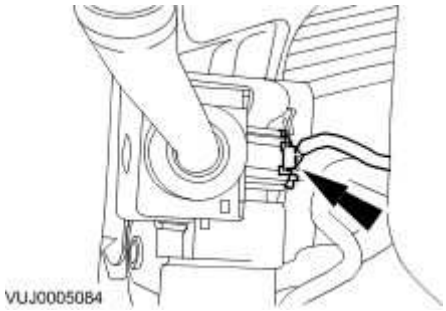

5 . Remove the steering column multifunction switch RH switch.

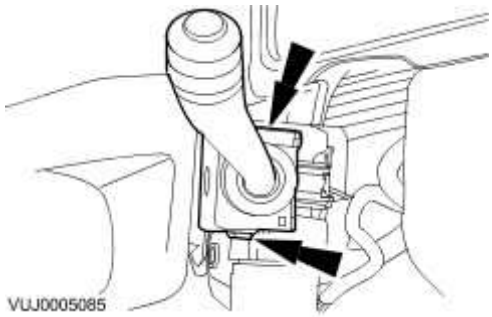

Installation

1 . To install, reverse the removal procedure.

2 . Tighten to 3 Nm.

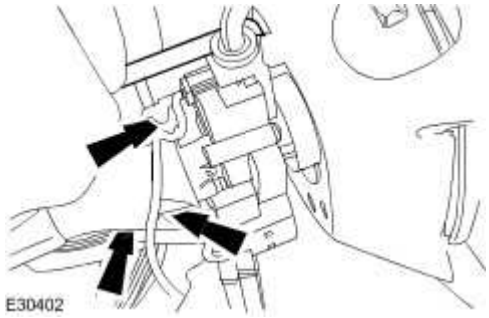

www.JagDocs.com

3. POWERTRAIN

303 : Engine

303-00 : Engine System – General Information

Specifications

Specifications

General specifications - Vehicles 3.0L engine.

Item	Specification
Displacement in liters	2.967
Number of cylinders	6
Bore and stroke (mm)	89.0 x 79.5
Compression ratio	10.5:1

General specifications - Vehicles 3.5L engine.

Item	Specification
Displacement in liters	3.554
Number of cylinders	8
Bore and stroke (mm)	86.0 x 76.5
Compression ratio	11.0:1

General specifications - Vehicles with 4.2L engine without supercharger.

Item	Specification
Displacement in liters	4.196
Number of cylinders	8
Bore and stroke (mm)	86.0 x 90.3
Compression ratio	11.0:1

General specifications - Vehicles with 4.2L engine with supercharger.

Item	Specification
Displacement in liters	4.196
Number of cylinders	8
Bore and stroke (mm)	86.0 x 90.3
Compression ratio	9.0:1

Cylinder Head and Valve Train - Vehicles with 3.0L engine

Item	Specification
Valve guide inner diameter (mm)	5.514 - 5.544
Intake valve effective length (mm)	90.13 - 90.93
Exhaust valve effective length (mm)	89.68 - 89.88
Valve stem to guide clearance intake - diametrical (mm)	0.022 - 0.067
Valve stem to guide clearance exhaust - diametrical (mm)	0.035 - 0.08
Valve head diameter intake (mm)	34.85 - 35.15
Valve head diameter exhaust (mm)	29.85 - 30.15
Intake valve face angle degree	45.75°
Exhaust valve face angle degree	45.25°
Valve stem diameter intake (mm)	5.477 - 5.492
Valve stem diameter exhaust (mm)	5.464 - 5.479
Valve spring free length (mm)	44.2
Valve spring installed height (mm)	33.41
Camshaft lobe lift intake (mm)	9.367
Camshaft lobe lift exhaust (mm)	9.461
Camshaft end play (mm)	0.07 - 0.15
Camshaft journal to cylinder head bearing surface clearance diametrical (mm)	0.025 - 0.076
Camshaft journal diameter standard runout limit (mm)	0.04
Camshaft journal diameter standard out of round (mm)	0.013

Cylinder Head and Valve Train - Vehicles with 3.5L engine

Item	Specification
Valve guide inner diameter (mm)	5.02
Intake valve effective length (mm)	88.87 - 89.17
Exhaust valve effective length (mm)	88.40 - 88.70

www.JagDocs.com

Valve stem to guide clearance intake - diametrical (mm)	0.012 - 0.067
Valve stem to guide clearance exhaust - diametrical (mm)	0.02 - 0.075
Valve head diameter intake (mm)	34.8 - 35.0
Valve head diameter exhaust (mm)	30.8 - 31.0
Intake valve face angle degree	45° 15'
Exhaust valve face angle degree	45° 15'
Valve stem diameter intake (mm)	4.963 - 4.978
Valve stem diameter exhaust (mm)	4.955 - 4.97
Valve spring free length (mm)	45.45 - 46.2
Valve spring installed height (mm)	33.20
Camshaft lobe lift intake (mm)	9.00
Camshaft lobe lift exhaust (mm)	8.50
Camshaft journal to cylinder head bearing surface clearance diametrical (mm)	• Front bearing 0.035 - 0.095 • Other bearings 0.025 - 0.085
Camshaft journal diameter standard runout limit (mm)	• Center bearing to outer bearing's 0.07 • Other bearing to outer bearing's 0.05
Camshaft journal diameter standard out of round (mm)	0.005
Maximum permitted cylinder head warp (mm)	0.125

Cylinder Head and Valve Train - Vehicles with 4.2L engine without supercharger

Item	**Specification**
Valve guide inner diameter (mm)	5.02
Intake valve effective length (mm)	88.87 - 89.17
Exhaust valve effective length (mm)	88.40 - 88.70
Valve stem to guide clearance intake - diametrical (mm)	0.012 - 0.067
Valve stem to guide clearance exhaust - diametrical (mm)	0.02 - 0.075
Valve head diameter intake (mm)	34.8 - 35.0
Valve head diameter exhaust (mm)	30.8 - 31.0
Intake valve face angle degree	45° 15'
Exhaust valve face angle degree	45° 15'
Valve stem diameter intake (mm)	4.963 - 4.978

Valve stem diameter exhaust (mm)	4.955 - 4.97
Valve spring free length (mm)	45.45 - 46.2
Valve spring installed height (mm)	33.20
Camshaft lobe lift intake (mm)	8.50
Camshaft lobe lift exhaust (mm)	8.50
Camshaft journal to cylinder head bearing surface clearance diametrical (mm)	• Front bearing 0.035 - 0.095 • Other bearings 0.025 - 0.085
Camshaft journal diameter standard runout limit (mm)	• Center bearing to outer bearing's 0.07 • Other bearing to outer bearing's 0.05
Camshaft journal diameter standard out of round (mm)	0.005
Maximum permitted cylinder head warp (mm)	0.125

Cylinder Head and Valve Train - Vehicles with 4.2L engine with supercharger

Item	**Specification**
Valve guide inner diameter (mm)	5.02
Intake valve effective length (mm)	88.87 - 89.17
Exhaust valve effective length (mm)	88.40 - 88.70
Valve stem to guide clearance intake - diametrical (mm)	0.012 - 0.067
Valve stem to guide clearance exhaust - diametrical (mm)	0.02 - 0.075
Valve head diameter intake (mm)	34.8 - 35.0
Valve head diameter exhaust (mm)	30.8 - 31.0
Intake valve face angle degree	45° 15'
Exhaust valve face angle degree	45° 15'
Valve stem diameter intake (mm)	4.963 - 4.978
Valve stem diameter exhaust (mm)	4.955 - 4.97
Valve spring free length (mm)	45.45 - 46.2
Valve spring installed height (mm)	33.2
Camshaft lobe lift intake (mm)	9.0
Camshaft lobe lift exhaust (mm)	8.1
Camshaft journal to cylinder head bearing surface clearance diametrical (mm)	• Front bearing 0.035 - 0.095 • Other bearings 0.025 - 0.085
Camshaft journal diameter standard runout limit (mm)	• Center bearing to outer

www.JagDocs.com

	bearing's 0.07 • Other bearing to outer bearing's 0.05
Camshaft journal diameter standard out of round (mm)	0.005
Maximum permitted cylinder head warp (mm)	0.125

Lubrication system - Vehicles with 3.0L engine

Capacity	Liters
Engine oil with filter	6.5

Lubrication system - Vehicles with 3.5L engine

Capacity	Liters
Engine oil with filter	6.8

Lubrication system - Vehicles with 4.2L engine without supercharger

Capacity	Liters
Engine oil with filter	6.8

Lubrication system - Vehicles with 4.2L engine with supercharger

Capacity	Liters
Engine oil with filter	7.6

Bearing Inspection

1. Inspect bearings for the following defects.
    1. Cratering - fatigue failure
    2. Spot polishing - incorrect seating.
    3. Imbedded dirt engine oil.
    4. Scratching - dirty engine oil.
    5. Base exposed - poor lubrication.
    6. Both edges worn - journal damaged.
    7. One edge worn - journal tapered or bearing not seated.

www.JagDocs.com

Camshaft Bearing Journal Clearance

1. **NOTE:**
   Make sure that the following stages are followed exactly. The tappets or followers must be removed to carry out this measurement.

NOTE:
Make sure that the camshaft is to specification.

NOTE:
The bearing caps and journals should be free from engine oil and dirt.

Position on a length of plastigage on the bearing cap.

- Insert the camshaft, without lubrication, into the cylinder head.
- Position a plastigage strip, which should be equal to the width of the bearing cap, on the bearing journal.

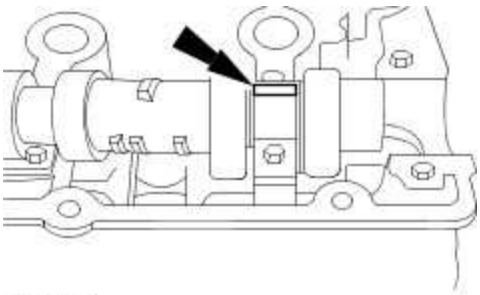

VUJ0001696

2. Install the camshaft bearing caps.
   - Follow the relevant tightening sequence.

3. **NOTE:**
   Do not strike the bearing caps.

Remove the camshaft bearing caps.

- Follow the relevant loosening sequence.

4. Using the special tool, read off the measurement.
   - Compare the width of plastigage with the plastigage scale.
   - The value that is read off is the bearing clearance.
   - If the values are not to specification install a new camshaft.

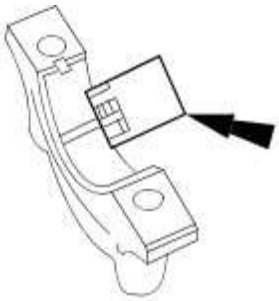

VUJ0001697

www.JagDocs.com

Camshaft Bearing Journal Diameter

1. Determine the diameter of the camshaft journals.
   - Using a micrometer measure the diameter at 90 degrees intervals to determine if the journals are out-of-round.
   - Measure at two different points on the journal to determine if there is any tapering.
   - If the measurements are out of the specified range, install a new camshaft.

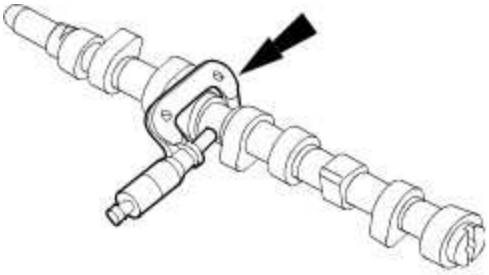

VUJ0001695

Camshaft End Play

1. **NOTE:**
   Make sure that the camshaft is to specification.

Using the special tool, measure the end play.

- Slide the camshaft in both directions. Read and note the maximum and minimum values on the dial indicator gauge.
  End play = maximum value minus minimum value.
- If the measurement is out of specification, install new components.

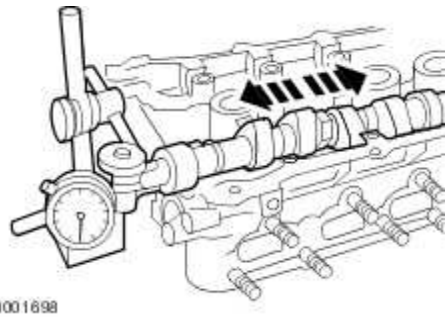

VUJ0001698

www.JagDocs.com

Camshaft Lobe Lift

1. Measure the diameter (1) and diameter (2) with a vernier caliper. The difference in measurements is the lobe lift.

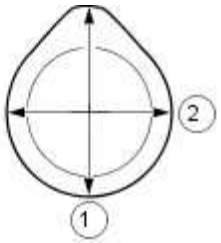

VUJ0001699

Camshaft Surface Inspection

1. Inspect camshaft lobes for pitting or damage in the active area. Minor pitting is acceptable outside the active area.

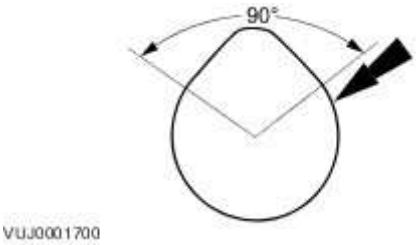

www.JagDocs.com

Connecting Rod Cleaning

1.

CAUTION: Do not use a caustic cleaning solution or damage to connecting rods may occur.

Mark and separate the parts and clean with solvent. Clean the oil passages.

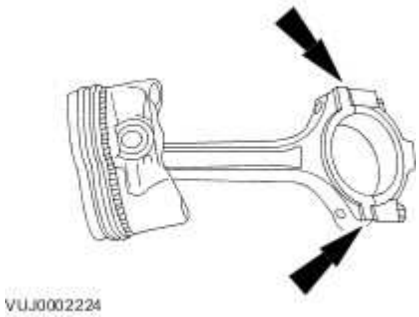

Connecting Rod Large End Bore

1. Measure the bearing bore in two directions. The difference is the connecting rod bore out-of-round. Verify the out-of-round is within specification.

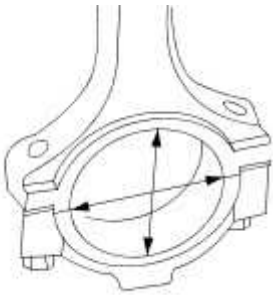

VUJ0002223

2. Measure the bearing bore diameter in two directions. Verify the bearing bore is within specification.

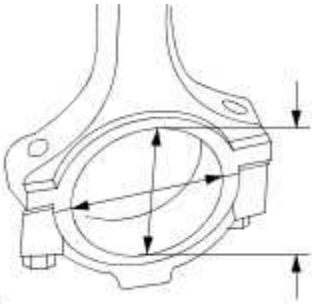

VUJ0002222

www.JagDocs.com

Crankshaft End Play

1. Using the Dial Indicator Gauge with Brackets, measure the end play.
   - Measure the end play by lifting the crankshaft using a lever.
   - If the value is out of the specification, install new thrust half rings to take up the end float and repeat the measurement.

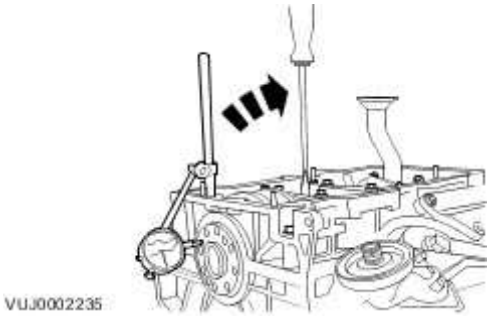

Crankshaft Main Bearing Journal Clearance - 3.0L

1. The main bearing machine codes are displayed on the crankshaft (1) and the cylinder block (2)

2. **NOTE:**
   Main bearing number 1 relates to the front of the engine.

Read the identification numbers from the crankshaft (1).

- The first two numbers represent the code for main bearing number 1.
  The second pair of numbers represents the code for main bearing number 2.
  The third pair of numbers represents the code for main bearing number 3.
  The last pair of numbers represents the code for main bearing number 4.

3. **NOTE:**
   Main bearing number 1 relates to the front of the engine.

Read the identification numbers on the cylinder block (2).

- The first two numbers represent the code for main bearing number 1.
  The second pair of numbers represents the code for main bearing number 2.
  The third pair of numbers represents the code for main bearing number 3.
  The last pair of numbers represents the code for main bearing number 4.

4. Using the select fit chart, for each main bearing match the crankshaft code (1) and the block code (2) with it's corresponding column or row. By reading across the crankshaft code row (1) and down the block code column (2) select the correct grade bearing for each main.

- 1 Crankshaft code.
- 2 Block code.

5. E.g. if the crankshaft code is *8580*8082* and the Block code is *0609*0711*, main bearing 1 should be assembled with a grade 1 bearing, as determined by the intersection of the number 06 block column (2) and the number 85 crankshaft row (1).

- Main bearing 2, 3 and 4 would all be assemble with a grade 2.

www.JagDocs.com

Crankshaft Main Bearing Journal Clearance - 3.5L/4.2L

CAUTION: THESES PROCEDURES SHOULD NOT BE CARRIED OUT DURING THE MANUFACTURERS WARRANTY PERIOD.

1. **NOTE:**
   Example - *PJEAL* - Crankshaft Main Journal Diameter.

Read the grade letters from LEFT to RIGHT = FRONT to REAR of engine eg. for this example engine, the crank journal at the front of the engine is grade P, and at the rear is grade L.

- The selection of main bearing shells is described in the following chart.

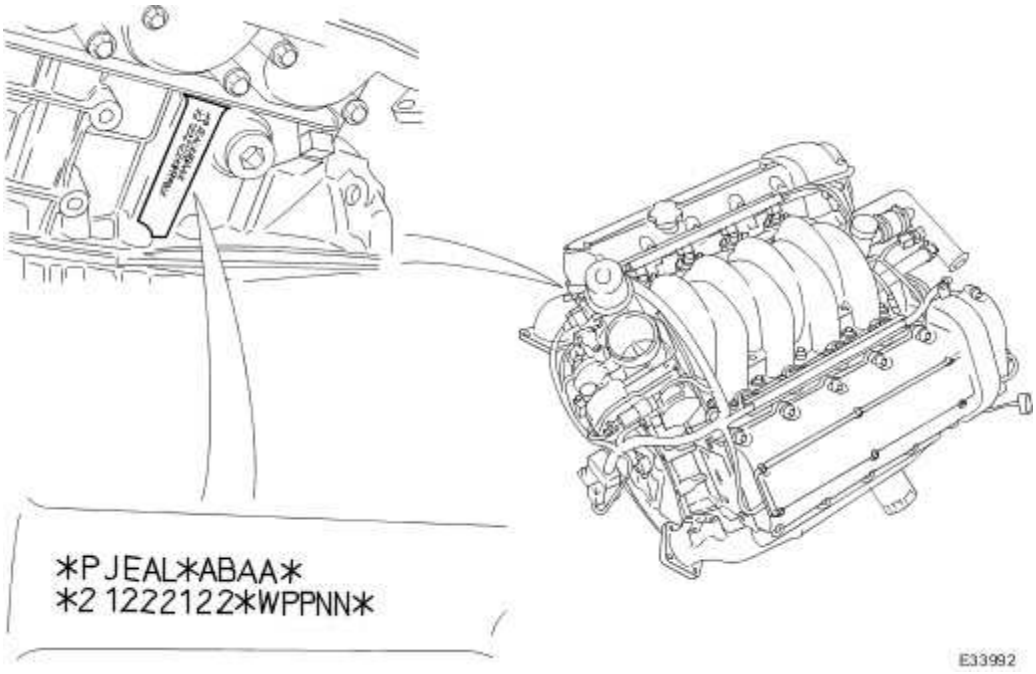

2. **NOTE:**
   Example - *ABAA* - Crankshaft (Big End Bearing) Crankpin Diameter

NOTE:
For vehicles built up to 2002 MY.

NOTE:
If the crankshaft main bearing carrier retaining bolts have been marked with a center punch dot, they must be discarded and new bolts installed.

Read the grade letters from LEFT to RIGHT = FRONT to REAR of engine eg. for this

example engine, the crankpin at the front of the engine is grade A and at the rear is also grade A.

- Grade A = 56,000 to 55,994 mm (Bearing Shell Color Code - Blue).
- Grade B = 55,994 to 55,988 mm (Bearing Shell Color Code - Green).
- Grade C = 55,988 to 55,982 mm (Bearing Shell Color Code - Yellow).

3. **NOTE:**
   Example - *ABAA* - Crankshaft (Big End Bearing) Crankpin Diameter

NOTE:
For vehicles built from 2002 MY.

NOTE:
If the crankshaft main bearing carrier retaining bolts have been marked with a center punch dot, they must be discarded and new bolts installed.

Read the grade letters from LEFT to RIGHT = FRONT to REAR of engine eg. for this example engine, the crankpin at the front of the engine is grade A and at the rear is also grade A.

- Grade A = 53,000 to 52,994 mm (Bearing Shell Color Code - Blue).
- Grade B = 52,994 to 52,988 mm (Bearing Shell Color Code - Green).
- Grade C = 52,988 to 52,982 mm (Bearing Shell Color Code - Yellow).

4. **NOTE:**
   Example - *21222122* - Cylinder Bore and Piston

The cylinder bore grades read from LEFT to RIGHT as follows:

- Bank 2 - Cylinder 1, Bank 2 - Cylinder 2, Bank 2 - Cylinder 3, Bank 2 - Cylinder 4, Bank 1 - Cylinder 4,
- Bank 1 - Cylinder 3, Bank 1 - Cylinder 2, Bank 1 - Cylinder 1.
- (Note, in earlier publications Bank 1 was described as A-Bank and Bank 2 as B-Bank)
- Grade 1 Bore = 85,990 to 86,000 mm.
- Grade 2 Bore = 86,000 to 86,010 mm.
- Grade 3 Bore = 86,010 to 86,020 mm.

5. **NOTE:**
   Example - *WPPNN* - Crankshaft Main Bearing Bore in Cylinder Block

Read the grade letters from LEFT to RIGHT = FRONT to REAR of engine eg. for this example engine, the crank journal bore at the front of the engine is grade W, and at the rear is grade N.

www.JagDocs.com

- The selection of main bearing shells is described in the following JOURNAL DIAMETER AND MAIN BEARING BORE CHART.

6. JOURNAL DIAMETER AND MAIN BEARING BORE CHART

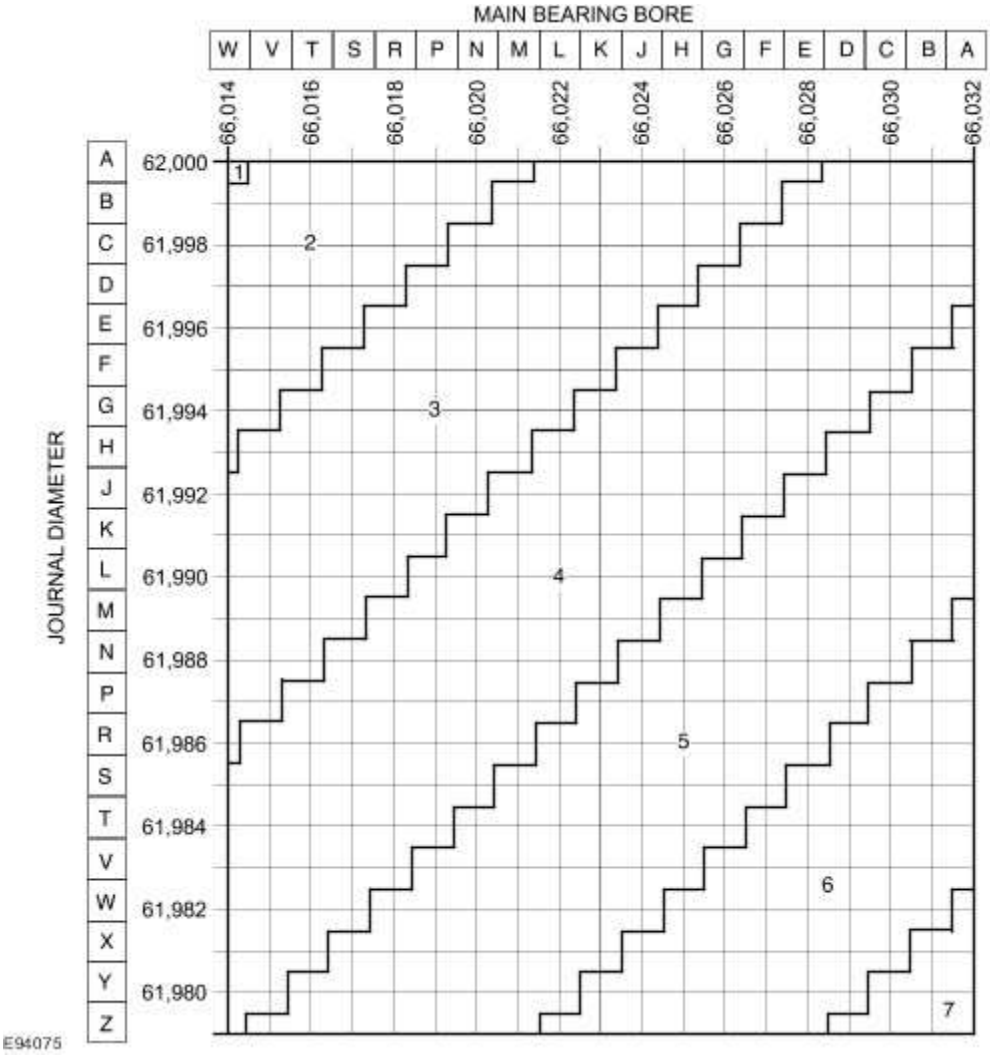

7. **NOTE:**

THIS PROCEDURE SHOULD ONLY BE CARRIED OUT WHEN REPLACIING MAIN BEARING SHELLS.

NOTE:

Refer to the JOURNAL DIAMETER AND MAIN BEARING BORE CHART in step 6 for tolerance and bearing information.

The number in each diagonal band represents a PAIR of color coded main bearing shells which must be used with a specific journal, depending on the combination of journal diameter and crankshaft bore diameter. The color codes for each band are as follows:

1. Blue / Green and Blue / Green

- Blue / Green and Blue

- Blue and Blue
- Blue and Green
- Green and Green
- Green and Yellow
- Yellow and Yellow
- Consider crankshaft journal 5 (from the example grade markings on the cylinder block) - the cylinder block bore is Grade N and the crankshaft journal diameter is Grade L. From the chart, it will be seen that the point of intersection is in Band 4 which equates to one Blue shell and one Green shell.
- When the appropriate pair of color codes have been selected for a journal, either color may be installed to the cylinder block or to the bedplate, but, the shell which is to be installed to the cylinder block must have an oil groove and the shell which is to be installed to the bedplate must be plain.

8. **NOTE:**

   THIS PROCEDURE SHOULD ONLY BE CARRIED OUT WHEN A REPLACMENT CRANKSHAFT OR CYLINDER BLOCK HAS BEEN FITTED.

NOTE:

Refer to the JOURNAL DIAMETER AND MAIN BEARING BORE CHART in step 6 for tolerance and bearing information.

The thickness grade of all main bearing shells are to be selected to give a total running clearance of not less than 0.022 mm or greater than 0.040 mm.

- Each bearing bore in the block/bedplate assembly should be measured at two mutually perpendicular diameters 45° to the vertical in the middle of the bearing.
- The minimum diameter of the two is to be used.
- Each crankshaft main bearing journal should be measured dynamically at a point in line with the middle of each bearing.
- When the appropriate pair of color codes have been selected for a journal, either color may be installed to the cylinder block or to the bedplate, but, the shell which is to be installed to the cylinder block must have an oil groove and the shell which is to be installed to the bedplate must be plain.

www.JagDocs.com

Cylinder Bore Out-of-Round

1. **NOTE:**

   The main bearing caps or lower crankcase must be in place and tightened to the specified torque; however, the bearing shells should not be installed.

Measure the cylinder bore with an internal micrometer.

- Carry out the measurements in different directions and at different heights to determine if there is any out-of-roundness or tapering.
- If the measurement is out of the specified range, hone out the cylinder block or install a new block.

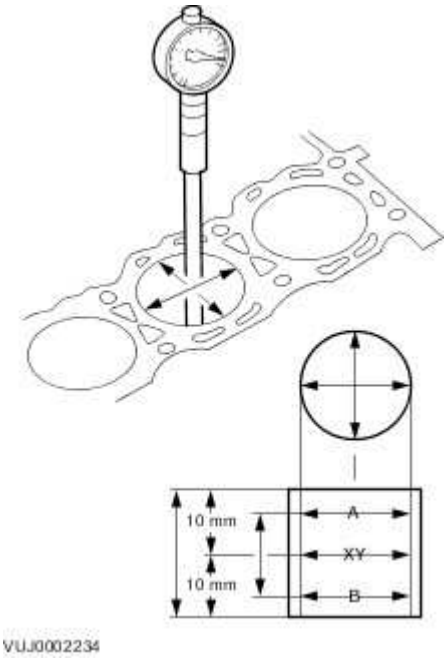

Cylinder Head Distortion

1. Measure the cylinder block/cylinder head distortion.
   - Using the special tool, measure the mating face distortion.
   - If the value is not to specification rework the mating face.

www.JagDocs.com

Exhaust Manifold Cleaning and Inspection

1. Inspect the cylinder head joining flanges of the exhaust manifold for evidence of exhaust gas leaks.

2. Inspect the exhaust manifold for cracks, damaged gasket surfaces, or other damage that would make it unfit for further use.

Piston Inspection

1.

CAUTION: Do not use any aggressive cleaning fluid or a wire brush to clean the piston.

Carry out a visual inspection.

- Clean the piston skirt, pin bush, ring grooves and crown and check for wear or cracks.
- If there are signs of wear on the piston skirt, check whether the connecting rod is twisted or bent.

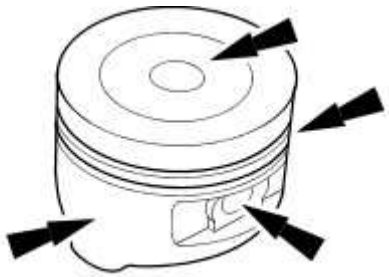

VUJ0002233

www.JagDocs.com

Piston Pin Diameter

1. **NOTE:**
   The piston and piston pin are a matched pair. Do not mix up the components.

Measure the piston pin diameter.

- Measure the diameter in two directions.
- If the values are not to specification, install a new piston and a new piston pin.

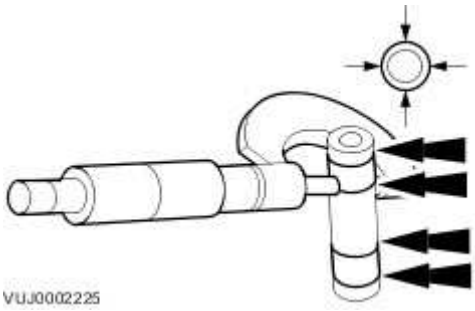

Piston Pin to Bore Diameter

1. **NOTE:**
   The piston and piston pin form a matched pair. Do not mix up the components.

Measure the diameter of the piston pin bore.

- Measure the diameter in two directions.
- If the values are not to specification, install both a new piston and a new piston pin.

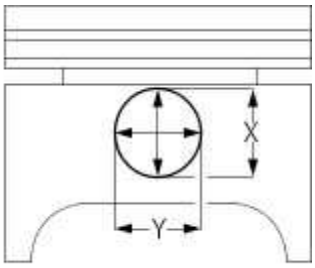

VUJ0002232

www.JagDocs.com

Piston Ring End Gap

1.

CAUTION: Do not mix up the piston rings. Install the piston rings in the same position and location.

Using the Feeler Gauge, measure the piston ring gap.

- The values given in the specification refer to a gauge ring used during production.

Piston Ring-to-Groove Clearance

1. **NOTE:**
   The piston ring must protrude from the piston groove. To determine the piston ring clearance, insert the Feeler Gauge right to the back of the groove, behind the wear ridge.

Using the Feeler Gauge, measure the piston ring clearance.

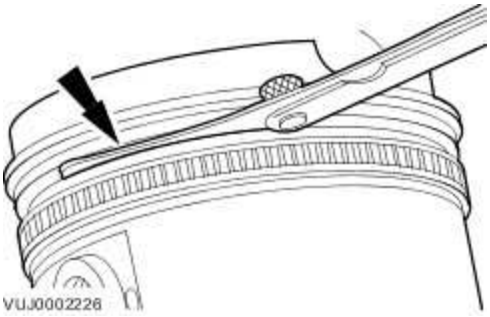

www.JagDocs.com

Valve Spring Free Length

1. Using a vernier gauge, measure the free length of each valve spring. Verify the length is within specification.

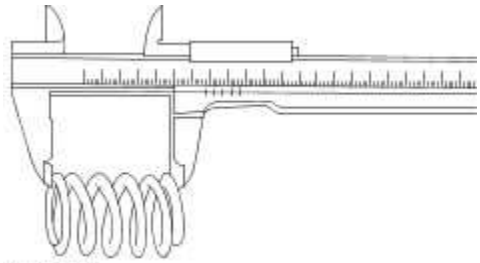

VUJ0002221

Valve Stem Diameter

1. Using a micrometer measure the diameter of the valve stems.
   - If the measurements are not to specification, install a new valve.

www.JagDocs.com

Engine

Vehicles with 3.0L engine

The 3.0L engine consists of:

- a six cylinder 60 degree 'V' configuration liquid cooled aluminium cylinder block with dry cast liners
- aluminium pistons with cut-outs in the piston crown to clear the valve heads for any available combination of camshaft profile and valve phasing
- two aluminium cylinder heads with square squish chambers
- two steel overhead camshafts per bank
- four valves per cylinder
- mechanical tappets and top mounted phosphate coated cast iron shims
- continuous variable camshaft timing (VCT) of the inlet camshafts
- two silent timing chains with one hydraulic tensioner per chain
- magnesium alloy valve covers with rubber seals
- a variable intake system containing two electrically controlled intake manifold tuning valves
- plastic lower intake manifold with integral fuel rail and injectors
- engine front cover manufactured from aluminium which accommodates the crankshaft front oil seal
- an oil pump located at the front of the crankshaft
- an aluminium bed plate
- an aluminium oil pan
- a steel crankshaft
- fracture-split connecting rods in sintered-forged steel
- cast iron exhaust manifolds
- a single, multi-vee belt which drives the front end accessories
- an advanced engine management system incorporating electronic throttle control
- the requirements of the CARB OBDII USA legislation

The engine code and serial number are located on the engine front cover as well as the left-hand side of the bed plate adjacent to the oil cooler assembly.

Vehicles with 3.5L or 4.2L engine

The 3.5L or 4.2L engine without supercharger consists of:

- an eight cylinder 90 degree 'Enclosed V' configuration liquid cooled aluminium cylinder block with dry cast liners
- pistons of open-ended skirt design, with two compression rings and a three piece oil control ring
- two aluminium cylinder heads, each incorporating two hollow camshafts manufactured in chilled cast iron
- four valves per cylinder
- aluminium tappets and top mounted shims
- continuous variable camshaft timing (VCT) of the inlet camshafts
- valve covers manufactured from Thermoplastic

- fuel injectors each with twelve holes
- engine front cover manufactured from aluminium which accommodates the crankshaft front oil seal
- multi row primary and single row secondary chains drive the camshafts of each cylinder bank
- an aluminium bed plate
- a cast iron crankshaft
- fracture-split connecting rods in sintered-forged steel
- brackets bolted to the front of the cylinder block which are used to mount all accessories
- a single, multi-vee belt which drives the front end accessories
- stainless steel exhaust manifolds
- an advanced engine management system incorporating electronic throttle control
- the requirements of the CARB OBDII USA legislation

The engine number is stamped onto the engine block adjacent to the thermostat housing.

Vehicles with 4.2L engine

Engines with supercharger

The 4.2L engine with supercharger consists of:

- an eight cylinder 90 degree 'Enclosed V' configuration liquid cooled aluminium cylinder block with dry cast liners
- pistons of open-ended skirt design, with two compression rings and a compact two piece oil control ring
- two aluminium cylinder heads, each incorporating two hollow camshafts manufactured in chilled cast iron
- four valves per cylinder
- aluminium tappets and top mounted shims
- valve covers manufactured from Thermoplastic
- fuel injectors each with twelve holes
- engine front cover manufactured from aluminium which accommodates the crankshaft front oil seal

- multi row primary and single row secondary chains drive the camshafts of each cylinder bank
- an aluminium bed plate
- oil spray jets in each cylinder bore
- a cast iron crankshaft
- fracture-split connecting rods in sintered-forged steel
- brackets bolted to the front of the cylinder block which are used to mount all accessories
- a single, multi-vee belt which drives the front end accessories
- stainless steel exhaust manifolds
- an advanced engine management system incorporating electronic throttle control.
- the requirements of the CARB OBDII USA legislation.

The engine number is stamped onto the engine block adjacent to the thermostat housing.

www.JagDocs.com

Engine - 3.0L/3.5L/4.2L

Inspection and Verification

Since diagnosis and testing actually begins when repairs are taken on, the following procedure is recommended.

1 . Verify the customer concern by operating the system.

2 . Visually inspect for obvious signs of mechanical damage or electrical damage. If the concern cannot be reproduced, carry out a road test and/or visual check with the aid of the following table.

Mechanical
• Coolant leaks • Oil leaks • Leaks in the fuel system • Visibly damaged or worn parts • Loose or missing nuts or bolts

3 . If an obvious cause for an observed or reported concern is found, correct the cause (if possible) before proceeding to the next step.

4 . If the concern is not visually evident, verify the symptom and refer to the Symptom Chart.

Symptom Chart

Difficult to start during hot or cold start

Possible Source(s):

- Piston ring(s) worn, damaged, sticking or worn piston/cylinder.

Action(s) to take:

- INSTALL a new engine.

Possible Source(s):

- Head gasket damaged.

Action(s) to take:

- INSPECT the head gasket.

Possible Source(s):

- Fuel system damaged or inoperative.

Action(s) to take:

- <<303-04A>> Or <<303-04B>>

Possible Source(s):

- Ignition system inoperative.

Action(s) to take:

- <<303-07A>> Or <<303-07B>>

Poor Idling

Possible Source(s):

- Restricted exhaust system.

Action(s) to take:

- INSPECT the exhaust system. <<309-00>>

Possible Source(s):

- Vacuum leak.

Action(s) to take:

- CARRY out the Intake Manifold Vacuum Test in this section. REPAIR and INSTALL new components as necessary.

Possible Source(s):

- Burned valve(s).

Action(s) to take:

- INSPECT the valve(s).

www.JagDocs.com

Possible Source(s):

- Incorrect valve to valve seat contact.

Action(s) to take:

- INSPECT the valve and valve seat.

Possible Source(s):

- Head gasket damaged.

Action(s) to take:

- INSPECT the head gasket.

Possible Source(s):

- Fuel system damaged or inoperative.

Action(s) to take:

- <<303-04A>> Or <<303-04B>>

Insufficient power

Possible Source(s):

- Compression leakage from valve seat.

Action(s) to take:

- INSPECT the valve or valve seat.

Possible Source(s):

- Valve sticking.

Action(s) to take:

- INSPECT valve stem to valve guide clearance or carbon accumulation.

Possible Source(s):

- Valve spring weak or broken.

Action(s) to take:

- INSPECT the valve spring.

Possible Source(s):

- Head gasket damaged.

Action(s) to take:

- INSPECT the head gasket.

Possible Source(s):

- Cylinder head cracked or distorted.

Action(s) to take:

- INSPECT the cylinder head.

Possible Source(s):

- Piston ring(s) worn, damaged or sticking.

Action(s) to take:

- INSTALL a new engine.

Possible Source(s):

- Fuel system damaged or inoperative.

Action(s) to take:

- <<303-04A>> Or <<303-04B>>

Possible Source(s):

- Brakes dragging.

Action(s) to take:

- <<206-00>>

Possible Source(s):

www.JagDocs.com

- Restricted exhaust system.

Action(s) to take:

- INSPECT the exhaust system. <<309-00>>

Excessive or insufficient compression.

Possible Source(s):

- Valve(s) burnt or sticking.

Action(s) to take:

- INSPECT the valve(s).

Possible Source(s):

- Valve spring(s) weak or broken.

Action(s) to take:

- INSPECT the valve spring(s).

Possible Source(s):

- Piston ring(s) worn, damaged, sticking or worn piston/cylinder.

Action(s) to take:

- INSTALL a new engine.

Possible Source(s):

- Head gasket damaged.

Action(s) to take:

- INSPECT the head gasket.

Possible Source(s):

- Carbon accumulation in combustion chamber.

Action(s) to take:

- ELIMINATE carbon build up.

Possible Source(s):

- Fuel system damaged or inoperative.

Action(s) to take:

- <<303-04A>> Or <<303-04B>>

Excessive oil consumption

Possible Source(s):

- Piston ring(s) worn, damaged, sticking or worn piston/cylinder.

Action(s) to take:

- INSTALL a new engine.

Possible Source(s):

- Valve stem seal worn or missing.

Action(s) to take:

- INSPECT the valve or valve stem seal.

Possible Source(s):

- Oil leakage.

Action(s) to take:

- REPAIR oil leakage.

Possible Source(s):

- Valve stem or valve guide worn.

Action(s) to take:

- INSPECT the valve stem or valve guide.

Possible Source(s):

www.JagDocs.com

- Incorrect oil viscosity.

Action(s) to take:

- DRAIN and FILL with new oil.

Possible Source(s):

- Diluted oil.

Action(s) to take:

- CHECK oil dilution. DRAIN and FILL as necessary.

Possible Source(s):

- Crankcase overfilled.

Action(s) to take:

- CHECK and adjust the oil level.

Possible Source(s):

- Incorrect oil pressure.

Action(s) to take:

- CHECK the oil pressure. REPAIR as necessary.

Engine noise

Possible Source(s):

- Excessive crankshaft main bearing clearance.

Action(s) to take:

- INSTALL a new engine.

Possible Source(s):

- Excessive crankshaft end play.

Action(s) to take:

- INSTALL a new engine.

Possible Source(s):

- Excessive connecting rod bearing oil clearance.

Action(s) to take:

- INSTALL a new engine.

Possible Source(s):

- Piston/cylinder worn.

Action(s) to take:

- INSTALL a new engine.

Possible Source(s):

- Piston ring damaged.

Action(s) to take:

- INSTALL a new engine.

Possible Source(s):

- Connecting rod bent.

Action(s) to take:

- INSTALL a new engine.

Possible Source(s):

- Valve spring(s) broken.

Action(s) to take:

- INSPECT the valve spring(s).

Possible Source(s):

- Excessive valve guide clearance.

www.JagDocs.com

Action(s) to take:

- INSPECT the valve guide or valve.

Possible Source(s):

- Cooling system inoperative (water pump, vibration of radiator),

Action(s) to take:

- Refer to <<303-03>>

Possible Source(s):

- Fuel system inoperative.

Action(s) to take:

- <<303-04A>> Or <<303-04B>>

Possible Source(s):

- Excessive carbon buildup.

Action(s) to take:

- ELIMINATE carbon buildup.

Possible Source(s):

- Exhaust gas leakage.

Action(s) to take:

- REPAIR leakage. <<309-00>>

Possible Source(s):

- Incorrect drive belt tension.

Action(s) to take:

- INSPECT the drive belt tension. <<303-05>>

Possible Source(s):

- Generator front bearing worn.

Action(s) to take:

- <<414-02>>

Tappet noise, engine running

Possible Source(s):

- Incorrect tappet clearance.

Action(s) to take:

- CHECK and ADJUST the tappet clearance as necessary.

Component Tests

Engine Oil Leaks

NOTE:

Before installing new gaskets or oil seals, make sure that the fault is clearly established.

If the oil leak cannot be identified clearly by a visual inspection, carry out an UV test:

Fluorescent Oil Additive Method

1 . Clean the engine with a suitable cleaning fluid (brake cleaner).

2 . Drain the engine oil and refill with recommended oil, premixed with Diesel Engine Oil Dye or equivalent. Use a minimum 14.8 ml (0.5 ounce) to a maximum 29.6 ml (1 ounce) of fluorescent additive to all engines. If oil is not premixed, fluorescent additive must first be added to the crankcase.

3 . Run engine for 15 minutes. Stop the engine and inspect all seal and gasket areas for leaks using a 12 Volt Master UV Diagnostic Inspection Kit or equivalent. A clear bright yellow or orange area will identify leak. For extremely small leaks, several hours may be required for the leak to appear.

4 . As necessary, pressurize the main oil gallery system to locate leaks due to incorrectly sealed, loose or cocked plugs. If the flywheel bolts leak oil, look for sealer on the threads.

5 . Repair all leaks as necessary.

www.JagDocs.com

Compression Test

General Remarks

NOTE:

Removing fuses and disconnecting electrical components causes the powertrain control module (PCM) to log an error message. After the measurements have been carried out this error message should be cleared from memory by connecting to the Jaguar Approved Diagnostic System.

NOTE:

Only check the compression pressure with the valves set to the prescribed clearance (if this can be adjusted).

The compression pressure should be checked with the engine at operating temperature.

Check The Compression Pressure

WARNING: On manual transmissions shift the transmission into neutral. On automatic transmission vehicles, select "P". Failure to follow these instructions may result in personal injury.

1 . Remove the fuel pump relay.

2 . Start the engine - the engine will start, run for a few seconds then stall.

3 . Remove the spark plugs.

4 . Install the compression tester.

5 . Install an auxiliary starter switch in the starting circuit. With the ignition switch OFF, using the auxiliary starter switch, crank the engine a minimum of five compression strokes and record the highest reading. Note the approximate number of compression strokes required to obtain the highest reading.

6 . Repeat the test on each cylinder, cranking the engine approximately the same number of compression strokes.

7 . Install the components in reverse order, observing the specified tightening torques.

8 . Reset the PCM fault memory.

Interpretation of the Results

The indicated compression pressure are considered within specification if the lowest reading cylinder is within 75% of the highest reading.

CAUTION: If engine oil is sprayed into the combustion chamber, after carrying out the measurement run the engine at 2000 rpm for about 15 minutes, in order to burn the oil and prevent damage to the catalytic converter.

If the measurement on one or more cylinders is much lower than the specified value, spray some engine oil into the combustion chamber and repeat the compression measurement.

If the reading greatly improves then the piston rings are damaged.

If the reading stays the same then the cause is either damaged valve seats or valve stem seals.

If the measurements for two cylinders next to each other are both too low then it is very likely that the cylinder head gasket between them is burnt through. This can also be recognized by traces of engine oil in the coolant and/or coolant in the engine oil.

Excessive Engine Oil Consumption

The amount of oil an engine uses will vary with the way the vehicle is driven in addition to normal engine-to-engine variation. This is especially true during the first 16,100 km (10,000 miles) when a new engine is being broken in or until certain internal components become conditioned. Vehicles used in heavy-duty operation may use more oil. The following are examples of heavy-duty operation:

- Trailer towing applications.
- Severe loading applications.
- Sustained high speed operation.

Engines need oil to lubricate the following internal components:

- Cylinder block cylinder walls.
- Pistons and piston rings.
- Intake and exhaust valve stems.
- Intake and exhaust valve guides.
- All internal engine components.

When the pistons move downward, a thin film of oil is left on the cylinder walls. As the vehicle is operated, some oil is also drawn into the combustion chambers past the intake and exhaust valve stem seals and burned.

The following is a partial list of conditions that can affect oil consumption rates:

- Engine size.
- Operator driving habits.

www.JagDocs.com

- Ambient temperatures.
- Quality and viscosity of oil.

Operation under varying conditions can frequently be misleading. A vehicle that has been run for several thousand miles on short trips or in below-freezing ambient temperatures may have consumed a "normal" amount of oil. However, when checking the engine oil level, it may measure up to the full mark on the oil level indicator due to dilution (condensation and fuel) in the engine crankcase. The vehicle then might be driven at high speeds on the highway where the condensation and fuel boil off. The next time the engine oil is checked it may appear that a liter of oil was used in about 160 km (100 miles) per liter oil consumption rate is about 2,400 km (1,500 miles) per liter.

Make sure the selected engine oil meets Jaguar specification and the recommended API performance category "SG" and SAE viscosity grade as shown in the vehicle Owner's Guide. It is also important that the engine oil is changed at the intervals specified for the typical operating conditions.

Oil Consumption Test

The following diagnostic procedure is used to determine the source of excessive oil consumption.

NOTE:

> Oil use is normally greater during the first 16,100 km (10,000 miles) of service. As mileage increases, oil use decreases. Vehicles in normal service should get a least 16,000 km (10,000 miles) per liter. High speed driving, towing, high ambient temperature and other factors may result in greater oil use.

1 . Define excessive consumption, such as the number of miles driven per liter of oil used. Also determine customers's driving habits, such as sustained high speed operation, towing, extended idle and other considerations.

2 . Verify that the engine has no external oil leaks as described under Engine Oil Leaks.

3 . Verify that the engine has the correct oil level.

4 . Verify that the engine is not being run in an overfilled condition. Check the oil level at least five minutes after a hot shutdown with the vehicle parked on a level surface. In no case should the level be above the top of the cross-hatched area and the letter "F" in FULL. If significantly overfilled, carry out step 5, sub steps 1 through 4.

5 . Carry out an oil consumption test:

- Drain engine oil and fill with one liter less than the recommended amount.

- Run the engine for three minutes (10 minutes if cold), and allow oil to drain back for at least five minutes with vehicle parked on level surface.

- Remove the oil level indicator and wipe clean. (Do not wipe with anything contaminated with silicone compounds.) Install the oil level indicator making sure to seat the oil level indicator firmly in the oil level indicator tube. Remove the oil level indicator and draw a mark on the back (unmarked) surface at the indicated oil level. (This level should be about the same as the ADD mark on the face of the oil level indicator.)

- Add one liter of oil. Start the engine and allow to idle for at least two minutes. Shut off the engine and allow the engine oil to drain back for at least five minutes. Mark the oil level dipstick, using the procedure above. (This level may range from slightly below the top of the cross-hatched area to slightly below the letter "F" in FULL.

- Record the vehicles mileage.

- Instruct the customer to drive the vehicle as usual and:

- Check the oil level regularly at intervals of 160-240 km (100-150 miles).

- Return to the service point when the oil level drops below the lower (ADD) mark on the oil level indicator.

- Add only full liters of the same oil in an emergency. Note the mileage at which the oil is added.

www.JagDocs.com

- Check the oil level under the same conditions and at the same location as in steps 3 and 4.
- Measure the distance from the oil level to the UPPER mark on the oil level indicator and record.
- Measure the distance between the two scribe marks and record.
- Divide the first measurement by the second.
- Divide the distance driven during the oil test by the result. This quantity is the approximate oil consumption rate in kilometers per liter or in mile per quart.
- If the oil consumption rate is unacceptable go to Step 6.

6 . Check the positive crankcase ventilation (PCV) system. Make sure the system is not plugged.

7 . Check for plugged oil drain-back holes in the cylinder head and cylinder block.

8 . If the condition still exists after carrying out the above tests go to step 9.

9 . Carry out a cylinder compression test. Refer to the procedure in this section : Compression Test. This can help determine the source of oil consumption such as valves, piston rings or other areas.

10 . Check valve guides for excessive guide clearance. Install new valve stem seals after verifying valve guide clearance.

11 . Worn or damaged internal engine components can cause excessive oil consumption. Small deposits of oil on the tips of the spark plugs can be a clue to internal oil consumption.

Intake Manifold Vacuum Test

Bring the engine to normal operating temperature. Connect a vacuum gauge or equivalent to the intake manifold. Run the engine at the specified idle speed.

The vacuum gauge should read between 51-74 kPa (15-22 in-Hg) depending upon the engine condition and the altitude at which the test is performed. Subtract 4.0193 kPa (1 in-Hg) from the specified reading for every 304.8 m (1,000 feet) of elevation above sea level.

The reading should be steady. As necessary, adjust the gauge damper control (where used) if the needle is fluttering rapidly. Adjust damper until needle moves easily without excessive flutter.

Interpreting Vacuum Gauge Readings

A careful study of the vacuum gauge reading while the engine is idling will help pinpoint trouble areas. Always conduct other appropriate tests before arriving at a final diagnostic decision. Vacuum gauge readings, although helpful, must be interpreted carefully.

Most vacuum gauges have a normal band indicated on the gauge face.

The following are potential gauge readings. Some are normal; others should be investigated further.

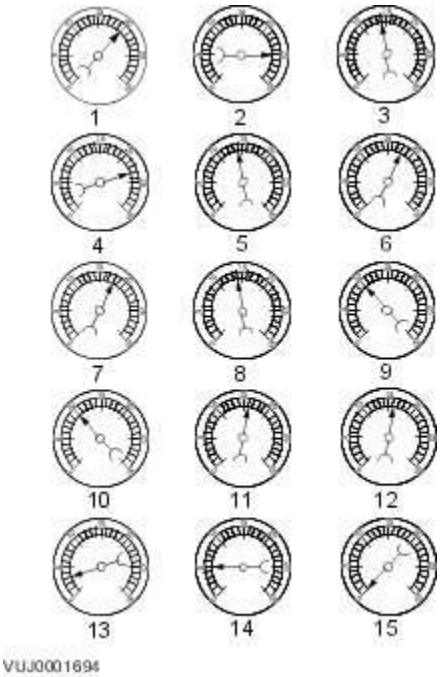

1 . NORMAL READING: Needle between 51-74 kPa (15-22 in-Hg) and holding steady.

2 . NORMAL READING DURING RAPID ACCELERATION : When the engine is rapidly accelerated (dotted needle), the needle will drop to a low (not to zero) reading . When the throttle is suddenly released, the needle will snap back up to a higher than normal figure.

www.JagDocs.com

3 . NORMAL FOR HIGH-LIFT CAMSHAFT WITH LARGE OVERLAP: The needle will register as low as 51 kPa (15 in-Hg) but will be relatively steady. Some oscillation is normal.

4 . WORN RINGS OR DILUTED OIL: When the engine is accelerated (dotted needle), the needle drops to 0 kPa (0 in-Hg). Upon deceleration, the needle runs slightly above 74 kPa (22 in-Hg).

5 . STICKING VALVES: When the needle (dotted) remains steady at a normal vacuum but occasionally flicks (sharp, fast movement) down and back about 13 kPa (4 in-Hg), one or more valves may be sticking.

6 . BURNED OR BENT VALVES: A regular, evenly-spaced, downscale flicking of the needle indicates one or more burned or damaged valves. Insufficient hydraulic valve tappet or hydraulic lash adjuster clearance will also cause this reaction.

7 . POOR VALVE SEATING: A small but regular downscale flicking can mean one or more valves are not seating correctly.

8 . WORN VALVE GUIDES: When the needle oscillates over about a 13 kPa (4 in-Hg) range at idle speed, the valve guides could be worn. As engine speed increases, the needle will become steady if guides are responsible.

9 . WEAK VALVE SPRINGS: When the needle oscillation becomes more violent as engine RPM is increased, weak valve springs are indicated. The reading at idle could be relatively steady.

10 . LATE VALVE TIMING: A steady but low reading could be caused by late valve timing.

11 . IGNITION TIMING RETARDING: Retarded ignition timing will produce a steady but somewhat low reading.

12 . INSUFFICIENT SPARK PLUG GAP: When spark plugs are gapped too close, a regular, small pulsation of the needle can occur.

13 . INTAKE LEAK: A low, steady reading can be caused by an intake manifold or throttle body gasket leak.

14 . BLOWN HEAD GASKET: A regular drop of fair magnitude can be caused by a blown head gasket or warped cylinder head to cylinder block surface.

15 . RESTRICTED EXHAUST SYSTEM: When the engine is first started and is idled, the reading may be normal, but as the engine RPM is increased, the back pressure caused by a clogged muffler, kinked tail pipe or other concerns will cause the needle to slowly drop to 0 kPa (0 in-Hg). The needle then may slowly rise. Excessive exhaust clogging will cause the needle to drop to a low point even if the engine is only idling.

When vacuum leaks are indicated, search out and correct the cause. Excess air leaking into the system will upset the fuel mixture and cause concerns such as rough idle, missing on acceleration or burned valves. If the leak exists in an accessory such as the power brake booster, the unit will not function correctly. Always repair vacuum leaks.

www.JagDocs.com

Engine - 2.7L Diesel

No data

Specifications

Lubricants, Fluids, Sealers and Adhesives

Description	Specification
Engine oil (EUROPE), SAE 5W-30	WSS-M2C-913A or B
Engine oil (US), SAE 5W-30	ILSAC GF3, API SJ
Engine assembly lubricant	SQM-2C9003 AA EP90
Sealant	WSS M4G 320-A3
Hose assembly surfactant	ESE-M99 B144-B

Capacities

Description	Liters
Engine oil, initial fill	7.0
Engine oil, service fill with oil filter change	6.5

Torque Specifications

Description	Nm	lb-ft	lb-in
Accessory drive belt idler pulley retaining bolt	25	18	-
Accessory drive belt tensioner retaining bolt	48	35	
Air conditioning (A/C) compressor retaining bolts	25	18	-
A/C compressor mounting bracket retaining bolts	25	18	-
A/C compressor lines retaining bolts	9	-	80
Camshaft bearing caps retaining bolts	A	-	-
Camshaft position sensor retaining bolt	7	-	62
Connecting rod cap retaining bolts	A	-	-
Coolant by-pass tube to cylinder head retaining bolts	10	7	-
Crankshaft position sensor retaining bolt	10	7	-
Crankshaft pulley retaining bolt	A	-	-
Cylinder head retaining bolts	A	-	-

www.JagDocs.com

Engine ground strap retaining bolt	10	7	-
Engine front cover retaining bolts	A	-	-
Engine mounting bracket retaining bolts	40	30	-
Engine mount bracket to engine mount retaining nuts	55	40	-
Engine mount retaining bolts to crossmember retaining nuts	63	46	-
Engine mount/oil filter housing retaining bolts	A	-	-
Engine wiring harness retaining bracket	7	-	62
Exhaust manifold heat shield retaining bolts	10	7	-
Exhaust manifold retaining studs	9	-	80
Exhaust manifold retaining nuts	A	-	-
Flywheel retaining bolts	80	59	-
Flexplate retaining bolts	80	59	-
Generator retaining bolts	48	35	-
Ignition coils retaining bolts	7	-	62
Knock sensor retaining bolts	25	18	-
Lower cylinder block retaining bolts	A	-	-
Lower intake manifold retaining bolts	A	-	-
Oil level indicator tube retaining bolt	10	7	-
Oil pan retaining bolts	A	-	-
Oil pan drain plug	24	18	-
Oil pressure sensor	16	12	-
Oil pump to engine block retaining bolts	10	7	-
Oil separator blanking plate	10	7	-
Oil temperature sensor	14	10	-
Power steering pump retaining bolts	25	18	-
Spark plugs	15	11	-
Timing chain guide retaining bolts	A	-	-
Timing chain tensioner retaining bolts	25	18	-
Upper intake manifold retaining bolts	A	-	-
Upper intake manifold support retaining bolts	10	7	-
Variable camshaft timing oil control unit retaining bolt	40 + 90°	30 + 90°	-
Valve cover studs and retaining bolts	A	-	-
Water pump retaining bolts	25	18	-
Wiring harness to valve cover retaining nuts	10	7	-
A = refer to the procedure for correct torque sequence	-	-	-

Valve Clearance Adjustment (12.29.48)

1. Remove the left-hand valve cover.

2. Remove the right-hand valve cover.
Valve Cover RH (12.29.44)

3. Turn the crankshaft pulley clockwise to position the relevent camshaft lobe 180 degrees to the shim being replaced.

4. Remove the camshaft bearing cap.

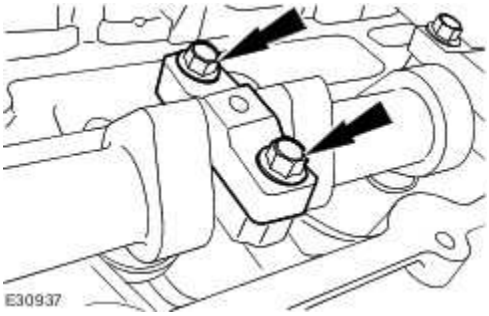

5. Install the special tool.
   - Making sure the legs of the tool are in contact with the edge of the valve bucket, compress the bucket.

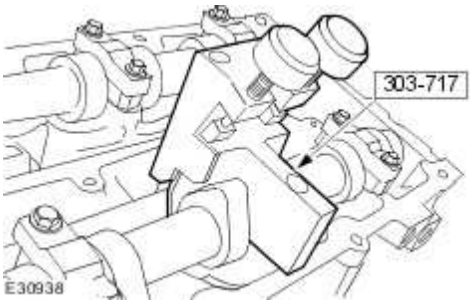

6. Use compressed air to remove the shims that require replacing.
   - Blow compressed air between the shim edge and bucket to dislodge the shim.

7. Use the following formula to calculate the required shim thickness.
   - Original shim thickness + measured clearance - desired clearance = required shim

www.JagDocs.com

thickness.

8. Apply a light coat of engine oil to the replacement shim(s) and install.

9. Install the left-hand valve cover.

10. Install the right-hand valve cover.

Valve Cover RH (12.29.44)

Valve Clearance Check (12.29.47)

1. Remove the left-hand valve cover. For additional information, refer to .

2. Remove the right-hand valve cover. For additional information, refer to .

3.

CAUTION: Rotating the crankshaft in a counterclockwise direction may cause engine damage. Crankshaft journals are directionally machined. Rotating the crankshaft counterclockwise Can raise burrs on bearing surfaces, reducing engine life.

CAUTION: Camshaft lobes must be 180 degrees away from each valve tappet or valve clearance will be incorrect.

Rotate the engine clockwise to position the camshaft lobe away from the shim surface.

4. Using the feeler gauge set, measure the clearance between the camshaft and the shim surface. Record and check the readings. For additional information, refer to <<303-00>>. Adjust the clearances as necessary. For additional information, refer to.

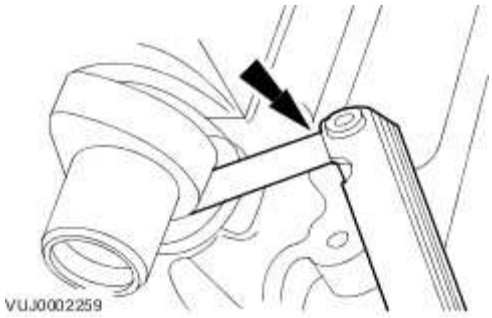

5. Install the right-hand valve cover. For additional information, refer to .

6. Install the left-hand valve cover. For additional information, refer to .

www.JagDocs.com

Description and operation

Engine

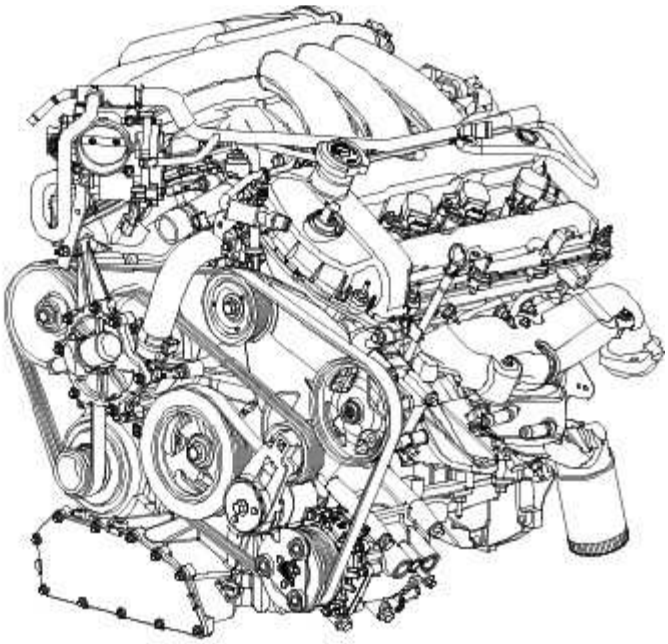

E30898

The 3.0 litre 24 valve V6 engine has four overhead camshafts and are driven by two timing chains. The engine incorporates electronic engine management with distributorless ignition system, sequential electronic fuel injection. It also has two catalytic converters in the exhaust system which includes two oxygen sensors and two catalytic monitor sensors.

Viewed from the driving position, the right-hand cylinder bank is numbered 1 to 3, from the front of the vehicle and the left-hand cylinder bank are numbered 4 to 6, from the front of the vehicle.

The engine includes the following:

- Compression ratio of 10.5:1.
- 3 Stage variable geometry intake manifold.
- Lightweight valve gear.
- Unique camshaft lift and duration.
- Twin knock sensor engine management control.
- Fully variable camshaft timing (VCT) system.

Variable Intake System (V.I.S).

The variable intake system consists of a three stage upper intake manifold assembly, two position electronically driven gate valves and an engine management powertrain control system.

The engine control module (ECM) switches the intake manifold tuning valves between fully open and fully closed at calibrated engine speeds.

The intake manifold efficiency is therefore increased which will also increase the engine torque and engine performance.

Variable Camshaft Timing (VCT)

Oil is supplied to the front of each VCT actuator via the spider bracket assembly which contains the VCT actuator solenoid, supply oil galleries and timing chain guide. Oil pressure advances and retards the camshaft timing which is controlled by the engine management system via a solenoid valve mounted on top of the oil feed spider assembly. Camshaft timing, dependant on engine speed, load and oil temperature can be optimized over the adjustment range of 30 degrees.

Engine Lubrication System

The engine lubrication system is of the force-feed type in which oil is supplied under full pressure to the:

- crankshaft main bearings.
- crankshaft thrust main bearing.
- connecting rod bearings.
- valve shims.
- camshaft bearings.
- variable camshaft timing.

All other parts are lubricated by gravity flow or splash of the oil.

Oil Pump

The rotary oil pump develops the oil pressure:

- The oil pump is located at the front of the crankshaft.
- The oil pump is driven by the crankshaft.
- A full flow oil filter is externally mounted on the oil filter housing.

If the filter element should become blocked a spring-loaded bypass valve will open and allow an uninterrupted flow of oil to the engine.

www.JagDocs.com

Engine

For additional information, refer to<<303-00>>.

Engine (12.41.01)

Special Service Tools

Engine Lifting Bracket
303-661

Engine Support Bracket
303-021

5 point security torx bit
418-535

Removal

1 . Remove the automatic transmission assembly. <<307-01>>

2 . Lower the vehicle.

3 . Remove the hood assembly. <<501-03>>

www.JagDocs.com

4 . Remove the air cleaner assembly. <<303-12A>>

5 . Remove the cabin air filter housing.

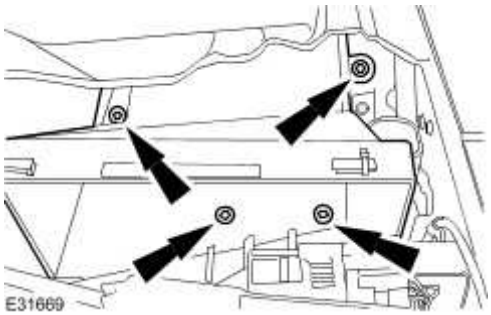

6 . **NOTE:**

Left-hand shown, right-hand similar.

Remove the engine compartment panel retaining bolts.

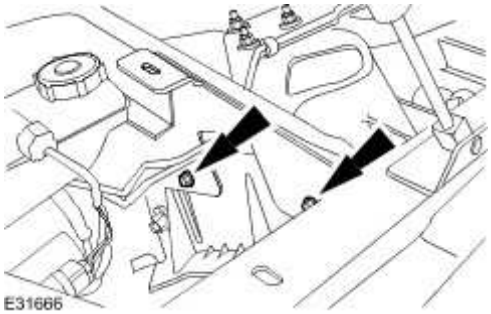

7 . **NOTE:**

Left-hand shown, right-hand similar.

Remove the engine compartment panel.

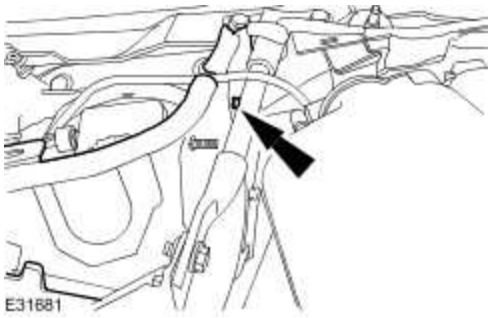

8 . Remove the engine cover.

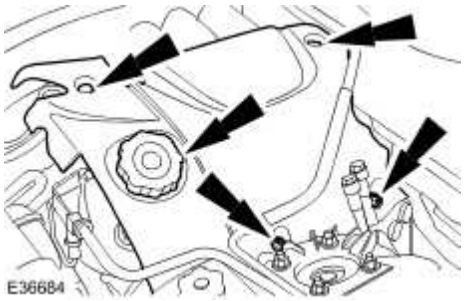

9 . Raise the vehicle.

10 . Remove the passenger side front wheel and tire assembly. <<204-04>>

11 . Lower the vehicle.

12 . Disconnect the engine harness ground strap.

www.JagDocs.com

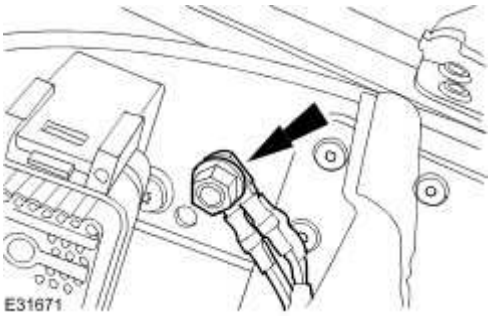

13 **NOTE:**

.

The engine control module (ECM) electrical connector retaining bolt remains captive in the electrical connector

Disconnect the ECM electrical connector.

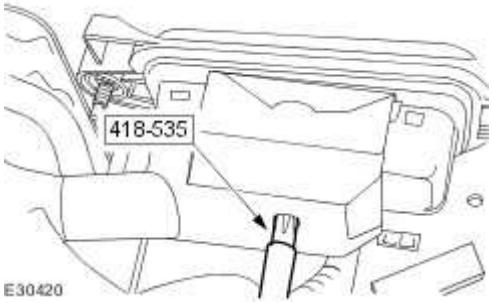

14 **NOTE:**

.

The main engine harness electrical connector retaining bolt remains captive in the electrical connector.

Disconnect the engine wiring harness electrical connectors.

1) Loosen the engine harness main electrical connector retaining bolt.

2) Disconnect the engine wiring harness electrical connectors.

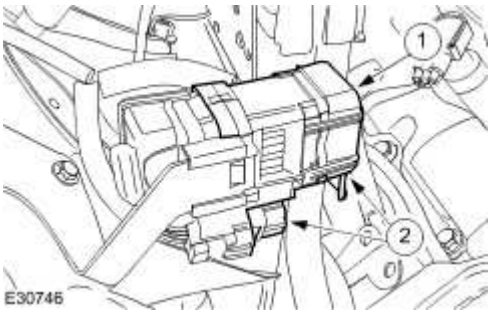

15 . Reposition the engine wiring harness from the vehicle body.

16 . Disconnect the evaporative emission canister purge valve to intake manifold hose.

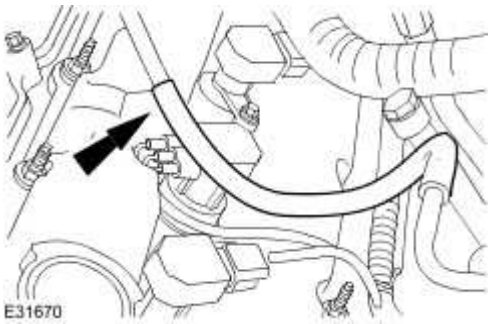

17 . Disconnect the fuel supply manifold spring lock coupling. <<310-00>>

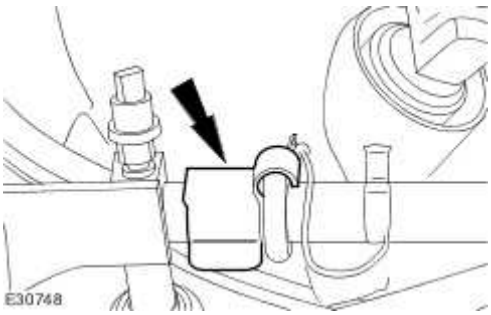

18 . Remove the cooling module. <<303-03A>>

19 . Detach the brake booster vacuum hose from the brake booster.

www.JagDocs.com

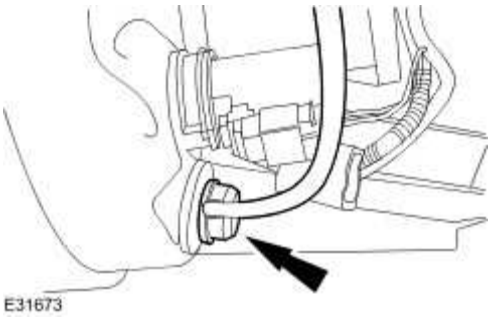

20. **CAUTION: Cap the power steering line to prevent loses of fluid and dirt ingress.**

CAUTION: If power steering fluid comes into contact with the paintwork, the affected area must be immediately washed down with cold water.

NOTE:

Drain the fluid into a suitable container.

Disconnect the power steering reservoir to power steering pump supply line.

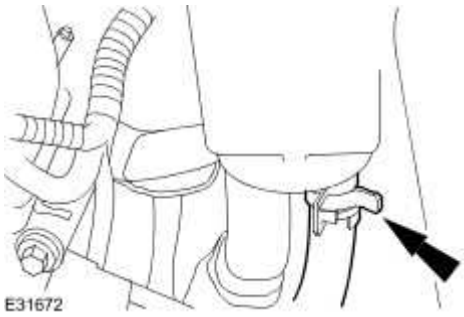

21. **CAUTION: Cap the power steering lines to prevent loses of fluid and dirt ingress.**

CAUTION: If power steering fluid comes into contact with the paintwork, the affected area must be immediately washed down with cold water.

NOTE:

Drain the fluid into a suitable container.

Disconnect the power steering pump to steering gear supply line.

- Remove and discard the O-ring seal.

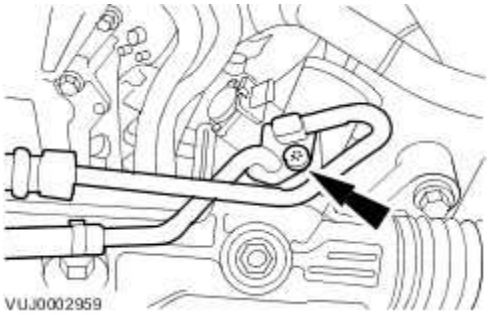

22 . **NOTE:**

Inlet manifold shown removed for clarity.

Detach the right-hand valve cover wiring harness.

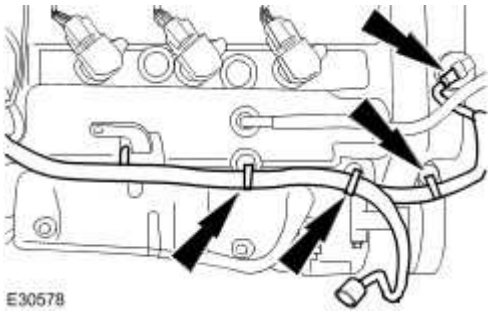

23 . Disconnect the left-hand ignition coils electrical connectors.

www.JagDocs.com

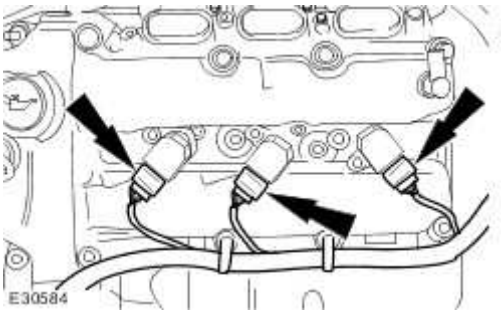

24 . Detach the left-hand valve cover wiring harness.

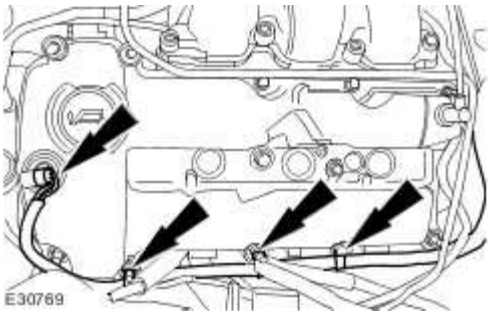

25 . Remove the dipstick tube retaining bolt.

Reposition the dipstick tube.

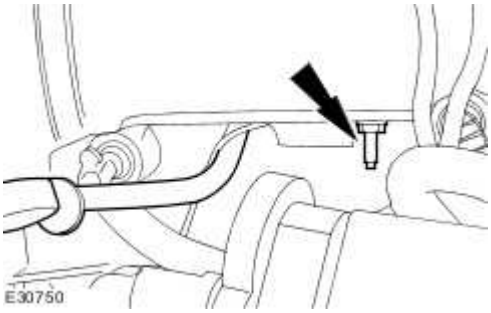

26 . **NOTE:**

Left-hand shown, right-hand similar.

Loosen the exhaust manifold retaining nut.

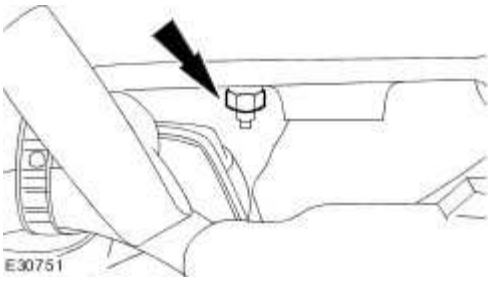

27 . **NOTE:**

Left-hand shown, right-hand similar.

Install the special tool to the exhaust manifold.

- Install the retaining bolt.

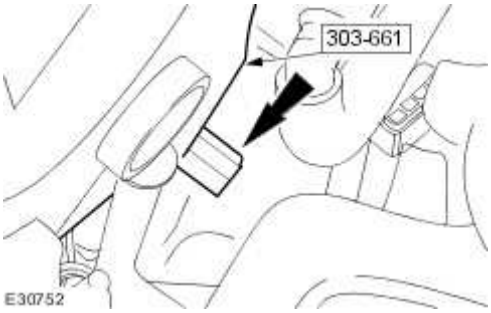

28 . **NOTE:**

Left-hand shown, right-hand similar.

Install the retaining bolt.

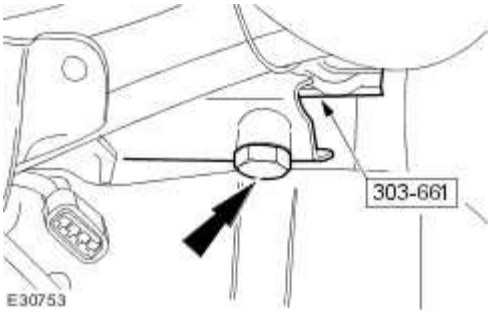

www.JagDocs.com

29 . Install the special tool support bars to the special tool.

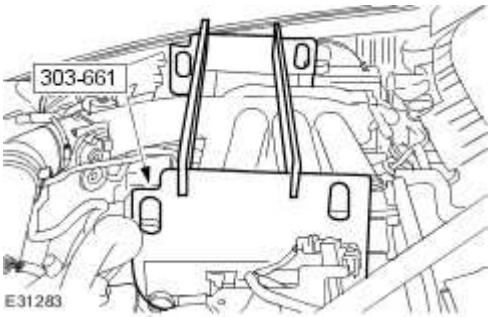

30 . Install the special tool.

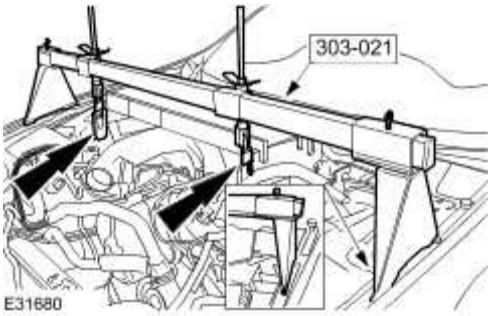

31 . Raise the vehicle.

32 Detach the accessory drive belt.

.

1) Rotate the accessory drive belt tensioner counter-clockwise.

Use a 3/8 inch square drive bar to rotate the accessory drive belt tensioner.

2) Detach the accessory drive belt.

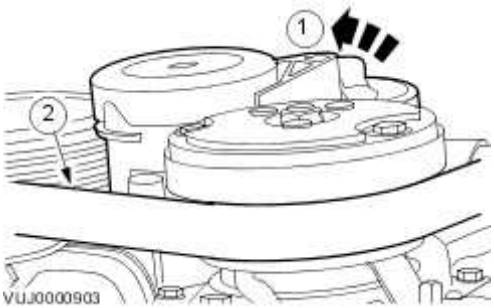

33 . Detach the generator battery positive cable protective cover.

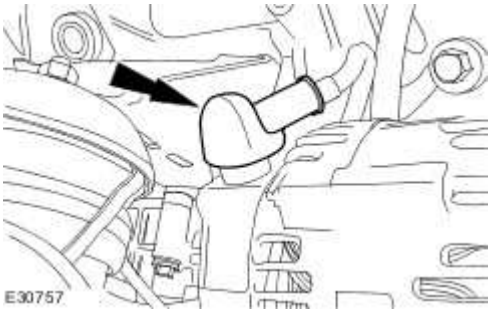

34 . Remove the generator battery positive cable retaining nut.

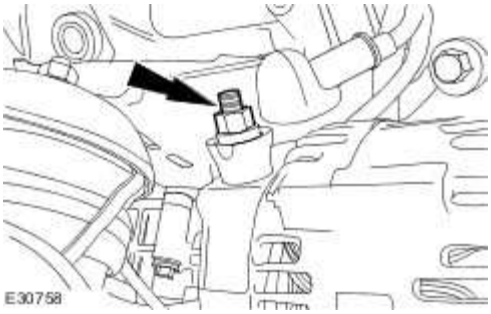

35 . Remove the air conditioning compressor. <<412-03>>

36 . Detach the power steering hose.

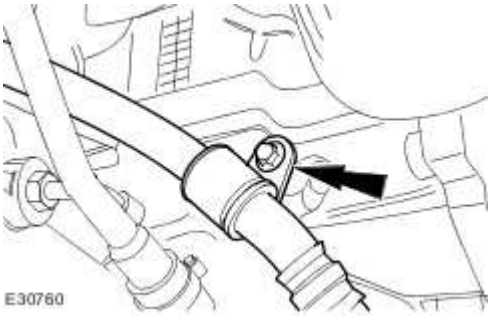

37 . Reposition the power steering hose away from the engine.

www.JagDocs.com

38 . **NOTE:**

Left-hand shown, right-hand similar.

Remove the engine mounts lower retaining bolts.

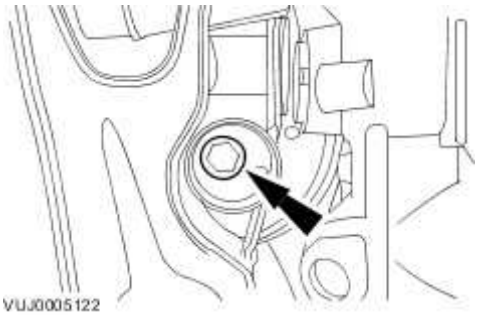

39 . Detach the automatic transmission oil cooler tubes bracket.

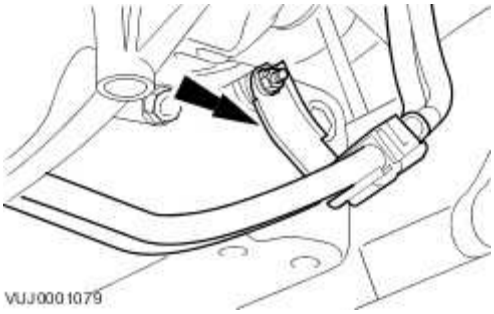

40 . Reposition the automatic transmission oil cooler tubes away from the engine.

41 . Reposition the automatic transmission wiring harness away from the engine.

42 . Lower the vehicle.

43 . Remove the special tool.

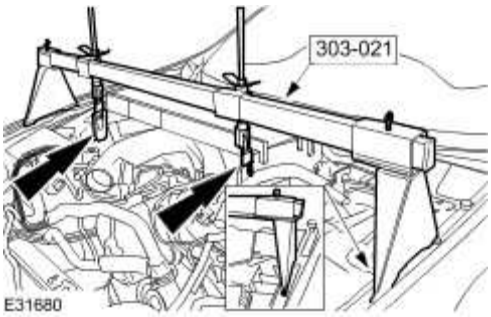

44 . Remove the engine assembly.

- Using the special tools, install a suitable floor crane.

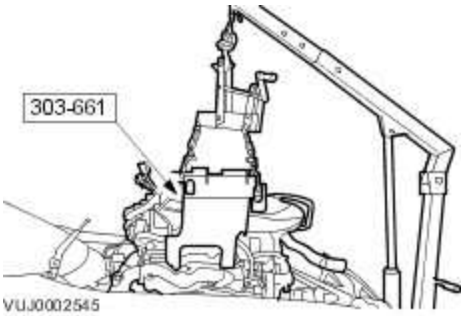

www.JagDocs.com

Engine (12.41.01)

Special Service Tools

Engine Lifting Bracket
303-661

Engine Support Bracket
303-021

5 point security torx bit
418-535

Installation

1 **NOTE:**

.

Make sure all wiring harnesses and oil pipes are suitably positioned for engine installation.

Install the engine assembly.

- Make sure engine mounts are correctly located

- Remove the floor Crane.

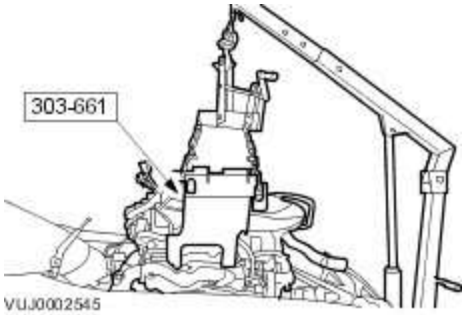

2 . Install the special tool.

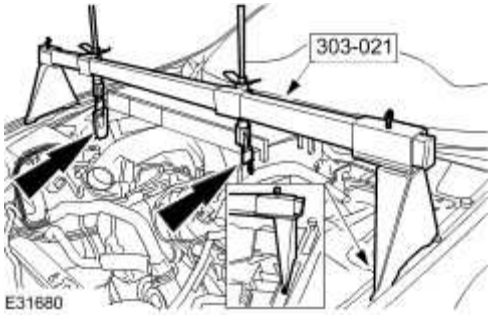

3 . Raise the vehicle.

4 . Attach the automatic transmission oil cooler tubes bracket.

- Tighten to 10 Nm.

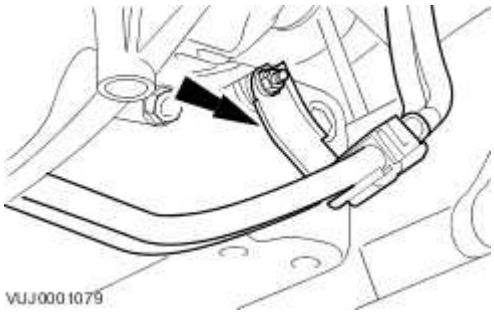

www.JagDocs.com

5 . **NOTE:**

Left-hand shown, right hand similar.

Install the engine mounts lower retaining bolts.

- Tighten to 63 Nm.

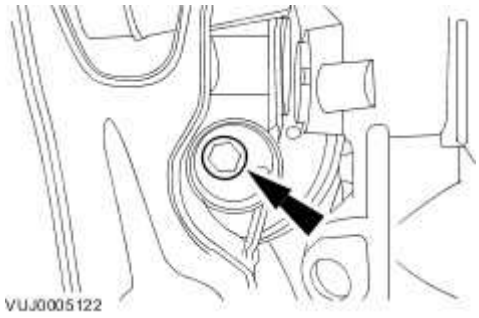

6 . Attach the power steering hose.

- Tighten to 10 Nm.

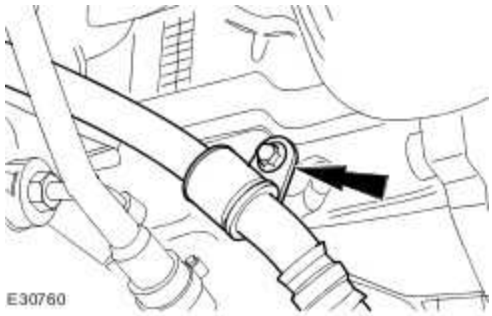

7 . Install the air conditioning compressor. <<412-03>>

8 . Install the generator battery positive cable retaining nut.

- Tighten to 12 Nm.

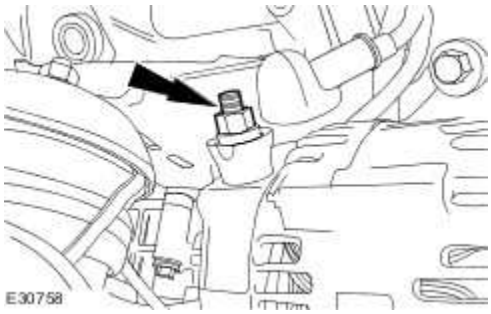

9 . Attach the generator battery positive cable protective cover.

10 Attach the accessory drive belt.

.

1) Rotate the accessory drive belt tensioner counter-clockwise.

Use a 3/8 inch square drive bar to rotate the accessory drive belt tensioner.

2) Attach the accessory drive belt.

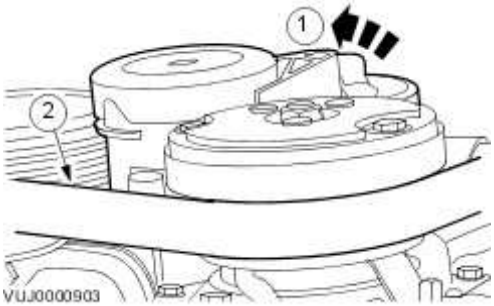

11 . Lower the vehicle.

www.JagDocs.com

12 . Remove the special tool.

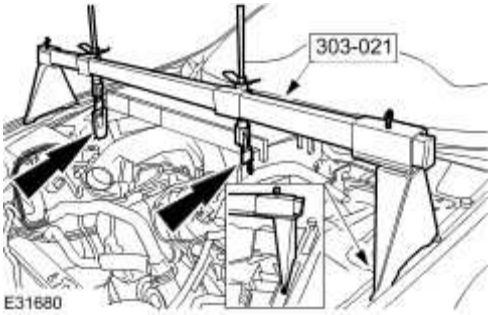

13 . Remove the special tool.

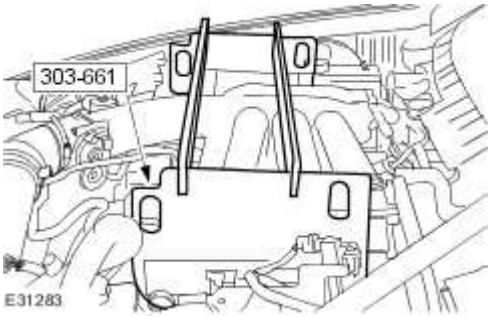

14 . Remove the special tool.

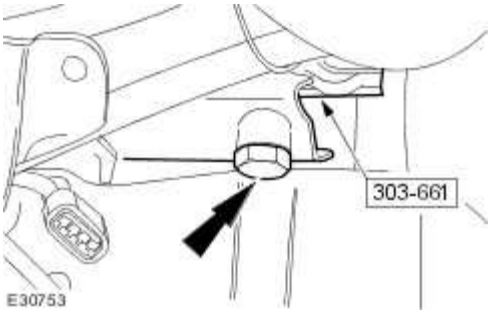

15 . Remove the special tool.

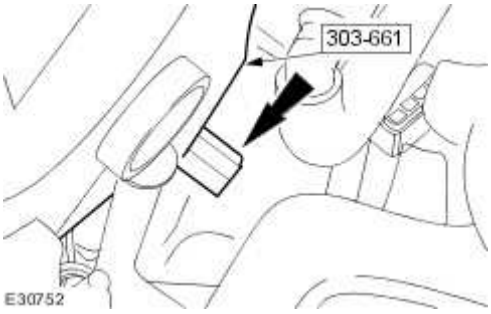

16 . **NOTE:**

Left-hand shown, right-hand similar.

Tighten the exhaust manifold retaining nut.

- Tighten to 25 Nm.

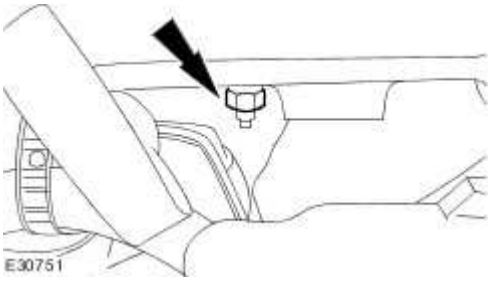

17 . Install the dipstick tube retaining bolt.

- Tighten to 10 Nm.

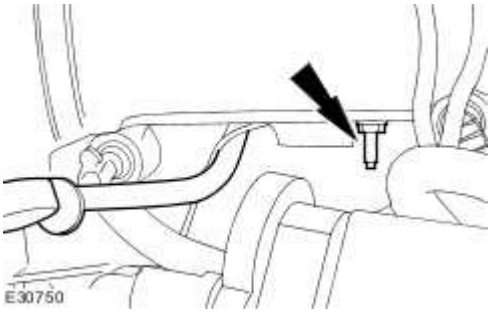

18 . Attach the left-hand valve cover wiring harness.

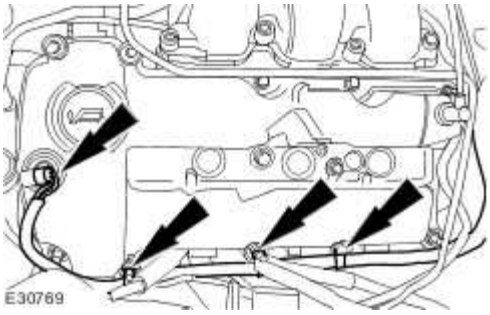

www.JagDocs.com

19 . Connect the left-hand ignition coils electrical connectors.

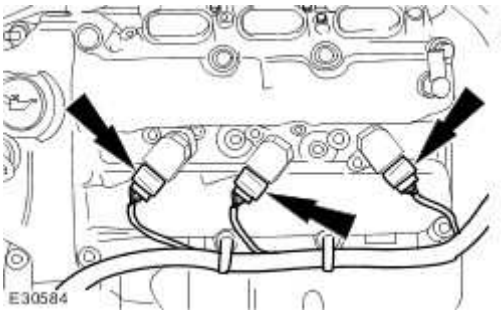

20 . **NOTE:**

Intake manifold shown removed for clarity.

Attach the right-hand valve cover wiring harness.

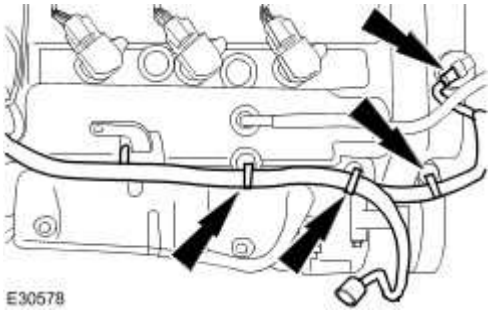

21 . **NOTE:**

Un-cap the power steering pump exposed ports.

Install new power steering pump supply line O-ring seal.

22 . **CAUTION: If power steering fluid comes into contact with the paintwork, the affected area must be immediately washed down with cold water.**

Connect the power steering pump to steering gear supply line.

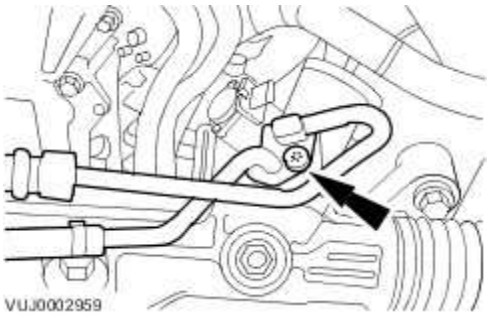

23 . **CAUTION: If power steering fluid comes into contact with the paintwork, the affected area must be immediately washed down with cold water.**

Connect the power steering reservoir to power steering pump supply line.

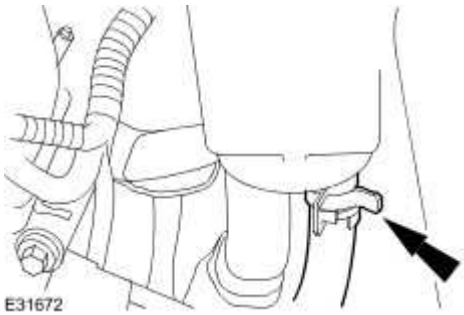

24 . Attach the brake booster vacuum hose from the brake booster.

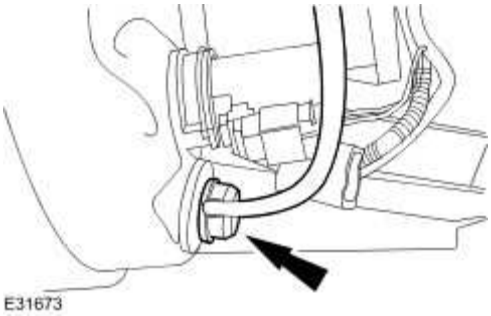

25 . Install the cooling module. <<303-03A>>

www.JagDocs.com

26 . **NOTE:**

Install new O-ring seals.

Connect the fuel supply manifold spring lock coupling. <<310-00>>

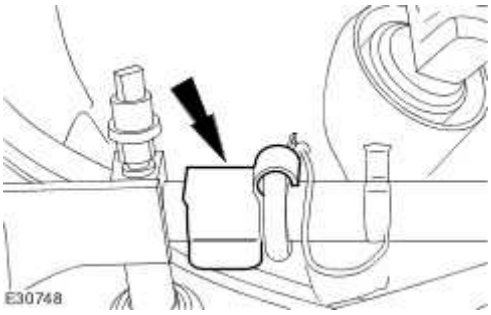

27 . Connect the evaporative emission canister purge valve to intake manifold hose.

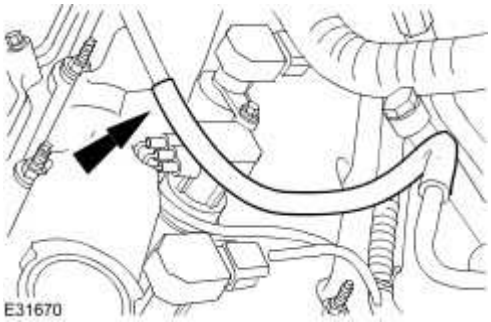

28 . Connect the engine wiring harness electrical connectors.

1) Align the engine harness main electrical connector retaining bolt.

2) Connect the engine wiring harness electrical connectors.

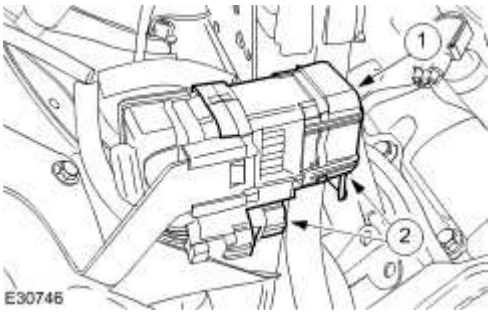

29 . Connect the engine control module (ECM) electrical connector.

Tighten to 6 Nm.

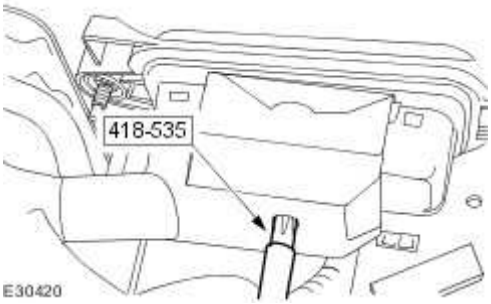

30 . Connect the engine harness ground strap.

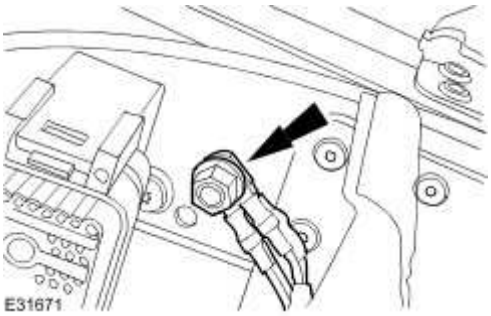

31 . Raise the vehicle.

32 . Install the passenger side front wheel and tire assembly.

Tighten to 128 Nm.

33 . Lower the vehicle.

www.JagDocs.com

34 . Install the engine cover.

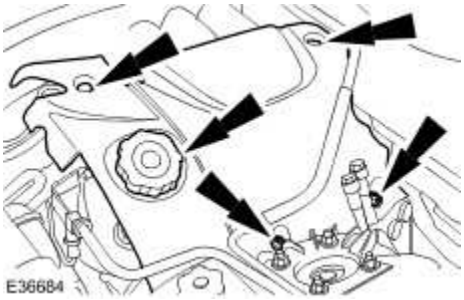

35 . **NOTE:**

Left-hand shown, right-hand similar.

Install the engine compartment panels.

- Tighten to 10 Nm.

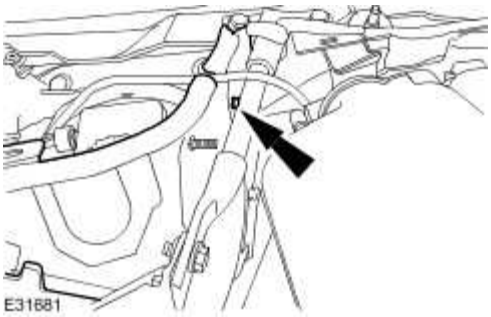

36 . **NOTE:**

Left-hand shown, right-hand similar.

Install the engine compartment panels retaining bolts.

- Tighten to 10 Nm.

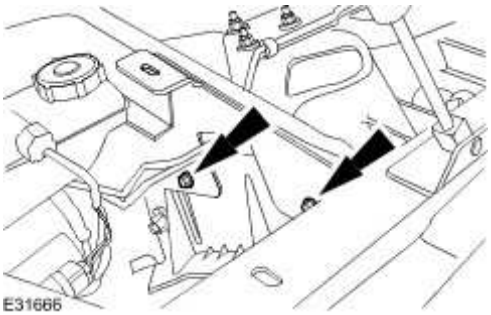

37 . Install the cabin air filter housing.

Tighten to 10 Nm.

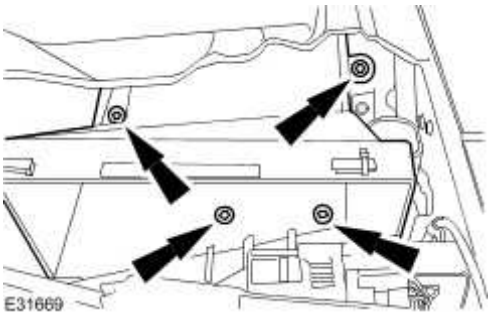

38 . Install the air cleaner assembly. <<303-12A>>

39 . Install the hood assembly. <<501-03>>

40 . Raise the vehicle.

41 . Install the automatic transmission assembly. <<307-01>>

www.JagDocs.com

Camshafts LH (12.13.19)

Removal

1 . Remove the timing drive components.
For additional information, refer to Timing Drive Components (12.65.13)

2 . Remove the camshaft bearing caps evenly.

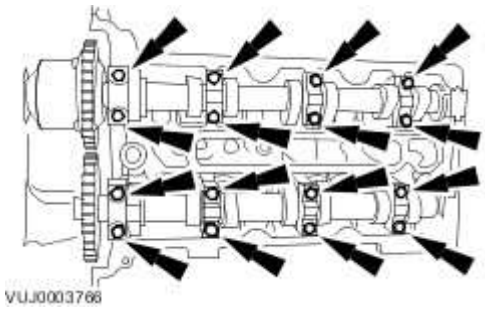

3 . Remove the camshafts.

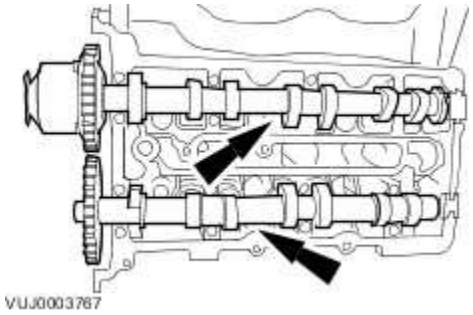

Installation

1 **NOTE:**
.

Lubricate the camshafts and the camshaft bearing caps with oil meeting Jaguar specification prior to installation.

Install the camshafts.

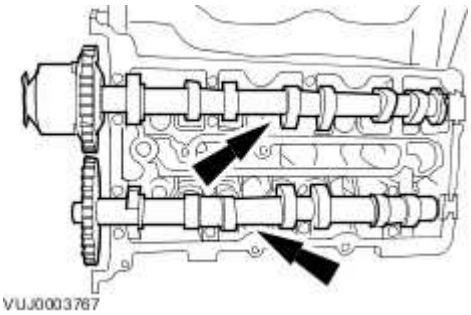

2 . **CAUTION: Do not install the cylinder head camshaft journal thrust caps until the camshaft journal caps are installed or damage to the thrust caps may occur.**

Install the camshaft bearing caps in their original position.

- Install the camshaft bearing cap retaining bolts evenly.
- Tighten the retaining bolts in the sequence shown to 10 Nm.

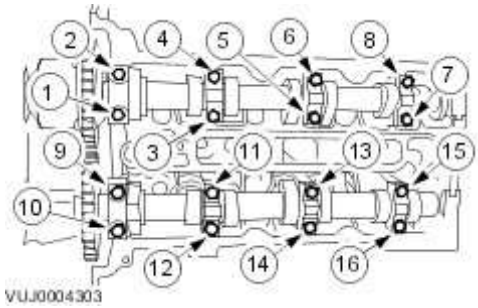

3 . Carry out a valve clearance check. For additional information, refer to
For additional information, refer to .

4 . Install the timing drive components.
For additional information, refer to Timing Drive Components (12.65.13)

www.JagDocs.com

Crankshaft Front Seal (12.21.14)

Special Service Tools

Crankshaft Front Seal Remover
303-700

Crankshaft Front Seal Installer
303-542

Crankshaft pulley installer
303-102

Removal

1 . Remove the crankshaft pulley.
For additional information, refer to

2 . Using the special tool, remove and discard crankshaft front seal.

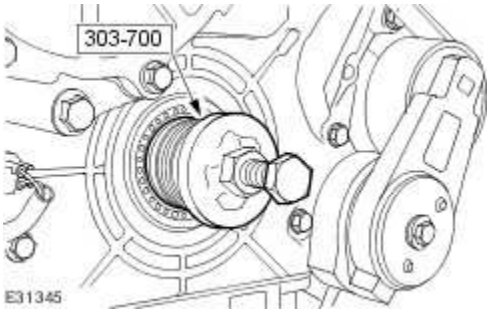

Installation

1 . Using the special tools, install the crankshaft front oil seal.

Lubricate the seal lip with clean engine oil.

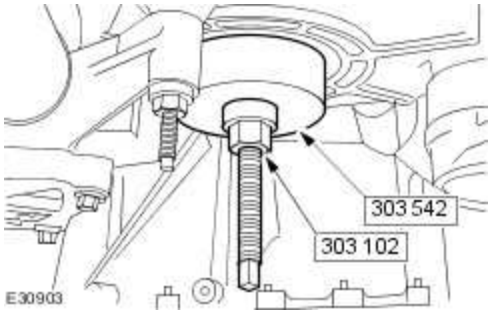

2 . Install the crankshaft vibration damper.
For additional information, refer to

www.JagDocs.com

Crankshaft Pulley (12.21.09)

Special Service Tools

Wrench strap-universal
303-D055

Crankshaft Pulley Remover
303-D121

Crankshaft Pulley Installer
303-102

Trust Pad
303-D121-01

Crankshaft pulley installer
303-335/2

Removal

1 . Disconnect the battery ground cable. <<414-01>>

2 . Carry out the cooling system draining procedure. <<303-03A>>

3 . Remove the accessory drivebelt.

1) Rotate the belt tensioner counter-clockwise.

Use a 3/8 inch square drive bar to rotate the belt tensioner.

2) Remove the accessory drivebelt.

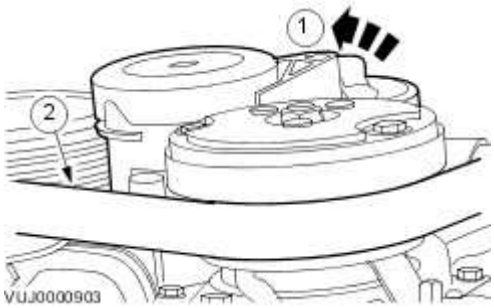

4 . Lower the vehicle.

5 . Remove the throttle body. <<303-04A>>

6 . Disconnect the radiator top coolant hose.

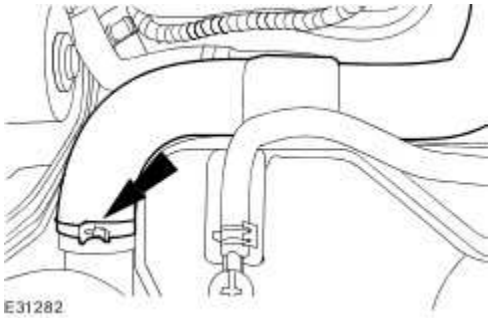

www.JagDocs.com

7 . Disconnect the coolant hose from the top coolant hose assembly.

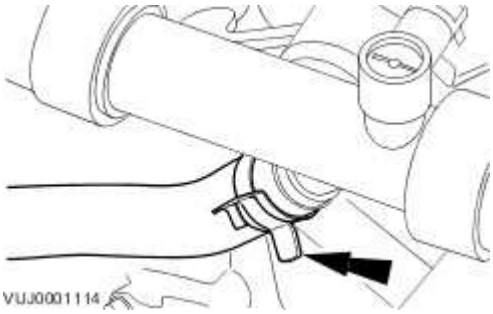

8 . Disconnect the hose assembly from the water pump and lower hose.

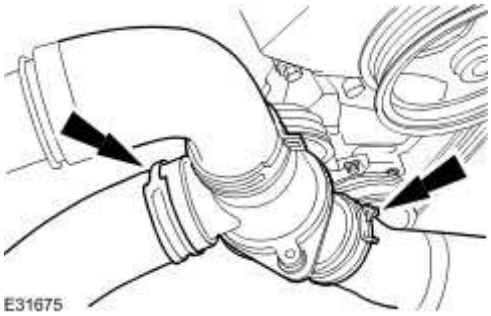

9 . Remove the hose assembly.

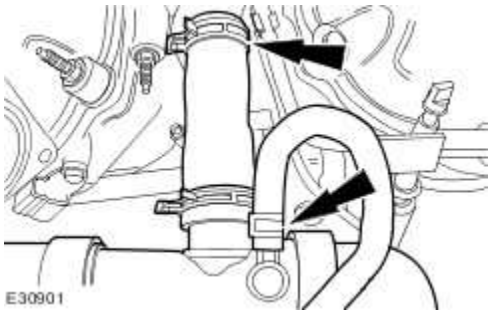

10 . Install the special tool.

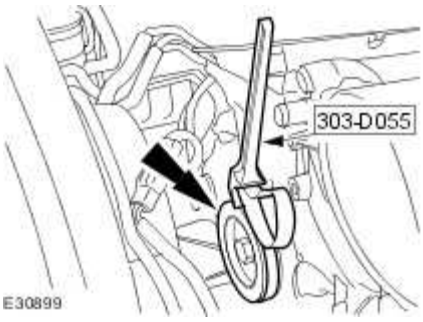

11 . Remove the crankshaft pulley retaining bolt.

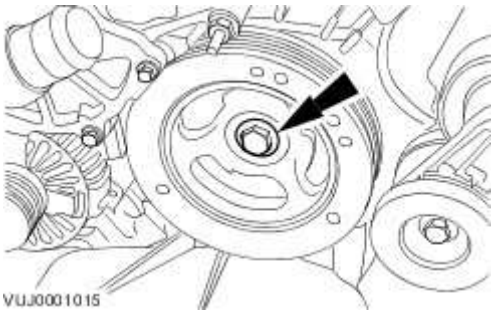

12 . Install the special tool.

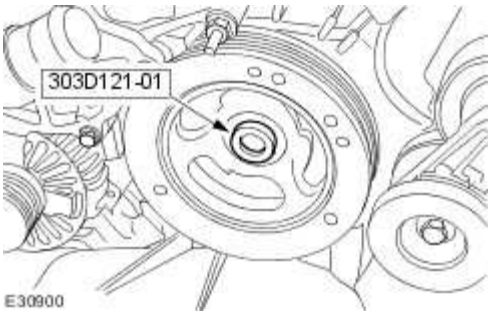

13 . Using the special tools, remove the crankshaft pulley.

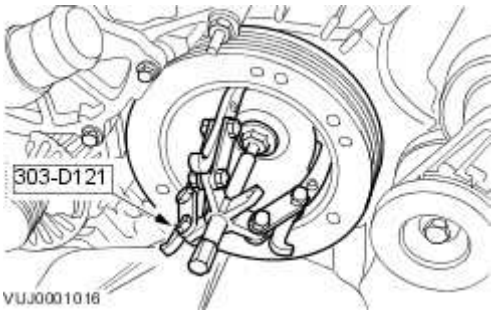

Installation

1 Using the special tools, install the crankshaft pulley.

.

- Coat the crankshaft pulley keyway with silicone gasket sealant meeting Jaguar specification.
- Coat the sealing surfaces of the crankshaft pulley with silicone gasket sealant meeting Jaguar specification.

www.JagDocs.com

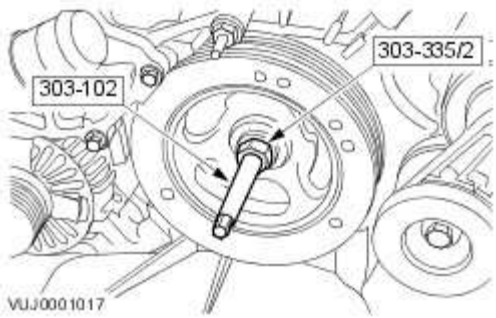

2 . Install the special tool.

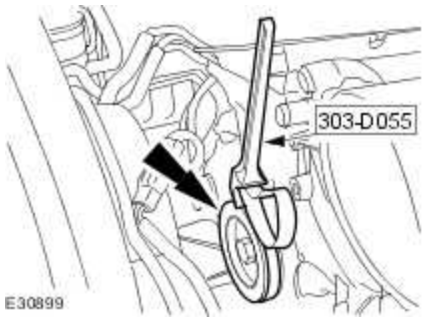

3 . Install the crankshaft pulley bolt.

- Torque to 120 Nm.
- Loosen the bolt (minimum 1 turn).
- Torque to 50 Nm.
- Angle Torque to 90°.

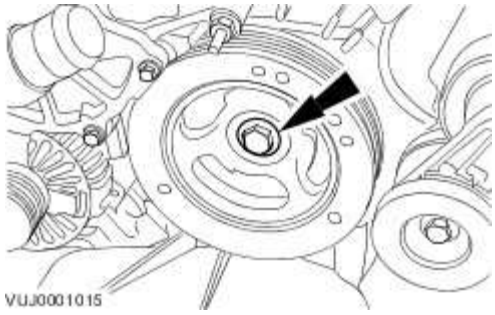

4 . Install the hose assembly.

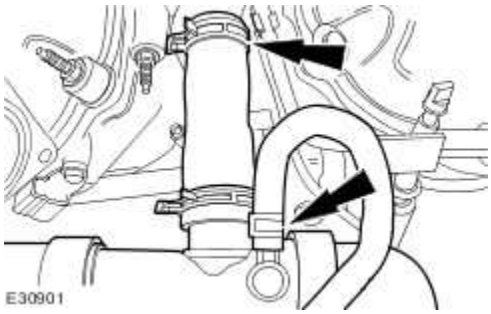

5 . Install the hose assembly to the water pump and lower hose.

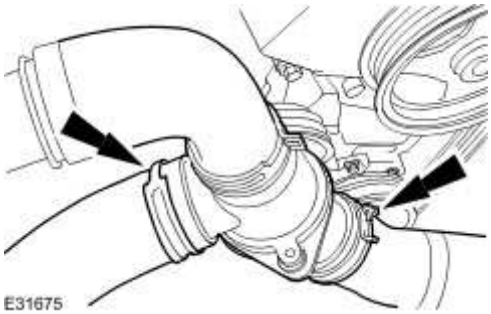

6 . Install the coolant hose to the housing assembly.

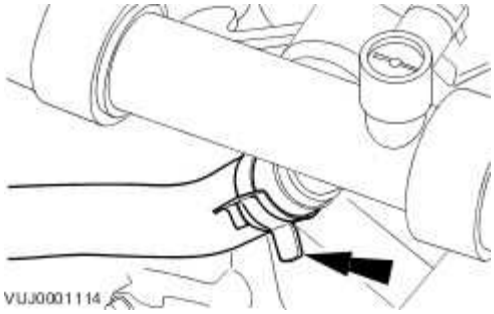

7 . Connect the radiator top coolant hose.

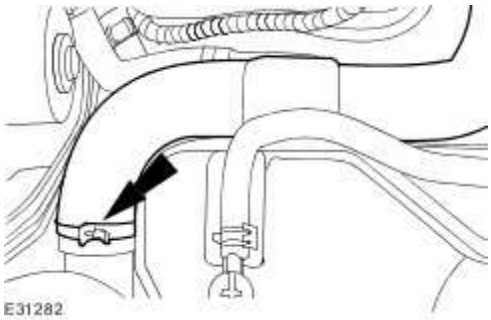

www.JagDocs.com

8 . Install the throttle body. <<303-04A>>

9 . Raise the vehicle.

10 . Install the accessory drivebelt.

1) Rotate the belt tensioner counter-clockwise.

Use a 3/8 inch square drive bar to rotate the belt tensioner.

2) Install the accessory drivebelt.

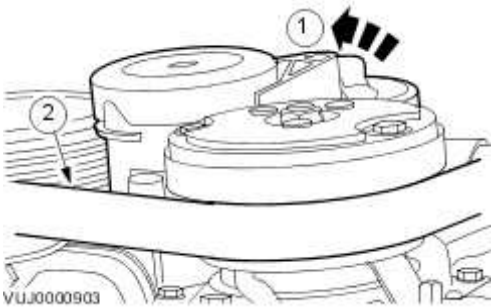

11 . Lower the vehicle.

12 . Connect the battery ground cable. <<414-01>>

13 . Carry out the cooling system filling and bleeding procedure. <<303-03A>>

Crankshaft Rear Seal (12.21.20)

Special Service Tools

Crankshaft Rear Seal Remover
303-566

Crankshaft Rear Seal Installer
303-178

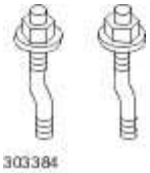

Crankshaft Rear Seal Installer Adapter Bolts
303-384

Crankshaft Rear Seal Installer Draw Bolts
303-102

Removal

Vehicles With Manual Transmission

1 . Remove the flywheel. For additional information, refer to
For additional information, refer to .

Vehicles With Automatic Transmission

2 . Remove the flexplate. For additional information, refer to

www.JagDocs.com

For additional information, refer to .

All Vehicles

3 . **CAUTION: Avoid scratching or damaging the oil seal sealing surfaces on the crankshaft and cylinder block.**

Using the special tools, remove the crankshaft rear main oil seal.

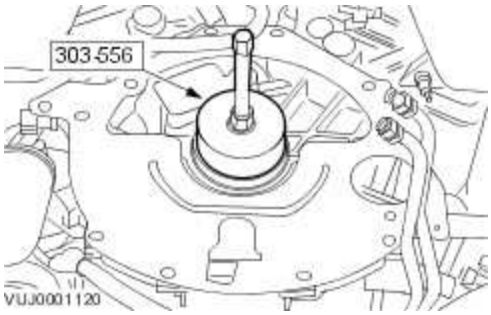

Installation

All Vehicles

1 . Clean and inspect the crankshaft rear oil seal sealing surfaces.

2 . Lubricate the crankshaft flange, the crankshaft rear oil bore seal, and the oil seal lip.

Use engine assembly lubricant or equivalent meeting Jaguar specification ESR-M99C80-A.

3 . **NOTE:**

Alternate bolt tightening to correctly seat the crankshaft rear oil seal until it is flush with the cylinder block.

Using the special tools, install the crankshaft rear oil seal.

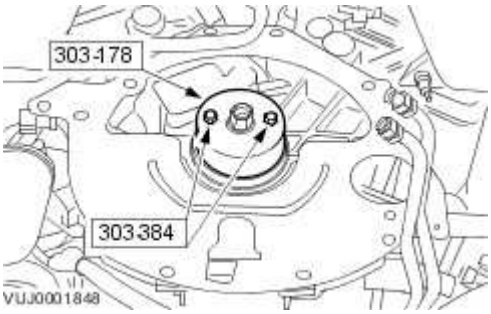

Vehicles With Automatic Transmission

4 . Install the flexplate. For additional information, refer to
For additional information, refer to .

Vehicles With Manual Transmission

5 . Install the flywheel. For additional information, refer to
For additional information, refer to .

www.JagDocs.com

Cylinder Head (12.29.01)

Removal

RH and LH Cylinder Heads

1 . Remove the right-hand valve cover.
For additional information, refer to Valve Cover RH (12.29.44)

2 . Remove the left-hand valve cover.
For additional information, refer to

3 . Disconnect the coolant temperature (ECT) electrical connector.

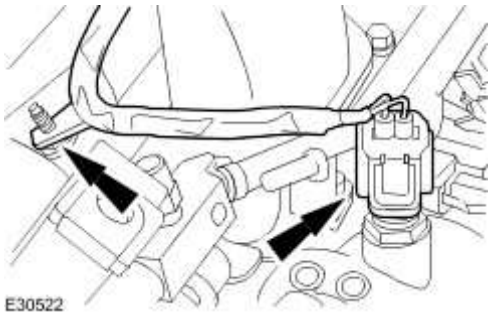

4 . Disconnect the fuel pressure regulator electrical connector and vacuum hose.

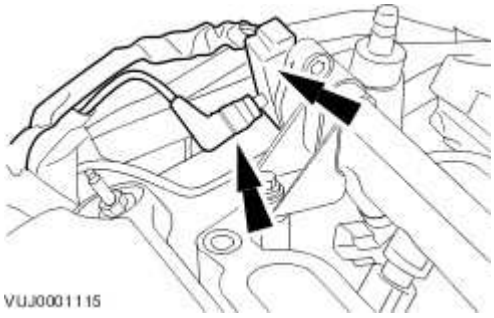

5 . Remove the fuel supply manifold and lower intake manifold.

- Remove and discard the lower intake manifold gaskets.

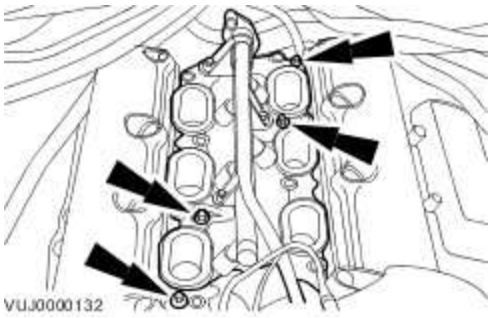

6 . Remove the coolant crossover tube.

Discard the O-ring seals.

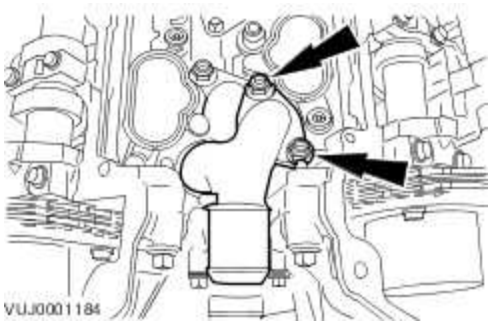

7 . Remove the catalytic converters. <<309-00>>

8 . Remove the camshafts.
For additional information, refer to Camshafts LH (12.13.19)

Cylinder Head-LH

9 . Remove the oil level indicator tube.

1) Remove the retaining nut.

2) Remove the oil level indicator tube.

www.JagDocs.com

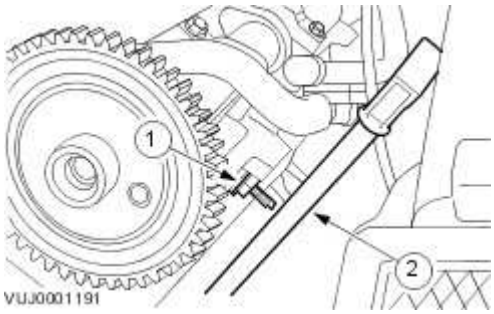

RH and LH Cylinder Heads

10 . **NOTE:**

Remove the retaining bolts in the indicated sequence.

Remove the cylinder head. (Left-hand shown, right-hand similar).

Remove and discard the cylinder head gasket.

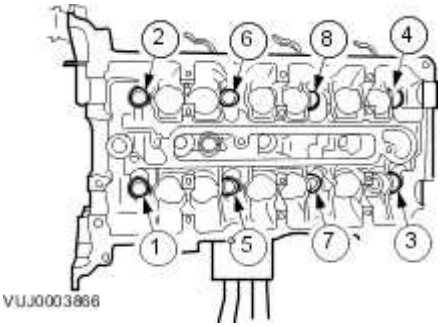

11 . Clean and inspect the cylinder head and cylinder block. <<303-00>>

Installation

RH and LH Cylinder Heads

1 . **NOTE:**

The head gaskets must be installed over the cylinder head to block dowels.

Install a new cylinder head gasket.

2. **CAUTION: Use care when installing the cylinder head. Damage to the cylinder block and or the cylinder head may result.**

NOTE:

Make sure the cylinder head is installed in its original position.

NOTE:

Tighten the retaining bolts in the indicated sequence in six stages.

Install the cylinder head and install new cylinder head retaining bolts and washers.

- Stage 1: tighten to 30 Nm.
- Stage 2: tighten 90 degrees.
- Stage 3: loosen 360 degrees.
- Stage 4: tighten to 30 Nm.
- Stage 5: tighten 90 degrees.
- Stage 6: tighten 90 degrees .

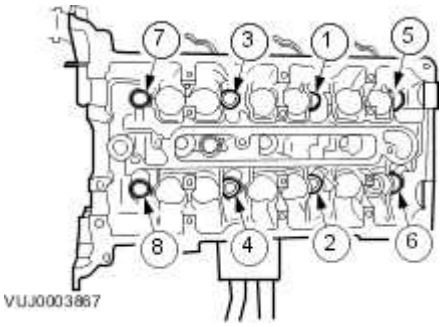

Cylinder Head-LH

3 . Install the oil level indicator tube.

www.JagDocs.com

Tighten to 10 Nm.

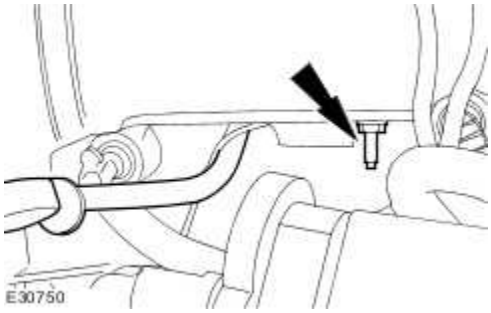

RH and LH Cylinder Heads

4 . Install the camshafts.
For additional information, refer to Camshafts LH (12.13.19)

5 . Install the catalytic converters. <<309-00>>

6 . **NOTE:**

Install new O-ring seals.

Install the coolant crossover tube.

Tighten to 10 Nm.

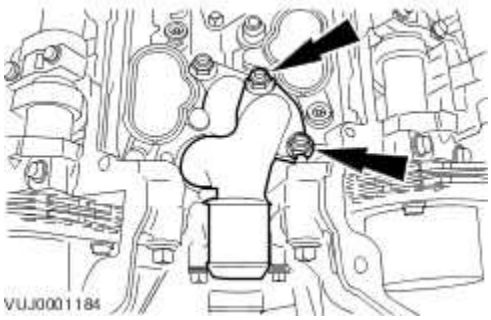

7 . **NOTE:**

Install new lower intake manifold gaskets.

Install the fuel supply manifold and lower intake manifold.

Tighten to 10 Nm.

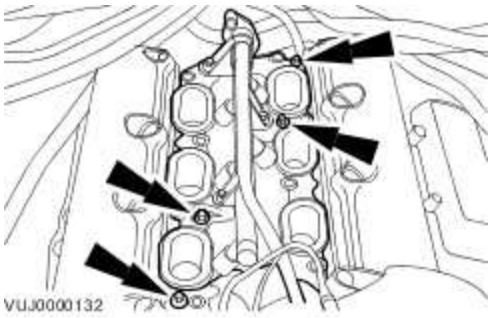

8 . Connect the fuel pressure regulator electrical connector and vacuum hose.

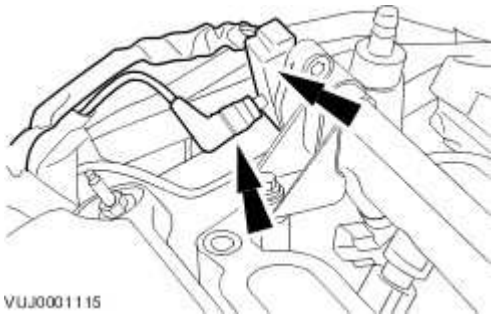

9 . Connect the ECT electrical connector.

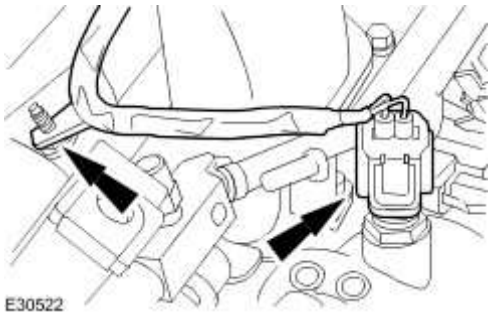

10 . Install the left-hand valve cover.
For additional information, refer to

11 . Install the right-hand valve cover.
For additional information, refer to Valve Cover RH (12.29.44)

www.JagDocs.com

Engine Front Cover (12.65.01)

Special Service Tools

Wrench strap-universal
303-D055

Crankshaft Pulley Remover
303-D121

Crankshaft Pulley Installer
303-102

Thrust Pad
303-D121-01

Crankshaft pulley installer
303-335/2

Removal

1 . Remove the left-hand valve cover.
For additional information, refer to

2 . Remove the right-hand valve cover.
For additional information, refer to Valve Cover RH (12.29.44)

3 . Remove the oil pan.
For additional information, refer to

4 . Carry out the cooling system draining procedure. <<303-03A>>

5 . Remove the accessory drivebelt.

1) Rotate the belt tensioner counter-clockwise.

Use a 3/8 inch square drive bar to rotate the belt tensioner.

2) Remove the accessory drivebelt.

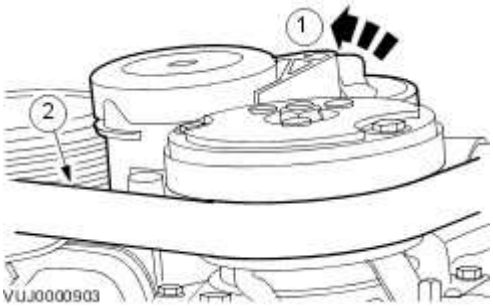

6 . Lower the vehicle.

7 . Disconnect the radiator top coolant hose.

www.JagDocs.com

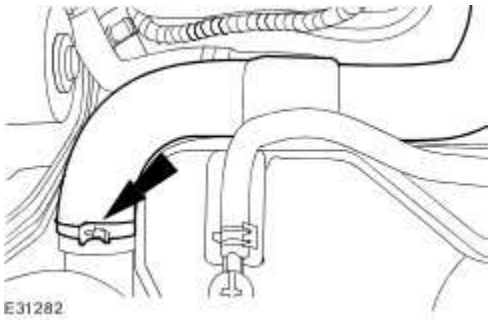

8 . Disconnect the coolant hose from the top coolant hose assembly.

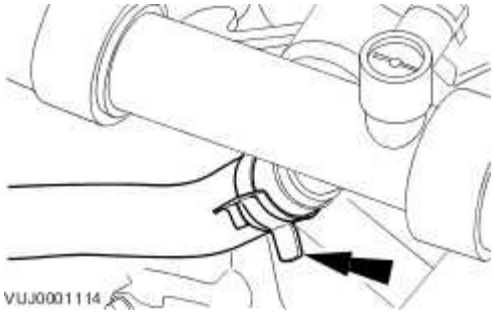

9 . Disconnect the hose assembly from the water pump and lower hose.

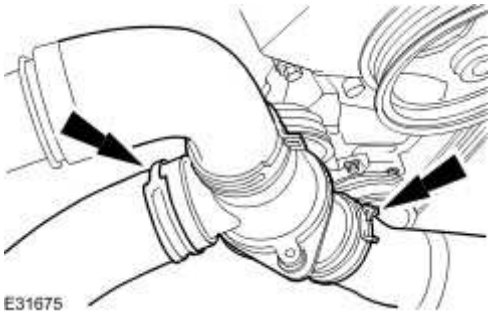

10 . Remove the hose assembly.

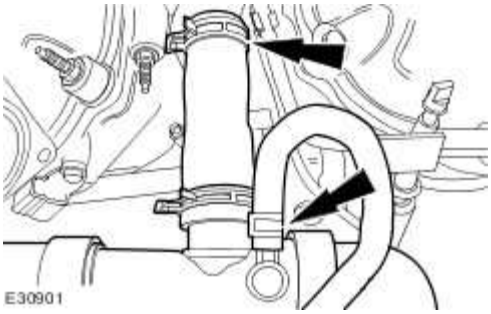

11 . Install the special tool.

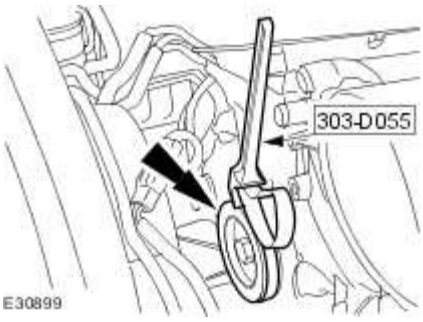

12 . Remove the crankshaft pulley retaining bolt.

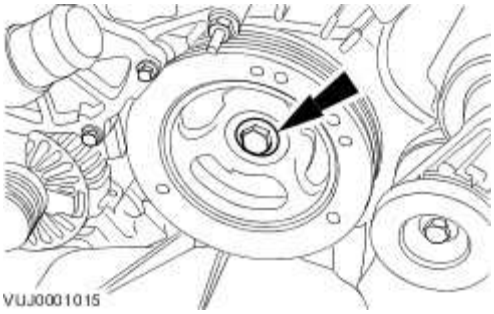

13 . Install the special tool.

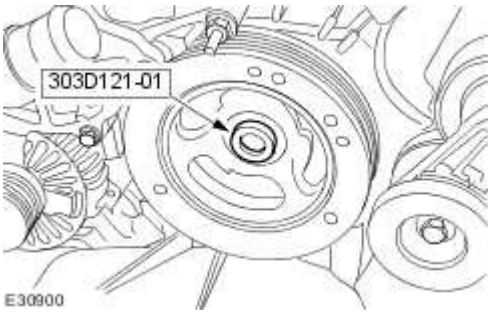

14 . Using the special tools, remove the crankshaft pulley.

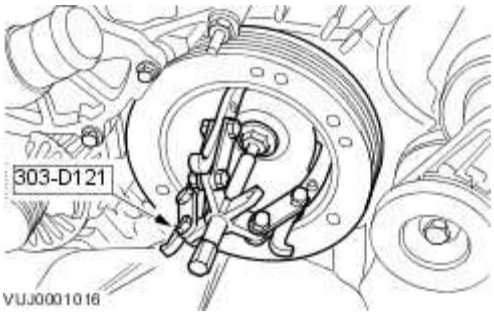

www.JagDocs.com

15 . Remove the crankshaft front seal.
For additional information, refer to Crankshaft Front Seal (12.21.14)

16 . Detach the coolant hose.

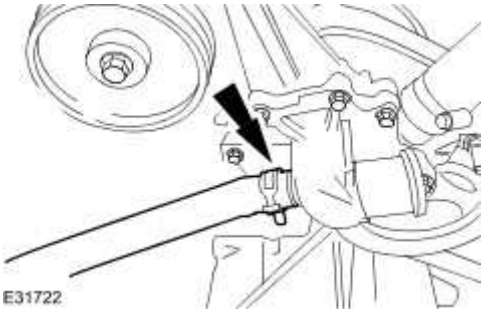

17 . Remove the coolant hose.

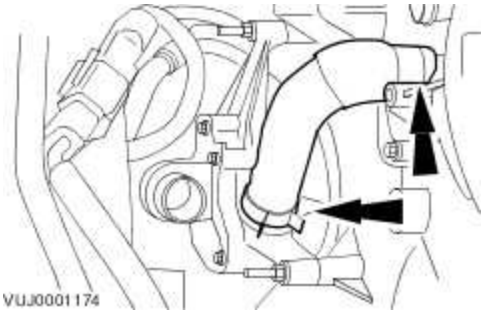

18 . Remove the water pump.

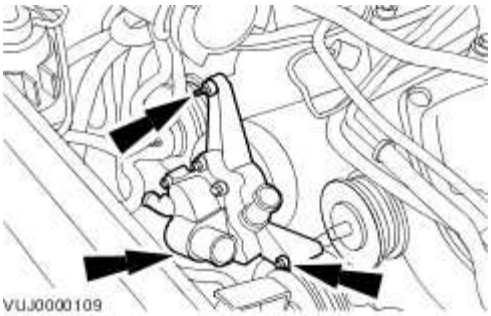

19 . Detach the fuel supply manifold retaining bolt.

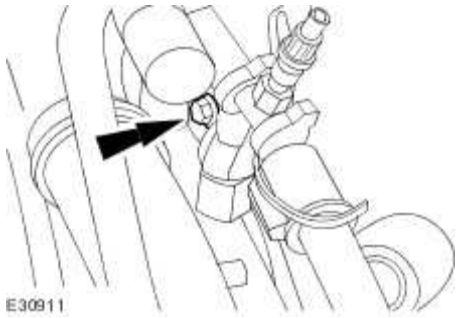

20 . Remove the accessory drive belt tensioner.

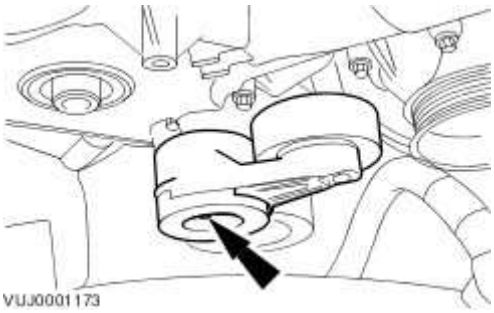

21 . Detach the engine harness from the right-hand idler pulley.

- Detach the splash shield.
- Detach the engine harness from the right-hand idler pulley.

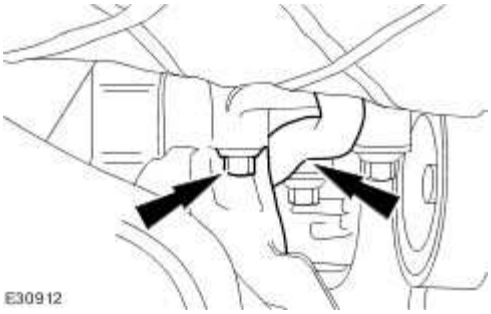

22 . Remove the right-hand idler pulley.

www.JagDocs.com

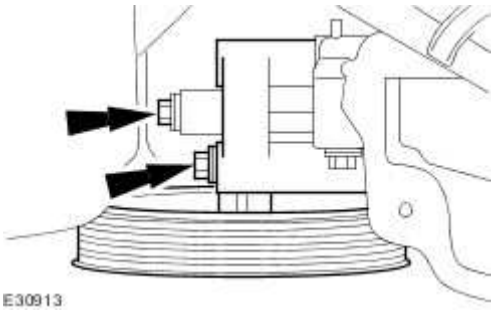

23 . Remove the left-hand idler pulley.

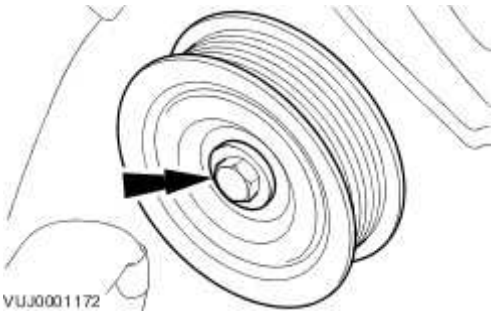

24 . Remove the power steering pump upper retaining bolts.

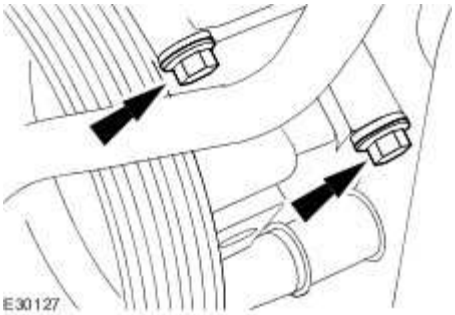

25 . Raise the vehicle.

26 . Detach the power steering pump.

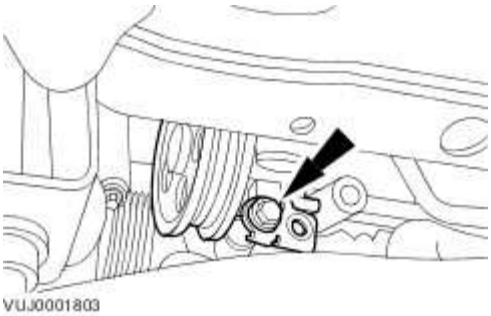

27 . Lower the vehicle.

28 . Disconnect the crankshaft position (CKP) sensor electrical connector.

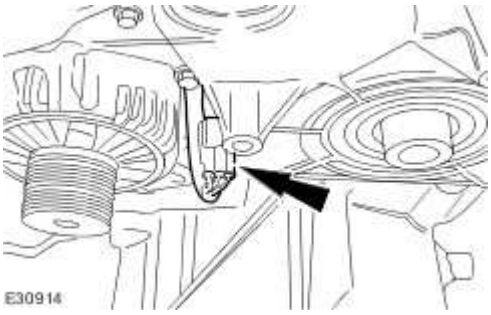

29 . **NOTE:**

Right-hand shown, left-hand similar.

Disconnect the camshaft position (CPS) sensors.

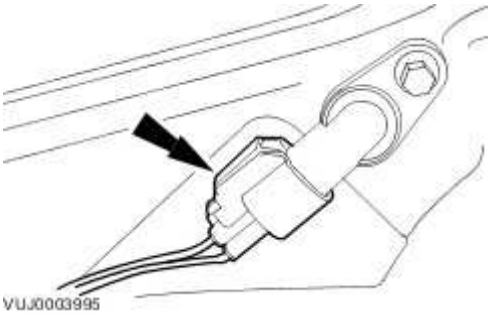

30 . Remove the engine front cover

Remove and discard the engine front cover gaskets.

www.JagDocs.com

Installation

1 . Install new engine front cover gaskets.

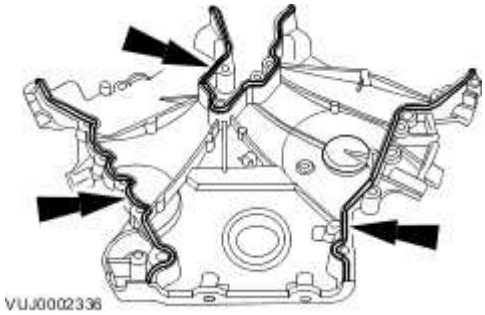

2 **NOTE:**

.

Prior to applying sealer clean the front cover to engine block and cylinder head sealing surfaces with metal surface cleaner.

Apply a 6 mm diameter dot of silicone sealant meeting Jaguar specification to the indicated locations.

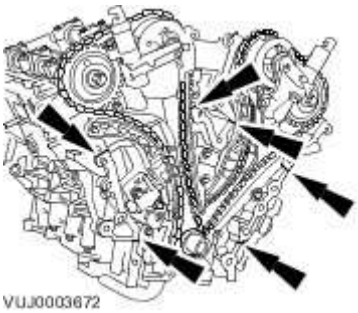

3 **NOTE:**

.

The engine front cover retaining bolts numbered 3,4,10 and 11 are longer than the retaining bolts numbered 1,2,5,6,7,8,9,12,13,15 and 16. The retaining bolt numbered 14 is a retaining bolt with a stud head.

Install the engine front cover, completing the tightening sequence.

Tighten to 25 Nm.

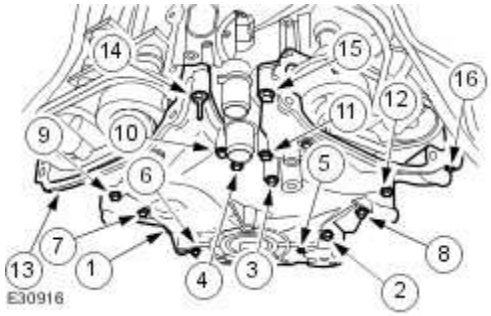

4 . **NOTE:**

Right-hand shown, left-hand similar.

Connect the camshaft position (CPS) sensors.

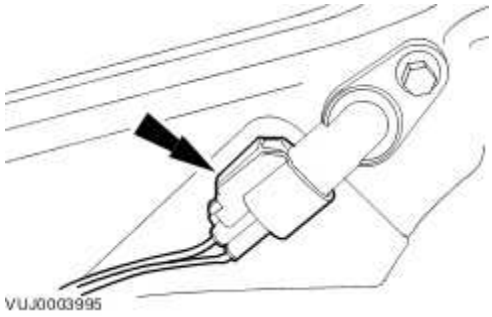

5 . Connect the crankshaft position (CKP) sensor electrical connector.

www.JagDocs.com

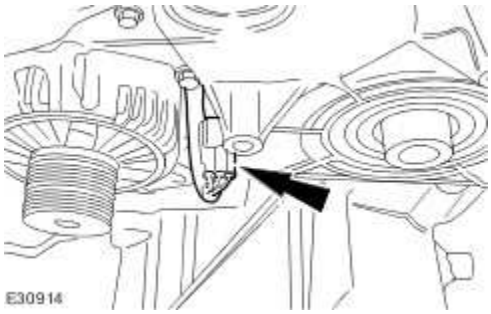

6 . Raise the vehicle.

7 . Attach the power steering pump.

Tighten to 25 Nm.

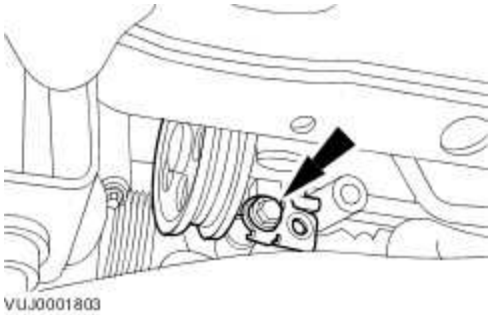

8 . Install the power steering pump upper retaining bolts.

Tighten to 25 Nm.

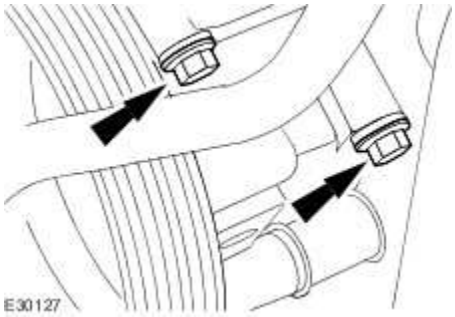

9 . Install the left-hand idler pulley.

- Tighten to 25 Nm.

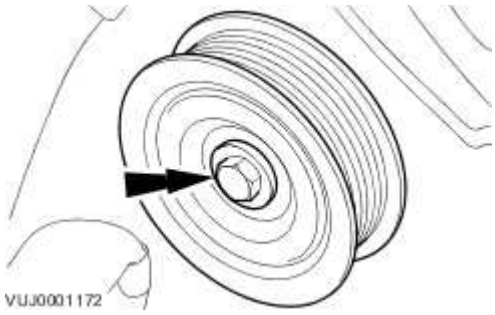

10 . Install the right-hand idler pulley.

- Tighten to 25 Nm.

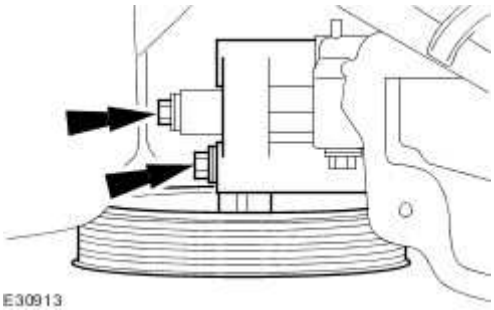

11 . Attach the engine splash shield.

- Attach the engine harness to the right-hand idler pulley.
- Attach the engine splash shield.

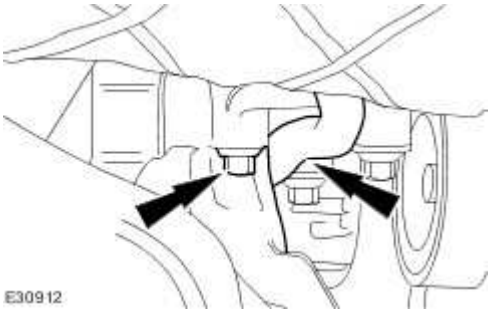

www.JagDocs.com

12 . Install the accessory drive belt tensioner.

Tighten to 45 Nm.

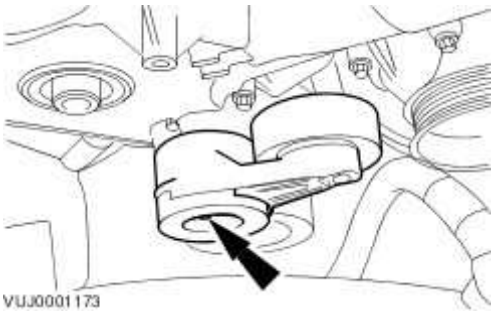

13 . Attach the fuel supply manifold retaining bolt.

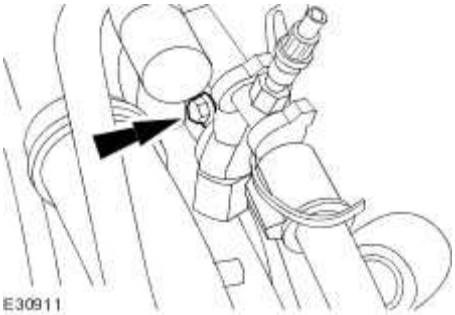

14 . Install the water pump.

Tighten to 25 Nm.

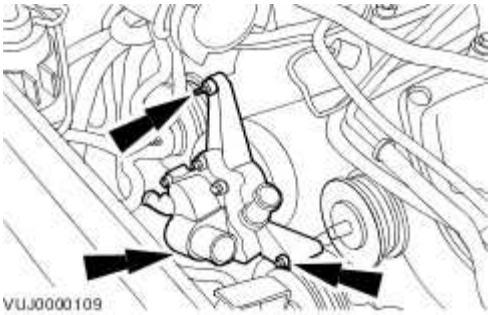

15 . Install the coolant hose.

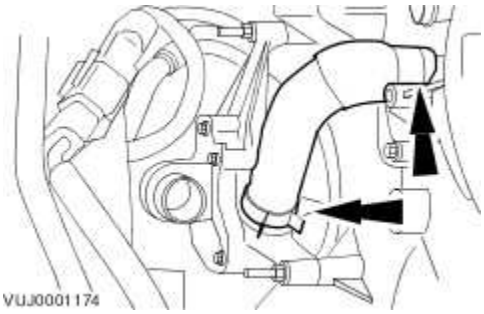

16 . Attach the coolant hose.

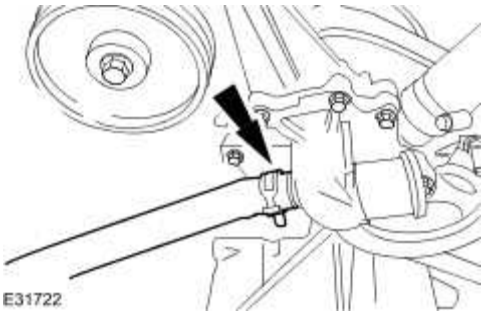

17 . Install a new crankshaft front seal.
For additional information, refer to Crankshaft Front Seal (12.21.14)

18 Using the special tools, install the crankshaft pulley.
.

- Coat the crankshaft pulley keyway with silicone gasket sealant meeting Jaguar specification.
- Coat the sealing surfaces of the crankshaft pulley with silicone gasket sealant meeting Jaguar specification.

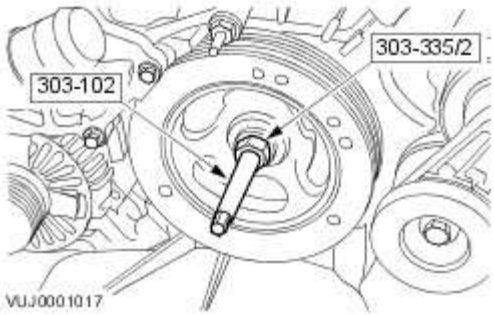

www.JagDocs.com

19 . Install the special tool.

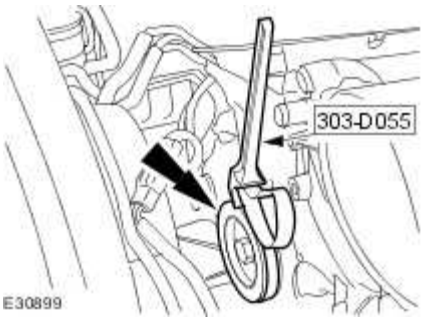

20 . Install the crankshaft pulley bolt.

- Torque to 120 Nm.
- Loosen the bolt (minimum 1 turn).
- Torque to 50 Nm.
- Angle Torque to 90°.

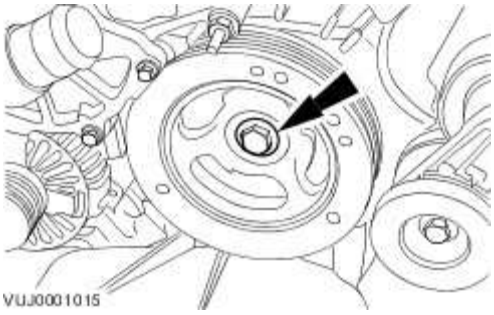

21 . Install the hose assembly.

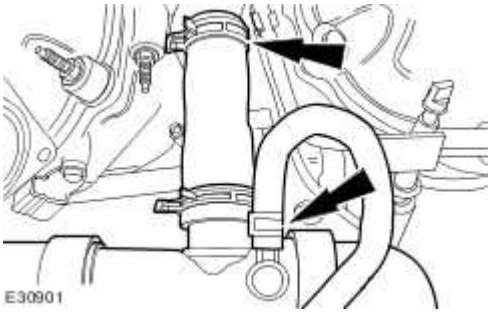

22 . Install the hose assembly to the water pump and lower hose.

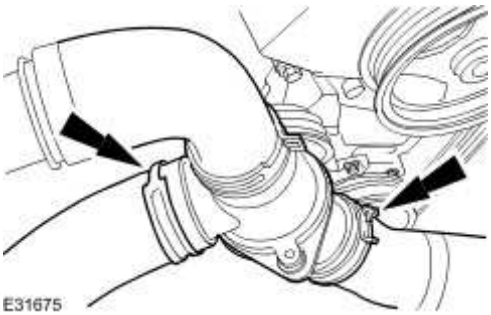

23 . Install the coolant hose to the housing assembly.

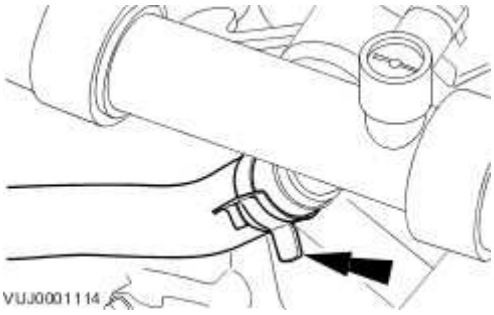

24 . Connect the radiator top coolant hose.

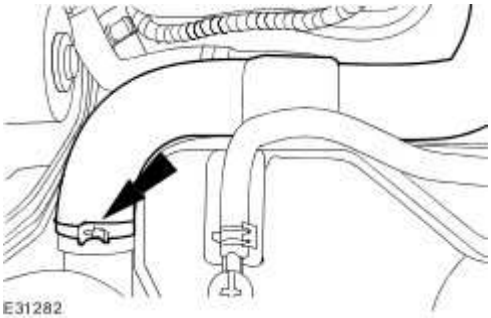

25 . Raise vehicle.

26 . Install the accessory drivebelt.

1) Rotate the belt tensioner counter-clockwise.

- Use a 3/8 inch square drive bar to rotate the belt tensioner.

2) Install the accessory drivebelt.

www.JagDocs.com

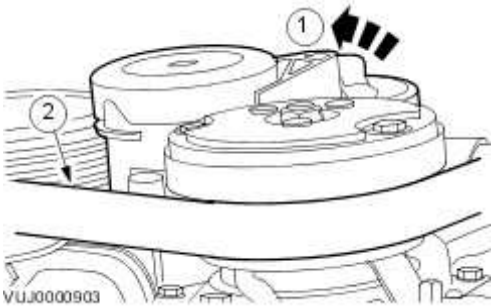

27 . Install the oil pan.
For additional information, refer to

28 . Lower the vehicle.

29 . Install the left-hand valve cover.
For additional information, refer to

30 . Install the right-hand valve cover.
For additional information, refer to Valve Cover RH (12.29.44)

31 . Carry out the cooling system feeling and bleeding procedure. <<303-03A>>

32 . Refill the engine with oil.

Engine Mount (12.45.13)

Special Service Tools

Engine lifting Bracket
303-661

Engine Support Bracket
303-021

Removal

1 . Disconnect the battery ground cable. <<414-01>>

2 . Remove the engine cover.

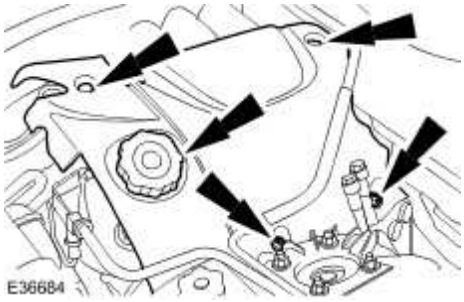

3 . Remove the cowl vent screen. <<501-02>>

4 . Remove the cabin air filter housing.

www.JagDocs.com

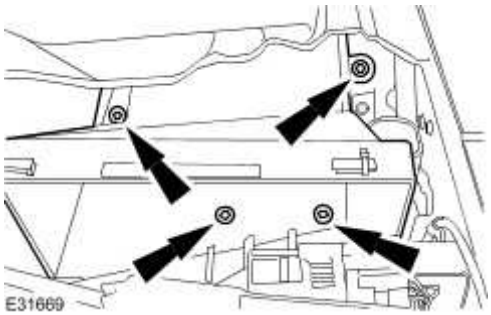

5 . **NOTE:**

Left-hand shown, right-hand similar.

Remove the engine compartment panel retaining bolts.

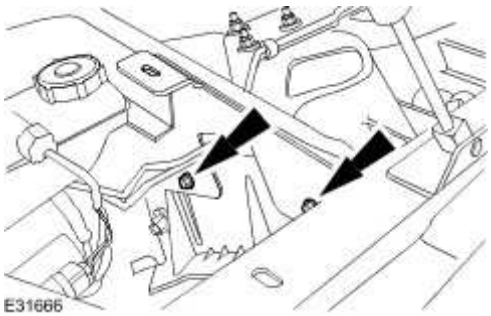

6 . **NOTE:**

Left-hand shown, right-hand similar.

Remove the engine compartment panel.

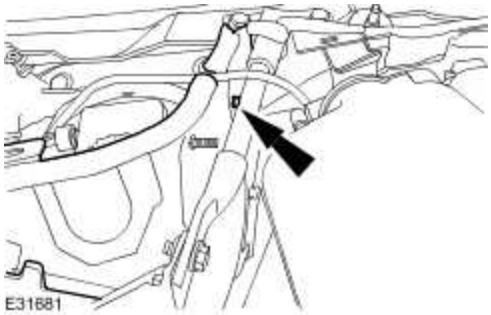

7 . **NOTE:**

Intake manifold shown removed for clarity.

Detach the right-hand valve cover wiring harness.

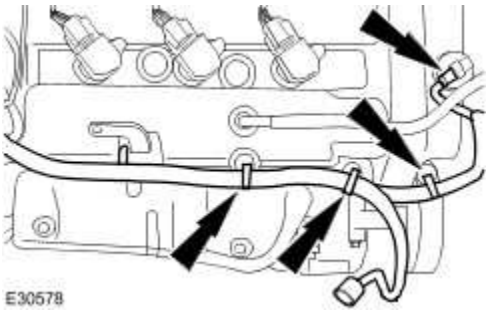

8 . Disconnect the left-hand ignition coil electrical connectors.

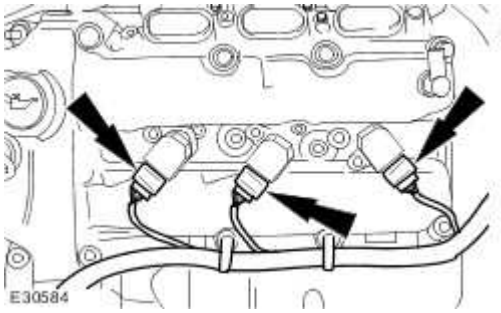

9 . Detach the left-hand valve cover wiring harness.

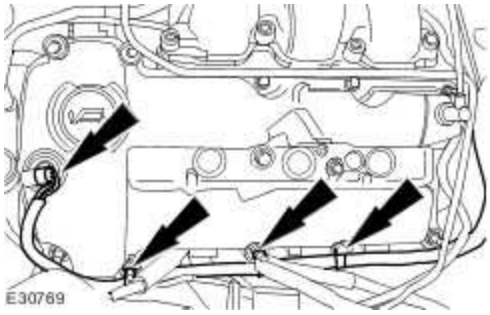

10 . Remove the dipstick tube retaining bolt.

Reposition the dipstick tube.

www.JagDocs.com

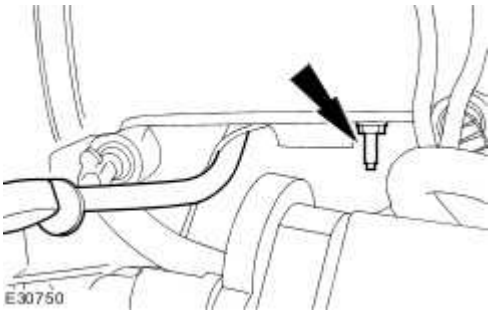

11 . **NOTE:**

Left-hand shown, right-hand similar.

Loosen the exhaust manifold retaining nut.

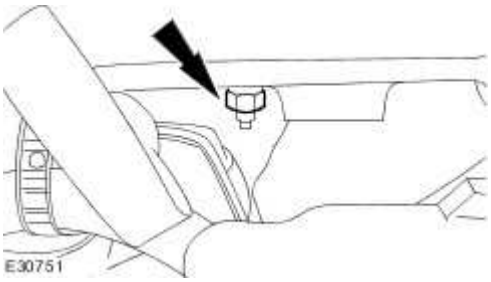

12 . **NOTE:**

Left-hand shown, right-hand similar.

Install the special tool to the exhaust manifold.

- Install the retaining bolt.

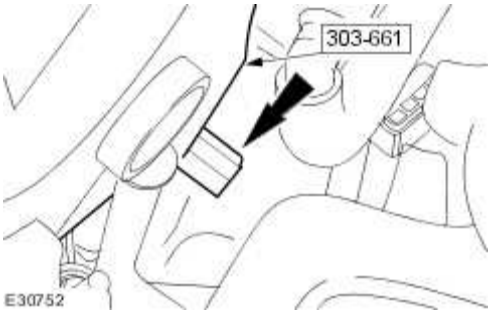

13 . **NOTE:**

Left-hand shown, right-hand similar.

Install the retaining bolt.

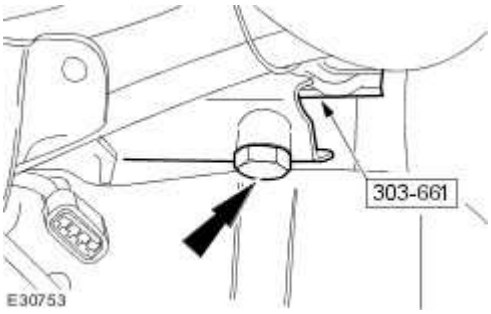

14 . Install the special tool support bars to the special tool.

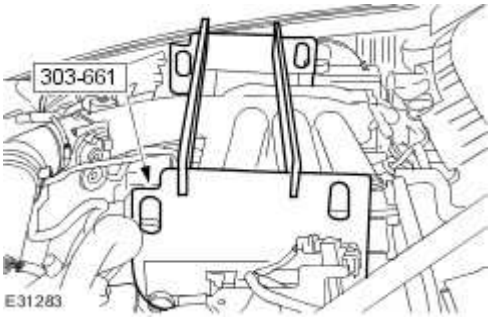

15 . Install the special tool.

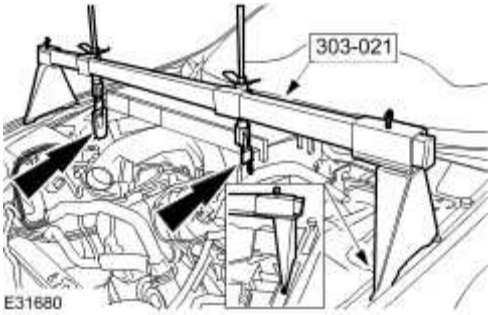

16 . Remove the left-hand catalytic converter. <<309-00>>

17 . Remove the steering gear shaft pinch bolt.

www.JagDocs.com

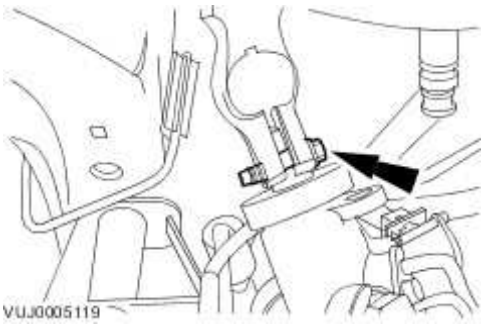

18 . Detach the steering gear.

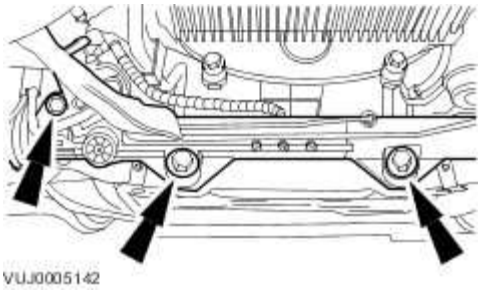

19 . Secure the steering gear.

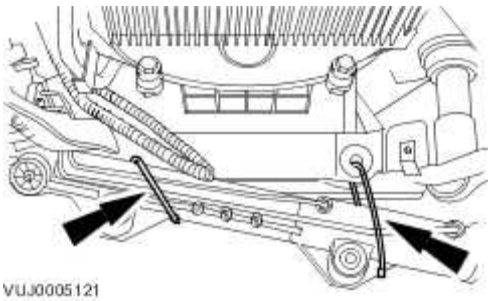

20 . **NOTE:**

Left-hand shown, right-hand similar.

Remove the engine mount lower retaining bolts.

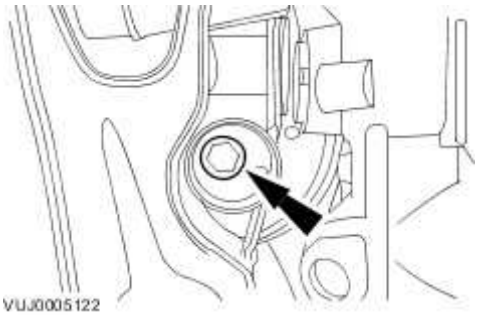

21 . Lower the vehicle.

22 . Using the special tools, raise the engine to a suitable height.

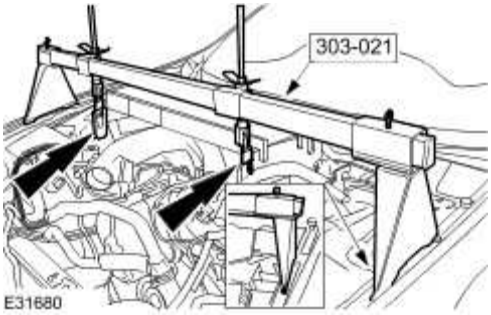

23 . Raise the vehicle.

24 . **WARNING: Do not remove the front subframe retaining bolts. Failure to follow this procedure may result in personal injury.**

Loosen the front subframe retaining bolts to enable the engine mount to be removed.

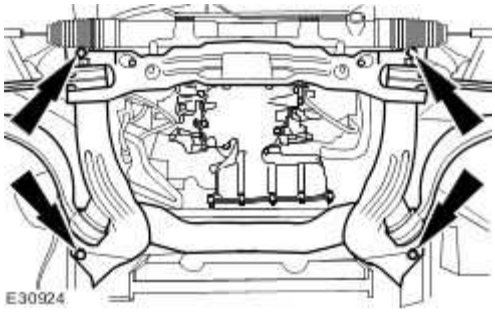

www.JagDocs.com

25 . **NOTE:**

Left-hand shown, right-hand similar.

Remove the engine mount.

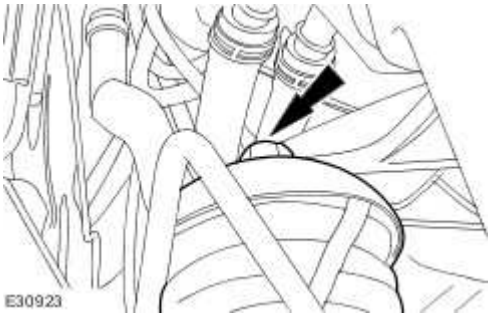

Installation

1 . **CAUTION: Make sure the engine mount locators are correctly aligned on installation.**

NOTE:

Left-hand shown, right-hand similar.

Install the engine mount.

Tighten to 63 Nm.

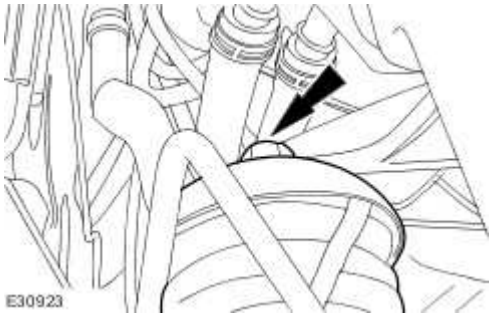

2 . Carry out the front subframe alignment procedure. <<204-01>>

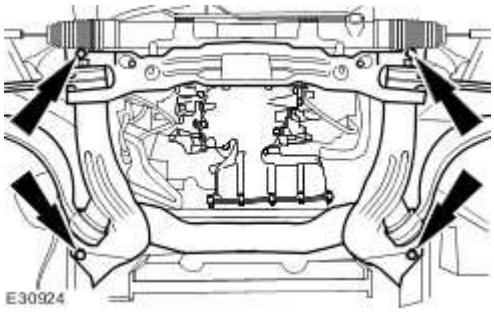

3 . Lower the vehicle.

4 . **CAUTION: Make sure the engine mounts locate into the correct position when the engine is repositioned.**

Using the special tools, reposition the engine.

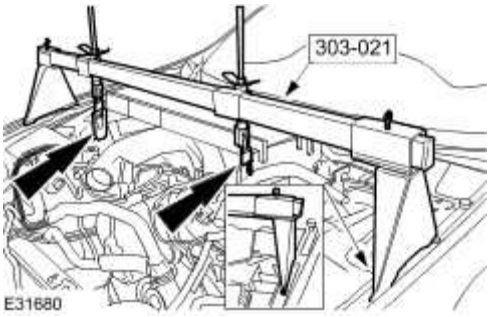

5 . Raise the vehicle.

6 . **NOTE:**

Left-hand shown, right-hand similar.

Install the engine mount lower retaining bolts.

- Tighten to 63 Nm.

www.JagDocs.com

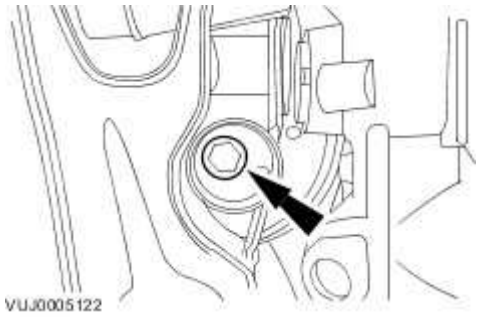

7 . Detach the steering gear.

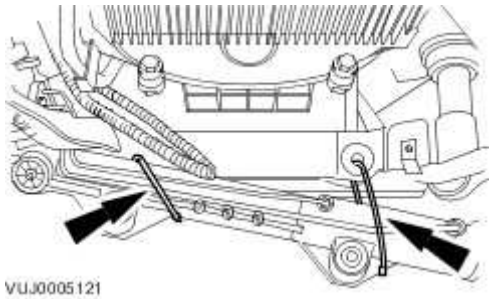

8 . Attach the steering gear.

- Tighten to 100 Nm.

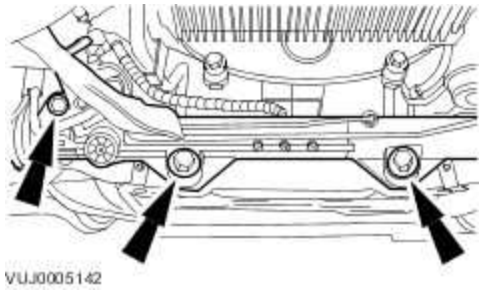

9 . Install the steering gear shaft pinch bolt.

- Tighten to 35 Nm.

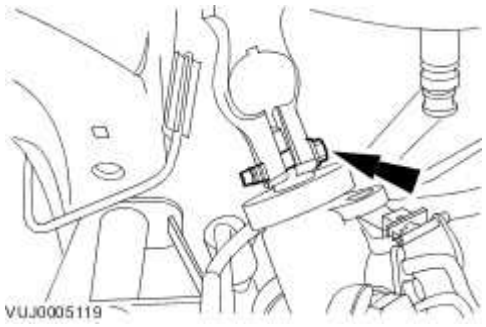

10 . Install the left-hand catalytic converter. <<309-00>>

11 . Lower the vehicle.

12 . Remove the special tool.

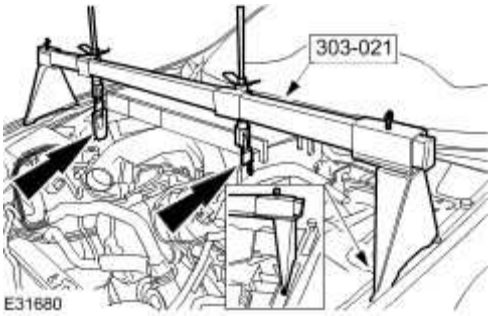

13 . Remove the special tool.

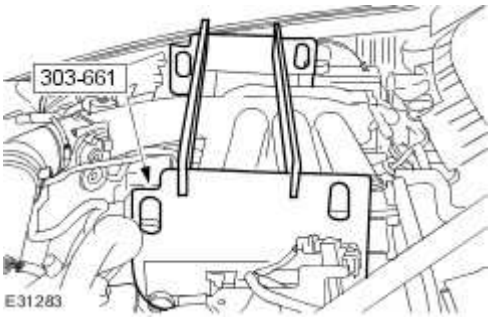

14 . **NOTE:**

Left-hand shown, right-hand similar.

www.JagDocs.com

Install the exhaust manifold retaining nut.

- Tighten to 25 Nm.

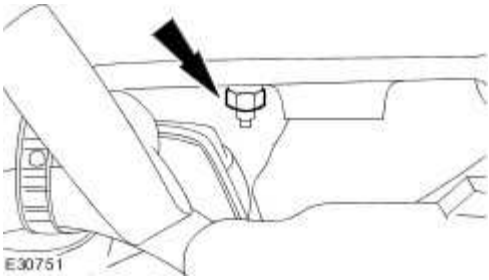

15 . Install the dipstick tube retaining bolt.

- Tighten to 10 Nm.

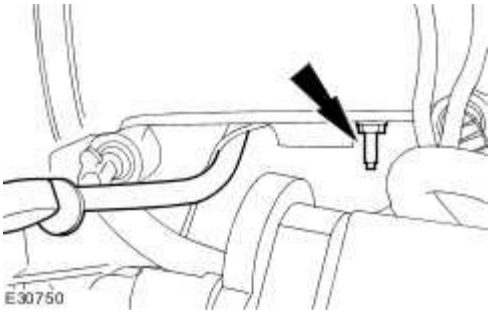

16 . Attach the left-hand valve cover wiring harness.

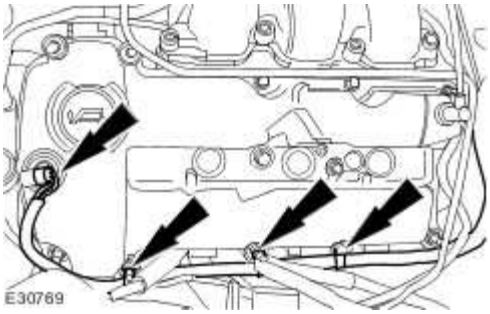

17 . Connect the left-hand ignition coil electrical connectors.

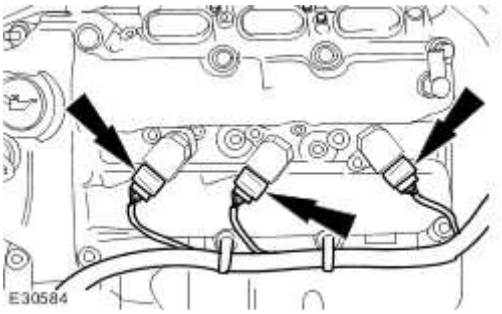

18 . Attach the right-hand valve cover wiring harness.

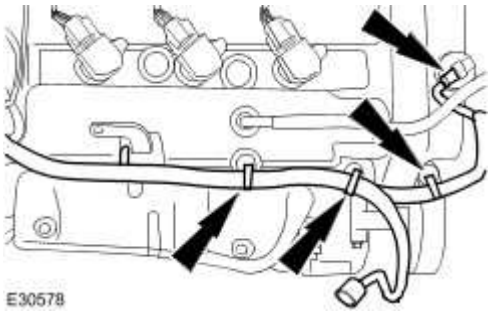

19 . **NOTE:**

Left-hand shown, right-hand similar.

Install the engine compartment panel.

Tighten to 10 Nm.

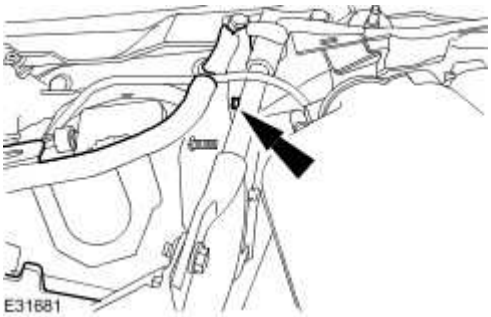

20 . **NOTE:**

Left-hand shown, right-hand similar.

www.JagDocs.com

Install the engine compartment panel retaining bolts.

Tighten to 10 Nm.

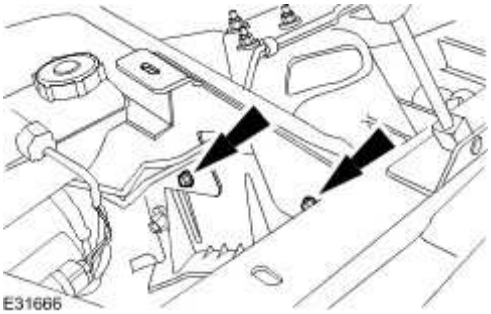

21 . Install the cabin air filter housing.

Tighten to 10 Nm.

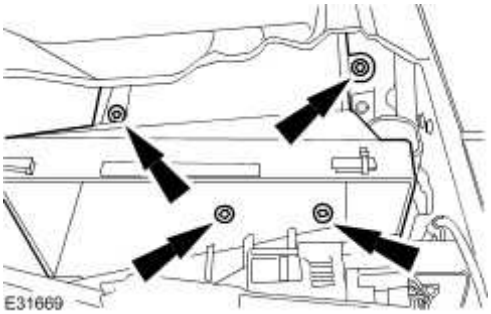

22 . Install the cowl vent screen. <<501-02>>

23 . Install the engine cover.

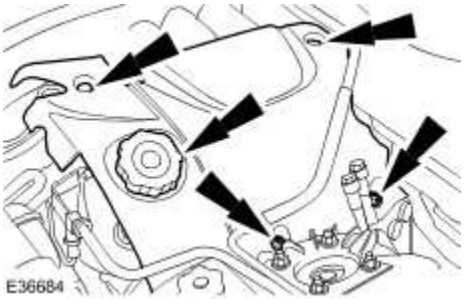

24 . Connect the battery ground cable. <<414-01>>

Exhaust Manifold LH - VIN Range: G004442->G45703 (30.15.55)

Removal

1 . Remove the left-hand catalytic converter.
For additional information, refer to Catalytic Converter - 3.0L/3.5L/4.2L (17.50.05)

2 . Lower the vehicle.

3 . Remove the engine cover.

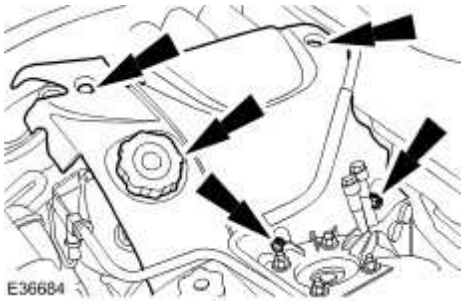

4 . Detach the left-hand valve cover wiring harness.

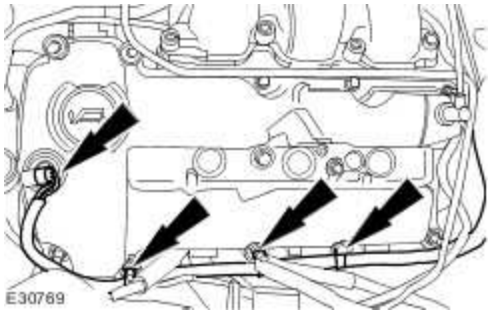

5 . Remove the dipstick tube retaining bolt.

Reposition the dipstick tube.

www.JagDocs.com

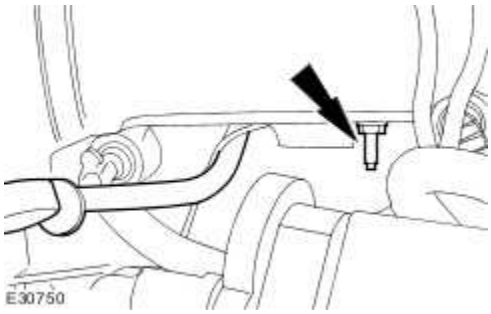

6 . Remove the left-hand exhaust manifold heat shield.

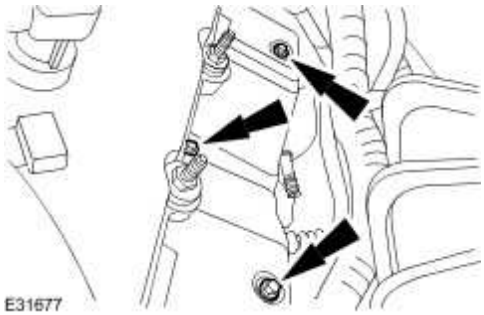

7 . Raise the vehicle.

8 **NOTE:**

.

Engine shown removed for clarity.

NOTE:

When an exhaust manifold retaining stud is removed, it must be replaced with a new retaining stud and nut.

Remove the left-hand exhaust manifold lower retaining nuts.

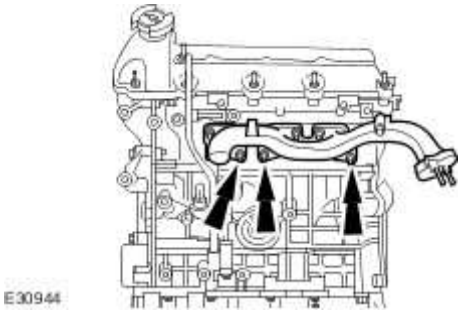

9 . Lower the vehicle.

10 **NOTE:**
.

Engine shown removed for clarity.

NOTE:

When an exhaust manifold retaining stud is removed, it must be replaced with a new retaining stud and nut.

Remove the left-hand exhaust manifold.

- Remove and discard the left-hand exhaust manifold gasket.

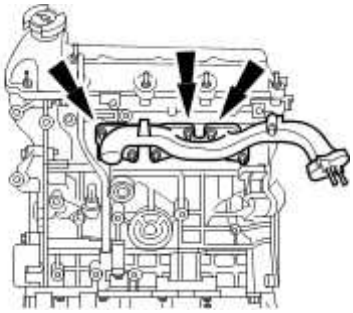

www.JagDocs.com

Installation

1 . **NOTE:**

Engine shown removed for clarity.

NOTE:

When a new exhaust manifold retaining stud is installed, tighten to 9 Nm.

NOTE:

Tighten the exhaust manifold retaining nuts in the sequence shown.

To install, reverse the removal procedure.

- Install a new left-hand exhaust manifold gasket.
- Tighten to 20 Nm.

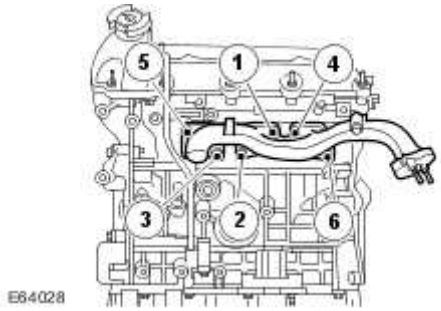

2 . Tighten to 10 Nm.

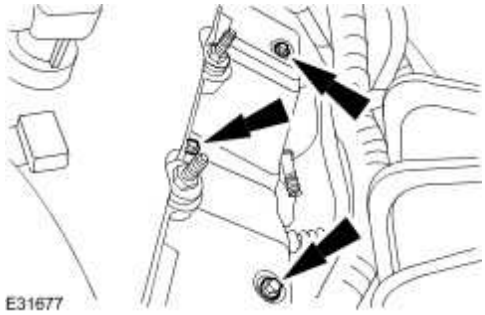

3 . Tighten to 10 Nm.

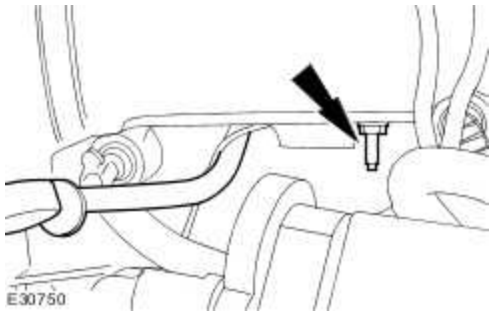

Exhaust Manifold LH - VIN Range: G45704->G99999 (30.15.55)

Removal

All vehicles

1 . Remove the engine cover.

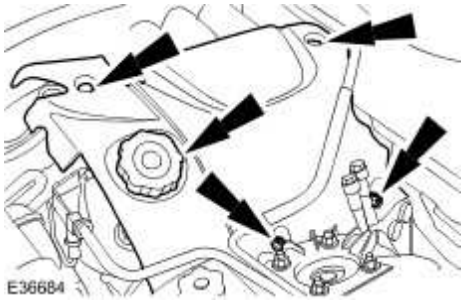

2 . Remove the left-hand exhaust manifold heat shield.

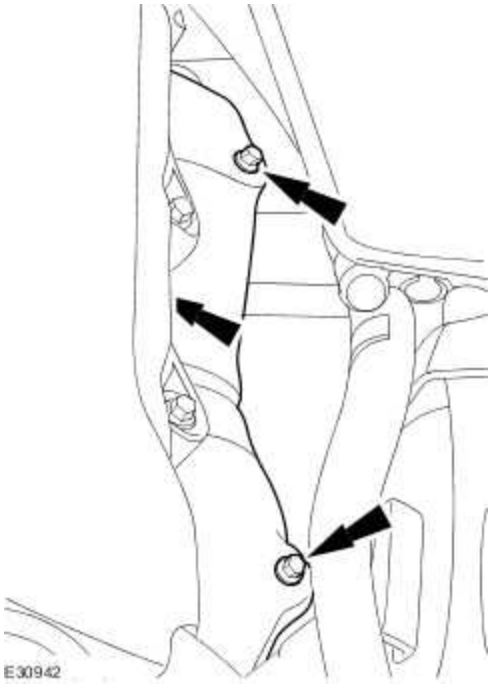

Vehicles with secondary air injection (AIR)

3 . Disconnect the secondary air injection (AIR) control valve to exhaust manifold tube.

www.JagDocs.com

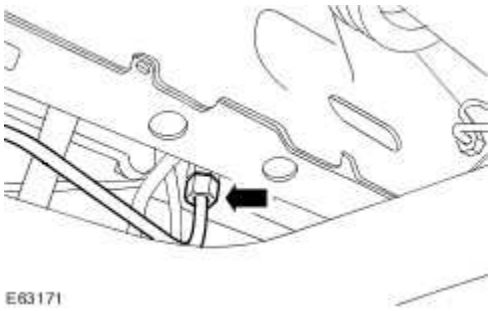

All vehicles

4 **NOTE:**

.

Engine shown removed for clarity.

NOTE:

When an exhaust manifold retaining stud is removed, it must be replaced with a new retaining stud and nut.

Remove the left-hand exhaust manifold upper retaining nuts.

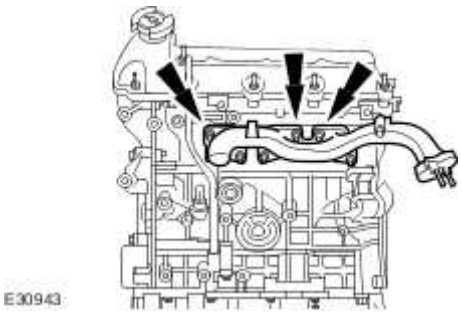

5 . Remove the left-hand catalytic converter.
For additional information, refer to

6 **NOTE:**

.

Engine shown removed for clarity.

NOTE:

When an exhaust manifold retaining stud is removed, it must be replaced with a new retaining stud and nut.

Remove the left-hand exhaust manifold.

- Remove and discard the left-hand exhaust manifold gasket.

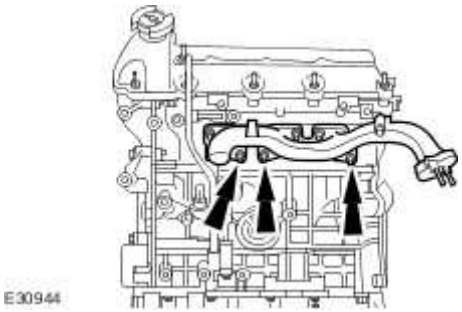

Installation

All vehicles

1 . **NOTE:**

Engine shown removed for clarity.

NOTE:

When a new exhaust manifold retaining stud is installed, tighten to 9 Nm.

NOTE:

Tighten the exhaust manifold retaining nuts in the sequence shown.

To install, reverse the removal procedure.

- Install a new left-hand exhaust manifold gasket.
- Tighten to 20 Nm.

www.JagDocs.com

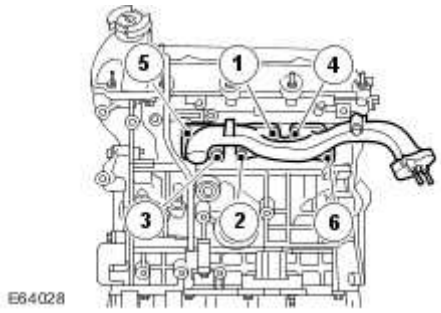

Vehicles with secondary air injection (AIR)

2 . Tighten to 35 Nm.

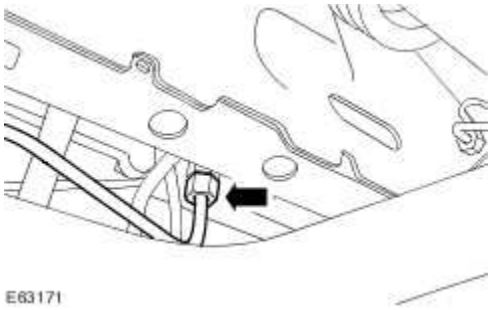

All vehicles

3 . Tighten to 10 Nm.

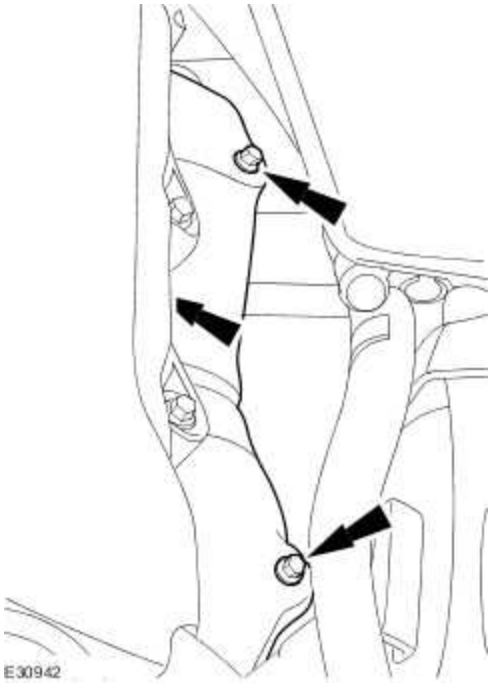

Flexplate (12.53.13)

Removal

1 . Remove the automatic transmission. <<307-01>>

2 . Detach the accessory drivebelt.

1) Rotate the belt tensioner counter-clockwise.

Use a 3/8 inch square drive bar to rotate the belt tensioner.

2) Detach the accessory drivebelt.

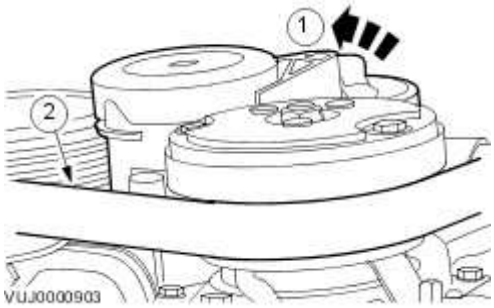

3 . Install the special tool.

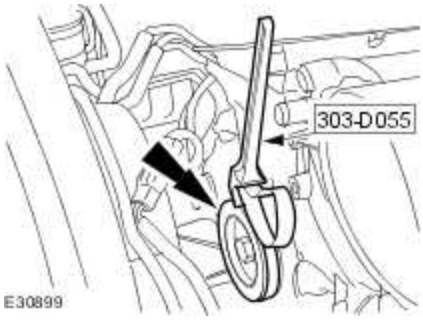

4 . **NOTE:**

Prevent the flexplate from rotating.

Remove the flexplate.

www.JagDocs.com

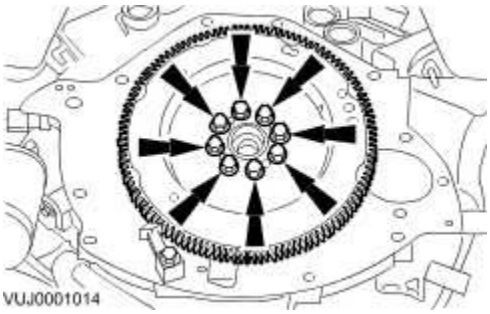

Installation

1 . **NOTE:**

Make sure the crankshaft and flexplate mating faces are clean before installation.

NOTE:

The flexplate will only locate in one position.

NOTE:

Tighten the retaining bolts working diagonally.

Install the flexplate.

- Prevent the flexplate from rotating.
- Tighten to 80 Nm.

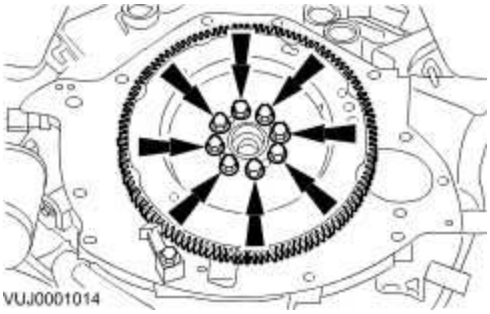

2 . Remove the special tool.

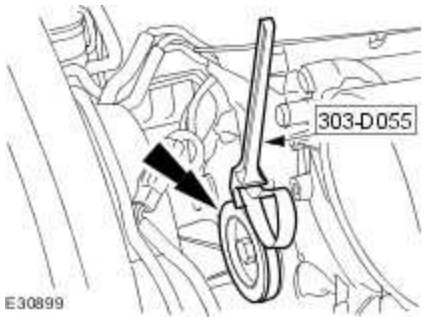

3 . Attach the accessory drivebelt.

1) Rotate the belt tensioner counter-clockwise.

Use a 3/8 inch square drive bar to rotate the belt tensioner.

2) Attach the accessory drivebelt.

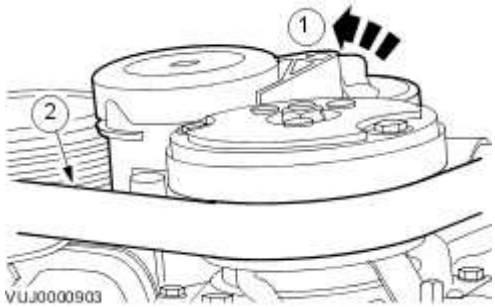

4 . Install the automatic transmission. <<307-01>>

www.JagDocs.com

Intake Manifold (30.15.01)

Removal

1. **WARNING: Never remove the coolant expansion tank pressure cap under any circumstances while the engine is operating. Failure to follow this instruction may result in personal injury.**

WARNING: To avoid hot coolant or steam blowing out of the cooling system, use extreme care when removing the coolant expansion tank pressure cap. Wait until the engine has cooled down, then insulate the coolant pressure cap with a suitable cloth and slowly loosen the coolant expansion tank pressure cap until the cooling system pressure is released. Do not remove the coolant expansion tank pressure cap. Step back while the pressure is released from the system. When all of the pressure has been released slowly remove the coolant expansion tank pressure cap (still with the suitable cloth in position) from the coolant expansion tank. Failure to follow this instruction may result in personal injury.

Release the cooling system pressure.

- Remove the coolant expansion tank pressure cap.

2. Remove the air cleaner outlet pipe.
   For additional information, refer to

3. Remove the engine cover.

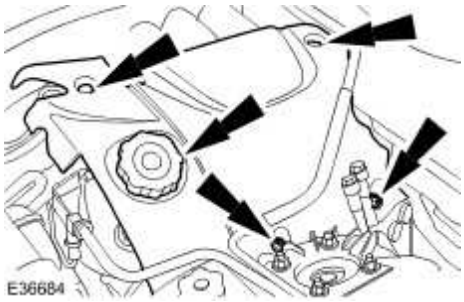

4 . Disconnect the throttle motor electrical connector.

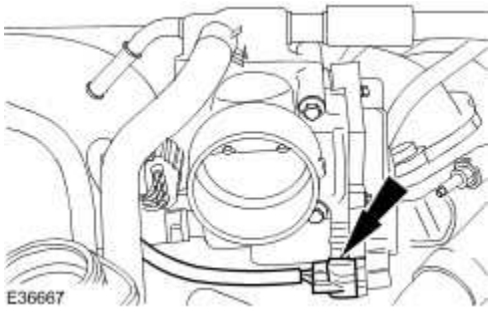

5 . Disconnect the throttle position sensor (TPS) electrical connector.

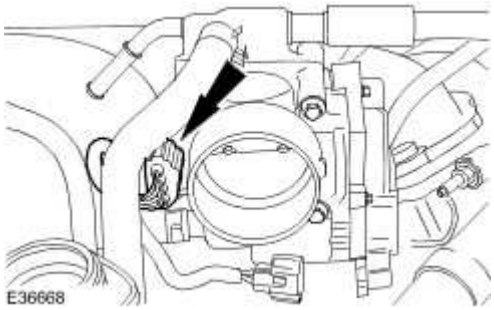

6 . Disconnect the positive crankcase ventilation (PCV) hose.

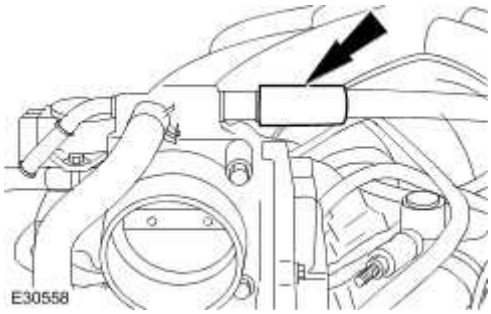

7 . **NOTE:**

Cap the coolant hoses to minimize coolant loss.

Detach the coolant hoses from the throttle body.

www.JagDocs.com

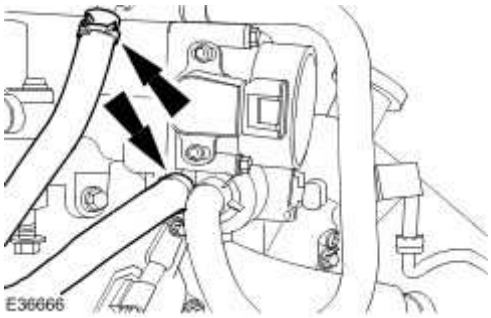

8 . Detach the engine wiring harness from the intake manifold side retaining bracket.

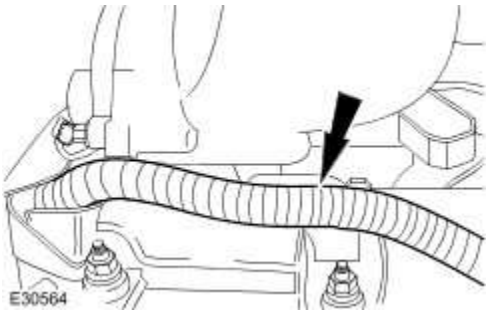

9 . Detach the intake manifold right-hand side retaining bracket.

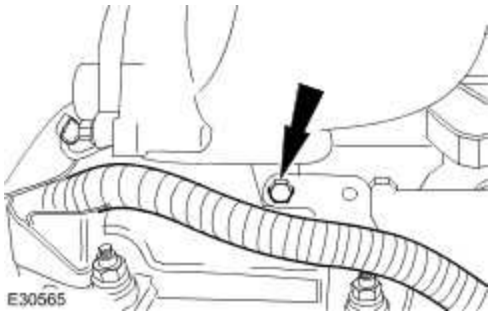

10 . Loosen the intake manifold right-hand side retaining bracket.

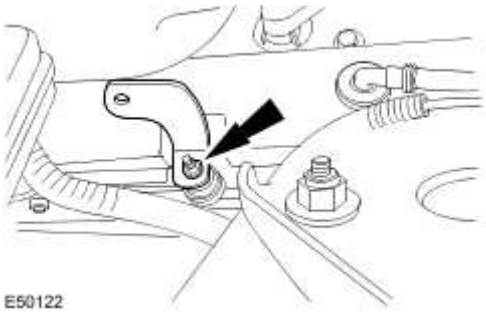

11 . Detach the intake manifold front retaining bracket.

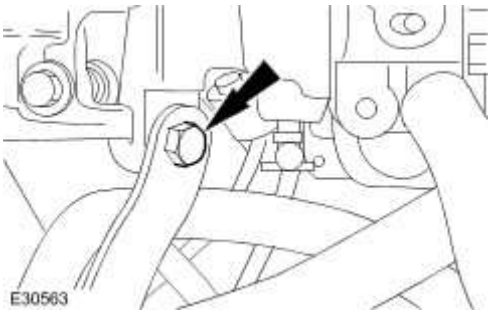

12 . Loosen the intake manifold front retaining bracket.

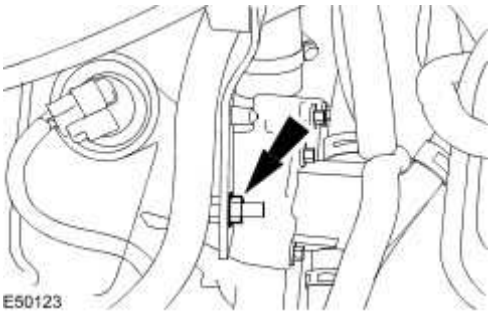

13 . Detach the coolant temperature sensor wiring harness.

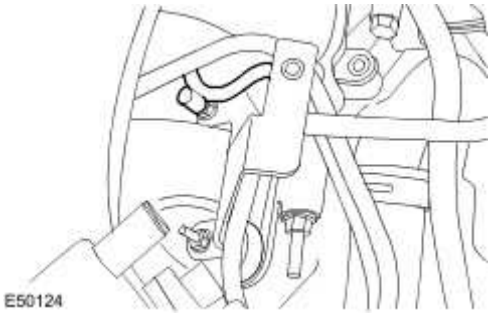

14 . Remove the engine cover front retaining bracket.

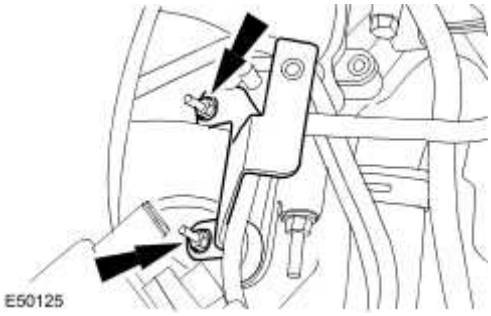

www.JagDocs.com

15 . Detach the evaporative emission canister purge valve transfer pipe.

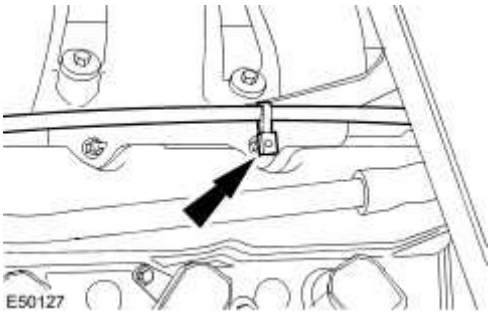

16 . Remove the engine cover left-hand side retaining bracket.

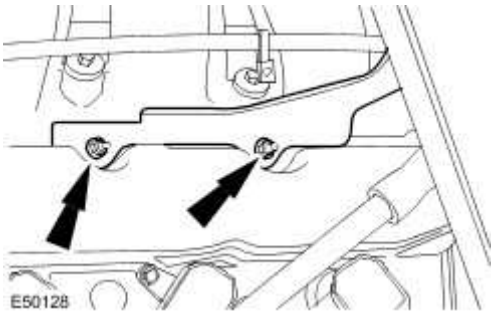

17 . Remove the fuel pressure sensor bracket retaining bolt.

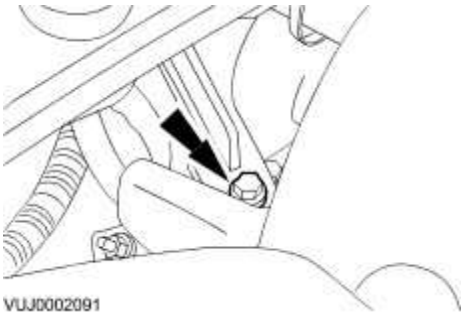

18 . Detach the fuel pressure sensor bracket.

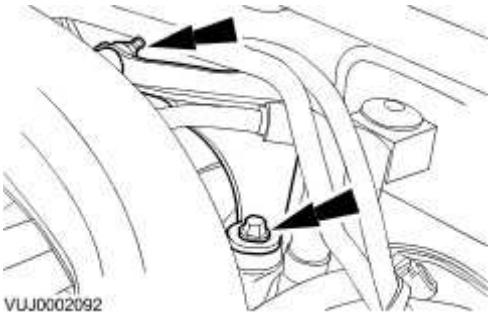

19 . Detach the intake manifold.

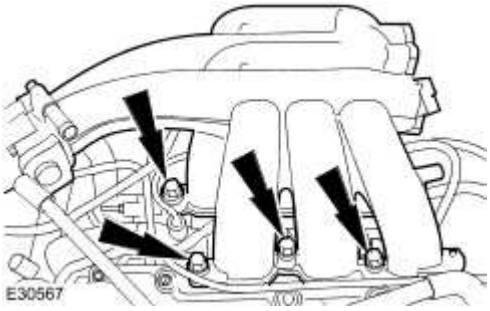

20 **NOTE:**

.

The evaporative emission canister purge valve transfer pipe is attached to the induction manifold by a quick release coupling.

Disconnect the evaporative emission canister purge valve transfer pipe.

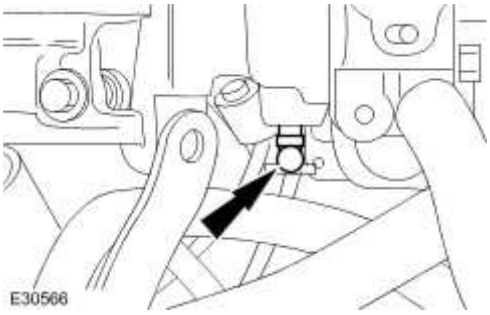

21 . Disconnect the manifold absolute pressure (MAP) sensor electrical connector.

22 . Disconnect the fuel pressure sensor vacuum hose.

www.JagDocs.com

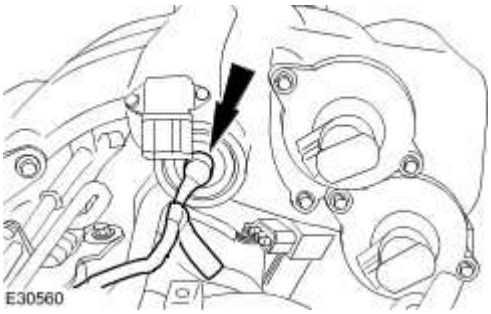

23 . **NOTE:**

Left-hand intake manifold tuning (IMT) valve shown, right-hand (IMT) valve similar.

Disconnect the IMT valves electrical connectors.

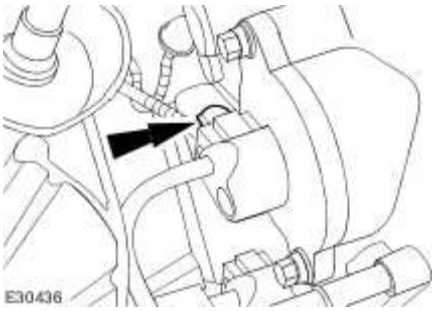

24 . Disconnect the fuel pressure regulator vacuum hose.

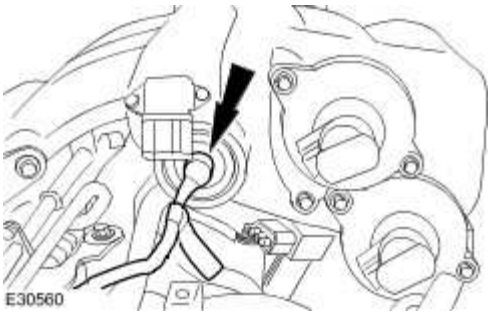

25 . Disconnect the brake booster vacuum hose.

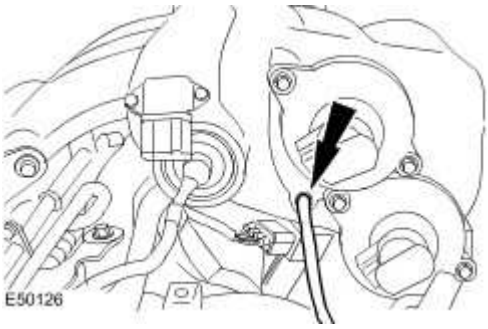

26 . Remove the intake manifold.

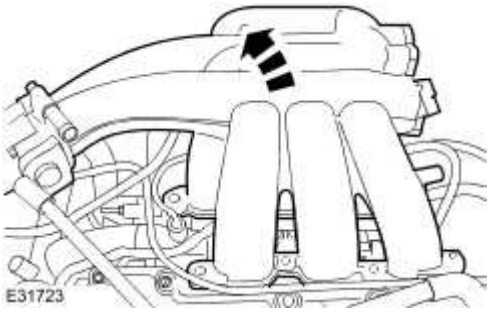

Installation

1 **NOTE:**

.

Install new intake manifold gaskets.

NOTE:

The intake manifold retaining bolts in position 1, 4 and 5 are longer than the retaining bolts in position 2, 3 and 6.

NOTE:

Do not fully tighten the retaining bolts.

Install the intake manifold.

www.JagDocs.com

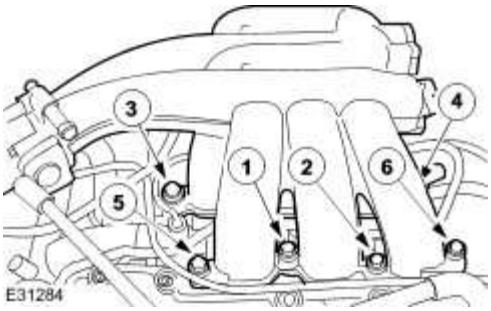

2 . Connect the brake booster vacuum hose.

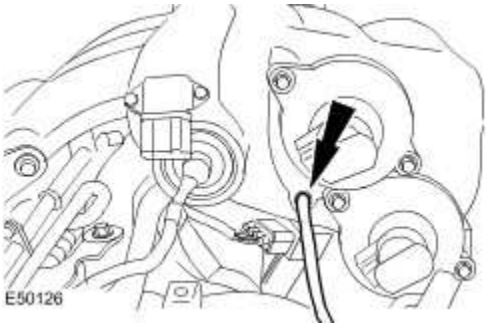

3 . Connect the fuel pressure regulator vacuum hose.

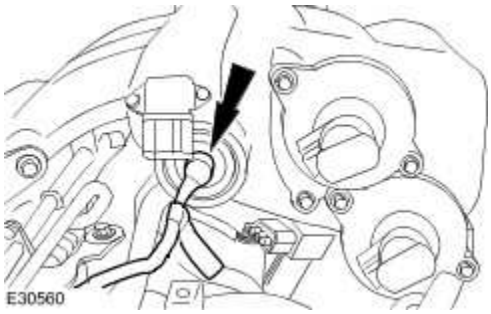

4 . **NOTE:**

Left-hand intake manifold tuning (IMT) valve shown, right-hand (IMT) valve similar.

Connect the IMT valves electrical connectors.

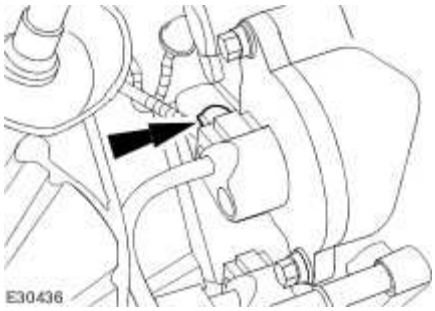

5 . Connect the fuel pressure sensor vacuum hose

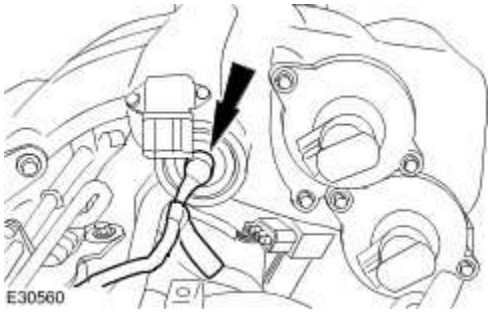

6 . Connect the manifold absolute pressure (MAP) sensor electrical connector.

7 **NOTE:**

.

The evaporative emission canister purge valve transfer pipe is attached to the induction manifold by a quick release coupling.

Connect the evaporative emission canister purge valve transfer pipe.

www.JagDocs.com

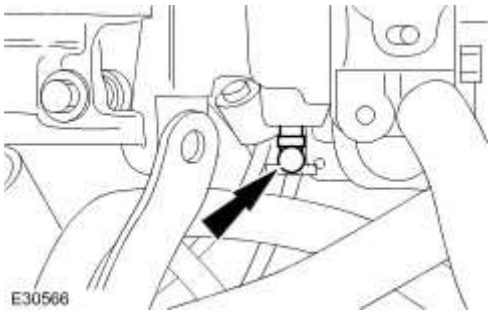

8 **NOTE:**

.

The intake manifold retaining bolts in position 1, 4 and 5 are longer than the retaining bolts in position 2, 3 and 6.

Reposition the intake manifold.

- Tighten to 10 Nm.
- Complete the tightening sequence.

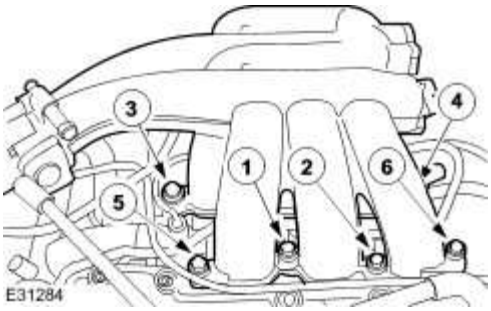

9 . Install the fuel pressure sensor bracket retaining bolt.

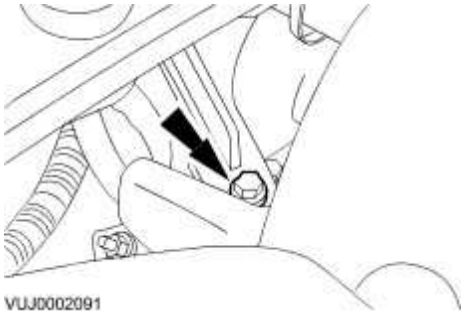

10 . Attach the fuel pressure sensor bracket.

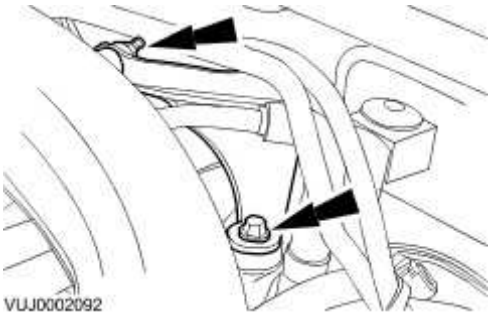

11 . Install the engine cover left-hand side retaining bracket.

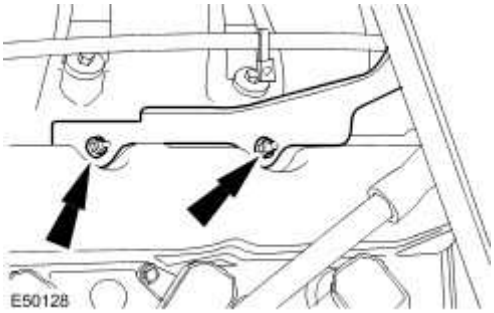

12 . Attach the evaporative emission canister purge valve transfer pipe.

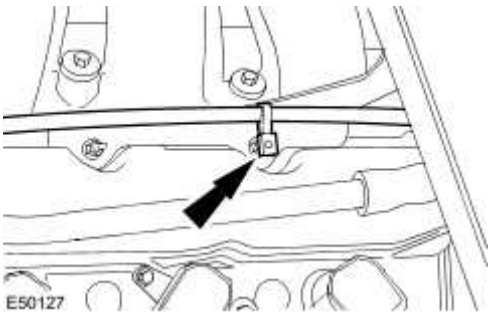

13 . Install the engine cover front retaining bracket.

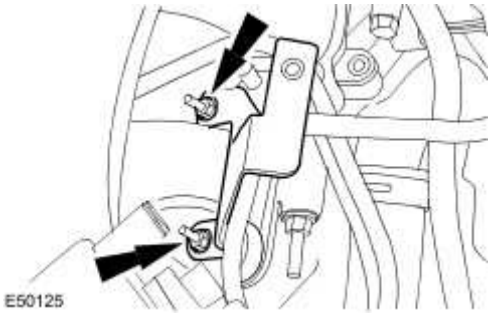

www.JagDocs.com

14 . Attach the coolant temperature sensor wiring harness.

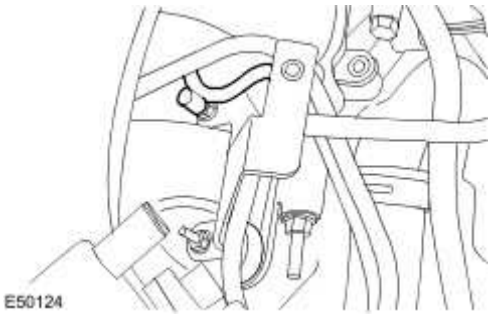

15 . Attach the intake manifold front retaining bracket.

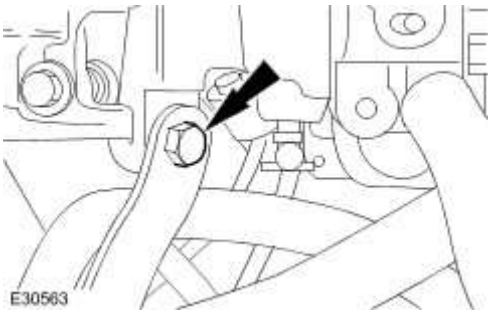

16 . Fully tighten the intake manifold front retaining bracket.

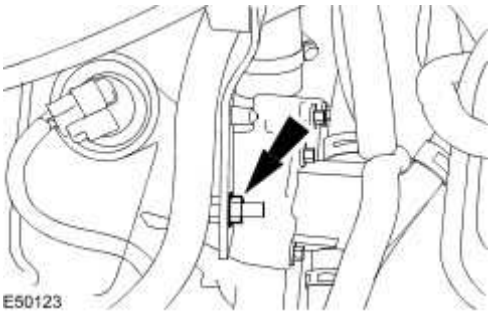

17 . Fully tighten the intake manifold right-hand side retaining bracket.

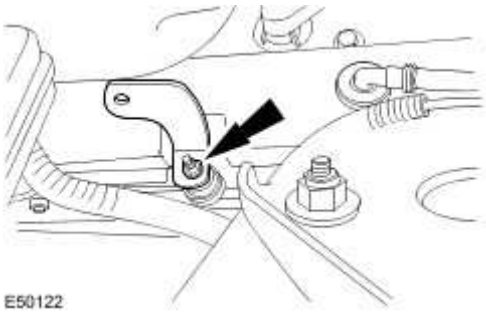

18 . Fully tighten the intake manifold right-hand side retaining bracket.

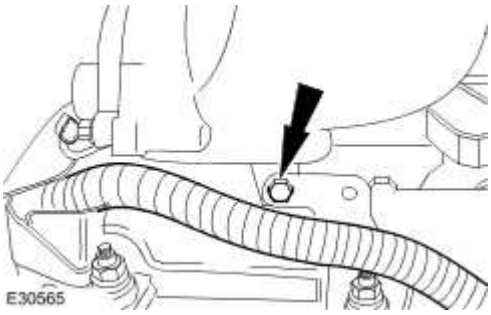

19 . Attach the engine wiring harness to the intake manifold side retaining bracket.

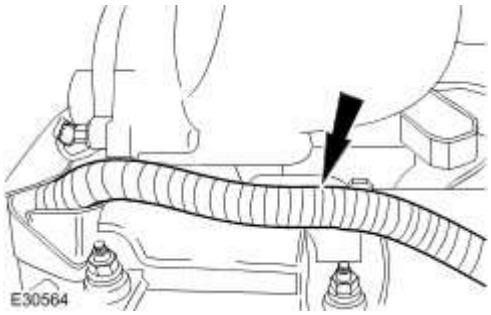

20 . **NOTE:**

Un-cap the coolant hoses.

Attach the coolant hoses to the throttle body.

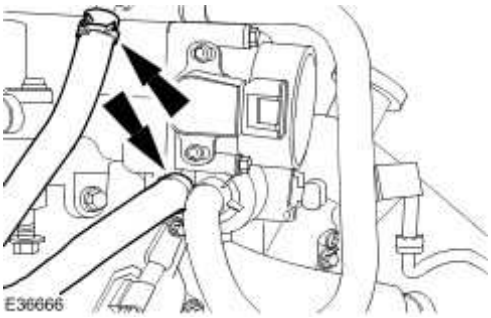

21 . Connect the positive crankcase ventilation (PCV) hose.

www.JagDocs.com

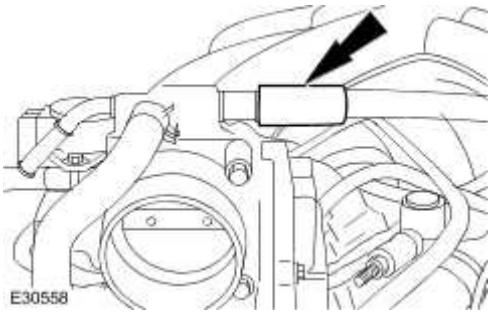

22 . Connect the throttle position sensor (TPS) electrical connector.

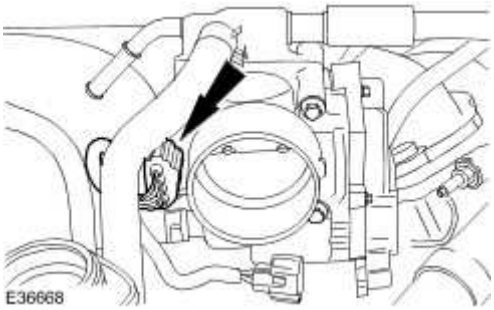

23 . Connect the throttle motor electrical connector.

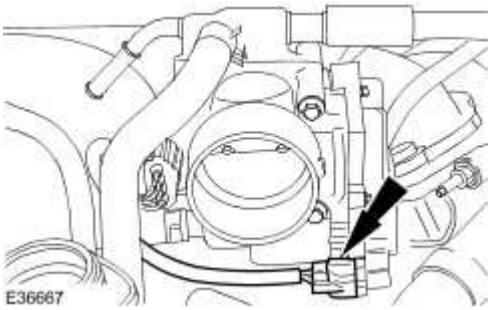

24 . Install the engine cover.

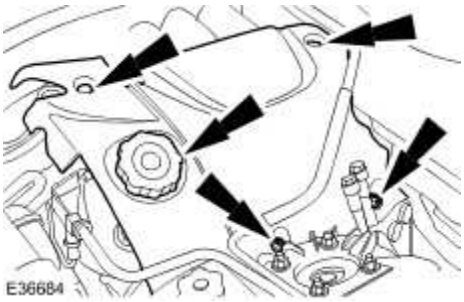

25 . Install the air cleaner outlet pipe.
For additional information, refer to

26 . Fill the cooling system up to the MAX mark on the coolant expansion tank using a fifty percent mixture of Jaguar Premium Cooling System Fluid or equivalent, meeting Jaguar specification WSS M97B44-D and fifty percent water.

www.JagDocs.com

Lower Intake Manifold (30.15.61)

Removal

1 . Remove the intake manifold.
For additional information, refer to Intake Manifold (30.15.01)

2 . Disconnect the spring lock coupling.
For additional information, refer to Spring Lock Couplings

3 . Disconnect the fuel charging wiring harness.

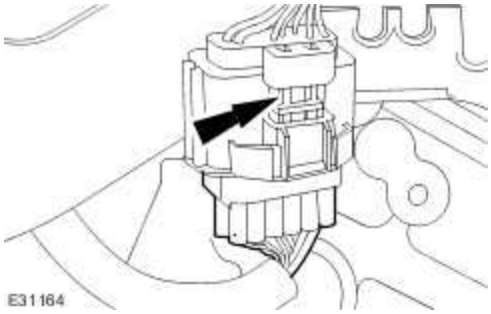

4 . **NOTE:**

Fuel may still be present in the fuel injection supply manifold.

NOTE:

Remove and discard the lower intake manifold O-ring seals.

Remove the lower intake manifold.

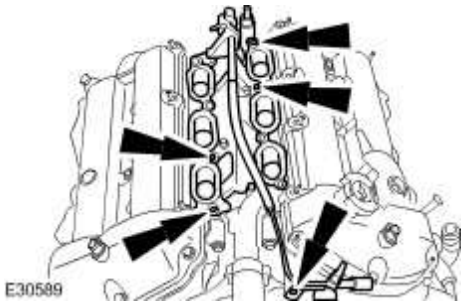

Installation

1 . **NOTE:**

Install new O-ring seals.

NOTE:

Tighten in the sequence shown.

To install, reverse the removal procedure.

- Tighten the retaining bolts in the sequence shown.
- Tighten to 10 Nm.

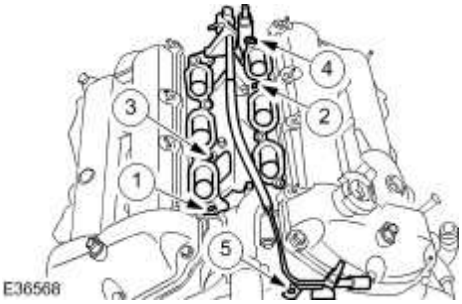

www.JagDocs.com

Oil Cooler (12.60.68)

Removal

1 . Carry out the cooling system draining procedure. <<303-03A>>

2 . Remove the left-hand engine mount.
For additional information, refer to

3 . Drain the engine oil.

4 . Remove and discard the engine oil filter.

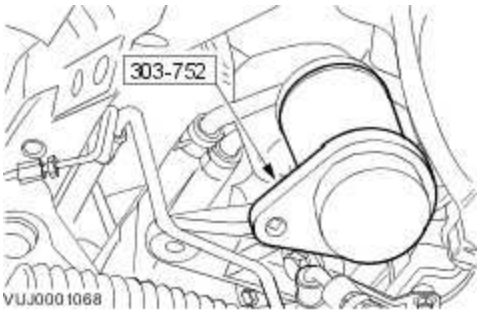

5 . Disconnect the coolant hoses.

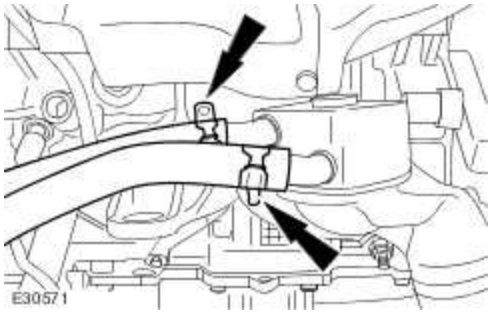

6 . Remove the oil filter housing.

1) Remove the center oil filter housing retaining bolt.

Discard the 'O' ring seal.

2) Remove the oil filter housing.

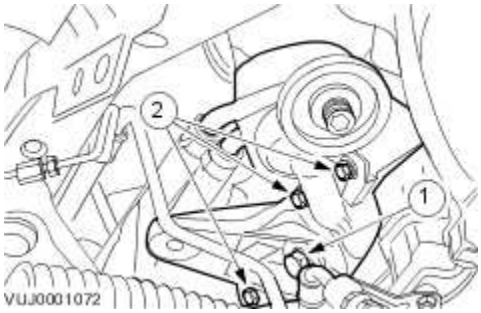

7 . Remove the oil cooler.

- Remove and discard the oil cooler O-ring seal.

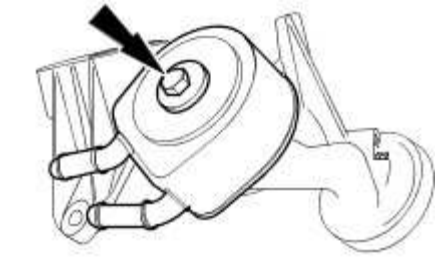

www.JagDocs.com

Installation

1 . Install the oil cooler.

- Install a new oil cooler O-ring seal.
- Tighten to 58 Nm.

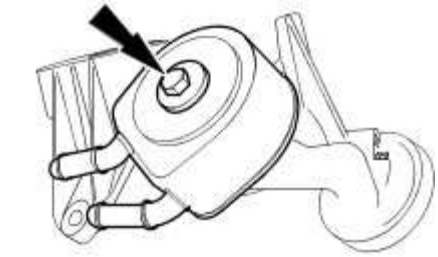

2 . **NOTE:**

Install a new 'O' ring seal.

Install the oil filter housing.

1) Loosely install the oil filter housing retaining bolts.

2) Loosely install the center oil filter housing retaining bolt.

3) Install the oil filter housing.

3 . **NOTE:**

Tighten the bolts in the indicated sequence.

Tighten all bolts to 25 Nm.

1) Tighten to 155 Nm.

2) Tighten to 40 Nm + 90 degrees.

4 . Connect the coolant hoses.

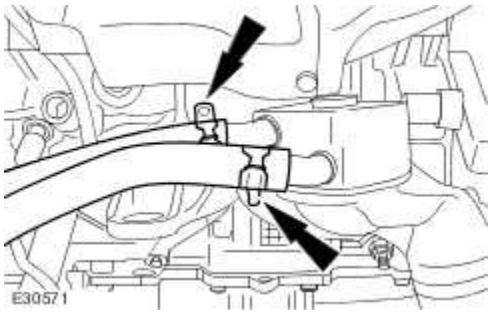

5 . Install a new engine oil filter.

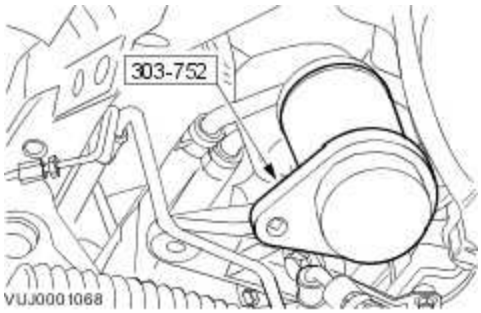

6 . Install the left-hand engine mount.
For additional information, refer to

7 . **NOTE:**

Install a new sealing washer to oil pan drain plug

Install the oil pan drain plug

www.JagDocs.com

- Tighten to 24 Nm.

8 . Lower the vehicle.

9 . Refill the engine with oil.

10 . Carry out the coolant fill and bleeding procedure.

Oil Pan (12.60.44)

Special Service Tools

Engine Lifting Bracket
303-661

Engine Support Bracket
303-021

Removal

1 . Disconnect the battery ground cable. <<414-01>>

2 . Remove the engine cover.

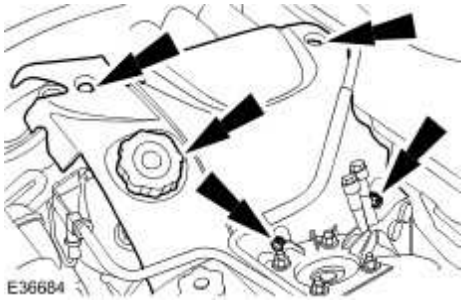

3 . Remove the cowl vent screen. <<501-02>>

4 . Remove the cabin air filter housing.

www.JagDocs.com

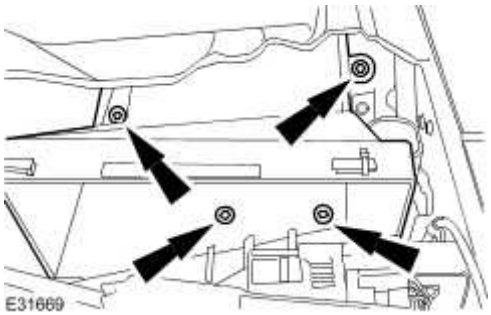

5 . **NOTE:**

Left-hand shown, right-hand similar.

Remove the engine compartment panel retaining bolts.

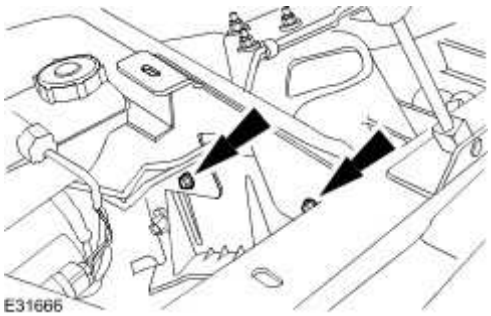

6 . **NOTE:**

Left-hand shown, right-hand similar.

Remove the engine compartment panel.

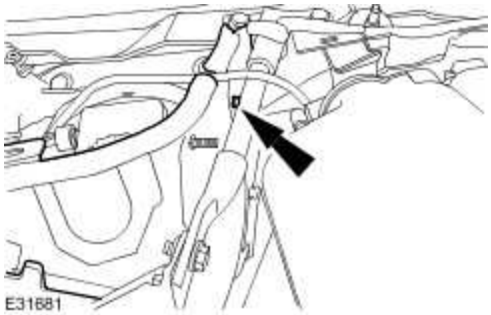

7 . **NOTE:**

Inlet manifold shown removed for clarity.

Detach the right-hand valve cover wiring harness.

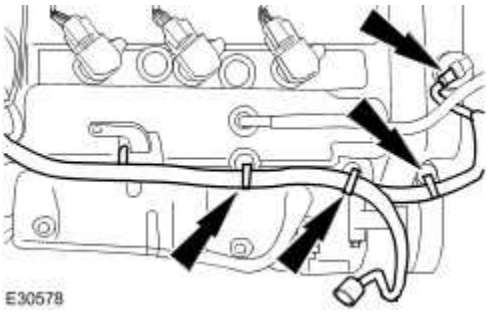

8 . Disconnect the left-hand ignition coils electrical connectors.

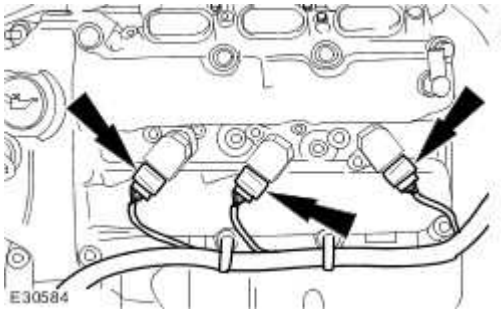

9 . Detach the left-hand valve cover wiring harness.

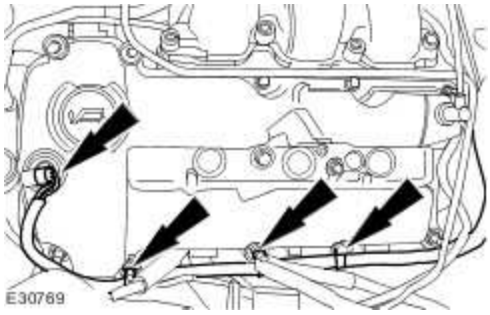

10 . Remove the dipstick tube retaining bolt.

Reposition the dipstick tube.

www.JagDocs.com

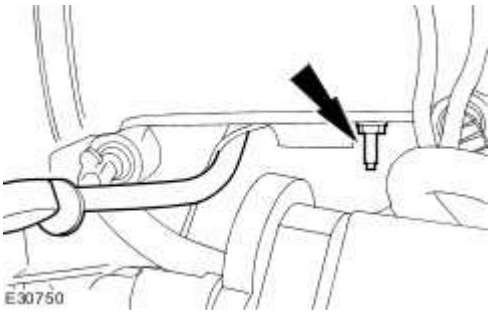

11 . **NOTE:**

Left-hand shown, right-hand similar.

Loosen the exhaust manifold retaining nut.

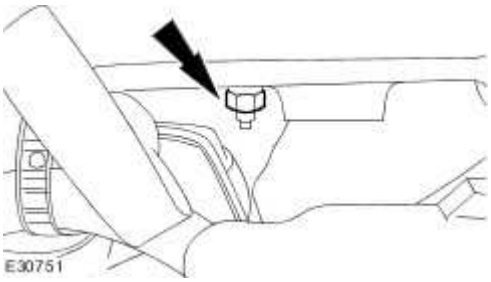

12 . **NOTE:**

Left-hand shown, right-hand similar.

Install the special tool to the exhaust manifold.

- Install the retaining bolt.

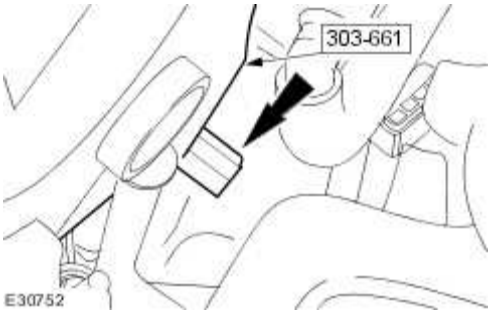

13 . **NOTE:**

Left-hand shown, right-hand similar.

Install the retaining bolt.

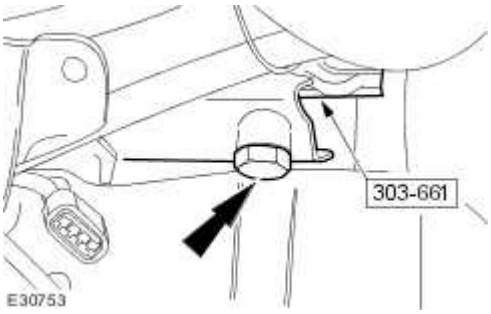

14 . Install the special tool support bars to the special tool.

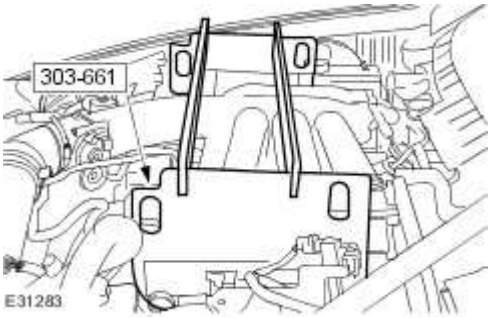

15 . Install the special tool.

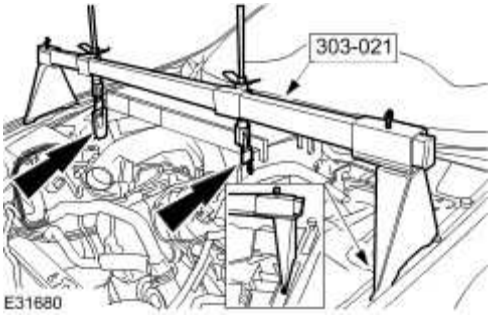

16 . Remove the air conditioning (AC) compressor. <<412-03>>

17 . Remove the air conditioning compressor bracket.

www.JagDocs.com

18 . Detach the generator battery positive cable protective cover.

19 . Remove the generator battery positive cable retaining nut.

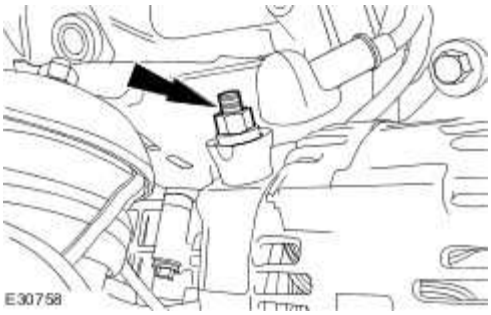

20 . Disconnect the generator electrical connector.

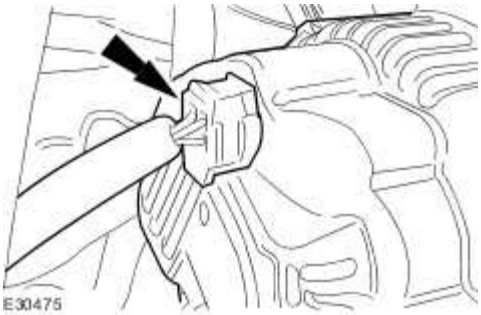

21 . Remove the generator.

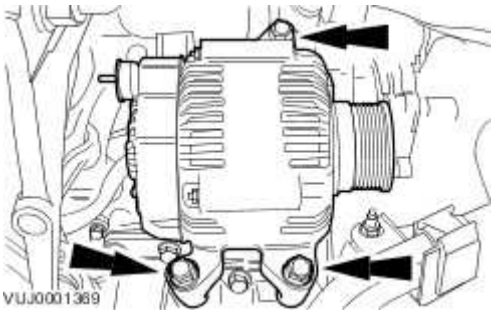

22 . Drain the engine oil.

23 . Detach the power steering hose.

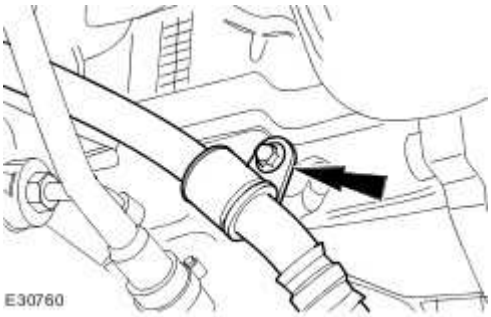

24 . Remove the steering gear shaft pinch bolt.

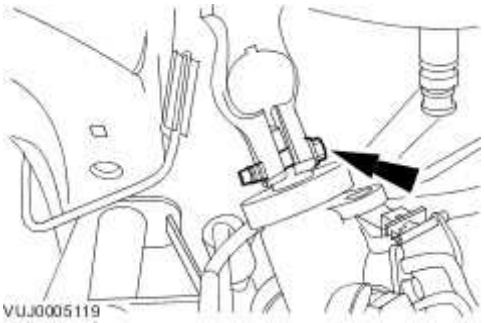

25 . Detach the steering gear.

www.JagDocs.com

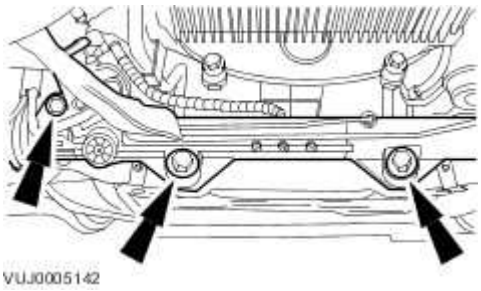

26 . Secure the steering gear.

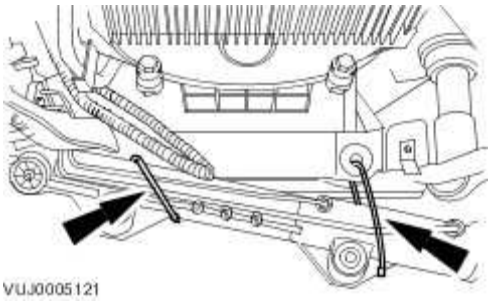

27 . **NOTE:**

Left-hand shown, right-hand similar.

Remove the engine mounts lower retaining bolts.

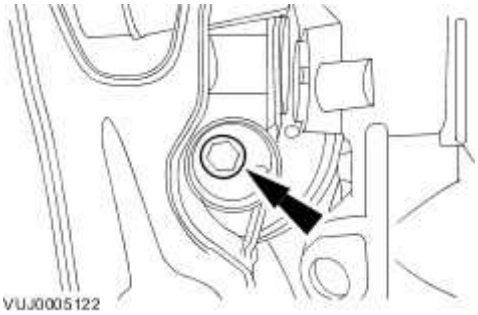

28 . Detach the automatic transmission oil cooler tubes retaining bracket.

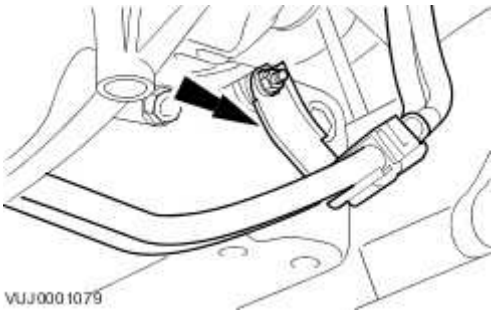

29 . Lower the vehicle.

30 . Using the special tools, raise the engine to a suitable height.

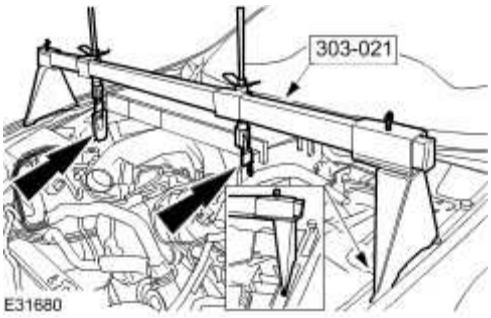

31 . Raise the vehicle.

32 . Detach the engine earth strap from the transmission.

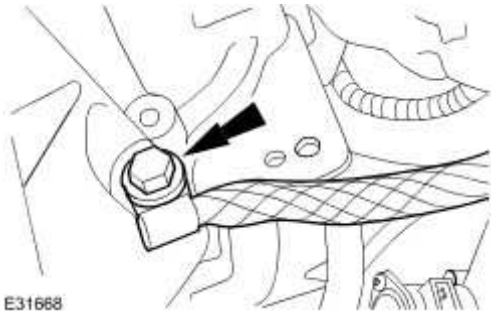

33 . **WARNING: Do not remove the front subframe retaining bolts. Failure to follow this procedure may result in personal injury.**

www.JagDocs.com

Loosen the front subframe retaining bolts to enable the oil pan to be removed.

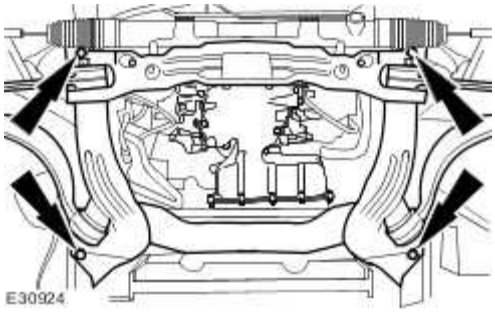

34 . Remove the oil pan rear retaining bolts.

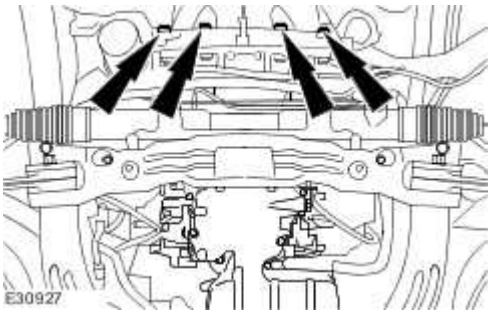

35 Remove the oil pan.

.

- Remove and discard the oil pan gasket.
- Clean and inspect the oil pan and cylinder block sealing surfaces using metal surface cleaner or equivalent meeting Jaguar specification.

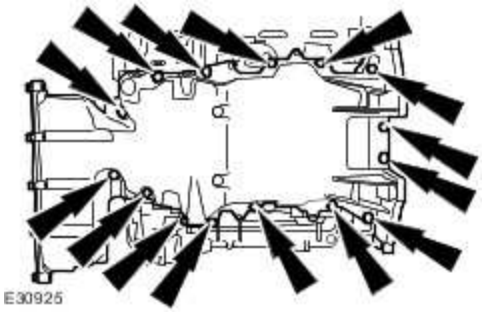

Installation

1 **NOTE:**

.

Apply an 10 mm dot of silicone gasket and sealant meeting Jaguar specification to the engine block and front cover mating surface.

NOTE:

Loosely install the oil pan to transmission housing bolts.

NOTE:

Tighten all oil pan retaining bolts within six minutes of applying the sealer.

Install the oil pan rear retaining bolts.

- Complete the tightening sequence.
- Tighten to 25 Nm.

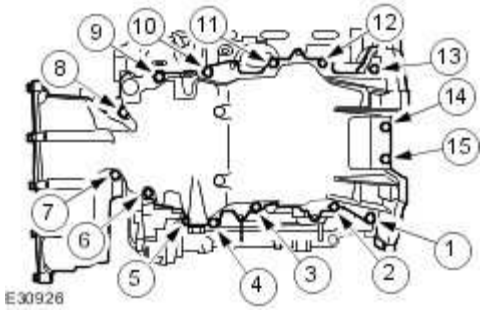

2 . Install the oil pan rear retaining bolts.

- Tighten to 45 Nm.

www.JagDocs.com

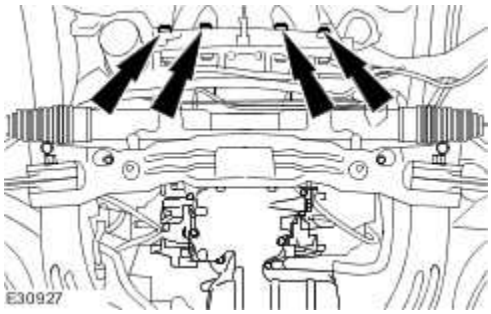

3 . Carry out the front subframe alignment procedure. <<502-00>>

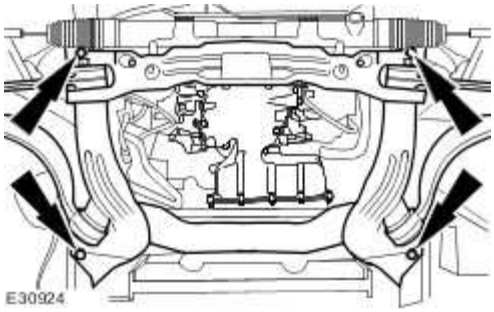

4 . Lower the vehicle.

5 . **CAUTION: Make sure the engine mounts locate into the correct position when the engine is repositioned.**

Using the special tools, reposition the engine.

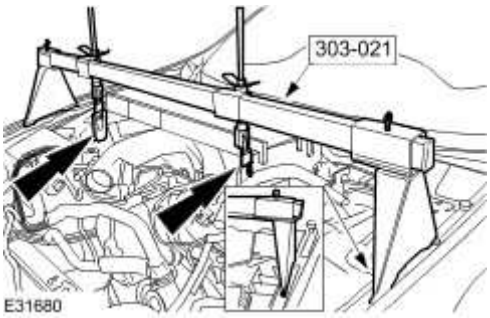

6 . Raise the vehicle.

7 . Install the engine earth strap to the transmission.

Tighten to 10 Nm.

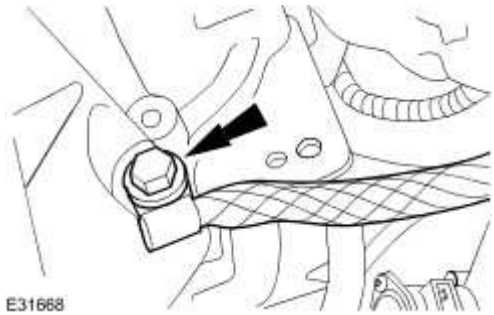

8 . Attach the automatic transmission oil cooler tubes retaining bracket.

Tighten to 10 Nm.

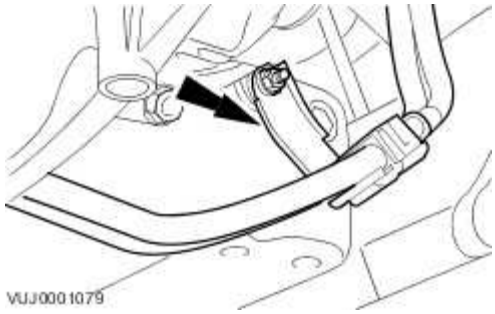

9 . **NOTE:**

Left-hand shown, right-hand similar.

Install the engine mounts lower retaining bolts.

Tighten to 63 Nm.

www.JagDocs.com

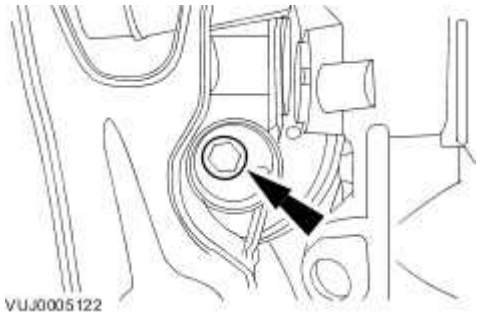

10 . Detach the steering gear.

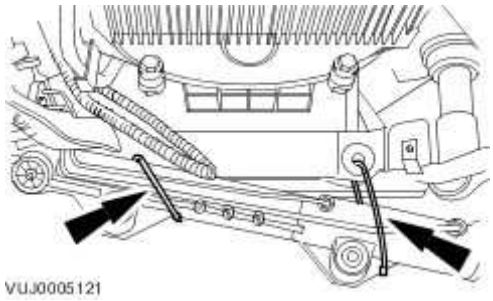

11 . Attach the steering gear.

- Tighten to 100 Nm.

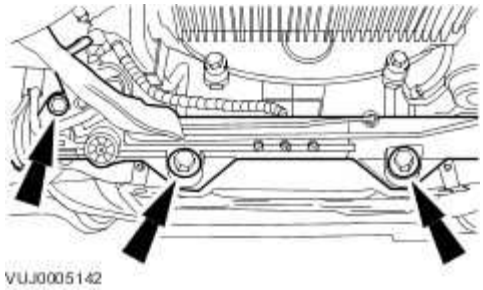

12 . Install the steering gear shaft pinch bolt.

- Tighten to 35 Nm.

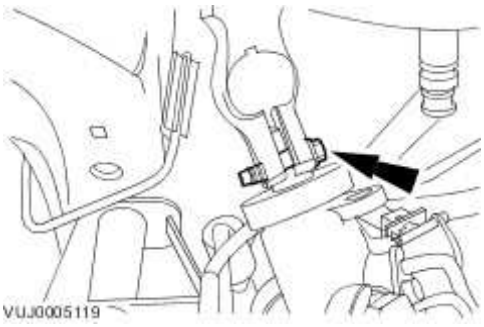

13 . Attach the power steering hose.

- Tighten to 10 Nm.

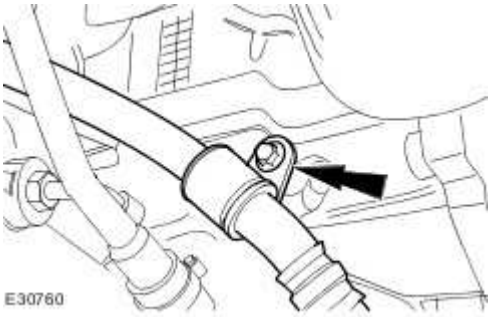

14 . **NOTE:**

Install a new sealing washer to the oil pan drain plug

Install the oil pan drain plug

- Tighten to 24 Nm.

15 . To install the generator.

- Tighten to 48 Nm.

www.JagDocs.com

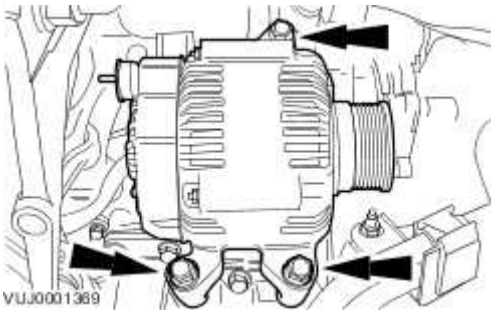

16 . Connect the generator electrical connector.

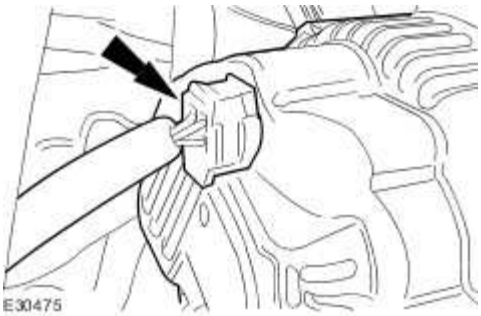

17 . Install the generator battery positive cable retaining nut.

Tighten to 12 Nm.

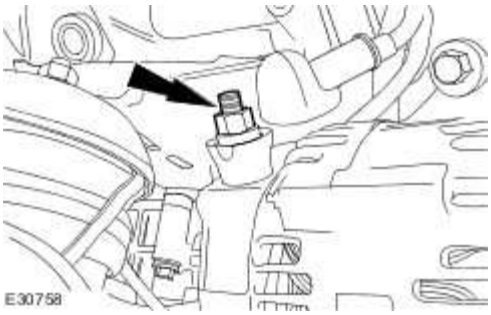

18 . Attach the generator battery positive cable protective cover.

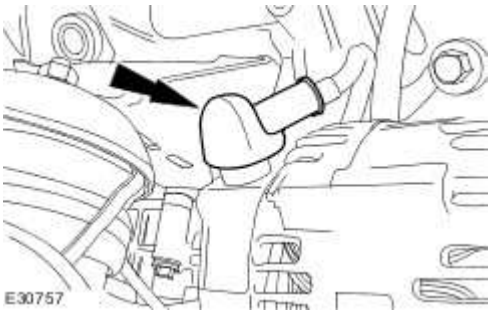

19 . Install the air conditioning compressor bracket.

Tighten to 25 Nm.

20 . Install the air conditioning (AC) compressor. <<412-03>>

21 . Remove the special tool.

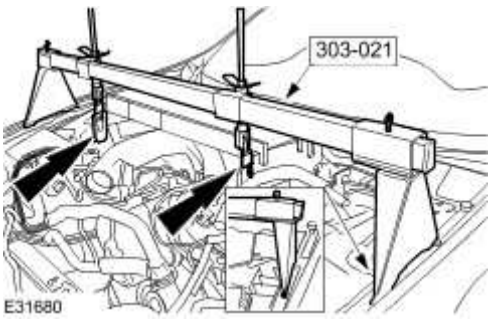

22 . Remove the special tool.

www.JagDocs.com

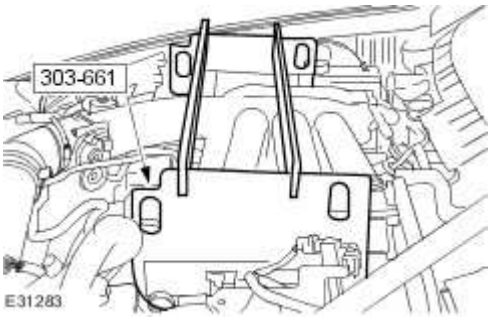

23 . **NOTE:**

Left-hand shown, right-hand similar.

Tighten the exhaust manifold retaining nut.

Tighten to 25 Nm.

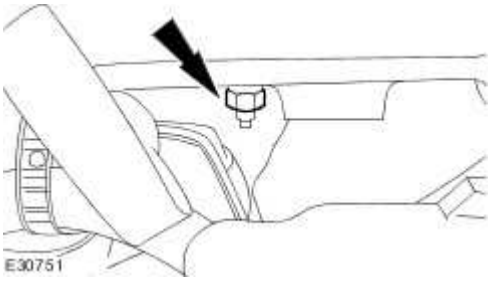

24 . **NOTE:**

Left-hand shown, right-hand similar.

Remove the retaining bolt.

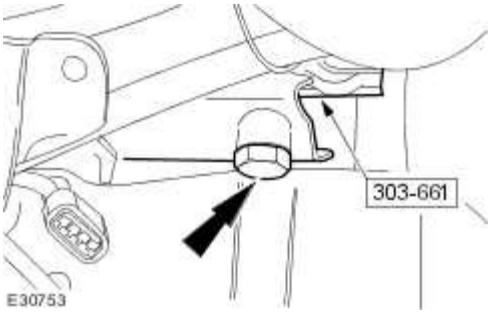

25 . **NOTE:**

Left-hand shown, right-hand similar.

Remove the special tool from the exhaust manifold.

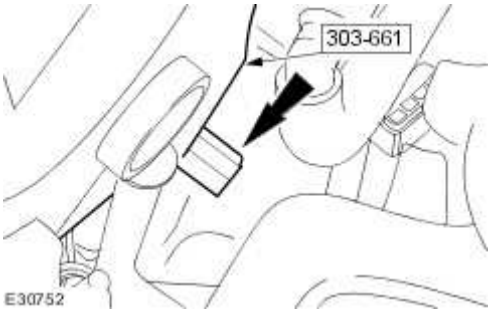

26 . Install the dipstick tube retaining bolt.

Tighten to 10 Nm.

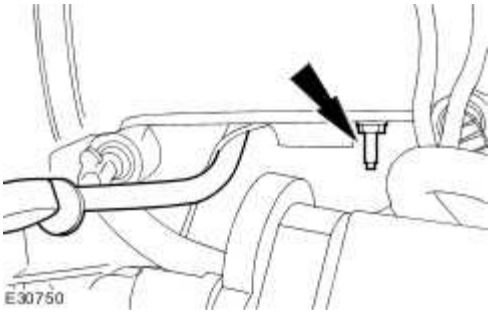

27 . Attach the left-hand valve cover wiring harness.

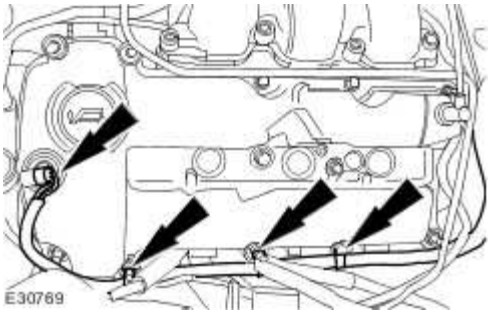

28 . Connect the left-hand ignition coils electrical connectors.

www.JagDocs.com

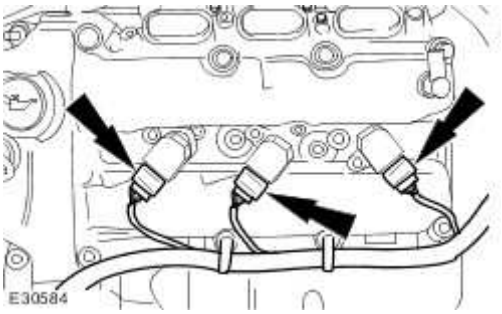

29 . **NOTE:**

Inlet manifold shown removed for clarity.

Attach the right-hand valve cover wiring harness.

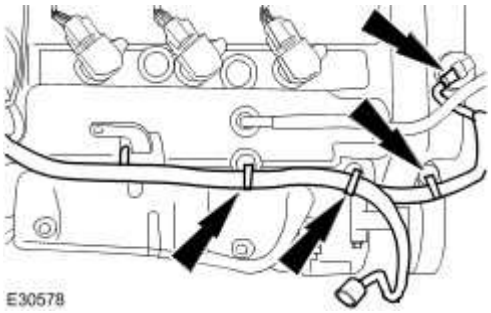

30 . **NOTE:**

Left-hand shown, right-hand similar.

Install the engine compartment panel.

Tighten to 10 Nm.

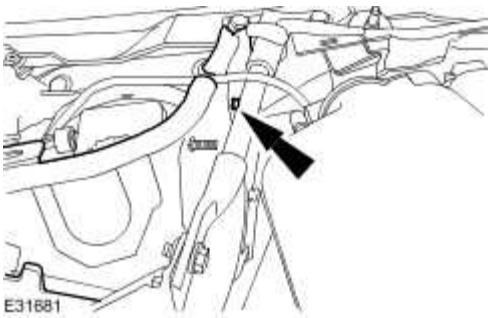

31 . **NOTE:**

Left-hand shown, right-hand similar.

Install the engine compartment panel retaining bolts.

- Tighten to 10 Nm.

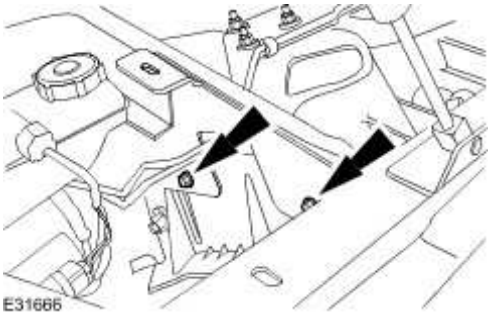

32 . Install the cabin air filter housing.

- Tighten to 10 Nm.

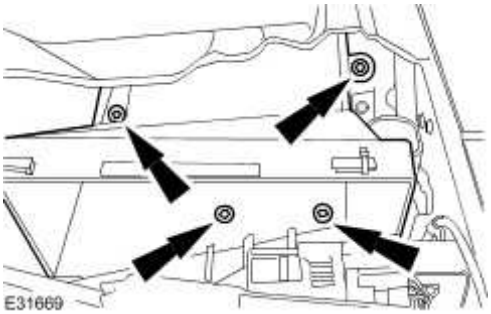

33 . Install the cowl vent screen. <<501-02>>

34 . Install the engine cover.

www.JagDocs.com

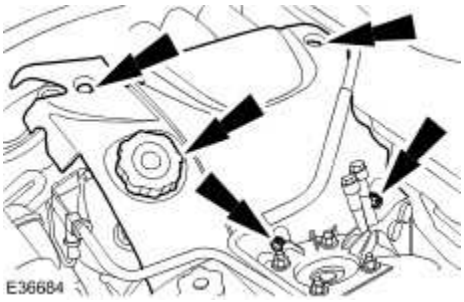

35 . Connect the battery ground cable. <<414-01>>

36 . Refill the engine with oil.

Oil Pump (12.60.26)

Removal

1 . Remove the timing drive components.
For additional information, refer to Timing Drive Components (12.65.13)

2 . **NOTE:**

Engine inverted for clarity.

Remove the oil pump tube.

3 . Remove the oil pump.

- Remove and discard the O-ring seal.
- Inspect the oil pump for damage and wear.

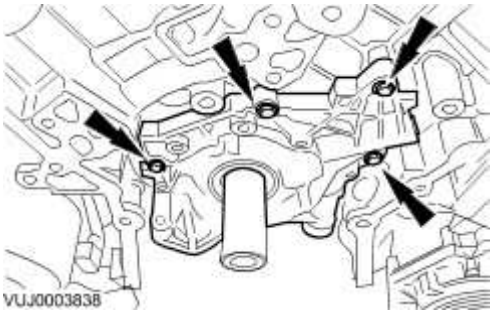

www.JagDocs.com

Installation

1. **CAUTION: Install the oil pump flush to the cylinder block for correct sealing.**

CAUTION: Rotate the inner rotor of the oil pump to align with the flats on the crankshaft before installation.

Install the oil pump.

- Tighten to 10 Nm.

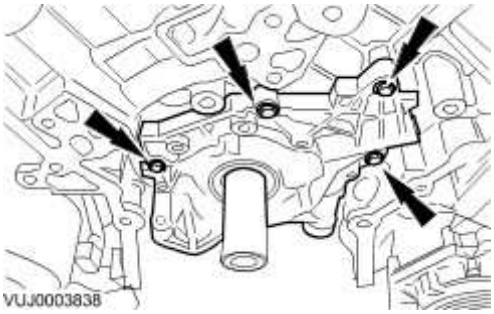

2 . **NOTE:**

Engine inverted for clarity.

Install the oil pump tube.

- Install a new O-ring seal.
- Tighten to 10 Nm.

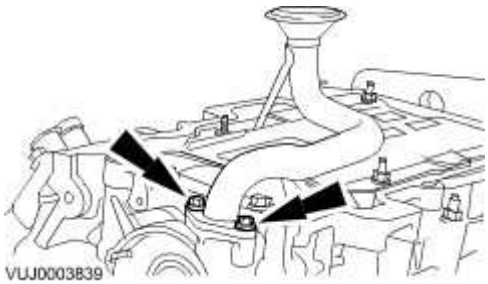

3 . **NOTE:**

Engine inverted for clarity.

Tighten to 5 Nm + 45°.

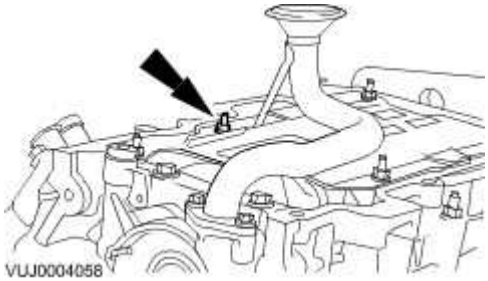

4 . Install the timing drive components.
For additional information, refer to Timing Drive Components (12.65.13)

www.JagDocs.com

Timing Drive Components (12.65.13)

Removal

1 . Remove the engine front cover.
For additional information, refer to

2 . Remove the spark plugs.

3 **NOTE:**
.

Note the position of the crankshaft position (CKP) sensor pulse wheel during removal. It must be returned to its original position during installation.

Remove the crankshaft position (CKP) sensor pulse wheel.

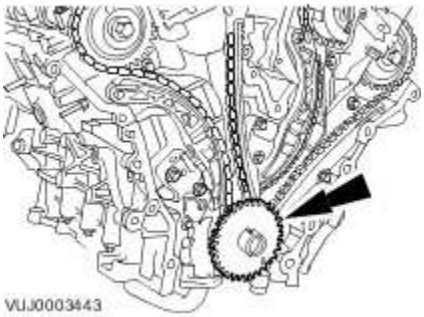

4
. **CAUTION: Do not rotate the crankshaft counterclockwise. The timing chains may bind causing engine damage.**

Install the crankshaft pulley retaining bolt and washer.

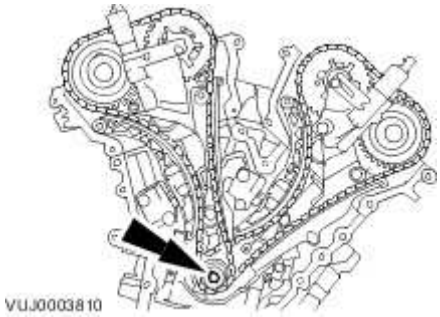

5 . **CAUTION: Do not rotate the crankshaft counterclockwise. The timing chains may bind causing engine damage.**

Rotate the crankshaft clockwise until the crankshaft keyway is at the 7 O'clock position, the alignment mark on the right-hand intake camshaft sprocket is at the 1 O'clock position and the alignment mark on the right-hand exhaust camshaft sprocket is at the 8 O'clock position.

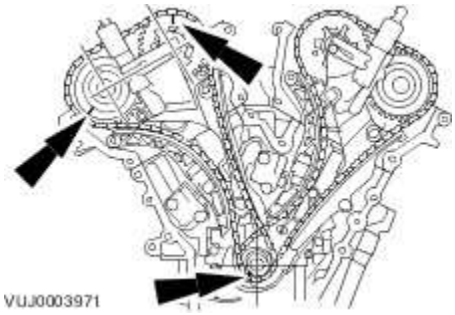

6 . Release the timing chain tensioner ratchet.

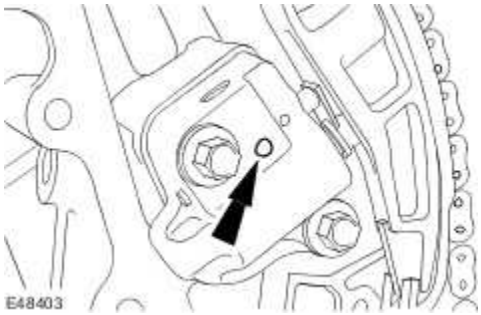

7 . **NOTE:**

Keep the timing chain tensioner ratchet released.

Reposition the timing chain tensioner plunger.

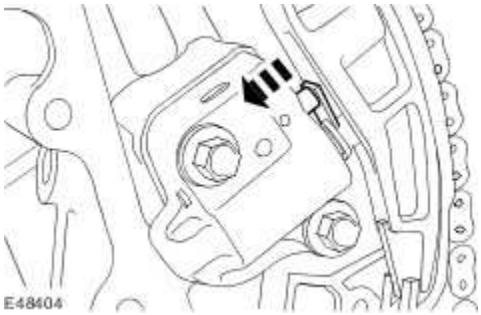

www.JagDocs.com

8 . Retain the timing chain tensioner plunger.

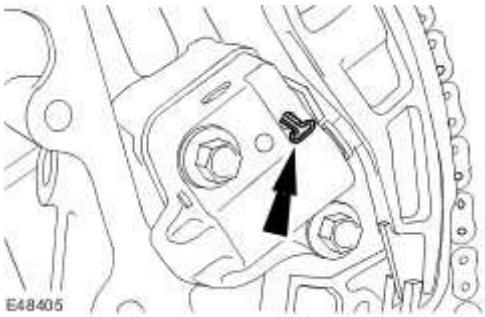

9 . Remove the right-hand timing chain tensioner.

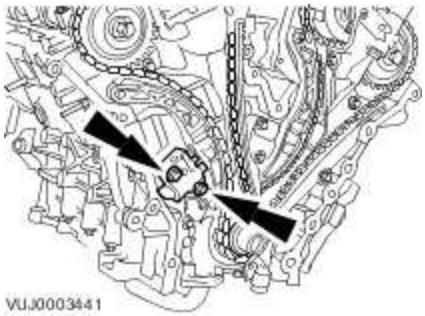

10 . Remove the right-hand timing chain outer guide.

11 . Remove the right-hand timing chain.

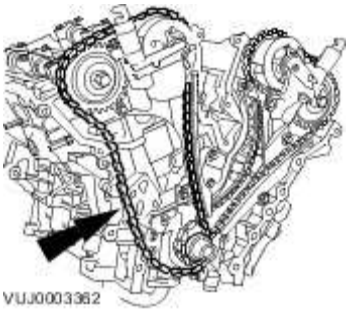

12 . **CAUTION: Inspect and replace the O-ring seal if necessary.**

Remove the right-hand timing chain inner guide.

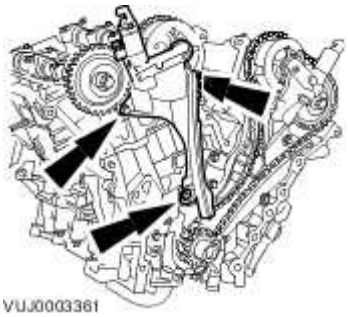

13 . **CAUTION: Do not rotate the crankshaft counterclockwise. The timing chains may bind causing engine damage.**

Rotate the crankshaft clockwise until the crankshaft keyway is at the 11 O'clock position, the alignment mark on the left-hand intake camshaft sprocket is at the 9 O'clock position and the alignment mark on the left-hand exhaust camshaft sprocket is at the 2 O'clock position.

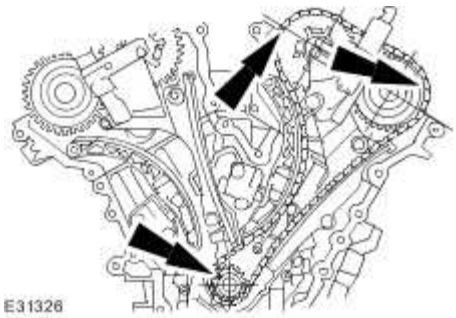

14 . **NOTE:**

Right-hand bank shown, left-hand bank similar.

Release the timing chain tensioner ratchet.

www.JagDocs.com

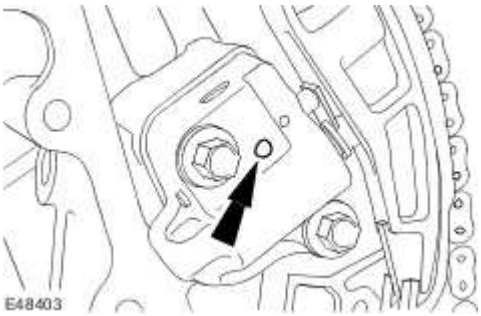

15 . **NOTE:**

Right-hand bank shown, left-hand bank similar.

NOTE:

Keep the timing chain tensioner ratchet released.

Reposition the timing chain tensioner plunger.

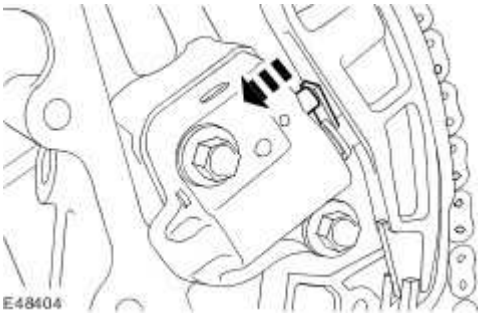

16 . **NOTE:**

Right-hand bank shown, left-hand bank similar.

Retain the timing chain tensioner plunger.

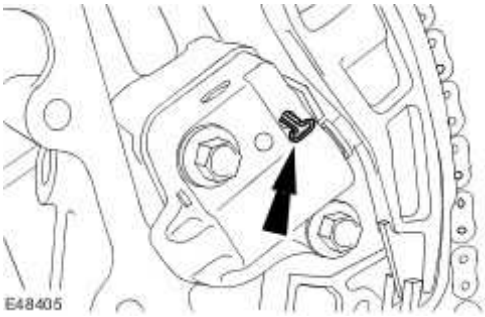

17 . Remove the left-hand timing chain tensioner.

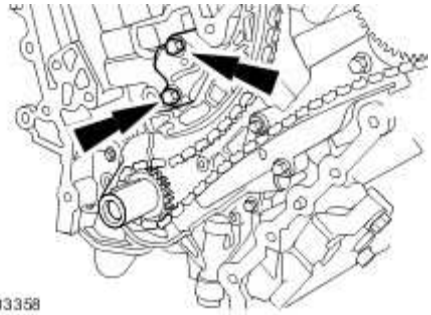

VUJ0003358

18 . Remove the left-hand timing chain inner guide.

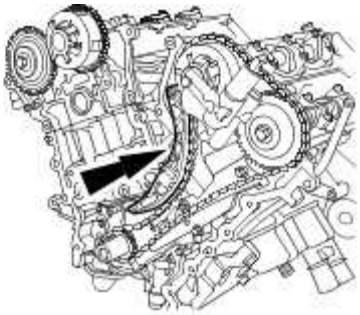

VUJ0003357

19 . Remove the left-hand timing chain.

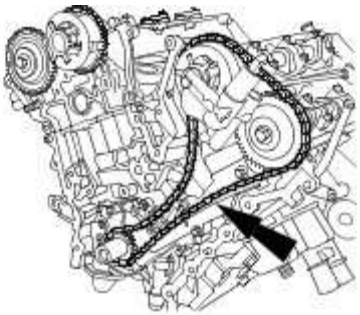

VUJ0003356

20 . **CAUTION: Inspect and replace the O-ring seal if necessary.**

Remove the left-hand timing chain outer guide.

www.JagDocs.com

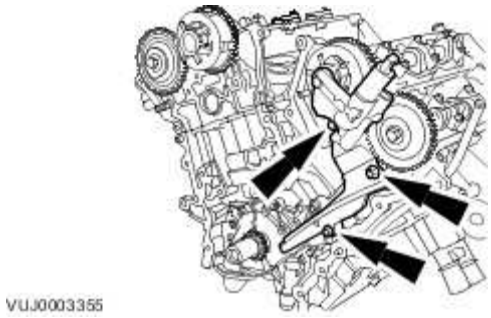

21 . **CAUTION: Make sure the crankshaft keyway is at the 9 O'clock position before any further engine repairs are carried out.**

Remove the crankshaft pulley retaining bolt and washer.

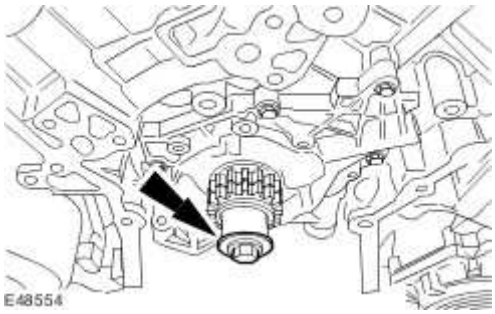

22 . Remove the crankshaft sprocket.

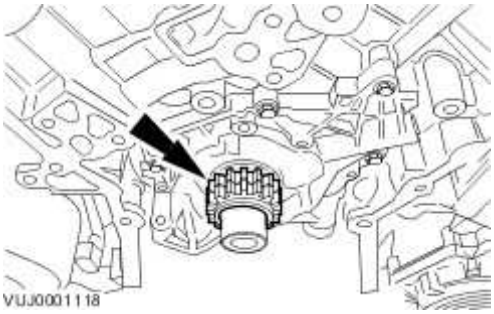

Installation

1 . **NOTE:**

Make sure the crankshaft sprocket timing marks are facing outwards.

Install the crankshaft sprocket.

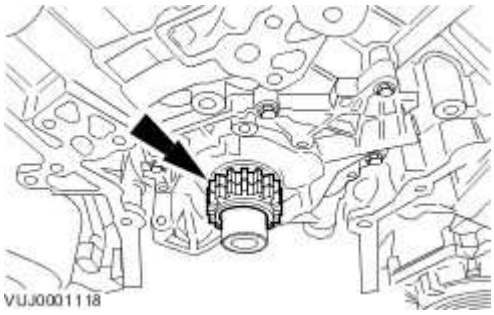

2. **CAUTION: Make sure the crankshaft keyway is at the 9 O'clock position before the camshaft positions are aligned.**

Install the crankshaft pulley retaining bolt and washer.

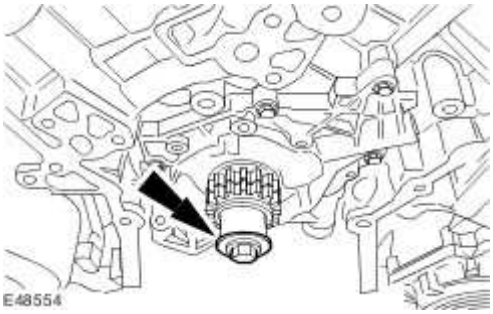

3. Rotate the left-hand intake camshaft clockwise until the camshaft sprocket alignment mark is at the 9 O'clock position and rotate the left-hand exhaust camshaft sprocket clockwise until the camshaft sprocket alignment mark is at the 2 O'clock position.

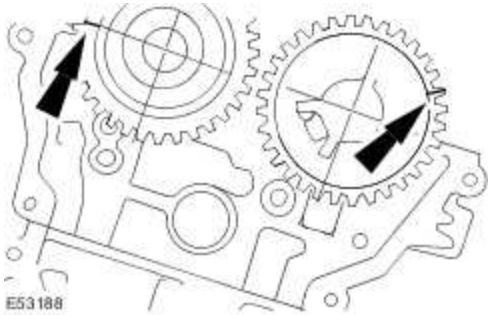

4. Rotate the right-hand intake camshaft clockwise until the camshaft sprocket alignment mark is at the 5 O'clock position and rotate the right-hand exhaust camshaft sprocket clockwise until the camshaft sprocket alignment mark is at the 12 O'clock position.

www.JagDocs.com

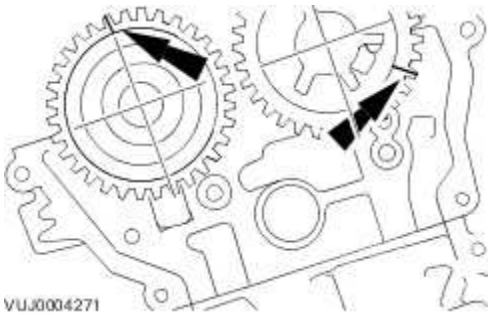

5 . Rotate the crankshaft clockwise until the keyway is at the 11 O'clock position.

6 . **CAUTION: Inspect and replace the O-ring seal if necessary.**

CAUTION: Make sure the O-ring seal is correctly installed.

Install the left-hand timing chain outer guide.

- Tighten the retaining bolts in the sequence shown in two stages.
- Stage 1: Tighten bolt 1 to 25 Nm.
- Stage 2: Tighten bolts 2 to 25 Nm.

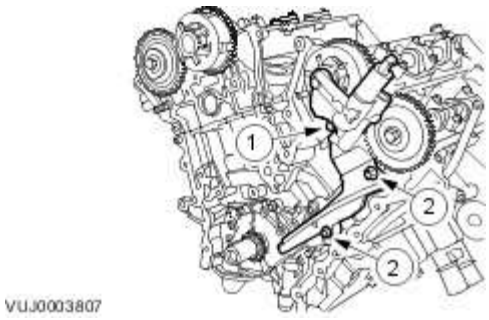

7 . **CAUTION: Make sure the crankshaft keyway is at the 11 O'clock position, the alignment mark on the left-hand intake camshaft sprocket is at the 9 O'clock position and**

the alignment mark on the left-hand exhaust camshaft sprocket is at the 2 O'clock position.

CAUTION: Make sure the timing chain alignment marks are correctly positioned to the crankshaft sprocket and camshaft sprocket alignment marks.

CAUTION: Make sure the timing chain slack is on the tensioned side of the timing chain.

Install the left-hand timing chain.

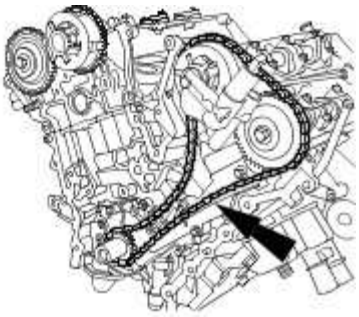

VUJ0003356

8 . Install the left-hand timing chain inner guide.

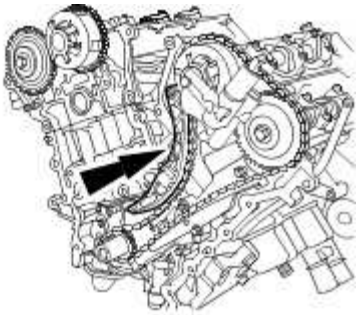

VUJ0003357

9 . **CAUTION: Do not manually adjust the timing chain tensioner.**

Install the left-hand timing chain tensioner.

- Tighten to 25 Nm.

www.JagDocs.com

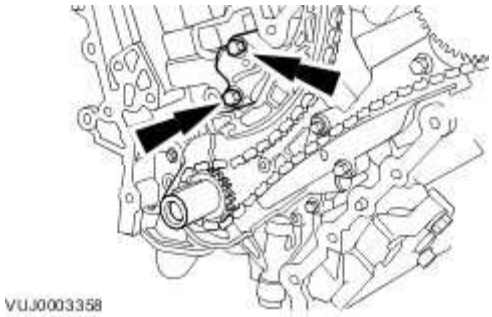

10 . **CAUTION: Do not manually adjust the timing chain tensioner.**

Make sure the left-hand timing chain alignment marks have remained correctly positioned to the camshaft sprocket and crankshaft sprocket alignment marks.

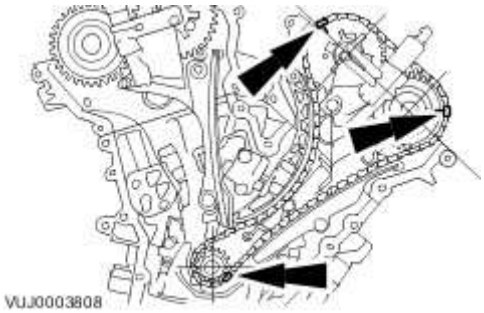

11 . **CAUTION: Do not manually adjust the timing chain tensioner.**

Remove the timing chain tensioner retaining pin.

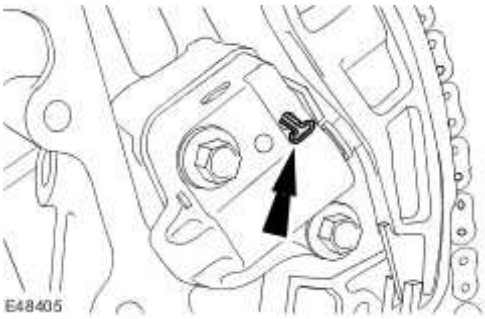

12 .

CAUTION: Do not rotate the crankshaft counterclockwise. The timing chains may bind causing engine damage.

Rotate the crankshaft clockwise until the crankshaft keyway is at the 3 O'clock position.

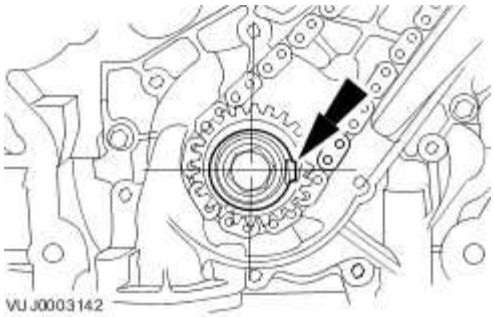

13 .

CAUTION: Inspect and replace the O-ring seal if necessary.

CAUTION: Make sure the O-ring seal is correctly installed.

Install the right-hand timing chain inner guide.

- Tighten the retaining bolts in the sequence shown in two stages.
- Stage 1: Tighten bolt 1 to 25 Nm.
- Stage 2: Tighten bolts 2 to 25 Nm.

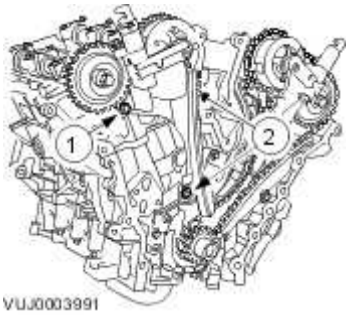

www.JagDocs.com

14 . **CAUTION: Make sure the crankshaft keyway is at the 3 O'clock position, the alignment mark on the right-hand intake camshaft sprocket is at the 5 O'clock position and the alignment mark on the right-hand exhaust camshaft sprocket is at the 12 O'clock position.**

CAUTION: Make sure the timing chain alignment marks are correctly positioned to the crankshaft sprocket and camshaft sprocket alignment marks.

CAUTION: Make sure the timing chain slack is on the tensioned side of the timing chain.

Install the right-hand timing chain.

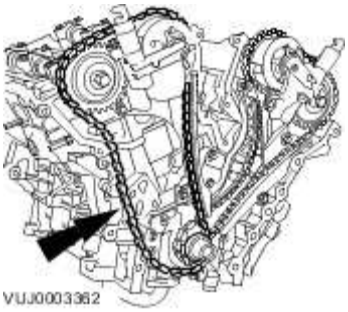

15 . Install the right-hand timing chain outer guide.

16 . **CAUTION: Do not manually adjust the timing chain tensioner.**

Install the right-hand timing chain tensioner.

Tighten to 25 Nm.

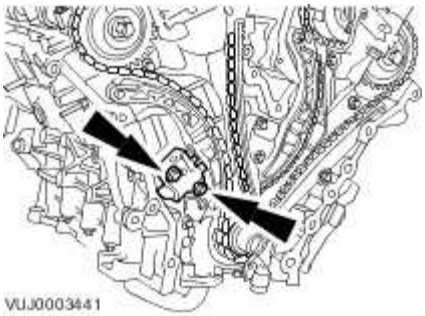

17 . **CAUTION: Do not manually adjust the timing chain tensioner.**

Remove the timing chain tensioner retaining pin.

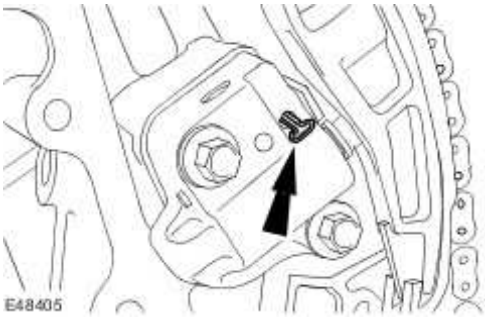

18 . **CAUTION: Make sure the right-hand timing chain alignment marks have remained correctly positioned to the camshaft sprocket and crankshaft sprocket alignment marks.**

CAUTION: Do not manually adjust the timing chain tensioner.

Make sure all the timing chain alignment marks are in the positions shown.

www.JagDocs.com

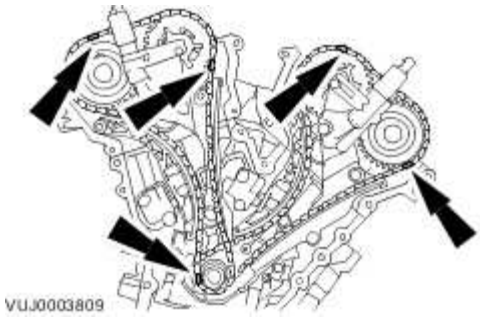

19. **CAUTION: Do not rotate the crankshaft counterclockwise. The timing chains may bind causing engine damage.**

NOTE:

Rotate the crankshaft using hand tools only

Rotate the crankshaft two complete turns clockwise to make sure the valves and pistons do not clash.

20. **CAUTION: Do not rotate the crankshaft counterclockwise. The timing chains may bind causing engine damage.**

Remove the crankshaft pulley retaining bolt and washer.

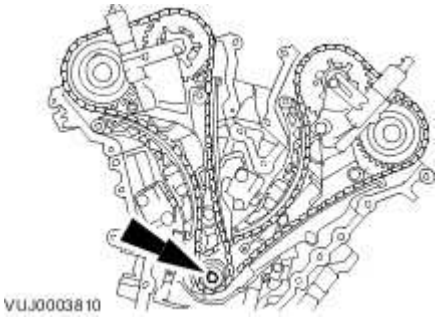

21. **CAUTION: Make sure the CKP sensor pulse wheel is correctly installed with the missing tooth aligned to the crankshaft keyway.**

CAUTION: Make sure the CKP sensor pulse wheel is correctly installed with the teeth pointing outwards.

Install the CKP sensor pulse wheel.

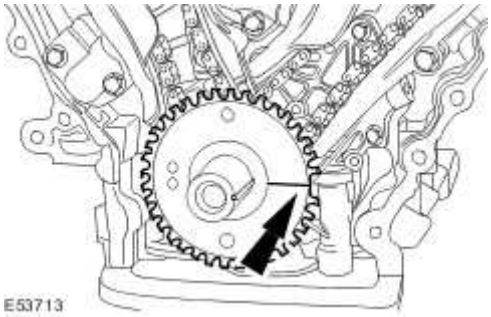

22 . Install the spark plugs.

- Tighten to 15 Nm.

23 . Install the engine front cover.
For additional information, refer to

www.JagDocs.com

Valve Cover LH (12.29.43)

Removal

1 . Remove the engine cover.

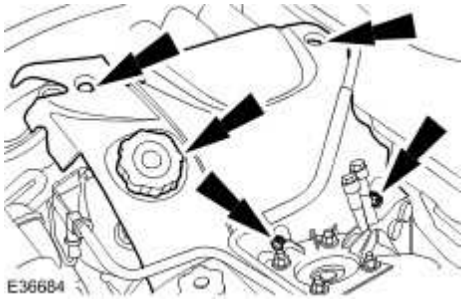

2 . Remove the left-hand on-plug coils. <<303-07A>>

3 . Detach the left-hand valve cover wiring harness.

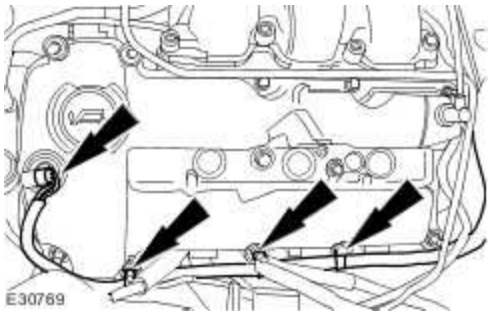

4 . Detach the engine breather tube.

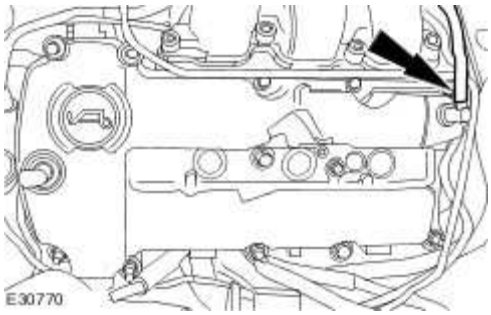

5 . Detach the engine wiring harness retaining bracket.

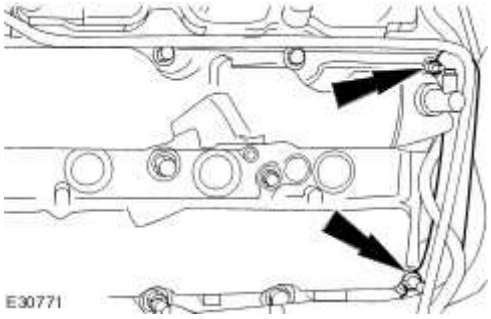

6 . Remove the valve cover.

- Remove and discard the gaskets.

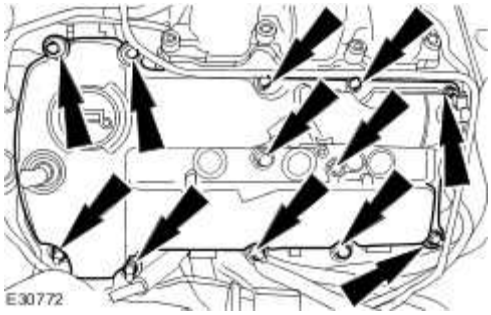

Installation

1 **NOTE:**

.

Apply a 5mm diameter bead of silicone gasket sealant or equivalent meeting Jaguar specification on the half round gaskets and apply an 8mm diameter on the two places where the cylinder head and front cover join.

To install, reverse the removal procedure.

- Install new valve cover gaskets.
- Complete the tightening sequence.
- Tighten to 10 Nm.

www.JagDocs.com

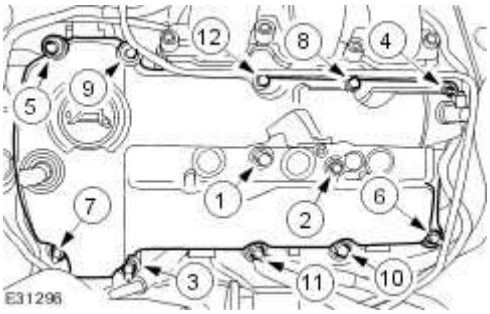
12
8
4
5
9
1
2
6
7
3
11
10
E31298

Valve Cover RH (12.29.44)

Removal

1 . Remove the intake manifold.
For additional information, refer to Intake Manifold (30.15.01)

2 . Remove the right-hand on-plug coils. <<303-07A>>

3 . Detach the right-hand valve cover wiring harness.

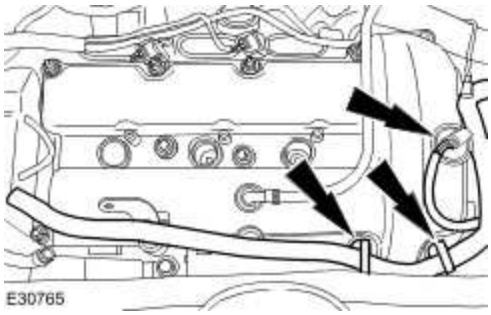

4 . Remove the intake manifold rear retaining bracket.

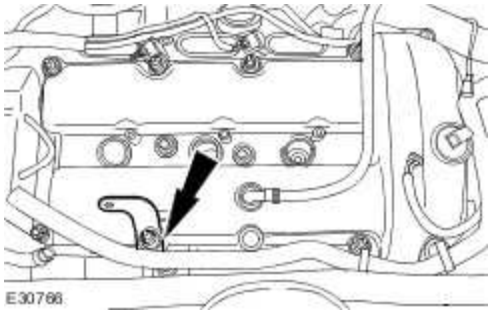

5 . Detach the engine wiring harness retaining bracket.

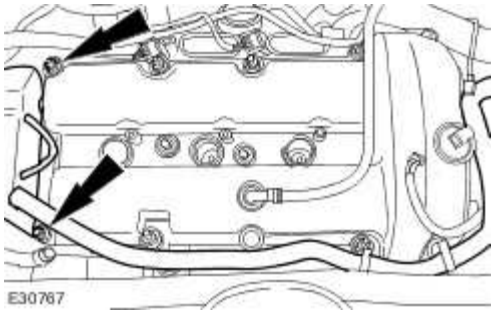

www.JagDocs.com

6 . Remove the valve cover.

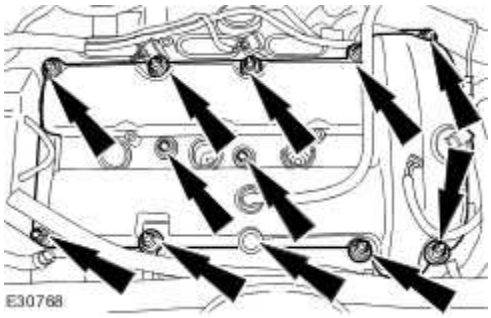

Installation

1 **NOTE:**

.

Apply a 5mm diameter bead of silicone gasket sealant or equivalent meeting Jaguar specification on the half round gaskets and apply an 8mm diameter on the two places where the cylinder head and front cover join.

To install, reverse the removal procedure.

- Install new valve cover gaskets.
- Complete the tightening sequence.
- Tighten to 10 Nm.

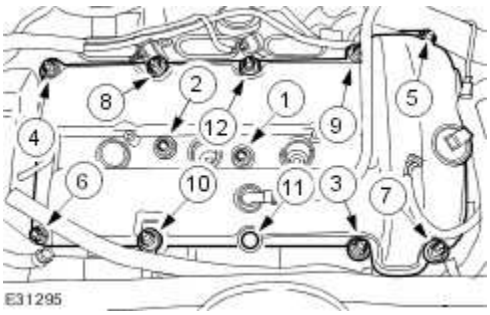

Piston (12.17.02)

Disassembly

1 **NOTE:**

- Mark the pistons to the original connecting rods to make sure correct installation in the same cylinders from which they were removed.

Remove the top compression ring.

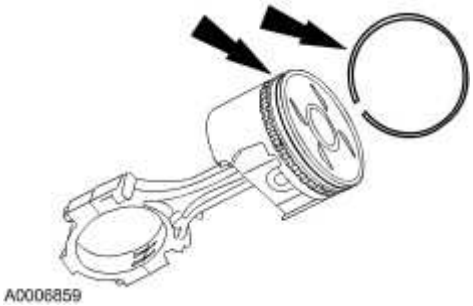

2 . Remove the second compression ring.

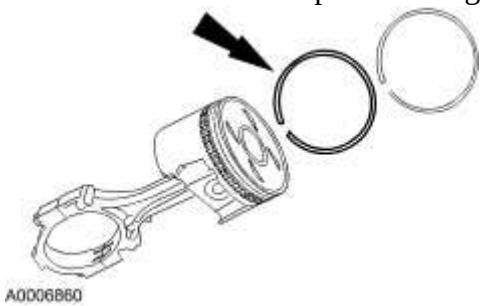

3 . Remove the first oil control ring.

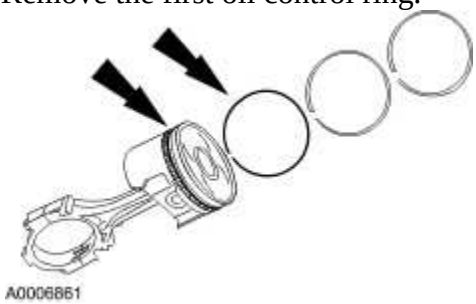

www.JagDocs.com

4 . Remove the oil control spacer ring.

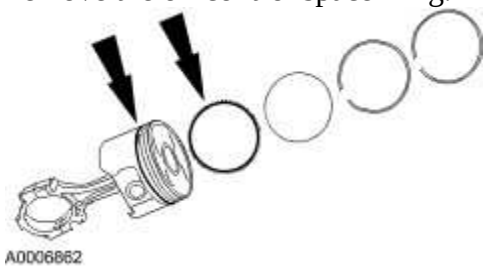

5 . Remove the second oil control ring.

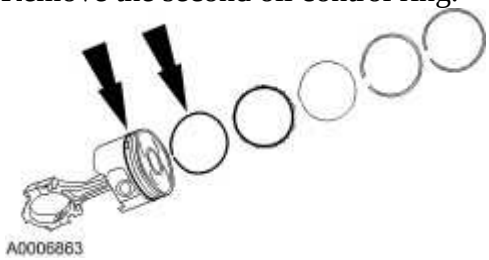

6 . **WARNING: The retaining rings have a tendency to spring out during removal. Cover the end of the pin bore with a hand or a rag when removing the retaining ring. Eye protection should be worn. Failure to follow these instructions may result in personal injury.**

Remove the retaining clips.

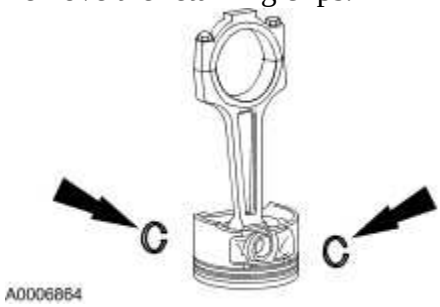

7 . Remove the piston pin and the connecting rod from the piston.

8. Clean and inspect the connecting rod and the piston. For additional information, refer to <<303-00>>.

Assembly

1 . Install the piston pin.

- Lubricate the piston pin and piston bore.

2 . Install the retaining clips.

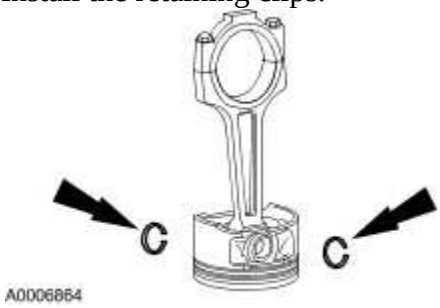

3 . Check the piston ring end gap. For additional information, refer to <<303-00>>.

4 . Lubricate the piston and piston rings.

5 . Install the second oil control ring.

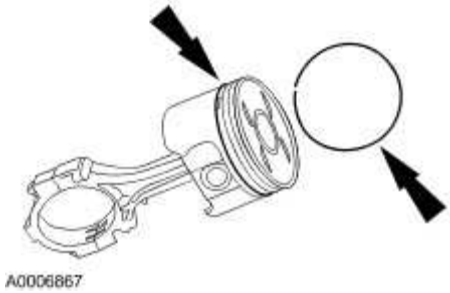

www.JagDocs.com

6 . Install the oil control spacer ring.

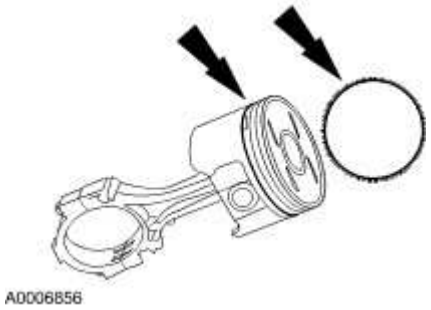

7 . Install the first oil control ring.

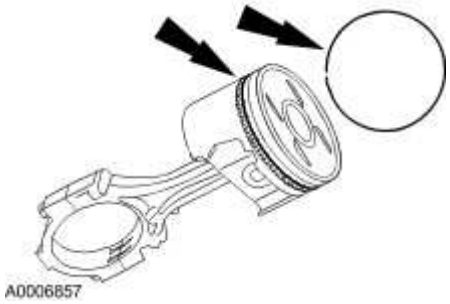

8 Install the second compression ring.

·
- The top of the second compression ring has a "0" marked on it. Position this side of the ring towards the top of the piston.

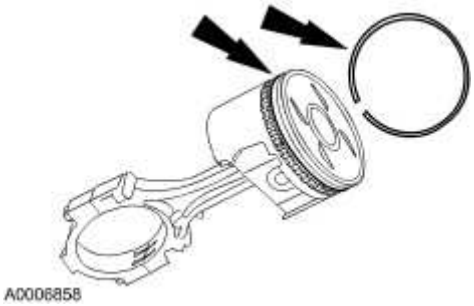

9 . Install the top compression ring.

- The top compression ring can be installed with either side up.

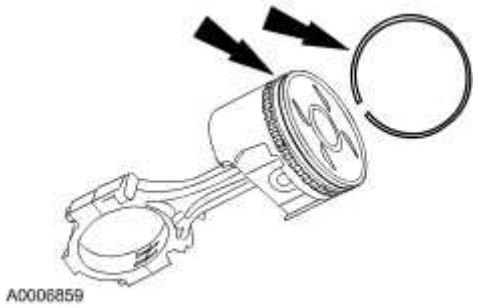

www.JagDocs.com

Cylinder Head (12.29.22)

Special Service Tools

Valve Spring Compressor
303-252

Disassembly

1. **CAUTION: If the cylinder head valve components are to be reused, mark position of the valve components to make sure they are reassembled in the same position.**

Remove the bucket tappet and shim assemblies.

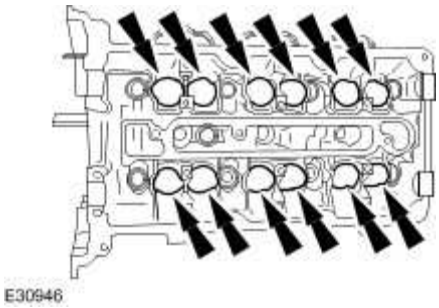

2 . Using the special tool, compress the valve springs.

- Remove the valve collets.

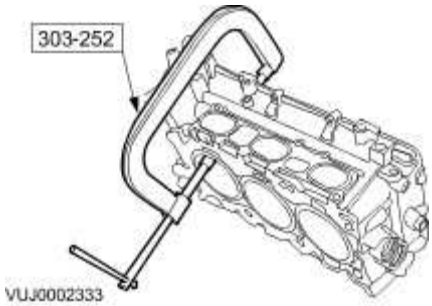

3 . Remove the valve spring retainers and valve springs.

1. Remove the valve spring retainers.
2. Remove the valve springs.
3. Remove the valve stem oil seals.

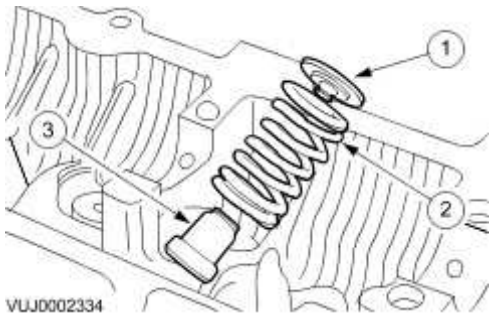

4 . Remove the valves from the cylinder heads.

4. Remove the intake valves.
5. Remove the exhaust valves.

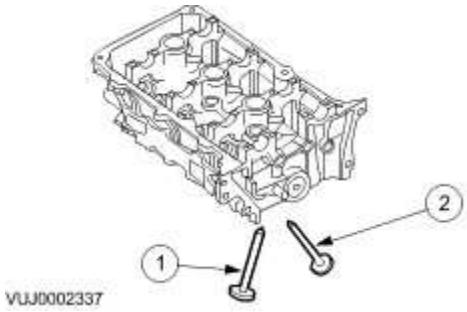

www.JagDocs.com

5 . Inspect the cylinder heads and the related components. <<303-00>>

6 . Remove the pipe plugs and alignment dowels as necessary to clean the cylinder heads.

Assembly

1 . **WARNING: Eye protection is required during use of compressed air. Failure to follow these instructions may result in personal injury.**

CAUTION: The cylinder head surface finish is measured in microns. For correct head gasket sealing, avoid any contact of finish with metallic objects.

Clean gasket material, dirt and foreign material from cylinder heads. Wash with a suitable soap and water solution and dry completely using compressed air if pipe plugs have been removed.

2 . Install the pipe plugs and alignment dowels to cylinder heads.

- Apply pipe sealant to plugs prior to installation.

3 . **NOTE:**

Lubricate the valve stems before assembly.

Install the valves into the cylinder heads.

6. Install the intake valves.

7. Install the exhaust valves.

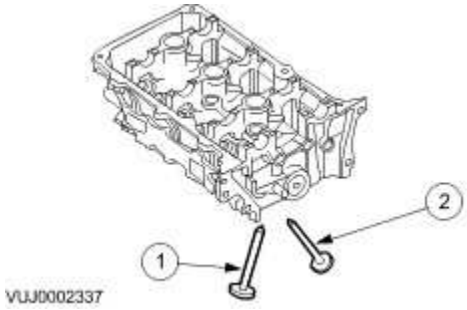

4 . Install the valve spring retainers and valve springs.

8. Install the valve stem oil seals.

9. Install the valve springs.

10. Install the valve spring retainers.

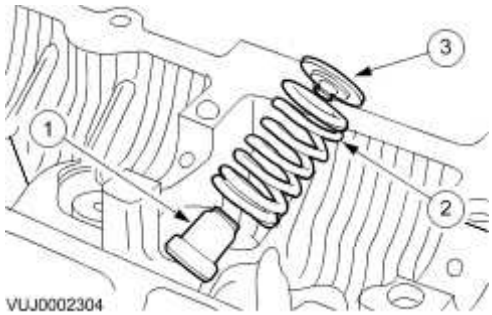

5 . Using the special tool, compress the valve springs.

- Install the valve collets.

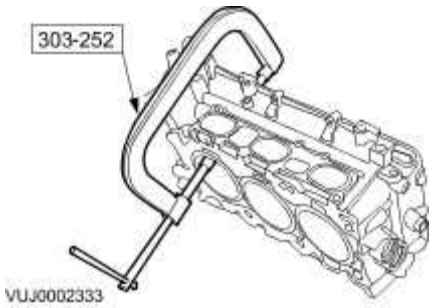

www.JagDocs.com

6 . Install the bucket tappet and shim assemblies.

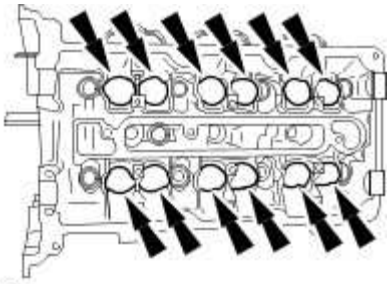

E30946

Piston (12.17.02)

Disassembly

1 **NOTE:**

· Mark the pistons to the original connecting rods to make sure correct installation in the same cylinders from which they were removed.

Remove the top compression ring.

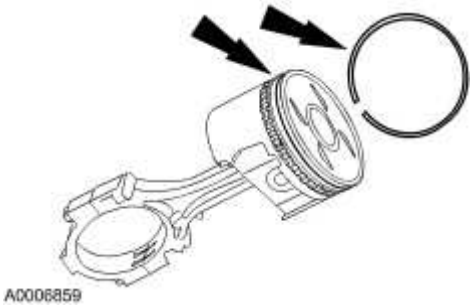

2 . Remove the second compression ring.

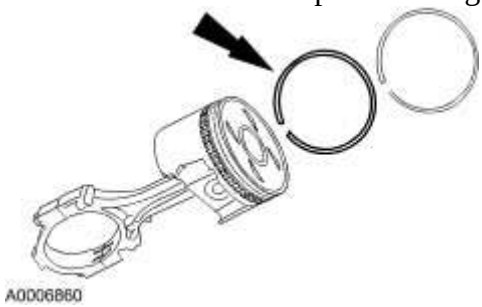

3 . Remove the first oil control ring.

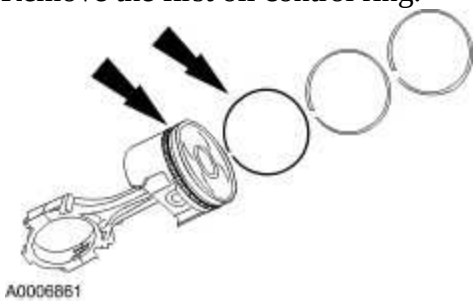

4 . Remove the oil control spacer ring.

www.JagDocs.com

5 . Remove the second oil control ring.

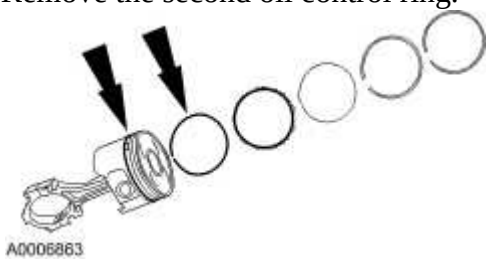

6 . **WARNING: The retaining rings have a tendency to spring out during removal. Cover the end of the pin bore with a hand or a rag when removing the retaining ring. Eye protection should be worn. Failure to follow these instructions may result in personal injury.**

Remove the retaining clips.

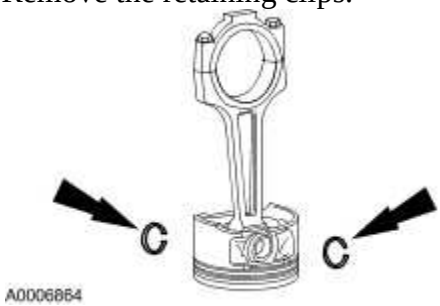

7 . Remove the piston pin and the connecting rod from the piston.

8 . Clean and inspect the connecting rod and the piston. For additional information, refer to <<303-00>>.

Assembly

1 . Install the piston pin.

- Lubricate the piston pin and piston bore.

2 . Install the retaining clips.

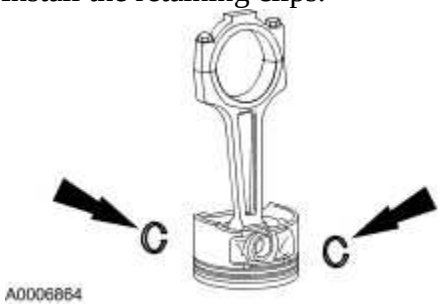

3 . Check the piston ring end gap. For additional information, refer to <<303-00>>.

4 . Lubricate the piston and piston rings.

5 . Install the second oil control ring.

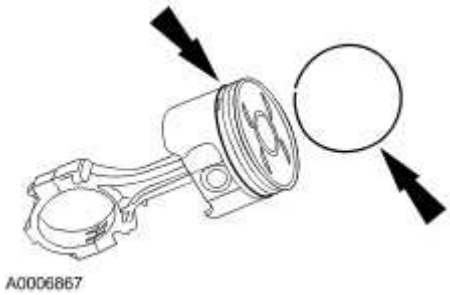

6 . Install the oil control spacer ring.

www.JagDocs.com

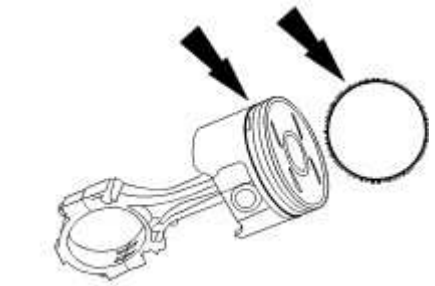

A0006856

7 . Install the first oil control ring.

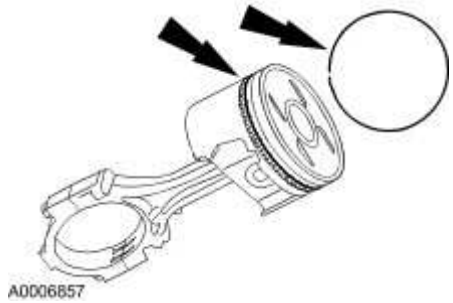

A0006857

8 Install the second compression ring.

· • The top of the second compression ring has a "0" marked on it. Position this side of the ring towards the top of the piston.

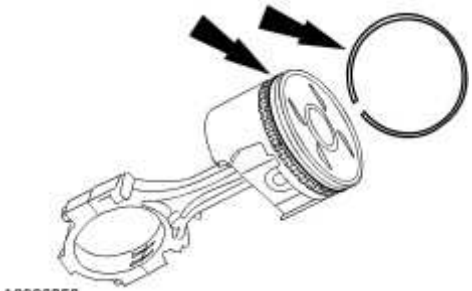

A0006858

9 . Install the top compression ring.

- The top compression ring can be installed with either side up.

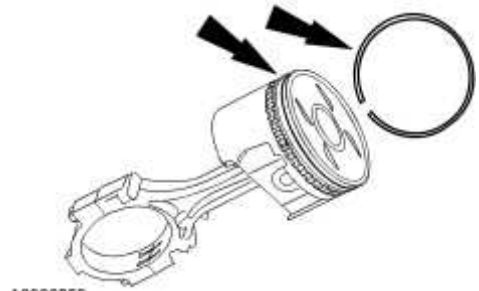

A0006859

Engine

Special Service Tools

Wrench Strap-Universal
303-D055

Crankshaft Rear Seal Installer
303-178

Crankshaft Rear Seal Installer Adapter Bolts
303-384

Piston Ring Compressor
303-372

www.JagDocs.com

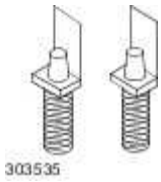

Cylinder Bore Protector
303-535

Crankshaft Pulley Installer
303-102

Crankshaft Pulley Installer
303-335/2

Assembly

1. **CAUTION: Use only plastic scraper when removing old gasket material.**

Clean all the mating faces and reusable parts thoroughly and check for damage.

- If gasket material remains on the cylinder head after cleaning, use a plastic tipped scraper to remove remaining material.

2 . **NOTE:**

Never remove pipe plugs or alignment dowels unless they are to be serviced.

Reseal oil passage blanking plugs, as necessary.

3 **NOTE:**
.

The main bearings are precision selective fit. For additional information, refer to <<303-00>>.

Install the upper crankshaft thrust washer.

- Align assembly tab on thrust bearing to machining spot face on cylinder block.

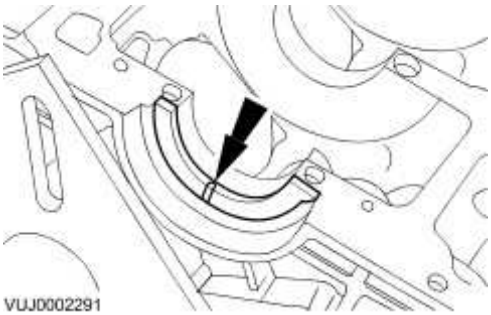

4 . Install the upper crankshaft main bearings.

- Lubricate the bearings and thrust washer.

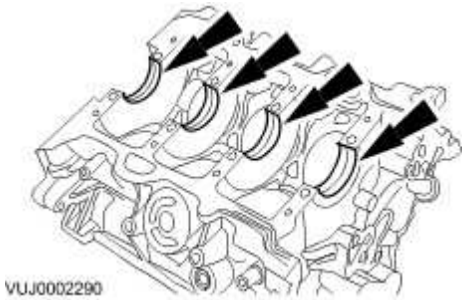

www.JagDocs.com

5 . **CAUTION: Avoid damage to any crankshaft journal bearing surfaces.**

Install the crankshaft.

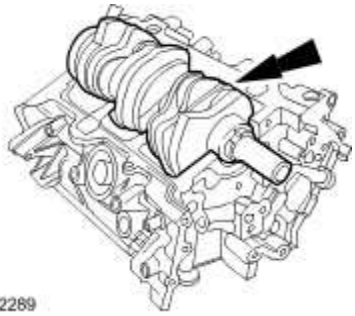

6 **NOTE:**
.

Push the crankshaft rearward prior to installation of upper thrust bearings.

NOTE:

Visually inspect the bearings to verify that the bearing oiling holes align with cylinder block oil feed holes.

Install the lower crankshaft bearings into the cylinder block.

1. Install the lower crankshaft thrust main bearing into lower cylinder block.
2. Install the lower crankshaft main bearings into lower cylinder block.

- Lubricate the bearings and thrust washer.

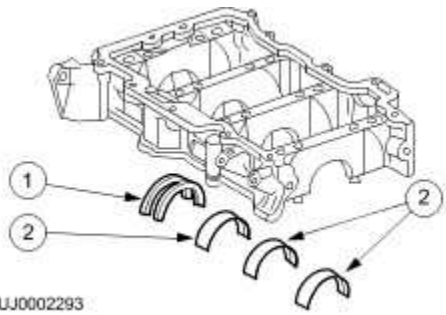

7 **NOTE:**

.

Sealant application must stop 6 mm from the rear crankshaft bore on each side.

NOTE:

Install lower cylinder block and tighten all bolts to specification within four minutes of applying sealer.

Apply a bead of sealant to the cylinder block housing.

- Use Silicone gasket and sealant.

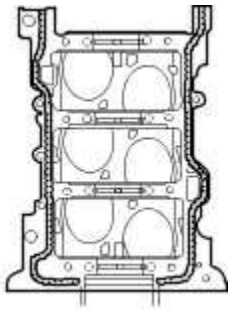

VUJ0002294

8

. **CAUTION: Make sure all dowels are fully seated into lower cylinder block prior to tightening the bolts.**

NOTE:

Before installing the bolts lightly seat the crankshaft forward.

NOTE:

Do not lubricate the lower cylinder block bolts.

NOTE:

Loosely install the lower cylinder block bolts.

www.JagDocs.com

NOTE:

Do not rotate crankshaft until all bolts are tightened to specification.

NOTE:

Bolts must be tightened within 4 minutes of applying sealant.

Install the lower cylinder block on the cylinder block.

- Push crankshaft rearward to seat the crankshaft thrust washer.

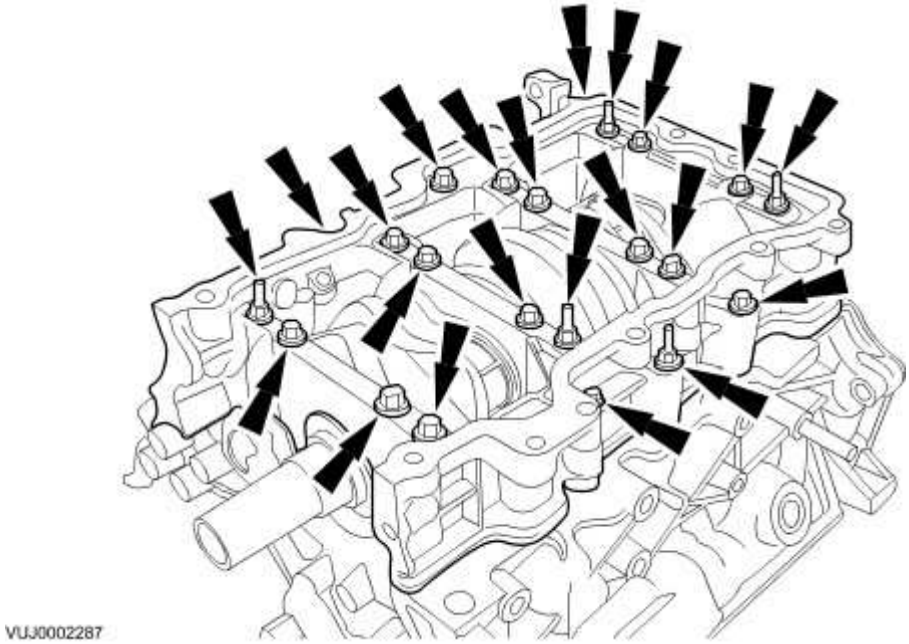

9 . **CAUTION: Bolts 1 through 16 are tighten-to-yield and must be replaced.**

NOTE:

Tighten the bolts in the indicated sequence in four stages.

Complete the tightening sequence.

- Stage 1: Bolts 1-8, 25 Nm

- Stage 2: Bolts 9-16, 40 Nm
- Stage 3: Bolts 1-16, 90°
- Stage 4: Bolts 17-22, 25 Nm
- Verify the crankshaft rotates freely.

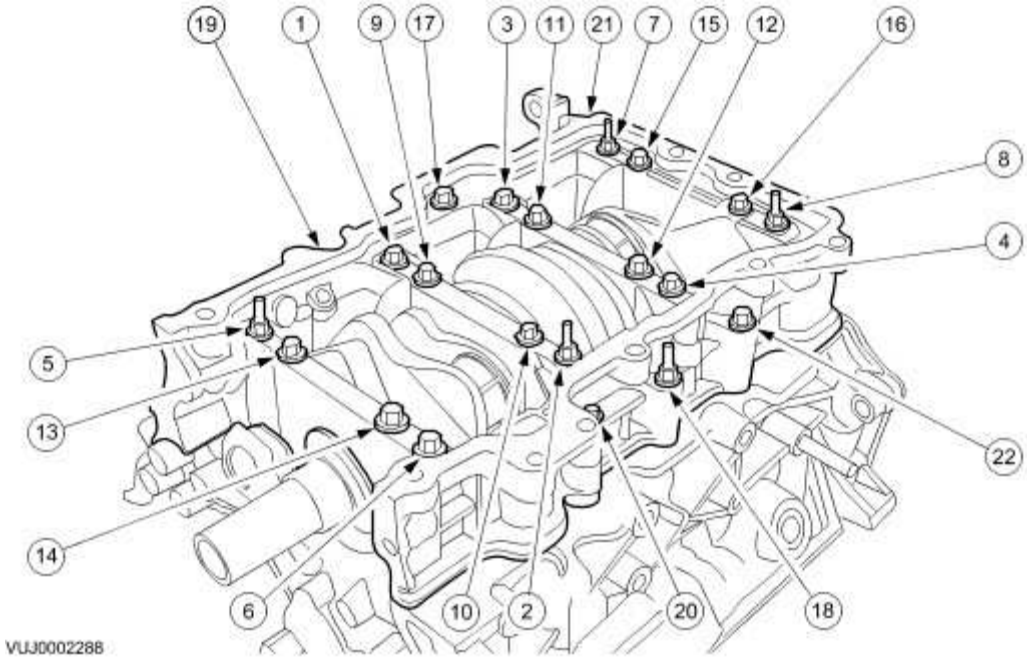

10 . Remove excess sealant which may squeeze out at the front cover sealing surface.

11 **NOTE:**

.

Alternate bolt tightening to correctly seat the crankshaft rear oil seal until it is flush with the cylinder block.

Using the special tools, install the crankshaft rear oil seal.

www.JagDocs.com

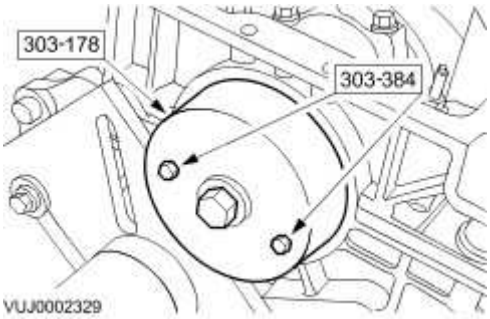

12. **CAUTION: Use appropriate protection to prevent damage to the crankshaft bearing journals and cylinder bore surfaces.**

Install special tools to the connecting rods.

- Position the crankshaft journal at the bottom of the stroke.

13. **NOTE:**

Make sure the piston ring gaps are positioned at different locations opposite the thrust side of the piston before installation.

NOTE:

Install pistons with arrow to front of engine.

Using the special tool compress the rings and install the piston and connecting rod.

- Lubricate all piston components.

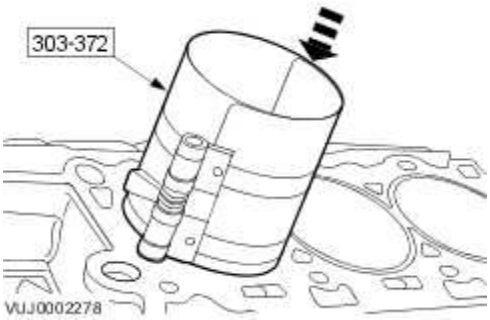

14 . **CAUTION: When assembling the connecting rods and connecting rod caps, it is imperative that bearing slots and tangs be located on the same side of the connecting rods.**

CAUTION: Connecting rod bolts are torqued to yield and must be replaced.

NOTE:

Remove the special tools from the connecting rods.

NOTE:

Tighten the bolts in the indicated sequence in three stages.

Position the connecting rod cap on the appropriate connecting rod.

- Stage 1: 23 Nm
- Stage 2: 43 Nm
- Stage 3: 105°

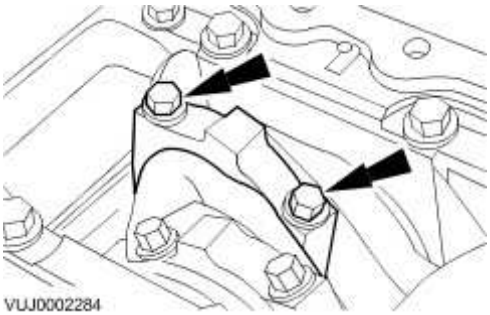

15 . Rotate the crankshaft to check correct operation.

www.JagDocs.com

16 . **CAUTION: Install the oil pump flush to the cylinder block for correct sealing.**

CAUTION: Rotate the inner rotor of the oil pump to align with the flats on the crankshaft before installation.

Install the oil pump.

- Install a new O-ring seal.
- Tighten to 10 Nm.

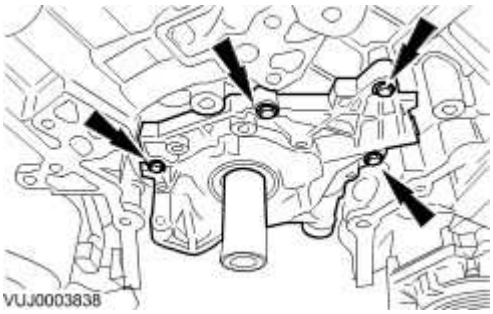

17 . **CAUTION: Oil pan baffle nuts are tightened to yield and must not be reused.**

NOTE:

Engine inverted for clarity.

NOTE:

Tighten the nuts in the indicated sequence in two stages.

Install the oil pan baffle.

- Stage 1: 5 Nm

- Stage 2: 45°

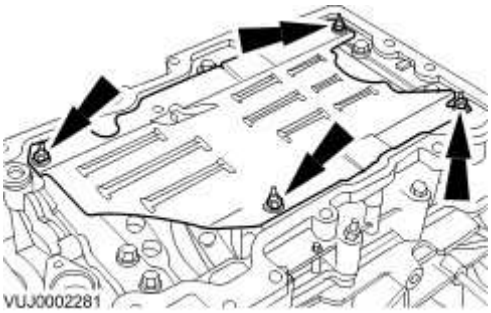

18 . **NOTE:**

Engine inverted for clarity.

Install the oil pump tube.

- Install a new O-ring seal.
- Tighten to 10 Nm.

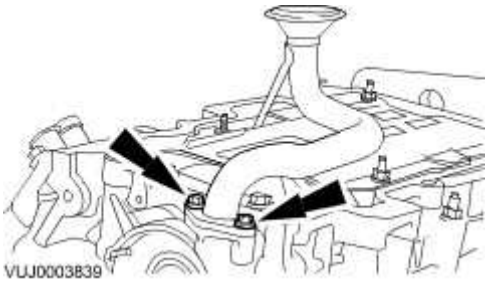

19 . **NOTE:**

Engine inverted for clarity.

Tighten to 5 Nm + 45°.

www.JagDocs.com

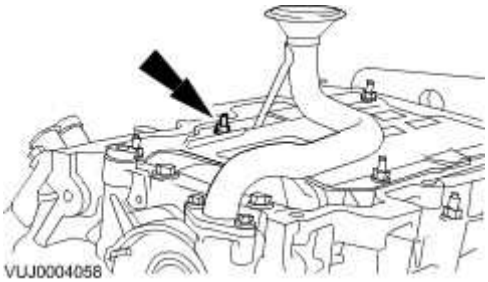

20 . Install the engine coolant housing.

- Install new O-ring seals.
- Tighten to 25 Nm.

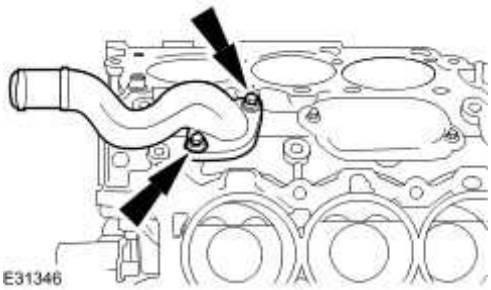

21 . Position the crankshaft.

- Turn the crankshaft until the key is in the 11 O'clock position.
- Remove the crankshaft pulley bolt and washer.

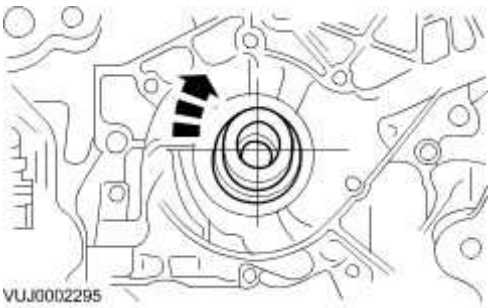

22 . Install a new cylinder head gasket (left-hand shown - right-hand similar).

3. Make sure the cylinder head dowels are correctly located.

4. Install a new cylinder head gasket.

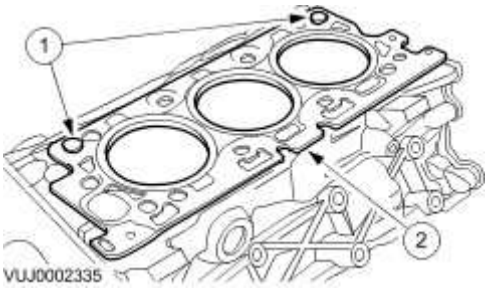

23 . **NOTE:**

Install the bolts in the indicated sequence.

Install the left-hand cylinder head.

- Tighten to 30 Nm.
- Tighten 90°.
- Loosen 360°.
- Tighten to 30 Nm.
- Tighten 90°.
- Tighten 90°.

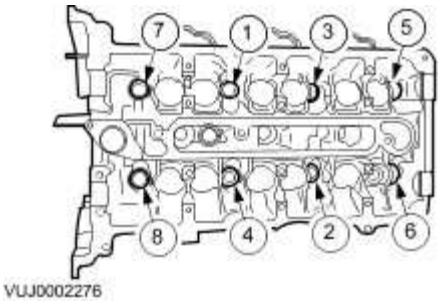

www.JagDocs.com

24 . **NOTE:**

Install the bolts in the indicated sequence.

Install the right-hand cylinder head.

- Tighten to 30 Nm.
- Tighten 90°.
- Loosen 360°.
- Tighten to 30 Nm.
- Tighten 90°.
- Tighten 90°.

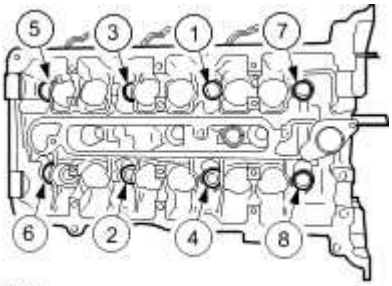

VUJ0002274

25 . Install the left-hand inlet camshaft.

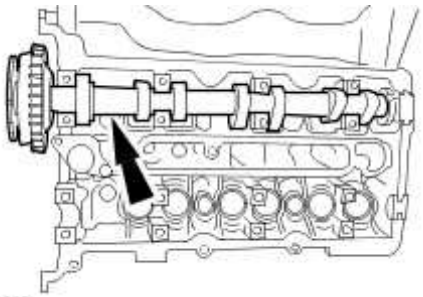
E36669

26 . **CAUTION: Do not install the cylinder head camshaft journal thrust caps until the camshaft journal caps are installed or damage to the thrust caps may occur.**

NOTE:

Lubricate the camshafts and the camshaft bearing caps with oil WSE-M2C908-A or equivalent meeting Jaguar specification prior to installation.

Install the left-hand inlet camshaft bearing cap bolts evenly.

- Install the inlet camshaft bearing caps.
- Tighten to 10 Nm.

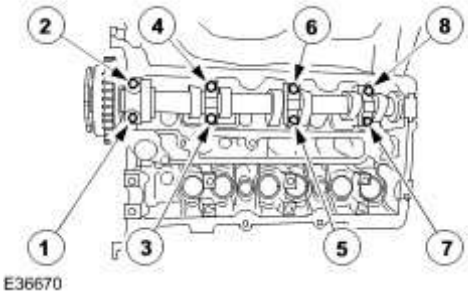

27 . Install the left-hand exhaust camshaft.

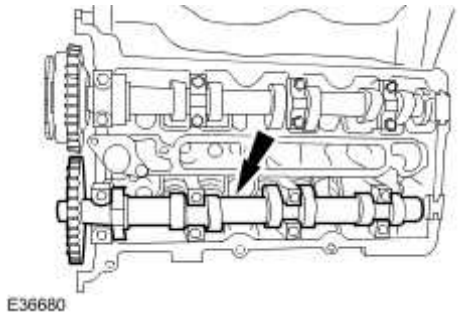

28 . **CAUTION: Do not install the cylinder head camshaft journal thrust caps until the camshaft journal caps are installed or damage to the thrust caps may occur.**

NOTE:

Lubricate the camshafts and the camshaft bearing caps with oil WSE-M2C908-A or equivalent meeting Jaguar specification prior to installation.

www.JagDocs.com

Install the left-hand exhaust camshaft bearing cap bolts evenly.

- Install the exhaust camshaft bearing caps.

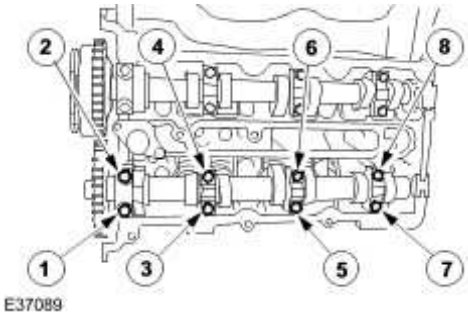

29 . Install the right-hand inlet camshaft.

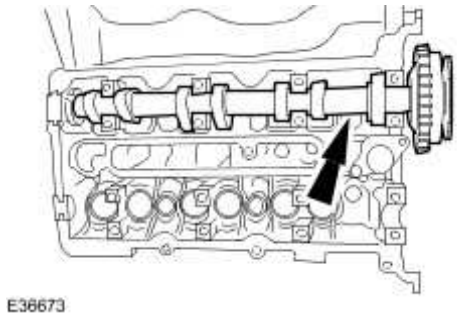

30 . Install the right-hand inlet camshaft bearing cap bolts evenly.

- Install the inlet camshaft bearing caps.

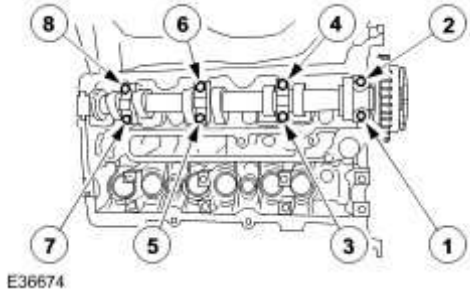

31 . Install the right-hand exhaust camshaft.

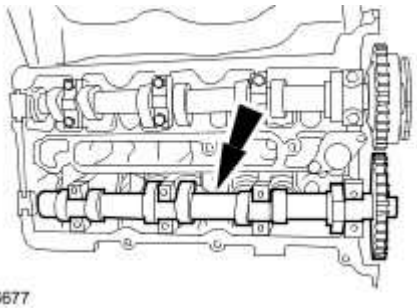

E36677

32 . Install the right-hand exhaust camshaft bearing cap bolts evenly.

- Install the exhaust camshaft bearing caps.

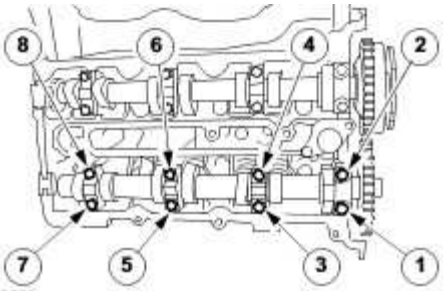

E36675

33 . Rotate the right-hand intake camshaft clockwise until the camshaft sprocket alignment mark is at the 5 O'clock position and rotate the right-hand exhaust camshaft sprocket clockwise until the camshaft sprocket alignment mark is at the 12 O'clock position.

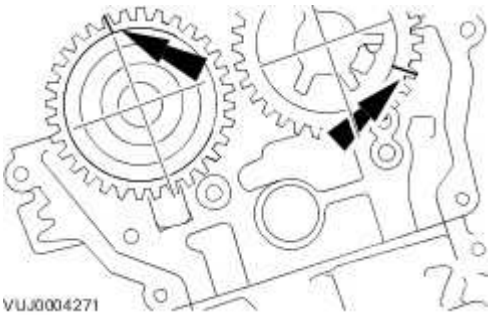

VUJ0004271

34 . Install the crankshaft inner sprocket.

www.JagDocs.com

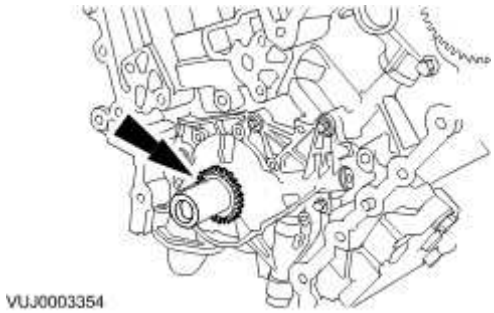

35 . Install the left-hand timing chain outer guide.

- Tighten the retaining bolts in the sequence shown in two stages.
- Stage 1: Tighten bolt 1 to 25 Nm.
- Stage 2: Tighten bolts 2 to 25 Nm.

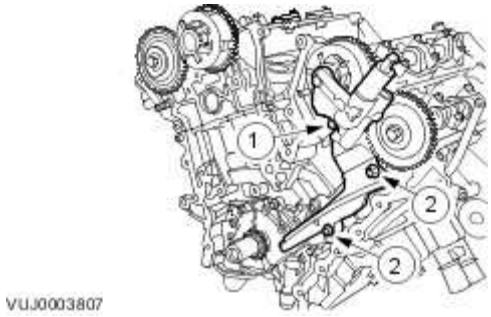

36 . **CAUTION: Make sure the crankshaft keyway is at the 11 O'clock position, the alignment mark on the left-hand intake camshaft sprocket is at the 9 O'clock position and the alignment mark on the left-hand exhaust camshaft sprocket is at the 2 O'clock position.**

CAUTION: Make sure the timing chain alignment marks are correctly positioned to the crankshaft sprocket and camshaft sprocket alignment marks.

CAUTION: Make sure the timing chain slack is on the tensioned side of the timing

chain.

Install the left-hand timing chain.

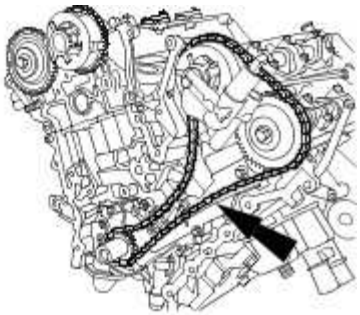

VUJ0003356

37 . Install the left-hand timing chain inner guide.

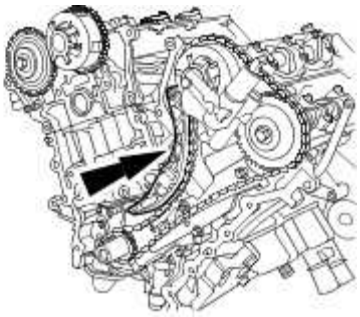

VUJ0003357

38 . **CAUTION: Use suitable protective covers on the vice jaws to protect the timing chain tensioner.**

Secure the left-hand timing chain tensioner in the vice jaws.

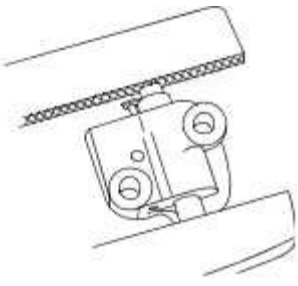

GA3138-B

39 . **CAUTION: During timing chain tensioner compression, do not release the ratchet stem until the timing chain tensioner piston is fully bottomed in its bore or damage to the**

www.JagDocs.com

ratchet stem will result.

Using a suitable tool, hold the left-hand timing chain tensioner ratchet lock mechanism away from the ratchet stem.

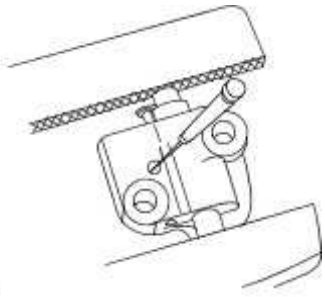

40 **NOTE:**
.

The timing chain tensioner piston should retract with minimal force. If binding occurs, reposition the timing chain tensioner to eliminate side loading.

Slowly compress the left-hand timing chain tensioner.

41 **NOTE:**
.

The retaining tool must remain in the timing chain tensioner until the timing chain tensioner is installed to the engine with the piston bottomed in the bore.

Using a suitable tool, retain the left-hand timing chain tensioner piston.

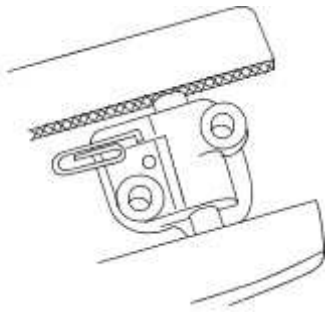

42 . Install the left-hand timing chain tensioner.

- Tighten to 25 Nm.

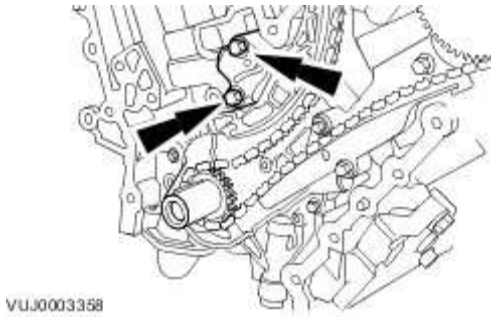

43 . Release the tension in the left-hand timing chain tensioner.

- Remove the retaining tool.

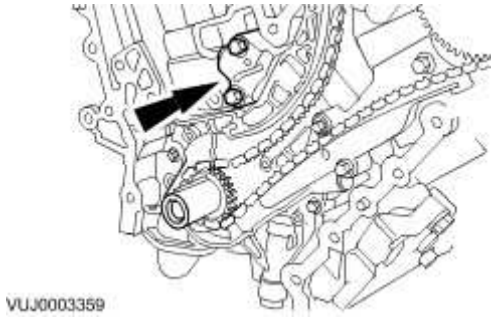

44 . Make sure the left-hand timing chain alignment marks have remained correctly positioned to the camshaft sprocket and crankshaft sprocket alignment marks.

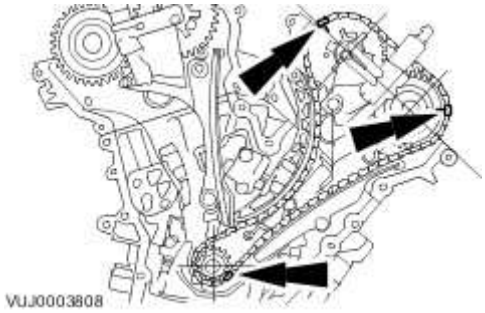

45 . **CAUTION: Do not rotate the crankshaft counterclockwise. The timing chains may bind causing engine damage.**

www.JagDocs.com

Install the crankshaft pulley retaining bolt and washer.

46 . **CAUTION: Do not rotate the crankshaft counterclockwise. The timing chains may bind causing engine damage.**

Rotate the crankshaft clockwise until the crankshaft keyway is at the 3 O'clock position.

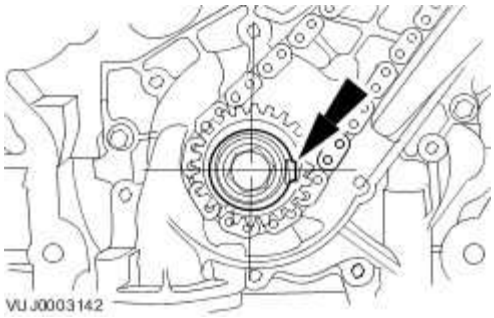

47 . **CAUTION: Do not rotate the crankshaft counterclockwise. The timing chains may bind causing engine damage.**

Remove the crankshaft pulley retaining bolt and washer.

48 . Install the crankshaft outer sprocket.

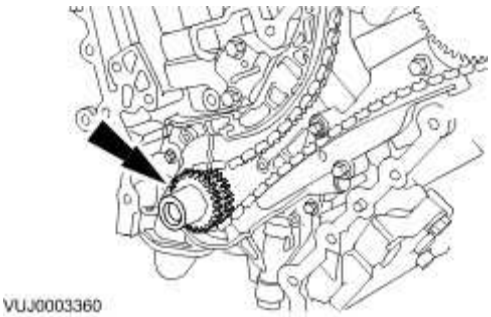

49 . Install the right-hand timing chain inner guide.

- Tighten the retaining bolts in the sequence shown in two stages.

- Stage 1: Tighten bolt 1 to 25 Nm.
- Stage 2: Tighten bolts 2 to 25 Nm.

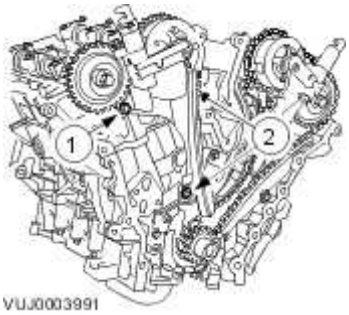

50. **CAUTION: Make sure the crankshaft keyway is at the 3 O'clock position, the alignment mark on the right-hand intake camshaft sprocket is at the 5 O'clock position and the alignment mark on the right-hand exhaust camshaft sprocket is at the 12 O'clock position.**

CAUTION: Make sure the timing chain alignment marks are correctly positioned to the crankshaft sprocket and camshaft sprocket alignment marks.

CAUTION: Make sure the timing chain slack is on the tensioned side of the timing chain.

Install the right-hand timing chain.

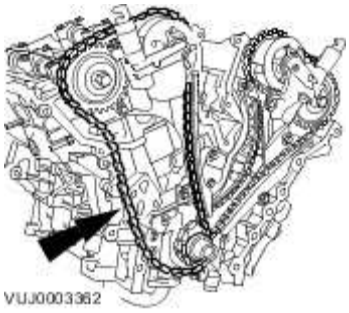

www.JagDocs.com

51 . Install the right-hand timing chain outer guide.

52 . **CAUTION: Use suitable protective covers on the vice jaws to protect the timing chain tensioner.**

Secure the right-hand timing chain tensioner in the vice jaws.

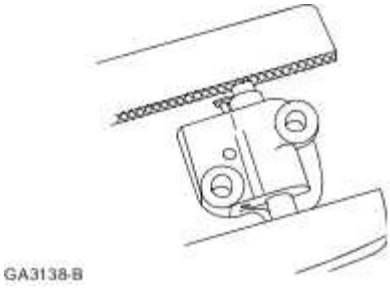

53 . **CAUTION: During timing chain tensioner compression, do not release the ratchet stem until the timing chain tensioner piston is fully bottomed in its bore or damage to the ratchet stem will result.**

Using a suitable tool, hold the right-hand timing chain tensioner ratchet lock mechanism away from the ratchet stem.

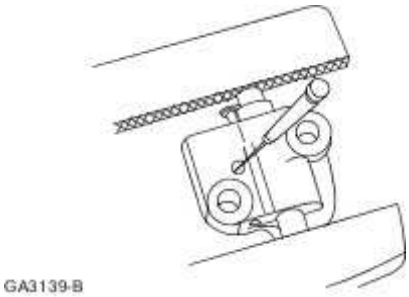

54 **NOTE:**

.

The timing chain tensioner piston should retract with minimal force. If binding occurs, reposition the timing chain tensioner to eliminate side loading.

Slowly compress the right-hand timing chain tensioner.

55 **NOTE:**

.

The retaining tool must remain in the timing chain tensioner until the timing chain tensioner is installed to the engine with the piston bottomed in the bore.

Using a suitable tool, retain the right-hand timing chain tensioner piston.

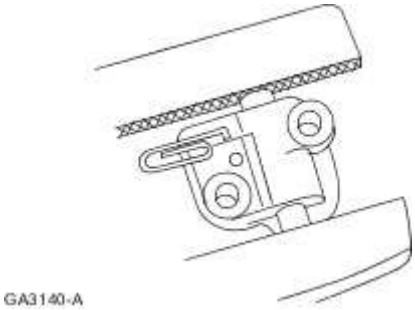

56 . Install the right-hand timing chain tensioner.

- Tighten to 25 Nm.

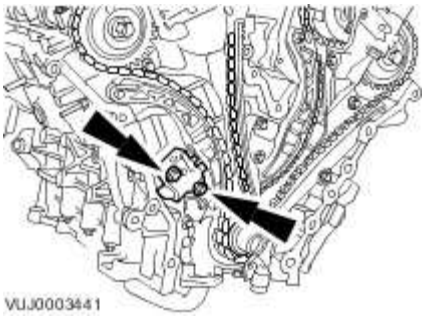

57 . Release the tension in the right-hand timing chain tensioner.

- Remove the retaining tool.

www.JagDocs.com

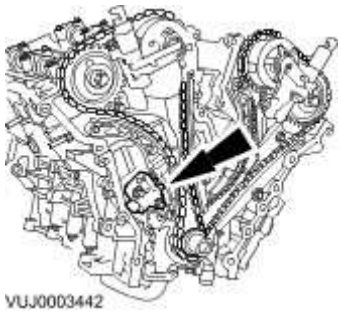

58. **CAUTION: Make sure the right-hand timing chain alignment marks have remained correctly positioned to the camshaft sprocket and crankshaft sprocket alignment marks.**

Make sure all the timing chain alignment marks are in the positions shown.

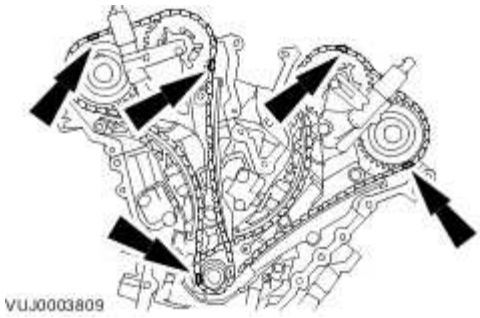

59. **CAUTION: Do not rotate the crankshaft counterclockwise. The timing chains may bind causing engine damage.**

Install the crankshaft pulley retaining bolt and washer.

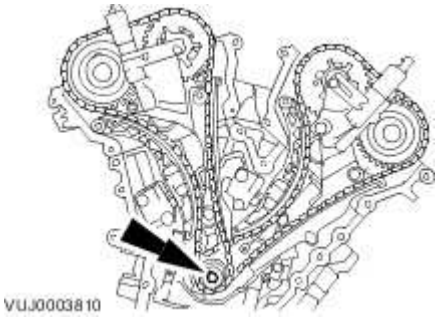

60 . **CAUTION: Do not rotate the crankshaft counterclockwise. The timing chains may bind causing engine damage.**

Check the engine valve timing is correctly set.

- Rotate the crankshaft two complete turns clockwise. Make sure the alignment marks on the camshaft sprockets are in the positions shown when the crankshaft keyway is at the 11 O'clock position.

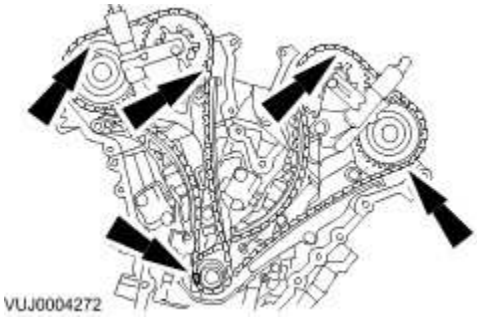

61 . **CAUTION: Do not rotate the crankshaft counterclockwise. The timing chains may bind causing engine damage.**

Remove the crankshaft pulley retaining bolt and washer.

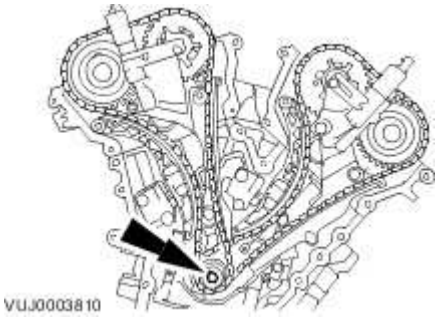

62 . **NOTE:**

Make sure the CKP sensor pulse wheel is correctly installed with the teeth pointing outwards.

Install the CKP sensor pulse wheel.

www.JagDocs.com

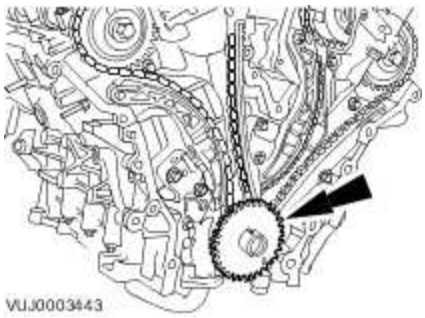

63 . Carry out a valve clearance check.
For additional information, refer to Valve Clearance Check (12.29.47)

64 . Install new front timing cover gaskets.

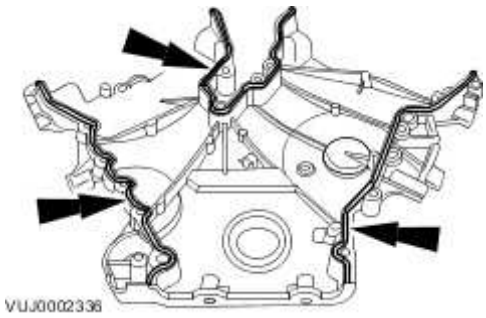

65 **NOTE:**
.

Prior to applying sealer clean the front cover to engine block and cylinder head sealing surfaces with metal surface cleaner.

Apply a 6 mm diameter dot of silicone sealant meeting Jaguar specification to the indicated locations.

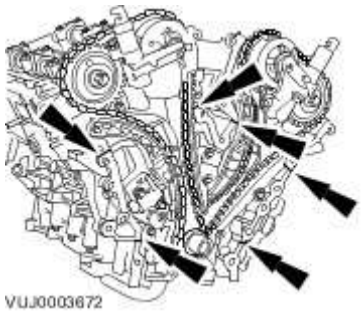

66 **NOTE:**

.

The engine front cover retaining bolts numbered 3,4,10 and 11 are longer than the retaining bolts numbered 1,2,5,6,7,8,9,12,13,15 and 16. The retaining bolt numbered 14 is a retaining bolt with a stud head.

Install the engine front cover, completing the tightening sequence.

- Tighten to 25 Nm.

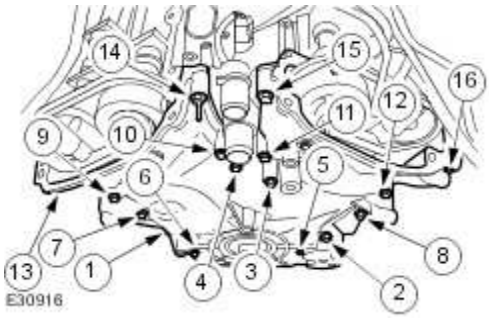

67 **NOTE:**

.

Apply an 10 mm dot of silicone gasket and sealant meeting Jaguar specification to the engine block and front cover mating surface.

NOTE:

Loosely install the oil pan to transmission housing bolts.

NOTE:

Tighten all oil pan retaining bolts within six minutes of applying the sealer.

Install the oil pan rear retaining bolts.

- Complete the tightening sequence.
- Tighten to 25 Nm.

www.JagDocs.com

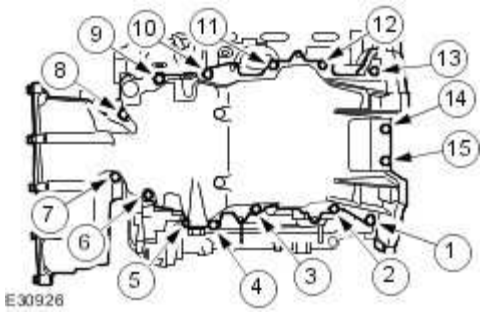

68 . **NOTE:**

Right-hand shown, left-hand similar.

Install the valve covers.

- Complete the tightening sequence.
- Tighten to 10 Nm.

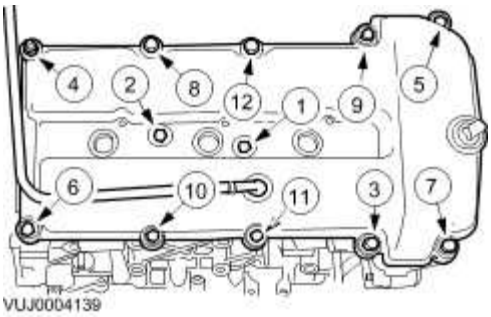

69 . Install the left-hand idler pulley.

- Tighten to 25 Nm.

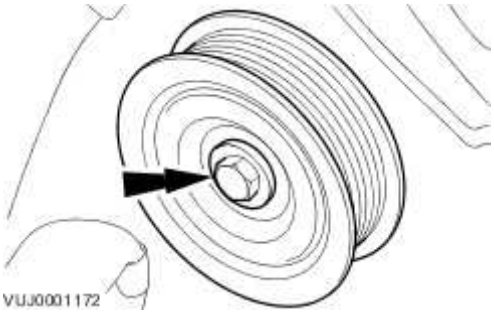

70 Using the special tools, install the crankshaft pulley.

.

- Coat the crankshaft pulley keyway with silicone gasket sealant meeting Jaguar specification.

- Coat the sealing surfaces of the crankshaft pulley with silicone gasket sealant meeting Jaguar specification.

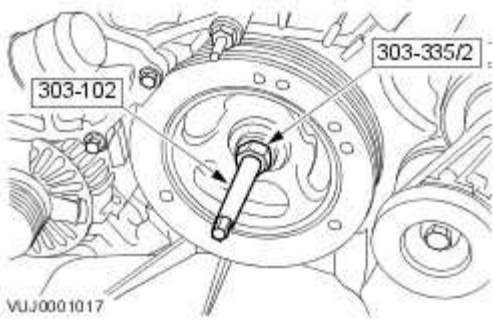

71 . Install the special tool, install the crankshaft pulley retaining bolt.

- Torque to 120 Nm.

- Loosen the bolt (minimum 1 turn).

- Torque to 50 Nm.

- Angle Torque to 90°.

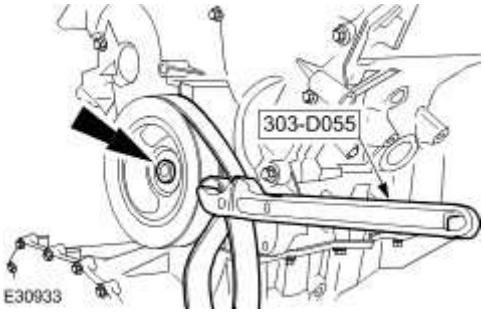

72 . Install the accessory drive belt tensioner.

www.JagDocs.com

- Tighten 45 Nm.

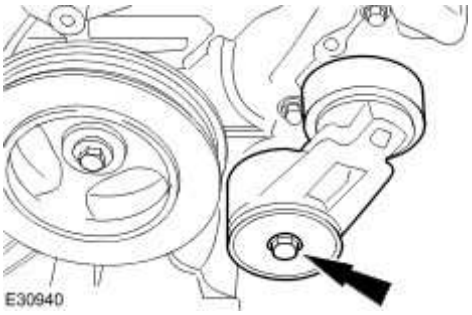

73 . Install the water pump and coolant hose assembly.

5. Attach the hose.

6. Install the water pump and coolant hose assembly.

- Tighten to 25 Nm.

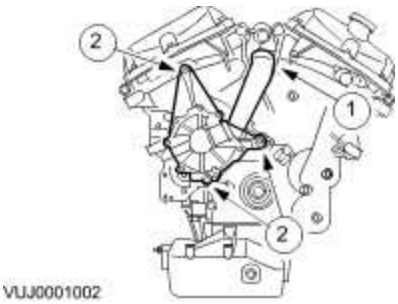

74 . **NOTE:**

Install new coolant crossover O-ring seals.

Install the coolant crossover tube.

- Install new O-ring seals.

- Tighten to 10 Nm.

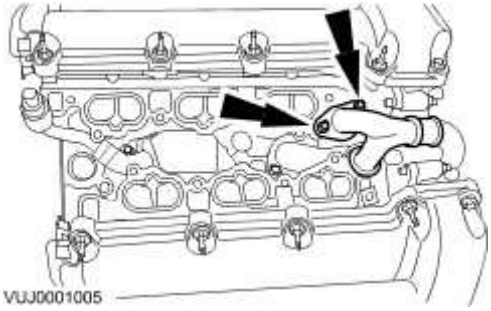

75 . Install the engine oil pressure and oil temperature sensors.

- Tighten to 14 Nm.

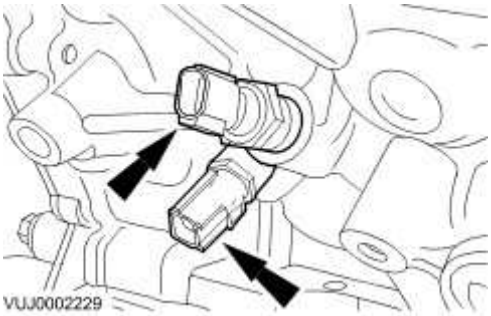

76 . **NOTE:**

Install new O-ring seals.

Install the oil filter housing assembly.

- Tighten all oil filter housing retaining bolts to 25 Nm.

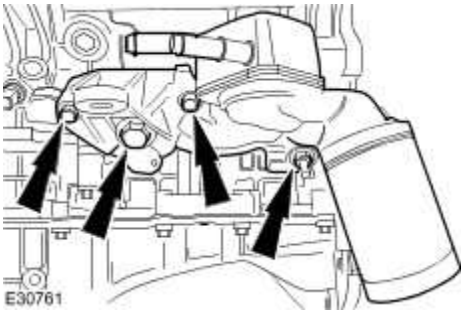

www.JagDocs.com

77 . Tighten the oil filter housing assembly retaining bolts in sequence.

- Tighten to 150 Nm.
- Tighten to 40 Nm + 90 degrees.

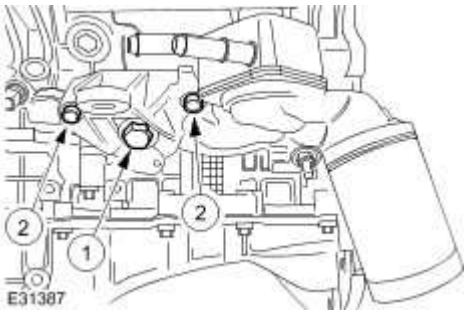

78 . Install the engine rear backing plate.

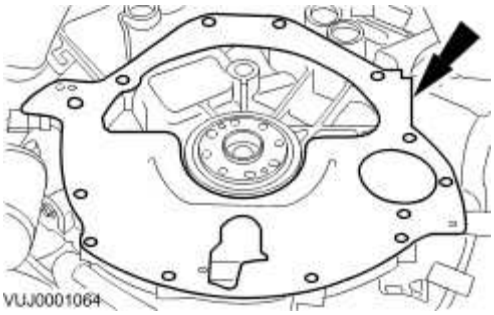

79 . Install the flexplate.

- Prevent the engine from rotating.
- Tighten to 80 Nm.

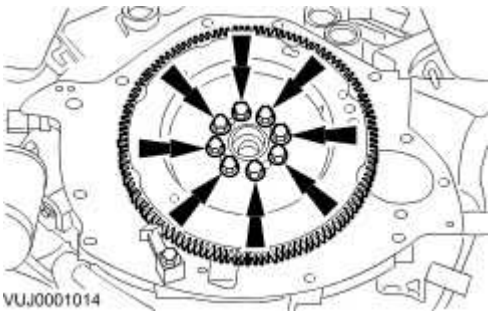

80 . **NOTE:**

Right-hand shown, left-hand similar.

Install the exhaust manifolds.

- Tighten to 25 Nm.

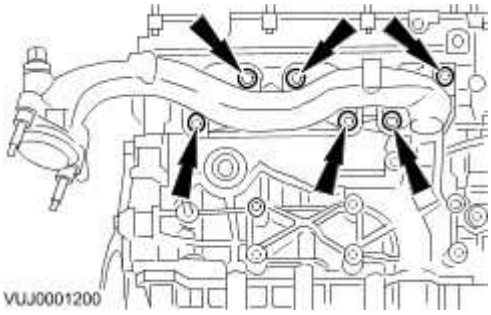

81 . **NOTE:**

Right-hand shown, left-hand similar.

Install the exhaust manifold heat shields.

- Tighten to 10 Nm.

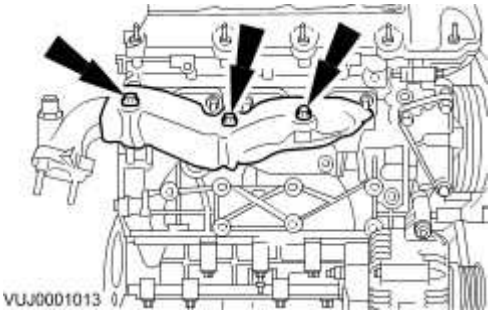

82 . **NOTE:**

Install a new O-ring seal.

Install the oil level indicator tube.

www.JagDocs.com

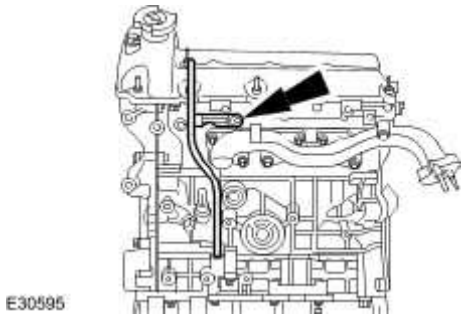

83 . Install the A/C compressor mounting bracket.

- Tighten to 25 Nm.

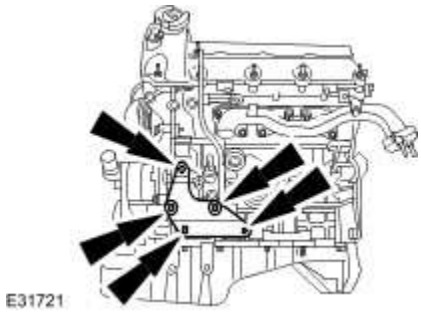

84 . Install the power steering pump.

- Tighten to 25 Nm.

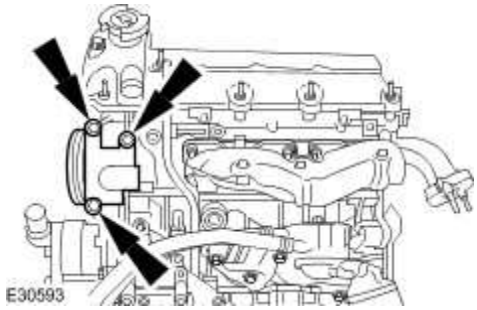

85 . Install the generator.

- Tighten to 48 Nm.

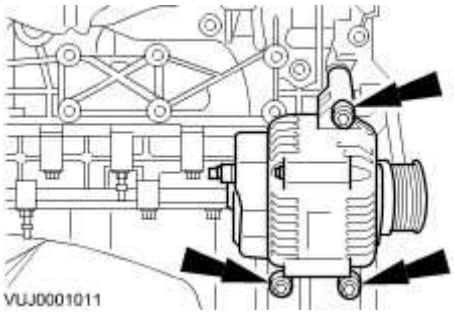

86 . Install the right-hand idler pulley.

- Tighten to 25 Nm.

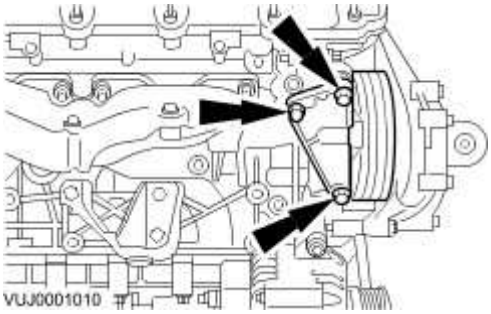

87 . Install the accessory drive belt.

- Use a 3/8 inch drive bar to release the accessory drive belt tensioner.
- Install the accessory drive belt.

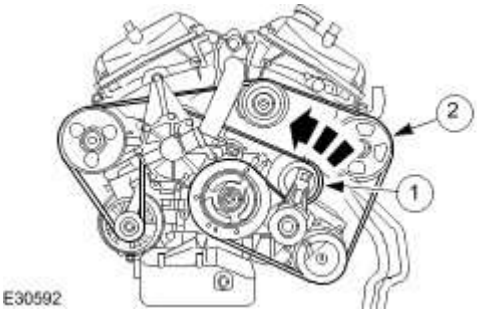

88 . Install the left-hand knock sensor.

www.JagDocs.com

- Tighten to 25 Nm.

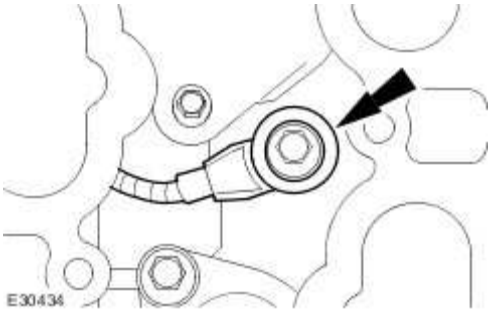

89 . Install new lower intake manifold gaskets.

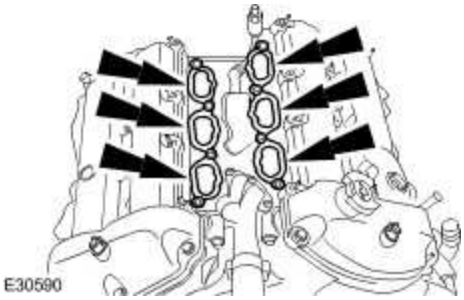

90 . Install the lower intake manifold and injector supply manifold.

- Tighten to 10 Nm.

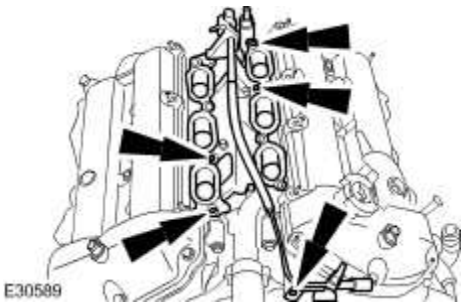

91 . Install the ignition coils.

- Tighten to 10 Nm.

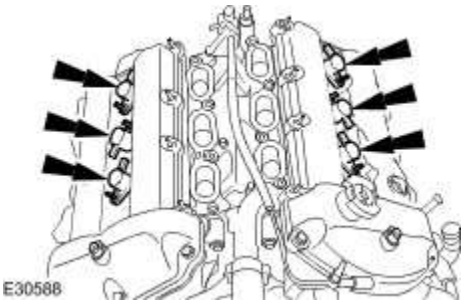

92 . Install the engine wiring harness.

- Tighten to 10 Nm.

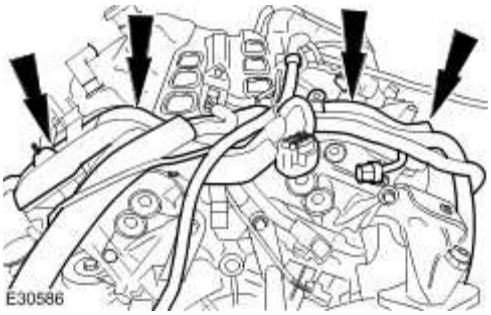

93 . Connect the engine wiring harness electrical connectors.

94 . Connect the left-hand ignition coils.

www.JagDocs.com

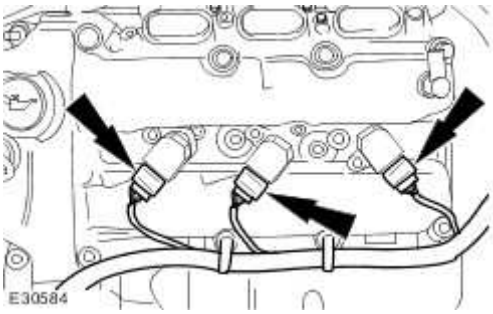

95 . Connect the left-hand camshaft position sensor.

96 . Attach the engine harness.

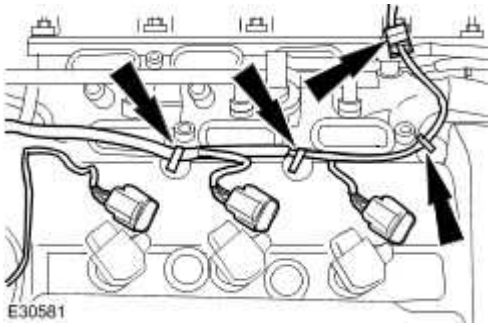

97 . Connect the right-hand ignition coils.

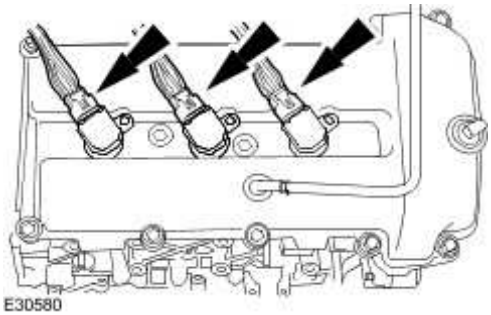

98 . Attach the engine harness.

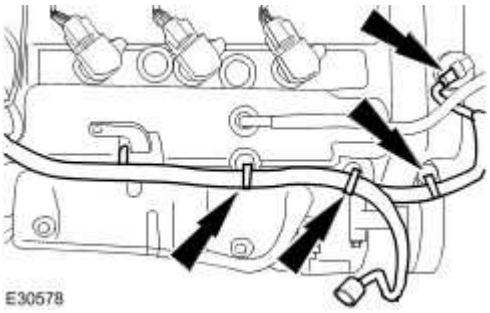

99 . Attach the engine harness retaining bracket.

100 . Disconnect the right-hand camshaft position sensor.

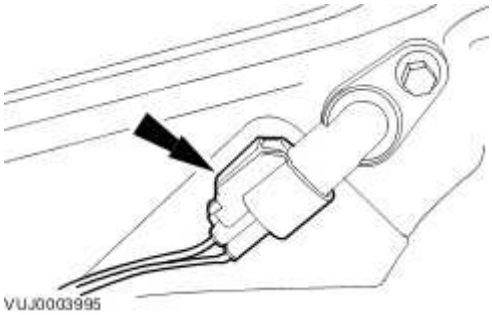

101 . Install the rear knock sensor.

7. Attach the knock sensor wiring harness.

8. Install the rear knock sensor.

- Tighten to 25 Nm.

www.JagDocs.com

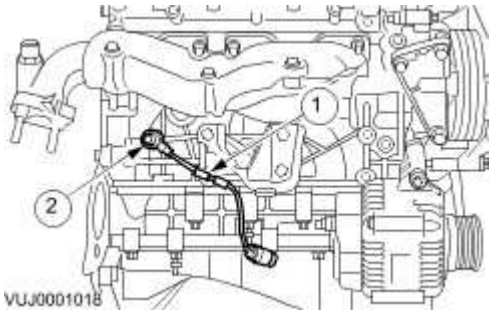

102 . Attach engine harness.

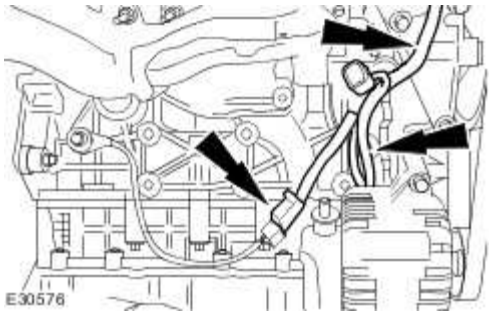

103 . Attach the engine harness.

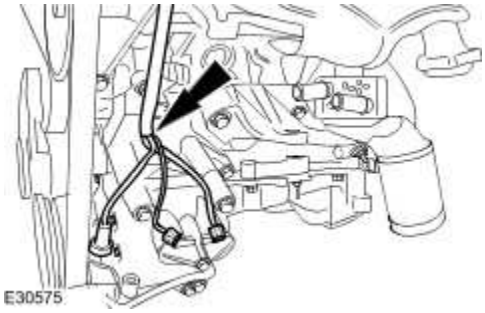

104 . Connect the electrical connectors.

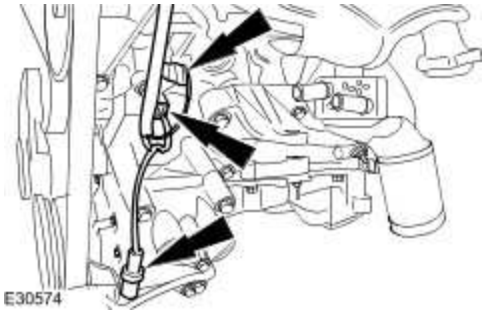

105 . Install the coolant hose.

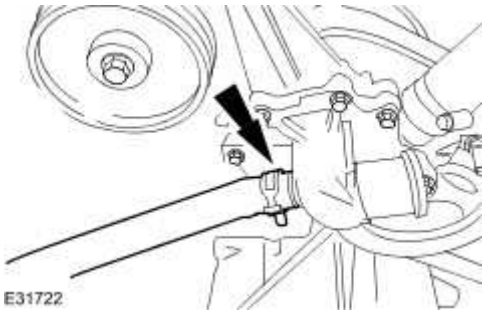

106 . Install the coolant hose.

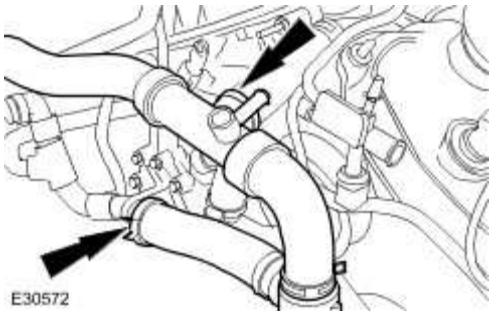

107 . Connect the oil cooler coolant hoses.

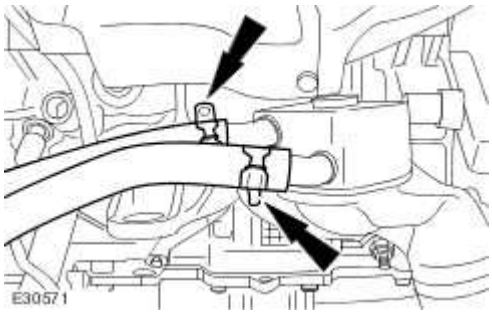

108 . Install the evaporative emission purge valve hose.

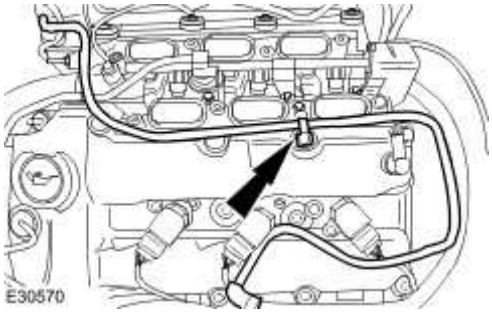

www.JagDocs.com

109 . Install new intake manifold gaskets.

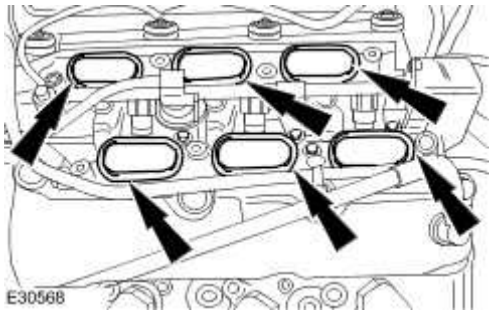

110 **NOTE:**

.

The intake manifold retaining bolts in position 1,2,3 and are longer than the retaining bolts in position 4,5 and 6.

Install the intake manifold.

- Tighten to 10 Nm.

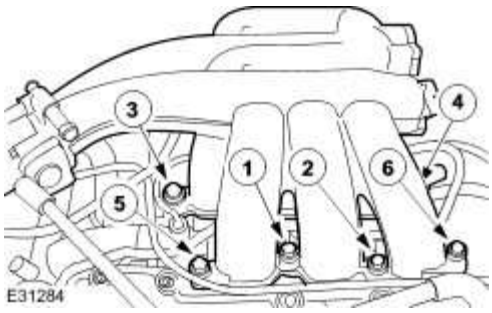

111 . Connect the evaporative emission canister purge valve transfer pipe.

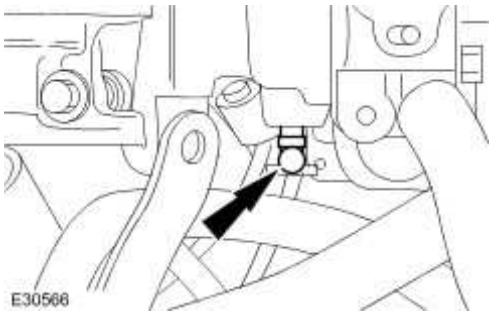

112 . Attach the intake manifold rear retaining bracket.

- Tighten to 10 Nm.

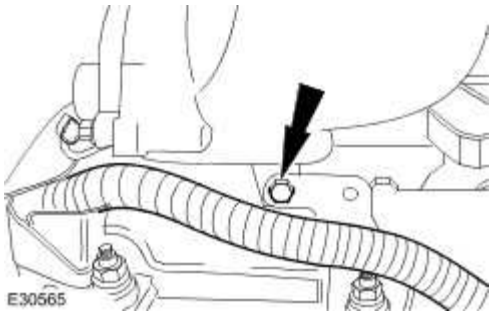

113 . Attach the engine wiring harness from the intake manifold rear retaining bracket.

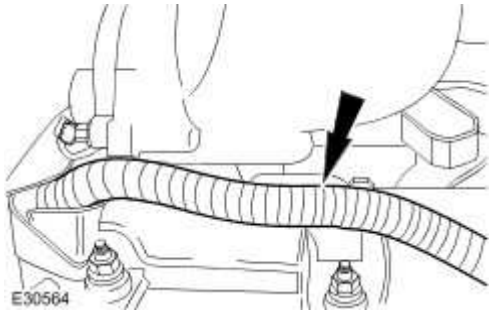

114 . Attach the intake manifold front retaining bracket.

- Tighten to 10 Nm.

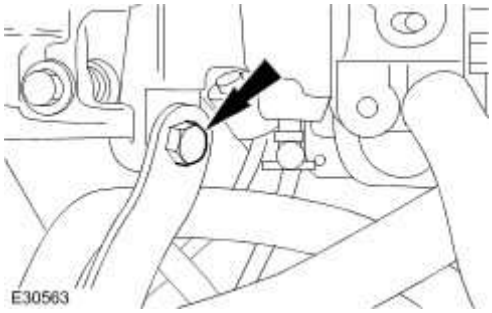

115 . Install the fuel pressure sensor bracket.

- Tighten to 10 Nm.

www.JagDocs.com

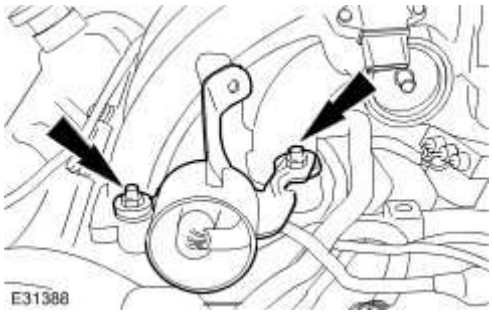

116 . Tighten to 7 Nm.

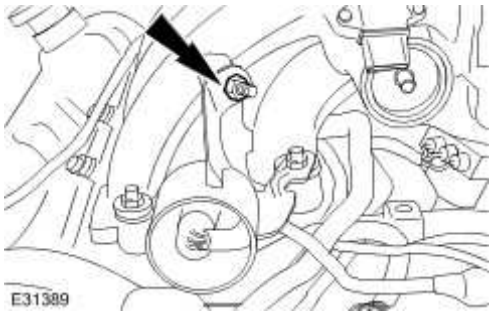

117 . Connect the fuel pressure sensor vacuum hose.

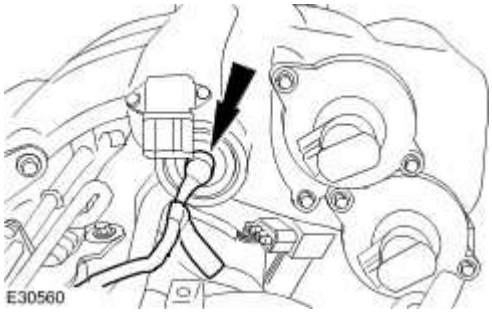

118 . Connect the electrical connectors.

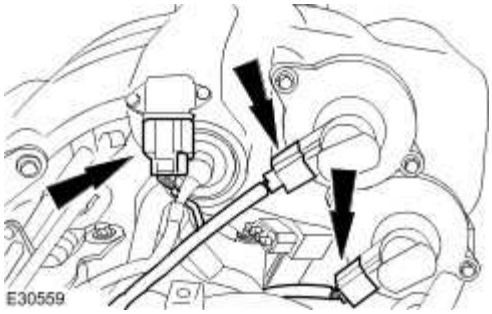

119 . Connect the positive crankcase ventilation (PCV) hose.

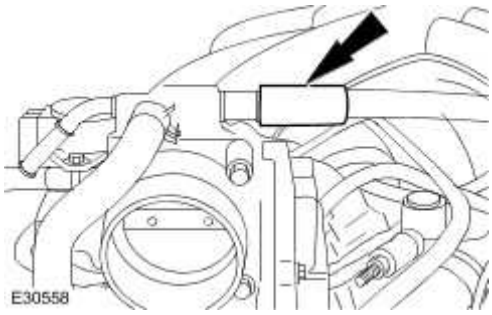

120 . Connect the throttle position sensor electrical connector.

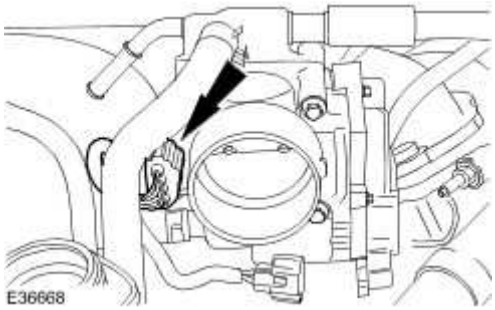

121 . Connect the throttle motor electrical connector.

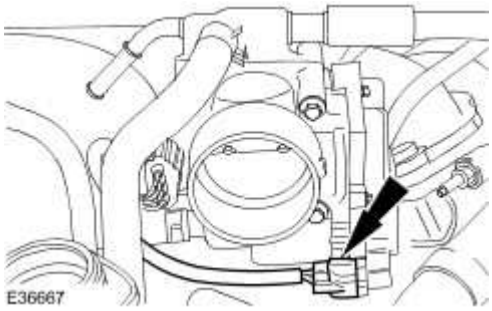

www.JagDocs.com

Specifications

Lubricants, Fluids, Sealers and Adhesives

Description	Specification
Engine oil, SAE 5W-30	WSS-M2C-912A
Engine assembly lubricant	SQM-2C9003 AA EP90
Sealant	WSS M4G 320-A3
Hose assembly surfactant	ESE-M99 B144-B

Capacities

Description	Liters
Engine oil, initial fill	6.8
Engine oil, service fill with oil filter change	6.5

Cylinder Head

Item	Specification
Maximum permitted cylinder head warp (mm)	0.125

Torque Specifications

Description	Nm	lb-ft	lb-in
Accessory drive belt idler pulley retaining bolt	25	18	-
Accessory drivebelt tensioner retaining bolt	40	30	-
Air conditioning compressor retaining bolts	25	18	-
Air conditioning compressor mounting bracket retaining bolts	25	18	-
A/C manifold retaining bolt	20	15	-
Camshaft bearing caps retaining bolts	10	7	-
Camshaft position sensor retaining bolt	7	-	62

Connecting rod retaining bolts	A	-	-
Crankshaft pulley retaining bolt	377	278	-
Crankshaft position sensor retaining bolt	10	7	-
Cylinder head retaining bolts	A	-	-
Drive plate retaining bolts	A	-	-
Engine front cover retaining bolts	13	10	-
Engine mounting bracket retaining bolts	40 (+/- 15%)	30 (+/- 15%)	-
Engine mount retaining nuts to crossmember	55 (+/- 15%)	40 (+/- 15%)	-
Engine mount bracket to engine mount retaining nuts	63 (+/- 15%)	46 (+/- 15%)	-
Engine wiring harness retaining bracket	10	7	-
Exhaust manifold heat shield retaining bolts	3	-	27
Exhaust manifold heat shield retaining bolt to cylinder head	50	37	-
Exhaust manifold retaining bolts	20	15	-
Flexiplate retaining bolts	A	-	-
Front engine cover retaining bolts	12	9	-
Generator lower retaining bolt	40	30	-
Generator upper retaining bolt	21	15	-
Generator lower retaining bolt	40	30	-
Generator mounting bracket retaining bolts	45	33	-
Ignition coil retaining bolts	5	4	-
Intake manifold assembly retaining bolts	22	16	-
Intake camshaft sprocket retaining bolt			
Stage 1	20	15	-
Stage 2	Further 90 degrees	Further 90 degrees	-
Knock sensor retaining nuts	20	15	-
Lower cylinder block to the upper cylinder block retaining bolts	A	-	-
Oil cooler to oil filter housing retaining bolt	20	15	-
Oil filter housing retaining bolts	21	15	-
Oil level indicator tube retaining nut	6	-	51
Oil pan retaining bolts	12	9	-
Oil pump to engine block retaining bolts	12	9	-
Oil pan drain plug	25	18	-
Oil separator retaining bolts	12	9	-
Oil filter	18	13	-
Piston cooling jet retaining bolt	9	-	80

www.JagDocs.com

Power steering bracket bracket retaining bolts	25	18	-
Power steering pump retaining bolts	25	18	-
Primary timing chain tensioner retaining bolts	12	9	-
Primary timing chain tensioner guide retaining bolts	12	9	-
Secondary timing chain tensioner retaining bolts	12	9	-
Spark plugs	27	20	-
Starter motor retaining bolts	45	33	-
Thermostat housing retaining bolts	10	7	-
Water pump retaining bolts	12	9	-
Water pump pulley retaining bolts	A	-	-
Upper oil pan retaining bolts	21	15	-
Valve cover retaining bolts	10	7	-
Variable camshaft timing (VCT) oil control unit housing retaining bolts	22	16	-
VCT sprocket centre retaining bolt			
Stage 1	20	15	-
Stage 2	Further 90 degrees	Further 90 degrees	-
A = refer to the procedure for the correct torque sequence	-	-	-

Valve Clearance Adjustment (12.29.48)

Special Service Tools

Tappet hold down tool
303-540

Fan nozzle, air gun
303-590

1. Remove the left-hand valve cover.

2. Remove the right-hand valve cover.

3. Use a cloth to wipe away as much oil as possible from the tappet and shim.

4.

CAUTION: Rotating the crankshaft in a counterclockwise direction may cause engine damage. Crankshaft journals are directionally machined. Rotating the crankshaft counterclockwise can raise burrs on bearing surfaces, reducing engine life.

CAUTION: Camshaft lobes must be 180 degrees away from each valve tappet or the valve clearance will be incorrect.

www.JagDocs.com

Rotate the engine clockwise to position the camshaft lobe away from the shim surface.

5. Install the base plate of the valve clearance adjusting tool to the relevant cylinder head using the bolts supplied.

- Secure the tool to the valve cover retaining holes.

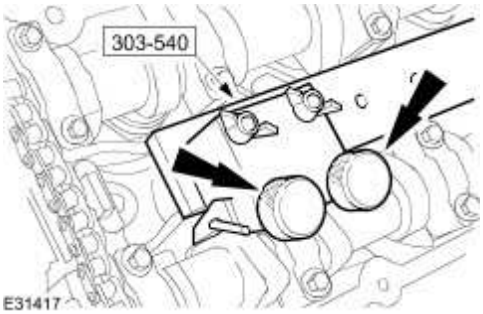

6.

CAUTION: Do not rotate the crankshaft while the attachment is installed to the base plate.

Install the attachment of the tool to the base plate to remove the relevant shims.

1. Adjust the fingers of the attachment to the highest position.
2. Install the attachment to the base plate.
3. Tighten the retaining screws to secure the attachment to the base plate.

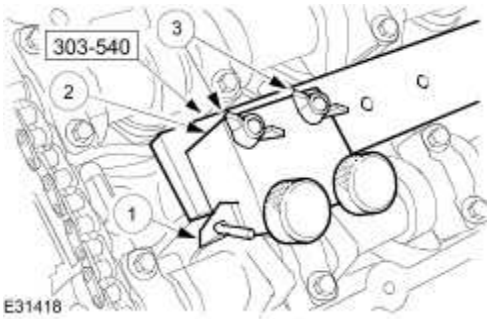

7. **NOTE:**

Use a mirror to help locating the fingers of the special tool as access is restricted.

Position the fingers on the outer edges of the tappet. Make sure the recessed step on each finger locates on the edge of the tappet.

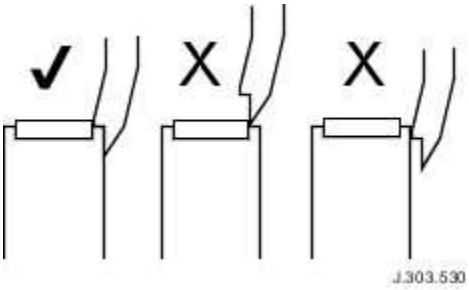

8. Tighten the special tool to compress the valve springs.

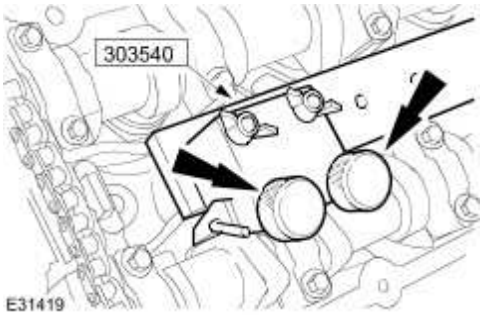

9.

WARNING: The following operations require the use of compressed air. Always wear suitable eye protection.

CAUTION: Do not use a magnet to remove shims. Failure to follow these instructions may result in damage to the vehicle.

Remove, clean and measure the shim.

1. Surround the immediate working area with a cloth to retain any loose shims displaced by the compressed air.

2. Use special tool aimed at the edge of the shim to lift it from the tappet. Remove the shim from each tappet, noting the position of each one.

www.JagDocs.com

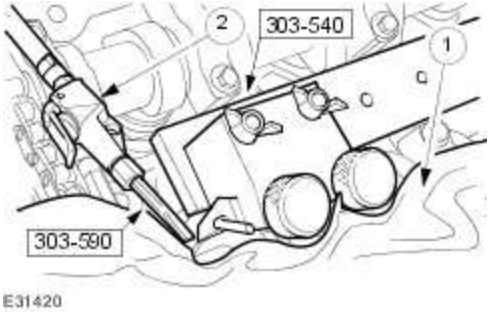

10. **NOTE:**

Two shims within each procedure are possible to be replaced using the special tool.

Use the following formula to calculate the required shim thickness.

- Original shim thickness + measured shim clearance - desired clearance = required shim thickness.

11.

CAUTION: Do not use a magnet to install shims. Failure to follow these instructions may result in damage to the vehicle.

NOTE:

Shims must be fitted with the size markings facing the tappet, not the camshaft.

Apply a light coat of engine oil to the replacement shim(s) and install.

12. Loosen the special tool to allow the valve springs to return to their normal position.

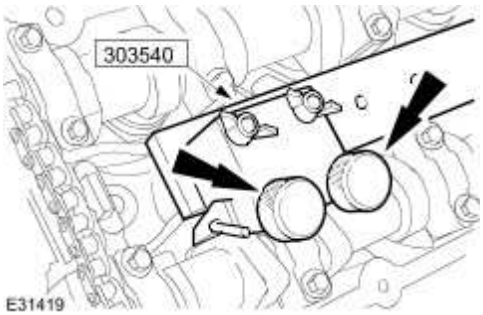

13. Using the feeler gauge set, measure the clearance between the camshaft and the shim surface. Record and check the readings.
Valve Clearance Check (12.29.47)

14. When the valve clearance is correct, remove the attachment from the base plate and repeat the procedure for the following two valves to be adjusted.

15. Install the right-hand valve cover.

16. Install the left-hand valve cover.

www.JagDocs.com

Valve Clearance Check (12.29.47)

1. Remove the left-hand valve cover.

2. Remove the right-hand valve cover.

3.

CAUTION: Rotating the crankshaft in a counterclockwise direction may cause engine damage. Crankshaft journals are directionally machined. Rotating the crankshaft counterclockwise can raise burrs on bearing surfaces, reducing engine life.

CAUTION: Camshaft lobes must be 180 degrees away from each valve tappet or the valve clearance will be incorrect.

Rotate the engine clockwise to position the camshaft lobe away from the shim surface.

4. Using the feeler gauge set, measure the clearance between the camshaft and the shim surface. Record and check the readings. Adjust the clearances as necessary.
Valve Clearance Check (12.29.47)

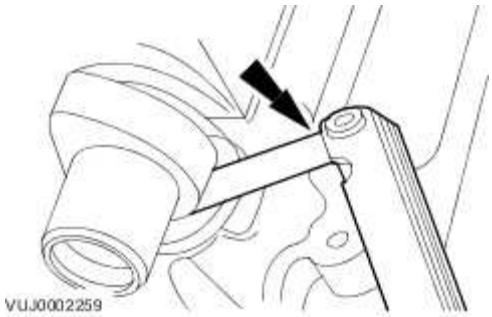

5. Install the right-hand valve cover.

6. Install the left-hand valve cover.

Engine

Cylinder Block

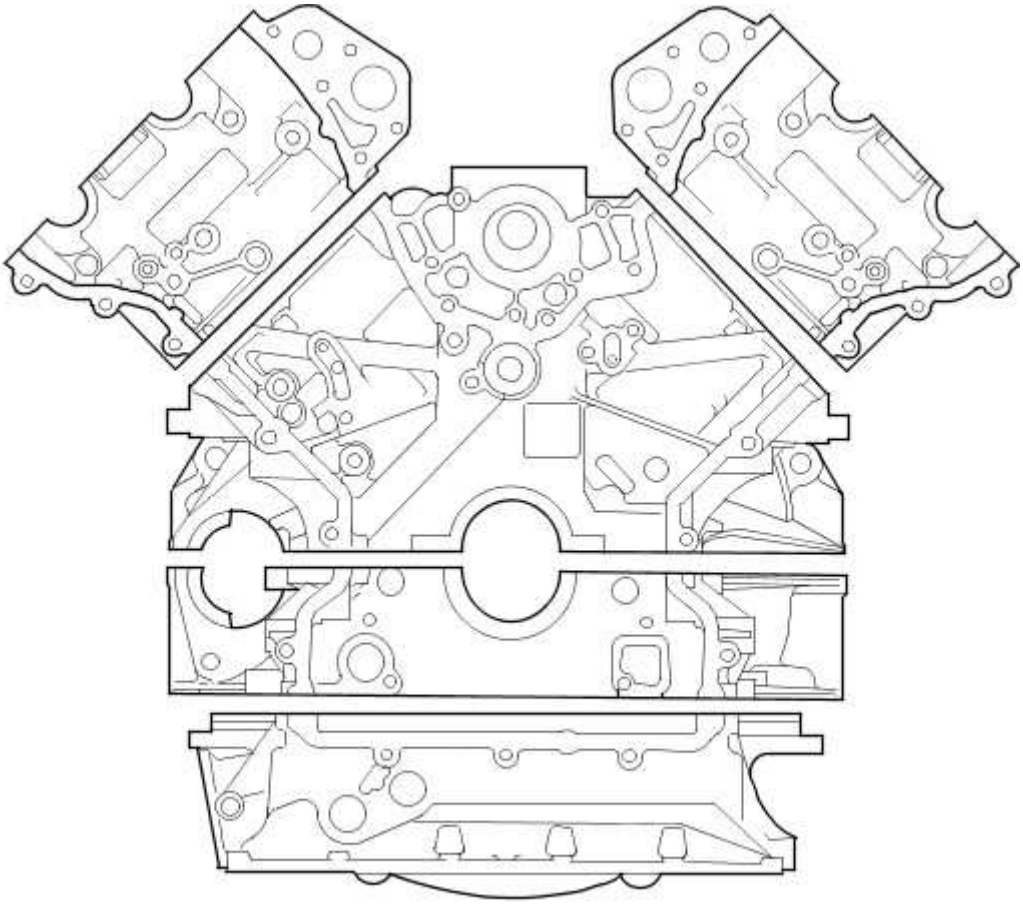

E31285

The 3.5L & 4.2L engine consists of an eight cylinder 90 degree 'Enclosed V' configuration liquid cooled aluminium cylinder block with dry cast liners.

Viewed from the driving position, the right-hand cylinder bank is designated A-bank and the left-hand cylinder bank as B-bank.

Cylinder Block Drain Plug

The coolant drain plug is located on the rear left side of the cylinder block.

On vehicles supplied with a cold climate package (i.e. vehicles operating in conditions regularly below -30ºC) a cylinder block heater unit is fitted instead of the drain plug.

www.JagDocs.com

Knock Sensors

Two knock sensors are fitted to the cylinder block on the inboard side of each cylinder bank. The electrical connector of each sensor is secured to the left-hand engine cover bracket.

These piezo-electric sensors provide inputs to the engine control module (ECM) to indicate the detection and location of detonation during combustion.

Crankshaft

E31286

The cast iron crankshaft has undercut and rolled fillets for improved strength and six counter-balance weights make sure low levels of vibration from the four throw, five bearing configuration.

The main bearing shells are aluminium/tin split plain type. An oil groove in the top half of each bearing transfers oil into the crankshaft oilway drillings for lubrication of the connecting rod bearings. A lead/bronze thrust washer is fitted on each side of the top half of the center main bearing.

The crankshaft rear oil seal is lipped and is a press fit in the interface of the bedplate to cylinder block.

A torsional vibration crankshaft damper pulley is bolted to the front of the crankshaft.

Connecting Rods and Pistons

E31287

The connecting rods are manufactured from sinter-forged steel and have fracture-split bearing caps. The opposing sides of each connecting rod being fractured at the bearing horizontal center line.

The cylinder position is etched on adjoining sides of the joint to identify matching connecting rods and bearing caps. The connecting rod bearing shells are lead/bronze, split plain bearings.

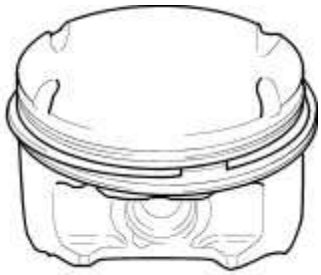

E31288

The pistons are open ended skirt design with small recesses for valve clearance and flat upper surfaces to reduce heat absorption. Three piston rings, two compression and one oil control, are fitted to each piston. Each piston is fitted on a gudgeon pin which is in a lead/bronze bush fitted in the connecting rod.

Timing Gear

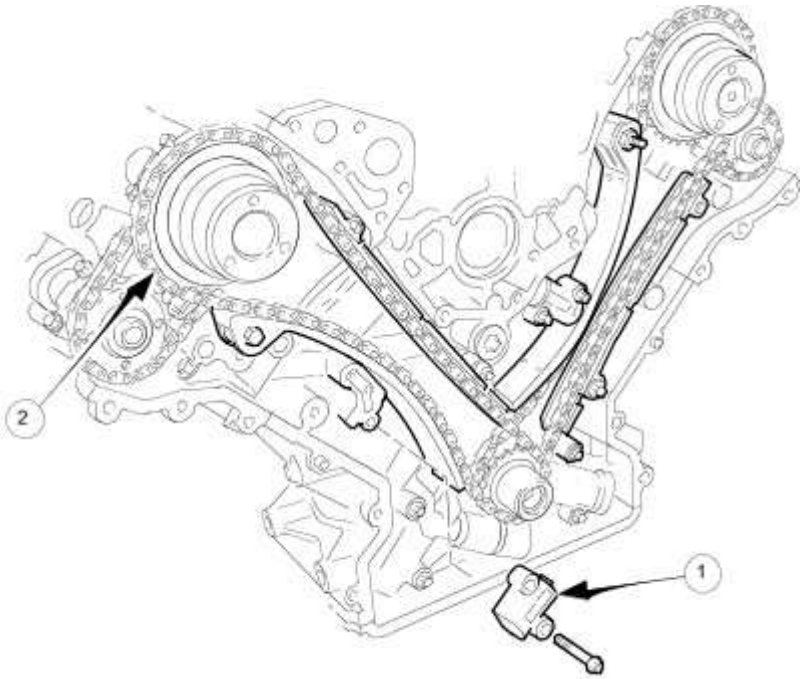

E31289

Item	Part Number	Description
1	—	Primary chain tensioner
2	—	Primary chain

Multi link primary and single link secondary chains drive the camshafts of each cylinder bank. The primary chains transmit the drive from sprocket on the crankshaft to a sprocket on each intake camshaft. The secondary chains transmit the drive from a second, smaller sprocket on the intake camshaft to a sprocket on the exhaust camshaft.

Each chain has a hydraulic tensioner operated by the engine lubricating system. A jet of oil from the end of each tensioner lubricates the chains. The primary chain tensioners act on pivoting flexible

www.JagDocs.com

tensioner blades, the secondary chain tensioners act directly on the chains.

A woodruff key locates the drive sprocket on the crankshaft and these are retained in position by the crankshaft damper pulley.

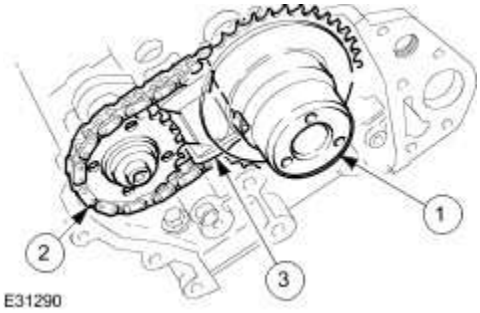

Item	Part Number	Description
1	—	Variable valve timing unit
2	—	Secondary chain
3	—	Secondary chain tensioner

The variable valve timing (VVT) oil control unit and the exhaust camshaft sprockets are non-interference. They are clamped in place on the camshafts by the retaining bolt and clamping plate/washer.

Timing Cover

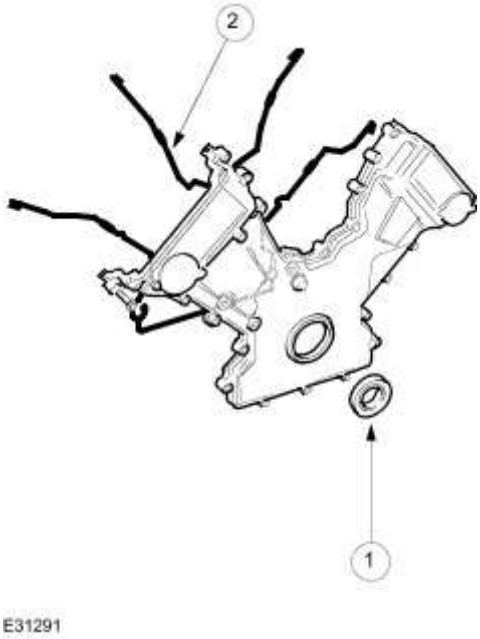

Item	Part Number	Description
1	—	Crankshaft front oil seal
2	—	Poly-acrylic seal

The aluminium-alloy timing cover accommodates the crankshaft front oil seal. Poly-acrylic seal in-groove gaskets seal the joint between the timing cover and the front face of the engine.

Cylinder Heads and Valve Gear

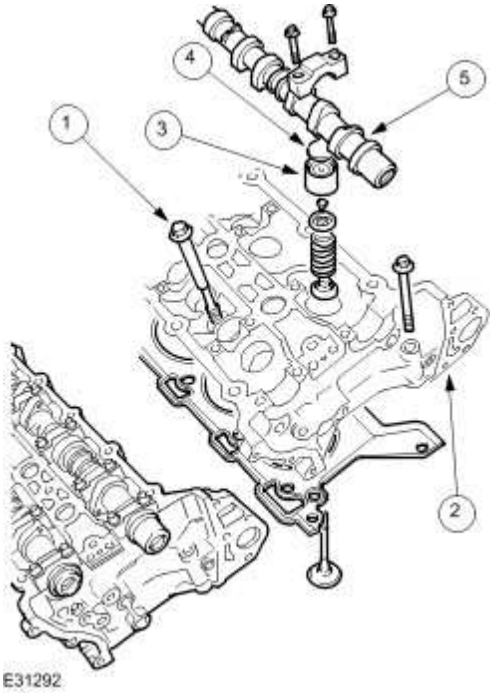

Item	Part Number	Description
1	—	Cylinder head bolt
2	—	Coolant outlet
3	—	Valve lifter
4	—	Adjustment shim
5	—	Camshaft

Cylinder heads are unique to each cylinder bank and are secured, using deep seated bolts, to the cylinder block. Two hollow dowels align each cylinder head with the cylinder block.

Each cylinder head gasket consists of a silicon beaded composite gasket with metal eyelets for the

www.JagDocs.com

cylinder bores.

Each cylinder head incorporates dual overhead camshafts operating four valves per cylinder via solid aluminium-alloy valve lifters. A steel shim in the top of each lifter allows adjustment of valve clearances.

Collets, valve collars and spring seats locate the valve springs on the intake and exhaust valves. Valve stem seals are integrated into the spring seats.

Four 14mm spark plugs are located in a recess on the center-line of each cylinder head. <<303-07B>>

Camshafts

The chilled cast iron camshafts are each retained by five aluminium alloy caps - location numbers 0 to 4 for the intake camshaft and 5 to 9 for the exhaust camshaft from the front.

A machined flat near the front of each camshaft enables the camshafts to be locked during the valve timing procedure.

Camshaft Sensor

The camshaft sensors are fitted to the rear of each cylinder head and are triggered by four toothed sensing rings fitted to the rear of the intake camshaft. The camshaft sensors are variable reluctance sensors that provides an input to the ECM of intake camshaft position.

Camshaft Covers

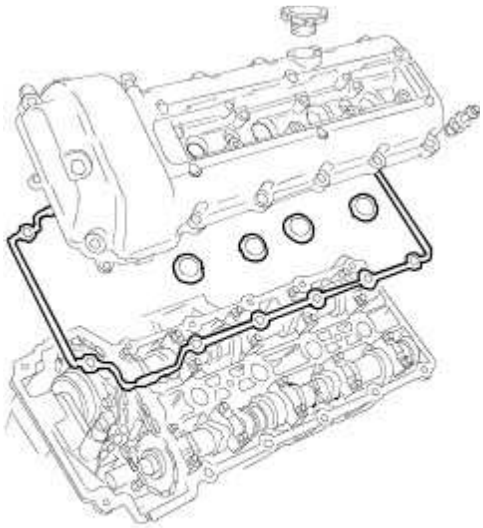

VUJ0001974

The valve covers are made from thermoplastic plastic; the right-hand bank cover incorporates an outlet for the part load engine breather.

The left-hand bank cover incorporates the engine oil filler cap and an outlet for the full load engine

breather. Identical oil separators are incorporated inside the top of each cover. Each oil separator comprises a wire gauze packing in an open ended enclosure below the breather outlet.

Bedplate

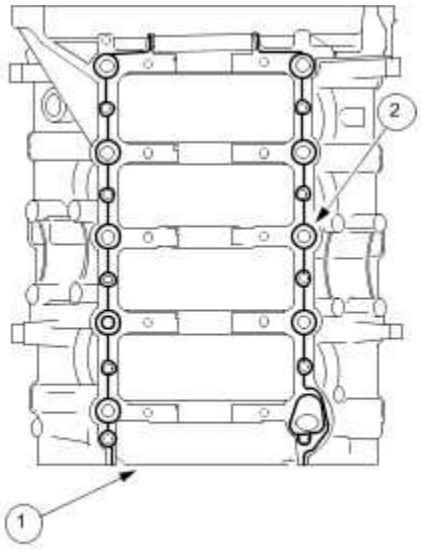

E31293

Item	Part Number	Description
1	—	Bedplate
2	—	Sealant track

This is a structural casting bolted to the bottom of the cylinder block to retain the crankshaft and to further improve overall rigidity.

Main bearing clearance changes due to expansion are minimized by means of iron inserts cast into the bedplate main bearing supports.

Two hollow dowels align the bedplate with the cylinder block and the joint is sealed by a continuous bead of sealant.

Engine Mountings

The engine is mounted at two points. At each side of the engine, there is a mounting bracket with a hydraulic mounting to the subframe.

Engine Lubrication

Oil is drawn from the reservoir in the oil pan and pressurized by the oil pump. The output from the oil pump is then filtered and distributed through the internal oil passages.

Where an oil cooler is fitted, the oil is cooled before entering the filter.

www.JagDocs.com

All moving parts are lubricated either by pressure or splash oil. Pressurized oil is also provided for operation of the variable valve timing units and the timing gear chain tensioners.

All of the oil system components are installed on the structural sump.

Oil is returned to the oil pan under gravity through large drain holes in the cylinder heads and the engine block to make sure quick return of the oil.

Oil Pick-Up

The plastic moulded oil pick-up is attached to the underside of the structural sump. It is immersed in the oil reservoir to provide a supply to the oil pump during all normal vehicle attitudes. A castellated inlet allows the supply to be maintained after any deformation of the sump pan (e.g. after grounding). A mesh screen in the inlet prevents debris from entering the oil system.

Oil Pressure Switch

Installed at the right front of the structural sump, the oil pressure switch connects a ground input to the instrument cluster when oil pressure is present. This switch operates at a pressure of 0,15 to 0,41 bar (2.2 to 5.9 lbf.in2).

Oil Pump

The oil pump is fitted at the front of the engine and is driven directly by the crankshaft. The inlet and outlet ports align with oil passages in the bedplate, with a rubber coated metal gasket to seal the pump to bedplate interface.

An integral pressure relief valve regulates pump outlet pressure at 4,5 bar (65.25lbf.in2).

Oil Pan

The oil pan/sump comprises an aluminium-alloy structural sump bolted to the bedplate and a pressed steel pan with integral sump plug, bolted to the structural sump.

Oil Filler Cap

The oil filler cap is located on the top of the left-hand bank valve cover.

Windage Tray

A windage tray attached to the top of the structural sump isolates the oil pan from the disturbed air flow, caused by the rotation of the crankshaft; preventing oil aeration and improving oil drainage.

Crankcase Ventilation

The engine is ventilated through a part-load and a full-load breather; one on each valve cover. These flexible plastic hoses incorporate O-ring seals and quick release connectors.

The part-load breather ventilates the left-hand valve cover (B-bank) and feeds onto the throttle body adaptor and the purge valve. This breather is connected between the oil separator in the cover and the induction elbow.

The full-load breather ventilates the right-hand cover (A-bank) and is connected between the oil

separator in the cover and the air intake duct between the mass air flow (MAF) sensor and the throttle body.

The MAF sensor unit combines the two sensors: one for air flow and one for air inlet temperature. It is a hot wire sensor that provides an input which is (approximately) proportional to the mass air flow into the engine.

Each valve cover oil separator consists of wire gauze packed into an open ended enclosure in the top of the cover, below the breather outlet.

Variable Valve Timing (VVT)

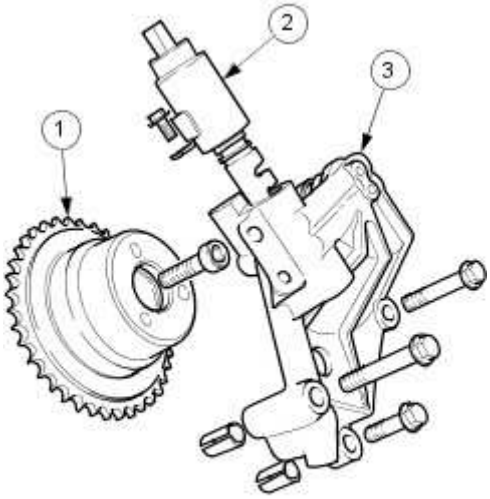

E31298

Item	Part Number	Description
1	—	Variable valve timing (VCT) oil control unit
2	—	Variable valve timing (VCT) oil control solenoid
3	—	Bush carrier

The variable valve timing system improves both low speed and high speed engine performance, engine idle quality and exhaust emissions. It is an infinitely variable system operating on the intake camshafts only. There is the equivalent of 48º of crankshaft movement between the retarded and advanced positions. Engine oil pressure operates the system under the control of the ECM.

www.JagDocs.com

Engine

For additional information, refer to <<303-00>>

Crankshaft Main Bearing Carrier

Special Service Tools

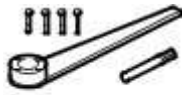

303-191

Crankshaft locking, main tool
303-191

303-191-02

Adapter
303-191-02

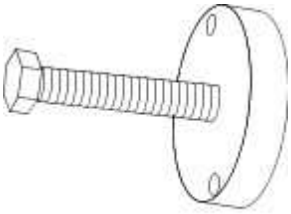

303-588

Crankshaft pulley/damper remover
303-588

303-645

Crankshaft setting, main tool
303-645

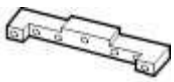

303-530

www.JagDocs.com

Camshaft setting
303-530

303-532

Timing chain tensioning tool
303-532

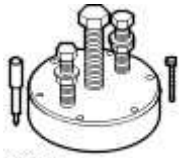

303-538

Crankshaft rear oil seal remover/replacer
303-538

303-750

Crankshaft front seal installer
303-538

303-751

Remover, crankshaft front seal
303-751

Removal

All vehicles

1 . Remove the engine from the vehicle.
For additional information, refer to Engine (12.41.01)

2 . Mount the engine to a suitable engine stand.

Vehicles without supercharger

3 . Disconnect the oil cooler hoses.

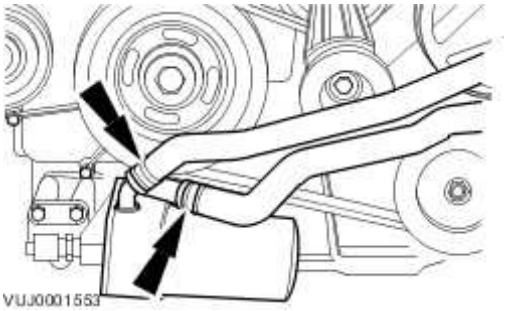

Vehicles with supercharger

4 . Detach the supercharger belt.

- Use a ½ inch square drive bar to rotate the supercharger belt tensioner.
- Detach the supercharger belt.

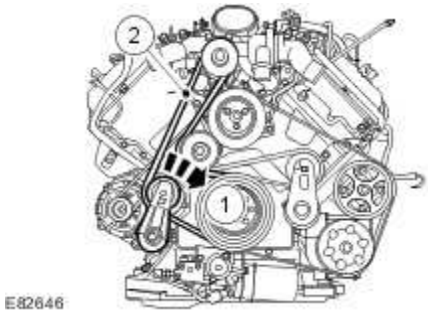

5 . Remove the supercharger belt tensioner.

- Remove the supercharger belt.

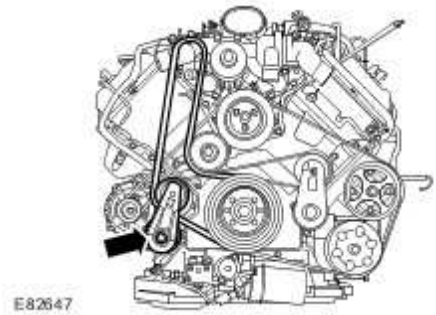

www.JagDocs.com

6 . Remove the supercharger belt idler pulley.

- Remove the retaining bolt.

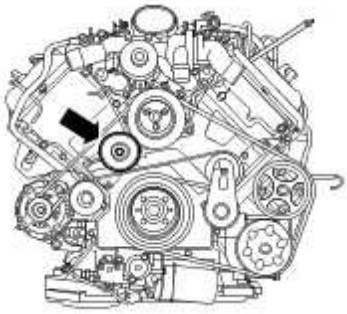

7 . Remove the mounting bracket.

- Remove the retaining bolts.

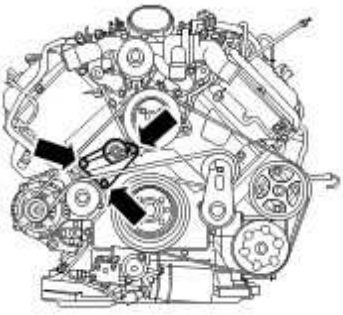

All vehicles

8 . Detach the accessory drive belt.

- Rotate the accessory drive belt tensioner counter-clockwise.
- Detach the accessory drive belt.

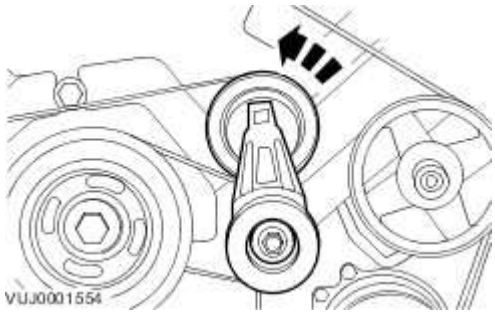

9 . Remove the accessory drive belt tensioner.

- Remove the accessory drive belt.

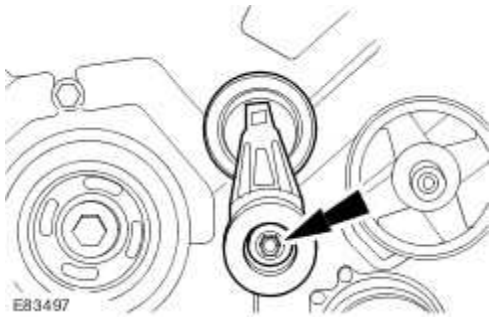

10 . Remove the accessory drive belt idler pulley.

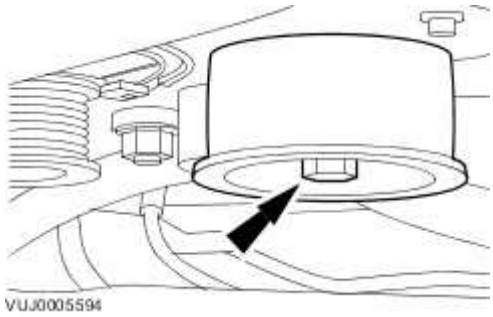

11 . Detach the battery positive cable.

www.JagDocs.com

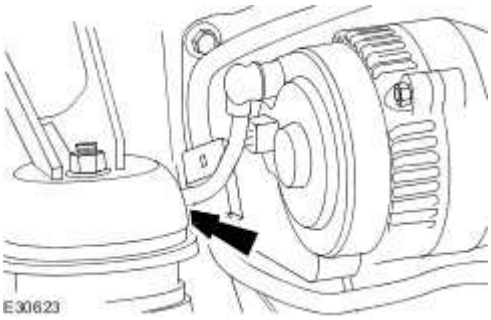

12 . Detach the generator battery positive cable protective cover.

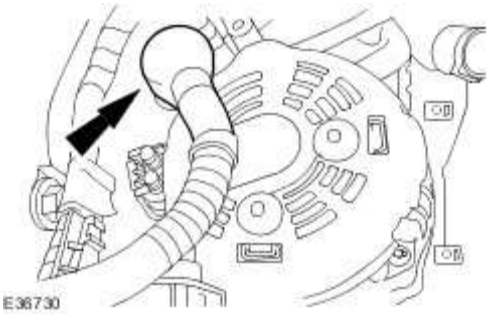

13 . Remove the battery positive cable.

- Remove the retaining nut.

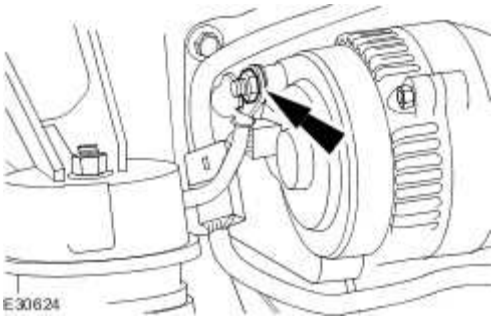

14 . Disconnect the generator electrical connector.

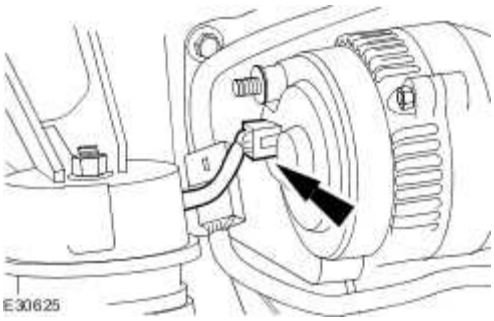

15 . Remove the generator.

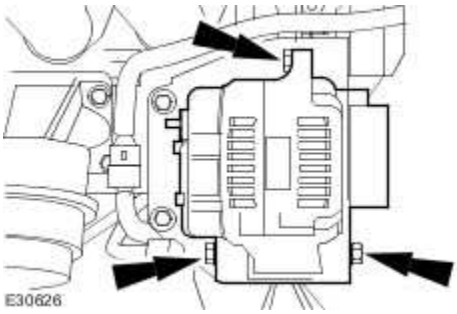

16 . Detach the engine wiring harness.

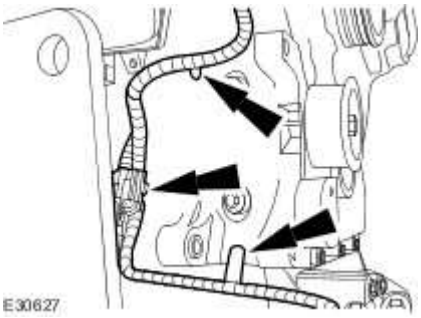

17 . Remove the generator mounting bracket.

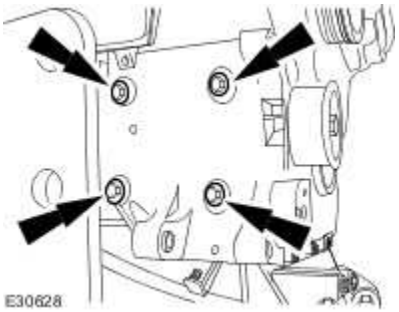

www.JagDocs.com

18 . Detach the right-hand heated oxygen sensor (HO2S) retaining bracket.

Remove the retaining bolt.

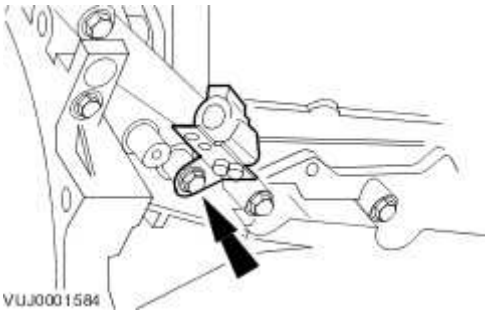

19 . Detach the HO2S wiring harness, from the engine.

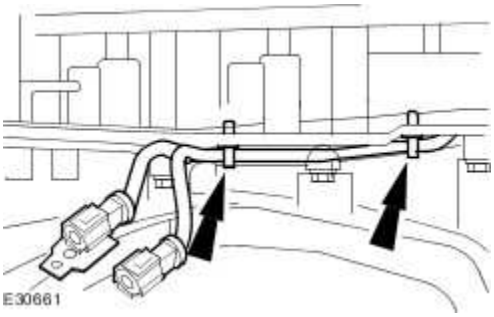

20 . Remove the starter motor.

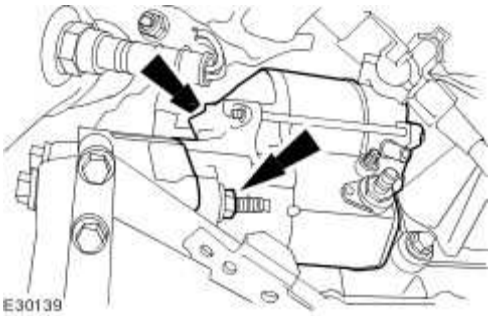

21 . **NOTE:**

Right-hand shown, left-hand similar.

Remove both engine mounts.

- Remove the retaining nuts.

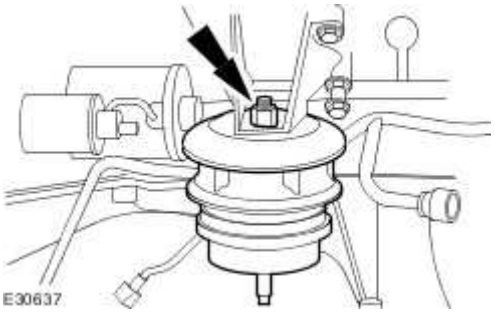

22 . Disconnect the air conditioning compressor electrical connector.

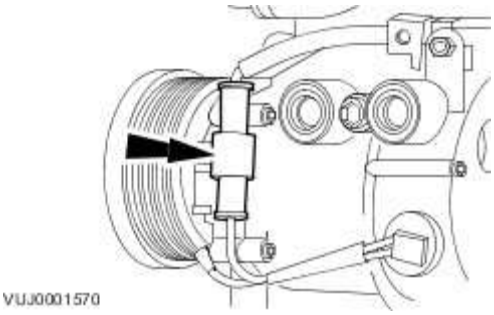

23 . Detach the A/C compressor wiring harness.

- Remove the retaining nut.

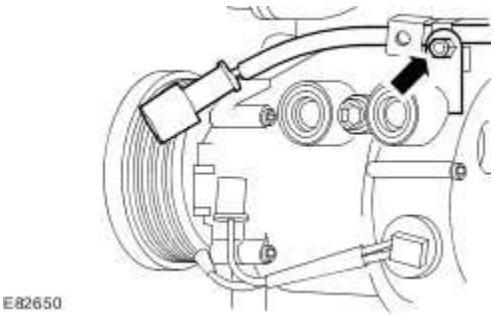

24 . Remove the A/C compressor.

www.JagDocs.com

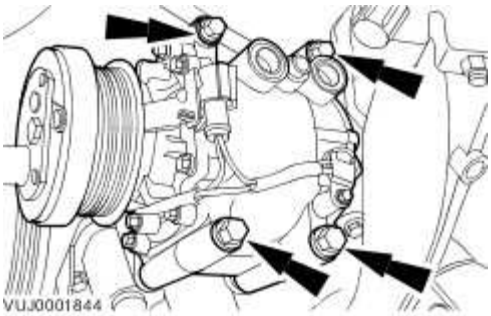

25 . Remove the air conditioning compressor mounting bracket.

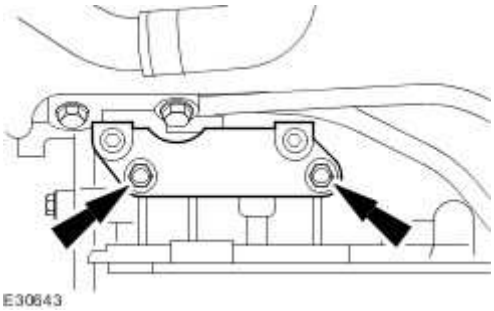

26 . Remove the power steering pump.

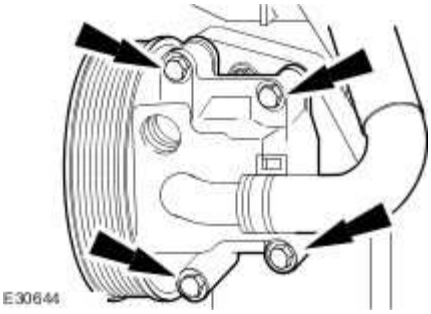

27 . Remove the power steering pump mounting bracket.

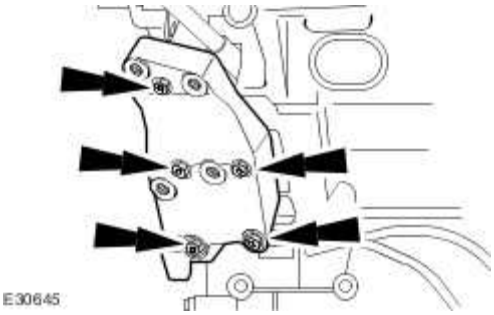

28 . Remove the oil level indicator and tube.

- Remove and discard the O-ring seal.

29 . Disconnect the crankshaft position (CKP) sensor electrical connector.

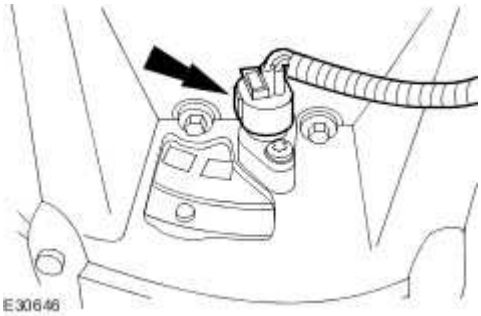

30 . Remove the CKP sensor.

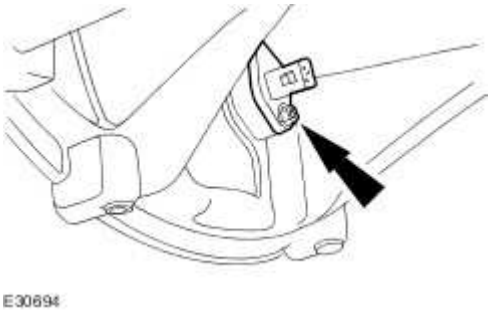

31 . Detach the left-hand heated oxygen sensor (HO2S) wiring harness.

- Remove the retaining bolt.

www.JagDocs.com

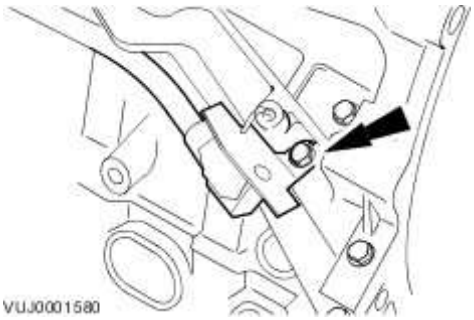

32 . Detach the engine wiring harness from the cylinder block.

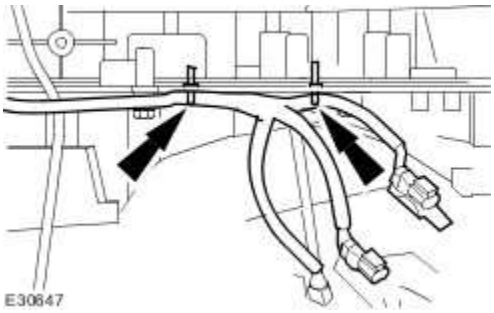

33 . Detach the engine wiring harness.

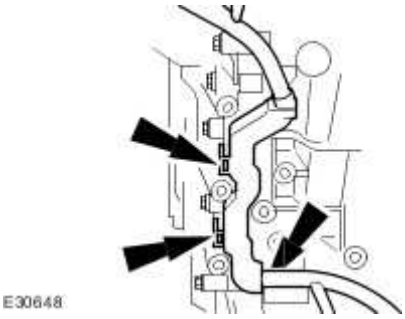

34 Detach the engine wiring harness.

.

- Disconnect the variable camshaft timing (VCT) solenoid electrical connector.
- Detach the engine wiring harness.

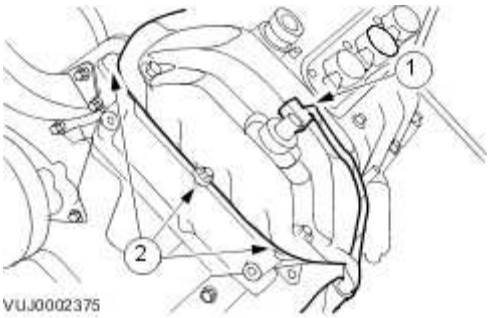

Vehicles without supercharger

35 . Disconnect the engine coolant temperature (ECT) sensor electrical connector.

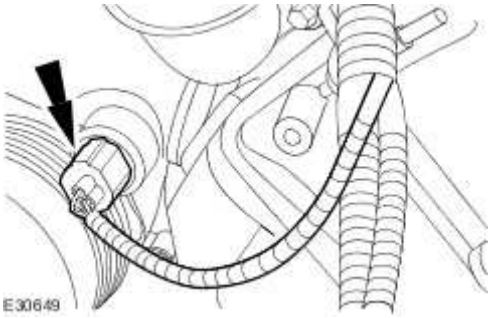

36 . Remove the thermostat housing.

- Remove and discard the O-ring seals.

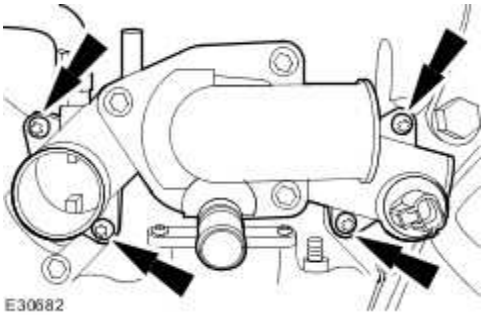

Vehicles with supercharger

37 . Disconnect the thermostat housing hoses

www.JagDocs.com

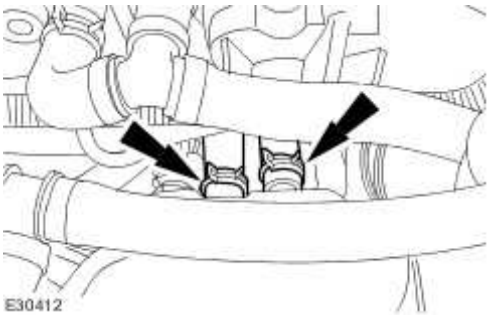

38 . Disconnect the ECT sensor electrical connector.

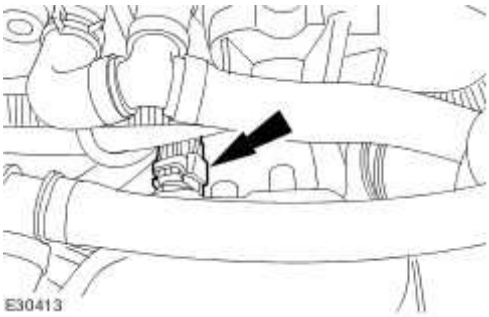

39 . Reposition the thermostat housing hose retaining clip.

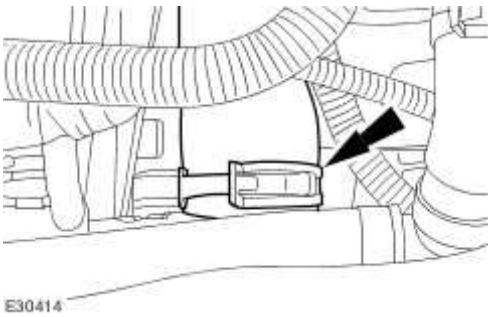

40 . Disconnect the hose.

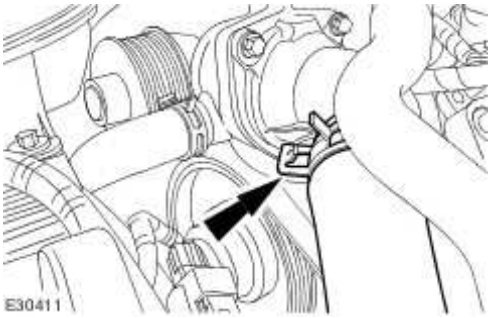

41 . Disconnect the heater supply hose from the thermostat housing.

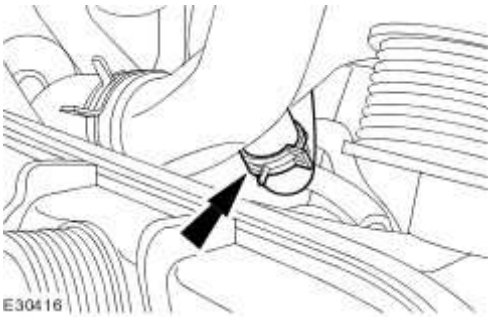

42 . Disconnect the water pump outlet hose.

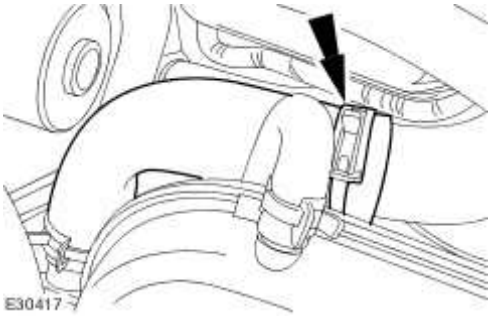

43 . Remove the thermostat housing retaining bolts.

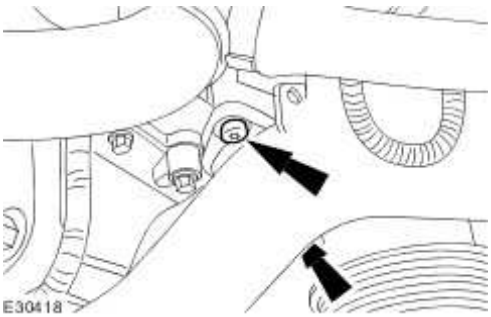

44 . Remove the thermostat housing.

- Remove and discard thermostat housing O-ring seals.

www.JagDocs.com

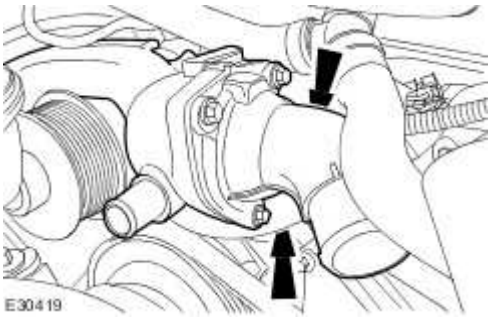

Vehicles without supercharger

45 . Remove the engine cover left-hand retaining bracket.

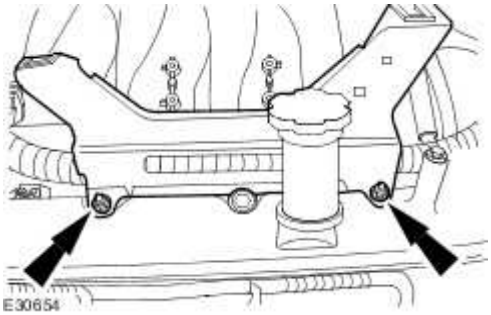

46 . Remove the engine cover right-hand retaining bracket.

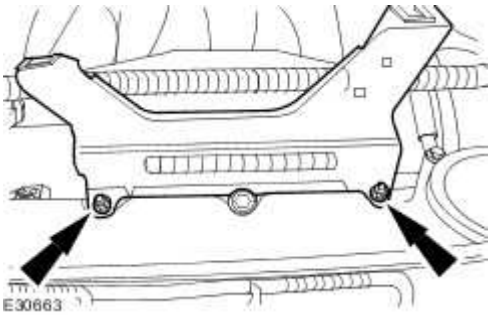

All vehicles

47 . **NOTE:**

Left-hand shown, right-hand similar.

Remove both ignition coil covers.

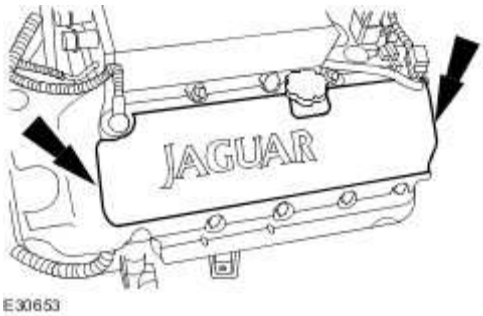

48 . Disconnect the left-hand ignition coil electrical connectors.

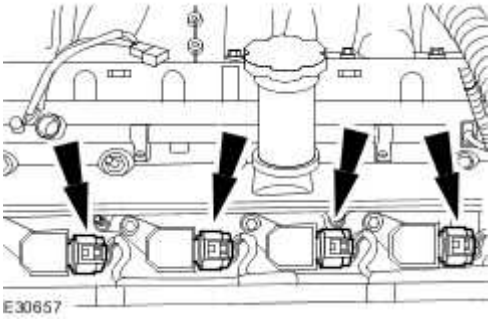

49 . Detach the left-hand ignition coil wiring harness.

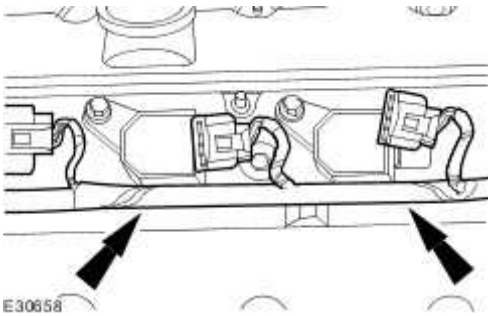

50 . Detach the left-hand ignition coil wiring harness.

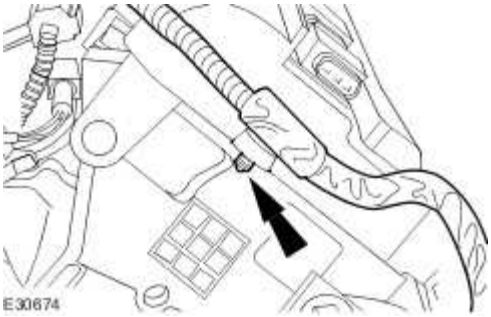

www.JagDocs.com

51 . Detach the right-hand ignition coil wiring harness.

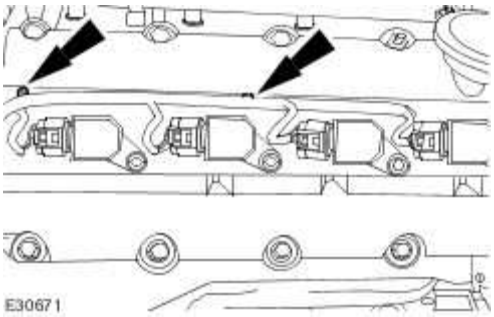

52 . Disconnect the right-hand ignition coil electrical connectors.

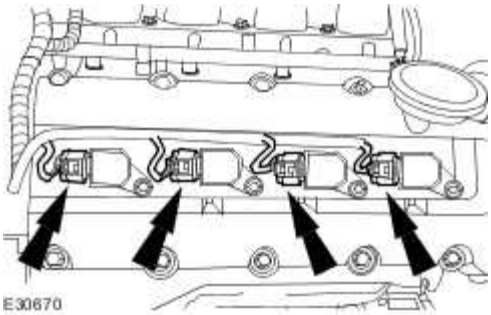

53 . Detach the right-hand ignition coil wiring harness.

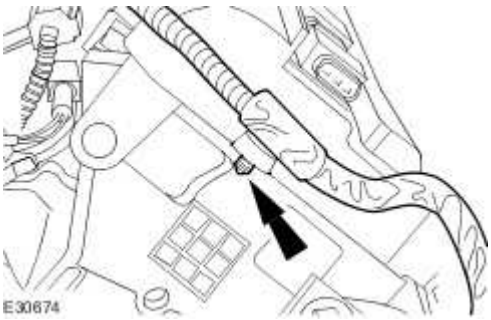

54 Detach the engine wiring harness.

.

- Detach the ground cable.
- Disconnect the variable camshaft timing (VCT) solenoid electrical connector.
- Detach the engine wiring harness.

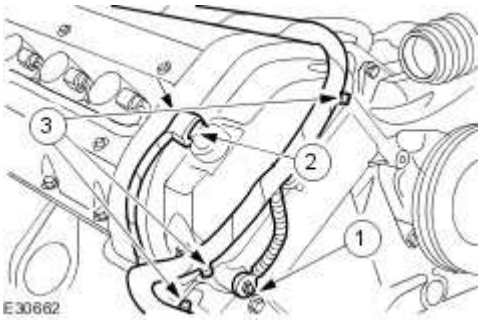

55 . **NOTE:**

Left-hand shown, right-hand similar.

Remove the ignition coils.

- Remove the retaining bolts.

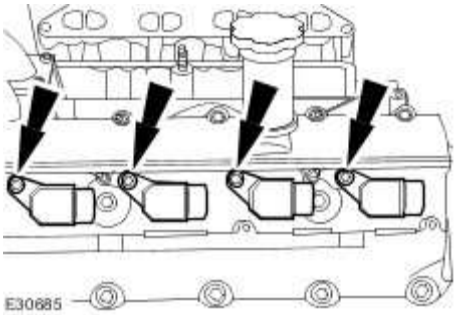

Vehicles without supercharger

56 . Disconnect the positive crankcase ventilation (PCV) pipe.

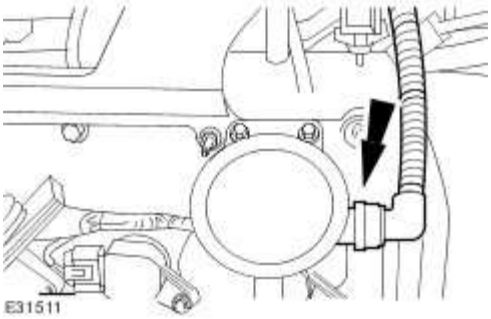

www.JagDocs.com

All vehicles

57 . Remove the right-hand valve cover.

- Remove and discard the valve cover gaskets.

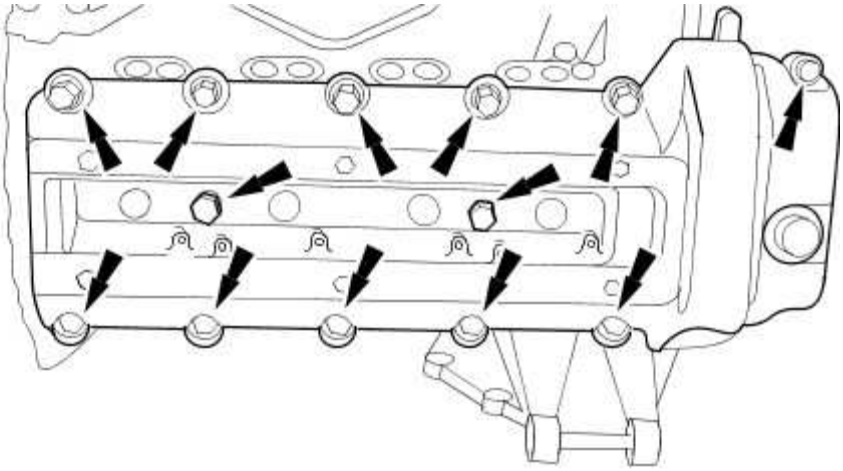

VUJ0002395

58 . Remove the left-hand valve cover.

- Remove and discard the valve cover gaskets.

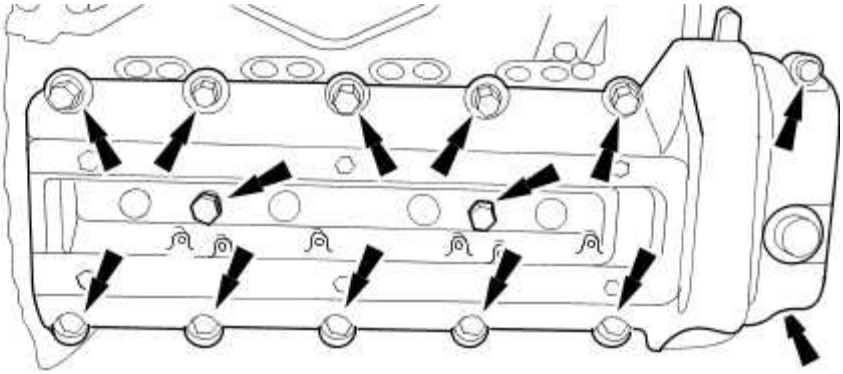

E30696

59 . Using the special tool, remove the water pump pulley.

- Using the special tool, retain the water pump pulley.

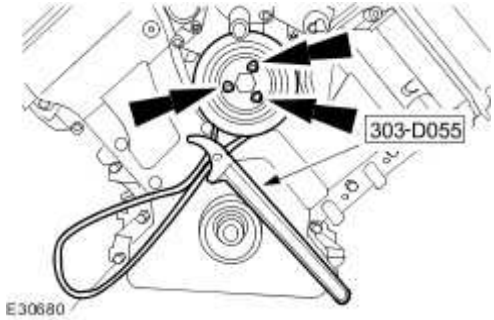

60 . **NOTE:**

Place a suitable container underneath the oil filter housing to prevent oil spillage.

Remove the oil filter.

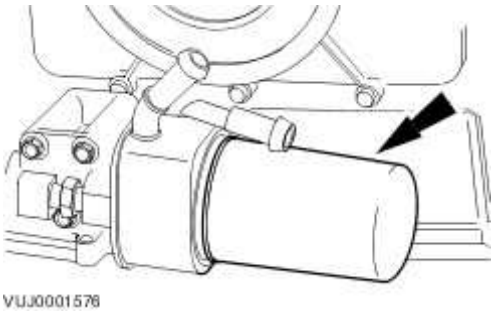

61 . Disconnect the oil pressure switch and oil temperature sensor electrical connectors.

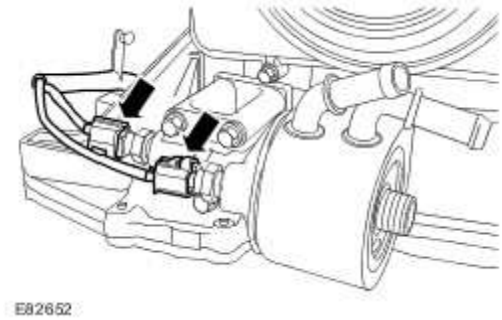

62 . Remove the oil filter housing.

- Remove and discard the O-ring seal.

www.JagDocs.com

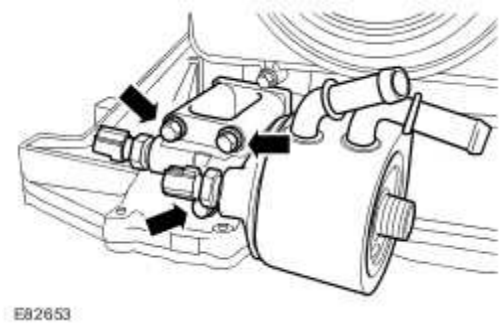

63 . **CAUTION: Under no circumstances should the crankshaft setting peg 303-645 be used in the following operations to lock the crankshaft.**

NOTE:

The crankshaft retaining bolt will be very tight.

Using special tools, retain the crankshaft pulley.

- Remove and discard the crankshaft pulley bolt.

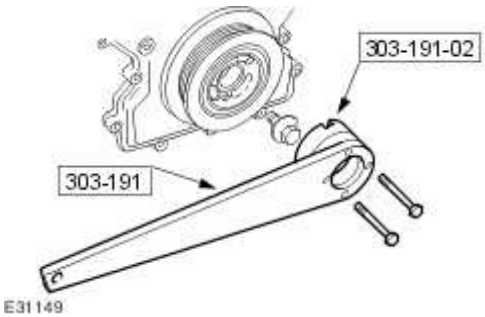

64 . Remove the special tools.

65 . **NOTE:**

The crankshaft pulley will be very tight.

Using special tools, remove the crankshaft pulley.

- Collect the locking ring.
- Remove and discard the O-ring seal.

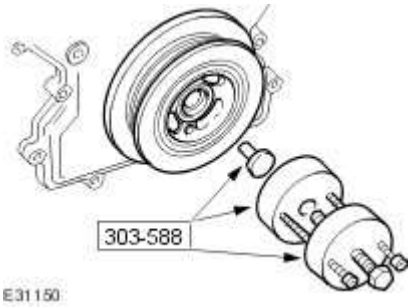

66 . Using the special tool, remove the crankshaft front seal.

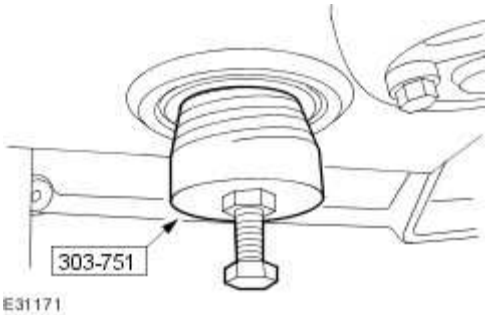

67 . **CAUTION: Make sure the spark plugs are removed to enable the engine to rotate freely.**

CAUTION: Do not rotate the crankshaft counterclockwise. The timing chains may bind causing engine damage.

CAUTION: Rotate the crankshaft clockwise to position the engine to top dead center (TDC) No. 1 cylinder

www.JagDocs.com

Install the special tool.

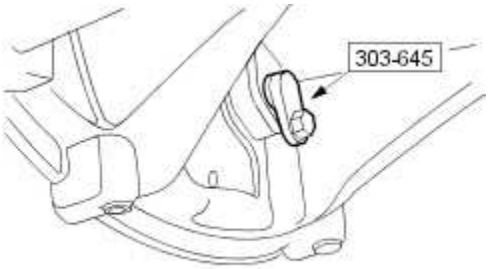

VUJ0002400

68 . Remove the engine front cover.

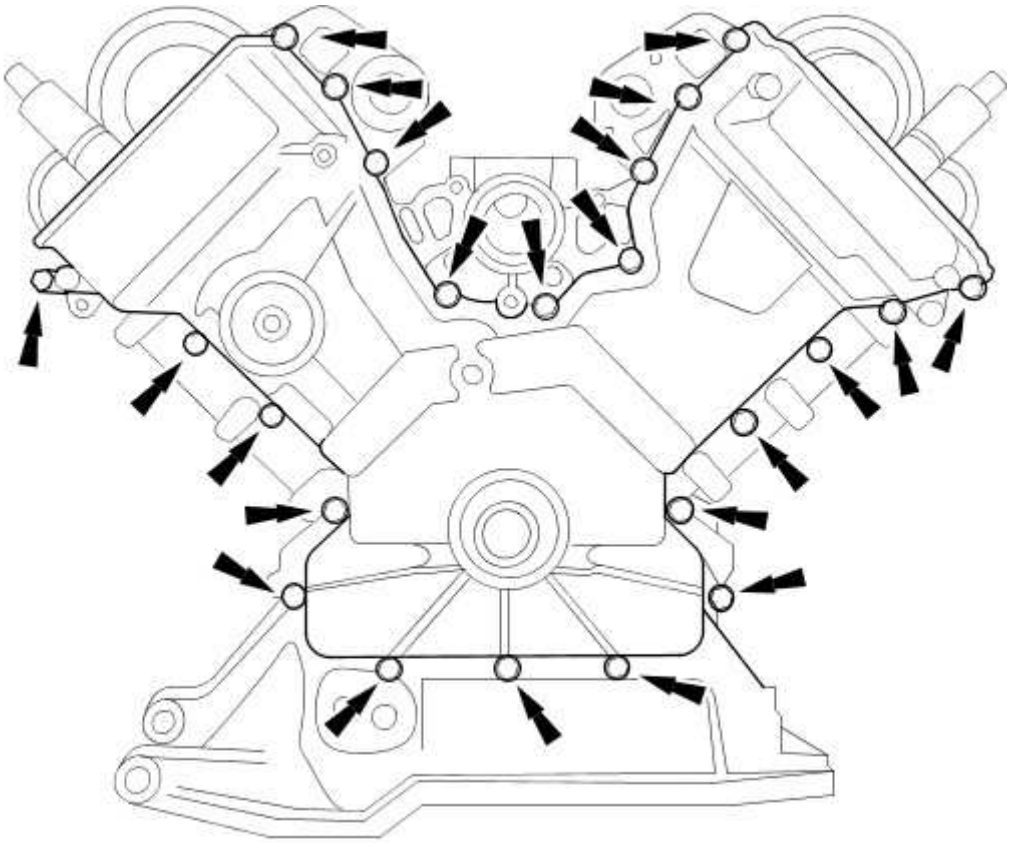

VUJ0002398

69 . Remove the left-hand VCT oil control unit housing.

- Remove and discard the O-ring seals.

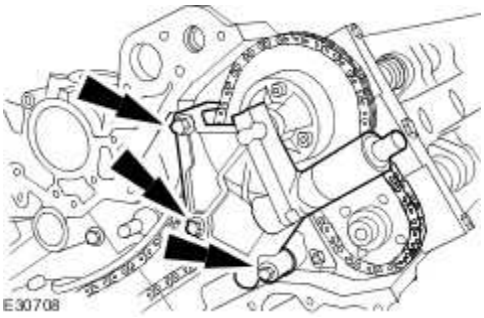

70 . Install the special tool to the left-hand cylinder head.

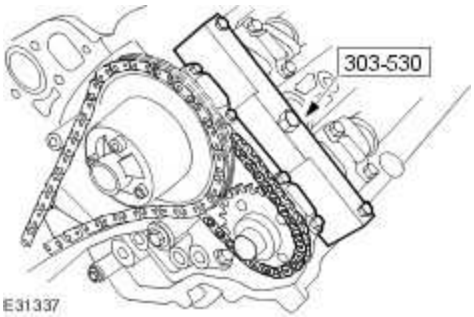

71 . Loosen the left-hand exhaust camshaft sprocket retaining bolt.

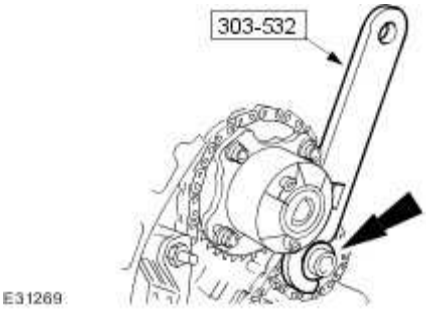

72 . Loosen the left-hand inlet camshaft sprocket retaining bolt.

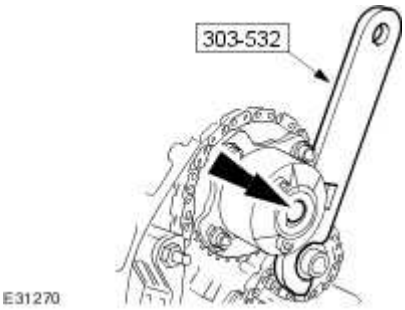

www.JagDocs.com

73 . Remove the right-hand VCT oil control unit housing.

Remove and discard the O-ring seals.

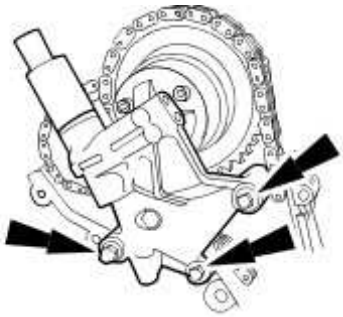

74 . Install the special tool to the right-hand cylinder head.

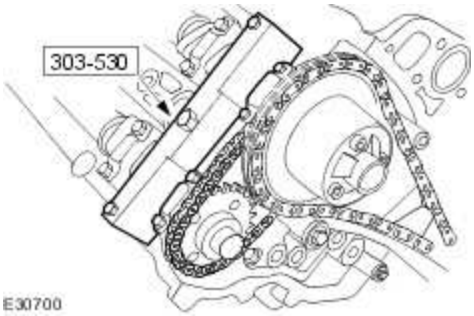

75 . Loosen the right-hand exhaust camshaft sprocket retaining bolt.

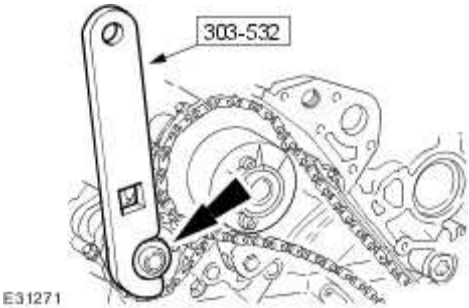

76 . Loosen the right-hand exhaust camshaft sprocket retaining bolt.

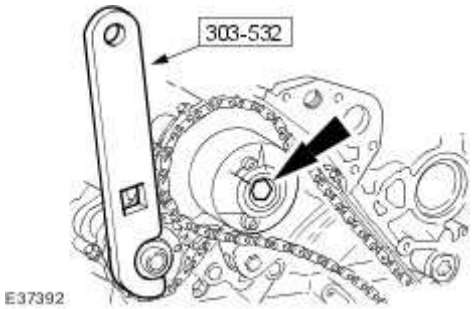

77 . Remove the right-hand primary timing chain tensioner assembly.

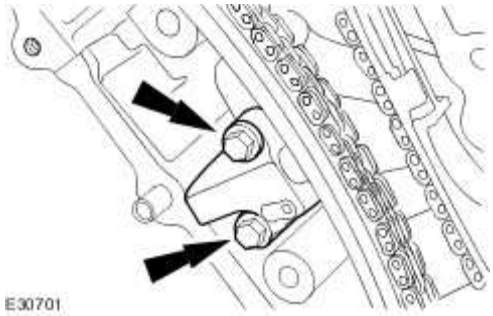

78 . Remove the right-hand primary timing chain tensioner guide.

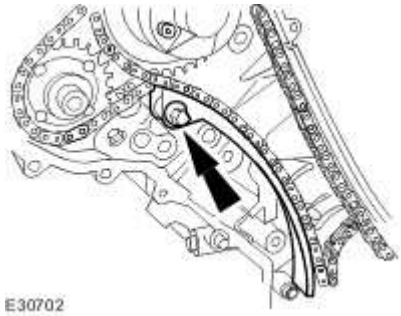

79 . Remove the right-hand primary timing chain.

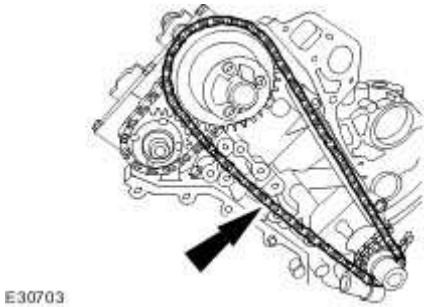

www.JagDocs.com

80 . Remove the right-hand primary timing chain guide.

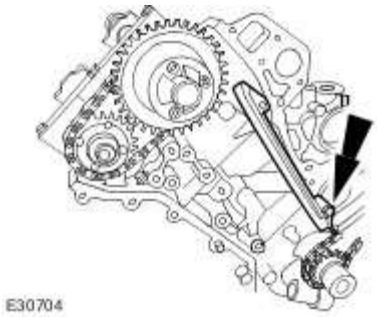

81 . Remove the left-hand primary timing chain tensioner assembly.

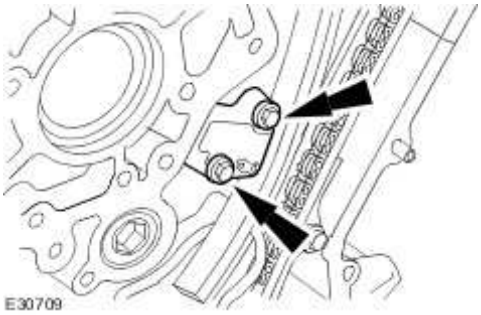

82 . Remove the left-hand primary timing chain tensioner guide.

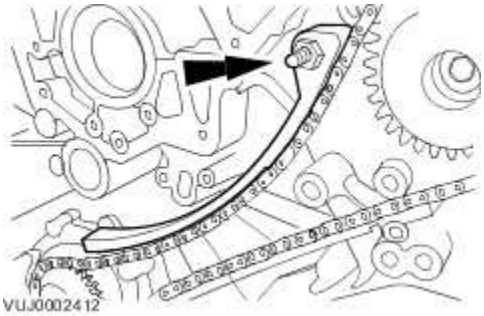

83 . Remove the left-hand primary timing chain.

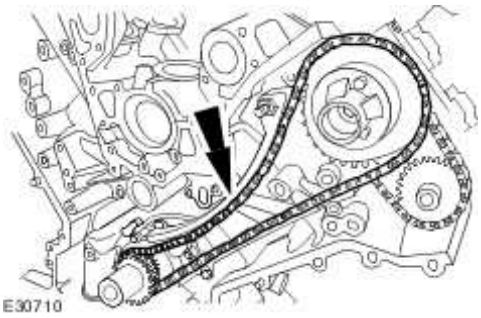

84 . Remove the crankshaft sprocket.

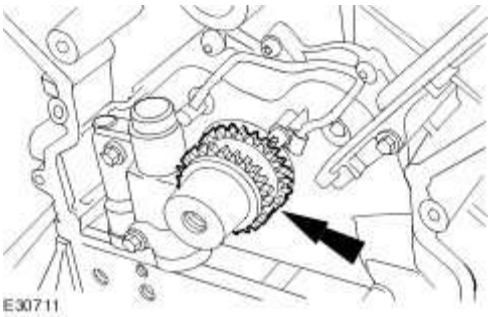

85 . Remove the left-hand primary timing chain tensioner guide.

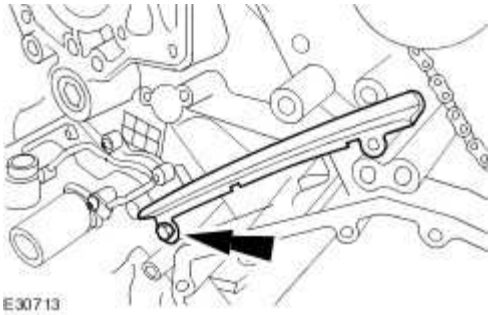

86 . Remove the special tool.

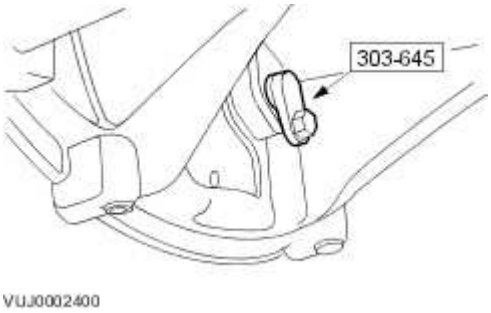

87 . **CAUTION: The bolts can only be used 3 times, mark the bolts with a center punch. If 2 punch marks are visible, discard the bolts.**

Remove the drive plate.

- Remove the 8 bolts.

www.JagDocs.com

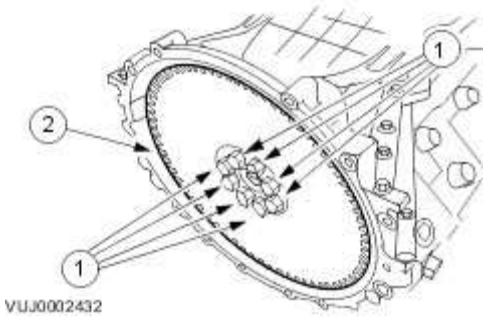

88 . Remove the lower oil pan.

- Remove and discard the gasket.

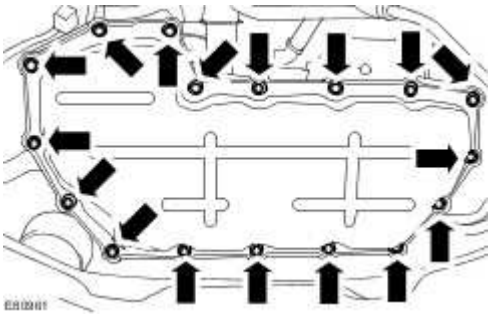

89 . Remove the oil strainer.

- Remove and discard the O-ring seal.

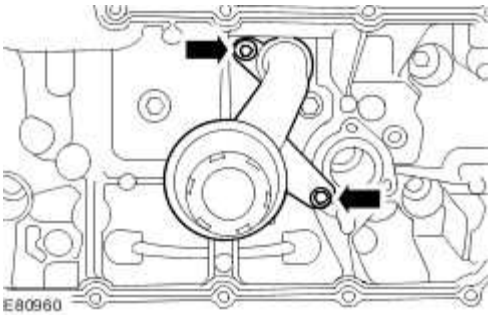

90 . Remove the upper oil pan.

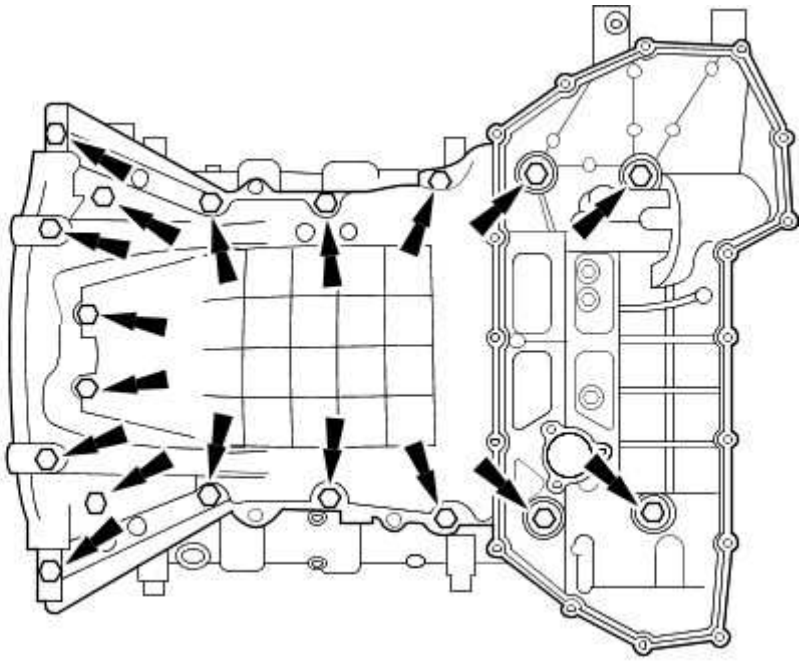

91 . Remove the oil pump.

- Remove and discard the gasket.

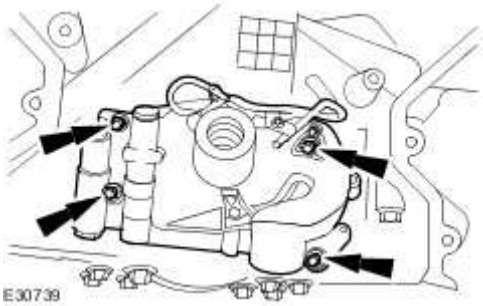

92 . **CAUTION: To make sure damage does not occur to the crankshaft and piston components, the engine must be inverted on the engine stand. Failure to follow this instruction may result in damage to the engine.**

NOTE:

If the crankshaft main bearing carrier retaining bolts have been marked with a center punch dot, they must be discarded and new bolts installed.

www.JagDocs.com

Remove the crankshaft main bearing carrier.

- Remove the crankshaft main bearing carrier retaining bolts in the indicated sequence.

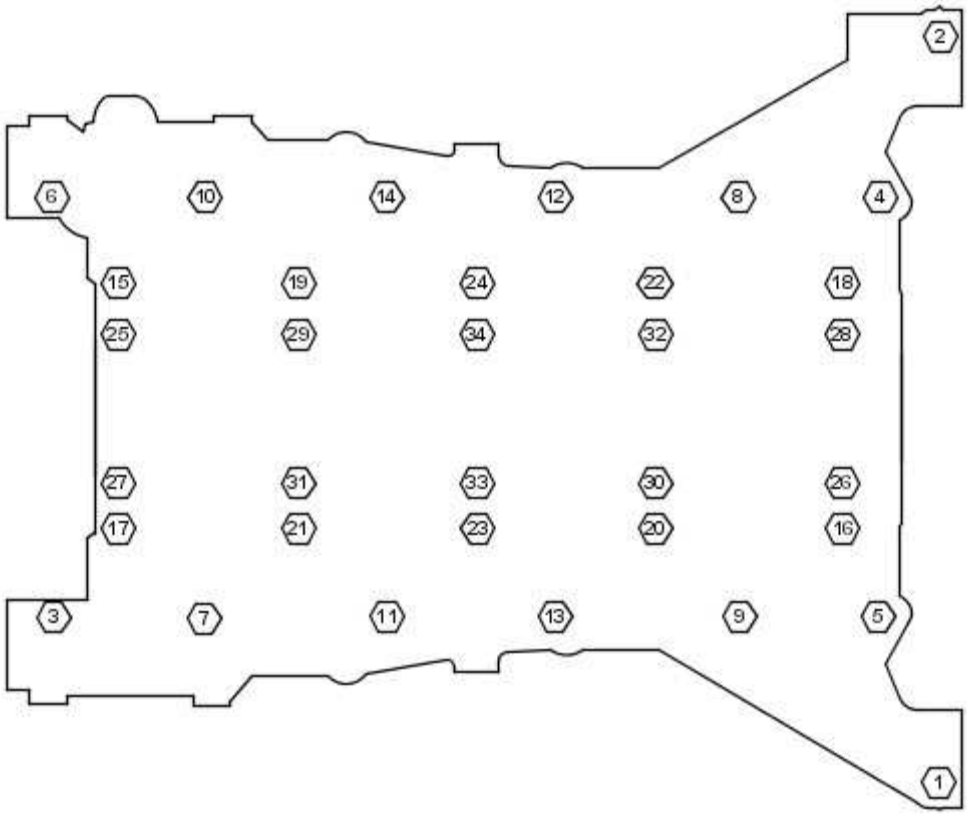

VUJ0002439

93 . Discard the crankshaft rear main oil seal.

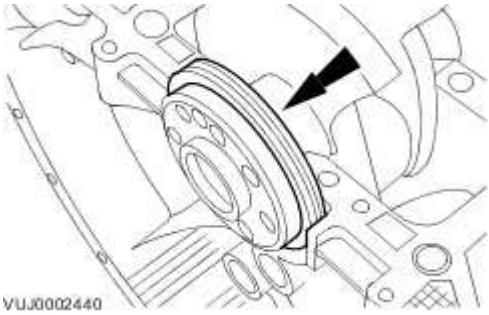

VUJ0002440

Installation

All vehicles

1. **CAUTION: Use only a plastic scraper when removing the sealing material.**

CAUTION: If any new bolts are to be installed to retain the crankshaft main bearing carrier, pre-stress the retaining bolts by installing the crankshaft main bearing carrier without any sealant and tightening the new retaining bolts to the specified torque. Remove the crankshaft main bearing carrier once the bolts have been pre-stressed. Failure to follow this instruction may result in damage to the vehicle.

Clean all the mating faces and reusable parts thoroughly and check for damage.

2. **NOTE:**

Install the crankshaft main bearing carrier and tighten bolts to specification within twenty minutes of applying the sealant.

Apply a 2 mm bead of sealant to the cylinder block in the area shown.

- Use WSS-M4G323-A4-RTV sealant.

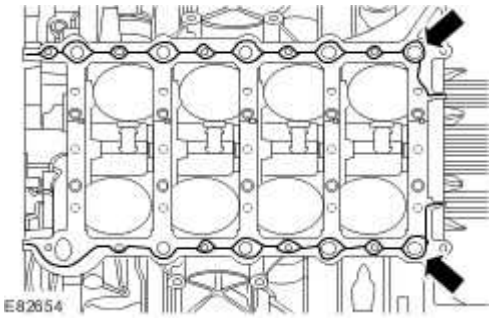

www.JagDocs.com

3 **NOTE:**

Install the crankshaft main bearing carrier and tighten bolts to specification within twenty minutes of applying the sealant.

Apply a 1 mm bead of sealant to the cylinder block in the area shown.

Use WSS-M4G323-A4-RTV sealant.

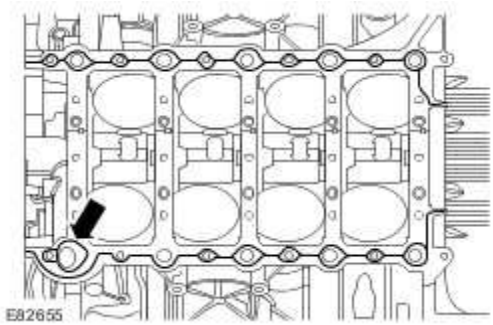

4 . **CAUTION: Make sure all dowels are fully seated into the crankshaft main bearing carrier prior to tightening the bolts.**

NOTE:

Do not lubricate the crankshaft main bearing carrier retaining bolts.

NOTE:

Do not rotate the crankshaft until all the retaining bolts are tightened to specification.

NOTE:

The retaining bolts must be tightened within twenty minutes of applying the sealant.

NOTE:

Tighten the retaining bolts in the sequence shown.

Install the crankshaft main bearing carrier to the cylinder block.

- Stage 1: Bolts 21 to 32, tighten to 15 Nm
- Stage 2: Bolts 33 to 34, tighten to 15 Nm
- Stage 3: Bolts 1 to 10, tighten to 25 Nm
- Stage 4: Bolts 11 to 20, tighten to 15 Nm
- Stage 5: Bolts 1 to 10, tighten to 35 Nm + 135 degrees
- Stage 6: Bolts 11 to 20, tighten to 20 Nm + 150 degrees
- Stage 7: Bolts 21 to 32, tighten to 20 Nm + 90 degrees
- Stage 8: Bolts 33 to 34, tighten to 20 Nm + 150 degrees
- Stage 9: Center punch each of the bolt heads to indicate it has been reused.

www.JagDocs.com

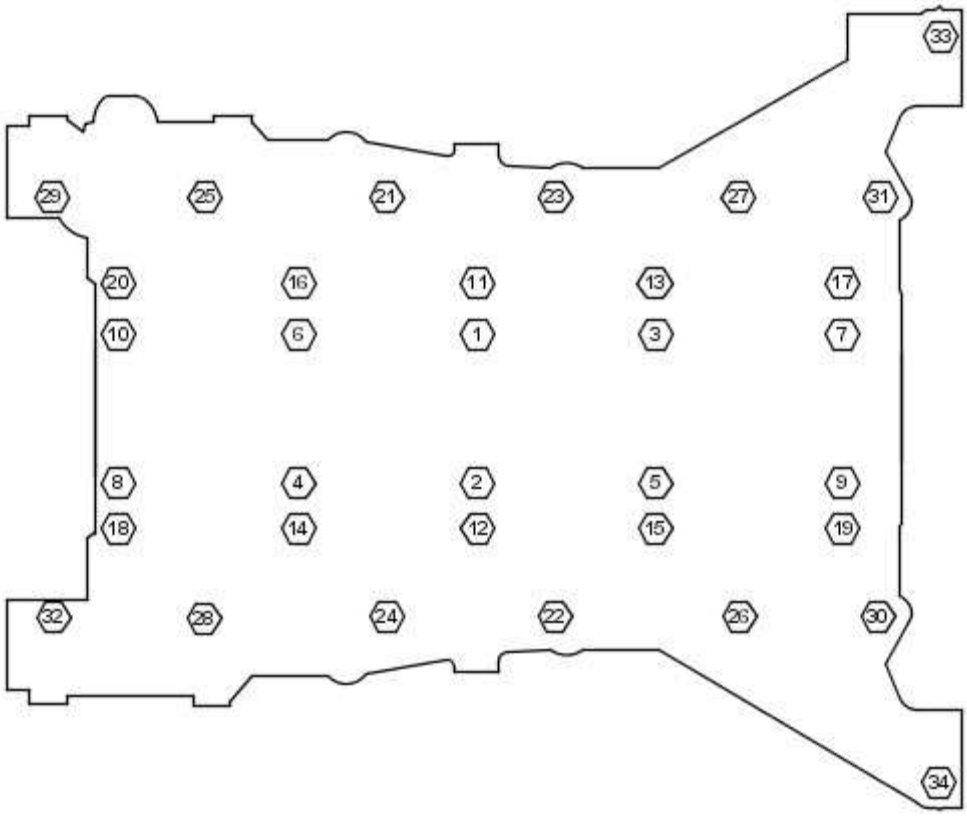

VUJ0002450

5 . Remove the special tool.

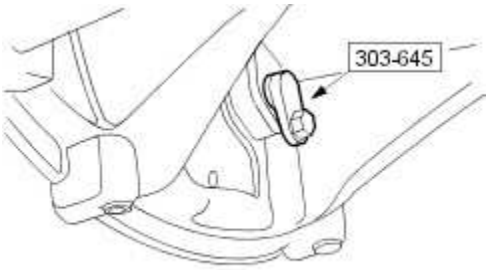

VUJ0002400

6 . Remove the special tool from the left-hand cylinder head.

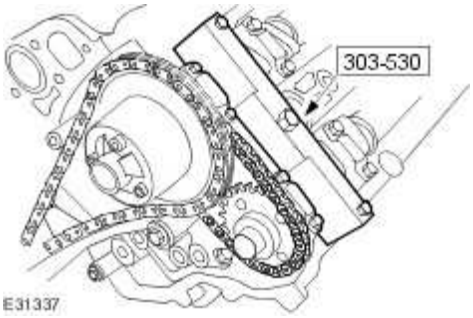

E31337

7 . Remove the special tool from the right-hand cylinder head.

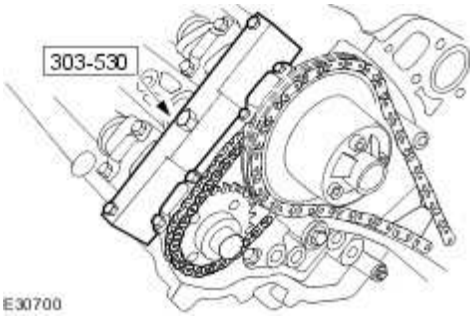

E30700

8 . **CAUTION: Make sure that number 1 cylinder intake camshaft lobes are vertical to the cylinder head face.**

Position the right-hand camshafts to the neutral position.

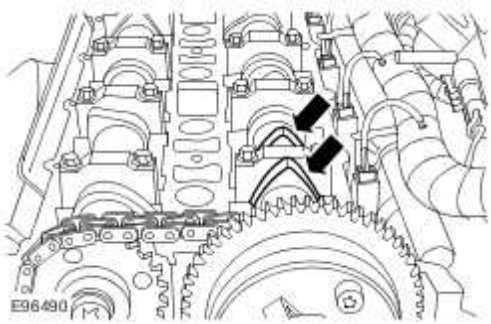

9. **CAUTION: Make sure that number 2 cylinder exhaust camshaft lobes are vertical to the cylinder head face.**

Position the left-hand camshafts to the neutral position.

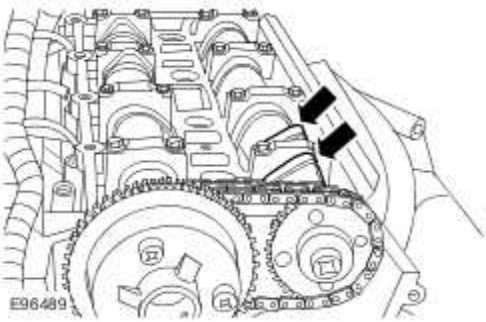

10. **CAUTION: Make sure no binding of the crankshaft occurs.**

CAUTION: Make sure the spark plugs are removed to enable the engine to rotate freely.

Carefully rotate the crankshaft two complete turns to check for correct operation.

11. **CAUTION: Make sure the spark plugs are removed to enable the engine to rotate freely.**

www.JagDocs.com

CAUTION: Do not rotate the crankshaft counterclockwise.

CAUTION: Rotate the crankshaft clockwise to position the engine to top dead center (TDC) No. 1 cylinder

Install the special tool.

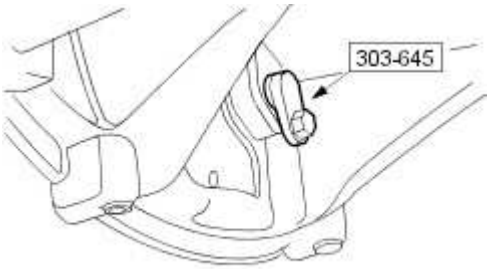

VUJ0002400

12 . Install the special tool to the left-hand cylinder head.

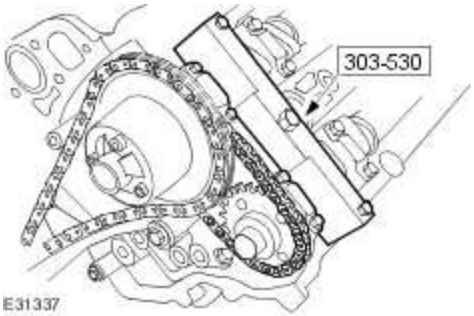

E31337

13 . Install the special tool to the right-hand cylinder head.

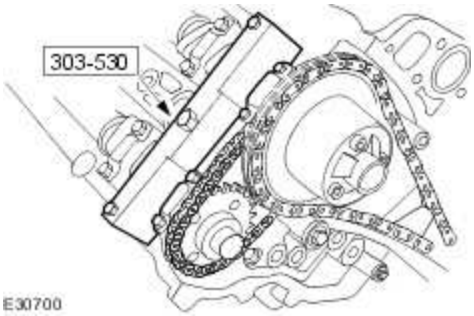

E30700

14 . Rotate the crankshaft to check correct operation.

15 . Remove excess sealant which may squeeze out at the front cover sealing surfaces.

16 . **NOTE:**

Make sure the transit sleeve is correctly positioned.

Align the rear crankshaft oil seal, to the crankshaft.

- Carefully remove the transit sleeve, leaving the seal in place.

17 . Install the special tool to the crankshaft.

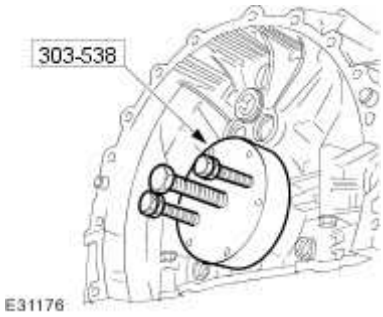

18 . Reposition the nuts to hold the special tool against the crankshaft rear seal. Check that the crankshaft rear seal and the special tool are parallel to the rear of the engine.

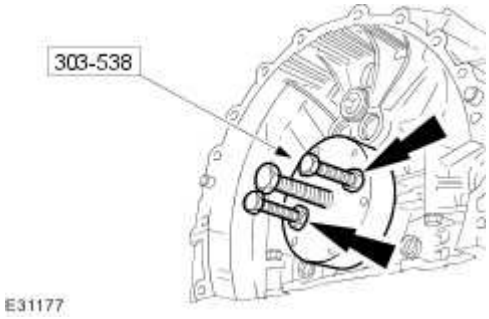

19 . **NOTE:**

Alternate nut tightening to correctly seat the crankshaft rear seal.

www.JagDocs.com

Using the special tool, install the crankshaft rear seal.

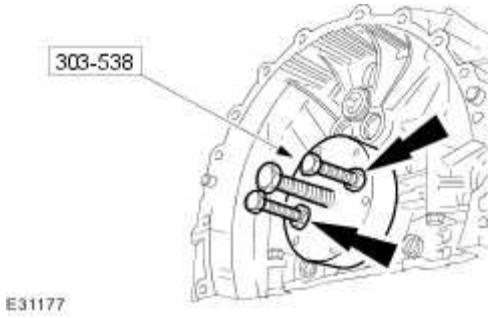

20 . Remove the special tool from the crankshaft.

- Check that the seal is located correctly.

21 . **NOTE:**

Install a new gasket.

Install the oil pump.

- Tighten to 12 Nm.

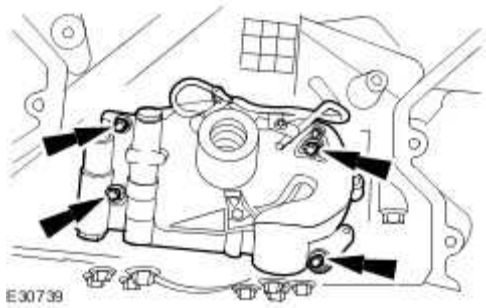

22 **NOTE:**

.

It is important that the oil pan extension is bolted to the crankshaft main bearing carrier within twenty minutes of applying the sealant.

Apply a continuous 3mm bead of sealant around the crankshaft main bearing carrier flange

OR around the oil pan body flange as shown.

- Use WSS-M4G323-A4-RTV sealant.

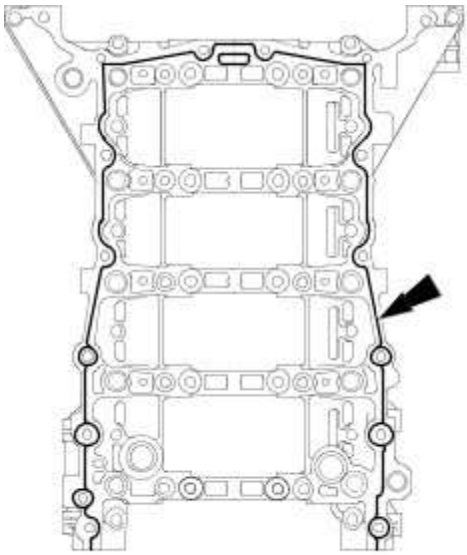

E32647

23 **NOTE:**

.

It is important that the oil pan extension is bolted to the crankshaft main bearing carrier within twenty minutes of applying the sealant.

Apply a continuous 2mm bead of sealant, around the diverter valve flange as shown.

- Use WSS-M4G323-A4-RTV sealant.

www.JagDocs.com

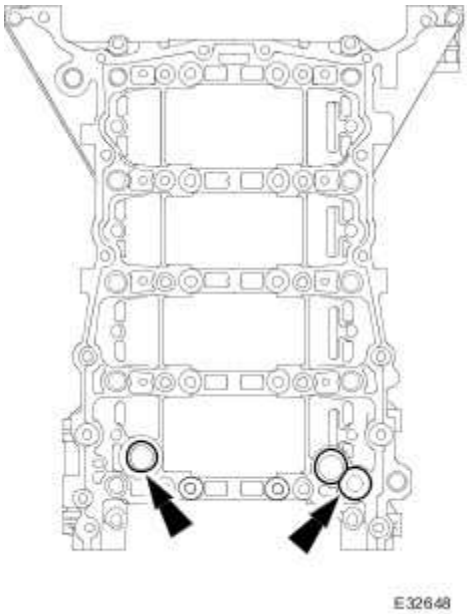

24 . **NOTE:**

Tighten the retaining bolts in the sequence shown.

Install the upper oil pan.

- Tighten to 21 Nm.

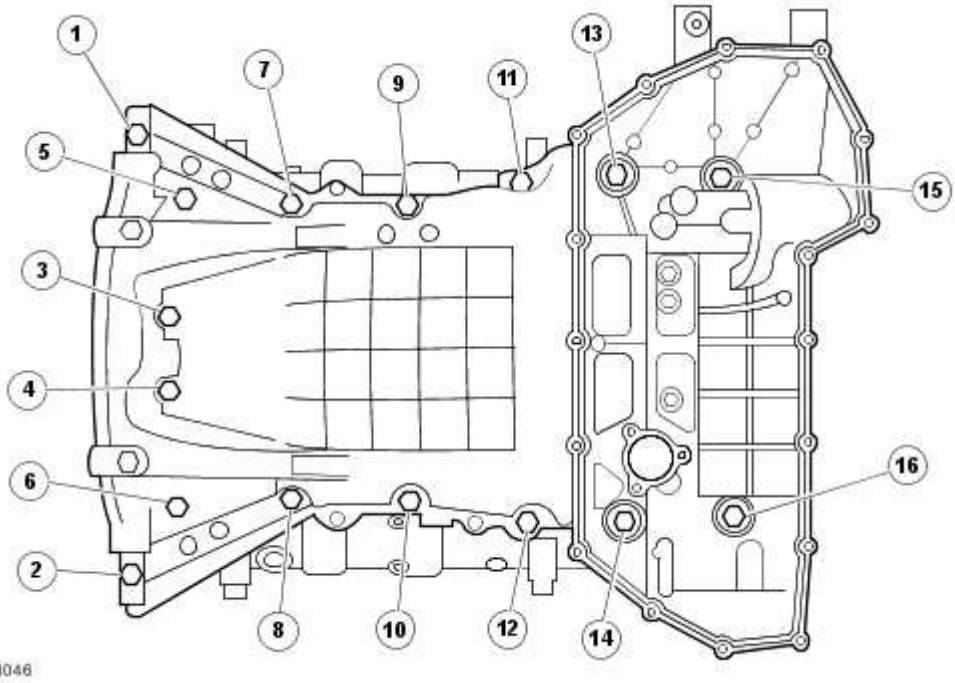

25 . **NOTE:**

Install a new O-ring seal.

Install the oil strainer.

- Tighten to 12 Nm.

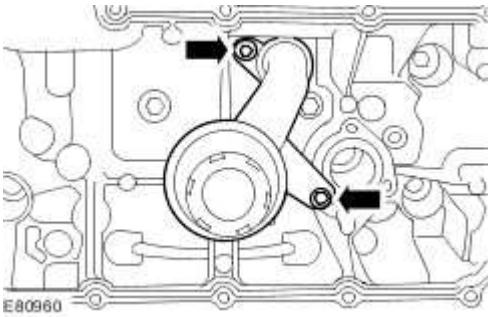

26 . Install the oil pan gasket to the oil pan body assembly.

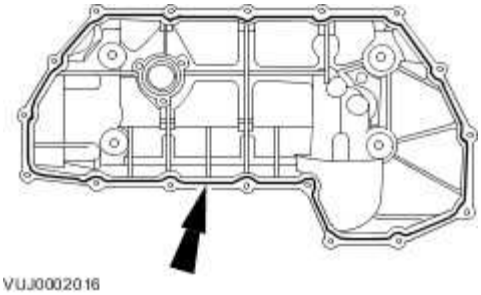

27 . Install the lower oil pan.

- Install, but do not fully tighten the retaining bolts.

www.JagDocs.com

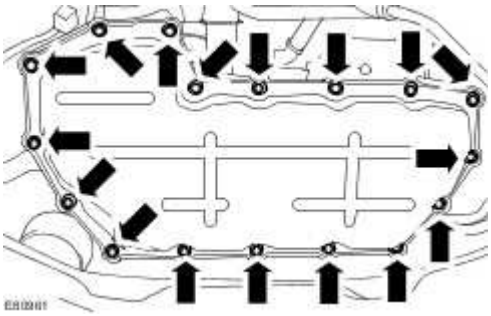

28 . Tighten the retaining bolts in the indicated sequence in two stages.

- Stage 1: bolts 1 to 7, tighten to 5 Nm.
- Stage 2: bolts 1 to 17, tighten to 12 Nm.

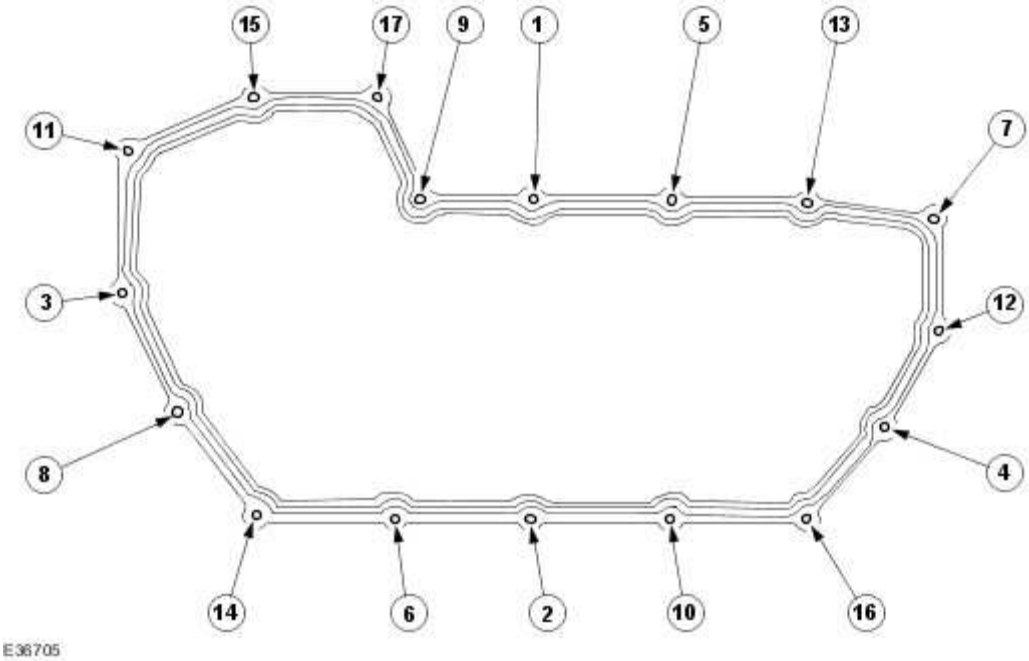

29 . Install the drive plate.

- Install the drive plate.
- Install the drive plate retaining bolts, and tighten in 2 stages.
- Stage 1: Tighten to 15 Nm.

- Stage 2: Tighten to 110 Nm.

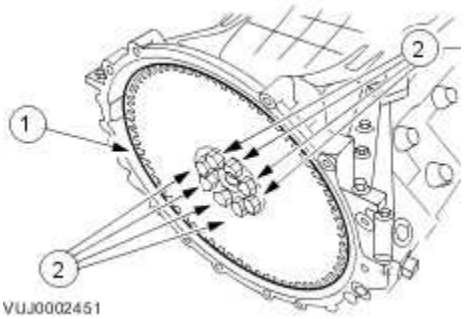

30 . Position the crankshaft.

- Install the special tool.

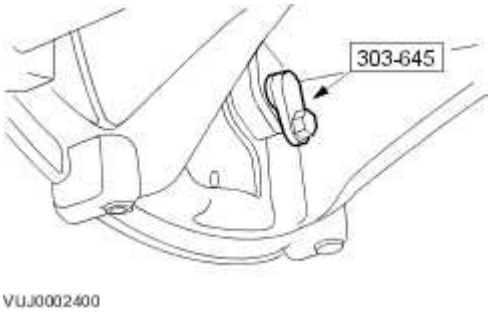

31 . Install the left-hand primary timing chain tensioner guide.

- Tighten to 12 Nm.

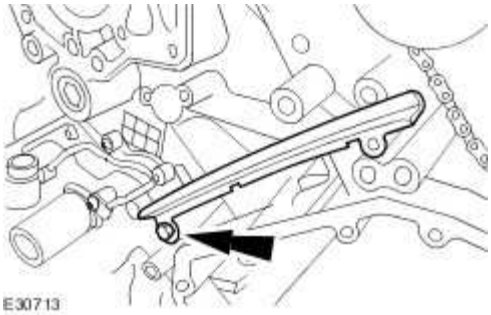

www.JagDocs.com

32 . Install the crankshaft sprocket.

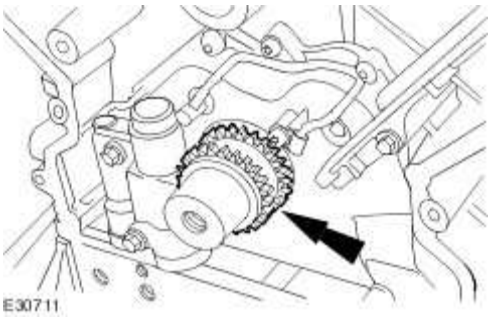

33 . **CAUTION: Make sure the timing chain slack is on the tensioned side of the timing chain.**

Install the left-hand primary timing chain.

- Install the primary chain over the crankshaft sprocket and the intake sprocket.

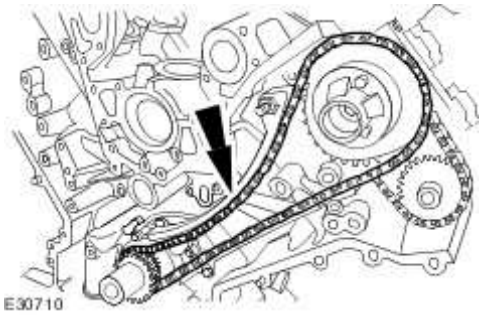

34 . Install the left-hand primary timing chain tensioner guide.

- Tighten to 12 Nm.

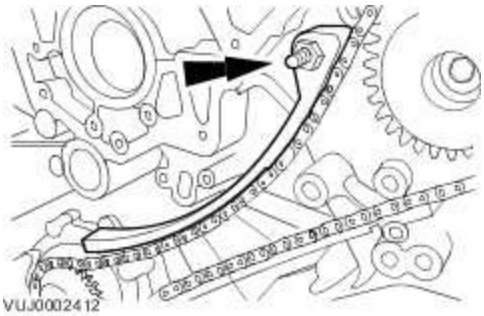

35. **CAUTION: Use suitable protective covers on the vice jaws to protect the timing chain tensioner.**

Secure the left-hand timing chain tensioner in the vice jaws.

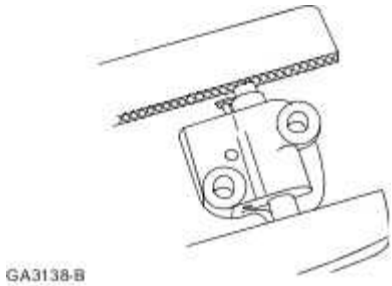

36. **CAUTION: During timing chain tensioner compression, do not release the ratchet stem until the timing chain tensioner piston is fully bottomed in its bore or damage to the ratchet stem will result.**

Using a suitable tool, hold the left-hand timing chain tensioner ratchet lock mechanism away from the ratchet stem.

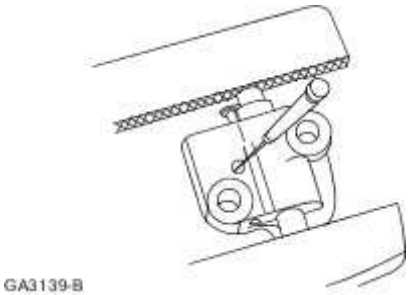

www.JagDocs.com

37 **NOTE:**

.

The timing chain tensioner piston should retract with minimal force. If binding occurs, reposition the timing chain tensioner to eliminate side loading.

Slowly compress the left-hand timing chain tensioner.

38 **NOTE:**

.

The retaining tool must remain in the timing chain tensioner until the timing chain tensioner is installed to the engine with the piston bottomed in the bore.

Using a suitable tool, retain the left-hand timing chain tensioner piston.

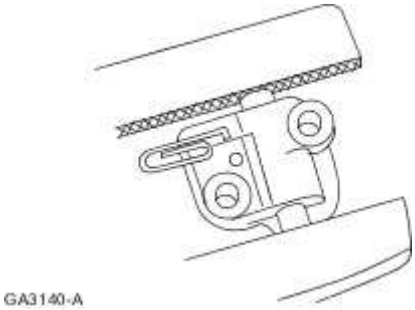

39 . Install the left-hand primary timing chain tensioner assembly.

- Tighten to 12 Nm.

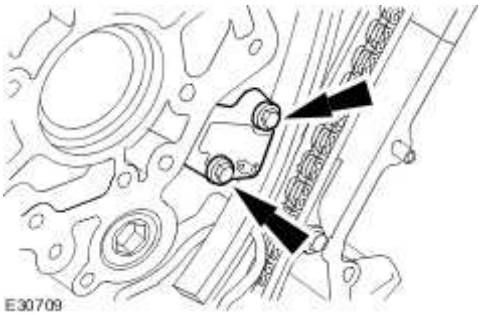

40 . Release the tension in the left-hand timing chain tensioner.

- Remove the retaining tool.

41 . **CAUTION: While applying the opposing force to sprocket and chain, tighten the sprocket bolt.**

Using the special tool apply force to the tool in an anti-clockwise direction to tension the primary timing chain on its drive side.

- Tighten to 120 Nm.

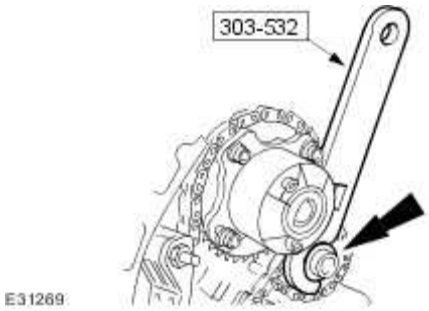

42 . **CAUTION: While applying the opposing force to sprocket and chain, tighten the sprocket bolt.**

Using the special tool apply force to the tool in an anti-clockwise direction.

- Tighten to 120 Nm.

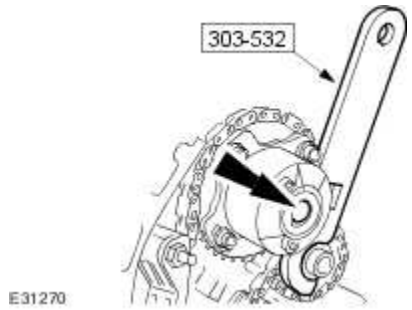

43 . Install the right-hand primary timing chain guide.

www.JagDocs.com

- Tighten to 12 Nm.

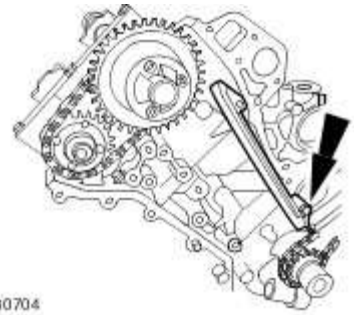

44. **CAUTION: Make sure the timing chain slack is on the tensioned side of the timing chain.**

Install the right-hand primary timing chain.

- Install the primary chain over the crankshaft sprocket and the intake sprocket.

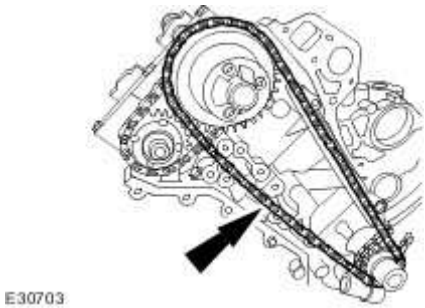

45 . Install the right-hand primary timing chain tensioner guide.

- Tighten to 12 Nm.

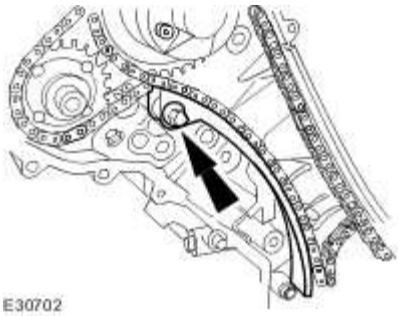

46. **CAUTION: Use suitable protective covers on the vice jaws to protect the timing chain tensioner.**

Secure the right-hand timing chain tensioner in the vice jaws.

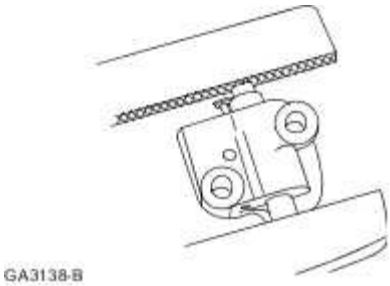

47. **CAUTION: During timing chain tensioner compression, do not release the ratchet stem until the timing chain tensioner piston is fully bottomed in its bore or damage to the ratchet stem will result.**

Using a suitable tool, hold the right-hand timing chain tensioner ratchet lock mechanism away from the ratchet stem.

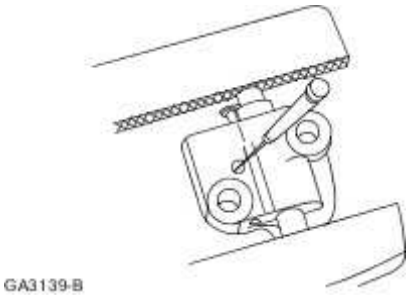

www.JagDocs.com

48 **NOTE:**

.

The timing chain tensioner piston should retract with minimal force. If binding occurs, reposition the timing chain tensioner to eliminate side loading.

Slowly compress the right-hand timing chain tensioner.

49 **NOTE:**

.

The retaining tool must remain in the timing chain tensioner until the timing chain tensioner is installed to the engine with the piston bottomed in the bore.

Using a suitable tool, retain the right-hand timing chain tensioner piston.

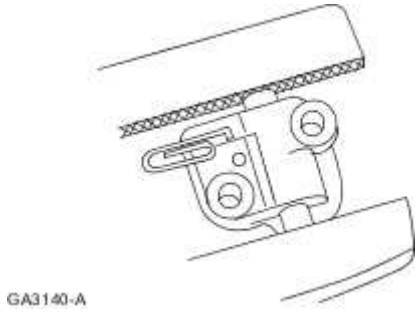

50 . Install the right-hand primary timing chain tensioner assembly.

- Tighten to 12 Nm.

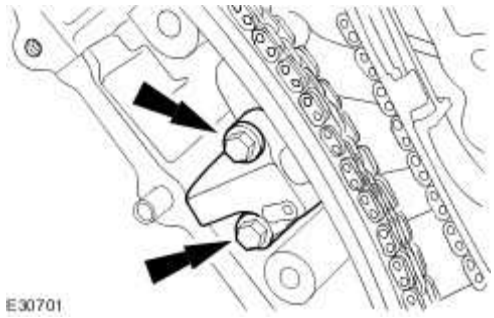

51 . Release the tension in the right-hand timing chain tensioner.

- Remove the retaining tool.

52 . **CAUTION: While applying the opposing force to sprocket and chain, tighten the sprocket bolt.**

Using the special tool apply force to the tool in an anti-clockwise direction to tension the primary timing chain on its drive side.

- Tighten to 120 Nm.

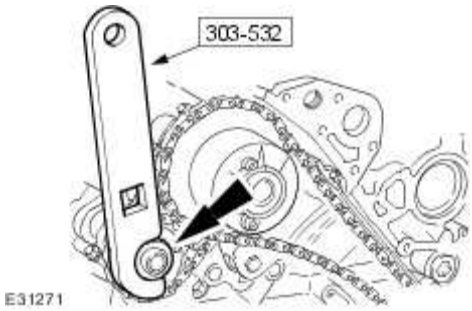

53 . **CAUTION: While applying the opposing force to sprocket and chain, tighten the sprocket bolt.**

Using the special tool apply force to the tool in an anti-clockwise direction.

- Tighten to 120 Nm.

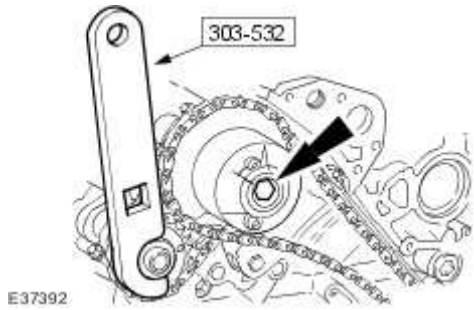

54 . Remove the special tool from the right-hand cylinder head.

www.JagDocs.com

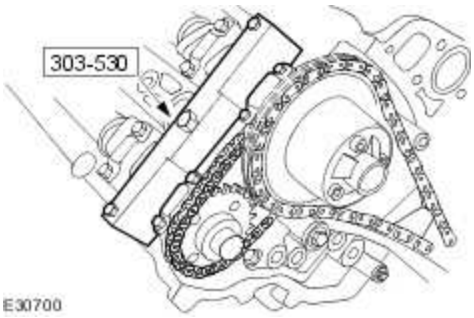

55 . **NOTE:**

Install new O-ring seals.

Install the right-hand VCT oil control unit housing.

Tighten to 22 Nm.

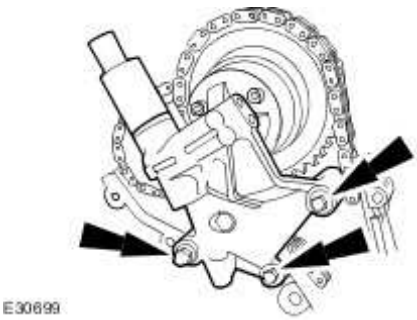

56 . Remove the special tool from the left-hand cylinder head.

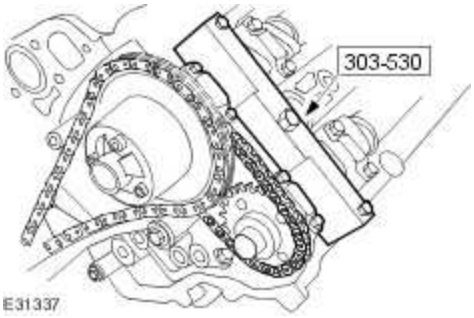

57 . **NOTE:**

Install new O-ring seals.

Install the left-hand VCT oil control unit housing.

- Tighten to 22 Nm.

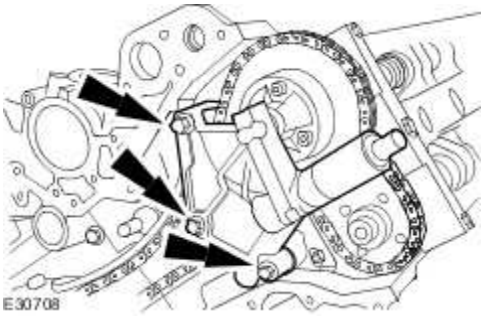

58 . Install new seals to the timing cover.

- Install the new seal to the inner groove on the face of the timing cover.
- Install the new seal to the outer groove on the face of the timing cover.

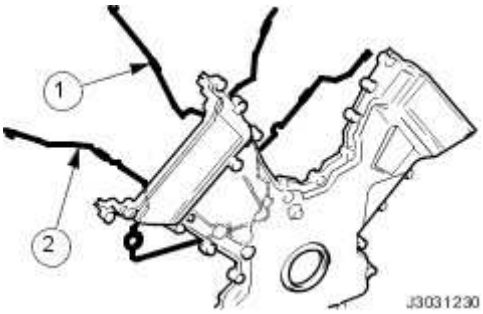

59 Apply sealant to the eight joints on the engine face.

.

- Sealant beads to be 3mm diameter and 12mm long. Cut the nozzle of the sealant tube to produce a 3 mm (0.12 in) bead. (Install and tighten the securing bolts within twenty minutes of sealant application).

www.JagDocs.com

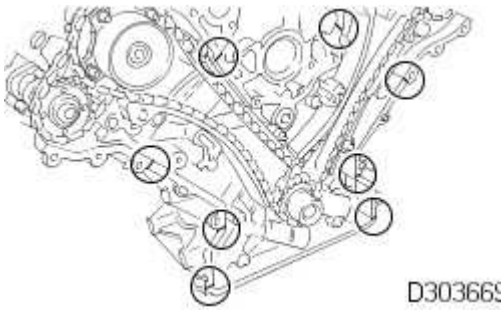

60 . Install the timing cover.

Tighten in the sequence shown.

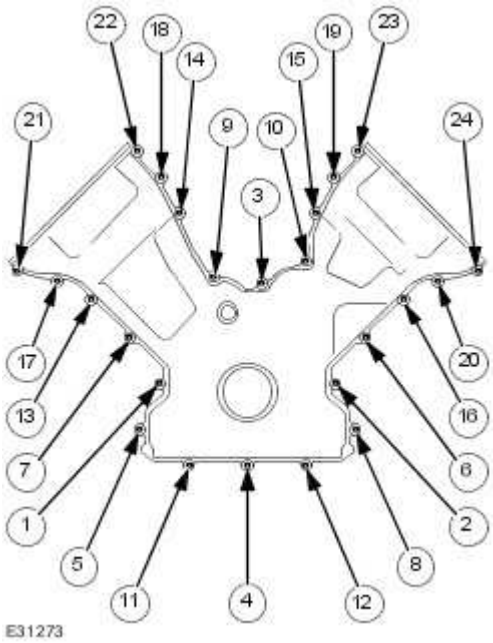

61 . **CAUTION: Make sure the crankshaft front seal mating faces are clean and dry.**

CAUTION: Do not remove the crankshaft front seal protector.

Using the special tool, install a new crankshaft front seal.

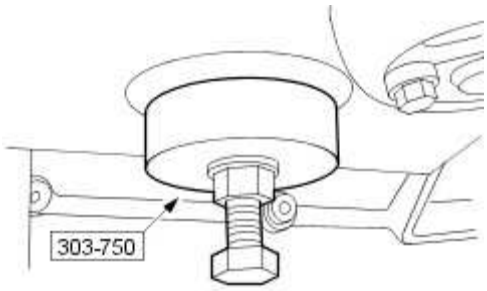

E31173

62 . Remove the crankshaft seal protector.

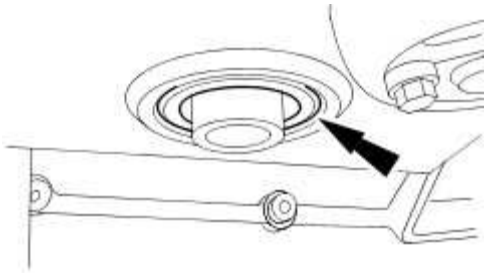

E31172

63 . Remove the special tool.

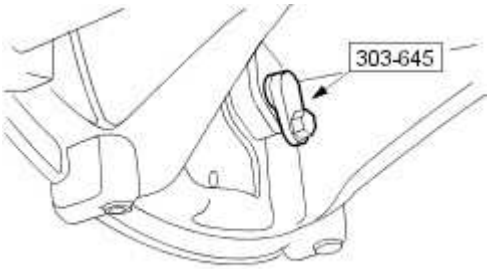

VUJ0002400

64 . Install the CKP sensor.

- Tighten to 12 Nm.

www.JagDocs.com

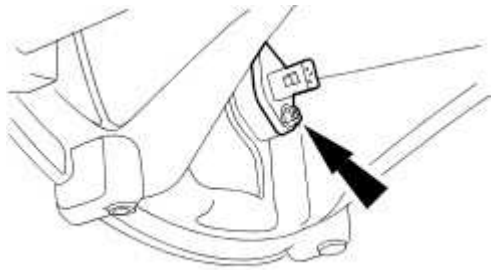

E30694

65 . Install a new O-ring seal to the crankshaft pulley.

- Lubricate the new O-ring.

66 . **CAUTION: The screw thread in the crankshaft must be cleaned out before a new crankshaft pulley bolt is installed.**

CAUTION: A new crankshaft pulley bolt must be used.

Install, but do not tighten, a new crankshaft pulley retaining bolt.

- Install the crankshaft pulley and locking ring to the crankshaft.

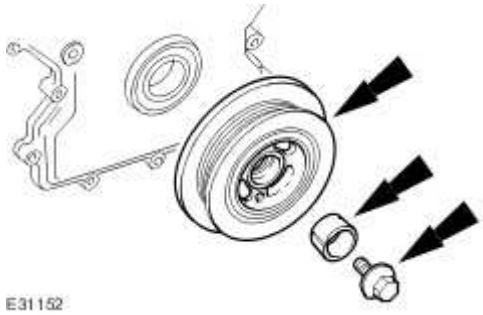

E31152

67 . **CAUTION: Under no circumstances should the crankshaft setting peg 303-645 be used in the following operations to lock the crankshaft.**

Using special tools, retain the crankshaft pulley.

- Tighten the crankshaft pulley retaining bolt to 375 Nm.

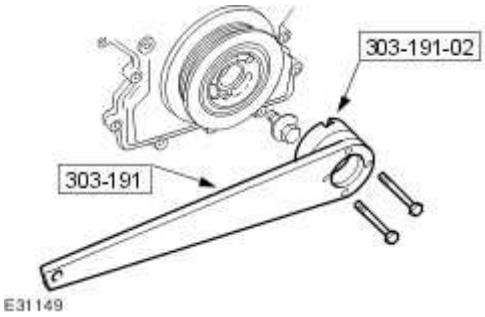

68 . Remove the special tools.

69 . **NOTE:**

Install a new gasket.

Install the oil filter housing.

- Tighten to 21 Nm.

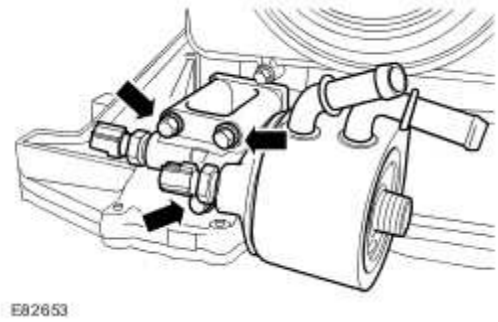

70 . Connect the oil pressure switch and oil temperature sensor electrical connectors.

www.JagDocs.com

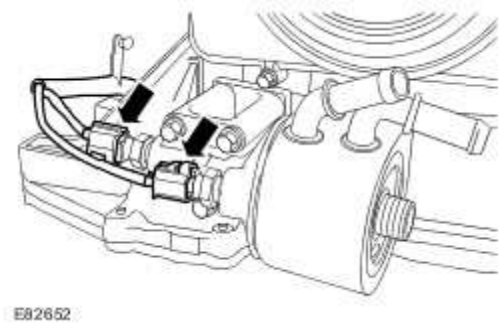

71 . **NOTE:**

Apply a suitable amount of clean engine oil to lubricate the oil filter O-ring seal.

Install a new oil filter.

- Tighten to 18 Nm.

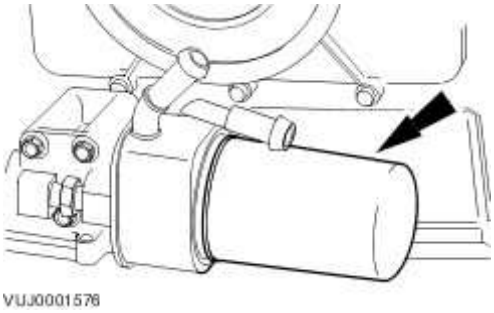

72 . Install the water pump pulley.

- Using the special tool, retain the water pump pulley.
- Tighten to 10 Nm + 45°.

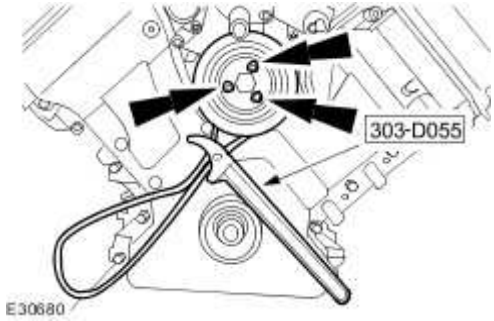

73 **NOTE:**

.

Install new valve cover gaskets.

NOTE:

Apply an 8mm diameter bead of silicone gasket sealant on the two places where the cylinder head and front cover join.

Install the left-hand valve cover.

- Tighten in the sequence shown to 10 Nm.

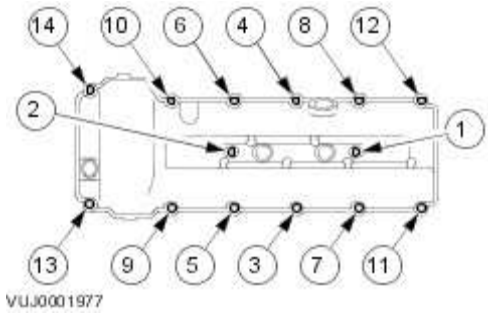

74 **NOTE:**

.

Install new valve cover gaskets.

NOTE:

Apply an 8mm diameter bead of silicone gasket sealant on the two places where the cylinder head and front cover join.

www.JagDocs.com

Install the left-hand valve cover.

- Tighten in the sequence shown to 10 Nm.

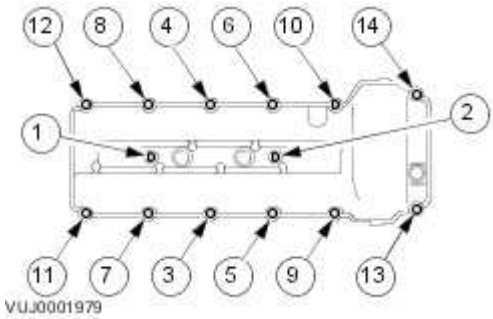

Vehicles without supercharger

75 . Connect the PCV pipe.

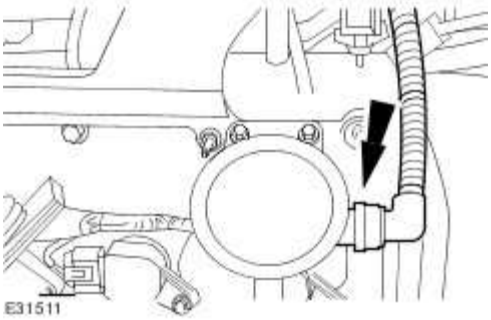

All vehicles

76 . **NOTE:**

Left-hand shown, right-hand similar

Install the ignition coils.

- Tighten to 5 Nm.

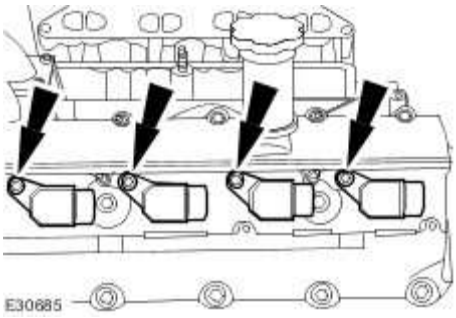

77 . Attach the engine harness.

- Connect the VCT solenoid electrical connector.
- Attach the engine harness.

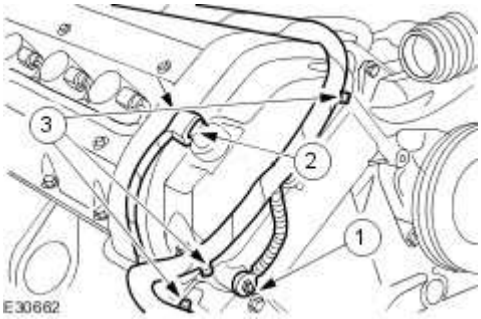

78 . Attach the right-hand ignition coil wiring harness

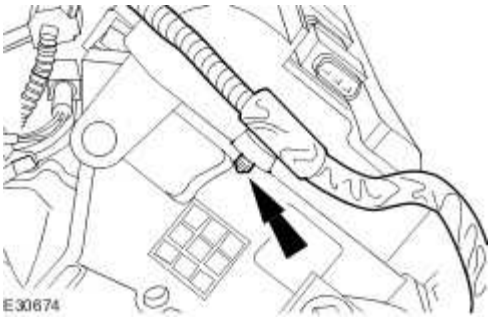

79 . Connect the right-hand ignition coil electrical connectors.

www.JagDocs.com

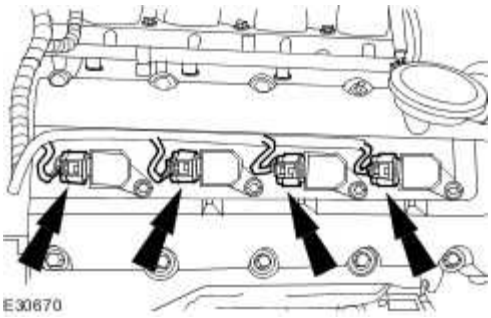

80 . Attach the right-hand ignition coil wiring harness.

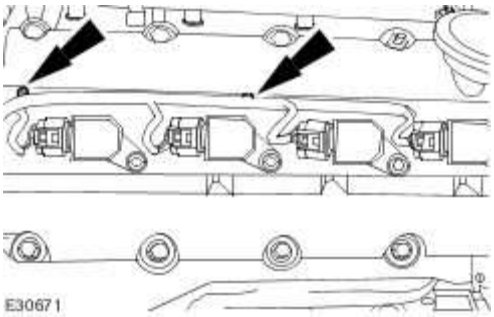

81 . Attach the left-hand ignition coil wiring harness.

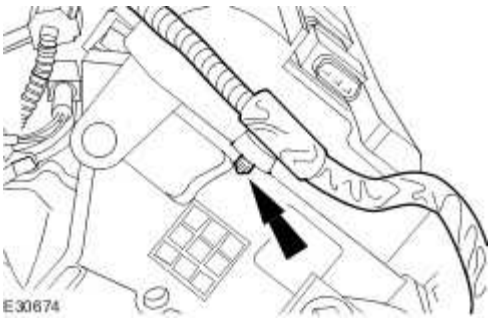

82 . Attach the left-hand ignition coil wiring harness.

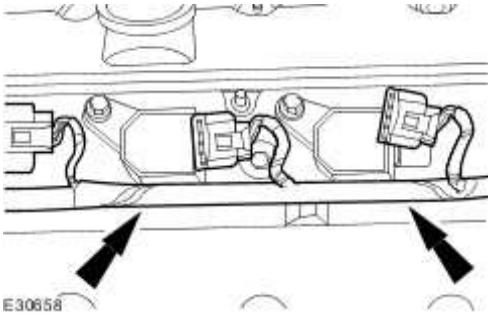

83 . Connect the left-hand ignition coil electrical connectors.

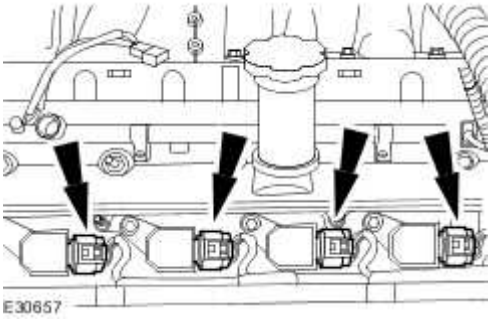

84 . **NOTE:**

Left-hand shown, right-hand similar.

Install both ignition coil covers.

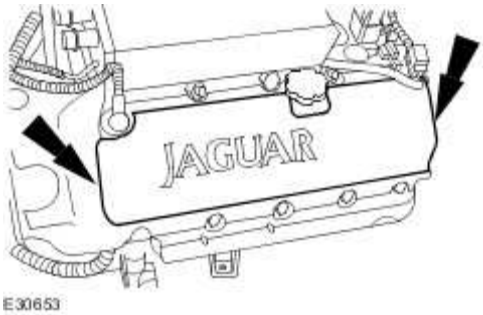

Vehicles without supercharger

85 . Install the right-hand engine cover retaining bracket.

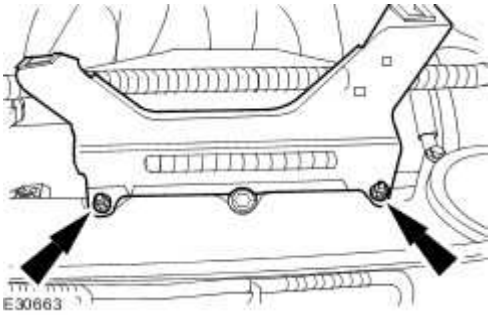

86 . Install the left-hand engine cover retaining bracket.

www.JagDocs.com

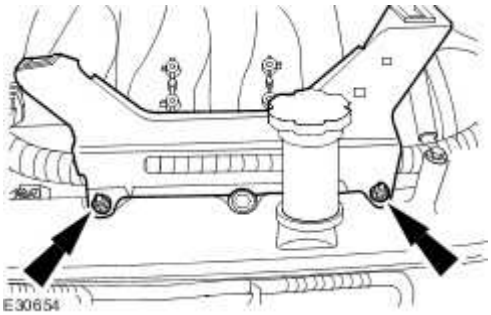

Vehicles with supercharger

87 . **NOTE:**

Install new O-ring seals to the thermostat housing.

Install thermostat housing.

Tighten to 10 Nm.

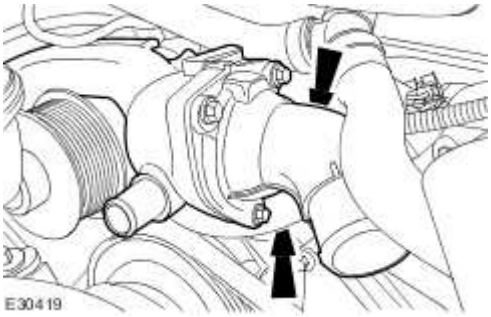

88 . Tighten to 10 Nm.

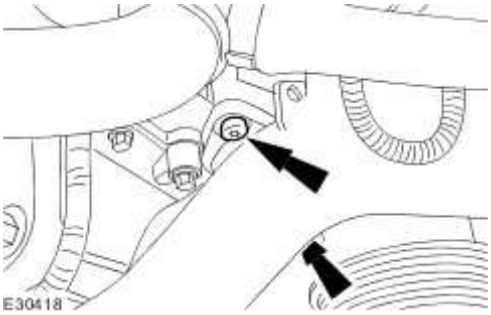

89 . Connect the water pump outlet to thermostat housing hose.

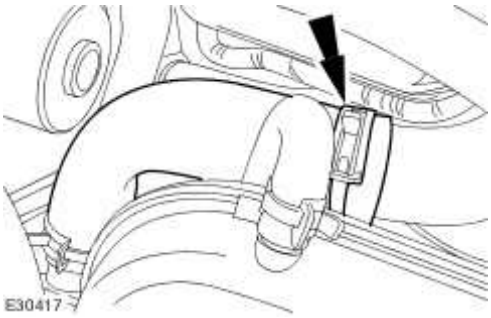

90 . Connect the heater supply hose to the thermostat housing.

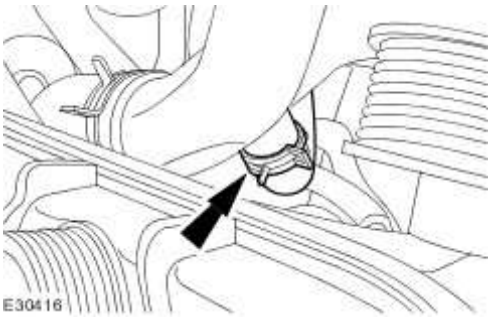

91 . Connect the thermostat outlet hose.

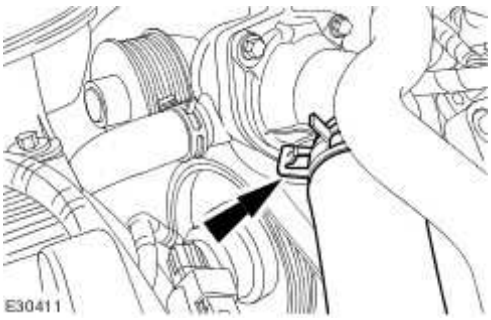

92 . Reposition the thermostat housing hose retaining clip.

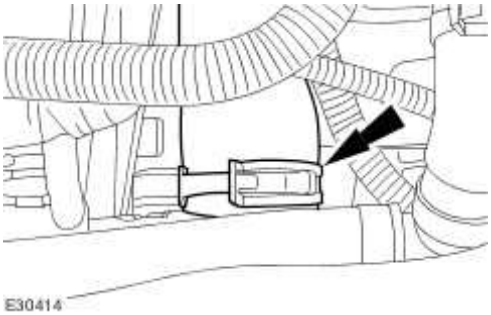

www.JagDocs.com

93 . Connect the ECT sensor electrical connector.

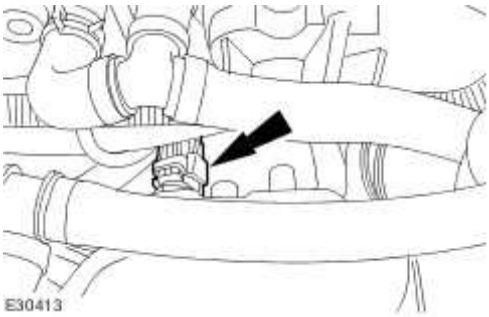

94 . Connect the thermostat housing hoses

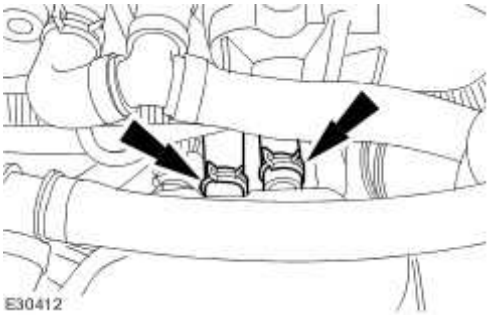

Vehicles without supercharger

95 . **NOTE:**

Install new O-ring seals.

Install the thermostat housing.

Tighten to 10 Nm.

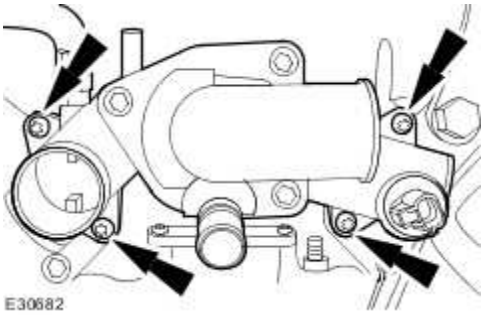

96 . Connect the ECT sensor electrical connector.

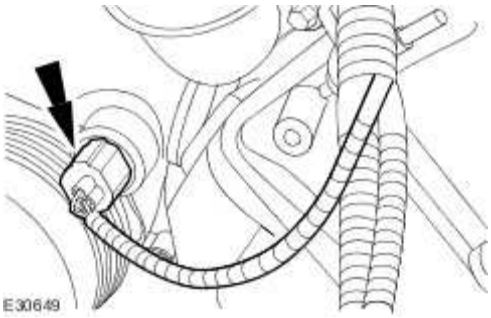

All vehicles

97 . Attach the engine wiring harness.

- Connect the VCT solenoid electrical connector.
- Attach the engine wiring harness.

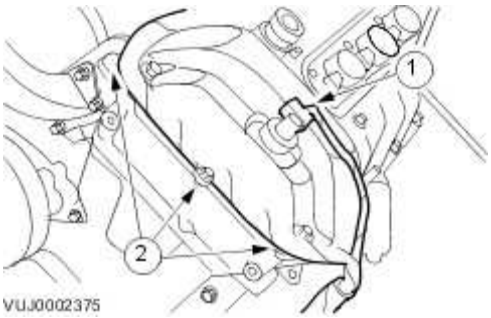

98 . Attach the engine wiring harness to the cylinder block.

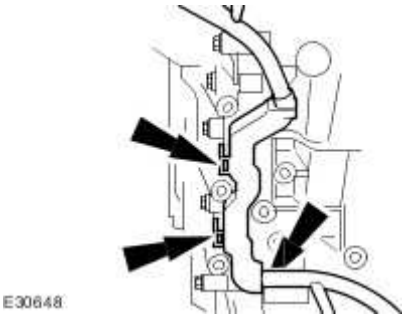

99 . Attach the engine wiring harness to the cylinder block.

www.JagDocs.com

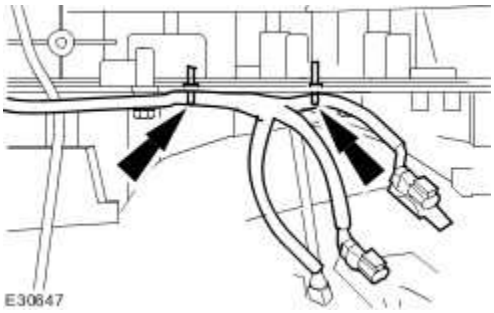

100 . Attach the left-hand HO2S wiring harness.

- Install the retaining bolt.
- Tighten to 10 Nm.

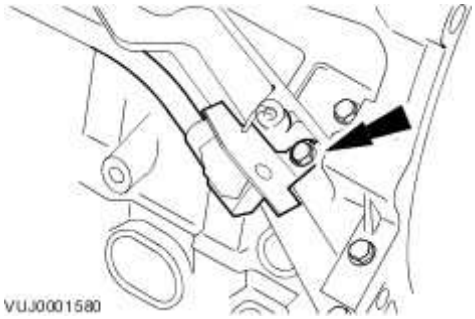

101 . Connect the CKP sensor electrical connector.

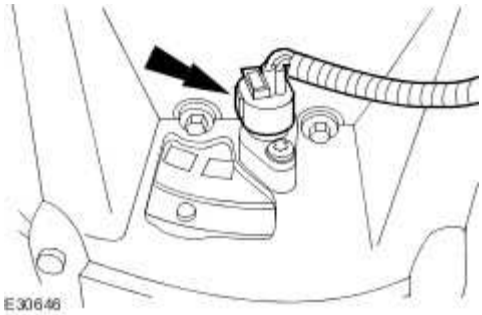

102 . **NOTE:**

Install a new O-ring seal.

Install the oil level indicator and tube.

Tighten to 6 Nm.

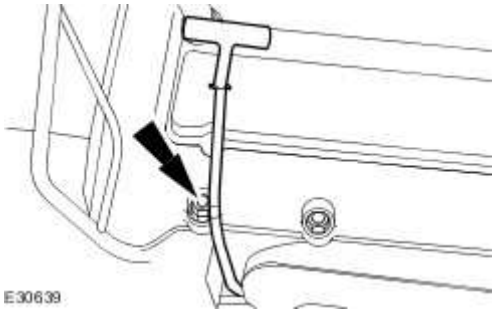

103 . Install the power steering pump mounting bracket.

Tighten to 25 Nm.

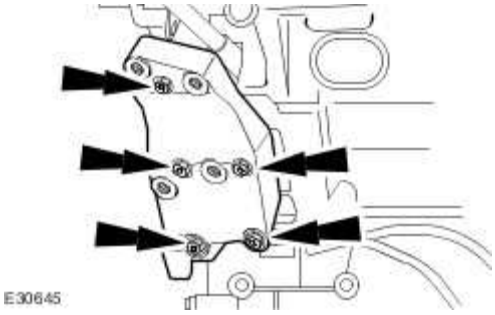

104 . Install the power steering pump.

Tighten to 25 Nm.

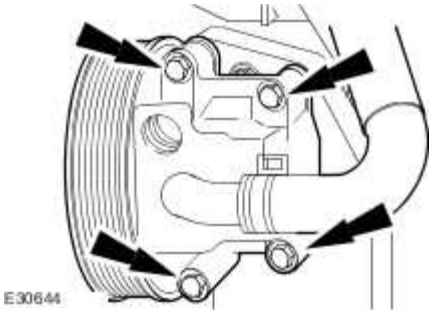

105 . Install the A/C compressor mounting bracket.

www.JagDocs.com

- Tighten to 25 Nm.

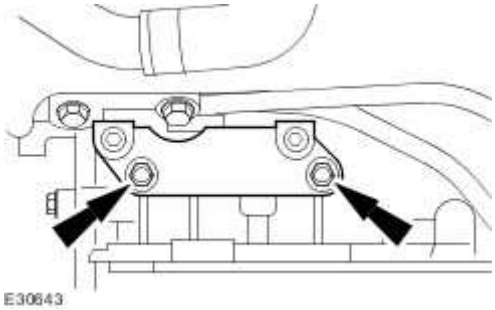

106 . Install the A/C compressor.

- Tighten to 25 Nm.

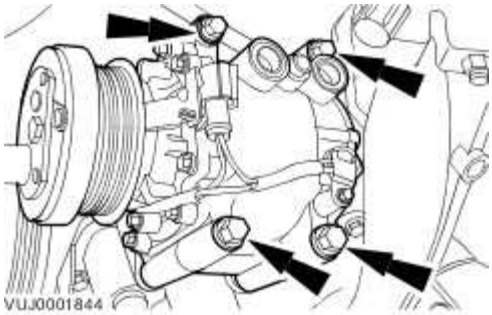

107 . Attach the A/C compressor harness.

- Install the retaining nut.
- Tighten to 10 Nm.

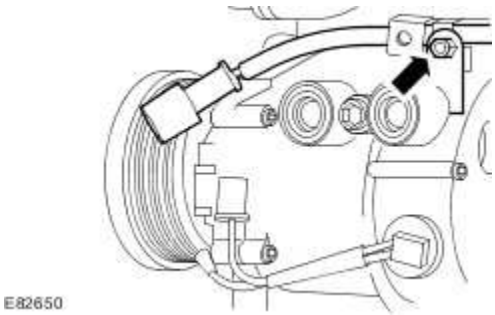

108 . Connect the A/C compressor electrical connector.

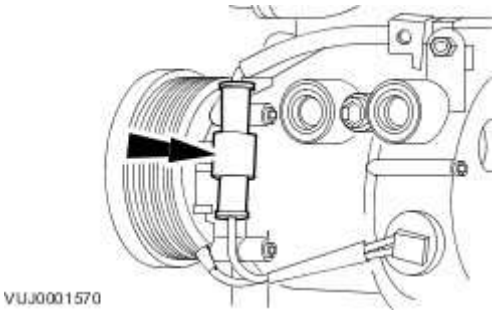

109 . **NOTE:**

Right-hand shown, left-hand similar.

Install both engine mounts.

- Tighten to 43 Nm.

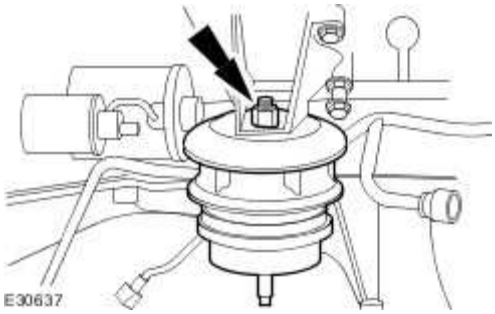

110 . Install the starter motor.

- Tighten to 45 Nm.

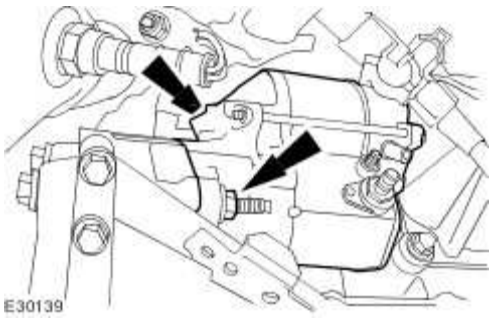

www.JagDocs.com

111 . Attach the right-hand HO2S wiring harness to the cylinder block.

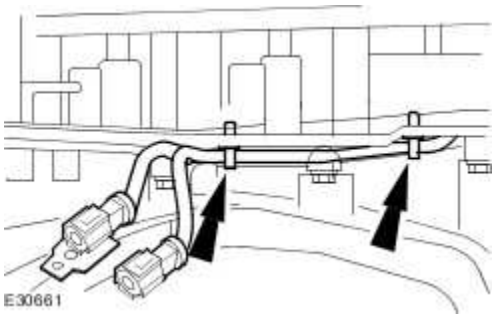

Engine (12.41.01)

Special Service Tools

Engine lifting brackets
303-536

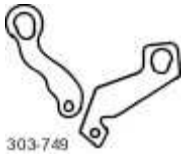

Engine lifting brackets
303-749

5 point security torx bit
418-535

Removal

All Vehicles

1 Reclaim the air conditioning (A/C) refrigerant.
. For additional information, refer to Air Conditioning (A/C) System Recovery, Evacuation and Charging (82.30.30)

2 . Remove the automatic transmission.
For additional information, refer to Transmission - 3.5L/4.2L (44.20.01)

www.JagDocs.com

3 . **NOTE:**

Left hand shown, right hand similar.

Remove the engine mount retaining nuts.

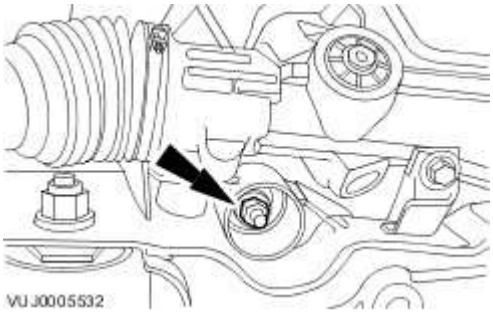

Vehicles with supercharger

4 . **NOTE:**

Place a suitable container underneath the oil cooler to prevent oil spillage.

Detach the oil cooler lines.

- Remove and discard the oil cooler O-ring seals.

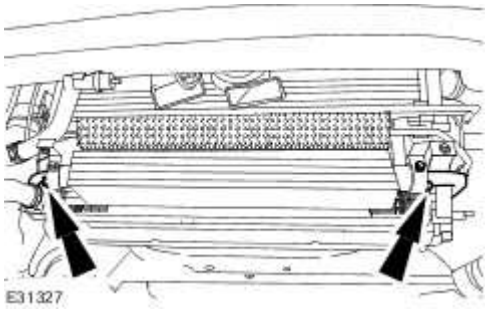

5 . Remove the oil cooler inlet line.

- Remove and discard the O-ring seals.

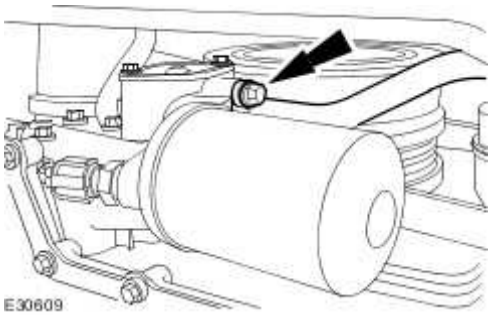

6 . Remove the oil cooler outlet line.

- Remove and discard the O-ring seals.

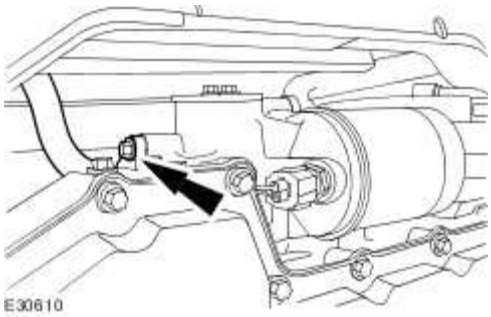

All vehicles

7 . Detach the starter motor positive cable cover.

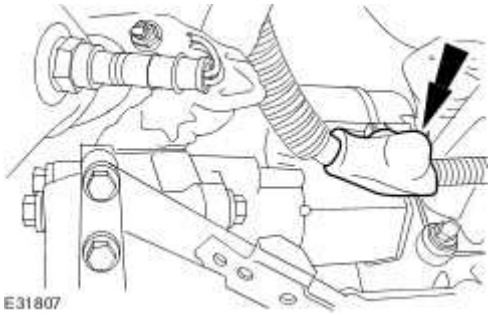

8 . Detach the starter motor positive cables.

www.JagDocs.com

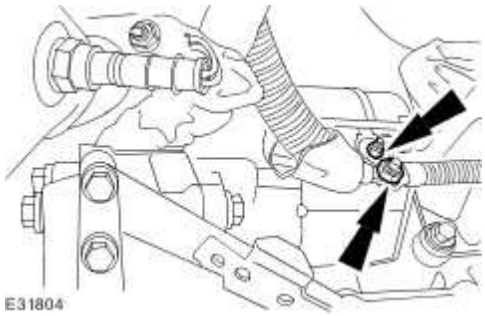

9 . Detach the A/C compressor return line.

- Remove and discard the O-ring seals

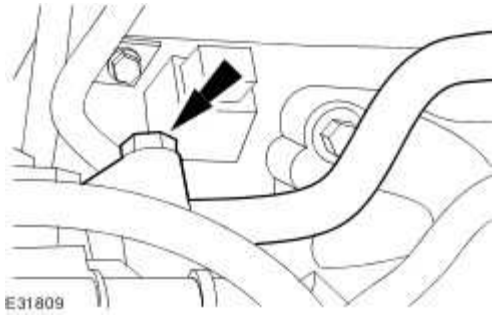

10 . Detach the power steering line.

- Remove and discard the O-ring seal.

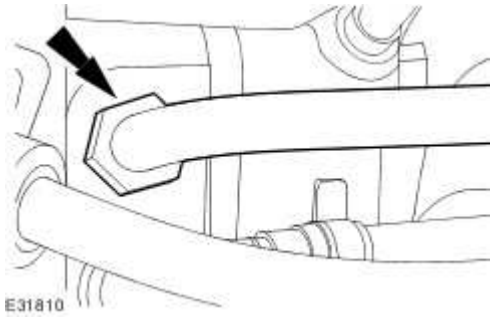

11 . Lower the vehicle.

12 . Remove the hood.
For additional information, refer to Hood (76.16.01)

13 . Cooling Fan Motor and Shroud
For additional information, refer to Cooling Fan Motor and Shroud (26.25.25)

14 . Detach the lower coolant hose.

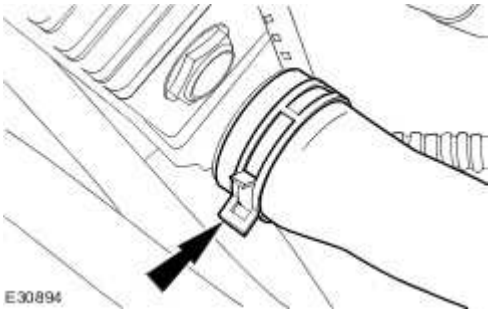

15 . Remove the cabin air filter.
For additional information, refer to Cabin Air Filter (76.10.09)

16 . Remove the cowl vent screen.
For additional information, refer to Cowl Vent Screen (76.10.01)

17 . Remove the engine compartment support.

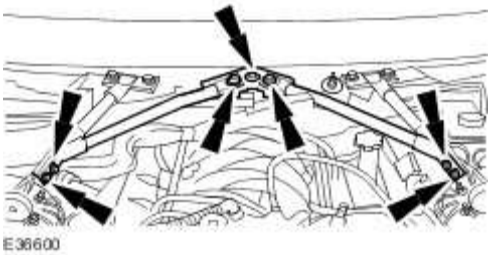

18 . Remove the engine compartment support.

www.JagDocs.com

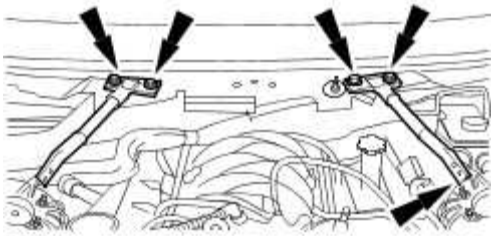

19 . Remove the engine compartment cover.

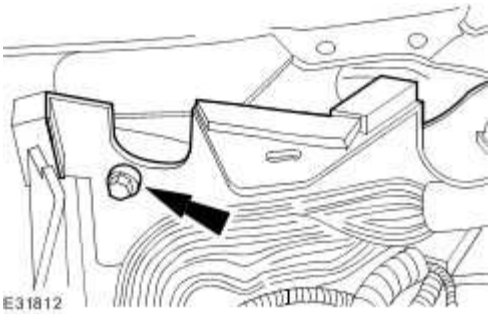

20 . Remove the cabin air filter housing.

21 . Disconnect the engine harness electrical connector.

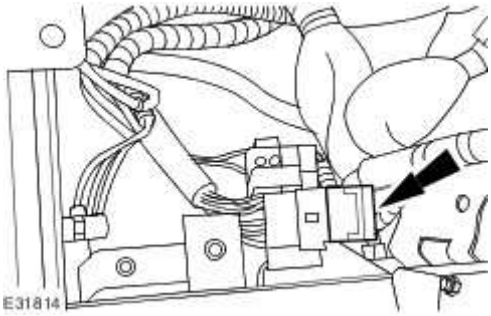

22 . Disconnect the engine harness electrical connector.

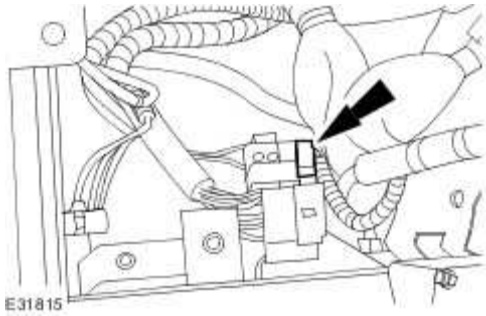

23 . Detach the engine harness earth.

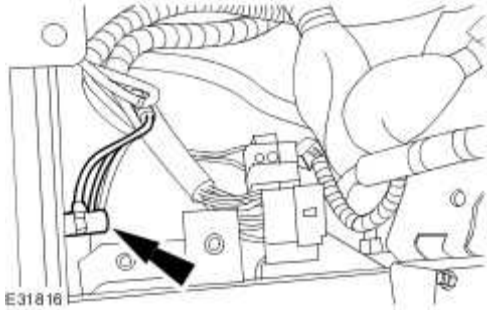

24 **NOTE:**

.

The engine control module (ECM) electrical connector retaining bolt remains captive in the electrical connector

Disconnect the ECM electrical connector.

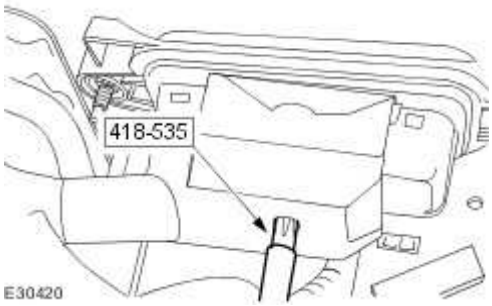

25 . Detach the wiring harness retaining clip.

www.JagDocs.com

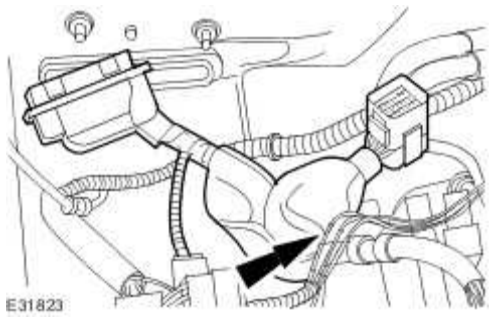

26 Remove the power steering fluid reservoir.
. For additional information, refer to Power Steering Fluid Reservoir - 3.0L/3.5L/4.2L (57.15.08)

27 **NOTE:**
.

The spilling of fuel is unavoidable during this operation. Ensure that all necessary precautions are taken to prevent fire and explosion.

Using the special tool, disconnect the fuel line.

- Remove the clip.

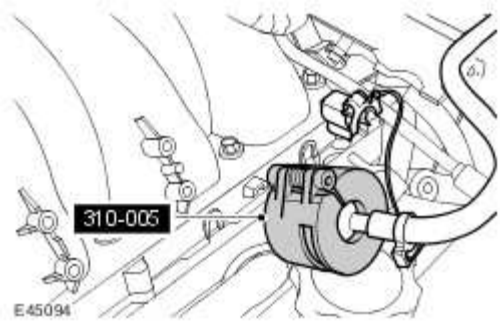

28 . Detach the fuel line retaining bracket.

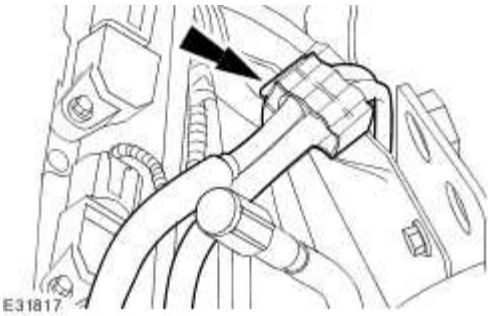

29 . Install the special tool to the left-hand rear of the engine.

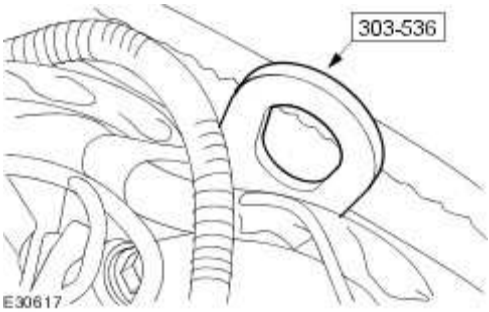

30 . Install the special tool to the right-hand rear of the engine.

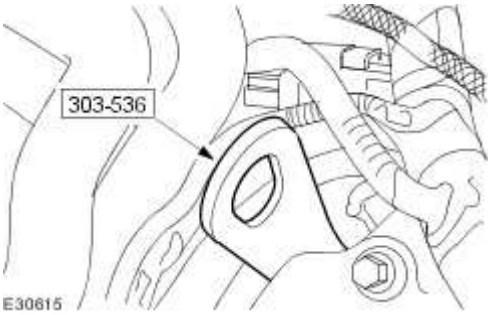

31 . Detach the evaporative emission canister purge valve hose.

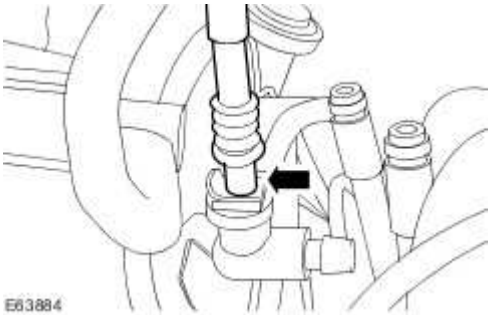

www.JagDocs.com

Vehicles without supercharger

32 Remove the throttle body.

. For additional information, refer to Throttle Body - Vehicles Without: Supercharger, VIN Range: G00442->G45703 (19.70.04)

For additional information, refer to Throttle Body - Vehicles Without: Supercharger, VIN Range: G45704->G99999 (19.70.04)

33 . Detach the brake booster vacuum pipe.

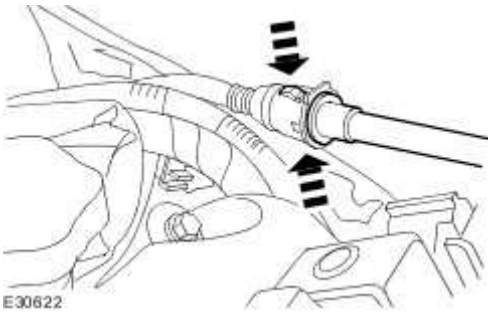

Vehicles with supercharger

34 . Remove the air intake tube.

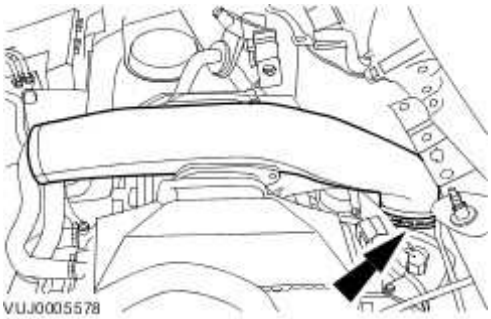

35 . Detach the brake booster vacuum pipe.

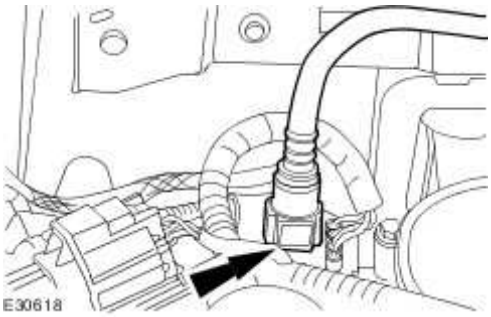

36 . Detach the fuel purge line.

- Remove and discard the retaining clip.

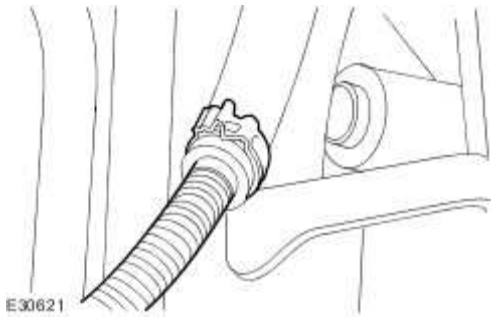

All vehicles

37 **NOTE:**

.

Vehicles with 3.5L or 4.2L engine without supercharger shown, vehicles with 4.2L engine with supercharger similar.

Install the special tools to the front of the engine.

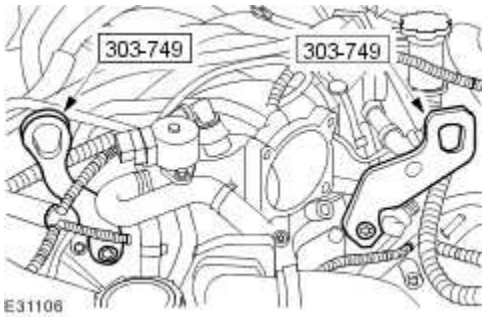

38 . Remove the engine assembly.

- Using the special tools, remove the engine assembly.

www.JagDocs.com

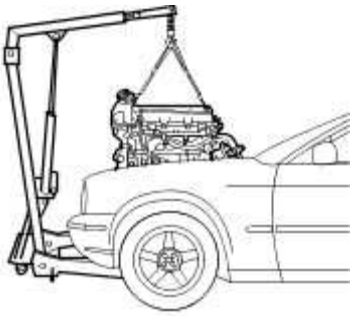

E31824

Engine (12.41.01)

Special Service Tools

Engine lifting brackets
303-536

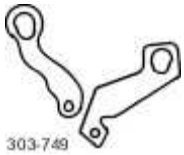

Engine lifting brackets
303-749

5 point security torx bit
418-535

Installation

All Vehicles

1 . Install the engine using suitable hydraulic lift.

www.JagDocs.com

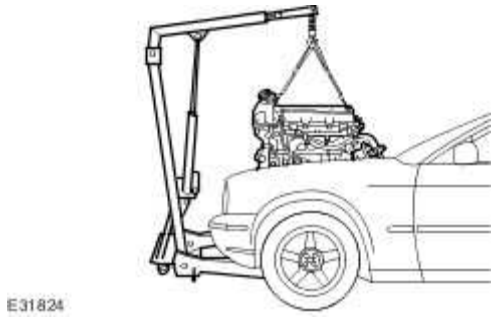

2 . Install the rubber blocks supplied with special tool HTJ1200-2.

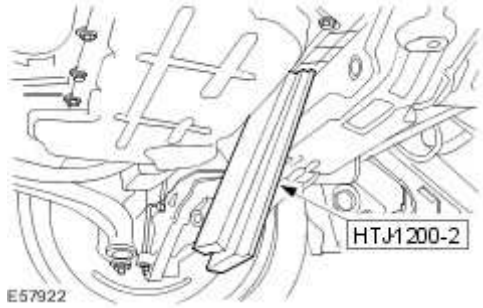

3 **NOTE:**

.

Vehicles with 3.5L or 4.2L engine without supercharger shown, vehicles with 4.2L engine with supercharger similar.

Remove the special tools from the front of the engine.

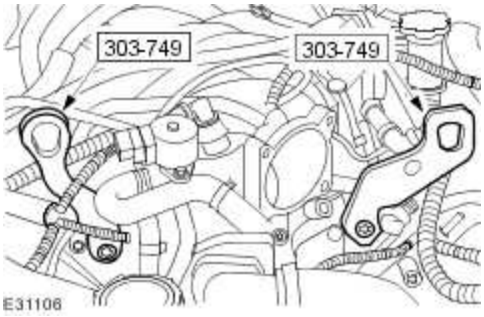

Vehicles with supercharger

4 . Attach the fuel purge line.

- Install a new retaining clip.

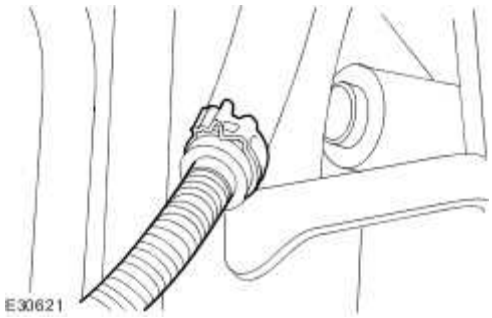

5 . Attach the brake booster vacuum pipe.

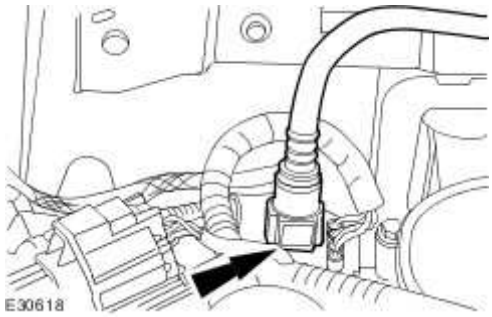

6 . Install the air intake tube.

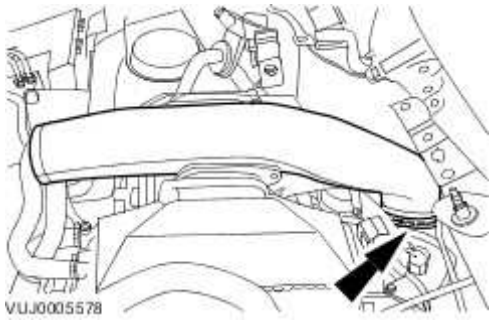

Vehicles without supercharger

7 . Attach the brake booster vacuum pipe.

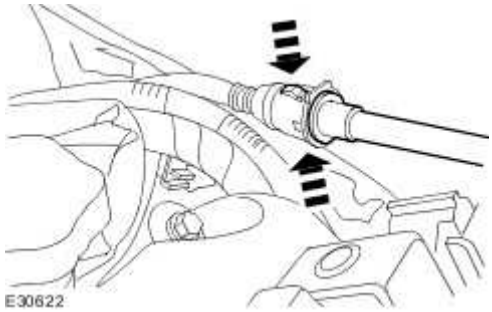

www.JagDocs.com

8 Install the throttle body.

. For additional information, refer to Throttle Body - Vehicles Without: Supercharger, VIN Range: G00442->G45703 (19.70.04)
For additional information, refer to Throttle Body - Vehicles Without: Supercharger, VIN Range: G45704->G99999 (19.70.04)

All Vehicles

9 . Attach the evaporative emission canister purge valve hose.

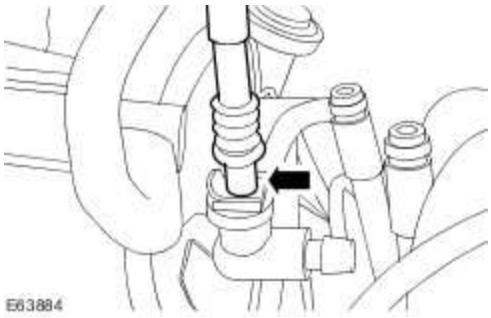

10 . Remove the special tool from the left-hand rear of the engine.

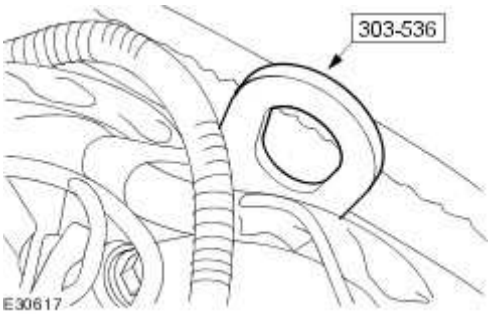

11 . Remove the special tool from the right-hand rear of the engine.

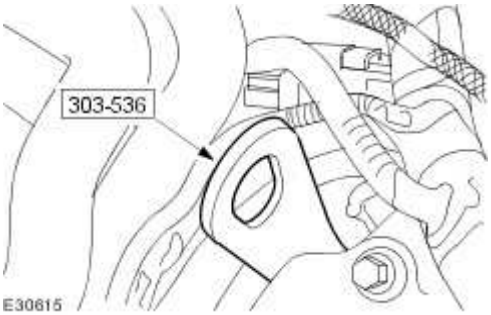

12 . Attach the fuel line retaining bracket.

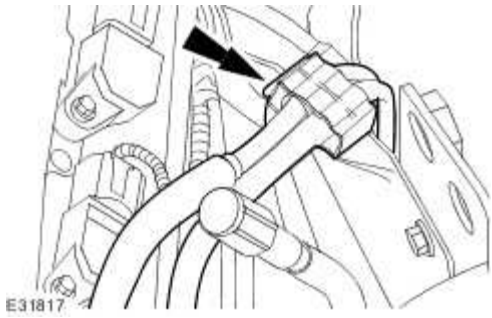

13 . Connect the fuel line.

- Install new O-ring seals.
- Attach the fuel line retaining clip.

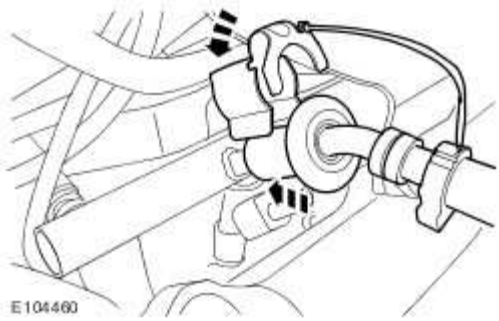

14 Install the power steering fluid reservoir.
. For additional information, refer to Power Steering Fluid Reservoir - 3.0L/3.5L/4.2L (57.15.08)

15 . Attach the wiring harness retaining clip.

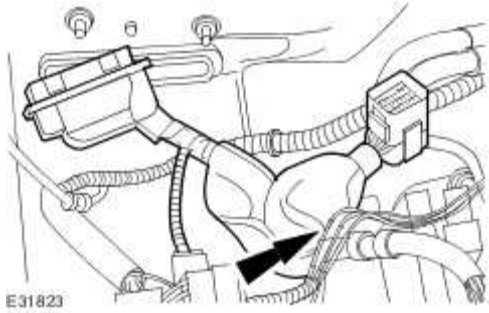

www.JagDocs.com

16 . Connect the engine control module (ECM) electrical connector.

Tighten to 6 Nm.

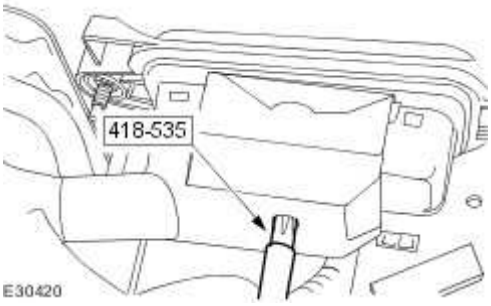

17 . Attach the engine harness earth.

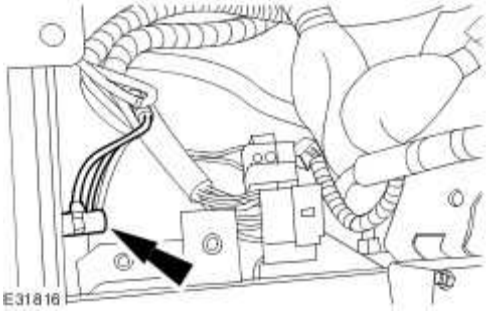

18 . Connect the engine harness electrical connector.

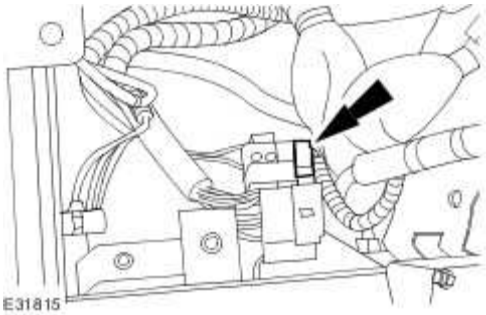

19 . Connect the engine harness electrical connector.

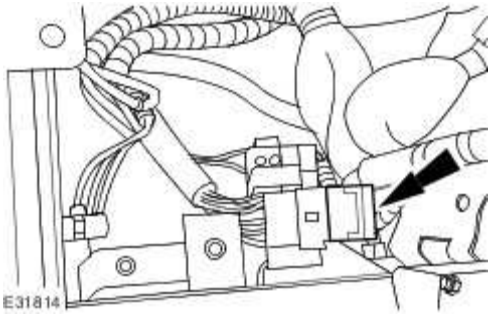

20 . Install the cabin air filter housing.

21 . Install the engine compartment cover.

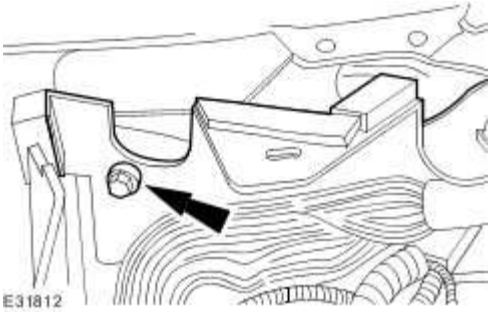

22 . Install the engine compartment support.

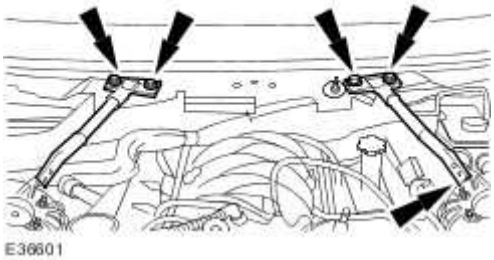

www.JagDocs.com

23 . Install the engine compartment support.

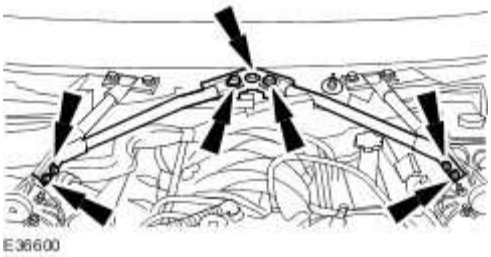

24 . Install the cabin air filter.
For additional information, refer to Cabin Air Filter (76.10.09)

25 . Install the cowl vent screen.
For additional information, refer to Cowl Vent Screen (76.10.01)

26 . Connect the lower coolant hose.

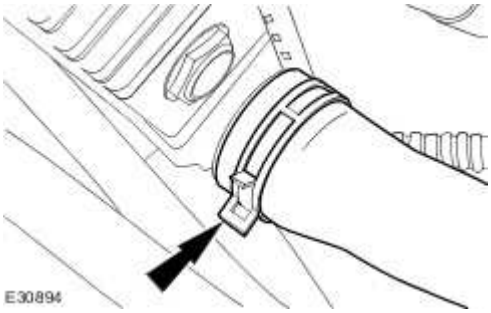

27 . Install the cooling fan motor and shroud.
For additional information, refer to Cooling Fan Motor and Shroud (26.25.25)

28 . Install the hood.
For additional information, refer to Hood (76.16.01)

29 . Raise the vehicle.

30 . Attach the power steering line.

- Install a new O-ring seal.

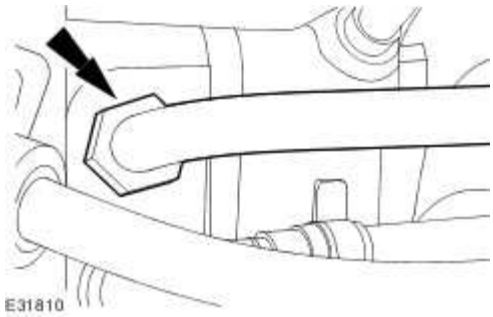

31 . Connect the A/C compressor return line.

- Install new O-ring seals.
- Tighten to 20 Nm.

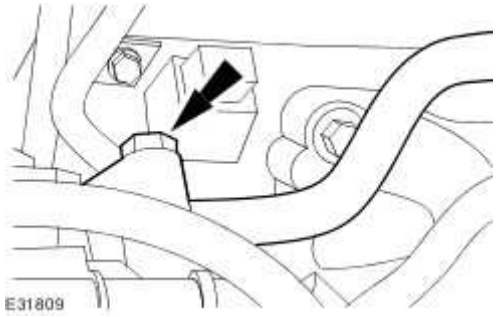

32 . Tighten to 10 Nm.

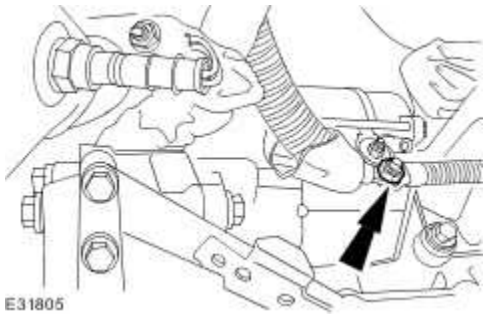

33 . Tighten to 7 Nm.

www.JagDocs.com

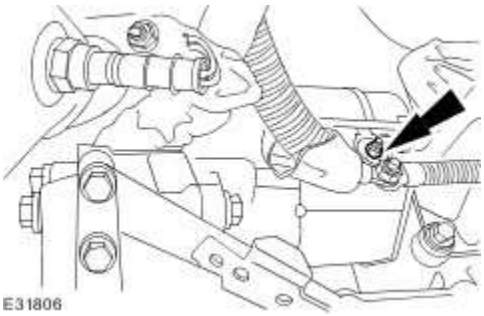

34 . Attach the starter motor positive cable cover.

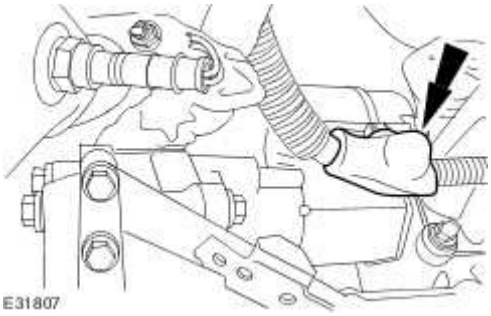

Vehicles with supercharger

35 . Tighten to 12 Nm.

Install new O-ring seals.

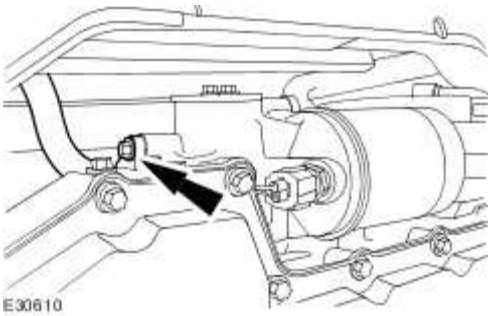

36 . Tighten to 12 Nm.

Install new O-ring seals.

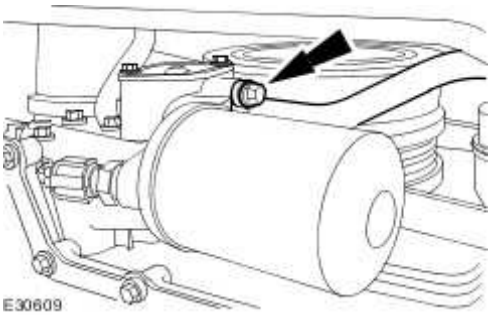

37 . Tighten to 12 Nm.

Install new O-ring seals.

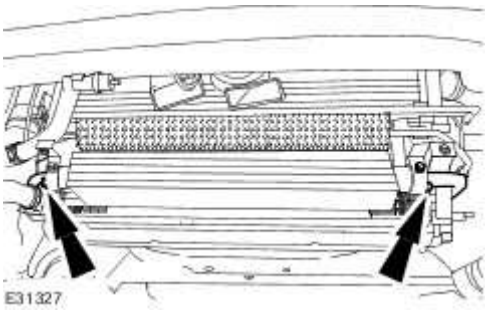

All vehicles

38 . **NOTE:**

Left hand shown, right hand similar.

Tighten to 63 Nm.

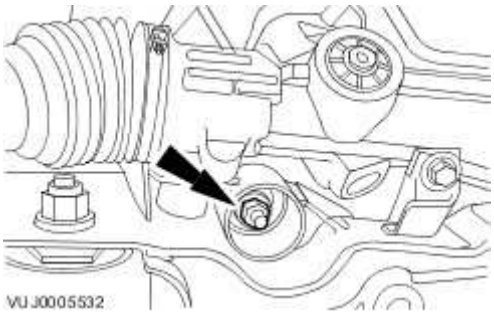

39 . Install the automatic transmission.
For additional information, refer to Transmission - 3.5L/4.2L (44.20.01)

www.JagDocs.com

40 Carry out the A/C system evacuation and charging procedure.

. For additional information, refer to Air Conditioning (A/C) System Recovery, Evacuation and Charging (82.30.30)

41 . Carry out the A/C system flourescent dye leak detection procedure.

For additional information, refer to Fluorescent Dye Leak Detection

Camshafts RH - VIN Range: G00442->G45703 (12.13.18)

Special Service Tools

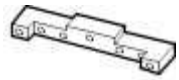

303-530

Camshaft setting/locking tool
303-530

303-532

Timing chain tensioning tool
303-532

303-645

Crankshaft setting, main tool
303-645

Removal

All vehicles

1 . Remove the air deflector.
For additional information, refer to Air Deflector (76.11.41)

2 . Disconnect the crankshaft position sensor electrical connector.

www.JagDocs.com

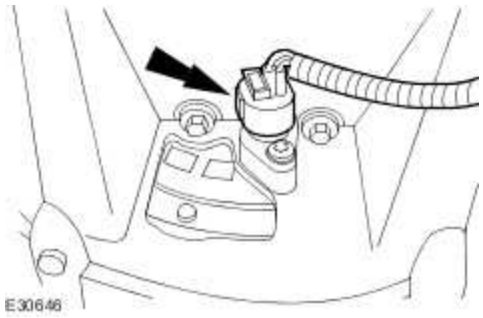

3 . Remove the crankshaft position sensor.

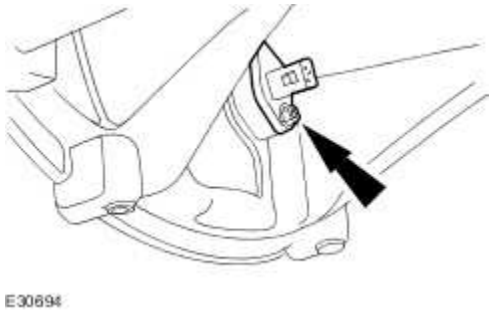

4 . Install the special tool.

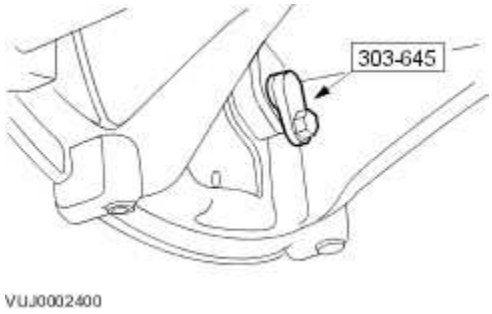

5 Remove the engine front cover.
. For additional information, refer to Engine Front Cover - VIN Range: G00442->G45703 (12.65.01)

Vehicles without supercharger

6 . Remove the right-hand variable camshaft timing oil control unit housing.

- Remove and discard the O-ring seals.

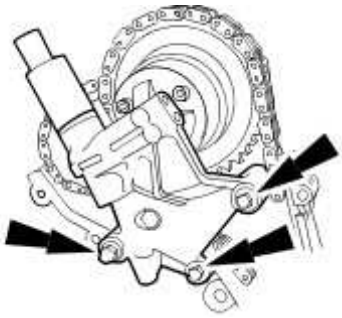

All vehicles

7 . Install the special tool to the left-hand cylinder head.

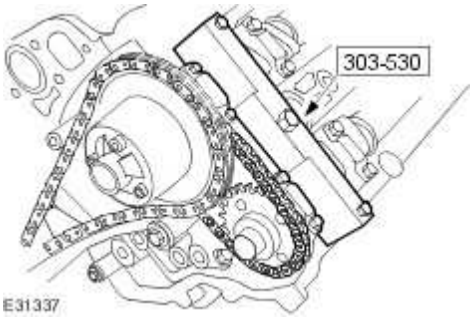

8 . Install the special tool to the right-hand cylinder head.

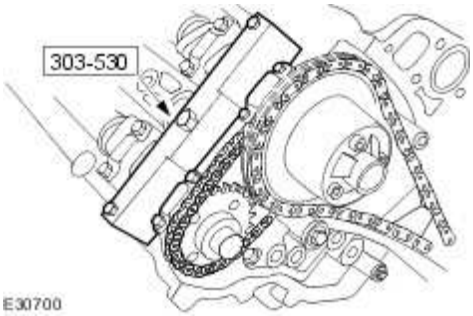

9 . Remove the primary timing chain tensioner assembly.

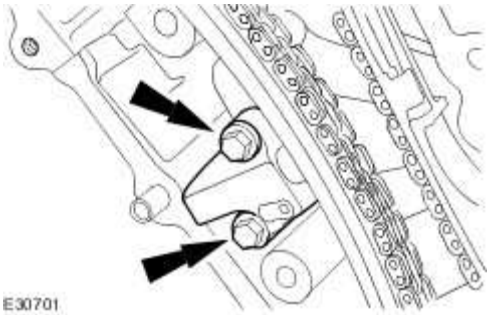

www.JagDocs.com

10 . Remove the primary timing chain tensioner guide.

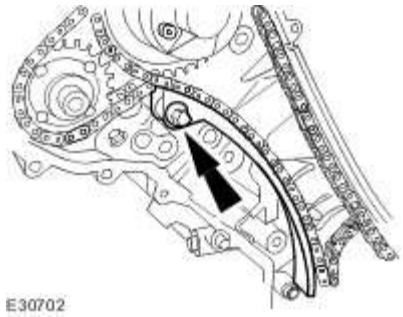

11 . Remove the primary timing chain.

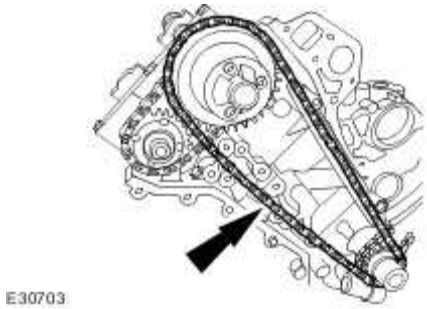

12 . Remove the secondary timing chain tensioner retaining bolts.

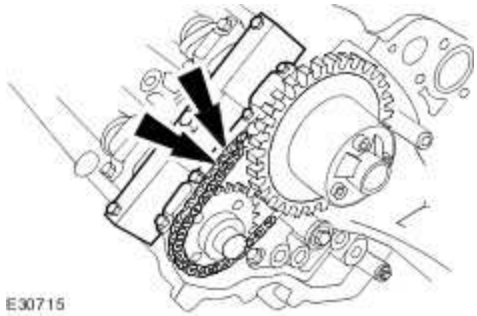

13 Remove the camshaft sprockets.

.

Remove the secondary timing chain tensioner and secondary timing chain from the camshaft sprockets.

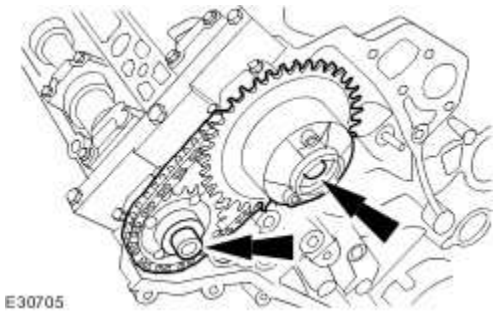

14 . Remove the camshaft setting tool.

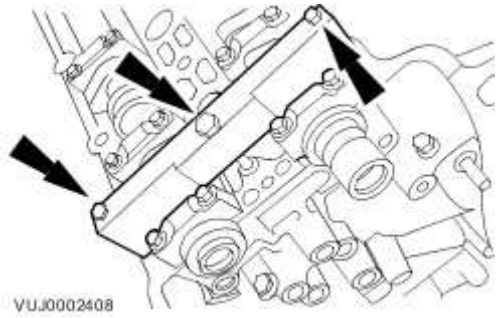

15 Remove the camshaft bearing caps.

.

- Remove the camshaft bearing cap retaining bolts evenly and in stages.
- Remove the camshaft bearing caps. Note their orientation and markings, each is marked with its position (a number) and orientation (an arrow).

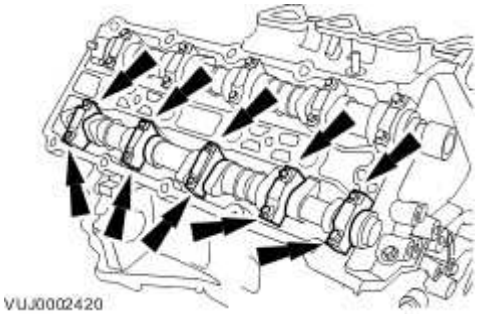

16 . Remove the right-hand exhaust camshaft.

www.JagDocs.com

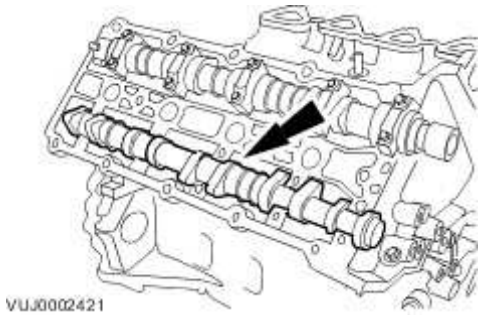

17 Remove the camshaft bearing caps.

.

- Remove the camshaft bearing cap retaining bolts evenly and in stages.
- Remove the camshaft bearing caps. Note their orientation and markings, each is marked with its position (a number) and orientation (an arrow).

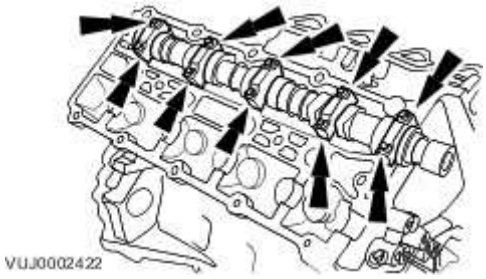

18 . Remove the right-hand intake camshaft.

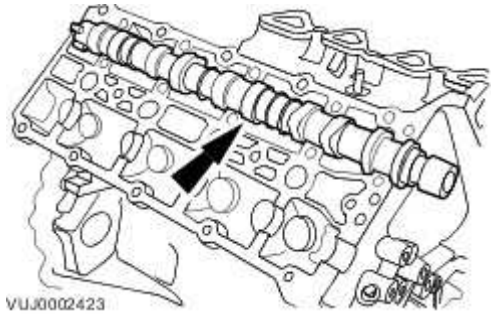

Installation

All vehicles

1 . **NOTE:**

Make sure all components are clean.

Apply oil (EP-90) to the camshaft and bearing surfaces, as follows:

- To the upper face of each bearing surface in the cylinder head.
- To the upper face of each bearing surface in each bearing cap.
- On the cam lobes ONLY, not on the base circle area.

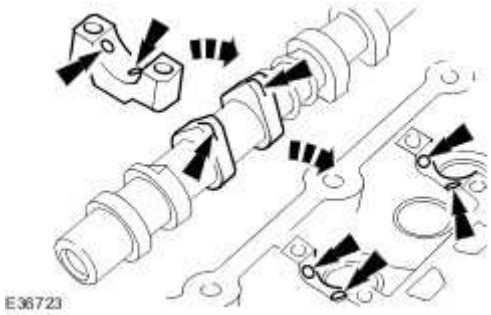

2 . Install the right-hand inlet camshaft.

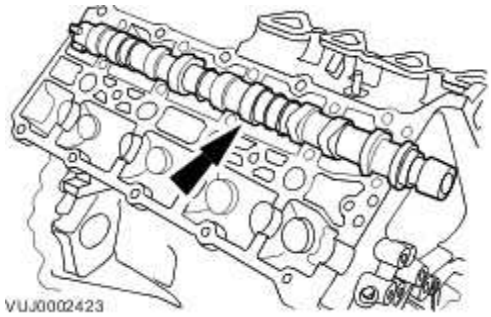

3 . **CAUTION: Alternate bolt tightening to correctly seat the camshaft bearing caps.**

Install the camshaft bearing cap bolts evenly.

- Tighten to 10 Nm.

www.JagDocs.com

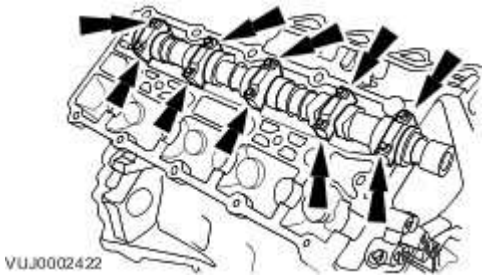

4 . **NOTE:**

Make sure all components are clean.

Apply oil (EP-90) to the camshaft and bearing surfaces, as follows:

- To the upper face of each bearing surface in the cylinder head.
- To the upper face of each bearing surface in each bearing cap.
- On the cam lobes ONLY, not on the base circle area.

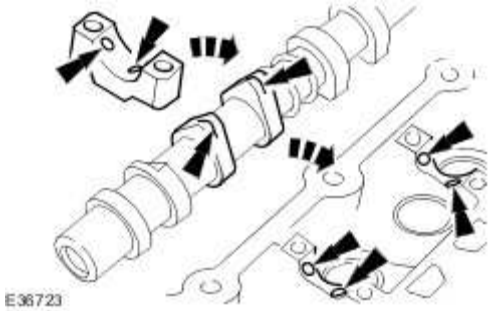

5 . Install the right-hand exhaust camshaft.

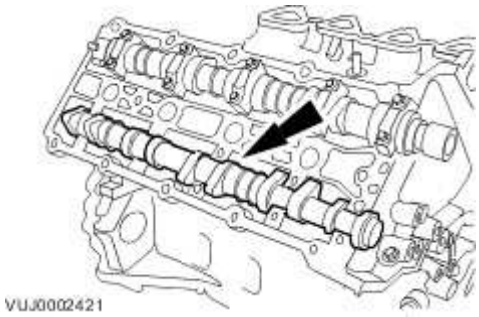

6 . **CAUTION: Alternate bolt tightening to correctly seat the camshaft bearing caps.**

Install the camshaft bearing cap bolts evenly.

- Tighten to 10 Nm.

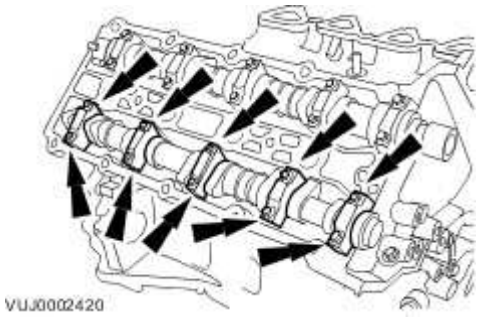

7 . Install the camshaft setting tool.

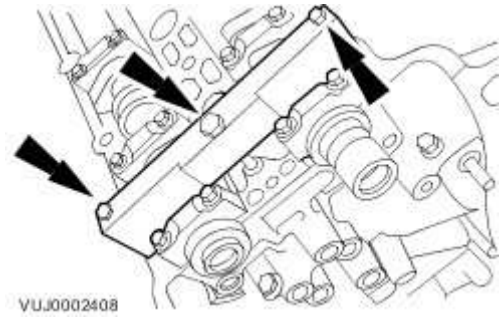

8 . Using a suitable tool, retain the right-hand timing chain tensioner piston.

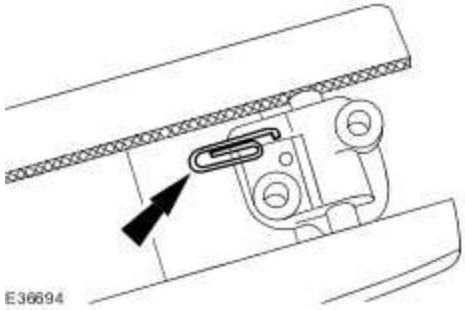

9 . **CAUTION: Do not tighten the camshaft sprocket retaining bolts.**

www.JagDocs.com

CAUTION: Make sure the secondary timing chain and camshaft sprockets are free to rotate.

Install the camshaft sprockets.

- Install the secondary timing chain tensioner and secondary timing chain to the camshaft sprockets.

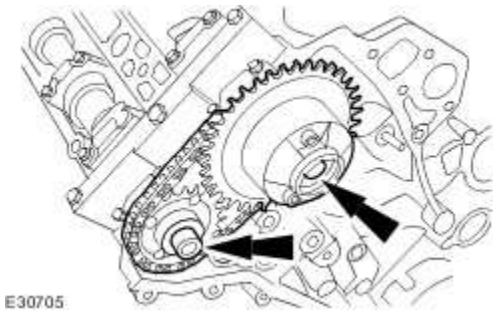

10 . Install the secondary timing chain tensioner retaining bolts.

- Tighten to 12 Nm.

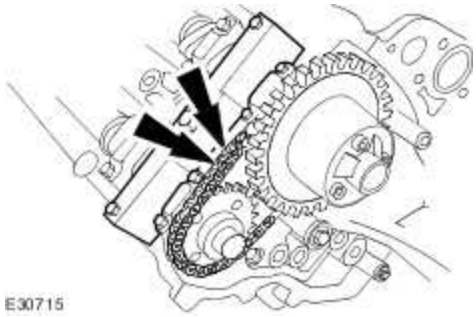

11 . Release the tension in the right-hand timing chain tensioner.

- Remove the retaining tool.

12 Install the timing chain tensioning tool 303-532 to the exhaust camshaft sprocket.

.

- Reposition the camshaft sprockets for the most advantageous position for use of the tool.

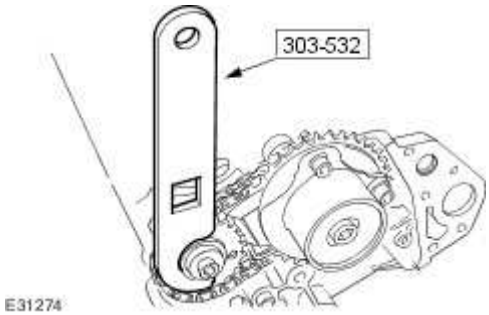

13 . **CAUTION: Make sure the timing chain slack is on the tensioned side of the timing chain.**

Install the primary timing chain.

- Install the primary chain over the crankshaft sprocket and the intake sprocket.

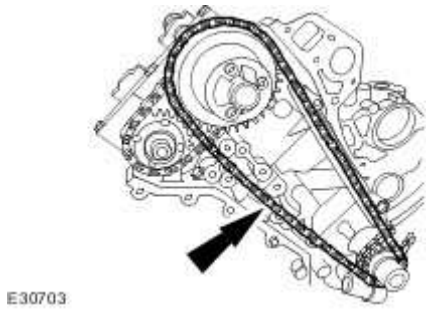

14 . Install the primary timing chain tensioner guide.

- Tighten to 12 Nm.

www.JagDocs.com

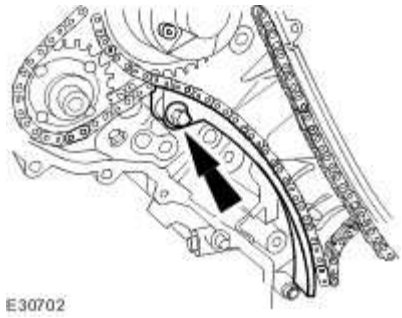

15. **CAUTION: During timing chain tensioner compression, do not release the ratchet stem until the timing chain tensioner piston is fully bottomed in its bore or damage to the ratchet stem will result.**

Using a suitable tool, hold the right-hand timing chain tensioner ratchet lock mechanism away from the ratchet stem.

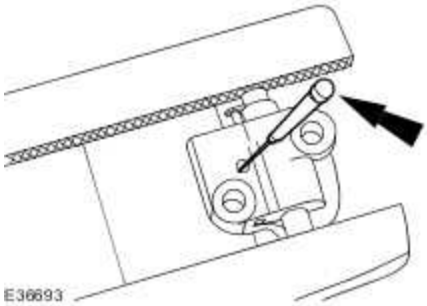

16. **NOTE:**

The timing chain tensioner piston should retract with minimal force. If binding occurs, reposition the timing chain tensioner to eliminate side loading.

Slowly compress the right-hand timing chain tensioner.

17. **NOTE:**

The retaining tool must remain in the timing chain tensioner until the timing chain tensioner is installed to the engine with the piston bottomed in the bore.

Using a suitable tool, retain the right-hand timing chain tensioner piston.

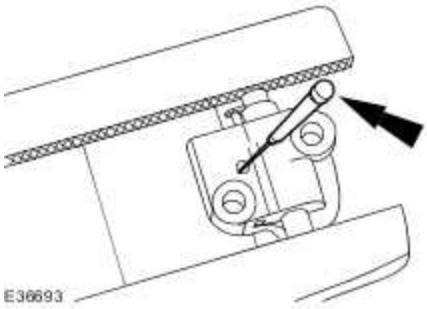

18 . Install the primary timing chain tensioner assembly.

- Tighten to 12 Nm.

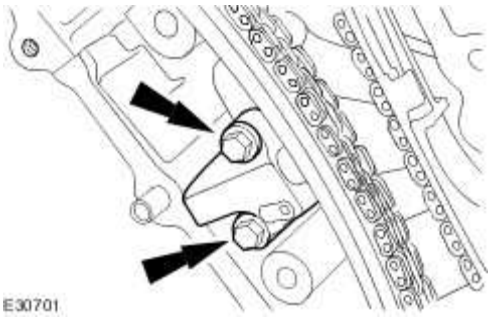

19 . Release the tension in the right-hand timing chain tensioner.

- Remove the retaining tool.

20 . **CAUTION: While applying the opposing force to sprocket and chain, tighten the sprocket bolt.**

CAUTION: Make sure that a new bolt is installed.

Using the special tool apply force to the tool in an anti-clockwise direction to tension the primary timing chain on its drive side.

www.JagDocs.com

Tighten to 20 Nm + 90 deg.

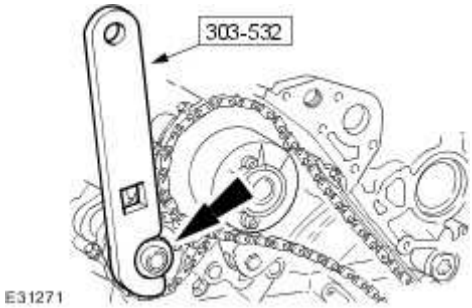

21 . **CAUTION: While applying the opposing force to sprocket and chain, tighten the sprocket bolt.**

CAUTION: Make sure that a new bolt is installed.

Using the special tool apply force to the tool in an anti-clockwise direction.

Tighten to 20 Nm + 90 deg.

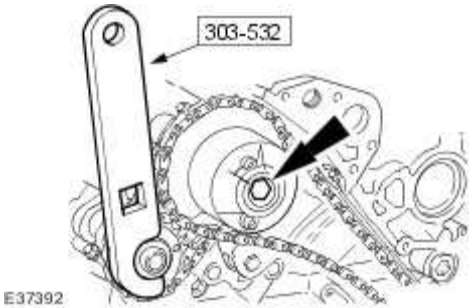

22 . Remove the special tool from the right-hand cylinder head.

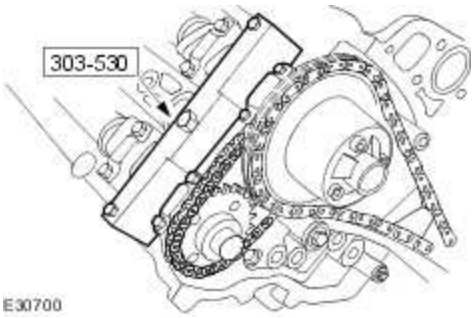

23 . Remove the special tool from the left-hand cylinder head.

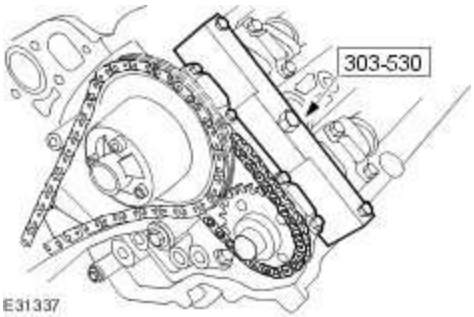

Vehicles without supercharger

24 . Install the right-hand variable camshaft timing oil control unit housing.

- Install new O-ring seals.
- Tighten to 22 Nm.

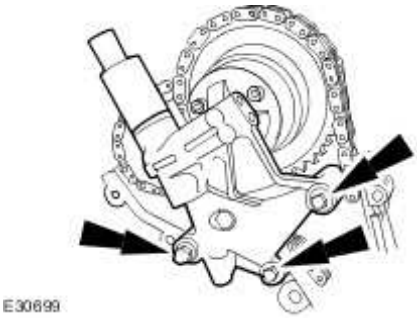

All vehicles

25 . Remove the special tool.

www.JagDocs.com

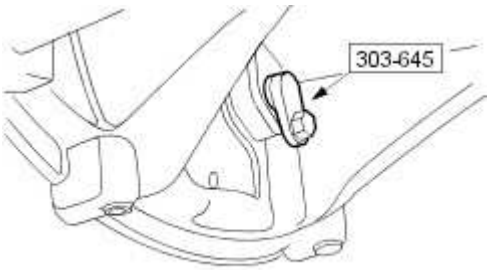

VUJ0002400

26 . Install the crankshaft position sensor.

Tighten to 10 Nm.

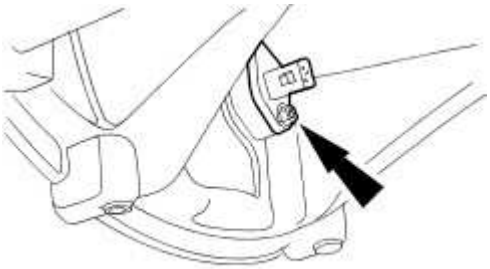

E30694

27 . Connect the crankshaft position sensor electrical connector.

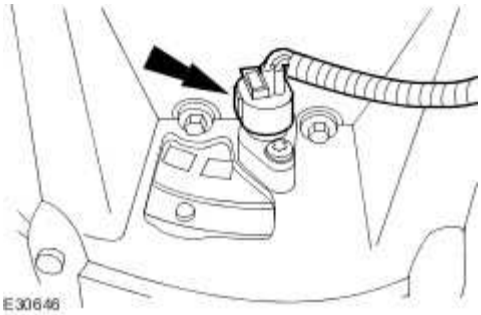

E30646

28 . Install the air deflector.
For additional information, refer to Air Deflector (76.11.41)

29 . Install the engine front cover.
For additional information, refer to Engine Front Cover - VIN Range: G00442->G45703 (12.65.01)

30 . Carry out the valve clearance check.
For additional information, refer to Valve Clearance Check (12.29.47)

www.JagDocs.com

Camshafts RH - VIN Range: G45704->G99999 (12.13.18)

Special Service Tools

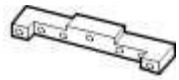

303-530

Camshaft setting/locking tool
303-530

303-532

Timing chain tensioning tool
303-532

303-645

Crankshaft setting, main tool
303-645

Removal

1 Remove the engine front cover.
. For additional information, refer to Engine Front Cover - VIN Range: G45704->G99999 (12.65.01)

2 . Raise the vehicle.

3 . Disconnect the crankshaft position (CKP) sensor electrical connector.

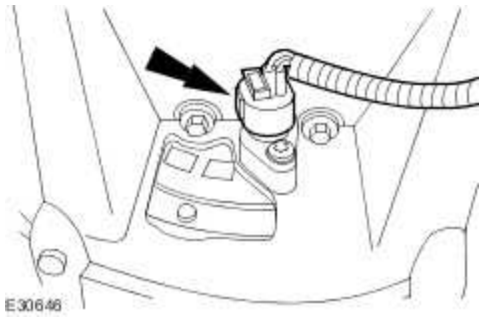

4 . Remove the CKP sensor.

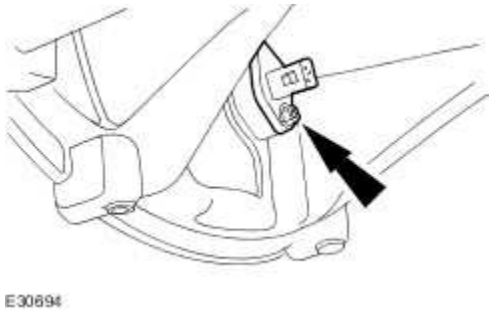

5 . Install the special tool.

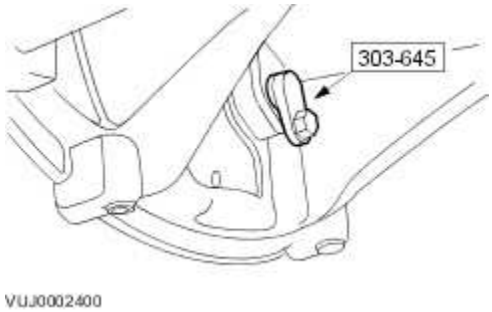

6 . Lower the vehicle.

7 . Remove the right-hand variable camshaft timing oil control unit housing.

- Remove and discard the O-ring seals.

www.JagDocs.com

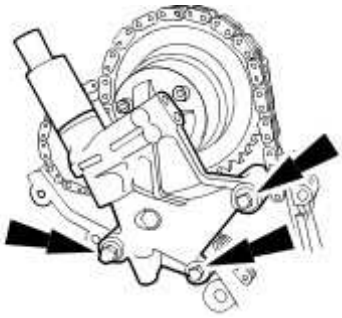

8 . Install the special tool to the left-hand cylinder head.

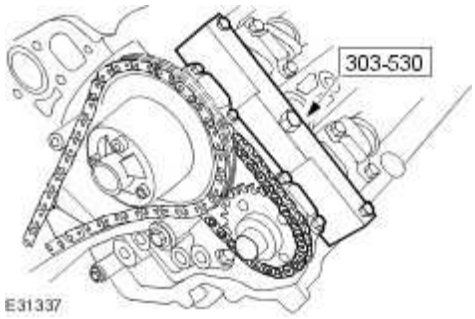

9 . Install the special tool to the right-hand cylinder head.

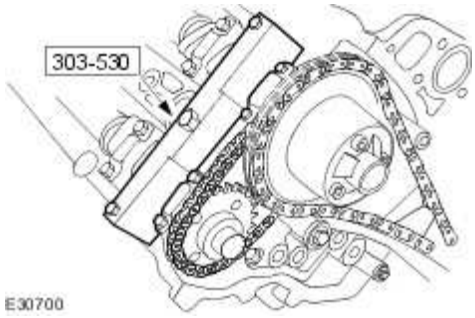

10 . Remove the primary timing chain tensioner assembly.

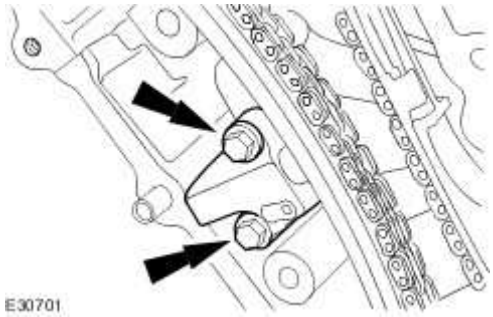

11 . Remove the primary timing chain tensioner guide.

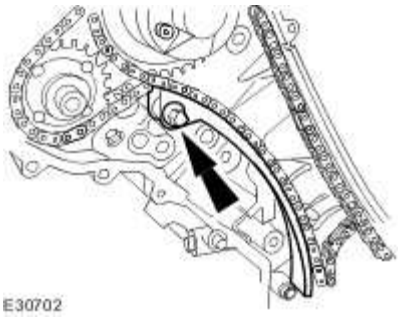

12 . Remove the primary timing chain.

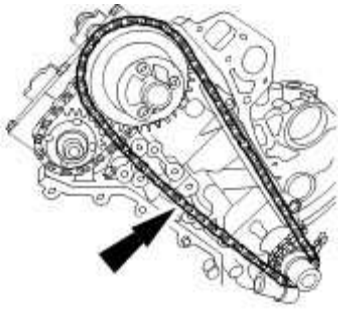

13 . Remove the secondary timing chain tensioner retaining bolts.

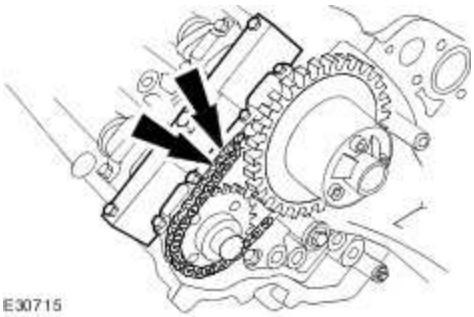

14 Remove the camshaft sprockets.

.

- Remove the secondary timing chain tensioner and secondary timing chain from the camshaft sprockets.

www.JagDocs.com

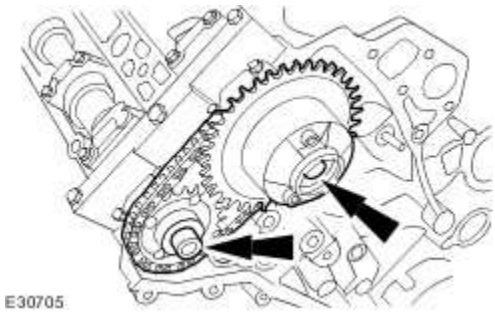

15 . Remove the camshaft setting tool.

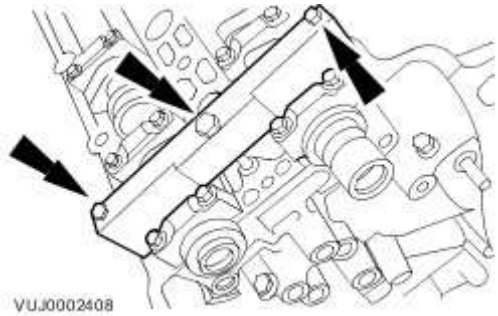

16 Remove the camshaft bearing caps.

.

- Remove the camshaft bearing cap retaining bolts evenly and in stages.
- Remove the camshaft bearing caps. Note their orientation and markings, each is marked with its position (a number) and orientation (an arrow).

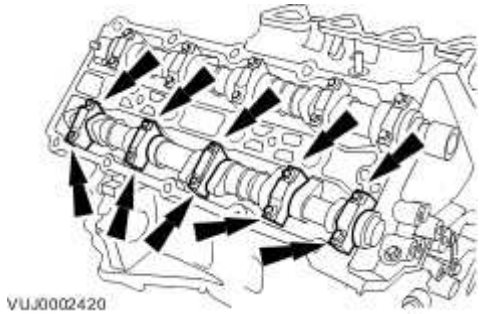

17 . Remove the right-hand exhaust camshaft.

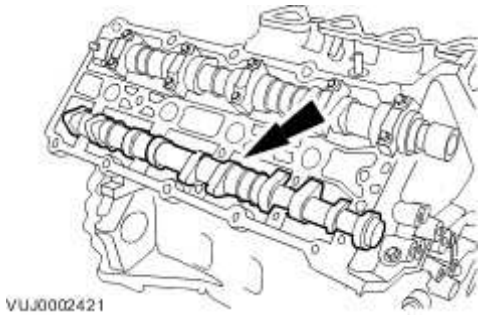

18 Remove the camshaft bearing caps.

.

- Remove the camshaft bearing cap retaining bolts evenly and in stages.
- Remove the camshaft bearing caps. Note their orientation and markings, each is marked with its position (a number) and orientation (an arrow).

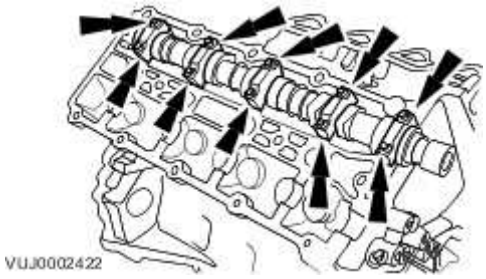

19 . Remove the right-hand intake camshaft.

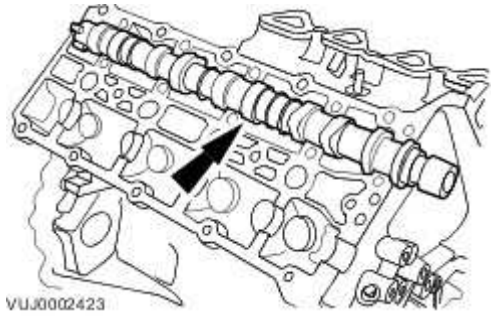

Installation

1 . **NOTE:**

Make sure all components are clean.

www.JagDocs.com

Apply oil (EP-90) to the camshaft and bearing surfaces, as follows:

- To the upper face of each bearing surface in the cylinder head.
- To the upper face of each bearing surface in each bearing cap.
- On the cam lobes ONLY, not on the base circle area.

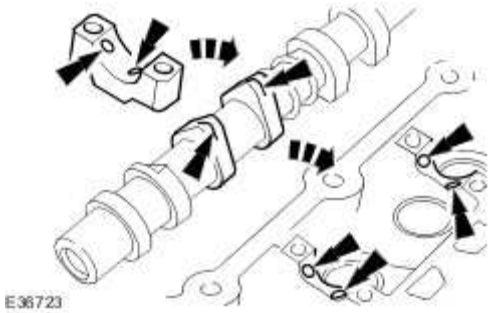

2 . Install the right-hand inlet camshaft.

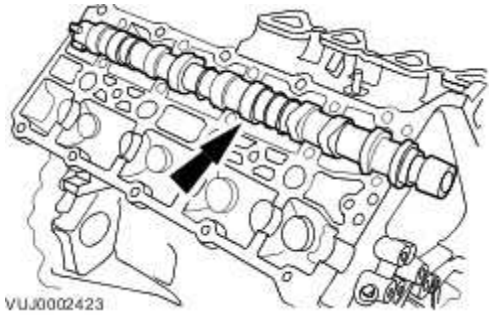

3 . **CAUTION: Alternate bolt tightening to correctly seat the camshaft bearing caps.**

Install the camshaft bearing cap bolts evenly.

- Tighten to 10 Nm.

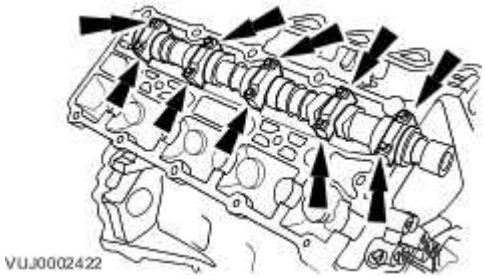

4 . **NOTE:**

Make sure all components are clean.

Apply oil (EP-90) to the camshaft and bearing surfaces, as follows:

- To the upper face of each bearing surface in the cylinder head.
- To the upper face of each bearing surface in each bearing cap.
- On the cam lobes ONLY, not on the base circle area.

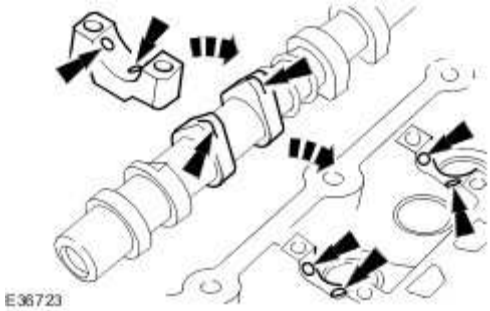

5 . Install the right-hand exhaust camshaft.

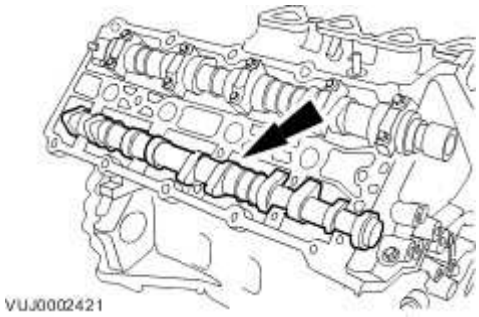

www.JagDocs.com

6 . **CAUTION: Alternate bolt tightening to correctly seat the camshaft bearing caps.**

Install the camshaft bearing cap bolts evenly.

- Tighten to 10 Nm.

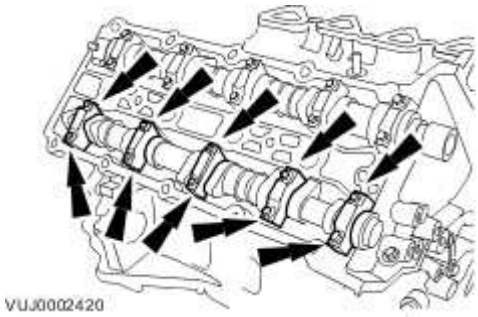

7 . Install the camshaft setting tool.

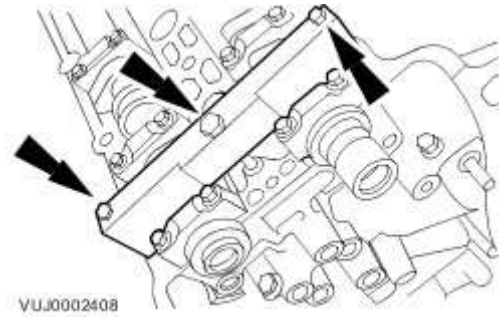

8 . Using a suitable tool, retain the right-hand timing chain tensioner piston.

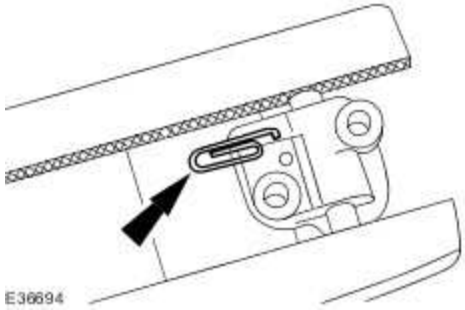

9 . **CAUTION: Do not tighten the camshaft sprocket retaining bolts.**

CAUTION: Make sure the secondary timing chain and camshaft sprockets are free to rotate.

Install the camshaft sprockets.

- Install the secondary timing chain tensioner and secondary timing chain to the camshaft sprockets.

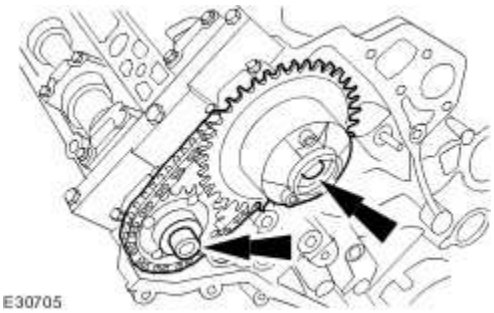

10 . Install the secondary timing chain tensioner retaining bolts.

- Tighten to 12 Nm.

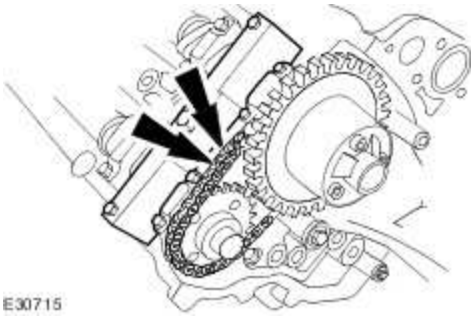

11 . Release the tension in the right-hand timing chain tensioner.

- Remove the retaining tool.

12 Install the timing chain tensioning tool 303-532 to the exhaust camshaft sprocket.

.

www.JagDocs.com

- Reposition the camshaft sprockets for the most advantageous position for use of the tool.

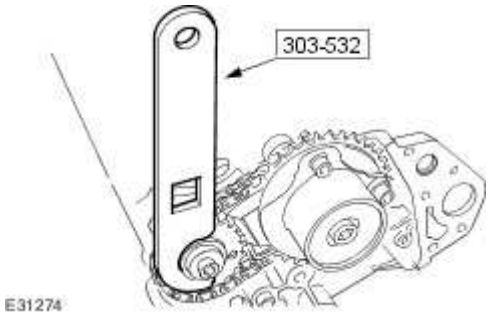

13 . **CAUTION: Make sure the timing chain slack is on the tensioned side of the timing chain.**

Install the primary timing chain.

- Install the primary chain over the crankshaft sprocket and the intake sprocket.

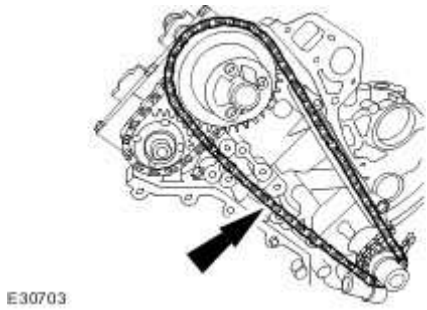

14 . Install the primary timing chain tensioner guide.

- Tighten to 12 Nm.

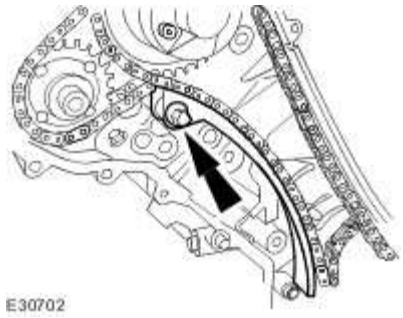

15. **CAUTION: During timing chain tensioner compression, do not release the ratchet stem until the timing chain tensioner piston is fully bottomed in its bore or damage to the ratchet stem will result.**

Using a suitable tool, hold the right-hand timing chain tensioner ratchet lock mechanism away from the ratchet stem.

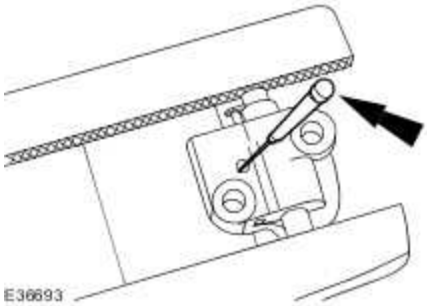

16. **NOTE:**

The timing chain tensioner piston should retract with minimal force. If binding occurs, reposition the timing chain tensioner to eliminate side loading.

Slowly compress the right-hand timing chain tensioner.

17. **NOTE:**

The retaining tool must remain in the timing chain tensioner until the timing chain tensioner is installed to the engine with the piston bottomed in the bore.

Using a suitable tool, retain the right-hand timing chain tensioner piston.

www.JagDocs.com

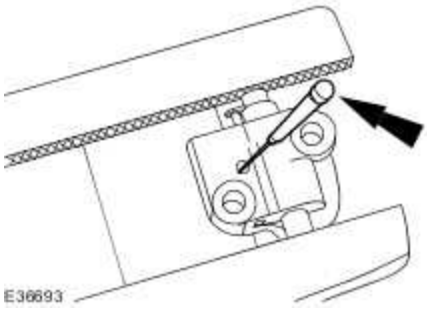

18 . Install the primary timing chain tensioner assembly.

- Tighten to 12 Nm.

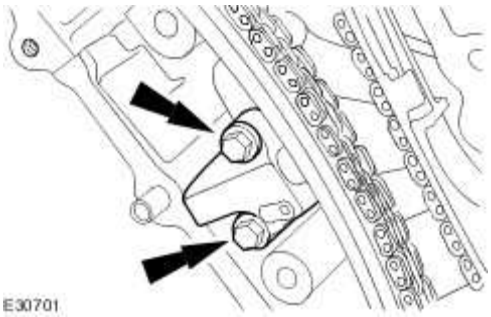

19 . Release the tension in the right-hand timing chain tensioner.

- Remove the retaining tool.

20 . **CAUTION: While applying the opposing force to sprocket and chain, tighten the sprocket bolt.**

CAUTION: Make sure that a new bolt is installed.

Using the special tool, apply force to the tool in an anti-clockwise direction to tension the primary timing chain on its drive side.

Tighten to 20 Nm + 90 deg.

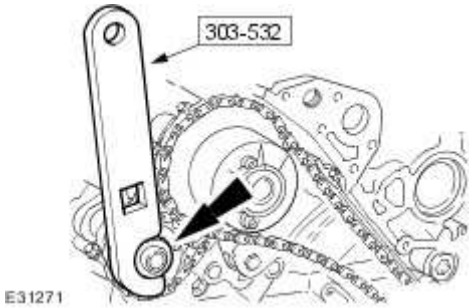

21 . **CAUTION: While applying the opposing force to sprocket and chain, tighten the sprocket bolt.**

CAUTION: Make sure that a new bolt is installed.

Using the special tool, apply force to the tool in an anti-clockwise direction.

Tighten to 20 Nm + 90 deg.

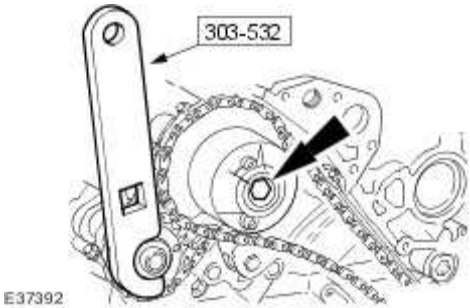

22 . Remove the special tool from the right-hand cylinder head.

www.JagDocs.com

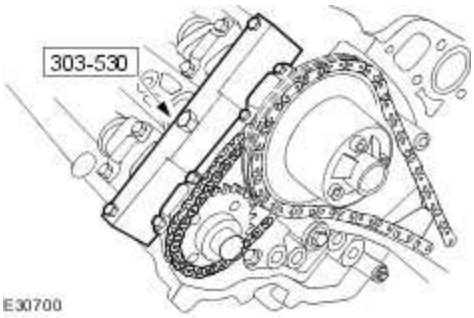

23 . Remove the special tool from the left-hand cylinder head.

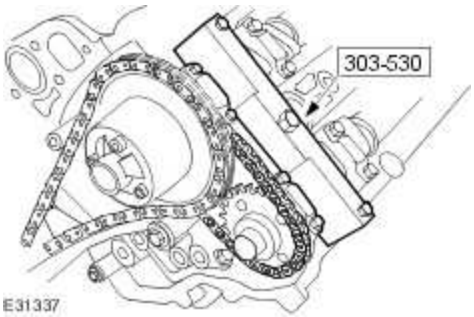

24 . Install the right-hand variable camshaft timing oil control unit housing.

- Install new O-ring seals.
- Tighten to 22 Nm.

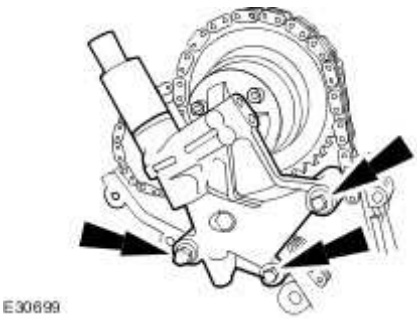

25 . Raise the vehicle.

26 . Remove the special tool.

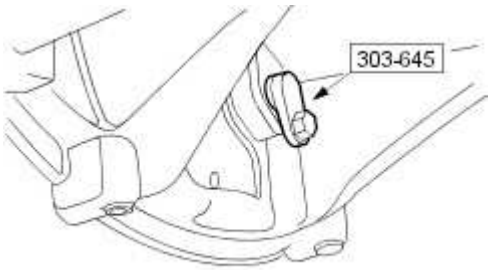

VUJ0002400

27 . Install the CKP sensor.

Tighten to 10 Nm.

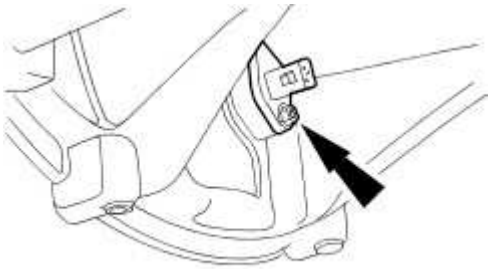

E30694

28 . Connect the CKP sensor electrical connector.

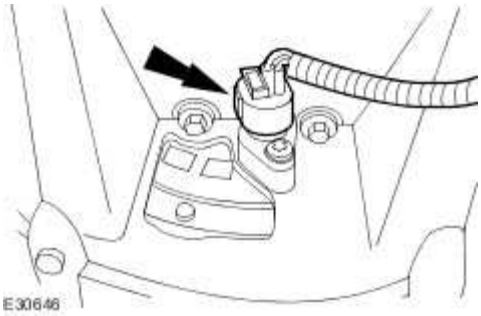

E30646

29 . Lower the vehicle.

30 . Carry out the valve clearance check.
For additional information, refer to Valve Clearance Check (12.29.47)

31 . Install the engine front cover.
For additional information, refer to Engine Front Cover - VIN Range: G45704->G99999 (12.65.01)

www.JagDocs.com

Crankshaft Front Seal - VIN Range: G00442->G45703 (12.21.14)

Special Service Tools

Installer, crankshaft front seal
303-750

Remover, crankshaft front seal
303-751

Removal

1 . Remove the crankshaft pulley.
For additional information, refer to

2 . Using the special tool, remove the crankshaft front seal.

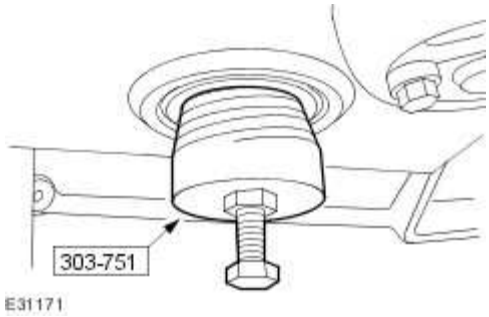

Installation

1 . **CAUTION: Make sure the crankshaft front seal mating faces are clean and dry.**

CAUTION: Do not remove the crankshaft front seal protector.

Using the special tool, install the crankshaft front seal.

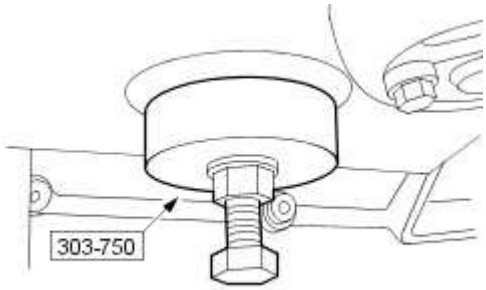

E31173

2 . Remove the crankshaft seal protector.

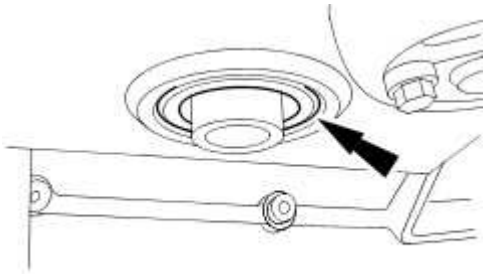

E31172

3 . Install the crankshaft pulley.
For additional information, refer to

www.JagDocs.com

Crankshaft Front Seal - VIN Range: G45704->G99999 (12.21.14)

Special Service Tools

Installer, crankshaft front seal
303-750

Remover, crankshaft front seal
303-751

Removal

1 . Remove the crankshaft pulley.
For additional information, refer to

2 . Using the special tool, remove the crankshaft front seal.

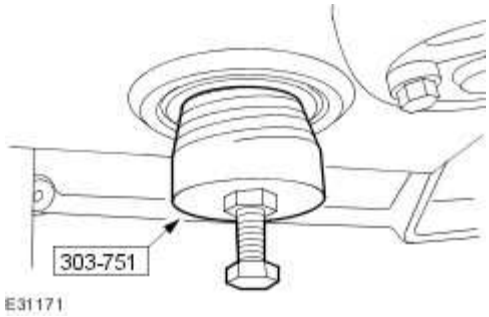

Installation

1 . **CAUTION: Make sure the crankshaft front seal mating faces are clean and dry.**

CAUTION: Do not remove the crankshaft front seal protector.

Using the special tool, install the crankshaft front seal.

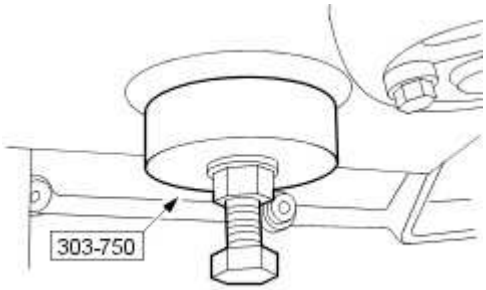

E31173

2 . Remove the crankshaft seal protector.

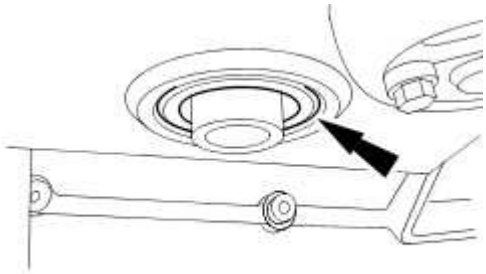

E31172

3 . Install the crankshaft pulley.
For additional information, refer to

www.JagDocs.com

Crankshaft Pulley (12.21.09)

Special Service Tools

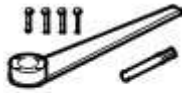

303-191

Locking Tool, Crankshaft Pulley
303-191

303-191-02

Adapter for 303-191/303-588
303-191-02

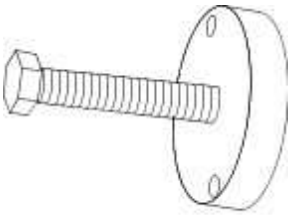

303-588

Remover, Crankshaft Pulley
303-588

303-752

Installer/remover, Oil Filter
303-752

Removal

All vehicles

1 . Remove the cooling fan motor and shroud.
For additional information, refer to Cooling Fan Motor and Shroud (26.25.25)

2 . Remove the accessory drive belt .
For additional information, refer to Accessory Drive Belt - 3.5L/4.2L (12.10.40)

Vehicles without supercharger

3 . **NOTE:**

Place a suitable container underneath the filter to prevent oil spillage.

Using the special tool, remove and discard the oil filter element.

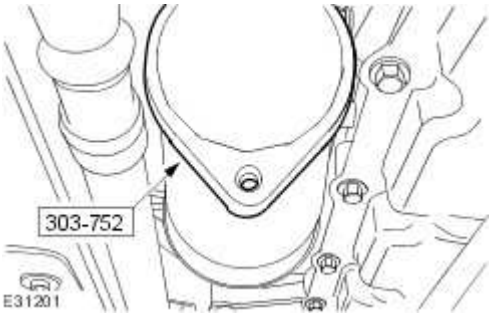

4 . Detach the oil cooler.

- Remove and discard the O-ring seal.

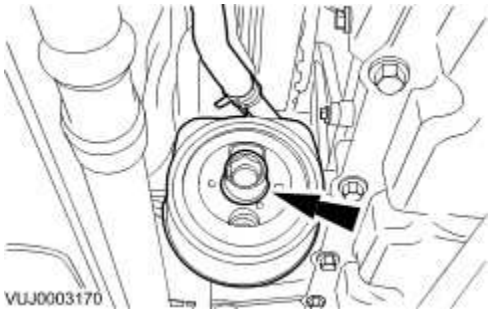

5 . Lower the vehicle

All vehicles

6 . **CAUTION: Under no circumstances should the crankshaft setting peg 303-645 be used in the following operations to lock the crankshaft.**

www.JagDocs.com

NOTE:

The crankshaft retaining bolt will be very tight.

Using special tools, retain the crankshaft pulley.

- Remove and discard the crankshaft pulley bolt.

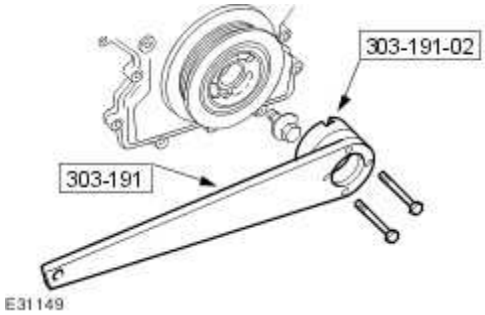

7 . Remove the special tools.

8 . **NOTE:**

The crankshaft pulley will be very tight.

Using special tools, remove the crankshaft pulley.

- Collect the locking ring.
- Remove and discard the O-ring seal.

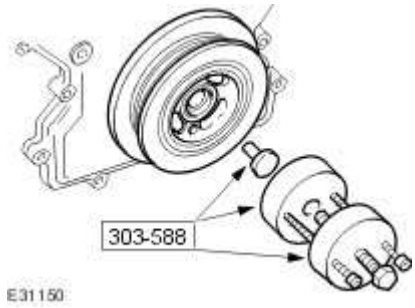

9 . Remove the special tools.

10 . Remove the crankshaft front seal.
For additional information, refer to Crankshaft Front Seal - VIN Range: G00442->G45703 (12.21.14)
For additional information, refer to Crankshaft Front Seal - VIN Range: G45704->G99999 (12.21.14)

11 . **NOTE:**

Check crankshaft pulley and locking ring for damage.

Clean all crankshaft pulley mating faces.

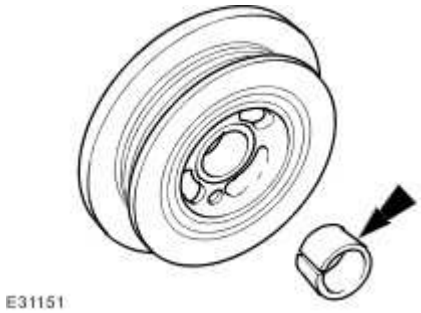

www.JagDocs.com

Installation

All vehicles

1 . Install a new crankshaft front seal.
For additional information, refer to Crankshaft Front Seal - VIN Range: G00442->G45703 (12.21.14)
For additional information, refer to Crankshaft Front Seal - VIN Range: G45704->G99999 (12.21.14)

2 . Install a new O-ring seal to the crankshaft pulley.

Lubricate the new O-ring.

3. **CAUTION: The screw thread in the crankshaft must be cleaned out before a new crankshaft pulley bolt is installed.**

CAUTION: A new crankshaft pulley bolt must be used.

Install, but do not tighten, a new crankshaft pulley retaining bolt.

- Install the crankshaft pulley and locking ring to the crankshaft.

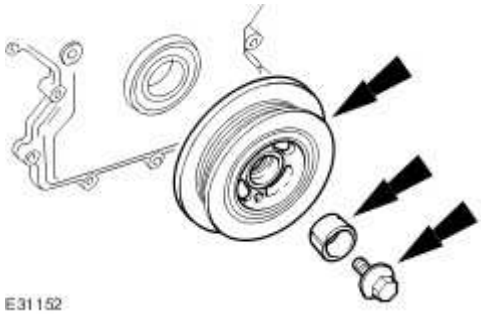

4. **CAUTION: Under no circumstances should the crankshaft setting peg 303-645 be used in the following operations to lock the crankshaft.**

Using special tools, retain the crankshaft pulley.

- Tighten the crankshaft pulley retaining bolt to 320 Nm.

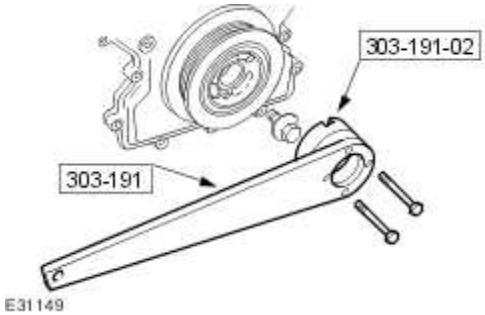

5 . Remove the special tools.

Vehicles without supercharger

6 . Raise the vehicle.

7 . Attach the oil cooler.

- Install a new O-ring seal.
- Tighten to 55 Nm.

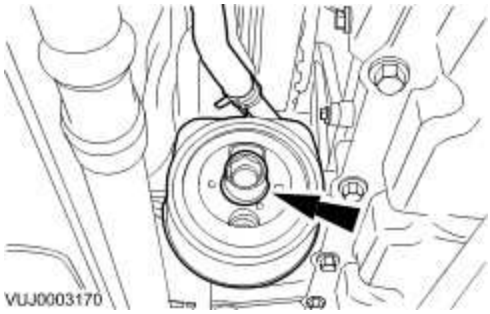

8 . **NOTE:**

Apply a suitable amount of clean engine oil to lubricate the oil filter O-ring seal.

Using special tool, install a new oil filter.

- Tighten to 18 Nm.

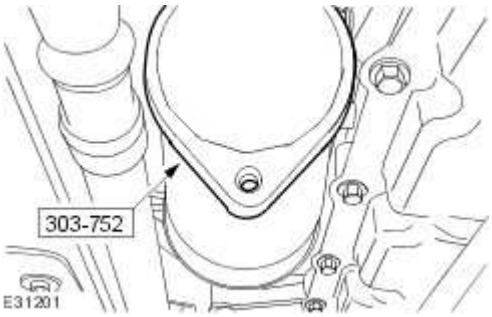

www.JagDocs.com

All vehicles

9 . Install the accessory drive belt.
For additional information, refer to Accessory Drive Belt - 3.5L/4.2L (12.10.40)

10 . Install the cooling fan motor and shroud.
For additional information, refer to Cooling Fan Motor and Shroud (26.25.25)

11 . Check and top up the engine oil to the correct level on the oil level indicator.

Crankshaft Rear Seal (12.21.20)

Special Service Tools

Crankshaft rear seal remover/replacer
303-538

Removal

1 . Remove the flexplate.
For additional information, refer to Flexplate (12.53.13)

2 . Install the special tool.

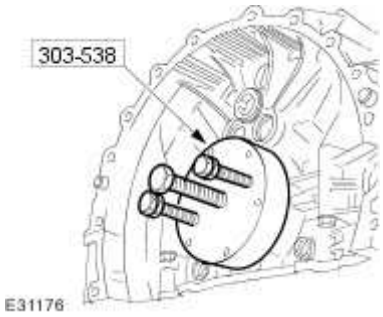

3 . Reposition the special tool retaining nuts.

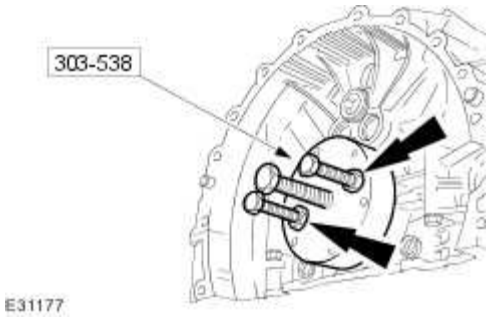

4 . Using the special tool pierce the seal face and provide a pilot hole for the self-tapping screws.

www.JagDocs.com

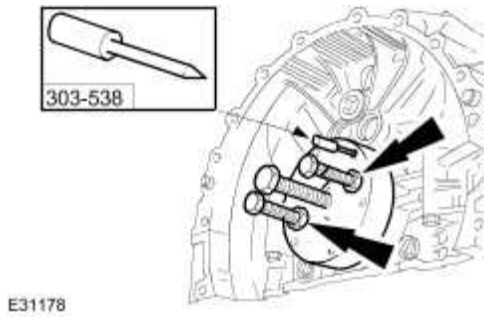

5 . Loosen the special tool retaining nuts.

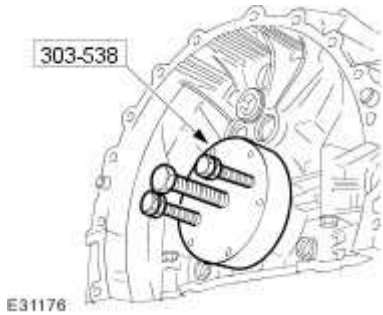

6 . **CAUTION: To prevent damage to special tool do not tighten screws more than one and a half turns.**

Install the special tool self-tapping screws.

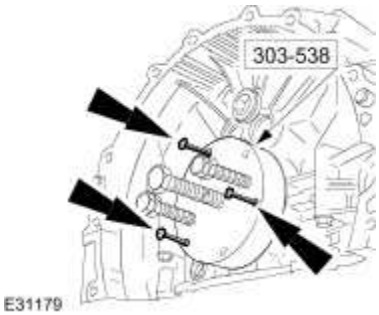

7 . Using the special tool remove and discard the crankshaft rear seal.

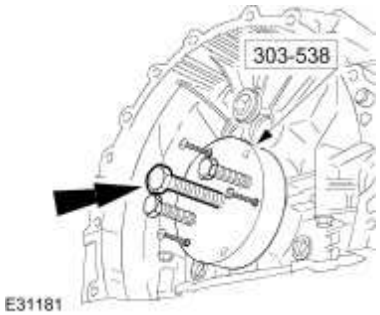

Installation

1 **NOTE:**
.

Make sure all components are clean and dry.

Make sure the transit sleeve is correctly in place and install the new seal over the crankshaft. Do not use any lubricant on the seal, the transit sleeve or the crankshaft.

2 . Carefully remove the transit sleeve, leaving the seal in place.

3 . Install the special tool to the crankshaft.

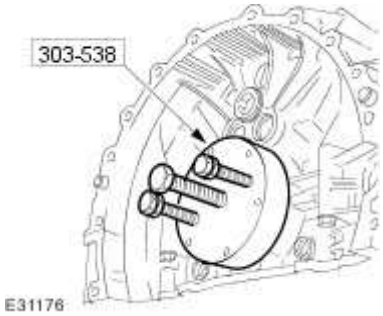

4 Reposition the nuts to hold the special tool against the crankshaft rear seal. Check that the
. crankshaft rear seal and the special tool are parallel to the rear of the engine.

www.JagDocs.com

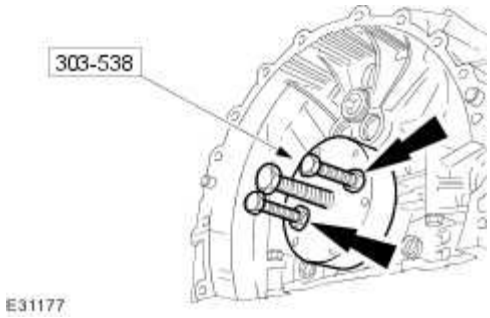

5 .

CAUTION: Alternate nut tightening to correctly seat the crankshaft rear seal.

Using the special tool, install the crankshaft rear seal.

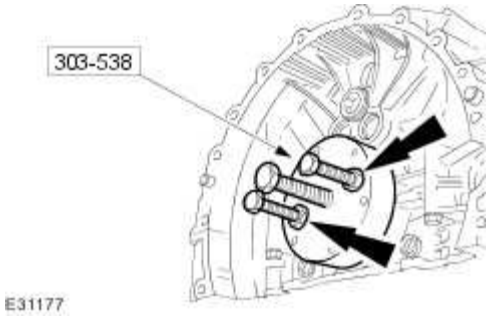

6 . Remove the special tool from the crankshaft.

- Check that the seal is located correctly.

7 . Install the flexplate.
For additional information, refer to Flexplate (12.53.13)

Cylinder Head LH - VIN Range: G00442->G45703 (12.29.02)

Special Service Tools

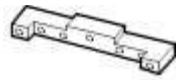

303-530

Camshaft setting/locking Tool
303-530

303-532

Timing chain tensioning tool
303-532

303-645

Crankshaft setting, main tool
303-645

Removal

All vehicles

CAUTION: If a replacement cylinder head is to be installed to a vehicle with variable camshaft timing (VCT) the cylinder head must have the oil gallery blind rivet removed before installation.

1 . Remove the air deflector.
For additional information, refer to Air Deflector (76.11.41)

2 . Disconnect the crankshaft position sensor electrical connector.

www.JagDocs.com

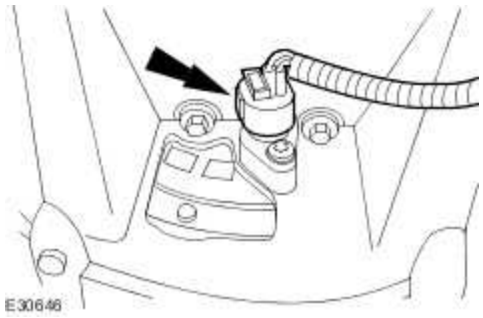

3 . Remove the crankshaft position sensor.

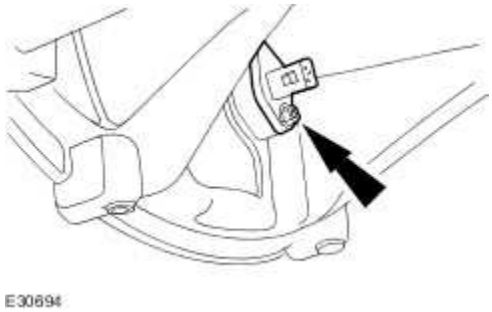

4 . Install the special tool.

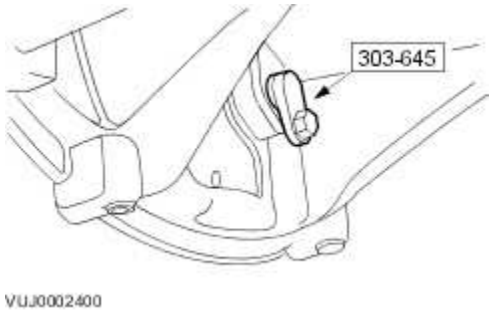

Vehicles without supercharger

5 . Remove the intake manifold.
For additional information, refer to Intake Manifold - VIN Range: G00442->G45703 (30.15.01)

Vehicles with supercharger

6 . Remove the charge air cooler.
For additional information, refer to Charge Air Cooler

7 . **NOTE:**

Left-hand shown, right-hand similar.

Remove the lower intake manifold.

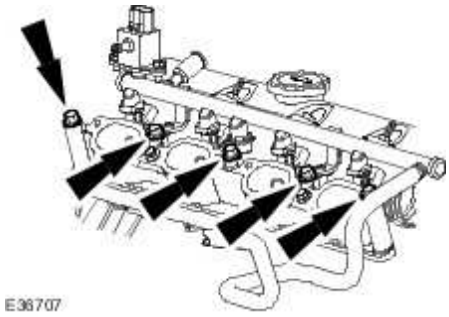

All vehicles

8 Remove the engine front cover.

. For additional information, refer to Engine Front Cover - VIN Range: G00442->G45703 (12.65.01)

Vehicles without supercharger

9 . Remove the right-hand variable camshaft timing oil control unit housing.

- Remove and discard the O-ring seals.

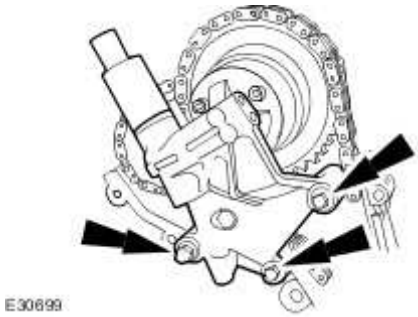

10 . Remove the left-hand variable camshaft timing oil control unit housing.

- Remove and discard the O-ring seals.

www.JagDocs.com

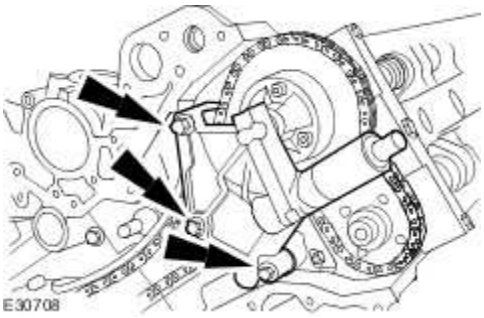

All vehicles

11 . Install the special tool to the left-hand cylinder head.

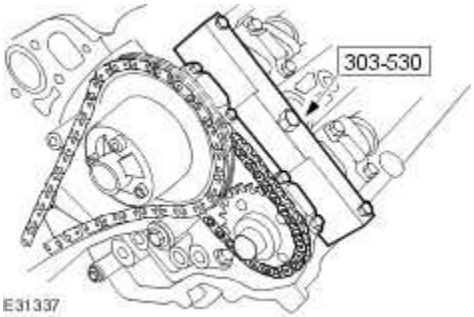

12 . Install the special tool to the right-hand cylinder head.

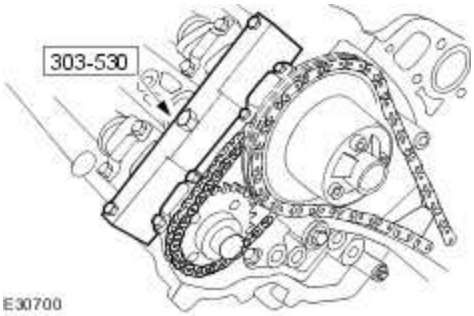

13 . Remove the primary timing chain tensioner assembly.

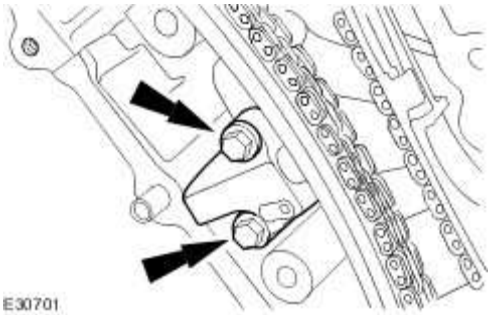

14 . Remove the primary timing chain tensioner guide.

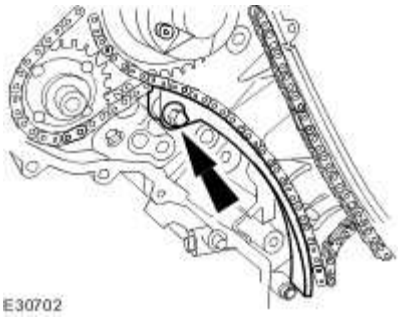

15 . Remove the primary timing chain.

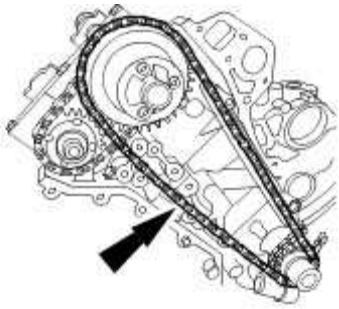

16 . **CAUTION: Make sure the secondary timing chain and camshaft sprockets are free to rotate.**

Loosen the camshaft sprockets.

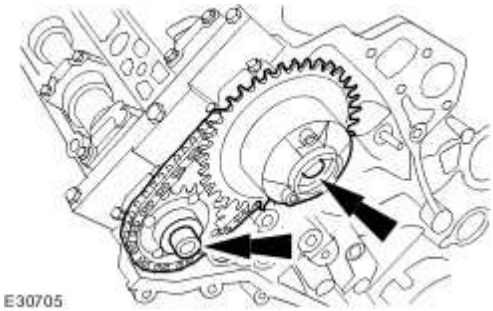

17 . Remove the primary timing chain guide.

www.JagDocs.com

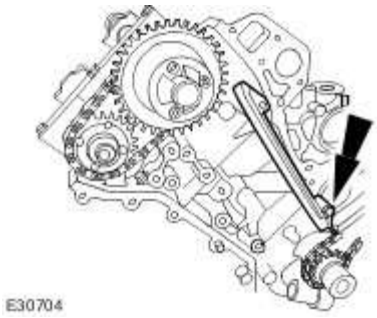

18 . Remove the primary timing chain tensioner assembly.

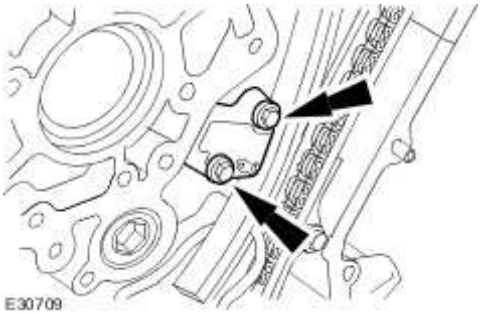

19 . Remove the primary timing chain tensioner guide.

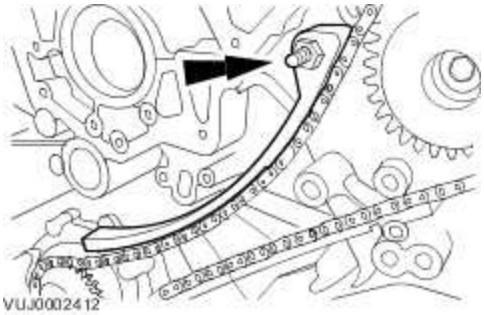

20 . Remove the primary timing chain.

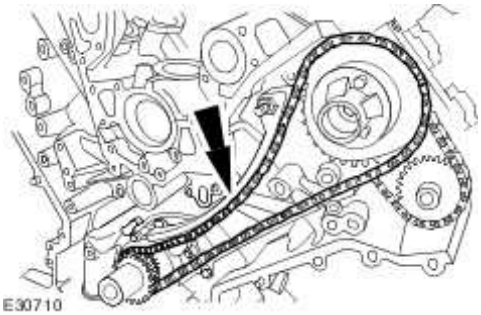

21 . Remove the primary timing chain tensioner guide.

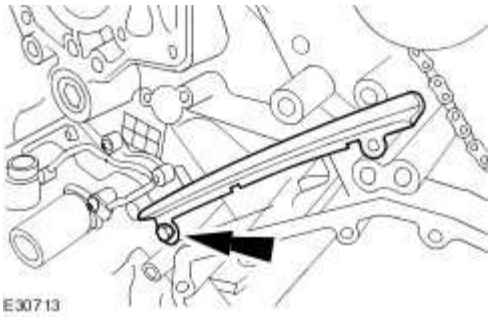

22 . Remove the secondary timing chain tensioner retaining bolts.

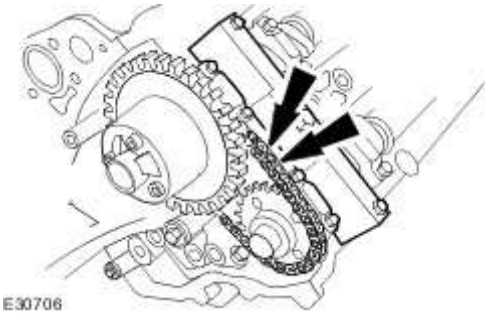

23 Remove the camshaft sprockets.

.

Remove the secondary timing chain tensioner and secondary timing chain from the camshaft sprockets.

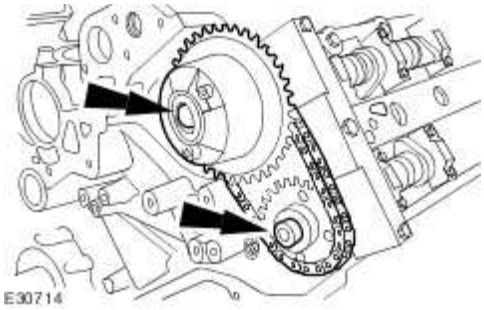

24 . Remove the camshaft setting tool.

www.JagDocs.com

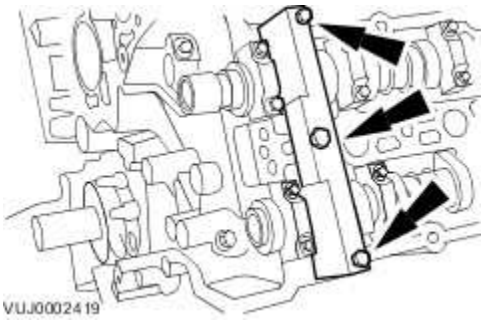

25 Remove the camshaft bearing caps.

.

- Remove the camshaft bearing cap retaining bolts evenly and in stages.
- Remove the camshaft bearing caps. Note their orientation and markings, each is marked with its position (a number) and orientation (an arrow).

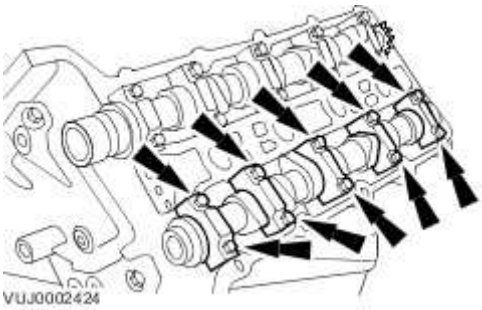

26 . Remove the left-hand exhaust camshaft.

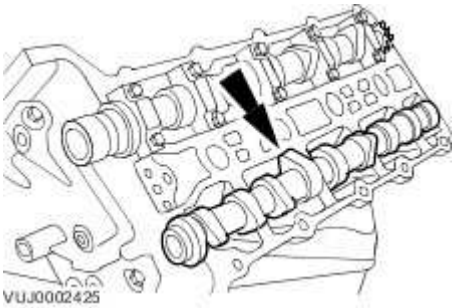

27 Remove the camshaft bearing caps.

.

- Remove the camshaft bearing cap retaining bolts evenly and in stages.

Remove the camshaft bearing caps. Note their orientation and markings, each is marked with its position (a number) and orientation (an arrow).

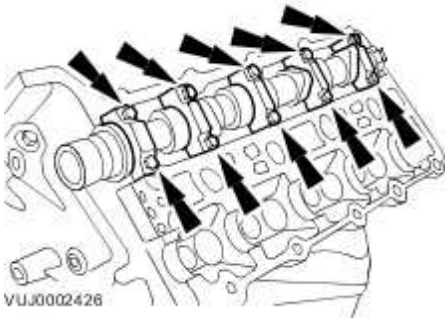

28 . Remove the left-hand inlet camshaft.

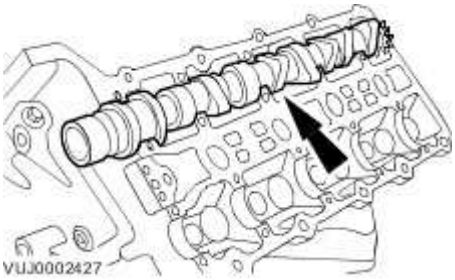

29 . **CAUTION: The bolts can only be used twice, mark the bolts with a center punch. If two punch marks are visible, discard the bolts.**

CAUTION: Vehicles fitted with Polydrive cylinder head bolts, the cylinder head bolts must be removed using a 10 mm Polydrive socket or a 10 mm Allen key. Failure to follow this instruction may result in damage to the component.

Remove the left-hand cylinder head.

Remove the bolts in the indicated sequence.

www.JagDocs.com

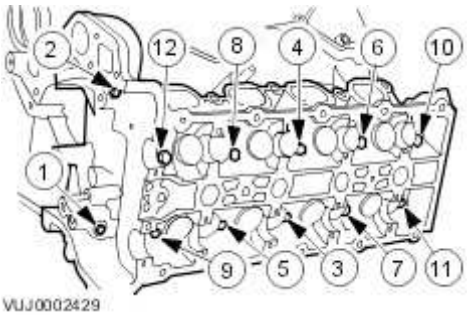

30 .

CAUTION: Only use a plastic scrapper to clean off old gasket.

Remove the cylinder head gasket.

- Clean the gasket mating faces.

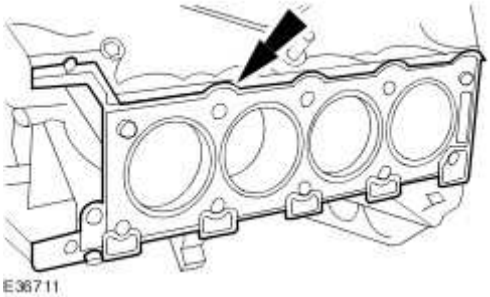

31 .

CAUTION: Only use a plastic scrapper to clean off old gasket.

Clean the cylinder head locating dowels.

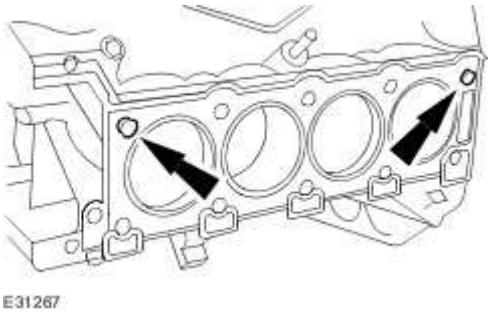

32 . Clean and inspect the cylinder head and cylinder block.

Installation

All vehicles

1 . **CAUTION: If a replacement cylinder head is to be installed to a vehicle with VCT the cylinder head must have the oil gallery blind rivet removed before installation.**

CAUTION: Make sure that all debris is removed from the cylinder head and cylinder head oil gallery.

Vehicles fitted with VCT: Remove the blind rivet from the VCT oil gallary.

- Identify the VCT oil supply gallery and the 8 mm (0.31 inch) blind rivet.
- Using a suitable 3 mm (0.12 inch) punch release the centre of the blind rivet until it is released from the outer part of the blind rivet.
- Using a suitable extraction tool, remove the remaining part of the blind rivet.

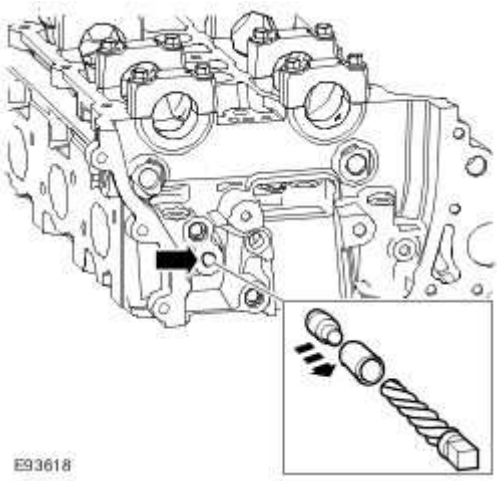

2 . Clean the component mating faces.

www.JagDocs.com

3 . Check cylinder head face for distortion, across the center and from corner to corner.

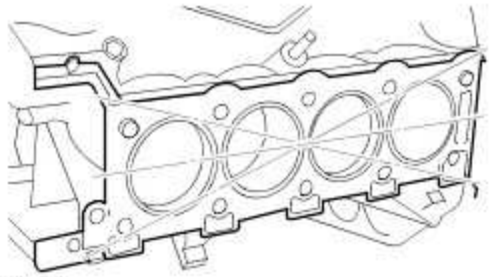

4 . For cylinder head face distortion data, refer to specifications.
For additional information, refer to Specifications

5 **NOTE:**
.

For cylinder head with distortion above the maximum allowance, the cylinder head material must be measured.

Measure the cylinder head material.

- Check measurement from the centre of the exhaust dowel to the cylinder head face as shown.
- If the measurement is less than 51.88 mm the cylinder head requires replacement.

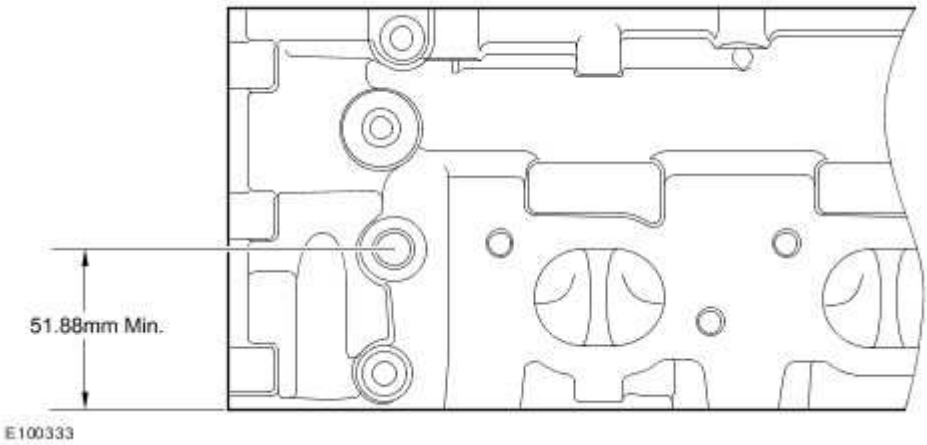

6 . **CAUTION: The head gasket must be installed over the cylinder block dowels.**

Install a new cylinder head gasket

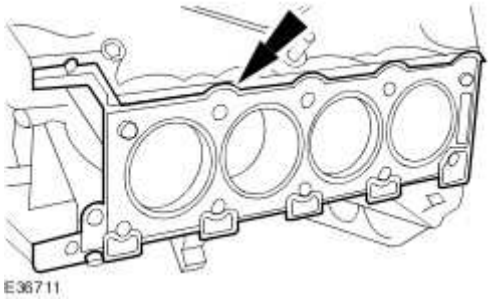

7 . **CAUTION: Vehicles fitted with Polydrive cylinder head bolts, the cylinder head bolts must be installed using a 10 mm Polydrive socket or a 10 mm Allen key. Failure to follow this instruction may result in damage to the component.**

NOTE:

Tighten the bolts 1 to 10 in the sequence shown.

Install the left-hand cylinder head.

1) Tighten bolts 1 to 10 to 20 Nm.

2) Tighten bolts 1 to 10 to 35 Nm.

3) Tighten bolts 1 to 10 to 90°.

4) Tighten bolts 1 to 10 to 90°.

5) Tighten bolts 11 to 12 to 25 Nm.

www.JagDocs.com

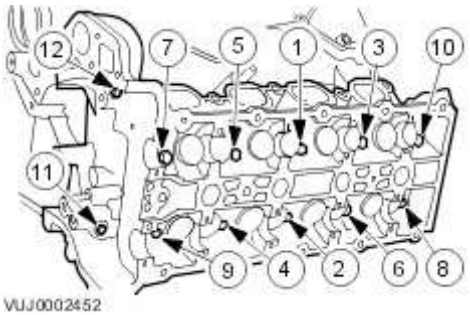

8 . **NOTE:**

Make sure all components are clean.

Apply oil (EP-90) to the camshaft and bearing surfaces, as follows:

- To the upper face of each bearing surface in the cylinder head.
- To the upper face of each bearing surface in each bearing cap.
- On the cam lobes ONLY, not on the base circle area.

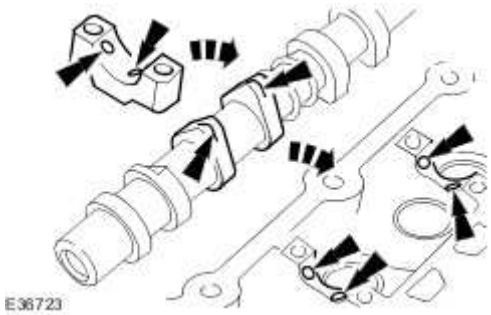

9 . Install the left-hand inlet camshaft.

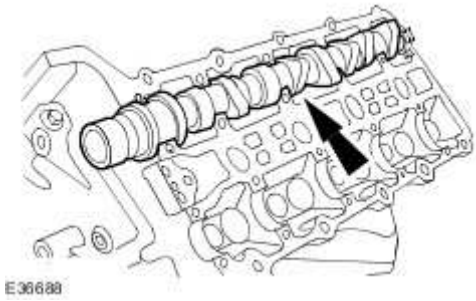

10 . **CAUTION: Alternate bolt tightening to correctly seat the camshaft bearing caps.**

Install the camshaft bearing cap bolts evenly.

- Tighten to 10 Nm.

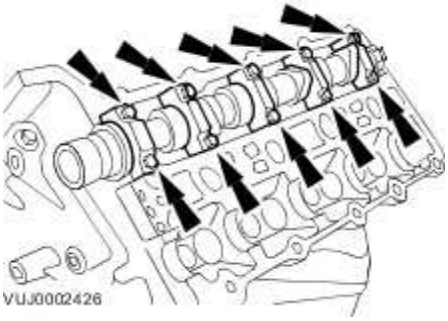

11 . Install the left-hand exhaust camshaft.

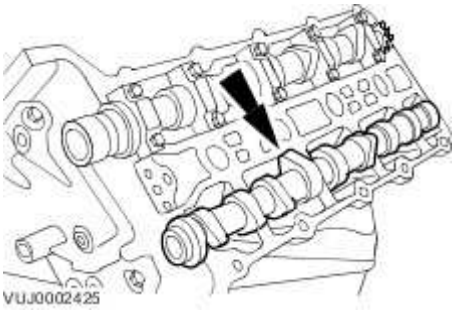

12 . **CAUTION: Alternate bolt tightening to correctly seat the camshaft bearing caps.**

Install the camshaft bearing cap bolts evenly.

- Tighten to 10 Nm.

www.JagDocs.com

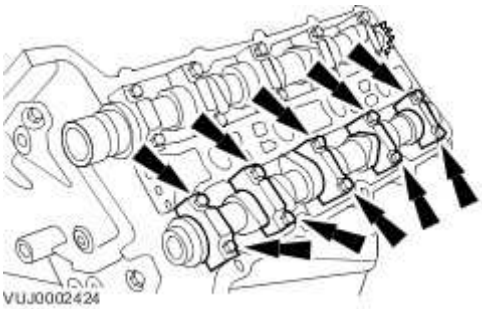

13 . Install the camshaft setting tool.

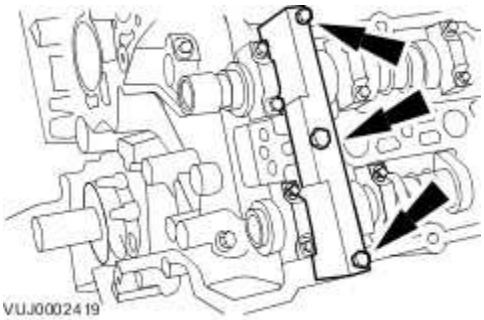

14 . **CAUTION: Do not tighten the camshaft sprocket retaining bolts.**

CAUTION: Make sure the secondary timing chain and camshaft sprockets are free to rotate.

Install the camshaft sprockets.

- Install the secondary timing chain tensioner and secondary timing chain to the camshaft sprockets.

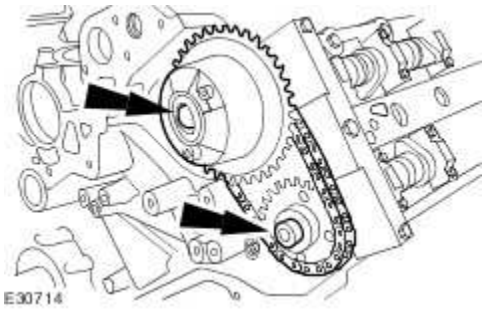

15 . Using a suitable tool, retain the left-hand timing chain tensioner piston.

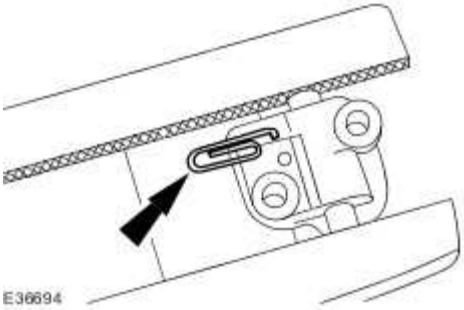

16 . Install the secondary timing chain tensioner retaining bolts.

- Tighten to 12 Nm.

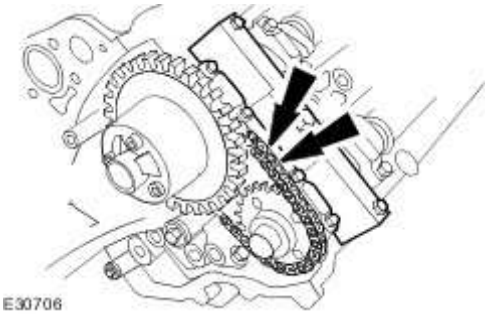

17 . Release the tension in the left-hand timing chain tensioner.

- Remove the retaining tool.

18 Install the timing chain tensioning tool 303-532 to the exhaust camshaft sprocket.

.

www.JagDocs.com

- Reposition the camshaft sprockets for the most advantageous position for use of the tool.

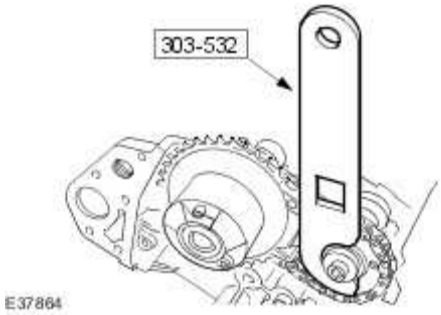

19 . Install the primary timing chain tensioner guide.

- Tighten to 12 Nm.

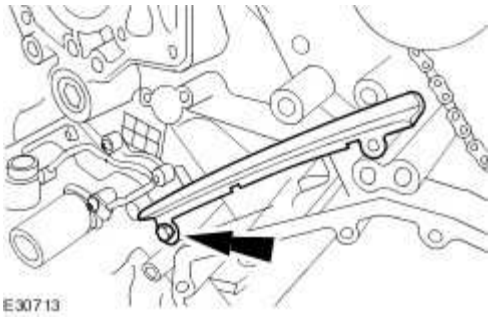

20 . **CAUTION: Make sure the timing chain slack is on the tensioned side of the timing chain.**

Install the primary timing chain.

- Install the primary chain over the crankshaft sprocket and the intake sprocket.

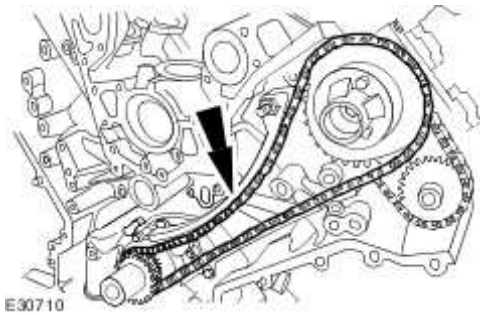

21 . Install the primary timing chain tensioner guide.

Tighten to 12 Nm.

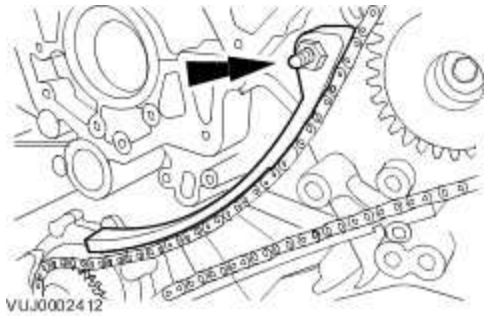

22 . **CAUTION: During timing chain tensioner compression, do not release the ratchet stem until the timing chain tensioner piston is fully bottomed in its bore or damage to the ratchet stem will result.**

Using a suitable tool, hold the left-hand timing chain tensioner ratchet lock mechanism away from the ratchet stem.

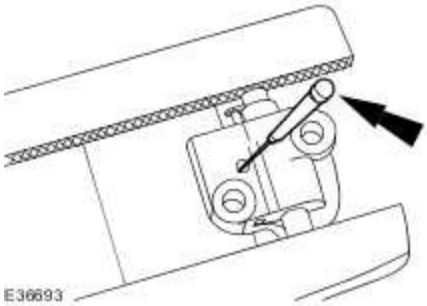

www.JagDocs.com

23 **NOTE:**

.

The timing chain tensioner piston should retract with minimal force. If binding occurs, reposition the timing chain tensioner to eliminate side loading.

Slowly compress the left-hand timing chain tensioner.

24 **NOTE:**

.

The retaining tool must remain in the timing chain tensioner until the timing chain tensioner is installed to the engine with the piston bottomed in the bore.

Using a suitable tool, retain the left-hand timing chain tensioner piston.

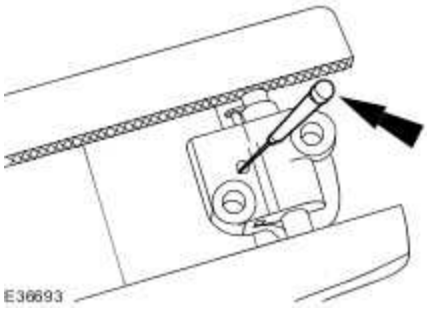

25 . Install the primary timing chain tensioner assembly.

- Tighten to 12 Nm.

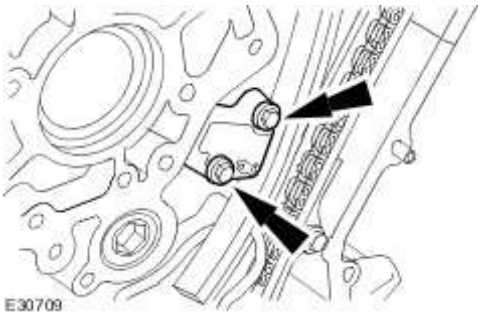

26 . Release the tension in the left-hand timing chain tensioner.

- Remove the retaining tool.

27. **CAUTION: While applying the opposing force to sprocket and chain, tighten the sprocket bolt.**

CAUTION: Make sure that a new bolt is installed.

Using the special tool apply force to the tool in an anti-clockwise direction to tension the primary timing chain on its drive side.

- Tighten to 20 Nm + 90 deg.

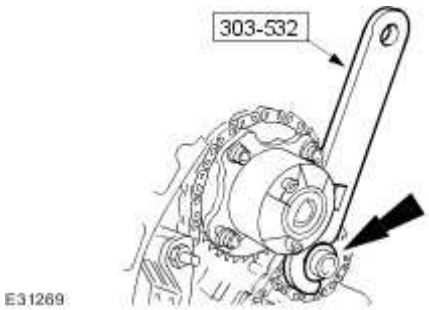

28. **CAUTION: While applying the opposing force to sprocket and chain, tighten the sprocket bolt.**

CAUTION: Make sure that a new bolt is installed.

Using the special tool apply force to the tool in an anti-clockwise direction.

- Tighten to 20 Nm + 90 deg.

www.JagDocs.com

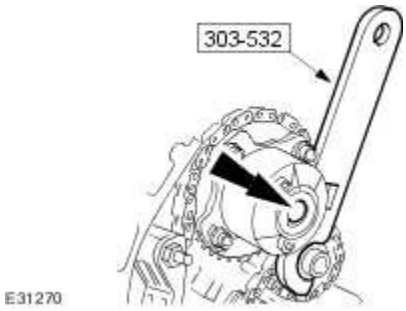

29 . Install the primary timing chain guide.

- Tighten to 12 Nm.

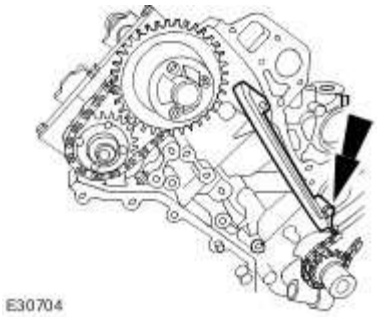

30 . **CAUTION: Make sure the timing chain slack is on the tensioned side of the timing chain.**

Install the primary timing chain.

- Install the primary chain over the crankshaft sprocket and the intake sprocket.

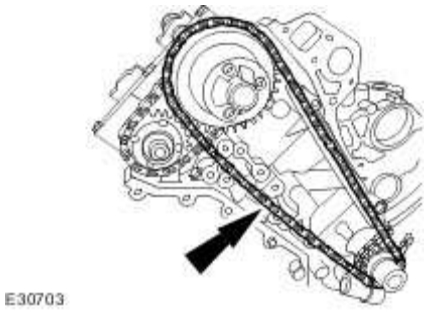

31 . Install the primary timing chain tensioner guide.

Tighten to 12 Nm.

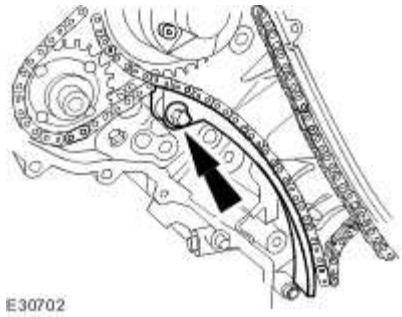

32 . **CAUTION: During timing chain tensioner compression, do not release the ratchet stem until the timing chain tensioner piston is fully bottomed in its bore or damage to the ratchet stem will result.**

Using a suitable tool, hold the right-hand timing chain tensioner ratchet lock mechanism away from the ratchet stem.

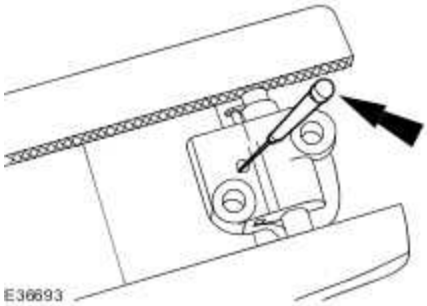

33 . **NOTE:**

The timing chain tensioner piston should retract with minimal force. If binding occurs, reposition the timing chain tensioner to eliminate side loading.

Slowly compress the right-hand timing chain tensioner.

www.JagDocs.com

34 **NOTE:**

.

The retaining tool must remain in the timing chain tensioner until the timing chain tensioner is installed to the engine with the piston bottomed in the bore.

Using a suitable tool, retain the right-hand timing chain tensioner piston.

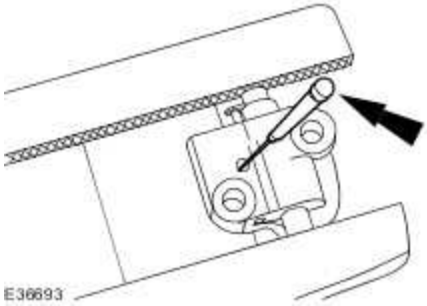

35 . Install the primary timing chain tensioner assembly.

- Tighten to 12 Nm.

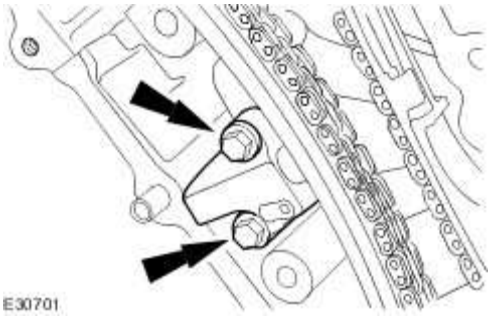

36 . Release the tension in the right-hand timing chain tensioner.

- Remove the retaining tool.

37

. **CAUTION: While applying the opposing force to sprocket and chain, tighten the sprocket bolt.**

CAUTION: Make sure that a new bolt is installed.

Using the special tool apply force to the tool in an anti-clockwise direction to tension the primary timing chain on its drive side.

- Tighten to 20 Nm + 90 deg.

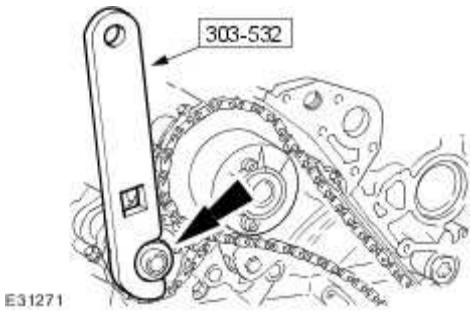

38 . **CAUTION: While applying the opposing force to sprocket and chain, tighten the sprocket bolt.**

CAUTION: Make sure that a new bolt is installed.

Using the special tool apply force to the tool in an anti-clockwise direction.

- Tighten to 20 Nm + 90 deg.

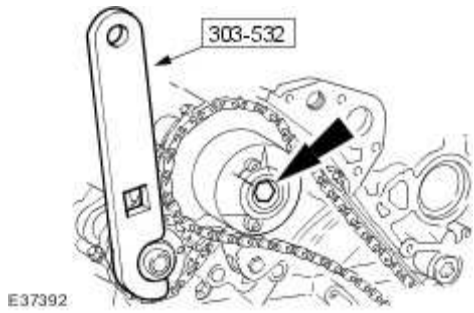

39 . Remove the special tool from the right-hand cylinder head.

www.JagDocs.com

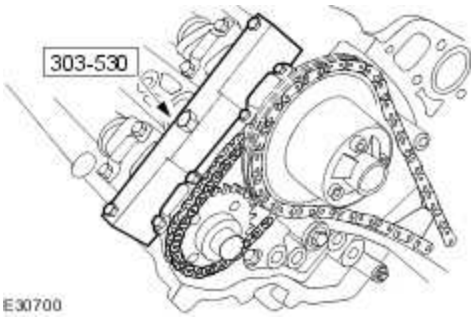

40 . Remove the special tool from the left-hand cylinder head.

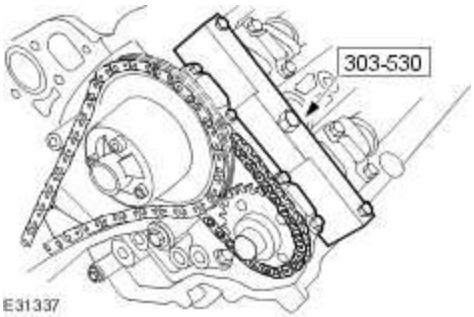

Vehicles without supercharger

41 . Install the left-hand variable camshaft timing oil control unit housing.

- Install new O-ring seals.
- Tighten to 22 Nm.

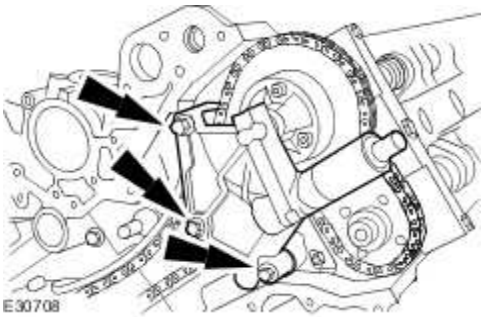

42 . Install the right-hand variable camshaft timing oil control unit housing.

- Install new O-ring seals.

Tighten to 22 Nm.

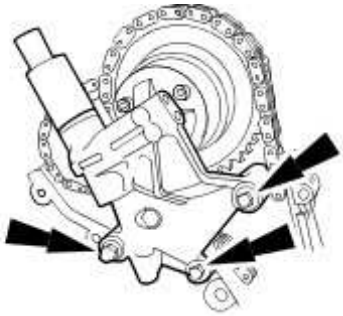

E30699

All vehicles

43 . Remove the special tool.

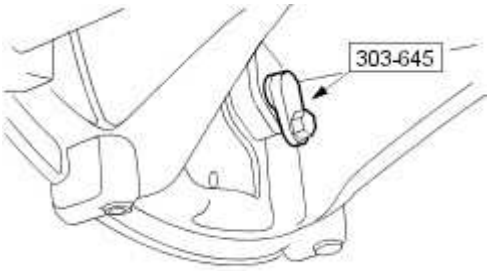

VUJ0002400

44 . Install the crankshaft position sensor.

Tighten to 10 Nm.

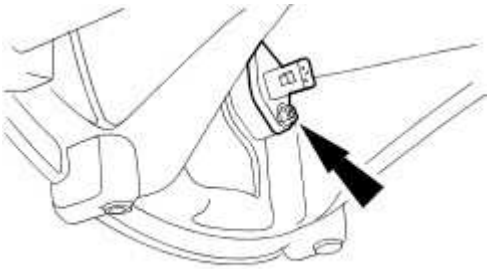

E30694

45 . Connect the crankshaft position sensor electrical connector.

www.JagDocs.com

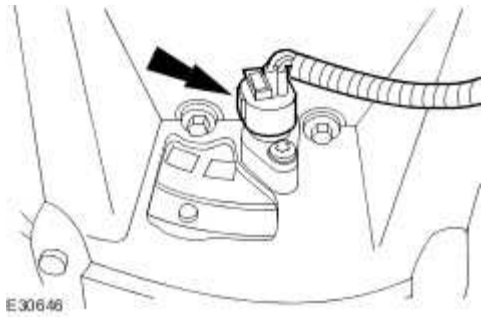

46 . Install the air deflector.
For additional information, refer to Air Deflector (76.11.41)

Vehicles without supercharger

47 Install the intake manifold.
. For additional information, refer to Intake Manifold - VIN Range: G00442->G45703 (30.15.01)

Vehicles with supercharger

48 . Install the lower intake manifold.

Tighten to 22 Nm.

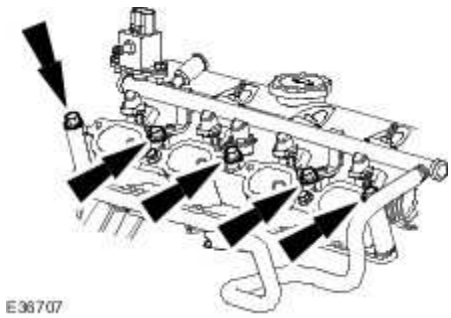

49 . Install the charge air cooler.
For additional information, refer to Charge Air Cooler

All vehicles

50 Install the engine front cover.

. For additional information, refer to Engine Front Cover - VIN Range: G00442->G45703 (12.65.01)

51 . Carry out the valve clearance check.
For additional information, refer to Valve Clearance Check (12.29.47)

www.JagDocs.com

Cylinder Head LH - VIN Range: G45704->G99999 (12.29.02)

Special Service Tools

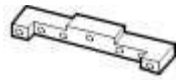

303-530

Camshaft setting/locking Tool
303-530

303-532

Timing chain tensioning tool
303-532

303-645

Crankshaft setting, main tool
303-645

Removal

All vehicles

CAUTION: If a replacement cylinder head is to be installed to a vehicle with variable camshaft timing (VCT) the cylinder head must have the oil gallery blind rivet removed before installation.

1 . Remove the air deflector.
For additional information, refer to Air Deflector (76.11.41)

2 . Disconnect the crankshaft position (CKP) sensor electrical connector.

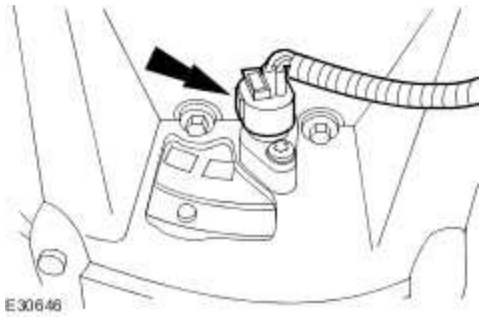

3 . Remove the CKP sensor.

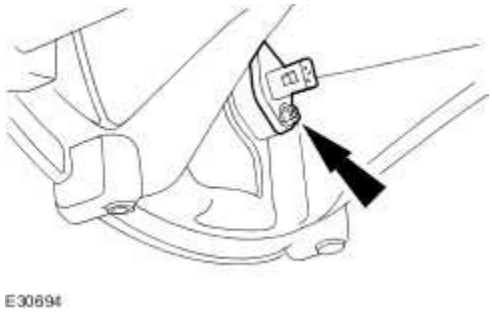

4 . Install the special tool.

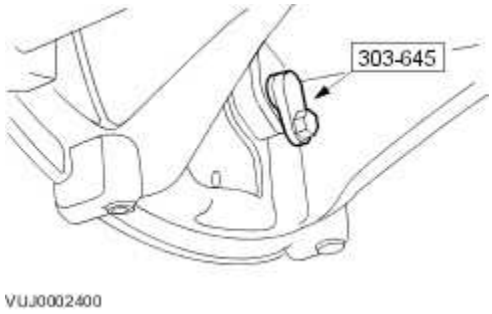

Vehicles without supercharger

5 . Remove the intake manifold.
For additional information, refer to Intake Manifold - VIN Range: G45704->G99999 (30.15.01)

Vehicles with supercharger

6 . Remove the charge air cooler.
For additional information, refer to Charge Air Cooler

www.JagDocs.com

7 . **NOTE:**

Left-hand shown, right-hand similar.

Remove the lower intake manifold.

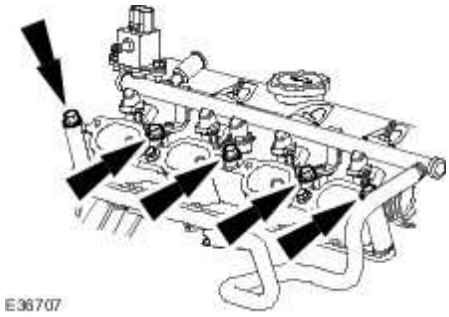

All vehicles

8 Remove the engine front cover.

. For additional information, refer to Engine Front Cover - VIN Range: G45704->G99999 (12.65.01)

9 . Remove the right-hand variable camshaft timing oil control unit housing.

- Remove and discard the O-ring seals.

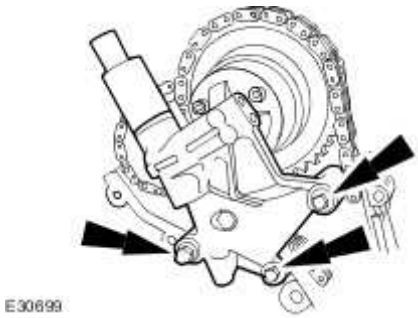

10 . Remove the left-hand variable camshaft timing oil control unit housing.

- Remove and discard the O-ring seals.

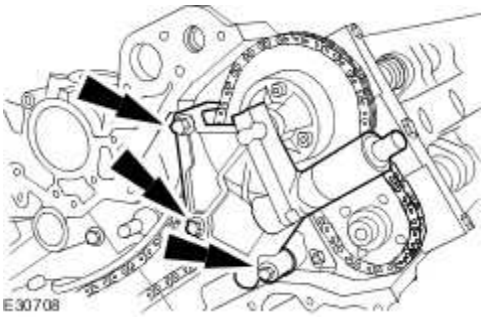

11 . Install the special tool to the left-hand cylinder head.

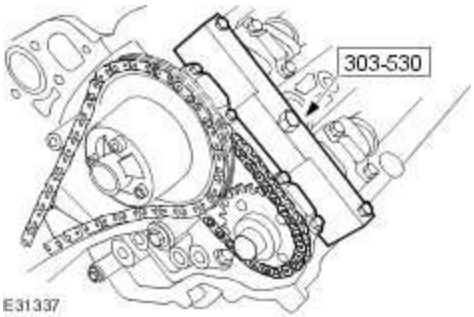

12 . Install the special tool to the right-hand cylinder head.

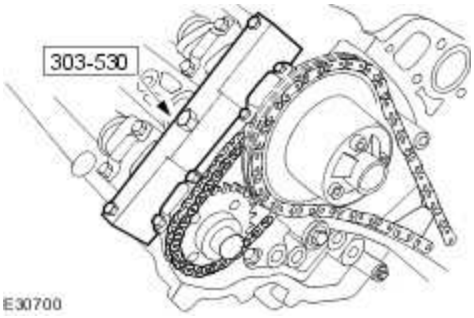

13 . Remove the primary timing chain tensioner assembly.

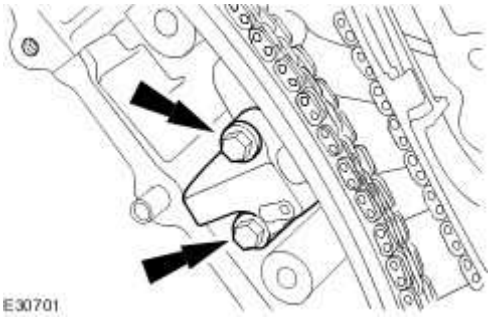

www.JagDocs.com

14 . Remove the primary timing chain tensioner guide.

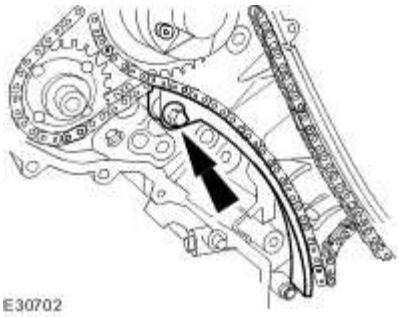

15 . Remove the primary timing chain.

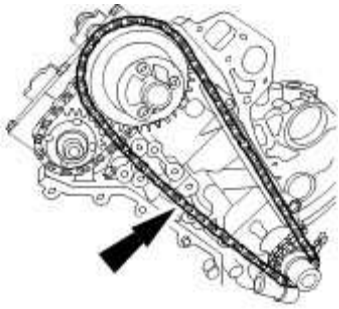

16 . **CAUTION: Make sure the secondary timing chain and camshaft sprockets are free to rotate.**

Loosen the camshaft sprockets.

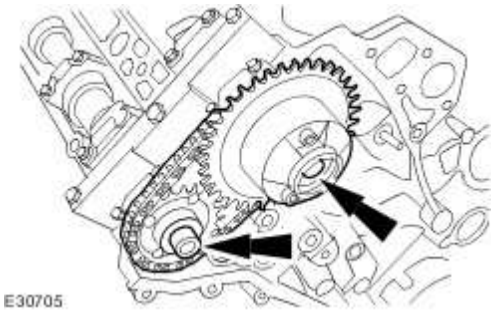

17 . Remove the primary timing chain guide.

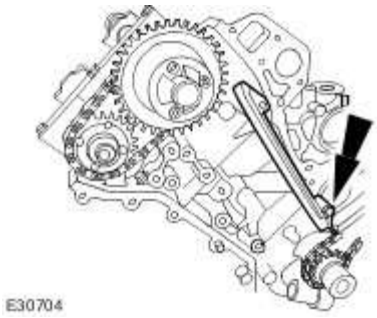

18 . Remove the primary timing chain tensioner assembly.

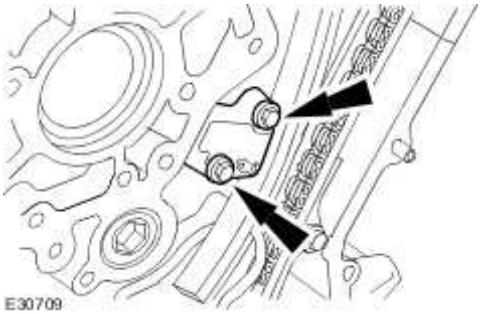

19 . Remove the primary timing chain tensioner guide.

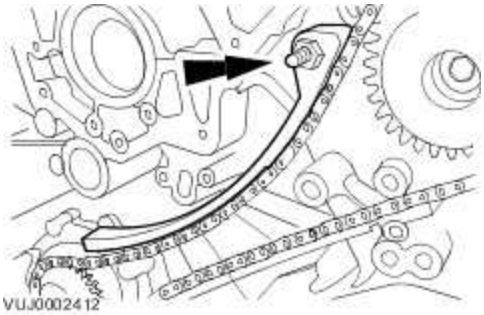

20 . Remove the primary timing chain.

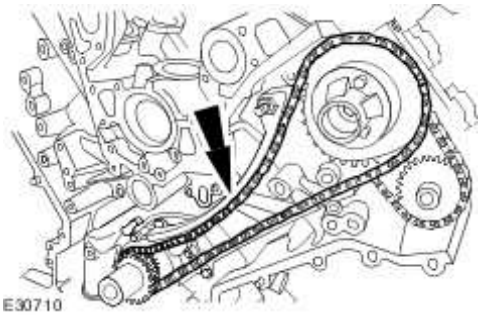

www.JagDocs.com

21 . Remove the primary timing chain tensioner guide.

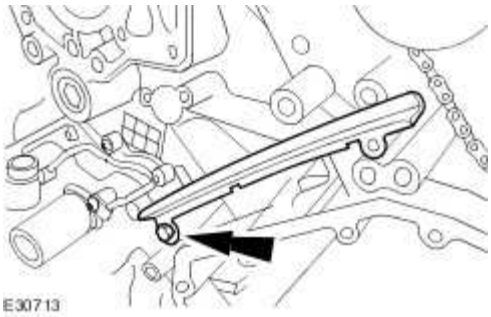

22 . Remove the secondary timing chain tensioner retaining bolts.

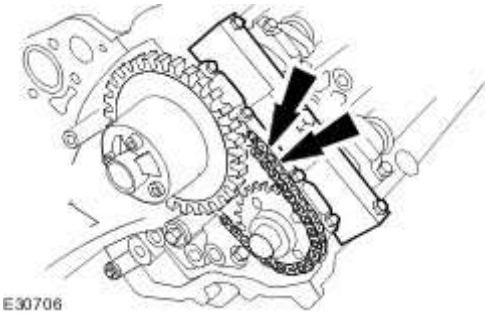

23 Remove the camshaft sprockets.

.

Remove the secondary timing chain tensioner and secondary timing chain from the camshaft sprockets.

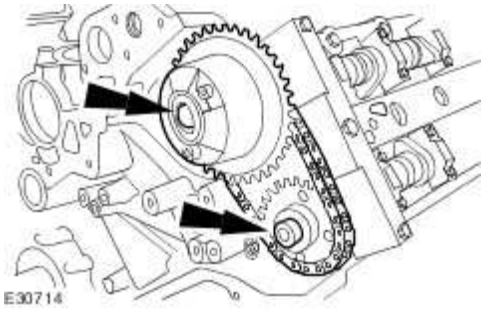

24 . Remove the camshaft setting tool.

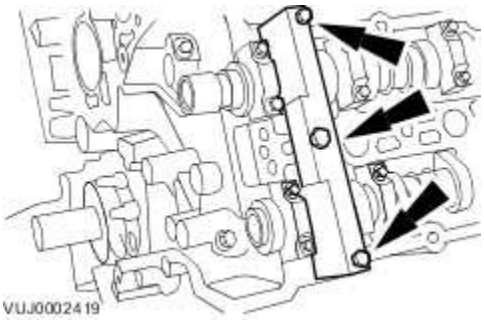

25 Remove the camshaft bearing caps.

.

- Remove the camshaft bearing cap retaining bolts evenly and in stages.
- Remove the camshaft bearing caps. Note their orientation and markings, each is marked with its position (a number) and orientation (an arrow).

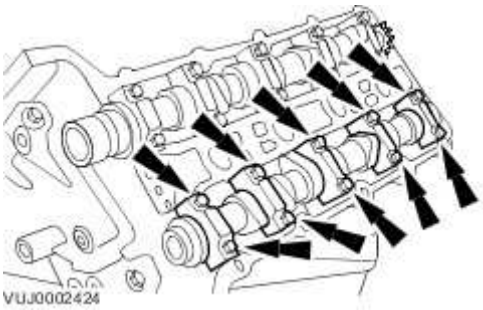

26 . Remove the left-hand exhaust camshaft.

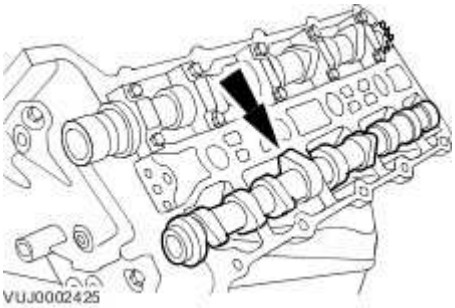

27 Remove the camshaft bearing caps.

.

- Remove the camshaft bearing cap retaining bolts evenly and in stages.

www.JagDocs.com

- Remove the camshaft bearing caps. Note their orientation and markings, each is marked with its position (a number) and orientation (an arrow).

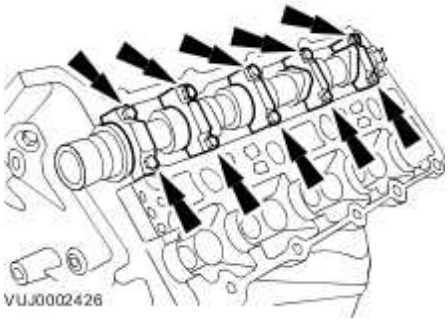

28 . Remove the left-hand inlet camshaft.

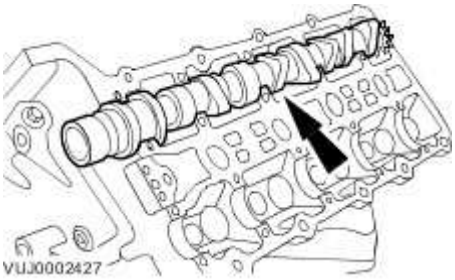

29 . **CAUTION: The bolts can only be used twice, mark the bolts with a center punch. If two punch marks are visible, discard the bolts.**

CAUTION: Vehicles fitted with Polydrive cylinder head bolts, the cylinder head bolts must be removed using a 10 mm Polydrive socket or a 10 mm Allen key. Failure to follow this instruction may result in damage to the component.

Remove the left-hand cylinder head.

- Remove the bolts in the indicated sequence.

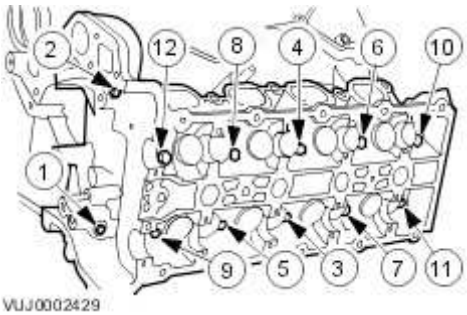

30 .

CAUTION: Only use a plastic scrapper to clean off old gasket.

Remove the cylinder head gasket.

- Clean the gasket mating faces.

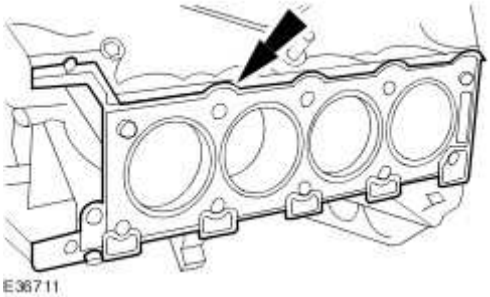

31 .

CAUTION: Only use a plastic scrapper to clean off old gasket.

Clean the cylinder head locating dowels.

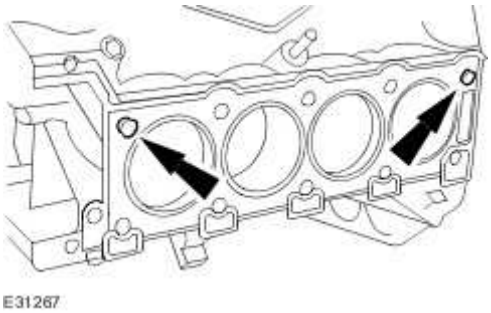

www.JagDocs.com

Installation

All vehicles

1 . Check cylinder head face for distortion, across the center and from corner to corner.

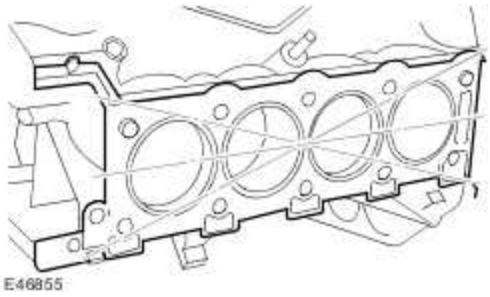

2 . For cylinder head face distortion data, refer to specifications.
For additional information, refer to Specifications

3 **NOTE:**
.

For cylinder head with distortion above the maximum allowance, the cylinder head material must be measured.

Measure the cylinder head material.

- Check measurement from the centre of the exhaust dowel to the cylinder head face as shown.
- If the measurement is less than 51.88 mm the cylinder head requires replacement.

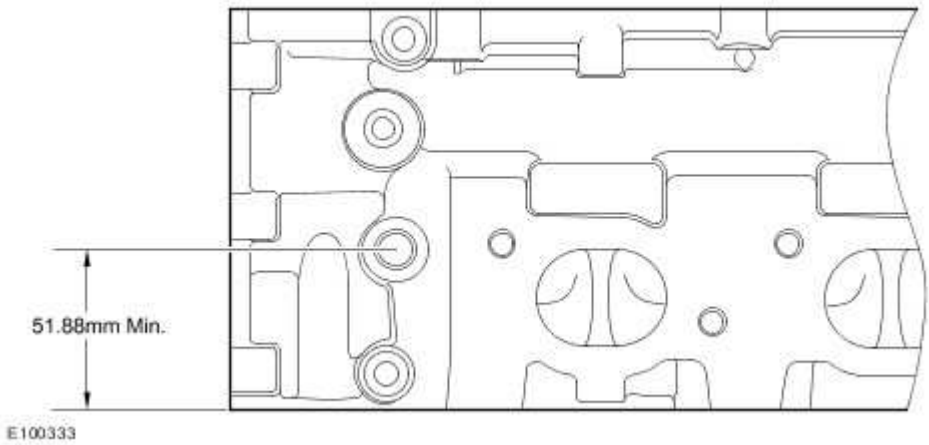

4. **CAUTION: If a replacement cylinder head is to be installed to a vehicle with VCT the cylinder head must have the oil gallery blind rivet removed before installation.**

CAUTION: Make sure that all debris is removed from the cylinder head and cylinder head oil gallery.

Vehicles fitted with VCT: Remove the blind rivet from the VCT oil gallary.

- Identify the VCT oil supply gallery and the 8 mm (0.31 inch) blind rivet.
- Using a suitable 3 mm (0.12 inch) punch release the centre of the blind rivet until it is released from the outer part of the blind rivet.
- Using a suitable extraction tool, remove the remaining part of the blind rivet.

www.JagDocs.com

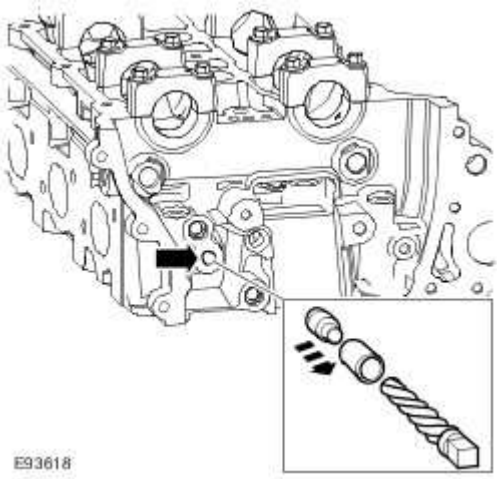

5 . **CAUTION: The head gasket must be installed over the cylinder block dowels.**

Install a new cylinder head gasket

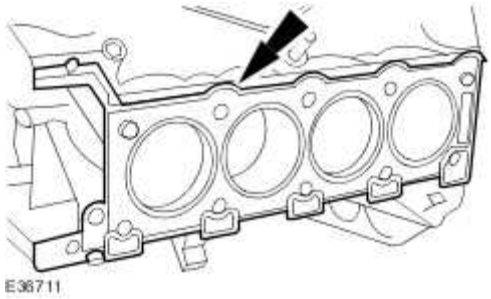

6 . **NOTE:**

Tighten the bolts 1 to 10 in the sequence shown.

Install the left-hand cylinder head.

1) Tighten bolts 1 to 10 to 20 Nm.

2) Tighten bolts 1 to 10 to 35 Nm.

3) Tighten bolts 1 to 10 to 90°.

4) Tighten bolts 1 to 10 to 90°.

5) Tighten bolts 11 to 12 to 25 Nm.

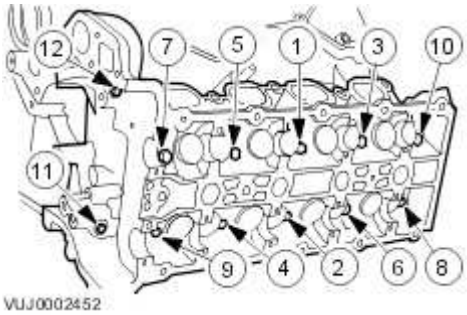

7 . **NOTE:**

Make sure all components are clean.

Apply oil (EP-90) to the camshaft and bearing surfaces, as follows:

- To the upper face of each bearing surface in the cylinder head.
- To the upper face of each bearing surface in each bearing cap.
- On the cam lobes ONLY, not on the base circle area.

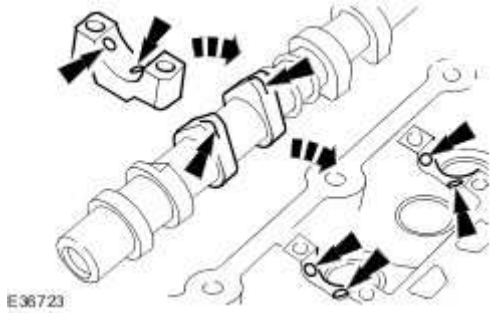

8 . Install the left-hand inlet camshaft.

www.JagDocs.com

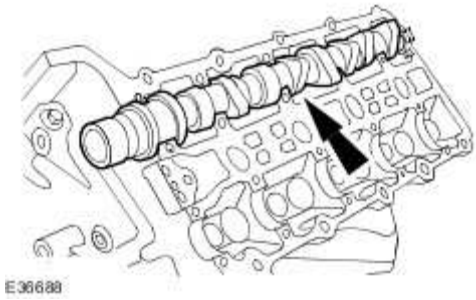

9 . **CAUTION: Alternate bolt tightening to correctly seat the camshaft bearing caps.**

Install the camshaft bearing cap bolts evenly.

- Tighten to 10 Nm.

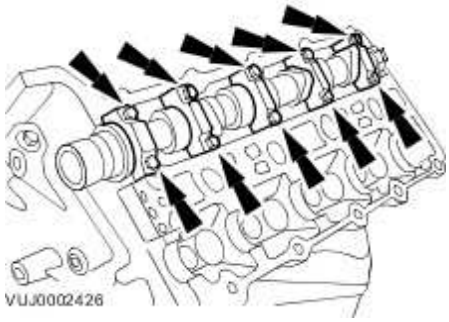

10 . Install the left-hand exhaust camshaft.

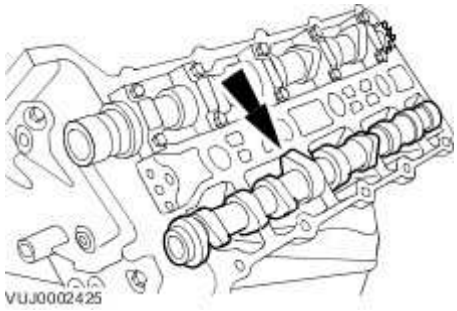

11 . **CAUTION: Alternate bolt tightening to correctly seat the camshaft bearing caps.**

Install the camshaft bearing cap bolts evenly.

- Tighten to 10 Nm.

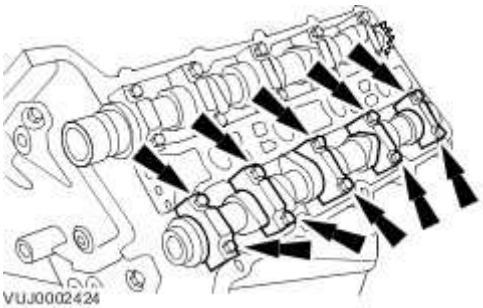

12 . Install the camshaft setting tool.

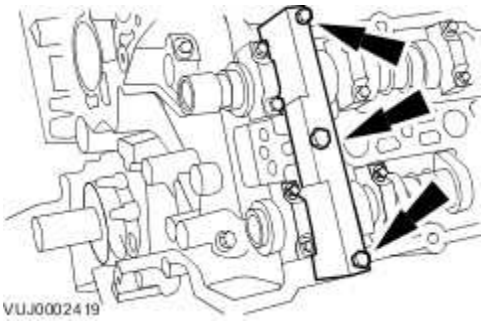

13 . **CAUTION: Do not tighten the camshaft sprocket retaining bolts.**

CAUTION: Make sure the secondary timing chain and camshaft sprockets are free to rotate.

Install the camshaft sprockets.

- Install the secondary timing chain tensioner and secondary timing chain to the camshaft sprockets.

www.JagDocs.com

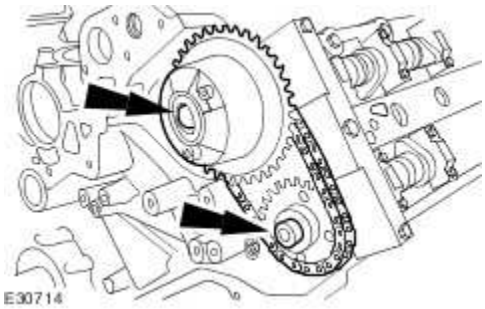

14 . Using a suitable tool, retain the left-hand timing chain tensioner piston.

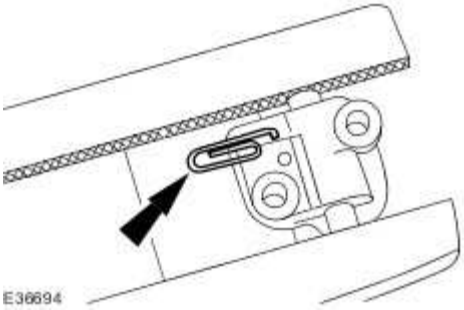

15 . Install the secondary timing chain tensioner retaining bolts.

- Tighten to 12 Nm.

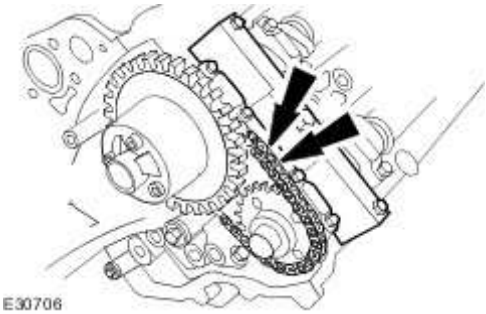

16 . Release the tension in the left-hand timing chain tensioner.

- Remove the retaining tool.

17 Install the timing chain tensioning tool 303-532 to the exhaust camshaft sprocket.

.

- Reposition the camshaft sprockets for the most advantageous position for use of the tool.

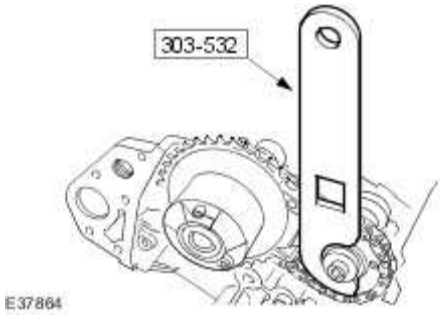

18 . Install the primary timing chain tensioner guide.

- Tighten to 12 Nm.

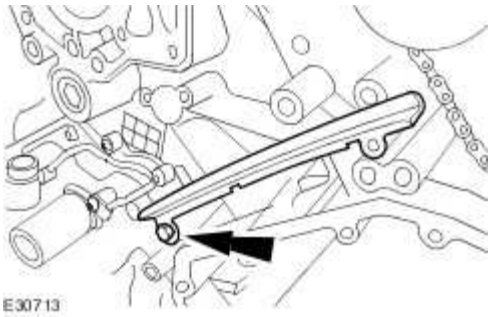

19 . **CAUTION: Make sure the timing chain slack is on the tensioned side of the timing chain.**

Install the primary timing chain.

- Install the primary chain over the crankshaft sprocket and the intake sprocket.

www.JagDocs.com

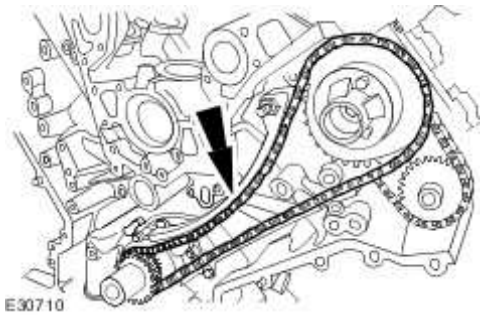

20 . Install the primary timing chain tensioner guide.

Tighten to 12 Nm.

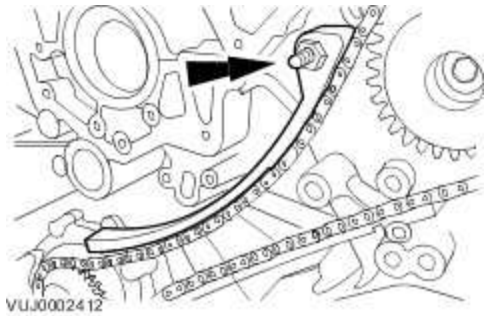

21 . **CAUTION: During timing chain tensioner compression, do not release the ratchet stem until the timing chain tensioner piston is fully bottomed in its bore or damage to the ratchet stem will result.**

Using a suitable tool, hold the left-hand timing chain tensioner ratchet lock mechanism away from the ratchet stem.

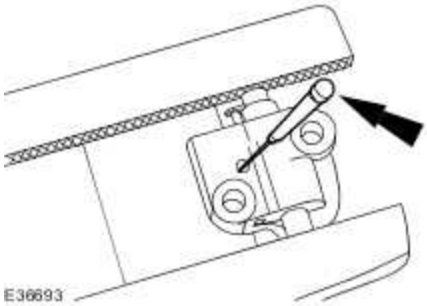

22 **NOTE:**

.

The timing chain tensioner piston should retract with minimal force. If binding occurs, reposition the timing chain tensioner to eliminate side loading.

Slowly compress the left-hand timing chain tensioner.

23 **NOTE:**

.

The retaining tool must remain in the timing chain tensioner until the timing chain tensioner is installed to the engine with the piston bottomed in the bore.

Using a suitable tool, retain the left-hand timing chain tensioner piston.

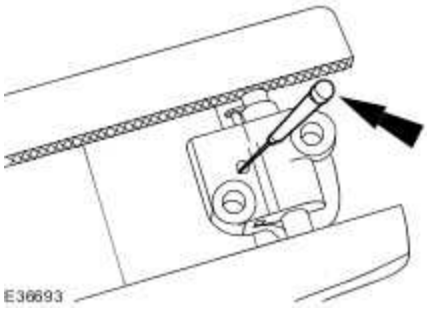

24 . Install the primary timing chain tensioner assembly.

- Tighten to 12 Nm.

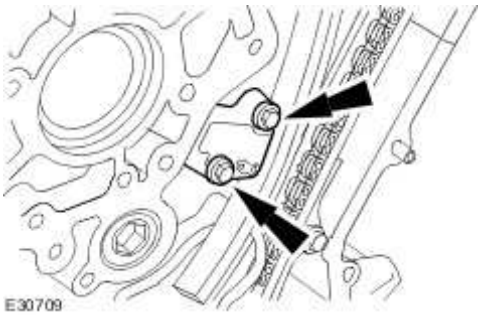

25 . Release the tension in the left-hand timing chain tensioner.

- Remove the retaining tool.

www.JagDocs.com

26. **CAUTION: While applying the opposing force to sprocket and chain, tighten the sprocket bolt.**

CAUTION: Make sure that a new bolt is installed.

Using the special tool, apply force to the tool in an anti-clockwise direction to tension the primary timing chain on its drive side.

- Tighten to 20 Nm + 90 deg.

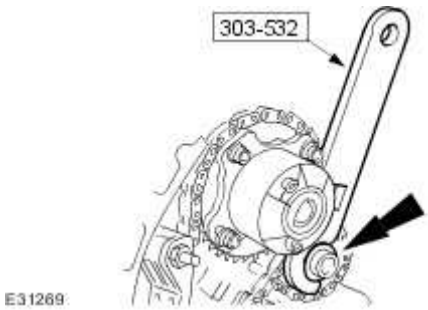

27. **CAUTION: While applying the opposing force to sprocket and chain, tighten the sprocket bolt.**

CAUTION: Make sure that a new bolt is installed.

Using the special tool, apply force to the tool in an anti-clockwise direction.

- Tighten to 20 Nm + 90 deg.

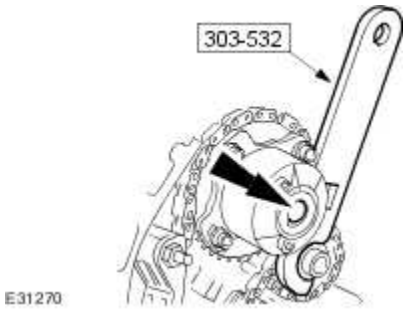

28 . Install the primary timing chain guide.

- Tighten to 12 Nm.

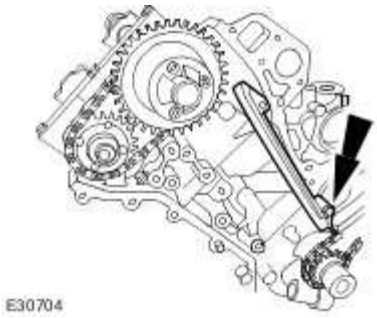

29 . **CAUTION: Make sure the timing chain slack is on the tensioned side of the timing chain.**

Install the primary timing chain.

- Install the primary chain over the crankshaft sprocket and the intake sprocket.

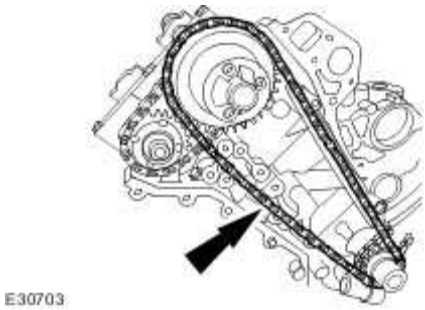

www.JagDocs.com

30 . Install the primary timing chain tensioner guide.

Tighten to 12 Nm.

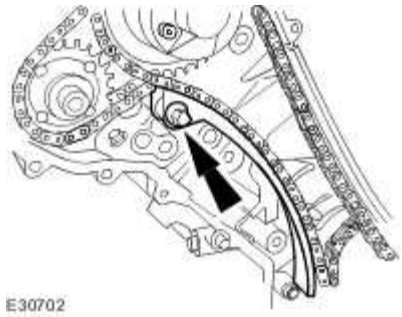

31 . **CAUTION: During timing chain tensioner compression, do not release the ratchet stem until the timing chain tensioner piston is fully bottomed in its bore or damage to the ratchet stem will result.**

Using a suitable tool, hold the right-hand timing chain tensioner ratchet lock mechanism away from the ratchet stem.

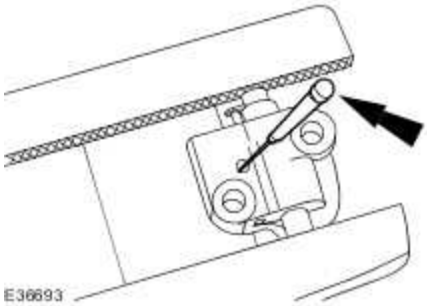

32 . **NOTE:**

The timing chain tensioner piston should retract with minimal force. If binding occurs, reposition the timing chain tensioner to eliminate side loading.

Slowly compress the right-hand timing chain tensioner.

33 **NOTE:**

.

The retaining tool must remain in the timing chain tensioner until the timing chain tensioner is installed to the engine with the piston bottomed in the bore.

Using a suitable tool, retain the right-hand timing chain tensioner piston.

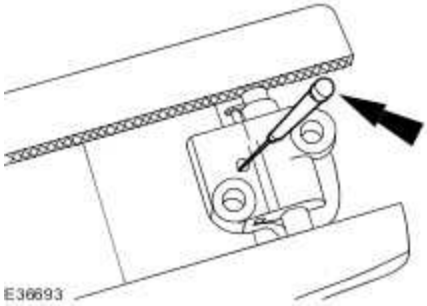

34 . Install the primary timing chain tensioner assembly.

- Tighten to 12 Nm.

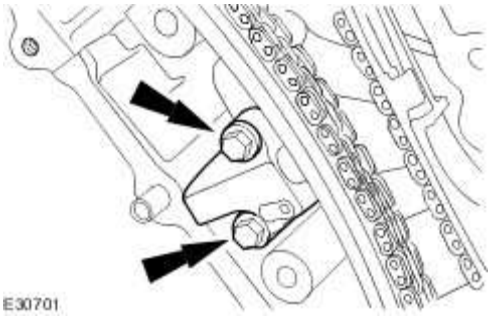

35 . Release the tension in the right-hand timing chain tensioner.

- Remove the retaining tool.

36

. **CAUTION: While applying the opposing force to sprocket and chain, tighten the sprocket bolt.**

CAUTION: Make sure that a new bolt is installed.

www.JagDocs.com

www.JagDocs.com

Using the special tool apply force to the tool in an anti-clockwise direction to tension the primary timing chain on its drive side.

- Tighten to 20 Nm + 90 deg.

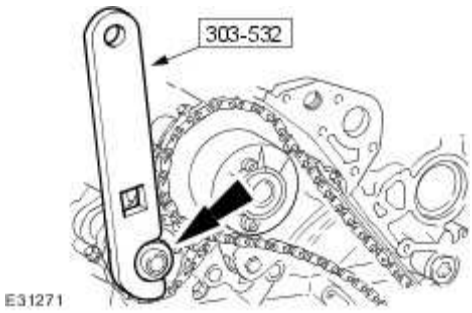

37 . **CAUTION: While applying the opposing force to sprocket and chain, tighten the sprocket bolt.**

CAUTION: Make sure that a new bolt is installed.

Using the special tool, apply force to the tool in an anti-clockwise direction.

- Tighten to 20 Nm + 90 deg.

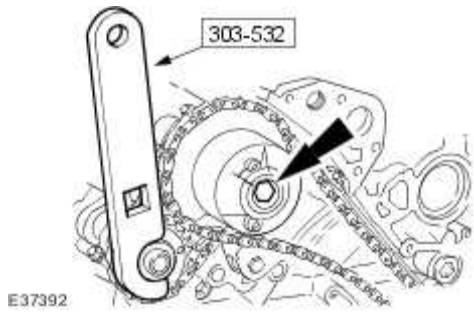

38 . Remove the special tool from the right-hand cylinder head.

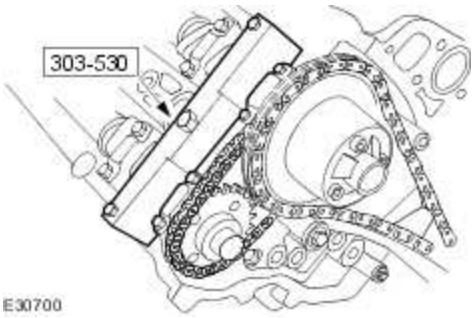

39 . Remove the special tool from the left-hand cylinder head.

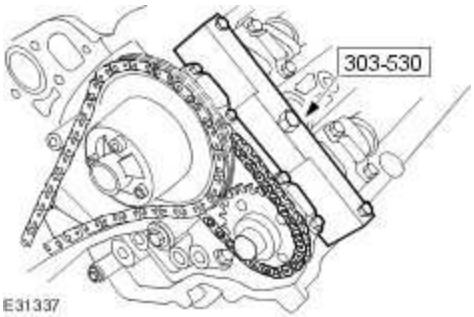

40 . Install the left-hand variable camshaft timing oil control unit housing.

- Install new O-ring seals.
- Tighten to 22 Nm.

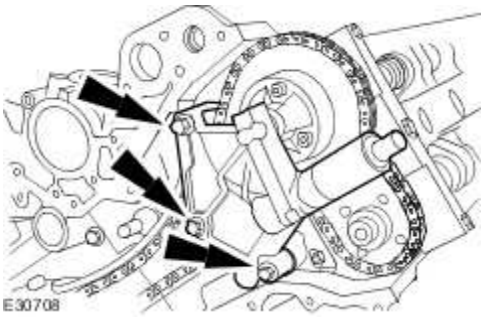

41 . Install the right-hand variable camshaft timing oil control unit housing.

- Install new O-ring seals.
- Tighten to 22 Nm.

www.JagDocs.com

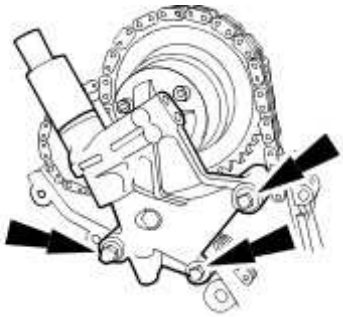

E30699

42 . Raise the vehicle.

43 . Remove the special tool.

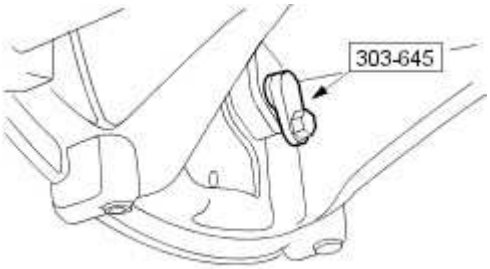

VUJ0002400

44 . Install the CKP sensor.

Tighten to 10 Nm.

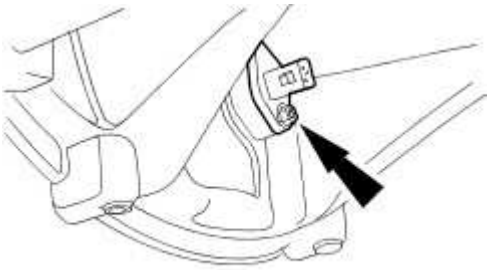

E30694

45 . Connect the CKP sensor electrical connector.

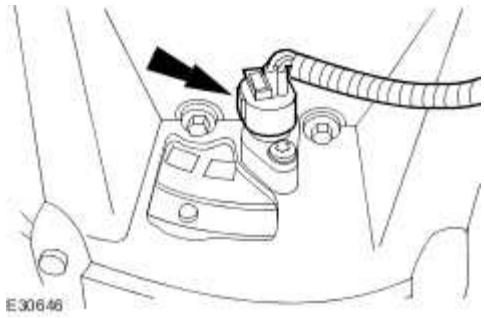

Vehicles without supercharger

46 Install the intake manifold.

. For additional information, refer to Intake Manifold - VIN Range: G45704->G99999 (30.15.01)

Vehicles with supercharger

47 . Install the lower intake manifold.

Tighten to 22 Nm.

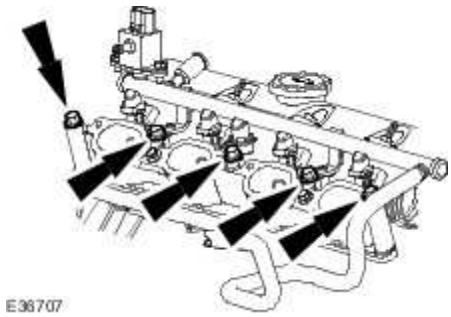

48 . Install the charge air cooler.
For additional information, refer to Charge Air Cooler

All vehicles

49 . Carry out the valve clearance check.
For additional information, refer to Valve Clearance Check (12.29.47)

50 Install the engine front cover.

For additional information, refer to Engine Front Cover - VIN Range: G45704->G99999 (12.65.01)

www.JagDocs.com

Engine Front Cover - VIN Range: G00442->G45703 (12.65.01)

Special Service Tools

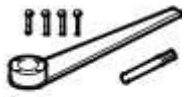

303-191

Front Pulley Lock
303-191

303-191-02

Front Pulley Lock Adaptor
303-191-02

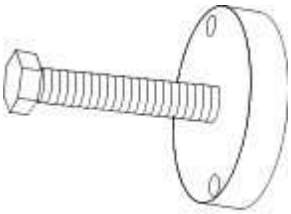

303-588

Remover, Crankshaft Damper
303-588

Removal

All vehicles

1 . Remove the cooling fan motor and shroud. <<303-03A>>

2 . Remove the left-hand valve cover.
For additional information, refer to

3 . Remove the right-hand valve cover.
For additional information, refer to

Vehicles without supercharger

4 . Remove the oil cooler.
For additional information, refer to

Vehicles with supercharger

5 . Remove the supercharger drive belt. <<303-05>>

All vehicles

6 . Remove power steering pump. <<211-02>>

7 . Remove the air conditioning compressor. <<412-03>>

8 . Remove the water pump pulley.

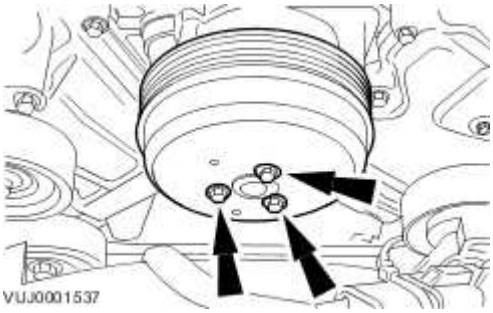

9 . Remove the accessory drive belt idler pulley.

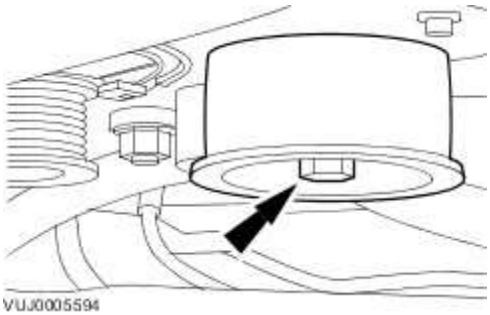

www.JagDocs.com

Vehicles with supercharger

10 . Remove supercharger drive belt tensioner. <<303-05>>

All vehicles

11 . Remove the power steering pump mounting bracket.

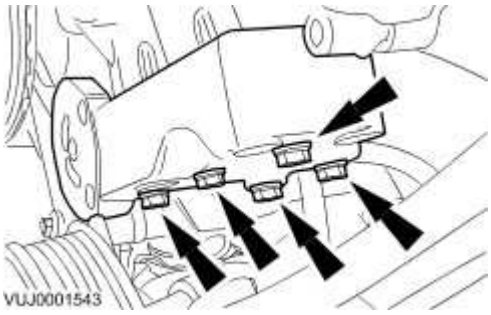

12 . Detach the engine harness.

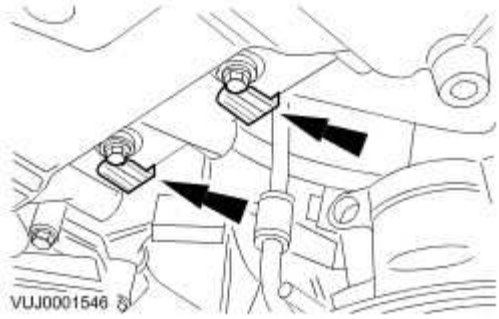

13 . **CAUTION: Under no circumstances should the crankshaft setting peg 303-645 be used in the following operations to lock the crankshaft.**

Using special tools, retain the crankshaft pulley.

- Remove and discard the crankshaft pulley bolt.

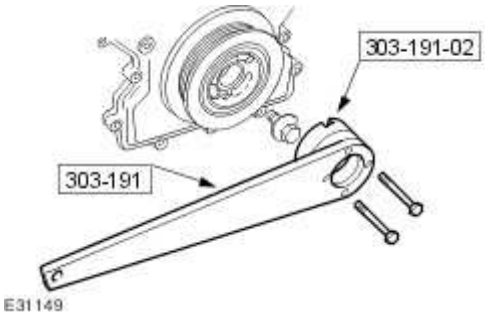

14 . Remove the special tools.

15 . Using special tools, remove the crankshaft pulley.

- Collect the locking ring.
- Remove and discard the O-ring seal.

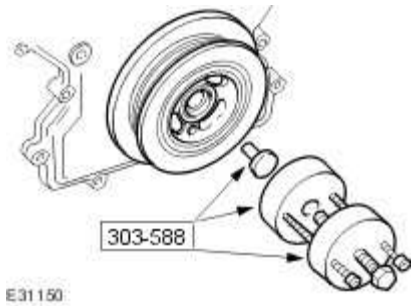

16 . Remove the special tools.

17 . Remove the engine front cover.

- Remove and discard all the seals.

www.JagDocs.com

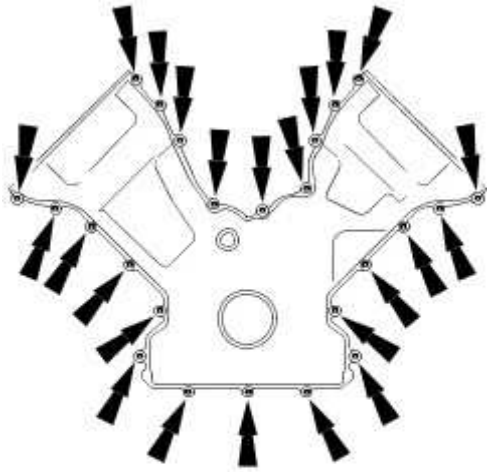

VUJ0002018

Installation

All vehicles

1 . Install new seals to the timing cover.

1) Install the new seal to the inner groove on the face of the timing cover.

2) Install the new seal to the outer groove on the face of the timing cover.

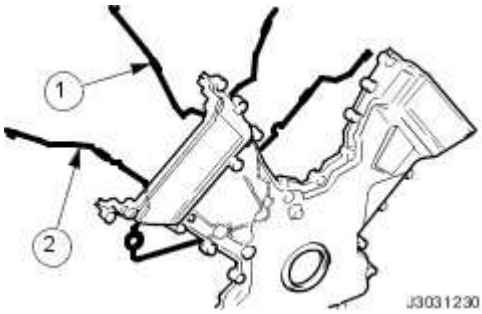

2 Apply sealant to the eight joints on the engine face.

.

Sealant beads to be 3mm diameter and 12mm long. Cut the nozzle of the sealant tube to produce a 3 mm (0.12 in) bead. (Install and tighten the securing bolts within twenty minutes of sealant application).

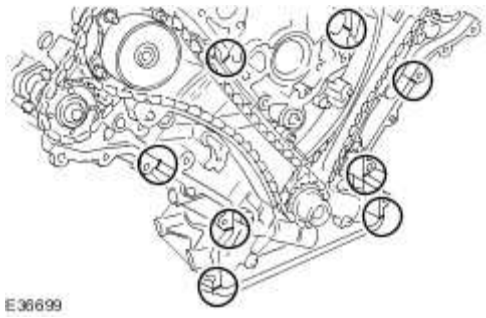

3 . Install the timing cover.

- Tighten in the sequence shown.
- Tighten to 13 Nm.

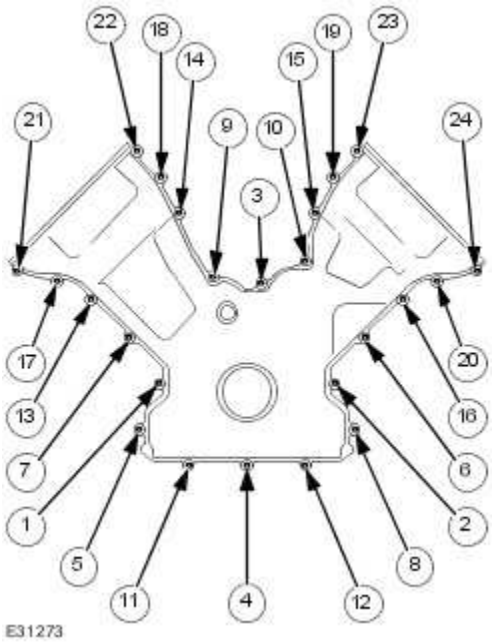

4 . **NOTE:**

Check crankshaft pulley and locking ring for damage.

Clean all crankshaft pulley mating faces.

www.JagDocs.com

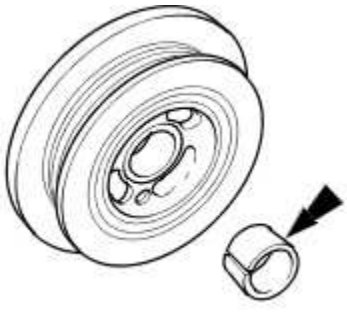

5. **CAUTION: The screw thread in the crankshaft must be cleaned out before a new crankshaft pulley bolt is installed.**

CAUTION: A new crankshaft pulley bolt must be used.

Install, but do not tighten, a new crankshaft pulley retaining bolt.

- Install the crankshaft pulley and locking ring to the crankshaft.

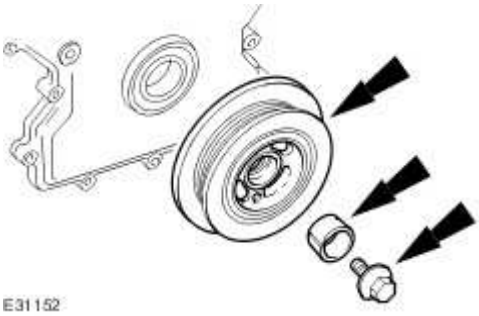

6. **CAUTION: Under no circumstances should the crankshaft setting peg 303-645 be used in the following operations to lock the crankshaft.**

Using special tools, retain the crankshaft pulley.

- Tighten the crankshaft pulley retaining bolt to 375 Nm.

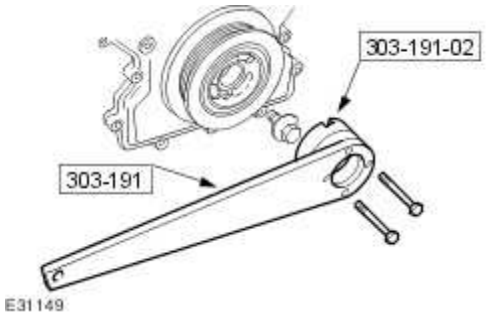

7 . Remove the special tools.

8 . Attach the engine harness.

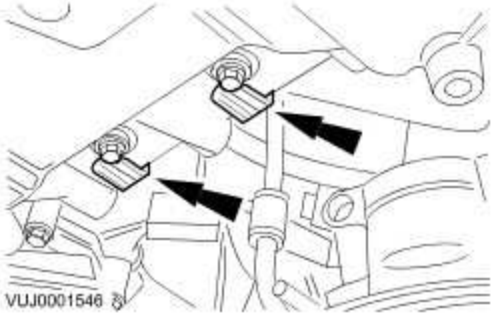

9 . Install the power steering pump mounting bracket.

Tighten to 25 Nm.

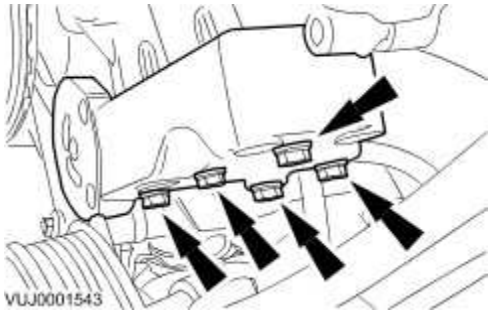

10 . Install the accessory drive belt idler pulley.

Tighten to 25 Nm.

www.JagDocs.com

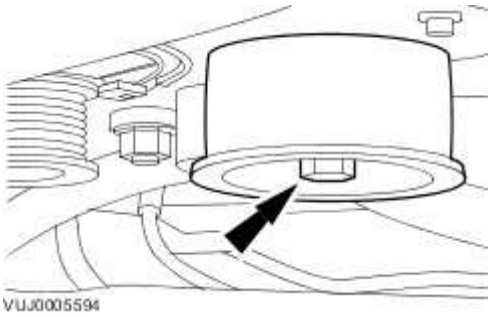

Vehicles with supercharger

11 . Install the supercharger drive belt tensioner. <<303-05>>

All vehicles

12 . Install the water pump pulley.

Tighten to 10 Nm + 45°.

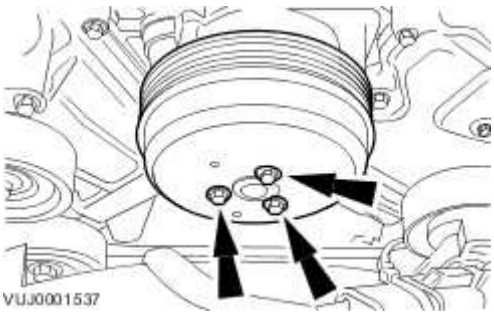

13 . Install the air conditioning compressor. <<412-03>>

14 . Install power steering pump. <<211-02>>

Vehicles with supercharger

15 . Install the supercharger drive belt. <<303-05>>

Vehicles without supercharger

16 . Install the oil cooler.
For additional information, refer to

All vehicles

17 . Install the left-hand valve cover.
For additional information, refer to

18 . Install the right-hand valve cover.
For additional information, refer to

19 . Install the cooling fan motor and shroud. <<303-03A>>

www.JagDocs.com

Engine Front Cover - VIN Range: G45704->G99999 (12.65.01)

Removal

All vehicles

1 . Remove the left-hand valve cover.
For additional information, refer to Valve Cover LH - VIN Range: G45704->G99999 (12.29.43)

2 . Remove the right-hand valve cover.
For additional information, refer to Valve Cover RH - VIN Range: G45704->G99999 (12.29.44)

3 . Remove the crankshaft pulley.
For additional information, refer to Crankshaft Pulley (12.21.09)

Vehicles without supercharger

4 . Remove the oil cooler.
For additional information, refer to Oil Cooler - Vehicles Without: Supercharger (12.60.68)

Vehicles with supercharger

5 . Disconnect the coolant hose.

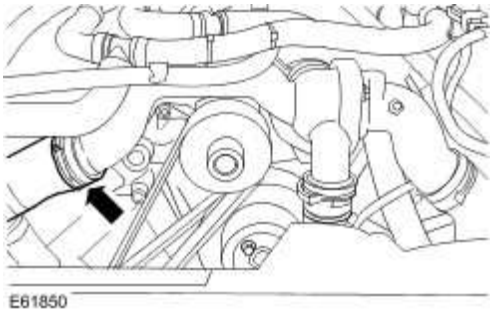

6 . Disconnect the coolant hose.

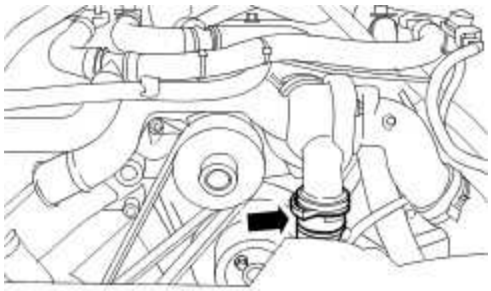

E61851

7 . Disconnect the coolant hose.

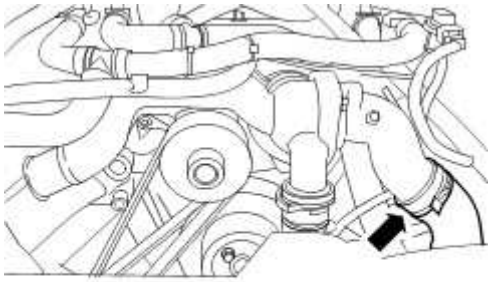

E61852

8 . Disconnect the engine coolant temperature (ECT) sensor electrical connector.

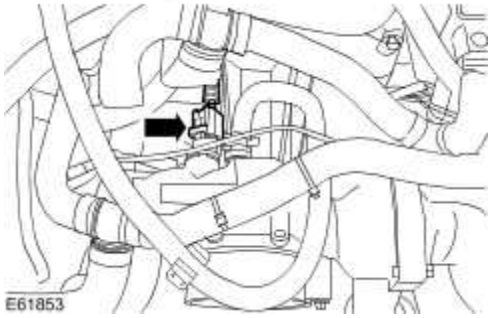

E61853

9 . Disconnect the coolant hose.

www.JagDocs.com

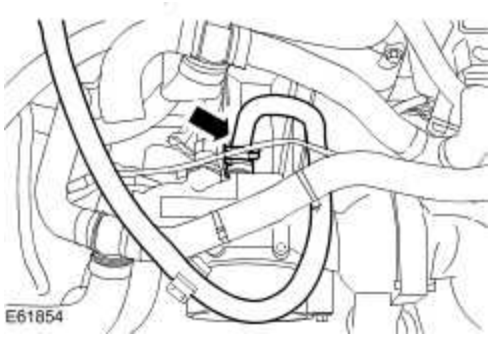

10 . Disconnect the coolant hose.

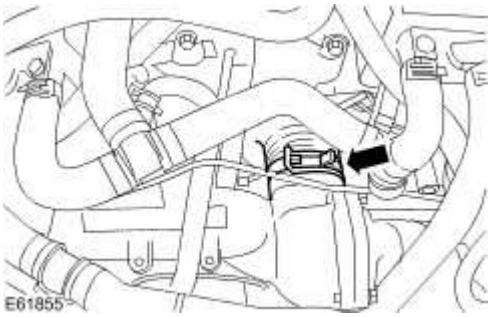

11 . Detach the coolant assembly.

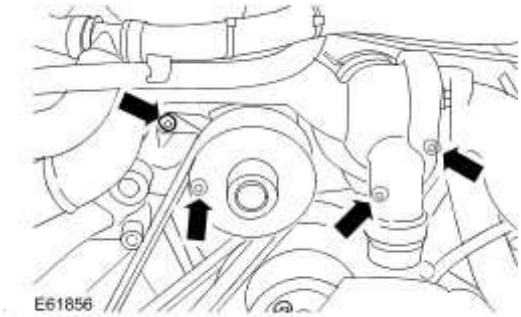

12 . Remove the coolant assembly.

- Disconnect the coolant hose.
- Remove and discard the O-ring seals.

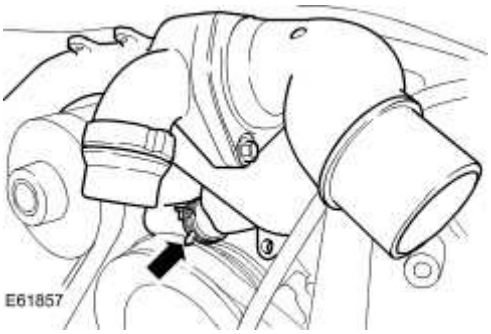

All vehicles

13 . Remove the water pump pulley.

Using a suitable tool, retain the water pump pulley.

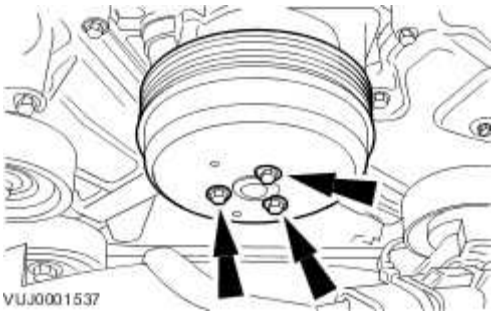

14 Remove the air conditioning (A/C) compressor.
. For additional information, refer to Air Conditioning (A/C) Compressor - 3.5L/4.2L, VIN Range: G45704->G99999 (82.10.20)

15
. **CAUTION: Cap the power steering line to prevent loss of fluid and prevent dirt ingress.**

CAUTION: If power steering fluid comes into contact with the paintwork, the affected area must be immediately washed down with cold water.

www.JagDocs.com

NOTE:

Drain the fluid into a suitable container.

Disconnect the power steering reservoir to power steering pump supply line.

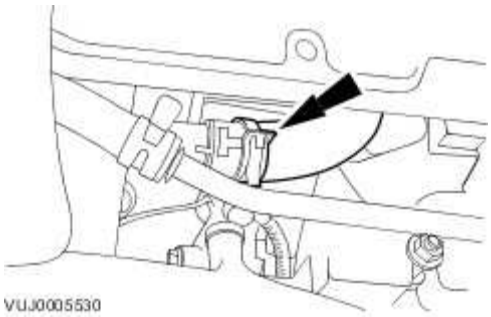

16 . Remove the power steering pump lower retaining bolts.

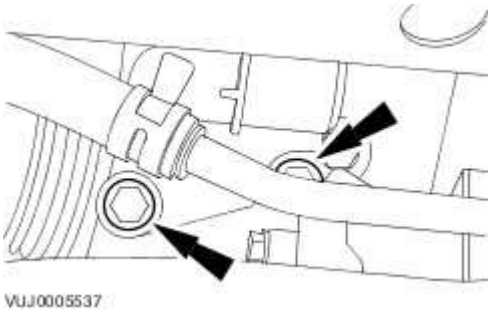

17 . Disconnect the secondary air injection (AIR) control valve to exhaust manifold tube.

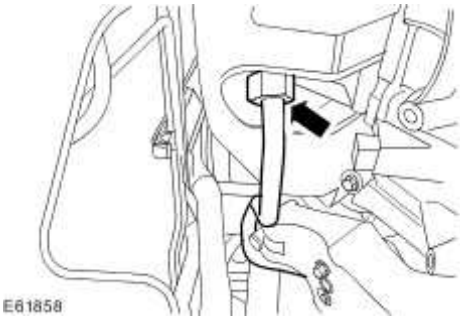

18 . Lower the vehicle.

19 . **CAUTION: Cap the power steering lines to prevent loss of fluid and prevent dirt ingress.**

CAUTION: If power steering fluid comes into contact with the paintwork, the affected area must be immediately washed down with cold water.

NOTE:

Drain the fluid into a suitable container.

Disconnect the power steering pump to steering gear high-pressure line.

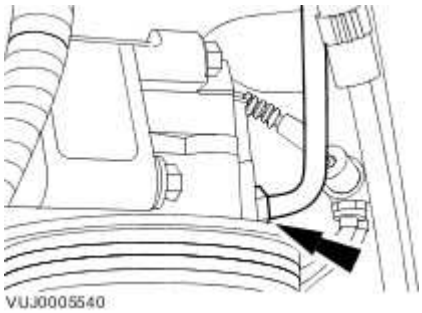

20 . Remove the power steering pump.

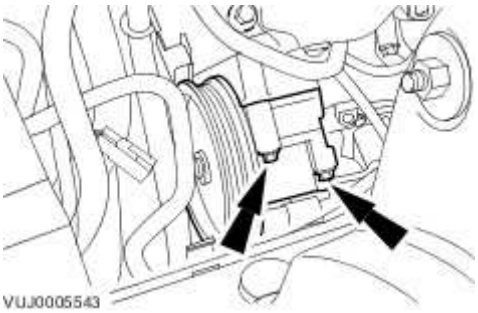

21 . Remove the accessory drive belt idler pulley.

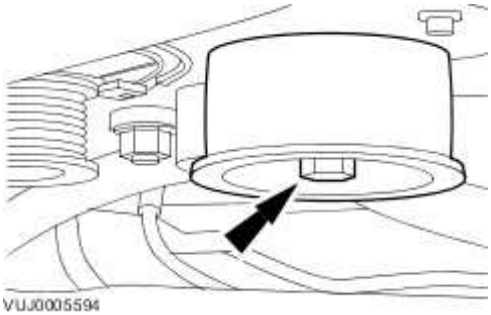

www.JagDocs.com

Vehicles with supercharger

22 . Remove the supercharger belt idler pulley and bracket assembly.

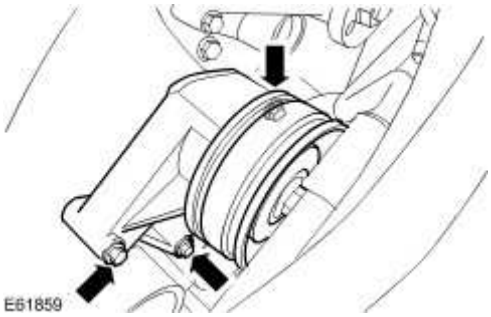

23 . Remove the supercharger belt tensioner.

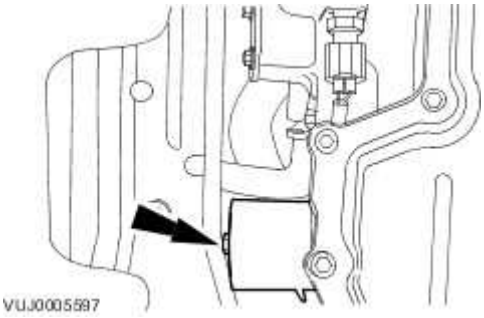

All vehicles

24 . **NOTE:**

Vehicles with supercharger shown, vehicles without supercharger similar.

Disconnect the AIR control valve to exhaust manifold tube.

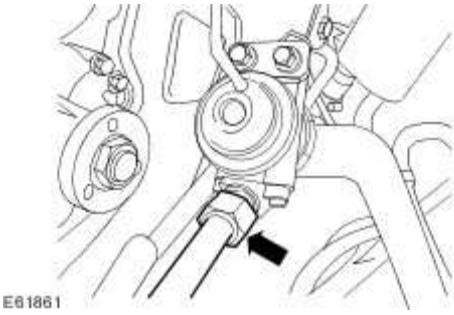

25 . **NOTE:**

Vehicles with supercharger shown, vehicles without supercharger similar.

Reposition the AIR control valve and bracket assembly.

Remove the retaining bolts.

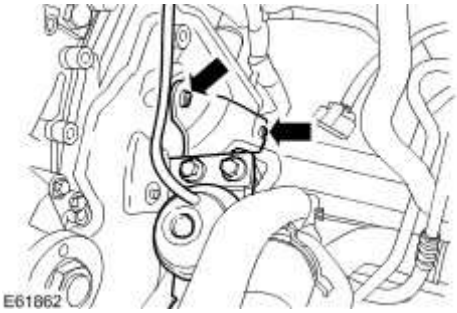

Vehicles with supercharger

26 . Disconnect the AIR control valve to exhaust manifold tube.

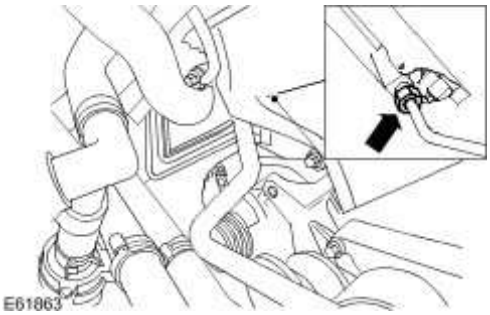

27 . Remove the AIR control valve to exhaust manifold tube.

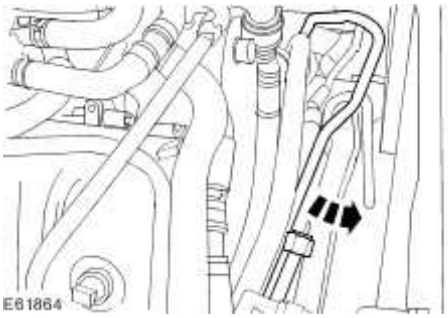

All vehicles

28 . Remove the power steering pump mounting bracket.

www.JagDocs.com

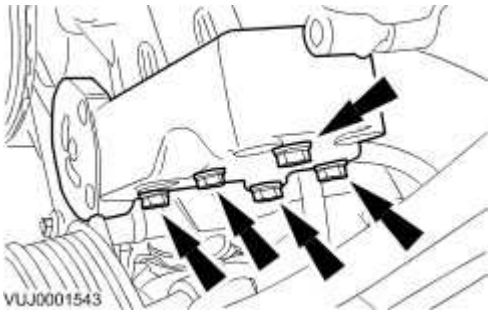

29 . Detach the engine harness.

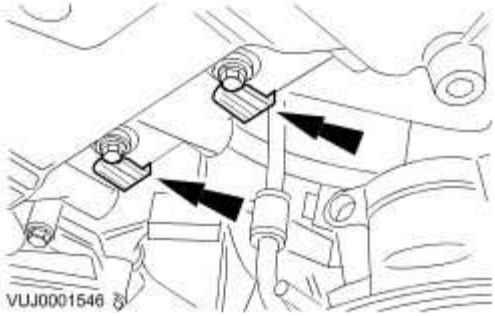

30 . Remove the engine front cover.

Remove and discard all the seals.

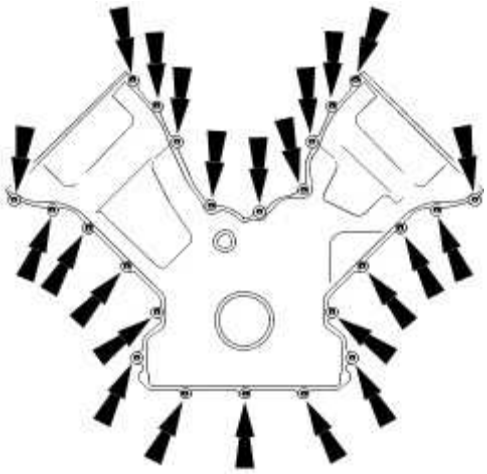

VUJ0002018

Installation

All vehicles

1 . Install new seals to the timing cover.

1) Install the new seal to the inner groove on the face of the timing cover.

2) Install the new seal to the outer groove on the face of the timing cover.

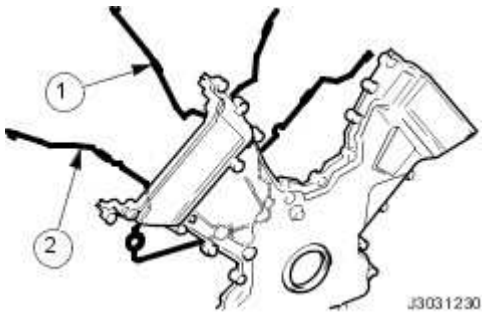

2 Apply sealant to the eight joints on the engine face.

.

- Sealant beads to be 3mm diameter and 12mm long. Cut the nozzle of the sealant tube to produce a 3 mm (0.12 in) bead. (Install and tighten the securing bolts within twenty minutes of sealant application).

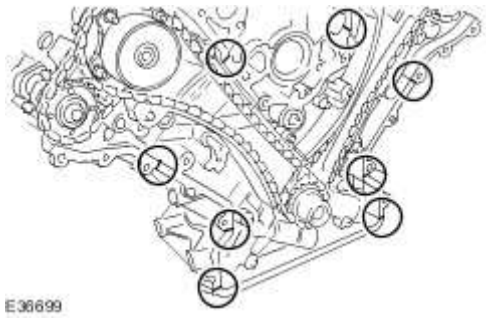

3 . Install the timing cover.

- Tighten in the sequence shown.
- Tighten to 12 Nm.

www.JagDocs.com

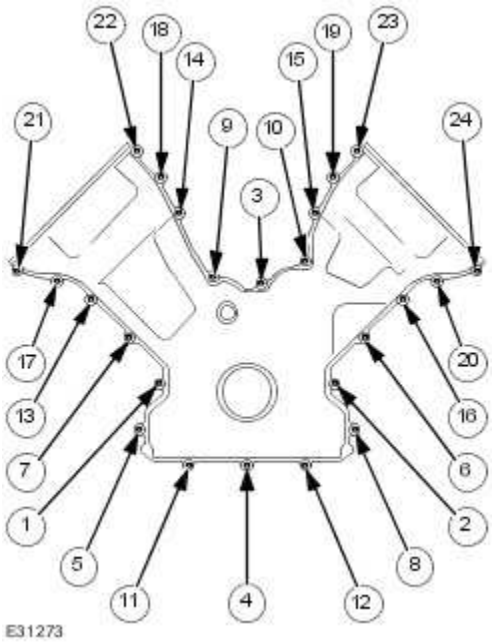

4 . Attach the engine harness.

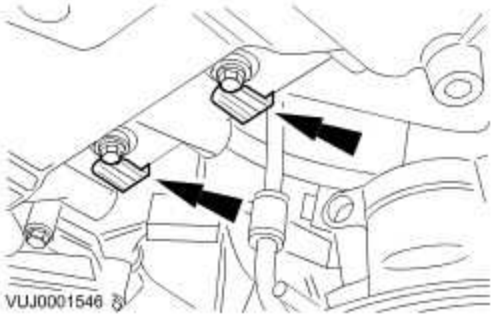

5 . Install the power steering pump mounting bracket.

Tighten to 25 Nm.

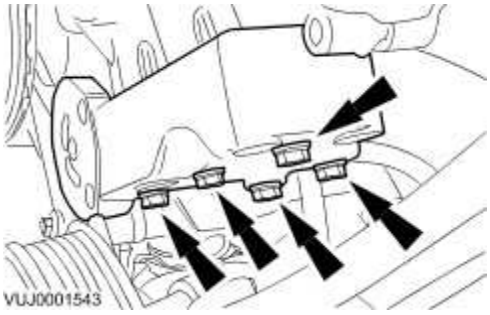

Vehicles with supercharger

6 . Install the AIR control valve to exhaust manifold tube.

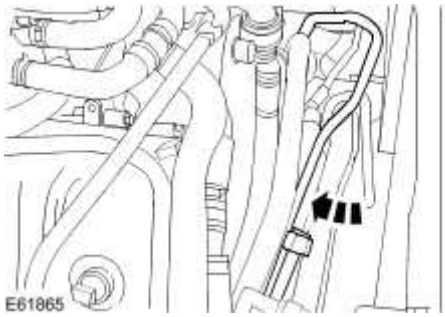

7 . Connect the AIR control valve to exhaust manifold tube.

Tighten to 35 Nm.

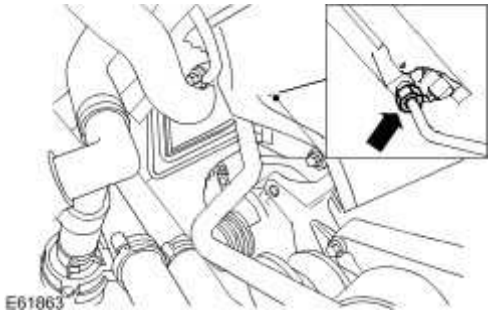

All vehicles

8 . **NOTE:**

Vehicles with supercharger shown, vehicles without supercharger similar.

Reposition the AIR control valve and bracket assembly.

Tighten to 8 Nm.

www.JagDocs.com

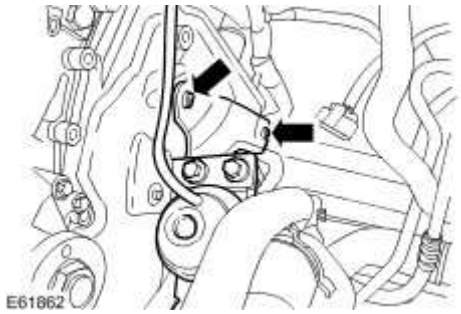

9 . **NOTE:**

Vehicles with supercharger shown, vehicles without supercharger similar.

Connect the AIR control valve to exhaust manifold tube.

Tighten to 35 Nm.

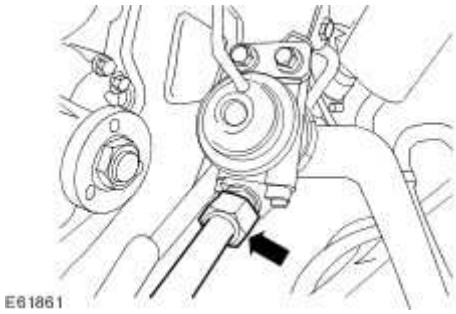

Vehicles with supercharger

10 . Install the supercharger belt tensioner.

Tighten to 40 Nm.

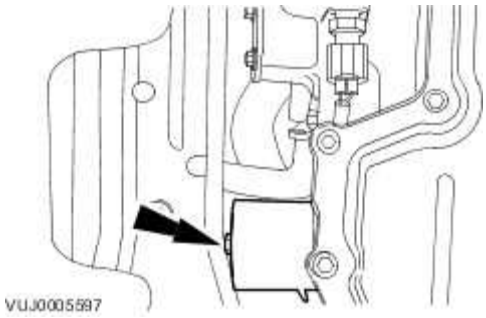

11 . Install the supercharger belt idler pulley and bracket assembly.

Tighten to 9 Nm.

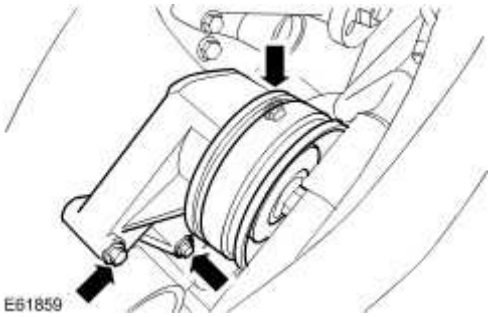

All vehicles

12 . Install the accessory drive belt idler pulley.

Tighten to 61 Nm.

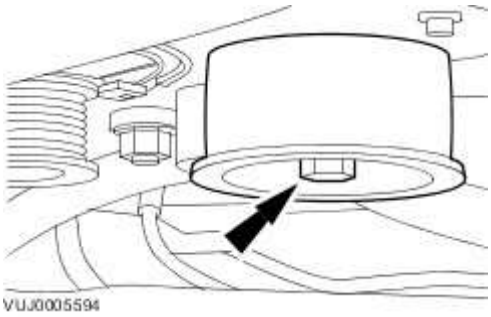

13 . Install the power steering pump.

Tighten to 25 Nm.

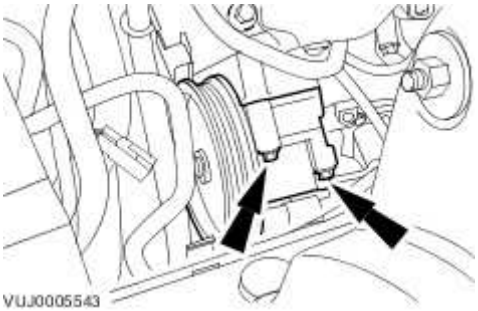

www.JagDocs.com

14 . **NOTE:**

Remove the blanking caps.

Connect the power steering pump to steering gear high-pressure line.

- Install a new O-ring seal.
- Tighten to 25 Nm.

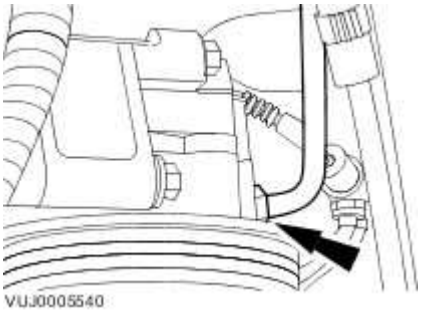

15 . Raise the vehicle.

16 . Connect the AIR control valve to exhaust manifold tube.

- Tighten to 35 Nm.

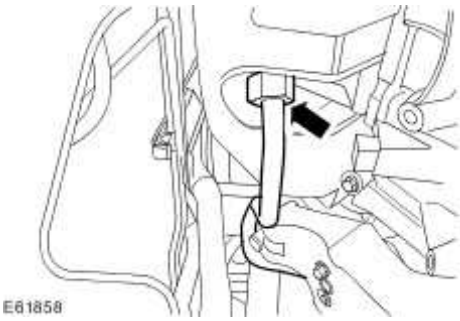

17 . Install the power steering pump lower retaining bolts.

- Tighten to 25 Nm.

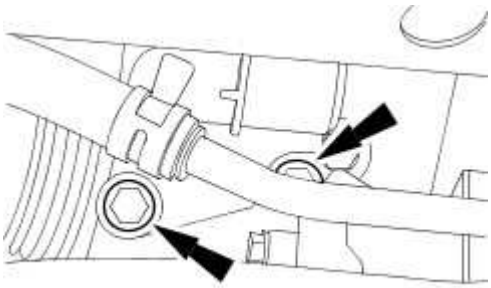

18 . **NOTE:**

Remove the blanking caps.

Connect the power steering reservoir to power steering pump supply line.

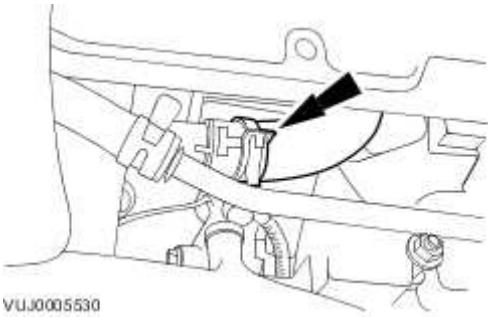

19 Install the A/C compressor.
. For additional information, refer to Air Conditioning (A/C) Compressor - 3.5L/4.2L, VIN Range: G45704->G99999 (82.10.20)

20 . Install the water pump pulley.

- Using a suitable tool, retain the water pump pulley.
- Tighten to 10 Nm + 45°.

www.JagDocs.com

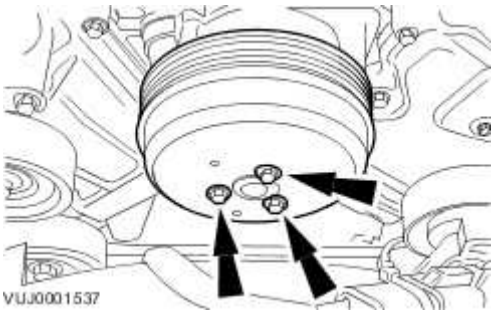

Vehicles with supercharger

21 . Install the coolant assembly.

- Install new O-ring seals.
- Connect the coolant hose.

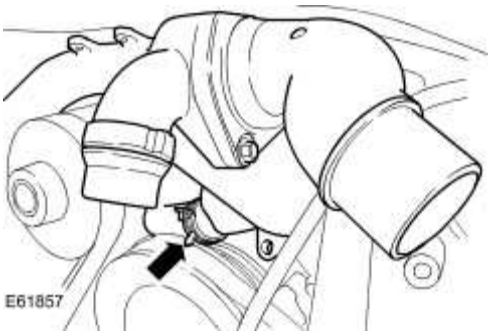

22 . Attach the coolant assembly.

- Tighten to 9 Nm.

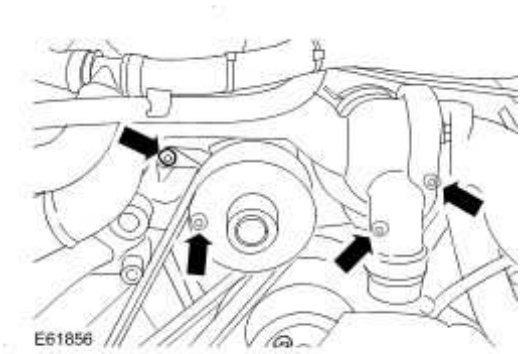

23 . Connect the coolant hose.

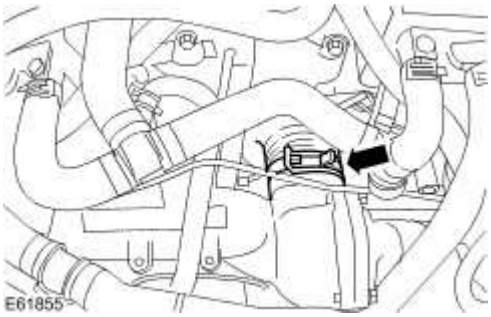

24 . Connect the coolant hose.

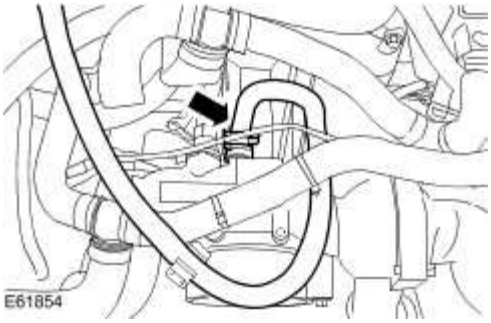

25 . Connect the ECT sensor electrical connector.

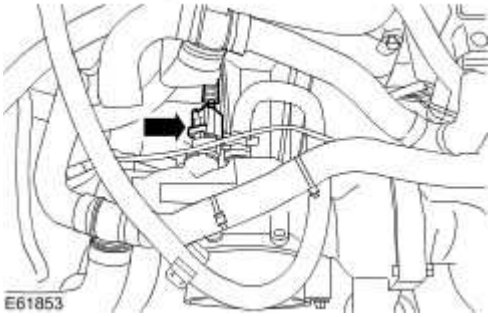

26 . Connect the coolant hose.

www.JagDocs.com

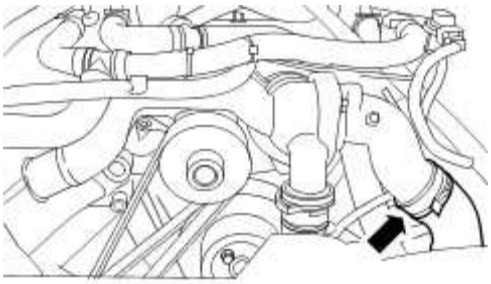

E61852

27 . Connect the coolant hose.

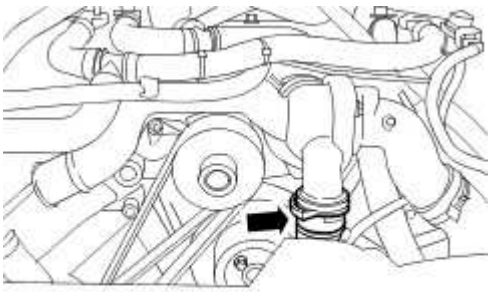

E61851

28 . Connect the coolant hose.

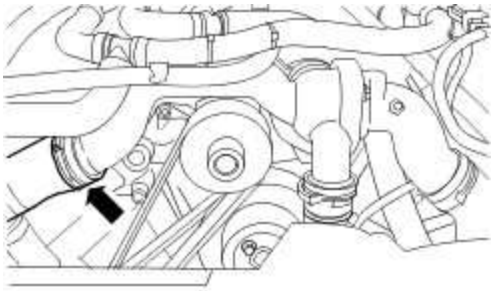

E61850

Vehicles without supercharger

29 . Install the oil cooler.

For additional information, refer to Oil Cooler - Vehicles Without: Supercharger (12.60.68)

All vehicles

30 . Install the crankshaft pulley.

For additional information, refer to Crankshaft Pulley (12.21.09)

31. Install the right-hand valve cover.
For additional information, refer to Valve Cover RH - VIN Range: G45704->G99999 (12.29.44)

32. Install the left-hand valve cover.
For additional information, refer to Valve Cover LH - VIN Range: G45704->G99999 (12.29.43)

www.JagDocs.com

Engine Mount LH (12.45.01)

Special Service Tools

Engine Support Beam
303-021

Engine Lifting Brackets
303-749

Removal

Vehicles without supercharger

1 . Remove the throttle body.
For additional information, refer to Throttle Body - VIN Range: G00442->G45703 (19.70.04)
For additional information, refer to Throttle Body - VIN Range: G45704->G99999 (19.70.04)

Vehicles with supercharger

2 . Remove the air cleaner outlet pipe.
For additional information, refer to Air Cleaner Outlet Pipe (19.10.31)

All vehicles

3 **NOTE:**
.
Vehicles with 3.5L or 4.2L engine without supercharger shown, vehicles with 4.2L engine with supercharger similar.

Install the special tools.

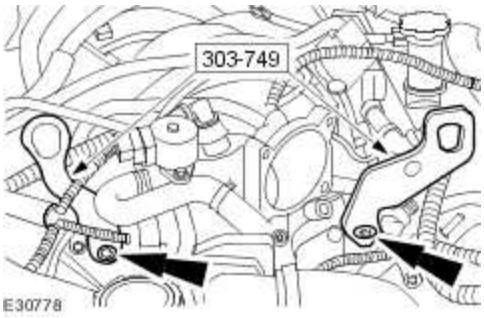

4 **NOTE:**

.

Vehicles with 3.5L or 4.2L engine without supercharger shown, vehicles with 4.2L engine with supercharger similar.

Install the special tool.

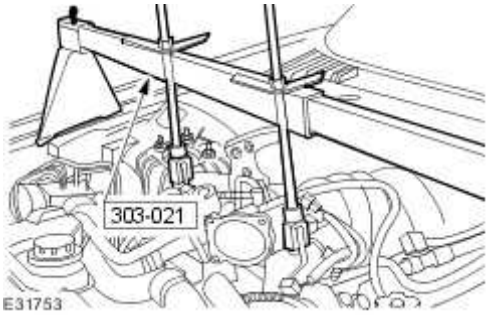

5 . Remove the air deflector.

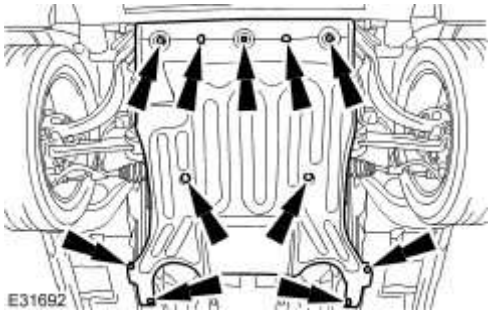

6 . Remove the left-hand front wheel and tire assembly.
For additional information, refer to Wheel and Tire (74.20.05)

www.JagDocs.com

7 . **NOTE:**

Left-hand drive vehicle shown, right-hand drive vehicle similar.

Remove the steering gear shaft pinch bolt.

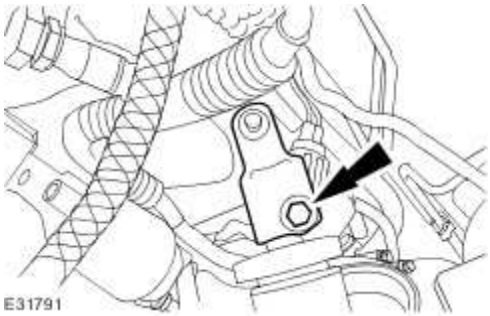

8 . **NOTE:**

Left-hand drive vehicle shown, right-hand drive vehicle similar.

Detach the steering gear.

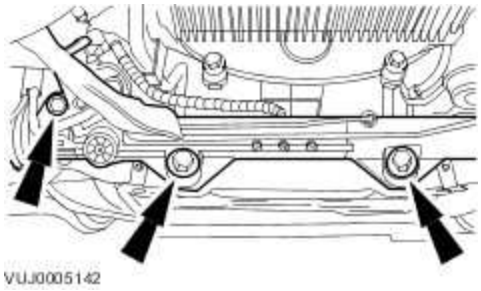

9 . **NOTE:**

Right-hand drive vehicle shown, left-hand drive vehicle similar.

Disconnect the power steering control valve actuator electrical connector.

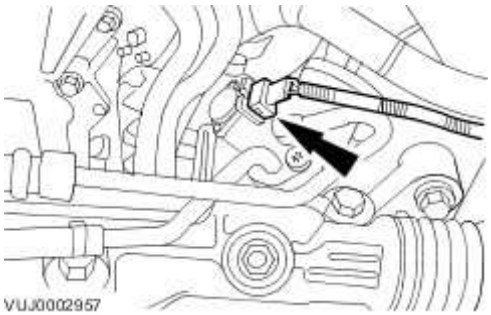

10 . **NOTE:**

Left-hand drive vehicle shown, right-hand drive vehicle similar.

Secure the steering gear.

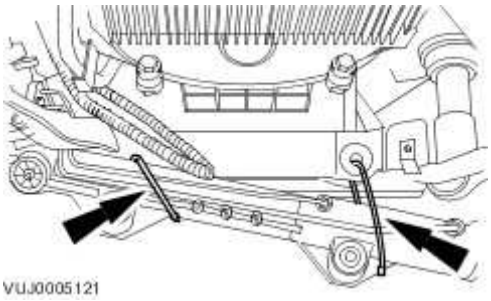

11 . **NOTE:**

Remove and discard the engine mounting securing nut.

Remove the engine mounting retaining nut.

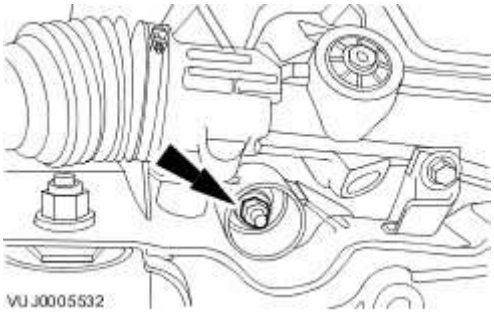

12 . Lower the vehicle.

13 **NOTE:**

.

Vehicles with 4.2L engine with supercharger shown, vehicles with 3.5L or 4.2L engine without supercharger similar.

Using the special tools, raise the engine to a suitable height.

1) Adjust the engine support beam (clockwise).

www.JagDocs.com

2) Raise the engine to a suitable height.

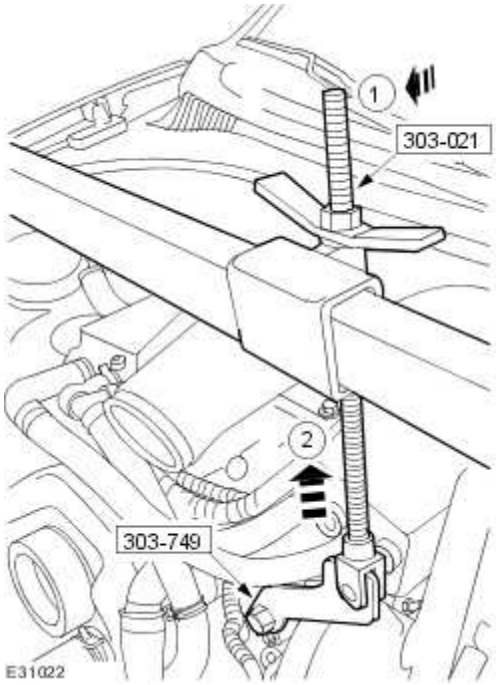

14 . Raise the vehicle.

15 . Remove the engine mount and bracket assembly.

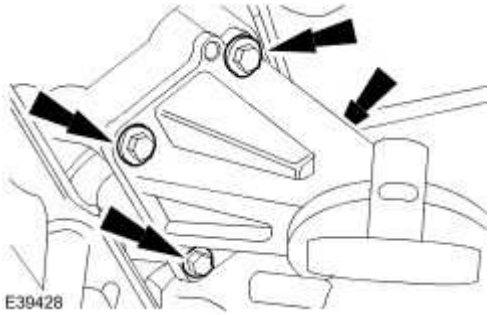

16 . **NOTE:**

Remove and discard the engine mounting securing nut.

Remove the engine mount.

E31200

Installation

1 . **CAUTION: Make sure the engine mount location peg is correctly located into the engine bracket. Failure to follow this instruction may result in damage to the vehicle.**

NOTE:

Install a new engine mounting securing nut.

To install, reverse the removal procedure.

- Tighten to 55 Nm (+/- 15%).

E31200

2 . Tighten to 40 Nm (+/- 15%).

www.JagDocs.com

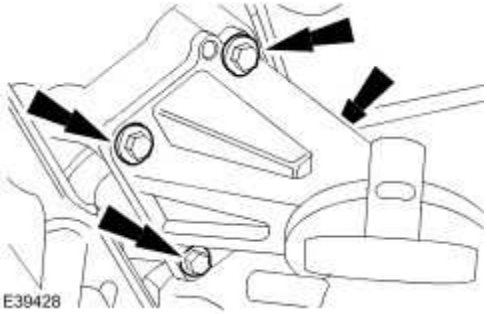

3 . Tighten to 100 Nm.

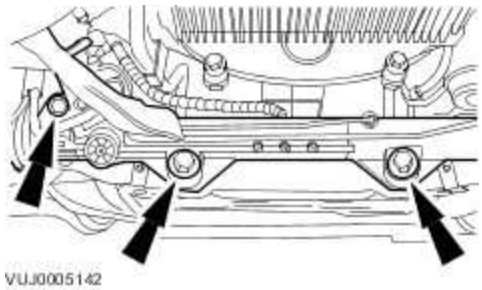

4 . Tighten to 35 Nm.

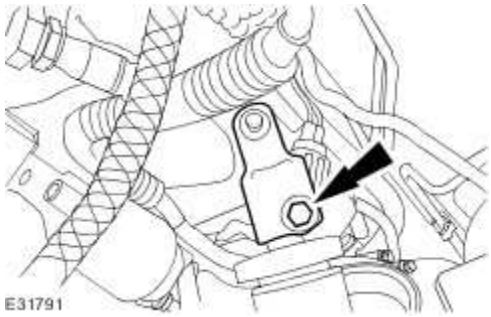

5 . **NOTE:**

Install a new engine mounting securing nut.

Tighten to 63 Nm (+/- 15%).

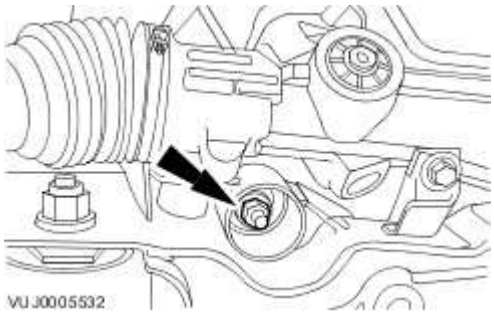

www.JagDocs.com

Engine Mount RH (12.45.03)

Special Service Tools

Engine Support Beam
303-021

Engine Lifting Brackets
303-749

Removal

Vehicles without supercharger

1 . Remove the throttle body.
For additional information, refer to Throttle Body - VIN Range: G00442->G45703 (19.70.04)
For additional information, refer to Throttle Body - VIN Range: G45704->G99999 (19.70.04)

Vehicles with supercharger

2 . Remove the air cleaner outlet pipe.
For additional information, refer to Air Cleaner Outlet Pipe (19.10.31)

All vehicles

3 **NOTE:**
.
Vehicles with 3.5L or 4.2L engine without supercharger shown, vehicles with 4.2L engine with supercharger similar.

Install the special tools.

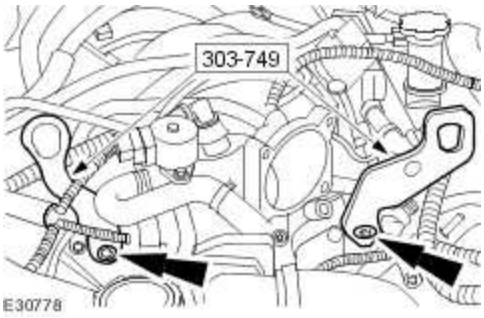

4 **NOTE:**

.

Vehicles with 3.5L or 4.2L engine without supercharger shown, vehicles with 4.2L engine with supercharger similar.

Install the special tool.

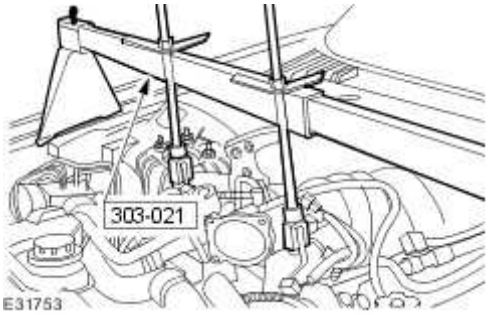

5 . Remove the air deflector.

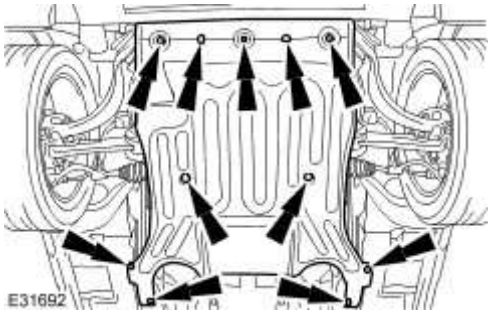

6 . Remove the right-hand front wheel and tire assembly.
For additional information, refer to Wheel and Tire (74.20.05)

www.JagDocs.com

7 . **NOTE:**

Remove and discard the engine mounting securing nut.

NOTE:

Left-hand shown, right-hand similar.

Remove the engine mounting retaining nut.

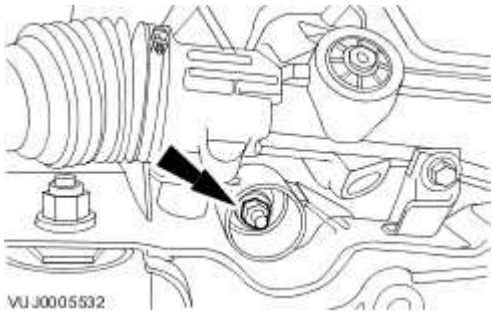

8 . Lower the vehicle.

9 . **NOTE:**

Left-hand shown, right-hand similar.

NOTE:

Vehicles with 4.2L engine with supercharger shown, vehicles with 3.5L or 4.2L engine without supercharger similar.

Using the special tools, raise the engine to a suitable height.

1) Adjust the engine support beam (clockwise).

2) Raise the engine to a suitable height.

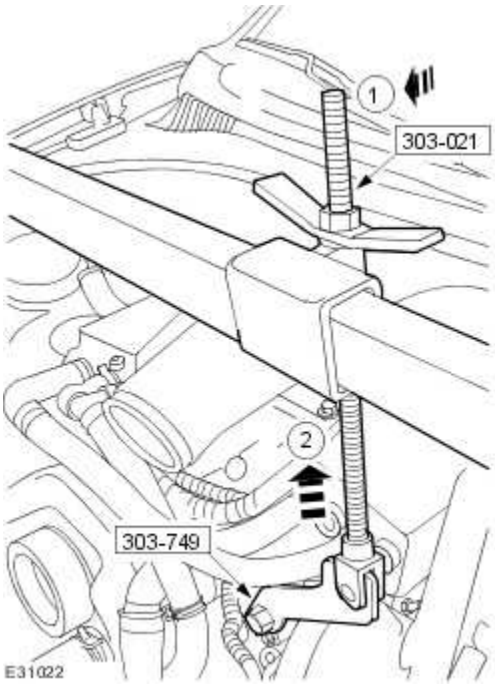

10 . Raise the vehicle.

11 . Remove the engine mount and bracket assembly.

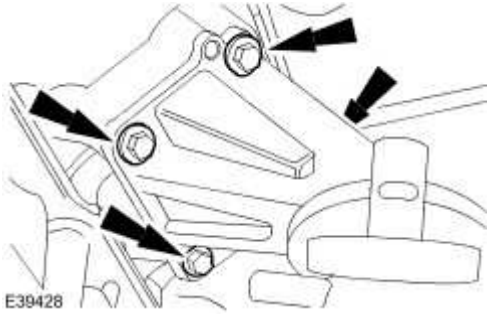

12 . **NOTE:**

Remove and discard the engine mounting securing nut.

Remove the engine mount.

www.JagDocs.com

E31200

Installation

1. **CAUTION: Make sure the engine mount location peg is correctly located into the engine bracket. Failure to follow this instruction may result in damage to the vehicle.**

NOTE:

Install a new engine mounting securing nut.

To install, reverse the removal procedure.

Tighten to 55 Nm (+/- 15%).

E31200

2 . Tighten to 40 Nm (+/- 15%).

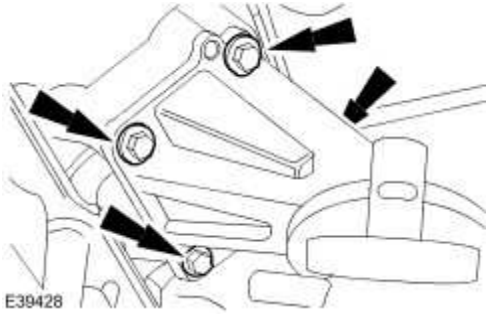

3 . **NOTE:**

Install a new engine mounting securing nut.

Tighten to 63 Nm (+/- 15%).

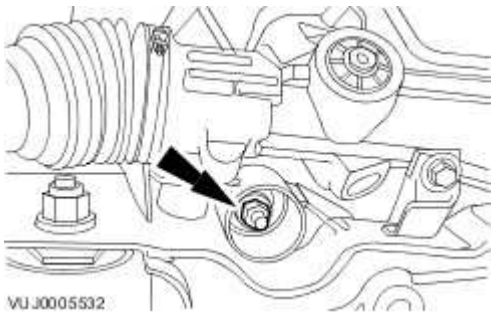

www.JagDocs.com

Exhaust Manifold RH - VIN Range: G00442->G45703 (30.15.56)

Removal

1 . Remove the exhaust system. <<309-00>>

2 . Remove the right-hand exhaust manifold heat shield

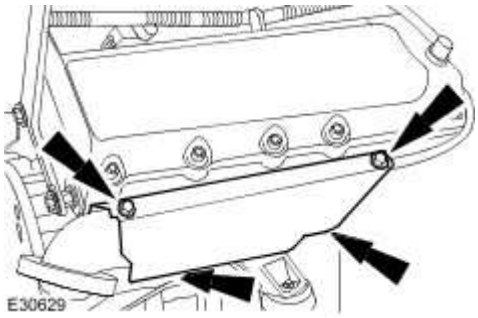

3 . Detach the exhaust gas recirculation (EGR) valve.

- Remove and discard the retaining nuts and gasket.

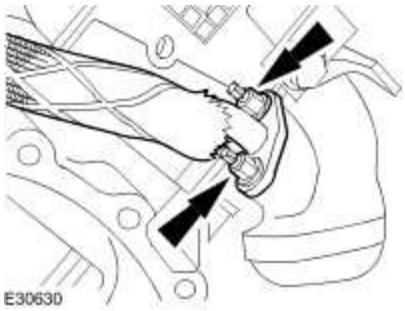

4 . Remove the right-hand exhaust manifold heat shield/gasket retaining bolt.

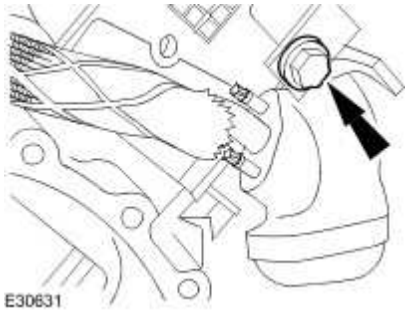

5 . **NOTE:**

New exhaust manifold retaining studs must be fitted if the old studs are removed.

Remove the exhaust manifold.

- Remove and discard the retaining nuts and heat shield/gasket.

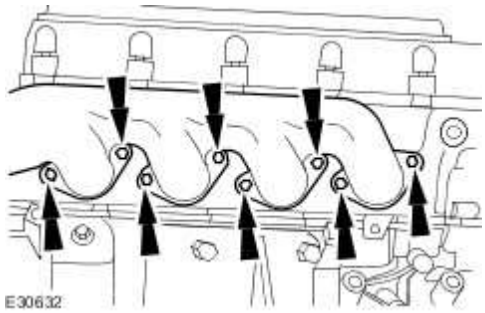

Installation

1 . **CAUTION: When all retaining nuts have been torqued, re-torque all retainig nuts to 25 Nm.**

CAUTION: Ensure exhaust manifold and heat shield/gasket is correctly aligned to cylinder head and studs.

Install the exhaust manifold.

- Install new retaining nuts and a new heat shield/gasket.
- Tighten to 25 Nm.

www.JagDocs.com

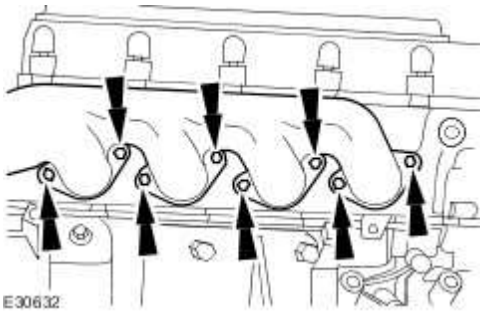

2 . Install the right-hand exhaust manifold heat shield/gasket retaining bolt.

- Tighten to 50 Nm.

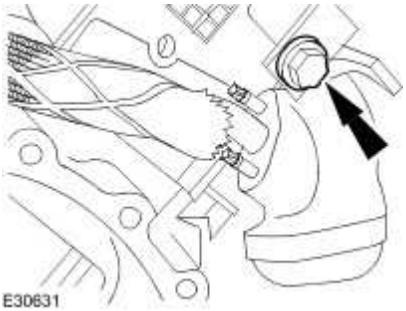

3 . Attach the exhaust gas recirculation (EGR) valve.

- Install new retaining nuts and a new gasket.
- Tighten to 22 Nm.

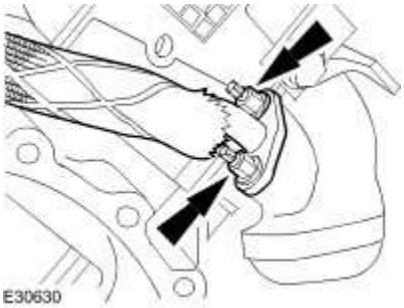

4 . Install the right-hand exhaust manifold heat shield

Tighten to 3 Nm.

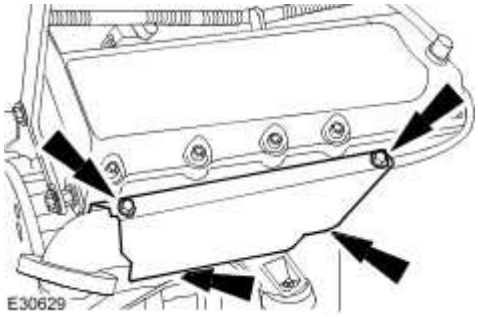

5 . Install the exhaust system. <<309-00>>

www.JagDocs.com

Exhaust Manifold RH - VIN Range: G45704->G99999 (30.15.56)

Removal

Right-hand drive vehicles

1 . Center the steering wheel.

Lock in position, remove the ignition key.

All vehicles

2 . Remove the right-hand exhaust manifold heat shield upper retaining bolts.

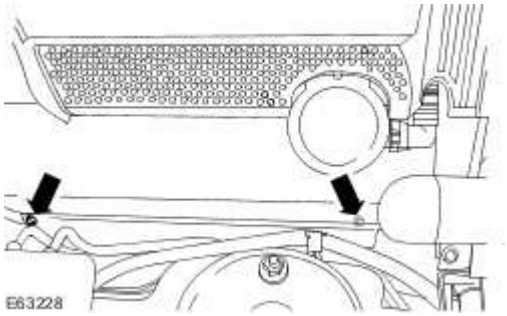

3 . Remove the right-hand catalytic converter.
For additional information, refer to Catalytic Converter - 3.0L/3.5L/4.2L (17.50.05)

Right-hand drive vehicles

4 . Remove the steering gear coupling upper pinch bolt

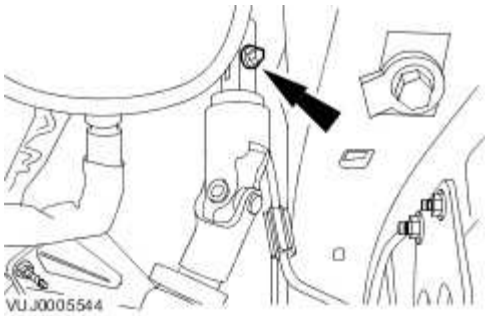

5 . Remove the steering gear coupling.

Remove the steering gear coupling lower pinch bolt.

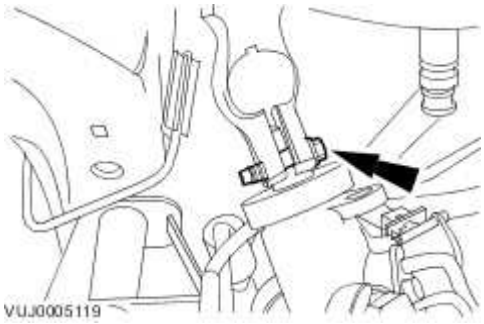

All vehicles

6 . Remove the right-hand exhaust manifold heat shield.

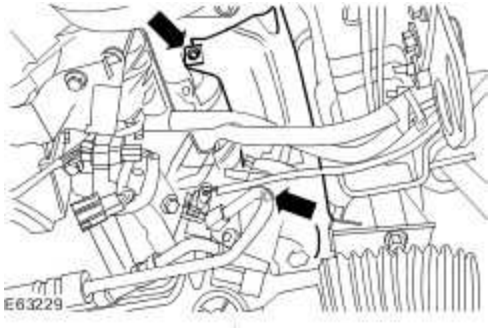

7 . Disconnect the secondary air injection (AIR) control valve to exhaust manifold tube.

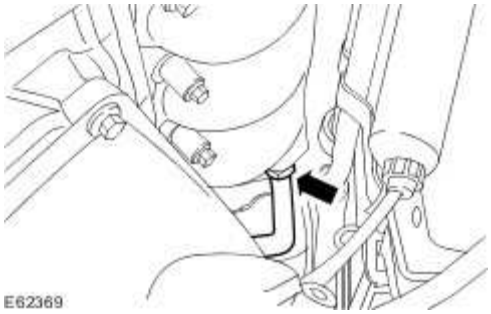

8 . **NOTE:**

Engine shown removed for clarity.

Detach the exhaust gas recirculation (EGR) valve.

www.JagDocs.com

Remove and discard the retaining nuts and gasket.

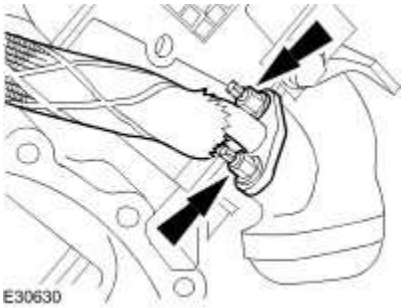

9 . **NOTE:**

Engine shown removed for clarity.

Remove the right-hand exhaust manifold heat shield/gasket retaining bolt.

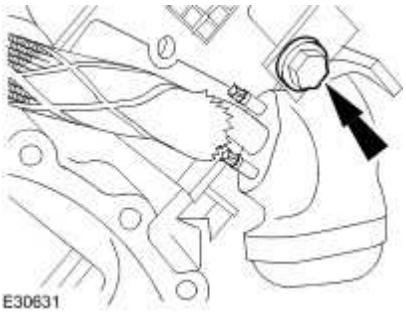

10 . Remove the exhaust manifold.

Remove and discard the retaining bolts and heat shield/gasket.

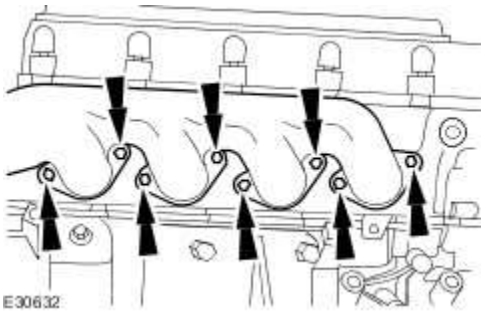

Installation

All vehicles

1. **CAUTION: Make sure that the exhaust manifold and heat shield/gasket is correctly aligned to cylinder head.**

Install the exhaust manifold.

- Loosely install new retaining bolts and a new heat shield/gasket.

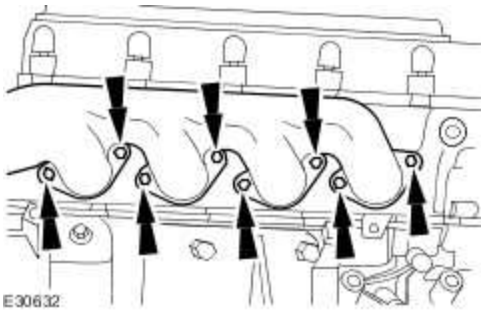

2 . Tighten the exhaust manifold retaining bolts to 25 Nm.

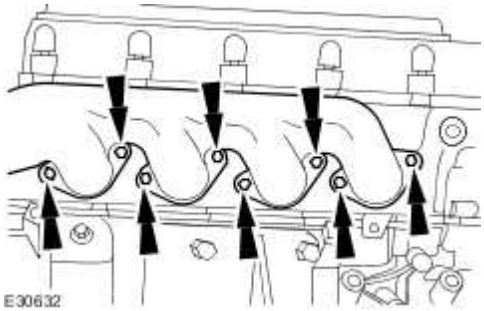

3 . **NOTE:**

Engine shown removed for clarity.

Install the right-hand exhaust manifold heat shield/gasket retaining bolt.

- Tighten to 50 Nm.

www.JagDocs.com

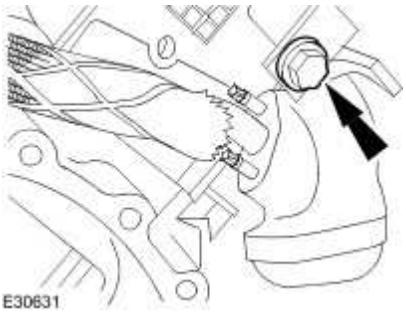

4 . **NOTE:**

Engine shown removed for clarity.

Attach the EGR valve.

- Install new retaining nuts and a new gasket.
- Tighten to 22 Nm.

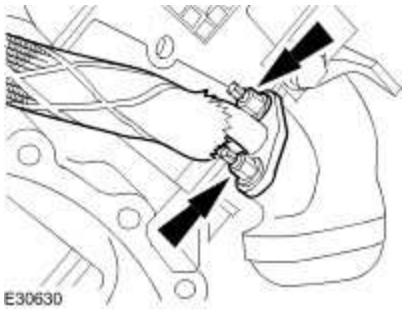

5 . Connect the AIR control valve to exhaust manifold tube.

- Tighten to 35 Nm.

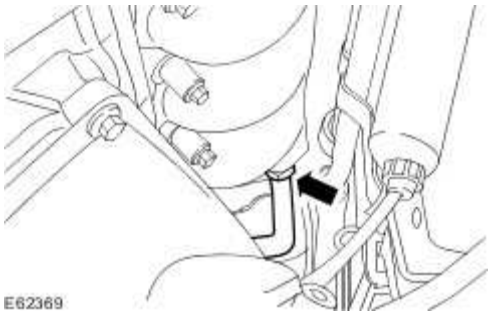

6 . Install the right-hand exhaust manifold heat shield

- Tighten to 3 Nm.

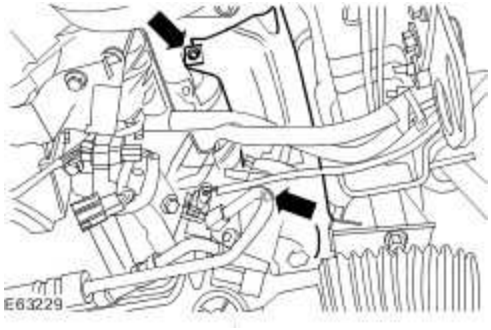

Right-hand drive vehicles

7 . Install the steering gear coupling.

- Tighten the steering gear coupling lower pinch bolt to 35 Nm.

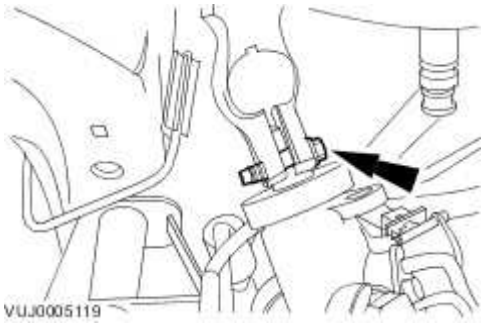

8 . Install the steering gear coupling upper pinch bolt

- Tighten to 35 Nm.

www.JagDocs.com

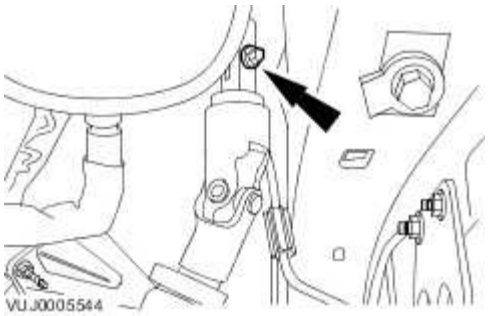

All vehicles

9 . Install the right-hand catalytic converter.
For additional information, refer to Catalytic Converter - 3.0L/3.5L/4.2L (17.50.05)

10 . Install the right-hand exhaust manifold heat shield upper retaining bolts.

Tighten to 3 Nm.

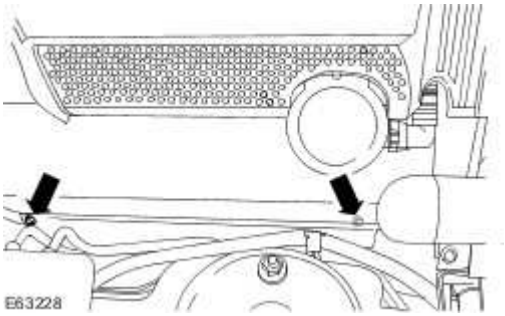

Flexplate (12.53.13)

Removal

1 . Remove the automatic transmission. For additional information, refer to
For additional information, refer to Transmission - 3.5L/4.2L (44.20.01)

2 . **CAUTION: The bolts can only be used 3 times, mark the bolts with a center punch. If 2 punch marks are visible, discard the bolts.**

NOTE:

Prevent the flexplate from rotating.

Remove the flexplate.

- Remove the 8 bolts.

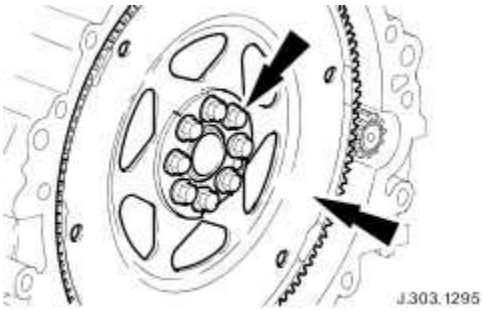

Installation

1 . **NOTE:**

Make sure the crankshaft and flexplate mating faces are clean before installation.

NOTE:

The flexplate will only locate in one position.

www.JagDocs.com

NOTE:

Install, but do not tighten, the flexplate retaining bolts.

Install the flexplate.

- Prevent the flexplate from rotating.

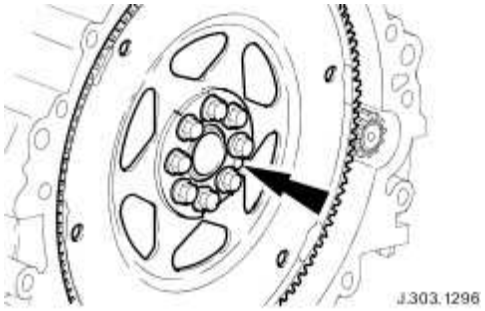

2 . **NOTE:**

Tighten the retaining bolts working diagonally.

Tighten to 15 Nm.

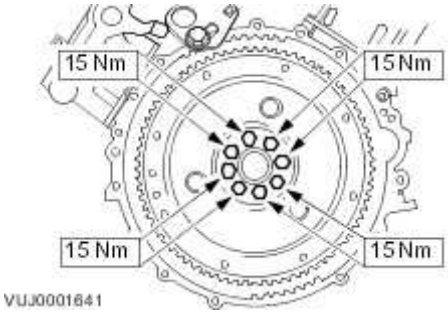

3 . **NOTE:**

Tighten the retaining bolts working diagonally.

Tighten to 110 Nm.

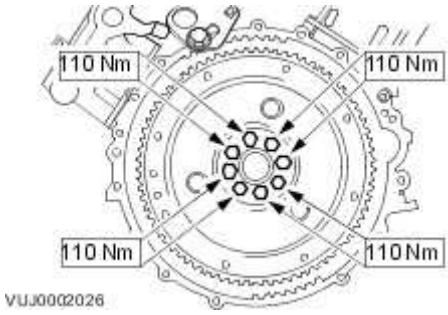

4 . Install the automatic transmission. For additional information, refer to
For additional information, refer to Transmission - 3.5L/4.2L (44.20.01)

www.JagDocs.com

Intake Manifold - VIN Range: G00442->G45703 (30.15.01)

Removal

1 . Remove the cowl vent screen. <<501-02>>

2 . Remove the air cleaner outlet pipe. <<303-12B>>

3 . Remove the engine compartment support.

E36600

4 . **NOTE:**

Left-hand shown, right-hand similar.

Remove the on-plug coil covers.

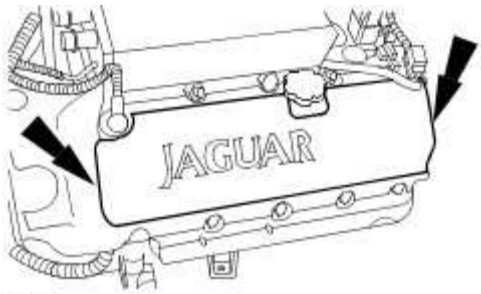

E30653

5 . Disconnect the throttle potentiometer (TP) electrical connector.

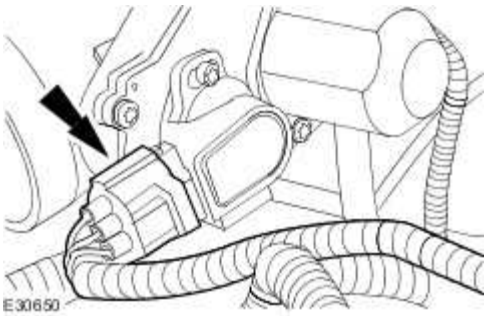

6 . Disconnect the throttle motor electrical connector.

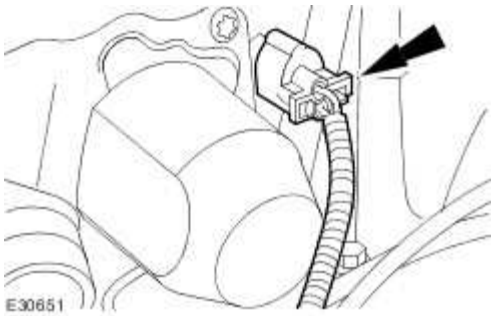

7 . **WARNING: TO AVOID HAVING SCALDING HOT COOLANT OR STEAM BLOW OUT OF THE COOLING SYSTEM, USE EXTREME CARE WHEN REMOVING THE COOLANT PRESSURE CAP FROM A HOT COOLING SYSTEM. WAIT UNTIL THE ENGINE HAS COOLED, THEN WRAP A THICK CLOTH AROUND THE COOLANT PRESSURE CAP AND TURN IT SLOWLY UNTIL THE PRESSURE BEGINS TO RELEASE. STEP BACK WHILE THE PRESSURE IS RELEASED FROM THE SYSTEM. WHEN CERTAIN ALL THE PRESSURE HAS BEEN RELEASED (STILL WITH A CLOTH) TURN AND REMOVE THE COOLANT PRESSURE CAP FROM THE COOLANT EXPANSION TANK. FAILURE TO FOLLOW THESE INSTRUCTIONS MAY RESULT IN PERSONAL INJURY.**

Remove the coolant expansion tank cap.

8 . **NOTE:**

Cap the coolant hose.

Disconnect the throttle body coolant hose.

www.JagDocs.com

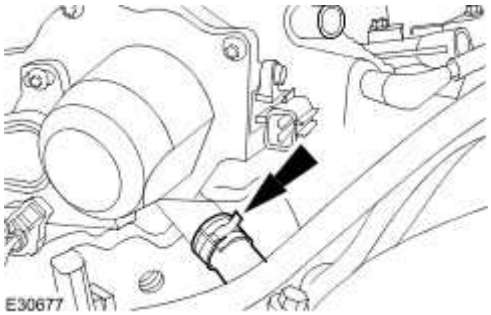

9 . Disconnect the knock sensors (KS) electrical connectors.

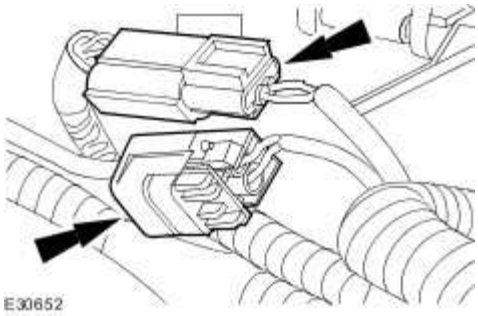

10 . Remove the left-hand engine cover bracket.

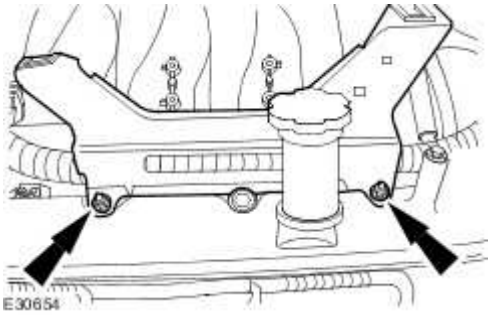

11 . **NOTE:**

Right-hand shown left-hand similar.

Detach the engine wiring harness.

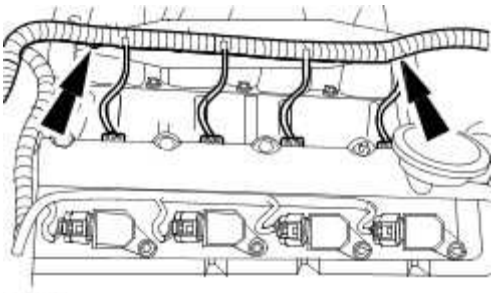

12 . **NOTE:**

Right-hand shown left-hand similar.

Disconnect the fuel injector electrical connectors.

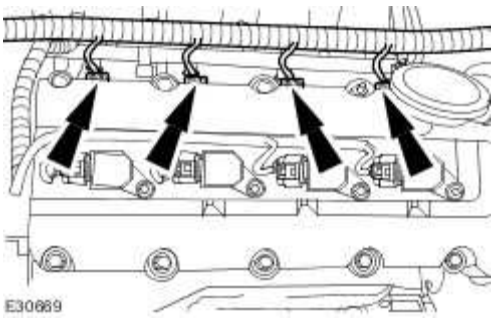

13 . Detach the fuel line. <<310-00>>

14 . Detach the left-hand camshaft position sensor electrical connector.

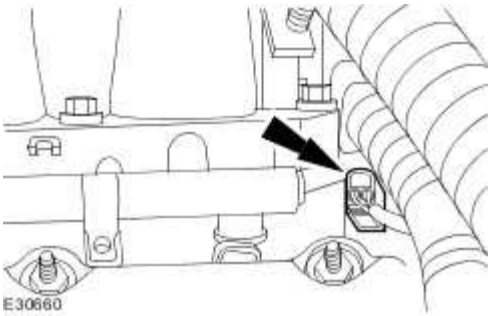

15 . Disconnect the coolant temperature sensor electrical connector.

www.JagDocs.com

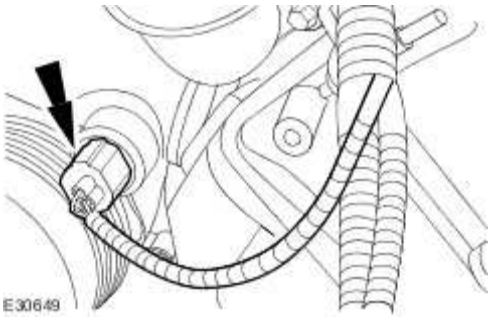

16 . Remove the right-hand engine cover bracket.

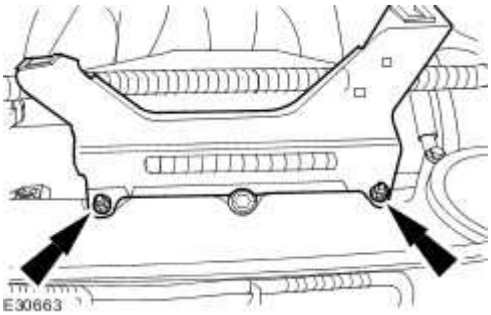

17 . Remove the positive crankcase ventilation (PCV) valve.

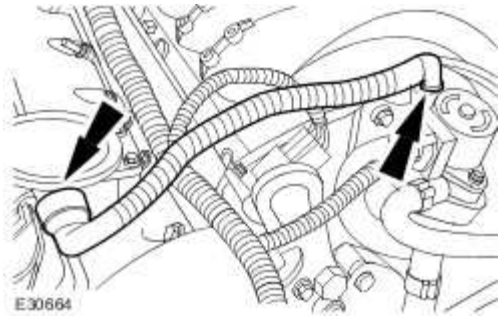

18 . Disconnect the fuel pressure regulator electrical connector.

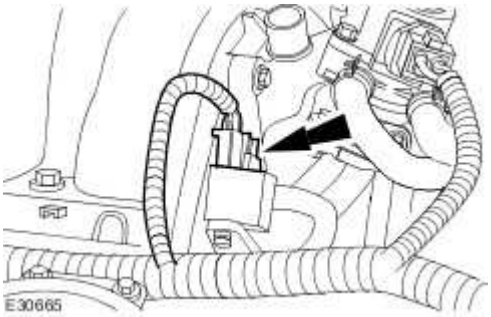

19 . Disconnect the exhaust gas recirculation (EGR) valve electrical connector.

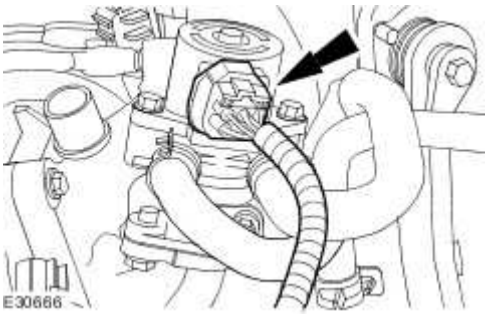

20 . **NOTE:**

Cap the coolant hose.

Disconnect the exhaust gas recirculation (EGR) valve coolant hose.

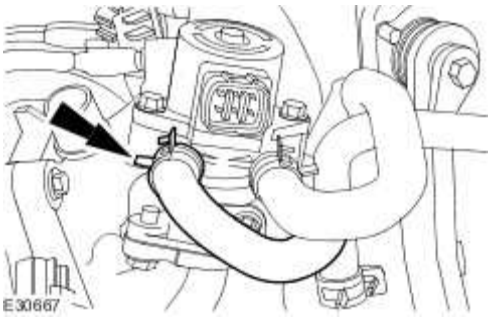

21 . Detach the right-hand engine wiring harness.

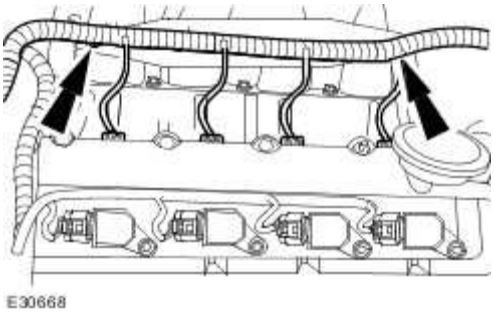

22 . Disconnect the right-hand fuel injector electrical connectors.

www.JagDocs.com

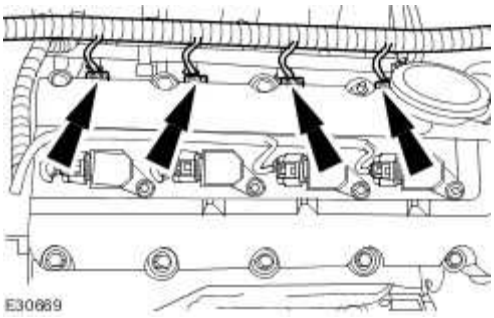

23 . Disconnect the fuel temperature sensor electrical connector.

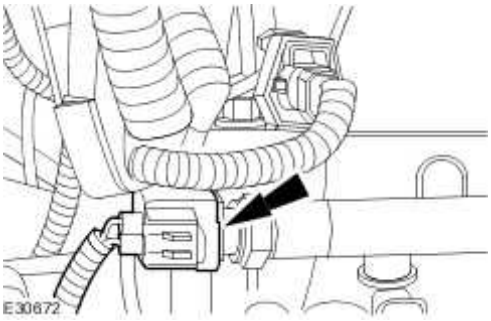

24 . Disconnect the right-hand camshaft position (CMP) sensor.

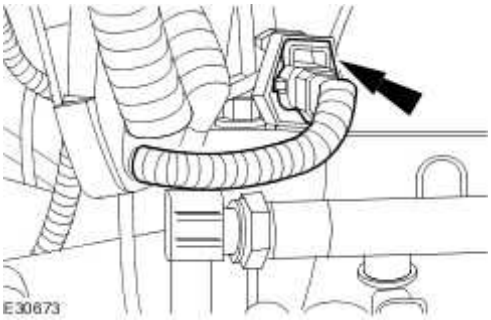

25 . Detach the brake booster vacumn pipe.

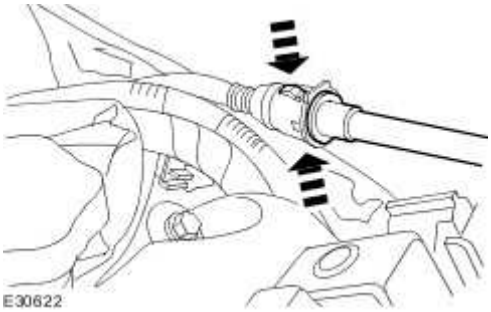

26 . Disconnect the manifold absolute pressure (MAP) sensor electrical connector.

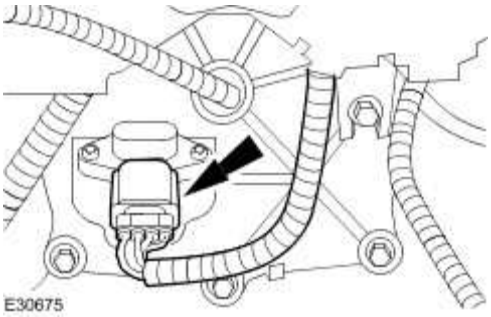

27 . Detach the engine wiring harness.

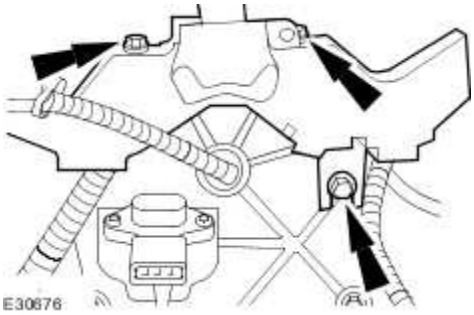

28 . Detach the exhaust gas recirculation (EGR) valve tube.

- Remove and discard the gasket.

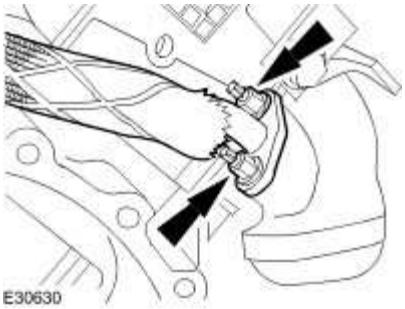

29 . Remove the intake manifold.

- Remove and discard the gaskets.

www.JagDocs.com

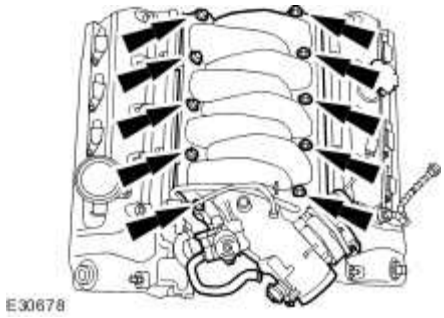

Installation

1 . **CAUTION: Make sure that all gasket mating faces are clean and dry.**

Install the intake manifold.

- Install new gaskets.
- Tighten to 22 Nm.

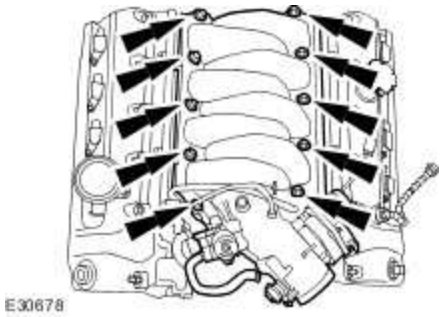

2 . Attach the exhaust gas recirculation (EGR) valve tube.

- Install a new gasket.
- Tighten to 22 Nm.

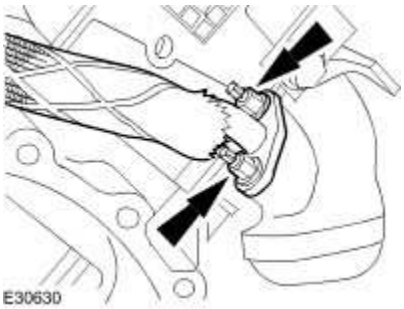

3 . Attach the engine wiring harness.

Tighten to 10 Nm.

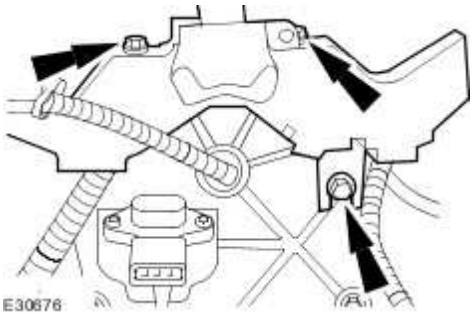

4 . Connect the manifold absolute pressure (MAP) sensor electrical connector.

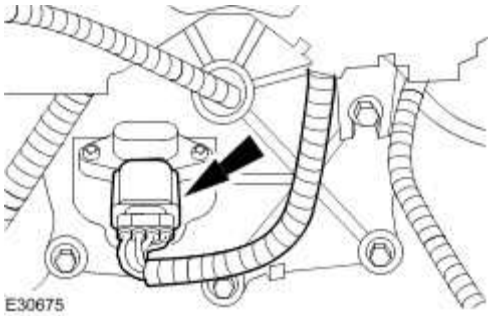

5 . Connect the right-hand camshaft position (CMP) sensor.

www.JagDocs.com

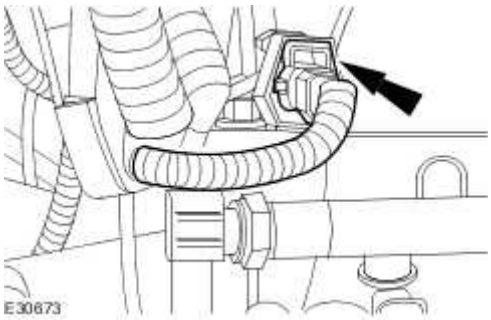

6 . Connect the fuel temperature sensor electrical connector.

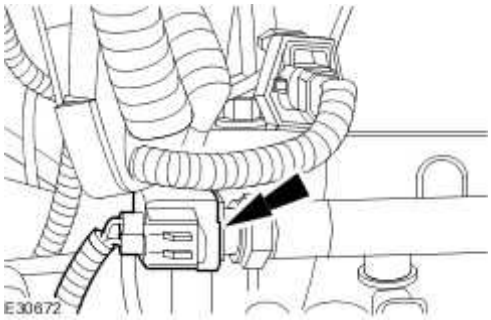

7 . Attach the brake booster vacumn pipe.

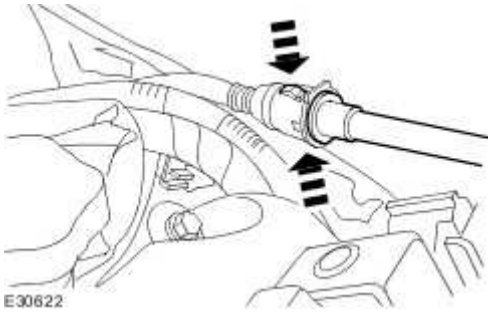

8 . Connect the right-hand fuel injector electrical connectors.

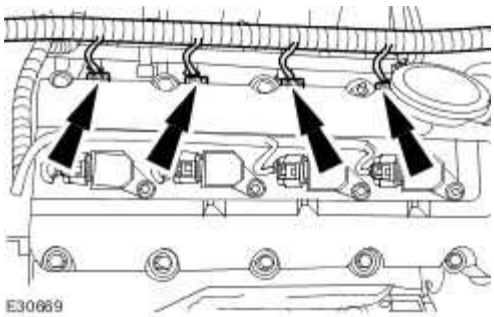

9 . Attach the engine wiring harness.

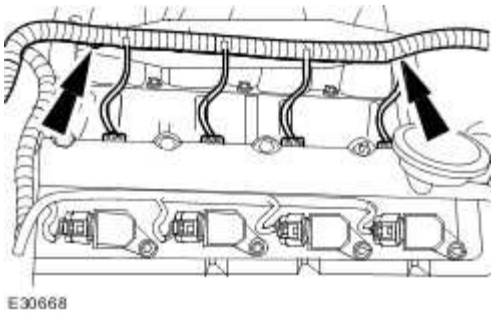

10 . **NOTE:**

Remove the cap from the coolant hose.

Connect the exhaust gas recirculation (EGR) valve coolant hose.

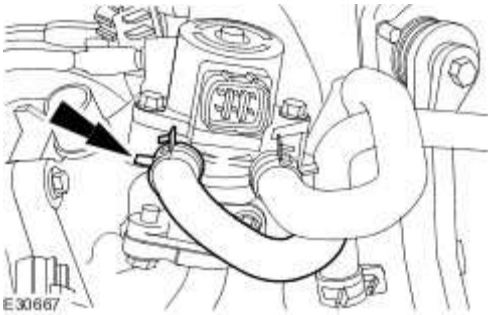

11 . Connect the exhaust gas recirculation (EGR) valve electrical connector.

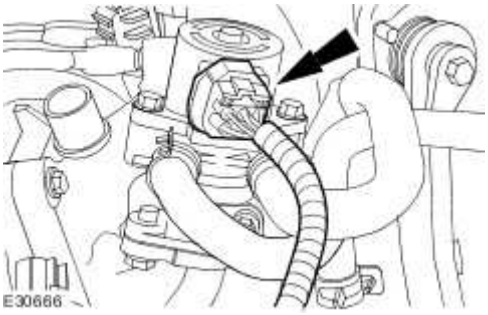

12 . Connect the fuel pressure regulator electrical connector.

www.JagDocs.com

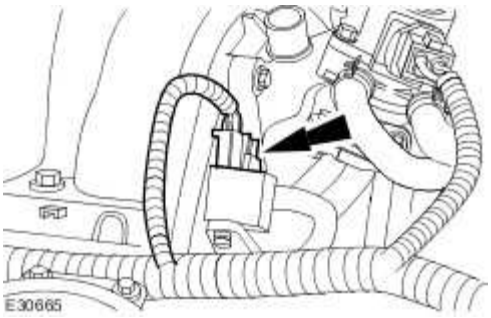

13 . Install the positive crankcase ventilation (PCV) pipe.

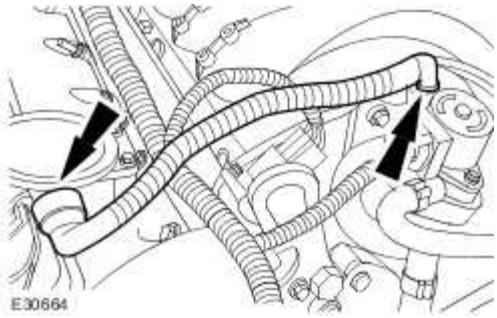

14 . Install the right-hand engine cover bracket.

Tighten to 6 Nm.

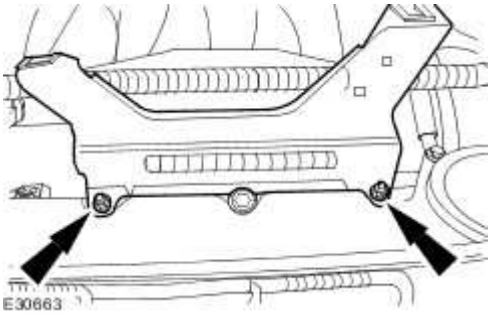

15 . Connect the coolant temperature sensor electrical connector.

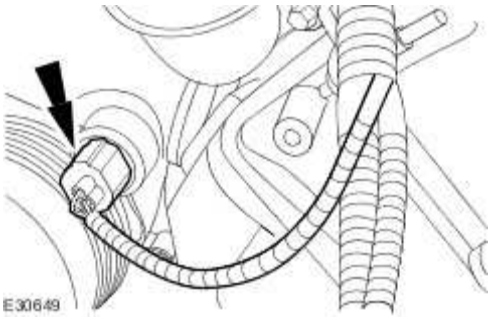

16 . Attach the left-hand camshaft position sensor electrical connector.

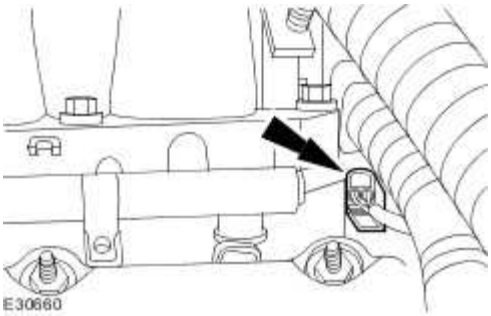

17 . Connect the fuel line.

- Install new O-ring seals.
- Attach the fuel line retaining clip.

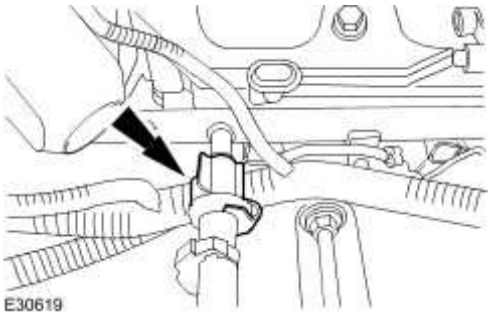

18 . **NOTE:**

Right-hand shown left-hand similar.

Connect the fuel injector electrical connectors.

www.JagDocs.com

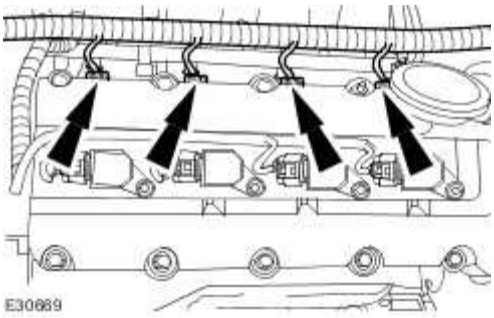

19 . **NOTE:**

Left-hand shown right-hand similar.

Attach the engine wiring harness.

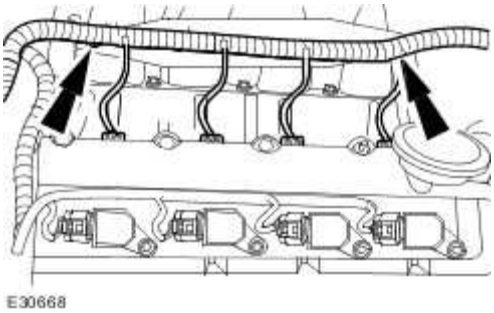

20 . Install the left-hand engine cover bracket.

Tighten to 6 Nm.

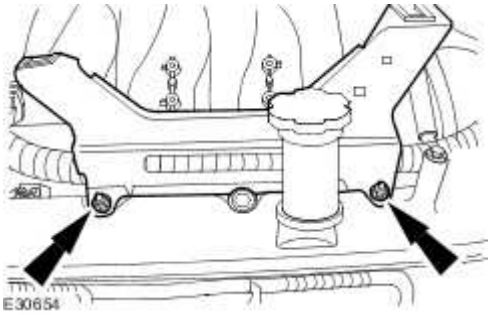

21 . Connect the knock sensor (KS) electrical connectors.

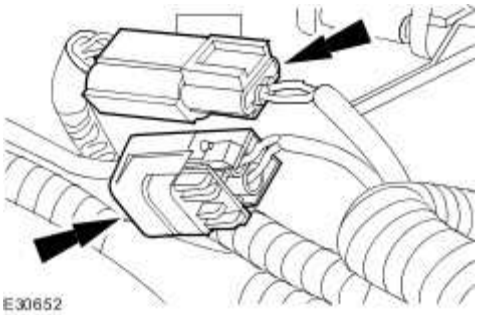

22 . **NOTE:**

Remove the cap from the coolant hose.

Connect the throttle body coolant hose.

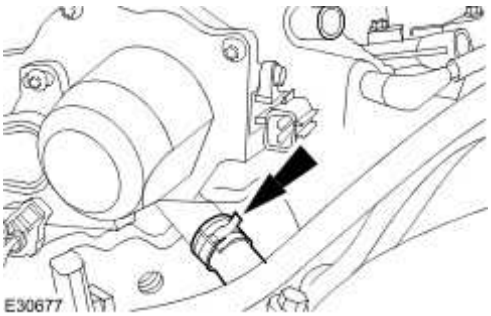

23 . Connect the throttle motor electrical connector.

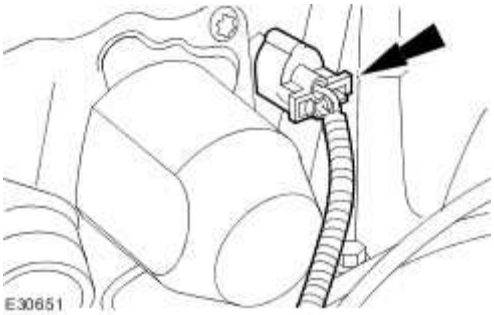

24 . Connect the throttle potentiometer (TP) electrical connector.

www.JagDocs.com

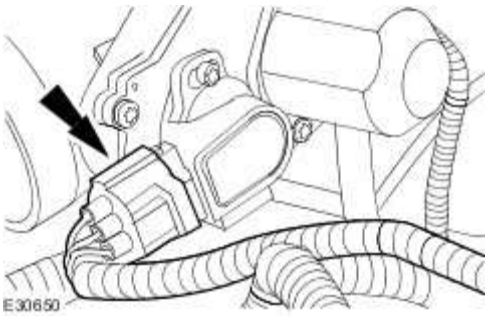

25 . **NOTE:**

Left-hand shown, right-hand similar.

Install the on-plug coil covers.

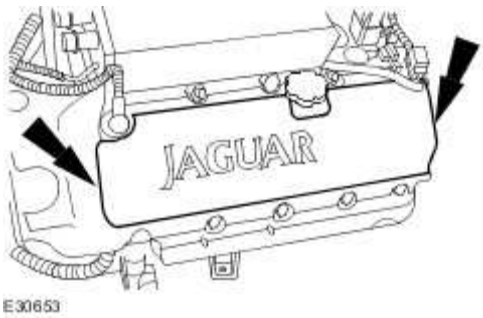

26 . Install the engine compartment support.

Tighten to 18 Nm.

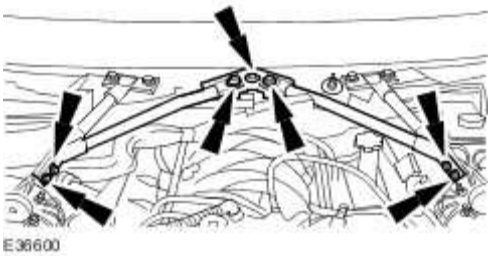

27 . Install the air cleaner outlet pipe. <<303-12B>>

28 . Install the cowl vent screen. <<501-02>>

29 . Check and top up the cooling system.

www.JagDocs.com

Intake Manifold - VIN Range: G45704->G99999 (30.15.01)

Removal

1 . Remove the cowl vent screen.
For additional information, refer to Cowl Vent Screen (76.10.01)

2 . Remove the air cleaner outlet pipe.
For additional information, refer to Air Cleaner Outlet Pipe (19.10.31)

3 . Remove the engine compartment support.

4 . Disconnect the supressor electrical connector.

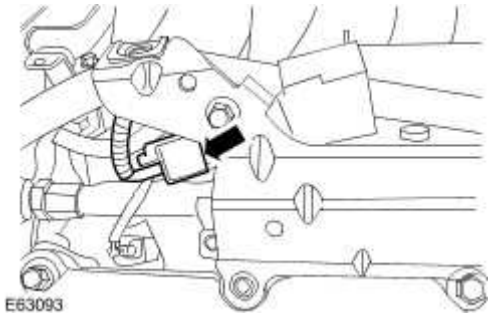

5 . Remove the engine cover right-hand bracket.

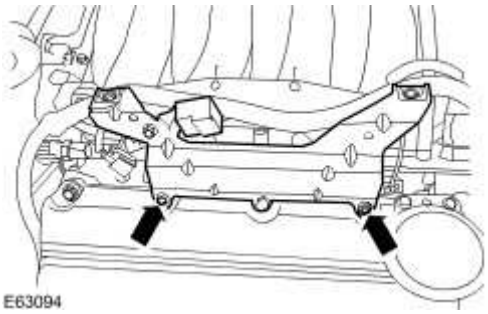

6 . Disconnect the fuel pressure regulator electrical connector.

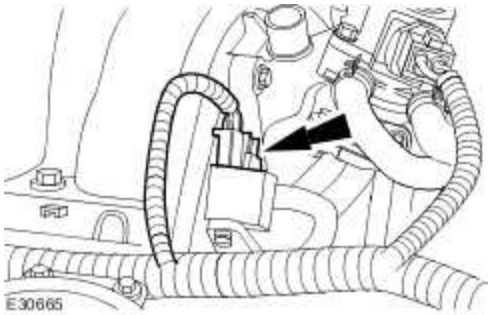

7 . Disconnect the fuel temperature sensor electrical connector.

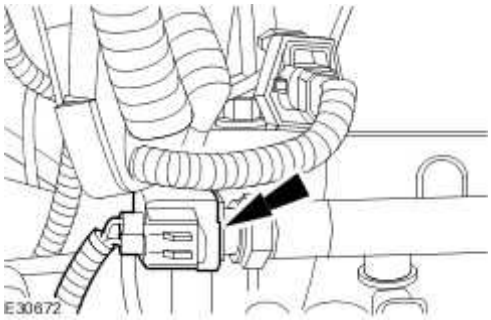

8 . Remove the exhaust gas recirculation (EGR) valve retaining bolts.

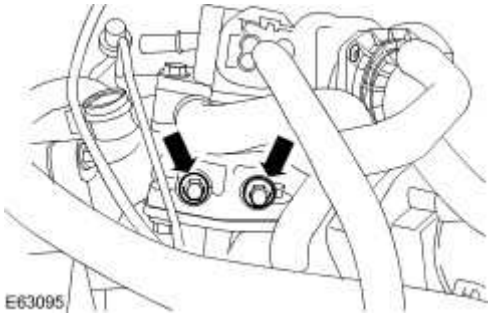

www.JagDocs.com

9 . Disconnect the brake booster vacumn pipe.

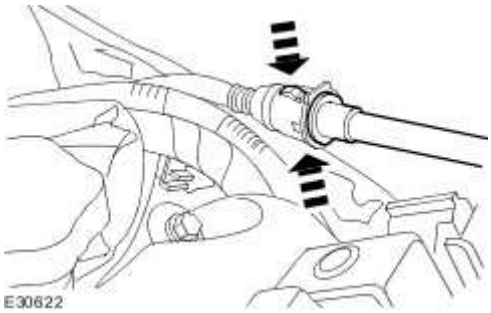

10 . Disconnect the secondary air injection (AIR) vacuum line.

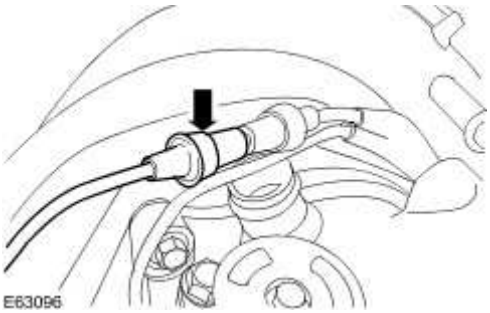

11 . Remove the positive crankcase ventilation (PCV) valve.

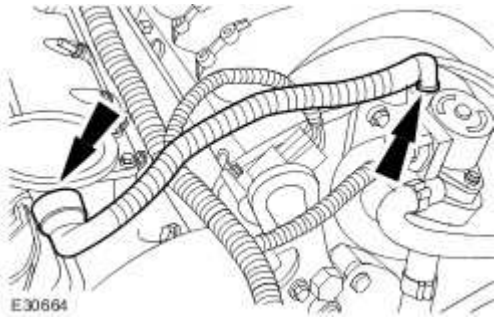

12 . Disconnect the throttle body electrical connector.

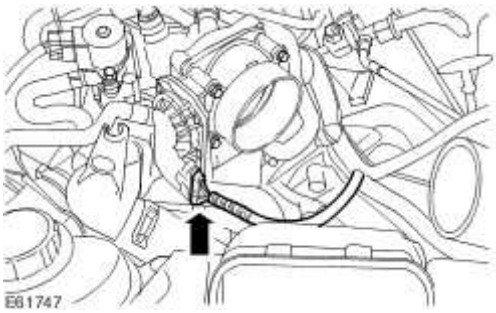

13 . Disconnect the evaporative emission vent hose.

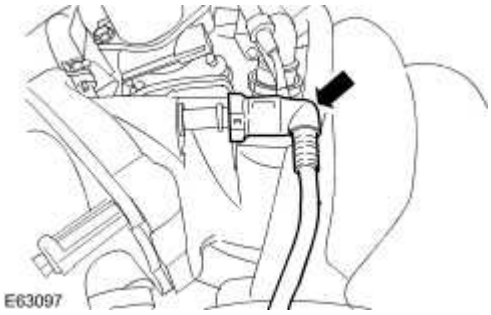

14 . **WARNING: When relieving cooling system pressure, cover the expansion tank cap with a thick cloth to prevent the possibility of scalding. Failure to follow these instructions may result in personal injury.**

Remove the coolant expansion tank cap.

15 . **NOTE:**

Cap the coolant hose to minimize coolant loss.

Disconnect the throttle body coolant hose.

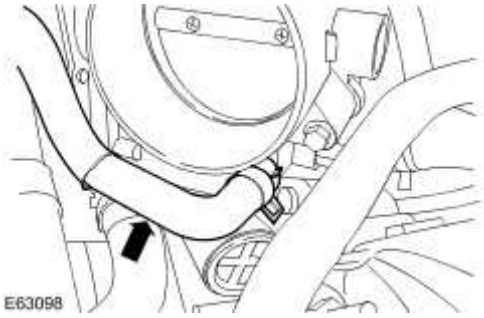

16 . Disconnect the engine cooolant temperature (ECT) sensor electrical connector.

www.JagDocs.com

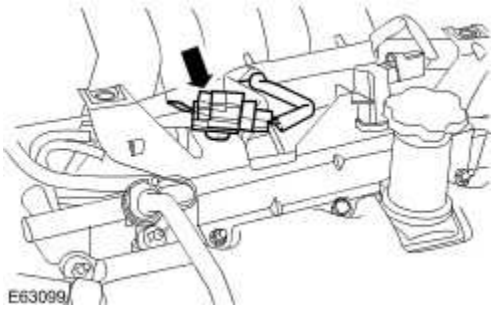

17 . Disconnect the evaporative emission cannister purge valve electrical connector.

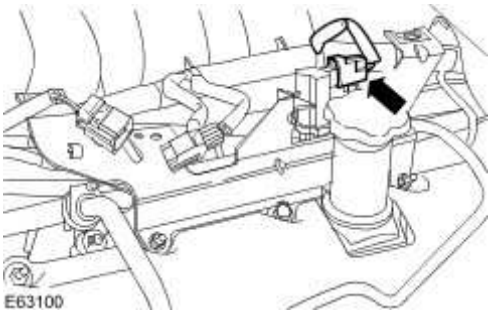

18 . Detach the knock sensor (KS) electrical connector.

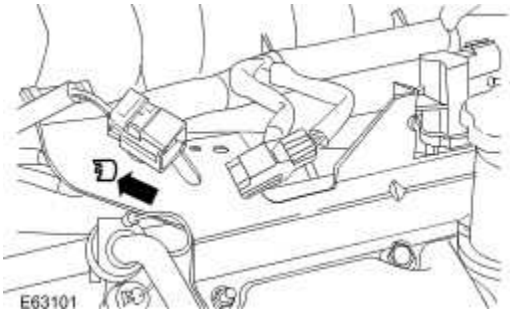

19 . Reposition the engine cover left-hand bracket.

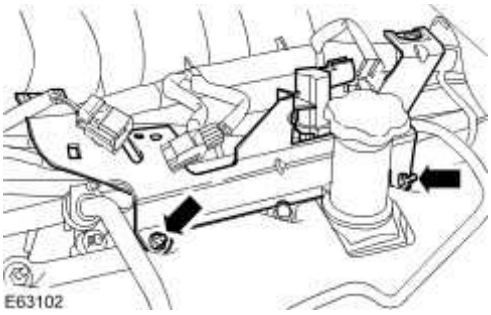

20 . Disconnect the KS electrical connector.

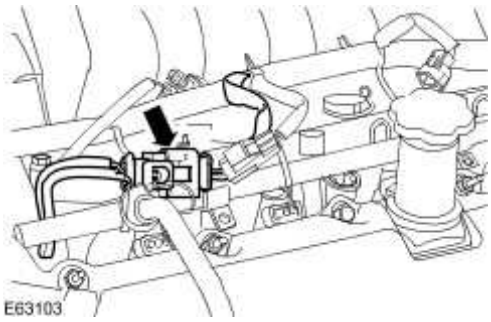

21 . **NOTE:**

Left-hand shown, right-hand similar.

Remove the on-plug coil covers.

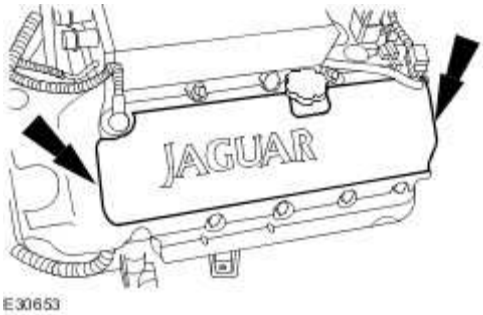

22 . **NOTE:**

Right-hand shown, left-hand similar.

Detach the engine wiring harness.

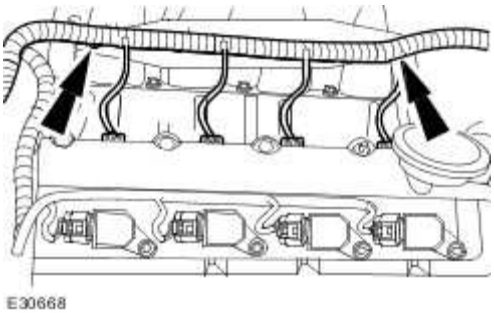

www.JagDocs.com

23 . **NOTE:**

Right-hand shown, left-hand similar.

Disconnect the fuel injector electrical connectors.

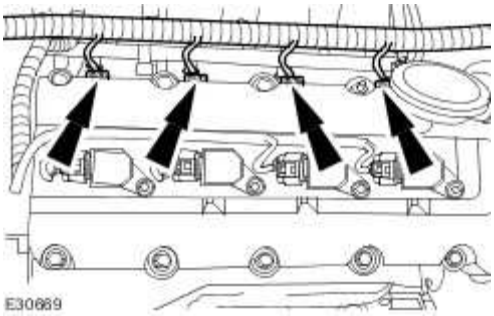

24 . Disconnect the fuel line.
For additional information, refer to Spring Lock Couplings

- Release the retaining clip.
- Remove and discard the O-ring seals.

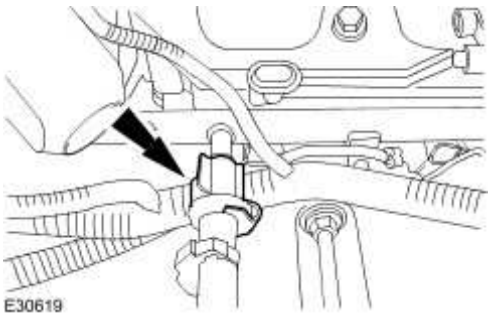

25 . Detach the left-hand camshaft position sensor electrical connector.

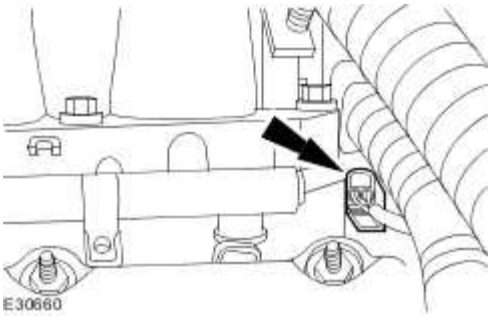

26 . Disconnect the right-hand camshaft position (CMP) sensor.

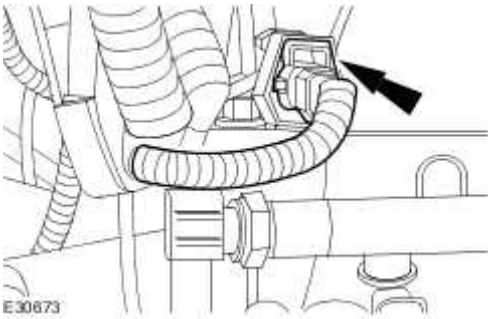

27 . Disconnect the manifold absolute pressure (MAP) sensor electrical connector.

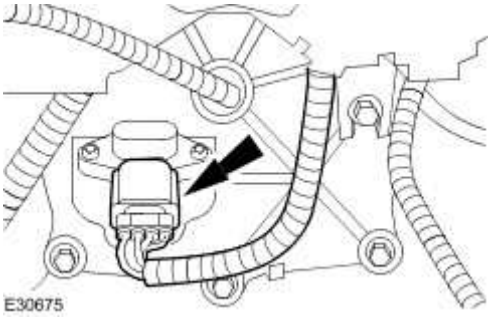

28 . Detach the engine wiring harness.

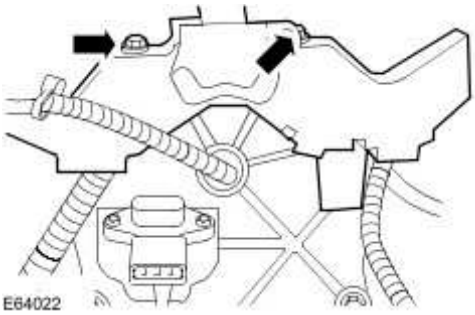

29 . Remove the intake manifold.

- Remove and discard the gaskets.

www.JagDocs.com

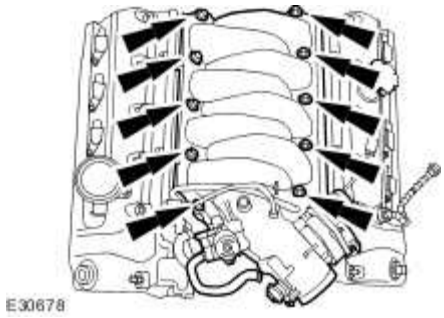

Installation

1 . **CAUTION: Make sure that all gasket mating faces are clean and dry.**

Install the intake manifold.

- Install new gaskets.
- Tighten to 22 Nm.

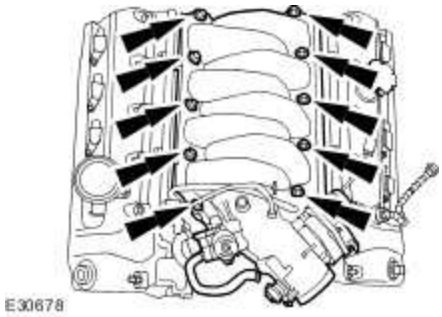

2 . Attach the engine wiring harness.

- Tighten to 10 Nm.

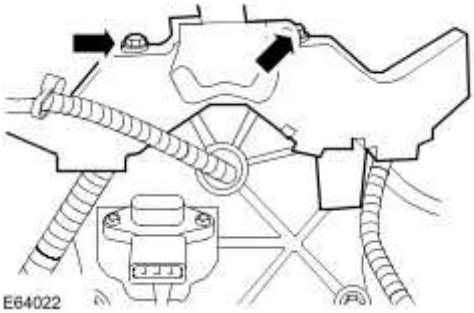

3 . Connect the MAP sensor electrical connector.

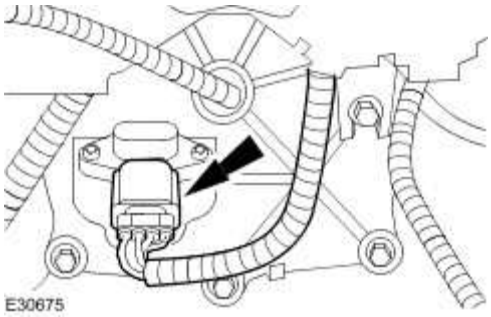

4 . Connect the right-hand CMP sensor.

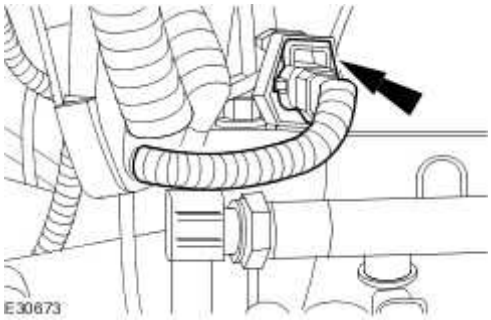

5 . Attach the left-hand CMP sensor electrical connector.

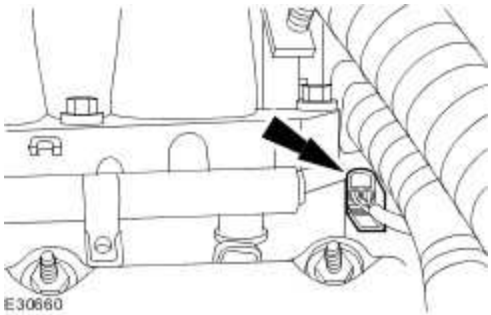

www.JagDocs.com

6 . Connect the fuel line.
For additional information, refer to Spring Lock Couplings

- Install new O-ring seals.
- Secure the retaining clip.

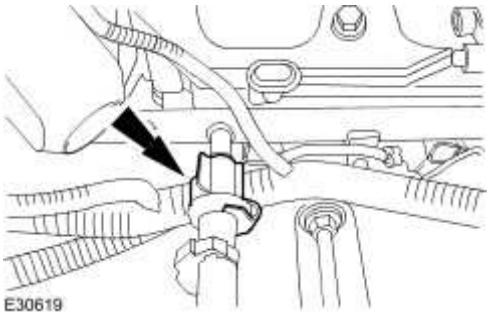

7 . **NOTE:**

Right-hand shown, left-hand similar.

Connect the fuel injector electrical connectors.

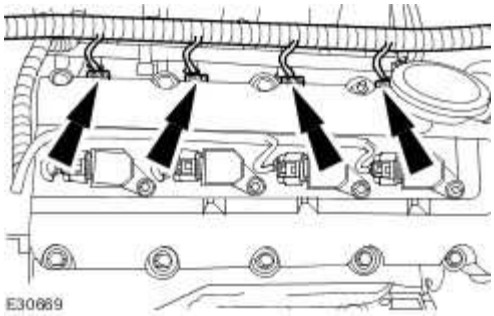

8 . **NOTE:**

Right-hand shown, left-hand similar.

Attach the engine wiring harness.

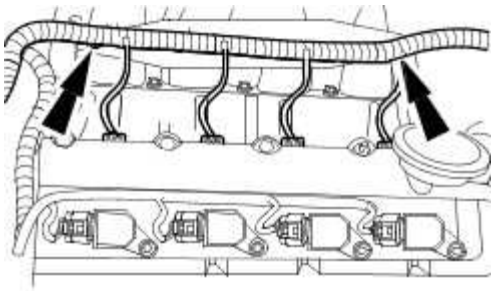

9 . **NOTE:**

Left-hand shown, right-hand similar.

Install the on-plug coil covers.

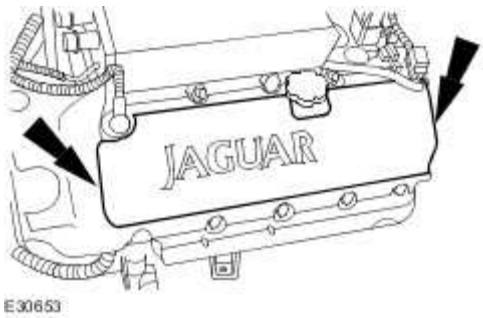

10 . Connect the KS electrical connector.

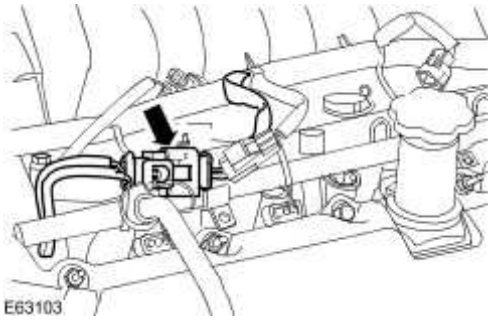

11 . Reposition the engine cover left-hand bracket.

Tighten to 6 Nm.

www.JagDocs.com

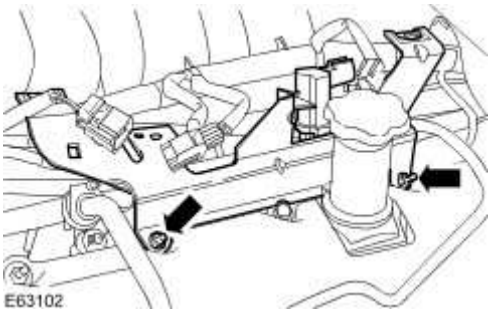

12 . Attach the KS electrical connector.

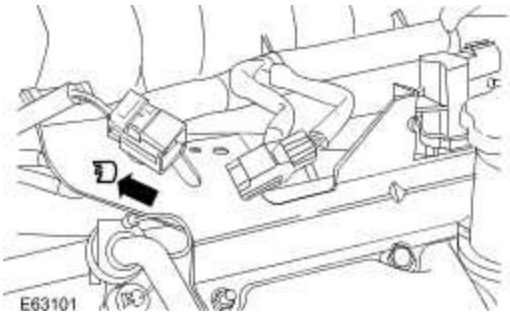

13 . Connect the evaporative emission cannister purge valve electrical connector.

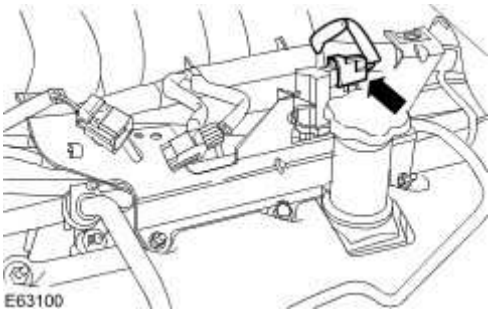

14 . Connect the ECT sensor electrical connector.

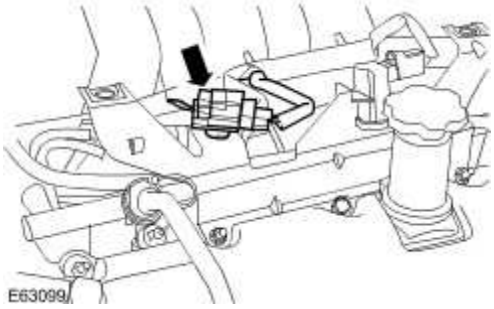

15 . **NOTE:**

Remove the blanking caps.

Connect the throttle body coolant hose.

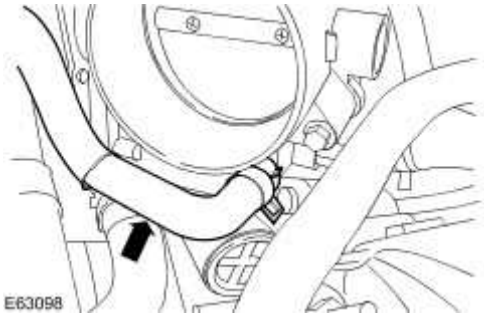

16 . Install the coolant expansion tank cap.

17 . Connect the evaporative emission vent hose.

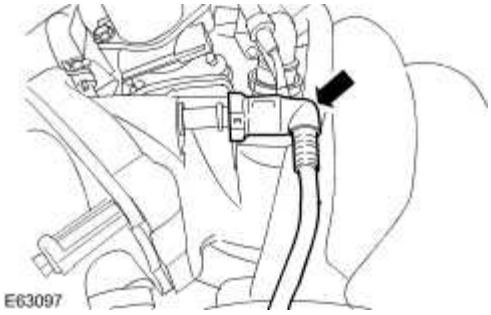

18 . Connect the throttle body electrical connector.

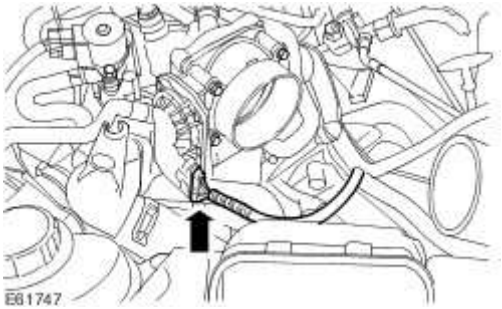

19 . Install the PCV valve.

www.JagDocs.com

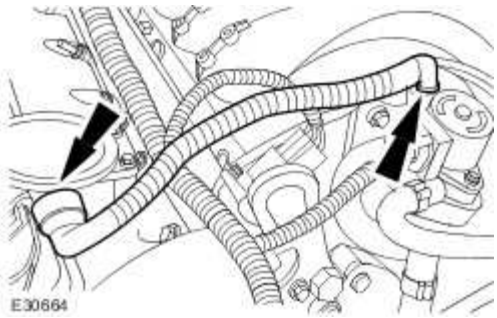

20 . Connect the AIR vacuum line.

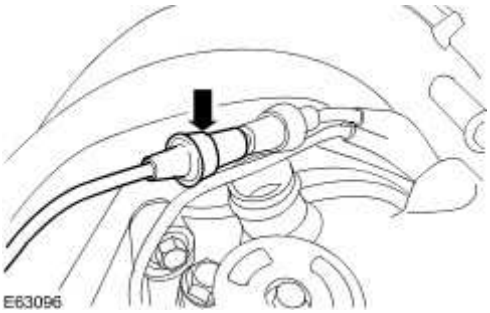

21 . Connect the brake booster vacumn pipe.

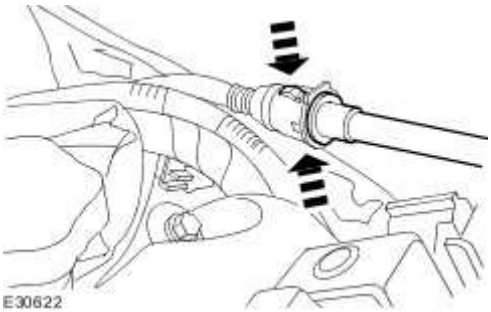

22 . Install the EGR valve retaining bolts.

- Tighten to 10 Nm.

23 . Connect the fuel temperature sensor electrical connector.

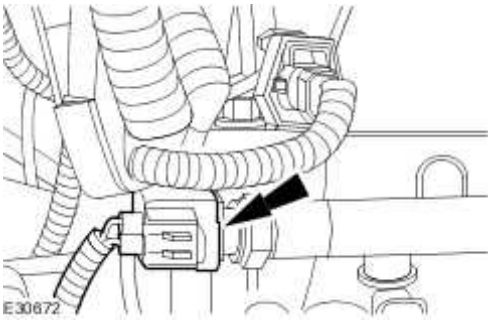

24 . Connect the fuel pressure regulator electrical connector.

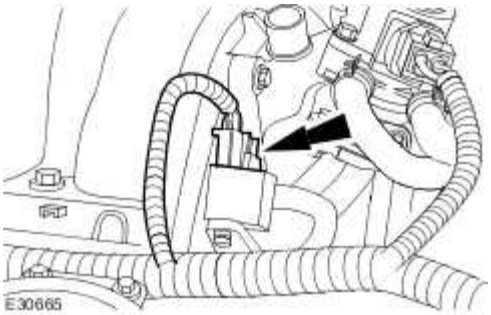

25 . Install the engine cover right-hand bracket.

- Tighten to 6 Nm.

www.JagDocs.com

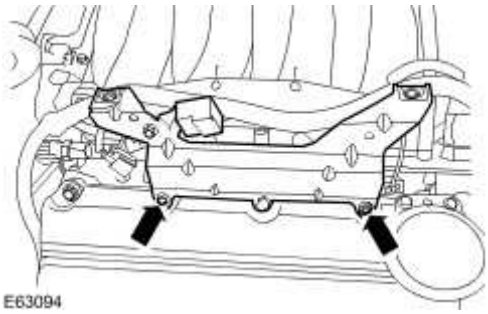

26 . Connect the supressor electrical connector.

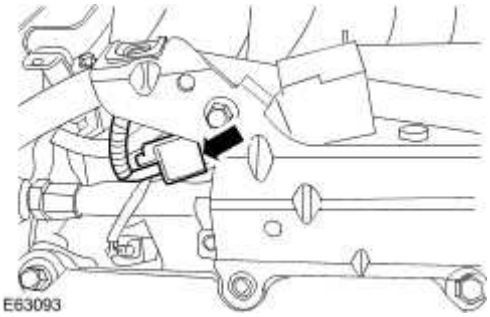

27 . Install the engine compartment support.

Tighten to 18 Nm.

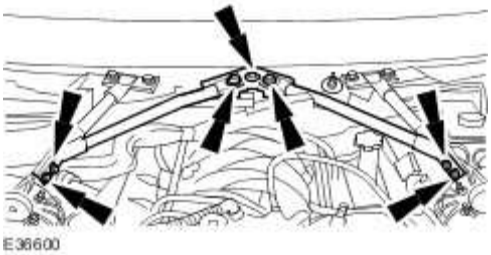

28 . Install the air cleaner outlet pipe.
For additional information, refer to Air Cleaner Outlet Pipe (19.10.31)

29 . Install the cowl vent screen.
For additional information, refer to Cowl Vent Screen (76.10.01)

30 . Check and top up the cooling system.

Oil Cooler - Vehicles With: Supercharger (12.60.68)

Removal

1 . Remove the radiator splash shield. <<501-02>>

2 . Detach the electrical connectors.

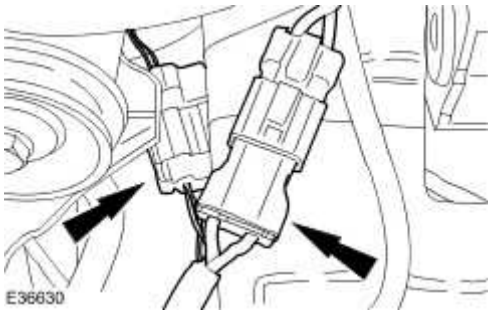

3 . Remove the radiator lower cowl.

4 . **NOTE:**

Place a suitable container underneath oil cooler to prevent oil spillage.

Detach the oil cooler lines.

- Remove and discard the oil cooler O-ring seals.

www.JagDocs.com

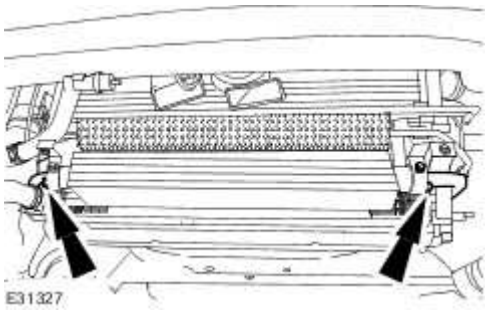

5 . Remove the oil cooler.

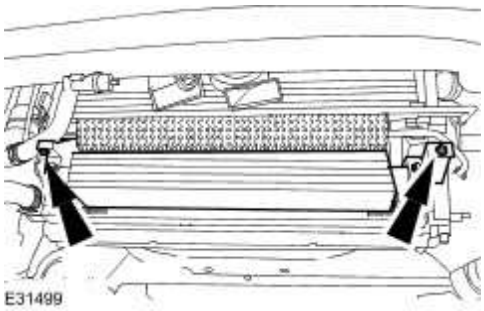

Installation

1 . Install the oil cooler.

- Tighten to 7 Nm.

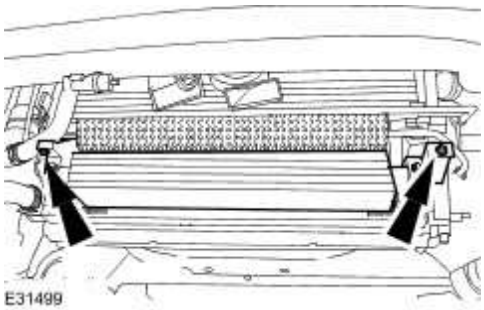

2 . Install the oil cooler lines.

- Install new oil cooler O-ring seals.

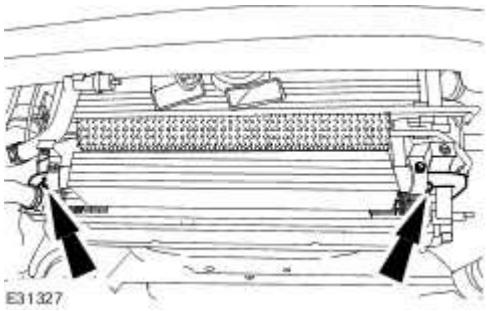

3 . Install the radiator lower cowl.

4 . Attach the electrical connectors.

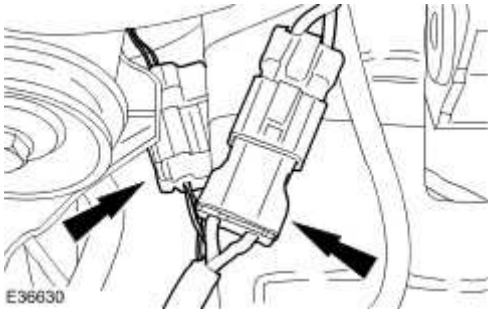

5 . Install the radiator splash shield. <<501-02>>

6 . Check and fill the engine oil to the correct level on the oil level indicator.

www.JagDocs.com

Oil Cooler - Vehicles Without: Supercharger (12.60.68)

Special Service Tools

Installer/remover, Oil Filter
303-752

Removal

1 . Drain the cooling system. <<303-03A>>

2 . Lower the vehicle.

3 . Disconnect the oil cooler hose.

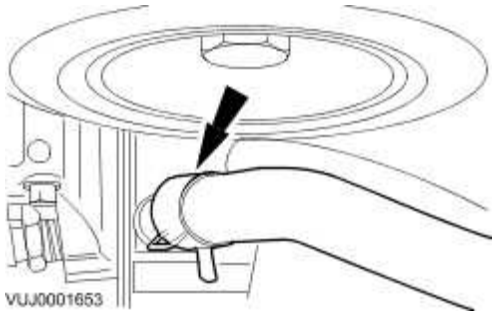

4 . Raise the vehicle.

5 . Remove the air deflector.

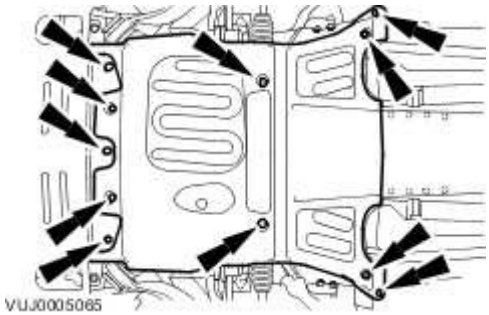

6 . **NOTE:**

Place a suitable container underneath the filter to prevent oil spillage.

Using the special tool remove and discard the oil filter element.

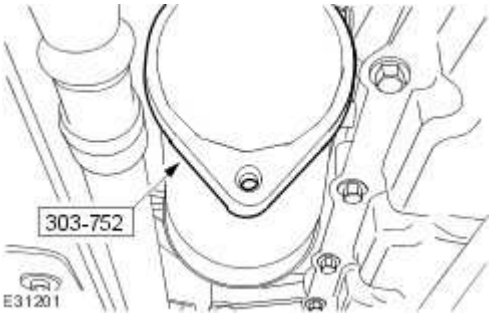

7 . Disconnect the oil cooler hose.

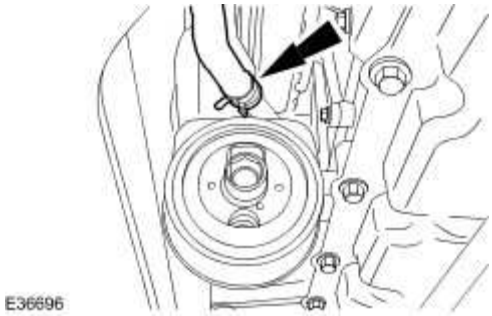

8 . Remove the oil cooler.

- Remove and discard the O-ring.

www.JagDocs.com

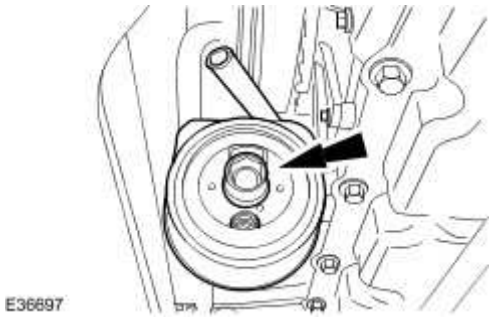

Installation

1 . Install the oil cooler.

- Install a new O-ring seal.
- Tighten to 55 Nm.

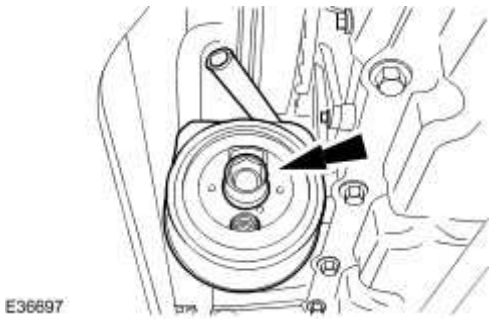

2 . Connect the oil cooler hose.

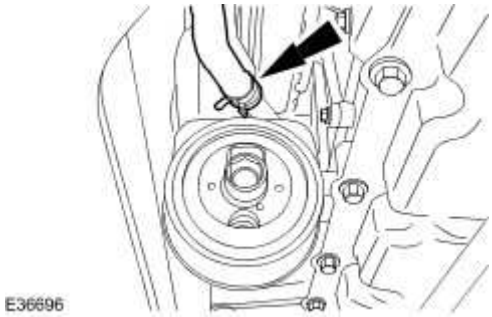

3 . **NOTE:**

Apply a suitable amount of clean engine oil to lubricate the oil filter O-ring seal.

Using the special tool, install a new oil filter.

- Tighten to 18 Nm.

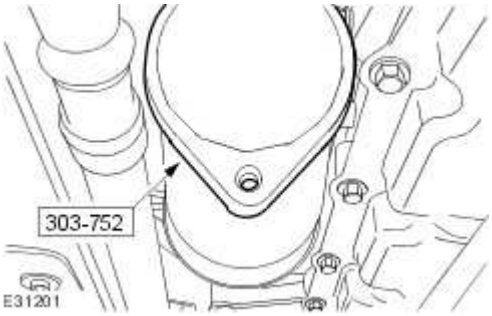

4 . Install the air deflector.

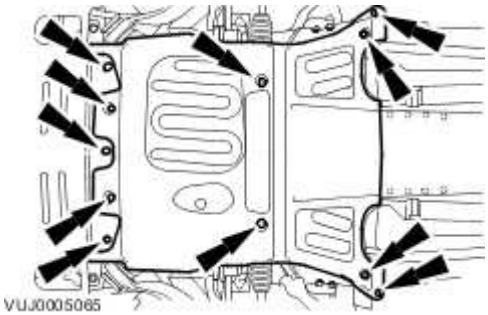

5 . Lower the vehicle.

6 . Connect the oil cooler hose.

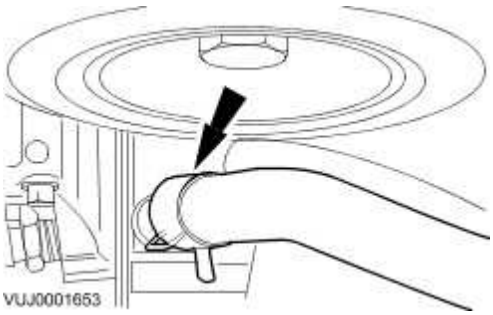

7 . Check and fill the engine oil to the correct level on the oil level indicator.

8 . Carry out cooling system filling and bleeding procedure. <<303-03A>>

www.JagDocs.com

Oil Pan (12.60.44)

Removal

1 . Remove the air deflector.
For additional information, refer to Air Deflector (76.11.41)

2 . Drain the engine oil.

- Place suitable container under the vehicle.
- Remove the drain plug and drain the engine oil.

3 . Remove the oil pan.

- Remove and discard the gasket.

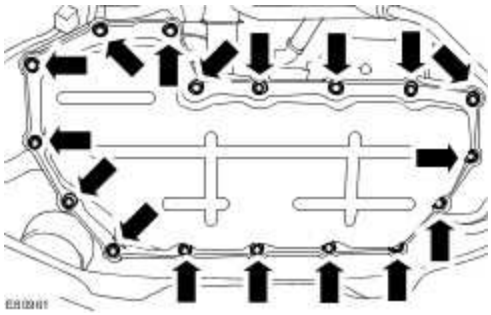

Installation

1 . **NOTE:**

Make sure all surfaces are clean.

Install the oil pan gasket to the oil pan extension.

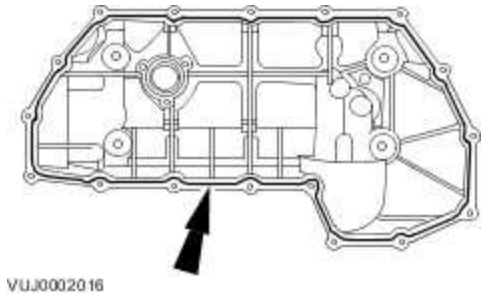

2 . Install the oil pan.

- Install, but do not fully tighten the retaining bolts.

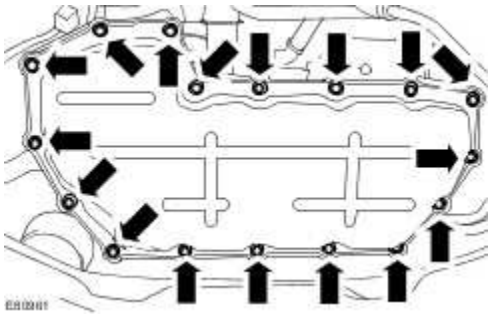

3 **NOTE:**

.

A new oil pan is supplied with the drain plug installed. Check that the drain plug is tightened to 25 Nm.

Tighten the retaining bolts in the indicated sequence in two stages.

- Stage 1: bolts 1 to 7, tighten to 5 Nm.
- Stage 2: bolts 1 to 17, tighten to 12 Nm.

www.JagDocs.com

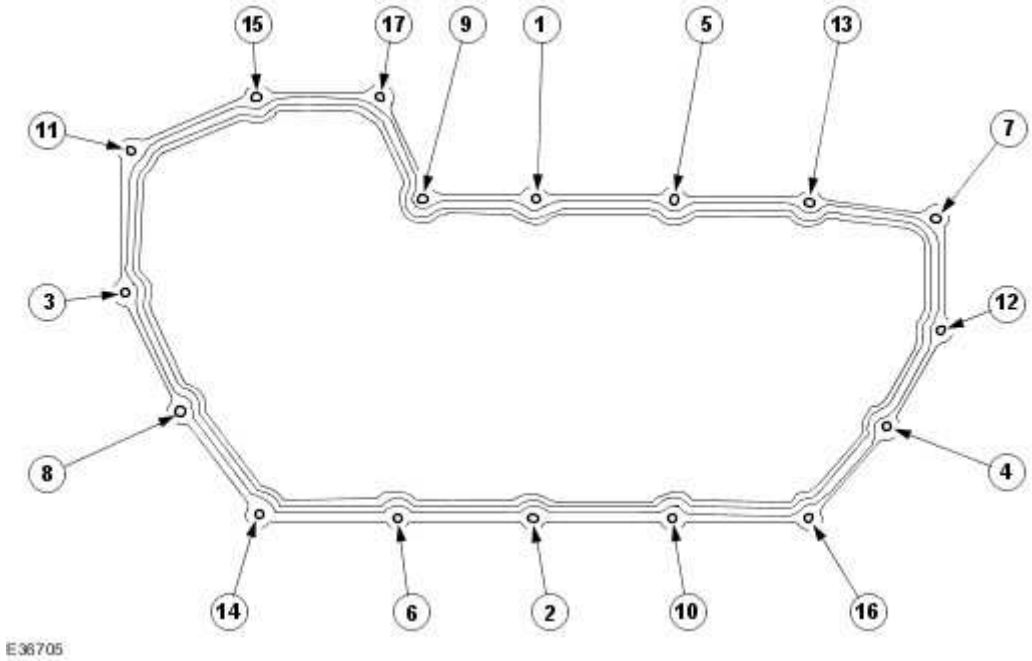

4 . Install the air deflector.
For additional information, refer to Air Deflector (76.11.41)

5 . Check and top-up the engine oil.

Oil Pan Extension (12.60.48)

Removal

1 Remove the engine front cover.
. For additional information, refer to Engine Front Cover - VIN Range: G00442->G45703 (12.65.01)
For additional information, refer to Engine Front Cover - VIN Range: G45704->G99999 (12.65.01)

2 . Remove the oil pan.
For additional information, refer to Oil Pan (12.60.44)

3 . Disconnect the engine oil temperature sensor electrical connector.

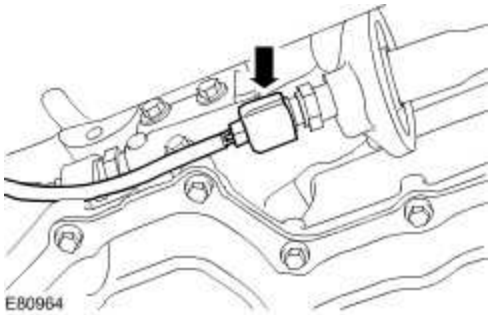

4 . Disconnect the engine oil pressure sensor electrical connector.

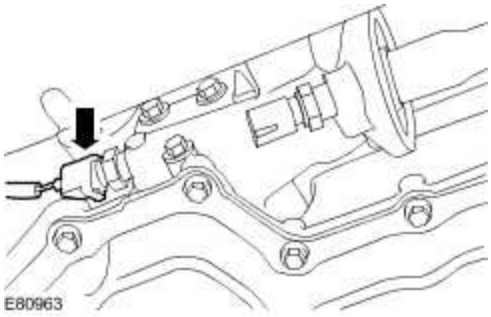

5 . Remove the oil filter housing.

- Remove and discard the O-ring seal.
- Using suitable blanking plugs, blank the exposed ports.

www.JagDocs.com

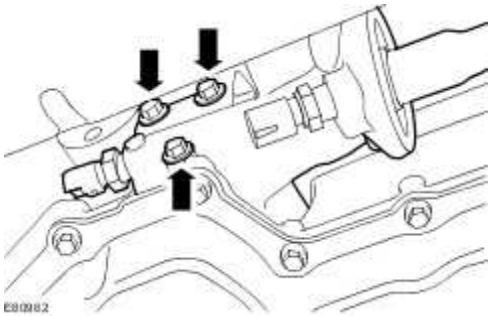

6 . Remove the oil strainer.

- Remove and discard the O-ring seal.

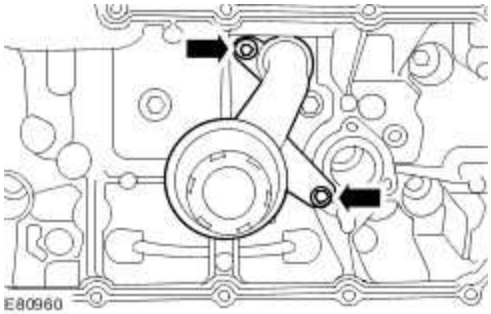

7 . Detach the right-hand heated oxygen sensor (HO2S) electrical connector retaining bracket.

- Remove the retaining bolt.

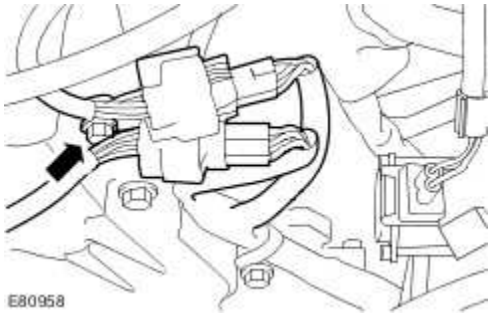

8 . Detach the engine wiring harness.

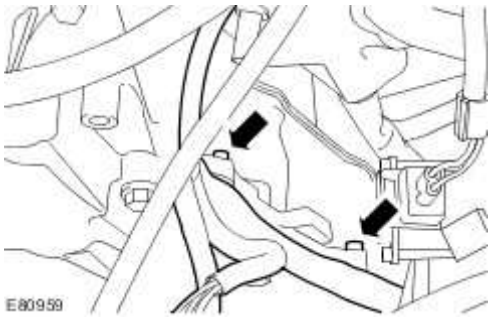

9 . Disconnect the crankshaft position (CKP) sensor electrical connector.

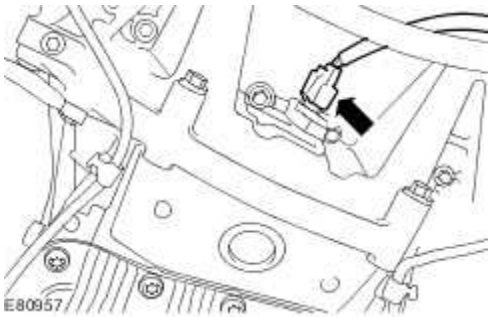

10 . Remove the CKP sensor.

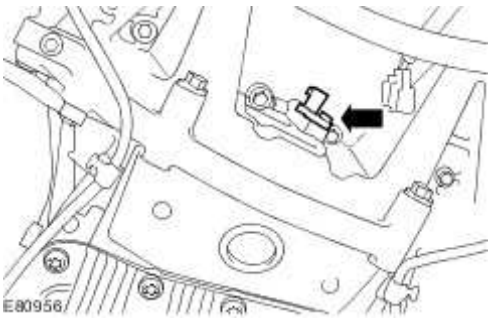

11 . Remove the transmission bell housing to oil pan retaining bolts.

- Detach the engine ground cable.

www.JagDocs.com

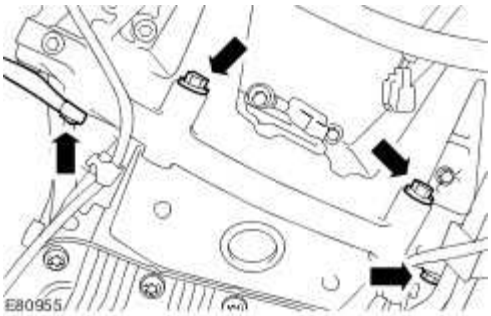

12 . Detach the left-hand HO2S electrical connector retaining bracket.

- Remove the retaining bolt.

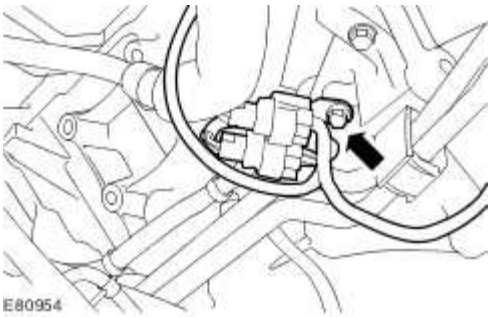

13 . Detach the engine wiring harness.

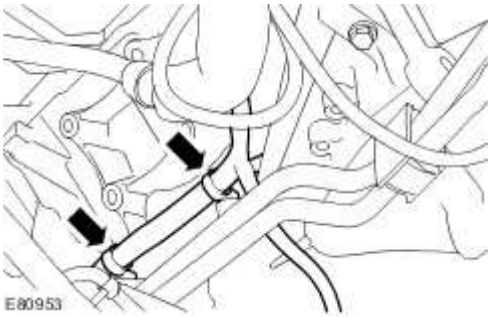

14 . Detach the transmission fluid cooler pipes.

- Remove the retaining nut.

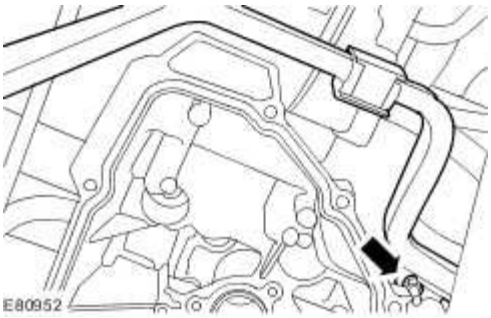

15 . Remove the oil pan extension.

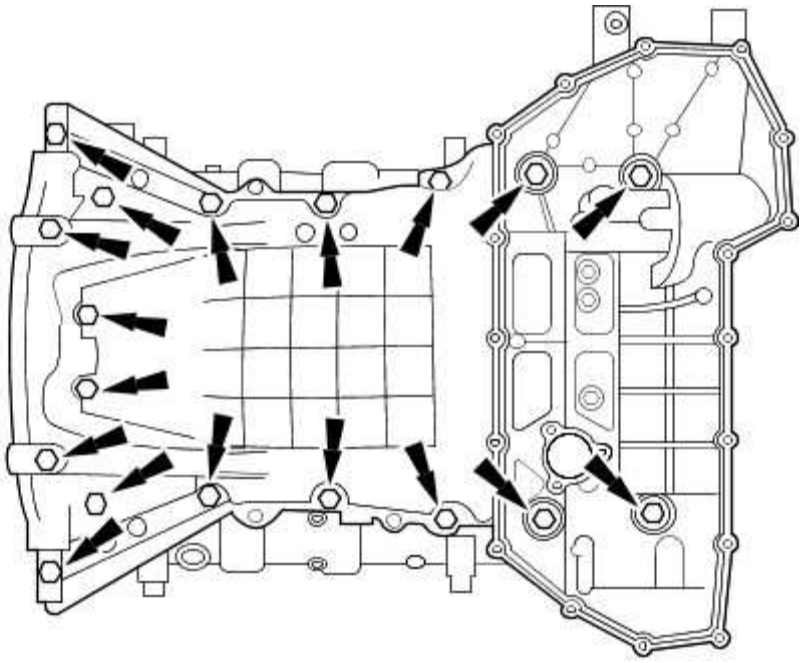

Installation

1 . **NOTE:**

Use only a plastic scraper when removing old gasket material.

Clean all the mating faces and reusable parts thoroughly and check for damage.

2 **NOTE:**

.

It is important that the oil pan extension is bolted to the bedplate within 20 minutes of

www.JagDocs.com

applying the RTV sealant.

Apply a continuous bead of RTV sealant (Loctite 5699) 3 mm diameter, around the flange as indicated.

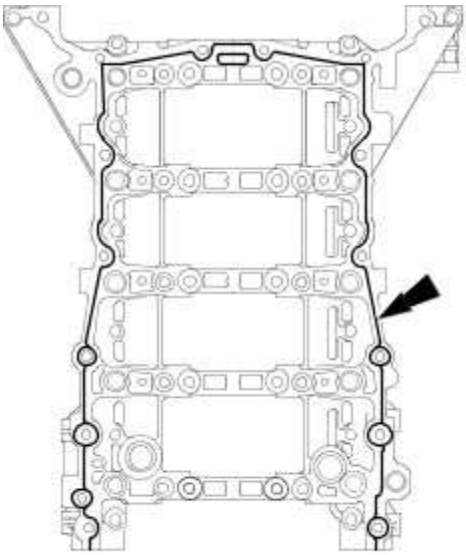

E32647

3 **NOTE:**

.

It is important that the oil pan extension is bolted to the bedplate within 20 minutes of applying the RTV sealant.

Apply a continuous bead of RTV sealant (Loctite 5699) 2 mm diameter, around the diverter valve flange as indicated.

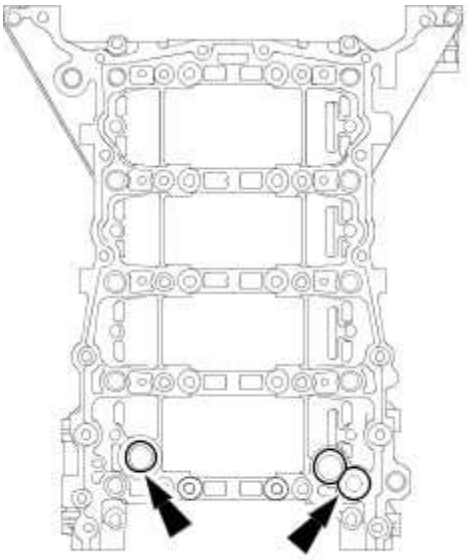

E32648

4 . **NOTE:**

Tighten the retaining bolts in the indicated sequence.

Install the oil pan extension to the bedplate.

1) Tighten to 21 Nm.

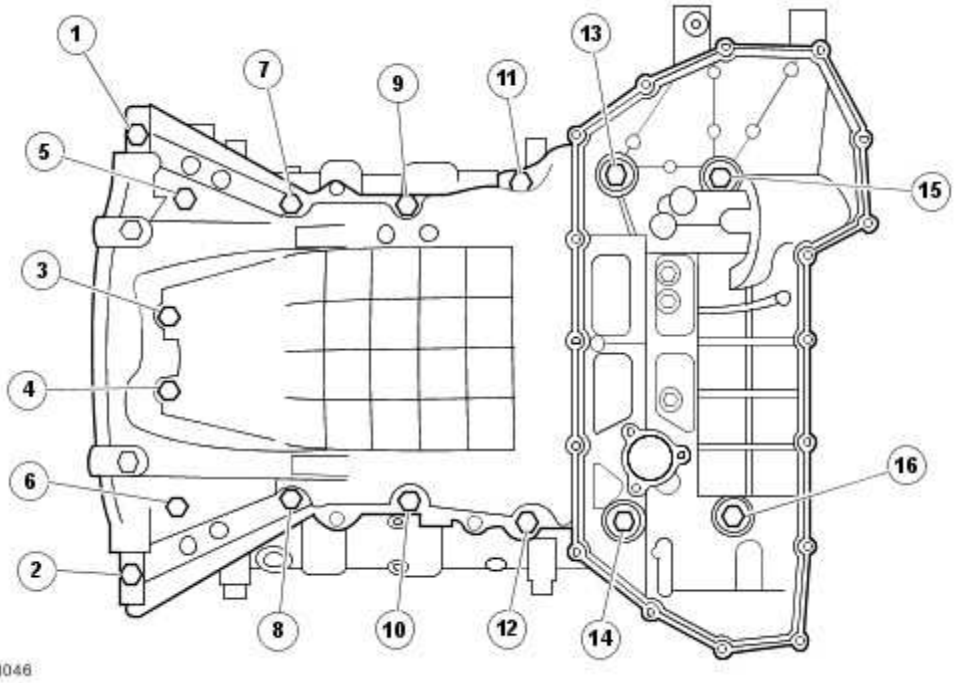

E81046

www.JagDocs.com

5 . Attach the transmission fluid cooler pipes.

- Install the retaining nut.
- Tighten to 10 Nm.

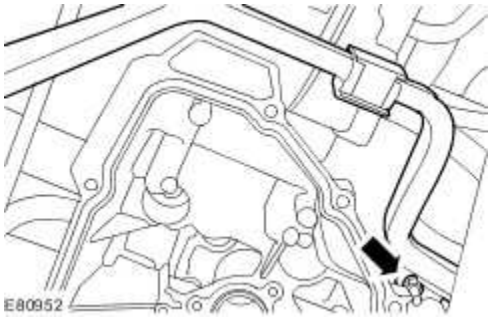

6 . Attach the engine wiring harness.

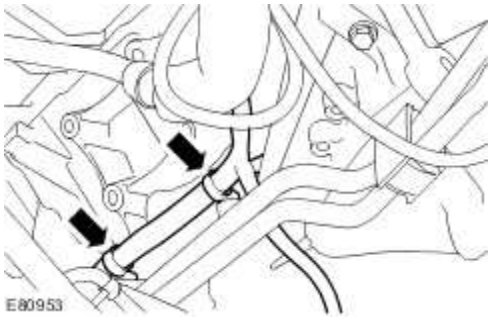

7 . Attach the left-hand HO2S electrical connector retaining bracket.

- Install the retaining bolt.
- Tighten to 10 Nm.

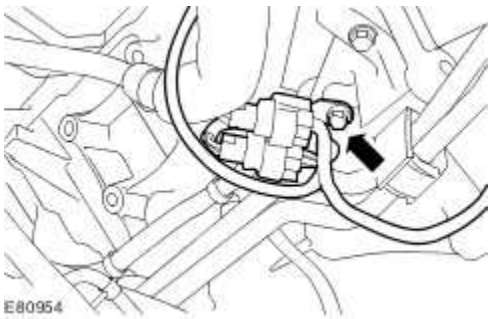

8 . Install the transmission bell housing to oil pan retaining bolts.

- Attach the engine ground cable.
- Tighten to 48 Nm.

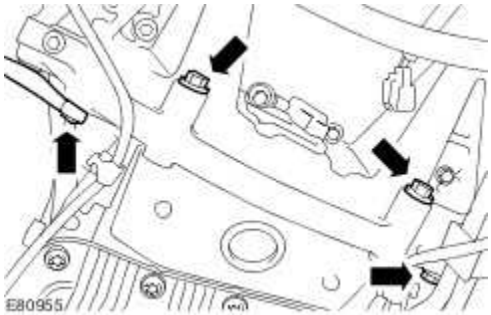

9 . Install the CKP sensor.

- Tighten to 10 Nm.

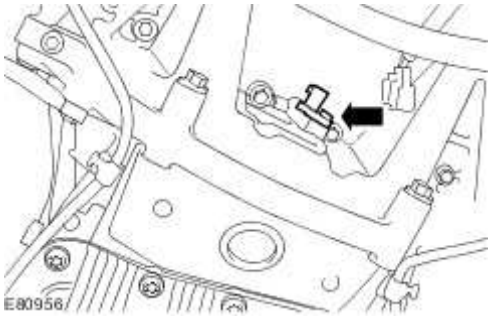

10 . Connect the CKP sensor electrical connector.

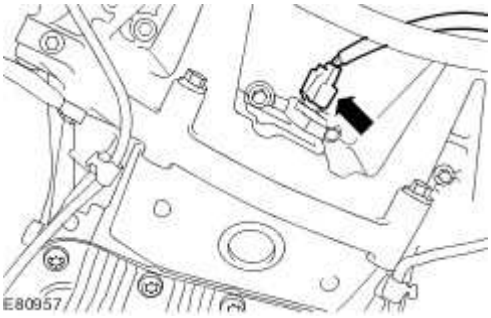

www.JagDocs.com

11 . Attach the engine wiring harness.

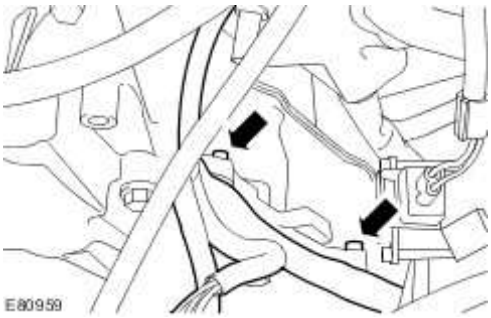

12 . Attach the right-hand HO2S electrical connector retaining bracket.

- Install the retaining bolt.
- Tighten to 10 Nm.

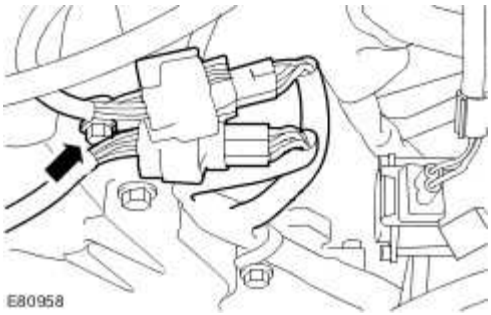

13 . Install the oil strainer.

- Install a new O-ring seal.
- Tighten to 12 Nm.

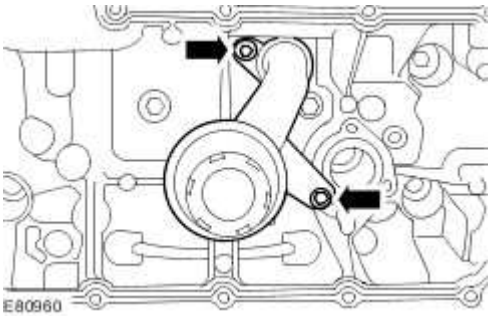

14 . Install the oil filter housing.

- Remove the blanking plugs.
- Install a new O-ring seal.
- Tighten to 21 Nm.

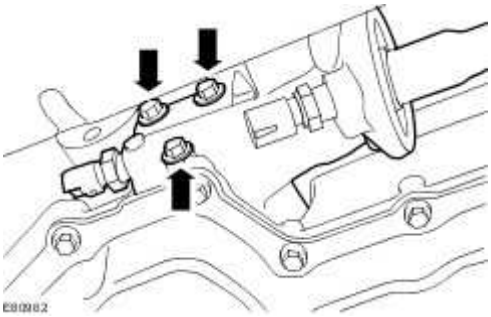

15 . Connect the engine oil pressure sensor electrical connector.

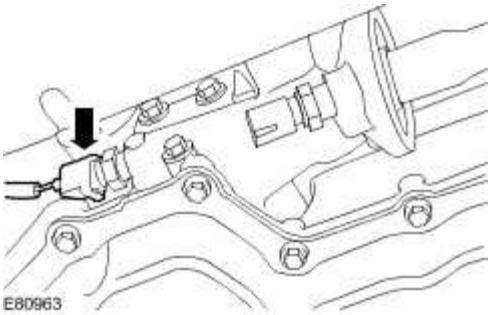

16 . Connect the engine oil temperature sensor electrical connector.

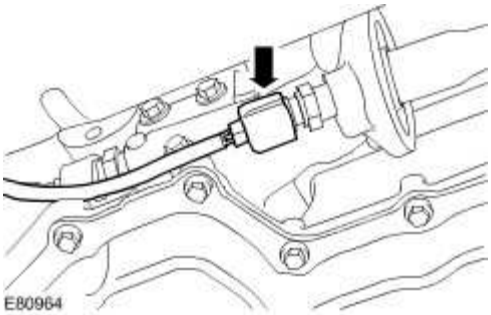

17 . Install the oil pan.
For additional information, refer to Oil Pan (12.60.44)

www.JagDocs.com

18 Install the engine front cover.

. For additional information, refer to Engine Front Cover - VIN Range: G00442->G45703 (12.65.01)

For additional information, refer to Engine Front Cover - VIN Range: G45704->G99999 (12.65.01)

Oil Pump - VIN Range: G00442->G45703 (12.60.26)

Special Service Tools

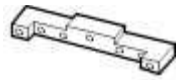

303-530

Camshaft setting
303-530

303-532

Timing chain tensioning tool
303-532

303-645

Crankshaft setting, main tool
303-645

Removal

All vehicles

1 . Remove the oil pan.
For additional information, refer to Oil Pan (12.60.44)

2 . Remove the oil strainer.

Remove and discard the O-ring seal.

www.JagDocs.com

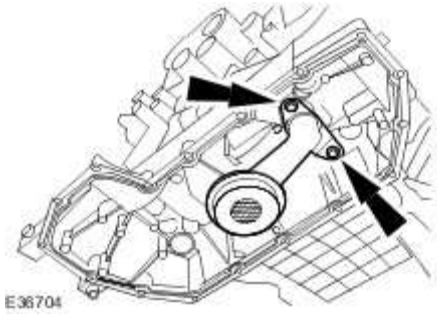

3 . Disconnect the crankshaft position (CKP) sensor electrical connector.

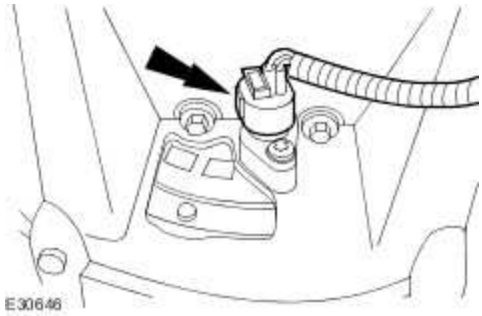

4 . Remove the CKP sensor.

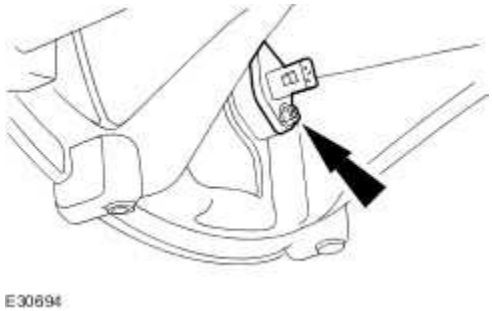

5 . Install the special tool.

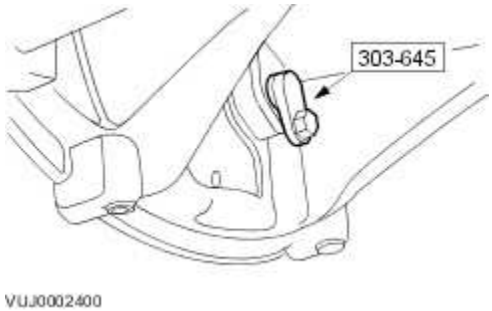

6 Remove the engine front cover.

. For additional information, refer to Engine Front Cover - VIN Range: G00442->G45703 (12.65.01)

Vehicles without supercharger

7 . Remove the right-hand variable camshaft timing oil control unit housing.

- Remove and discard the O-ring seals.

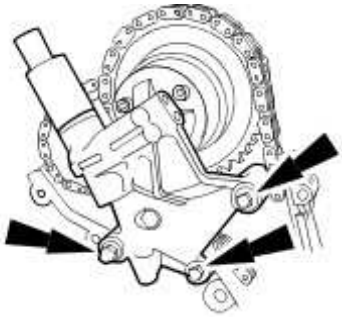

8 . Remove the left-hand variable camshaft timing oil control unit housing.

- Remove and discard the O-ring seals.

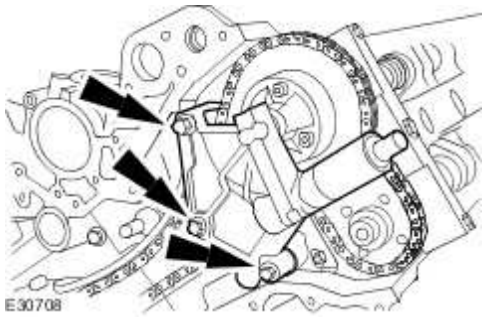

All vehicles

9 . Install the special tool to the left-hand cylinder head.

www.JagDocs.com

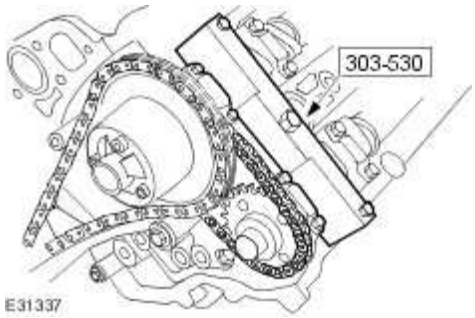

10 . Install the special tool to the right-hand cylinder head.

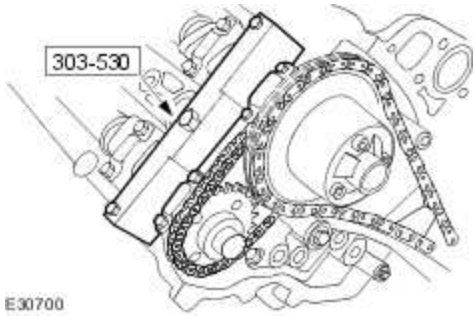

11 . Remove the primary timing chain tensioner assembly.

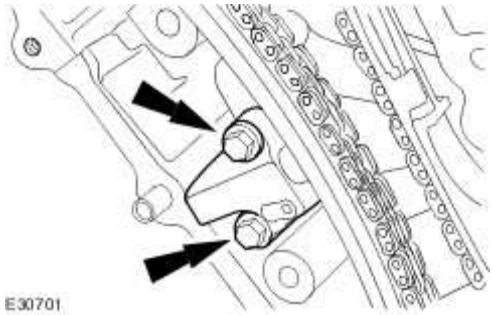

12 . Remove the primary timing chain tensioner guide.

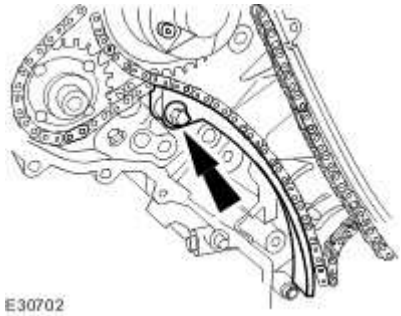

13 . Remove the primary timing chain.

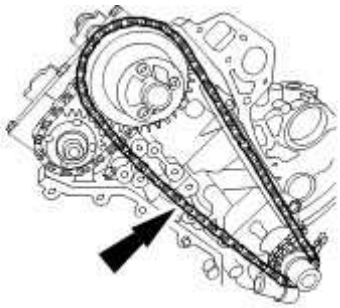

E30703

14 . **CAUTION: Make sure the secondary timing chain and camshaft sprockets are free to rotate.**

Loosen the camshaft sprockets.

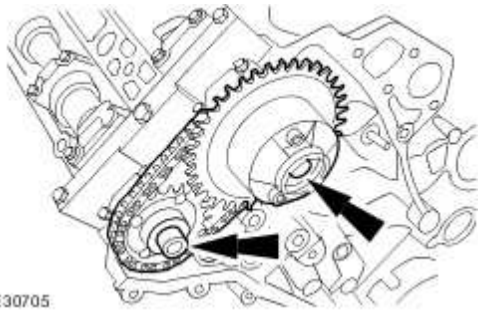

E30705

15 . Remove the primary timing chain guide.

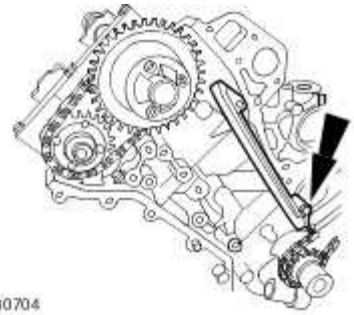

E30704

16 . Remove the primary timing chain tensioner assembly.

www.JagDocs.com

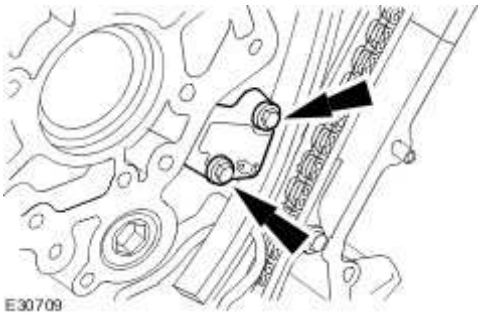

17 . Remove the primary timing chain tensioner guide.

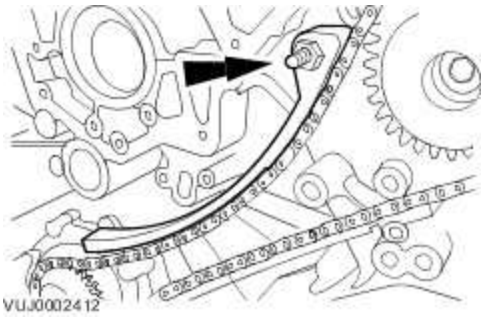

18 . Remove the primary timing chain.

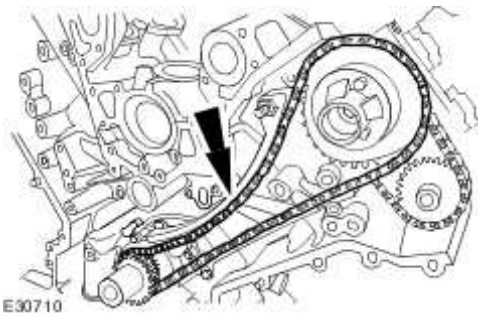

19 . Remove the primary timing chain tensioner guide.

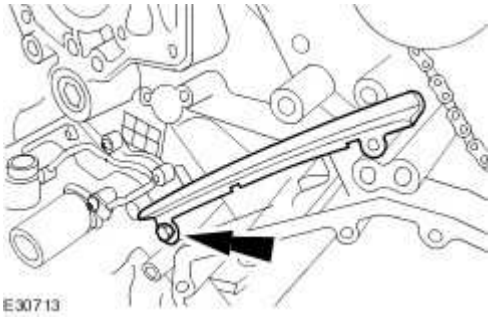

20 . **CAUTION: Make sure the secondary timing chain and camshaft sprockets are free to rotate.**

Loosen the camshaft sprockets.

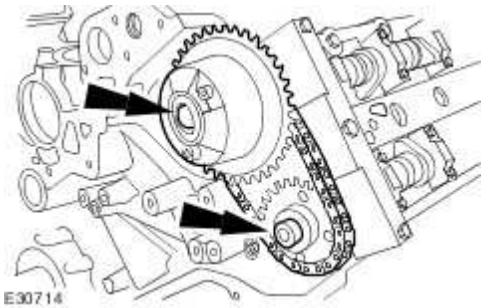

21 . Remove the oil pump.

- Remove and discard the gasket.

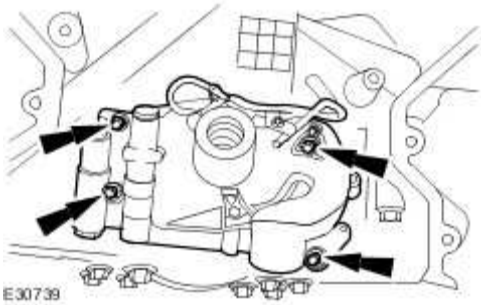

Installation

All vehicles

1 . Install the oil pump.

- Install a new gasket.
- Tighten to 12 Nm.

www.JagDocs.com

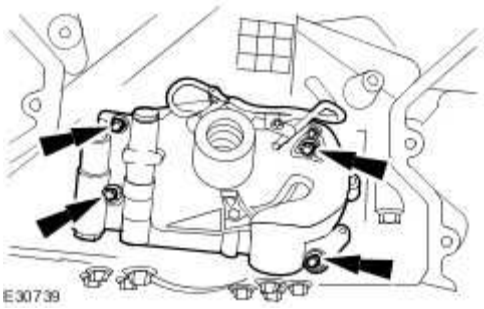

2 Install the special tool to the exhaust camshaft sprocket.

.

- Reposition the camshaft sprockets for the most advantageous position for use of the tool.

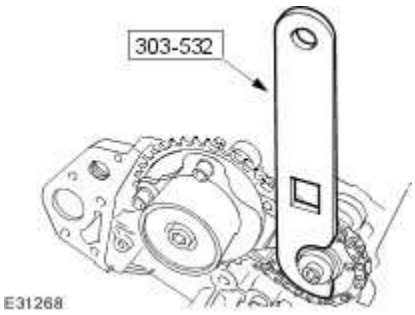

3 . Install the primary timing chain tensioner guide.

- Tighten to 12 Nm.

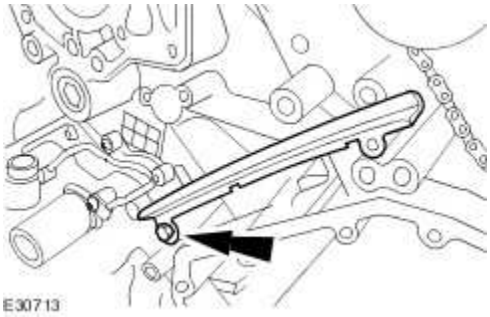

4

. **CAUTION: Make sure the timing chain slack is on the tensioned side of the timing**

chain.

Install the primary timing chain.

- Install the primary chain over the crankshaft sprocket and the intake sprocket.

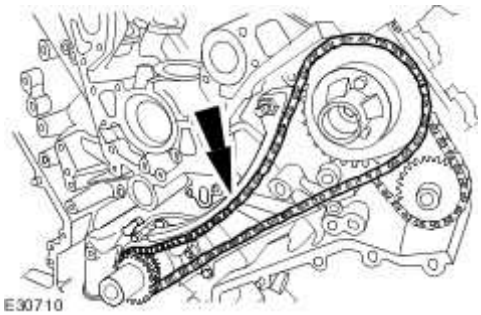

5 . Install the primary timing chain tensioner guide.

- Tighten to 12 Nm.

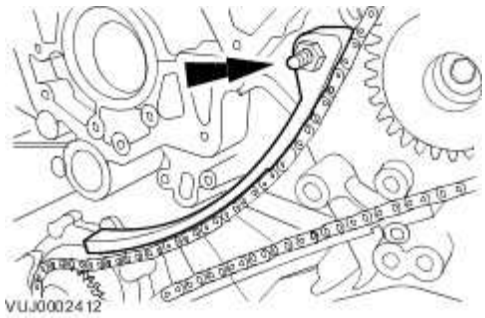

6 . **CAUTION: During timing chain tensioner compression, do not release the ratchet stem until the timing chain tensioner piston is fully bottomed in its bore or damage to the ratchet stem will result.**

Using a suitable tool, hold the left-hand timing chain tensioner ratchet lock mechanism away from the ratchet stem.

www.JagDocs.com

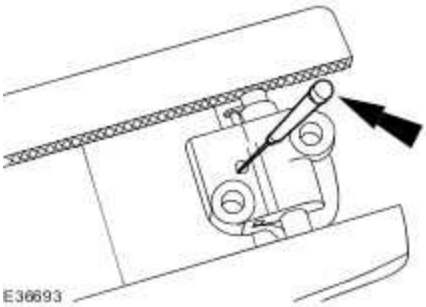

7 **NOTE:**

.

The timing chain tensioner piston should retract with minimal force. If binding occurs, reposition the timing chain tensioner to eliminate side loading.

Slowly compress the left-hand timing chain tensioner.

8 **NOTE:**

.

The retaining tool must remain in the timing chain tensioner until the timing chain tensioner is installed to the engine with the piston bottomed in the bore.

Using a suitable tool, retain the left-hand timing chain tensioner piston.

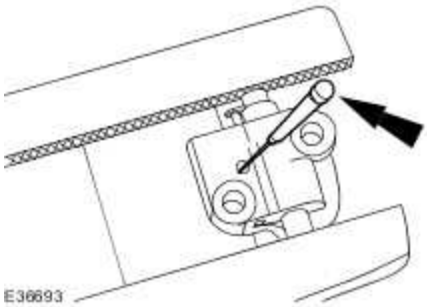

9 . Install the primary timing chain tensioner assembly.

Tighten to 12 Nm.

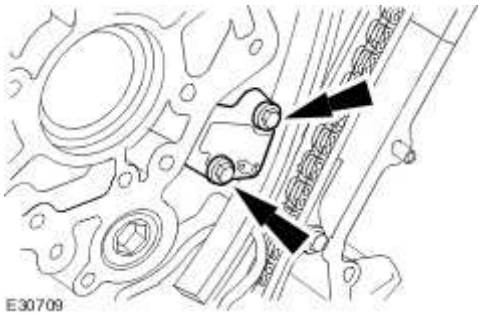

10 . Release the tension in the left-hand timing chain tensioner.

- Remove the retaining tool.

11 . **CAUTION: While applying the opposing force to sprocket and chain, tighten the sprocket bolt.**

Using the special tool, apply force to the tool in an anti-clockwise direction to tension the primary timing chain on its drive side.

- Tighten to 120 Nm.

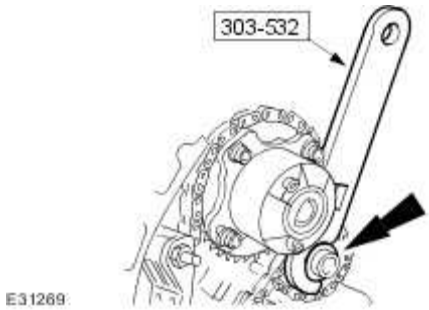

12 . **CAUTION: While applying the opposing force to sprocket and chain, tighten the sprocket bolt.**

Using the special tool, apply force to the tool in an anti-clockwise direction.

www.JagDocs.com

- Tighten to 120 Nm.

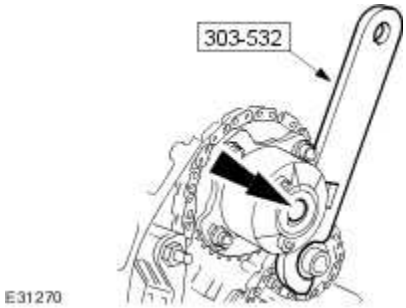

13 . Install the primary timing chain guide.

- Tighten to 12 Nm.

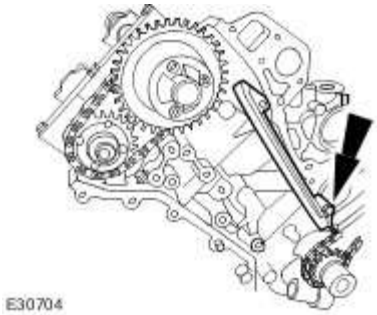

14 . **CAUTION: Make sure the timing chain slack is on the tensioned side of the timing chain.**

Install the primary timing chain.

- Install the primary chain over the crankshaft sprocket and the intake sprocket.

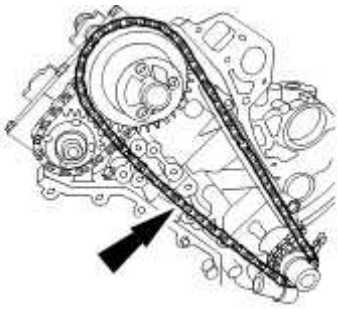

15 . Install the primary timing chain tensioner guide.

Tighten to 12 Nm.

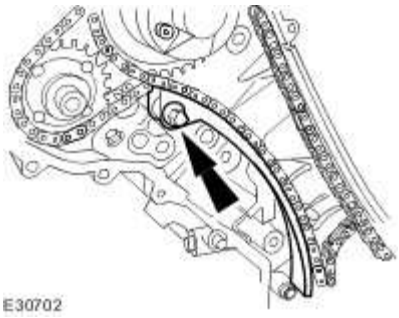

16 . **CAUTION: During timing chain tensioner compression, do not release the ratchet stem until the timing chain tensioner piston is fully bottomed in its bore or damage to the ratchet stem will result.**

Using a suitable tool, hold the right-hand timing chain tensioner ratchet lock mechanism away from the ratchet stem.

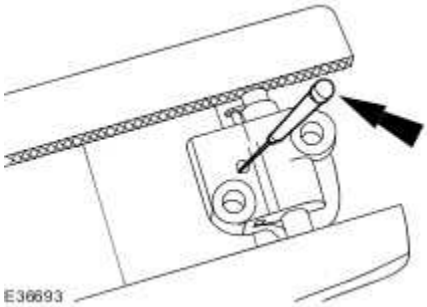

www.JagDocs.com

17 **NOTE:**

.

The timing chain tensioner piston should retract with minimal force. If binding occurs, reposition the timing chain tensioner to eliminate side loading.

Slowly compress the right-hand timing chain tensioner.

18 **NOTE:**

.

The retaining tool must remain in the timing chain tensioner until the timing chain tensioner is installed to the engine with the piston bottomed in the bore.

Using a suitable tool, retain the right-hand timing chain tensioner piston.

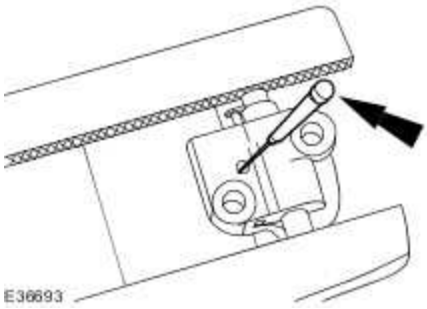

19 . Install the primary timing chain tensioner assembly.

- Tighten to 12 Nm.

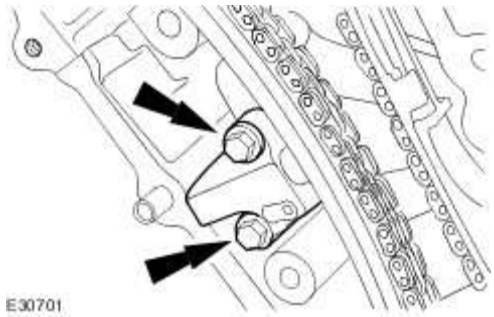

20 . Release the tension in the right-hand timing chain tensioner.

- Remove the retaining tool.

21 . **CAUTION: While applying the opposing force to sprocket and chain, tighten the sprocket bolt.**

Using the special tool, apply force to the tool in an anti-clockwise direction to tension the primary timing chain on its drive side.

- Tighten to 120 Nm.

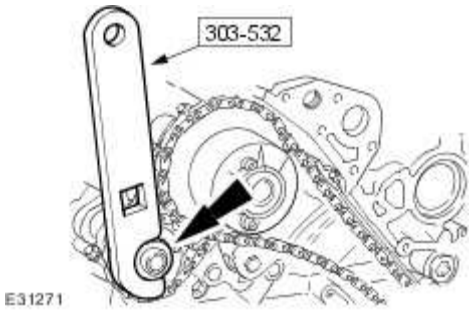

22 . **CAUTION: While applying the opposing force to sprocket and chain, tighten the sprocket bolt.**

Using the special tool, apply force to the tool in an anti-clockwise direction.

- Tighten to 120 Nm.

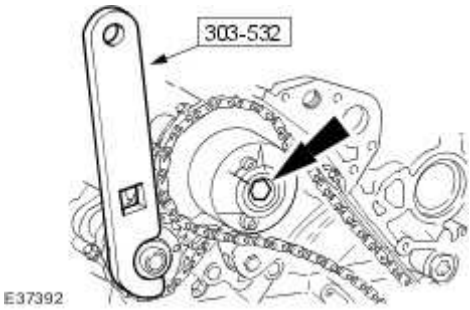

23 . Remove the special tool from the right-hand cylinder head.

www.JagDocs.com

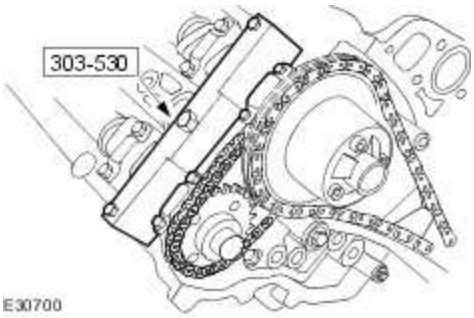

24 . Remove the special tool from the left-hand cylinder head.

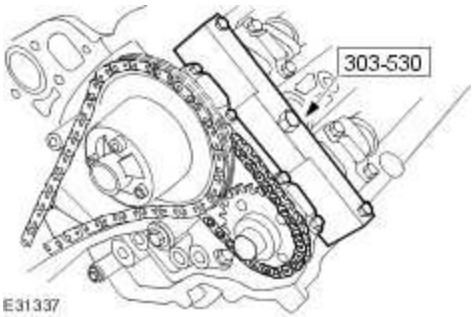

Vehicles without supercharger

25 . Install the left-hand variable camshaft timing oil control unit housing.

- Install new O-ring seals.
- Tighten to 22 Nm.

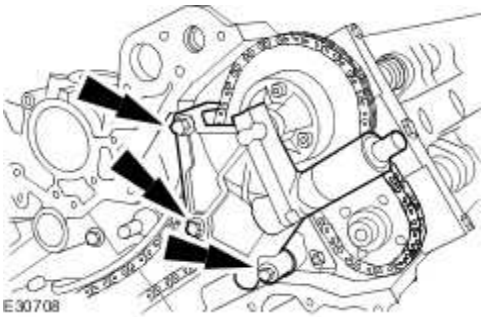

26 . Install the right-hand variable camshaft timing oil control unit housing.

- Install new O-ring seals.

Tighten to 22 Nm.

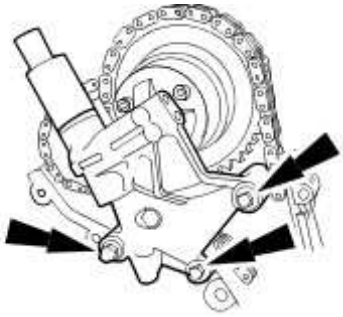

E30699

All vehicles

27 Install the engine front cover.

. For additional information, refer to Engine Front Cover - VIN Range: G00442->G45703 (12.65.01)

28 . Remove the special tool.

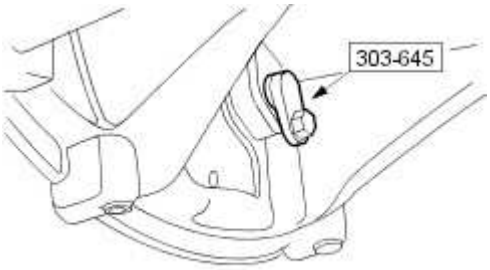

VUJ0002400

29 . Install the CKP sensor.

Tighten to 10 Nm.

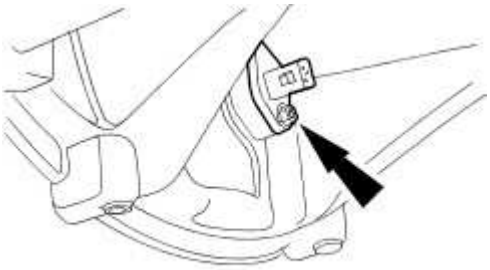

E30694

www.JagDocs.com

30 . Connect the CKP sensor electrical connector.

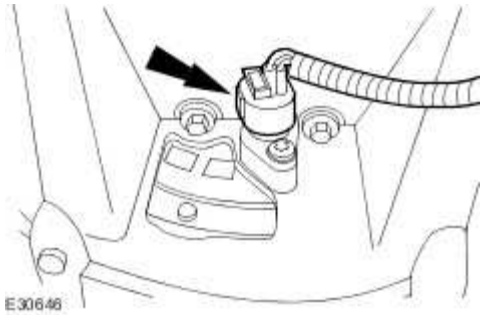

31 . Install the oil strainer.

- Install new O-ring seals.
- Tighten to 12 Nm.

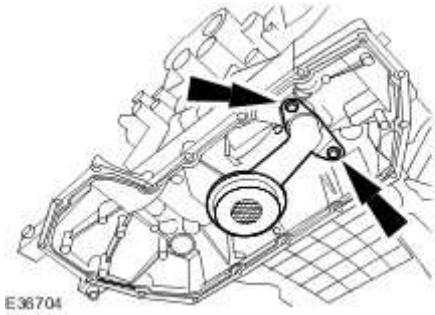

32 . Install the oil pan.
For additional information, refer to Oil Pan (12.60.44)

Oil Pump - VIN Range: G45704->G99999 (12.60.26)

Special Service Tools

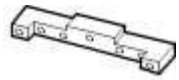

303-530

Camshaft setting
303-530

303-532

Timing chain tensioning tool
303-532

303-645

Crankshaft setting, main tool
303-645

Removal

1 . Remove the oil pan.
For additional information, refer to Oil Pan (12.60.44)

2 . Remove the oil strainer.

Remove and discard the O-ring seal.

www.JagDocs.com

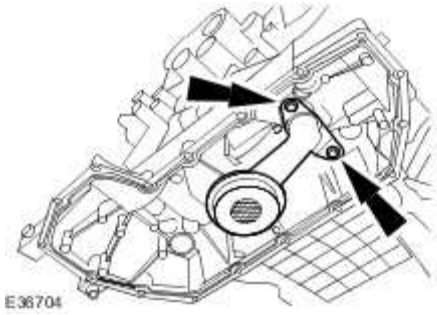

3 . Disconnect the crankshaft position (CKP) sensor electrical connector.

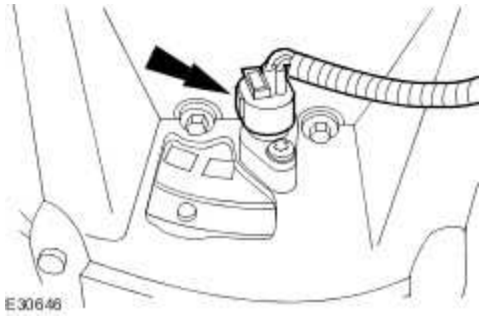

4 . Remove the CKP sensor.

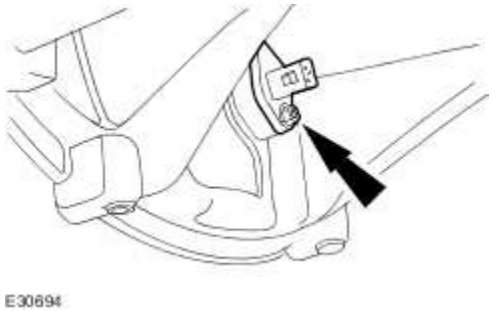

5 . Install the special tool.

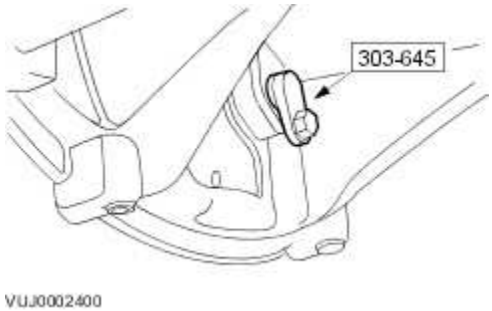

6 Remove the engine front cover.

. For additional information, refer to Engine Front Cover - VIN Range: G45704->G99999 (12.65.01)

7 . Remove the right-hand variable camshaft timing oil control unit housing.

- Remove and discard the O-ring seals.

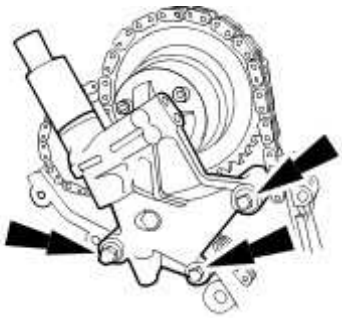

8 . Remove the left-hand variable camshaft timing oil control unit housing.

- Remove and discard the O-ring seals.

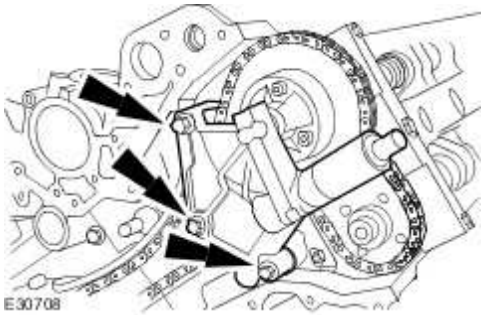

9 . Install the special tool to the left-hand cylinder head.

www.JagDocs.com

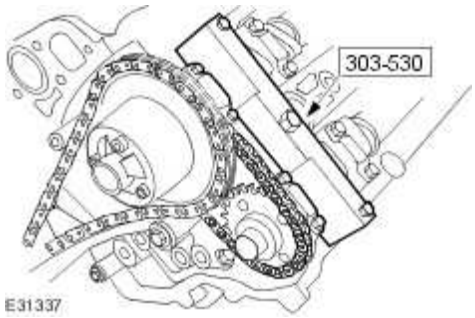

10 . Install the special tool to the right-hand cylinder head.

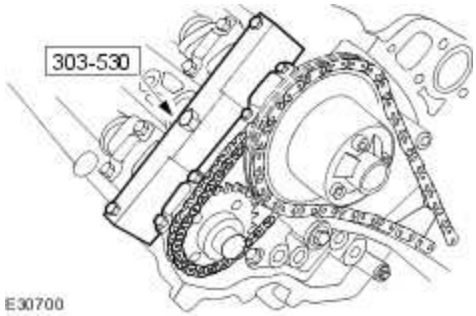

11 . Remove the primary timing chain tensioner assembly.

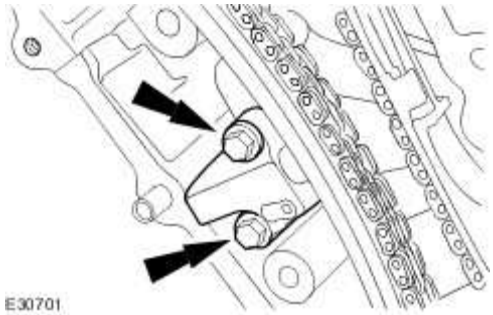

12 . Remove the primary timing chain tensioner guide.

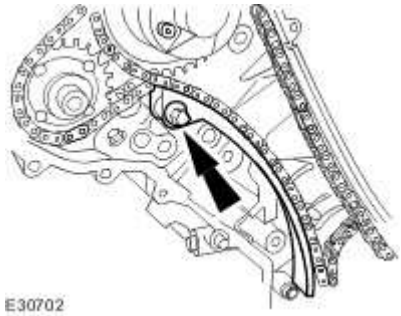

13 . Remove the primary timing chain.

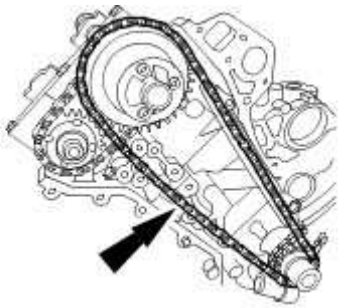

E30703

14 . **CAUTION: Make sure the secondary timing chain and camshaft sprockets are free to rotate.**

Loosen the camshaft sprockets.

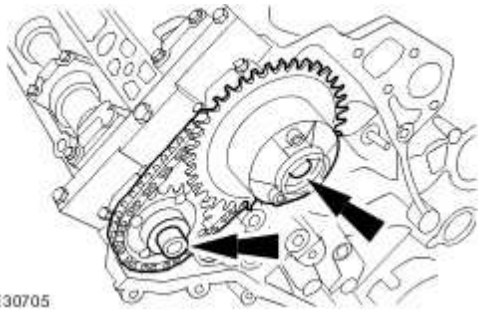

E30705

15 . Remove the primary timing chain guide.

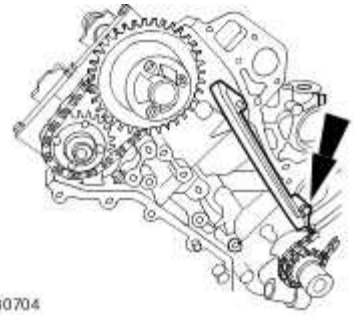

E30704

16 . Remove the primary timing chain tensioner assembly.

www.JagDocs.com

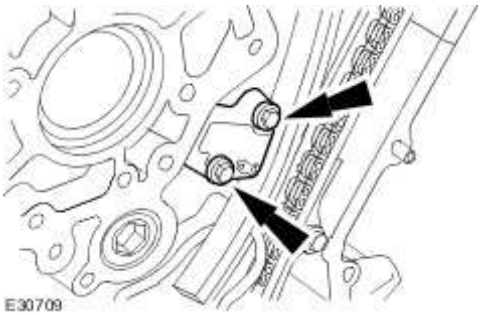

17 . Remove the primary timing chain tensioner guide.

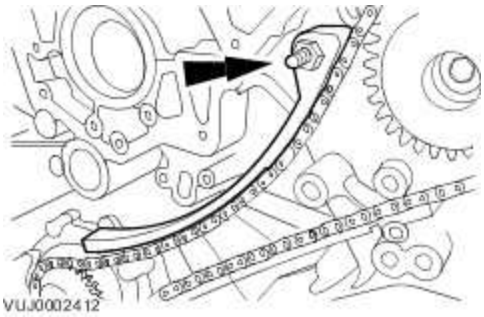

18 . Remove the primary timing chain.

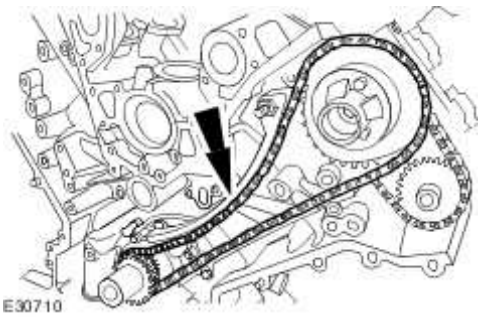

19 . Remove the primary timing chain tensioner guide.

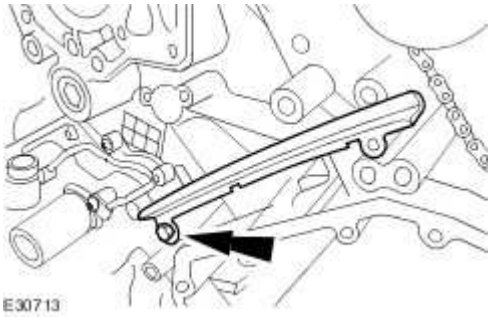

20 . **CAUTION: Make sure the secondary timing chain and camshaft sprockets are free to rotate.**

Loosen the camshaft sprockets.

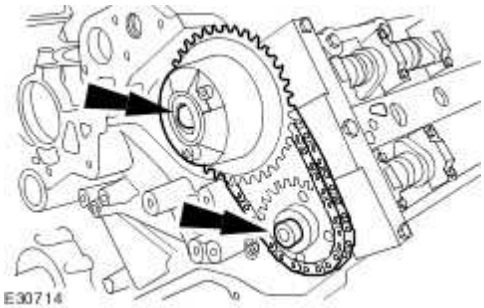

21 . Remove the oil pump.

- Remove and discard the gasket.

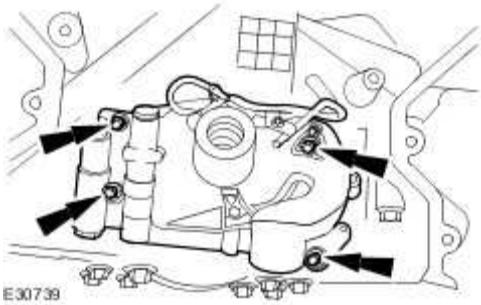

Installation

1 . Install the oil pump.

- Install a new gasket.
- Tighten to 12 Nm.

www.JagDocs.com

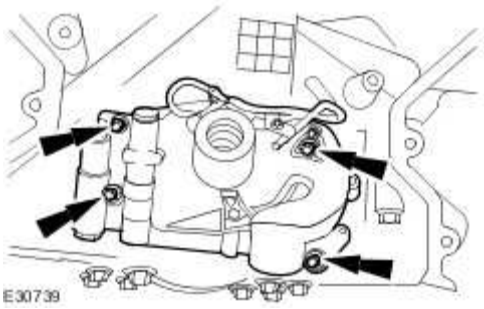

2 Install the special tool to the exhaust camshaft sprocket.

.

- Reposition the camshaft sprockets for the most advantageous position for use of the tool.

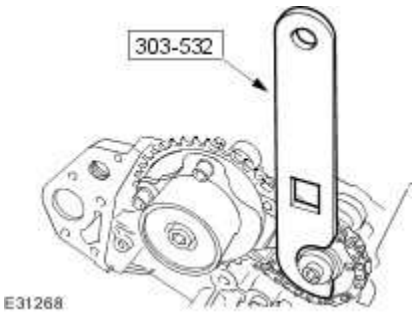

3 . Install the primary timing chain tensioner guide.

- Tighten to 12 Nm.

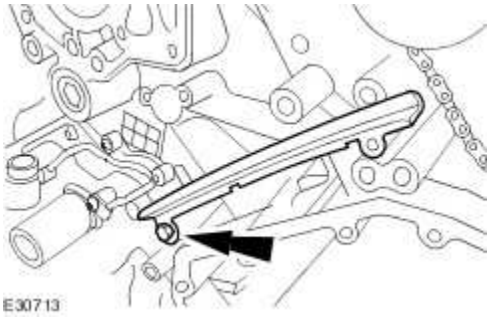

4

. **CAUTION: Make sure the timing chain slack is on the tensioned side of the timing**

chain.

Install the primary timing chain.

- Install the primary chain over the crankshaft sprocket and the intake sprocket.

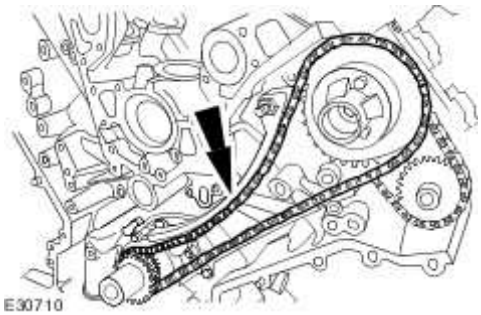

5 . Install the primary timing chain tensioner guide.

- Tighten to 12 Nm.

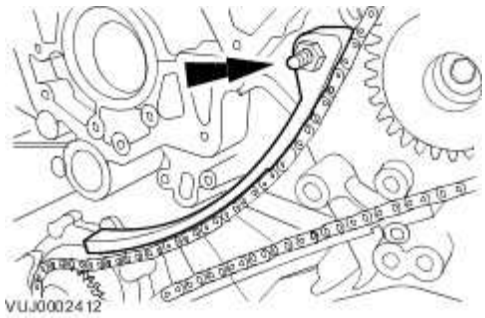

6 . **CAUTION: During timing chain tensioner compression, do not release the ratchet stem until the timing chain tensioner piston is fully bottomed in its bore or damage to the ratchet stem will result.**

Using a suitable tool, hold the left-hand timing chain tensioner ratchet lock mechanism away from the ratchet stem.

www.JagDocs.com

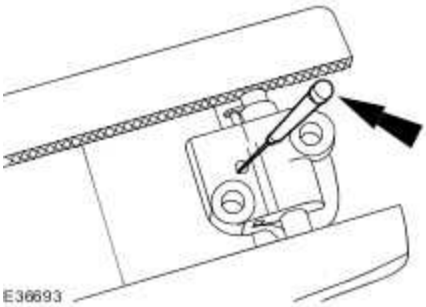

7 **NOTE:**

.

The timing chain tensioner piston should retract with minimal force. If binding occurs, reposition the timing chain tensioner to eliminate side loading.

Slowly compress the left-hand timing chain tensioner.

8 **NOTE:**

.

The retaining tool must remain in the timing chain tensioner until the timing chain tensioner is installed to the engine with the piston bottomed in the bore.

Using a suitable tool, retain the left-hand timing chain tensioner piston.

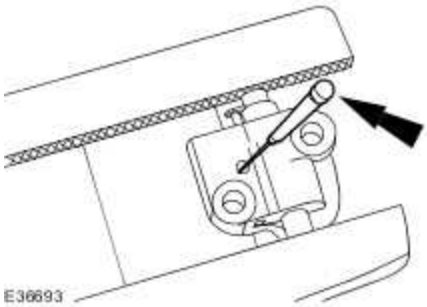

9 . Install the primary timing chain tensioner assembly.

Tighten to 12 Nm.

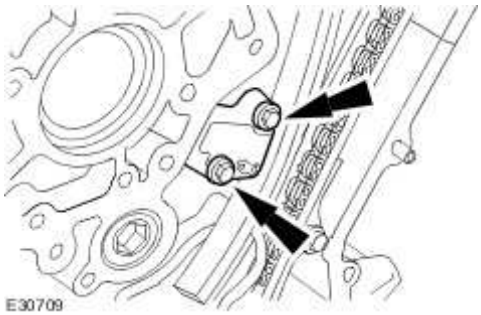

10 . Release the tension in the left-hand timing chain tensioner.

- Remove the retaining tool.

11 . **CAUTION: While applying the opposing force to sprocket and chain, tighten the sprocket bolt.**

Using the special tool, apply force to the tool in an anti-clockwise direction to tension the primary timing chain on its drive side.

- Tighten to 120 Nm.

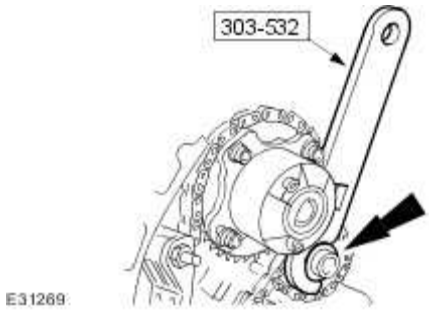

12 . **CAUTION: While applying the opposing force to sprocket and chain, tighten the sprocket bolt.**

Using the special tool, apply force to the tool in an anti-clockwise direction.

www.JagDocs.com

- Tighten to 120 Nm.

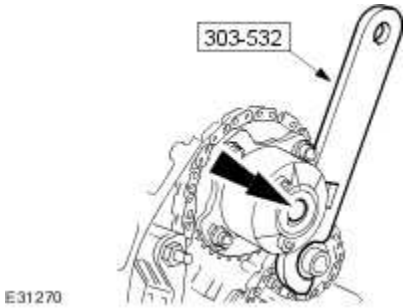

13 . Install the primary timing chain guide.

- Tighten to 12 Nm.

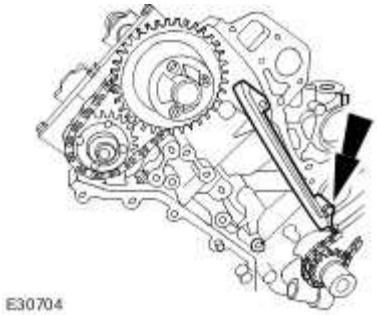

14 . **CAUTION: Make sure the timing chain slack is on the tensioned side of the timing chain.**

Install the primary timing chain.

- Install the primary chain over the crankshaft sprocket and the intake sprocket.

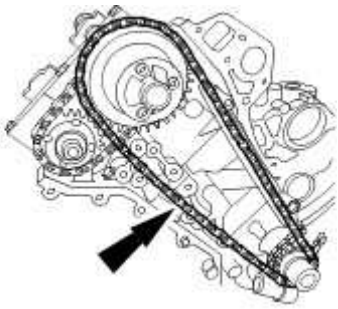

15 . Install the primary timing chain tensioner guide.

Tighten to 12 Nm.

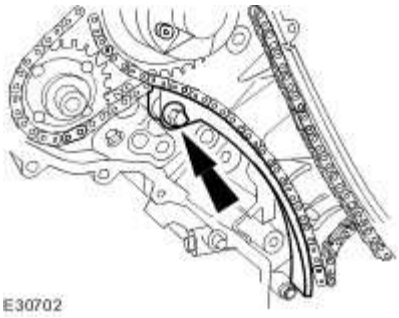

16 . **CAUTION: During timing chain tensioner compression, do not release the ratchet stem until the timing chain tensioner piston is fully bottomed in its bore or damage to the ratchet stem will result.**

Using a suitable tool, hold the right-hand timing chain tensioner ratchet lock mechanism away from the ratchet stem.

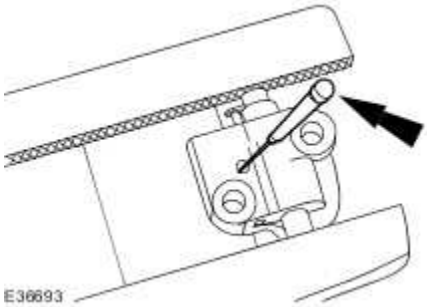

www.JagDocs.com

17 **NOTE:**

.

The timing chain tensioner piston should retract with minimal force. If binding occurs, reposition the timing chain tensioner to eliminate side loading.

Slowly compress the right-hand timing chain tensioner.

18 **NOTE:**

.

The retaining tool must remain in the timing chain tensioner until the timing chain tensioner is installed to the engine with the piston bottomed in the bore.

Using a suitable tool, retain the right-hand timing chain tensioner piston.

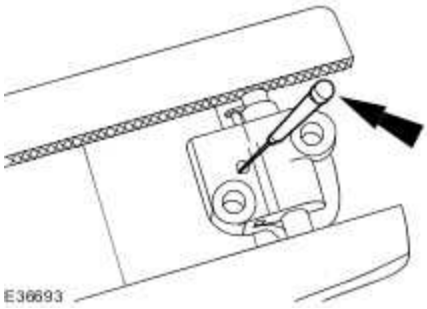

19 . Install the primary timing chain tensioner assembly.

- Tighten to 12 Nm.

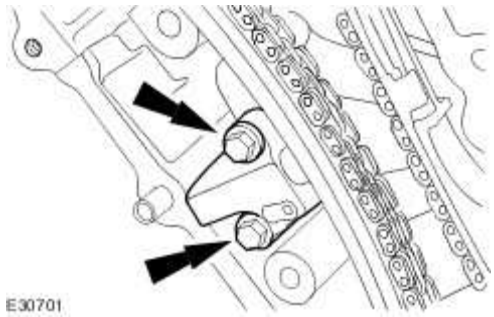

20 . Release the tension in the right-hand timing chain tensioner.

- Remove the retaining tool.

21 . **CAUTION: While applying the opposing force to sprocket and chain, tighten the sprocket bolt.**

Using the special tool, apply force to the tool in an anti-clockwise direction to tension the primary timing chain on its drive side.

- Tighten to 120 Nm.

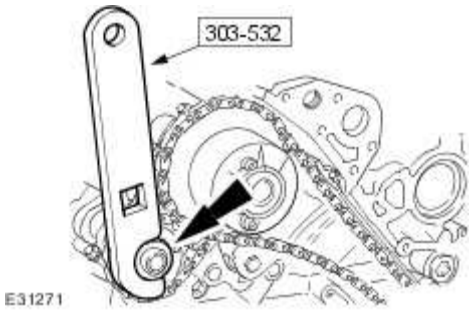

22 . **CAUTION: While applying the opposing force to sprocket and chain, tighten the sprocket bolt.**

Using the special tool, apply force to the tool in an anti-clockwise direction.

- Tighten to 120 Nm.

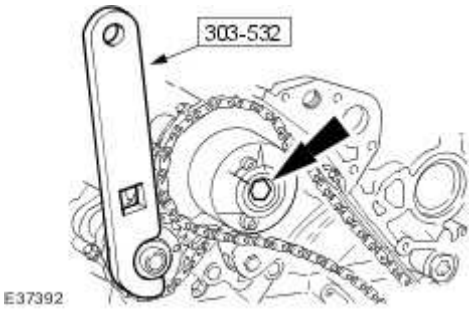

23 . Remove the special tool to the right-hand cylinder head.

www.JagDocs.com

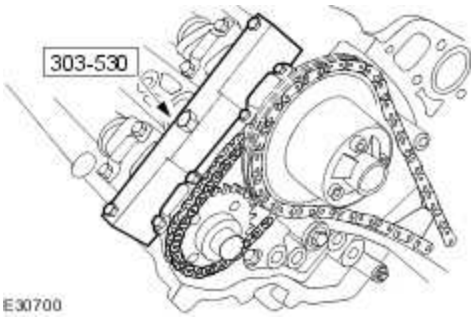

24 . Remove the special tool to the left-hand cylinder head.

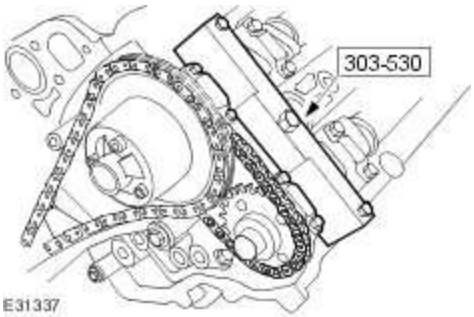

25 . Install the left-hand variable camshaft timing oil control unit housing.

- Install new O-ring seals.
- Tighten to 22 Nm.

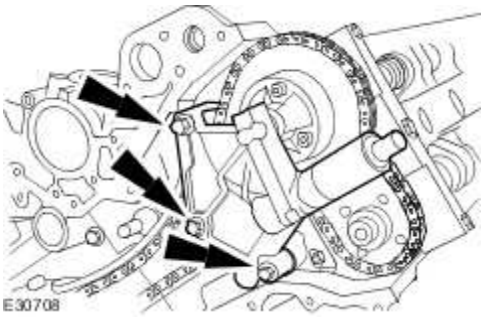

26 . Install the right-hand variable camshaft timing oil control unit housing.

- Install new O-ring seals.
- Tighten to 22 Nm.

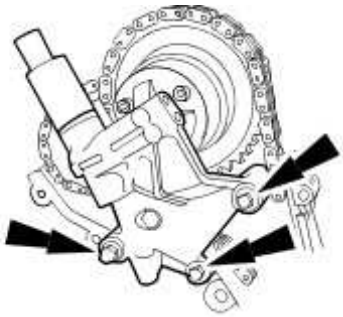

E30699

27 Install the engine front cover.
. For additional information, refer to Engine Front Cover - VIN Range: G45704->G99999 (12.65.01)

28 . Remove the special tool.

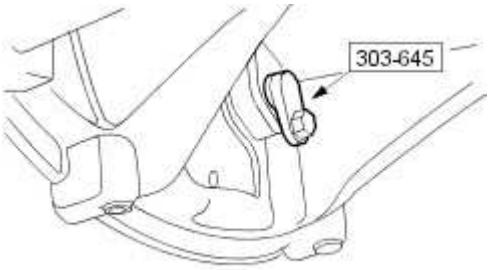

VUJ0002400

29 . Install the CKP sensor.

Tighten to 10 Nm.

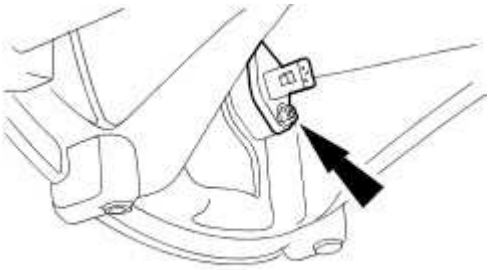

E30694

30 . Connect the CKP sensor electrical connector.

www.JagDocs.com

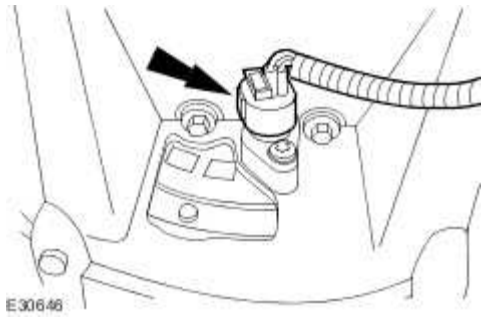

31 . Install the oil strainer.

- Install new O-ring seals.
- Tighten to 12 Nm.

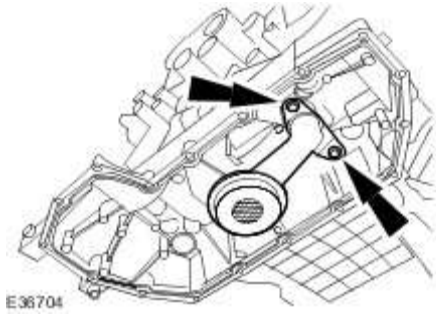

32 . Install the oil pan.
For additional information, refer to Oil Pan (12.60.44)

Secondary Timing Chain Tensioner

Special Service Tools

303-1077A

E76151

12mm Ribe bit socket
303-1077A

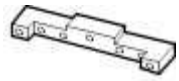

303-530

Camshaft setting tool
303-530

DWST021

Timing chain tensioning tool
303-532

DWST032

Crankshaft setting, main tool
303-645

Removal

1 . Remove the air deflector.
For additional information, refer to Air Deflector (76.11.41)

2 . Disconnect the crankshaft position (CKP) sensor electrical connector.

www.JagDocs.com

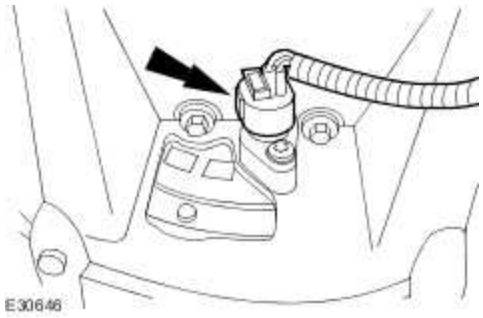

3 . Remove the CKP sensor.

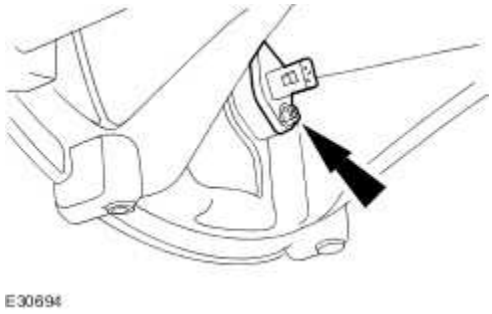

4 . Install the special tool.

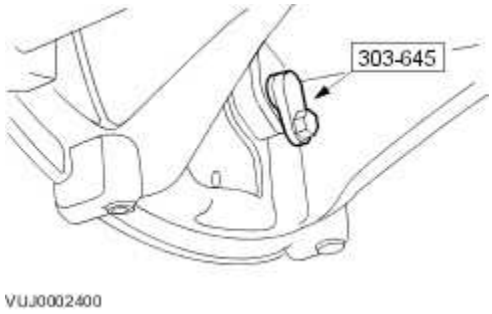

5 . Remove the valve cover.
For additional information, refer to Valve Cover LH - VIN Range: G00442->G45703 (12.29.43)
For additional information, refer to Valve Cover LH - VIN Range: G45704->G99999 (12.29.43)
For additional information, refer to Valve Cover RH - VIN Range: G00442->G45703 (12.29.44)
For additional information, refer to Valve Cover RH - VIN Range: G45704->G99999 (12.29.44)

6 . **NOTE:**

Left-hand shown, right-hand similar.

Install the special tool to the left-hand cylinder head.

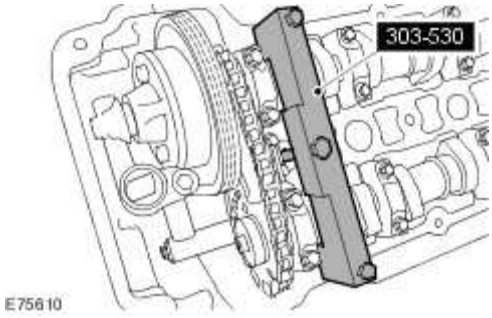

7 . **NOTE:**

Left-hand shown, right-hand similar.

Using the special tool, remove the exhaust camshaft sprocket retaining bolt.

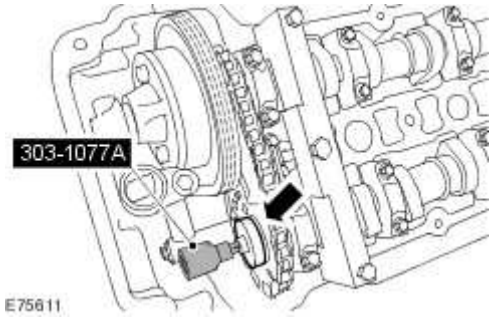

8 . **NOTE:**

Left-hand shown, right-hand similar.

Remove the secondary timing chain tensioner retaining bolts.

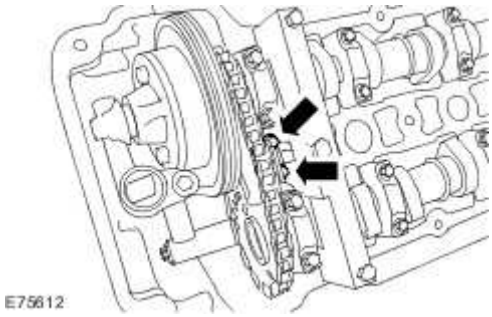

www.JagDocs.com

9 . **NOTE:**

Left-hand shown, right-hand similar.

Remove the secondary timing chain tensioner.

1) Reposition the exhaust camshaft sprocket and secondary timing chain.

2) Remove the secondary timing chain tensioner.

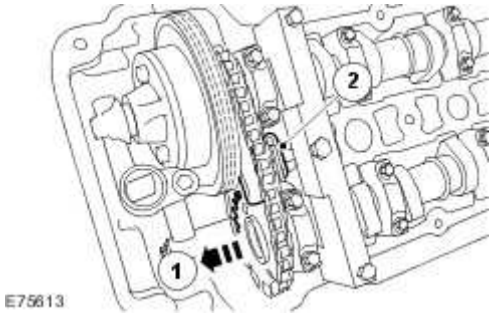

Installation

1 . **NOTE:**

Left-hand shown, right-hand similar.

Install the secondary timing chain tensioner.

1) Install the secondary timing chain tensioner.

2) Reposition the exhaust camshaft sprocket and secondary timing chain.

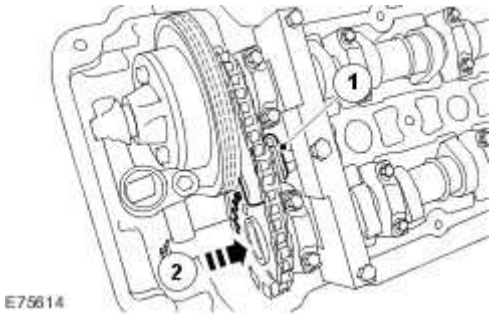

2 . **NOTE:**

Left-hand shown, right-hand similar.

Install the secondary timing chain tensioner retaining bolts.

- Tighten to 12 Nm.

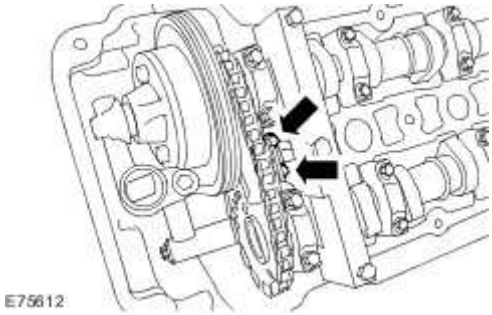

3 . Release the tension in the secondary timing chain tensioner.

- Remove the retaining tool.

4 . **CAUTION: Make sure that a new bolt is installed.**

NOTE:

Left-hand shown, right-hand similar.

Using the special tools, install the exhaust camshaft sprocket retaining bolt.

- Tighten to 20 Nm + 90 deg.

www.JagDocs.com

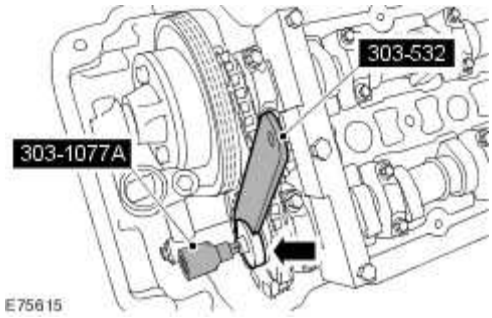

5 . **NOTE:**

Left-hand shown, right-hand similar.

Remove the special tool.

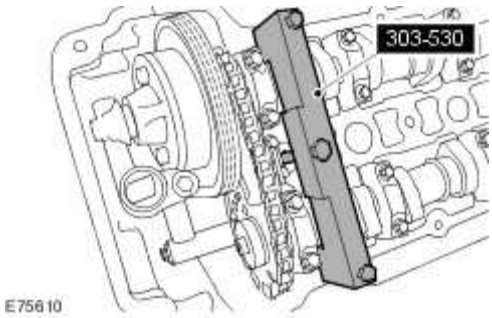

6 . Install the valve cover.
For additional information, refer to Valve Cover LH - VIN Range: G00442->G45703 (12.29.43)
For additional information, refer to Valve Cover LH - VIN Range: G45704->G99999 (12.29.43)
For additional information, refer to Valve Cover RH - VIN Range: G00442->G45703 (12.29.44)
For additional information, refer to Valve Cover RH - VIN Range: G45704->G99999 (12.29.44)

7 . Remove the special tool.

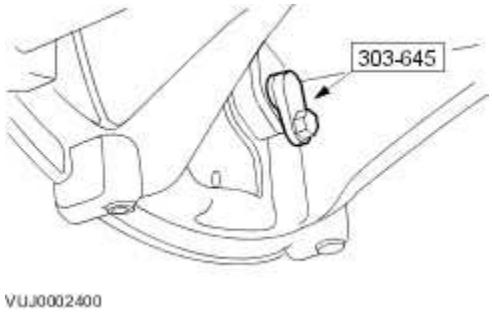

8 . Install the CKP sensor.

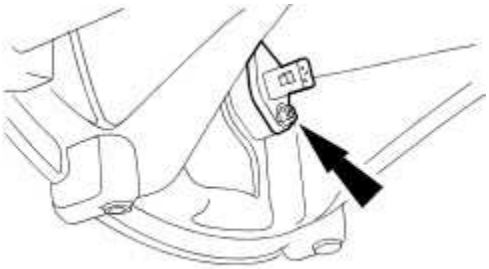

E30694

9 . Connect the crankshaft position (CKP) sensor electrical connector.

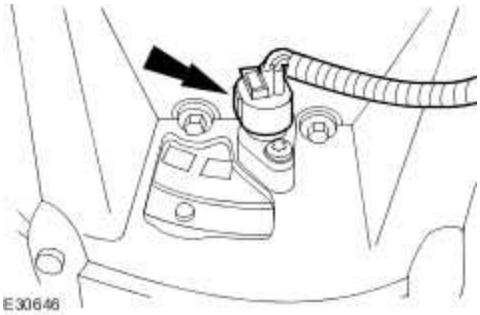

E30646

10 . Install the air deflector.

For additional information, refer to Air Deflector (76.11.41)

www.JagDocs.com

Timing Drive Components - VIN Range: G00442->G45703 (12.65.13)

Special Service Tools

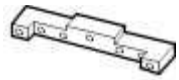

303-530

Camshaft setting tool
303-530

303-532

Timing chain tensioning tool
303-532

303-645

Crankshaft setting tool
303-645

Removal

All vehicles

1 Remove the engine front cover.
. For additional information, refer to Engine Front Cover - VIN Range: G00442->G45703 (12.65.01)

2 . Remove the spark plugs.

3 . Remove the air deflector.
For additional information, refer to Air Deflector (76.11.41)

4 . Disconnect the crankshaft position sensor electrical connector.

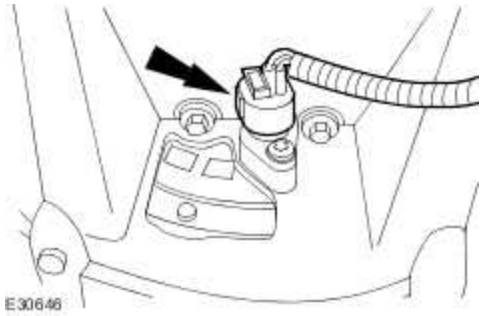

5 . Remove the crankshaft position sensor.

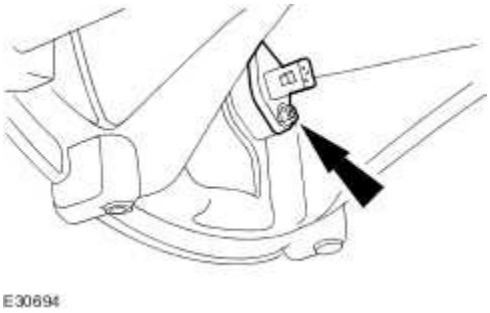

6 . **CAUTION: Make sure the spark plugs are removed to enable the engine to rotate freely.**

CAUTION: Do not rotate the crankshaft counterclockwise. The timing chains may bind causing engine damage.

CAUTION: Rotate the crankshaft clockwise to position the engine to top dead center (TDC) No. 1 cylinder

Install the special tool 303-645.

www.JagDocs.com

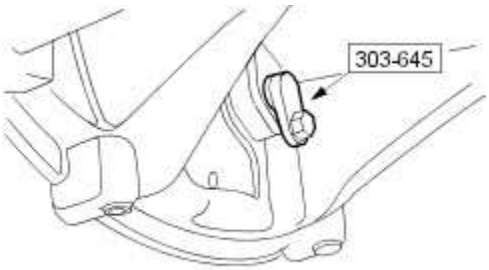

VUJ0002400

Vehicles without supercharger

7 . Remove the right-hand variable camshaft timing oil control unit housing.

- Remove and discard the O-ring seals.

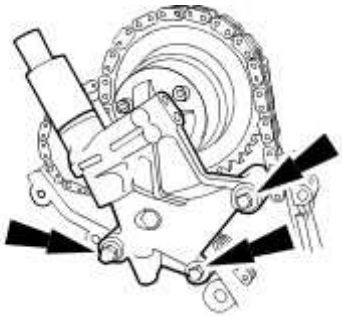

E30699

8 . Remove the left-hand variable camshaft timing oil control unit housing.

- Remove and discard the O-ring seals.

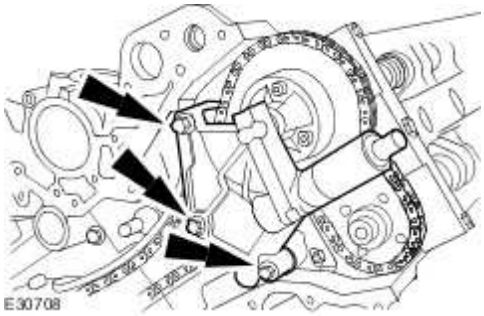

E30708

All vehicles

9 . Install the special tool to the left-hand cylinder head.

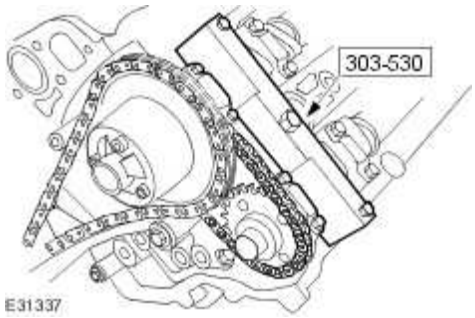

10 . Install the special tool to the right-hand cylinder head.

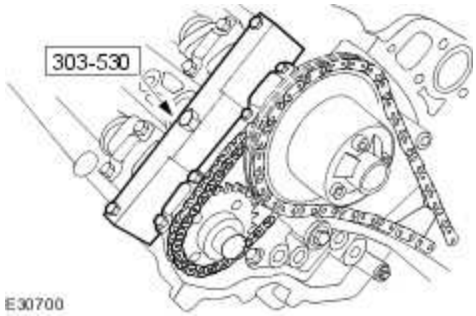

11 . Remove the primary timing chain tensioner assembly.

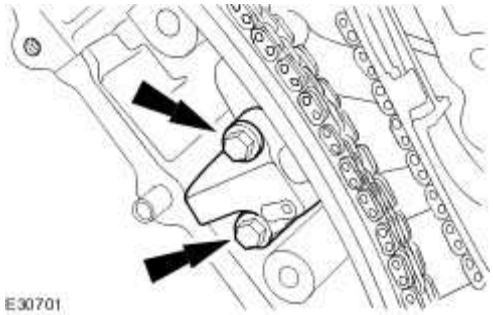

12 . Remove the primary timing chain tensioner guide.

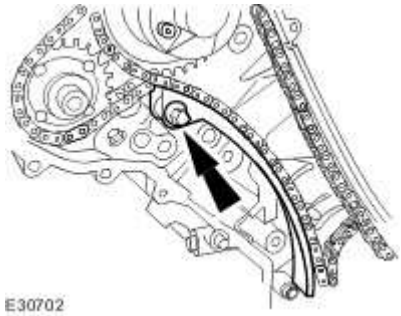

www.JagDocs.com

13 . Remove the primary timing chain.

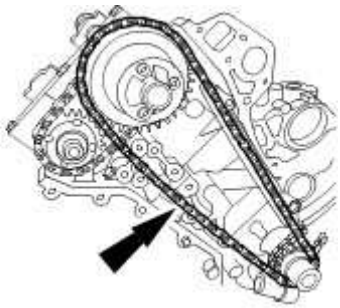

14 . Remove the primary timing chain guide.

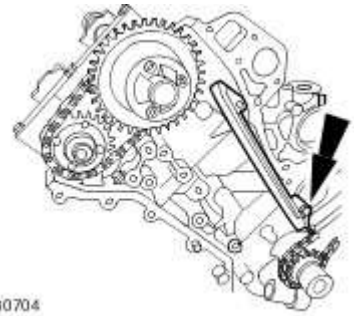

15 . Remove the secondary timing chain tensioner retaining bolts.

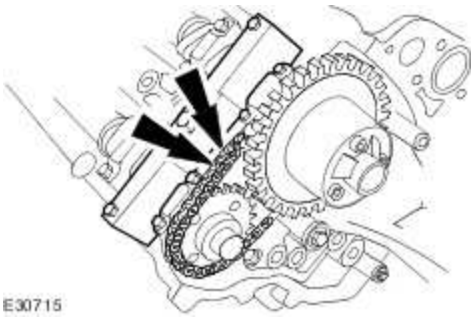

16 Remove the camshaft sprockets.

.

- Remove the secondary timing chain tensioner and secondary timing chain from the camshaft sprockets.

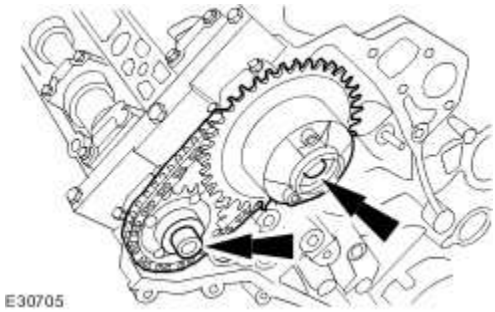

17 . Remove the primary timing chain tensioner assembly.

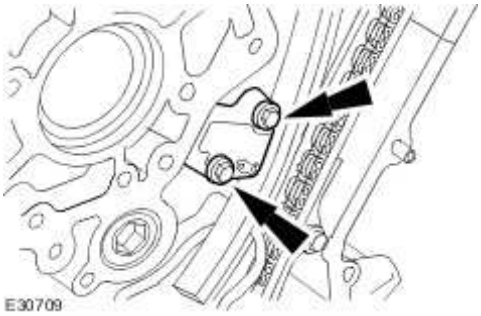

18 . Remove the primary timing chain tensioner guide.

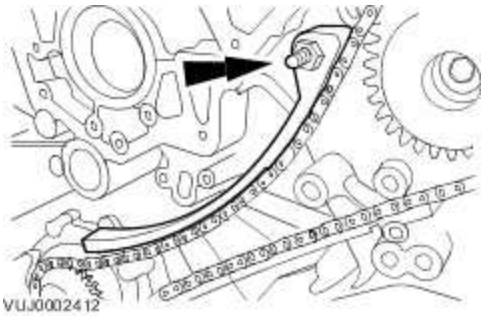

19 . Remove the primary timing chain.

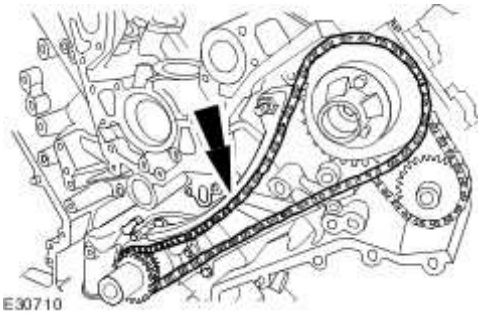

www.JagDocs.com

20 . Remove the crankshaft sprocket.

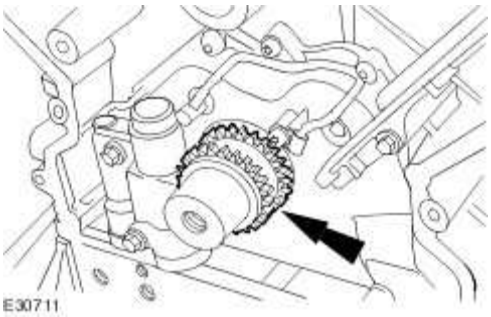

21 . Remove the primary timing chain tensioner guide.

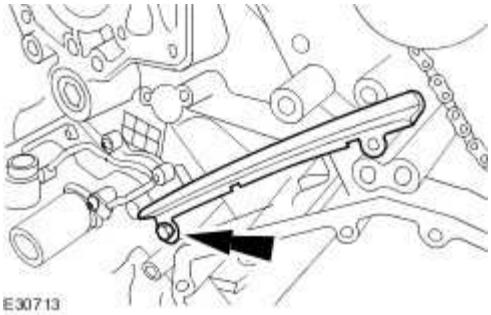

22 . Remove the secondary timing chain tensioner retaining bolts.

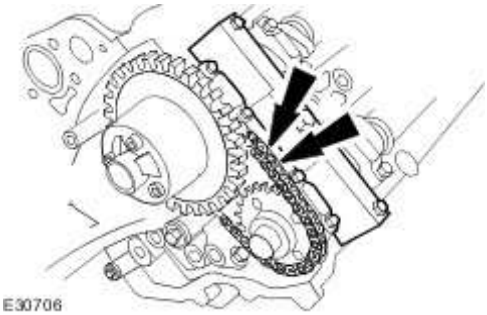

23 Remove the camshaft sprockets.

.

- Remove the secondary timing chain tensioner and secondary timing chain from the camshaft sprockets.

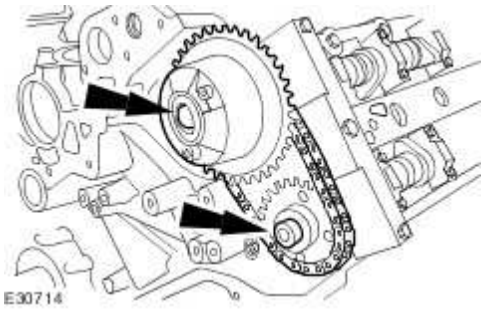

Installation

All vehicles

1 . Using a suitable tool, retain the left-hand timing chain tensioner piston.

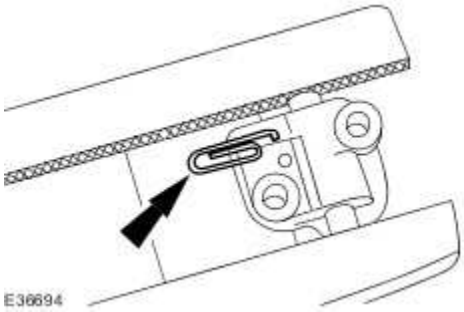

2 . **CAUTION: Do not tighten the camshaft sprocket retaining bolts.**

CAUTION: Make sure the secondary timing chain and camshaft sprockets are free to rotate.

Install the camshaft sprockets.

- Install the secondary timing chain tensioner and secondary timing chain to the camshaft sprockets.

www.JagDocs.com

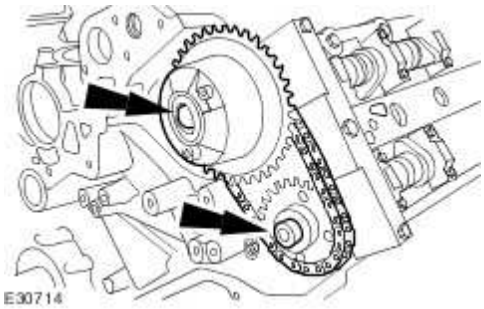

3 . Install the secondary timing chain tensioner retaining bolts.

- Tighten to 12 Nm.

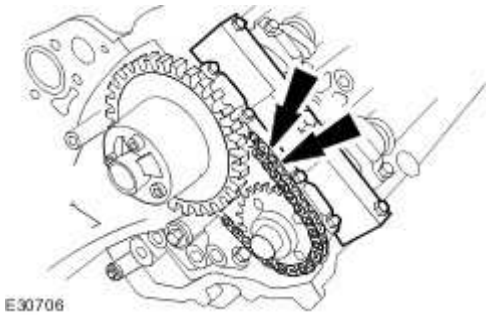

4 . Release the tension in the left-hand timing chain tensioner.

- Remove the retaining tool.

5 Install the timing chain tensioning tool 303-532 to the exhaust camshaft sprocket.
.

- Reposition the camshaft sprockets for the most advantageous position for use of the tool.

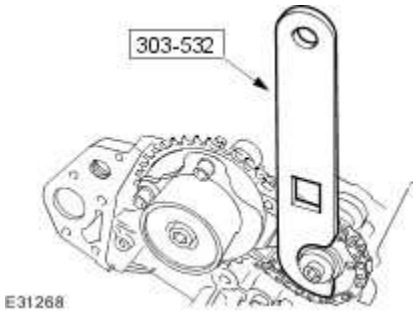

6 . Install the primary timing chain tensioner guide.

- Tighten to 12 Nm.

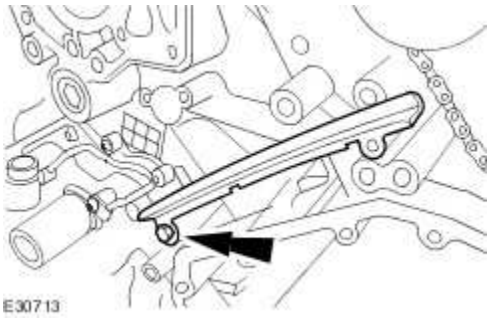

7 . Install the crankshaft sprocket.

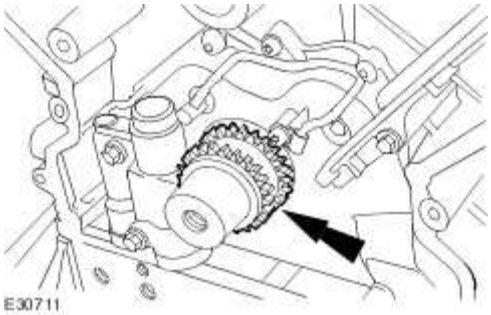

8 . **CAUTION: Make sure the timing chain slack is on the tensioned side of the timing chain.**

Install the primary timing chain.

- Install the primary chain over the crankshaft sprocket and the intake sprocket.

www.JagDocs.com

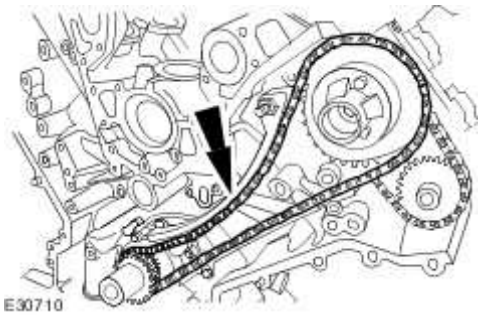

9 . Install the primary timing chain tensioner guide.

Tighten to 12 Nm.

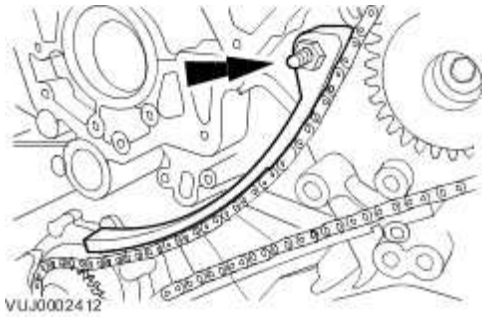

10 . **CAUTION: During timing chain tensioner compression, do not release the ratchet stem until the timing chain tensioner piston is fully bottomed in its bore or damage to the ratchet stem will result.**

Using a suitable tool, hold the left-hand timing chain tensioner ratchet lock mechanism away from the ratchet stem.

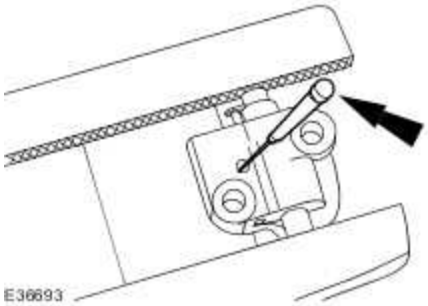

11 **NOTE:**

.

The timing chain tensioner piston should retract with minimal force. If binding occurs, reposition the timing chain tensioner to eliminate side loading.

Slowly compress the left-hand timing chain tensioner.

12 **NOTE:**

.

The retaining tool must remain in the timing chain tensioner until the timing chain tensioner is installed to the engine with the piston bottomed in the bore.

Using a suitable tool, retain the left-hand timing chain tensioner piston.

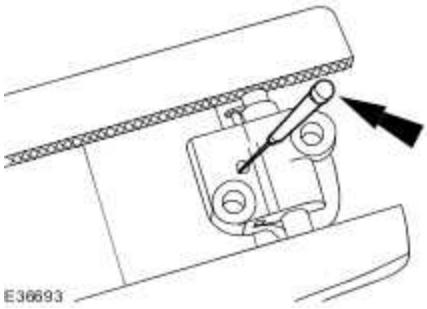

13 . Install the primary timing chain tensioner assembly.

- Tighten to 12 Nm.

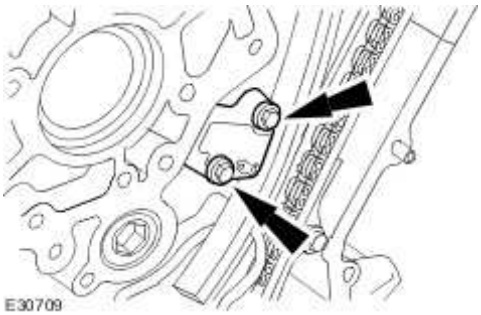

14 . Release the tension in the left-hand timing chain tensioner.

- Remove the retaining tool.

www.JagDocs.com

15. **CAUTION: While applying the opposing force to sprocket and chain, tighten the sprocket bolt.**

CAUTION: Make sure that a new bolt is installed.

Using the special tool apply force to the tool in an anti-clockwise direction to tension the primary timing chain on its drive side.

- Tighten to 20 Nm + 90 deg.

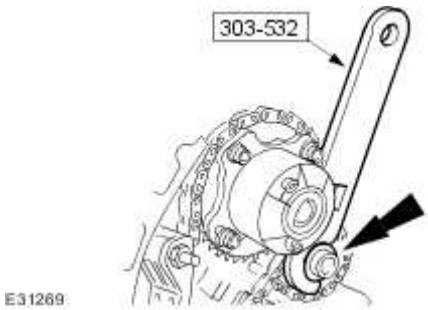

16. **CAUTION: While applying the opposing force to sprocket and chain, tighten the sprocket bolt.**

CAUTION: Make sure that a new bolt is installed.

Using the special tool apply force to the tool in an anti-clockwise direction.

- Tighten to 20 Nm + 90 deg.

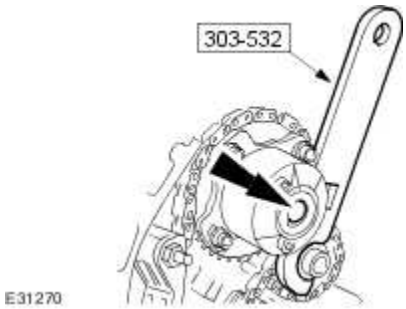

17 . Using a suitable tool, retain the right-hand timing chain tensioner piston.

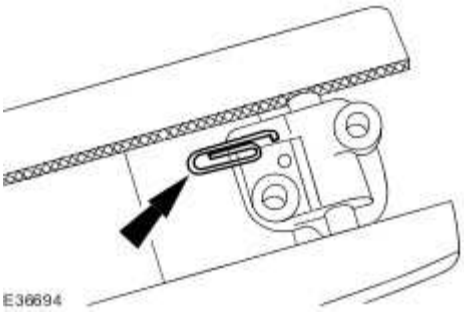

18 . **CAUTION: Do not tighten the camshaft sprocket retaining bolts.**

CAUTION: Make sure the secondary timing chain and camshaft sprockets are free to rotate.

Install the camshaft sprockets.

- Install the secondary timing chain tensioner and secondary timing chain to the camshaft sprockets.

www.JagDocs.com

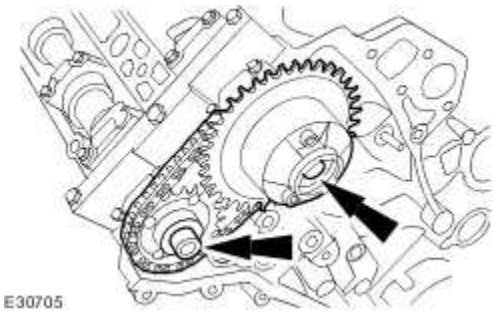

19 . Install the secondary timing chain tensioner retaining bolts.

- Tighten to 12 Nm.

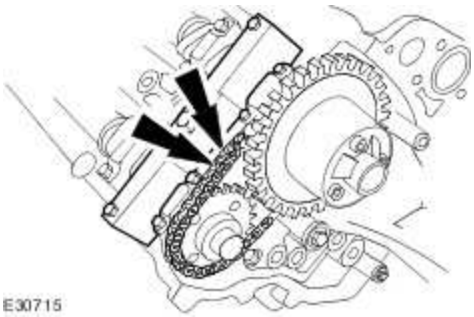

20 Install the timing chain tensioning tool 303-532 to the exhaust camshaft sprocket.

.

- Reposition the camshaft sprockets for the most advantageous position for use of the tool.

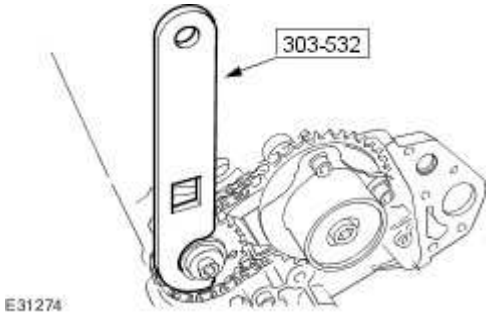

21 . Install the primary timing chain guide.

- Tighten to 12 Nm.

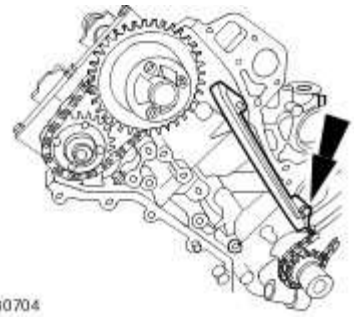

22 . **CAUTION: Make sure the timing chain slack is on the tensioned side of the timing chain.**

Install the primary timing chain.

- Install the primary chain over the crankshaft sprocket and the intake sprocket.

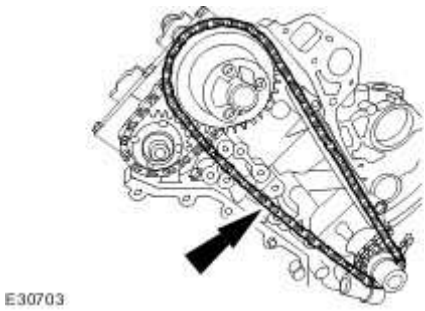

23 . Install the primary timing chain tensioner guide.

- Tighten to 12 Nm.

www.JagDocs.com

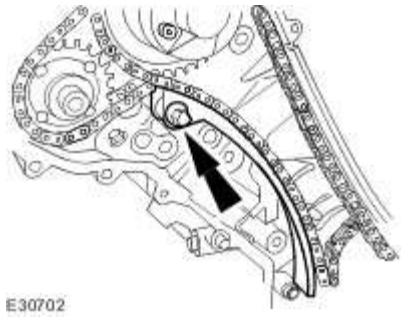

24. **CAUTION: During timing chain tensioner compression, do not release the ratchet stem until the timing chain tensioner piston is fully bottomed in its bore or damage to the ratchet stem will result.**

Using a suitable tool, hold the right-hand timing chain tensioner ratchet lock mechanism away from the ratchet stem.

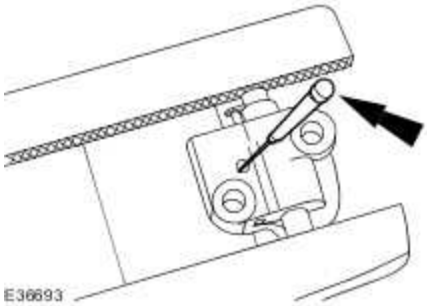

25. **NOTE:**

The timing chain tensioner piston should retract with minimal force. If binding occurs, reposition the timing chain tensioner to eliminate side loading.

Slowly compress the right-hand timing chain tensioner.

26. **NOTE:**

The retaining tool must remain in the timing chain tensioner until the timing chain tensioner is installed to the engine with the piston bottomed in the bore.

Using a suitable tool, retain the right-hand timing chain tensioner piston.

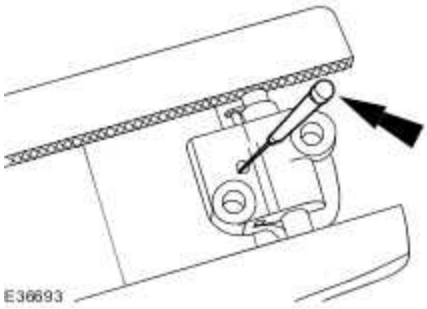

27 . Install the primary timing chain tensioner assembly.

- Tighten to 12 Nm.

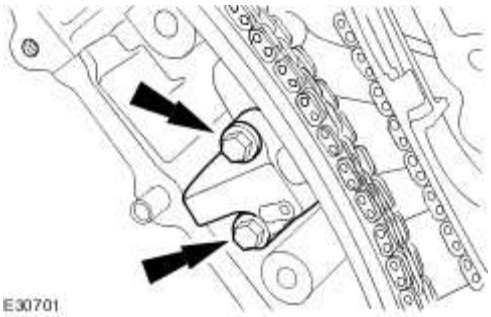

28 . Release the tension in the right-hand timing chain tensioner.

- Remove the retaining tool.

29 . **CAUTION: While applying the opposing force to sprocket and chain, tighten the sprocket bolt.**

CAUTION: Make sure that a new bolt is installed.

Using the special tool apply force to the tool in an anti-clockwise direction to tension the primary timing chain on its drive side.

www.JagDocs.com

Tighten to 20 Nm + 90 deg.

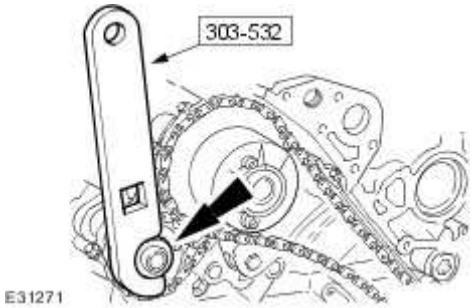

30 . **CAUTION: While applying the opposing force to sprocket and chain, tighten the sprocket bolt.**

CAUTION: Make sure that a new bolt is installed.

Using the special tool apply force to the tool in an anti-clockwise direction.

Tighten to 20 Nm + 90 deg.

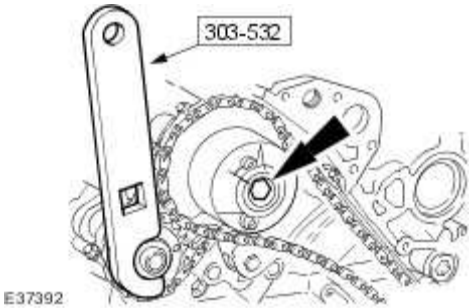

31 . Remove the special tool from the right-hand cylinder head.

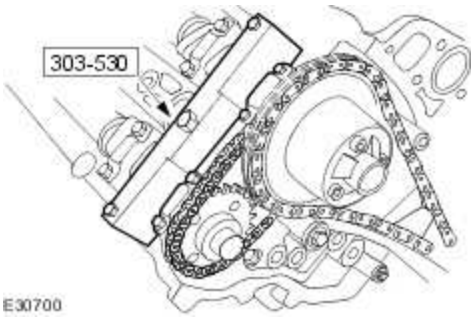

32 . Remove the special tool from the left-hand cylinder head.

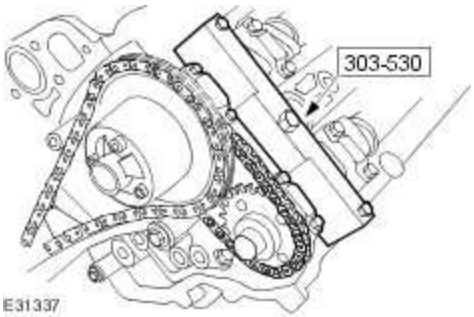

Vehicles without supercharger

33 . Install the left-hand variable camshaft timing oil control unit housing.

- Install new O-ring seals.
- Tighten to 22 Nm.

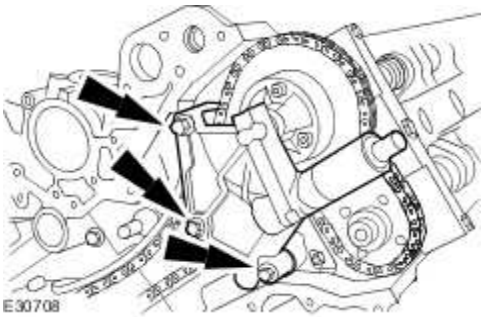

34 . Install the right-hand variable camshaft timing oil control unit housing.

- Install new O-ring seals.

www.JagDocs.com

Tighten to 22 Nm.

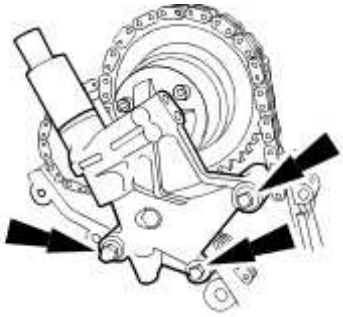

E30699

All vehicles

35 . Remove the special tool.

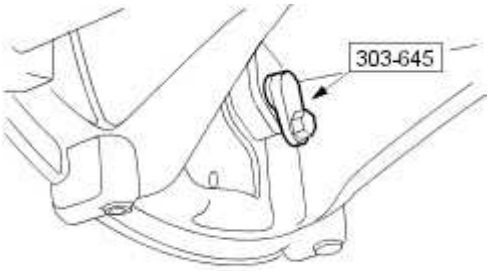

VUJ0002400

36 . Install the crankshaft position sensor.

Tighten to 10 Nm.

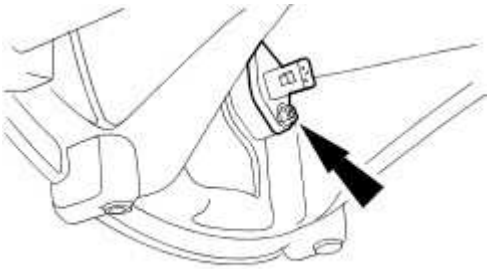

E30694

37 . Connect the crankshaft position sensor electrical connector.

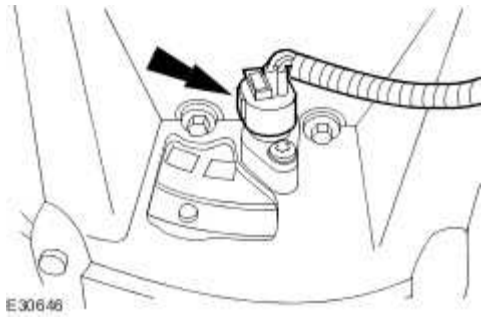

38 . Install the air deflector.
For additional information, refer to Air Deflector (76.11.41)

39 . Install the spark plugs.

40 Install the engine front cover.
. For additional information, refer to Engine Front Cover - VIN Range: G00442->G45703 (12.65.01)

www.JagDocs.com

Timing Drive Components - VIN Range: G45704->G99999 (12.65.13)

Special Service Tools

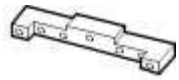

303-530

Camshaft setting tool
303-530

303-532

Timing chain tensioning tool
303-532

303-645

Crankshaft setting tool
303-645

Removal

1 Remove the engine front cover.
. For additional information, refer to Engine Front Cover - VIN Range: G45704->G99999 (12.65.01)

2 . Remove the spark plugs.

3 . Raise the vehicle.

4 . Disconnect the crankshaft position (CKP) sensor electrical connector.

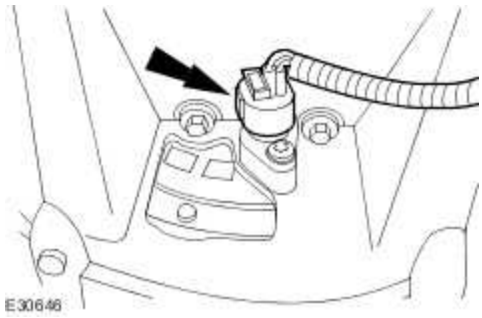

5 . Remove the CKP sensor.

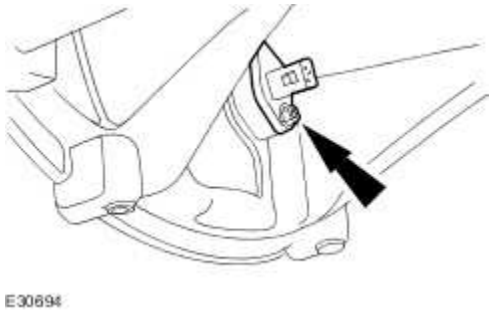

6 . **CAUTION: Make sure the spark plugs are removed to enable the engine to rotate freely.**

CAUTION: Do not rotate the crankshaft counterclockwise. The timing chains may bind causing engine damage.

CAUTION: Rotate the crankshaft clockwise to position the engine to top dead center (TDC) No. 1 cylinder

Install the special tool 303-645.

www.JagDocs.com

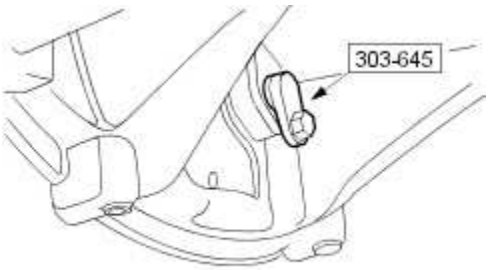

VUJ0002400

7 . Lower the vehicle.

8 . Remove the right-hand variable camshaft timing oil control unit housing.

- Remove and discard the O-ring seals.

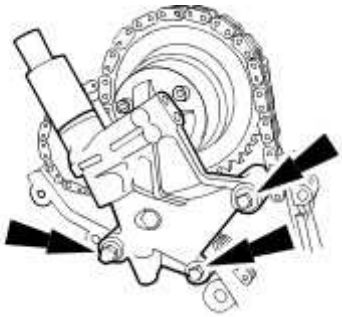

E30699

9 . Remove the left-hand variable camshaft timing oil control unit housing.

- Remove and discard the O-ring seals.

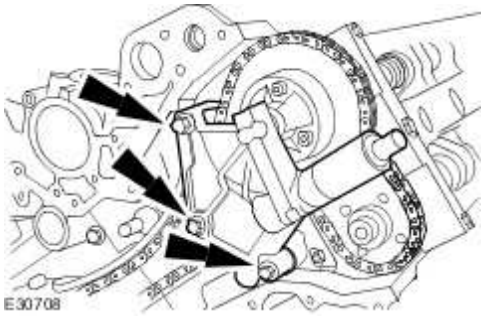

E30708

10 . Install the special tool to the left-hand cylinder head.

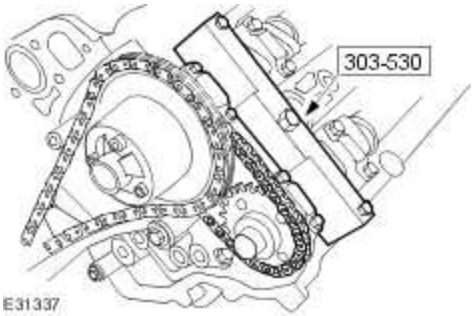

11 . Install the special tool to the right-hand cylinder head.

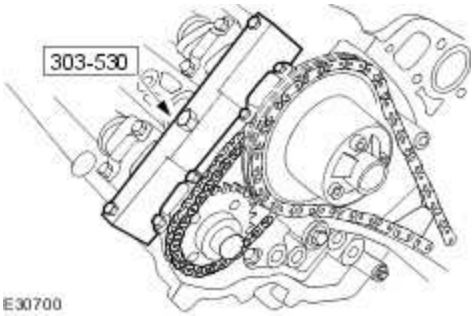

12 . Remove the primary timing chain tensioner assembly.

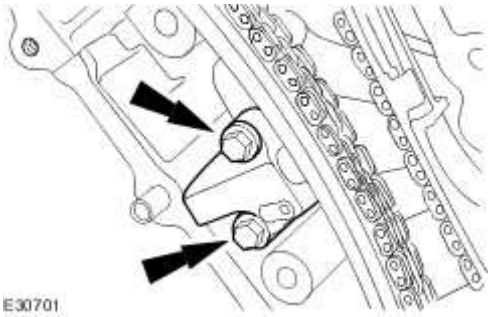

13 . Remove the primary timing chain tensioner guide.

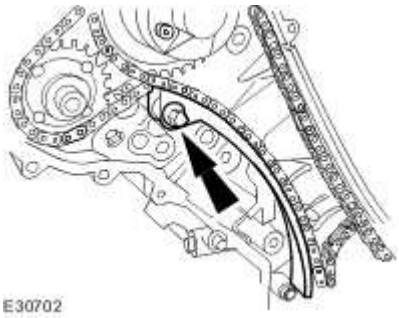

www.JagDocs.com

14 . Remove the primary timing chain.

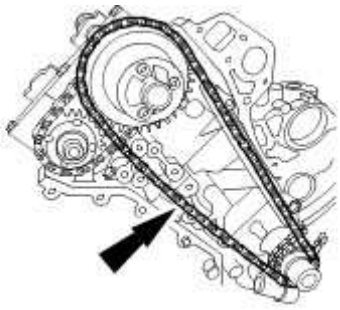

15 . Remove the primary timing chain guide.

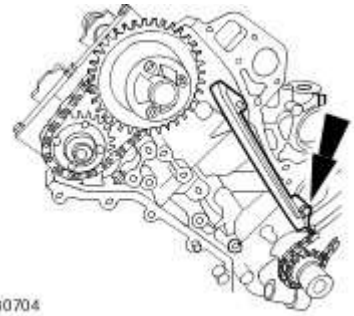

16 . Remove the secondary timing chain tensioner retaining bolts.

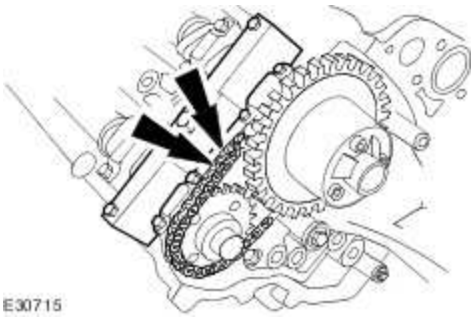

17 Remove the camshaft sprockets.

.

- Remove the secondary timing chain tensioner and secondary timing chain from the camshaft sprockets.

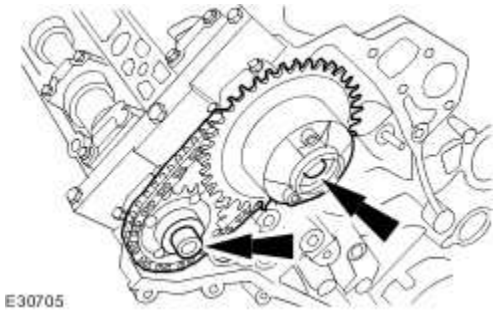

18 . Remove the primary timing chain tensioner assembly.

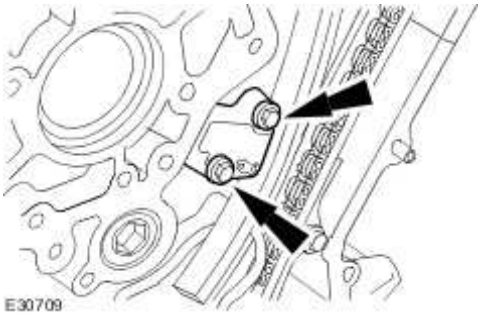

19 . Remove the primary timing chain tensioner guide.

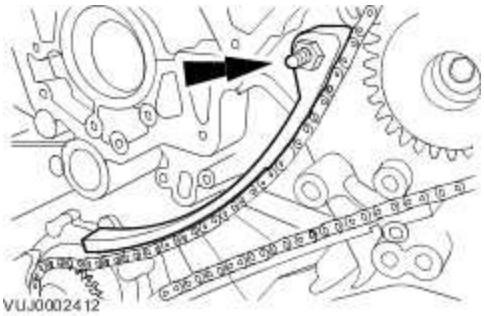

20 . Remove the primary timing chain.

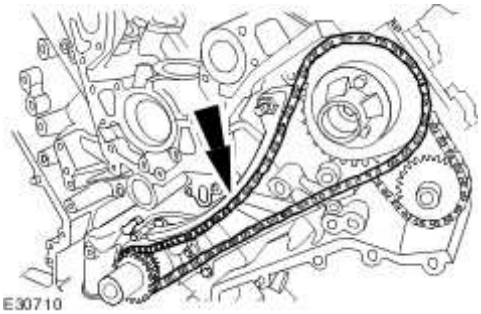

www.JagDocs.com

21 . Remove the crankshaft sprocket.

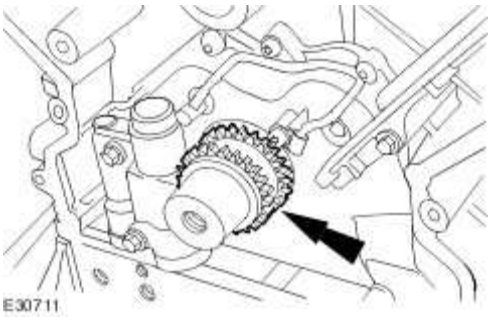

22 . Remove the primary timing chain tensioner guide.

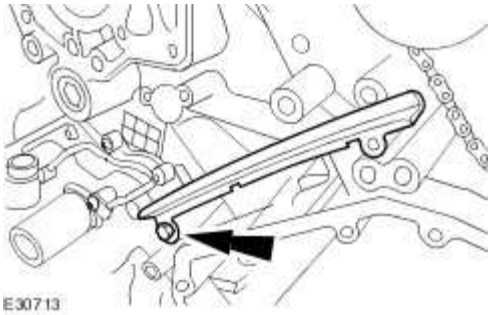

23 . Remove the secondary timing chain tensioner retaining bolts.

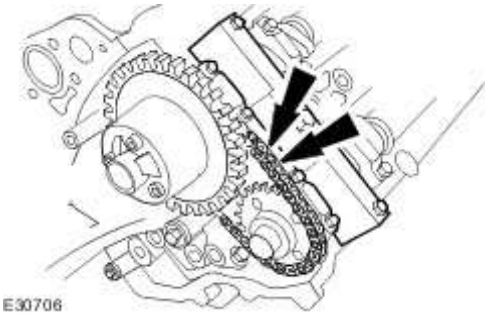

24 Remove the camshaft sprockets.

.

- Remove the secondary timing chain tensioner and secondary timing chain from the camshaft sprockets.

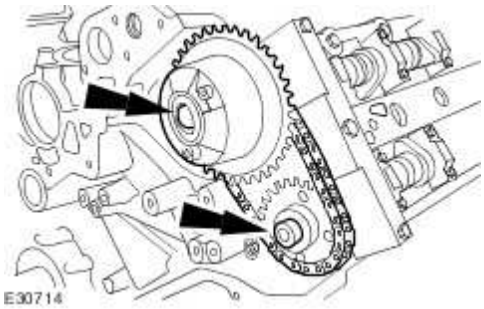

Installation

1 . Using a suitable tool, retain the left-hand timing chain tensioner piston.

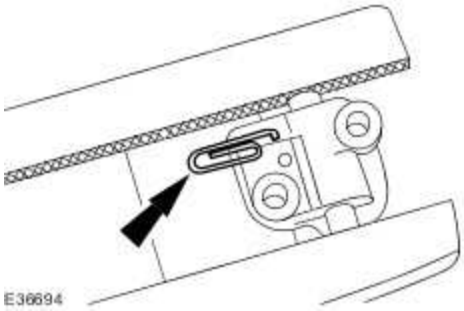

2 . **CAUTION: Do not tighten the camshaft sprocket retaining bolts.**

CAUTION: Make sure the secondary timing chain and camshaft sprockets are free to rotate.

Install the camshaft sprockets.

- Install the secondary timing chain tensioner and secondary timing chain to the camshaft sprockets.

www.JagDocs.com

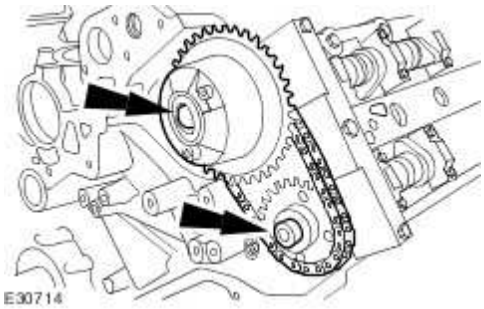

3 . Install the secondary timing chain tensioner retaining bolts.

- Tighten to 12 Nm.

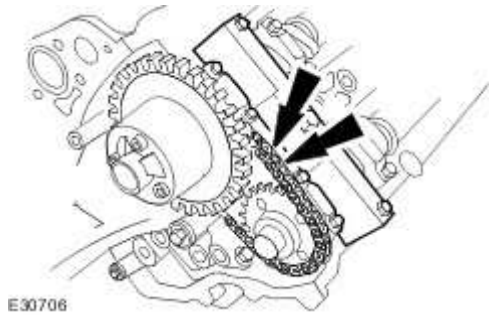

4 . Release the tension in the left-hand timing chain tensioner.

- Remove the retaining tool.

5 Install the timing chain tensioning tool 303-532 to the exhaust camshaft sprocket.
.

- Reposition the camshaft sprockets for the most advantageous position for use of the tool.

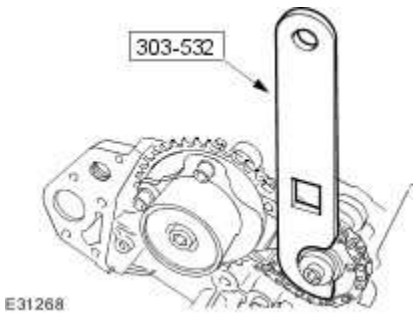

6 . Install the primary timing chain tensioner guide.

- Tighten to 12 Nm.

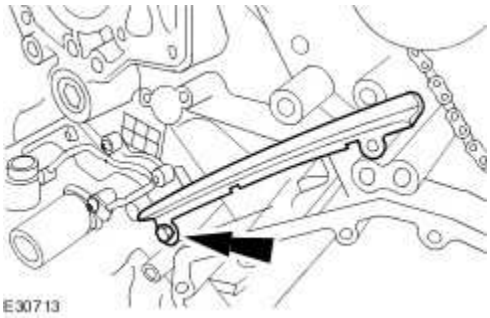

7 . Install the crankshaft sprocket.

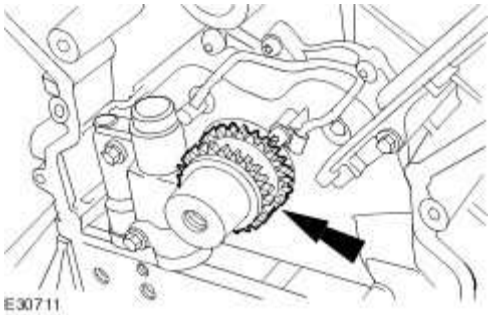

8 . **CAUTION: Make sure the timing chain slack is on the tensioned side of the timing chain.**

Install the primary timing chain.

- Install the primary chain over the crankshaft sprocket and the intake sprocket.

www.JagDocs.com

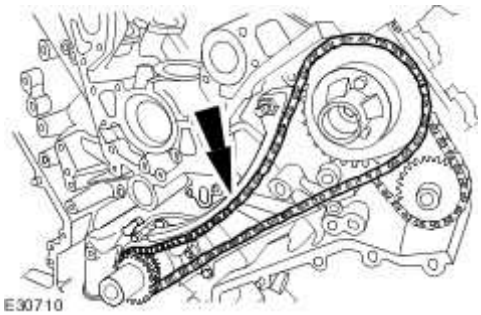

9 . Install the primary timing chain tensioner guide.

Tighten to 12 Nm.

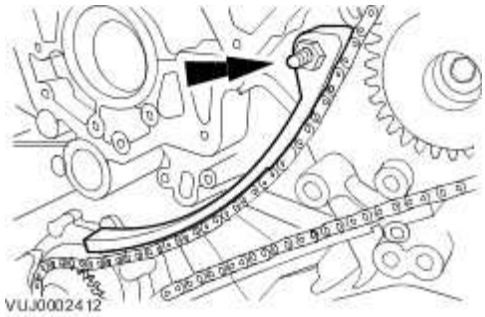

10 . **CAUTION: During timing chain tensioner compression, do not release the ratchet stem until the timing chain tensioner piston is fully bottomed in its bore or damage to the ratchet stem will result.**

Using a suitable tool, hold the left-hand timing chain tensioner ratchet lock mechanism away from the ratchet stem.

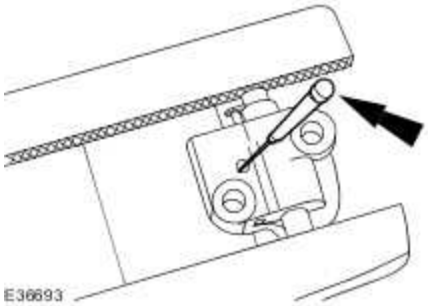

11 **NOTE:**

.

The timing chain tensioner piston should retract with minimal force. If binding occurs, reposition the timing chain tensioner to eliminate side loading.

Slowly compress the left-hand timing chain tensioner.

12 **NOTE:**

.

The retaining tool must remain in the timing chain tensioner until the timing chain tensioner is installed to the engine with the piston bottomed in the bore.

Using a suitable tool, retain the left-hand timing chain tensioner piston.

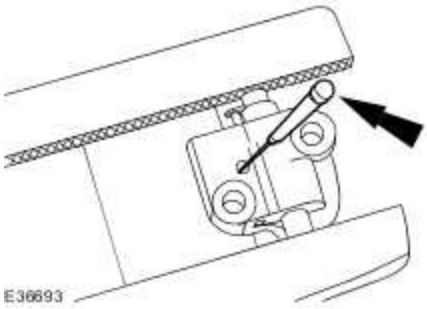

13 . Install the primary timing chain tensioner assembly.

- Tighten to 12 Nm.

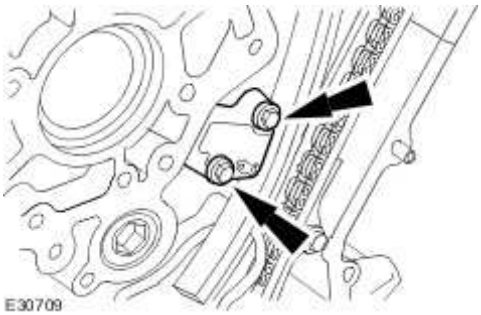

14 . Release the tension in the left-hand timing chain tensioner.

- Remove the retaining tool.

www.JagDocs.com

15. **CAUTION: While applying the opposing force to sprocket and chain, tighten the sprocket bolt.**

CAUTION: Make sure that a new bolt is installed.

Using the special tool apply force to the tool in an anti-clockwise direction to tension the primary timing chain on its drive side.

- Tighten to 20 Nm + 90 deg.

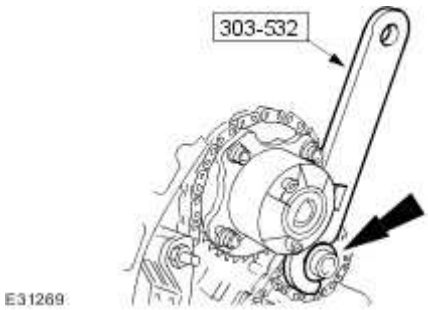

16. **CAUTION: While applying the opposing force to sprocket and chain, tighten the sprocket bolt.**

CAUTION: Make sure that a new bolt is installed.

Using the special tool apply force to the tool in an anti-clockwise direction.

- Tighten to 20 Nm + 90 deg.

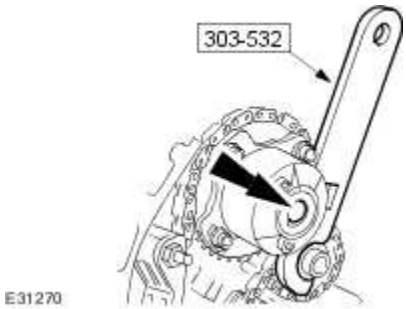

17 . Using a suitable tool, retain the right-hand timing chain tensioner piston.

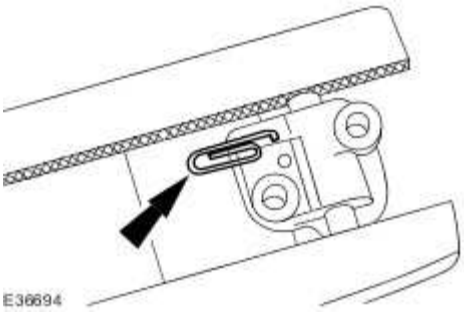

18 . **CAUTION: Do not tighten the camshaft sprocket retaining bolts.**

CAUTION: Make sure the secondary timing chain and camshaft sprockets are free to rotate.

Install the camshaft sprockets.

- Install the secondary timing chain tensioner and secondary timing chain to the camshaft sprockets.

www.JagDocs.com

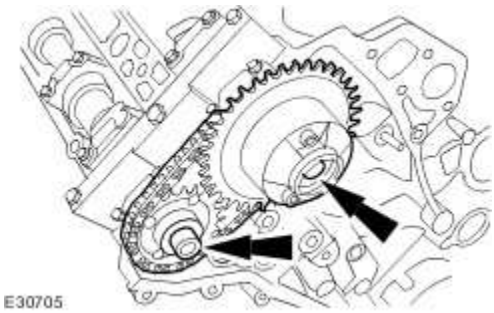

19 . Install the secondary timing chain tensioner retaining bolts.

- Tighten to 12 Nm.

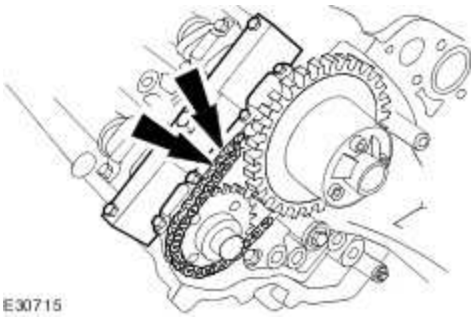

20 Install the timing chain tensioning tool 303-532 to the exhaust camshaft sprocket.

.

- Reposition the camshaft sprockets for the most advantageous position for use of the tool.

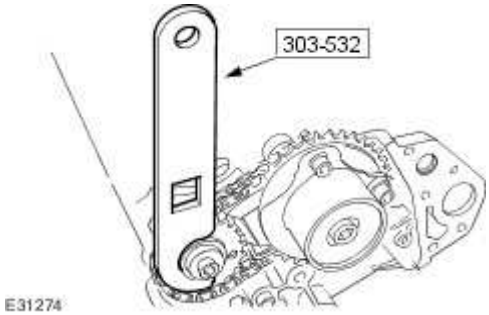

21 . Install the primary timing chain guide.

- Tighten to 12 Nm.

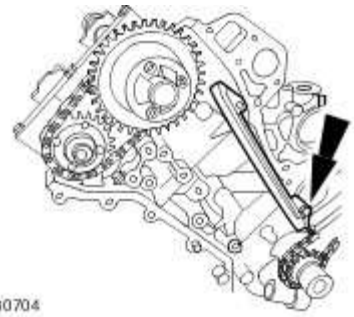

22 . **CAUTION: Make sure the timing chain slack is on the tensioned side of the timing chain.**

Install the primary timing chain.

- Install the primary chain over the crankshaft sprocket and the intake sprocket.

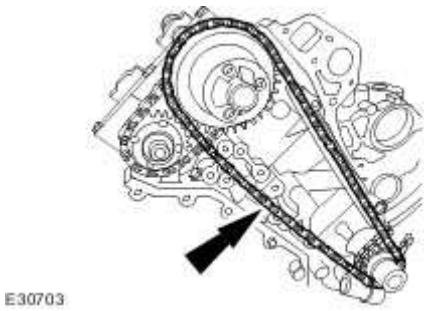

23 . Install the primary timing chain tensioner guide.

- Tighten to 12 Nm.

www.JagDocs.com

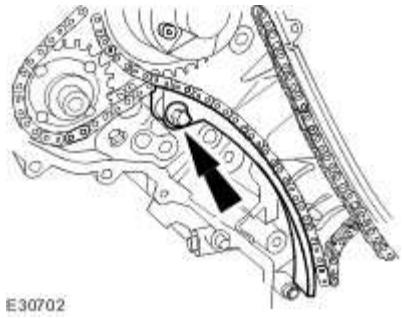

24. **CAUTION: During timing chain tensioner compression, do not release the ratchet stem until the timing chain tensioner piston is fully bottomed in its bore or damage to the ratchet stem will result.**

Using a suitable tool, hold the right-hand timing chain tensioner ratchet lock mechanism away from the ratchet stem.

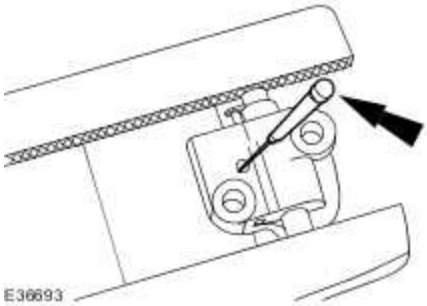

25. **NOTE:**

The timing chain tensioner piston should retract with minimal force. If binding occurs, reposition the timing chain tensioner to eliminate side loading.

Slowly compress the right-hand timing chain tensioner.

26. **NOTE:**

The retaining tool must remain in the timing chain tensioner until the timing chain tensioner is installed to the engine with the piston bottomed in the bore.

Using a suitable tool, retain the right-hand timing chain tensioner piston.

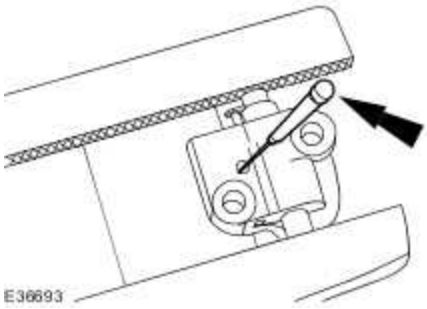

27 . Install the primary timing chain tensioner assembly.

- Tighten to 12 Nm.

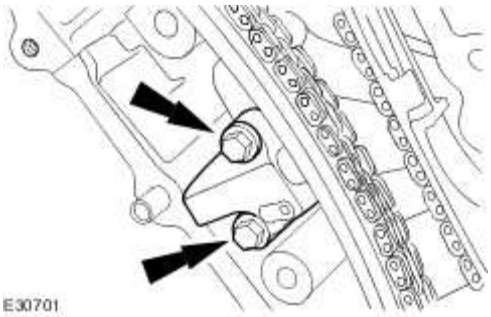

28 . Release the tension in the right-hand timing chain tensioner.

- Remove the retaining tool.

29 . **CAUTION: While applying the opposing force to sprocket and chain, tighten the sprocket bolt.**

CAUTION: Make sure that a new bolt is installed.

Using the special tool apply force to the tool in an anti-clockwise direction to tension the primary timing chain on its drive side.

www.JagDocs.com

Tighten to 20 Nm + 90 deg.

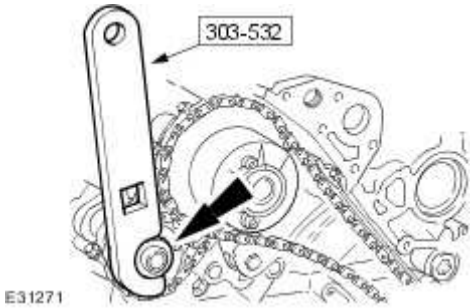

30 . **CAUTION: While applying the opposing force to sprocket and chain, tighten the sprocket bolt.**

CAUTION: Make sure that a new bolt is installed.

Using the special tool apply force to the tool in an anti-clockwise direction.

Tighten to 20 Nm + 90 deg.

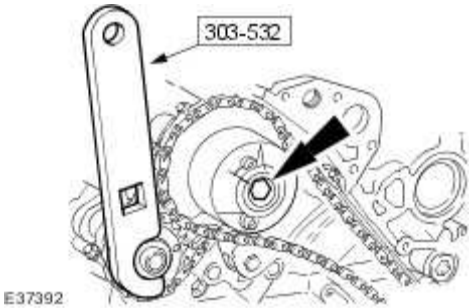

31 . Remove the special tool from the right-hand cylinder head.

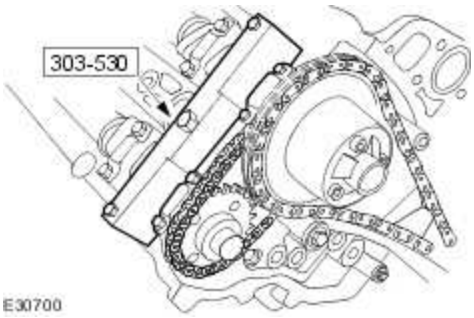

32 . Remove the special tool from the left-hand cylinder head.

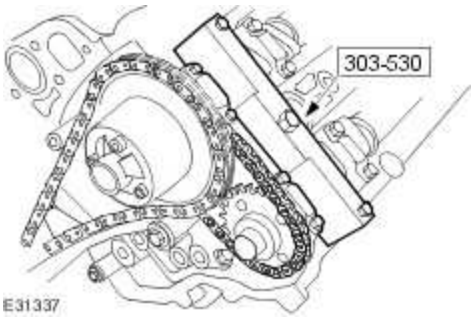

33 . Install the left-hand variable camshaft timing oil control unit housing.

- Install new O-ring seals.
- Tighten to 22 Nm.

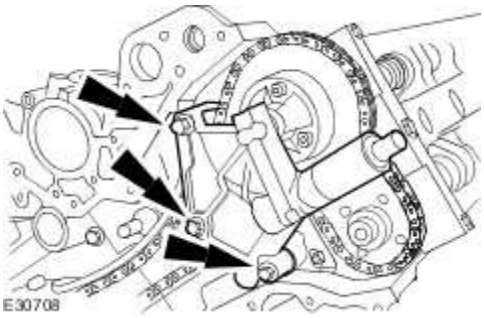

34 . Install the right-hand variable camshaft timing oil control unit housing.

- Install new O-ring seals.
- Tighten to 22 Nm.

www.JagDocs.com

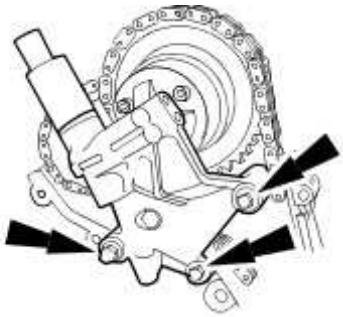

E30699

35 . Raise the vehicle.

36 . Remove the special tool.

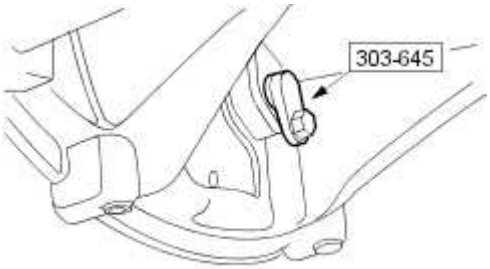

VUJ0002400

37 . Install the CKP sensor.

Tighten to 10 Nm.

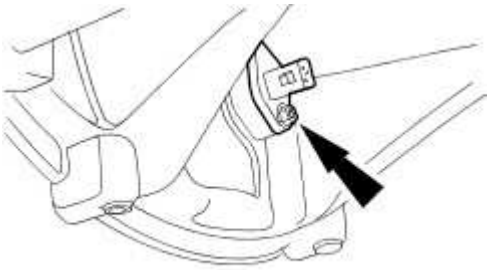

E30694

38 . Connect the CKP sensor electrical connector.

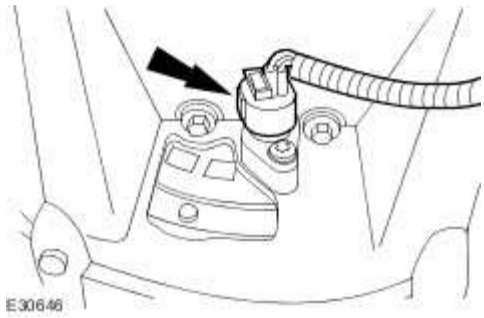

39 . Lower the vehicle.

40 . Install the spark plugs.

41 Install the engine front cover.
. For additional information, refer to Engine Front Cover - VIN Range: G45704->G99999 (12.65.01)

www.JagDocs.com

Valve Cover LH - VIN Range: G00442->G45703 (12.29.43)

Removal

All vehicles

1 . Remove the air cleaner. <<303-12B>>

2 . **CAUTION: If power steering fluid comes into contact with the paintwork, the affected area must be immediately washed down with cold water.**

Detach the power steering fluid reservoir.

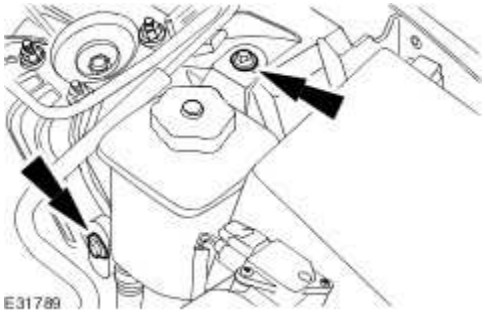

3 . Remove the ignition coil-on-plug cover.

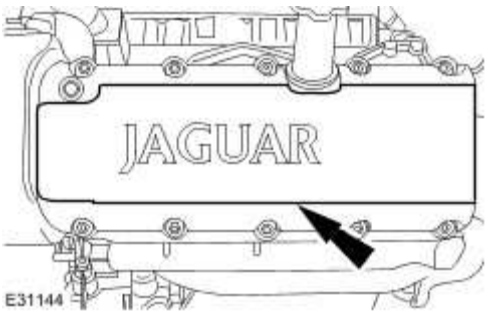

4 . Remove the oil level indicator and tube.

- Remove and discard the O-ring seal.

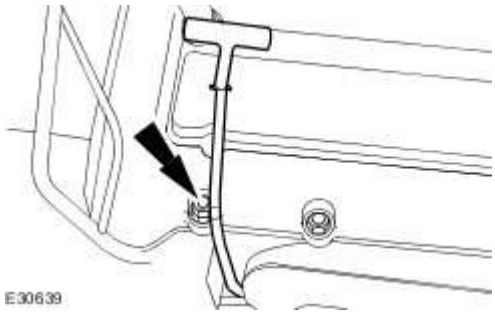

Vehicles without supercharger

5 . Remove the left-hand engine cover bracket.

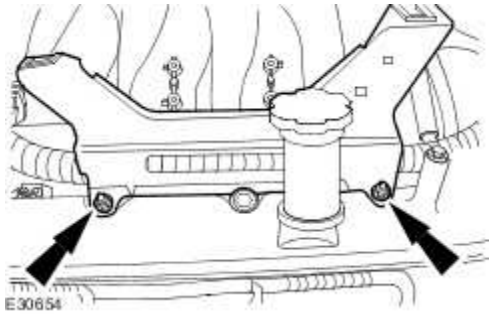

6 Detach the engine wiring harness.

.

1) Disconnect the variable camshaft timing (VCT) oil control solenoid electrical connector.

2) Detach the engine wiring harness.

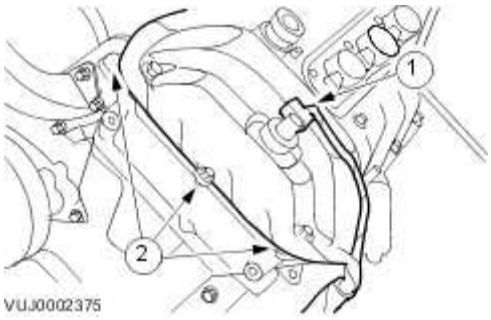

7 . **NOTE:**

Right-hand shown left-hand similar.

www.JagDocs.com

Detach the engine wiring harness.

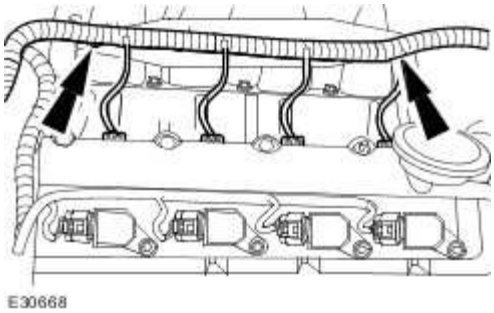

Vehicles with supercharger

8 . Detach the engine wiring harness.

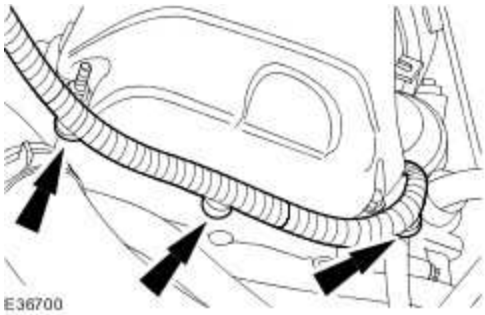

All vehicles

9 . Detach the fuel line. <<310-00>>

10 . Disconnect the ignition coil-on-plug electrical connectors.

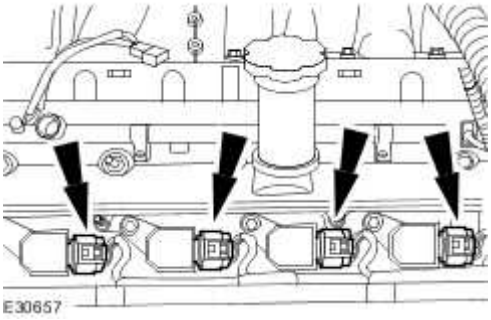

11 . Remove the ignition coil on-plugs.

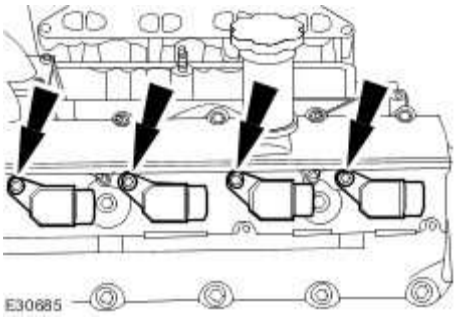

12 . Remove the valve cover assembly.

- Remove and discard valve cover gaskets.

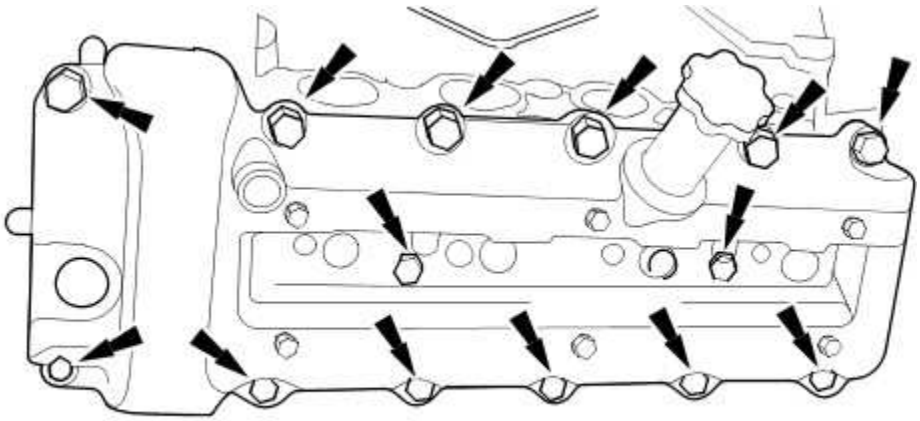

13 . **NOTE:**

On removal of the valve cover retaining bolts note their positions in the valve cover.

Remove the valve cover retaining bolts.

- Remove and discard the valve cover retaining bolt O-ring seals.

www.JagDocs.com

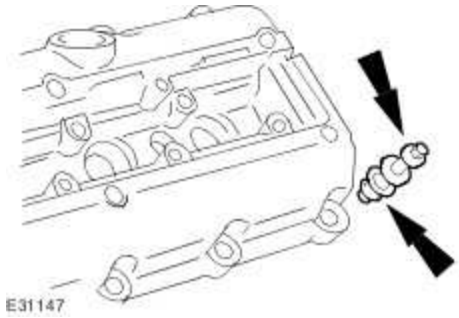

Installation

All vehicles

1 . **NOTE:**

Install the valve cover retaining bolts to their positions previously noted.

Install the valve cover retaining bolts.

- Install new valve cover retaining bolt O-ring seals.

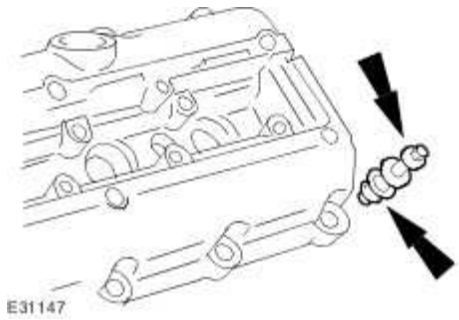

2 . Apply bead of silicone gasket sealant or equivalent meeting Jaguar specification on the two places where the cylinder head and front cover join.

- The application of sealant must be 3mm diameter by 12mm long. Install the valve cover immediately after applying the sealant.
- The cover should be fitted directly to the head without smearing the sealant or the seals.

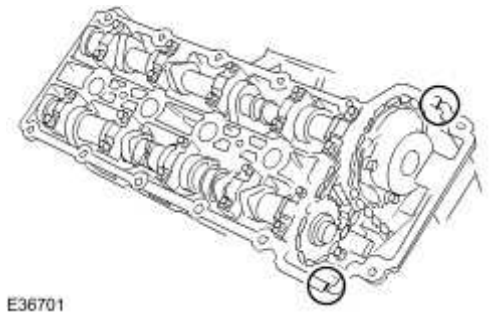

3 . Install the valve cover.

- Install new valve cover gaskets.
- Complete the tightening sequence.
- Tighten to 12 Nm.

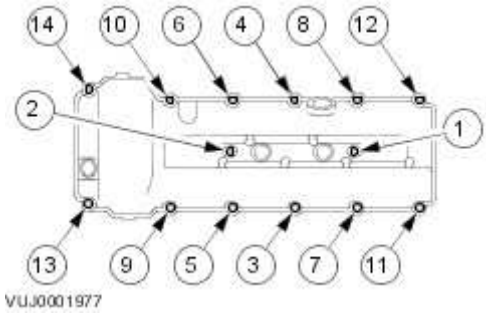

4 . Install the ignition coil-on-plugs.

- Tighten to 5 Nm.

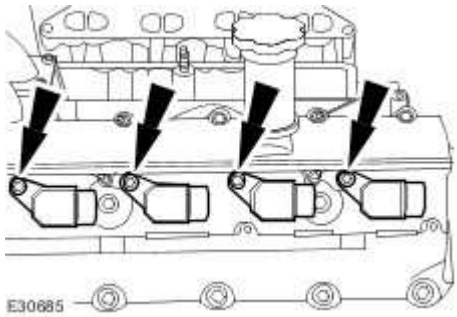

www.JagDocs.com

5 . Connect the ignition coil-on-plug electrical connectors.

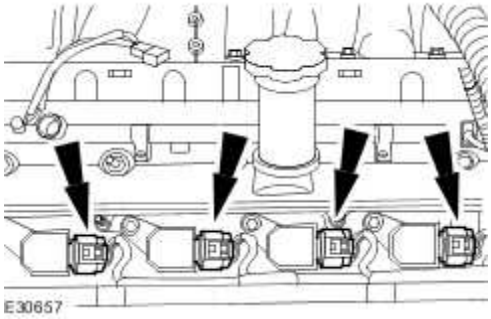

6 . Connect the fuel line.

- Attach the fuel line retaining clip.
- Install new O-ring seals.

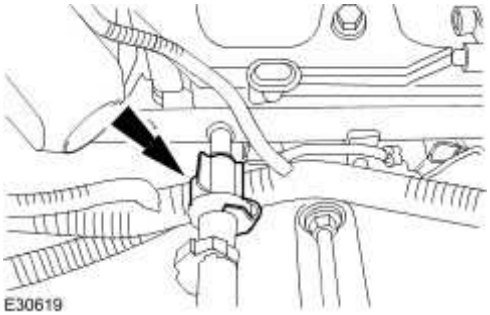

Vehicles without supercharger

7 . **NOTE:**

Right-hand shown left-hand similar.

Attach the engine wiring harness.

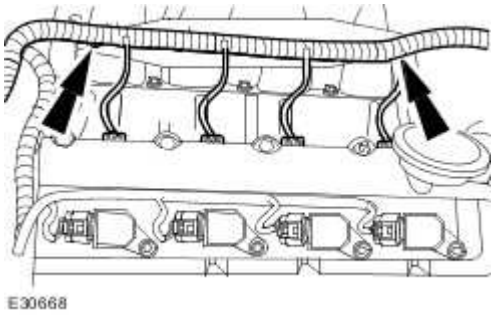

8 Attach the engine wiring harness.

.

1) Connect the variable camshaft timing (VCT) oil control solenoid electrical connector.

2) Attach the engine wiring harness.

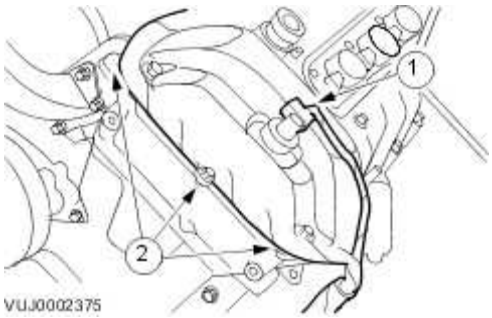

9 . Install the left-hand engine cover bracket.

Tighten to 6 Nm.

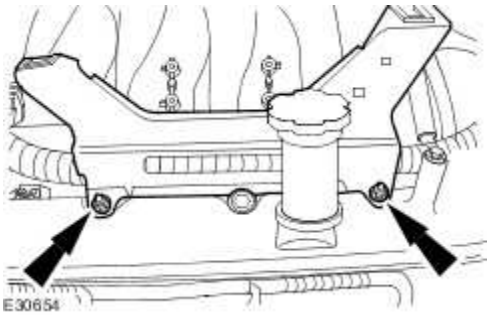

Vehicles with supercharger

10 . Attach the engine wiring harness.

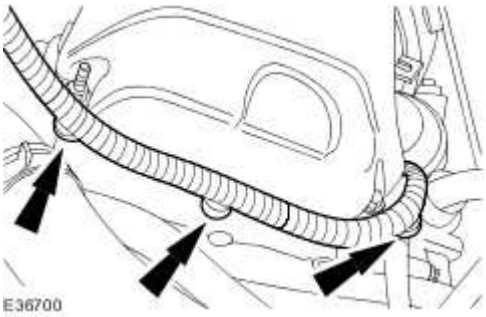

www.JagDocs.com

All vehicles

11 . Install the oil level indicator and tube.

- Install a new O-ring seal.
- Tighten to 6 Nm.

12 . Install the ignition coil-on-plug cover.

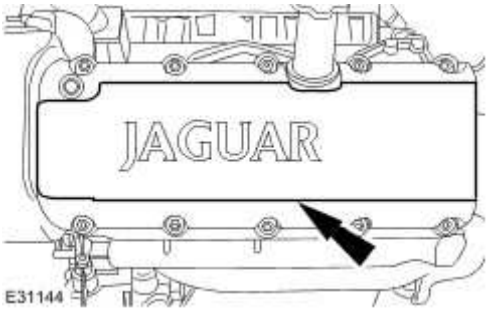

13 . **CAUTION: If power steering fluid comes into contact with the paintwork, the affected area must be immediately washed down with cold water.**

Attach the power steering fluid reservoir.

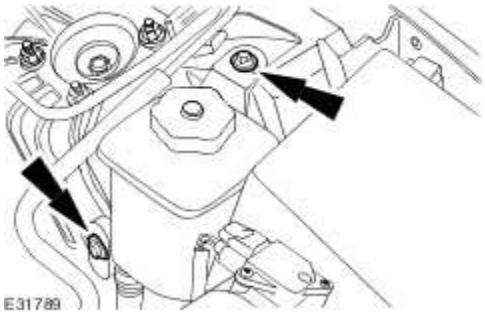

14 . Install the air cleaner. <<303-12B>>

Valve Cover LH - VIN Range: G45704->G99999 (12.29.43)

Removal

1 . Remove the air cleaner.
For additional information, refer to Air Cleaner (19.10.05)

2 . **CAUTION: If power steering fluid comes into contact with the paintwork, the affected area must be immediately washed down with cold water.**

Detach the power steering fluid reservoir.

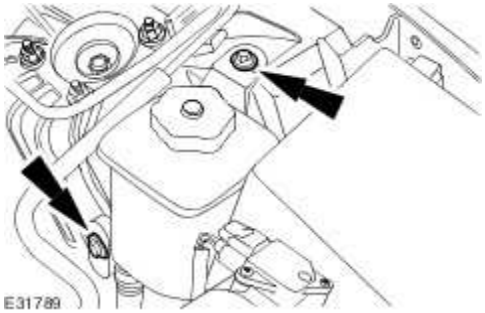

3 . Remove the oil level indicator and tube.

Remove and discard the O-ring seal.

4 . Remove the ignition coil-on-plug cover.

www.JagDocs.com

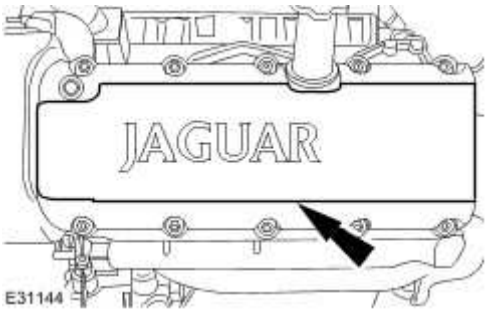

5 . **NOTE:**

Vehicles with supercharger shown, vehicles without supercharger similar.

Detach the engine cover bracket.

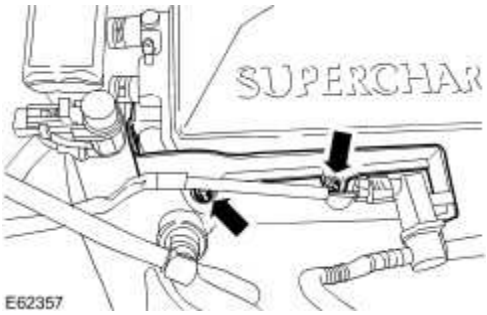

6 Detach the engine wiring harness.

.

1) Disconnect the variable camshaft timing (VCT) oil control solenoid electrical connector.

2) Detach the engine wiring harness.

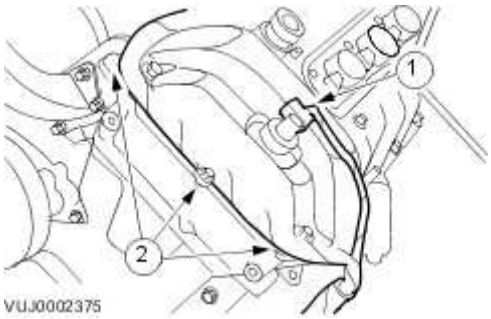

7 . **NOTE:**

Right-hand shown, left-hand similar.

Detach the engine wiring harness.

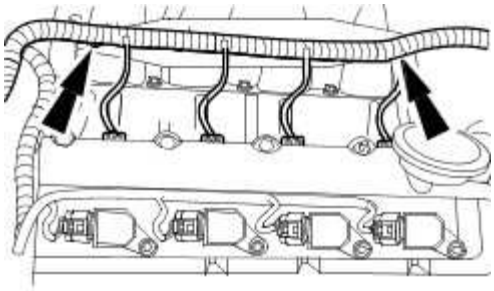

8 . Disconnect the fuel line.
For additional information, refer to Spring Lock Couplings

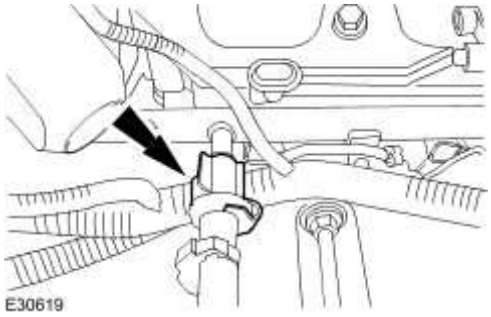

9 . Disconnect the ignition coil-on-plug electrical connectors.

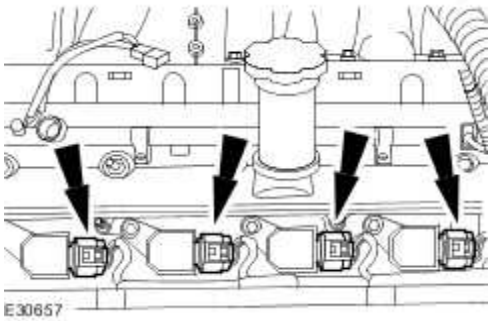

10 . Remove the ignition coil on-plugs.

www.JagDocs.com

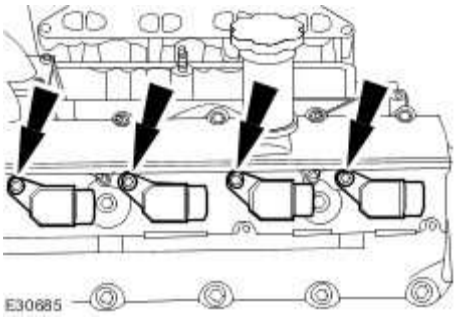

11 . Remove the valve cover assembly.

- Remove and discard valve cover gaskets.

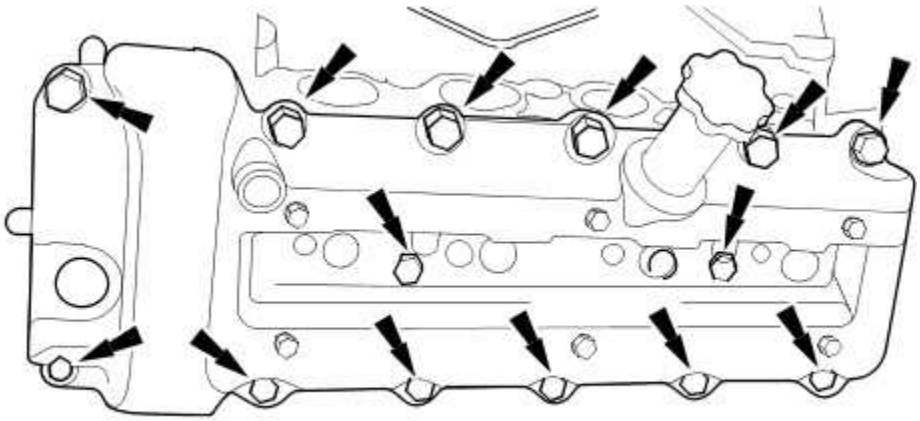

12 . **NOTE:**

On removal of the valve cover retaining bolts note their positions in the valve cover.

Remove the valve cover retaining bolts.

- Remove and discard the valve cover retaining bolt O-ring seals.

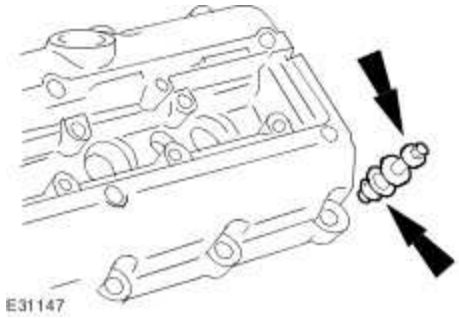

Installation

1 . **NOTE:**

Install the valve cover retaining bolts to their positions previously noted.

Install the valve cover retaining bolts.

- Install new valve cover retaining bolt O-ring seals.

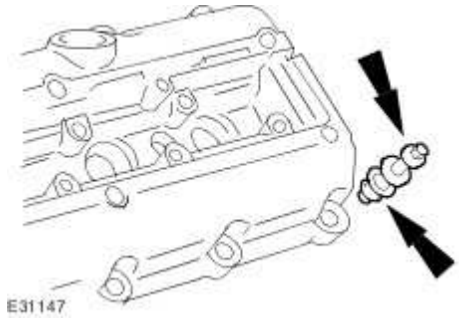

2 . Apply bead of silicone gasket sealant or equivalent meeting Jaguar specification on the two places where the cylinder head and front cover join.

- The application of sealant must be 3mm diameter by 12mm long. Install the valve cover immediately after applying the sealant.
- The cover should be fitted directly to the head without smearing the sealant or the seals.

www.JagDocs.com

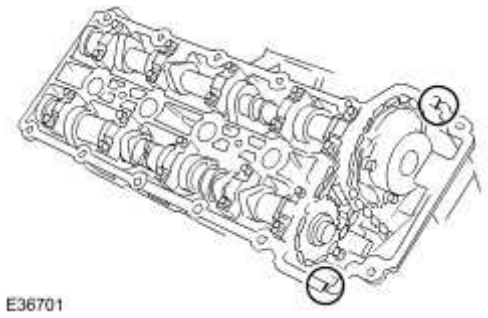

3 . Install the valve cover.

- Install new valve cover gaskets.
- Complete the tightening sequence.
- Tighten to 10 Nm.

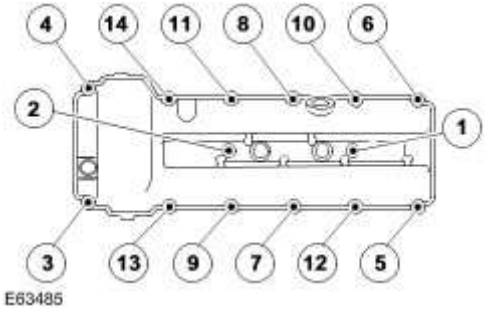

4 . Install the ignition coil-on-plugs.

- Tighten to 5 Nm.

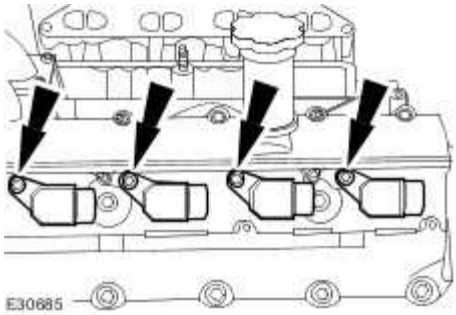

5 . Connect the ignition coil-on-plug electrical connectors.

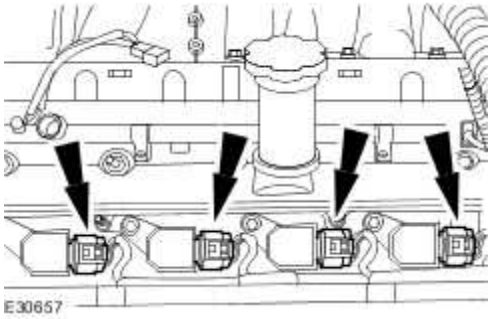

6 . Connect the fuel line.

- Attach the fuel line retaining clip.
- Install new O-ring seals.

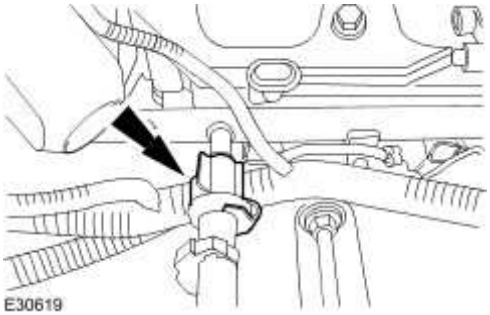

7 . **NOTE:**

Right-hand shown, left-hand similar.

Attach the engine wiring harness.

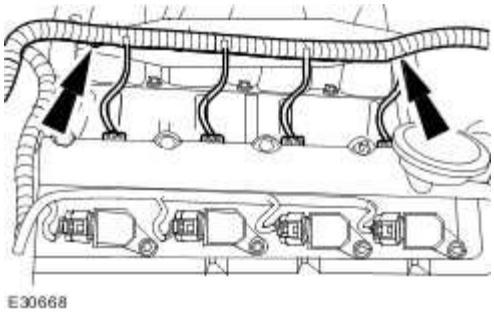

www.JagDocs.com

8 . Attach the engine wiring harness.

1) Connect the VCT oil control solenoid electrical connector.

2) Attach the engine wiring harness.

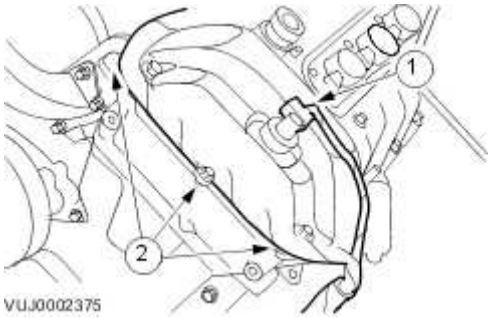

9 . **NOTE:**

Vehicles with supercharger shown, vehicles without supercharger similar.

Attach the engine cover bracket.

Tighten to 6 Nm.

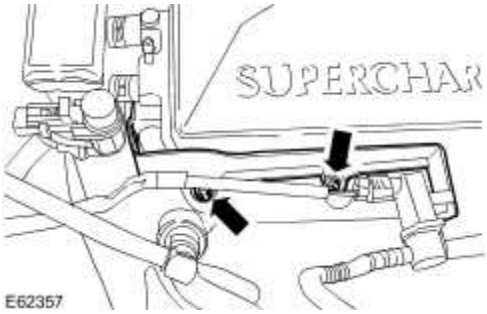

10 . Install the ignition coil-on-plug cover.

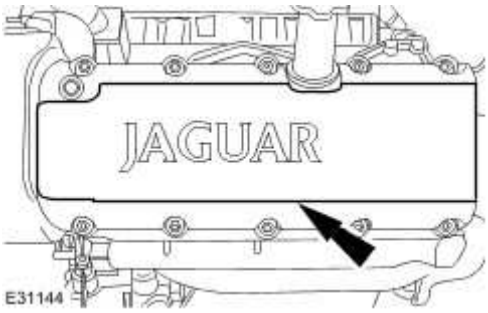

11 . Install the oil level indicator and tube.

- Install a new O-ring seal.
- Tighten to 6 Nm.

12 . **CAUTION: If power steering fluid comes into contact with the paintwork, the affected area must be immediately washed down with cold water.**

Attach the power steering fluid reservoir.

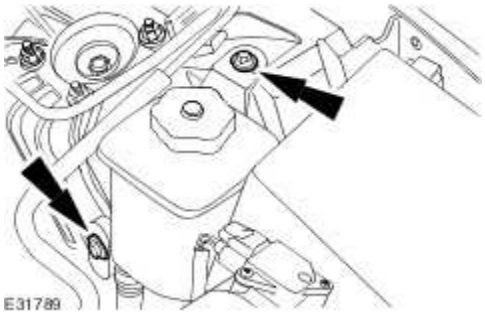

13 . Install the air cleaner.
For additional information, refer to Air Cleaner (19.10.05)

www.JagDocs.com

Valve Cover RH - VIN Range: G00442->G45703 (12.29.44)

Removal

All vehicles

1 . **NOTE:**

Left-hand shown right-hand similar.

Remove the ignition coil-on-plug cover.

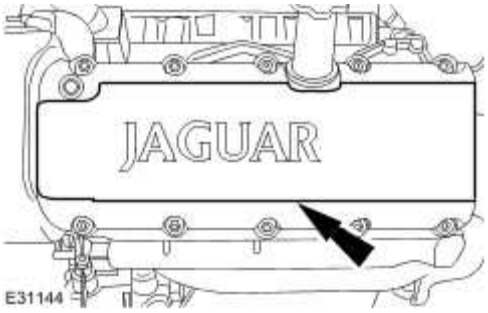

Vehicles without supercharger

2 . Remove the right-hand engine cover bracket.

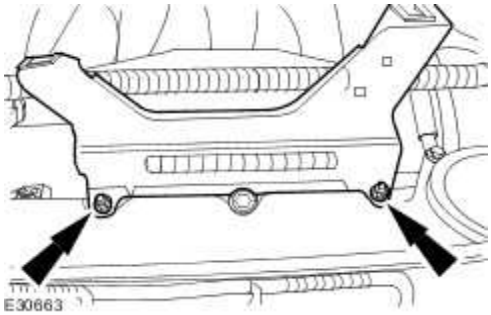

3 Detach the engine wiring harness.

.

1) Detach the ground harness.

2) Disconnect the variable camshaft timing (VCT) oil control solenoid electrical connector.

3) Detach the engine wiring harness.

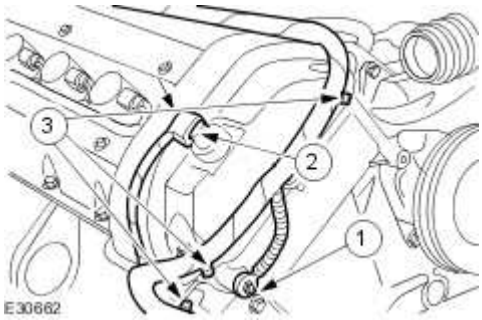

4 . Detach the right-hand engine wiring harness.

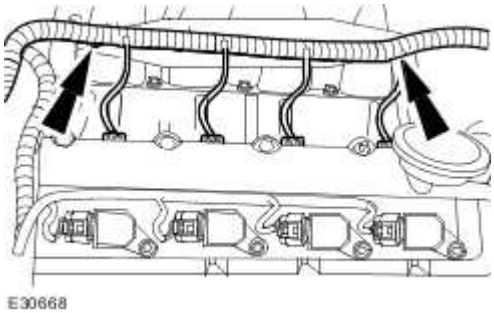

Vehicles with supercharger

5 . Detach the engine wiring harness.

Remove the retaining bolt.

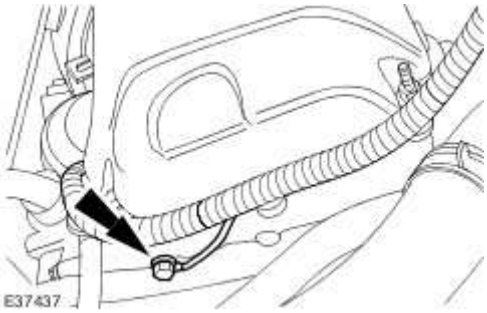

6 . Detach the engine wiring harness.

www.JagDocs.com

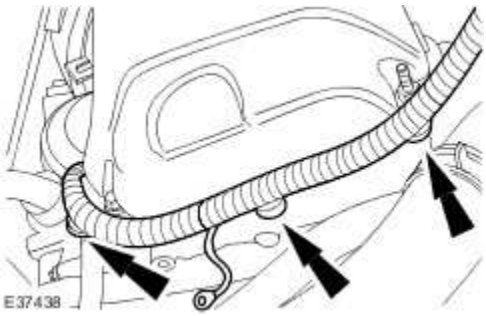

All vehicles

7 . Disconnect the positive crank ventilation (PCV) pipe.

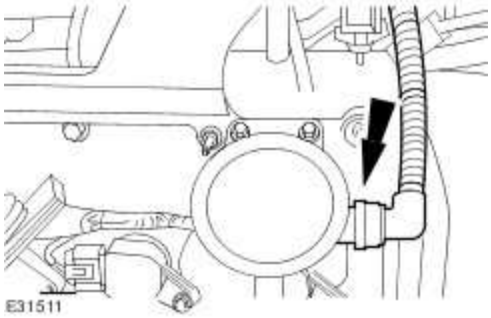

8 . Disconnect the ignition coil on-plug electrical connectors.

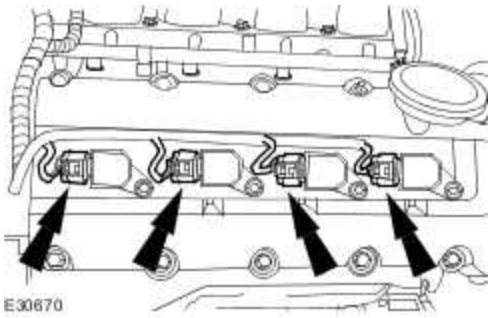

9 . **NOTE:**

Left-hand shown right-hand similar.

Remove the ignition coil-on-plugs.

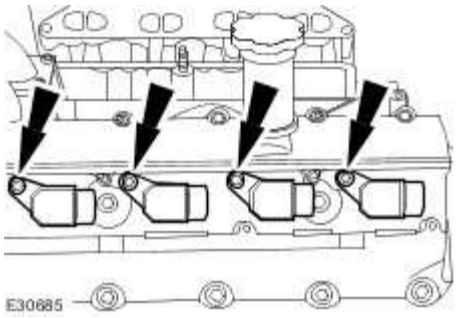

10 . Remove the valve cover assembly.

- Remove and discard valve cover gaskets.

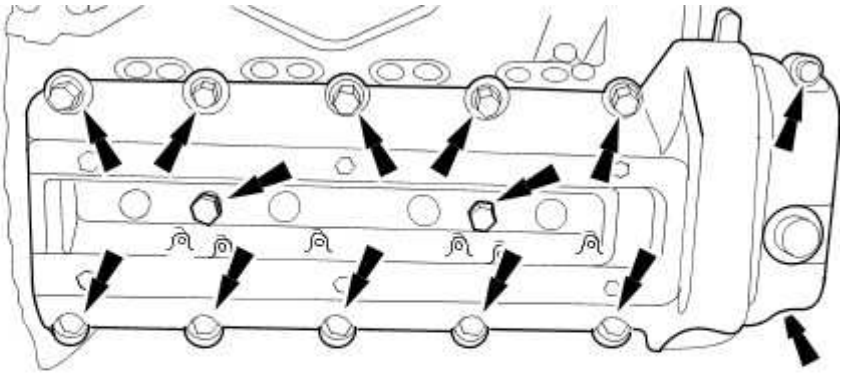

11 . **NOTE:**

On removal of the valve cover retaining bolts note their positions in the valve cover.

Remove the valve cover retaining bolts.

- Remove and discard the valve cover retaining bolt O-ring seals.

www.JagDocs.com

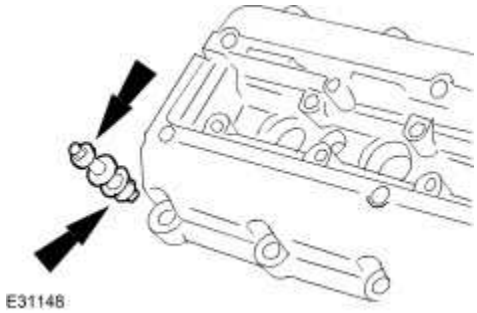

Installation

All vehicles

1 . **NOTE:**

Install the valve cover retaining bolts to their positions previously noted.

Install the valve cover retaining bolts.

- Install new valve cover retaining bolt O-ring seals.

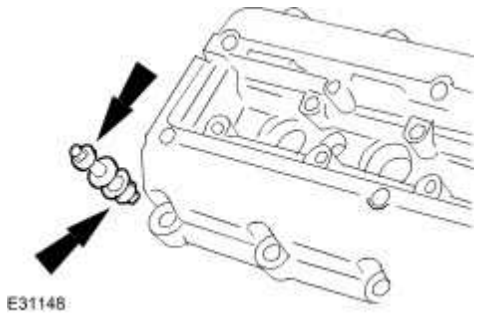

2 . Apply bead of silicone gasket sealant or equivalent meeting Jaguar specification on the two places where the cylinder head and front cover join.

- The application of sealant must be 3mm diameter by 12mm long. Install the valve cover immediately after applying the sealant.
- The cover should be fitted directly to the head without smearing the sealant or the seals.

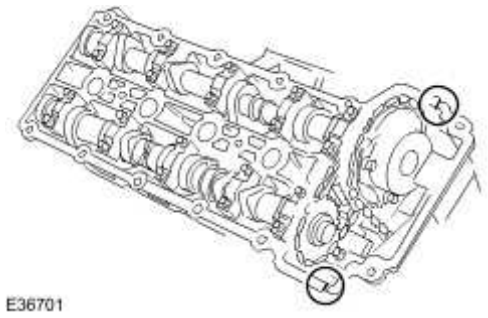

3 . Install the valve cover.

- Install new valve cover gaskets.
- Complete the tightening sequence.
- Tighten to 12 Nm.

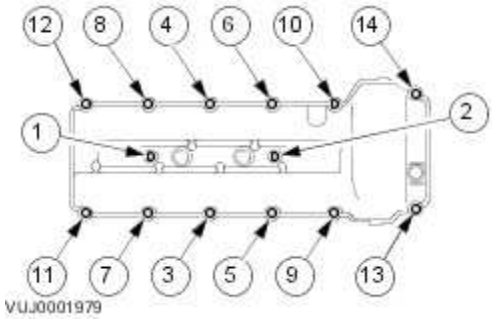

4 . Install the ignition coil-on-plugs.

- Tighten to 5 Nm.

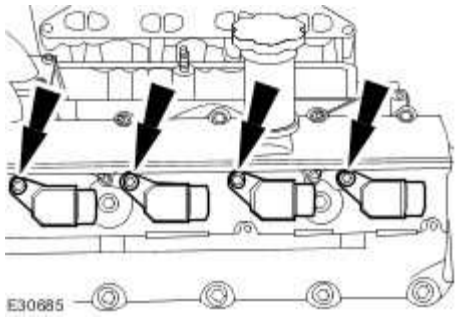

www.JagDocs.com

5 . Connect the ignition coil on-plug electrical connectors.

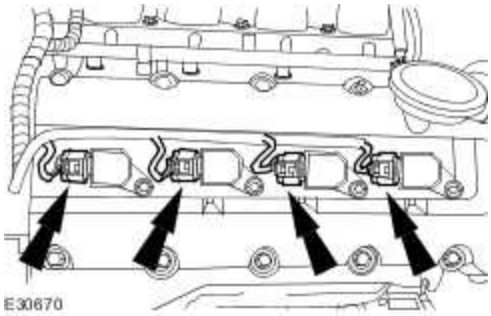

6 . Connect the positive crank ventilation (PCV) pipe.

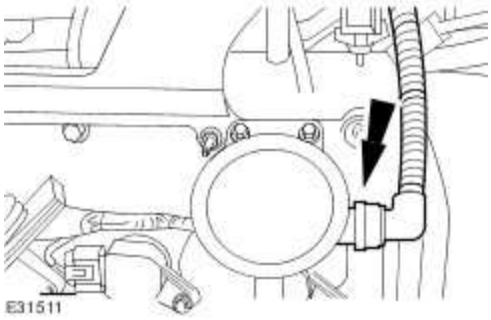

Vehicles without supercharger

7 . Attach the right-hand engine wiring harness.

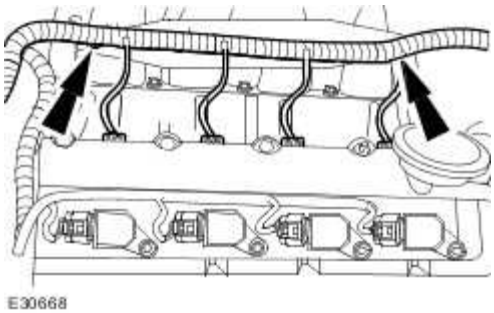

8 . Attach the engine wiring harness.

1) Attach the ground harness.

2) Connect the VCT oil control solenoid electrical connector.

3) Attach the engine wiring harness.

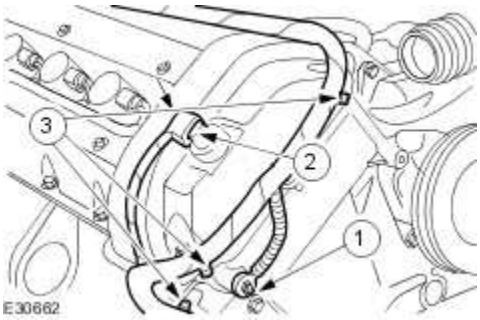

9 . Install the right-hand engine cover bracket.

Tighten to 6 Nm.

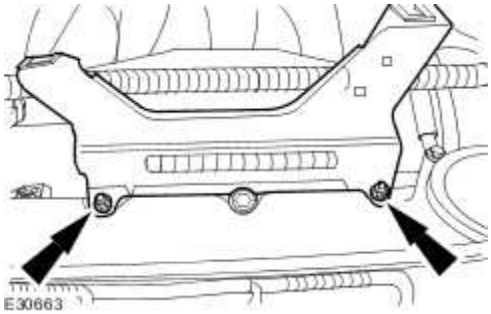

Vehicles with supercharger

10 . Attach the engine wiring harness.

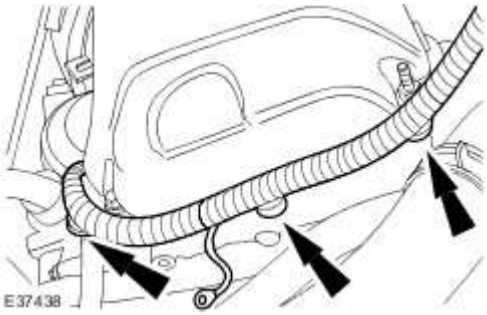

11 . Attach the engine wiring harness.

www.JagDocs.com

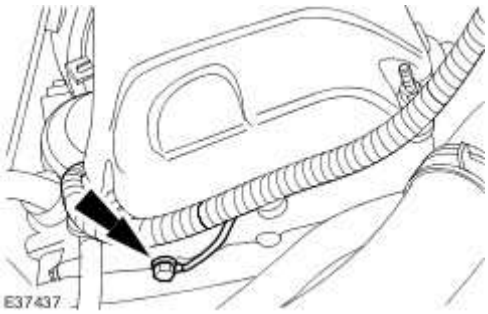

All vehicles

12 . **NOTE:**

Left-hand shown right-hand similar.

Install the ignition coil-on-plug cover.

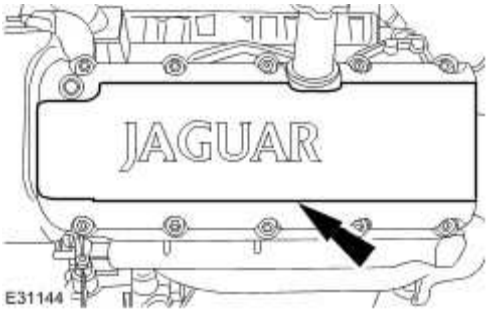

Valve Cover RH - VIN Range: G45704->G99999 (12.29.44)

Removal

All vehicles

1 . **NOTE:**

Left-hand shown, right-hand similar.

Remove the ignition coil-on-plug cover.

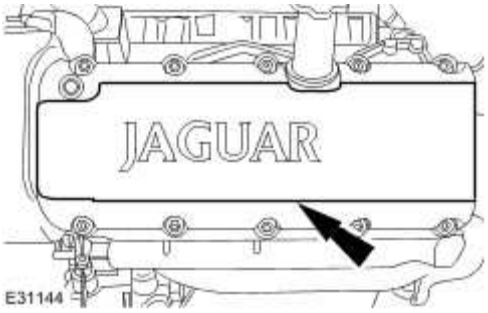

Vehicles without supercharger

2 . Remove the engine cover right-hand bracket.

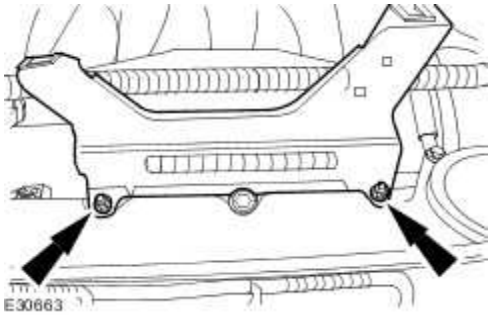

All vehicles

3 Detach the engine wiring harness.

.

1) Detach the ground harness.

2) Disconnect the variable camshaft timing (VCT) oil control solenoid electrical connector.

3) Detach the engine wiring harness.

www.JagDocs.com

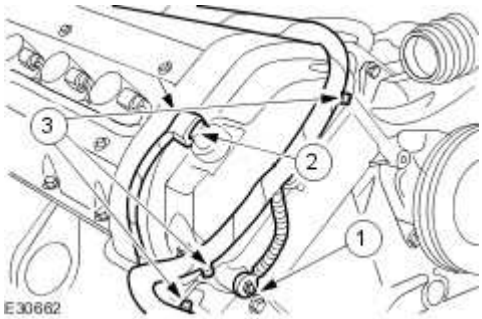

4 . Detach the engine wiring harness.

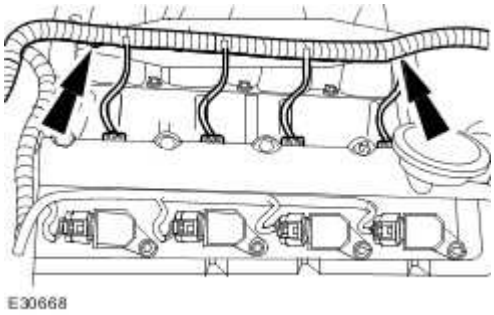

5 . Disconnect the positive crank ventilation (PCV) pipe.

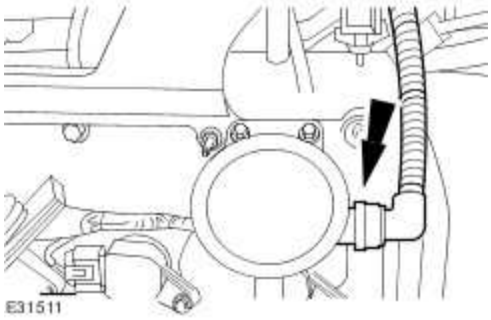

6 . Disconnect the ignition coil on-plug electrical connectors.

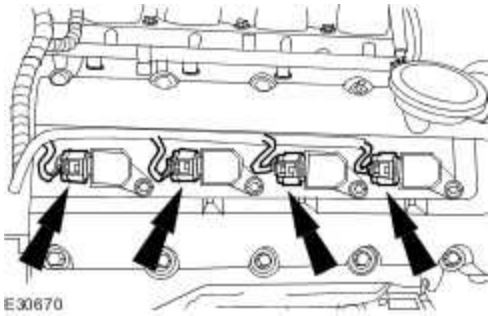

7 . **NOTE:**

Left-hand shown, right-hand similar.

Remove the ignition coil-on-plugs.

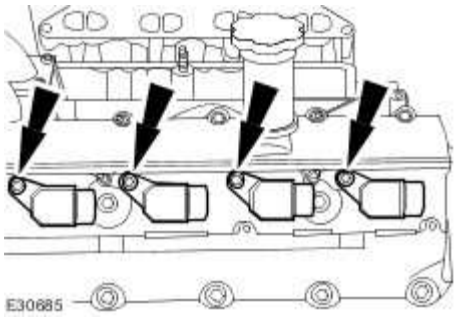

8 . Remove the valve cover assembly.

- Remove and discard valve cover gaskets.

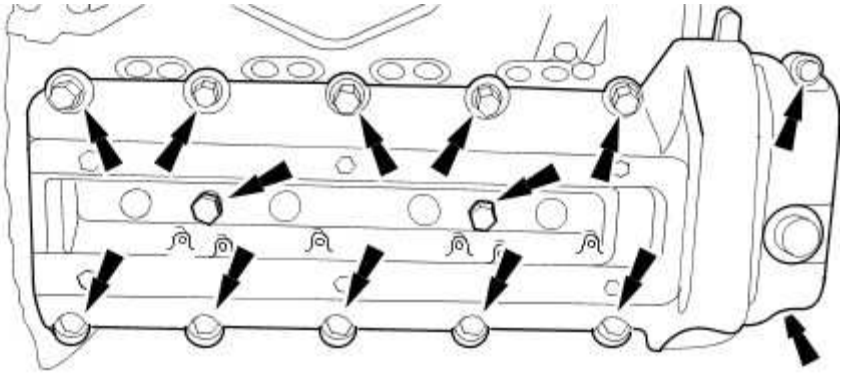

E30696

9 . **NOTE:**

On removal of the valve cover retaining bolts note their positions in the valve cover.

Remove the valve cover retaining bolts.

- Remove and discard the valve cover retaining bolt O-ring seals.

www.JagDocs.com

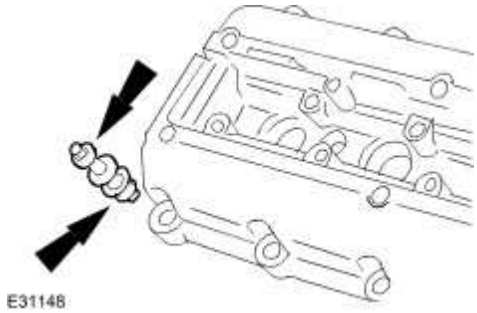

Installation

All vehicles

1 . **NOTE:**

Install the valve cover retaining bolts to their positions previously noted.

Install the valve cover retaining bolts.

- Install new valve cover retaining bolt O-ring seals.

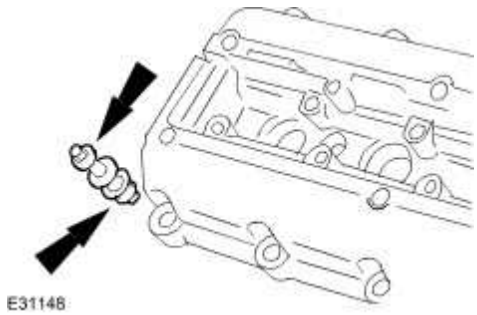

2 . Apply bead of silicone gasket sealant or equivalent meeting Jaguar specification on the two places where the cylinder head and front cover join.

- The application of sealant must be 3mm diameter by 12mm long. Install the valve cover immediately after applying the sealant.
- The cover should be fitted directly to the head without smearing the sealant or the seals.

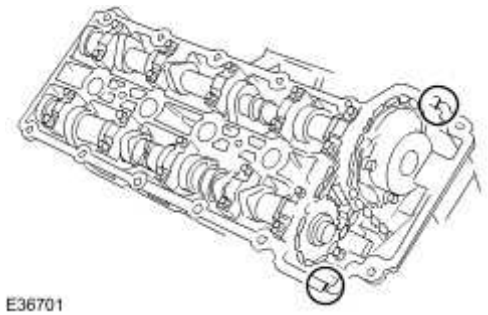

3 . Install the valve cover.

- Install new valve cover gaskets.
- Complete the tightening sequence.
- Tighten to 10 Nm.

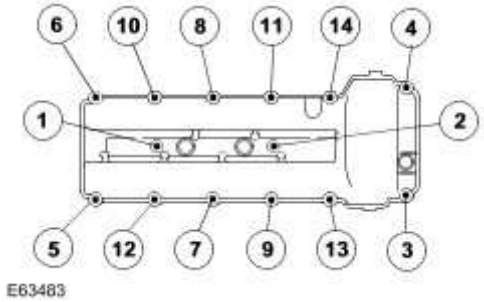

4 . **NOTE:**

Left-hand shown, right-hand similar.

Install the ignition coil-on-plugs.

- Tighten to 5 Nm.

www.JagDocs.com

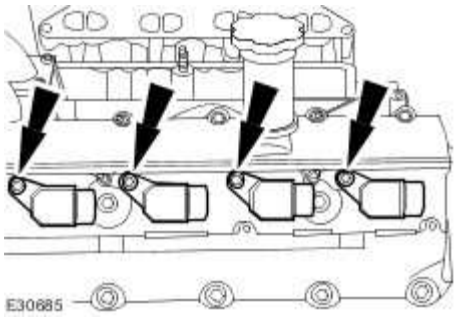

5 . Connect the ignition coil on-plug electrical connectors.

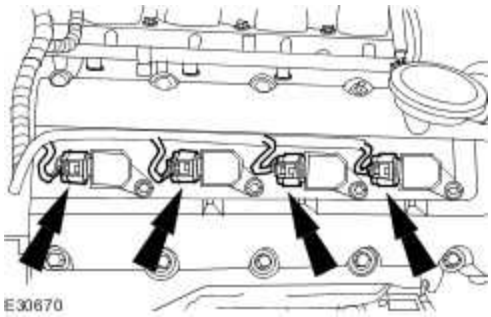

6 . Connect the PCV pipe.

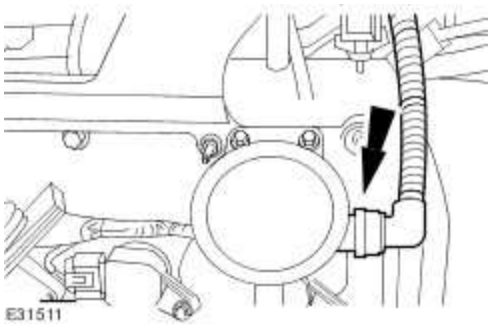

7 . Attach the engine wiring harness.

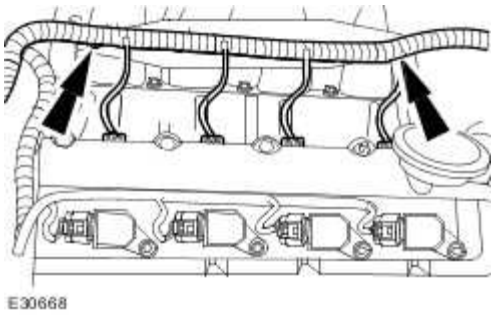

8 . Attach the engine wiring harness.

1) Attach the ground harness.

2) Connect the VCT oil control solenoid electrical connector.

3) Attach the engine wiring harness.

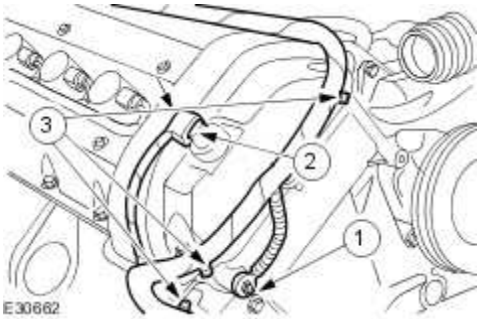

Vehicles without supercharger

9 . Install the engine cover bracket.

Tighten to 6 Nm.

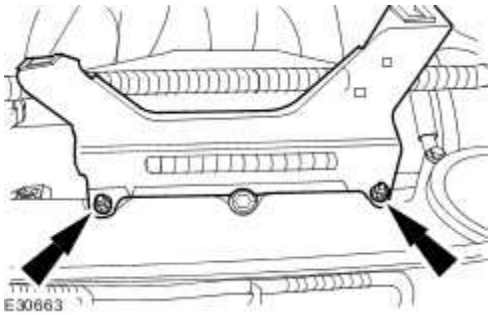

All vehicles

10 . **NOTE:**

Left-hand shown, right-hand similar.

Install the ignition coil-on-plug cover.

www.JagDocs.com

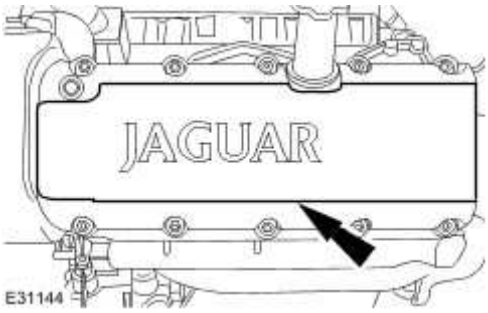
JAGUAR
E31144

Engine

Special Service Tools

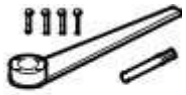

303-191

Crankshaft locking, main tool
303-191

303-191-02

Adapter
303-191-02

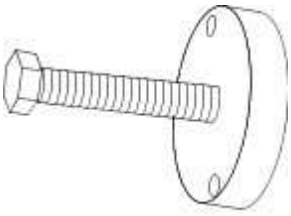

Crankshaft pulley/damper remover
303-588

303-645

Crankshaft setting, main tool
303-645

www.JagDocs.com

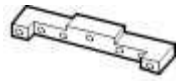

303-530

Camshaft setting
303-530

303D055

Crankshaft damper holding tool
303-D055

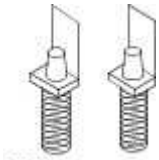

303535

Cylinder Bore Protectors
303-535

Disassembly

1 . Disconnect the oil cooler hoses.

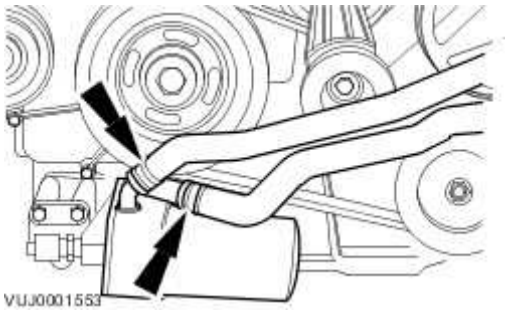

VUJ0001553

2 . Detach the supercharger belt.

- Use a 1/2 inch square drive bar to rotate the supercharger belt tensioner.
- Detach the supercharger belt.

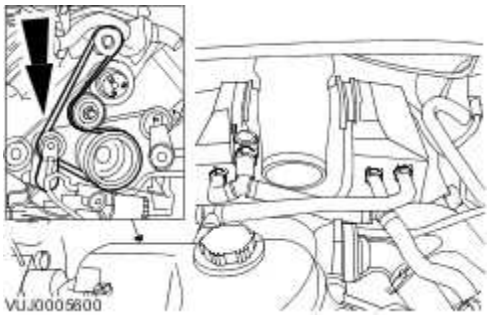

3 . Release the accessory drive belt tension.

- Use a 3/8 inch square drive bar to rotate the drive belt tensioner.
- Detach the accessory drive belt.

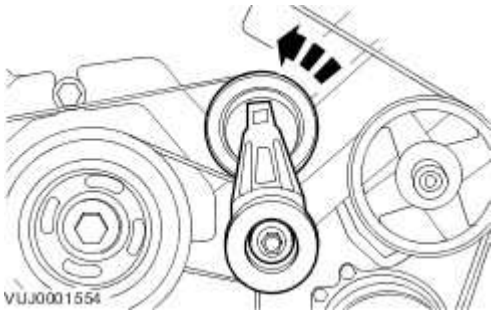

4 . Remove the accessory drive belt tensioner.

- Remove the accessory drive belt.

www.JagDocs.com

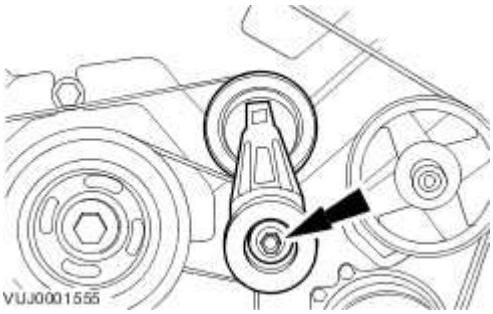

5 . Remove the accessory drive belt idler pulley.

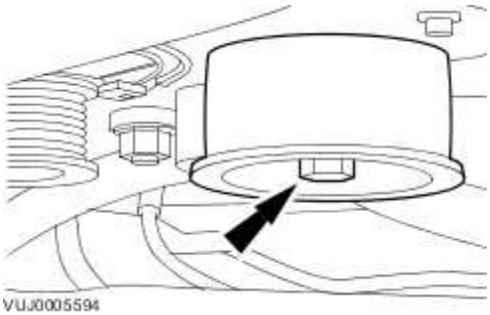

6 . Detach the wiring harness.

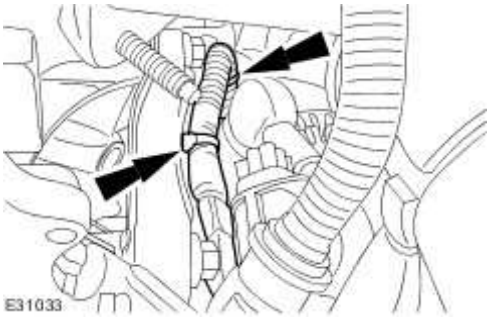

7 . Detach the generator battery positive cable protective cover.

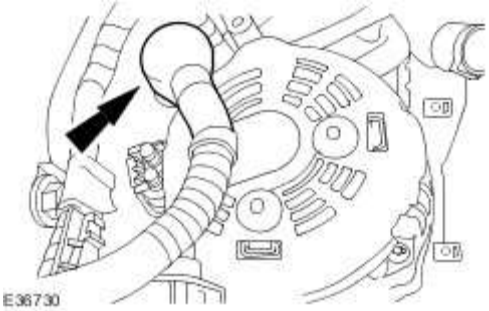

8 . Disconnect the generator battery positive cable.

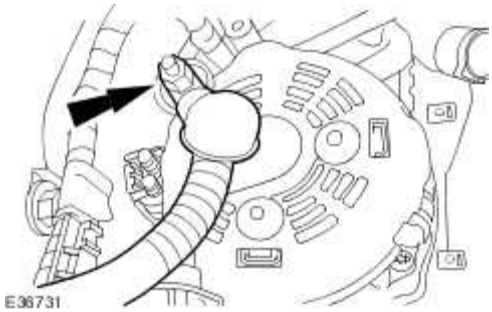

9 . Disconnect the generator electrical connector.

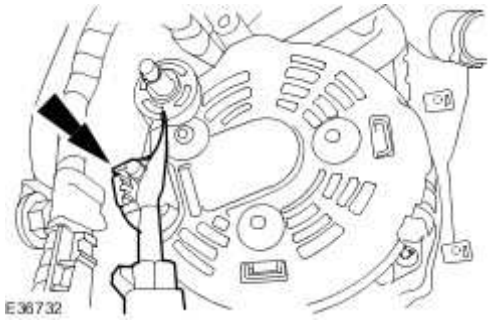

10 . Remove the generator.

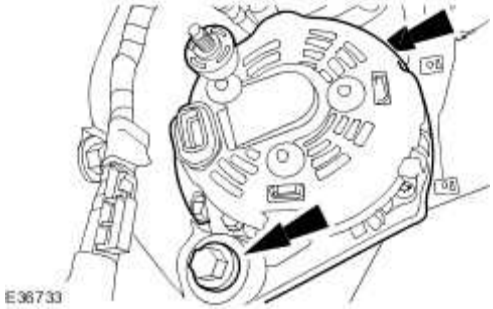

11 . Detach the engine wiring harness.

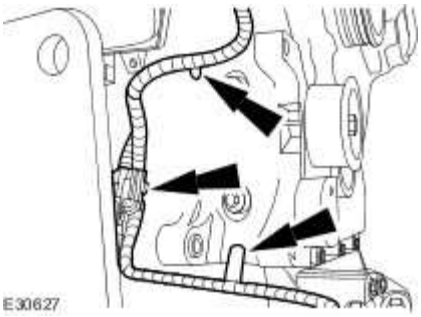

www.JagDocs.com

12 . Remove the generator mounting bracket.

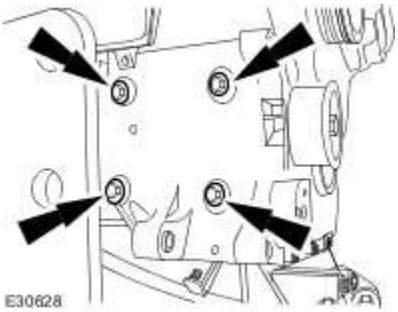

13 . Detach the right-hand oxygen sensor retaining bracket.

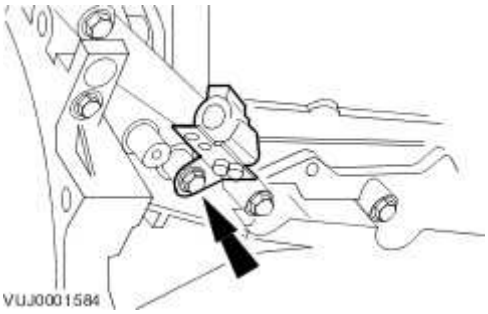

14 . Detach the engine wiring harness.

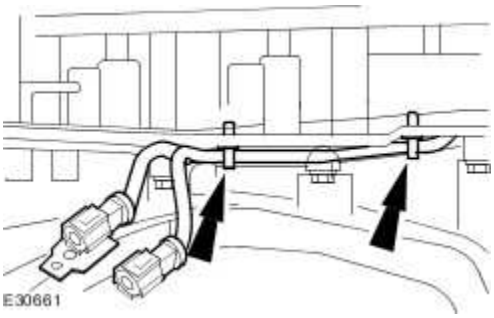

15 . Remove the starter motor.

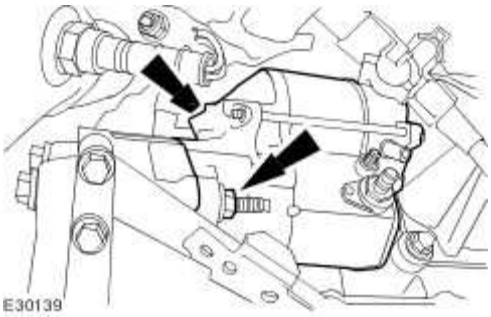

16 . Remove the oil level indicator and tube.

- Remove and discard the O-ring seal.

17 . Remove the heat shield.

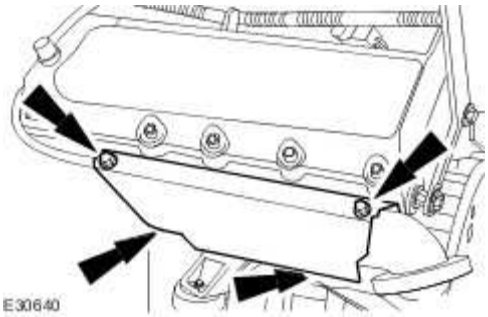

18 . Remove the heat shield retaining bolt.

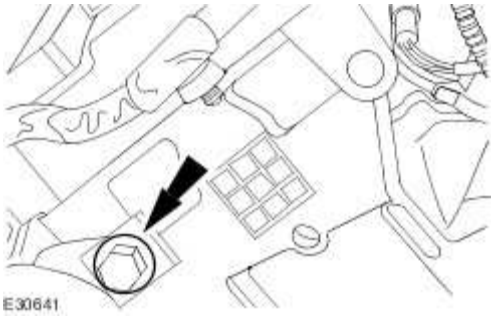

19 . Remove the left-hand exhaust manifold.

- Remove and discard the gasket.

www.JagDocs.com

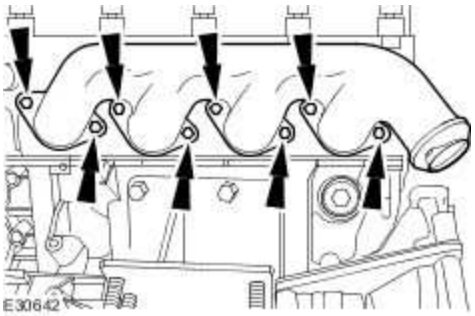

20 . Remove the left-hand engine mount.

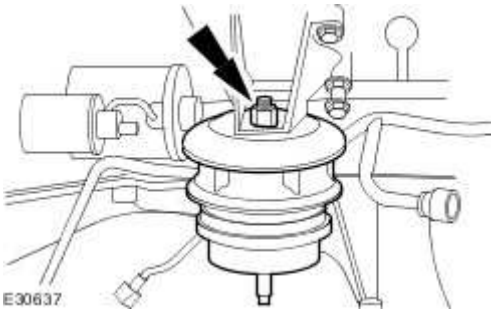

21 . Remove the left-hand engine mounting bracket.

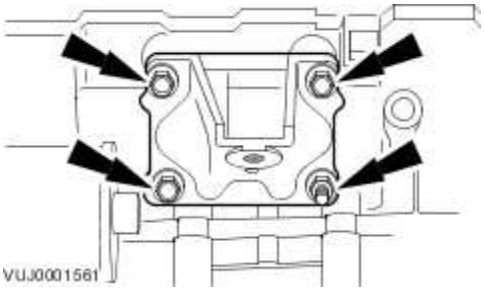

22 . Disconnect the A/C compressor electrical connector.

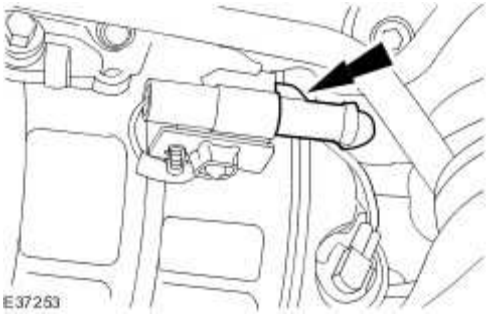

23 . Remove the A/C compressor.

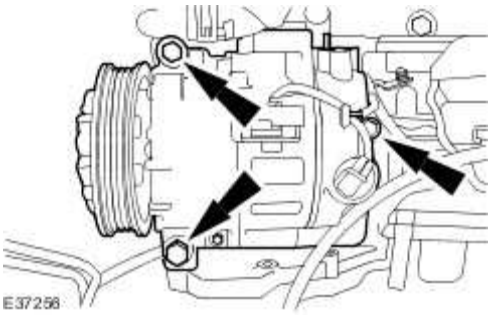

24 . Remove the air conditioning compressor mounting bracket.

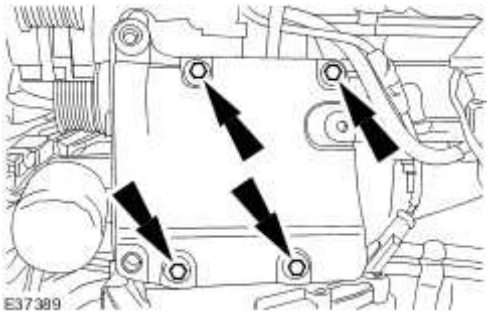

25 . Remove the power steering pump.

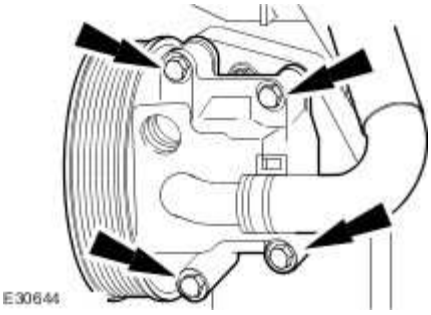

26 . Remove the power steering pump mounting bracket.

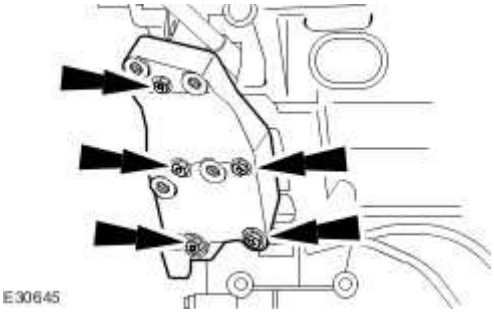

www.JagDocs.com

27 . Disconnect the crankshaft position sensor electrical connector.

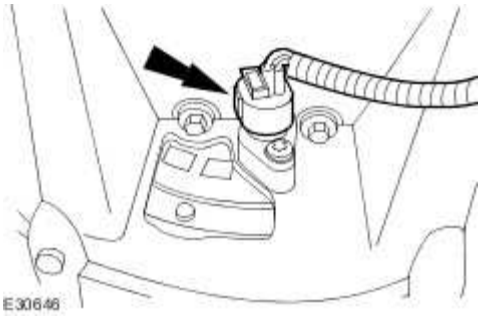

28 . Remove the crankshaft position sensor.

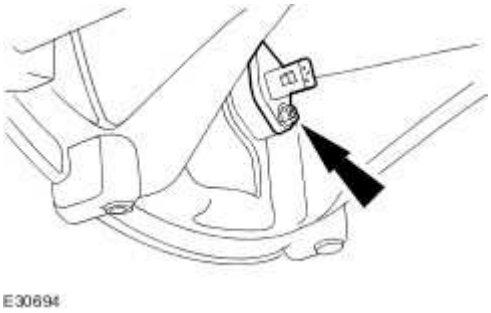

29 . Detach the engine wiring harness.

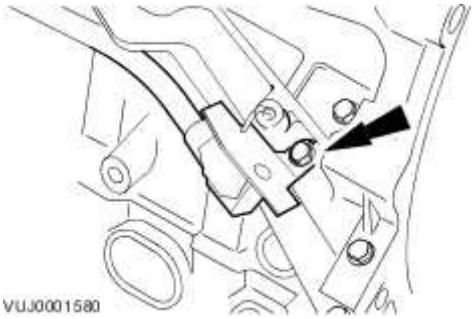

30 . Detach the engine wiring harness.

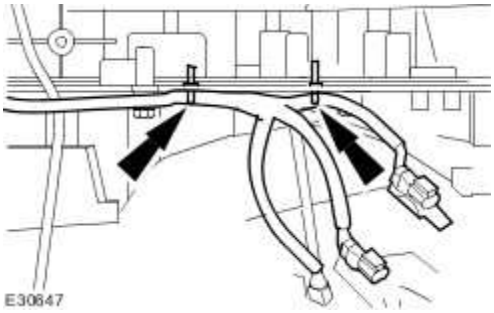

31 . Detach the engine wiring harness.

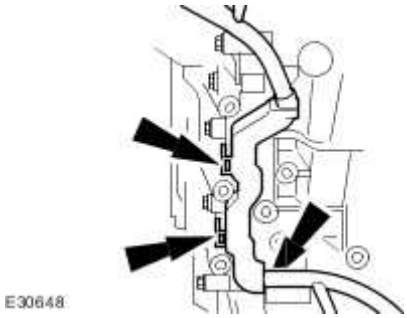

32 . Detach the engine wiring harness.

1. Disconnect the variable valve timing (VVT) solenoid electrical connector.
2. Detach the engine wiring harness.

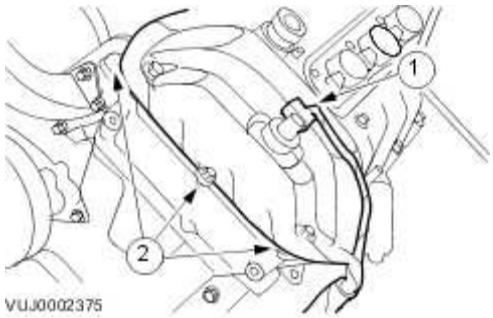

33 . Disconnect the coolant temperature sensor electrical connector.

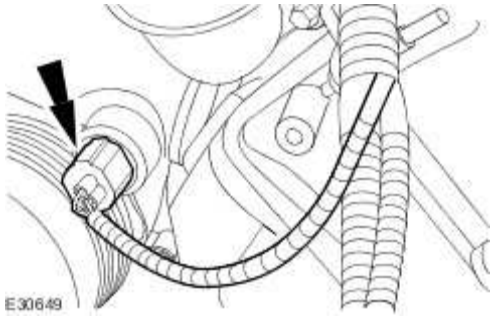

34 . Detach the engine wiring harness.

www.JagDocs.com

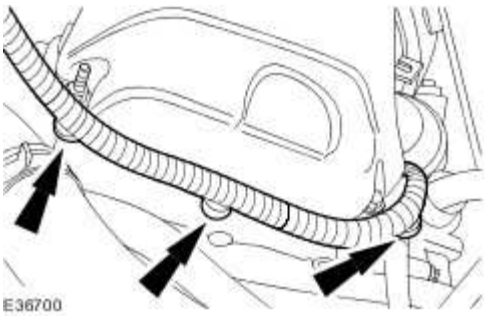

35 . Detach the hoses.

- Reposition the hose retaining clip.

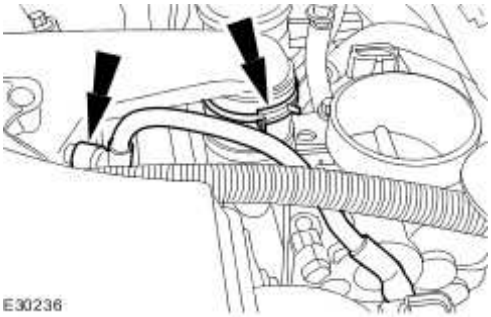

36 . Detach the supercharger outlet pipe coolant hose.

- Cap the coolant ports.

37 . **CAUTION: Make sure no foreign matter enters the supercharger.**

Remove the supercharger outlet pipe

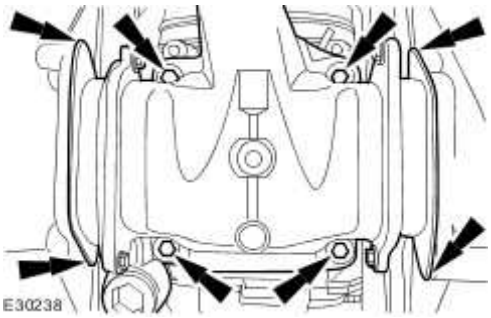

38 . Remove and discard the supercharger outlet pipe gasket.

39 . Remove and discard the supercharger outlet pipe retaining bolt seals.

40 . Remove and discard the supercharger outlet pipe to charge air coolers ducts.

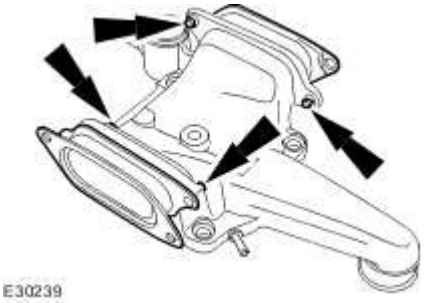

41 . Disconnect the thermostat housing hoses

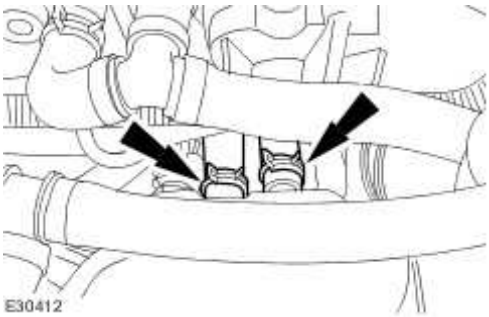

42 . Disconnect the coolant temperature sensor electrical connector.

www.JagDocs.com

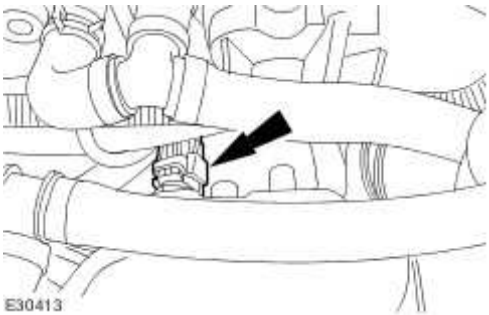

43 . Reposition the thermostat housing hose retaining clip.

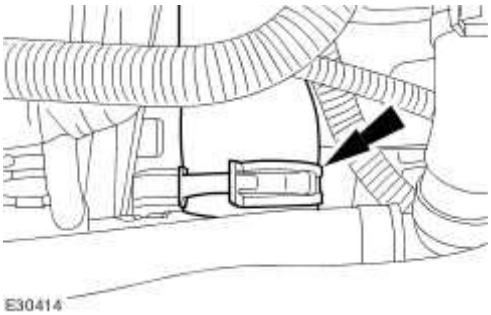

44 . Disconnect the hose.

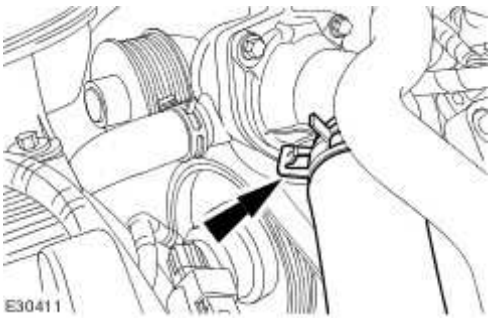

45 . Disconnect the hose.

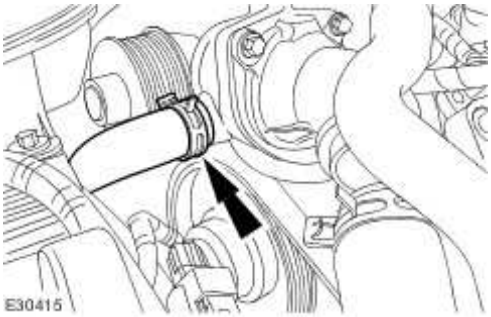

46 . Disconnect the hose.

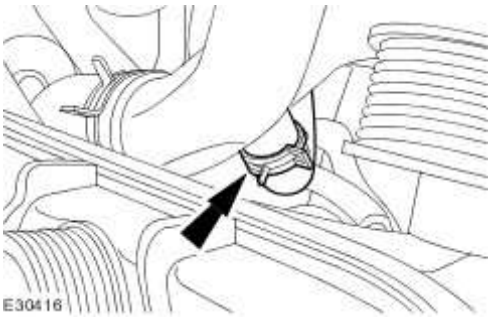

47 . Disconnect the hose.

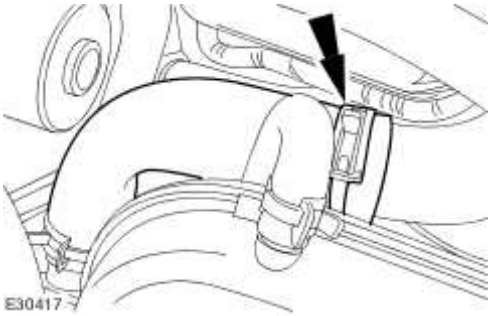

48 . Remove the thermostat housing retaining bolts.

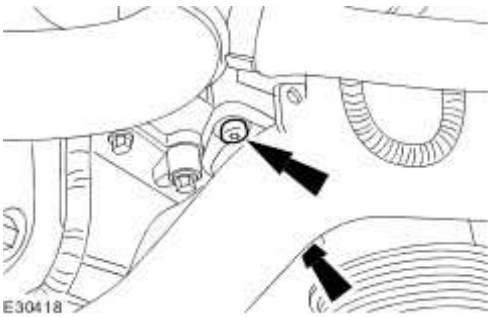

49 . Remove the thermostat housing.

- Remove and discard the thermostat housing O-ring seals.

www.JagDocs.com

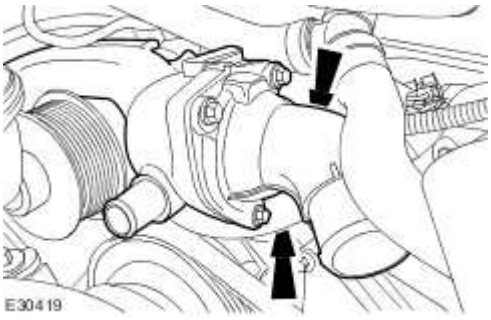

50 . Disconnect the charge air cooler coolant pipes.

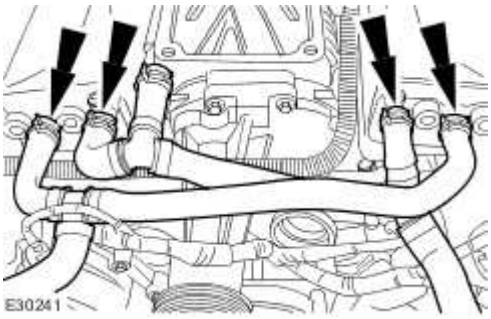

51 . Disconnect the intake air temperature (IAT) sensor electrical connector.

52 . Disconnect the electrical connectors.

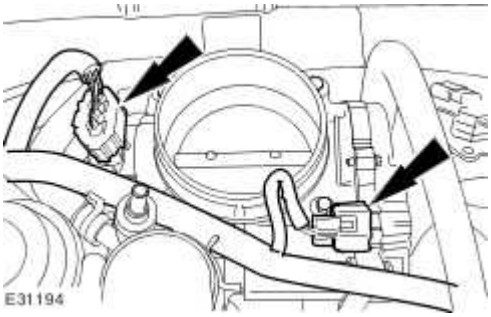

53 . **NOTE:**

Cap the exposed ports.

Detach the coolant hose from the throttle body.

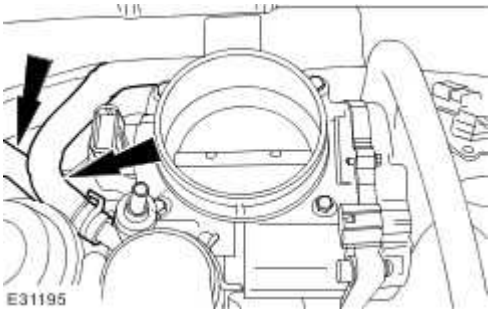

54 . Remove the throttle body.

- Remove and discard the gasket.

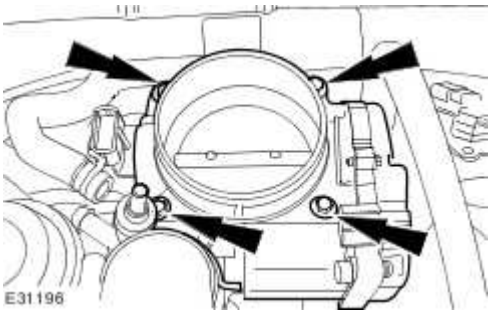

55 . Disconnect the exhaust gas recirculation (EGR) valve electrical connector.

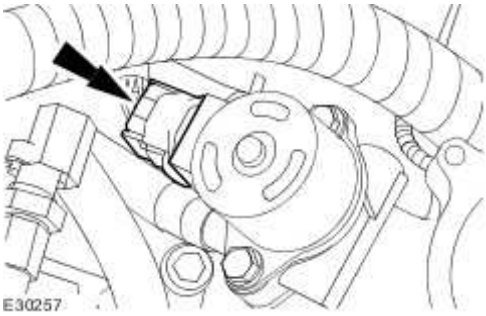

www.JagDocs.com

56 . **NOTE:**

Cap the exposed ports.

Disconnect the coolant hoses.

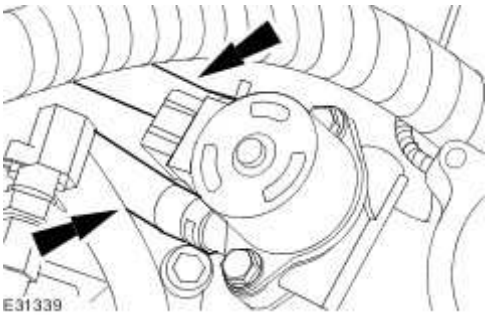

57 . Remove the EGR valve and the exhaust manifold to EGR valve tube.

- Remove the retaining bolts.
- Remove and discard the exhaust manifold to EGR valve tube gasket.
- Remove and discard the EGR valve to air intake elbow gasket.

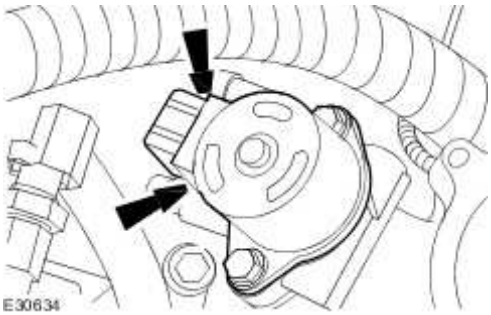

58 . Disconnect the air intake elbow pipes.

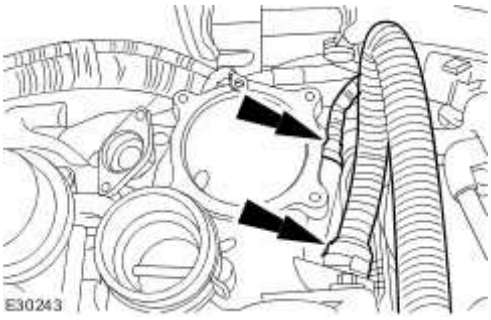

59 . **NOTE:**

Make sure correct location of the ground strap is noted.

Remove the air intake elbow retaining bracket lower retaining bolts.

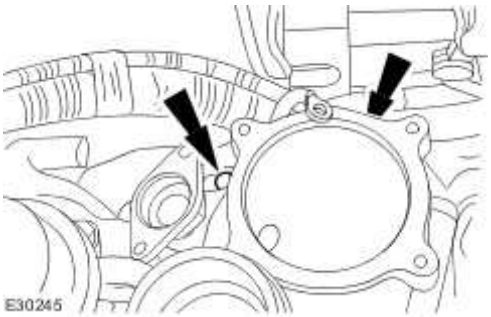

60 . Detach the air intake elbow.

- Remove and discard the gasket.
- Remove and discard the retaining bolt seals.

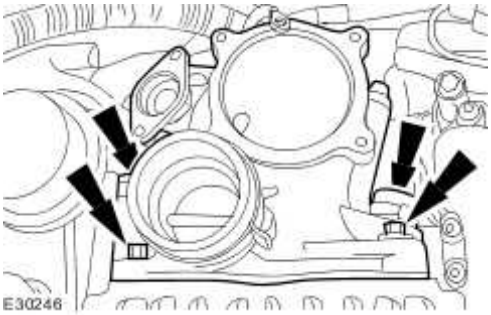

61 . Remove the air intake elbow.

- Disconnect the manifold absolute pressure (MAP) sensor.

www.JagDocs.com

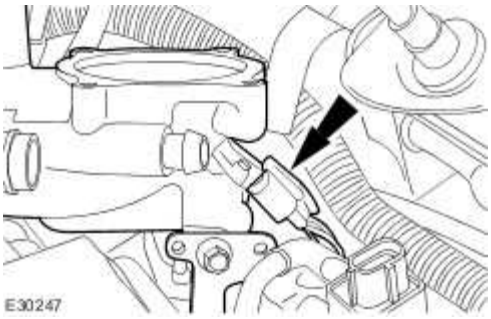

62 . Remove the supercharger.

63 . **CAUTION: Make sure no foreign matter enters the cylinder head ports.**

NOTE:

Right-hand shown, left-hand similar.

Remove the charge air coolers.

- Remove and discard the charge air cooler gasket.

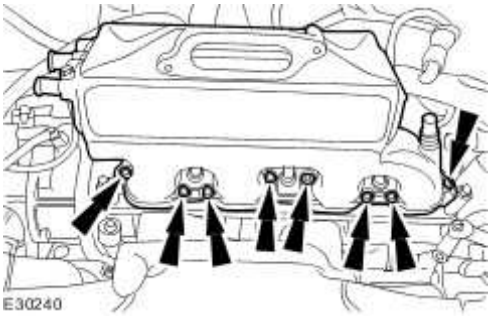

64 . Disconnect the knock sensor electrical connectors.

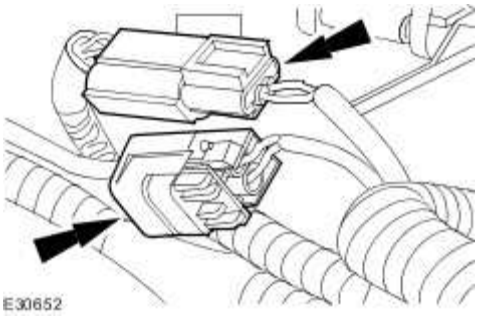

65 . **NOTE:**

Left-hand shown, right-hand similar.

Remove the ignition coil cover.

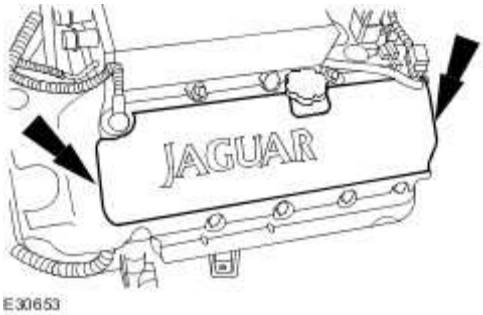

66 . Remove the engine cover retaining bracket.

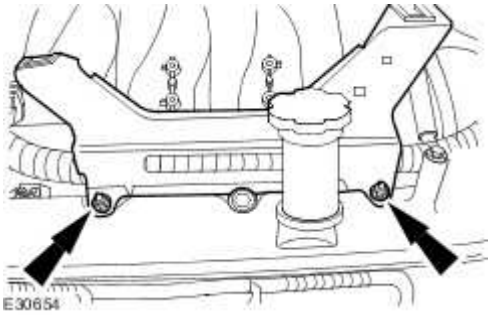

67 . Remove the engine cover retaining bracket.

www.JagDocs.com

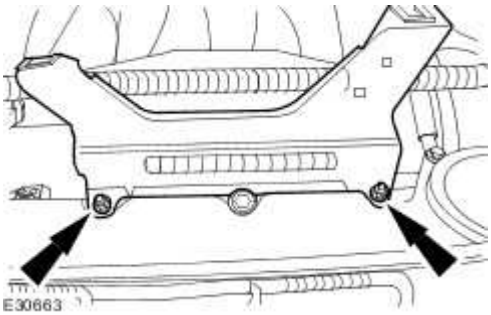

68 . **NOTE:**

Right-hand shown, left-hand similar.

Detach the engine wiring harness.

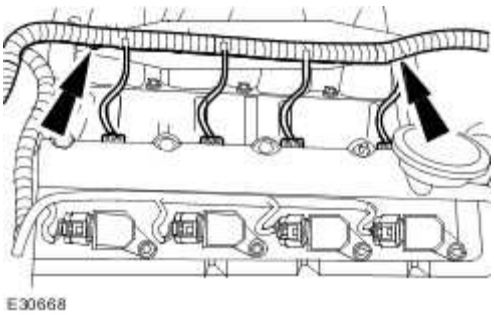

69 . **NOTE:**

Right-hand shown, left-hand similar.

Disconnect the fuel injector electrical connectors.

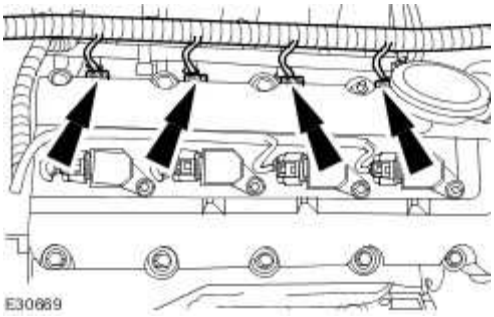

70 . Disconnect the ignition on-plug coil electrical connectors.

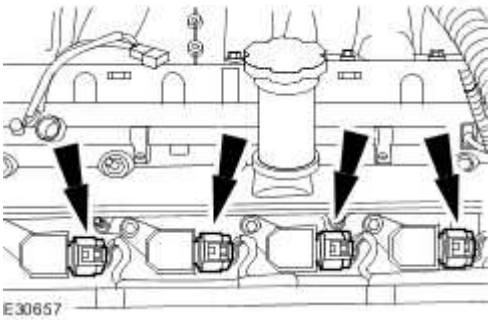

71 . Detach the engine wiring harness.

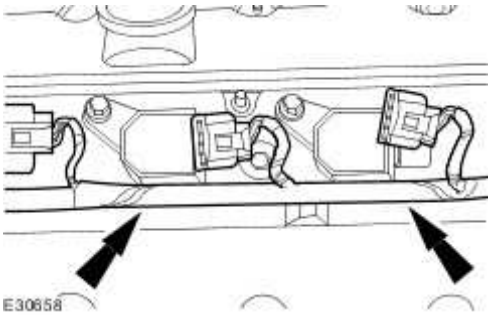

72 . Detach the engine wiring harness.

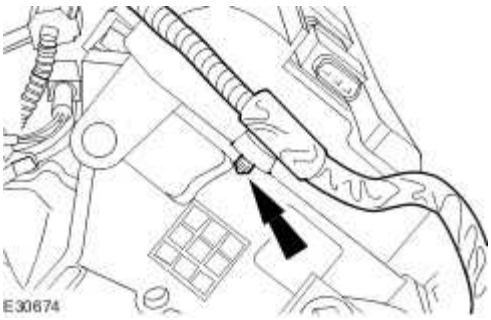

73 . Disconnect the camshaft position sensor electrical connector.

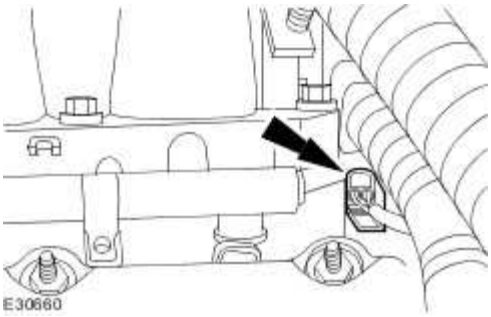

www.JagDocs.com

74 . Detach the engine wiring harness.

- Detach the ground cable.
- Disconnect the variable valve timing (VVT) solenoid electrical connector.

3. Detach the engine wiring harness.

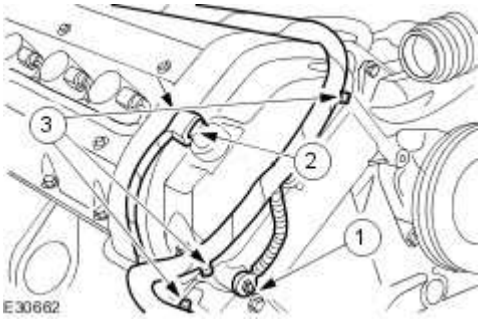

75 . Detach the engine wiring harness.

- Remove the retaining bolt.

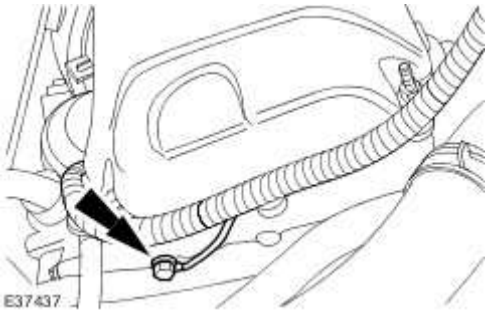

76 . Detach the engine wiring harness.

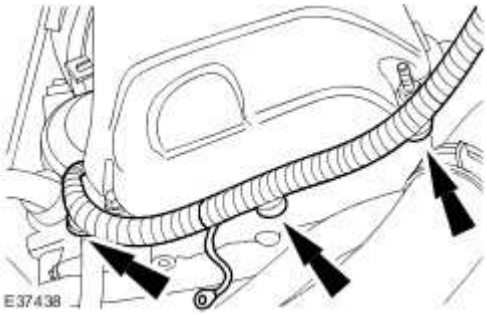

77 . Disconnect the positive crankcase ventilation pipe.

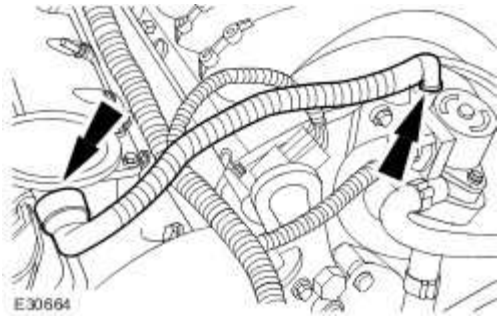

78 . Disconnect the fuel pressure regulator electrical connector.

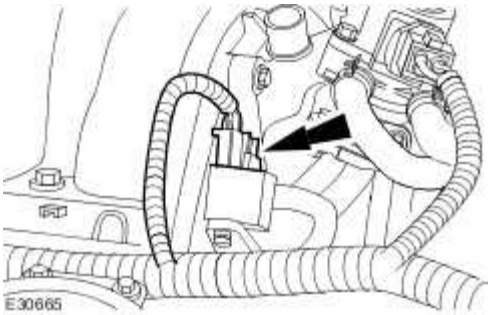

79 . Disconnect the exhaust gas recirculation valve electrical connector.

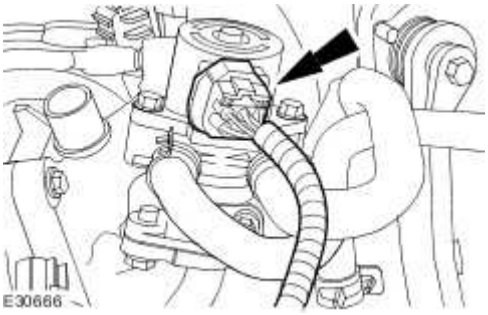

80 . Disconnect the exhaust gas recirculation valve coolant hose.

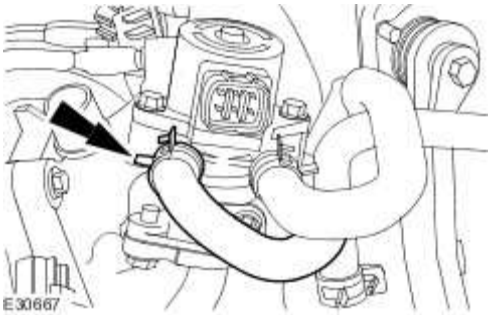

www.JagDocs.com

81 . Detach the engine wiring harness.

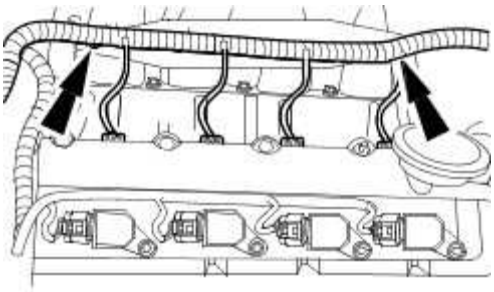

82 . Disconnect the fuel injector electrical connectors.

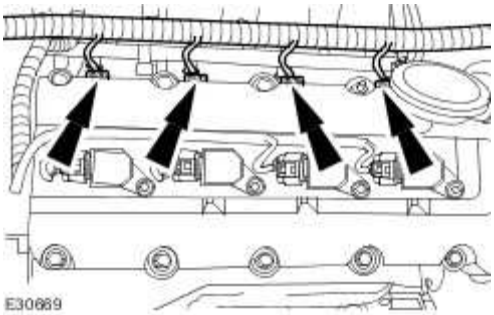

83 . Detach the engine wiring harness.

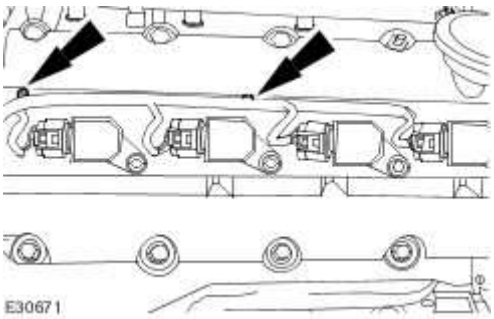

84 . Disconnect the ignition on-plug coil electrical connectors.

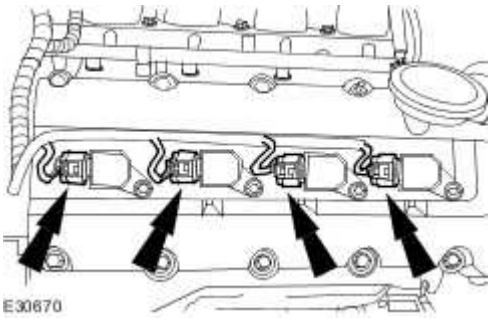

85 . Disconnect the fuel temperature sensor electrical connector.

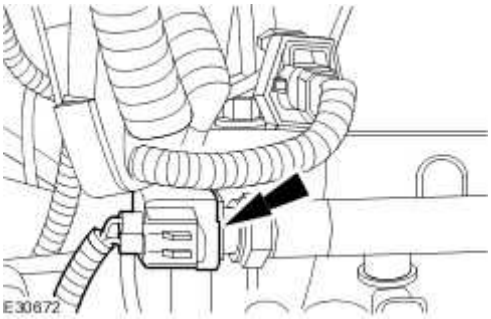

86 . Disconnect the camshaft position sensor electrical connector.

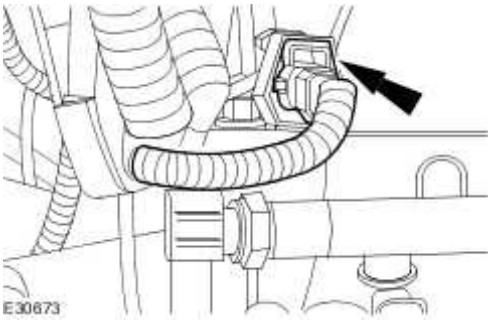

87 . Detach the engine wiring harness

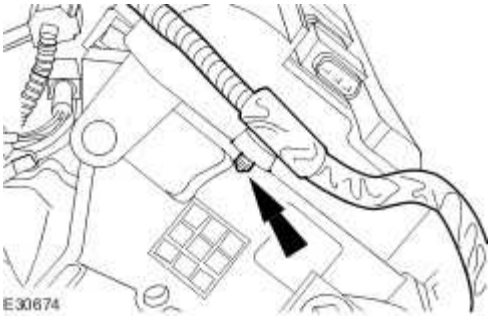

88 . Detach the engine wiring harness.

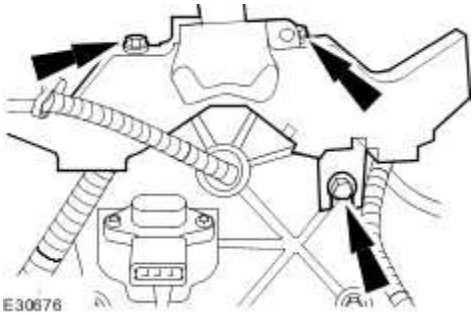

www.JagDocs.com

89 . Remove the intake manifold.

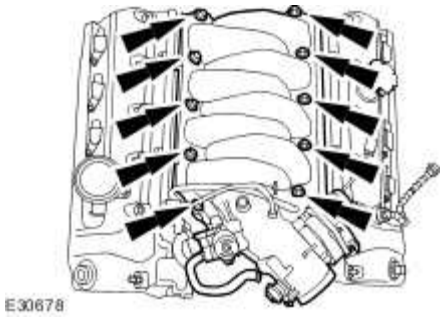

90 . Remove the lower intake manifold.

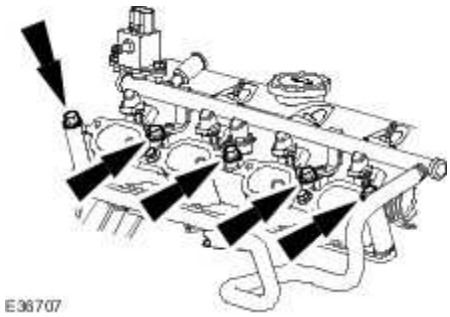

91 . **NOTE:**

Place a suitable container underneath the filter to prevent oil spillage.

Remove the oil filter element.

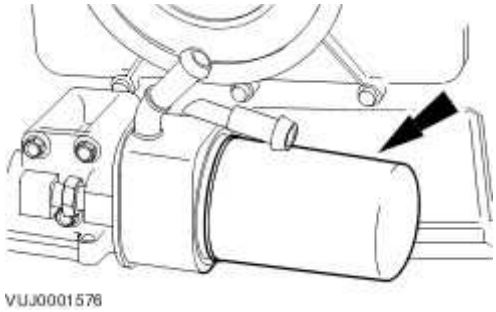

92 . Remove the oil cooler.

- Remove and discard the O-ring seal.

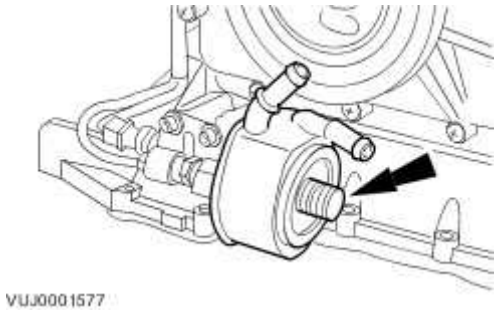

VUJ0001577

93 . Disconnect the oil pressure switch and oil temperature sensor electrical connectors.

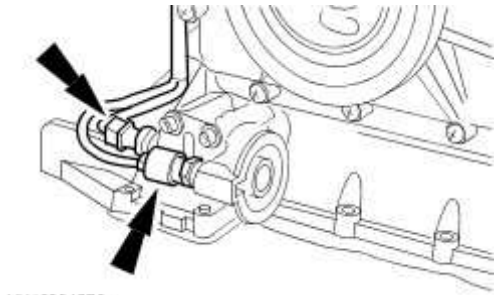

VUJ0001578

94 . Remove the oil filter housing.

- Remove and discard the O-ring seal.

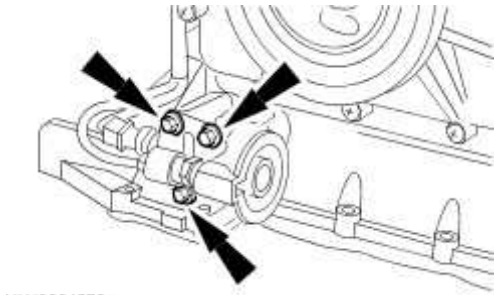

VUJ0001579

95 . Detach the right-hand oxygen sensor.

www.JagDocs.com

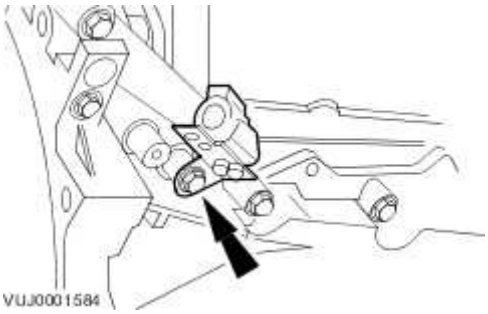

96 . Detach the engine wiring harness retaining clips.

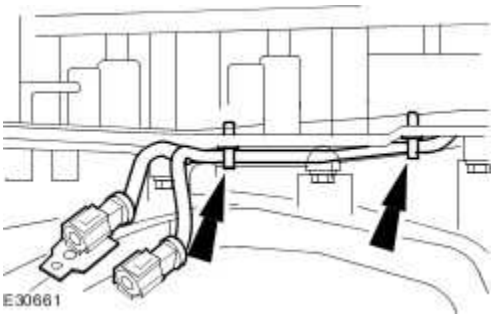

97 . Remove the engine wiring harness

98 . Remove the noise and vibration insulating pad.

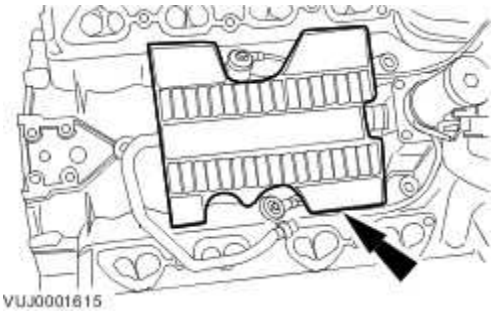

99 . Remove the intake manifold heater coolant hose.

4. Remove the knock sensors.

5. Remove the intake manifold heater coolant hose.

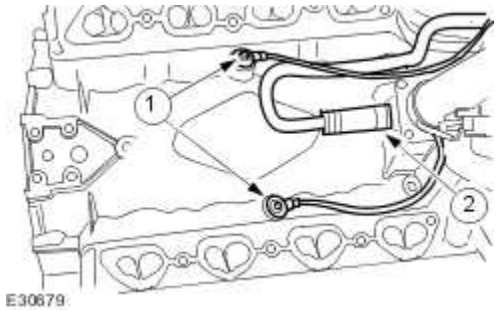

100 . Remove the engine block insulation grommet.

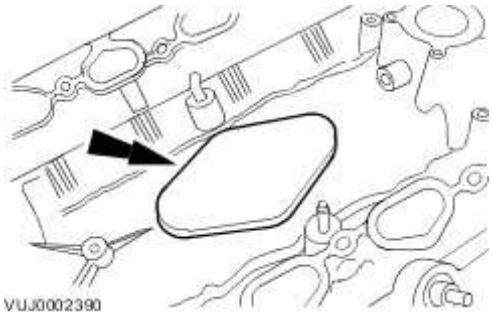

101 . Remove the water pump pulley.

- Using the special tool, retain the water pump pulley.

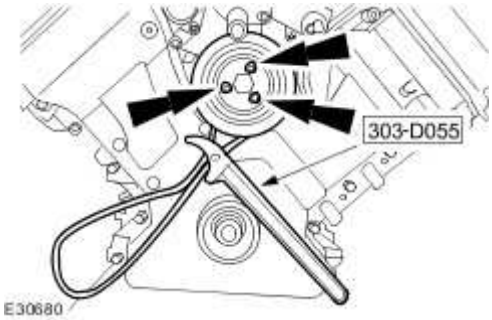

102 . Remove the water pump.

- Remove and discard the gasket.
- Remove and discard the O-ring seal.

www.JagDocs.com

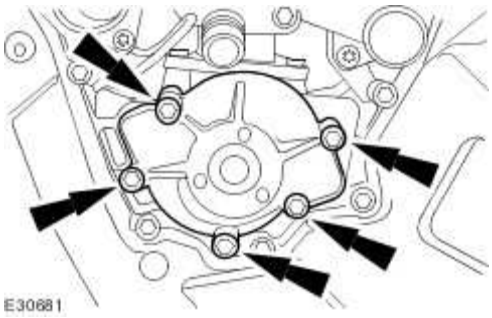

103 . Remove the thermostat housing.

- Remove and discard the O-ring seals.

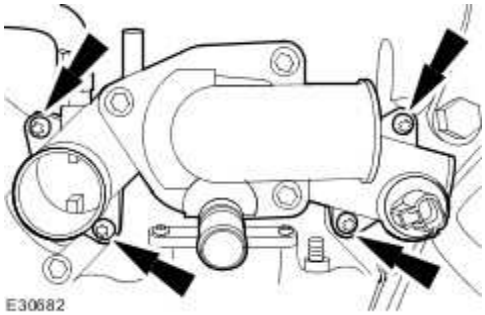

104 . **NOTE:**

Left-hand shown, right-hand similar

Remove the ignition coils.

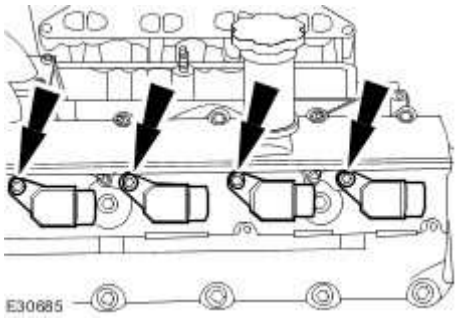

105 . Remove the spark plugs.

106 . Remove the right-hand camshaft position (CMP) sensor.

- Remove and discard the O-ring seal.

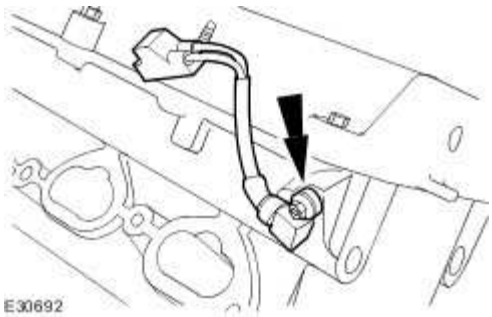

107 . Remove the left-hand camshaft position (CMP) sensor.

- Remove and discard the O-ring seal.

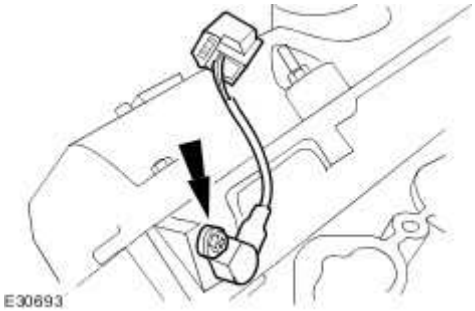

108 . **CAUTION: Under no circumstances should the crankshaft setting peg 303-645 be used in the following operations to lock the crankshaft.**

NOTE:

The crankshaft retaining bolt will be very tight.

Using special tools, retain the crankshaft pulley.

- Remove and discard the crankshaft pulley bolt.

www.JagDocs.com

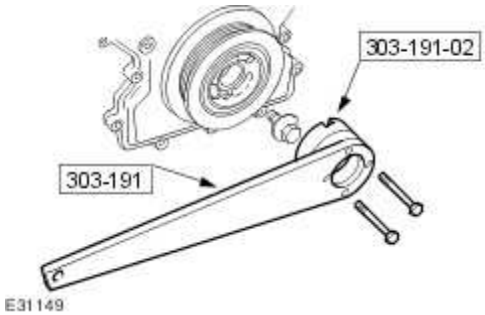

109 . Remove the special tools.

110 . **NOTE:**

The crankshaft pulley will be very tight.

Using special tools, remove the crankshaft pulley.

- Collect the locking ring.
- Remove and discard the O-ring seal.

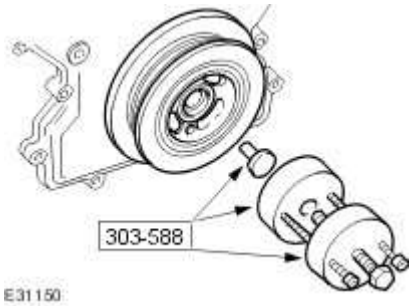

111 . Remove the crankshaft position (CKP) sensor.

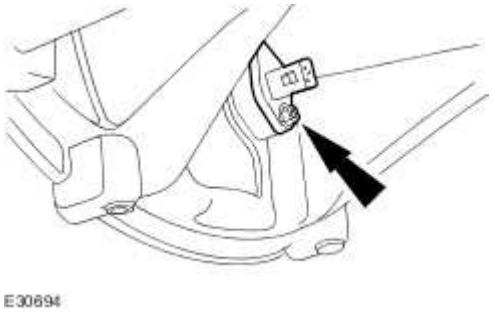

112 . **CAUTION: Make sure the spark plugs are removed to enable the engine to rotate freely.**

CAUTION: Do not rotate the crankshaft counterclockwise. The timing chains may bind causing engine damage.

CAUTION: Rotate the crankshaft clockwise to position the engine to top dead center (TDC) No. 1 cylinder.

Install the special tool 303-645.

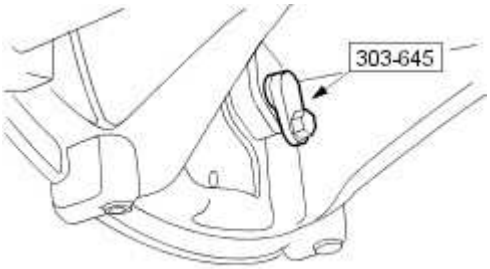

VUJ0002400

113 . Remove the right-hand valve cover.

- Discard the valve cover gaskets.

www.JagDocs.com

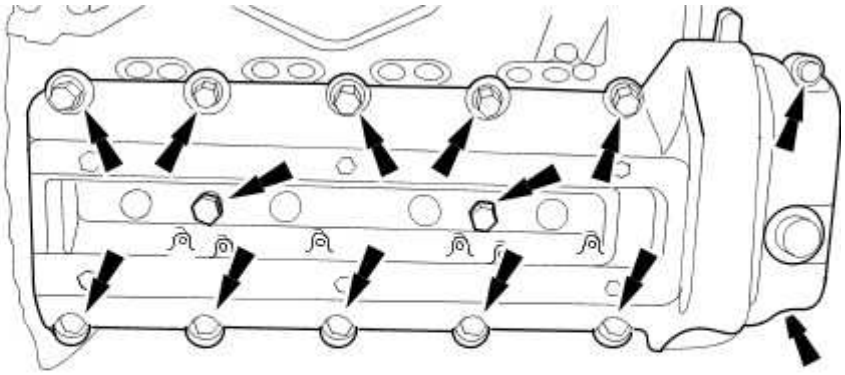

E30696

114 . Remove the left-hand valve cover.

- Discard the valve cover gaskets.

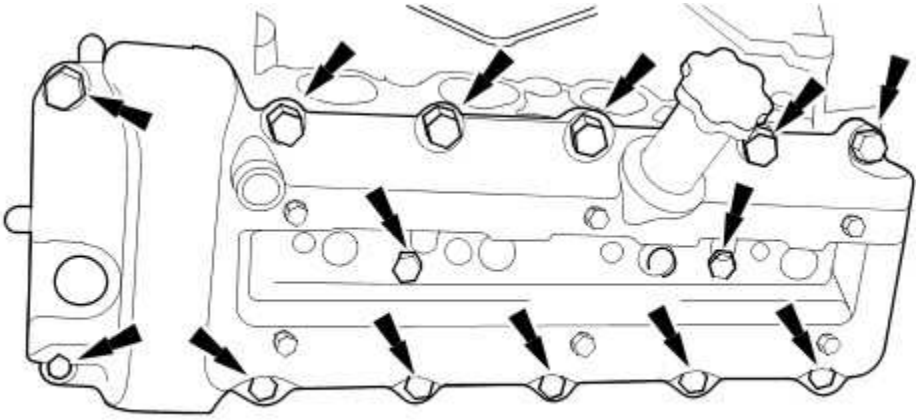

E30697

115 . Remove the engine front cover.

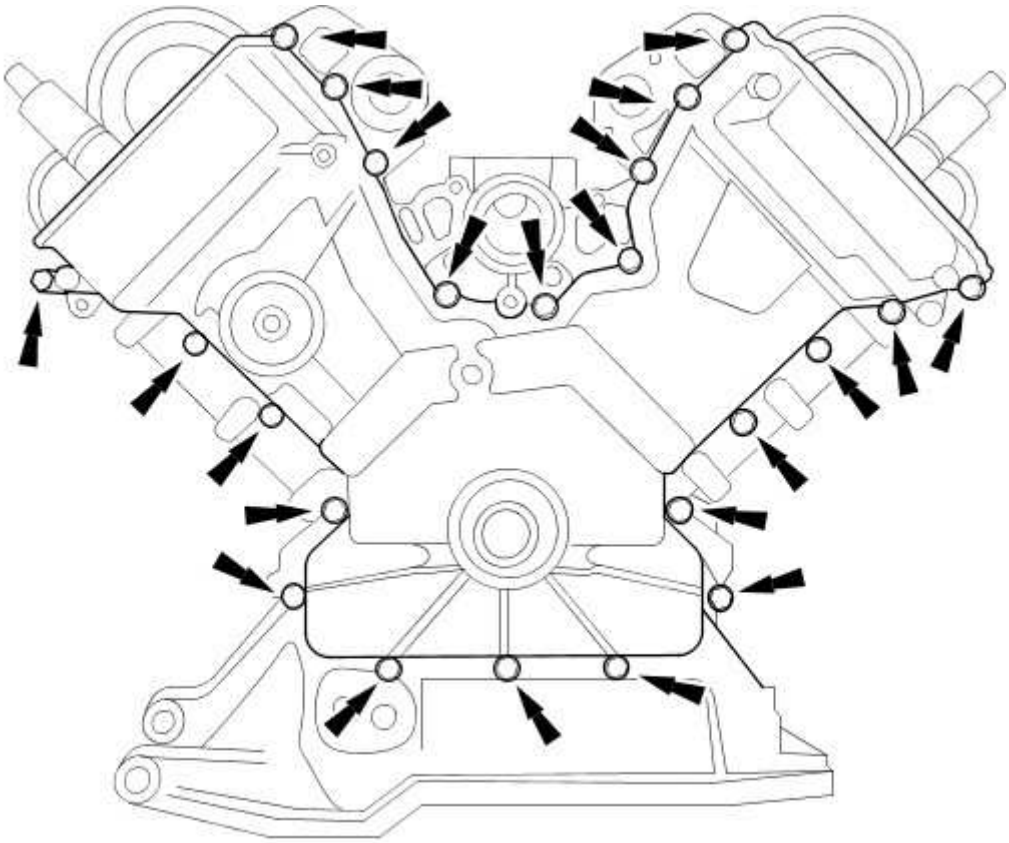

VUJ0002398

116 . Remove the right-hand variable camshaft timing oil control unit housing.

- Remove and discard the O-ring seals.

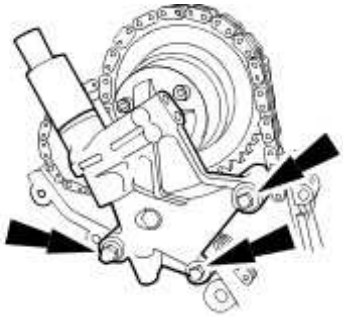

E30699

117 . Remove the left-hand variable camshaft timing oil control unit housing.

- Remove and discard the O-ring seals.

www.JagDocs.com

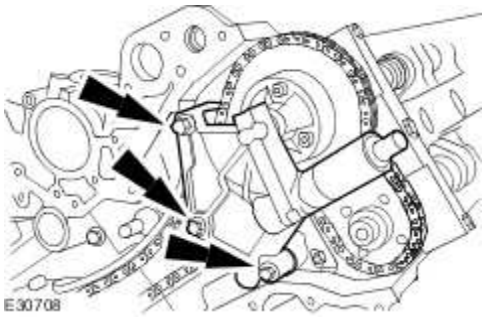

118 . Install the special tool to the left-hand cylinder head.

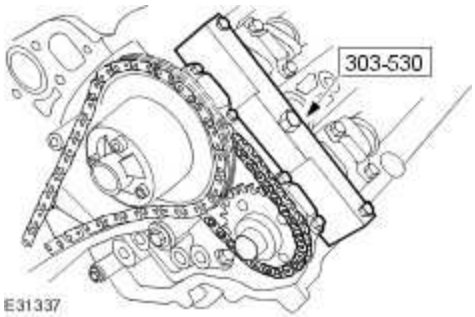

119 . Install the special tool to the right-hand cylinder head.

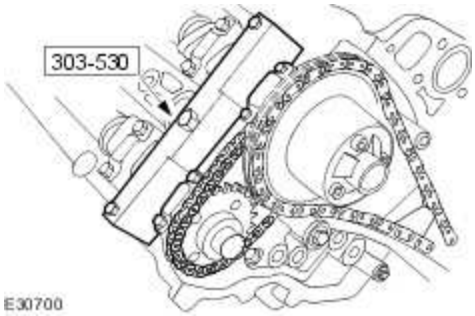

120 . Remove the primary timing chain tensioner assembly.

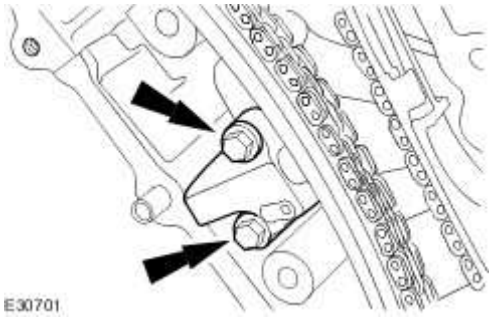

121 . Remove the primary timing chain tensioner guide.

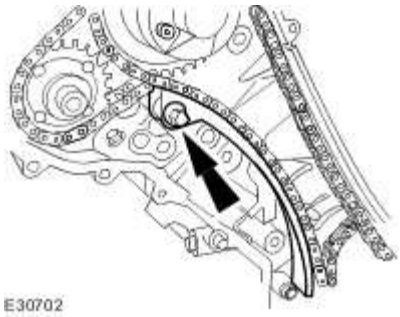

122 . Remove the primary timing chain.

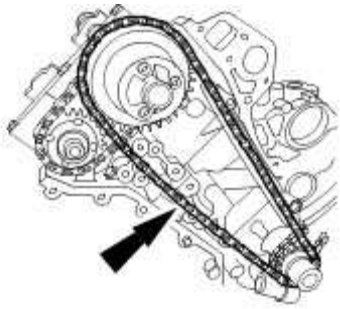

123 . Remove the primary timing chain guide.

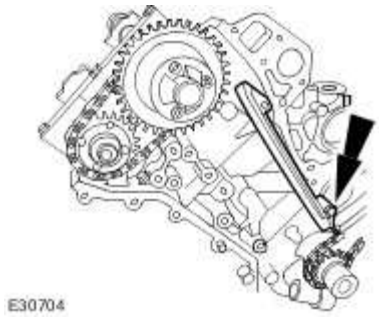

124 . Remove the secondary timing chain tensioner retaining bolts.

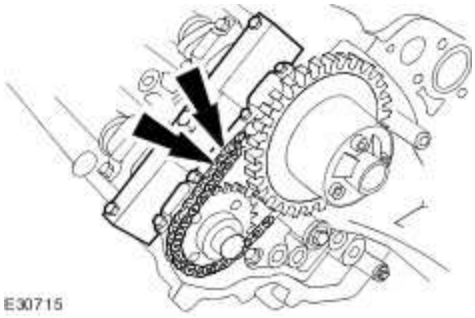

www.JagDocs.com

125 Remove the camshaft sprockets.

.

- Remove the secondary timing chain tensioner and secondary timing chain from the camshaft sprockets.

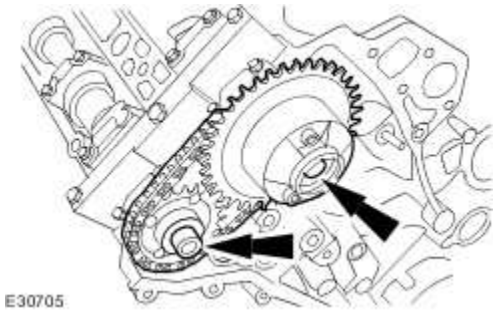

126 . Remove the primary timing chain tensioner assembly.

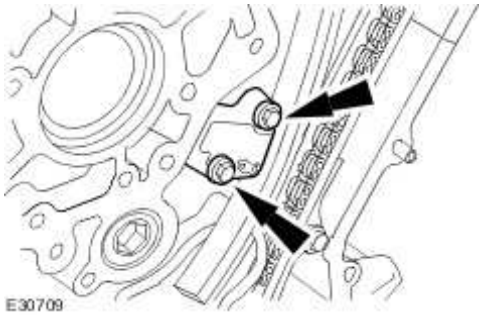

127 . Remove the primary timing chain tensioner guide.

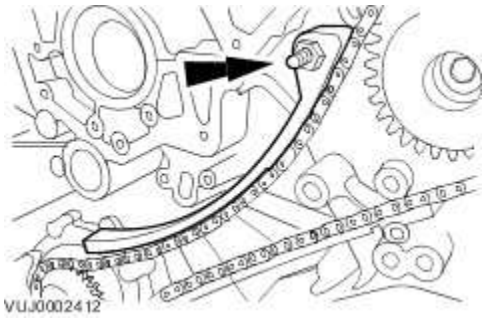

128 . Remove the primary timing chain.

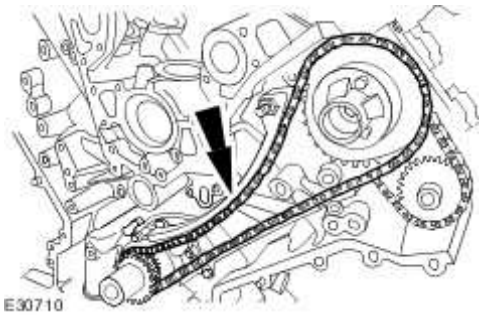

129 . Remove the crankshaft sprocket.

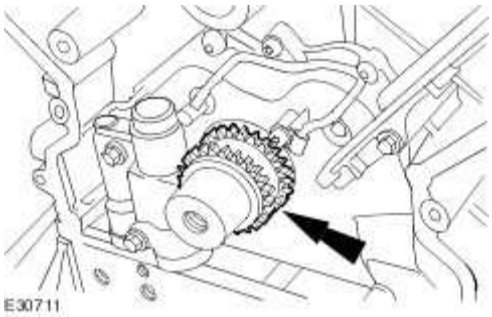

130 . Remove the primary timing chain tensioner guide.

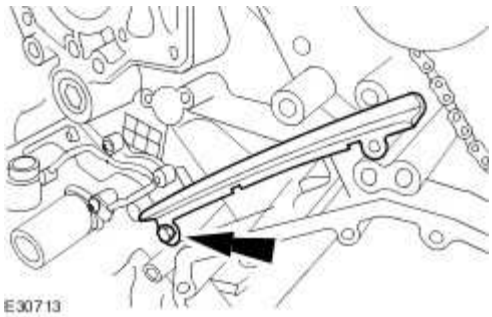

131 . Remove the secondary timing chain tensioner retaining bolts.

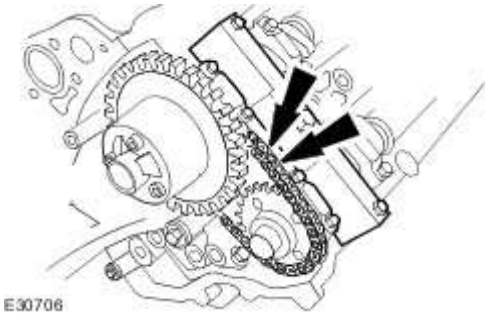

www.JagDocs.com

132 Remove the camshaft sprockets.

.

- Remove the secondary timing chain tensioner and secondary timing chain from the camshaft sprockets.

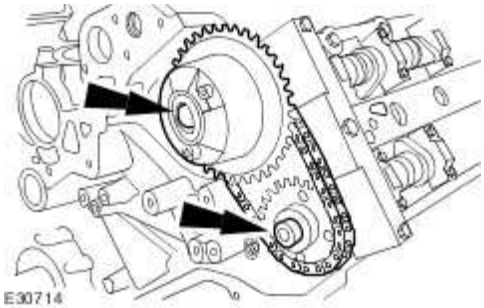

133 . Remove the camshaft setting tool.

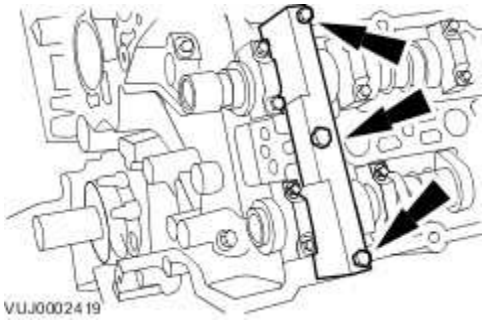

134 . Remove the camshaft setting tool.

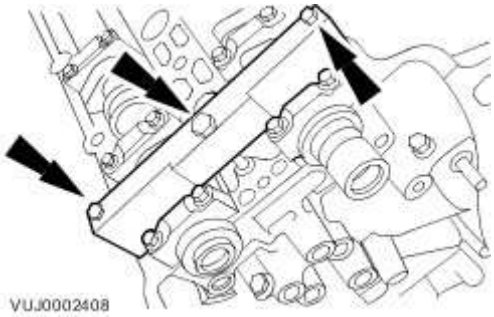

135 Remove the camshaft bearing caps.

.

- Remove the camshaft bearing cap retaining bolts evenly and in stages.

- Remove the camshaft bearing caps. Note their orientation and markings, each is

marked with its position (a number) and orientation (an arrow).

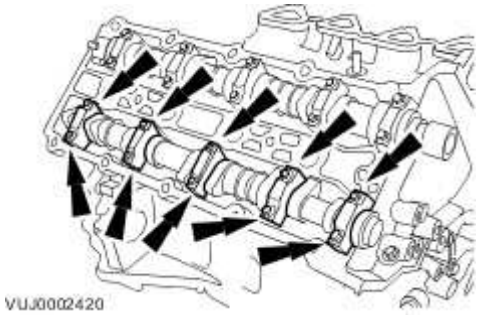

136 . Remove the right-hand exhaust camshaft.

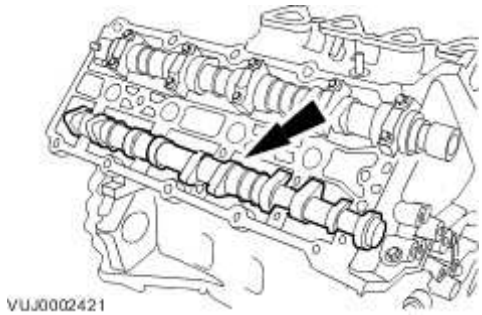

137 Remove the camshaft bearing caps.

.

- Remove the camshaft bearing cap retaining bolts evenly and in stages.

- Remove the camshaft bearing caps. Note their orientation and markings, each is marked with its position (a number) and orientation (an arrow).

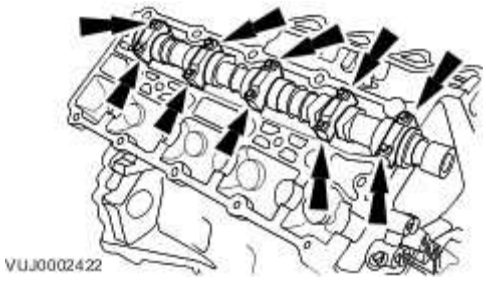

138 . Remove the right-hand intake camshaft.

www.JagDocs.com

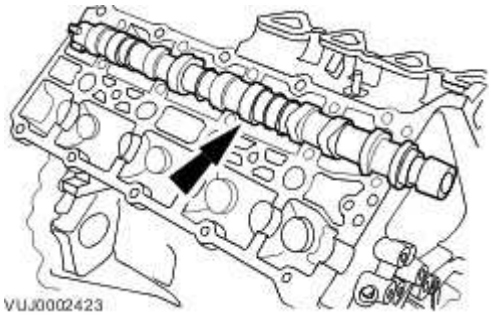

139 Remove the camshaft bearing caps.

.

- Remove the camshaft bearing cap retaining bolts evenly and in stages.

- Remove the camshaft bearing caps. Note their orientation and markings, each is marked with its position (a number) and orientation (an arrow).

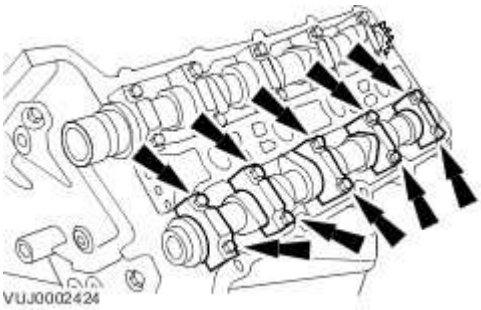

140 . Remove the left-hand exhaust camshaft.

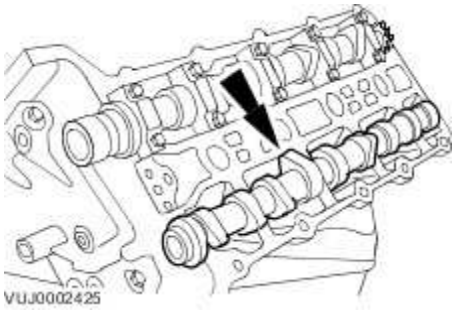

141 Remove the camshaft bearing caps.

.

- Remove the camshaft bearing cap retaining bolts evenly and in stages.

- Remove the camshaft bearing caps. Note their orientation and markings, each is marked with its position (a number) and orientation (an arrow).

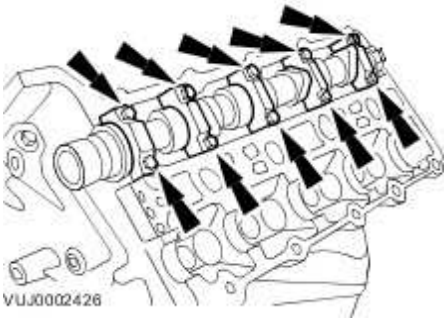

142 . Remove the left-hand inlet camshaft.

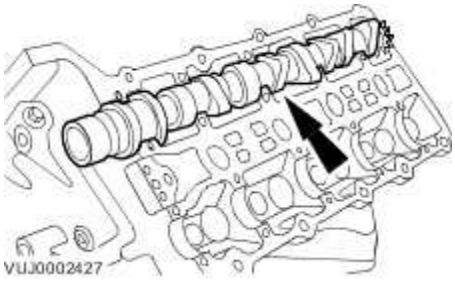

143 . **CAUTION: The bolts can only be used twice, mark the bolts with a center punch. If two punch marks are visible, discard the bolts.**

CAUTION: Vehicles fitted with Polydrive cylinder head bolts, the cylinder head bolts must be removed using a 10 mm Polydrive socket or a 10 mm Allen key. Failure to follow this instruction may result in damage to the component.

Remove the right-hand cylinder head.

- Remove the bolts in the indicated sequence.
- Remove and discard the gasket.

www.JagDocs.com

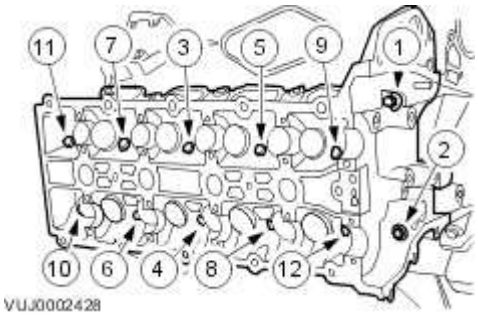

144 . **CAUTION: The bolts can only be used twice, mark the bolts with a center punch. If two punch marks are visible, discard the bolts.**

CAUTION: Vehicles fitted with Polydrive cylinder head bolts, the cylinder head bolts must be removed using a 10 mm Polydrive socket or a 10 mm Allen key. Failure to follow this instruction may result in damage to the component.

Remove the left-hand cylinder head.

- Remove the bolts in the indicated sequence.
- Remove and discard the gasket.

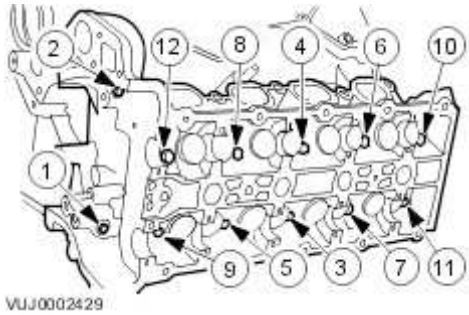

145 . Remove the crankshaft setting peg 303-645 from the crankshaft position sensor location.

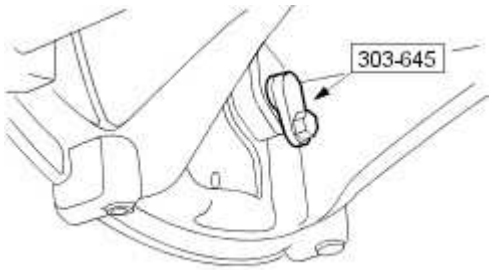

VUJ0002400

146 . Remove the flexplate.

6. Remove the flexplate retaining bolts.

7. Remove the flexplate.

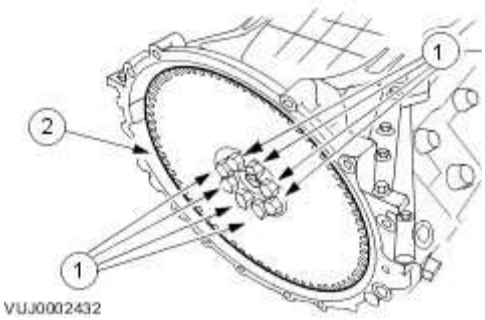

VUJ0002432

147 . Remove the lower oil pan.

- Remove and discard the gasket.

www.JagDocs.com

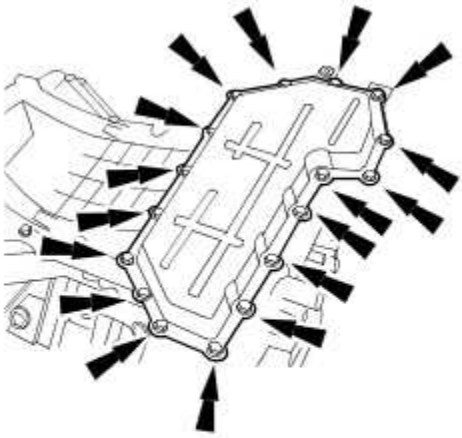

VUJ0002433

148 . Remove the oil strainer.

- Remove and discard the O-ring seal.

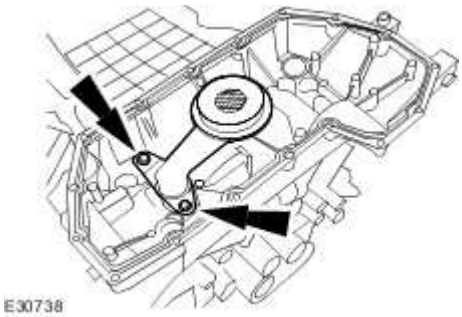

E30738

149 . Remove the upper oil pan.

- Remove and discard the gasket.

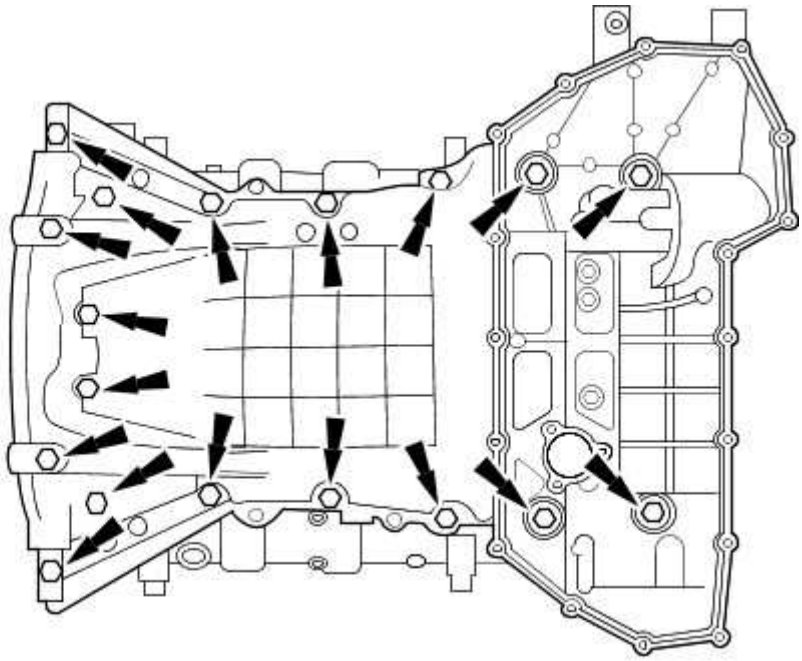

150 . Remove the oil pump.

- Remove and discard the gasket.

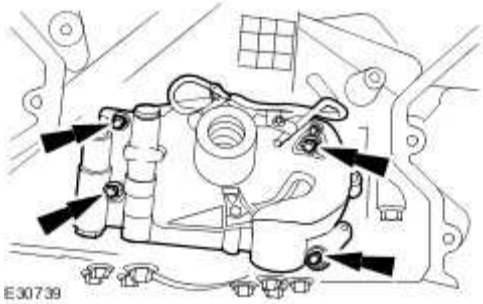

151 . Inspect the tops of the cylinder bores. As necessary remove ridge and carbon build up from each cylinder.

152 . Remove the piston cooling jets.

153 . **CAUTION: Pistons, connecting rods and connecting rod bearings should be**

www.JagDocs.com

numbered to make sure they are reassembled in the same position.

NOTE:

Mark the position of the connecting rod caps to the connecting rods to make sure of correct installation.

NOTE:

Discard the connecting rod bolts after removal.

Remove the connecting rod bolts, the connecting rod caps and the lower connecting rod bearings.

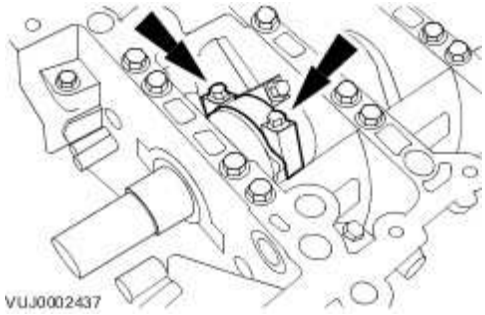

154. **CAUTION: Use appropriate protection to prevent damage to the crankshaft bearing journals and cylinder bore surfaces.**

Install special tools to the connecting rods.

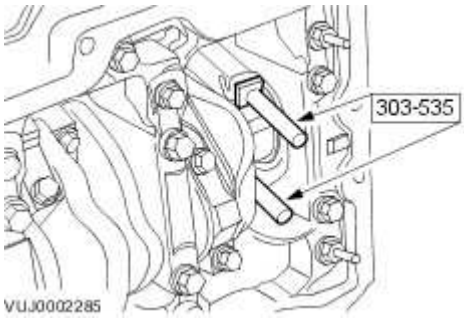

155. **CAUTION: Care should be taken not to damage the connecting rod and cap joint**

face surfaces or possible engine damage may occur. Avoid contaminating the fractured joint surfaces with dirt or grease.

NOTE:

Attach the connecting rods and caps after removal to avoid mismatch.

Remove the pistons.

- Rotate the crankshaft to locate pistons at the bottom of travel.
- Push the piston, connecting rod and upper bearing through the top of the cylinder.

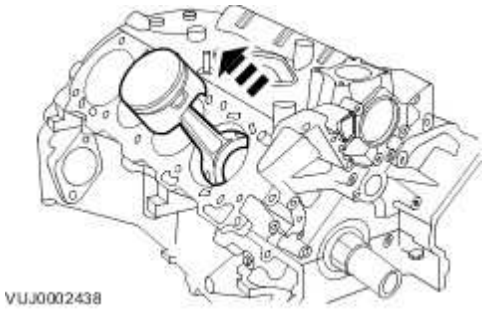

156 . **NOTE:**

Remove the lower cylinder block bolts in the indicated sequence.

NOTE:

Mark the position of the upper and lower crankshaft main bearings for reassembly.

Remove the lower cylinder block.

- Remove the lower cylinder block retaining bolts in the indicated sequence.

www.JagDocs.com

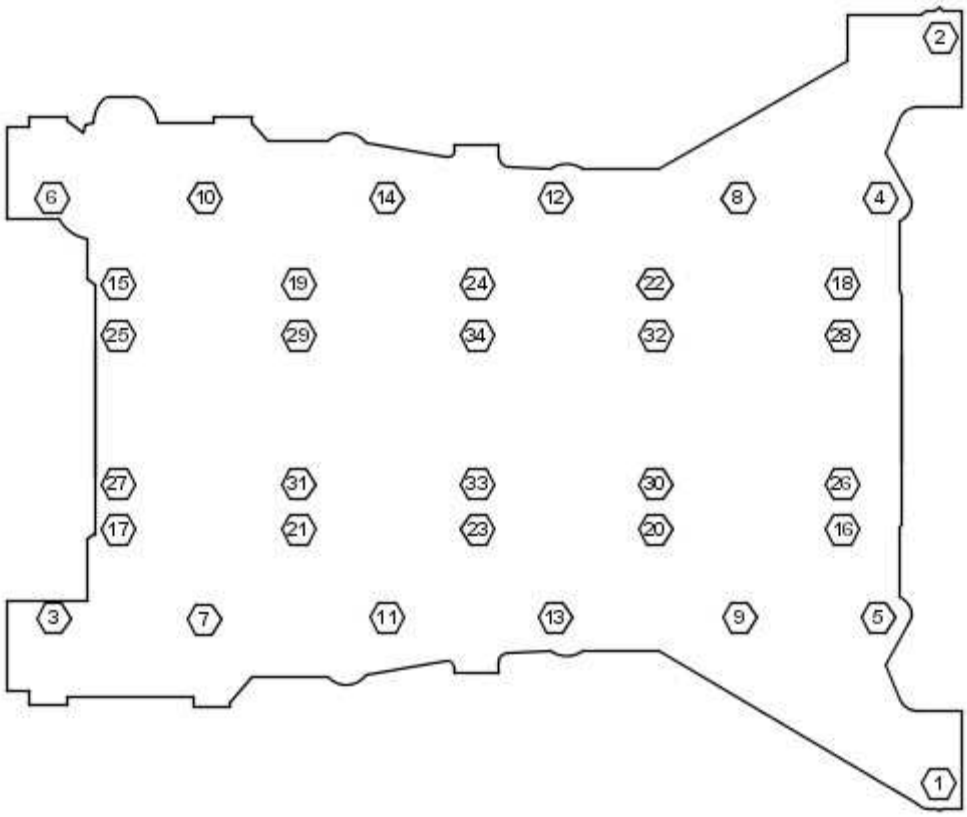

VUJ0002439

157 . Discard the crankshaft rear main oil seal.

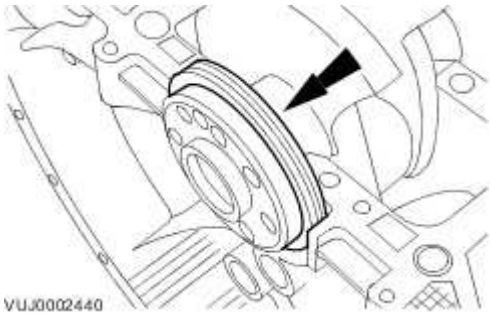

VUJ0002440

158 . **CAUTION: Avoid damage to any crankshaft bearing surfaces.**

NOTE:

Never remove any pipe, plugs or dowels unless they are to be newly installed or the cylinder block is to be washed.

Remove the crankshaft.

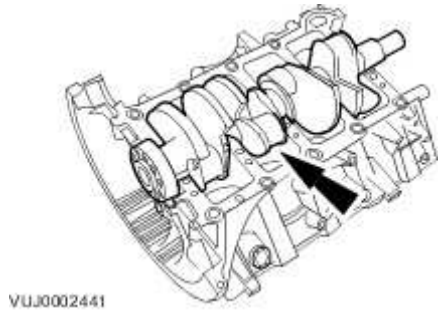

159 . Remove the upper crankshaft main bearings.

8. Remove the upper crankshaft thrust washers.

9. Remove the upper crankshaft main bearings.

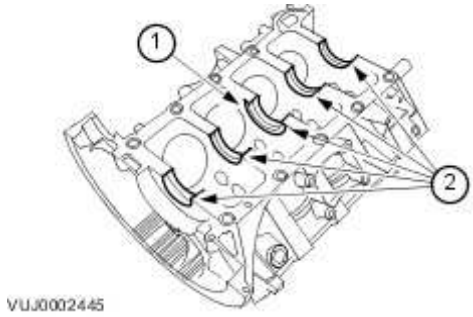

160 . Clean the cylinder block with a soap and water solution. Dry the cylinder block completely with compressed air.

www.JagDocs.com

Cylinder Head (12.29.22)

Special Service Tools

Valve Spring Compressor
303-252

Disassembly

1. **CAUTION: Do not use a magnet to remove shims. Failure to follow these instructions may result in damage to the vehicle.**

CAUTION: If the cylinder head valve components are to be reused, mark the position of the valve components to make sure they are reassembled in the same position.

Remove the bucket tappet and shim assemblies.

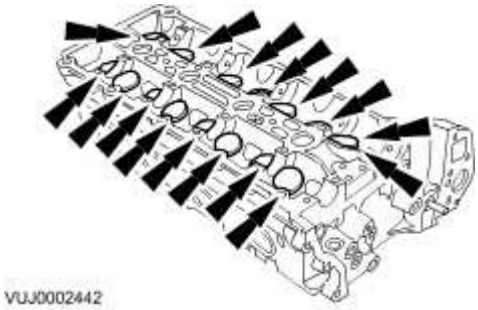

2 . Remove the camshaft position (CMP) sensor.

- Remove and discard the 'O' ring seal.

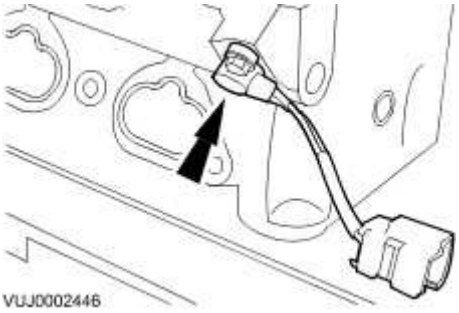

3 . Using the special tool, compress the valve springs.

- Remove the valve collets.

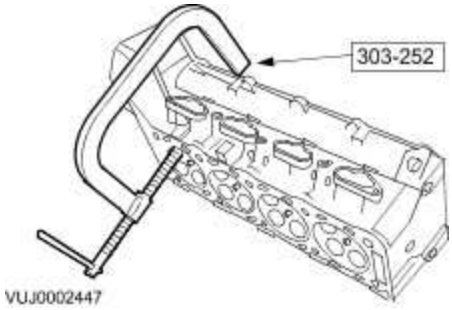

4 . Remove the valve spring retainers and valve springs.

1. Remove the valve spring retainers.
2. Remove the valve springs.
3. Remove the valve stem oil seals.

www.JagDocs.com

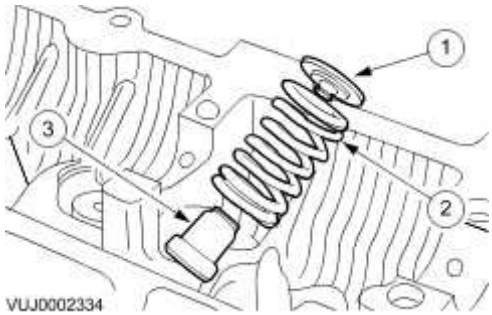

5 . Remove the valves from the cylinder head.

4. Remove the intake valves.

5. Remove the exhaust valves.

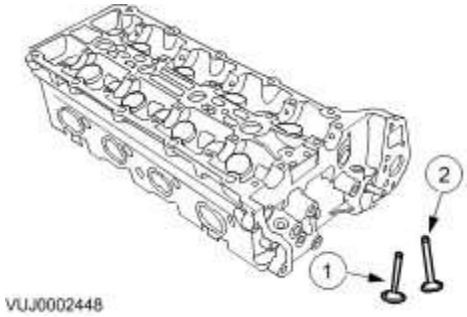

6 . Inspect the cylinder heads and related components. For additional information, refer to <<303-00>>

7 . Remove the pipe plugs and alignment dowels as necessary to clean the cylinder heads.

Assembly

1 . **WARNING: Eye protection is required during use of compressed air. Failure to follow**

these instructions may result in personal injury.

CAUTION: The cylinder head surface finish is measured in microns. For correct head gasket sealing, avoid any contact of finish with metallic objects.

Clean gasket material, dirt and foreign material from cylinder heads. Wash with a suitable soap and water solution and dry the cylinder head completely using compressed air if pipe plugs have been removed.

2 . Install the pipe plugs and alignment dowels to cylinder heads.

- Apply pipe sealant to plugs prior to installation.

3 . **NOTE:**

Lubricate the valve stems before assembly.

Install the valves into the cylinder heads.

6. Install the intake valves.

7. Install the exhaust valves.

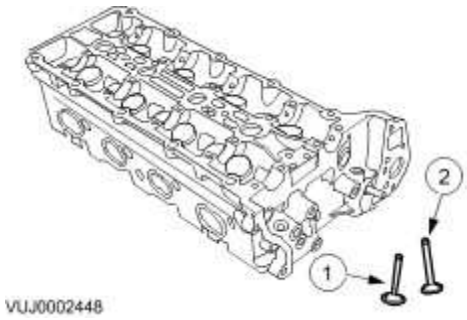

4 . Install the valve spring retainers and valve springs.

8. Install the valve stem oil seals.

www.JagDocs.com

9. Install the valve springs.

10. Install the valve spring retainers.

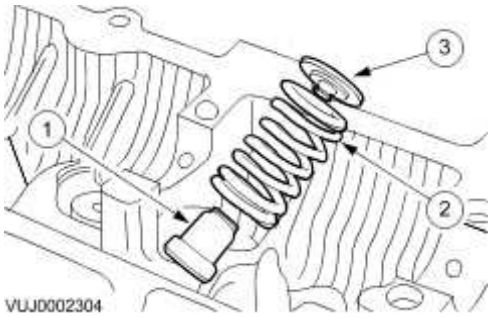

5 . Using the special tool, compress the valve springs.

- Install the valve collets.

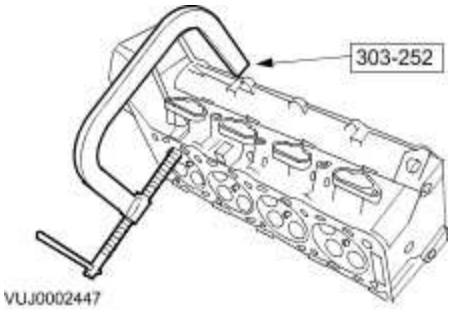

6 . Install the camshaft position (CMP) sensor.

- Install a new 'O' ring seal.
- Tighten to 7 Nm.

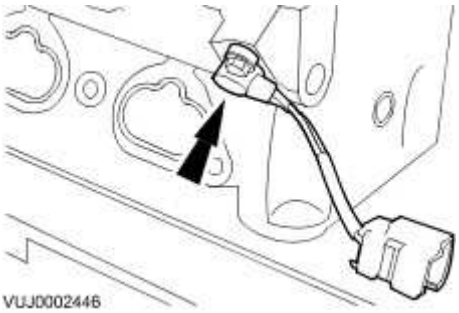

7. **CAUTION: Do not use a magnet to install shims. Failure to follow these instructions may result in damage to the vehicle.**

Install the bucket tappet and shim assemblies.

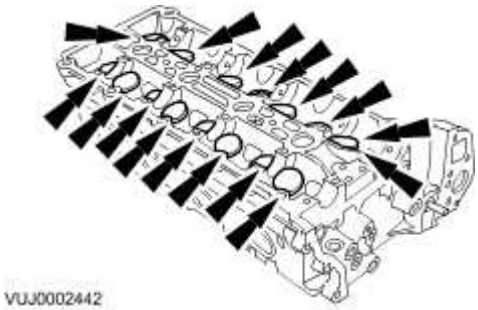

www.JagDocs.com

Engine

Special Service Tools

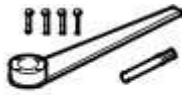

303-191

Crankshaft locking, main tool
303-191

303-191-02

Adapter
303-191-02

303-645

Crankshaft setting, main tool
303-645

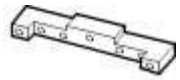

303-530

Camshaft setting
303-530

303-532

Timing chain tensioning tool
303-532

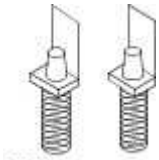

303535

Cylinder Bore Protectors
303-535

303372

Piston Ring Compressor
303-372

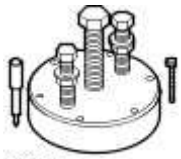

303-538

Crankshaft rear oil seal remover/replacer
303-538

303-750

Crankshaft front seal installer
303-538

www.JagDocs.com

Crankshaft damper holding tool
303-D055

Assembly

1. **CAUTION: Use only a plastic scraper when removing old gasket material.**

Clean all the mating faces and reusable parts thoroughly and check for damage.

- If gasket material remains on the cylinder head after cleaning, use a plastic tipped scraper to remove remaining material.

2 . **NOTE:**

Never remove pipe plugs or alignment dowels unless they are to be serviced.

Reseal oil passage blanking plugs, as necessary.

3 . **NOTE:**

The main bearings are precision selective fit.

NOTE:

Lubricate the upper crankshaft main bearings and thrust washers.

Install the upper crankshaft main bearings.

For additional information, refer to Camshaft Bearing Journal Clearance

1. Install the upper crankshaft thrust washers.

2. Install the upper crankshaft main bearings.

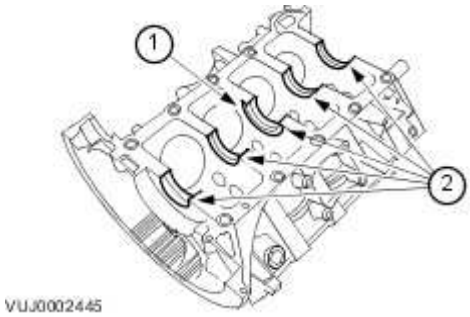

4 . **CAUTION: Avoid damage to any crankshaft bearing surfaces.**

Install the crankshaft.

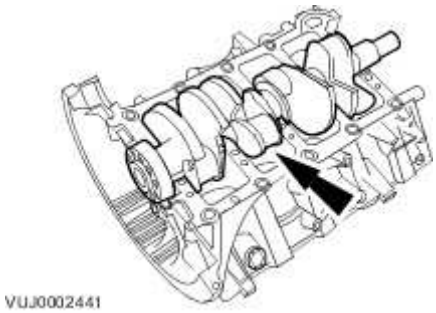

5 **NOTE:**
.

The main bearings are precision selective fit.

NOTE:

Install lower cylinder block and tighten bolts to specification within twenty minutes of applying sealer.

Apply a bead of sealant to the cylinder block housing.

www.JagDocs.com

- Use WSS-M4G320-A3-RTV sealant.

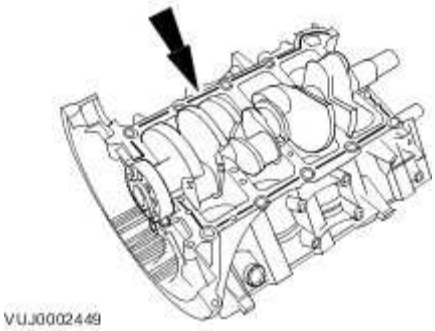

6. **CAUTION: Make sure all dowels are fully seated into lower cylinder block prior to tightening the bolts.**

CAUTION: Do not lubricate the lower cylinder block bolts.

CAUTION: Do not rotate crankshaft until all bolts are tightened to specification.

CAUTION: Bolts must be tightened within twenty minutes of applying sealer.

CAUTION: Tighten the bolts in the sequence shown.

Install the lower cylinder block to the upper cylinder block.

3. Tighten bolts 21 to 32 to 15 Nm
4. Tighten bolts 33 to 34 to 15 Nm
5. Tighten bolts 1 to 10 to 25 Nm

6. Tighten bolts 11 to 20 to 15 Nm

7. Tighten bolts 1 to 10 to 35 Nm +135°

8. Tighten bolts 11 to 20 to 20 Nm +150°

9. Tighten bolts 21 to 32 to 20 Nm +90°

10. Tighten bolts 33 to 34 to 20 Nm +150°

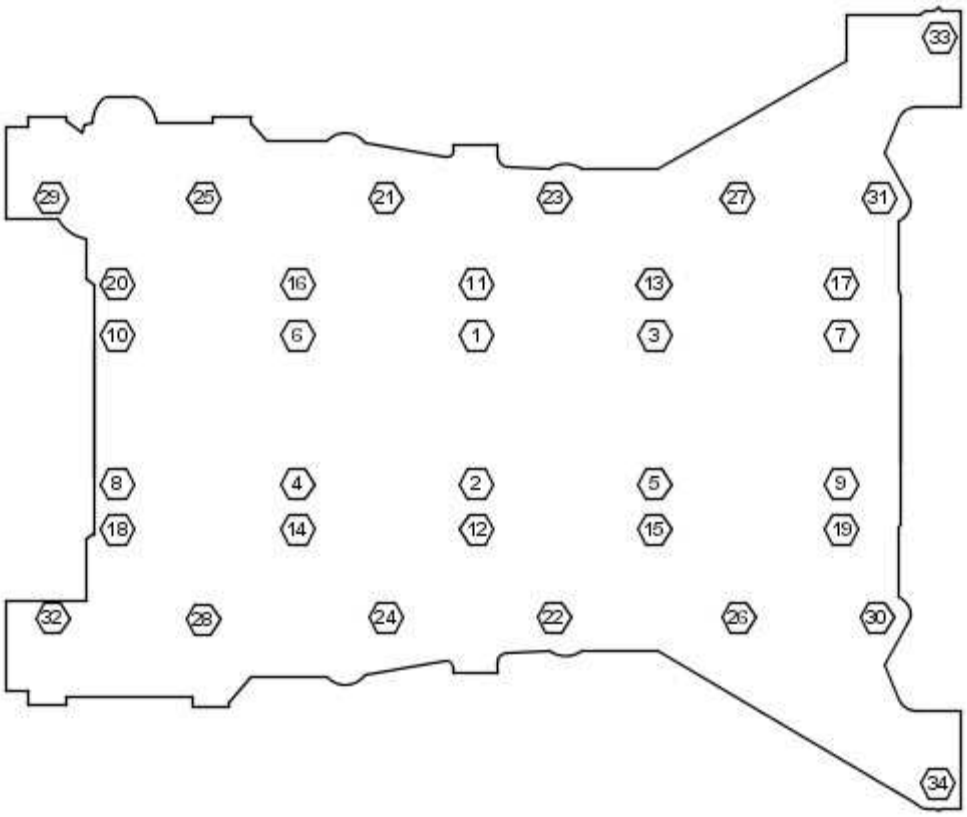

VUJ0002450

7 . Rotate the crankshaft to check correct operation.

8 . Remove excess sealant which may squeeze out at the front cover sealing surfaces.

www.JagDocs.com

9 . **CAUTION: Do not use any lubricant on the seal, the transit sleeve or the crankshaft.**

CAUTION: Make sure all components are clean and dry.

Make sure the transit sleeve is correctly in place and install the new seal over the crankshaft.

10 . Carefully remove the transit sleeve, leaving the seal in place.

11 . Install the special tool to the crankshaft.

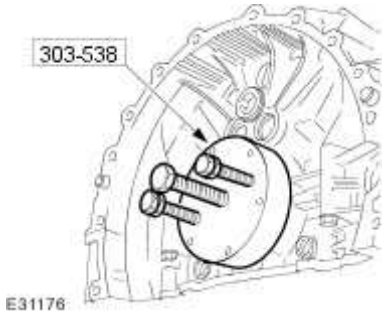

12 . Reposition the nuts to hold the special tool against the crankshaft rear seal. Check that the crankshaft rear seal and the special tool are parallel to the rear of the engine.

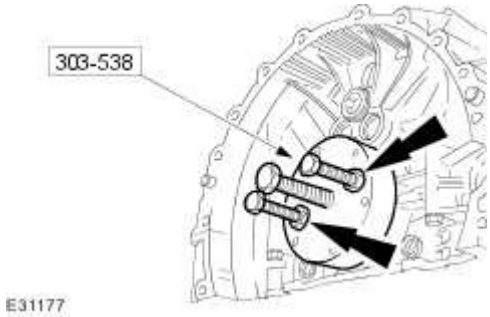

13 . **CAUTION: Alternate nut tightening to correctly seat the crankshaft rear seal.**

Using the special tool, install the crankshaft rear seal.

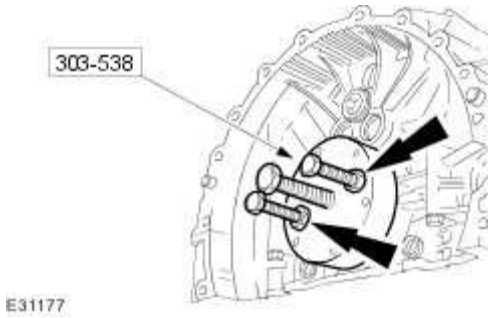

14 . Remove the special tool from the crankshaft.

- Check that the seal is located correctly.

15 . **CAUTION: Use appropriate protection to prevent damage to the crankshaft bearing journals and cylinder bore surfaces.**

Install special tools to the connecting rods.

- Position the crankshaft journal at the bottom of the stroke.

16 . **CAUTION: Make sure the piston rings are positioned at different positions opposite the thrust side of the piston before installation.**

CAUTION: Install pistons with arrow to front of engine.

Using the special tool compress the rings and install the piston and connecting rod.

- Lubricate all piston components.

www.JagDocs.com

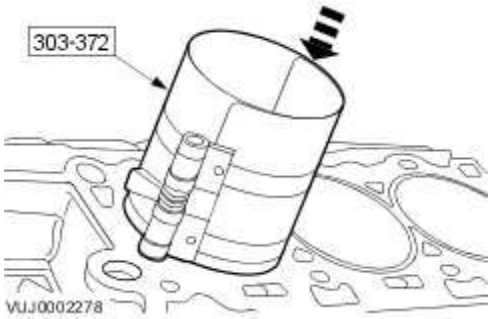

17. **CAUTION: When assembling the connecting rods and connecting rod caps it is imperative that bearing slots and tangs be located on the same side of the connecting rods.**

CAUTION: Connecting rod bolts are torqued to yield and must be replaced.

CAUTION: Bolts must be tightened equally.

NOTE:

Remove the special tools from the connecting rods.

Position the connecting rod cap on the appropriate connecting rod.

11. Tighten to 10 Nm
12. Tighten to 30 Nm
13. Tighten to 90°

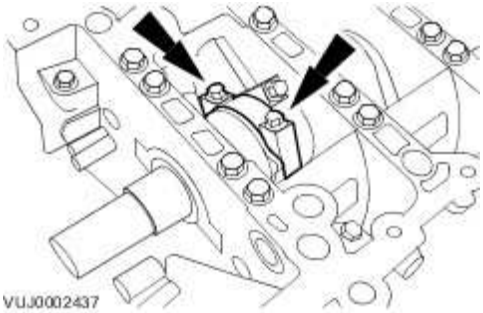

18 . Rotate the crankshaft to check correct operation.

19 . Install the piston cooling jets.

- Tighten to 9 Nm

20 . Install the oil pump.

- Install a new gasket.
- Tighten to 12 Nm.

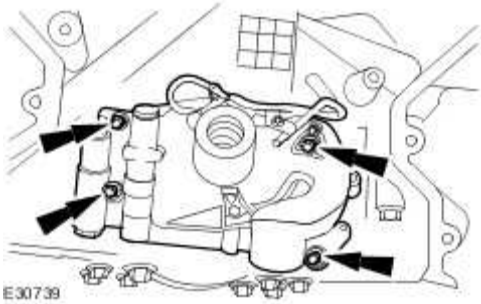

21 . Install the upper oil pan.

- Install a new gasket.
- Tighten to 21 Nm.

www.JagDocs.com

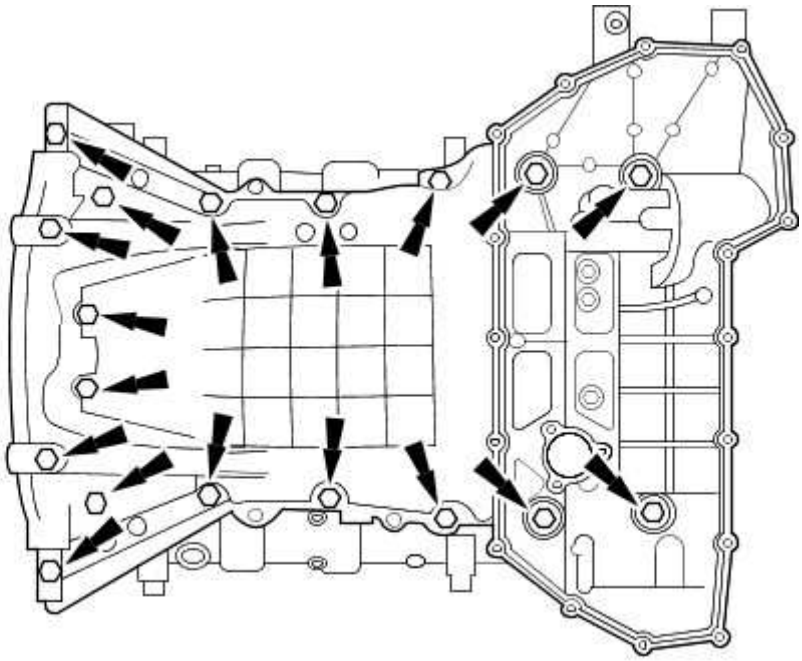

VUJ0002435

22 . Install the oil strainer.

- Install a new O-ring seal.
- Tighten to 12 Nm.

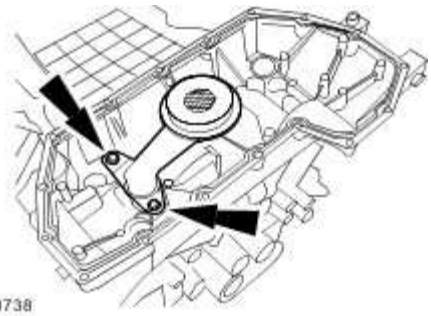

E30738

23 . Install the oil pan.

- Install a new gasket.
- Install, but do not fully tighten the retaining bolts.

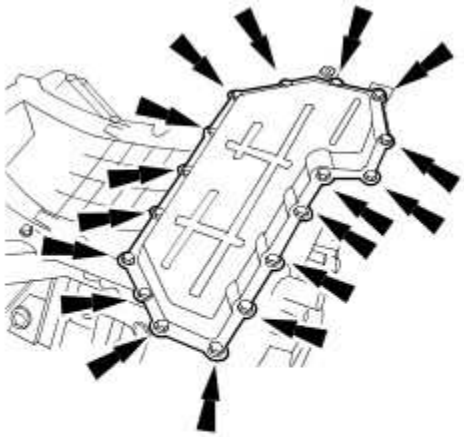

VUJ0002433

24 Tighten to 12 Nm.

.

- Tighten in the sequence shown.

- A new oil pan is supplied with the drain plug installed. Check that the drain plug is tightened to 25 Nm.

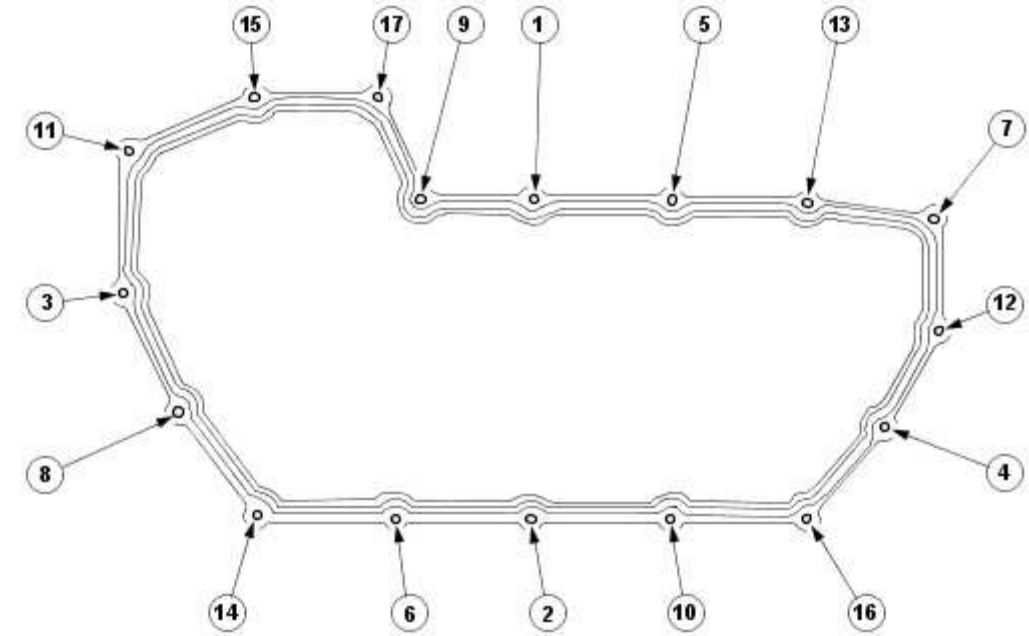

E36705

25 . Install the flexplate.

www.JagDocs.com

14. Install the flexplate.

15. Install the flexplate retaining bolts.

- Tighten to 15 Nm.
- Tighten to 110 Nm.

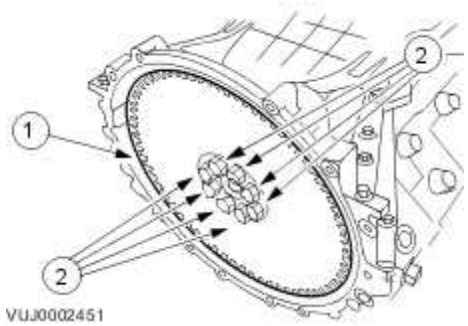

26 . Reposition the crankshaft.

- Install the crankshaft setting peg 303-645 to the crankshaft position sensor location.

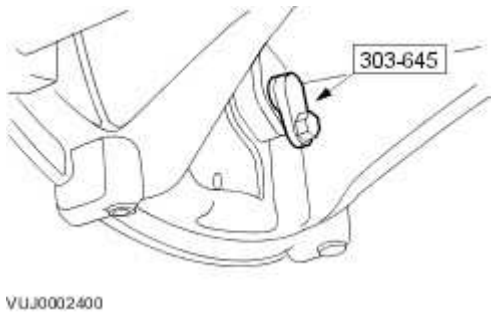

27 . Install a new left-hand cylinder head gasket.

- Make sure the cylinder head dowels are correctly located.

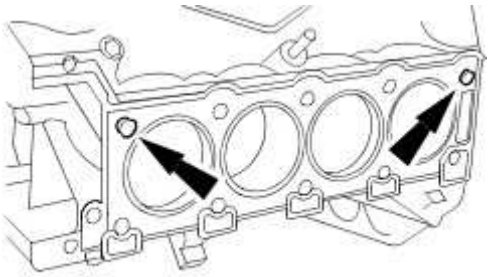

E31267

28. **CAUTION: Vehicles fitted with Polydrive cylinder head bolts, the cylinder head bolts must be installed using a 10 mm Polydrive socket or a 10 mm Allen key. Failure to follow this instruction may result in damage to the component.**

CAUTION: Tighten the bolts 1 to 10 in the sequence shown.

Install the left-hand cylinder head.

16. Tighten bolts 1 to 10 to 20 Nm.
17. Tighten bolts 1 to 10 to 35 Nm.
18. Tighten bolts 1 to 10 to 90°.
19. Tighten bolts 1 to 10 to 90°.
20. Tighten bolts 11 to 12 to 25 Nm.

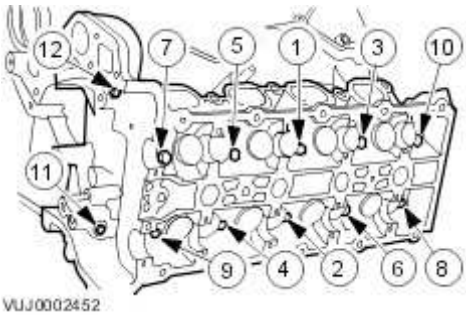

VUJ0002452

www.JagDocs.com

29 . Install a new right-hand cylinder head gasket.

- Make sure the cylinder head dowels are correctly located.

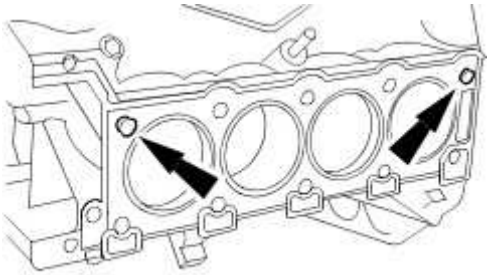

E31267

30 . **CAUTION: Vehicles fitted with Polydrive cylinder head bolts, the cylinder head bolts must be installed using a 10 mm Polydrive socket or a 10 mm Allen key. Failure to follow this instruction may result in damage to the component.**

CAUTION: Tighten the bolts 1 to 10 in the sequence shown.

Install the right-hand cylinder head.

21. Tighten bolts 1 to 10 to 20 Nm.
22. Tighten bolts 1 to 10 to 35 Nm.
23. Tighten bolts 1 to 10 to 90°.
24. Tighten bolts 1 to 10 to 90°.
25. Tighten bolts 11 to 12 to 25 Nm.

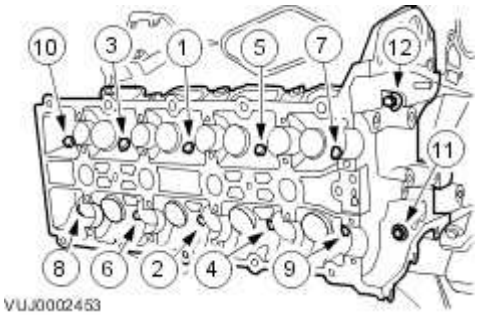

31 . **NOTE:**

Make sure all components are clean.

Apply oil (EP-90) to the camshaft and bearing surfaces, as follows:

- To the upper face of each bearing surface in the cylinder head.
- To the upper face of each bearing surface in each bearing cap.
- On the cam lobes ONLY, not on the base circle area.

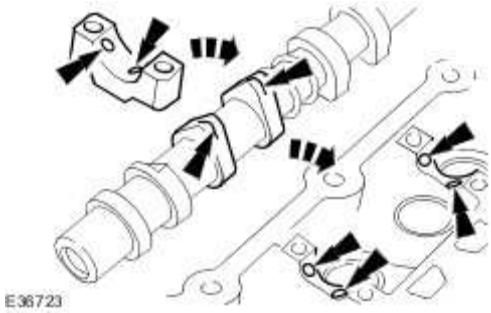

32 . Install the left-hand inlet camshaft.

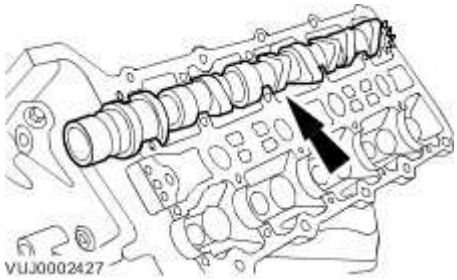

www.JagDocs.com

33 . **CAUTION: Alternate bolt tightening to correctly seat the camshaft bearing caps.**

Install the camshaft bearing cap bolts evenly.

- Tighten to 10 Nm.

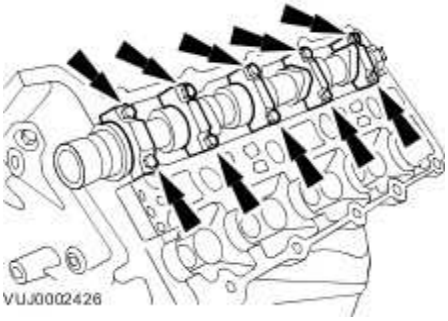

34 . **NOTE:**

Make sure all components are clean.

Apply oil (EP-90) to the camshaft and bearing surfaces, as follows:

- To the upper face of each bearing surface in the cylinder head.
- To the upper face of each bearing surface in each bearing cap.
- On the cam lobes ONLY, not on the base circle area.

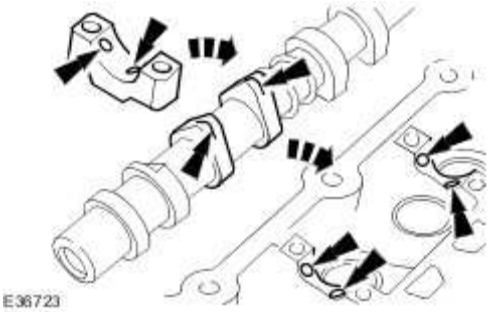

35 . Install the left-hand exhaust camshaft.

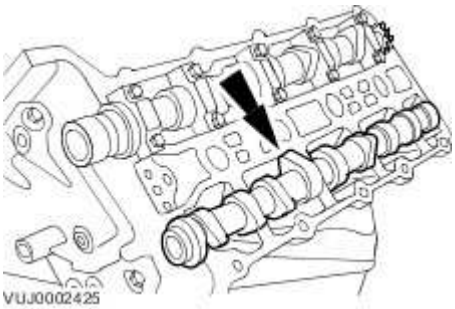

36 . **CAUTION: Alternate bolt tightening to correctly seat the camshaft bearing caps.**

Install the camshaft bearing cap bolts evenly.

- Tighten to 10 Nm.

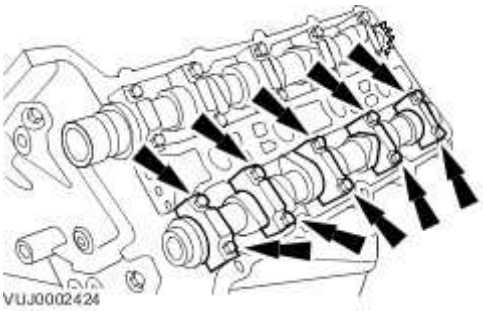

37 . **NOTE:**

Make sure all components are clean.

Apply oil (EP-90) to the camshaft and bearing surfaces, as follows:

- To the upper face of each bearing surface in the cylinder head.
- To the upper face of each bearing surface in each bearing cap.
- On the cam lobes ONLY, not on the base circle area.

www.JagDocs.com

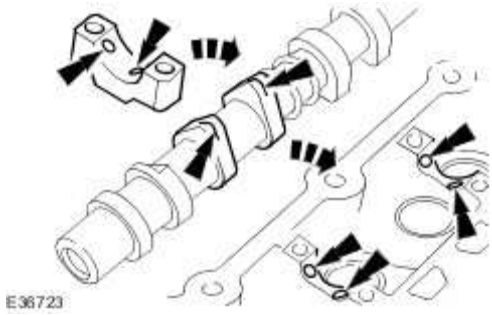

38 . Install the right-hand inlet camshaft.

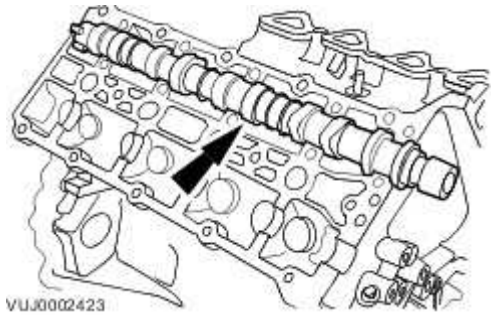

39 . **CAUTION: Alternate bolt tightening to correctly seat the camshaft bearing caps.**

Install the camshaft bearing cap bolts evenly.

- Tighten to 10 Nm.

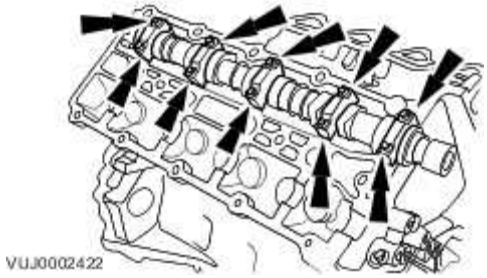

40 . **NOTE:**

Make sure all components are clean.

Apply oil (EP-90) to the camshaft and bearing surfaces, as follows:

- To the upper face of each bearing surface in the cylinder head.
- To the upper face of each bearing surface in each bearing cap.
- On the cam lobes ONLY, not on the base circle area.

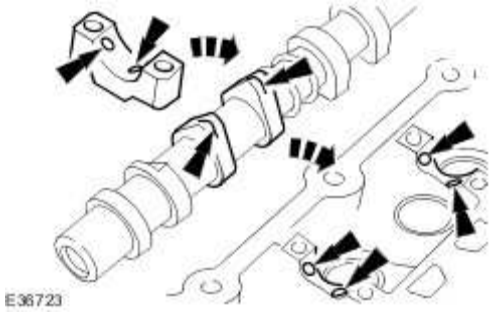

41 . Install the right-hand exhaust camshaft.

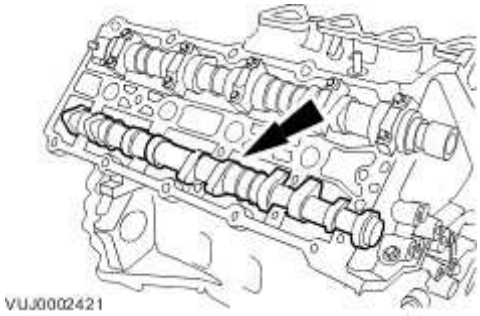

42 . **CAUTION: Alternate bolt tightening to correctly seat the camshaft bearing caps.**

Install the camshaft bearing cap bolts evenly.

- Tighten to 10 Nm.

www.JagDocs.com

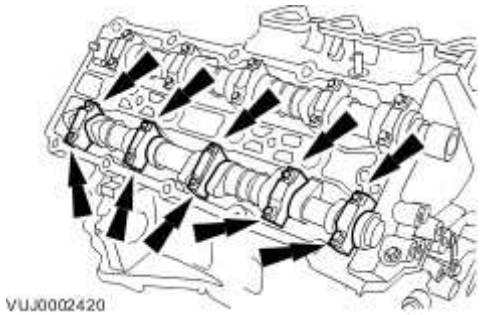

43 . Install the camshaft setting tool.

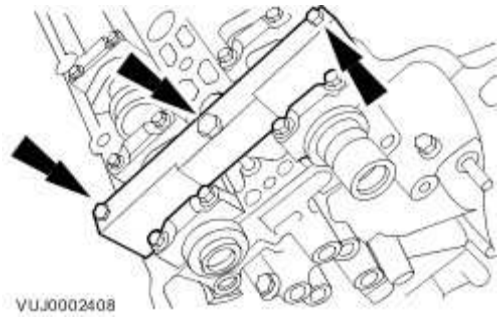

44 . Install the camshaft setting tool.

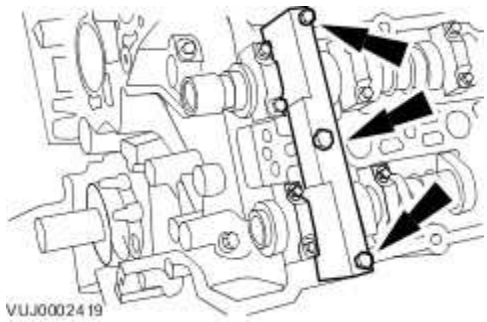

45 . **CAUTION: Do not tighten the camshaft sprocket retaining bolts.**

CAUTION: Make sure the secondary timing chain and camshaft sprockets are free to rotate.

Install the camshaft sprockets.

- Install the secondary timing chain tensioner and secondary timing chain to the camshaft sprockets.

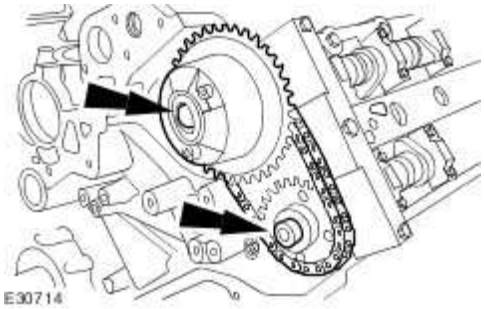

46 . Using a suitable tool, retain the left-hand timing chain tensioner piston.

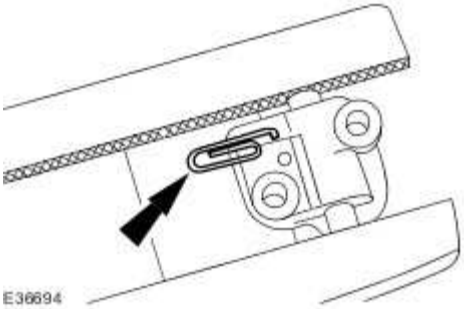

47 . Release the tension in the left-hand timing chain tensioner.

- Remove the retaining tool.

48 . Install the secondary timing chain tensioner.

- Tighten to 12 Nm.

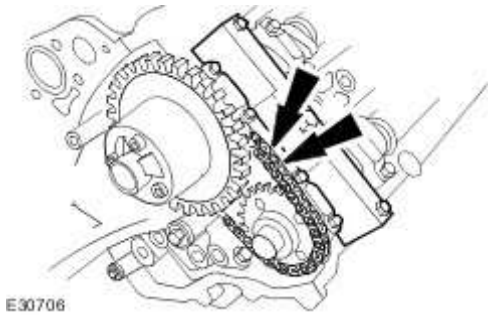

www.JagDocs.com

49 Install the timing chain tensioning tool 303-532 to the exhaust camshaft sprocket.

.

- Reposition the camshaft sprockets for the most advantageous position for use of the tool.

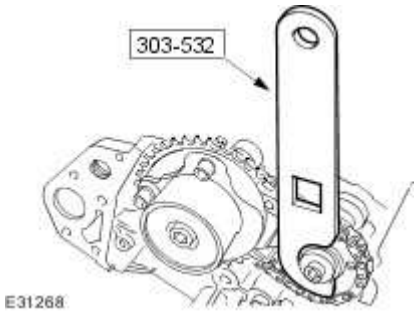

50 . Install the primary timing chain tensioner guide.

- Tighten to 12 Nm.

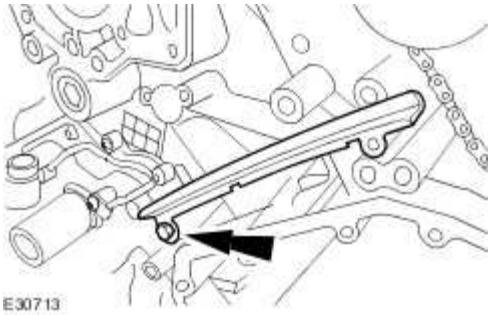

51 . Install the crankshaft sprocket.

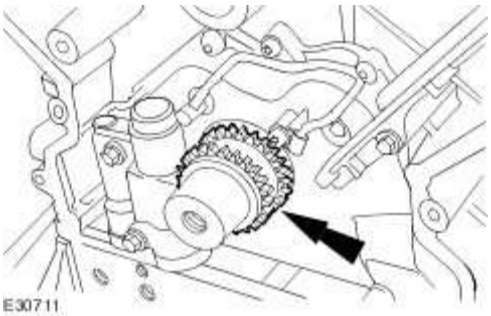

52 . **CAUTION: Make sure the timing chain slack is on the tensioned side of the timing chain.**

Install the primary timing chain.

- Install the primary chain over the crankshaft sprocket and the intake sprocket.

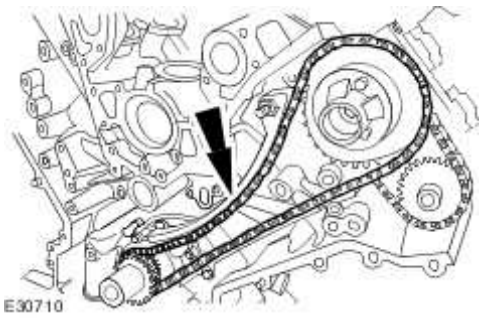

53 . Install the primary timing chain tensioner guide.

- Tighten to 12 Nm.

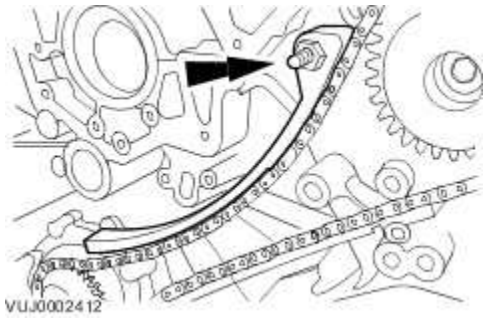

54 . **CAUTION: During timing chain tensioner compression, do not release the ratchet stem until the timing chain tensioner piston is fully bottomed in its bore or damage to the ratchet stem will result.**

Using a suitable tool, hold the left-hand timing chain tensioner ratchet lock mechanism away from the ratchet stem.

www.JagDocs.com

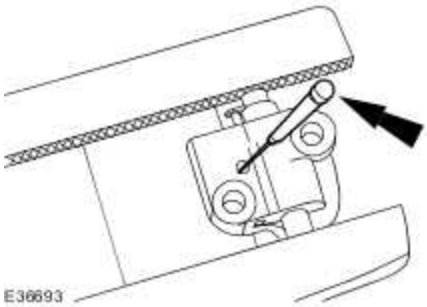

55 **NOTE:**

.

The timing chain tensioner piston should retract with minimal force. If binding occurs, reposition the timing chain tensioner to eliminate side loading.

Slowly compress the left-hand timing chain tensioner.

56 **NOTE:**

.

The retaining tool must remain in the timing chain tensioner until the timing chain tensioner is installed to the engine with the piston bottomed in the bore.

Using a suitable tool, retain the left-hand timing chain tensioner piston.

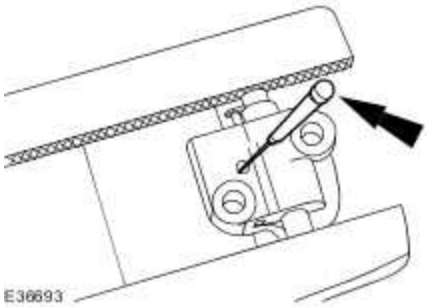

57 . Install the primary timing chain tensioner assembly.

- Tighten to 12 Nm.

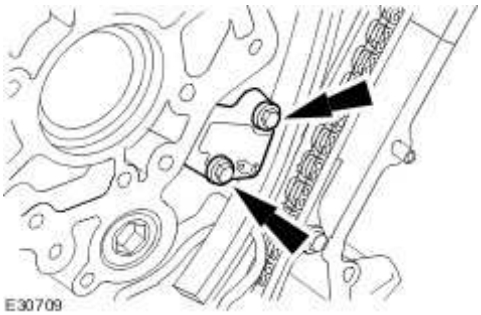

58 . Release the tension in the left-hand timing chain tensioner.

- Remove the retaining tool.

59 . **CAUTION: While applying the opposing force to sprocket and chain, tighten the sprocket bolt.**

Using the special tool apply force to the tool in an anti-clockwise direction to tension the primary timing chain on its drive side.

- Tighten to 20 Nm + 90 deg.

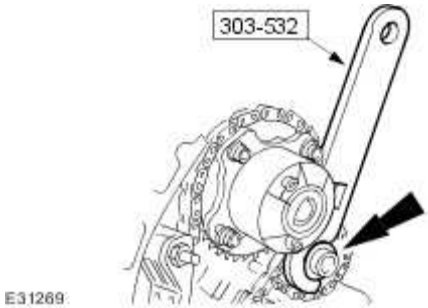

60 . **CAUTION: While applying the opposing force to sprocket and chain, tighten the sprocket bolt.**

Using the special tool apply force to the tool in an anti-clockwise direction.

www.JagDocs.com

- Tighten to 20 Nm + 90 deg.

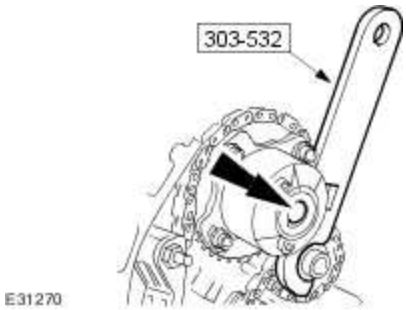

61 . **CAUTION: Do not tighten the camshaft sprocket retaining bolts.**

CAUTION: Make sure the secondary timing chain and camshaft sprockets are free to rotate.

Install the camshaft sprockets.

- Install the secondary timing chain tensioner and secondary timing chain to the camshaft sprockets.

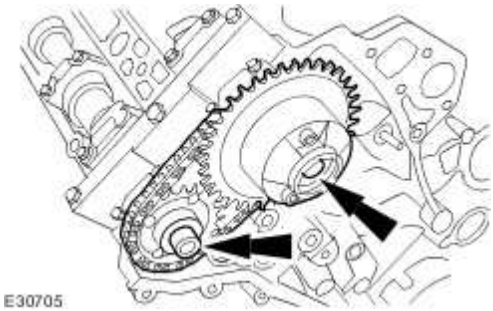

62 . Using a suitable tool, retain the right-hand timing chain tensioner piston.

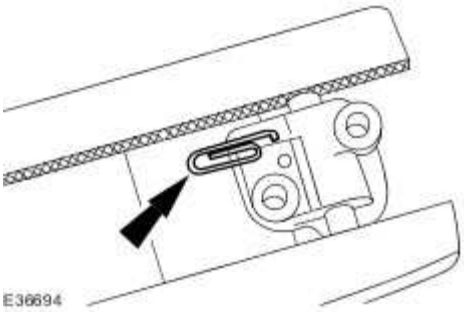

63 . Install the secondary timing chain tensioner retaining bolts.

- Tighten to 12 Nm.

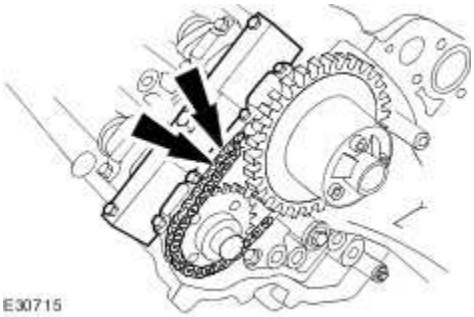

64 . Release the tension in the right-hand timing chain tensioner.

- Remove the retaining tool.

65 Install the timing chain tensioning tool 303-532 to the exhaust camshaft sprocket.
.

- Reposition the camshaft sprockets for the most advantageous position for use of the tool.

www.JagDocs.com

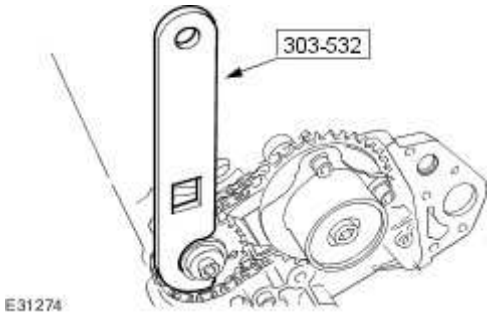

66 . Install the primary timing chain guide.

- Tighten to 12 Nm.

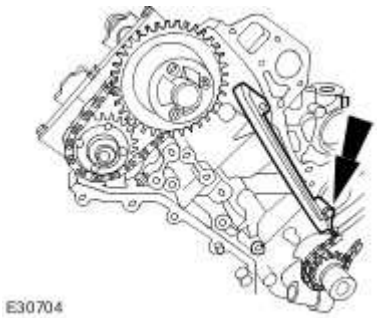

67 . **CAUTION: Make sure the timing chain slack is on the tensioned side of the timing chain.**

Install the primary timing chain.

- Install the primary chain over the crankshaft sprocket and the intake sprocket.

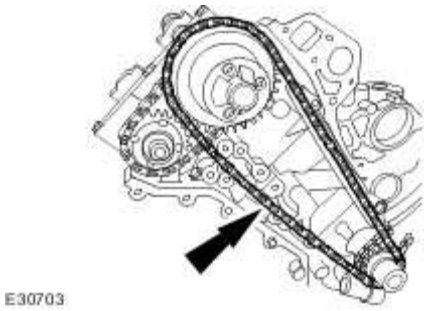

68 . Install the primary timing chain tensioner guide.

- Tighten to 12 Nm.

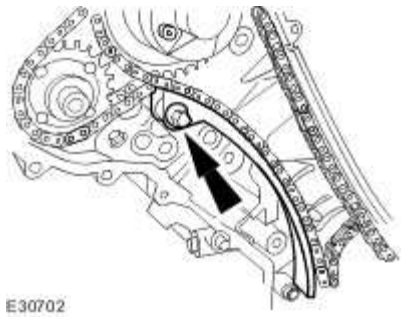

69 . **CAUTION: During timing chain tensioner compression, do not release the ratchet stem until the timing chain tensioner piston is fully bottomed in its bore or damage to the ratchet stem will result.**

Using a suitable tool, hold the right-hand timing chain tensioner ratchet lock mechanism away from the ratchet stem.

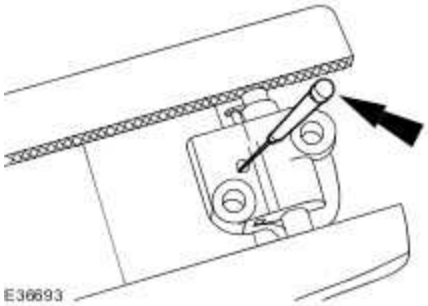

70 . **NOTE:**

The timing chain tensioner piston should retract with minimal force. If binding occurs, reposition the timing chain tensioner to eliminate side loading.

Slowly compress the right-hand timing chain tensioner.

www.JagDocs.com

71 **NOTE:**

.

The retaining tool must remain in the timing chain tensioner until the timing chain tensioner is installed to the engine with the piston bottomed in the bore.

Using a suitable tool, retain the right-hand timing chain tensioner piston.

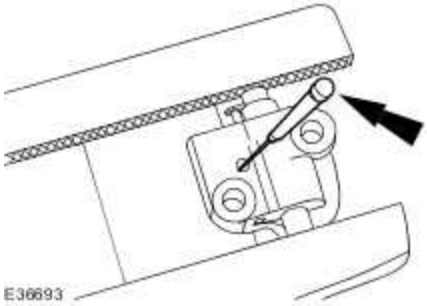

72 . Install the primary timing chain tensioner assembly.

- Tighten to 12 Nm.

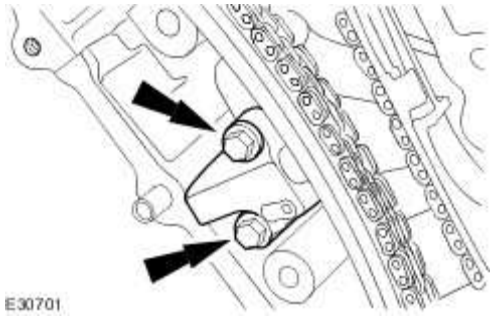

73 . Release the tension in the right-hand timing chain tensioner.

- Remove the retaining tool.

74

. **CAUTION: While applying the opposing force to sprocket and chain, tighten the sprocket bolt.**

Using the special tool apply force to the tool in an anti-clockwise direction to tension the primary timing chain on its drive side.

- Tighten to 20 Nm + 90 deg.

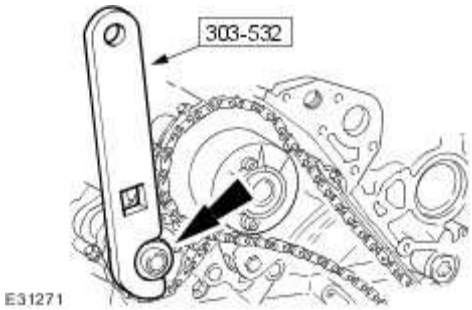

75 . **CAUTION: While applying the opposing force to sprocket and chain, tighten the sprocket bolt.**

Using the special tool apply force to the tool in an anti-clockwise direction.

- Tighten to 20 Nm + 90 deg.

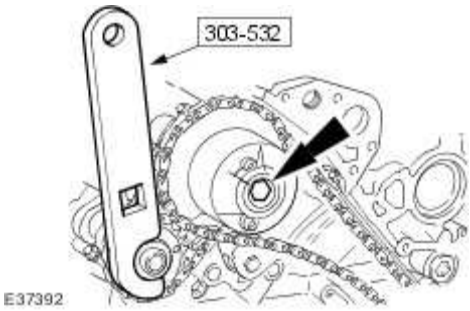

76 . Remove the special tool from the right-hand cylinder head.

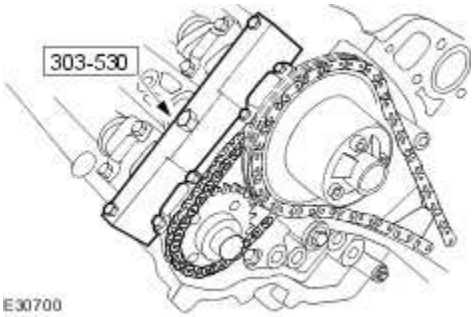

www.JagDocs.com

77 . Remove the special tool from the left-hand cylinder head.

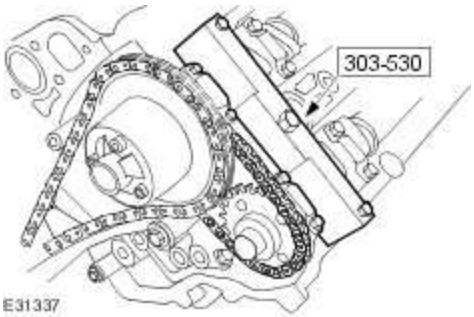

78 . Install the left-hand variable camshaft timing oil control unit housing.

- Install new O-ring seals.
- Tighten to 22 Nm.

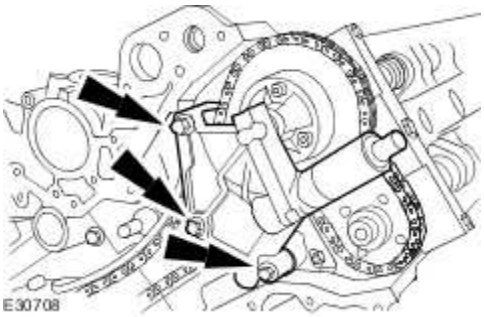

79 . Install the right-hand variable camshaft timing oil control unit housing.

- Install new O-ring seals.
- Tighten to 22 Nm.

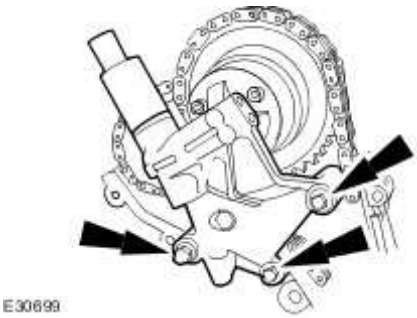

80 . Remove the special tool.

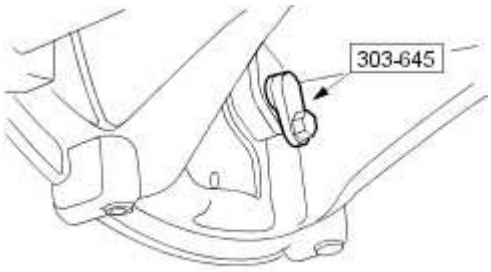

VUJ0002400

81 . Install the crankshaft position sensor.

- Tighten to 10 Nm.

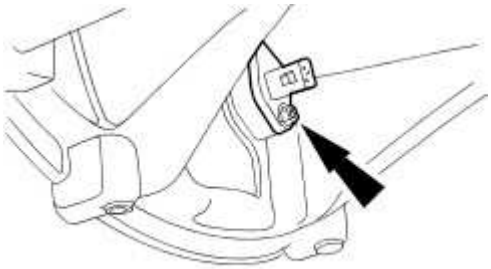

E30694

82 . Install new seals to the timing cover.

26. Install the new seal to the inner groove on the face of the timing cover.

27. Install the new seal to the outer groove on the face of the timing cover.

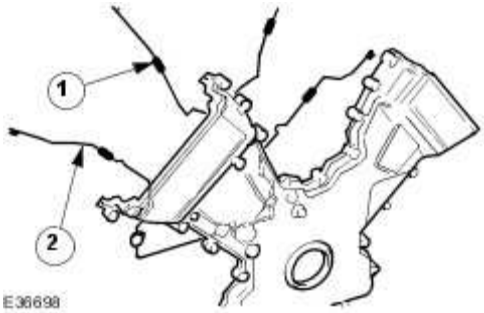

E36698

83 Apply sealant to the eight joints on the engine face.

www.JagDocs.com

·

- Sealant beads to be 3mm diameter and 12mm long. Cut the nozzle of the sealant tube to produce a 3 mm bead. (Install and tighten the securing bolts within twenty minutes of sealant application).

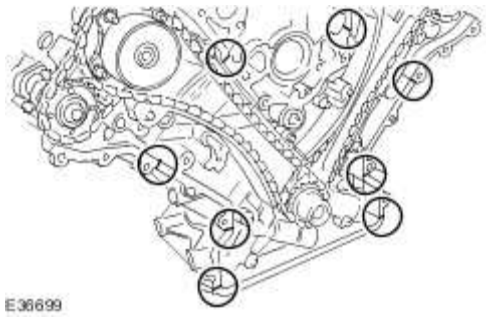

84 . Install the timing cover.

- Tighten in the sequence shown.
- Tighten to 13 Nm.

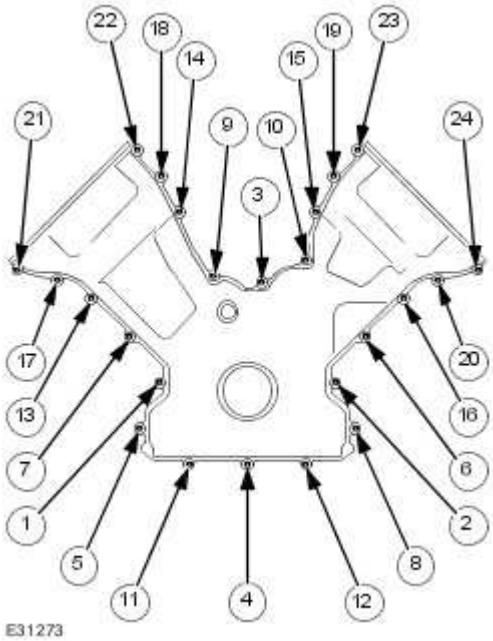

85 . **CAUTION: Make sure the crankshaft front seal mating faces are clean and dry.**

CAUTION: Do not remove the crankshaft front seal protector.

Using the special tool, install a new crankshaft front seal.

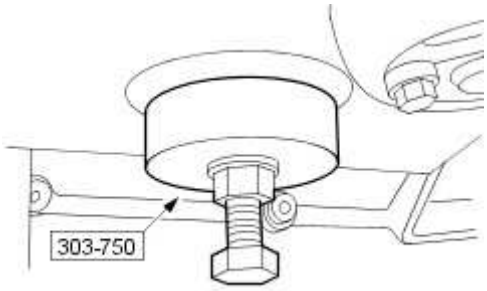

E31173

86 . Remove the crankshaft seal protector.

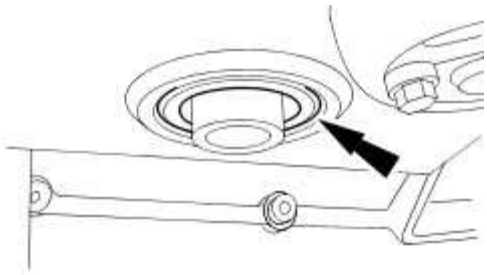

E31172

87 . Install a new O-ring seal to the crankshaft pulley.

- Lubricate the new O-ring.

88 . **CAUTION: The screw thread in the crankshaft must be cleaned out before a new crankshaft pulley bolt is installed.**

CAUTION: A new crankshaft pulley bolt must be used.

Install, but do not tighten, a new crankshaft pulley retaining bolt.

www.JagDocs.com

- Install the crankshaft pulley and locking ring to the crankshaft.

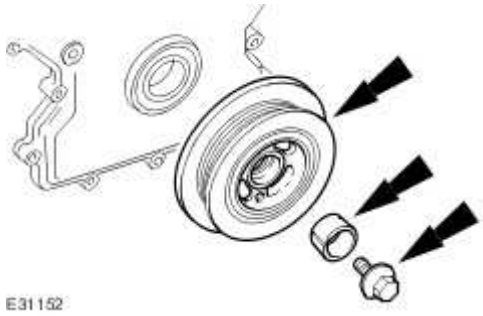

89 . **CAUTION: Under no circumstances should the crankshaft setting peg 303-645 be used in the following operations to lock the crankshaft.**

Using special tools, retain the crankshaft pulley.

- Tighten the crankshaft pulley retaining bolt to 375 Nm.

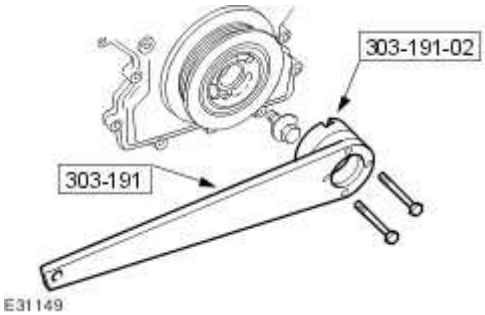

90 . Remove the special tools.

91 . Carry out a valve clearance check.
For additional information, refer to

92 **NOTE:**

.

Apply an 8mm diameter bead of silicone gasket sealant on the two places where the cylinder head and front cover join.

Install the left-hand valve cover.

- Install new valve cover gaskets.
- Tighten in the sequence shown.
- Tighten to 10 Nm.

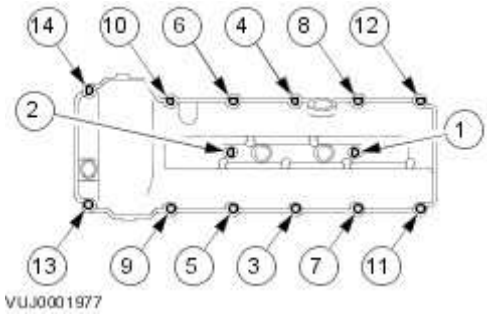

93 **NOTE:**

.

Apply an 8mm diameter bead of silicone gasket sealant on the two places where the cylinder head and front cover join.

Install the right-hand valve cover.

- Install new valve cover gaskets.
- Tighten in the sequence shown.
- Tighten to 10 Nm.

www.JagDocs.com

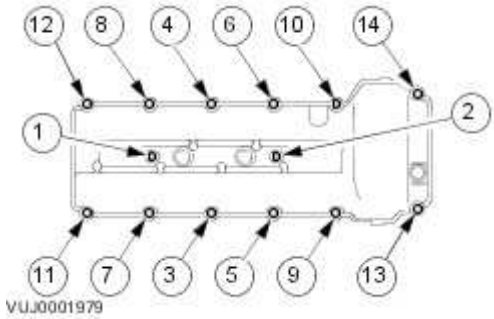

94 . Install the spark plugs.

- Tighten to 27 Nm.

95 . Install the left-hand camshaft position (CMP) sensor.

- Install a new O-ring seal.
- Tighten to 7 Nm.

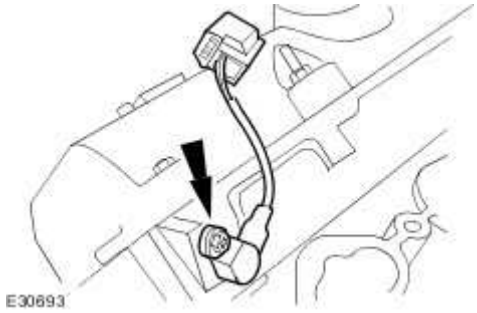

96 . Install the right-hand camshaft position (CMP) sensor.

- Install a new O-ring seal.
- Tighten to 7 Nm.

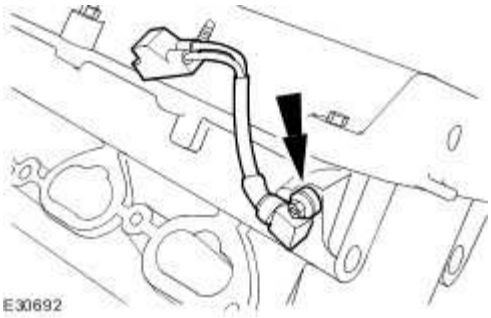

97 . **NOTE:**

Left-hand shown, right-hand similar

Install the ignition coils.

- Tighten to 5 Nm.

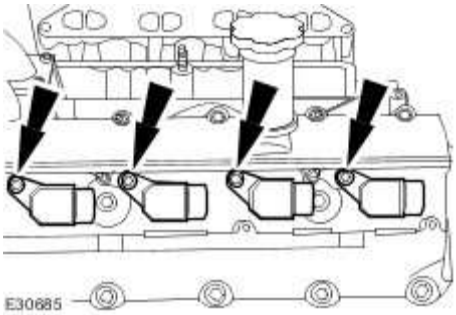

98 . Install the thermostat housing.

- Install new O-ring seals.
- Tighten to 10 Nm.

www.JagDocs.com

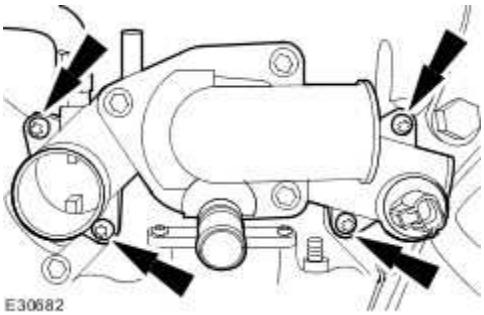

99 . Install the water pump.

- Install new O-ring seals and gaskets.
- Tighten to 12 Nm.

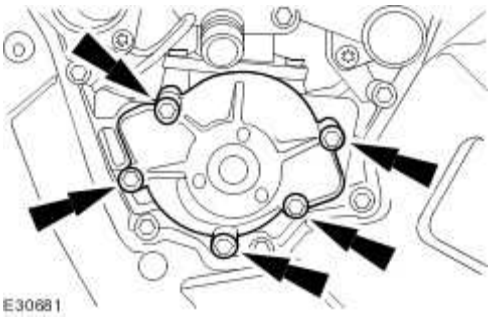

100 . Install the water pump pulley.

- Using special tool, retain the water pump pulley.
- Tighten to 10 Nm + 45°.

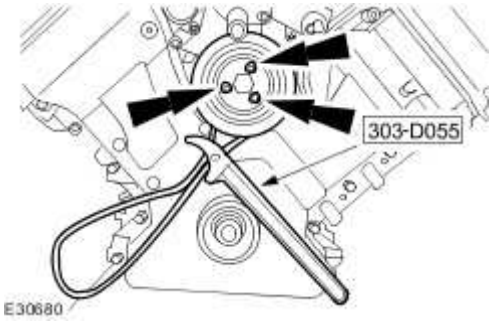

101 . Install the engine block insulation grommet.

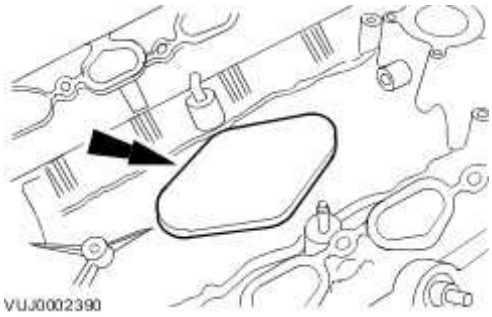

102 . Install the intake manifold heater coolant hose.

28. Install the knock sensors.

- Tighten to 20 Nm.

29. Install the intake manifold heater coolant hose.

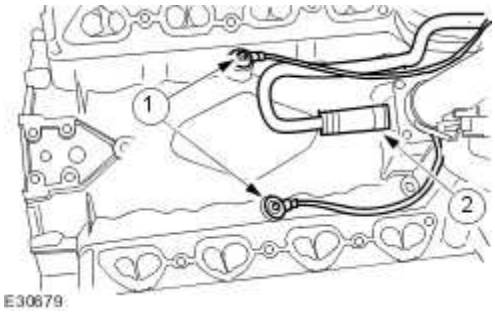

103 . Install the noise and vibration insulating pad.

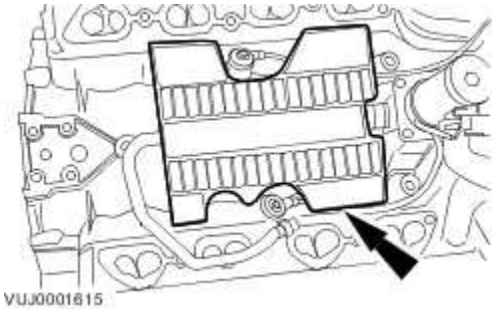

104 . Install the engine wiring harness.

www.JagDocs.com

105 . Attach the engine wiring harness retaining clips.

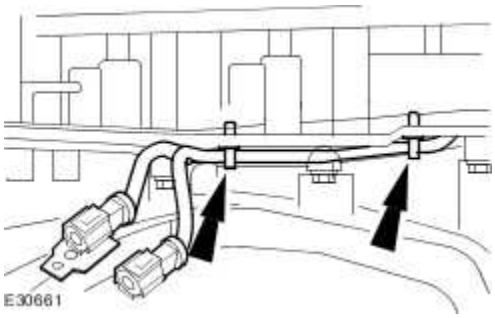

106 . Attach the right-hand oxygen sensor.

- Tighten to 10 Nm.

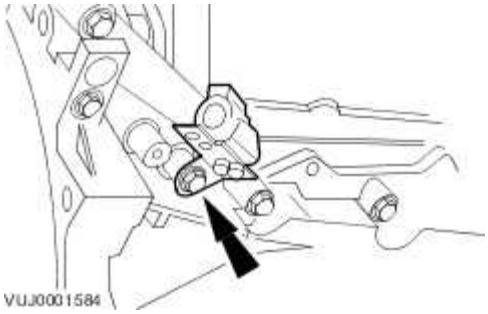

107 . Install the oil filter housing.

- Install a new O-ring seal.
- Tighten to 21 Nm.

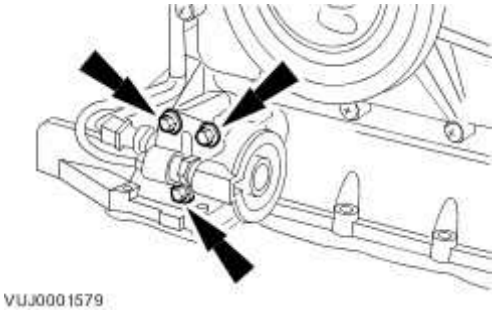

108 . Connect the oil pressure switch and oil temperature sensor electrical connectors.

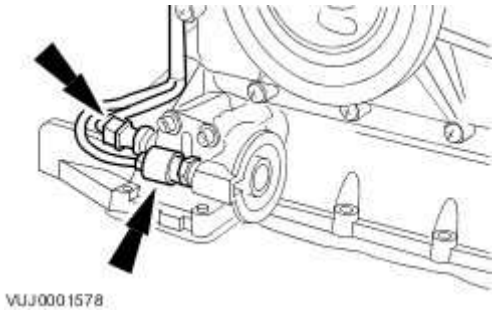

VUJ0001578

109 . Install the oil cooler.

- Install a new O-ring seal.
- Tighten to 55 Nm.

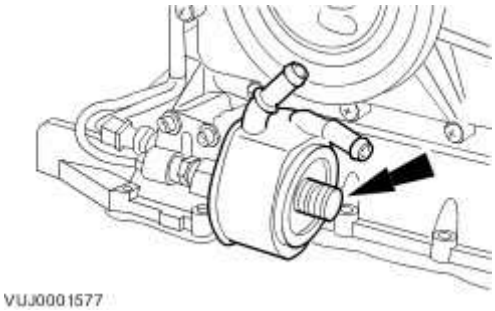

VUJ0001577

110 . **NOTE:**

Apply a suitable amount of clean engine oil to lubricate the oil filter O-ring seal.

Install a new oil filter.

- Tighten to 18 Nm.

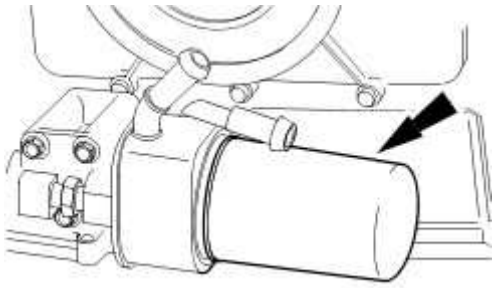

VUJ0001576

www.JagDocs.com

111 .

112 . Install the intake manifold.

- Tighten to 22 Nm.

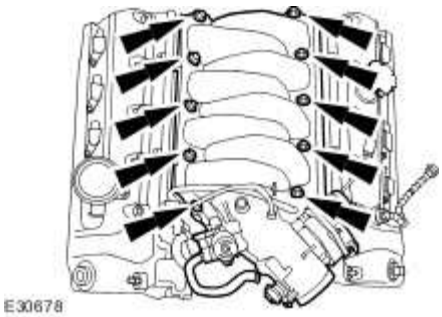

113 . Attach the engine wiring harness.

- Tighten to 10 Nm.

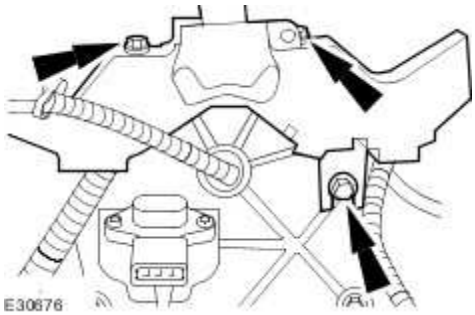

114 . **NOTE:**

Left-hand shown, right-hand simular.

Install the lower intake manifold.

- Tighten to 22 Nm.

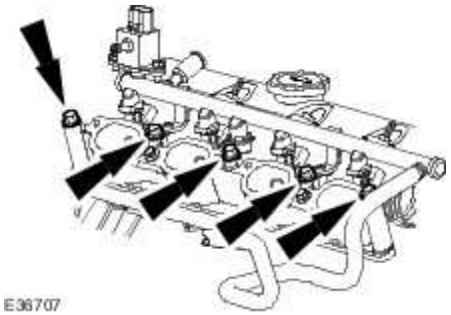

115 . Attach the engine wiring harness.

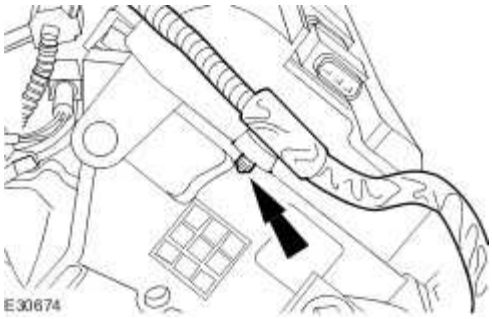

116 . Connect the camshaft position sensor electrical connector.

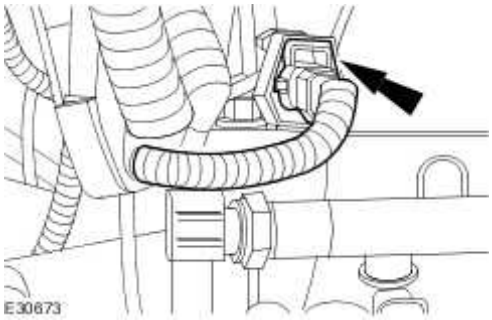

117 . Connect the fuel temperature sensor electrical connector.

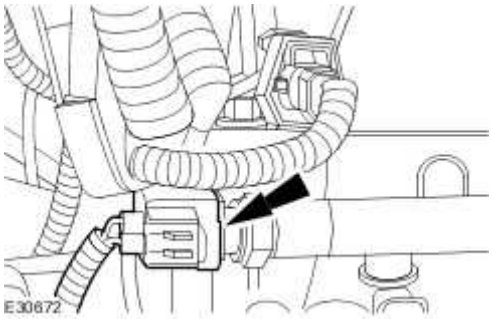

www.JagDocs.com

118 . Connect the ignition on-plug coil electrical connectors.

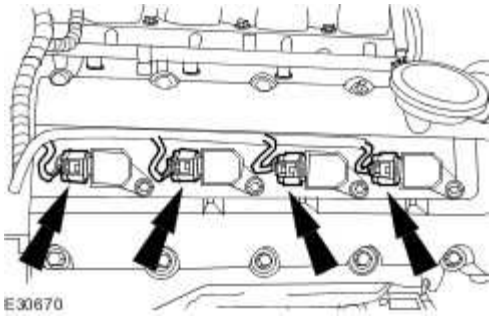

119 . Attach the engine wiring harness.

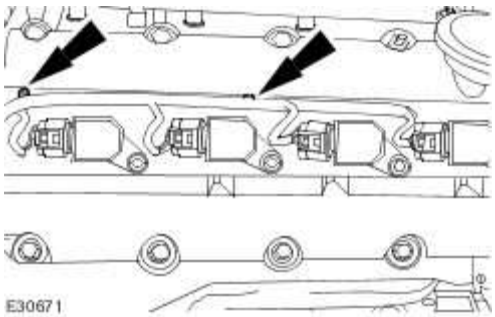

120 . Connect the fuel injector electrical connectors.

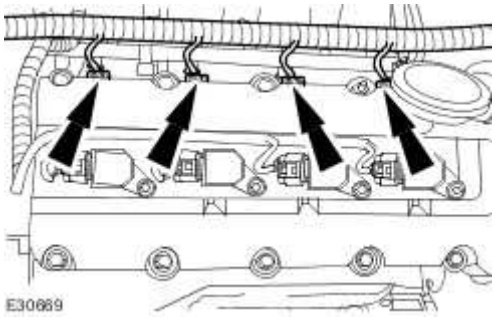

121 . Attach the engine wiring harness.

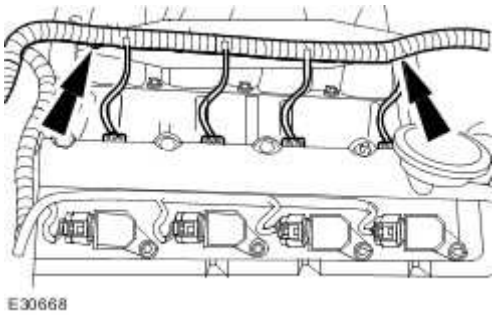

122 . Connect the exhaust gas recirculation valve coolant hose.

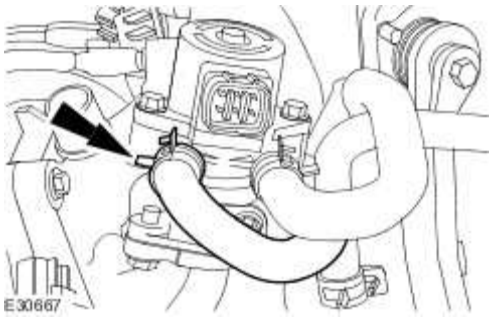

123 . Connect the exhaust gas recirculation valve electrical connector.

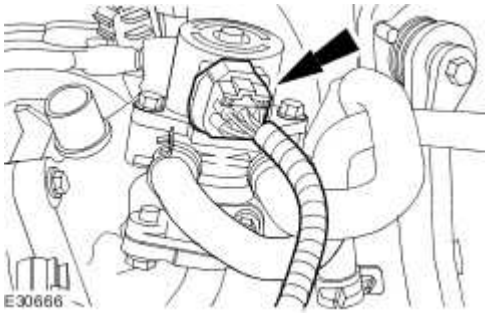

124 . Connect the fuel pressure regulator electrical connector.

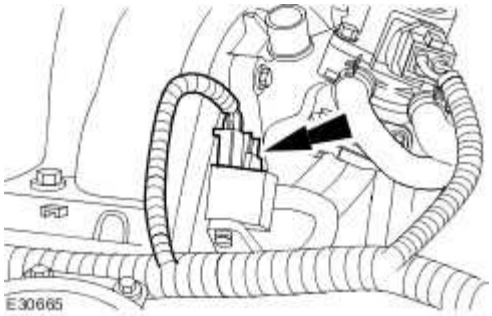

125 . Connect the positive crankcase ventilation pipe.

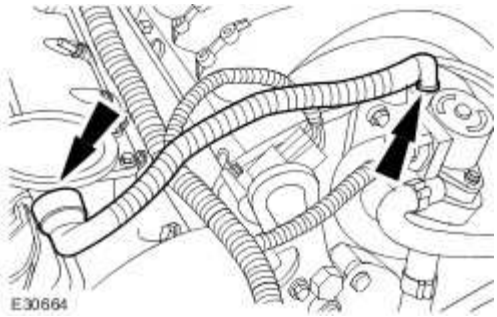

www.JagDocs.com

126 . Attach the engine wiring harness.

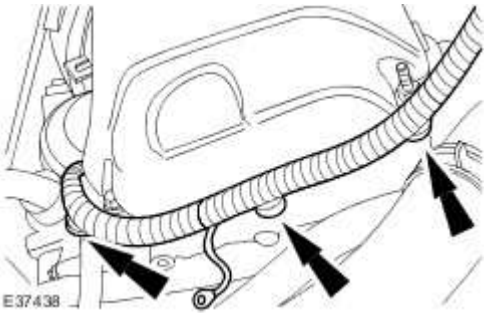

127 . Attach the engine wiring harness.

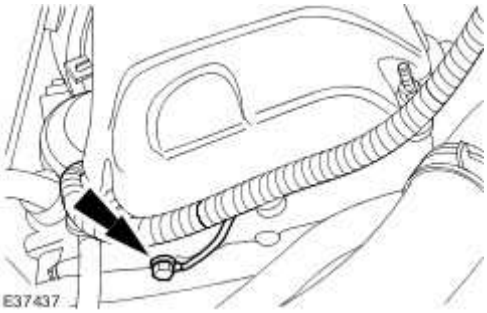

128 . Attach the engine harness.

30. Connect the earth wire.

31. Connect the variable valve timing (VVT) solenoid electrical connector.

- Attach the engine harness.

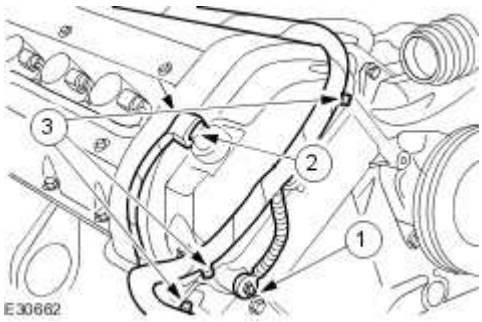

129 . Connect the camshaft position sensor electrical connector.

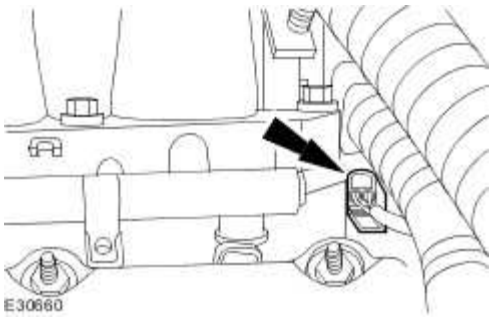

130 . Attach the engine wiring harness.

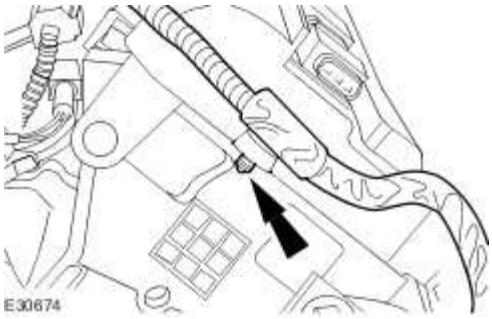

131 . Attach the engine wiring harness.

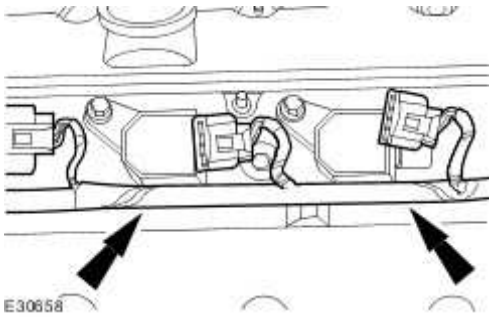

132 . Connect the ignition on-plug coil electrical connectors.

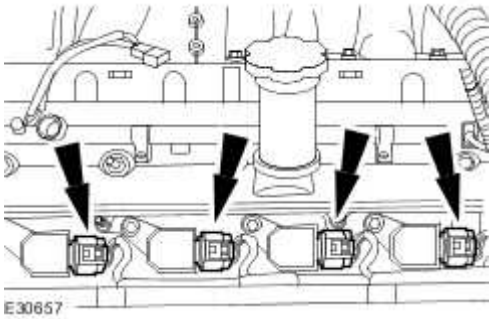

www.JagDocs.com

133 . **NOTE:**

Left-hand shown, right hand similar.

Connect the fuel injector electrical connectors.

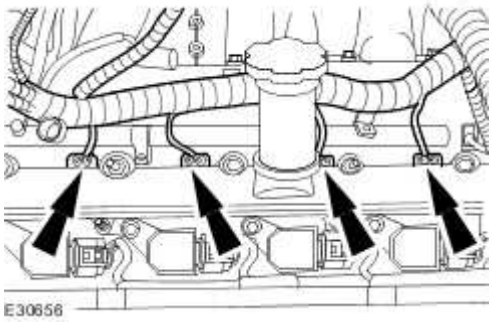

134 . Attach the engine wiring harness.

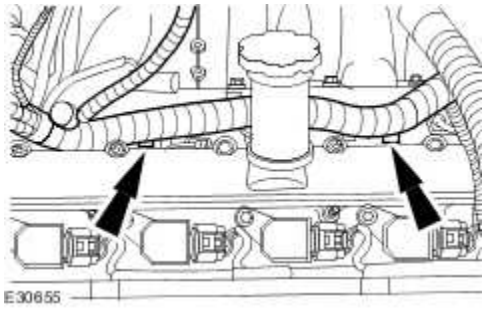

135 . Install the engine cover retaining bracket.

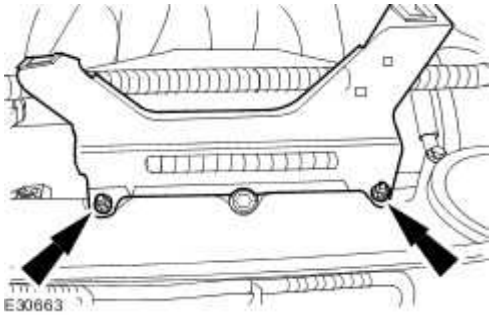

136 . Install the engine cover retaining bracket.

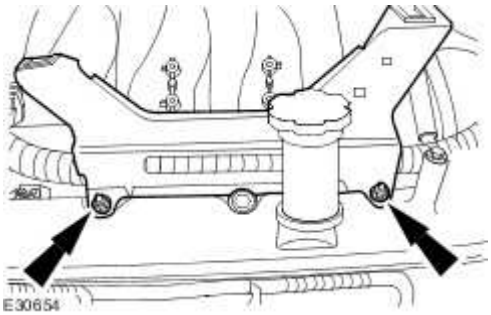

137 . **NOTE:**

Left-hand shown, right-hand similar.

Install the ignition coil cover.

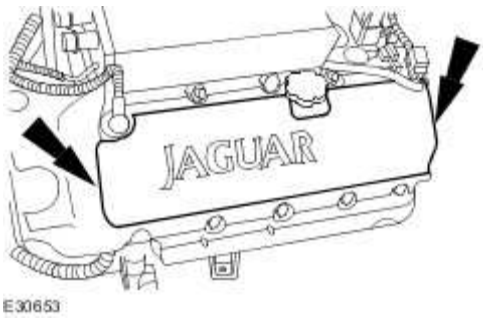

138 . Connect the knock sensor electrical connectors.

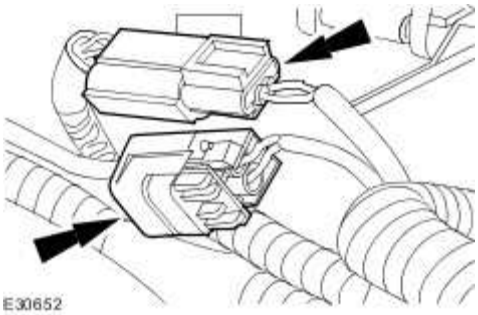

139 . **NOTE:**

Right-hand shown, left-hand similar.

Install the charge air coolers.

www.JagDocs.com

- Install a new charge air cooler gasket.
- Tighten to 13 Nm.

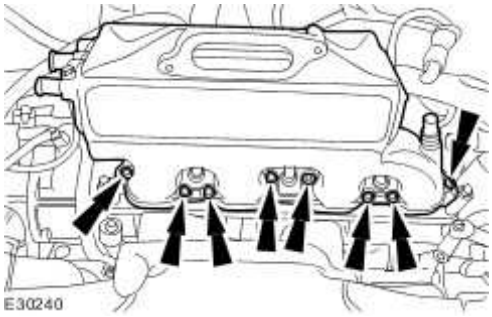

140 . Install the supercharger.

- Tighten to 24 Nm.

141 . Connect the manifold absolute pressure (MAP) sensor.

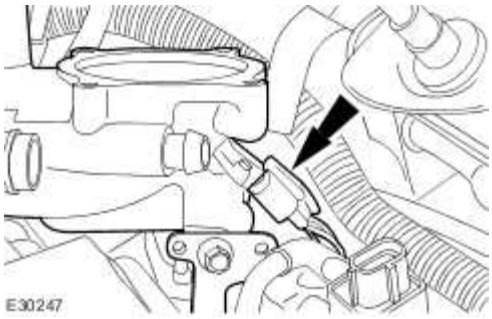

142 . Install the air intake elbow.

- Install a new gasket.
- Install new retaining bolt seals.
- Tighten to 24 Nm.

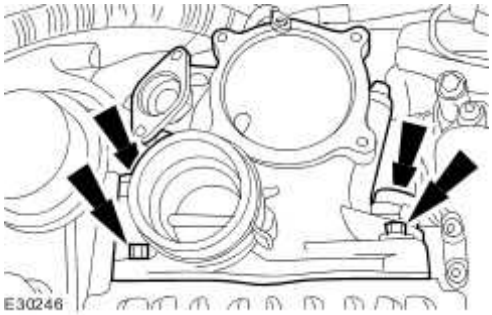

143 . **NOTE:**

Make sure ground strap is correctly installed to the location noted.

Install the air intake elbow retaining bracket lower retaining bolts.

- Tighten to 20 Nm.

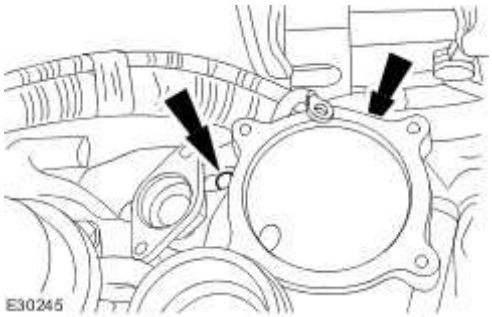

144 . Connect the air intake elbow pipes.

www.JagDocs.com

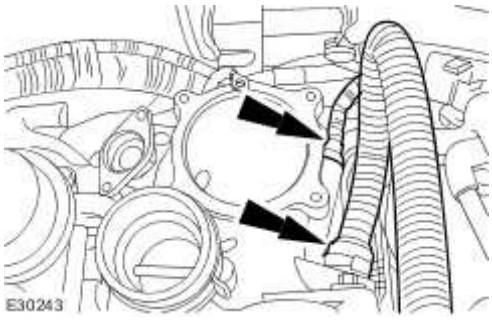

145 . **CAUTION: Do not attempt to clean the throttle body. The bore and the throttle plate has a special coating applied during manufacture which should not be removed.**

Install the throttle body.

- Install a new throttle body gasket.
- Tighten to 10 Nm.

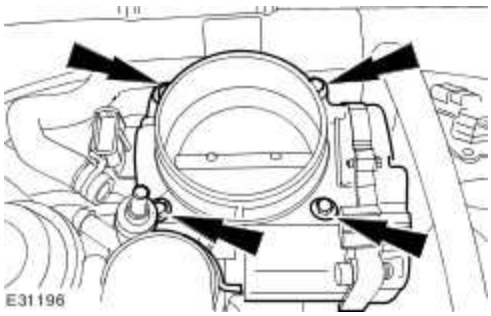

146 . **NOTE:**

Un-cap the coolant hose.

Attach the coolant hose to the throttle body.

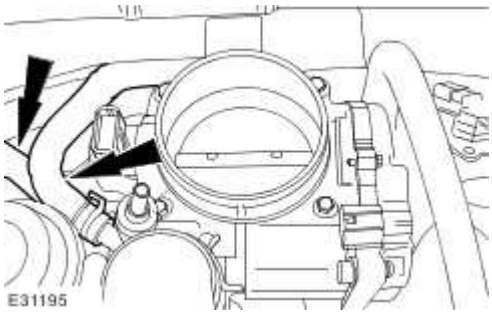

147 . Connect the electrical connectors.

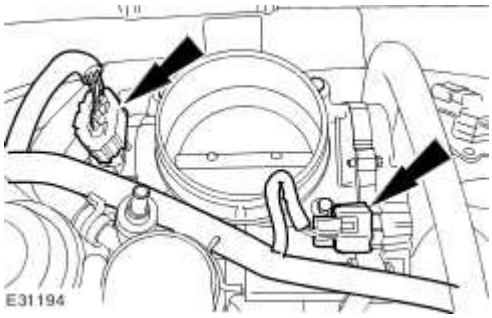

148 . Install the EGR valve and the exhaust manifold to EGR valve tube.

- Install a new exhaust manifold to EGR valve tube gasket.
- Install a new EGR valve to air intake elbow gasket.
- Tighten to 10 Nm.

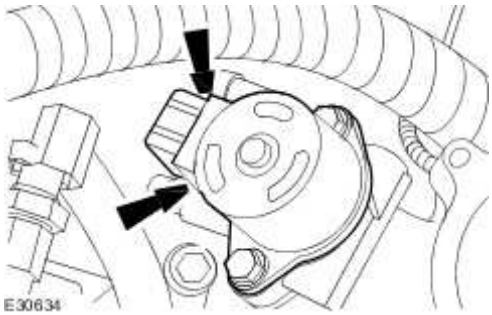

149 . Tighten to 21 Nm.

www.JagDocs.com

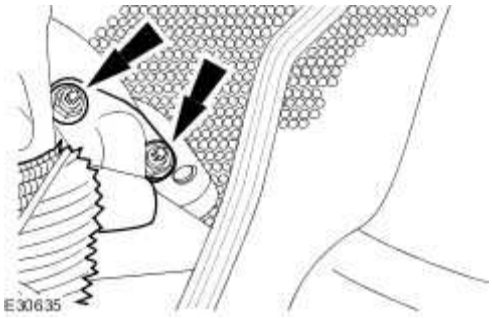

150 . **NOTE:**

Un-cap the exposed ports.

Connect the coolant hoses.

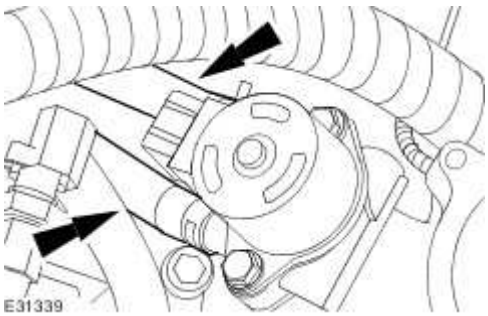

151 . Connect the exhaust gas recirculation (EGR) valve electrical connector.

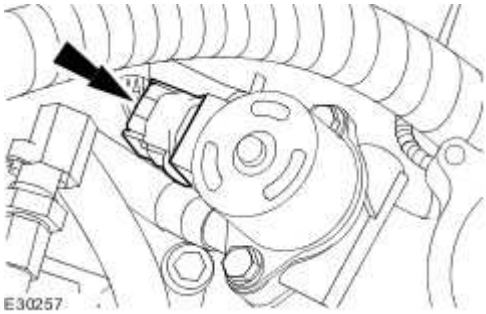

152 . Connect the IAT sensor electrical connector.

153 . Connect the charge air cooler coolant pipes.

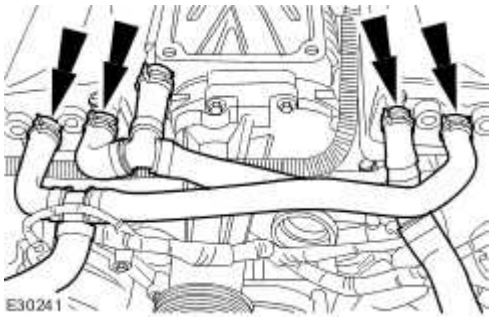

154 . Install new O-ring seals to the thermostat housing.

155 . Install thermostat housing.

156 . Tighten to 10 Nm.

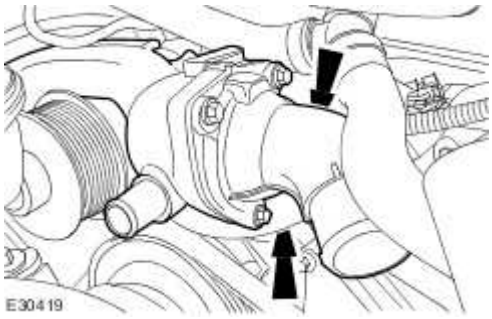

157 . Tighten to 10 Nm.

www.JagDocs.com

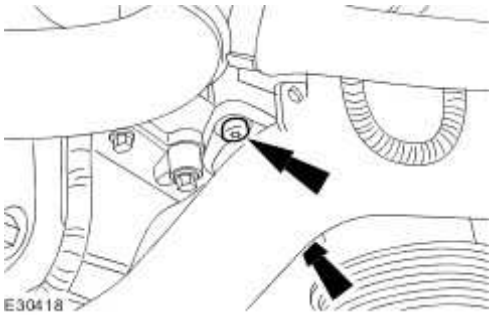

158 . Connect the hose.

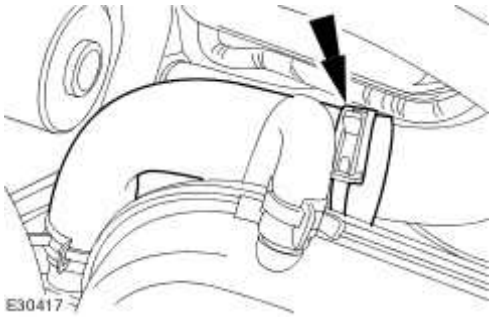

159 . Connect the hose.

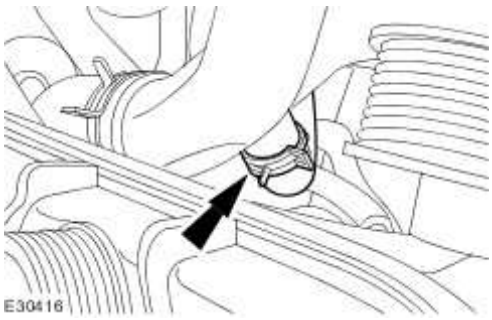

160 . Connect the hose.

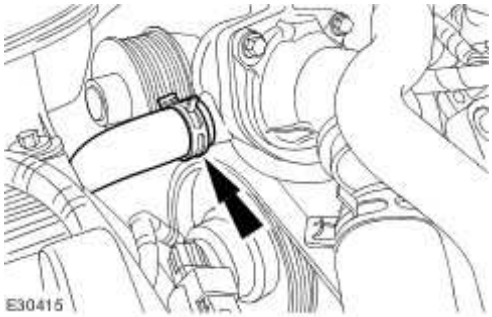

161 . Connect the hose.

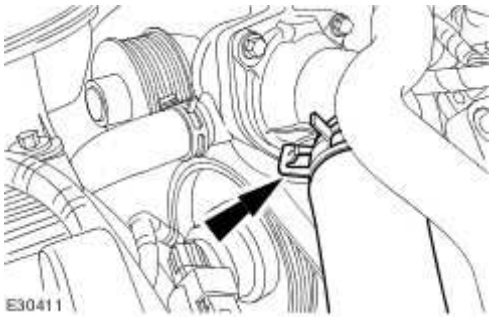

162 . Reposition the thermostat housing hose retaining clip.

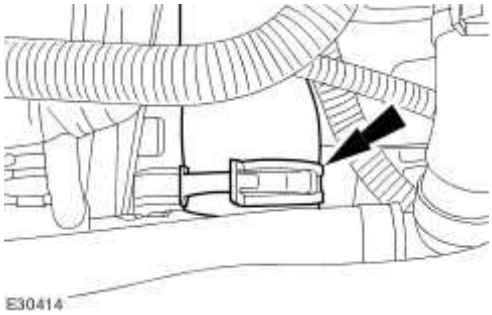

163 . Connect the coolant temperature sensor electrical connector.

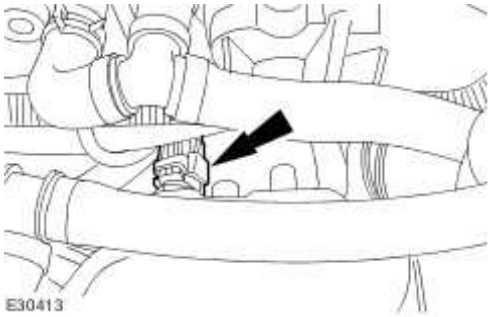

164 . Connect the thermostat housing hoses

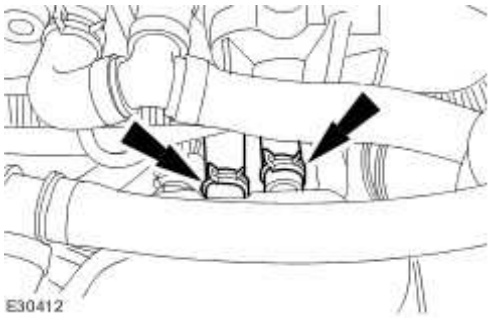

www.JagDocs.com

165 . Install new supercharger outlet pipe to charge air coolers ducts.

- Tighten to 8 Nm.

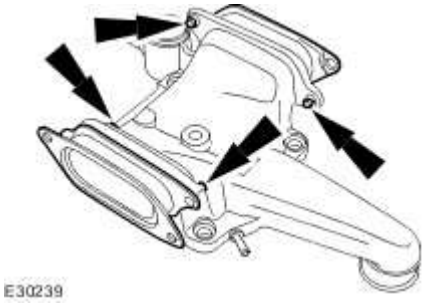

166 . Install a new supercharger outlet pipe gasket.

167 . Install new seals to the supercharger outlet pipe retaining bolts

168 . **CAUTION: Make sure no foreign matter enters the supercharger.**

Install the supercharger outlet pipe

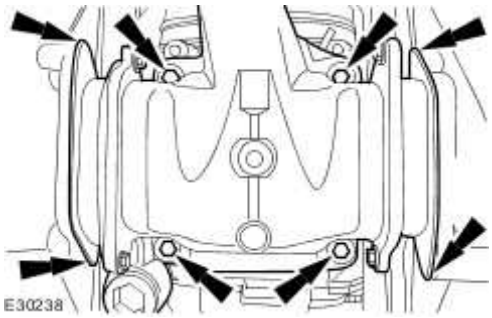

169 . **NOTE:**

Un-cap the coolant ports.

Attach the supercharger outlet pipe coolant hose.

170 . Attach the hoses.

- Reposition the hose retaining clip.

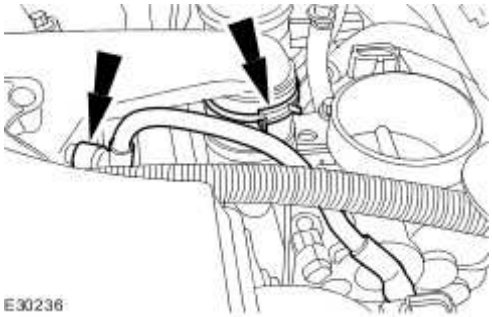

171 . Attach the engine wiring harness.

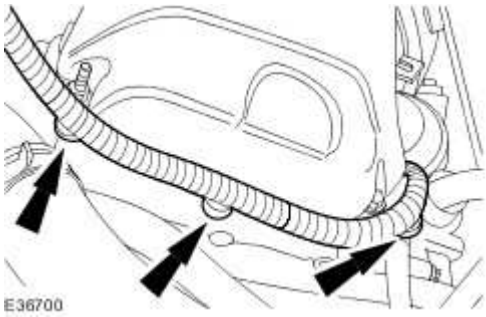

172 . Connect the coolant temperature sensor electrical connector.

www.JagDocs.com

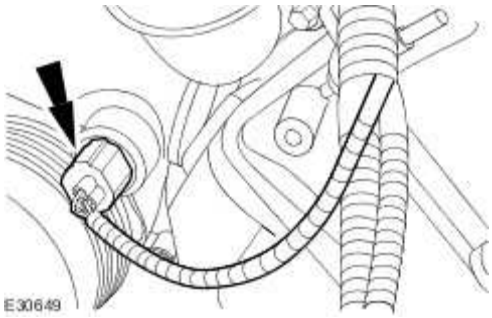

173 . Attach the engine wiring harness.

32. Connect the variable valve timing (VVT) solenoid electrical connector.

33. Attach the engine wiring harness.

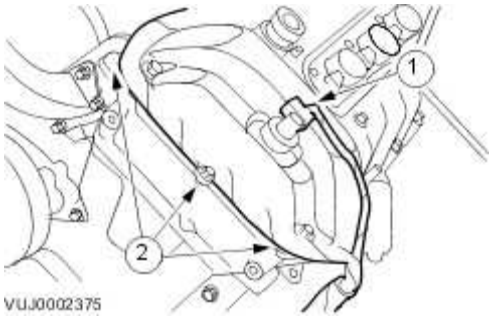

174 . Attach the engine wiring harness.

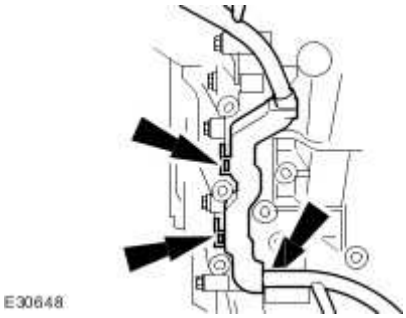

175 . Attach the engine wiring harness.

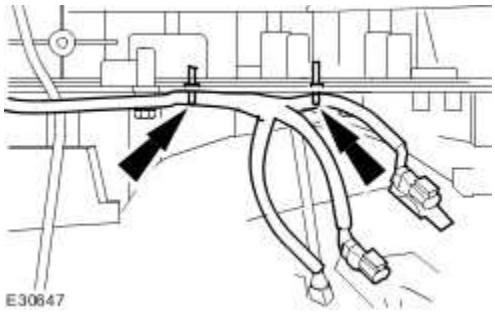

176 . Attach the engine wiring harness.

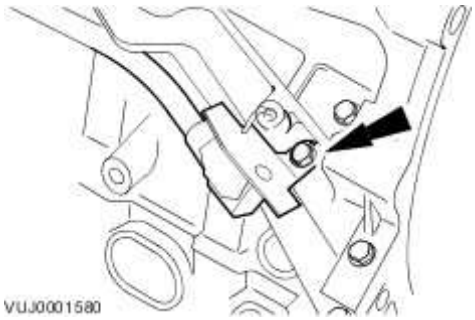

177 . Connect the crankshaft position sensor electrical connector.

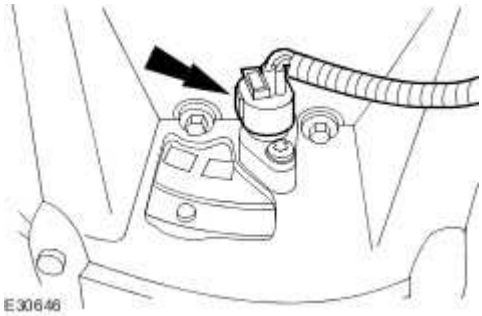

178 . Install the power steering pump mounting bracket.

- Tighten to 25 Nm.

www.JagDocs.com

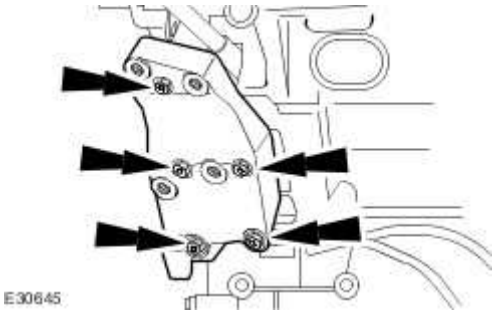

179 . Install the power steering pump.

- Tighten to 25 Nm.

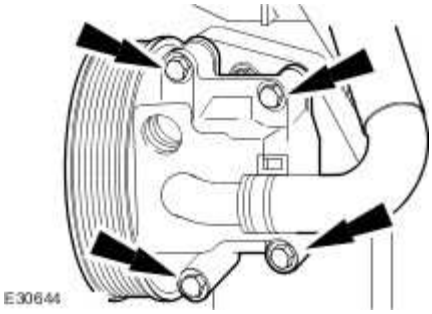

180 . Install the air conditioning compressor mounting bracket.

- Tighten to 25 Nm.

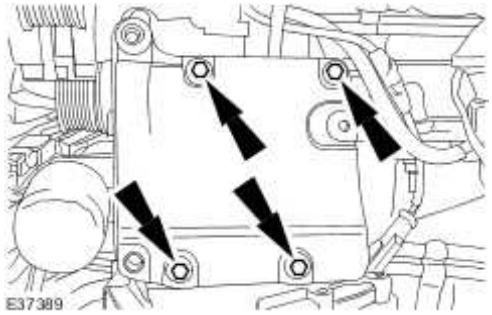

181 . Install the A/C compressor.

- Tighten to 25 Nm.

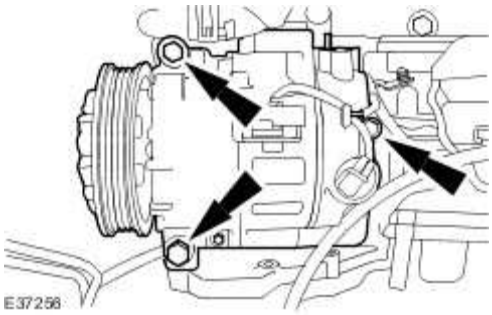

182 . Connect the air conditioning compressor electrical connector.

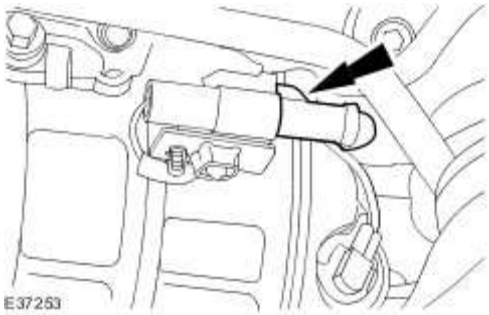

183 . Install the left-hand engine mounting bracket.

- Tighten to 25 Nm.

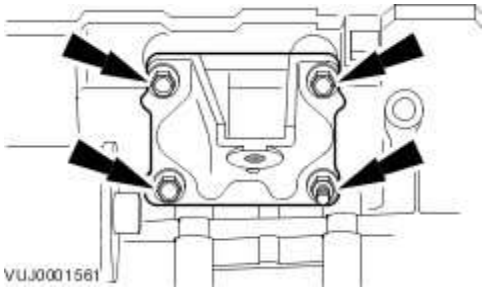

184 . Install the left-hand engine mount.

- Tighten to 43 Nm.

www.JagDocs.com

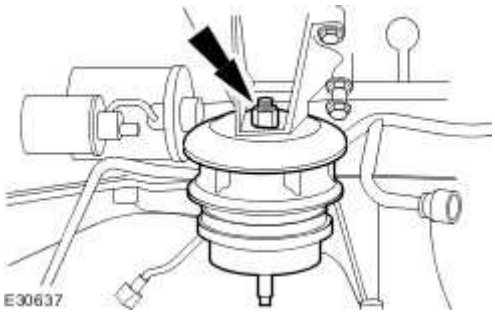

185 . **CAUTION: Make sure the exhaust manifold and gasket are correctly aligned to the cylinder head.**

CAUTION: Make sure the exhaust manifold torque is checked after initial tighten.

Install the left-hand exhaust manifold.

- Install a new gasket.
- Tighten to 20 Nm.

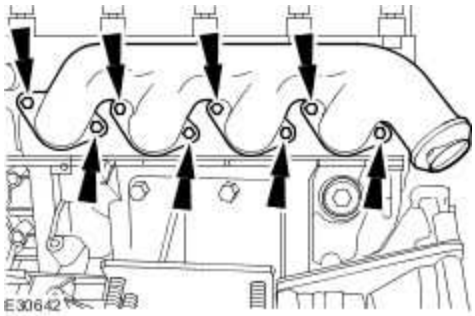

186 . Install the heat shield retaining bolt.

- Tighten to 50 Nm.

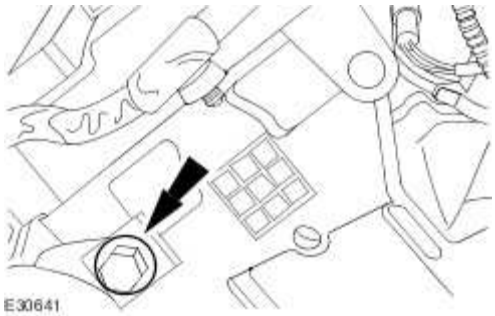

187 . Install the heat shield.

- Tighten to 3 Nm.

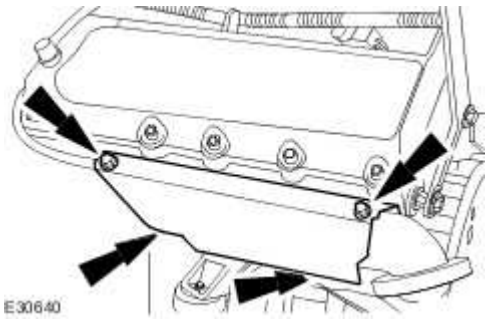

188 . Install the oil level indicator and tube.

- Install a new O-ring seal.
- Tighten to 6 Nm.

189 . Install the starter motor.

www.JagDocs.com

- Tighten to 45 Nm.

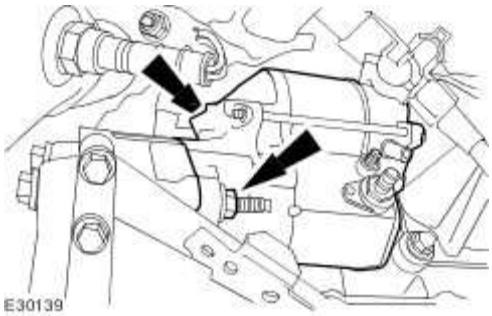

190 . Attach the engine wiring harness.

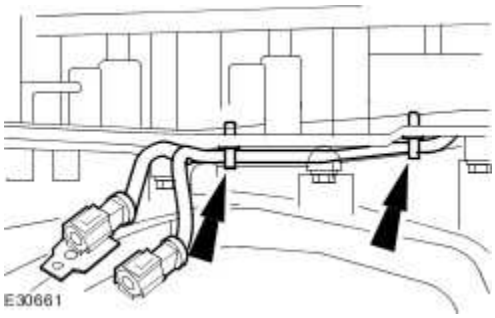

191 . Attach the right hand oxygen sensor retaining bracket.

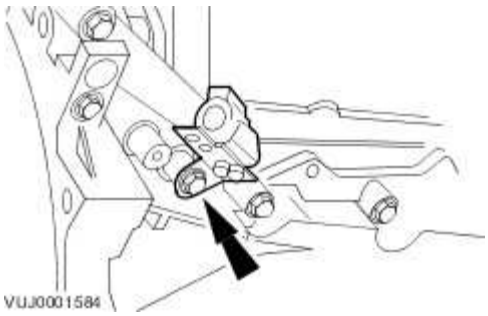

192 . Install the generator mounting bracket.

- Tighten to 45 Nm.

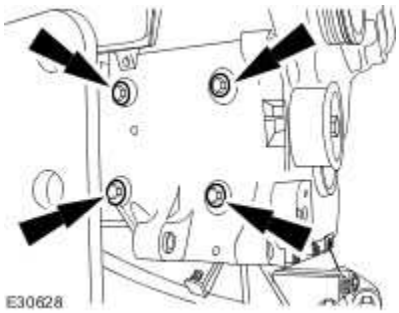

193 . Attach the engine wiring harness.

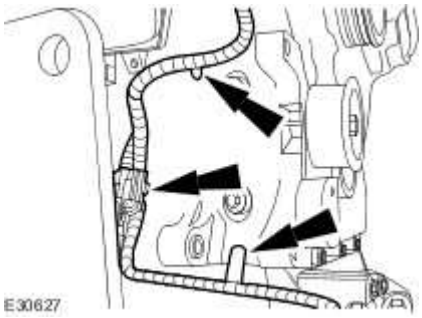

194 . Install the generator.

- Tighten the generator upper retaining bolt to 21 Nm.
- Tighten the generator lower retaining bolt to 40 Nm.

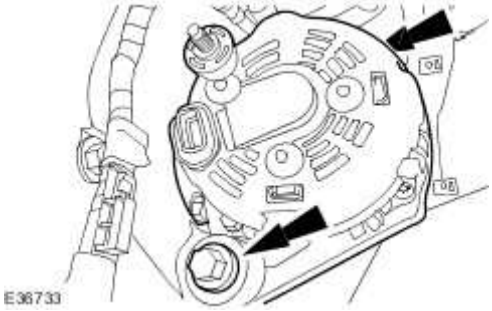

195 . Attach the wiring harness.

www.JagDocs.com

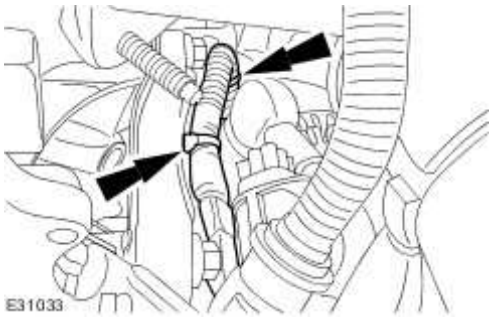

196 . Connect the generator electrical connector.

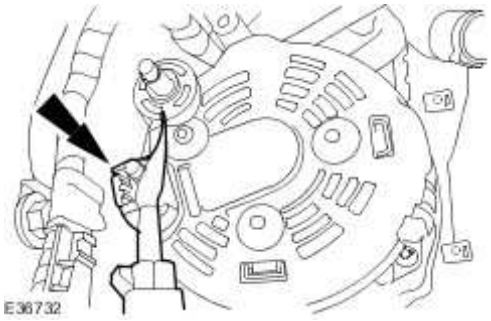

197 . Attach the generator battery positive cable.

- Tighten to 12 Nm

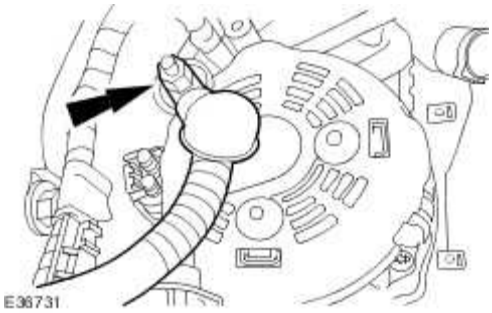

198 . Attach the generator battery positive cable protective cover.

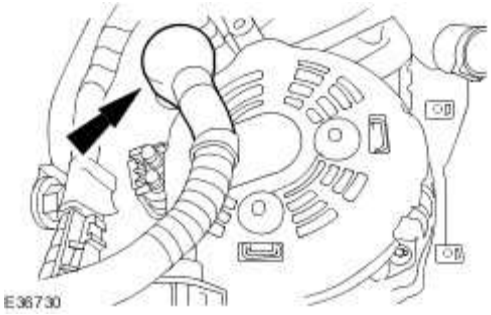

199 . Install the accessory drive belt idler pulley.

- Tighten to 25 Nm.

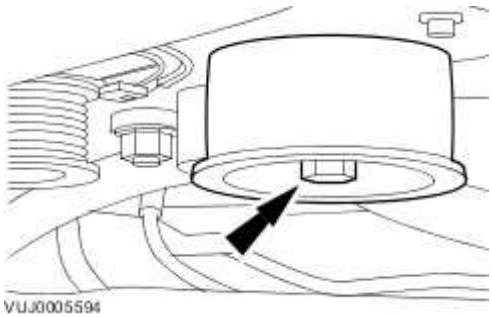

200 . Install the accessory drive belt tensioner.

- Install the accessory drive belt.
- Tighten to 45 Nm.

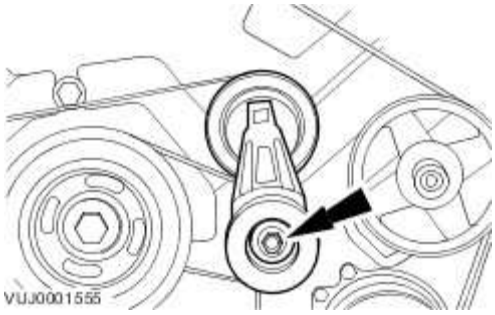

201 . Attach the accessory drive belt.

www.JagDocs.com

- Use a 3/8 inch square drive bar to rotate the drive belt tensioner.
- Attach the accessory drive belt.

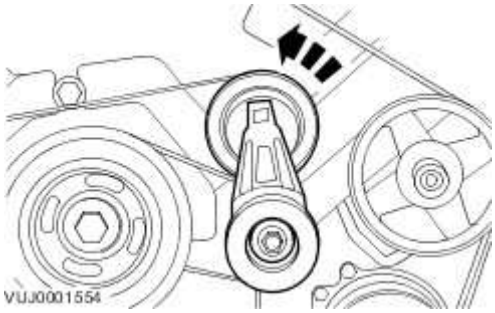

202 . Install the supercharger belt.

- Use a 1/2 inch square drive bar to rotate the supercharger belt tensioner.

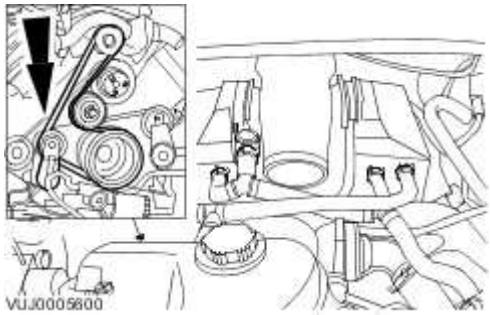

203 . Connect the oil cooler hoses.

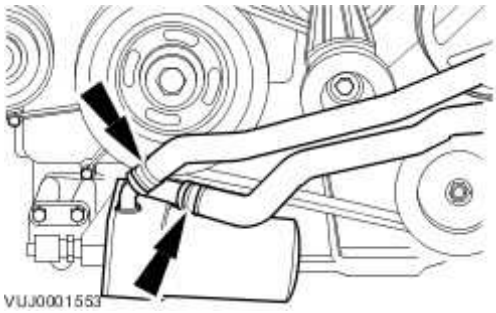

Specifications

Lubricants, Fluids, Sealers and Adhesives

Description	Specification
Engine oil, SAE 5W-30	WSS-M2C-913B A1
Sealant	WSE M4G323–A4 (Loctite 5910)
Sealant (camshaft caps)	ESK M4G269–A (Loctite 518)
Hose assembly surfactant	WSE N99C45–A2

General Specifications

Maximum permissible cylinder head warp	
Total flame face	0.1 mm
150 mm x 150 mm square on flame face	0.05 mm
25 mm x 25 mm square on flame face	0.025 mm

Capacities

Description	Liters
Engine oil, initial fill	7·7
Engine oil, service fill with oil filter change	6·6

Torque Specifications

Description	Nm	lb-ft	lb-in
Accessory drive belt idler pulley retaining bolt	47	35	–
Accessory drive belt idler pulley mount bracket retaining bolts	80	59	–
Accessory drivebelt tensioner retaining bolt	47	35	–
Air conditioning compressor retaining bolts	25	18	–
Air conditioning compressor mounting bracket retaining bolts	25	18	–
A/C manifold retaining bolt	20	15	–

www.JagDocs.com

Camshaft bearing caps retaining bolts	A	–	–
Camshaft position sensor retaining bolt	10	–	89
Camshaft hub retaining bolts	A	–	–
Camshaft pulley retaining bolts	23	17	–
Crankshaft pulley retaining bolt	A	–	–
Crankshaft position sensor retaining bolt	5	–	44
Coolant inlet housing	10	–	89
Cylinder head retaining bolts	A	–	–
Engine mount retaining nuts to crossmember	63	46	–
Engine mount bracket to engine mount retaining nut	48	35	–
Engine mount bracket to engine block retaining bolts	90	66	–
Engine wiring harness retaining bracket	4	–	35
Exhaust manifold heat shield retaining bolts	10	–	89
Exhaust manifold retaining bolts	23	17	–
Flexplate retaining bolts	A	–	–
Fuel injection pump	23	17	–
Fuel injection pump pulley retaining nut	50	37	–
Fuel injector retaining bolts	10	–	89
Generator retaining bolts	47	35	–
Generator mount bracket retaining bolts	23	17	–
Glow plugs	10	–	89
Knock sensor retaining nuts	20	15	–
Oil cooler to cylinder block retaining bolt	10	–	89
Oil level indicator tube retaining bolt	10	–	89
Oil pan retaining bolts	10	–	89
Oil pump to engine block retaining bolts	10	–	89
Oil pan drain plug	25	18	–
Oil separator pipe retaining bolts	10	–	89
Oil filter	25	18	–
Piston cooling jet retaining bolt	10	–	89
Power steering bracket retaining bolts	23	17	–
Power steering pump retaining bolts	22	16	–
Primary timing chain tensioner retaining bolts	12	9	–
Starter motor retaining bolts	48	35	–
Timing belt tensioner retaining bolt	24	18	–
Timing belt idler pulley retaining bolt	45	33	–
Water pump retaining bolts	10	–	89
Water pump pulley retaining bolts	24	18	–

Water pump outlet pipe retaining bolts	10	–	89
Valve cover retaining bolts	10	–	89
Vacuum pump retaining bolts	23	17	–
Vacuum pump retaining nuts	13	10	–

www.JagDocs.com

Engine

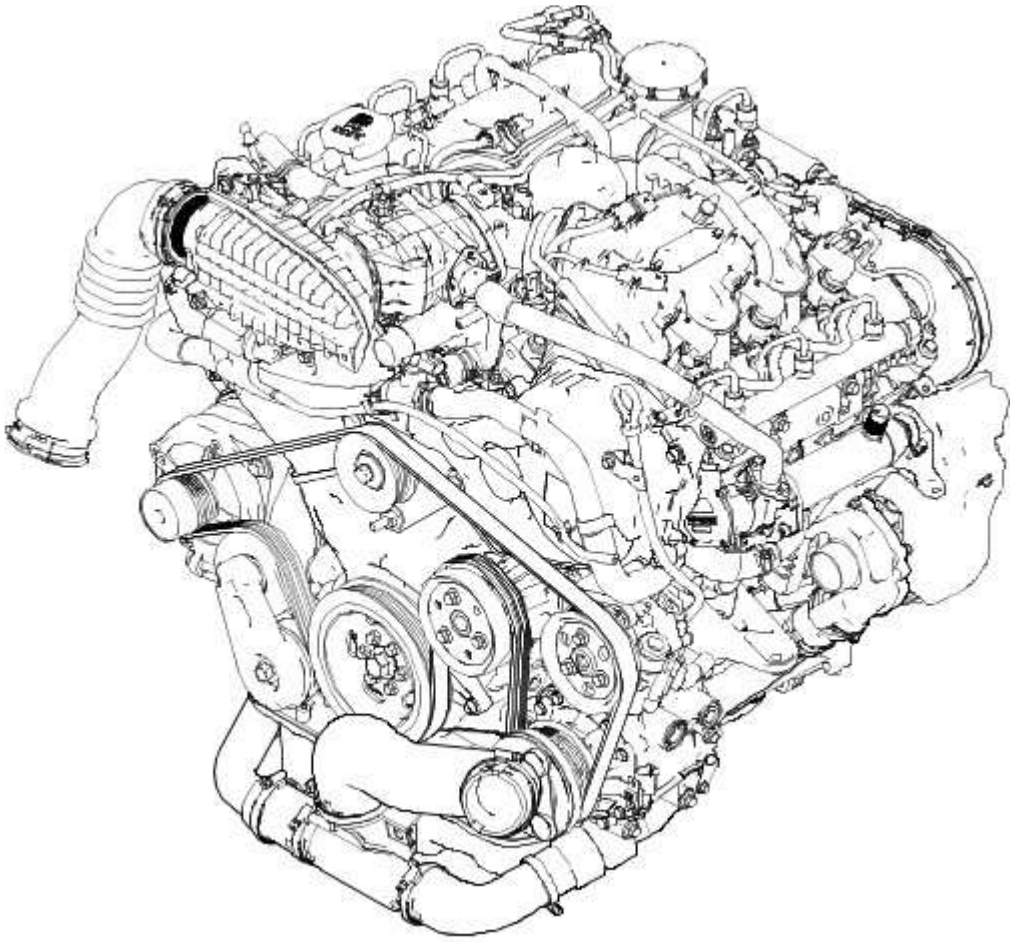

E52128

The 2.7 litre engine consists of a six cylinder 60-degree 'Enclosed Vee' configuration liquid cooled Compacted Graphite Iron (CGI) with the cylinder bores machined directly into the block.

Viewed from the driving position, the right-hand cylinder bank is numbered 1 to 3, from the front of the vehicle and the left-hand cylinder bank are numbered 4 to 6, from the front of the vehicle.

Knock Sensors

The knock sensor registers increased vibrations which occur due to increased combustion noise. The ECM uses the signal as a correction factor for calculating the quantity of fuel to be injected during the injection phase.

Active Engine Mounts

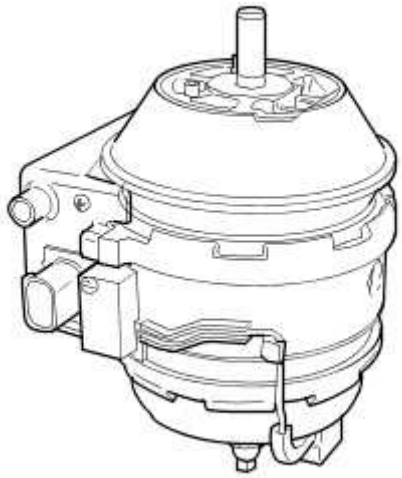

E67630

The function of the engine mounts is to support the engine, whilst also isolating vibrations transmitted from the engine to the vehicle body.

The active engine mounts are functional only when the engine is at idle, as this is when the engine high frequency vibrations are the dominant vibrations noticeable to the vehicle's occupants.

The mechanical construction of the active engine mounts is similar to the passive hydraulic engine mounts, but with the added element of an internal shaker mechanism. The shaker mechanism of the active engine mounts works on the same concept as a speaker diaphragm to move the top section of the active engine mounts to oppose the vibrations generated by the engine. The active engine mounts mechanism estimates the vibration caused by fluctuations in the engine crank rotation and isolates these vibrations by generating additional vibrations through the internal shaker mechanism. The result gives vibration isolation and reduction of chassis vibration.

To ensure accurate vibration suppression the active engine mounts have an electronic control module attached to the body and an accelerometer attached to the base.

www.JagDocs.com

Crankshaft

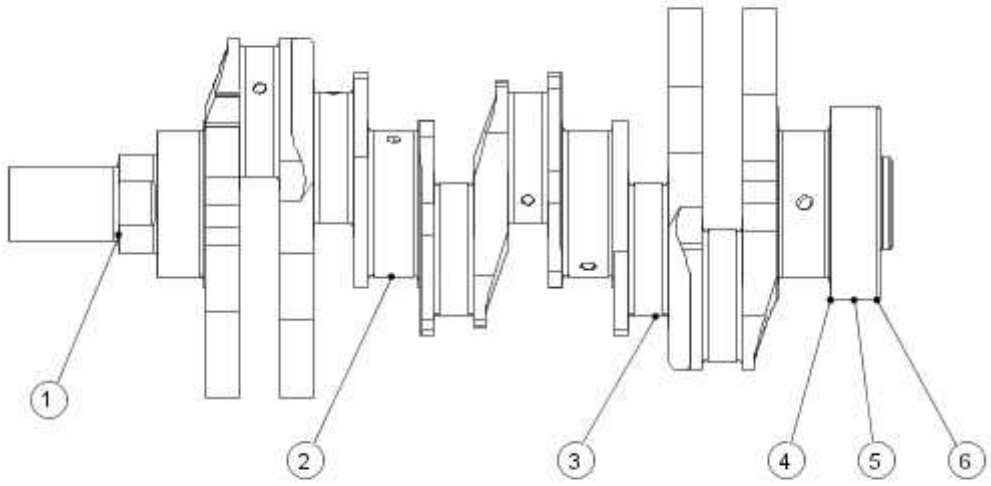

E52135

Item	Part Number	Description
1	—	Oil pump drive
2	—	Main bearing journal
3	—	Big end journal
4	—	Rear drive flange
5		Rear oil seal location
6		Trigger wheel location

The crankshaft is forged steel and fillet rolled with induction hardened journals, which run in four bearings with clamped two layer bearing shells. The upper and lower shells of bearing number four are flanged, which limits the end float of the crankshaft. The main bearing caps are double bolted and cross bolted to increase the strength and rigidity of the engine block.

The rear main oil seal and retainer assembly is a one piece unit and is supplied with its own plastic fitting sleeve. The seal and retainer have two locating dowels and ten fixing bolts. In addition the retainer has a location for the crankshaft position sensor.

A torsional vibration crankshaft damper pulley is bolted to the front of the crankshaft.

The crankshaft trigger wheel is located on the rear of the crankshaft. It is pressed onto the crank

using a special tool which also precisely aligns the trigger wheel for crankshaft position and timing. The trigger wheel consists of 60 magnets minus two for ECM crankshaft position reference and synchronisation. The magnets cannot be seen on the trigger wheel, which therefore can only be positioned using a special tool.

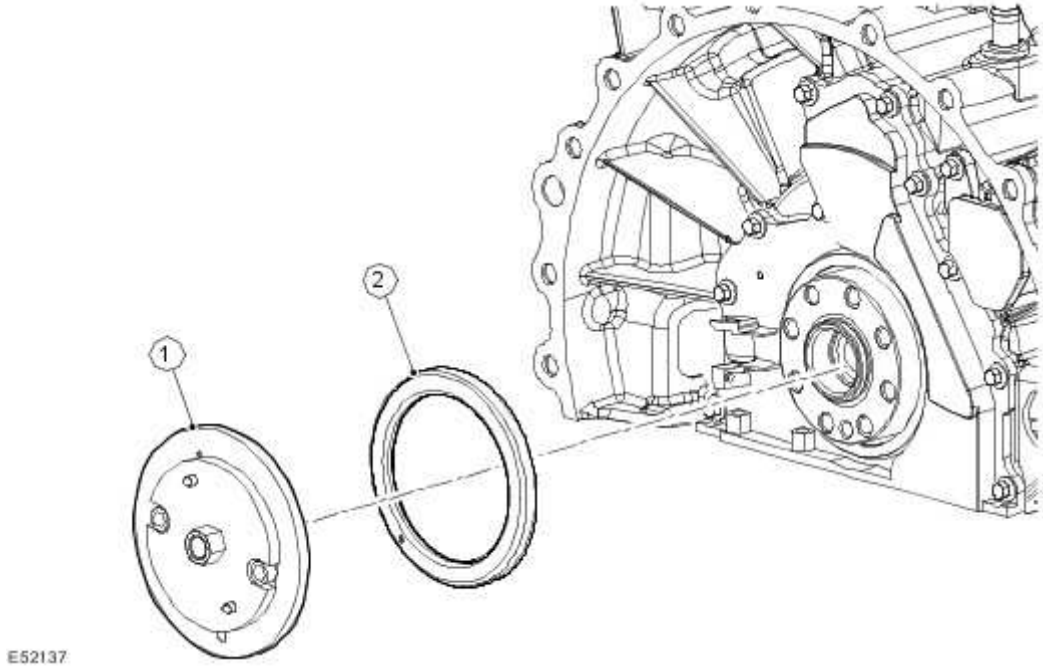

Item	Part Number	Description
1	—	Special tool
2	—	Trigger wheel

If the trigger is removed for any reason, then a new trigger wheel MUST be fitted.

www.JagDocs.com

Connecting Rods and Pistons

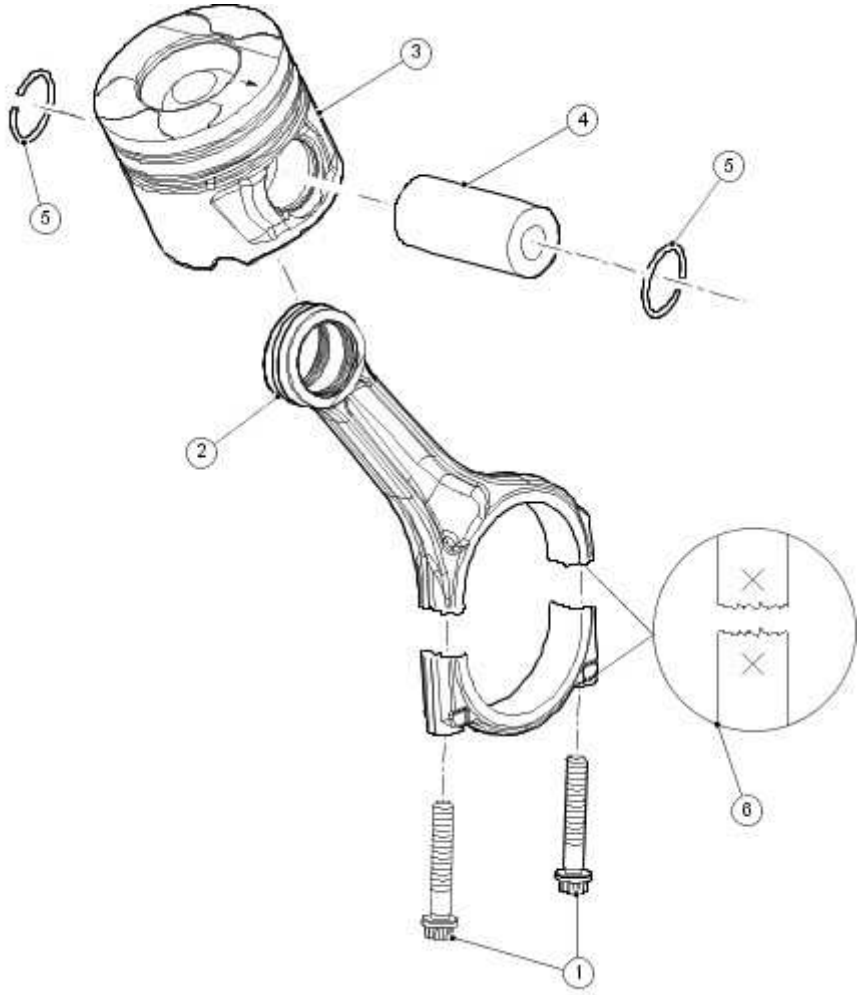

E52134

Item	Part Number	Description
1	—	Connecting rod bolts
2	—	Connecting rod
3	—	Piston
4	—	Gudgeon pin
5		Circlips
6		Connecting rod identification

In production the connecting rods are fitted in sets of six. The connecting rods are offset fracture split. Each connecting rod is marked (etched) with the cylinder number on either side of the fracture split line.

The pistons are made from aluminium alloy and fitted with three rings. The piston crown incorporates a pronounced bowl. This forms the combustion chamber which promotes swirl and turbulence, necessary for good combustion and improved emission. In addition, the piston skirt, which comes into contact with the cylinder bore, has molybdenum-coated surfaces. These counteract scoring of the cylinder and piston, therefore helping to increase engine life.

The piston also incorporates a double wave gallery within the piston crown to enhance piston cooling. The piston is supplied with oil by spray jets which are located in the engine block oil gallery. This ensures optimum piston cooling due to the high temperatures that are generated by the combustion process.

The arrows on the piston crown point to the front of the engine.

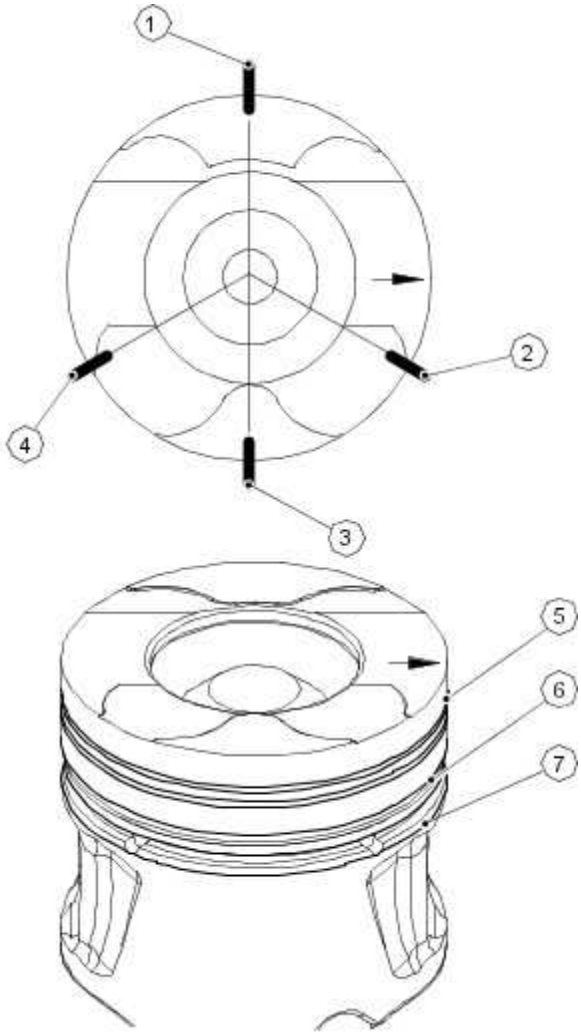

Item	Part Number	Description
1	—	Ring gap oil control
2	—	Ring gap upper compression

www.JagDocs.com

3	—	Spiral joint oil control
4	—	Ring gap lower compression
5		Upper compression ring
6		Lower compression ring
7		Oil control ring

All pistons are common single grade/single part number for all engines.

The piston top ring is a taper type and is fitted with a taper to the top of the piston. All rings marked 'top' are assembled with top to uppermost. All rings must be spaced evenly around the piston before installing. The circumference gap of the double bevelled oil control ring must be opposite to the spiral control joint.

Piston bowl volume is 20.025cc and the compression ratio is 17.3:1.

Cylinder Heads and Valve Gear

The cylinder head is of high quality aluminium and cannot be reworked. The cylinder head is secured to the engine block by eight bolts.

The cylinder head incorporates four valves per cylinder, glow plugs and a knock sensor. A vertically centrally placed fuel injector guarantees maximum distribution of fuel into the combustion chamber.

The cylinder head gasket is a three layer laminated steel construction that has an excellent service life and sealing properties. The cylinder head gasket is available in five different thicknesses depending on the piston protrusion height. The cylinder head gaskets are identified by serrations cut into the front end of the gasket.

The valves are operated directly by steel roller rockers with hydraulic lash adjusters.

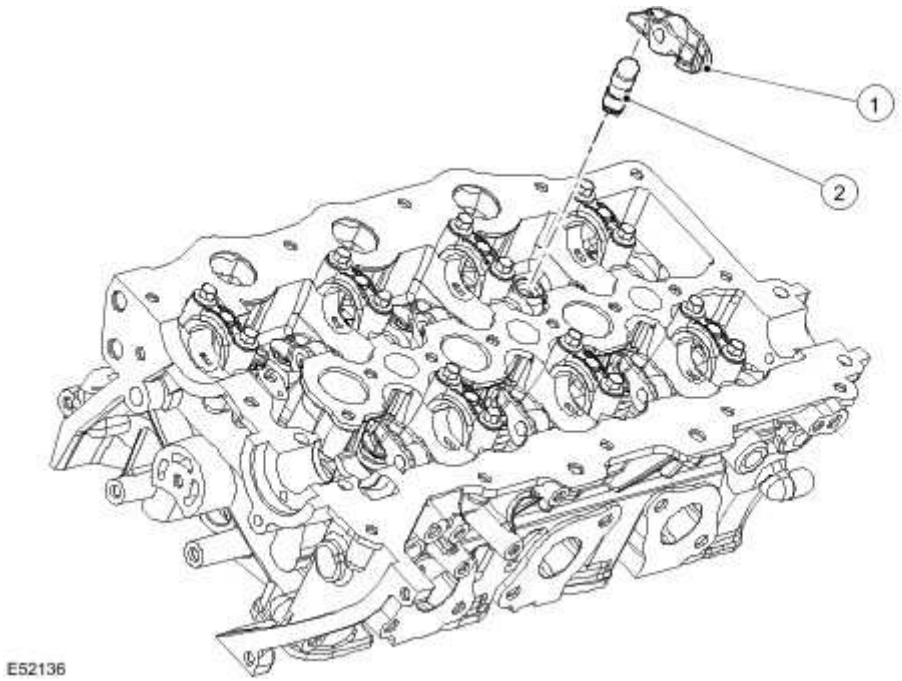

Item	Part Number	Description
1	—	Steel rocker
2	—	Hydraulic adjuster

Inlet Manifold

The induction is designed to optimise torque across the engine speed/load range. The air charge enters the induction manifold from the EGR throttle valve and passes into the plenum for distribution to the cylinders.

The purpose of the plenum is to maximise the air charge into the cylinders.

The inlet manifolds are of plastic composite construction and are handed for the left and right hand bank. The manifolds incorporate a twin plenum intake system and integrated cam covers. The plenum systems are vacuum operated, these are located at the rear of the manifolds and are ECM controlled

The inlet manifolds/cam covers are secured to the cylinder head by 13 shouldered bolts and sealed by means of rubber gasket.

Camshafts

The camshaft's construction is of hollow steel tube with pressed on syntered lobes. There are two camshafts per cylinder head. The camshafts have pressed on drive sprockets which are marked for timing purposes. The interconnecting drive chain is also marked for valve timing. The drive chain has

www.JagDocs.com

a hydraulic tensioner. Both banks are of similar construction. They are not interchangeable.

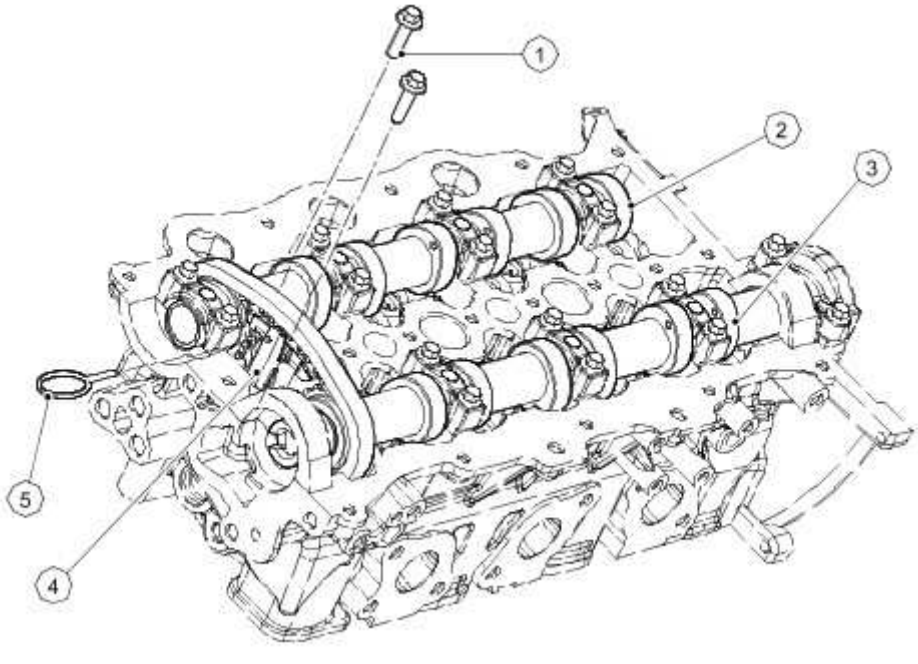

Item	Part Number	Description
1	—	Tensioner securing bolts
2	—	Camshaft bearing caps
3	—	Camshaft
4	—	Chain tensioner
5	—	Tensioner retaining pin

The drive sprockets also form the thrust faces for the camshaft. In production camshaft endfloat is set to 0.065mm-0.185mm.

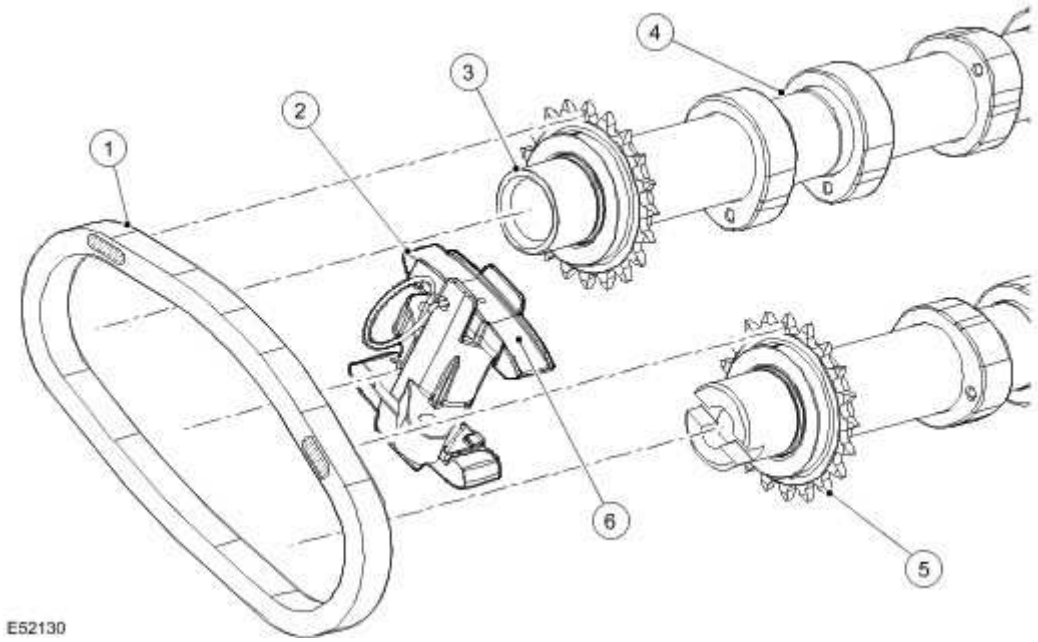

Item	Part Number	Description
1	—	Drive chain
2	—	Tensioner locking pin
3	—	Camshaft
4	—	Cam lobe
5	—	Drive gear
6	—	Tensioner

Camshaft Bearings

The camshafts are supported in five line bored bearings. The bearing caps, which are individually identified, must be fitted in the correct sequence.

www.JagDocs.com

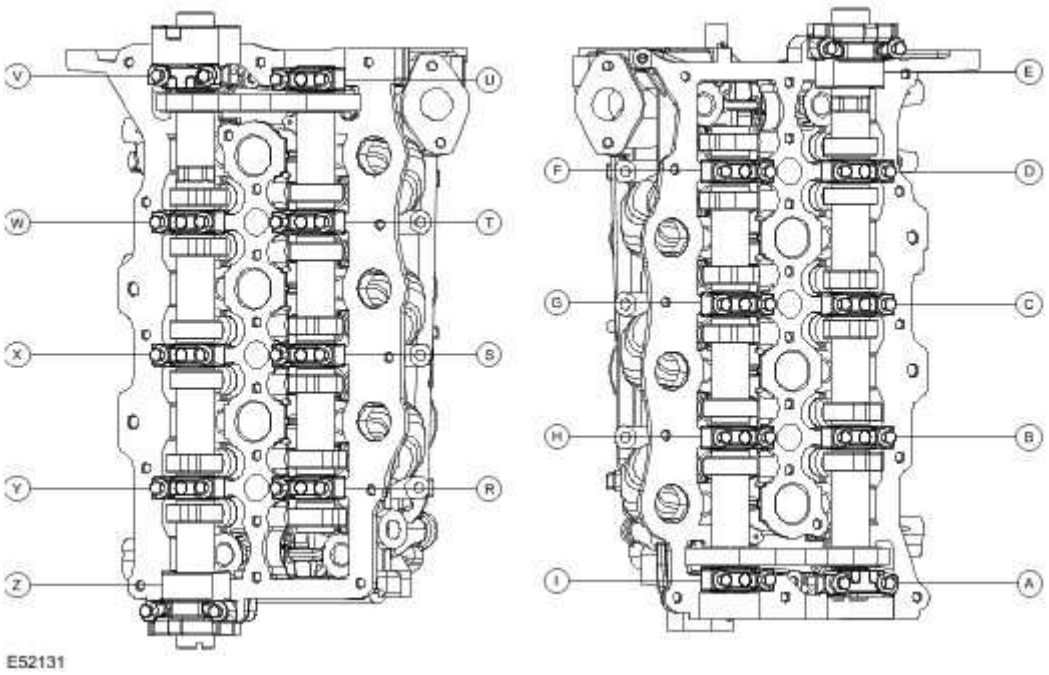

The right hand exhaust camshaft drives the vacuum pump which is sealed by an O-ring seal and secured by three bolts. Both inlet camshafts are sealed at each end by the inlet manifold/cam cover.

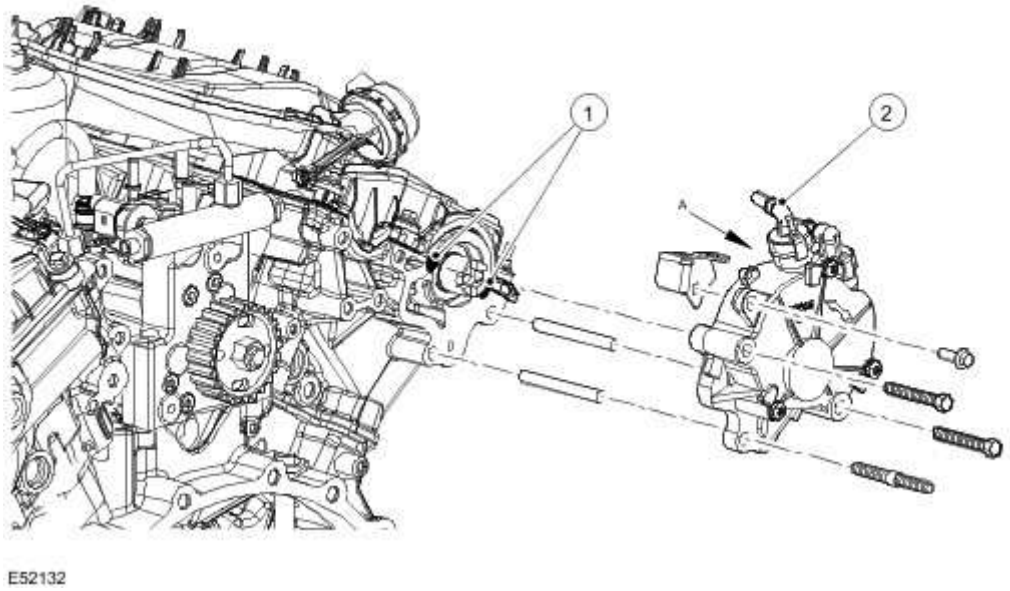

The vacuum pump supplies vacuum for the inlet port deactuation system and brake servo assistance. The pump is located at the rear of the engine and driven by the right hand side exhaust camshaft.

High Pressure Pump

The left hand exhaust camshaft drives the high pressure pump by means of a belt drive sprocket, which is supported by a boss and a single bolt fixing.

The high pressure pump is not timed to the engine.

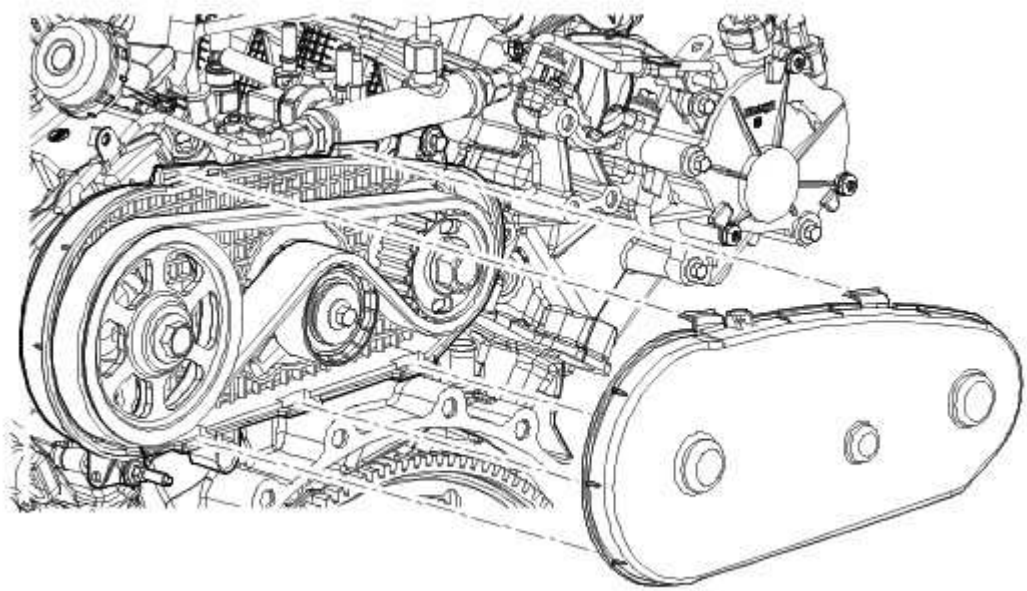

E52143

Timing Gear

The camshafts are driven from the crankshaft pulley via a timing belt to the front the of exhaust camshafts. The camshaft gears are bolted to a drive flange via three elongated adjustment holes and in turn bolted to the camshafts by a single bolt.

Each pair of camshafts are chain driven and must be timed before assembly.

www.JagDocs.com

Sump Pan

The sump pan is made from pressed steel and is secured to the bedplate by 21 M6 x 16 bolts.

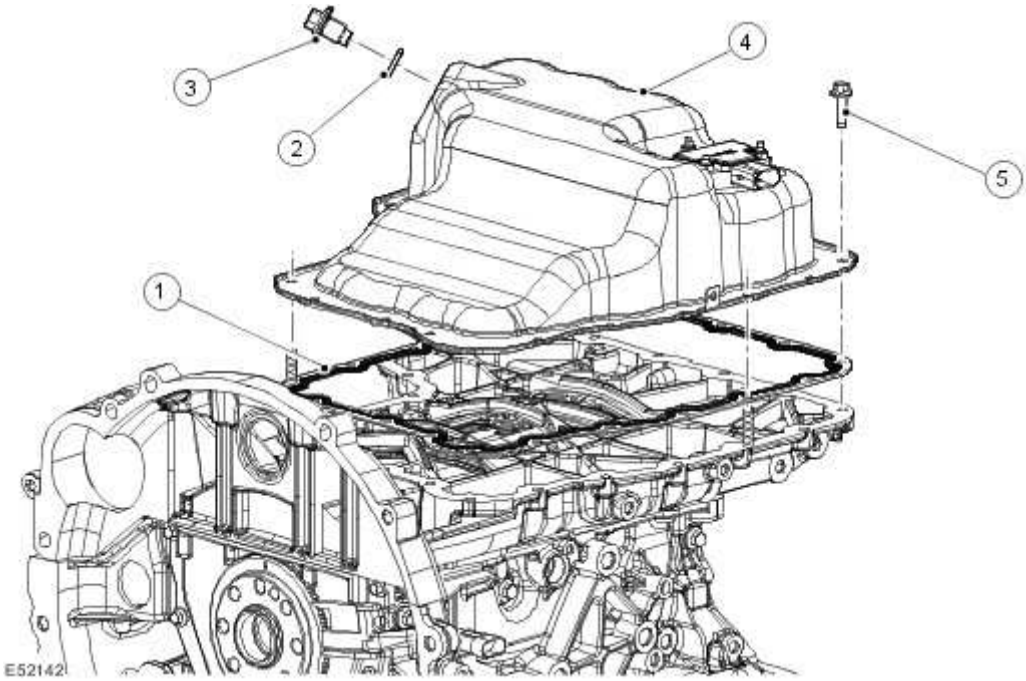

Item	Part Number	Description
1	—	Gasket
2	—	Draining bolt seal
3	—	Draining bolt
4	—	Sump pan
5	—	Retaining bolts

Engine Lubrication System

Oil is drawn from the oil pan and pressurised by the oil pump. The output from the oil pump is then filtered and distributed through the internal passage ways. Oil is cooled before entering the filter.

All moving parts are lubricated by pressure or splash oil. Pressurised oil is also provided for operation of the hydraulic adjusters, turbochargers and timing gear chain tensioners.

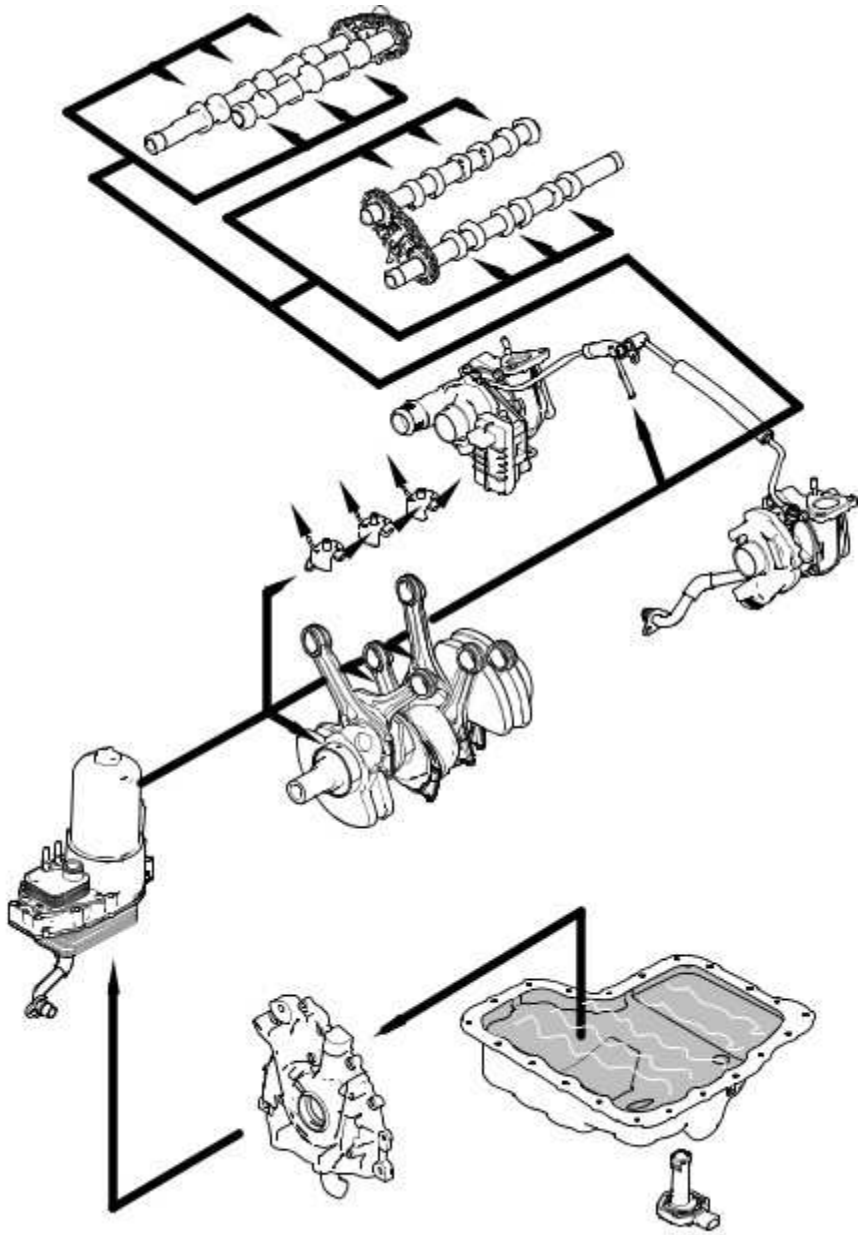

E52138

The engine is lubricated by a forced-feed circulation system with full flow oil filter. The oil cooler forms a unit with the oil filter and fuel cooler which is mounted centrally in the cylinder block between the two banks of cylinders. The engine oil is cooled using the engine cooling system. This eliminates the need for an additional engine oil cooler remotely mounted.

www.JagDocs.com

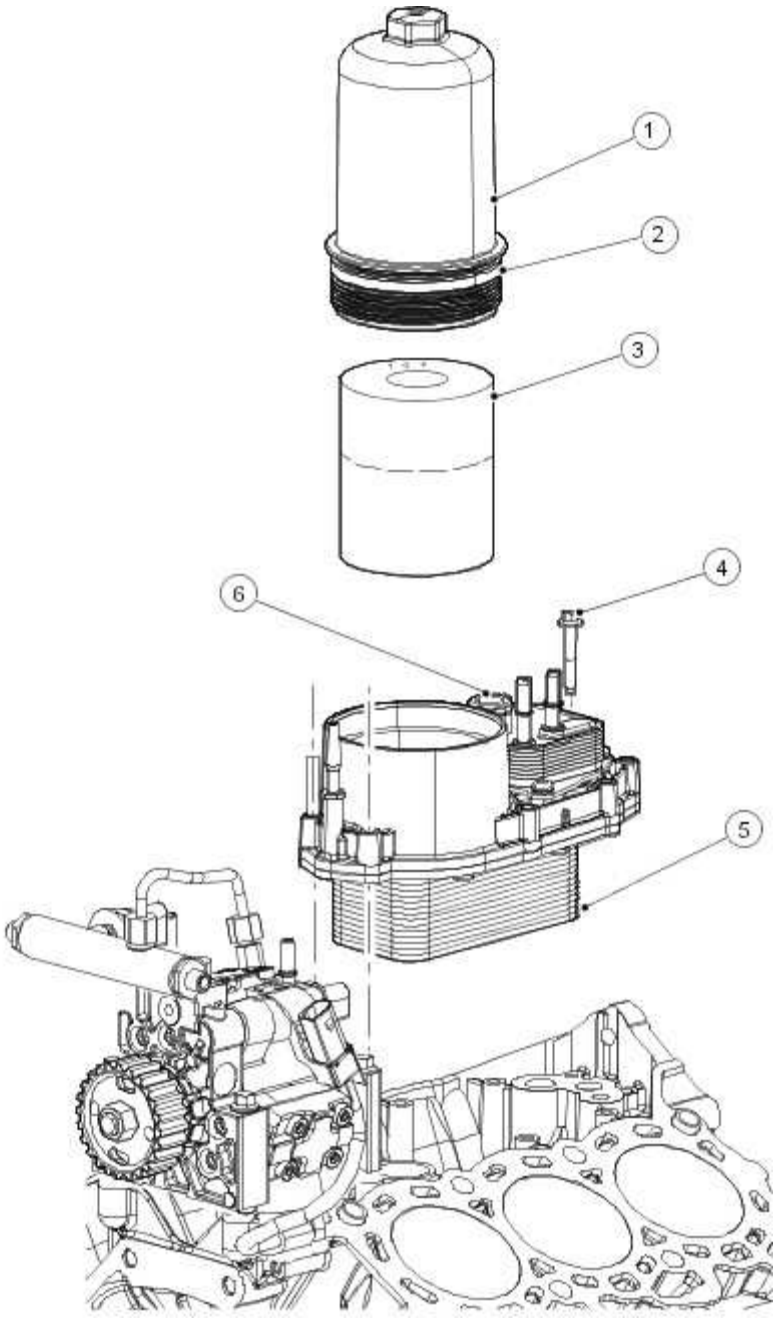

Item	Part Number	Description
1	—	Filter housing
2	—	'O' ring seal
3	—	Paper element
4	—	Retaining bolts

5	—	Cooler assembly
6	—	Water inlet connection

Oil Pump

The oil pump is a gear type pump and is bolted and dowelled to the front of the engine block. It is sealed by means of rubber gasket which is recessed into the oil pump casing. The pump is driven directly by two flats from the front of the crankshaft. The oil relief valve is an integral part of the pump.

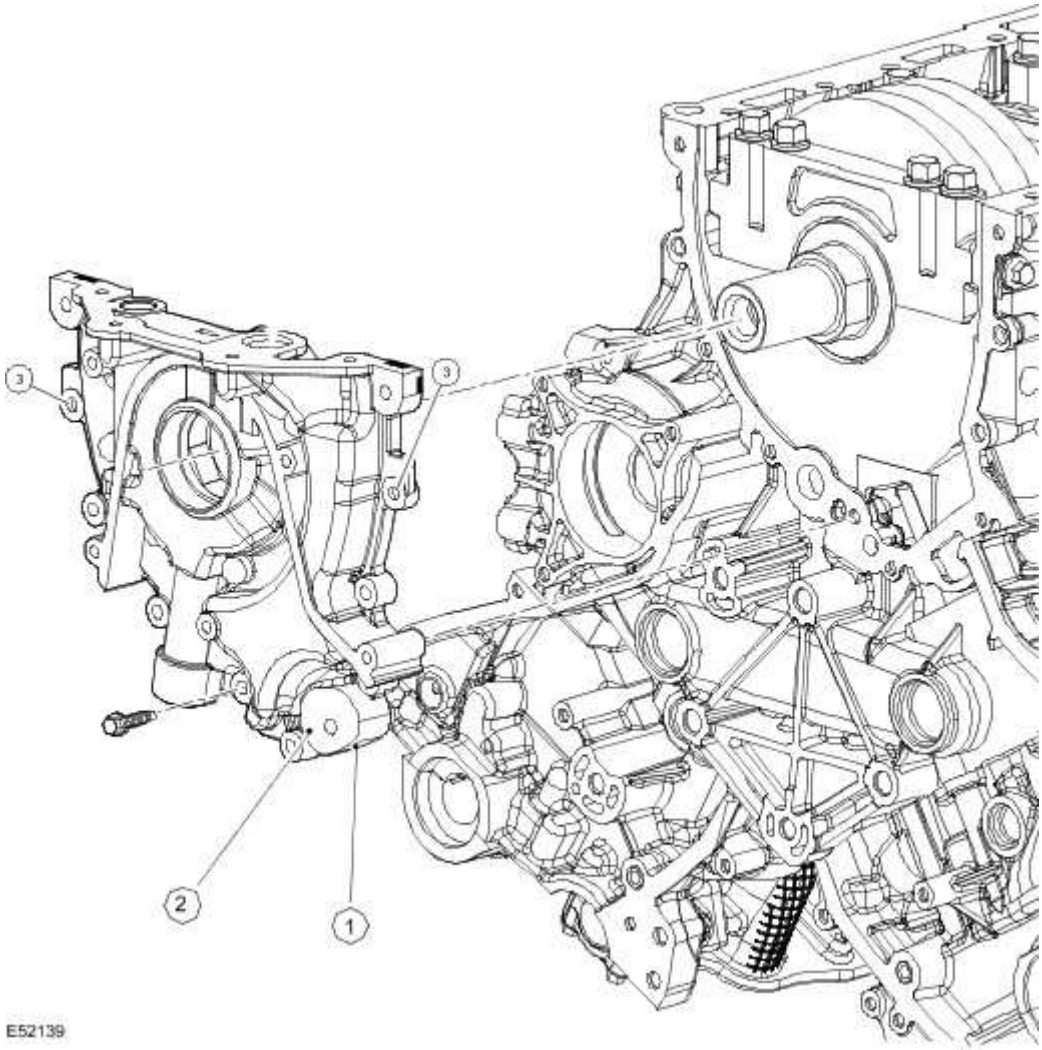

Item	Part Number	Description
1	—	Oil pump
2	—	Primary tensioner boss

www.JagDocs.com

3	—	Draining bolt
4	—	Sump pan
5	—	Retaining bolts

Oil spray jets are bolted in place under the cylinder bores between the crank bearing journals. The oil jets help to keep the pistons cool under arduous conditions and also prevent the oil draining back when the engine is stopped.

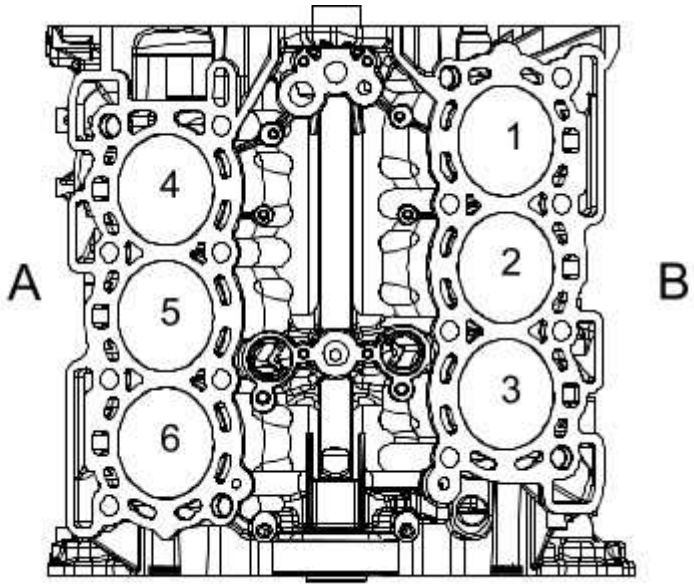

E52141

Engine Management

The ECM's (Engine Control Module) high capacity processor employs advanced software strategies that continuously control the engine's operating parameters. It gathers information from an array of sensors and provides output to the actuators. The ECM also operates a port deactivation system, which closes or opens flaps in the inlet system to provide the optimum swirl and flow conditions throughout the operating range of the engine.

In addition, the ECM controls the actuation of the Exhaust Gas Recirculation system, the Variable Geometry Turbochargers and the throttle, giving faster and more accurate response. A full torque-based strategy supports multiple injection control and integration with transmission and braking controllers. Transient torque and boost control enables vehicle performance to be optimised without compromising engine durability

System Components

All engine functions are controlled by the Siemens common rail ECM

Crank position (CKP) sensor

The CKP signal is used to determine: the quantity of fuel to be injected, the start of fuel delivery and the quantity of exhaust gases to be recirculated.

The crank position sensor is located at the rear of the crankshaft behind the flywheel.

The crankshaft position sensor (CKP) is a Hall effect sensor which scans a magnetic disc on the crankshaft. The air gap between the magnetic disc and the CKP is predetermined by the mounting of the sensor.

Camshaft position (CMP) sensor

Location: on the cylinder head behind the left hand camshaft timing belt pulley.

The CMP sensor is Hall effect type and is required to identify cylinder No. 1. (This is to synchronise engine to camshaft). The sensor scans a ring incorporated in the left hand camshaft timing belt pulley. The air gap between the magnetic ring and the CMP sensor is predetermined by the mounting of the sensor.

Engine coolant temperature (ECT) sensor

Location: in the top outlet hose.

The ECT is a NTC type sensor and is fitted into the top water outlet hose. The sensor has a bayonet type fitting.

Mass Air Flow (MAF) sensor

The MAF sensor is used to calculate the air mass. The MAF sensor is capable of detecting the mass air flow extremely precisely.

Location: there are two MAF sensors fitted. Each sensor is fitted to separate intake pipes.

On engines with a variable turbocharger, the MAF sensor is used solely to control the exhaust gas recirculation (EGR) and not the fuel metering. The MAF sensor also incorporates the Intake Air Temperature (IAT) sensor.

The IAT sensor measures the intake air or, the charge air temperature and supplies the ECM with an analog voltage signal.

Manifold Absolute Pressure (MAP) sensor

Location: fitted to the top of the throttle valve.

The MAP sensor measures the charging pressure in the intake pipe and sends the ECM an analog voltage signal.

www.JagDocs.com

Air Charge Temperature (ACT) sensor

Location: fitted to the pressure side of the air intake throttle valve.

The ACT sensor measures the intake air or the charge air temperature and supplies the ECM with an analog signal.

Fuel Rail Pressure sensor

Location: fitted to the diverter rail which in turn is bolted to the high pressure pump at the rear of the engine.

The fuel pressure sensor measures the instantaneous fuel pressure in the fuel rail very precisely within a very short time and supplies a voltage signal according to the pressure.

Fuel Temperature sensor

Location: the fuel temperature sensor is located on the low pressure side of the high pressure pump in the case of the common rail system. The sensor measures the temperature of the fuel in the low pressure system. Air and excessive heat in the fuel system can have an adverse effect on the operation of the sensor.

Exhaust Gas Recirculation (EGR) valves

Location: there are two EGR valves fitted, one to each exhaust manifold. These are water cooled and electronically controlled by the ECM.

Engine

Inspection and Verification

1 . Verify the customer concern.

2 . Visually inspect for obvious signs of mechanical or electrical damage.

Mechanical
• Coolant level • Coolant leaks • Oil level • Oil leaks • Visibly damaged or worn parts • Loose or missing nuts or bolts

3 . If an obvious cause for an observed or reported concern is found, correct the cause (if possible) before proceeding to the next step

4 . If the cause is not visually evident, verify the symptom and
Engine - 3.0L/3.5L/4.2L .

Active engine mounts

Overview

The active engine mount system operates at idle speed to help damp out any vibration from the engine.

The system is triggered by a signal from the engine control module activating the mounts at engine speeds between 600 and 900 rpm, when the mounts will operate as a pair.

The system determines which side mount is which by sending a ground signal to the right hand mount (this pin is vacant on the left hand mount).

Inspection and Verification

1 . Verify the customer concern.

If the customer concern is of a vibration at **other** than idle speed, then the fault is **not** with the active engine mounts.

www.JagDocs.com

2 . Use the Jaguar approved diagnostic system or a scan tool to retrieve any fault codes, as other causes of vibration or misfire should be eliminated before condemning an active engine mount.

3 . Visually inspect for obvious signs of mechanical or electrical damage.

Mechanical	Electrical
• Active engine mounts, correct fitment/damage • Routing of pipework etc to avoid vibrations • Contact anywhere between the driveline and chassis	• Fuse 9, front power distribution box • Harnesses/connectors • Active engine mounts • Engine control module (ECM)

4 . If an obvious cause for an observed or reported concern is found, correct the cause (if possible) before proceeding.

5 . If any DTCs were present in the steps above, make sure their causes are rectified before beginning any work on the active engine mounts.

Pinpoint test

PINPOINT TEST G414540p1 : ACTIVE ENGINE MOUNTS

G414540t1 : CHECK THE ACTIVE ENGINE MOUNT FUNCTION

1.

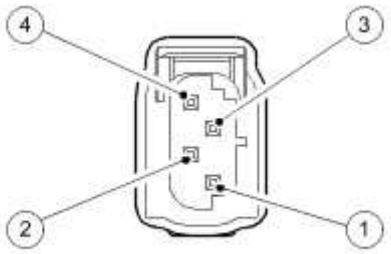

E66956

Circuit	Pin
Power ground	01
Power supply	02

Signal	03
Ground	04

2.

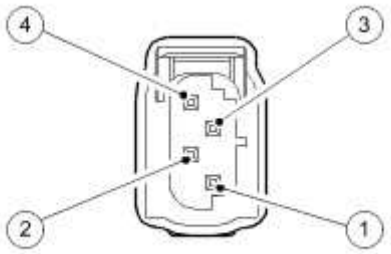

E66956

Circuit	Pin
Power ground	01
Power supply	02
Signal	03

3.

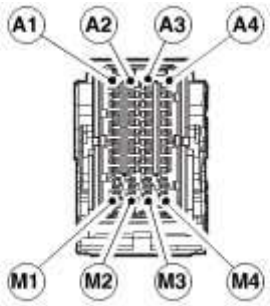

E66957

Circuit	Pin
Active engine mount signal	H1

4. Key off. 5. Disconnect the right hand active engine mount connector, PI065. 6. Using the Jaguar approved diagnostic system, activate the mounts. 7. Check for operation of the left hand mount.

Operation can be confirmed by feeling for vibration of the mount. 8. Key off. 9. Reconnect the right hand active engine mount connector, PI065. 10. Disconnect the left hand active engine mount connector, PI066. 11. Using the Jaguar approved diagnostic system, activate the mounts. 12. Check for operation of the right hand mount.

www.JagDocs.com

Operation can be confirmed by feeling for vibration of the mount.

- **Did both mounts operate when activated?**

-> Yes
GO to Pinpoint Test G414540t8.

-> No
GO to Pinpoint Test G414540t2.

G414540t8 : CHECK THE INTERNAL DIAGNOSTIC CIRCUIT FOR SHORT CIRCUIT

1. Measure the resistance between:

PI065, component side	PI065, component side
Pin 04	Pin 01

PI066, component side	PI066, component side
Pin 04	Pin 01

- **Are both resistances greater than 10 Kohms?**

-> Yes
An intermittent fault may be present in the wiring harness. GO to Pinpoint Test G414540t2.

-> No
INSTALL a new active engine mount in place of the suspect unit. Clear any DTCs, test the system for normal operation.

G414540t2 : CHECK FOR POWER SUPPLY TO THE ACTIVE ENGINE MOUNTS

1. Disconnect the right hand active engine mount connector, PI065. 2. Key on, engine off. 3. Measure the voltage between:

PI065, harness side	Battery

Pin 02	Negative terminal

PI066, harness side	Battery
Pin 02	Negative terminal

- **Is the voltage at both pins greater than 10 volts?**

-> Yes
GO to Pinpoint Test G414540t4.

-> No
REPAIR the power supply circuit. This circuit includes harness splice, PIS87. For additional information, refer to the wiring diagrams. Clear any DTCs, test the system for normal operation.

G414540t4 : CHECK THE SIGNAL FROM THE ECM

1. Using the Jaguar approved diagnostic system, activate the mounts. 2. Measure the signal voltage between:

PI065, harness side	Battery
Pin 03	Negative terminal

PI066, harness side	Battery
Pin 03	Negative terminal

- **Is the voltage between 1 and 2.5 volts with the mount active? (the circuit should register 4-5 volts with the mount inactive).**

-> Yes
GO to Pinpoint Test G414540t3.

-> No
GO to Pinpoint Test G414540t5.

www.JagDocs.com

G414540t3 : CHECK FOR GROUND TO THE ACTIVE ENGINE MOUNTS

1. Disconnect the battery negative terminal. **Link to genproc.** 2. Measure the resistance between:

PI065, harness side	Battery
Pin 01	Negative lead
Pin 04	Negative lead

PI066, harness side	Battery
Pin 01	Negative lead

- **Are the resistances less than 10 ohms?**

-> Yes
INSTALL a new active engine mount in place of the inoperative unit. Clear any DTCs, test the system for normal operation.

-> No
REPAIR the ground circuit. This circuit includes harness splice, PIS88. For additional information, refer to the wiring diagrams. Clear any DTCs, test the system for normal operation.

G414540t5 : CHECK THE SIGNAL CIRCUIT FOR SHORT CIRCUIT TO GROUND

1. Disconnect the ECM connector, EC066. 2. Measure the resistance between:

PI065, harness side	Battery
Pin 03	Negative lead

PI066, harness side	Battery
Pin 03	Negative lead

- **Is the resistance greater than 10 Kohms?**

-> Yes
GO to Pinpoint Test G414540t6.

-> No
REPAIR the short circuit. For additional information, refer to the wiring diagrams. Clear any DTCs, test the system for normal operation. REFER to the warranty policy and procedures manual if an ECM is suspect.

G414540t6 : CHECK THE SIGNAL CIRCUIT FOR SHORT CIRCUIT TO POWER

1. Measure the resistance between:

PI065, harness side	Battery
Pin 03	Positive terminal

PI066, harness side	Battery
Pin 03	Positive terminal

- **Is the resistance greater than 10 Kohms?**

-> Yes
GO to Pinpoint Test G414540t7.

-> No
REPAIR the short circuit. For additional information, refer to the wiring diagrams. Clear any DTCs, test the system for normal operation. REFER to the warranty policy and procedures manual if an ECM is suspect.

G414540t7 : CHECK THE SIGNAL CIRCUIT FOR HIGH RESISTANCE

1. Measure the resistance between:

PI065, harness side	ECM, harness side
Pin 03	Pin H1

PI066, harness side	ECM, harness side
Pin 03	Pin H1

www.JagDocs.com

- **Is the resistance less than 10 ohms?**

-> Yes
An intermittent fault may be present in the wiring harness. Visually check for chaffed wires or other physical damage to the harness or connectors. REFER to the warranty policy and procedures manual if an ECM is suspect.

-> No
REPAIR the high resistance circuit. This circuit includes harness splice, PIS86. For additional information, refer to the wiring diagrams. Clear any DTCs, test the system for normal operation.

Engine (12.41.01)

Special Service Tools

Engine Lifting Brackets
303-1129

Engine Support Bracket
303-021

Removal

1 . Disconnect the battery ground cable.
For additional information, refer to Battery Disconnect and Connect

2 . Remove the secondary bulkhead center panel.
For additional information, refer to Secondary Bulkhead Center Panel

3 . Remove the air cleaner.
For additional information, refer to Air Cleaner (19.10.05)

4 . Remove the automatic transmission.
For additional information, refer to Transmission - 2.7L Diesel (44.20.01)

5 . Drain the power steering fluid.

www.JagDocs.com

6 . Lower the vehicle.

7 . Detach the diesel particulate filter high and low-pressure pipes.

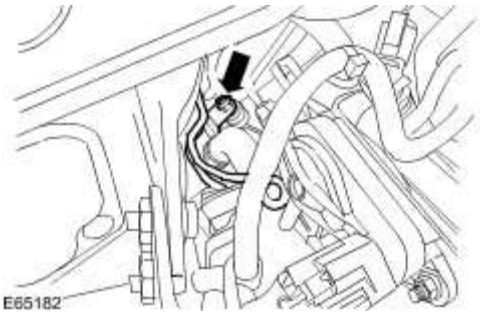

8 . Detach the diesel particulate filter differential pressure sensor retaining bracket.

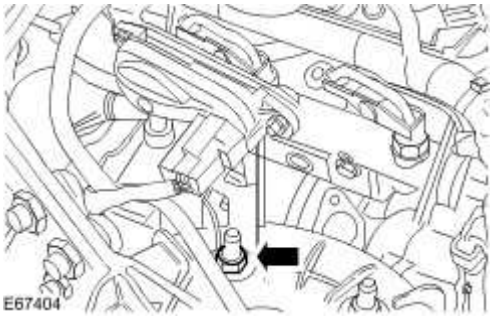

9 . Disconnect the glow plug harness electrical connectors.

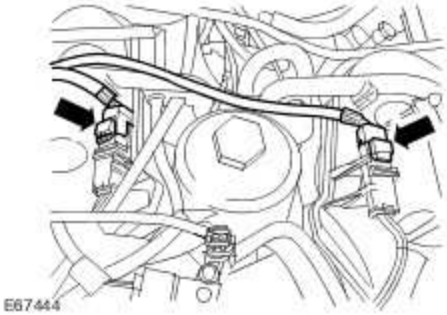

10 . Disconnect the coolant expansion tank coolant hose from the cylinder head coolant outlet assembly.

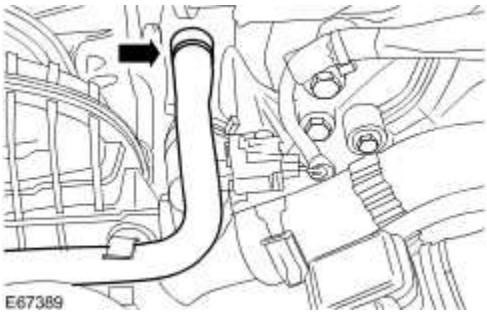

11 . Detach the coolant expansion tank coolant hose from the intake air shutoff throttle elbow.

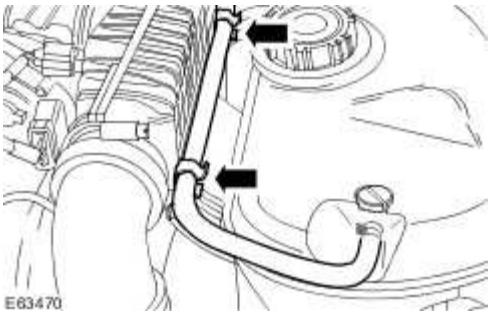

12 . Loosen the charge air cooler outlet tube retaining clip.

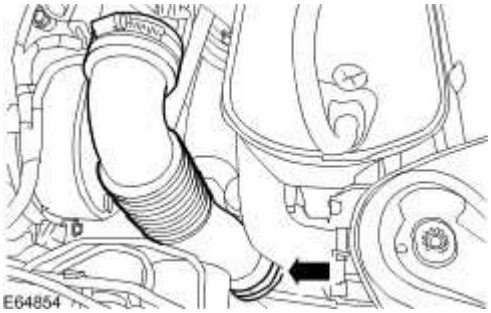

13 . Remove the intake air shutoff throttle elbow retaining bolt.

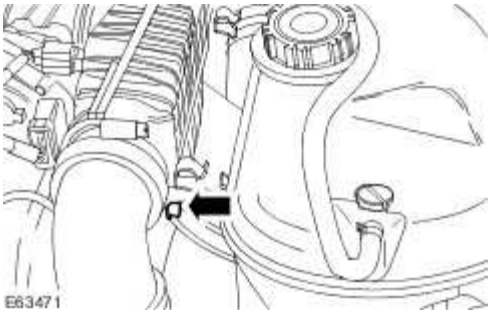

www.JagDocs.com

14 . Disconnect the intake air temperature (IAT) sensor electrical connector.

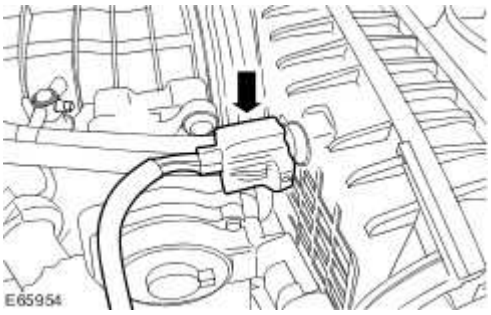

15 . **NOTE:**

Remove and discard the O-ring seal.

Remove the intake air shutoff throttle elbow and charge air cooler outlet tube assembly.

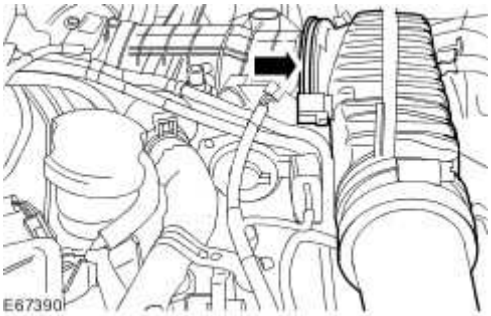

16 . Disconnect the exhaust gas recirculation (EGR) coolant hose.

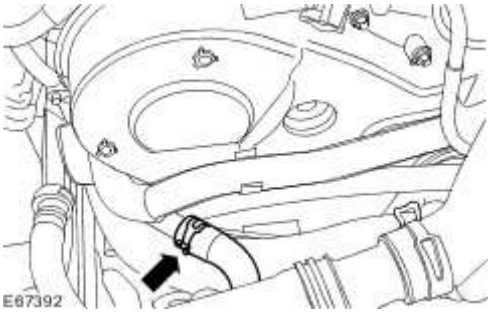

17 . Disconnect the radiator top hose from the cylinder head coolant outlet assembly.

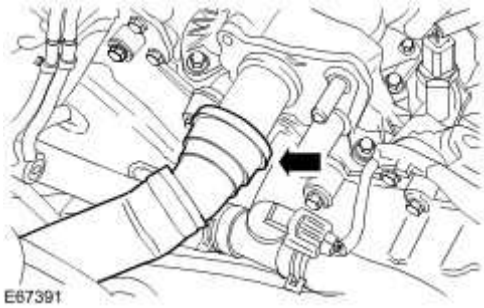

18 . Using a suitable tie strap, secure the radiator top hose.

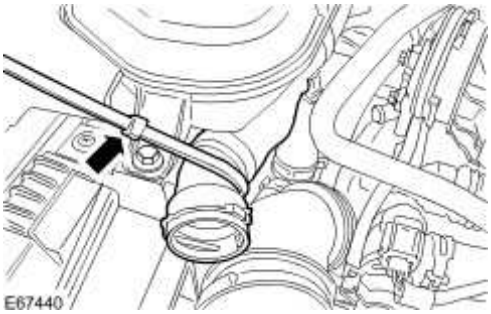

19 . Disconnect the charge air cooler intake hose.

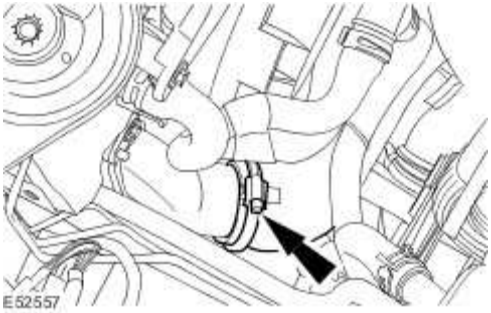

20 . Disconnect the power assisted steering (PAS) pump supply hose.

www.JagDocs.com

21 . Detach the front air spring supply tube.

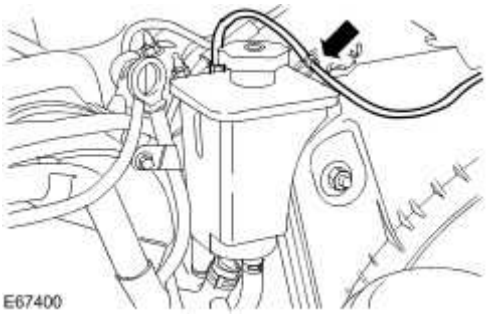

22 . Detach the PAS fluid reservoir.

23 . **CAUTION: If power steering fluid comes into contact with the paintwork, the affected area must be immediately washed down with cold water.**

NOTE:

Cap the power steering lines to prevent loss of fluid and dirt ingress.

NOTE:

Remove and discard the O-ring seal.

Disconnect the PAS pump to steering gear high-pressure line.

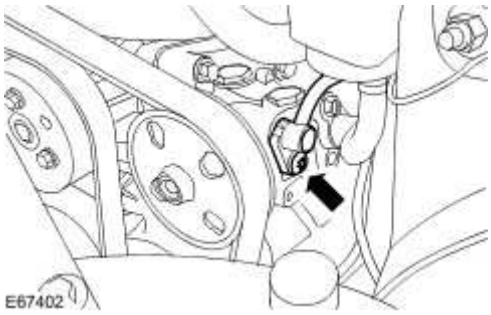

24 . **NOTE:**

PAS pump shown removed for clarity.

NOTE:

Remove and discard the O-ring seal.

NOTE:

Cap the exposed ports.

Disconnect the air conditioning (A/C) high-pressure line.

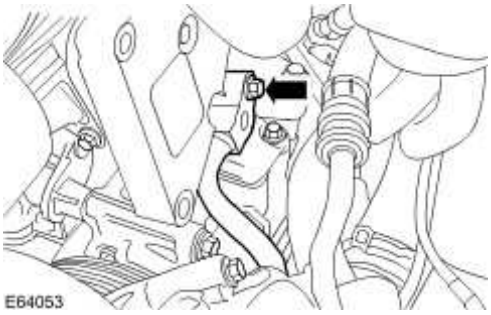

25 . Disconnect the automatic transmission cooler coolant hose.

www.JagDocs.com

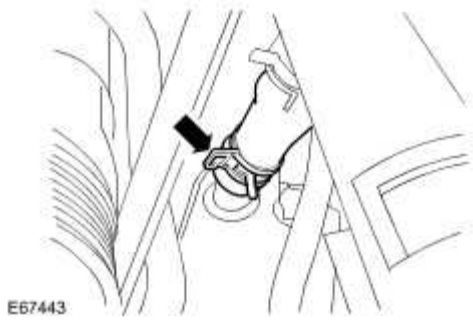

26 . Disconnect the radiator bottom hose.

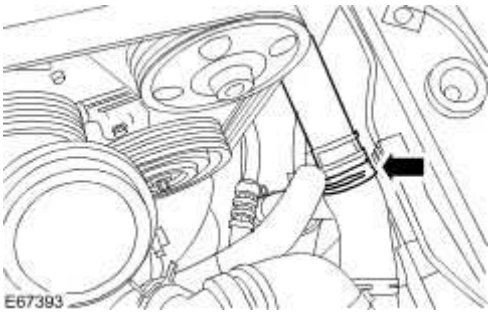

27 . Remove the fuel filter.
For additional information, refer to Fuel Filter - 2.7L Diesel (19.25.02)

28 . Remove the fuel filter securing bracket.

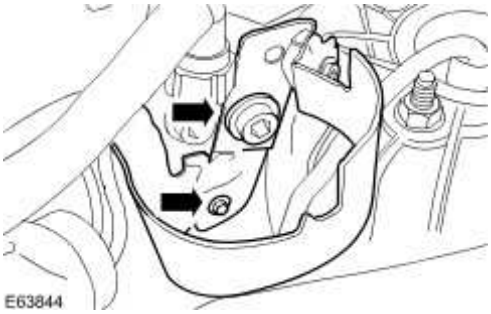

29 . Remove the engine compartment brace bar.

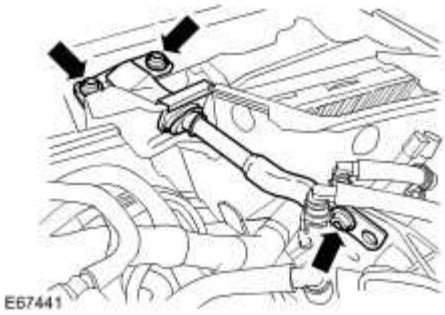

30 . **NOTE:**

Remove and discard the O-ring seal.

Remove the windshield washer reservoir filler neck.

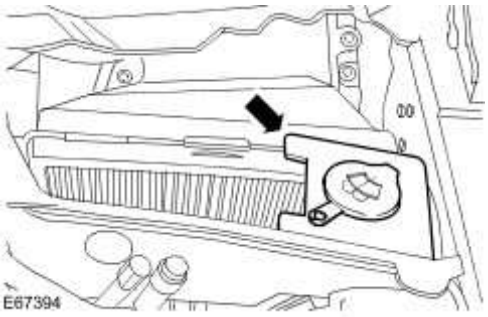

31 . Remove the cabin air filter.

1) Detach the cabin air filter.

2) Remove the cabin air filter.

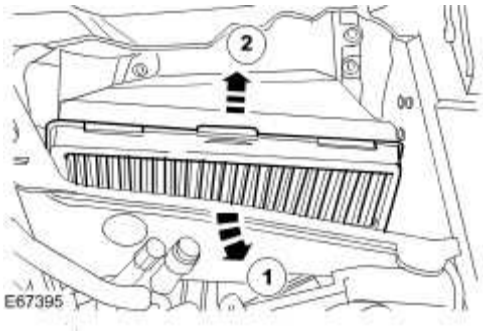

www.JagDocs.com

32 . Remove the cabin air filter housing.

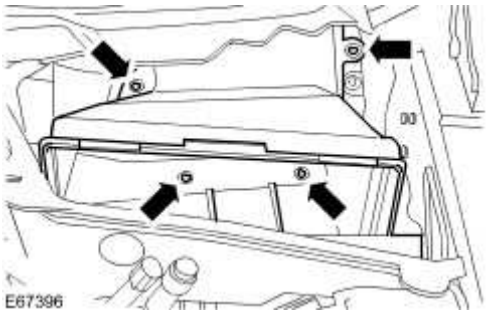

33 . Remove the engine compartment left-hand panel.

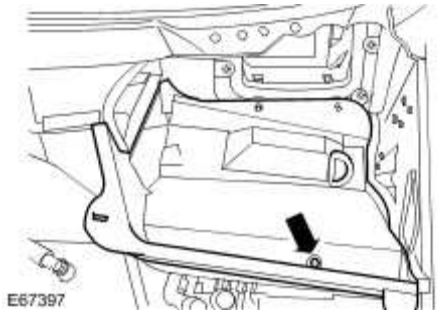

34 . Disconnect the engine harness electrical connector.

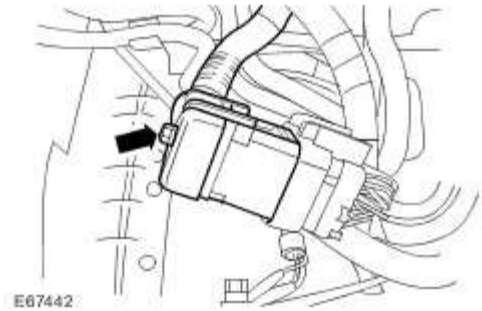

35 . Disconnect the engine control module (ECM) electrical connectors.

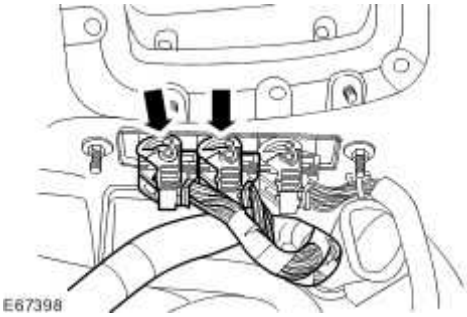

36 . Raise the vehicle.

37 . Detach the left-hand fender splash shield.

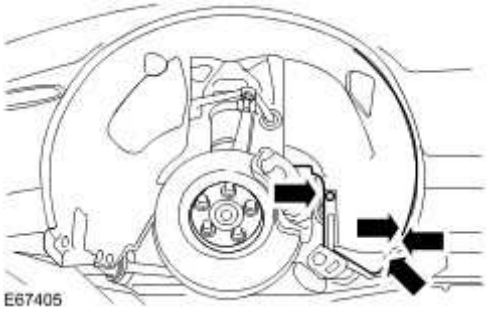

38 . **NOTE:**

Remove and discard the O-ring seal.

NOTE:

Cap the exposed ports.

Disconnect the A/C high-pressure line.

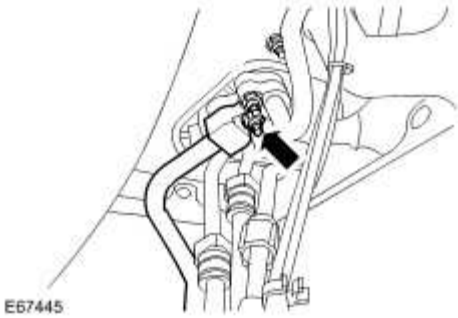

39 . Remove the power steering line retaining bolt.

www.JagDocs.com

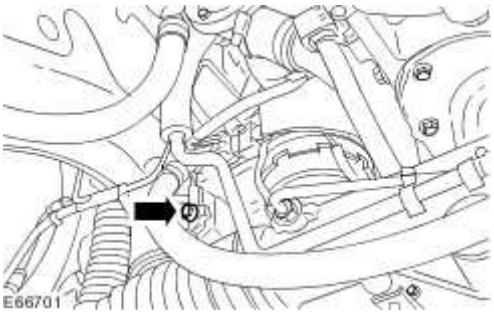

40 . Disconnect the engine coolant inlet hose.

41 . Reposition the starter motor positive cable insulation cover.

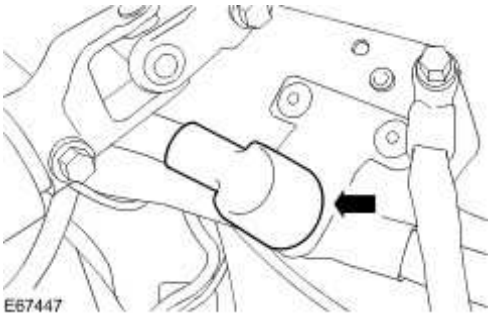

42 . Detach the starter motor positive cable.

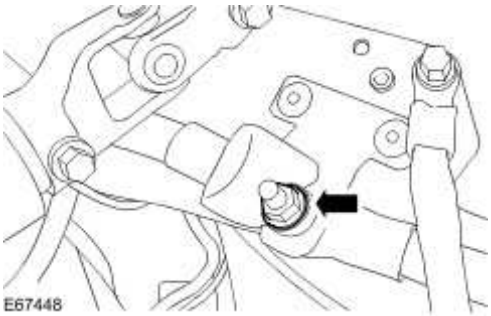

43 . **NOTE:**

Right-hand shown, left-hand similar.

Remove the engine mounts lower retaining nuts.

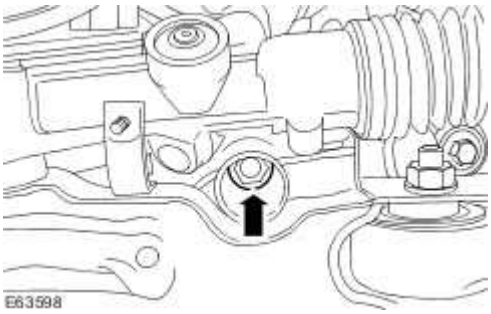

44 . Lower the vehicle.

45 . Remove the special tools.

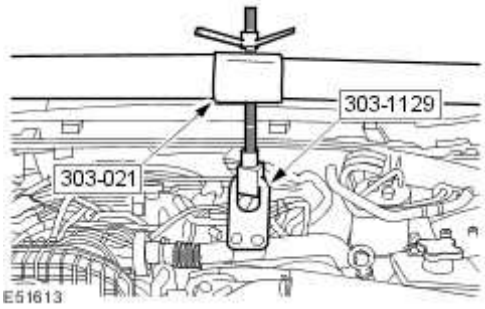

46 . Remove the engine.

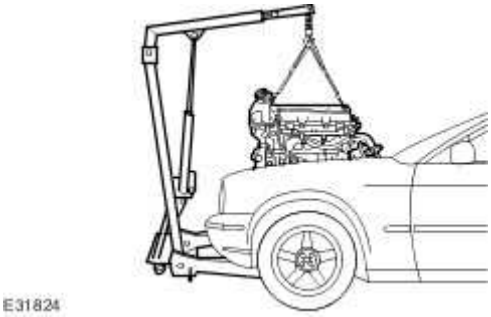

www.JagDocs.com

Engine (12.41.01)

Special Service Tools

Engine Lifting Brackets
303-1129

Engine Support Bracket
303-021

Installation

1 . Install the engine.

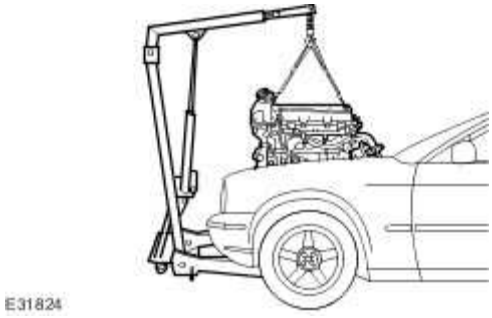

2 . Install the special tools.

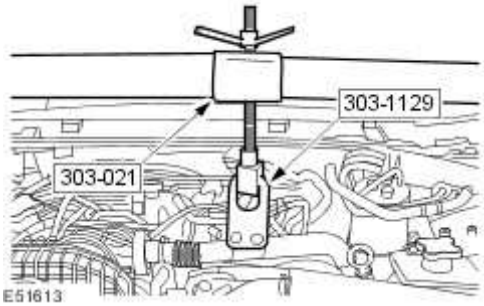

3 . Raise the vehicle.

4 . **NOTE:**

Right-hand shown, left-hand similar.

Install the engine mounts lower retaining nuts.

- Tighten to 63 Nm.

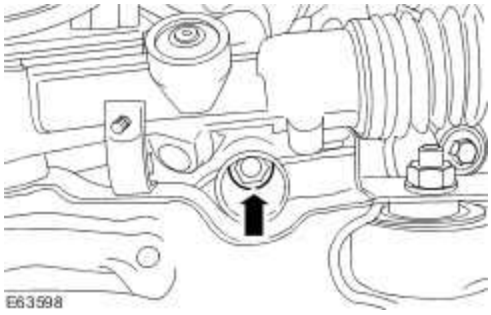

5 . Attach the starter motor positive cable.

- Tighten to 12 Nm.

www.JagDocs.com

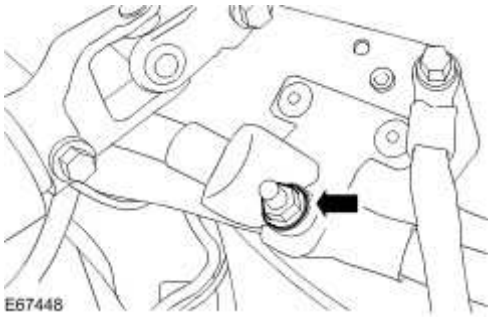

6 . Reposition the starter motor positive cable insulation cover.

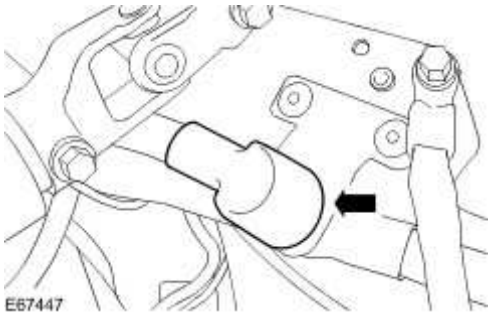

7 . Connect the engine coolant inlet hose.

8 . Install the power steering line retaining bolt.

- Tighten to 10 Nm.

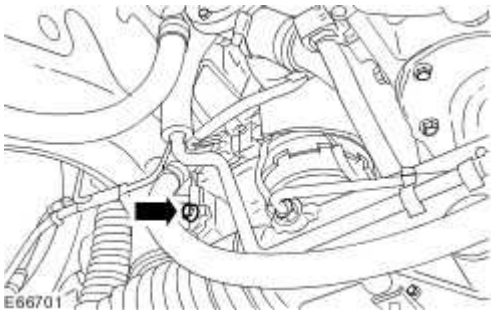

9 . **NOTE:**

Remove the blanking caps.

NOTE:

Install a new O-ring seal.

Connect the air conditioning (A/C) high-pressure line.

Tighten to 10 Nm.

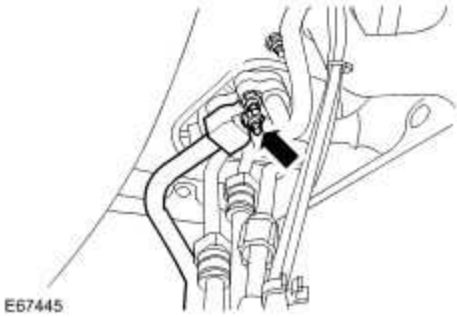

10 . Attach the left-hand fender splash shield.

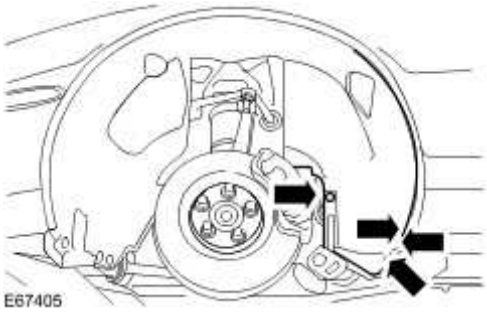

www.JagDocs.com

11 . Lower the vehicle.

12 . Connect the engine control module (ECM) electrical connectors.

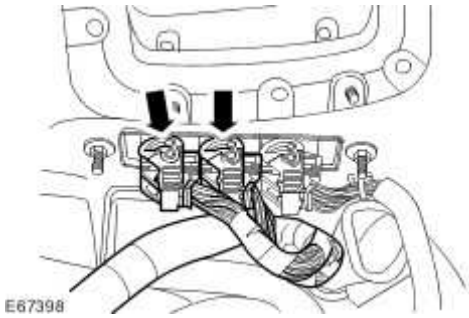

13 . Connect the engine harness electrical connector.

Tighten to 10 Nm.

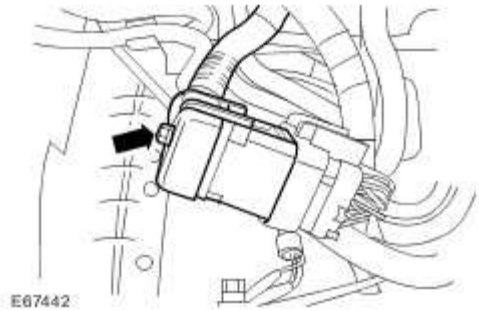

14 . Install the engine compartment left-hand panel.

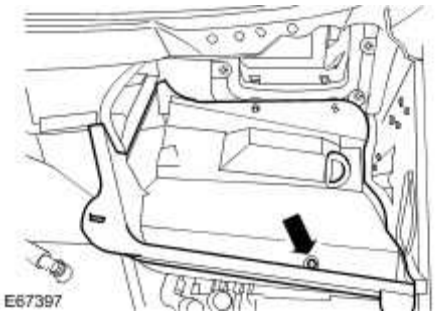

15 . Install the cabin air filter housing.

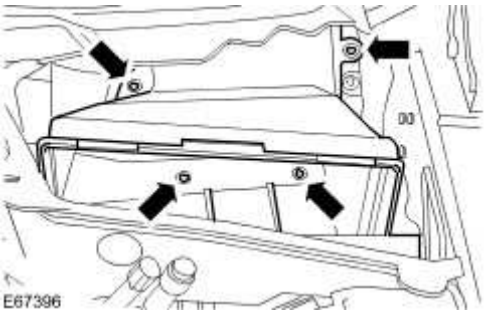

16 . Attach the cabin air filter.

1) Install the cabin air filter.

2) Attach the cabin air filter.

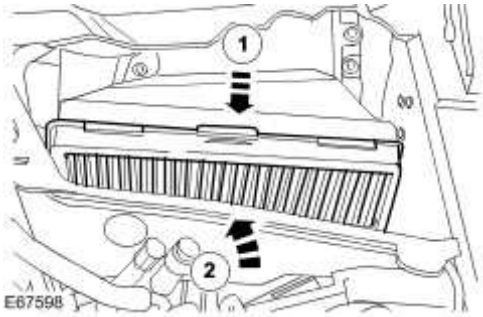

17 . **NOTE:**

Install a new O-ring seal.

Install the windshield washer reservoir fiiler neck.

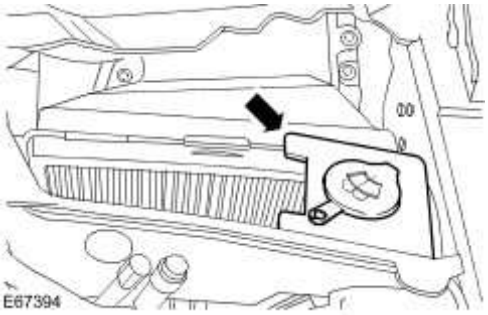

www.JagDocs.com

18 . Install the engine compartment brace bar.

- Tighten to 25 Nm.

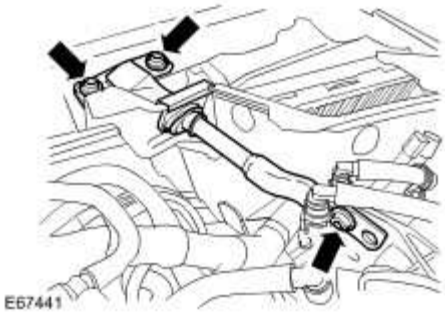

19 . Install the fuel filter securing bracket.

- Tighten 10 mm (0.394 inch's) bolt to 25 Nm.
- Tighten 6 mm (0.236 inch's) bolt to 8 Nm.

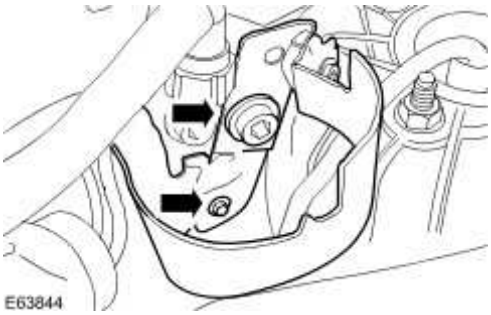

20 . Install the fuel filter.
For additional information, refer to Fuel Filter - 2.7L Diesel (19.25.02)

21 . Connect the radiator bottom hose.

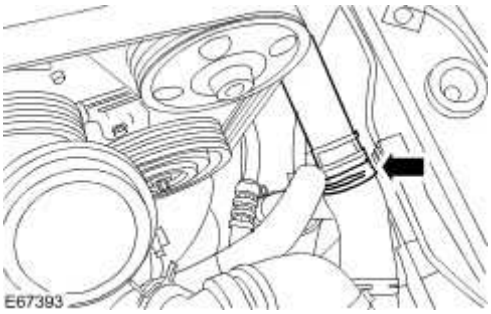

22 . Connect the automatic transmission cooler coolant hose.

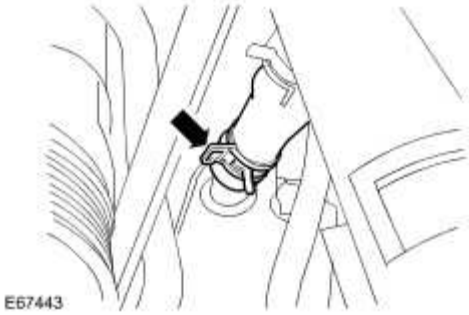

23 . **NOTE:**

Power steering pump shown removed for clarity.

NOTE:

Remove the blanking caps.

NOTE:

Install a new O-ring seal.

Connect the A/C high pressure line.

Tighten to 10 Nm.

www.JagDocs.com

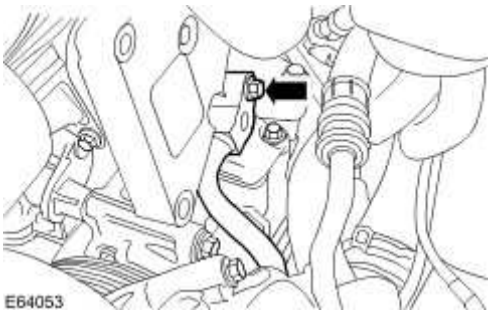

24 . **CAUTION: If power steering fluid comes into contact with the paintwork, the affected area must be immediately washed down with cold water.**

NOTE:

Remove the blanking caps.

NOTE:

Install a new O-ring seal.

Connect the power assisted steering (PAS) pump to steering gear high-pressure line.

Tighten to 22 Nm.

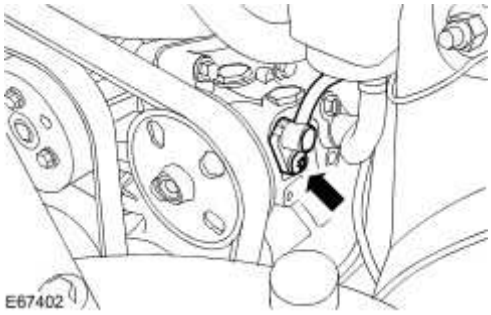

25 . Attach the PAS fluid reservoir.

26 . Attach the front air spring supply tube.

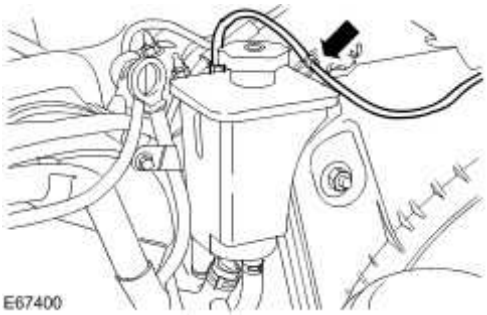

27 . Connect the PAS pump supply hose.

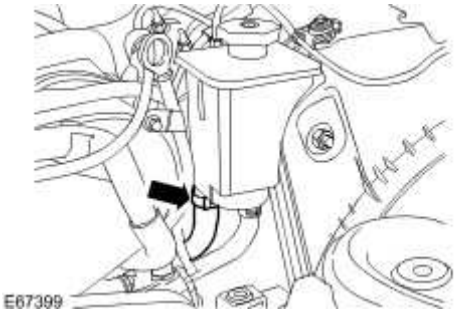

28 . Connect the charge air cooler intake hose.

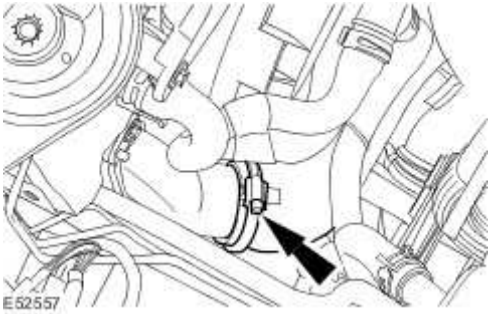

www.JagDocs.com

29 . Remove and discard the tie strap.

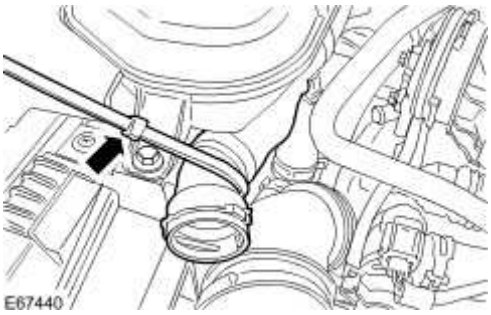

30 . Connect the radiator top hose from the cylinder head coolant outlet assembly.

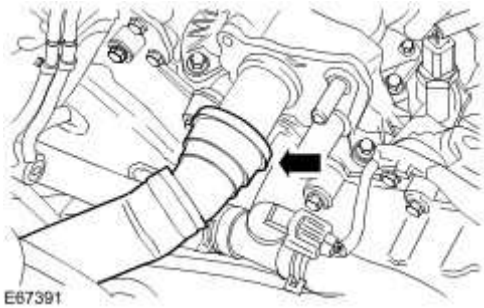

31 . Connect the exhaust gas recirculation (EGR) coolant hose.

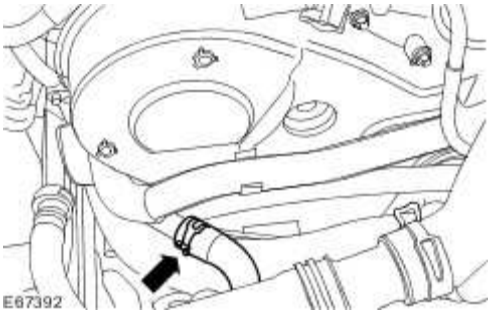

32 . **NOTE:**

Install a new O-ring seal.

Install the intake air shutoff throttle elbow and charge air cooler outlet tube assembly.

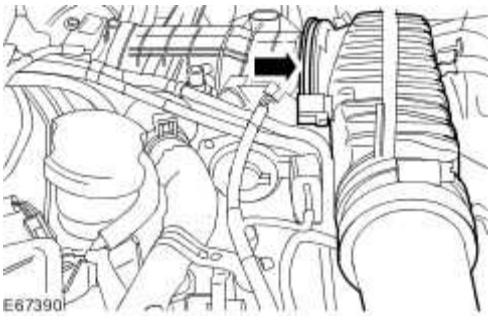

33 . Connect the intake air temperature (IAT) sensor electrical connector.

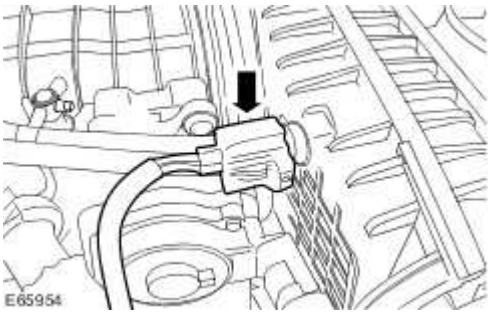

34 . Install the intake air shutoff throttle elbow retaining bolt.

Tighten to 10 Nm.

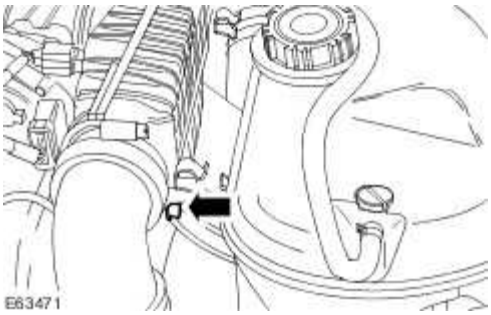

35 . Tighten the charge air cooler outlet tube retaining clip.

www.JagDocs.com

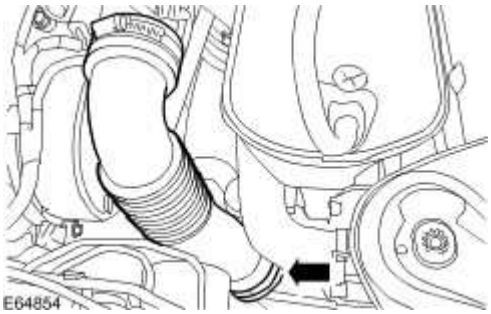

36 . Attach the coolant expansion tank coolant hose to the intake air shutoff throttle elbow.

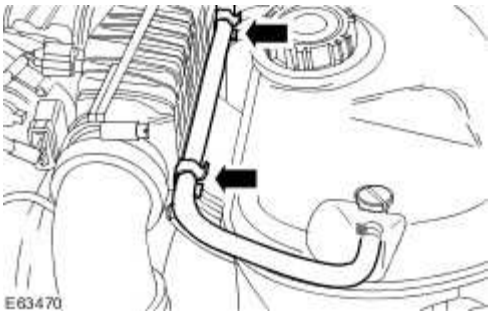

37 . Connect the coolant expansion tank coolant hose from the cylinder head coolant outlet assembly.

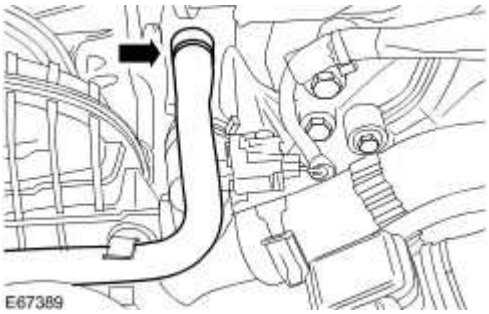

38 . Connect the glow plug harness electrical connectors.

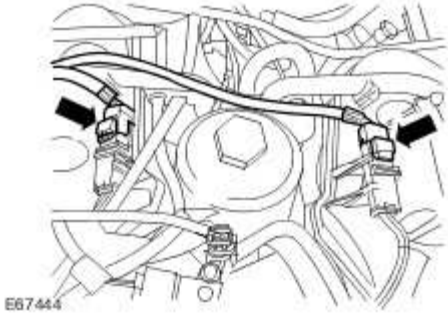

39 . Attach the diesel particulate filter differential pressure sensor securing bracket.

Tighten to 25 Nm.

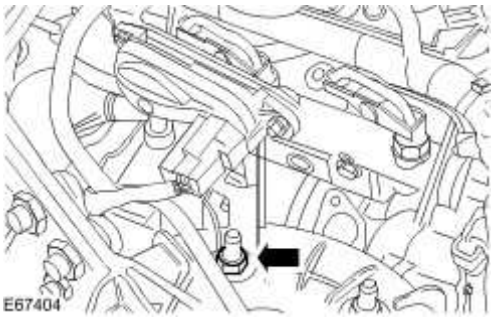

40 . Attach the diesel particulate filter high and low-pressure pipes.

Tighten to 10 Nm.

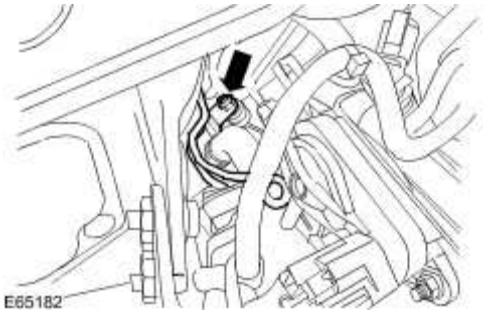

41 . Raise the vehicle.

42 . Install the automatic transmission.
For additional information, refer to Transmission - 2.7L Diesel (44.20.01)

43 . Install the air cleaner.
For additional information, refer to Air Cleaner (19.10.05)

44 . Install the secondary bulkhead center panel.

www.JagDocs.com

For additional information, refer to Secondary Bulkhead Center Panel

45 . Fill the power steering fluid reservoir and bleed the system.
For additional information, refer to Power Steering System Bleeding (57.15.02)

46 . Connect the battery ground cable.
For additional information, refer to Battery Connect (86.15.15)

Camshaft Front Seal

Special Service Tools

Holder - camshaft pulleys front
303-1124

Installer - camshaft oil seal
303-1119

Remover - camshaft oil seal
303-1118

Timing pin - camshaft pulleys
303-1126

Removal

1 . Remove the timing belt.
For additional information, refer to Timing Belt

www.JagDocs.com

2 . Remove the special tool.

1) Retain the camshaft pulley.

2) Remove the special tool.

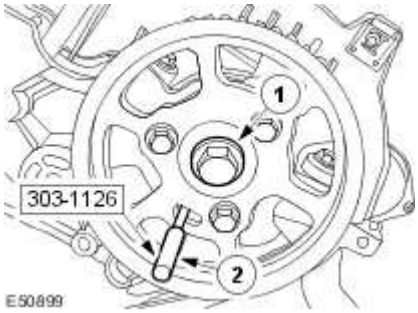

3 . Remove the camshaft pulley.

- Remove the camshaft pulley retaining bolts.

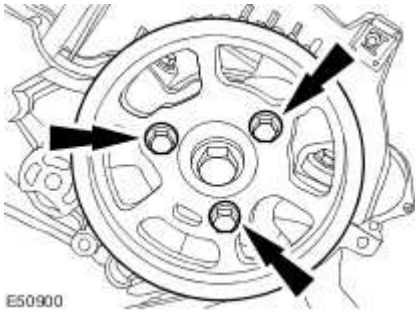

4 . **NOTE:**

Discard the camshaft pulley hub retaining bolt.

Using special tool, remove the camshaft pulley hub.

- Remove the camshaft pulley hub retaining bolt.

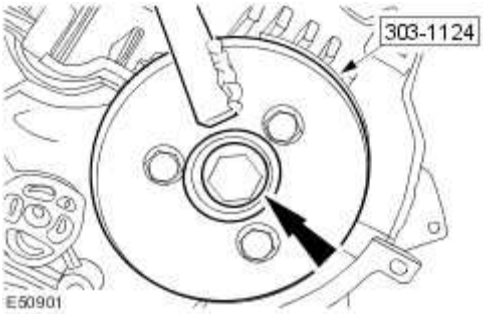

5 . Install the special tool to the camshaft.

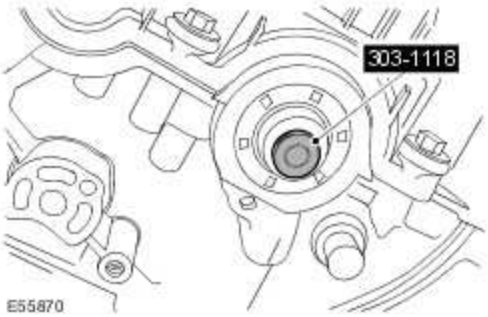

6 . **CAUTION: Make sure the special tool is correctly seated behind the camshaft seal. Failure to follow this instruction may result in damage to the special tool.**

Install the special tool into the camshaft front seal.

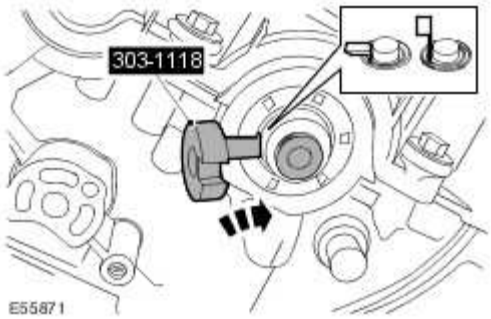

7 . Install the special tool extracting bolt.

www.JagDocs.com

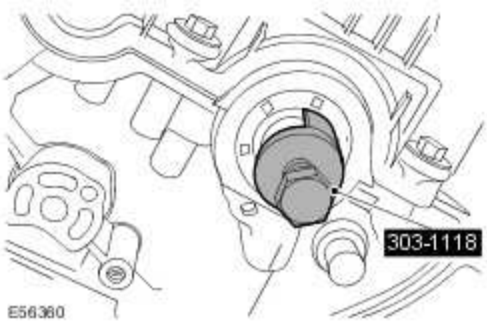

8. **CAUTION: Make sure the special tool is correctly seated behind the camshaft seal. Failure to follow this instruction may result in damage to the special tool.**

Install the special tool into the camshaft front seal.

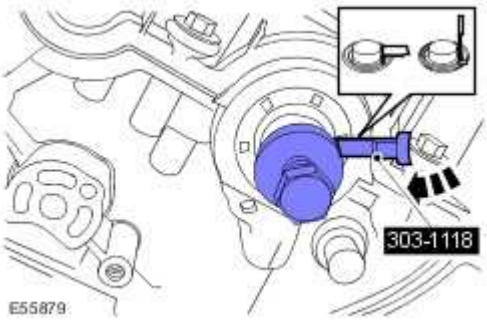

9 . Using the special tool, remove the camshaft front seal.

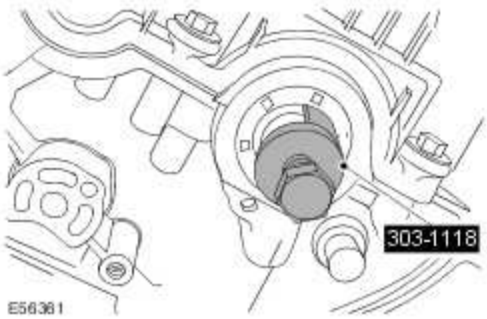

Installation

1. **CAUTION: Do not use any lubricant on the seal or the camshaft. Failure to follow**

this instruction may result in damage to the vehicle.

CAUTION: Make sure the seal is installed correctly.

NOTE:

Clean the component mating faces.

NOTE:

Use the discarded camshaft pulley hub retaining bolt with the special tool.

Using the special tool, install the camshaft front seal.

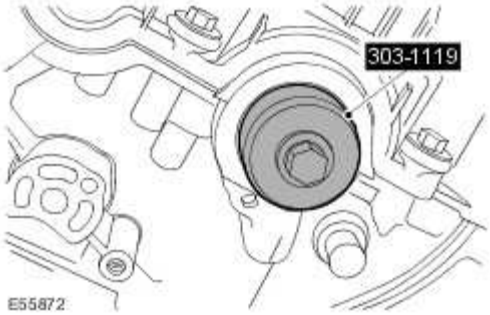

2 . Using special tool, install the camshaft pulley hub.

- Tighten the bolts in the sequence shown in two stages.
- Stage 1: Tighten to 80 Nm.
- Stage 2: Tighten to 90 degrees.

www.JagDocs.com

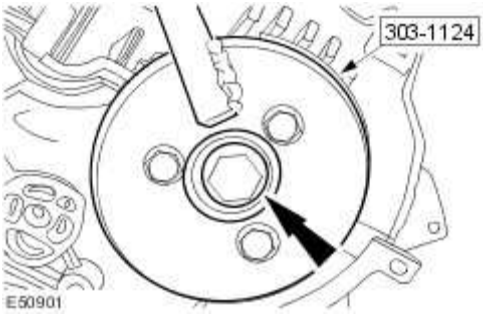

3 . Install the camshaft pulley.

Tighten to 22 Nm.

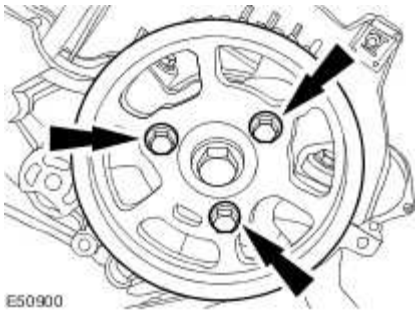

4 . Install the special tool.

1) Retain the camshaft pulley.

2) Install the special tool.

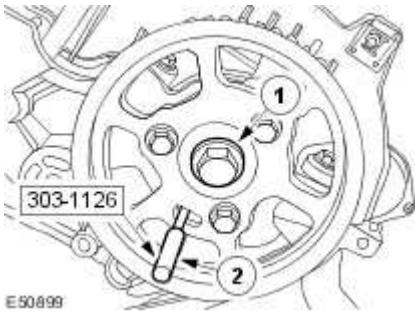

5 . Install the timing belt.
For additional information, refer to Timing Belt

Camshaft Rear Seal

Special Service Tools

Camshaft Seal Remover
303-1118

Camshaft Seal Installer
303-1119

Holder - Camshaft Pulley Rear
303-1125

Removal

1 . Remove the fuel injection pump belt.
For additional information, refer to

2 . Using the special tool, remove the camshaft rear pulley bolt.

www.JagDocs.com

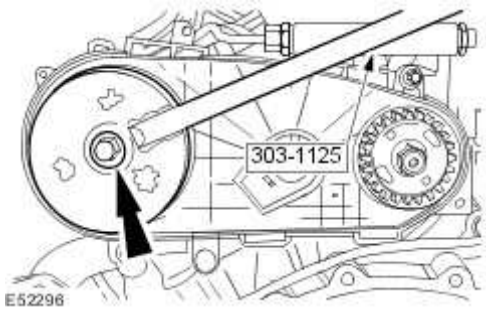

3 . Remove the camshaft rear pulley.

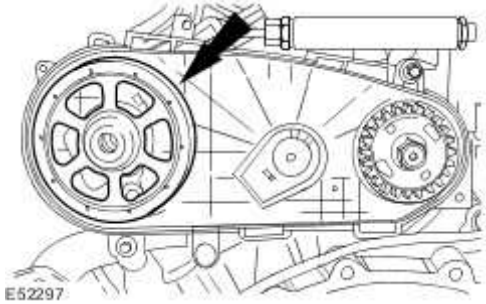

4 . Install the special tool to the camshaft.

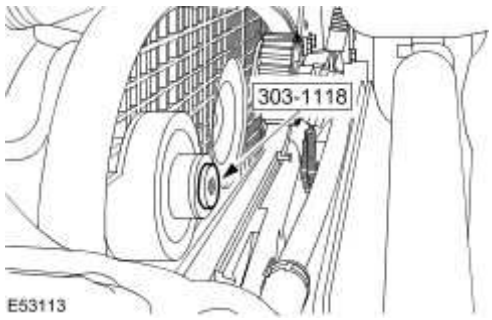

5 . **CAUTION: Make sure the special tool is seated correctly behind the camshaft rear seal. Failure to follow this instruction will result in damage to the vehicle.**

Install the special tool to the camshaft rear seal.

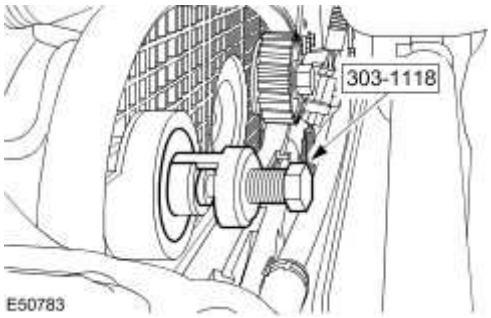

6. **CAUTION: Make sure the special tool is seated correctly behind the camshaft rear seal. Failure to follow this instruction will result in damage to the vehicle.**

Using the special tool, remove the camshaft rear seal.

Install the reaction arm.

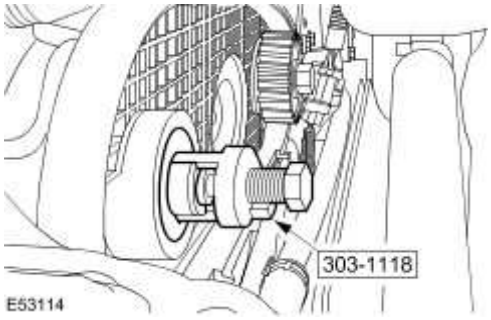

Installation

1 . Using the special tool, install the camshaft rear seal.

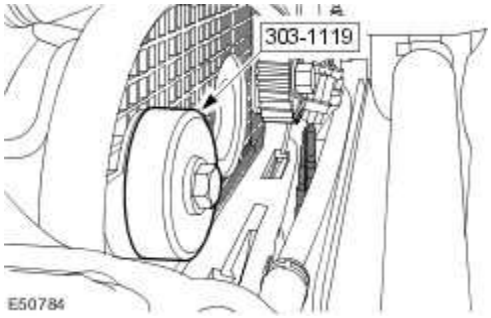

www.JagDocs.com

2 . Install the camshaft rear pulley.

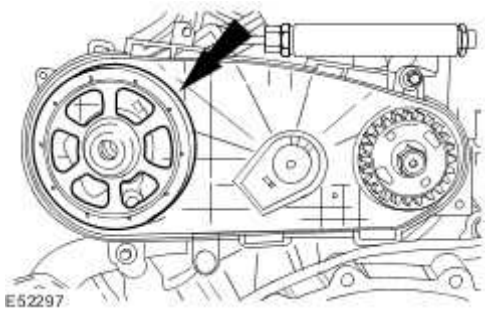

3 . **CAUTION: The camshaft pulley bolt must be tightened in two stages.**

Using the special tool, install the camshaft rear pulley bolt.

- Stage 1: Tighten to 80 Nm.
- stage 2: Tighten to 90 degrees.

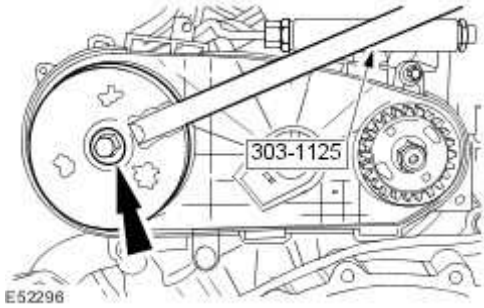

4 . Install the fuel injection pump belt.
For additional information, refer to

Camshafts LH (12.13.19)

Special Service Tools

Holder Camshaft Pulleys Front
303-1124

Installer Camshaft Oil Seal
303-1119

Holder Camshaft Pulleys Rear
303-1125

Timing pin - camshaft pulleys
303-1126

Reaction Arm - Fuel Pump Pulley
310-138

www.JagDocs.com

Holder - Fuel Pump Pulley
310-139

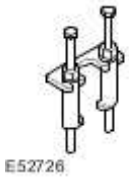

Fuel Injector Remover
303-1127

Removal

1. **WARNING: Wait at least 30 seconds after the engine stops before commencing any repair to the high pressure fuel injection system. Failure to follow this instruction may result in personal injury.**

WARNING: Do not smoke or carry lighted tobacco or open flame of any type when working on or near any fuel related components. Highly flammable mixtures are always present and may ignite. Failure to follow these instructions may result in personal injury.

WARNING: This procedure involves fuel handling. Be prepared for fuel spillage at all times and always observe fuel handling precautions. Failure to follow this instruction may result in personal injury.

WARNING: Do not carry out any repairs to the fuel injection system with the engine running. The fuel pressure within the system can be as high as 1650 bar. Failure to follow this instruction may result in personal injury.

CAUTION: Make sure the workshop area in which the vehicle is being worked on is as clean and as dust free as possible. Foreign matter from work on clutches, brakes or from machining or welding operations can contaminate the fuel system and may result in later malfunction.

CAUTION: Always carry out the cleaning process before carrying out any repairs to the fuel injection system components. Failure to follow this instruction may result in foreign matter ingress to the fuel injection system.

CAUTION: Diesel fuel injection equipment is manufactured to very precise tolerances and fine clearances. It is therefore essential that absolute cleanliness is observed when working with these components. Always install blanking plugs to any exposed ports.

Remove the fuel injection pump belt.
For additional information, refer to Fuel Injection Pump Belt

2 . **NOTE:**

Discard the camshaft rear pulley retaining bolt.

Remove the camshaft rear pulley retaining bolt.

- Using the special tool, retain the camshaft rear pulley.

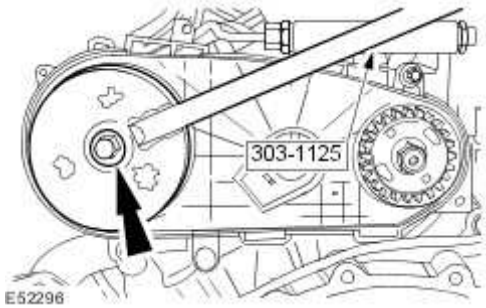

www.JagDocs.com

3 . Remove the camshaft rear pulley.

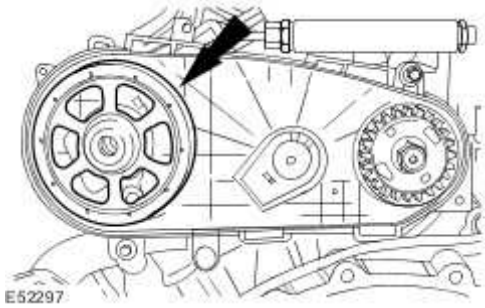

4 . Remove the fuel injection pump pulley retaining nut.

- Using the special tool, retain the fuel injection pump pulley.
- Remove the fuel injection pump pulley retaining nut.

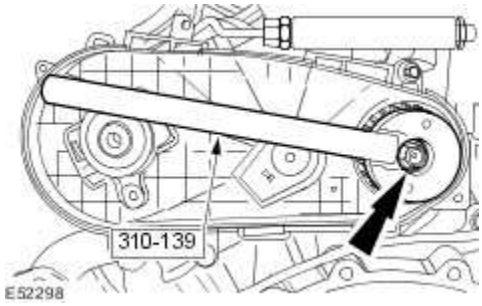

5 . Using the special tool, remove the fuel injection pump pulley.

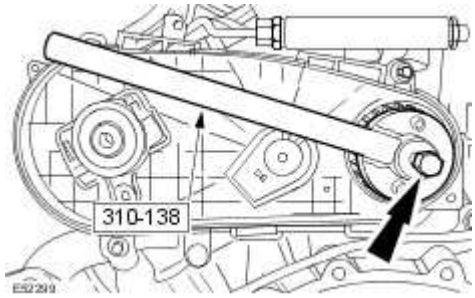

6 . Detach the exhaust gas recirculation (EGR) coolant outlet tube.

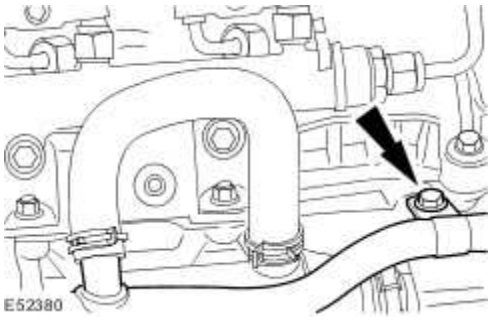

7 . Remove the fuel injection pump belt rear cover.

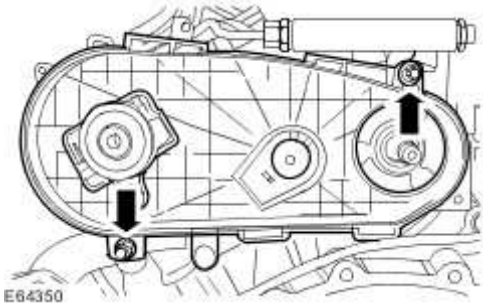

8 . Remove the timing belt.
For additional information, refer to Timing Belt

9 . Remove the special tool.

1) Retain the camshaft sprocket.

2) Remove the special tool.

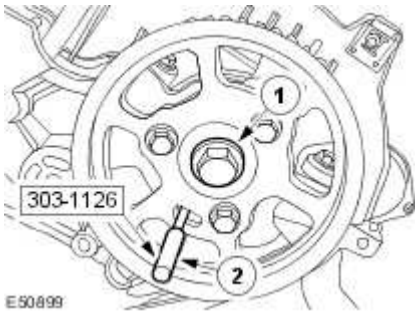

10 . Remove the camshaft sprocket.

www.JagDocs.com

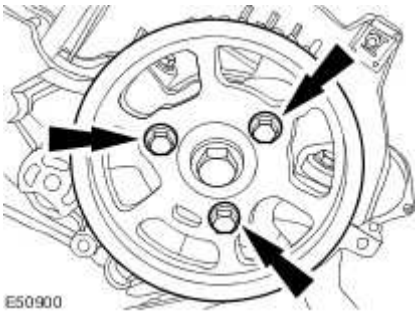

11 . Using special tool, remove the camshaft sprocket hub.

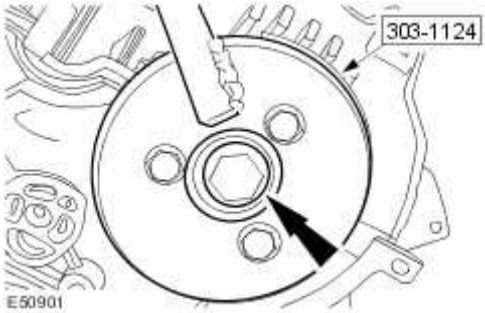

12 . Disconnect the intake air shutoff throttle electrical connector.

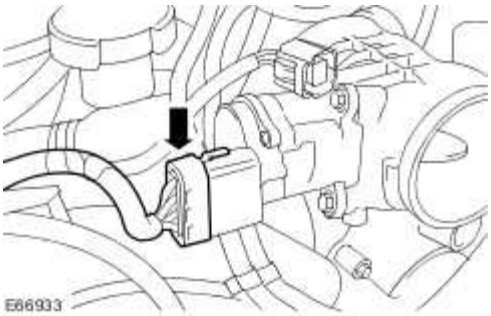

13 . Detach the vacuum hoses.

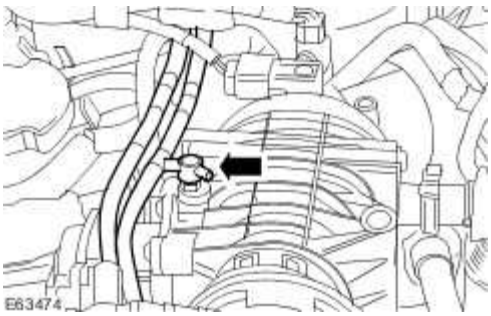

14 . Remove the retaining bolt.

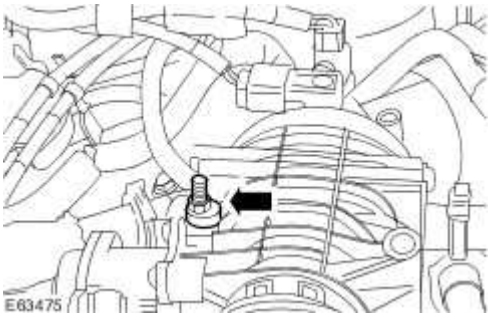

15 . **NOTE:**

Discard the retaining clips.

Detach the EGR valve outlet tube retaining clips.

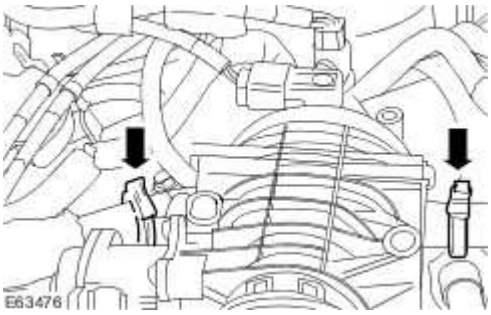

16 . **NOTE:**

Engine shown removed for clarity.

NOTE:

Right-hand shown, left-hand similar.

NOTE:

Discard the gaskets.

Remove the right-hand and left-hand EGR valve outlet tubes.

www.JagDocs.com

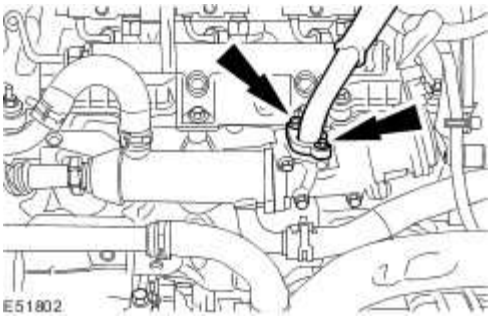

17 . Disconnect the manifold absolute pressure (MAP) sensor electrical connector.

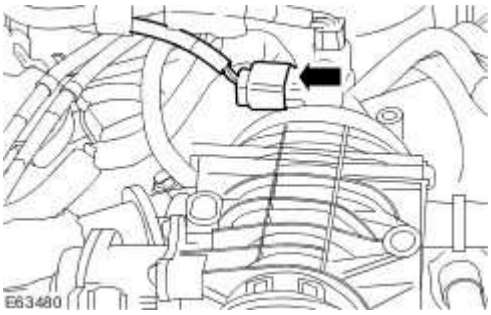

18 . Detach the fuel return line valve from the intake air shutoff throttle.

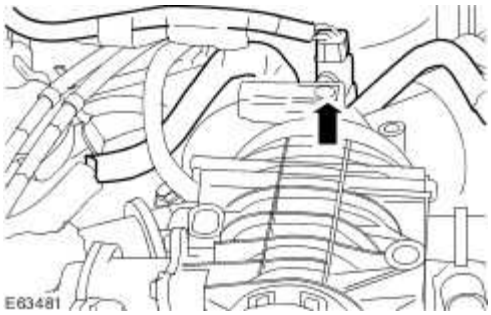

19 . **CAUTION: Make sure the fuel return line valve retaining clip is not damaged. Failure to follow this instruction may result in damage to the vehicle.**

Reposition the intake air shutoff throttle.

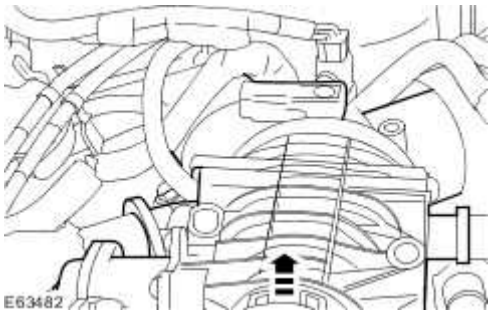

20. **CAUTION: Make sure the fuel return line valve retaining clip is not damaged. Failure to follow this instruction may result in damage to the vehicle.**

Reposition the intake air shutoff throttle.

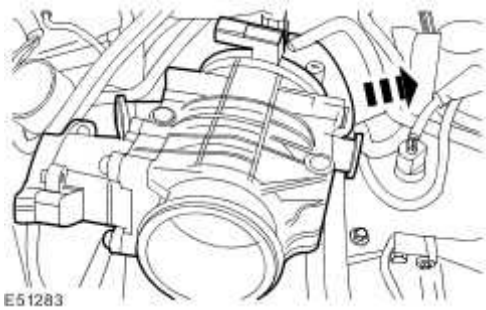

21. **CAUTION: Make sure the fuel return line valve retaining clip is not damaged. Failure to follow this instruction may result in damage to the vehicle.**

NOTE:

Discard the intake air shutoff throttle seals.

Remove the intake air shutoff throttle.

www.JagDocs.com

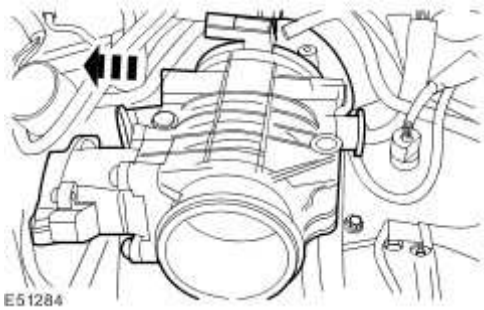

22 . Detach the knock sensor (KS) electrical connector from the left-hand valve cover.

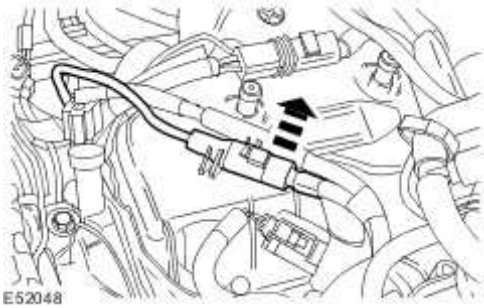

23 . Disconnect the KS electrical connector.

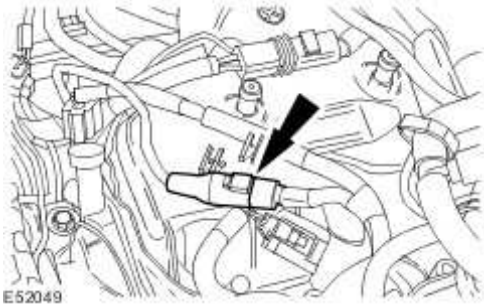

24 . Disconnect the oil pressure sensor electrical connector.

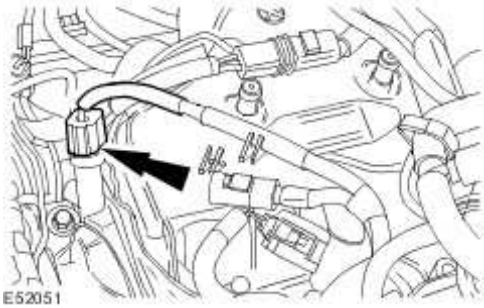

25 . Detach the engine harness.

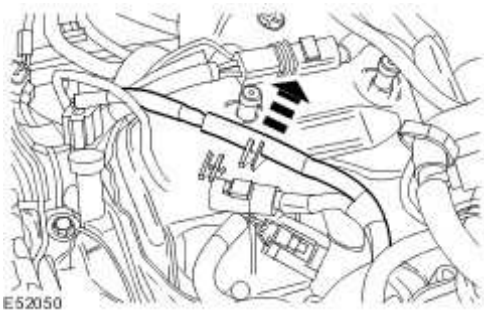

26 . Detach the glow plug electrical connector from the left-hand valve cover.

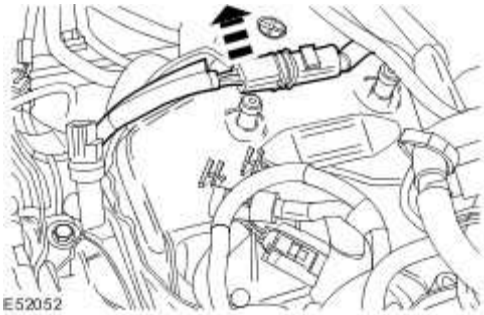

27 . Detach the engine breather hose.

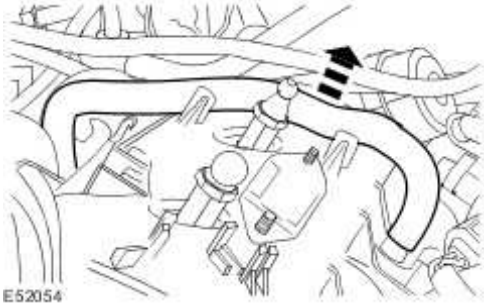

28 . Disconnect the vacuum hose.

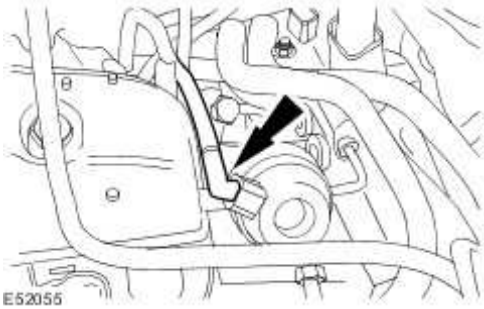

www.JagDocs.com

29 . **CAUTION: Make sure that the high-pressure fuel supply line remains in contact with both the fuel injector and the fuel injection supply manifold until both unions have been detached and cleaned. Failure to follow this instruction may result in foreign matter ingress to the fuel injection system.**

Using the pneumatic vacuum gun, vacuum foreign material from the high-pressure fuel supply lines, the fuel injectors and the fuel injection supply manifold.
For additional information, refer to Fuel Injection Component Cleaning

30 . Disconnect the fuel injector electrical connectors.

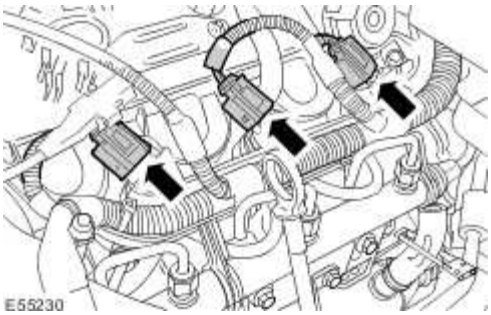

31 . Detach the fuel injection wiring harness.

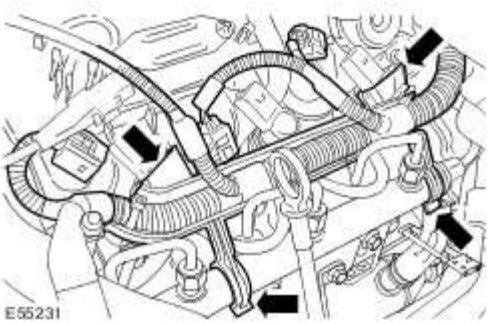

32 . **CAUTION: Make sure that the high-pressure fuel supply line remains in contact with both the fuel injector and the fuel injection supply manifold until both unions have been detached and cleaned. Failure to follow this instruction may result in foreign matter ingress to the fuel injection system.**

Using the pneumatic vacuum gun, vacuum foreign material from the high-pressure fuel supply lines, the fuel injectors and the fuel injection supply manifold.

For additional information, refer to Fuel Injection Component Cleaning

33. **CAUTION: Make sure that the high-pressure fuel supply line remains in contact with both the fuel injector and the fuel rail until both unions have been detached and cleaned. Failure to follow this instruction may result in foreign matter ingress to the fuel injection system.**

CAUTION: Make sure that the fuel injector adaptor union does not move when loosening the high-pressure fuel supply lines. Failure to follow this instruction may result in damage to the fuel injector or the fuel injector adaptor union.

NOTE:

Left-hand rear injector shown, left-hand center and front similar.

Loosen the high-pressure fuel supply lines from the fuel injectors and fuel rail.

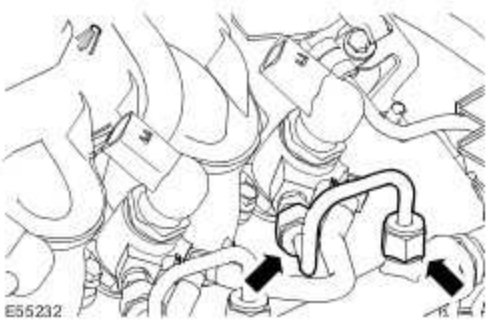

34. **CAUTION: Make sure that the high-pressure fuel supply line remains in contact with both the fuel injector and the fuel injection supply manifold until both unions have been detached and cleaned. Failure to follow this instruction may result in foreign matter ingress to the fuel injection system.**

Using the pneumatic vacuum gun, vacuum foreign material from the high-pressure fuel supply lines, the fuel injectors and the fuel injection supply manifold.
For additional information, refer to Fuel Injection Component Cleaning

www.JagDocs.com

35 **NOTE:**
.

Left-hand rear injector shown, left-hand center and front similar.

Remove and discard the high-pressure fuel supply lines.

- Install suitable blanking caps to the open threaded ports on the fuel injector and the fuel injection supply manifold.

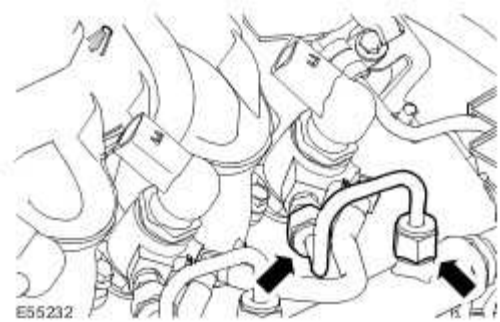

36 Using the pneumatic vacuum gun, vacuum foreign material from the fuel injectors and the
. fuel rail.
For additional information, refer to Fuel Injection Component Cleaning

37 **NOTE:**
.

Left-hand rear injector shown, left-hand center and front similar.

Disconnect the fuel return line from the fuel injectors.

- Remove and discard the fuel return line retaining clips from the fuel injectors.
- Disconnect the fuel return line from the fuel injectors.

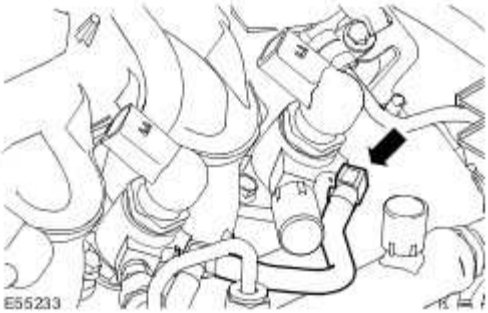

38 . **NOTE:**

Left-hand rear injector shown, left-hand center and front similar.

Remove the fuel injectors retaining bolts.

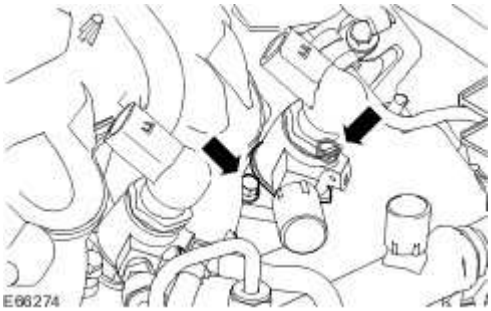

39 . **NOTE:**

Left-hand rear injector shown, left-hand center and front similar.

Install the special tool studs.

www.JagDocs.com

40. **CAUTION: Make sure the fuel injector remover legs are correctly engaged to the fuel injector. Failure to follow this instruction may result in damage to the component.**

NOTE:

Left-hand rear injector shown, left-hand centre and front similar.

Install the special tool puller legs to the studs.

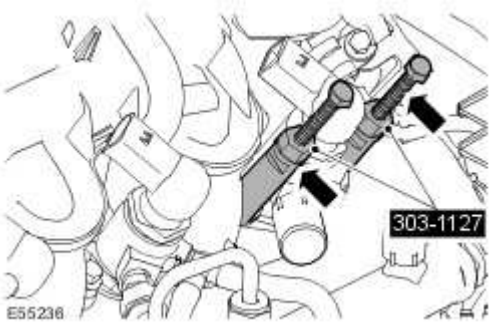

41. **CAUTION: Make sure the special tool puller bolts are rotated evenly. Failure to follow this instruction may result in damage to the special tool or fuel injector.**

NOTE:

Left-hand rear injector shown, left-hand centre and front similar.

Using the special tool, remove the fuel injectors.

- Install the special tool locking plate to the puller legs.
- Rotate the bolts evenly, in a clockwise direction.
- Remove the fuel injectors.
- Remove the special tool.
- Remove and discard the fuel injectors retaining clamps.
- Remove and discard the fuel injectors sealing washers.

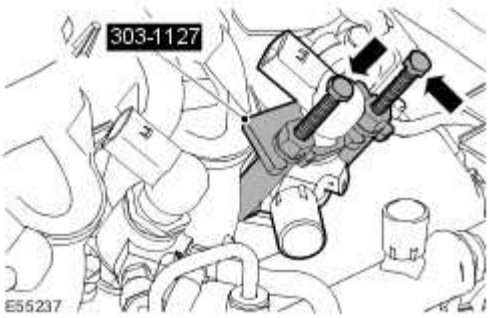

42 . Remove the high-pressure fuel supply line retaining bolt.

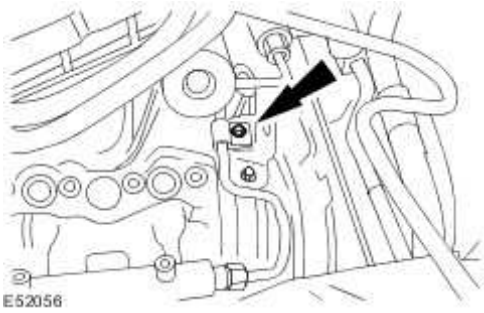

43 . **CAUTION: Make sure that the high-pressure fuel supply line remains in contact with both the fuel injector and the fuel injection supply manifold until both unions have been detached and cleaned. Failure to follow this instruction may result in foreign matter ingress to the fuel injection system.**

Using the pneumatic vacuum gun, vacuum foreign material from the high-pressure fuel supply lines, the fuel injectors and the fuel injection supply manifold.
For additional information, refer to Fuel Injection Component Cleaning

44 . **CAUTION: Make sure the tool used to loosen the high-pressure fuel supply line union is used at the top of the union as this is where there is most material. Failure to follow this instruction may result in damage to the union.**

CAUTION: Make sure that the high pressure fuel supply line remains in contact

www.JagDocs.com

with both the fuel pump and the fuel rail until both unions have been detached and cleaned. Failure to follow this instruction may result in foreign matter ingress to the fuel injection system.

CAUTION: While maintaining the pressure on the high-pressure fuel supply line, clean and vacuum foreign material from the line and unions.

Remove the high-pressure fuel supply line.

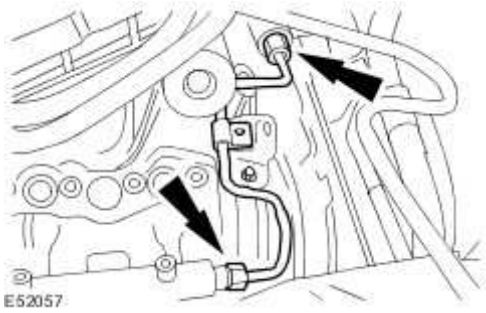

45 . Remove the fuel rail.

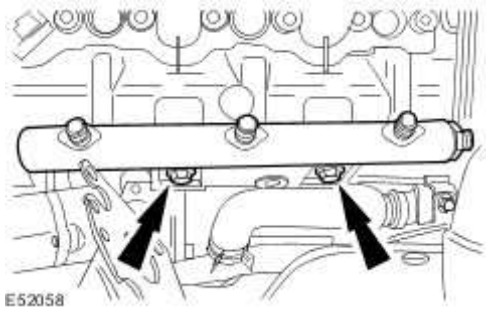

46 . Remove the fuel rail securing bracket .

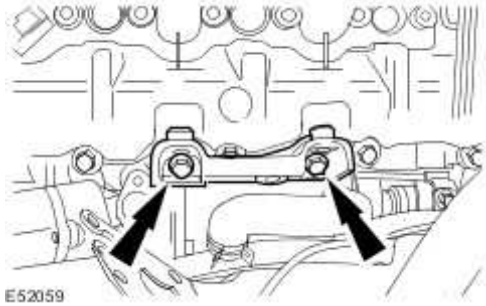

47 . Remove the engine cover and wiring harness retainers.

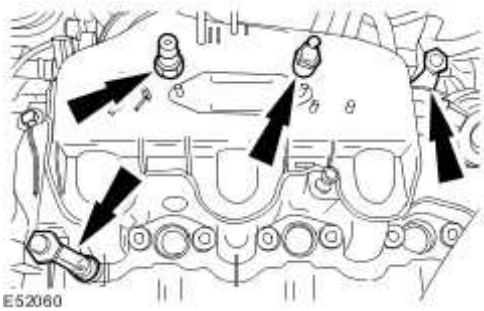

48 . **NOTE:**

Discard the valve cover gasket.

Remove the left-hand valve cover.

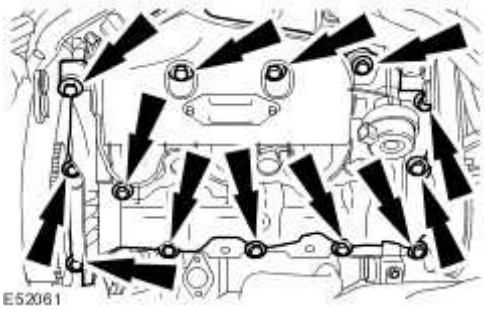

49 . Retain the secondary timing chain tensioner plunger.

1) Reposition the secondary timing chain tensioner.

2) Retain the secondary timing chain tensioner plunger.

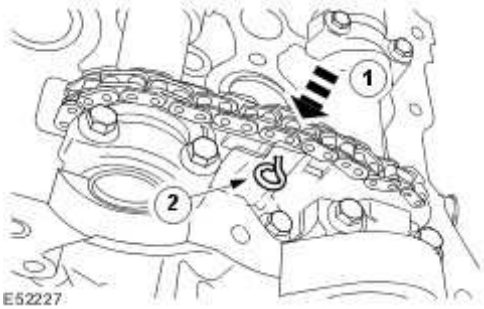

www.JagDocs.com

50 . Remove the camshaft bearing caps evenly.

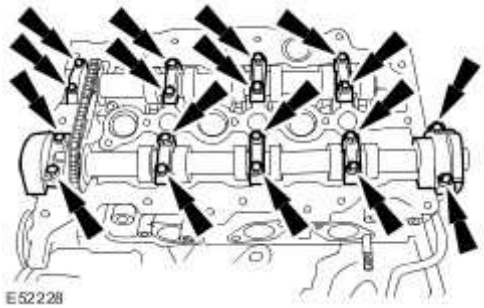

51 . Remove the secondary timing chain tensioner retaining bolts.

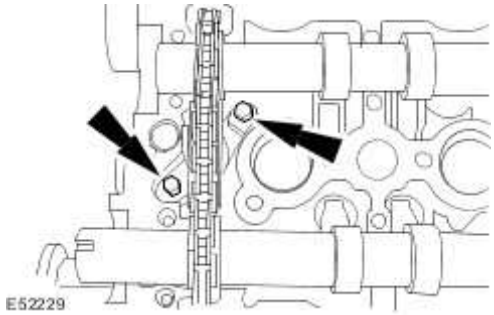

52 . **NOTE:**

Discard the left-hand exhaust camshaft seals.

Remove the left-hand camshafts and secondary timing chain tensioner assembly.

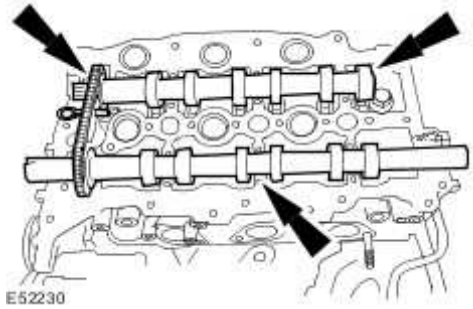

53 . Remove the secondary timing chain tensioner assembly.

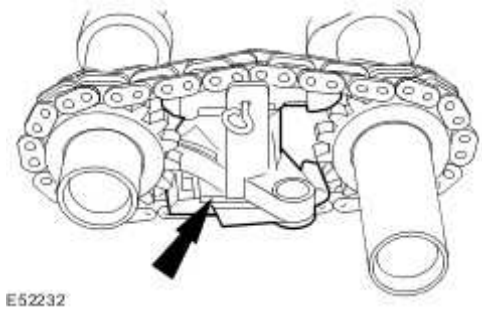

54 . Remove the camshafts.

- Remove the secondary timing chain from the camshafts.

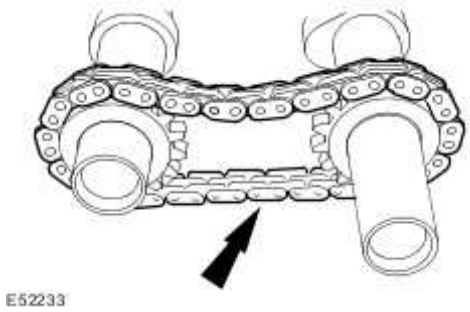

Installation

1 . **WARNING: Wait at least 30 seconds after the engine stops before commencing any repair to the high pressure fuel injection system. Failure to follow this instruction may result in personal injury.**

WARNING: Do not smoke or carry lighted tobacco or open flame of any type when working on or near any fuel related components. Highly flammable mixtures are always present and may ignite. Failure to follow these instructions may result in personal injury.

WARNING: This procedure involves fuel handling. Be prepared for fuel spillage at all times and always observe fuel handling precautions. Failure to follow this instruction may

www.JagDocs.com

result in personal injury.

WARNING: Do not carry out any repairs to the fuel injection system with the engine running. The fuel pressure within the system can be as high as 1650 bar. Failure to follow this instruction may result in personal injury.

CAUTION: Make sure the workshop area in which the vehicle is being worked on is as clean and as dust free as possible. Foreign matter from work on clutches, brakes or from machining or welding operations can contaminate the fuel system and may result in later malfunction.

CAUTION: Always carry out the cleaning process before carrying out any repairs to the fuel injection system components. Failure to follow this instruction may result in foreign matter ingress to the fuel injection system.

CAUTION: Diesel fuel injection equipment is manufactured to very precise tolerances and fine clearances. It is therefore essential that absolute cleanliness is observed when working with these components. Always install blanking plugs to any exposed ports.

CAUTION: Make sure that the colored links on the secondary timing chain align with the dots and scribed line on the sprocket shoulder. Failure to follow this instruction may result in damage to the engine.

Install the camshafts.

- Install the secondary timing chain onto the camshafts.

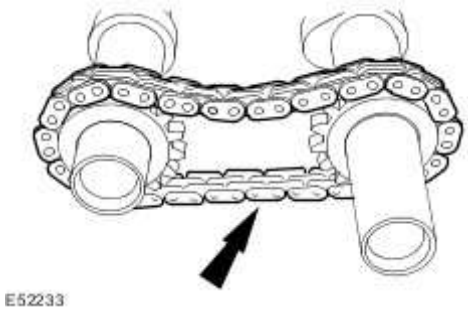

2 . Install the secondary timing chain tensioner assembly.

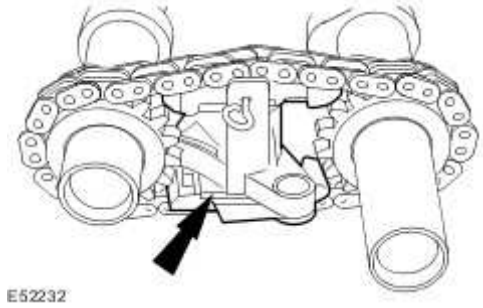

3 . **CAUTION: Make sure that the dots on the camshafts are aligned at the 12 o'clock position. Failure to follow this instruction may result in damage to the engine.**

NOTE:

Lubricate the camshafts and the camshaft bearing caps with oil meeting Jaguar specification prior to installation.

Install the camshafts.

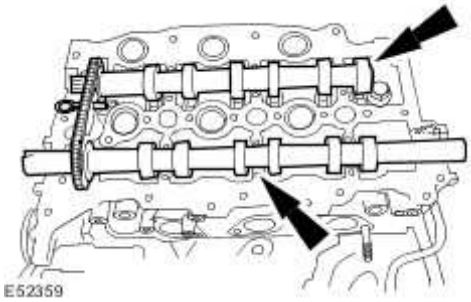

www.JagDocs.com

4 . Install the secondary timing chain tensioner retaining bolts.

- Tighten to 10 Nm.

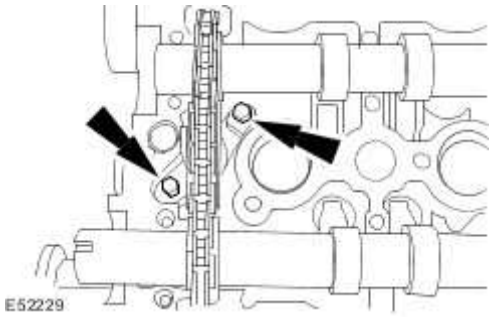

5 Apply Loctite 518 sealant to the exhaust camshaft seal bearing caps.

.

- Apply Loctite 518 sealant, 2 mm wide, to the left-hand rear and right-hand front camshaft bearing caps.

- Apply Loctite 518 sealant, 7 mm in diameter, to the left-hand front and right-hand rear camshaft bearing caps.

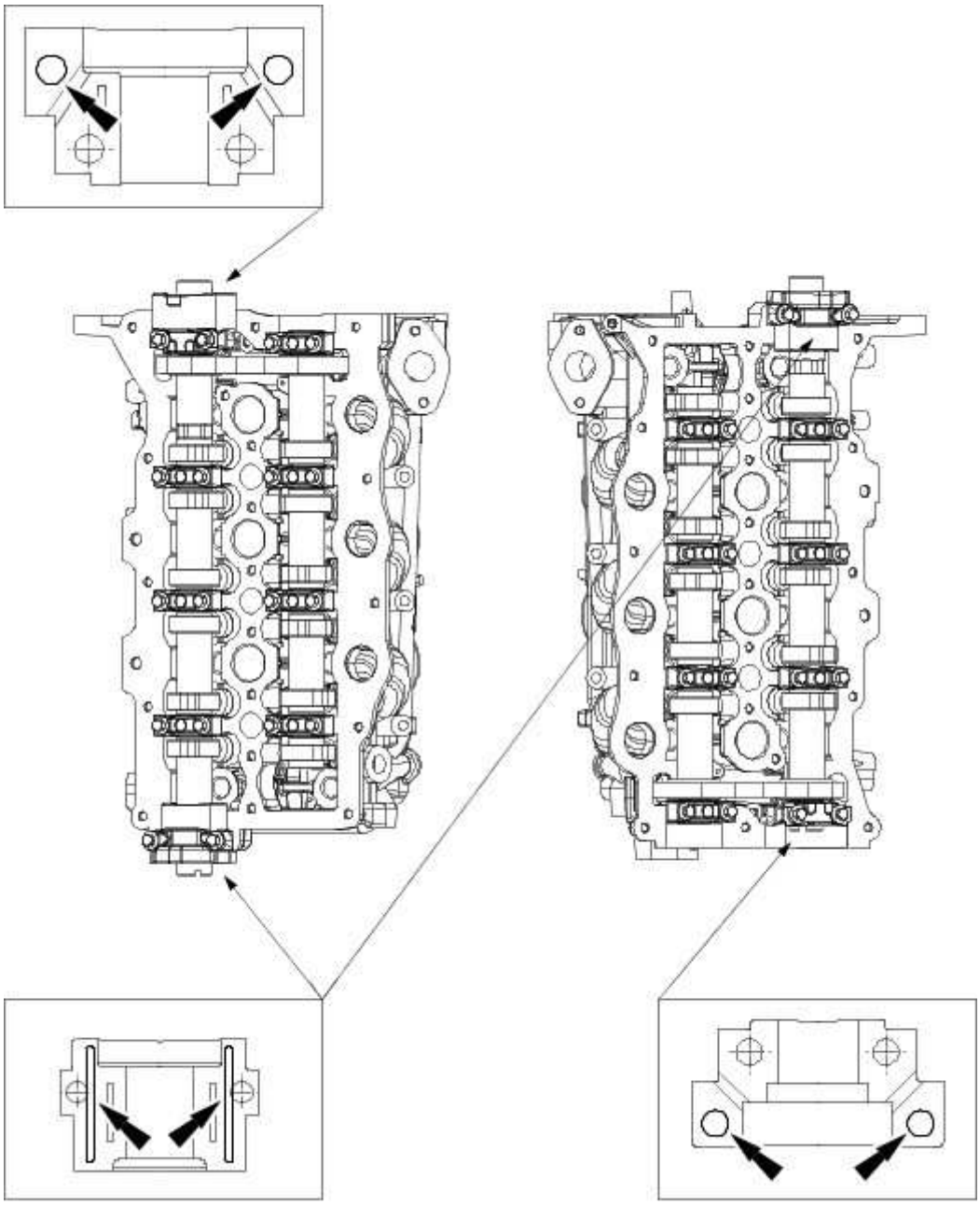

E53719

6 . **NOTE:**

Install the camshaft bearing cap retaining bolts evenly.

Install the camshaft bearing caps in their original position.

- Tighten the retaining bolts in the sequence shown.

www.JagDocs.com

- Stage 1: Bolts 1 to 14, 1 Nm.
- Stage 2: Bolts 1 to 14, 5 Nm.
- Stage 3: Bolts 1 to 14, 10 Nm.
- Stage 4: Bolts 15 to 18, 1 Nm.
- Stage 5: Bolts 15 to 18, 5 Nm.
- Stage 6: Bolts 15 to 18, 10 Nm.

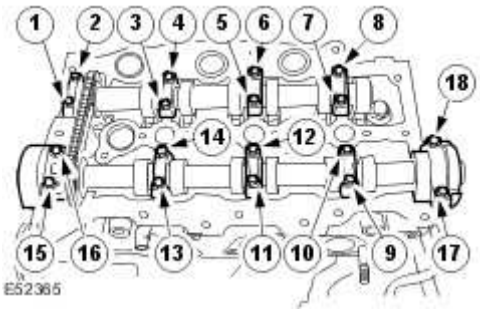

7 . Remove the secondary timing chain tensioner retaining pin.

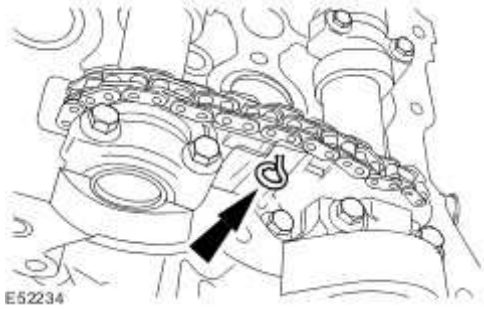

8 . **NOTE:**

Install a new valve cover gasket.

Install the left-hand valve cover.

- Tighten to 10 Nm.

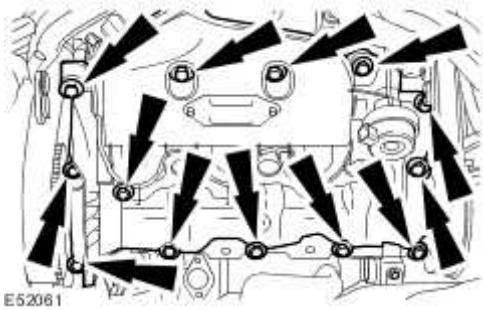

9 . Install the engine cover and wiring harness retainers.

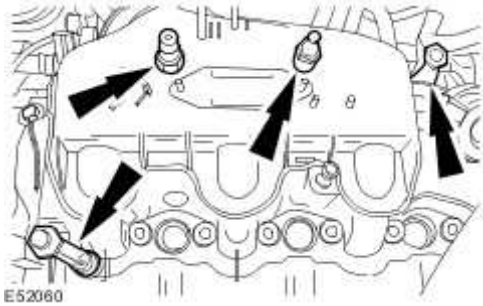

10 . **CAUTION: Do not use any lubricant on the seal or the camshaft. Failure to follow this instruction may result in damage to the vehicle.**

NOTE:

Make sure all components are clean and dry.

Using the special tool, install the camshaft front seal.

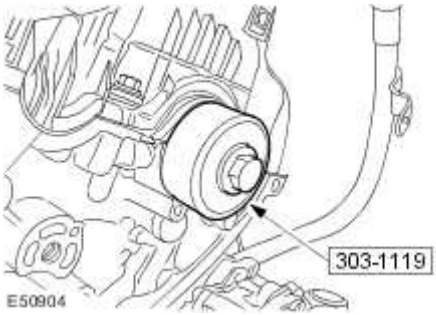

11 . Install the fuel rail securing bracket.

www.JagDocs.com

- Tighten to 24 Nm.

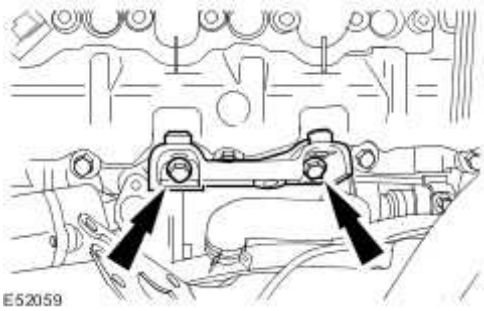

12 . Install the fuel rail.

- Tighten to 24 Nm.

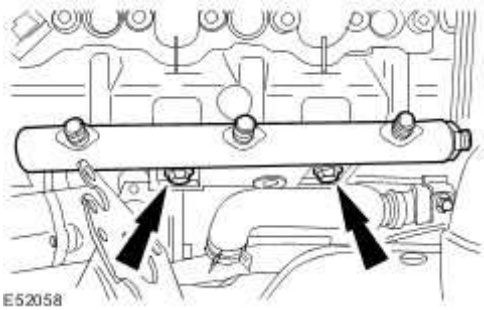

13 **NOTE:**
.

Remove the blanking caps.

Install a new high-pressure fuel supply line.

- Tighten the high-pressure fuel supply line in the sequence shown:
- Tighten the high-pressure fuel supply line union 1 to fuel injector to 15 Nm.
- Tighten the high-pressure fuel supply line union 2 to fuel rail to 15 Nm.
- Tighten the high-pressure fuel supply line union 1 to fuel injector to 30 Nm.

Tighten the high-pressure fuel supply line union 2 to fuel rail to 30 Nm.

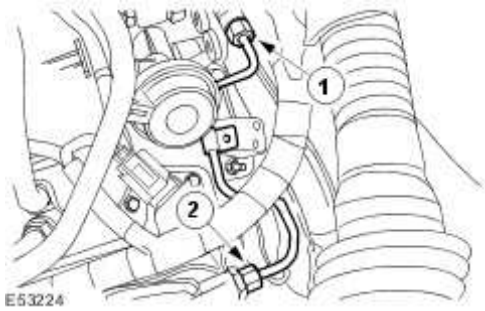

14 . Install the high-pressure fuel supply line retaining bolt.

Tighten to 10 Nm.

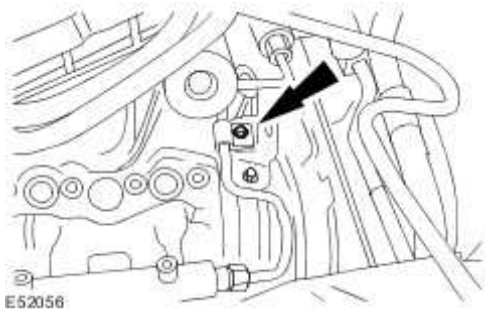

15 . **CAUTION: Do not use tools to install the new fuel return line retaining clip. Failure to follow this instruction may result in damage to the retaining clip.**

NOTE:

Install a new fuel return line retaining clip.

NOTE:

Install a new fuel injector sealing washer.

Install a new fuel injector retaining clamp.

www.JagDocs.com

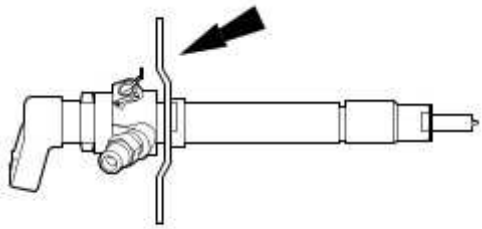

E52071

16 . **NOTE:**

Left-hand rear injector shown, left-hand center and front similar.

Install the fuel injector.

- Tighten to 10 Nm.

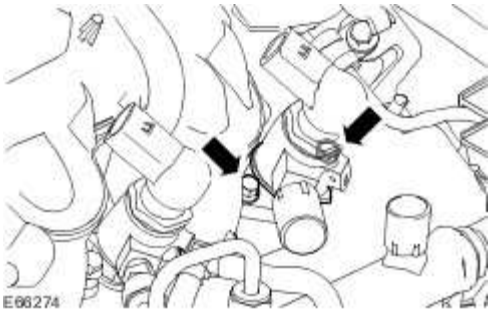

E66274

17 . **CAUTION: Make sure the fuel return line retaining clip is correctly installed to the fuel injector before installing the fuel return line.**

NOTE:

Left-hand rear injector shown, left-hand center and front similar.

Connect the fuel return line to the fuel injector.

- Visually inspect the fuel return line O-ring for damage.
- Apply a light coating of petroleum jelly to the fuel line return line O-ring

seals.

- Connect the fuel return line to the fuel injector.

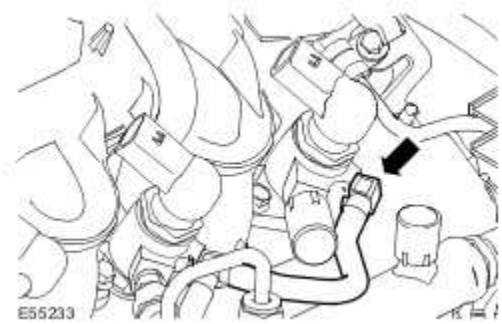

18. **CAUTION: Do not allow the unions to hit the olive ends of the high-pressure fuel supply line as this may damage the ends of the line and allow foreign matter enter the fuel injection system.**

Position the high-pressure fuel supply line as near to the final installation position as possible and then remove and discard the blanking plugs from the high-pressure fuel supply line.

19. **CAUTION: Maintain pressure on the high-pressure fuel supply line to keep the olives in contact with the fuel injectors and the fuel rail cones while installing the unions.**

NOTE:

Install the high-pressure fuel supply lines to the fuel rail end first followed by the fuel injector end.

NOTE:

Left-hand shown, right-hand similar.

Install the new high-pressure fuel supply line.

- Tighten the high-pressure fuel supply line in the sequence shown:

www.JagDocs.com

- Tighten the high-pressure fuel supply line union 1 to fuel injector to 15 Nm.
- Tighten the high-pressure fuel supply line union 2 to fuel rail to 15 Nm.
- Tighten the high-pressure fuel supply line union 1 to fuel injector to 30 Nm.
- Tighten the high-pressure fuel supply line union 2 to fuel rail to 30 Nm.

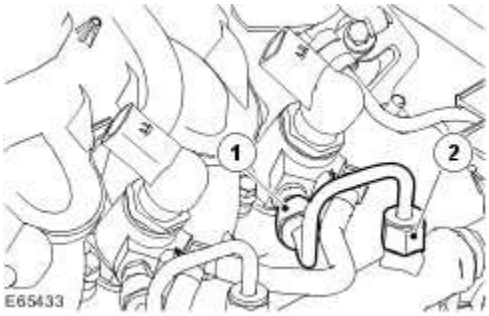

20 . Attach the fuel injection wiring harness.

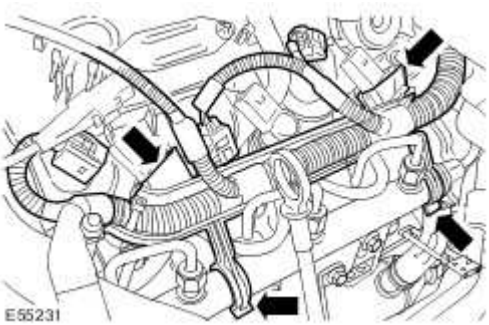

21 . Connect the fuel injector electrical connectors.

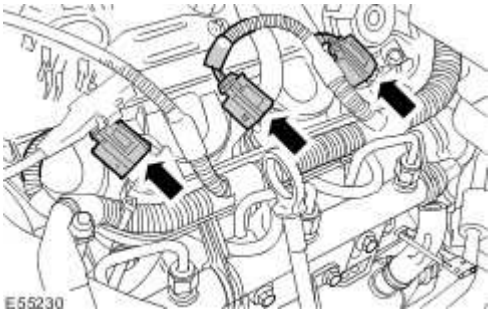

22 . Connect the vacuum hose.

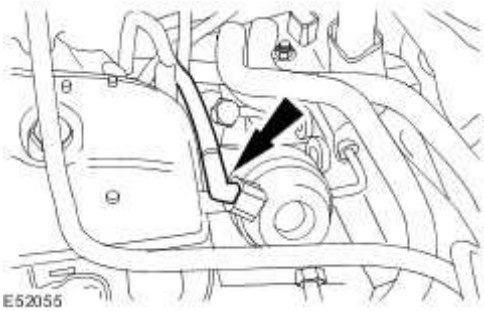

23 . Attach the engine breather hose.

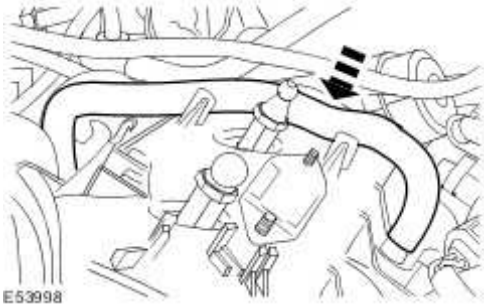

24 . Attach the glow plug electrical connector onto the left-hand valve cover.

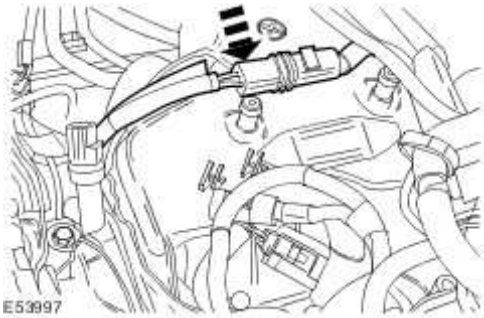

25 . Attach the engine harness.

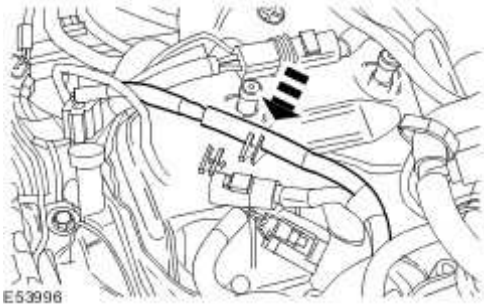

www.JagDocs.com

26 . Connect the oil pressure sensor electrical connector.

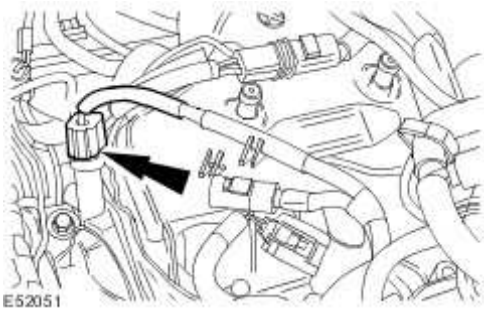

27 . Connect the KS electrical connector.

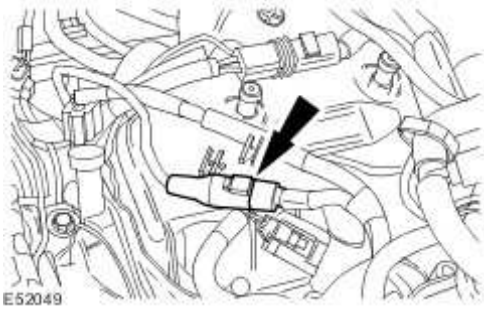

28 . Attach the KS electrical connector onto the left-hand valve cover.

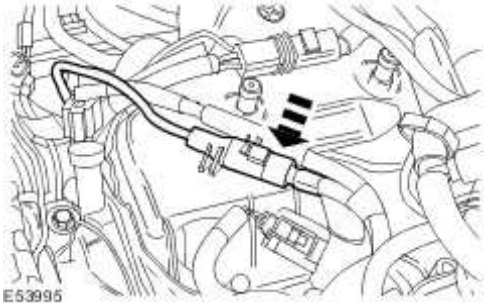

29 . **CAUTION: Make sure the fuel return line valve retaining clip is not damaged. Failure to follow this instruction may result in damage to the vehicle.**

Install the intake air shutoff throttle.

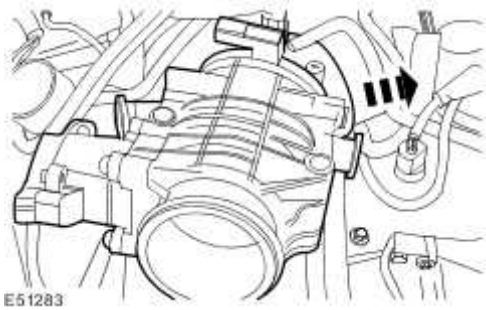

30 . Attach the fuel return line valve onto the intake air shutoff throttle.

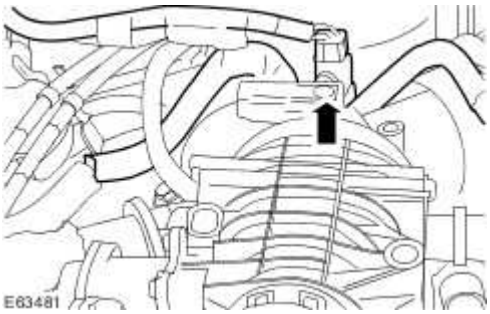

31 . Connect the MAP sensor electrical connector.

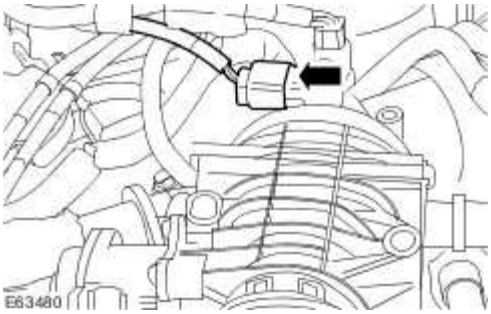

32 . **NOTE:**

Engine shown removed for clarity.

NOTE:

Right-hand shown, left-hand similar.

www.JagDocs.com

NOTE:

Fit new gaskets.

Install the right-hand and left-hand EGR valve outlet tubes.

Tighten to 10 Nm.

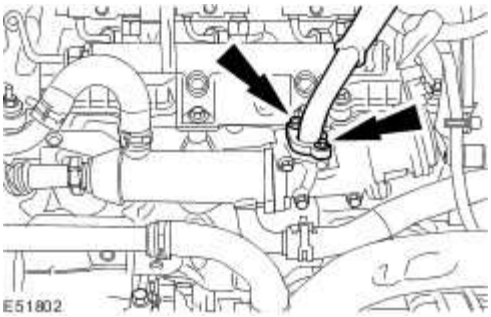

33 . **NOTE:**

Fit new retaining clips.

Attach the EGR valve outlet tube retaining clips.

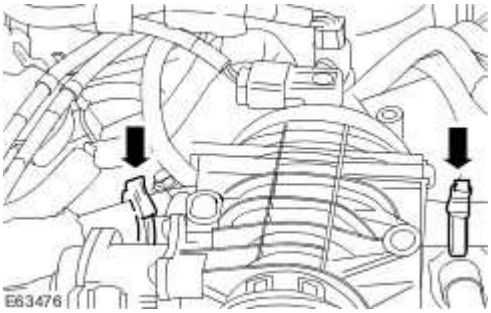

34 . Install the retaining bolt.

Tighten to 10 Nm.

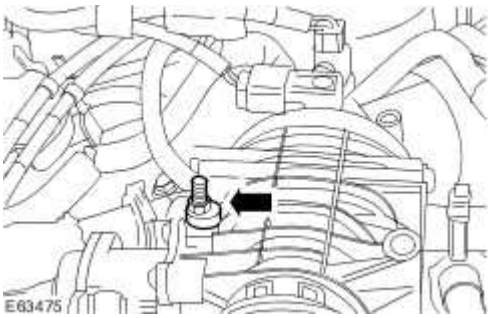

35 . Attach the vacuum hoses.

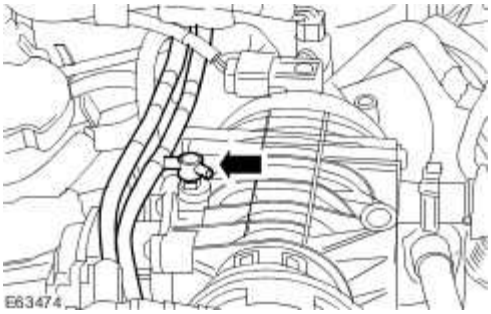

36 . Connect the intake air shutoff throttle electrical connector.

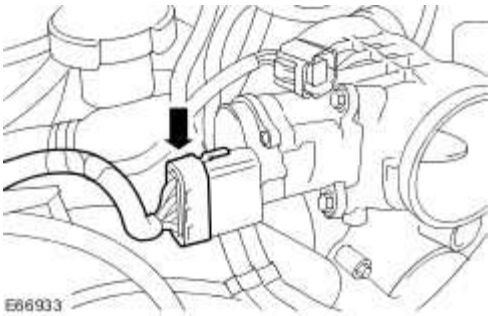

37 . Using special tool, install the camshaft sprocket hub.

- Install the camshaft sprocket hub retaining bolt.

www.JagDocs.com

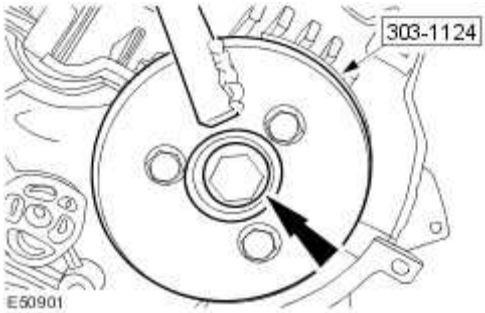

38 . Install the camshaft sprocket.

- Install the camshaft sprocket retaining bolts.

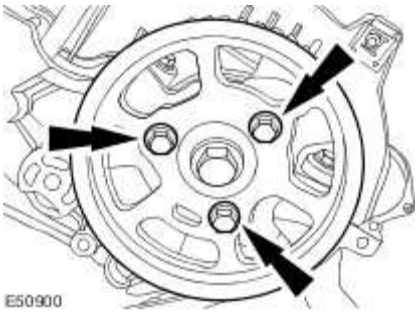

39 . Install the special tool.

1) Retain the camshaft sprocket.

2) Install the special tool.

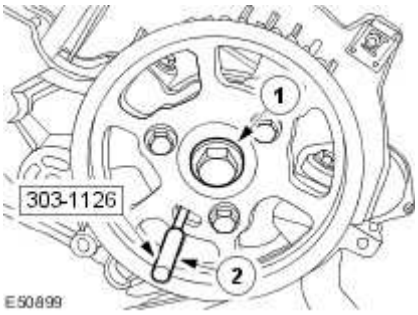

40 . Install the timing belt.
For additional information, refer to Timing Belt

41 . Install the fuel injection pump belt rear cover.

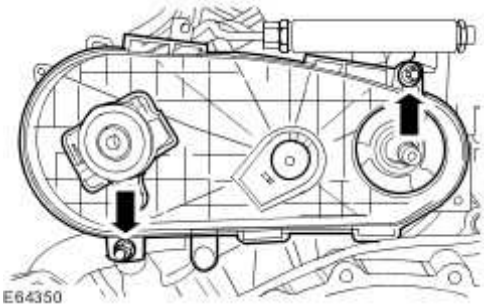

42 . Attach the EGR coolant inlet tube.

- Tighten to 10 Nm.

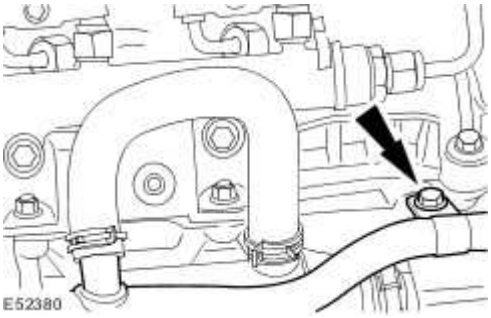

43 . Install the fuel injection pump pulley.

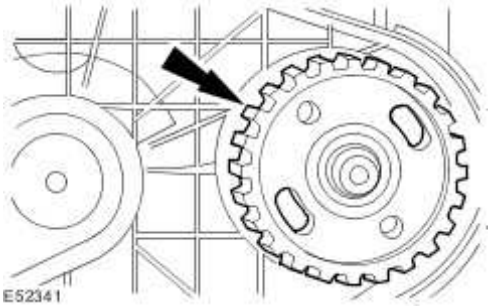

44 . Install the retaining nut.

- Using the special tool, retain the fuel injection pump pulley.
- Tighten to 50 Nm.

www.JagDocs.com

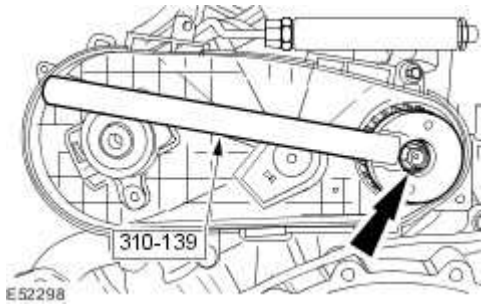

45 . **CAUTION: A new camshaft seal is supplied with an transit sleeve that must not be removed until the camshaft front seal is fully installed. Failure to follow this instruction may result in damage to the vehicle.**

CAUTION: Do not use any lubricant on the seal, the transit sleeve or the camshaft. Failure to follow this instruction may result in damage to the vehicle.

NOTE:

Make sure all components are clean and dry.

Using the special tool, install the camshaft rear seal.

- Remove and discard the transit sleeve.

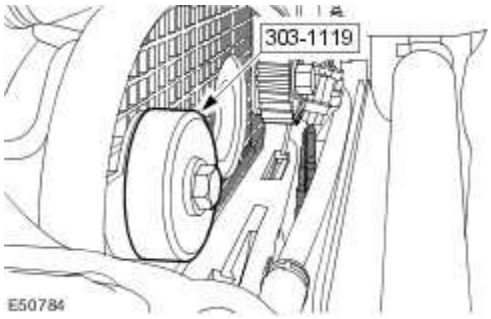

46 . Install the camshaft rear pulley.

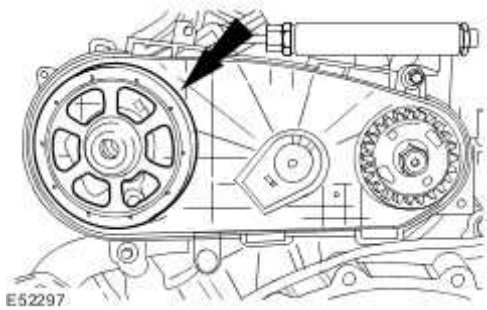

47 . **CAUTION: The camshaft pulley bolt must be tightened in two stages. Failure to follow this instruction may result in damage to the vehicle.**

Using the special tool, install the camshaft rear pulley retaining bolt.

- Stage 1: Tighten to 80 Nm.
- Stage 2: Tighten to 90 degrees.

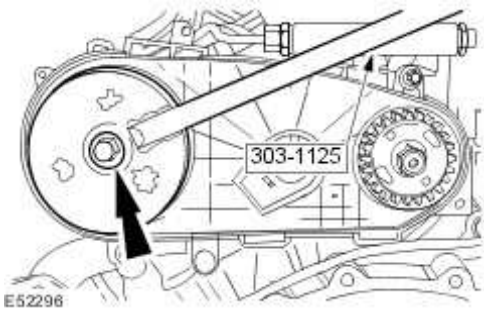

48 . Install the fuel injection pump belt.
For additional information, refer to Fuel Injection Pump Belt

www.JagDocs.com

Crankshaft Front Seal (12.21.14)

Special Service Tools

E52719

Locking Tool Flywheel
303-1123

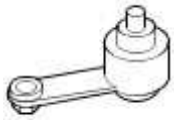

E52709

Timing Pin - Automatic Transmission
303-1117

E52716

Crankshaft Seal Remover
303-1120

E52718

Crankshaft Seal Sleave
303-1122

E52717

Crankshaft Seal Installer
303-1121

Removal

1 . Remove the timing belt.
For additional information, refer to Timing Belt

2 . Remove the starter motor.
For additional information, refer to Starter Motor - 2.7L Diesel (86.60.01)

3 . Remove the special tool.

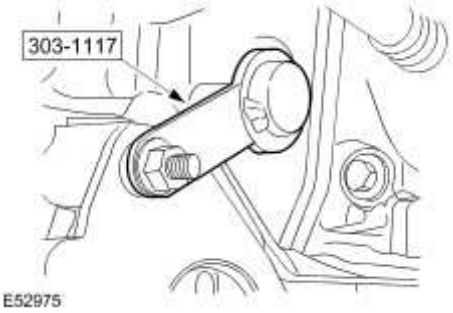

4 . Install the special tool.

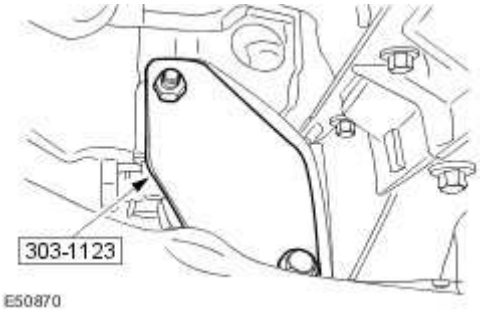

5 . **CAUTION: The crankshaft pulley retaining bolt must not be re-used.**

Remove the crankshaft pulley.

- Remove the retaining bolt.

www.JagDocs.com

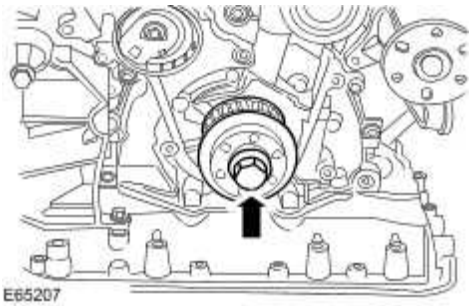

6 . Install the special tool to the crankshaft.

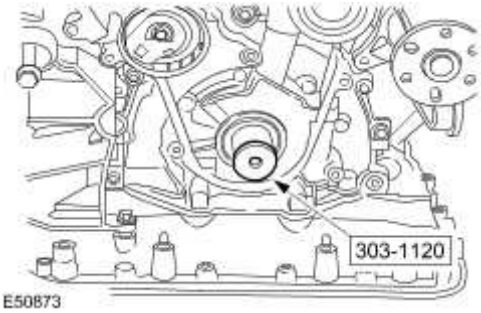

7 . Using the special tool, remove the crankshaft front seal.

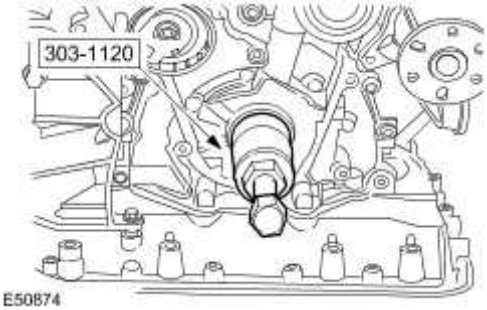

Installation

1 . **CAUTION: Do not use any lubricant on the crankshaft front seal, the special tool or the crankshaft. Failure to follow this instruction may result in damage to the vehicle.**

NOTE:

Make sure all components are clean and dry.

Install a new crankshaft front seal to the special tool.

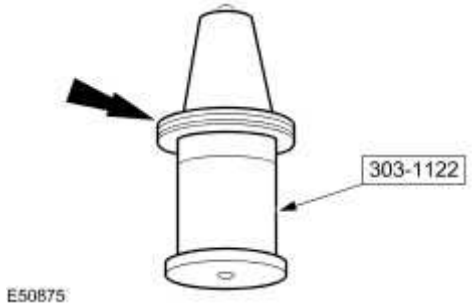

2 . Reposition the crankshaft front seal along the special tool.

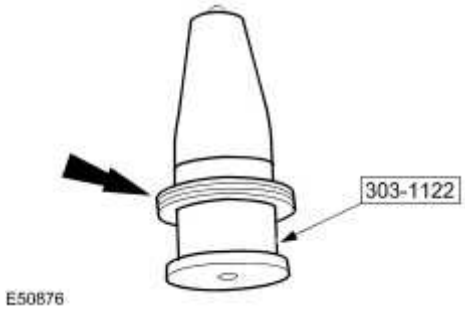

3 . Using the special tool, install the crankshaft front seal to the crankshaft.

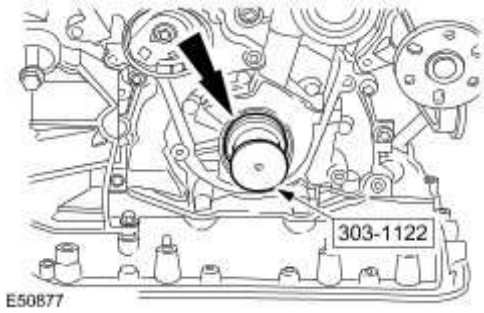

4 . Remove the special tool from the crankshaft.

5 . Install the special tool to the crankshaft.

www.JagDocs.com

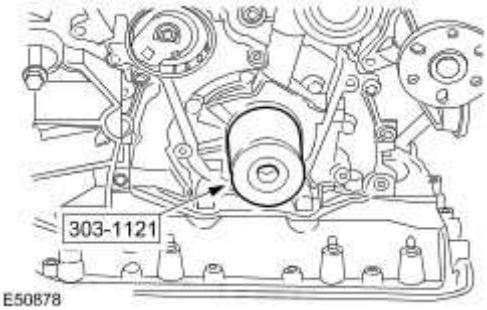

6 . Using the special tool, fully install the crankshaft front seal.

- Install the crankshaft pulley retaining bolt.

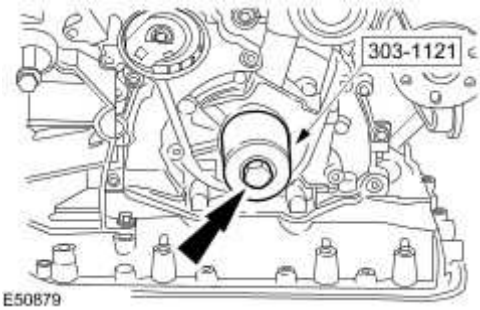

7 . **CAUTION: The crankshaft pulley retaining bolt must not be re-used.**

Remove the special tool.

- Remove and discard the crankshaft pulley retaining bolt.

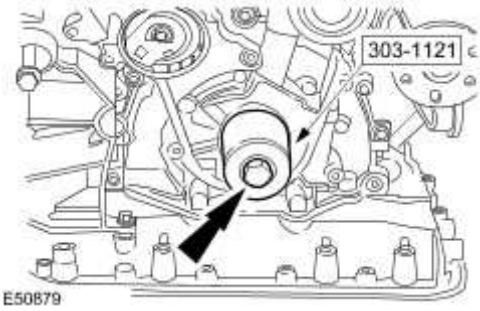

8 . **CAUTION: The crankshaft pulley retaining bolt must not be re-used.**

CAUTION: The crankshaft pulley retaining bolt must be tighten in two stages.

Install the new crankshaft pulley retaining bolt.

- Stage 1: Tighten to 100 Nm.
- Stage 2: Tighten to 90 degrees.

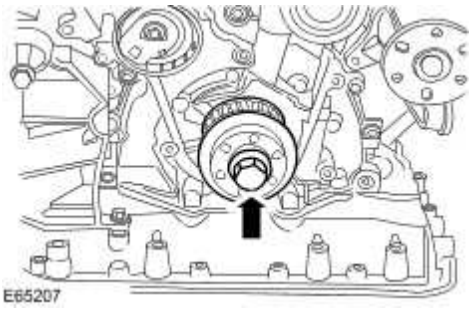

9 . Remove the special tool.

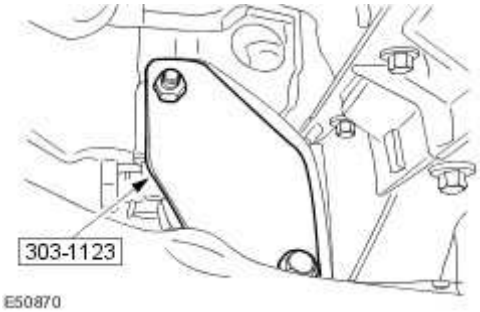

10 . Install the special tool.

www.JagDocs.com

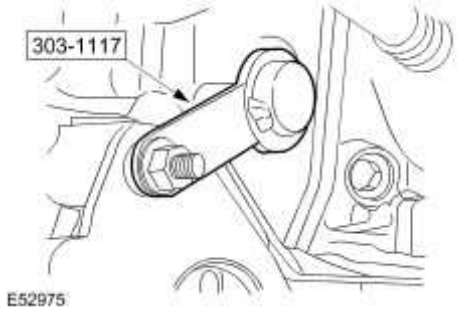

11 . Install the starter motor.
For additional information, refer to Starter Motor - 2.7L Diesel (86.60.01)

12 . Install the timing belt.
For additional information, refer to Timing Belt

Crankshaft Rear Seal (12.21.20)

Removal

1 . Remove the crankshaft position (CKP) sensor ring.
For additional information, refer to Crankshaft Position (CKP) Sensor Ring

2 . Remove the crankshaft rear seal retaining bolts.

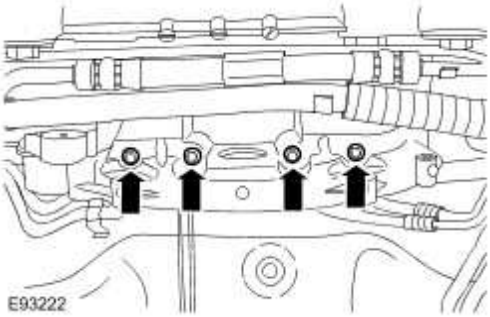

3 . Remove the crankshaft rear seal.

Remove the retaining bolts.

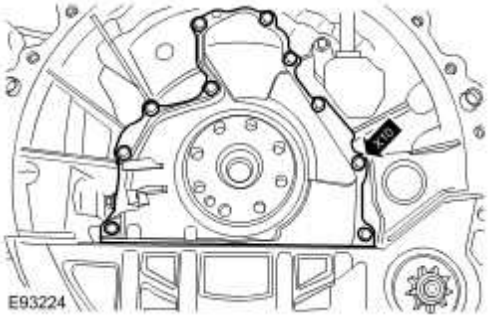

Installation

CAUTION: Make sure the crankshaft rear seal is installed correctly.

www.JagDocs.com

1 . **NOTE:**

Make sure the crankshaft rear seal mating faces are clean and dry.

Apply a 8 mm bead of sealant to the cylinder block in the areas shown.
For additional information, refer to Specifications

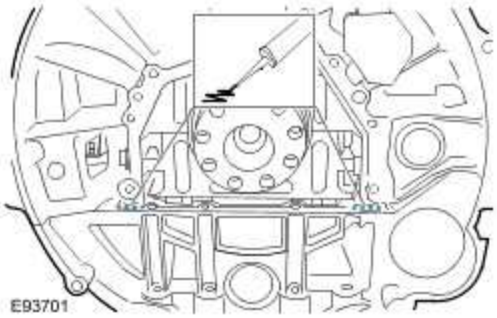

2 . Tighten to 10 Nm (7 lb.ft).

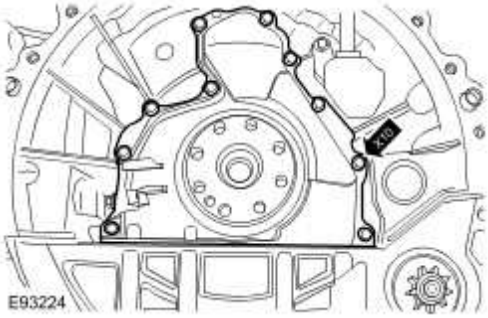

3 . Tighten to 10 Nm (7 lb.ft).

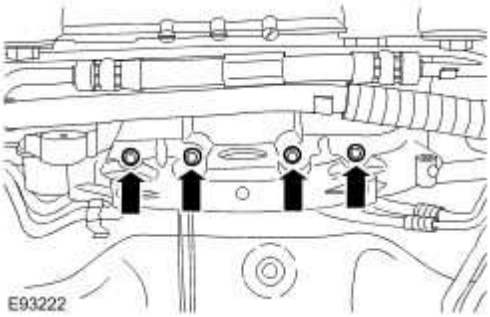

4 . Install the CKP sensor ring.
For additional information, refer to Crankshaft Position (CKP) Sensor Ring

Crankshaft Vibration Damper (12.21.09)

Special Service Tools

Accessory belt detensioner
303-703

Removal

1 . Disconnect the battery ground cable.
For additional information, refer to Battery Disconnect and Connect

2 . Remove the air deflector.
For additional information, refer to Air Deflector (76.11.41)

3 . Detach the accessory drive belt.

1) Using the special tool, rotate the belt tensioner counter clockwise.

2) Detach the accessory drive belt.

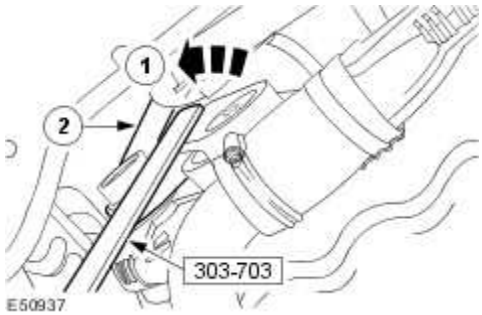

4 . Remove the crankshaft vibration damper.

www.JagDocs.com

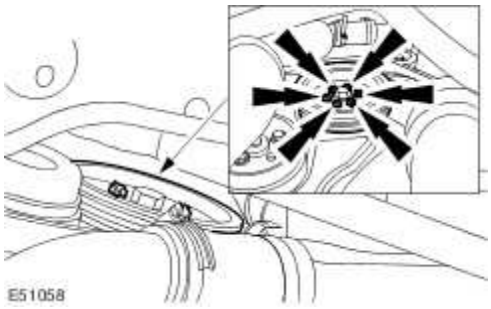

Installation

1 . To install, reverse the removal procedure.

Tighten to 14 Nm.

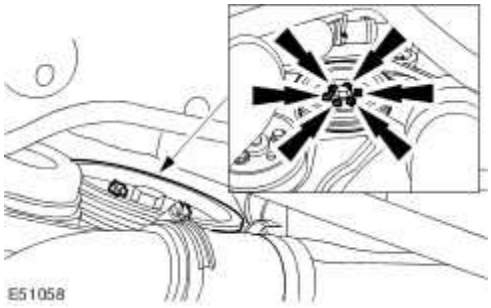

Cylinder Head LH (12.29.02)

Removal

1 . Remove the left-hand camshafts.
For additional information, refer to Camshafts LH (12.13.19)

2 . Remove the exhaust manifold.
For additional information, refer to Exhaust Manifold LH (30.15.55)

3 . Detach the expansion tank hose from the cylinder head coolant outlet assembly.

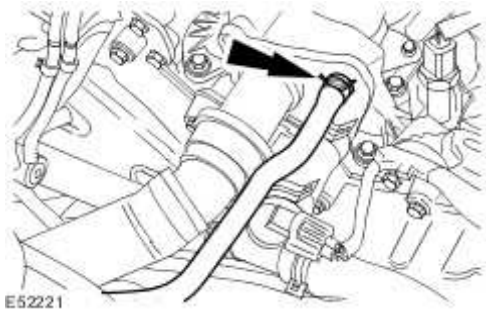

4 . Detach the engine coolant hose from the cylinder head coolant outlet assembly.

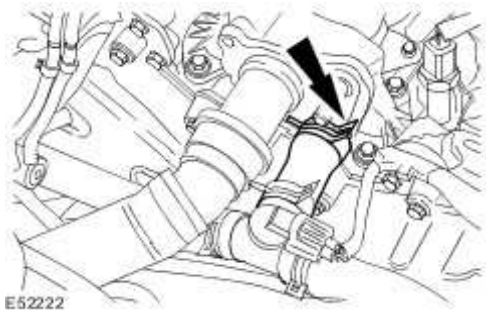

5 . Detach the radiator top hose from the cylinder head coolant outlet assembly.

www.JagDocs.com

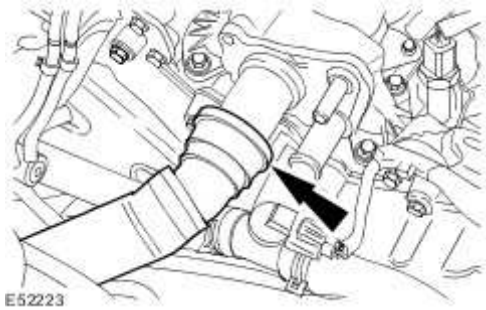

6 . **NOTE:**

Discard the O-ring seals.

Remove the cylinder head coolant outlet assembly.

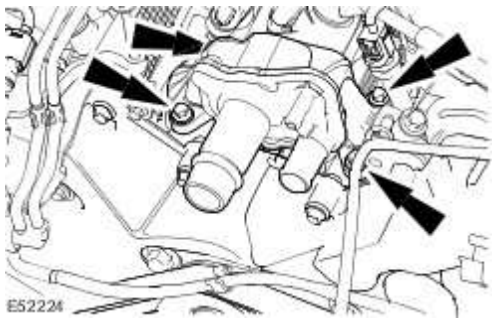

7 . Remove the left-hand cylinder head glow plugs.
For additional information, refer to Glow Plugs

8 . Disconnect the camshaft position sensor.

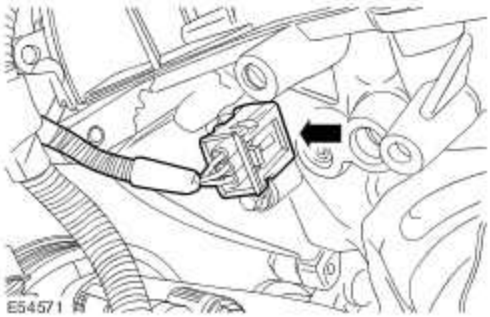

9 . Remove the hydraulic adjuster and rocker assemblies.

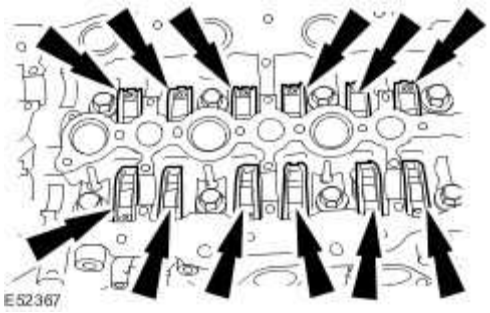

10 . **CAUTION: Only use a plastic scrapper to clean off the old gasket.**

Remove the left-hand cylinder head assembly.

- Remove and discard the left-hand cylinder head retaining bolts.
- Remove and discard the left-hand cylinder head gasket.

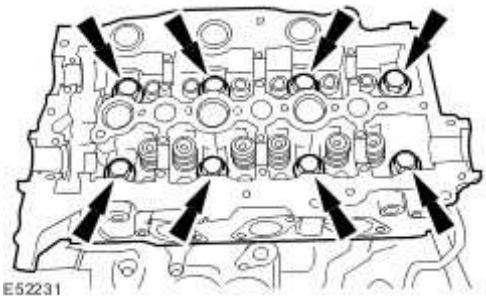

Installation

1 . **CAUTION: Use care when installing the cylinder head. Damage to the cylinder block, cylinder head or the cylinder head gasket may result.**

NOTE:

Install a new cylinder head gasket.

www.JagDocs.com

NOTE:

The head gaskets must be installed over the cylinder head to block dowels.

NOTE:

Make sure the cylinder head is installed in its original position.

NOTE:

Tighten the retaining bolts in the indicated sequence in four stages.

Install the cylinder head and install new cylinder head retaining bolts.

- Stage 1: Tighten to 20 Nm.
- Stage 2: Tighten to 40 Nm.
- Stage 3: Tighten to 80 Nm.
- Stage 4: Tighten to 180 degrees.

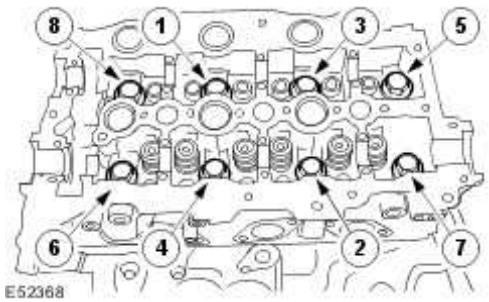

2 . Install the hydraulic adjuster and rocker assemblies.

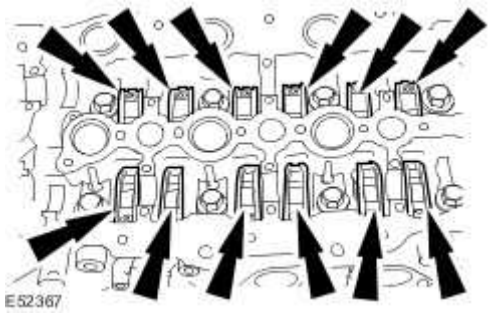

3 . Connect the camshaft position sensor.

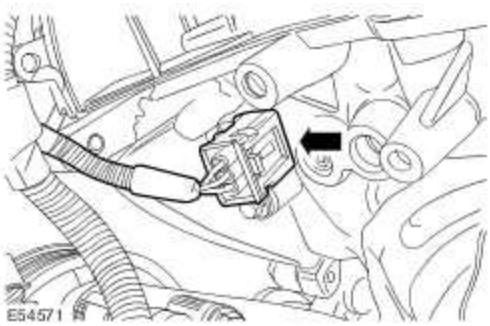

4 . Install the left-hand cylinder head glow plugs.
For additional information, refer to Glow Plugs

5 . **NOTE:**

Install new O-ring seals.

Install the cylinder head coolant outlet assembly.

- Tighten to 10 Nm.

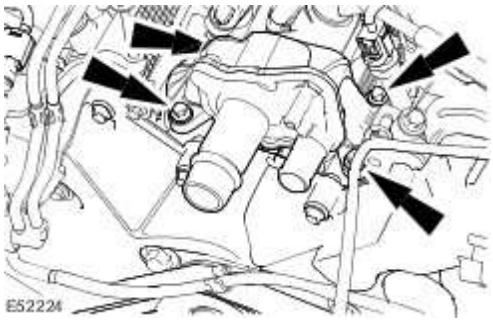

6 . Attach the radiator top hose onto the cylinder head coolant outlet assembly.

www.JagDocs.com

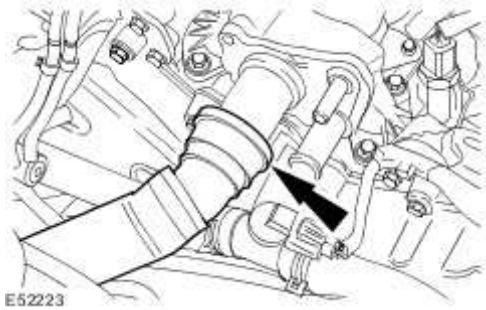

7 . Attach the engine coolant hose onto the cylinder head coolant outlet assembly.

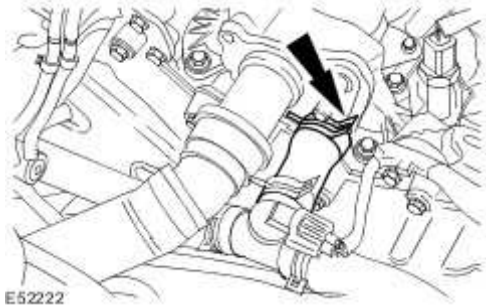

8 . Attach the expansion tank hose onto cylinder head coolant outlet assembly.

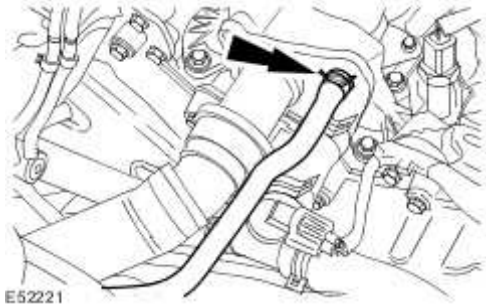

9 . Install the exhaust manifold.
For additional information, refer to Exhaust Manifold LH (30.15.55)

10 . Install the left-hand camshafts.
For additional information, refer to Camshafts LH (12.13.19)

Engine Mount LH (12.45.01)

Special Service Tools

Engine mount retaining nut adaptor
303-1191

Power train assembly jack
HTJ1200-02

Removal

1 . Remove the air deflector.
For additional information, refer to Air Deflector (76.11.41)

2 . Remove the power steering return line retaining bolt.

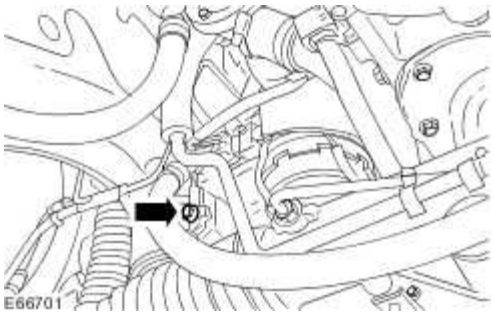

3 . Disconnect the engine mount electrical connector.

www.JagDocs.com

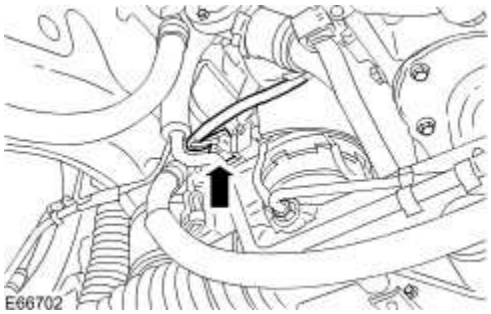

4 . Detach the engine mount wiring harness.

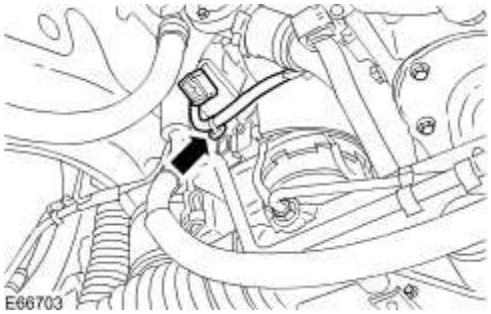

5 . Detach the turbocharger intake tube.

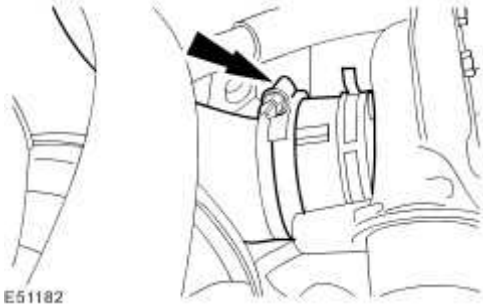

6 . **NOTE:**

Left-hand shown, right-hand similar.

Remove the engine mounts lower retaining nuts.

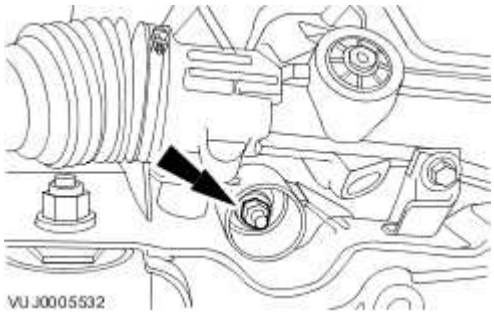

7 . Using the special tool, remove the engine mount upper retaining nut.

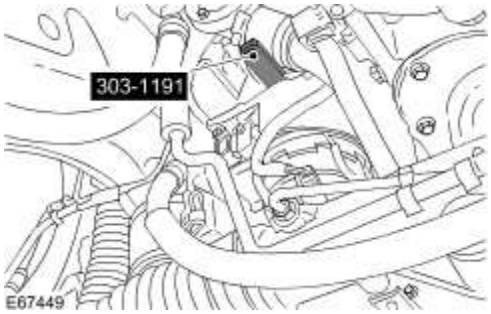

8 . Using the special tool, raise the engine to a suitable height.

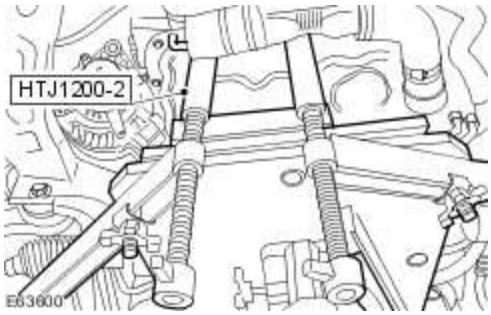

9 . Remove the engine mount.

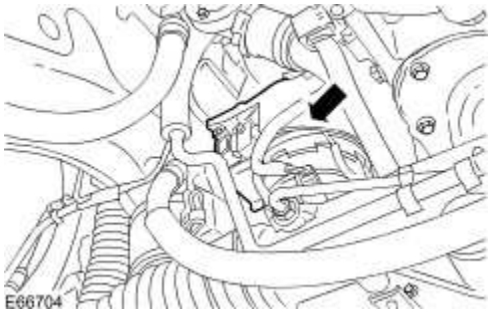

www.JagDocs.com

Installation

1. **CAUTION: Make sure that the engine mount location peg is correctly located into the engine mount bracket. Failure to follow this instruction may result in damage to the vehicle.**

Install the engine mount.

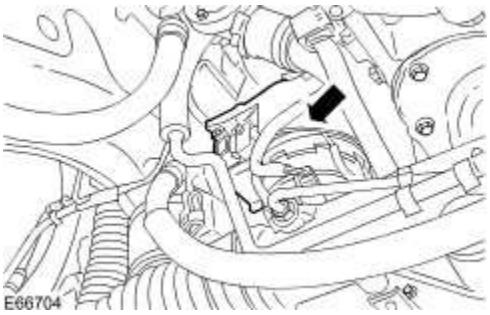

2 . Using the special tool, lower the engine.

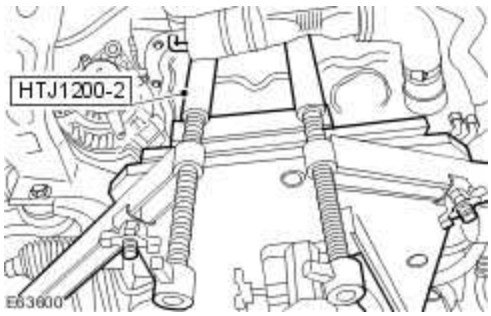

3. **CAUTION: Make sure the torque wrench setting procedure is followed correctly. Failure to follow this instruction may result in damage to the vehicle.**

Calculate the setting for the torque wrench.

- Stage 1: Multiply the required torque by the effective length of the torque wrench (1).
- Stage 2: Add the effective length of the special tool (2) to the effective length of the torque wrench.
- Stage 3: Divide the total of stage 1 by the total of stage 2.

- Stage 4: Set the torque wrench to the figure arrived at in stage 3.

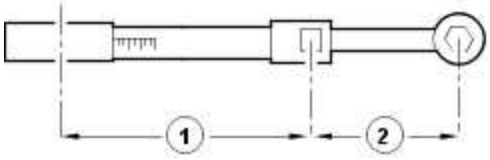

E37107

4 . Using the special tool, install the engine mount upper retaining nut.

- Tighten to 48 Nm.

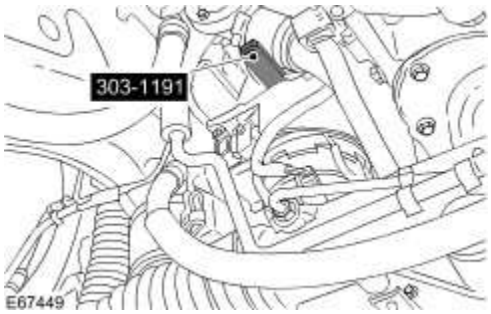

E67449

5 . **NOTE:**

Left-hand shown, right-hand similar.

Install the engine mounts lower retaining nuts.

- Tighten to 63 Nm.

www.JagDocs.com

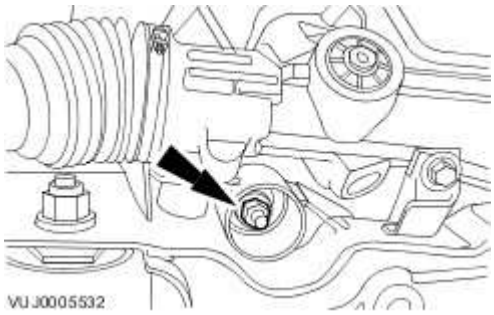

6 . Attach the turbocharger intake tube.

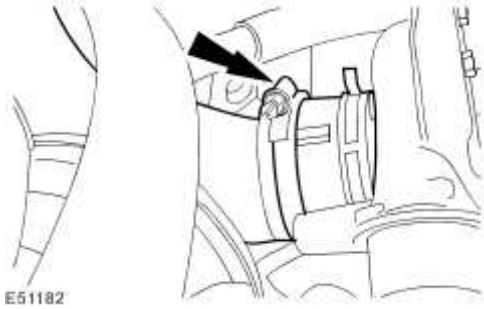

7 . Attach the engine mount wiring harness.

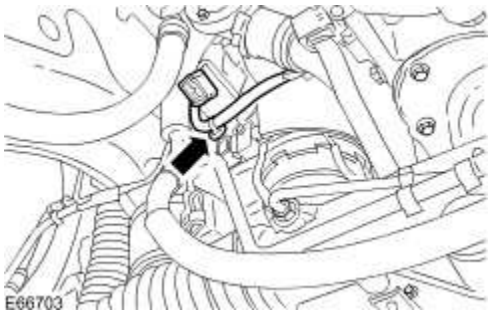

8 . **NOTE:**

Make sure that the engine mount electrical connector is fully seated.

Connect the engine mount electrical connector.

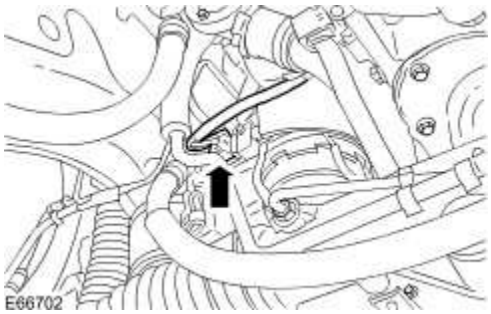

9 . Install the power steering return line retaining bolt.

Tighten to 10 Nm.

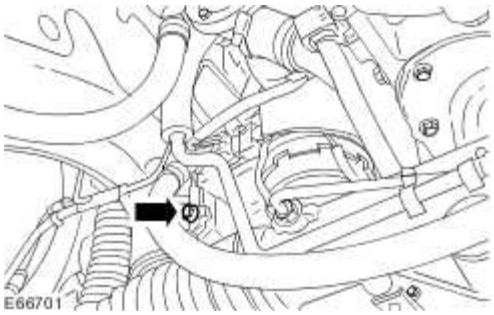

10 . Install the air deflector.

For additional information, refer to Air Deflector (76.11.41)

www.JagDocs.com

Engine Mount RH (12.45.03)

Special Service Tools

Engine mount retaining nut adaptor
303-1191

Power train assembly jack
HTJ1200-02

Removal

1 . Disconnect the battery ground cable.
For additional information, refer to Battery Disconnect and Connect

2 . Detach the exhaust gas recirculation (EGR) cooler coolant pipe.

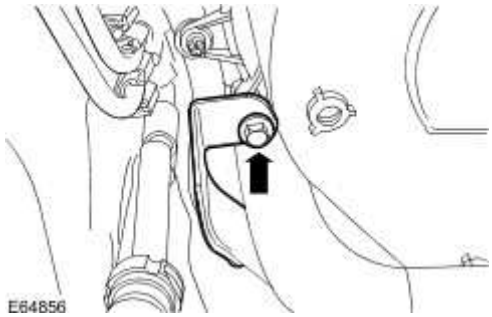

3 . Detach the upper mass air flow (MAF) sensor outlet pipe.

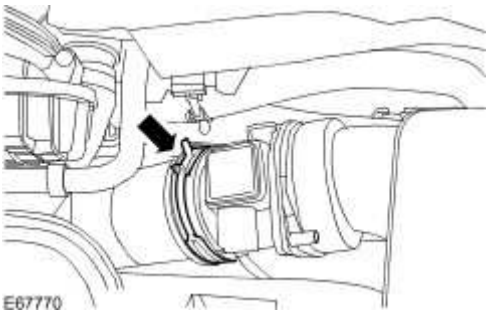

4 . Remove the air deflector.
For additional information, refer to Air Deflector (76.11.41)

5 . Remove the generator cooling duct.

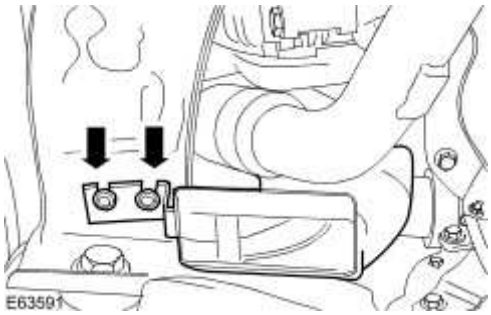

6 . Loosen the turbocharger outlet pipe retaining clips.

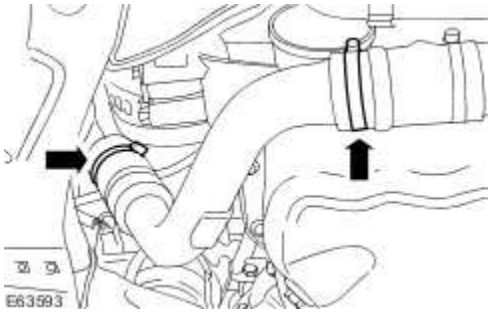

7 . Remove the turbocharger outlet pipe.

www.JagDocs.com

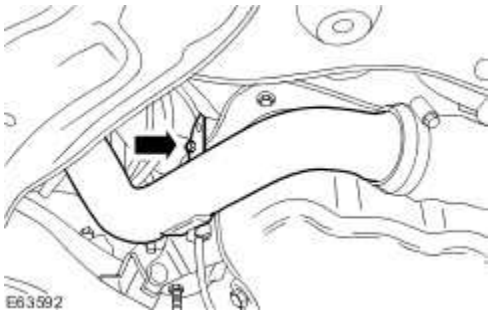

8 . Detach the air cleaner upper outlet tube from the timing cover.

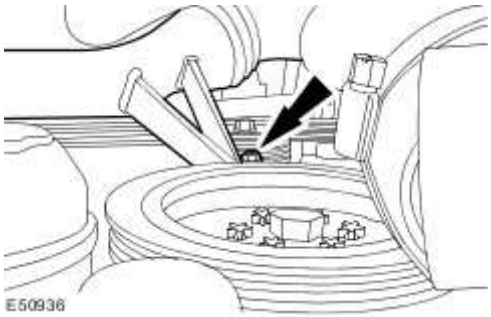

9 . Detach the air cleaner outlet tube.

1) Detach the air cleaner outlet tube to turbocharger retaining clip.

2) Detach the air cleaner outlet tube to breather tube retaining clip.

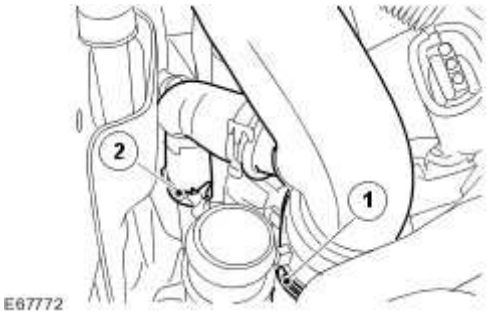

10 . Make sure that the alignment mark on the steering gear pinion seal protection cover is central to the steering gear pinion casting.

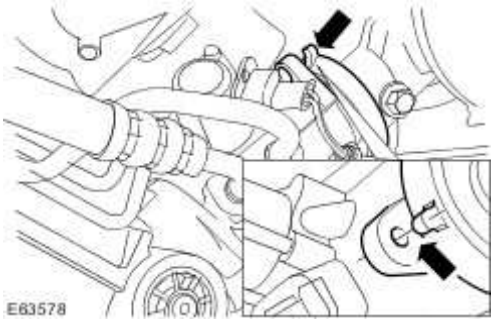

11 . Disconnect the power steering control valve actuator electrical connector.

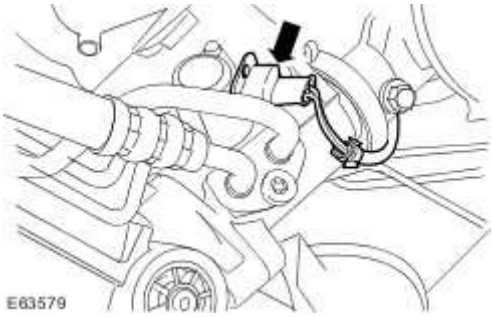

12 . Detach the lower steering column.

- Remove the steering gear shaft pinch bolt.

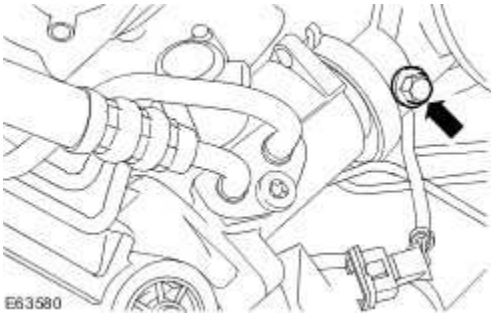

13 . Detach the starter motor positive cable.

www.JagDocs.com

14 . Reposition the starter motor positive cable.

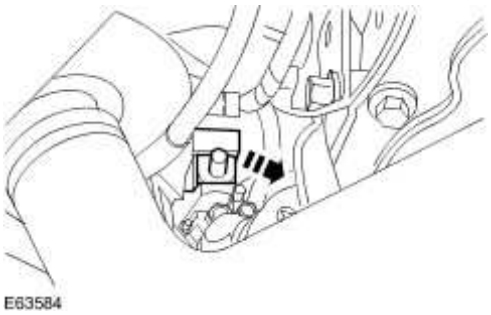

15 . Disconnect the engine mount electrical connector.

Detach the engine mount wiring harness.

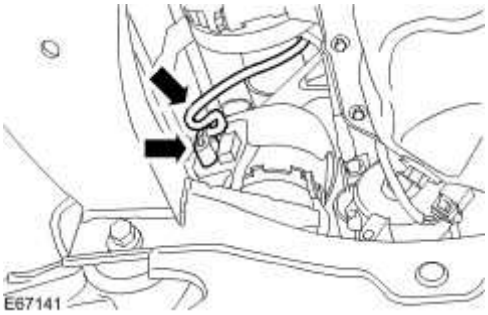

16 . **NOTE:**

Right-hand shown, left-hand similar.

Remove the engine mounts retaining nuts.

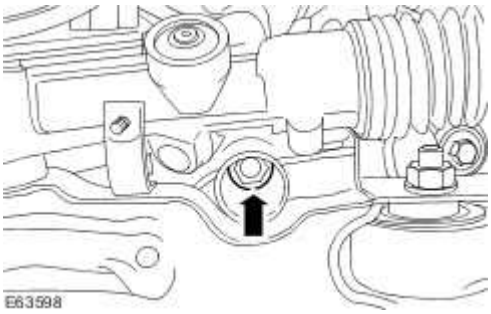

17 . Using the special tool, remove the engine mount upper retaining nut.

18 . Using the special tool, raise the engine.

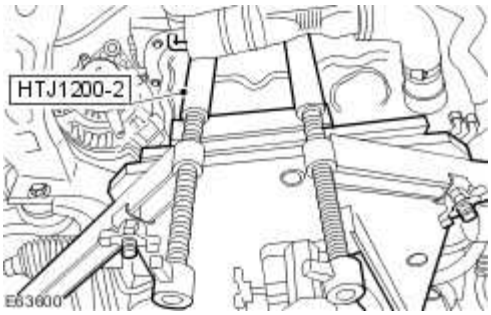

19 . Remove the engine mount.

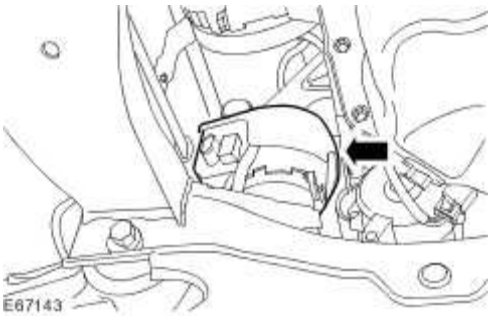

www.JagDocs.com

Installation

1 . Install the engine mount.

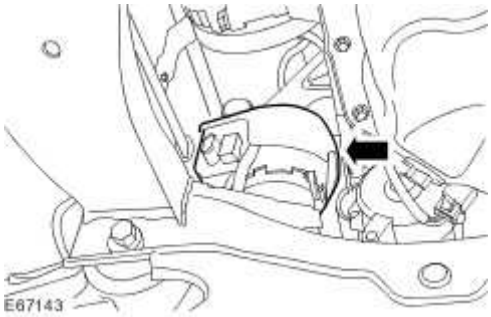

2 . Using the special tool, lower the engine.

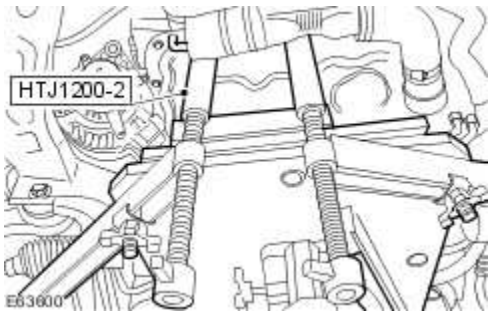

3 . **CAUTION: Make sure the torque wrench setting procedure is followed correctly. Failure to follow this instruction may result in damage to the vehicle.**

Calculate the setting for the torque wrench.

- Stage 1: Multiply the required torque by the effective length of the torque wrench (1).
- Stage 2: Add the effective length of the special tool (2) to the effective length of the torque wrench.
- Stage 3: Divide the total of stage 1 by the total of stage 2.
- Stage 4: Set the torque wrench to the figure arrived at in stage 3.

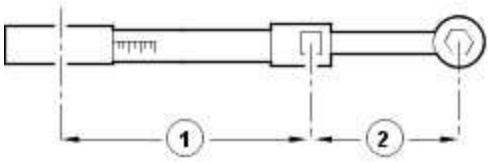

E37107

4 . **CAUTION: Make sure the torque wrench setting procedure is followed correctly. Failure to follow this instruction may result in damage to the vehicle.**

Using the special tool, install the engine mount upper retaining nut.

- Tighten to 48 Nm.

E67142

5 . **NOTE:**

Right-hand shown, left-hand similar.

Install the engine mountings retaining nuts.

- Tighten to 63 Nm.

www.JagDocs.com

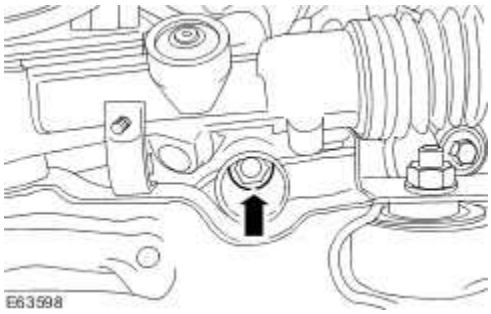

6 . **NOTE:**

Make sure that the engine mount electrical connector is fully seated.

Connect the engine mount electrical connector.

- Attach the engine mount wiring harness.

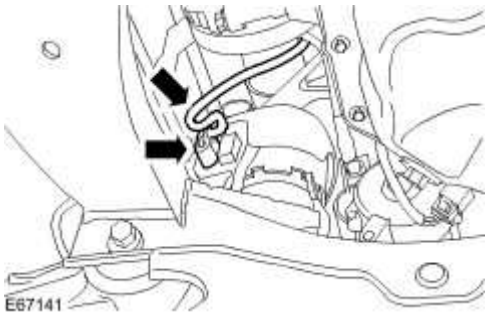

7 . Reposition the starter motor positive cable.

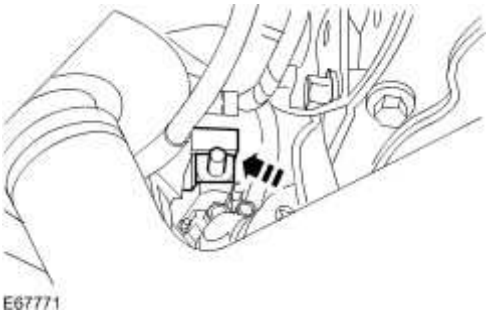

8 . Attach the starter motor positive cable.

- Tighten to 10 Nm.

E63583

9 . Attach the lower steering column.

- Install the steering gear shaft pinch bolt.
- Tighten to 35 Nm.

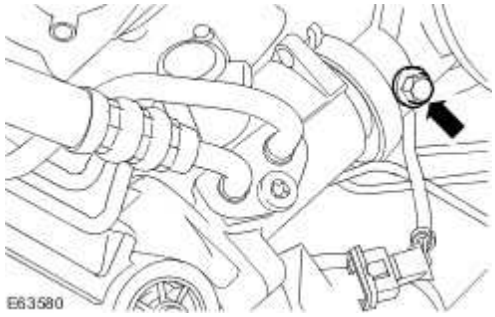

E63580

10 . Connect the power steering control valve actuator electrical connector.

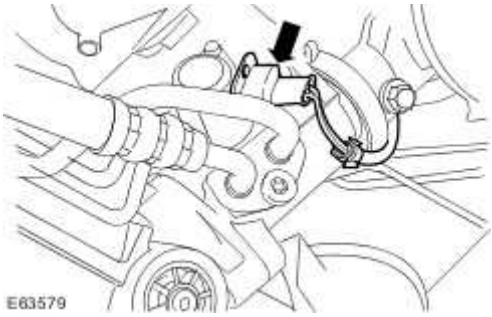

E63579

11 . Attach the air cleaner outlet tube.

1) Attach the air cleaner outlet tube to turbocharger retaining clip.

2) Attach the air cleaner outlet tube to breather tube retaining clip.

www.JagDocs.com

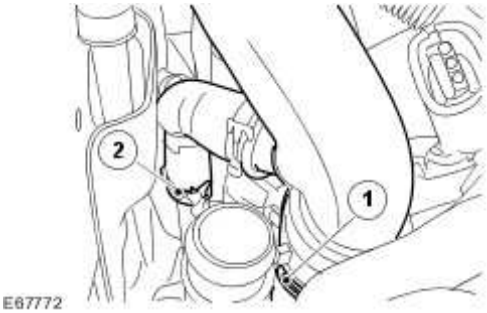

12 . Attach the air cleaner upper outlet tube to the timing cover.

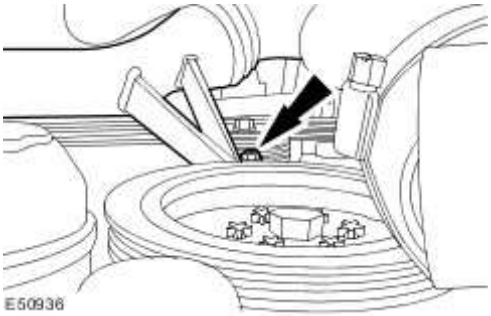

13 . Install the turbocharger outlet pipe.

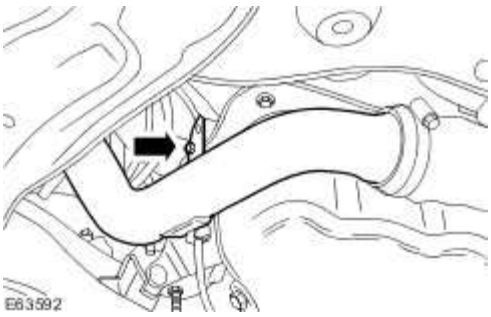

14 . Tighten the turbocharger outlet pipe retaining clips.

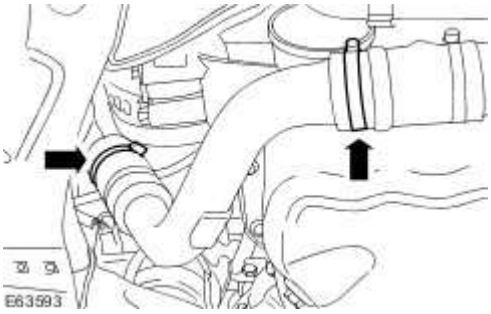

15 . Install the generator cooling duct.

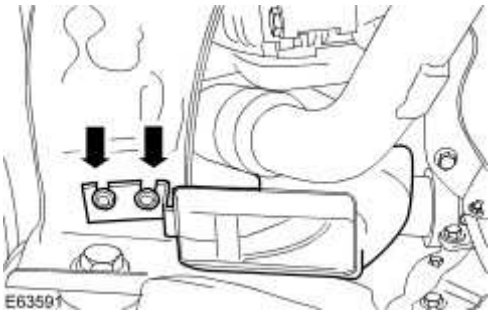

16 . Install the air deflector.
For additional information, refer to Air Deflector (76.11.41)

17 . Attach the upper MAF sensor outlet pipe.

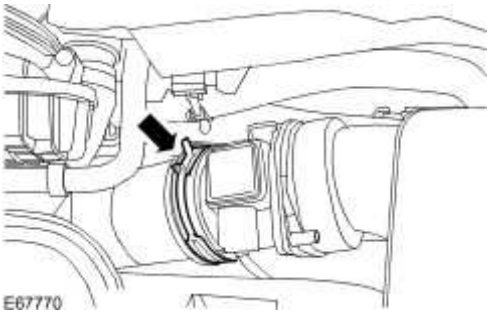

18 . Attach the EGR cooler coolant pipe.

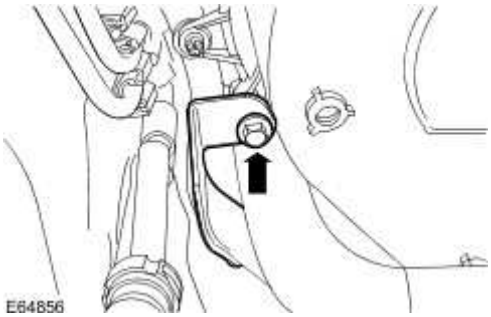

19 . Connect the battery ground cable.
For additional information, refer to Battery Connect (86.15.15)

www.JagDocs.com

Exhaust Manifold LH (30.15.55)

Removal

1 . Remove the left-hand exhaust gas recirculation (EGR) valve.
For additional information, refer to Exhaust Gas Recirculation (EGR) Valve LH

2 . Remove the left-hand turbocharger.
For additional information, refer to Turbocharger LH

3 . Remove the exhaust manifold heatshield.

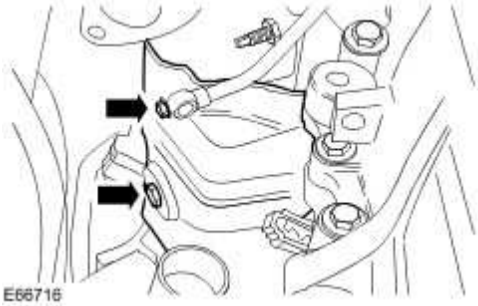

4 . Lower the vehicle.

5 . **NOTE:**

New exhaust manifold retaining studs must be fitted if the old studs are removed.

Remove and discard the exhaust manifold retaining nuts.

6 . Raise the vehicle.

7 . Remove the exhaust manifold.

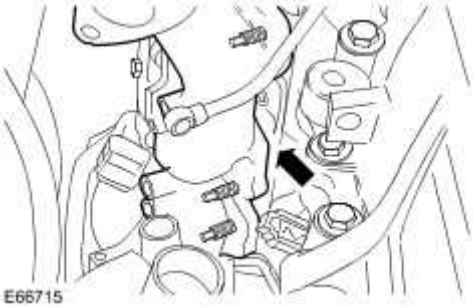

8 . Remove and discard the exhaust manifold gasket.

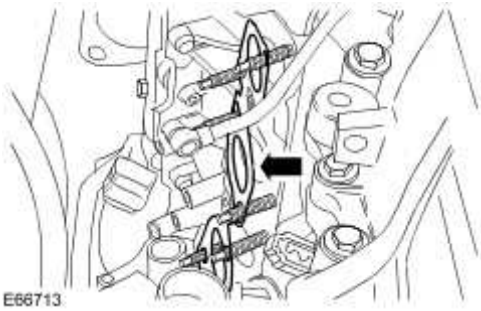

Installation

1 . Install a new exhaust manifold gasket.

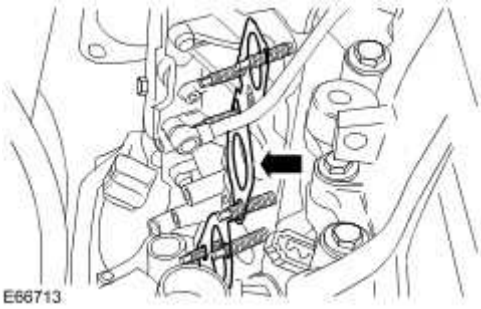

2 . **CAUTION: Make sure that the exhaust manifold and gasket are correctly aligned to the cylinder head and the exhaust manifold retaining studs.**

www.JagDocs.com

Install the exhaust manifold.

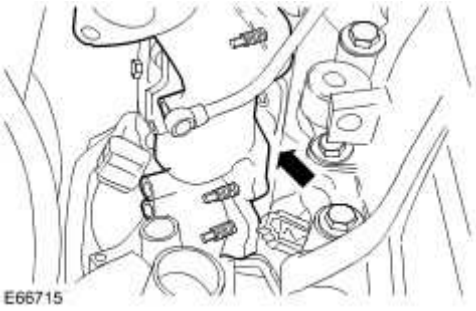

3 . Lower the vehicle.

4 . Install new exhaust manifold retaining nuts.

Tighten to 23 Nm.

5 . Raise the vehicle.

6 . Install the exhaust manifold heatshield.

Tighten to 10 Nm.

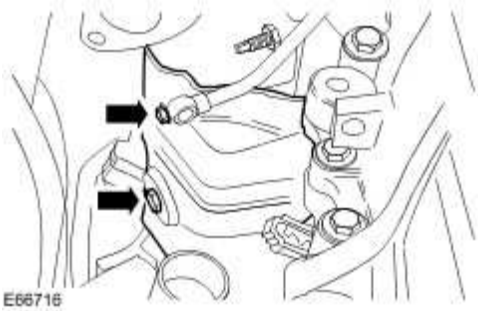

7 . Install the left-hand turbocharger.
For additional information, refer to Turbocharger LH

8 . Install the left-hand EGR valve.
For additional information, refer to Exhaust Gas Recirculation (EGR) Valve LH

www.JagDocs.com

Exhaust Manifold RH (30.15.56)

Removal

1 . Remove the right-hand exhaust gas recirculation (EGR) valve.
For additional information, refer to Exhaust Gas Recirculation (EGR) Valve RH

2 . Remove the right-hand turbocharger.
For additional information, refer to Turbocharger RH

3 . Remove the exhaust manifold front heat shield.

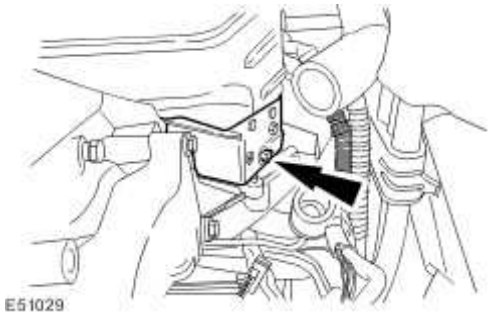

4 . Remove the exhaust manifold rear heat shield.

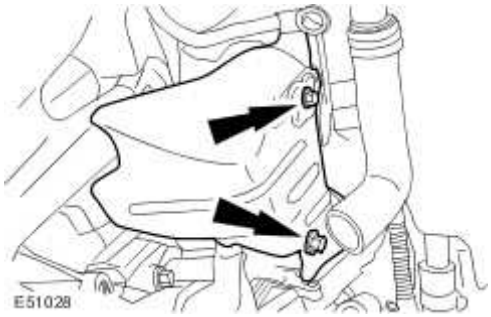

5 . **NOTE:**

New exhaust manifold retaining studs must be fitted if the old studs are removed.

Remove the exhaust manifold.

- Remove and discard the retaining nuts.

6 . Remove and discard the exhaust manifold gasket.

Installation

1 . **CAUTION: Ensure the exhaust manifold and gasket are correctly aligned to the cylinder head and studs.**

NOTE:

New exhaust manifold retaining studs must be fitted if the old studs are removed.

To install, reverse the removal procedure.

- Install a new exhaust manifold gasket.
- Install new exhaust manifold retaining nuts.
- Tighten to 23 Nm.

www.JagDocs.com

2 . Tighten to 10 Nm.

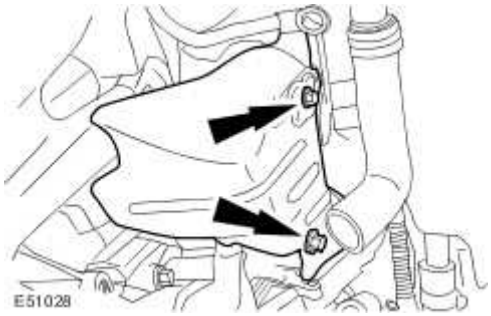

3 . Tighten to 10 Nm.

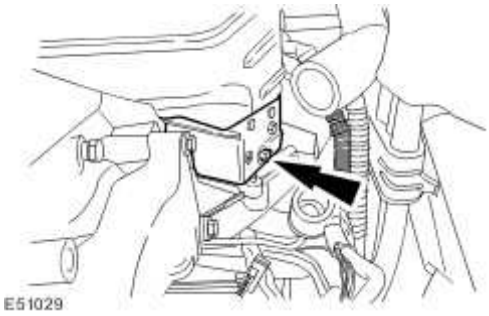

Flexplate (12.53.13)

Removal

1 . Remove the transmission.
For additional information, refer to

2 . **NOTE:**

Prevent the flexplate from rotating.

Remove the flexplate.

Installation

1 . **NOTE:**

Make sure the crankshaft and flexplate mating faces are clean before installation.

NOTE:

The flexplate will only locate in one position.

NOTE:

Install, but do not tighten, the flexplate retaining bolts.

Install the flexplate.

- Prevent the flexplate from rotating.

www.JagDocs.com

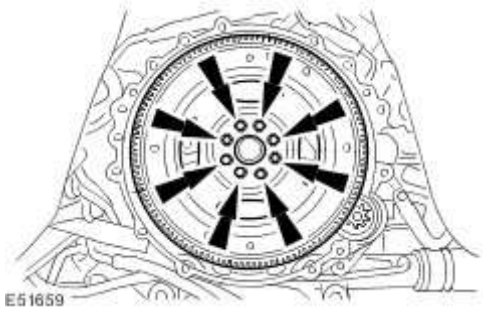

2 . **CAUTION: Tighten the flexplate securing bolts in three stages.**

Tighten the flexplate securing bolts.

- Stage 1: Tighten to 50 Nm.
- Stage 2: Tighten to 45 degrees.
- Stage 3: Tighten to 45 degrees.

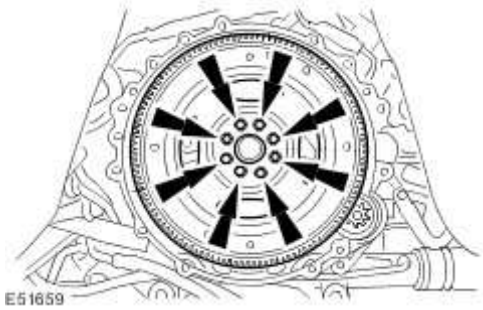

3 . Install the transmission.
For additional information, refer to

Oil Filter Element (12.60.02)

Special Service Tools

Remover - oil filter
303-1128

Removal

1 . Remove the oil filler cap.

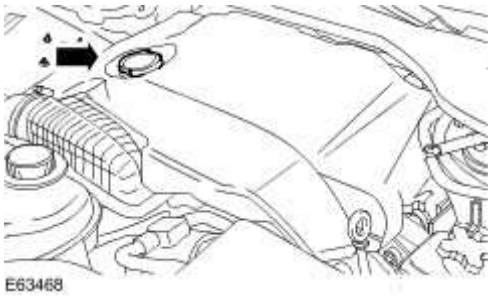

2 . Remove the engine cover.

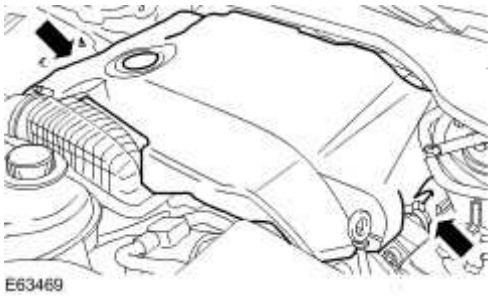

3 . Install the engine oil filler cap to prevent foreign material entering the valve cover.

4 **NOTE:**
.

Remove and discard the O-ring seal.

Remove the oil filter element housing.

www.JagDocs.com

- Rotate the oil filter element housing five complete turns counter-clockwise.
- Allow the engine oil to drain from the oil filter element housing for two minutes.
- Remove the oil filter element housing.

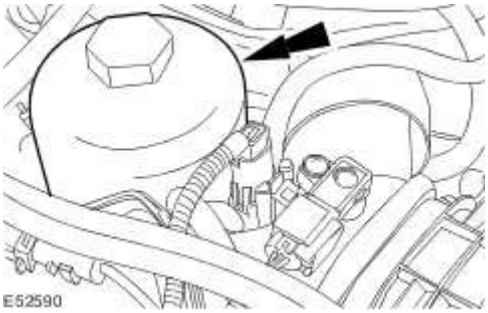

5 . Using the special tool, remove the oil filter element.

Installation

1 . Install the oil filter element.

2 . **NOTE:**

Install a new O-ring seal.

Install the oil filter element housing.

Tighten to 25 Nm.

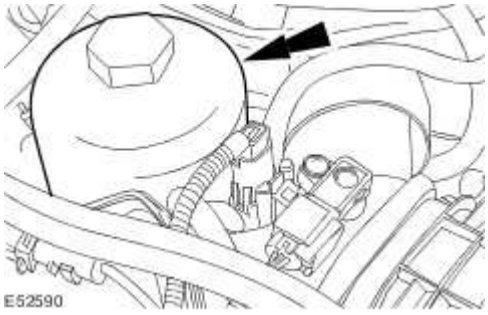

3 . Remove the engine oil filler cap.

4 . Install the engine cover.

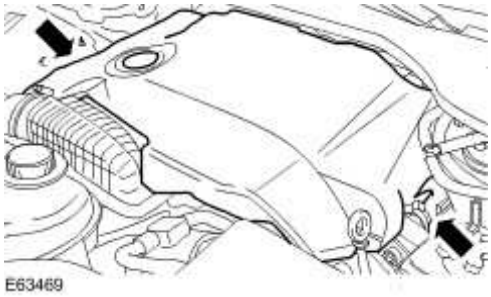

5 . Install the oil filler cap.

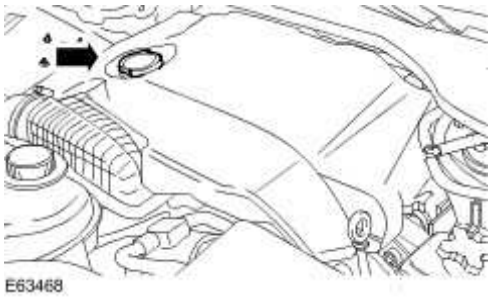

www.JagDocs.com

6 . Check and top up the engine oil.

7 . Run the engine.

8 . Check and if necessary top up the engine oil.

Oil Pan (12.60.44)

Special Service Tools

Engine Lifting Bracket
303-1129

Engine Support Bracket
303-021

Removal

1 . Remove the oil filler cap.

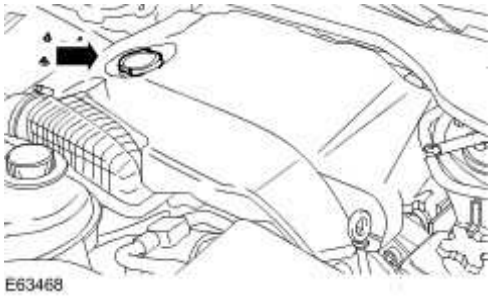

2 . Remove the engine cover.

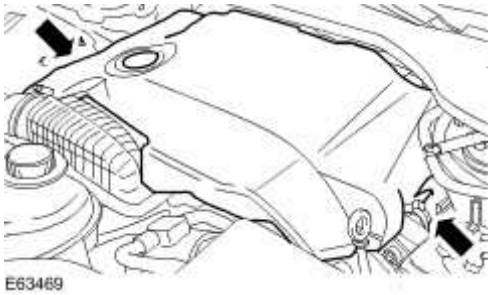

3 . Install the engine oil filler cap to prevent foreign material entering the valve cover.

www.JagDocs.com

4 . Install the engine lifting bracket.

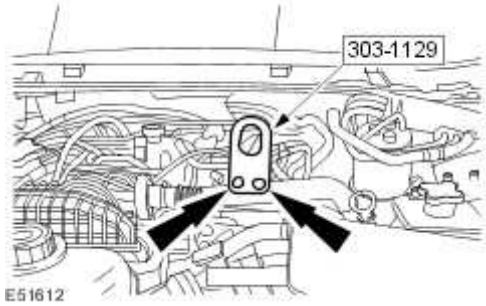

5 . Install the engine support bracket.

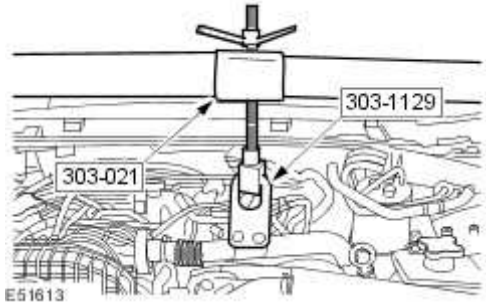

6 . Remove the air deflector.
For additional information, refer to Air Deflector (76.11.41)

7 . Drain the engine oil.

- Place suitable container under the vehicle.
- Remove the drain plug and drain the engine oil.

8 . Make sure the alignment mark on the steering gear pinion seal protection cover is central to the steering gear pinion casting.

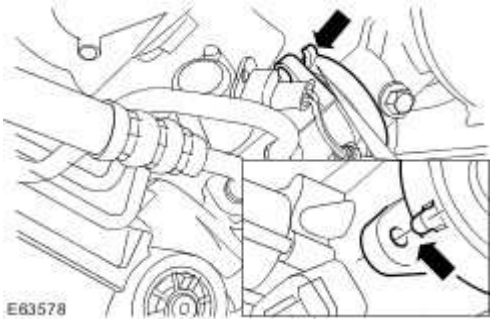

9 . Disconnect the power steering control valve actuator electrical connector.

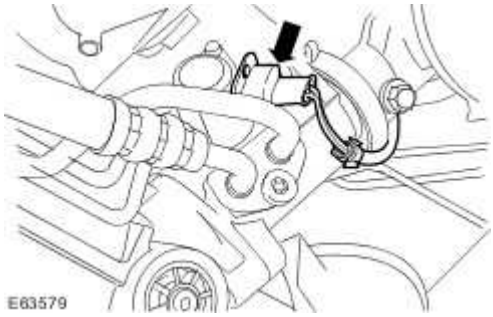

10 . Detach the lower steering column.

- Remove the steering gear shaft pinch bolt.

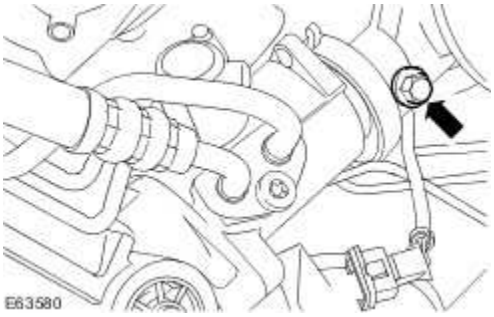

11 . Detach the steering gear.

- Remove the steering gear retaining bolts.

www.JagDocs.com

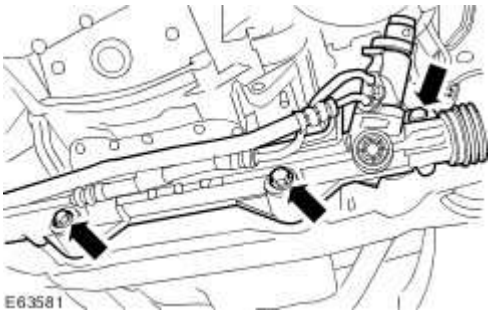

12 . Using a suitable piece of string secure the steering gear.

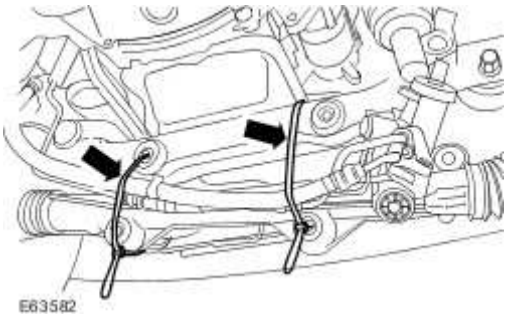

13 . Remove the generator cooling duct (if equipped).

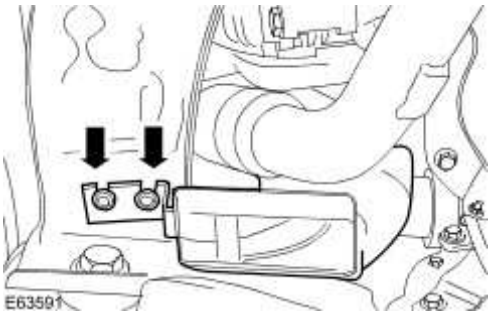

14 . Undo the right-hand turbocharger outlet tube securing clips.

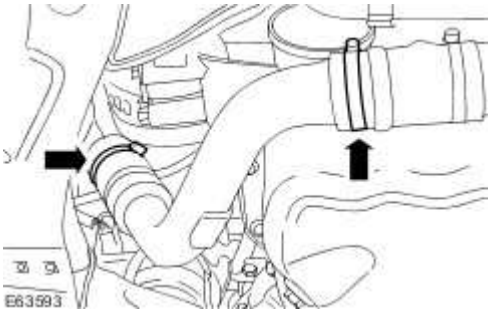

15 . Remove the right-hand turbocharger outlet tube.

- Remove the retaining bolt.

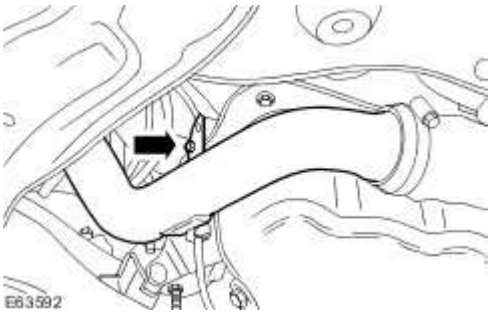

16 . Remove the left-hand engine mount retaining nut.

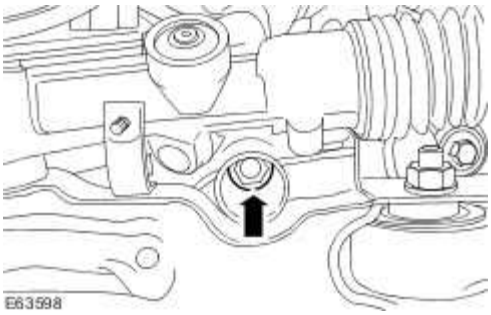

17 . Lower the vehicle.

18 . Using special tool raise the left-hand side of the engine.

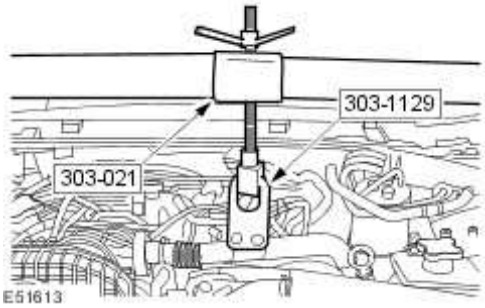

19 . Raise the vehicle.

www.JagDocs.com

20 . Disconnect the oil temperature sensor electrical connector.

Detach the oil temperature sensor wiring harness from the oil pan.

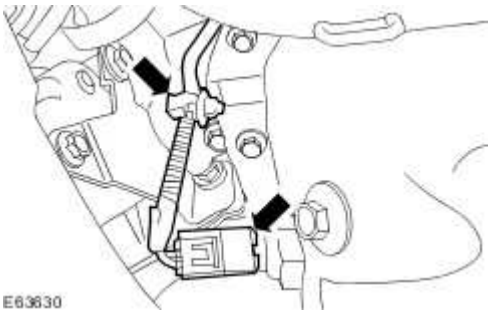

21 . Remove the oil pan retaining bolts.

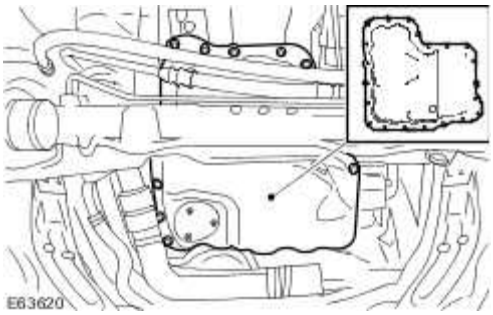

22 . Remove the oil strainer retaining bolt.

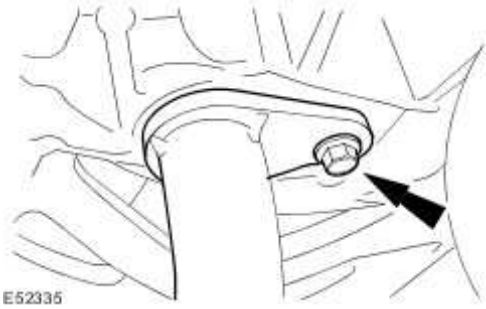

23 . Reposition the oil strainer.

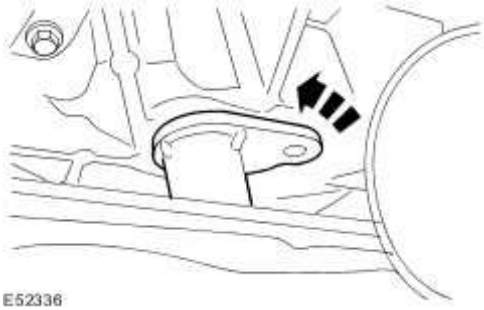

24 . Remove the oil pan.

- Remove and discard the gasket.

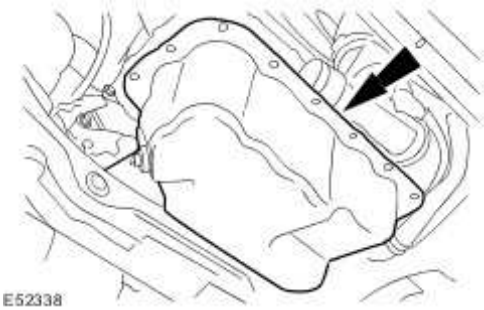

25 . Remove the oil strainer.

- Remove and discard the O-ring seal.

Installation

1 . Install the oil strainer.

www.JagDocs.com

- Install a new O-ring seal.

2 . Loosely install the oil pan.

- Install a new oil pan gasket.

3 . Reposition the oil strainer.

4 . Install the oil strainer retaining bolt.

- Tighten to 10 Nm.

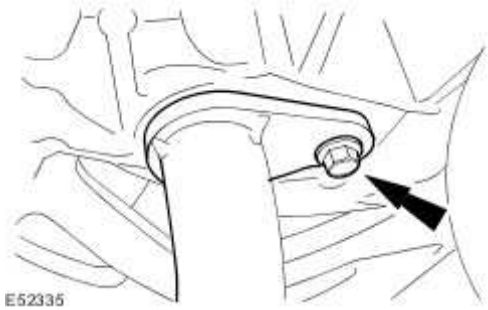

5 **NOTE:**

.

A new oil pan is supplied with the drain plug installed. Check that the drain plug is tightened to 25 Nm.

Install the oil pan.

- Tighten to 10 Nm.

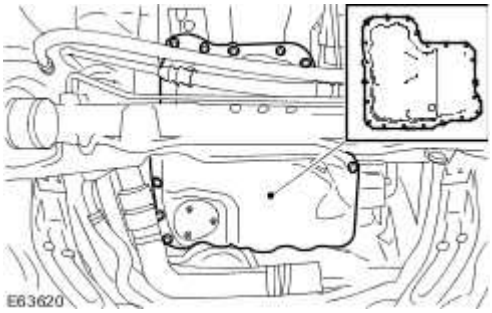

6 . Connect the oil temperature sensor electrical connector.

- Attach the oil temperature sensor wiring harness to the oil pan.

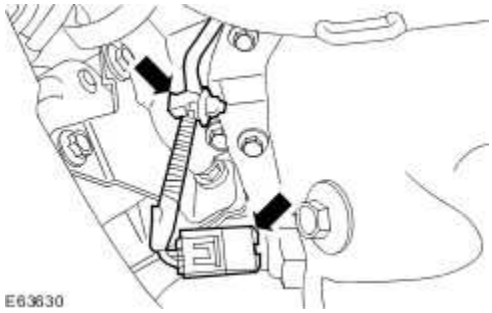

www.JagDocs.com

7 . Lower the vehicle.

8 . Using special tool lower the left-hand side of the engine.

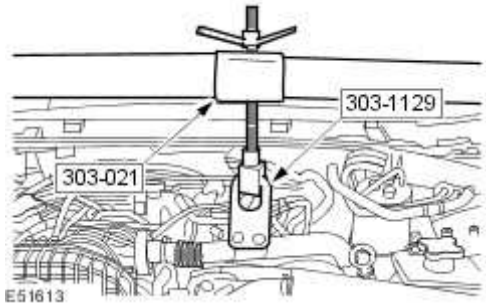

9 . Raise the vehicle.

10 . Install the left-hand engine mounting retaining nut.

Tighten to 63 Nm.

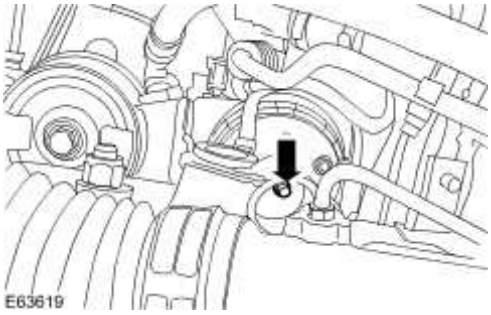

11 . Install the right-hand turbocharger outlet tube retaining bolt.

Tighten to 10 Nm.

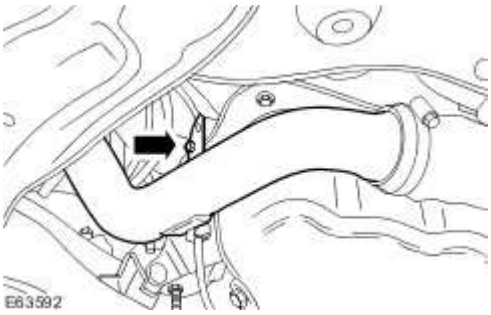

12 . Install the right-hand turbocharger outlet tube.

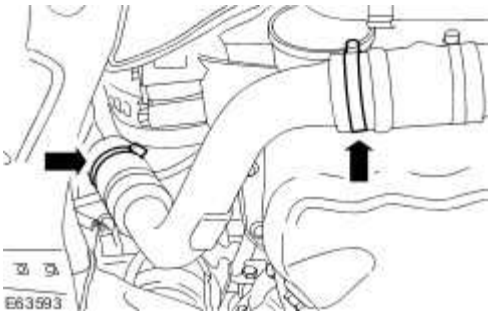

13 . Install the generator cooling duct (if equipped).

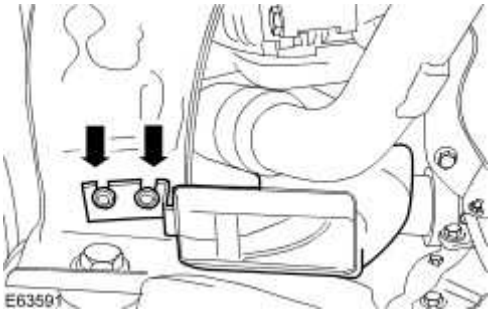

14 . Remove the piece of string securing the steering gear.

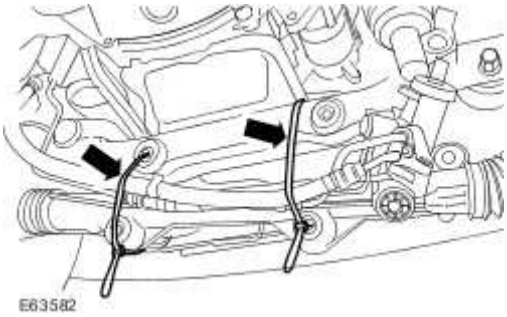

www.JagDocs.com

15 . Install the steering gear.

Tighten to 100 Nm.

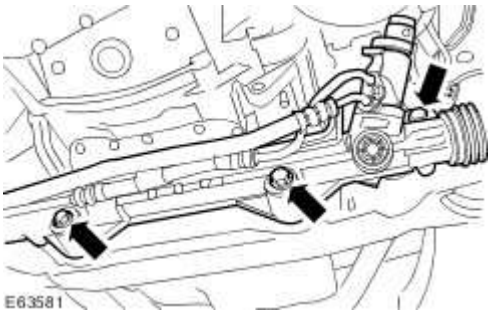

16 . Install the steering gear shaft pinch bolt.

Tighten to 35 Nm.

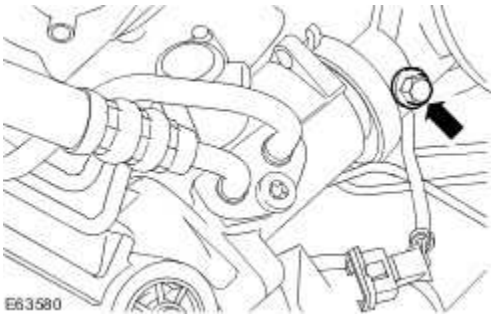

17 . Connect the power steering control valve actuator electrical connector.

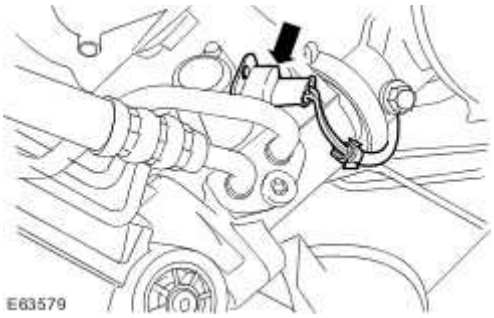

18 . Install the air deflector.
For additional information, refer to Air Deflector (76.11.41)

19 . Lower the vehicle.

20 . Remove the engine support bracket.

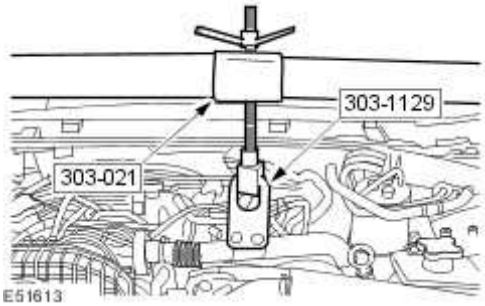

21 . Remove the engine lifting bracket.

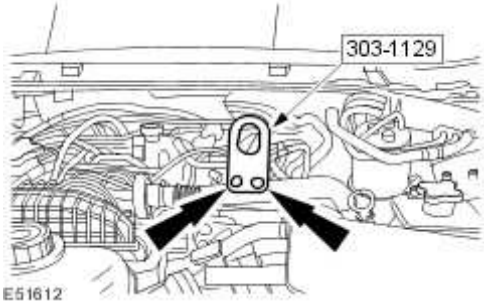

22 . Remove the engine oil filler cap.

23 . Install the engine cover.

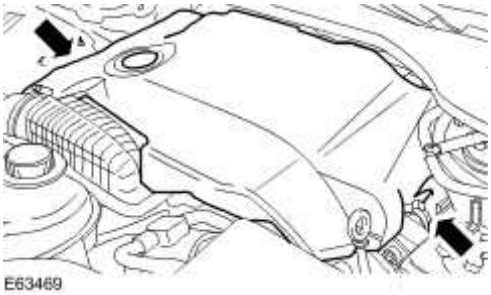

24 . Check and top-up the engine oil.

www.JagDocs.com

25 . Install the oil filler cap.

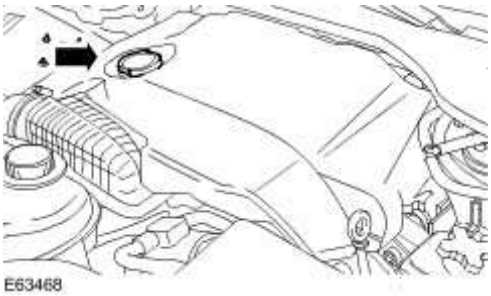

E63468

Oil Pan Extension (12.60.48)

Removal

1 . Remove the transmission.
For additional information, refer to Transmission - 2.7L Diesel (44.20.01)

2 . Remove the oil pan.
For additional information, refer to Oil Pan (12.60.44)

3 . Remove the left-hand turbocharger outlet pipe retaining bolt.

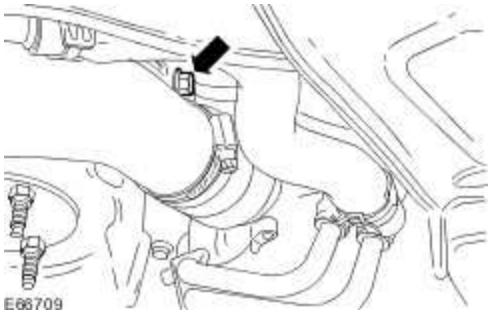

4 . Disconnect the left-hand turbocharger outlet pipe.

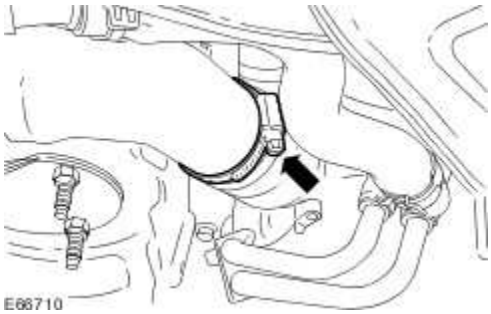

5 . Remove the left-hand turbocharger outlet pipe from the turbocharger.

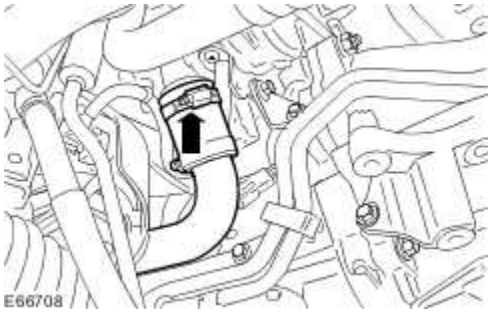

www.JagDocs.com

6 . Detach the starter motor positive cable.

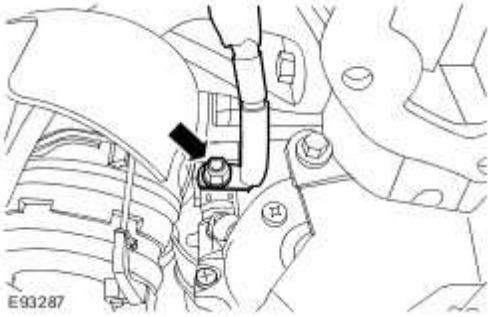

7 . Detach the starter motor solenoid harness.

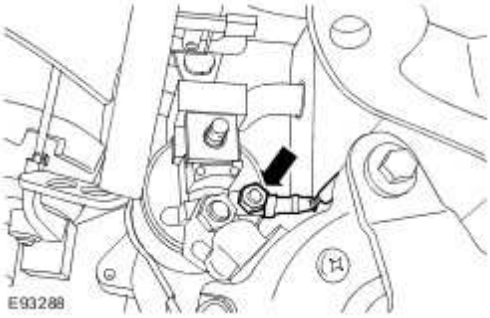

8 . Reposition the starter motor positive cable.

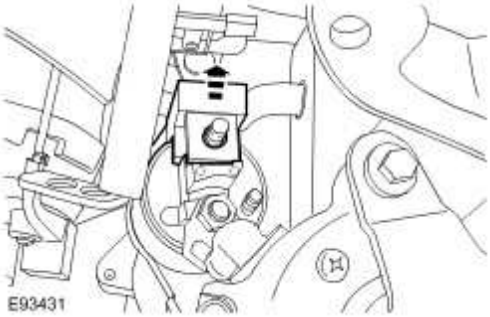

9 . Remove the starter motor.

10 . Detach the oil temperature sensor harness from the cylinder block.

11 . Remove the air conditioning (A/C) compressor lower retaining bolt.

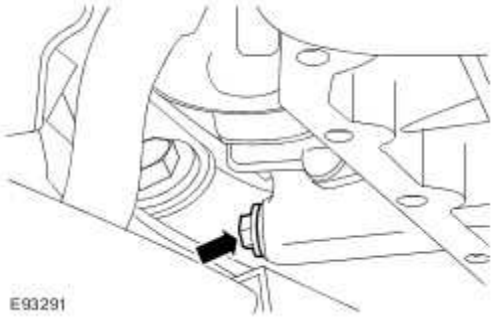

12 . Remove the accessory drive belt tensioner bracket retaining bolt.

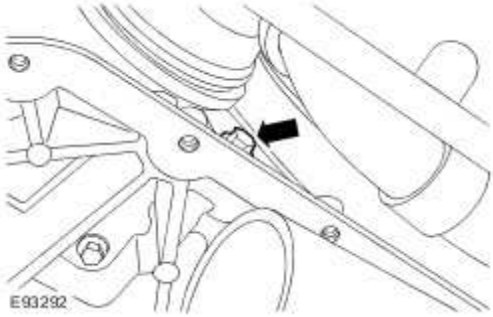

www.JagDocs.com

13 . Remove the charge air cooler pipe retaining bolt.

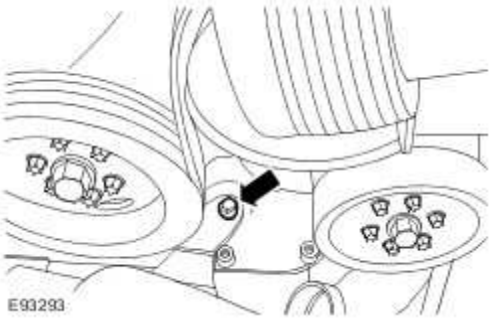

14 . Remove the oil pan extension.

Remove and discard the gasket.

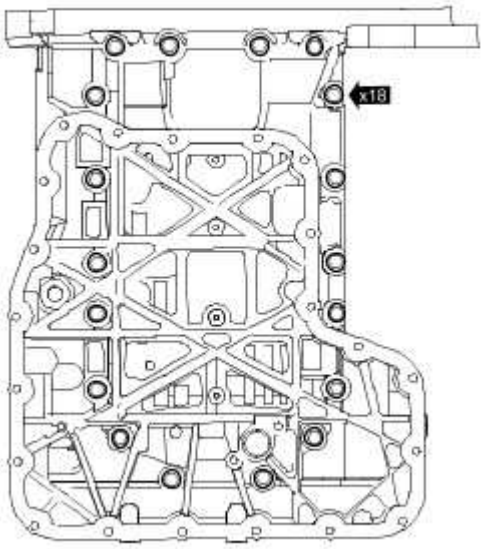

E93419

Installation

NOTE:

Make sure the oil pan extension mating faces are clean and dry.

NOTE:

Install a new oil pan extension gasket.

1 . Apply a 8 mm bead of sealant to the cylinder block in the areas shown.
For additional information, refer to Specifications

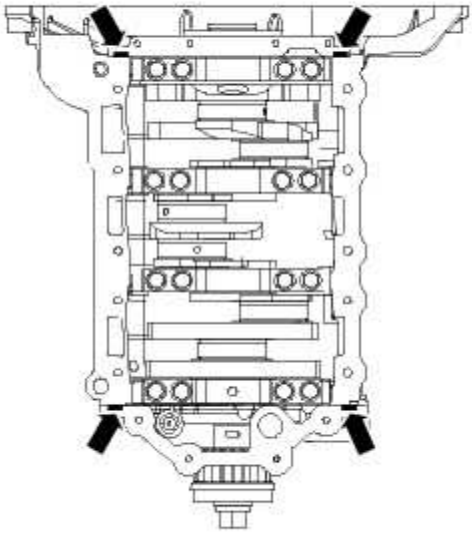

E93678

2 . Loosely install all oil pan extension retaining bolts.

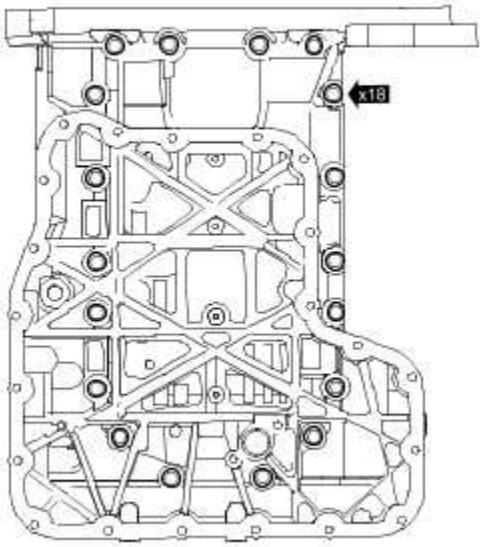

E93419

www.JagDocs.com

3 . **NOTE:**

The retaining bolts must be tightened within twenty minutes of applying the sealant.

Tighten the oil pan extension retaining bolts in the sequence shown.

1) Tighten bolts A to 10 Nm (7 lb.ft). Tighten bolts B to 4 Nm (2 lb.ft).

2) Tighten bolts A to 24 Nm (18 lb.ft). Tighten bolts B to 10 Nm (7 lb.ft).

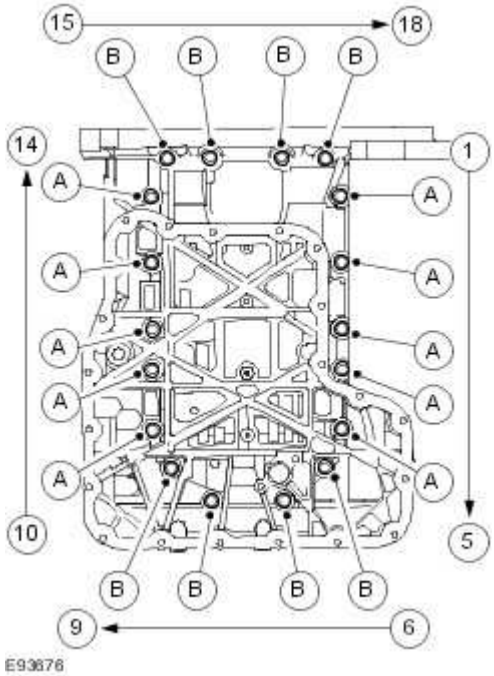

4 . Install the charge air cooler pipe retaining bolt.

Tighten to 10 Nm (7 lb.ft).

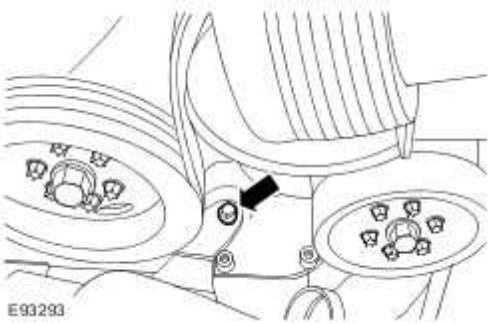

5 . Install the accessory drive belt tensioner bracket retaining bolt.

- Tighten to 24 Nm (18 lb.ft).

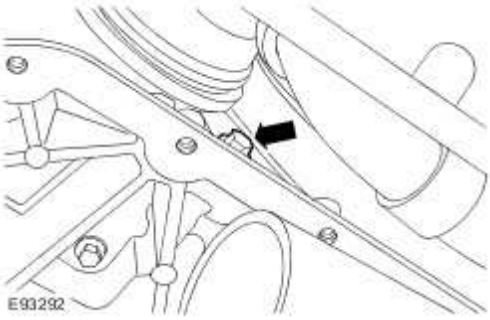

6 . Install the A/C compressor lower retaining bolt.

- Tighten to 24 Nm (18 lb.ft).

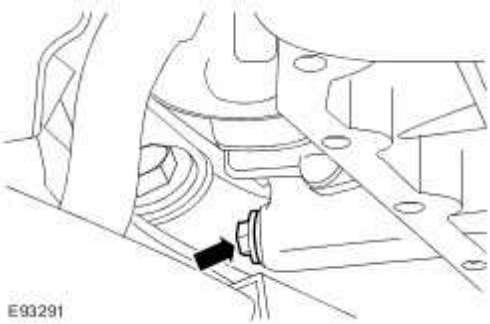

7 . Attach the oil temperature sensor harness to the cylinder block.

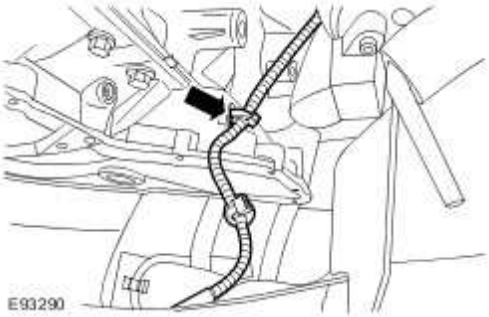

8 . Install the starter motor.

www.JagDocs.com

Tighten to 24 Nm (18 lb.ft).

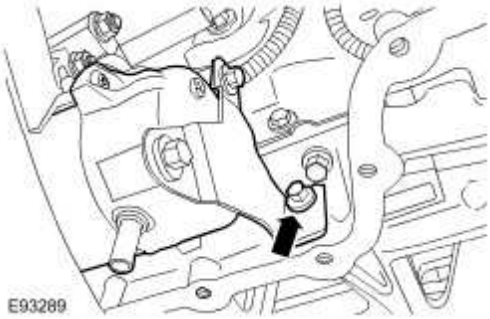

9 . Reposition the starter motor positive cable.

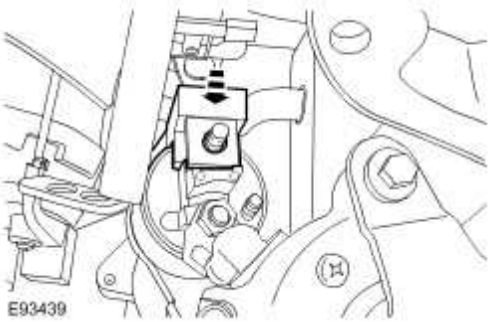

10 . Attach the starter motor solenoid harness.

Tighten to 7 Nm (5 lb.ft).

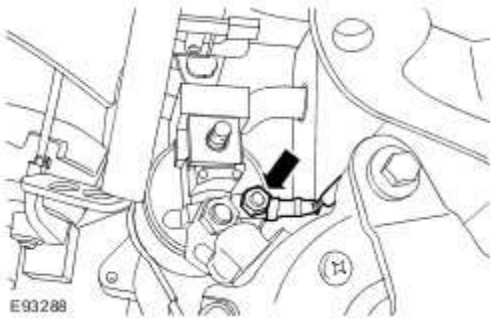

11 . Attach the starter motor positive cable.

Tighten to 10 Nm (7 lb.ft).

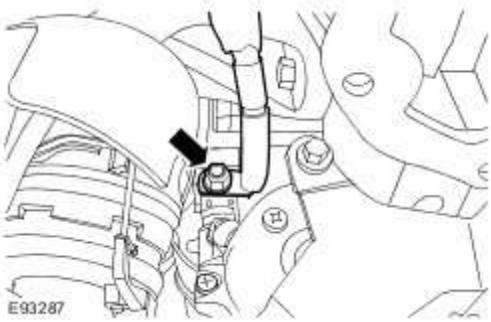

12 . Install the left-hand turbocharger outlet pipe to the turbocharger.

- Tighten to 5 Nm (4 lb.ft).

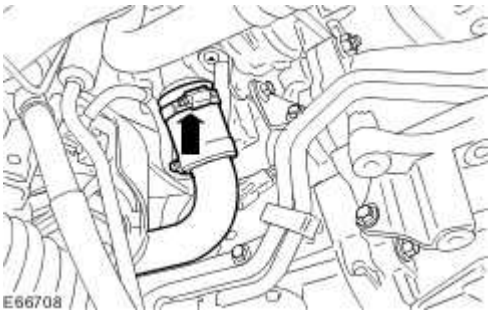

13 . Connect the left-hand turbocharger outlet pipe.

- Tighten to 5 Nm (4 lb.ft).

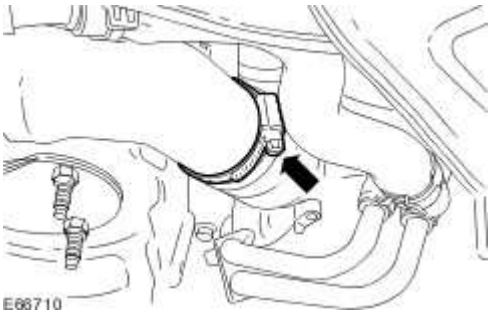

14 . Install the left-hand turbocharger outlet pipe retaining bolt.

www.JagDocs.com

Tighten to 24 Nm (18 lb.ft).

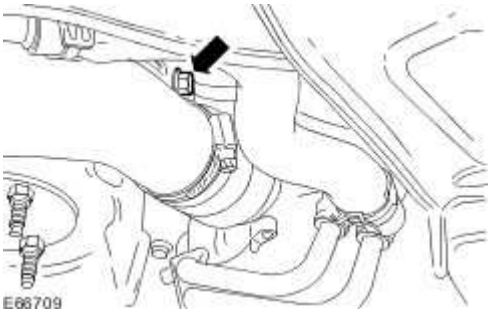

15 . Install the oil pan.
For additional information, refer to Oil Pan (12.60.44)

16 . Install the transmission.
For additional information, refer to Transmission - 2.7L Diesel (44.20.01)

Oil Pump (12.60.26)

Removal

1 . Disconnect the battery ground cable.
For additional information, refer to Battery Disconnect and Connect

2 . Remove the crankshaft front oil seal.
For additional information, refer to Crankshaft Front Seal (12.21.14)

3 . **WARNING: Do not work on or under a vehicle supported only by a jack. Always support the vehicle on safety stands.**

Raise and support the vehicle.

4 . Remove the oil pan extension.
For additional information, refer to Oil Pan Extension (12.60.48)

5 . Remove the accessory drive belt tensioner.

Remove the bolt.

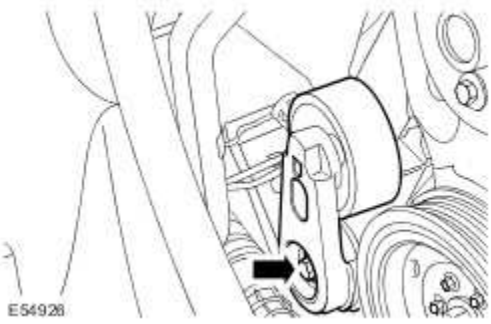

6 . Release the right hand turbocharger outlet pipe from the turbocharger.

www.JagDocs.com

- Release the clip.

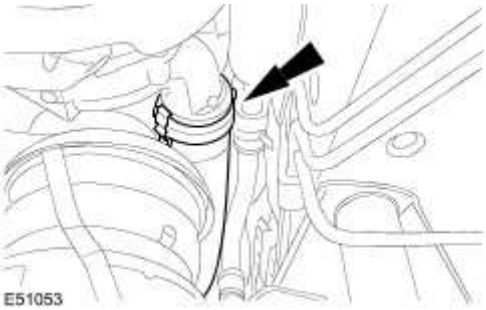

7 . Remove the right hand turbocharger outlet pipe.

- Remove the bolt.
- Release the clip.

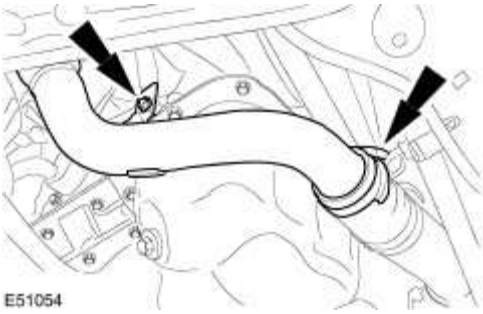

8 . Disconnect the generator electrical connector.

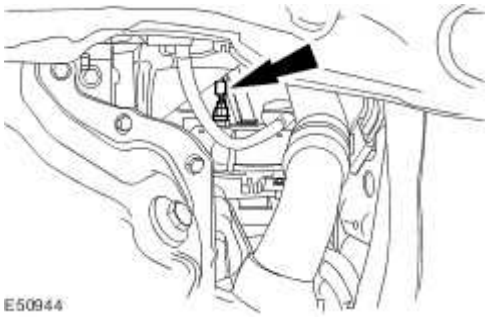

9 . Disconnect the battery positive cable from the generator.

- Reposition the battery positive cable connector cover.

- Remove the nut.

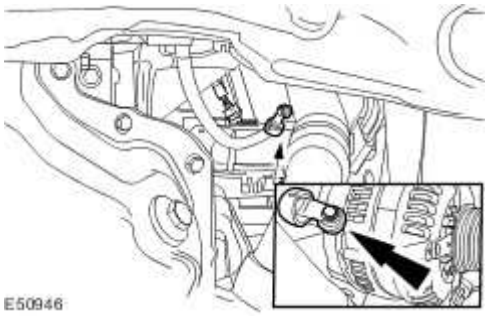

10 . Remove the 2 generator lower bolts.

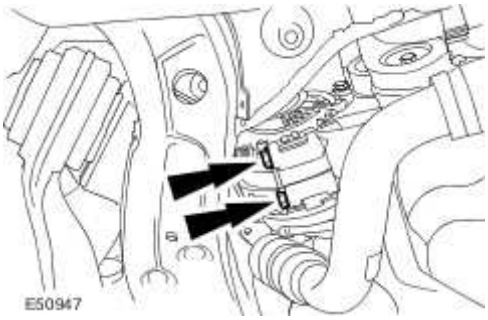

11 . Release the generator.

- Remove the generator upper bolt.
- Reposition the generator.
- Using a suitable tie strap, secure the generator to the front subframe.

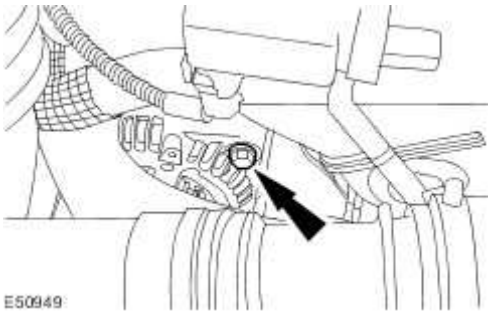

www.JagDocs.com

12 **NOTE:**

.

The generator mounting bracket upper rear bolt cannot be fully removed until the generator mounting bracket has been detached from the engine.

Remove the generator mounting bracket.

Remove the 4 bolts.

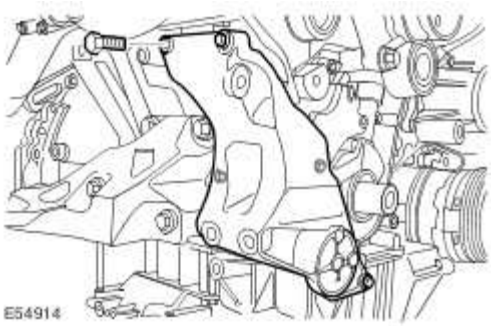

13 . Remove the timing belt idler pulley.

Remove the bolt.

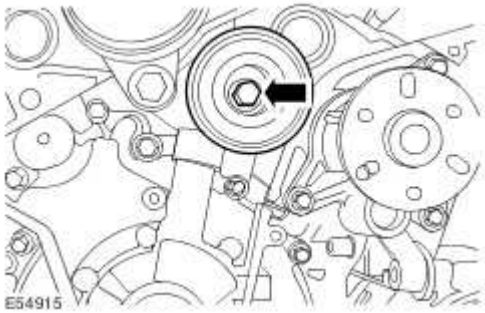

14 . Remove the 2 timing belt cover sealing strips.

E118536

15 . Remove the oil pump.

- Remove the 10 bolts.
- Remove and discard the gasket.

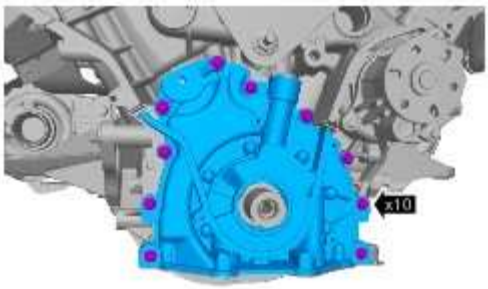

E118537

www.JagDocs.com

Installation

1 . Prime the oil pump.

1) Fill the orifice shown with 20 ml of engine oil.
For additional information, refer to Specifications

2) Rotate the oil pump drive 2 complete turns.

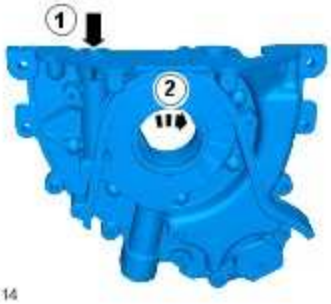

E123914

2 . **CAUTION: Make sure that the mating faces are clean and free of foreign material.**

CAUTION: Make sure the gasket is installed correctly.

Install the oil pump.

- Clean the component mating faces.
- Install a new gasket.
- Lightly tighten the bolts in the positions shown.

E123911

3 . **CAUTION: Make sure the base of the oil pump is aligned within 0.2 mm of the base**

of the engine block. Failure to follow this instruction may result in damage to the vehicle.

NOTE:

Vehicles fitted with oil pumps without dowels.

Check the oil pump to engine block alignment.

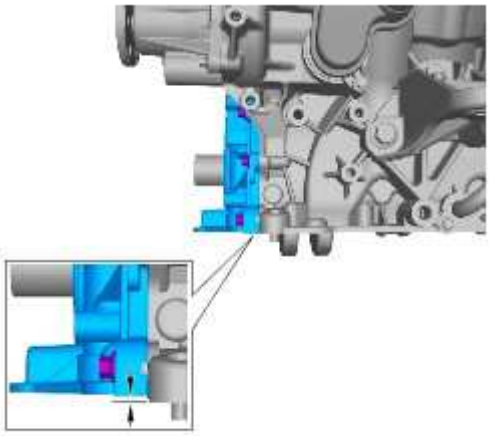

E123913

4 . **NOTE:**

All vehicles.

Secure the oil pump.

- Tighten the 10 bolts to 10 Nm in the sequence shown.

www.JagDocs.com

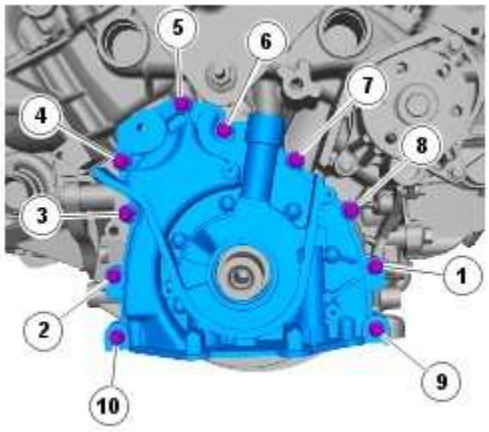

E123912

5 . Install the timing belt cover sealing strips.

6 . Install the timing belt idler pulley.

- Tighten the bolt to 45 Nm.

7 **NOTE:**

.

The generator mounting bracket upper rear bolt must be installed to the generator mounting bracket before the generator bracket is installed to the engine.

Install the generator mounting bracket.

- Loosely install the 4 bolts.
- Tighten the 4 bolts in the sequence shown to 23 Nm.

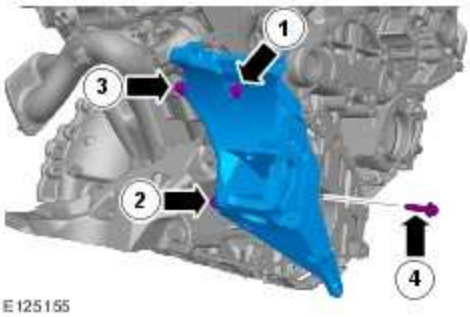

E125155

8 . Install the generator.

- Tighten the 3 bolts to 47 Nm.

9 . Connect the generator electrical connections.

- Attach the battery positve cable and tighten the nut to 12 Nm.
- Reposition the battery positive cable connector cover.
- Connect the electrical connection.

10 . Install the RH turbocharger outlet pipe.

- Secure the 2 clips.

11 . Install the accessory drive belt tensioner.

- Tighten the bolt to 47 Nm.

12 . Install the oil pan extension.
For additional information, refer to Oil Pan Extension (12.60.48)

13 . Install the crankshaft front oil seal.
For additional information, refer to Oil Pan Extension (12.60.48)

14 . Connect the battery ground cable.
For additional information, refer to Battery Disconnect and Connect

www.JagDocs.com

Timing Belt

Special Service Tools

Check pin - camshaft pulleys
303-1132

Timing pin - camshaft pulleys
303-1126

Timing pin - flexplate automatic transmission
303-1117

Removal

1 . Disconnect the battery ground cable.
For additional information, refer to Battery Disconnect and Connect

2 . Remove the timing belt cover.
For additional information, refer to Timing Belt Cover

3 . Remove the generator cooling duct (if equipped).

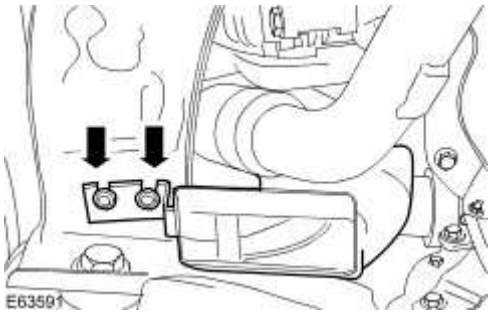

4 . Remove the starter motor retaining bracket.

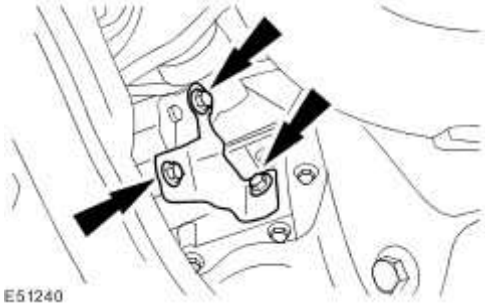

5 . Detach the starter motor positive cable.

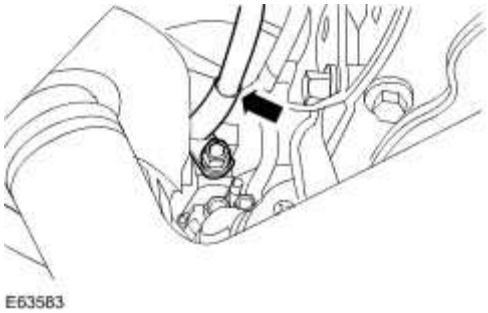

6 . Reposition the starter motor positive cable.

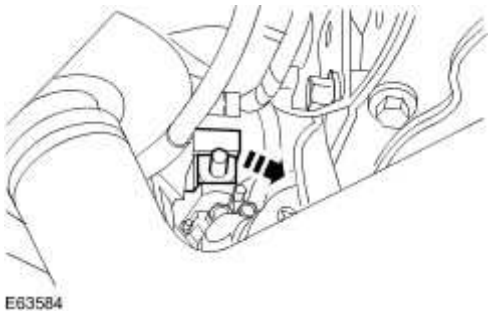

www.JagDocs.com

7 . Detach the starter motor solenoid harness.

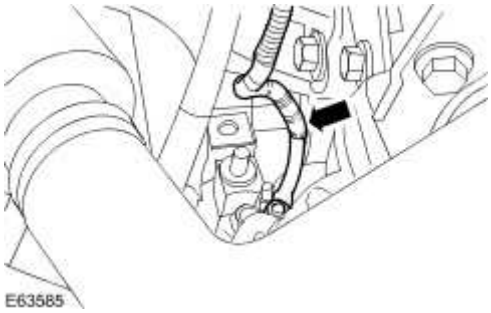

8 . **NOTE:**

Steering shaft shown removed for clarity.

Detach and reposition the starter motor.

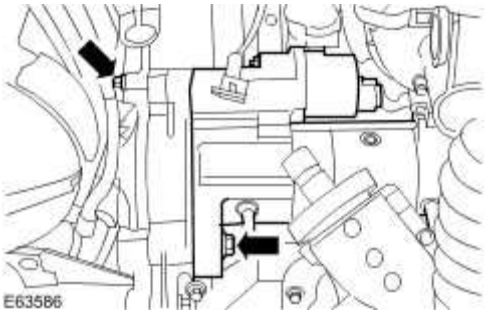

9 . **NOTE:**

Remove the locking pin access grommet.

Align the timing pin hole.

Rotate the crankshaft clockwise.

10 . Using the special tool, lock the flexplate.

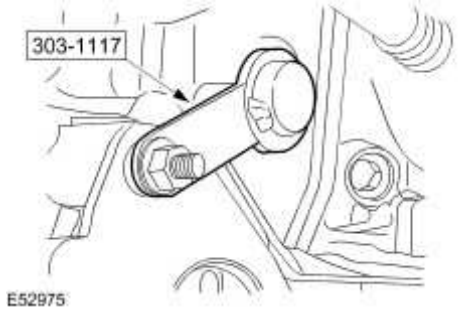

11 . Lower the vehicle.

12 . **CAUTION: If the camshafts are not aligned to the correct position, remove the special tool (303-1117) and rotate the crankshaft 180 degrees.**

NOTE:

Check that the left-hand camshaft alignment hole is at the 7 o'clock position and that the right-hand camshaft alignment hole is at the 5 o'clock position.

NOTE:

Engine shown removed for clarity.

Using the special tools, lock the camshaft pulleys.

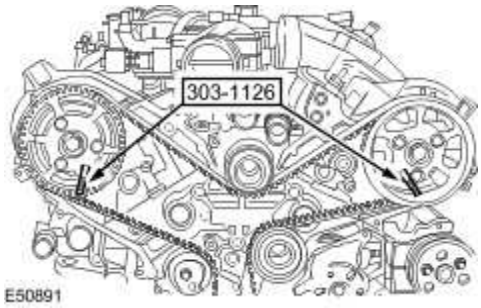

13 . Remove the accessory drive belt pulley and bracket assembly.

www.JagDocs.com

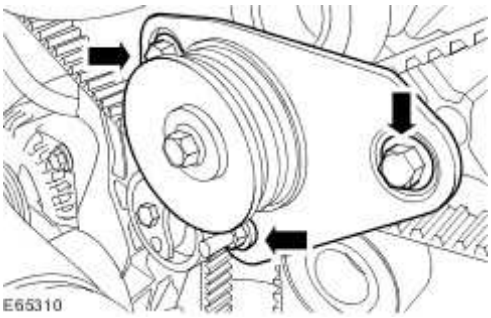

14 . **CAUTION: The camshaft pulley hub must be counter held while undoing the camshaft pulley hub retaining bolts. Failure to follow this instruction may result in damage to the special tools and the engine.**

NOTE:

Engine shown removed for clarity.

Undo but do not remove the camshaft pulley securing bolts.

1) Counter hold the camshaft pulley hub.

2) Undo but do not remove the camshaft pulley retaining bolts.

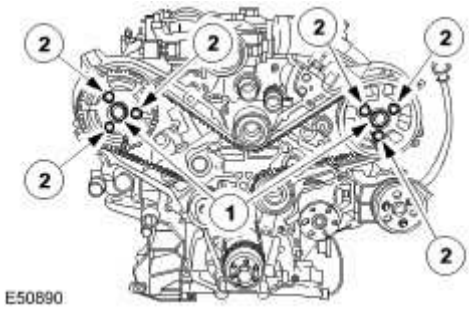

15 . Remove and discard the timing belt tensioner.

Release the timing belt tensioner.

16 . **NOTE:**

Engine shown removed for clarity.

Remove and discard the timing belt.

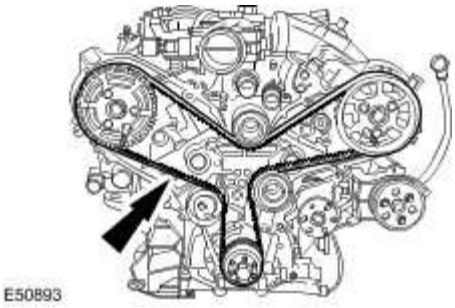

Installation

1 . Rotate both camshaft pulleys fully clockwise.

2 . Install a new timing belt tensioner.

- Do not fully tighten the retaining bolt.

www.JagDocs.com

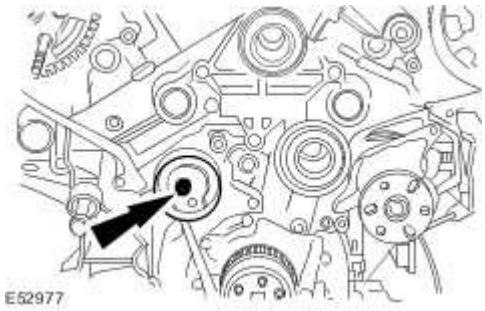

3. **CAUTION: Make sure that the timing belt slack is at the timing belt tensioner. Failure to follow this instruction may result in damage to the engine.**

NOTE:

Engine shown removed for clarity.

Install the timing belt in the sequence shown.

1) Install the timing belt to the crankshaft pulley.

2) Attach the timing belt to the idler pulley.

3) Attach the timing belt to the left-hand camshaft pulley.

4) Attach the timing belt to the idler pulley.

5) Attach the timing belt to the right-hand camshaft pulley.

6) Attach the timing belt to the timing belt tensioner.

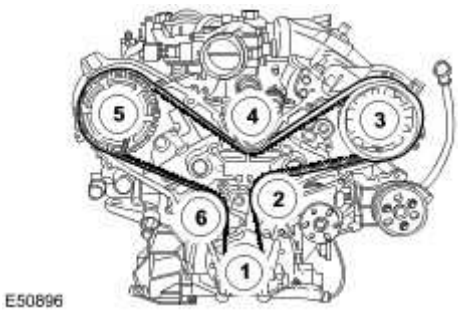

4. **CAUTION: Make sure the timing belt tensioner window is correctly aligned. Failure to follow this instruction may result in damage to the engine.**

Tension the timing belt.

1) Rotate the tensioner.

2) Make sure the tensioner window is aligned.

3) Tighten to 24 Nm.

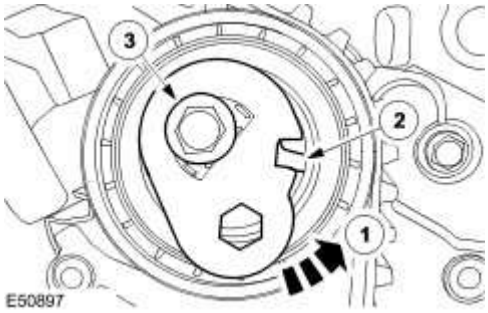

5. **CAUTION: The camshaft pulley hub must be counter held while tightening the camshaft pulley hub retaining bolts. Failure to follow this instruction may result in damage to the special tools and the engine.**

NOTE:

Engine shown removed for clarity.

Fully tighten the camshaft pulley retaining bolts.

1) Counter hold the camshaft pulley hub.

2) Tighten to 23 Nm.

www.JagDocs.com

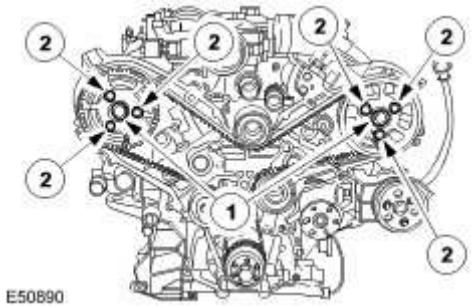

6 . Raise the vehicle.

7 . Remove the special tool.

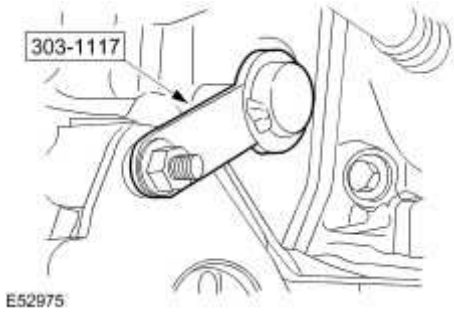

8 . Lower the vehicle.

9 . **NOTE:**

Engine shown removed for clarity.

Remove the special tools.

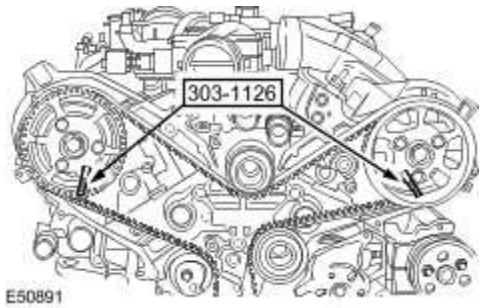

10 . **CAUTION: Do not rotate the crankshaft counter clockwise. Failure to follow this instruction may result in damage to the engine.**

Rotate the crankshaft clockwise two complete turns.

11 . Raise the vehicle.

12 . Using the special tool, lock the flexplate.

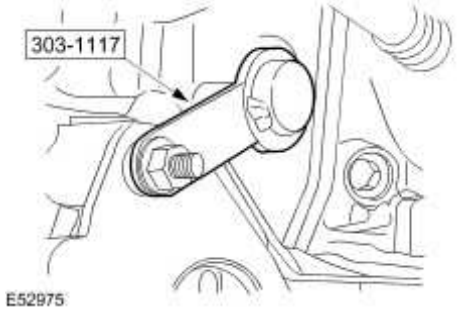

13 . Lower the vehicle.

14 . **CAUTION: If the camshafts are misaligned repeat the timing belt installation procedure. Failure to follow this instruction may result in damage to the engine.**

NOTE:

Engine shown removed for clarity.

Using the special tools, make sure the camshafts are aligned.

www.JagDocs.com

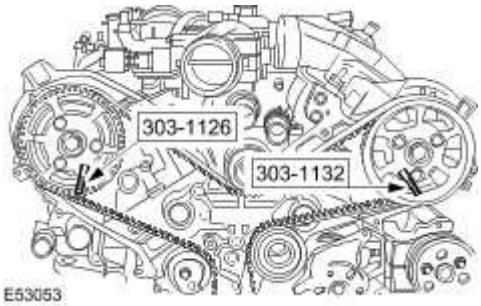

15 . **NOTE:**

Engine shown removed for clarity.

Remove the special tools.

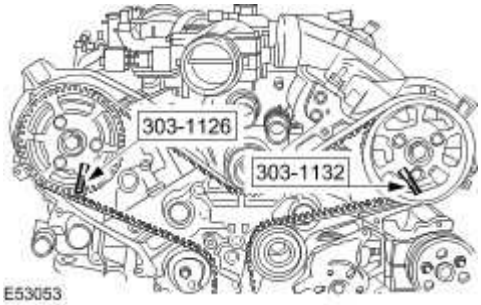

16 . Install the accessory drive belt pulley and bracket assembly.

Tighten to 80 Nm.

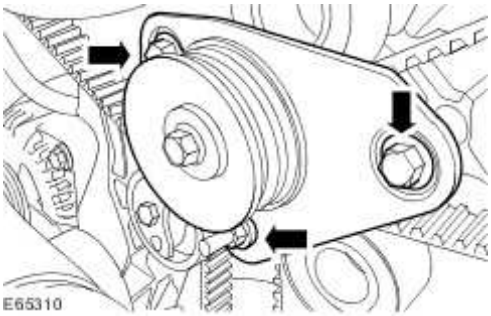

17 . Raise the vehicle.

18 . Remove the special tool.

- Install the grommet.

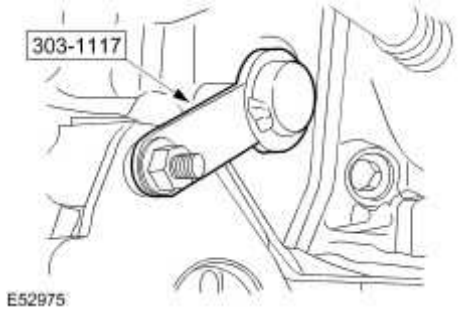

19 . **NOTE:**

Steering shaft shown removed for clarity.

Install the starter motor.

- Tighten to 48 Nm.

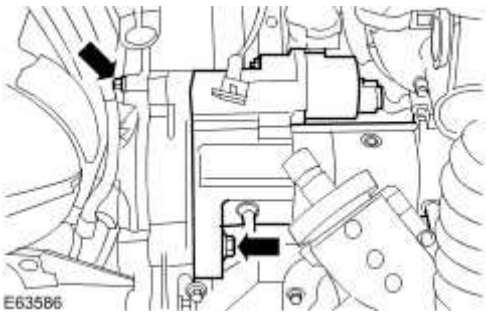

20 . Attach the starter motor solenoid harness.

- Tighten to 7 Nm.

www.JagDocs.com

www.JagDocs.com

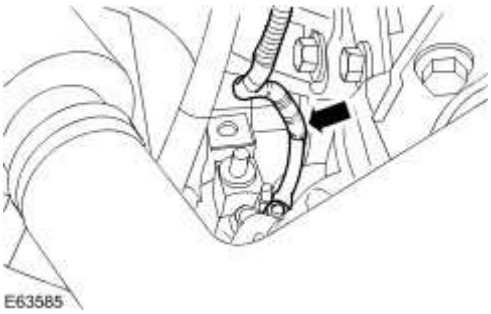

21 . Attach the starter motor positive cables.

- Tighten to 10 Nm.

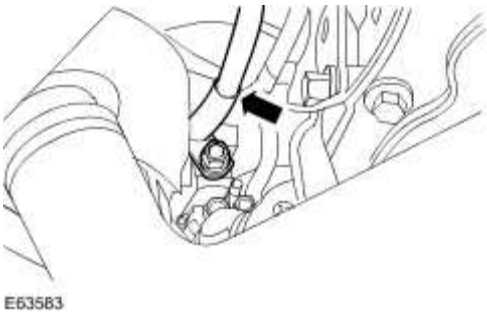

22 . Install the starter motor retaining bracket.

- Tighten to 23 Nm.

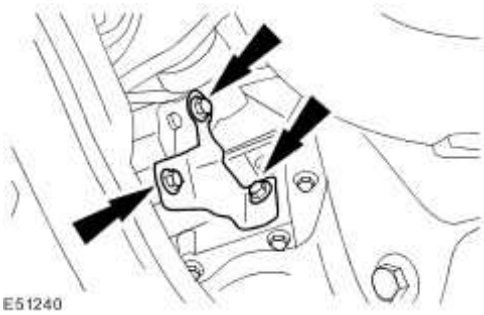

23 . Install the generator cooling duct (if equipped).

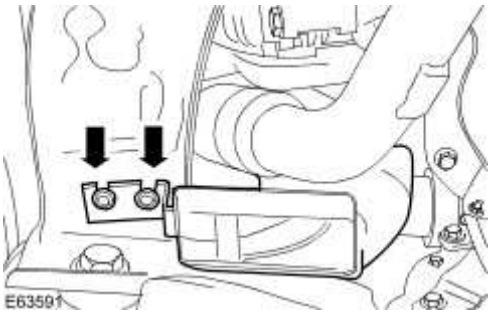

24 . Install the timing belt cover.
For additional information, refer to Timing Belt Cover

25 . Connect the battery ground cable.
For additional information, refer to Battery Connect (86.15.15)

www.JagDocs.com

Timing Belt Cover

Special Service Tools

Accessory belt detensioner
303-703

Removal

1 . Remove the air cleaner.
For additional information, refer to Air Cleaner (19.10.05)

2 . Remove the oil filler cap.

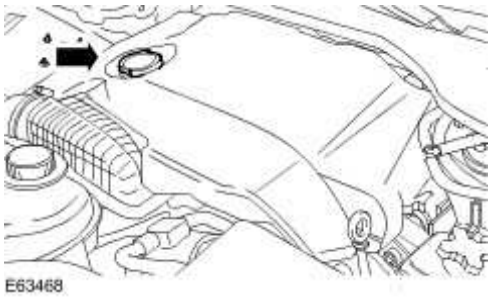

3 . Remove the engine cover.

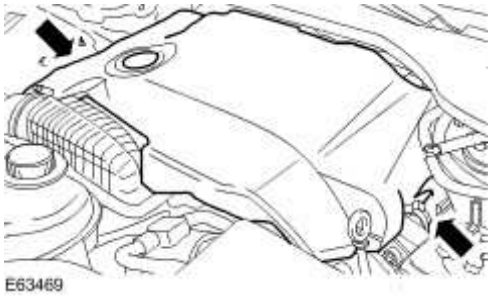

4 . Install the engine oil filler cap to prevent foreign material entering the valve cover.

5 . Remove the air deflector.

For additional information, refer to Air Deflector (76.11.41)

6 Detach the accessory drive belt.

.

1) Using the special tool, rotate the accessory drive belt tensioner counter clockwise.

2) Remove the accessory drive belt.

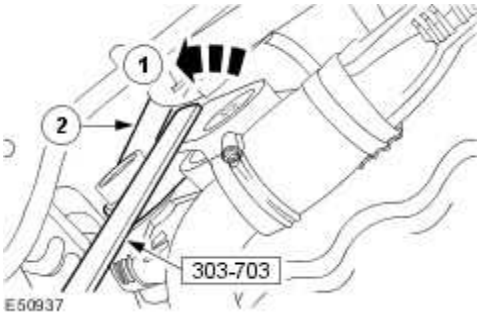

7 . Lower the vehicle.

8 . Detach the coolant hose.

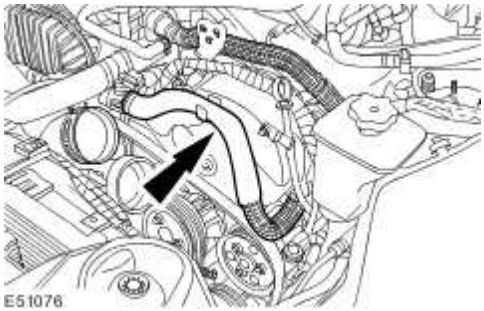

9 . Disconnect the coolant temperature sensor electrical connector.

www.JagDocs.com

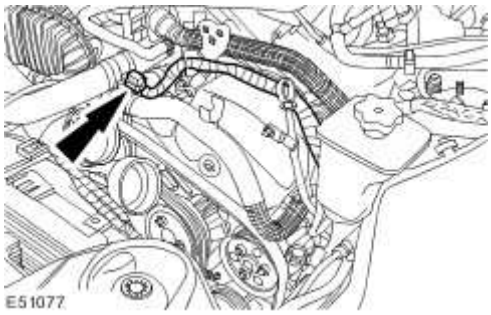

10 . Detach the coolant temperature sensor wiring harness.

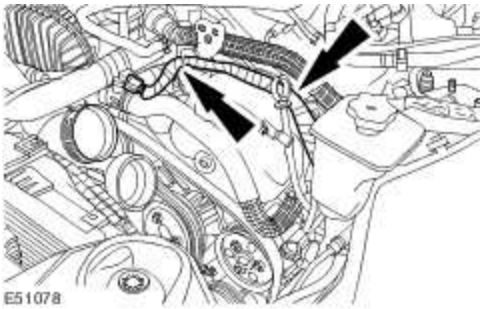

11 . Detach the exhaust gas recirculation (EGR) valve tube.

- Remove the retaining bolt.

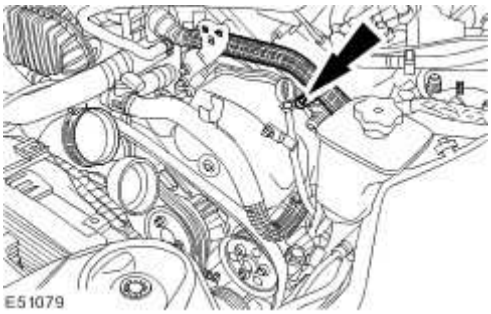

12 . Detach the oil level indicator tube.

- Remove the retaining bolt.

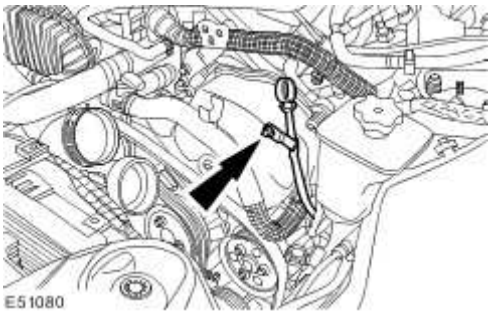

13 . Loosen the power steering pump retaining bolt.

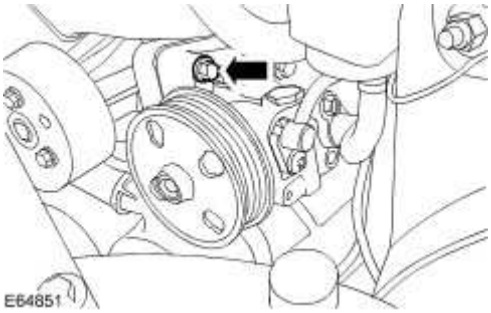

14 . Detach the wiring harness.

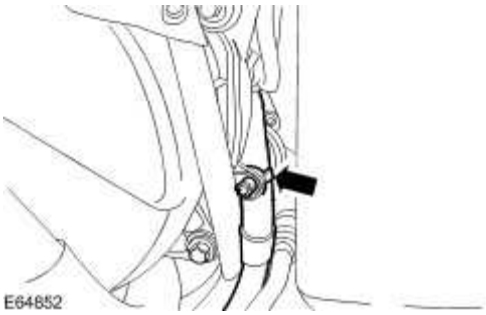

15 . Remove the left-hand timing cover.

- Remove and discard the gasket.

www.JagDocs.com

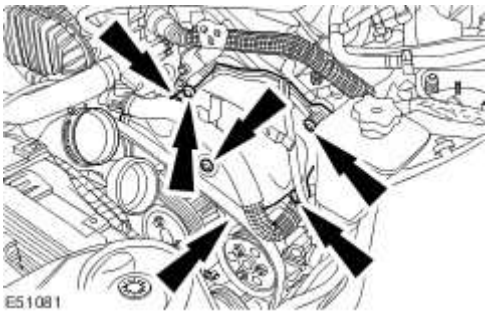

16 . Detach the coolant hose.

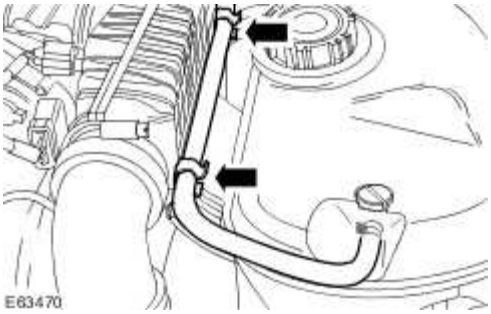

17 . Remove the retaining bolt.

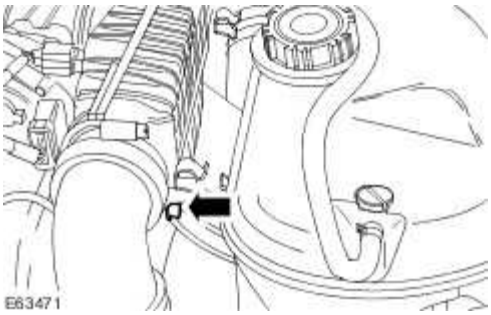

18 . Loosen the charge air cooler retaining clip.

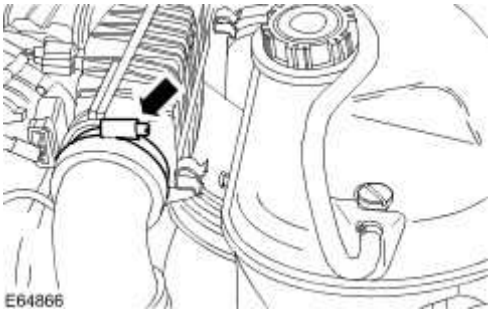

19 . Disconnect the electrical connectors.

20 . Remove the intake air shutoff throttle elbow.

- Release the retaining clip.

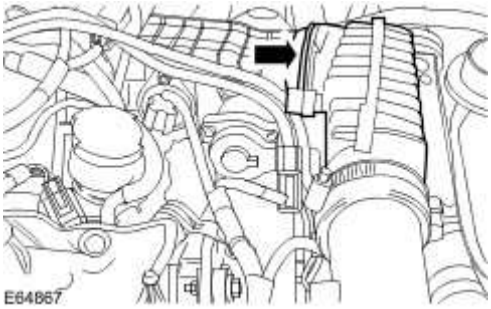

21 . Remove the charge air cooler pipe.

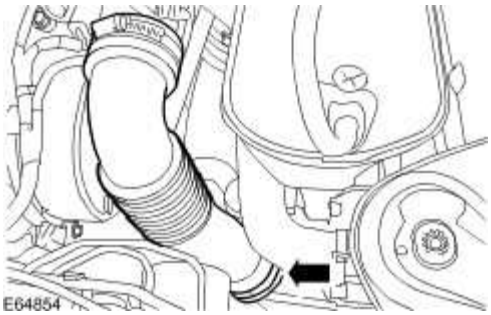

22 . Detach the port deactivation valve retaining bracket.

www.JagDocs.com

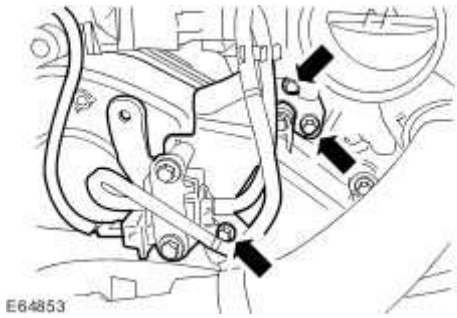

23 . Detach the coolant hose.

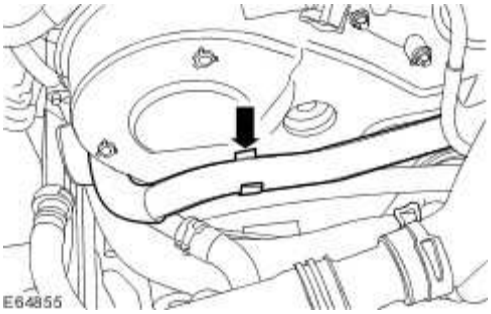

24 . Detach the EGR cooler pipe.

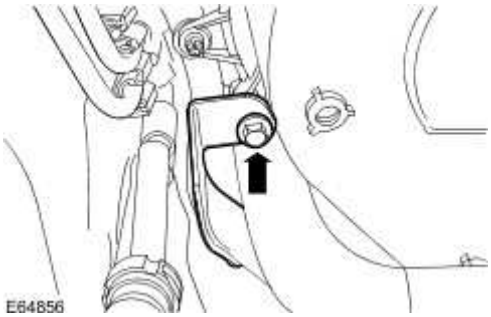

25 . Detach the air temperature sensor wiring harness.

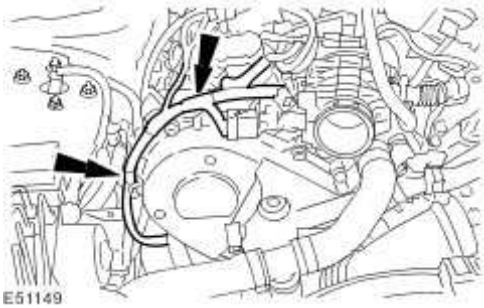

26 . Detach the EGR valve tube.

- Remove the retaining bolt.

27 . Remove the right-hand timing cover.

- Remove and discard the gaskets

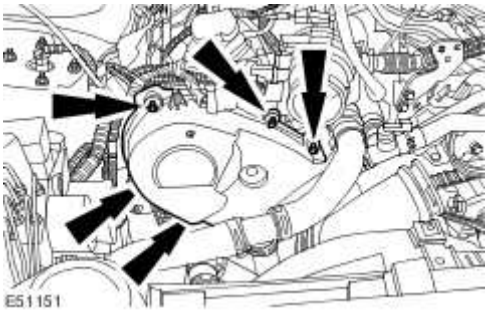

28 . Remove the crankshaft vibration damper.
For additional information, refer to Crankshaft Vibration Damper (12.21.09)

29 . Detach the charge air cooler hose.

1) Remove the hose clamp.

2) Remove the retaining bolt.

www.JagDocs.com

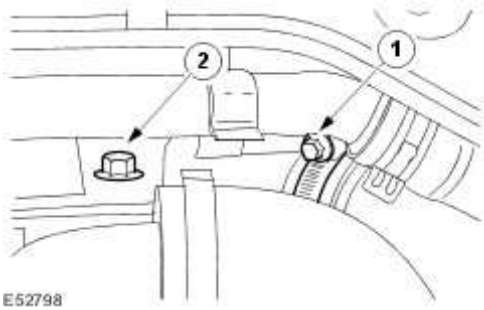

30 . Lower the vehicle.

31 . Remove the charge air cooler pipe.

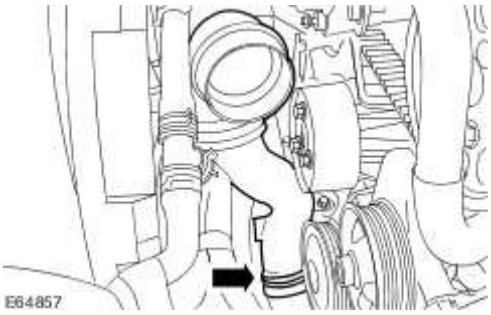

32 . Detach the turbocharger inlet pipe.

Remove the retaining nut.

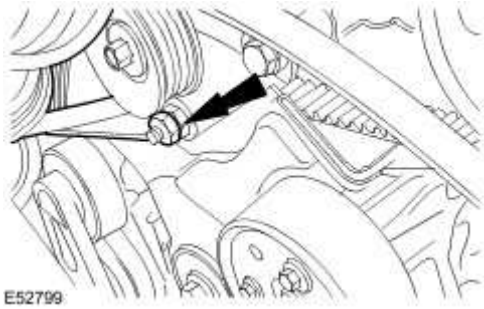

33 . **NOTE:**

Lock the water pump pulley with suitable 6 mm bar.

NOTE:

Discard the water pump pulley retaining bolts.

Remove the water pump pulley.

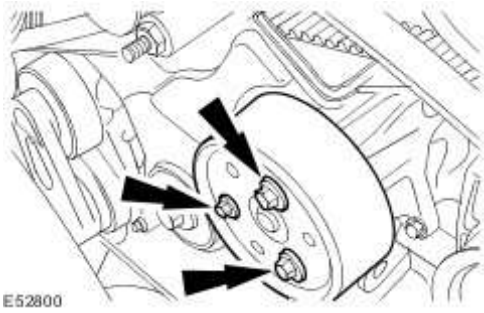

34 . Remove the lower timing cover.

- Remove and discard the gasket.

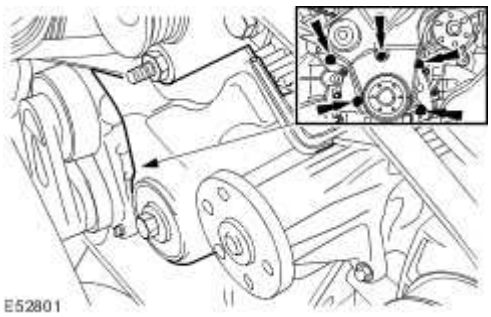

Installation

1 . **NOTE:**

Install a new gasket.

Install the lower timing cover.

- Tighten to 10 Nm.

www.JagDocs.com

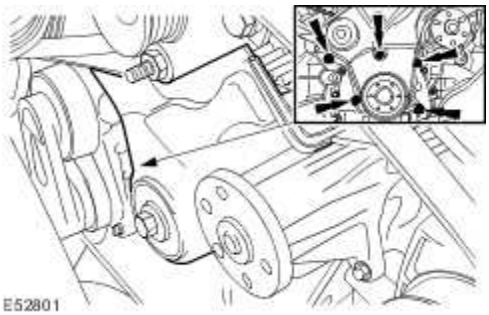

2 . Install the water pump pulley.

- Install new water pump pulley retaining bolts.
- Tighten to 24 Nm.

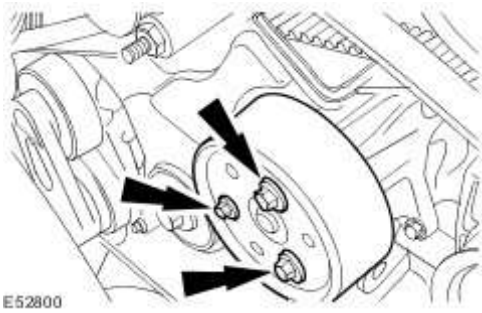

3 . Attach the turbocharger inlet pipe.

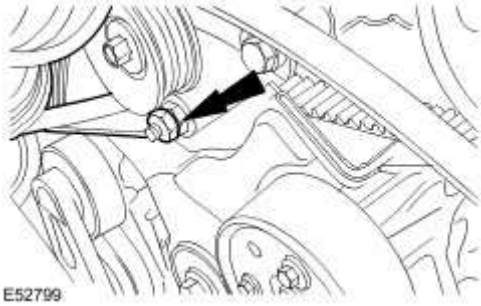

4 . Attach the charge air cooler pipe.

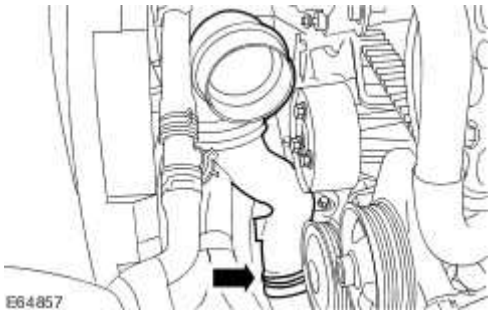

5 . Raise the vehicle.

6 . Attach the charge air cooler hose.

1) Tighten to 4 Nm.

2) Tighten to 8 Nm.

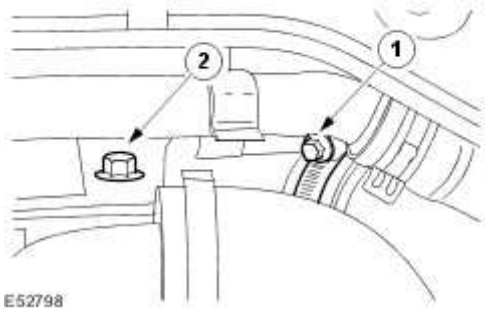

7 . Install the crankshaft vibration damper.
For additional information, refer to Crankshaft Vibration Damper (12.21.09)

8 . **NOTE:**

Install a new gasket.

Install the right-hand timing cover.

Tighten to 10 Nm.

www.JagDocs.com

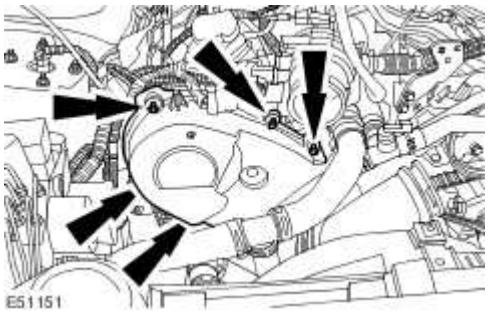

9 . Attach the EGR valve tube.

Tighten to 3 Nm.

10 . Attach the port deactivation valve retaining bracket.

Tighten to 8 Nm.

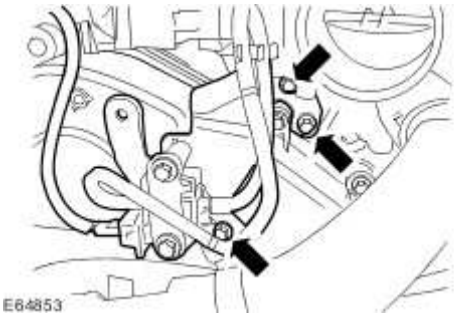

11 . Attach the air temperature sensor wiring harness.

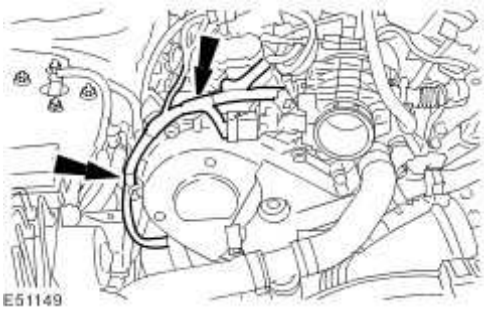

12 . Attach the EGR cooler pipe.

Tighten to 10 Nm.

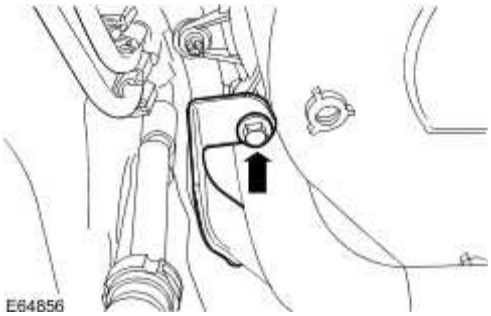

13 . Attach the coolant hose.

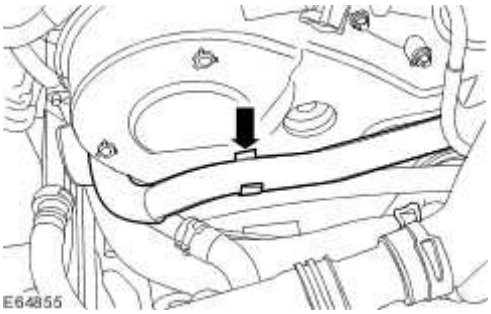

14 . Install the charge air cooler pipe.

Tighten to 8 Nm.

www.JagDocs.com

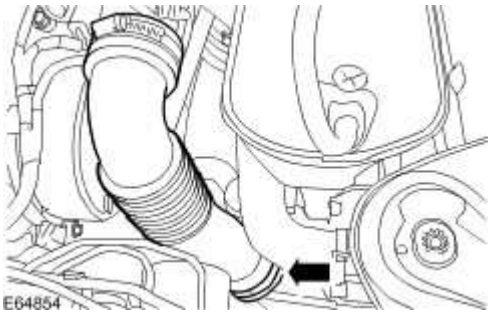

15 . Install the intake air shutoff throttle elbow.

- Release the retaining clip.

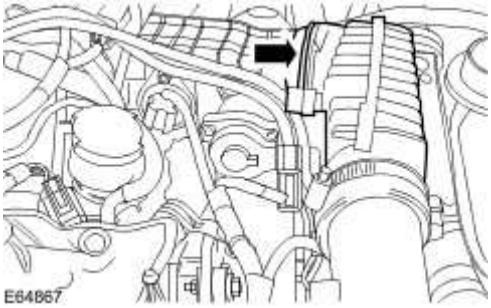

16 . Connect the electrical connectors.

17 . Install the retaining bolt.

- Tighten to 10 Nm.

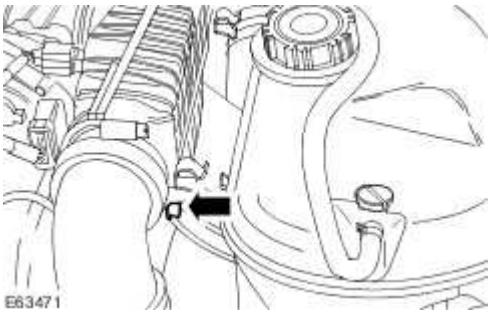

18 . Attach the coolant hose.

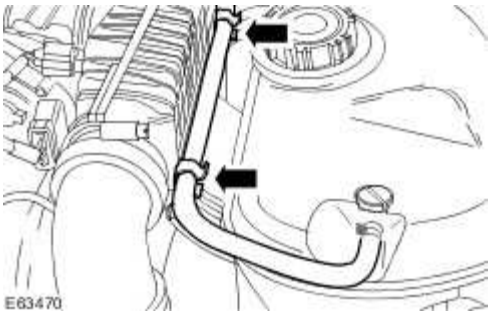

19 . **NOTE:**

Install a new gasket.

Install the left-hand timing cover.

Tighten to 10 Nm.

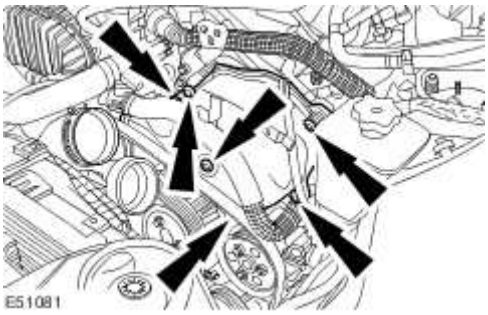

20 . Attach the wiring harness.

www.JagDocs.com

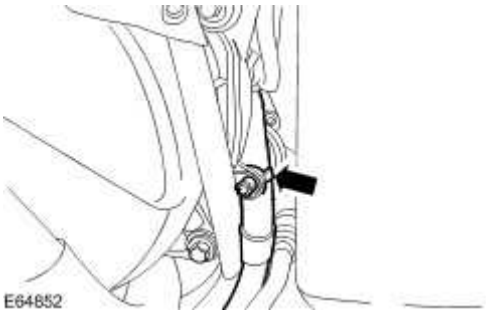

21 . Install the power steering pump bolt.

- Tighten to 22 Nm.

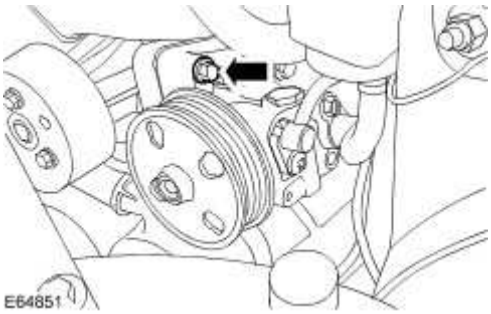

22 . Attach the oil level indicator tube.

- Tighten to 3 Nm.

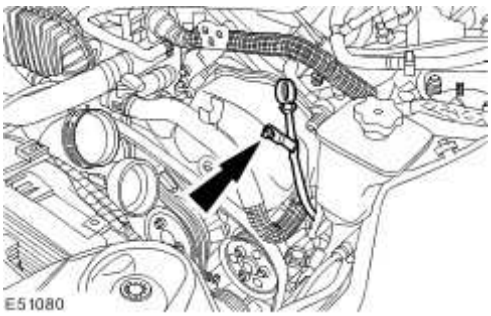

23 . Attach the EGR valve tube.

- Tighten to 3 Nm.

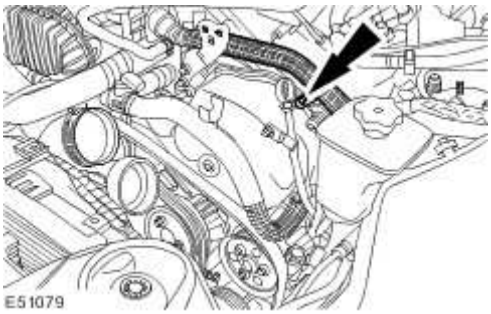

24 . Attach the coolant temperature sensor wiring harness.

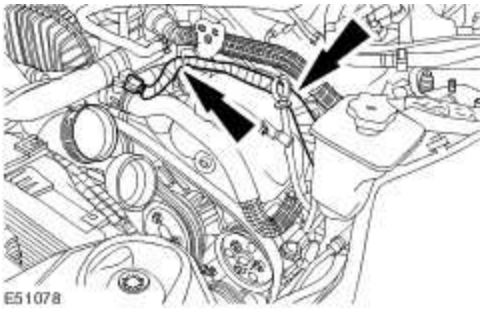

25 . Connect the coolant temperature sensor electrical connector.

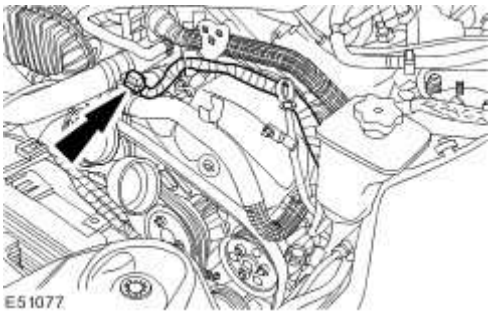

26 . Attach the coolant hose.

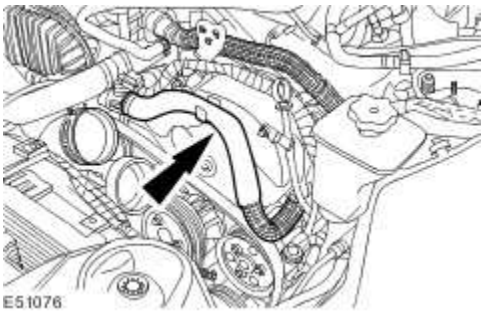

www.JagDocs.com

27 . Remove the engine oil filler cap.

28 . Install the engine cover.

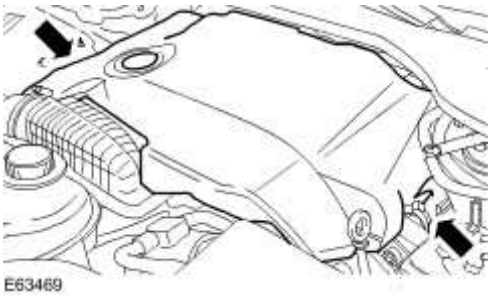

29 . Install the oil filler cap.

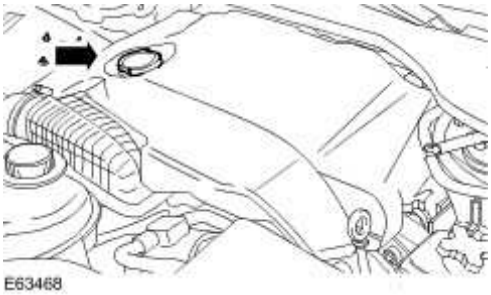

30 . Install the air deflector.
For additional information, refer to Air Deflector (76.11.41)

31 Attach the accessory drive belt.
.

1) Using the special tool, rotate the accessory drive belt tensioner counter clockwise.

2) Install the accessory drive belt.

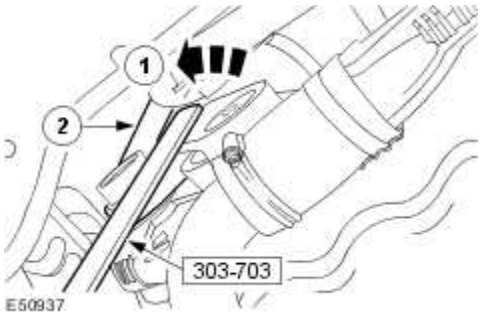

32 . Lower the vehicle.

33 . Install the air cleaner.
For additional information, refer to Air Cleaner (19.10.05)

www.JagDocs.com

Valve Cover LH (12.29.43)

Special Service Tools

Accessory belt detensioner
303-703

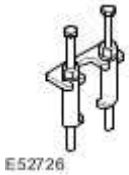

Fuel injector remover
303-1127

Removal

WARNING: Wait at least 30 seconds after the engine stops before commencing any repair to the high-pressure fuel injection system. Failure to follow this instruction may result in personal injury.

WARNING: Do not smoke or carry lighted tobacco or open flame of any type when working on or near any fuel related components. Highly flammable mixtures are always present and may ignite. Failure to follow these instructions may result in personal injury.

WARNING: This procedure involves fuel handling. Be prepared for fuel spillage at all times and always observe fuel handling precautions. Failure to follow this instruction may result in personal injury.

WARNING: Do not carry out any repairs to the fuel injection system with the engine running. The fuel pressure within the system can be as high as 1650 bar. Failure to follow this

instruction may result in personal injury.

CAUTION: Make sure the workshop area in which the vehicle is being worked on is as clean and as dust free as possible. Foreign matter from work on clutches, brakes or from machining or welding operations can contaminate the fuel system and may result in later malfunction.

CAUTION: Do not disconnect the fuel injector electrical connectors with the engine running. Failure to follow this instruction may result in damage to the vehicle.

CAUTION: Always carry out the cleaning process before carrying out any repairs to the fuel injection system components. Failure to follow this instruction may result in foreign matter ingress to the fuel injection system.

CAUTION: Diesel fuel injection equipment is manufactured to very precise tolerances and fine clearances. It is therefore essential that absolute cleanliness is observed when working with these components. Always install blanking plugs to any exposed ports.

1 . Remove the air deflector.
For additional information, refer to Air Deflector (76.11.41)

2 Detach the accessory drive belt.
.

1) Using the special tool, rotate the accessory drive belt tensioner counter clockwise.

2) Remove the accessory drive belt.

www.JagDocs.com

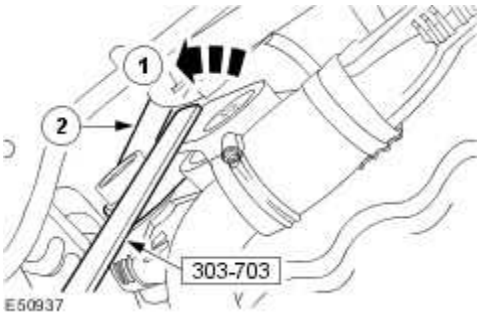

3 . Lower the vehicle.

4 . Remove the air cleaner.
For additional information, refer to Air Cleaner (19.10.05)

5 . Detach the coolant hose.

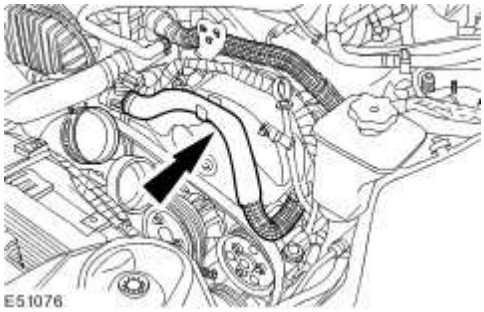

6 . Disconnect the engine coolant temperature (ECT) sensor electrical connector.

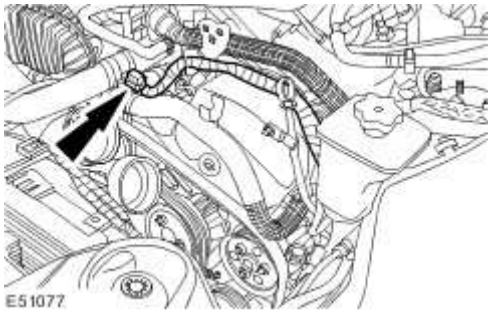

7 . Detach the ECT sensor wiring harness.

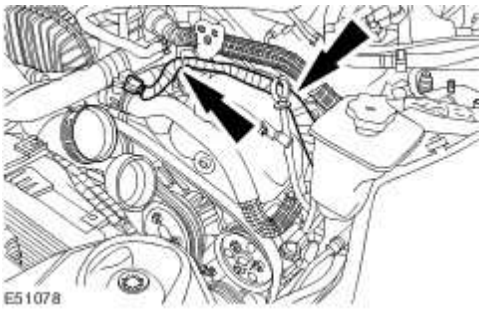

8 . Detach the exhaust gas recirculation (EGR) valve tube.

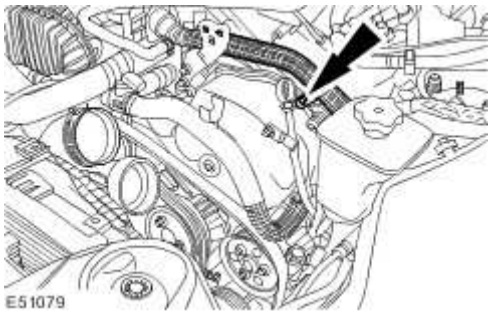

9 . Detach the oil level indicator tube.

- Remove the retaining bolt.

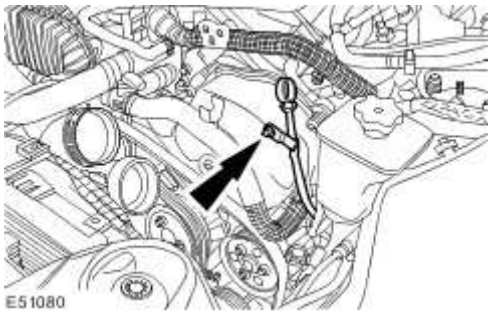

10 . Loosen the power steering pump retaining bolt.

www.JagDocs.com

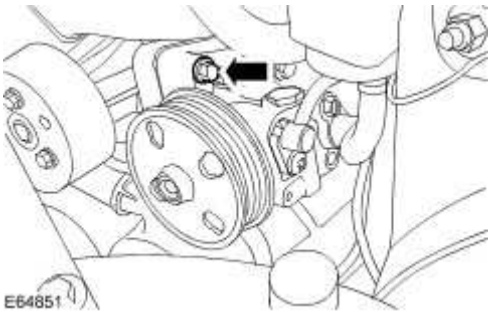

11 . Detach the wiring harness.

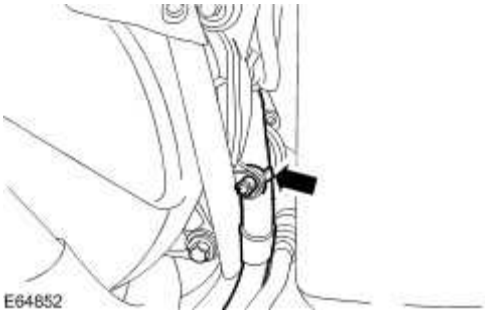

12 . Remove the left-hand timing cover.

Remove and discard the gasket.

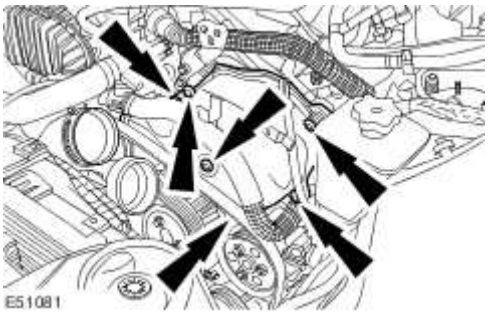

13 . Remove the cowl vent screen.
For additional information, refer to Cowl Vent Screen (76.10.01)

14 Remove the exhaust gas recirculation (EGR) valve outlet tubes.
. For additional information, refer to Exhaust Gas Recirculation (EGR) Valve Outlet Tube (17.45.11)

15 . Remove the injector sound proofing.

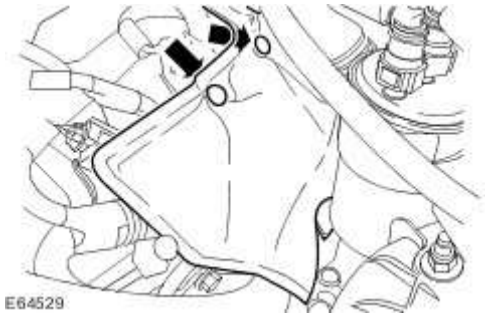

16 . Remove the engine harness cover.

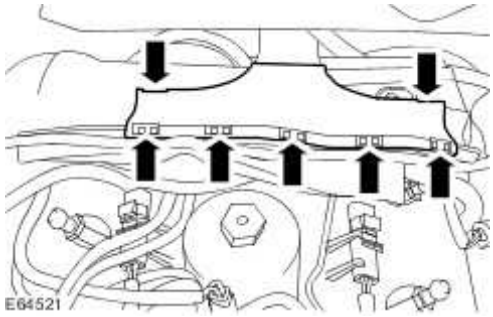

17 . Remove the engine harness casing.

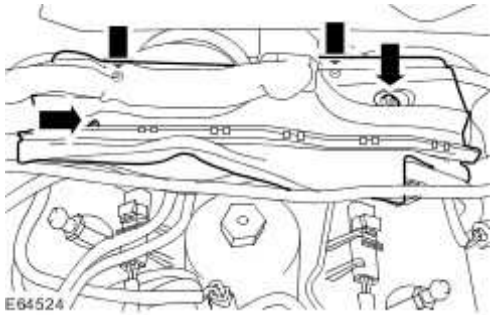

18 . **CAUTION: Protect the fuel injector electrical connectors with lint-free material to prevent contamination from the cleaning fluid. Failure to follow this instruction may result in serious damage to the vehicle.**

Using the pneumatic vacuum gun, vacuum foreign material from the fuel injectors, high-pressure fuel supply lines and surrounding areas.

www.JagDocs.com

For additional information, refer to Fuel Injection Component Cleaning

19 . Disconnect the fuel injector electrical connectors.

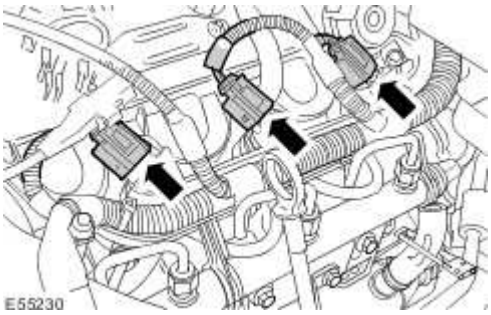

20 . Detach the fuel injection wiring harness.

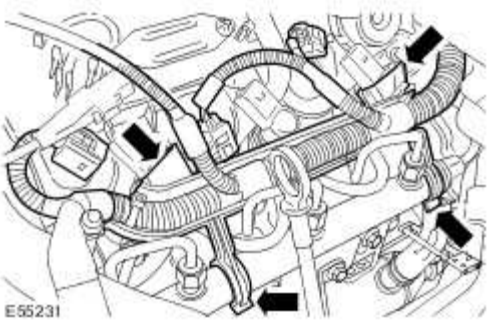

21 . Using the pneumatic vacuum gun, vacuum foreign material from the fuel injectors, high-pressure fuel supply lines and surrounding areas.
For additional information, refer to Fuel Injection Component Cleaning

22 . **CAUTION: Make sure that the high-pressure fuel supply line remains in contact with both the fuel injector and the fuel rail until both unions have been detached and cleaned. Failure to follow this instruction may result in foreign matter ingress to the fuel injection system.**

CAUTION: Make sure that the fuel injector adaptor union does not move when loosening the high-pressure fuel supply lines. Failure to follow this instruction may result in damage to the fuel injector or the fuel injector adaptor union.

Loosen the high-pressure fuel supply lines from the fuel injectors and fuel rail.

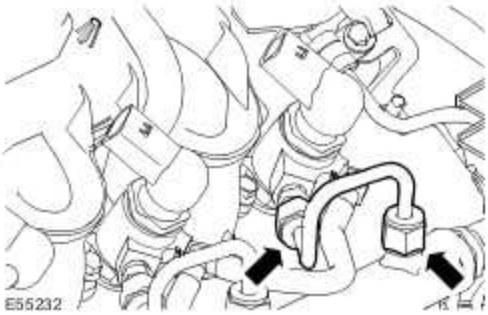

23 . **CAUTION: Make sure that the high-pressure fuel supply line remains in contact with both the fuel injector and the fuel rail until both unions have been detached and cleaned. Failure to follow this instruction may result in foreign matter ingress to the fuel injection system.**

Using the pneumatic vacuum gun, vacuum foreign material from the high-pressure fuel supply lines, the fuel injectors and the fuel rail.
For additional information, refer to Fuel Injection Component Cleaning

24 . **NOTE:**

While maintaining the pressure on the high-pressure fuel supply line, clean and vacuum foreign material from the line and unions.

Remove and discard the high-pressure fuel supply lines.

- Install suitable blanking caps to the open threaded ports on the fuel injectors and the fuel rail.

www.JagDocs.com

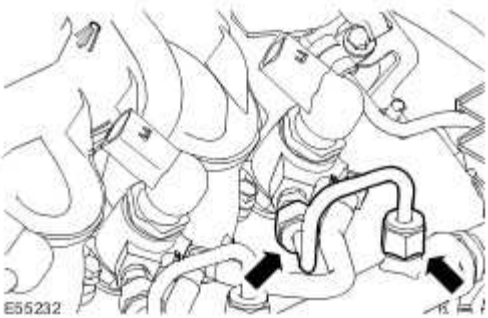

25 . Using the pneumatic vacuum gun, vacuum foreign material from the fuel injectors and the fuel rail.
For additional information, refer to Fuel Injection Component Cleaning

26 . Disconnect the fuel return line from the fuel injectors.

- Remove and discard the fuel return line retaining clips from the fuel injectors.
- Disconnect the fuel return line from the fuel injectors.

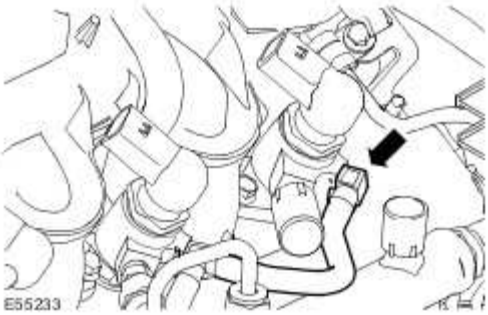

27 . Remove the fuel injectors retaining bolts.

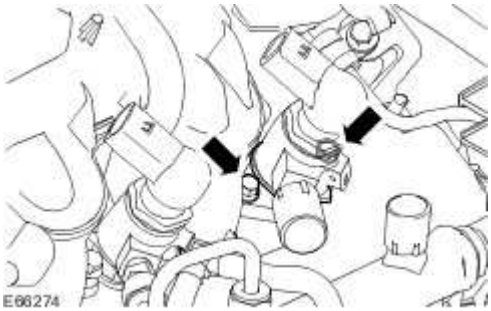

28 . Install the special tool studs.

29 . **CAUTION: Make sure the fuel injector remover legs are correctly engaged to the fuel injector. Failure to follow this instruction may result in damage to the component.**

Install the special tool puller legs to the studs.

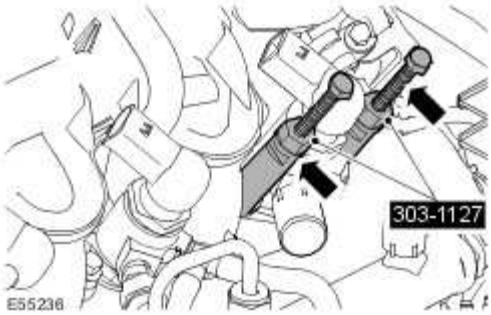

30 . **CAUTION: Make sure the special tool puller bolts are rotated evenly. Failure to follow this instruction may result in damage to the special tool or fuel injectors.**

Using the special tool, remove the fuel injectors.

- Install the special tool locking plate to the puller legs.
- Rotate the bolts evenly, in a clockwise direction.
- Remove the fuel injectors.
- Remove the special tool.

www.JagDocs.com

- Remove and discard the fuel injectors retaining clamps.
- Remove and discard the fuel injectors sealing washers.

31 . Detach the coolant hose.

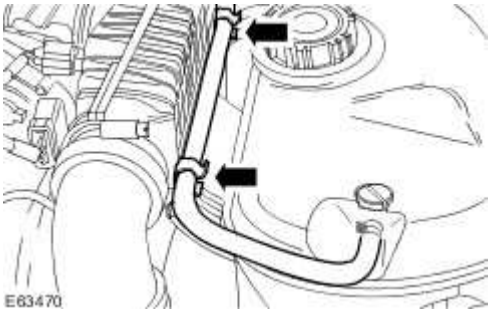

32 . Remove the retaining bolt.

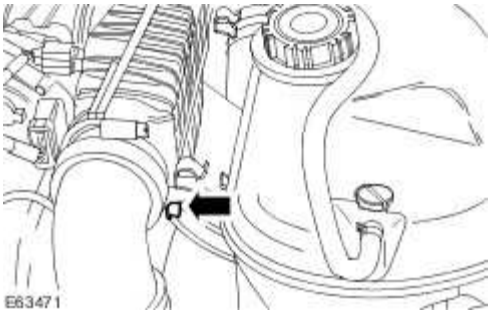

33 . Disconnect the electrical connectors.

34 . Detach the intake air shutoff throttle elbow.

- Release the retaining clip.

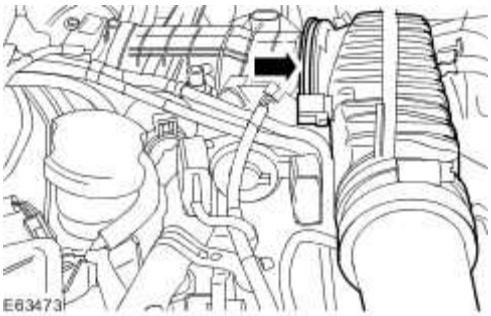

35 . Detach the vacuum hoses.

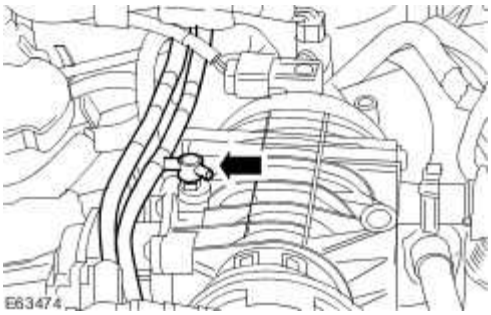

36 . Remove the retaining bolt.

www.JagDocs.com

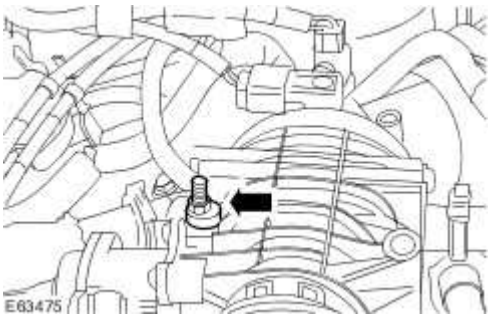

37 . Disconnect the electrical connector.

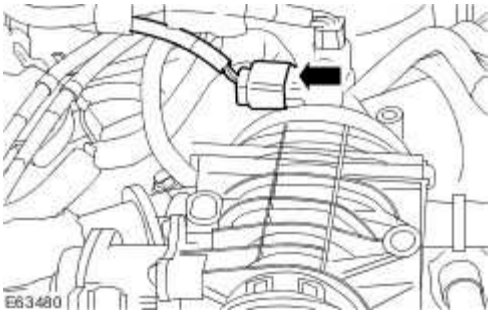

38 . Detach the fuel return line valve from the intake air shutoff throttle.

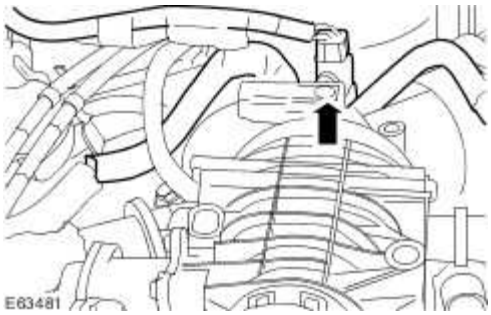

39 . **CAUTION: Make sure the fuel return line valve retaining clip is not damaged. Failure to follow this instruction may result in damage to the vehicle.**

Reposition the intake air shutoff throttle.

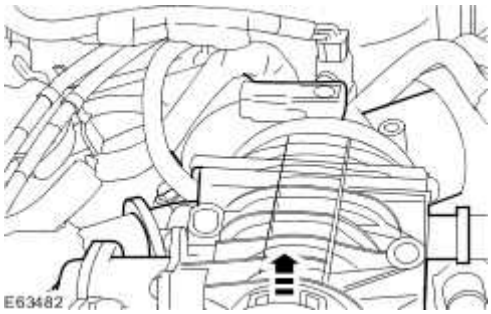

40 . **CAUTION: Make sure the fuel return line valve retaining clip is not damaged. Failure to follow this instruction may result in damage to the vehicle.**

Reposition the intake air shutoff throttle.

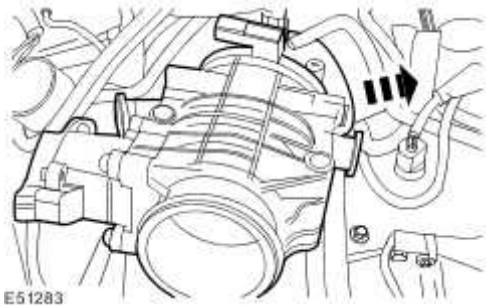

41 . **CAUTION: Make sure the fuel return line valve retaining clip is not damaged. Failure to follow this instruction may result in damage to the vehicle.**

Remove the intake air shutoff throttle.

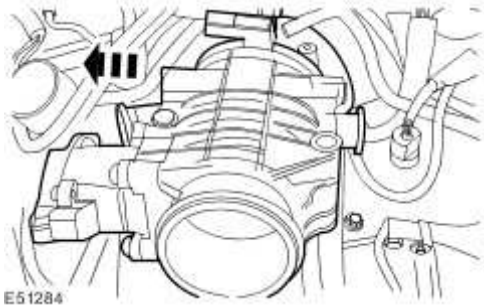

42 . Detach the knock sensor (KS) electrical connector.

www.JagDocs.com

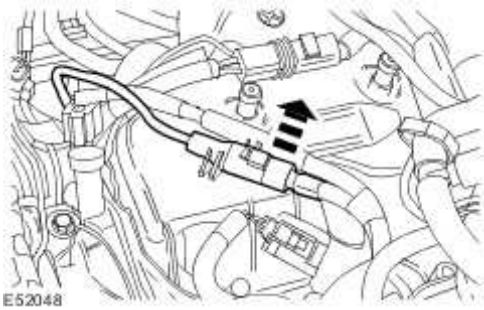

43 . Disconnect the KS electrical connector.

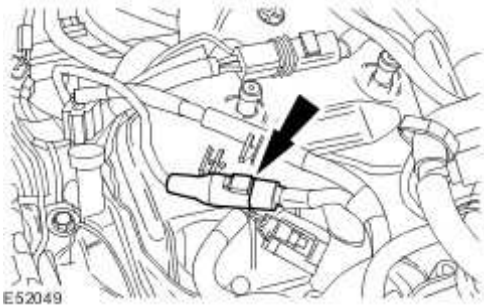

44 . Disconnect the engine oil pressure (EOP) sensor electrical connector.

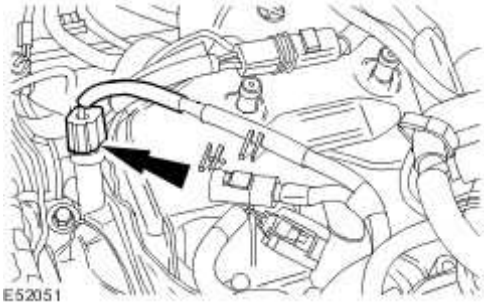

45 . Detach the engine harness.

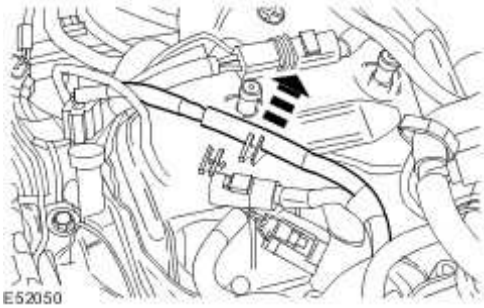

46 . Detach the glow plug harness.

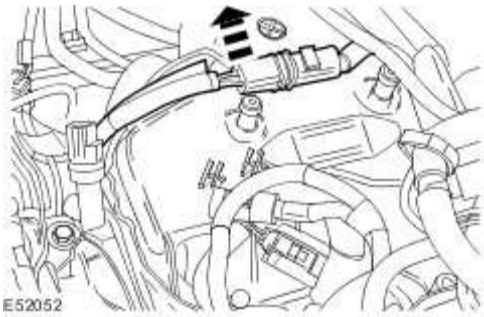

47 . Detach the engine breather pipe.

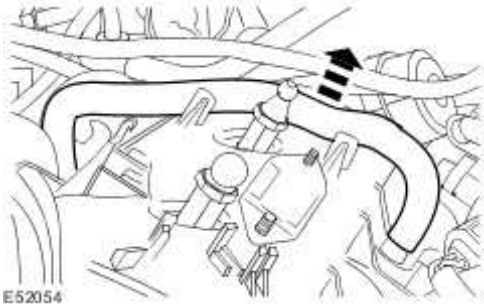

48 . Disconnect the vacuum pipe.

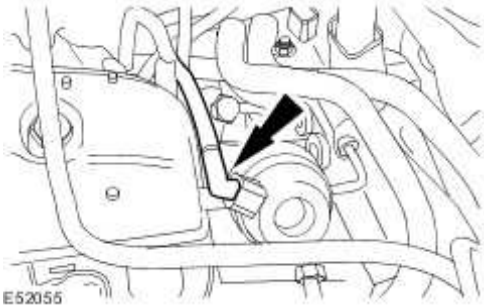

49 . Remove the high-pressure fuel supply line retaining bolt.

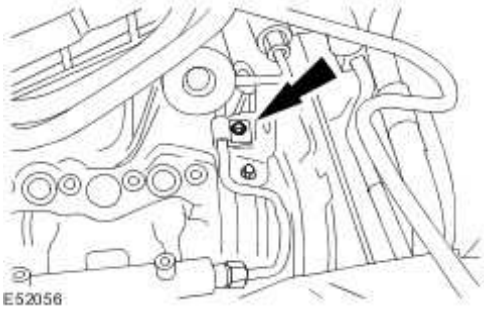

www.JagDocs.com

50 . Using the pneumatic vacuum gun, vacuum foreign material from the fuel injection pump, high-pressure fuel supply line and surrounding areas.
For additional information, refer to Fuel Injection Component Cleaning

51 . **CAUTION: Make sure that the tool used to loosen the high-pressure fuel supply line union is used at the top of the union as this is where there is most material. Failure to follow this instruction may result in damage to the union.**

CAUTION: Make sure that the high-pressure fuel supply line remains in contact with both the fuel injection pump and the fuel rail until both unions have been detached and cleaned. Failure to follow this instruction may result in foreign matter ingress to the fuel injection system.

NOTE:

While maintaining the pressure on the high-pressure fuel supply line, clean and vacuum foreign material from the line and unions.

Remove the high-pressure fuel supply line.

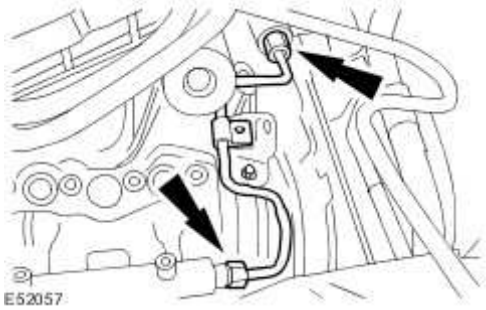

52 . Remove the fuel rail.

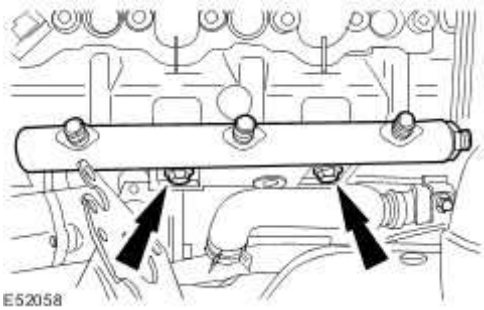

53 . Remove the fuel rail securing bracket .

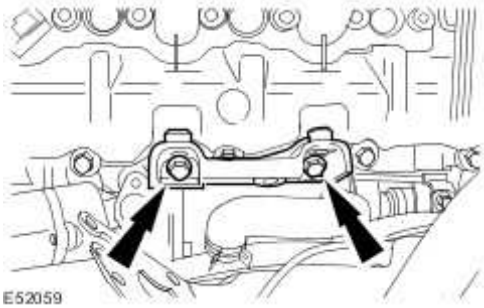

54 . Remove the engine cover and wiring harness retainers.

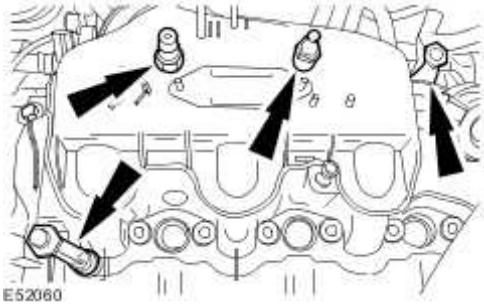

55 . Remove the valve cover.

- Remove and discard the valve cover gasket.

www.JagDocs.com

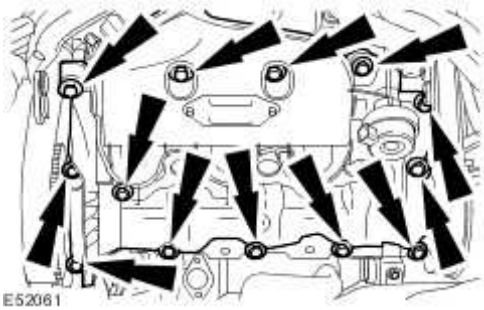

Installation

WARNING: Wait at least 30 seconds after the engine stops before commencing any repair to the high-pressure fuel injection system. Failure to follow this instruction may result in personal injury.

WARNING: Do not smoke or carry lighted tobacco or open flame of any type when working on or near any fuel related components. Highly flammable mixtures are always present and may ignite. Failure to follow these instructions may result in personal injury.

WARNING: This procedure involves fuel handling. Be prepared for fuel spillage at all times and always observe fuel handling precautions. Failure to follow this instruction may result in personal injury.

WARNING: Do not carry out any repairs to the fuel injection system with the engine running. The fuel pressure within the system can be as high as 1650 bar. Failure to follow this instruction may result in personal injury.

CAUTION: Make sure the workshop area in which the vehicle is being worked on is as clean and as dust free as possible. Foreign matter from work on clutches, brakes or from machining or welding operations can contaminate the fuel system and may result in later malfunction.

CAUTION: Do not disconnect the fuel injector electrical connectors with the engine running. Failure to follow this instruction may result in damage to the vehicle.

CAUTION: Always carry out the cleaning process before carrying out any repairs to the fuel injection system components. Failure to follow this instruction may result in foreign matter ingress to the fuel injection system.

CAUTION: Diesel fuel injection equipment is manufactured to very precise tolerances and fine clearances. It is therefore essential that absolute cleanliness is observed when working with these components. Always install blanking plugs to any exposed ports.

www.JagDocs.com

1 . Install the valve cover.

- Install a new valve cover gasket.
- Tighten to 10 Nm.

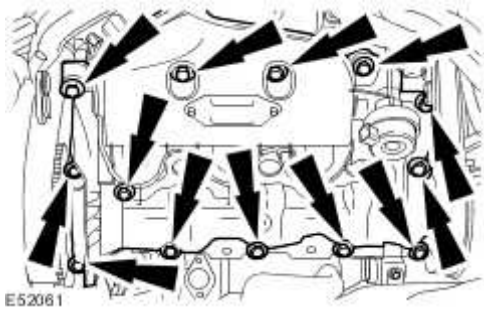

2 . Install the engine cover and wiring harness retainers.

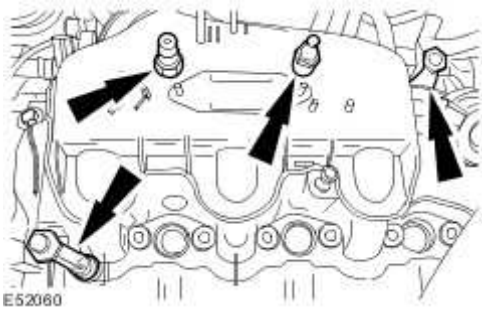

3 . Install the fuel rail securing bracket.

- Tighten to 24 Nm.

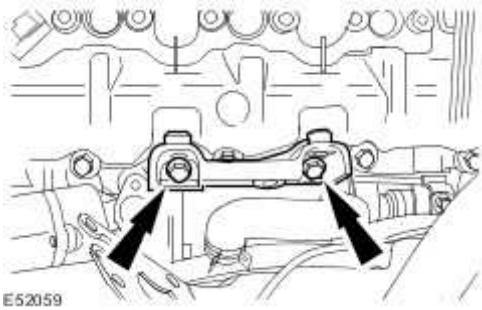

4 . Install the fuel rail.

- Tighten to 24 Nm.

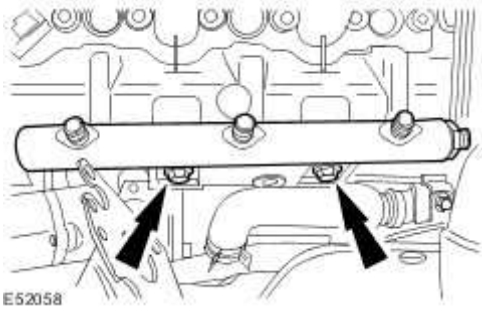

5 Install new a high-pressure fuel supply line.

.

- Tighten the high-pressure fuel supply line in the sequence shown:

- Tighten the high-pressure fuel supply line union 1 to fuel diverter rail to 15 Nm.
- Tighten the high-pressure fuel supply line union 2 to fuel rail to 15 Nm.
- Tighten the high-pressure fuel supply line union 1 to fuel diverter rail to 30 Nm.
- Tighten the high-pressure fuel supply line union 2 to fuel rail to 30 Nm.

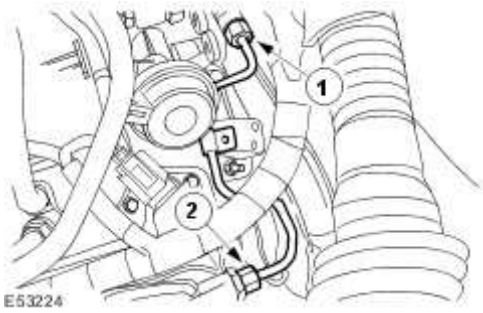

6 . Install the high-pressure fuel supply line retaining bolt.

- Tighten to 10 Nm.

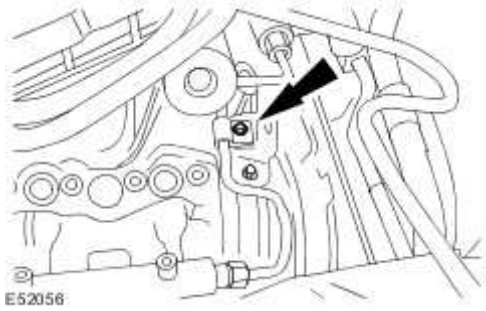

7 . Connect the vacuum pipe.

www.JagDocs.com

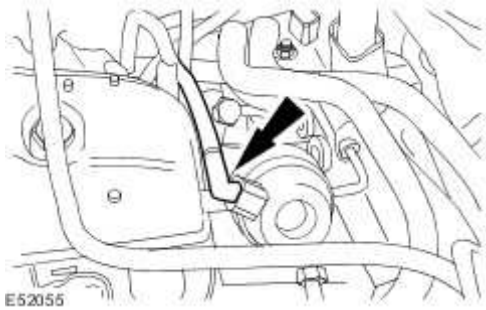

8 . Attach the engine breather pipe.

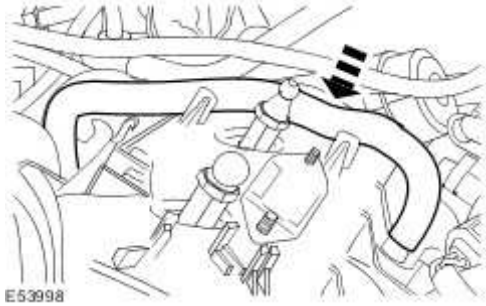

9 . Attach the glow plug harness.

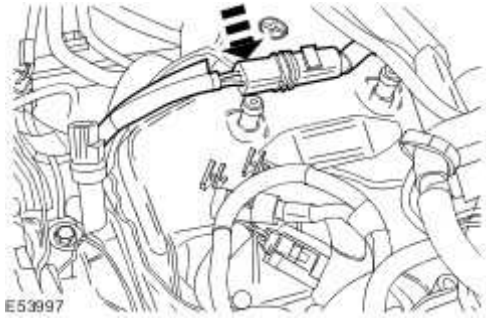

10 . Attach the engine harness.

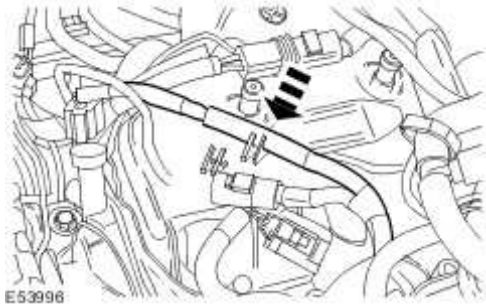

11 . Connect the EOP sensor electrical connector.

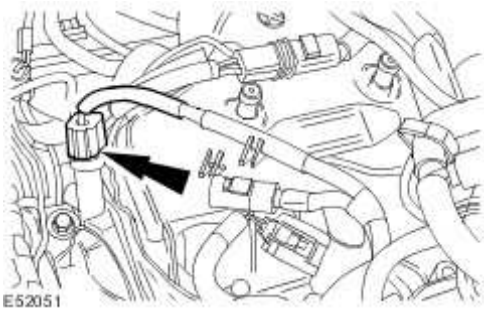

12 . Connect the KS electrical connector.

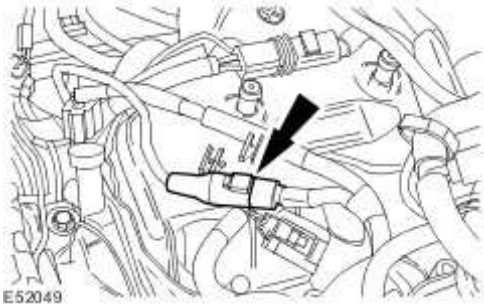

13 . Attach the KS electrical connector.

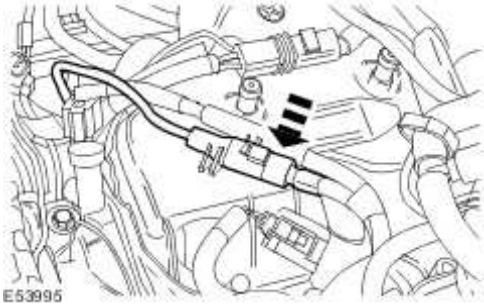

14 . **CAUTION: Make sure the fuel return line valve retaining clip is not damaged. Failure to follow this instruction may result in damage to the vehicle.**

Install the intake air shutoff throttle.

www.JagDocs.com

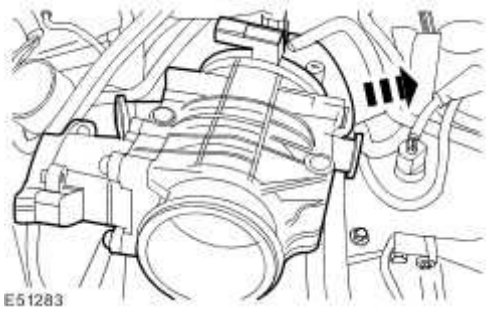

15 . Attach the fuel return line valve onto the intake air shutoff throttle.

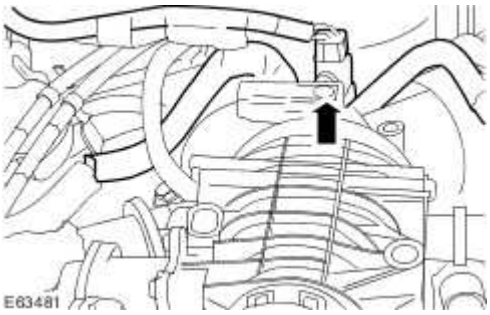

16 . Connect the electrical connector.

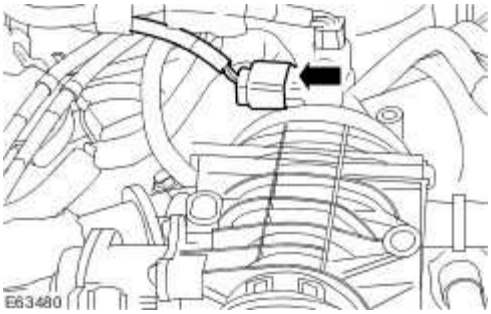

17 . Install the retaining bolt.

- Tighten to 10 Nm.

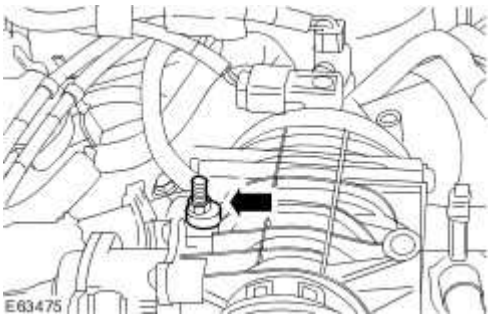

18 . Attach the vacuum hoses.

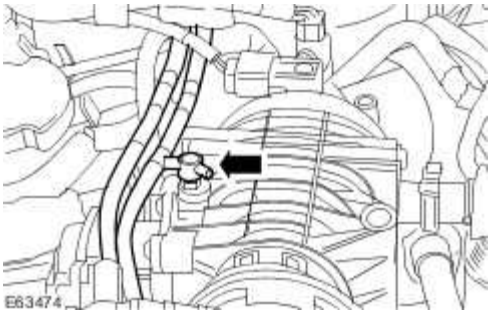

19 . Attach the inake air shutoff throttle elbow.

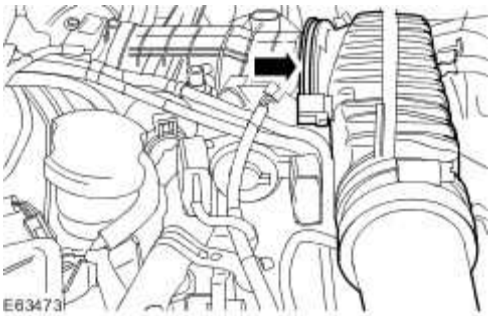

20 . Connect the electrical connectors.

www.JagDocs.com

21 . Install the retaining bolt.

Tighten to 10 Nm.

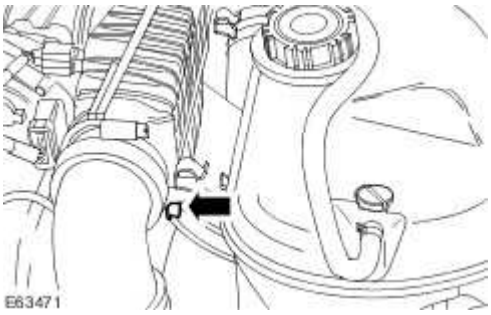

22 . Attach the coolant hose.

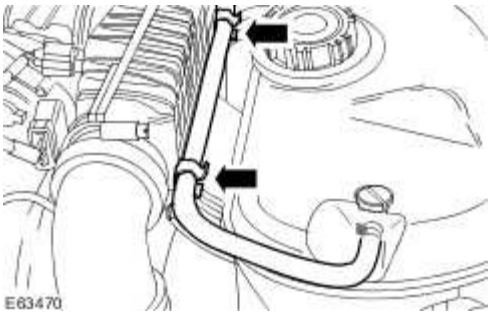

23 . **CAUTION: Do not use tools to install the new fuel return line retaining clips. Failure to follow this instruction may result in damage to the retaining clips.**

NOTE:

Install new fuel return line retaining clips.

NOTE:

Install new fuel injector sealing washers.

NOTE:

Install new fuel injector retaining clamps.

Install new fuel injector retaining clamps.

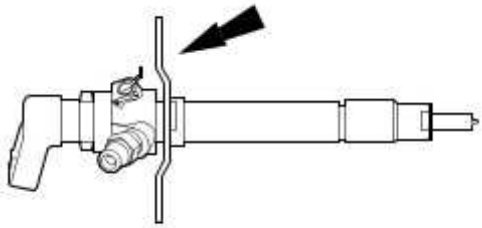

E52071

24 . Install the fuel injectors.

- Tighten to 10 Nm.

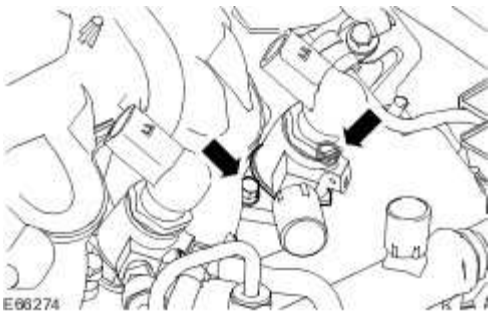

E66274

25 . **CAUTION: Make sure the fuel return line retaining clips are correctly installed to the fuel injectors before installing the fuel return line.**

Connect the fuel return line to the fuel injectors.

- Visually inspect the fuel return line O-ring seals for damage.
- Apply a light coating of petroleum jelly to the fuel line return line O-ring seals.
- Connect the fuel return line to the fuel injectors.

www.JagDocs.com

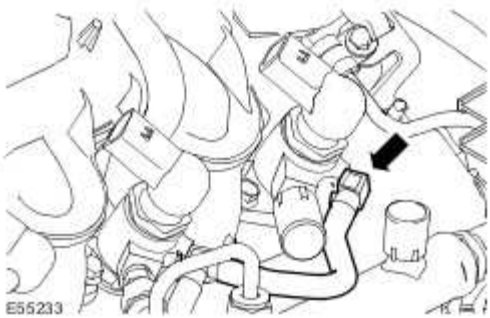

26. **CAUTION: Do not allow the unions to hit the olive ends of the high-pressure fuel supply lines as this may damage the ends of the lines and allow foreign matter enter the fuel injection system.**

Position the high-pressure fuel supply lines as near to the final installation position as possible and then remove and discard the blanking plugs from the high-pressure fuel supply lines.

27. **CAUTION: Maintain pressure on the high-pressure fuel supply lines to keep the olives in contact with the fuel injectors and the fuel rail cones while installing the unions.**

NOTE:

Install the high-pressure fuel supply lines to the fuel rail end first followed by the fuel injector end.

Install new high-pressure fuel supply lines.

- Tighten the high-pressure fuel supply line in the sequence shown:
- Tighten the high-pressure fuel supply line union 1 to fuel injector to 15 Nm.
- Tighten the high-pressure fuel supply line union 2 to fuel rail to 15 Nm.
- Tighten the high-pressure fuel supply line union 1 to fuel injector to 30 Nm.

- Tighten the high-pressure fuel supply line union 2 to fuel rail to 30 Nm.

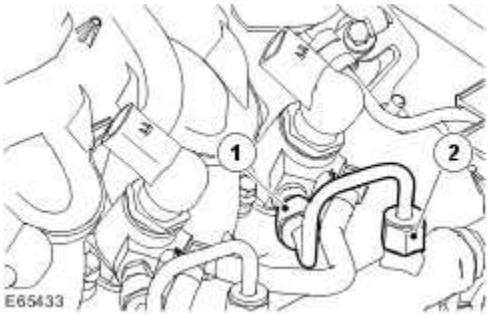

28 . Attach the fuel injection wiring harness.

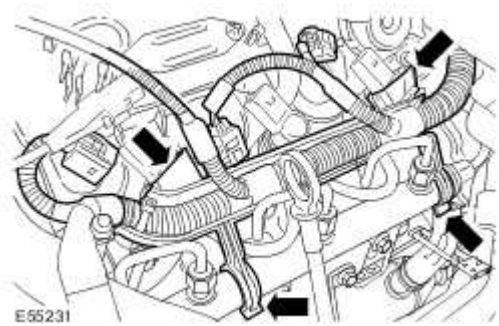

29 . Connect the fuel injector electrical connectors.

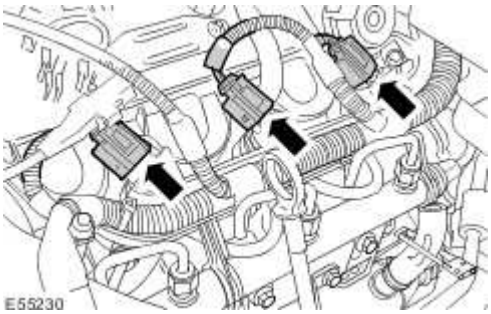

30 . Install the engine harness casing.

- Tighten to 4 Nm.

www.JagDocs.com

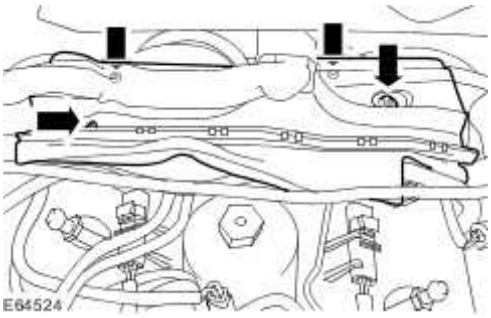

31 . Install the engine harness cover.

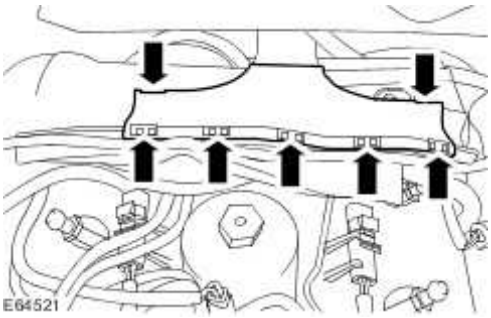

32 . Install the injector sound proofing.

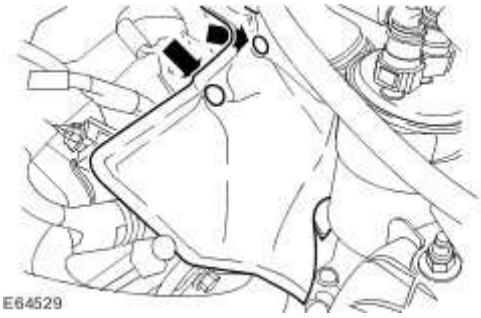

33 Install the EGR valve outlet tubes.
. For additional information, refer to Exhaust Gas Recirculation (EGR) Valve Outlet Tube (17.45.11)

34 . Install the cowl vent screen.
For additional information, refer to Cowl Vent Screen (76.10.01)

35 . **NOTE:**

Install a new gasket.

Install the left-hand timing belt cover.

Tighten to 10 Nm.

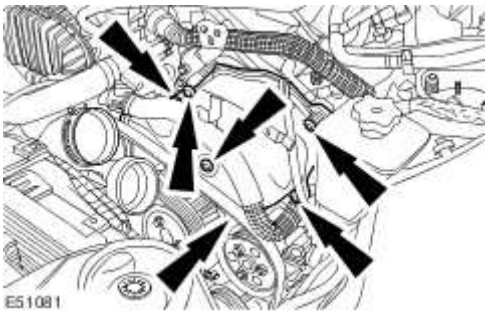

36 . Attach the wiring harness.

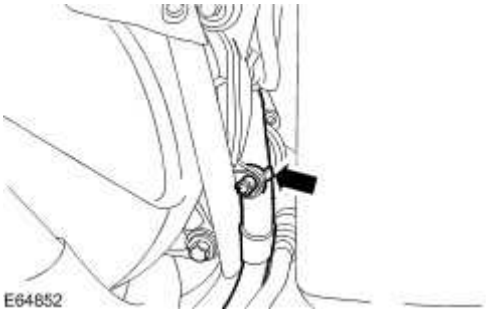

37 . Tighten the power steering pump bolt.

Tighten to 22 Nm.

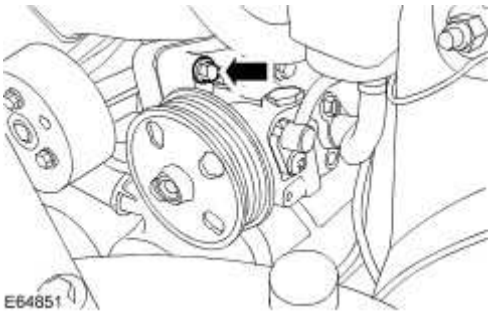

www.JagDocs.com

38 . Attach the oil level indicator tube.

Tighten to 3 Nm.

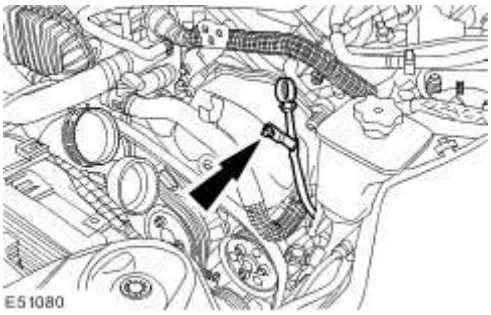

39 . Attach the EGR valve tube.

Tighten to 3 Nm.

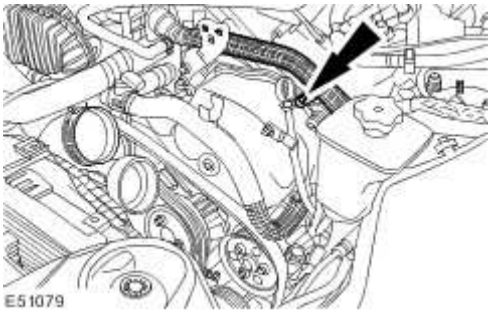

40 . Attach the ECT sensor wiring harness.

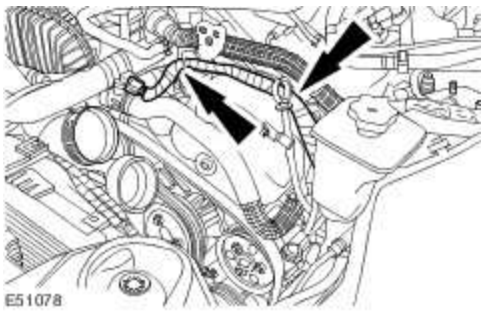

41 . Connect the ECT sensor electrical connector.

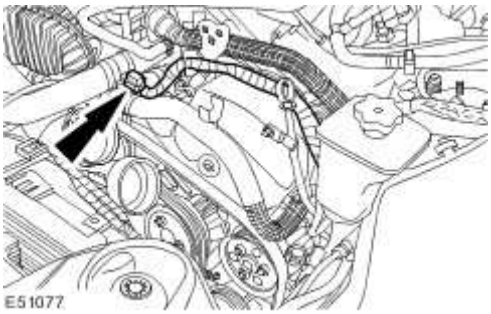

42 . Attach the coolant hose.

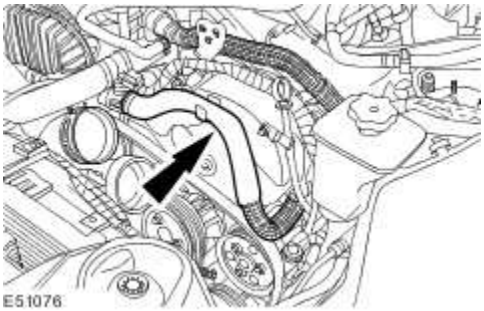

43 . Install the air cleaner.
For additional information, refer to Air Cleaner (19.10.05)

44 . Raise the vehicle.

45 Attach the accessory drive belt.
.

1) Using the special tool, rotate the accessory drive belt tensioner counter clockwise.

2) Install the accessory drive belt.

www.JagDocs.com

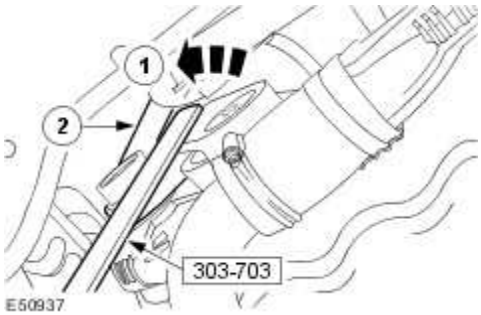

46 . Install the air deflector.
For additional information, refer to Air Deflector (76.11.41)

47 . Connect the battery ground cable.
For additional information, refer to Battery Connect (86.15.15)

48 . **WARNING: Do not carry out any repairs to the fuel system with the engine running. The fuel pressure within the high-pressure system can be as high as 1650 bar. Failure to follow this instruction may result in personal injury.**

NOTE:

The fuel return line must be renewed if any leaks are found from the fuel return line O-ring seals.

Start the engine and check visually for fuel leaks.

Valve Cover RH (12.29.44)

Removal

WARNING: Wait at least 30 seconds after the engine stops before commencing any repair to the high-pressure fuel injection system. Failure to follow this instruction may result in personal injury.

WARNING: Do not smoke or carry lighted tobacco or open flame of any type when working on or near any fuel related components. Highly flammable mixtures are always present and may ignite. Failure to follow these instructions may result in personal injury.

WARNING: This procedure involves fuel handling. Be prepared for fuel spillage at all times and always observe fuel handling precautions. Failure to follow this instruction may result in personal injury.

WARNING: Do not carry out any repairs to the fuel injection system with the engine running. The fuel pressure within the system can be as high as 1650 bar. Failure to follow this instruction may result in personal injury.

CAUTION: Make sure the workshop area in which the vehicle is being worked on is as clean and as dust free as possible. Foreign matter from work on clutches, brakes or from machining or welding operations can contaminate the fuel system and may result in later malfunction.

CAUTION: Do not disconnect the fuel injector electrical connectors with the engine running. Failure to follow this instruction may result in damage to the vehicle.

CAUTION: Always carry out the cleaning process before carrying out any repairs to the fuel

www.JagDocs.com

injection system components. Failure to follow this instruction may result in foreign matter ingress to the fuel injection system.

CAUTION: Diesel fuel injection equipment is manufactured to very precise tolerances and fine clearances. It is therefore essential that absolute cleanliness is observed when working with these components. Always install blanking plugs to any exposed ports.

1 . Remove the fuel injectors.
For additional information, refer to

2 . Detach the coolant hose.

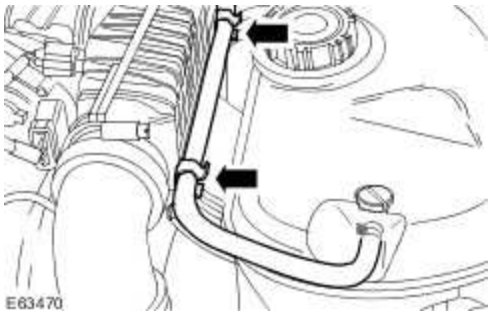

3 . Remove the intake air shutoff throttle elbow retaining bolt.

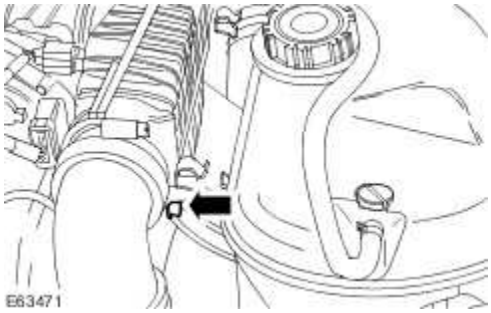

4 . Disconnect the intake air shutoff throttle electrical connectors.

5 . Detach the intake air shutoff throttle elbow.

- Release the retaining clip.

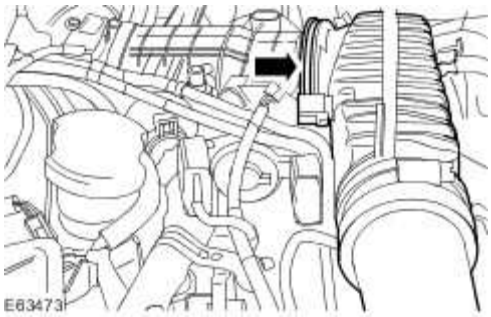

6 . Detach the vacuum hoses.

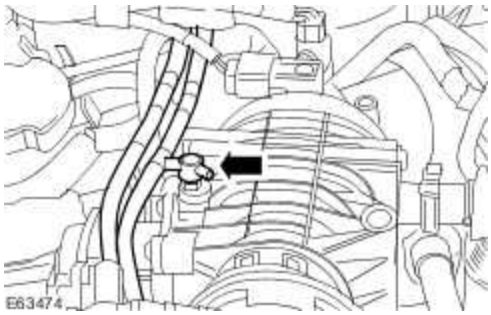

7 . Remove the intake air shutoff throttle retaining bolt.

www.JagDocs.com

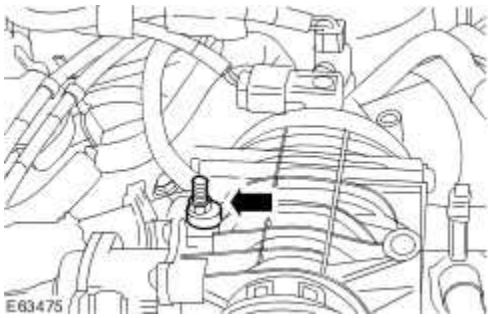

8 . Disconnect the manifold absolute pressure (MAP) sensor electrical connector.

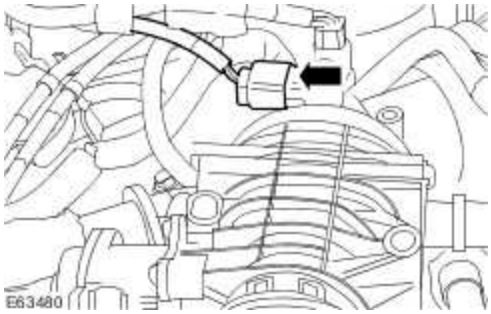

9 . Detach the fuel return line valve from the intake air shutoff throttle.

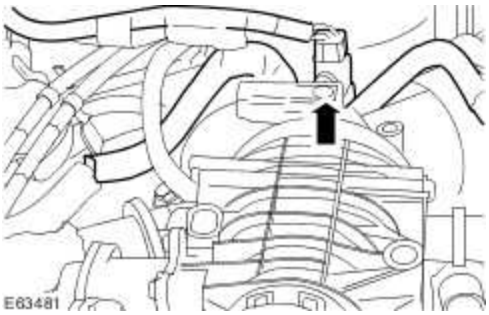

10 . **CAUTION: Make sure the fuel return line valve retaining clip is not damaged. Failure to follow this instruction may result in damage to the vehicle.**

Reposition the intake air shutoff throttle.

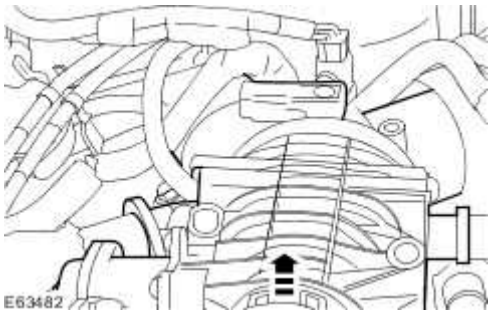

11 . **CAUTION: Make sure the fuel return line valve retaining clip is not damaged. Failure to follow this instruction may result in damage to the vehicle.**

Reposition the intake air shutoff throttle.

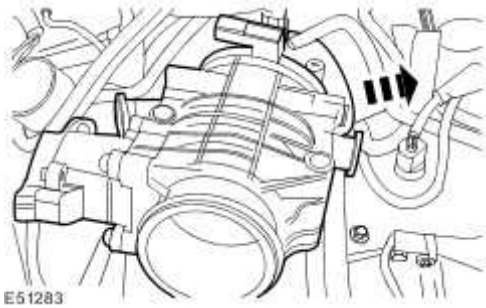

12 . **CAUTION: Make sure the fuel return line valve retaining clip is not damaged. Failure to follow this instruction may result in damage to the vehicle.**

Remove the intake air shutoff throttle.

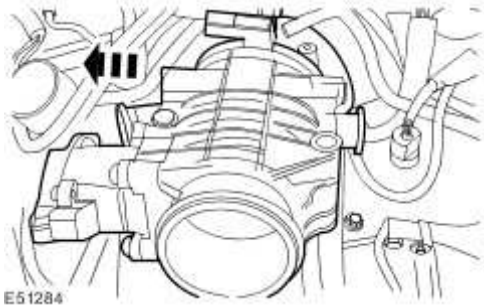

13 . Disconnect the knock sensor (KS) electrical connector.

www.JagDocs.com

Detach the KS electrical connector from the valve cover.

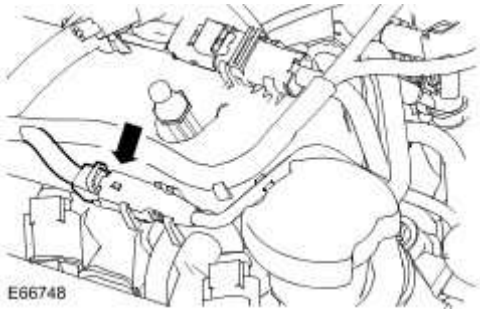

14 . Detach the glow plug electrical connector from the valve cover.

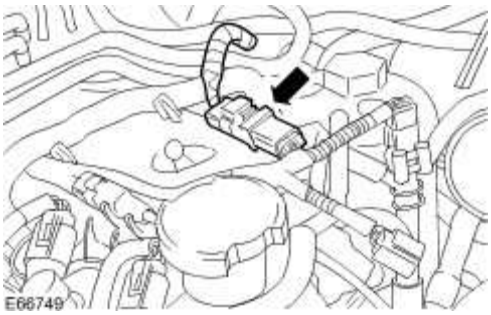

15 . Detach the engine breather pipe.

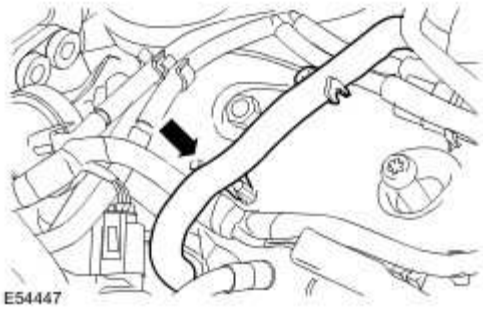

16 . Loosen the right-hand timing cover retaining bolt.

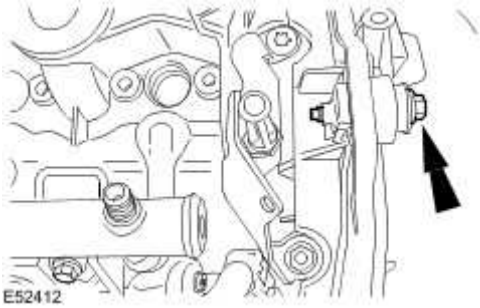

17 . Remove the engine cover mounting bracket.

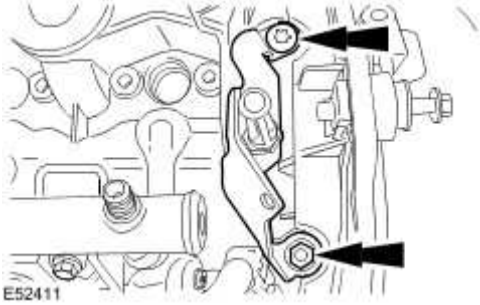

18 . Disconnect the port deactivation vacuum pipe.

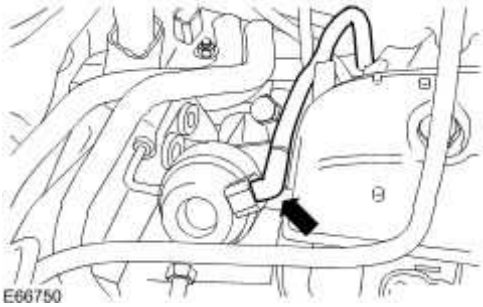

19 . Remove the high-pressure fuel supply line retaining bolt.

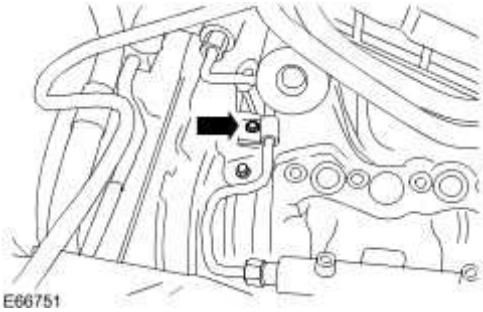

www.JagDocs.com

20 . Using the pneumatic vacuum gun, vacuum foreign material from the fuel injectors and the fuel rail.

For additional information, refer to Fuel Injection Component Cleaning

21 . **CAUTION: Make sure that the high-pressure fuel supply line remains in contact with both the fuel injection pump and the fuel injection supply manifold until both unions have been detached and cleaned. Failure to follow this instruction may result in foreign matter ingress to the fuel injection system.**

CAUTION: While maintaining the pressure on the high-pressure fuel supply line, clean and vacuum foreign material from the line and unions.

Remove and discard the high-pressure fuel supply line.

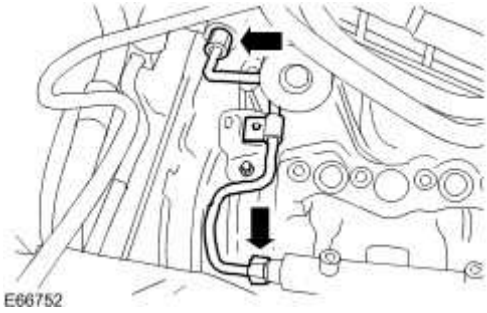

22 . Remove the fuel rail.

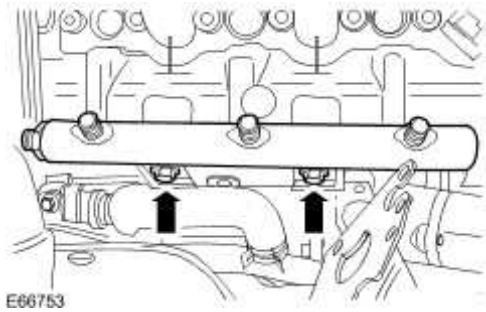

23 . Remove the fuel rail securing bracket.

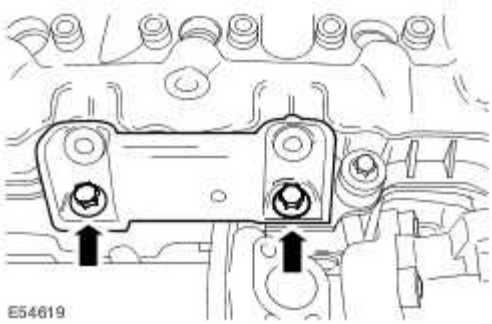

24 . Detach the diesel particulate filter high and low-pressure pipes.

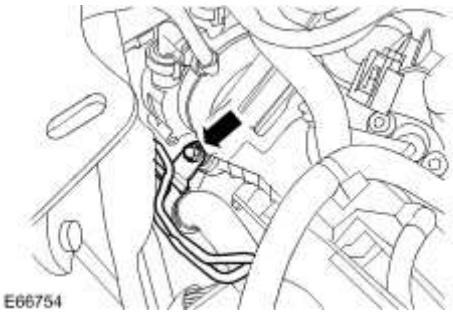

25 . Detach the exhaust gas recirculation (EGR) coolant rail.

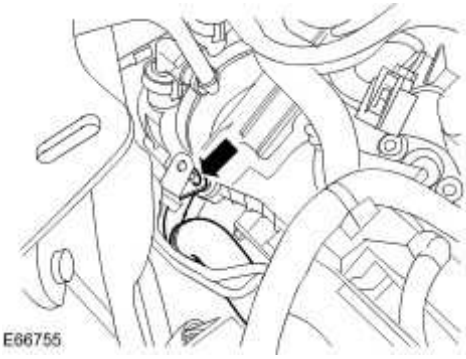

26 . Remove the engine cover locating studs.

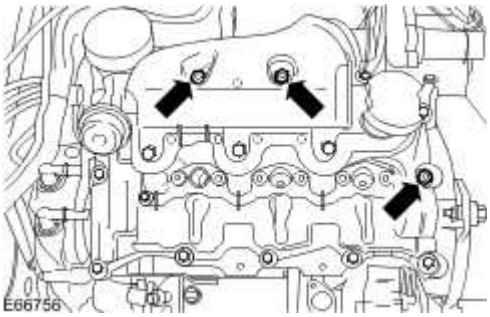

www.JagDocs.com

27 . Remove the valve cover.

- Remove and discard the valve cover gasket.

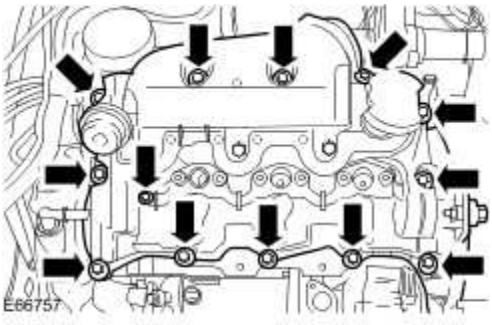

Installation

WARNING: Wait at least 30 seconds after the engine stops before commencing any repair to the high-pressure fuel injection system. Failure to follow this instruction may result in personal injury.

WARNING: Do not smoke or carry lighted tobacco or open flame of any type when working on or near any fuel related components. Highly flammable mixtures are always present and may ignite. Failure to follow these instructions may result in personal injury.

WARNING: This procedure involves fuel handling. Be prepared for fuel spillage at all times and always observe fuel handling precautions. Failure to follow this instruction may result in personal injury.

WARNING: Do not carry out any repairs to the fuel injection system with the engine running. The fuel pressure within the system can be as high as 1650 bar. Failure to follow this

instruction may result in personal injury.

CAUTION: Make sure the workshop area in which the vehicle is being worked on is as clean and as dust free as possible. Foreign matter from work on clutches, brakes or from machining or welding operations can contaminate the fuel system and may result in later malfunction.

CAUTION: Do not disconnect the fuel injector electrical connectors with the engine running. Failure to follow this instruction may result in damage to the vehicle.

CAUTION: Always carry out the cleaning process before carrying out any repairs to the fuel injection system components. Failure to follow this instruction may result in foreign matter ingress to the fuel injection system.

CAUTION: Diesel fuel injection equipment is manufactured to very precise tolerances and fine clearances. It is therefore essential that absolute cleanliness is observed when working with these components. Always install blanking plugs to any exposed ports.

1 . Install the valve cover.

- Install a new valve cover gasket.
- Tighten to 10 Nm.

www.JagDocs.com

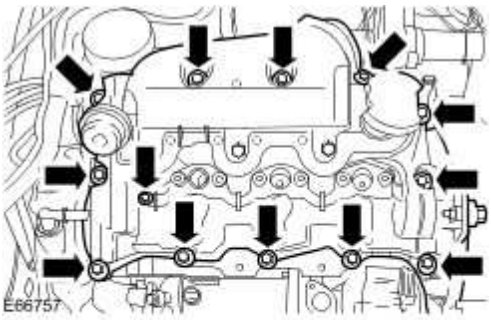

2 . Install the engine cover locating studs.

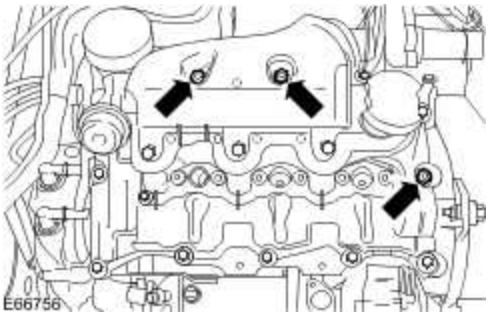

3 . Attach the EGR coolant rail.

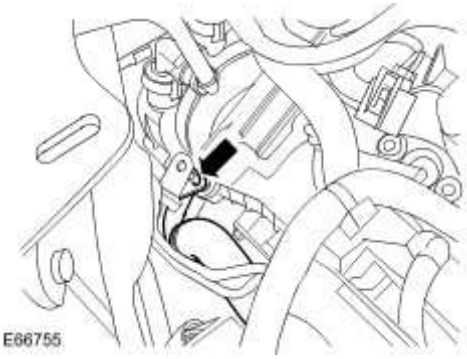

4 . Attach the diesel particulate filter high and low-pressure pipes.

Tighten to 10 Nm.

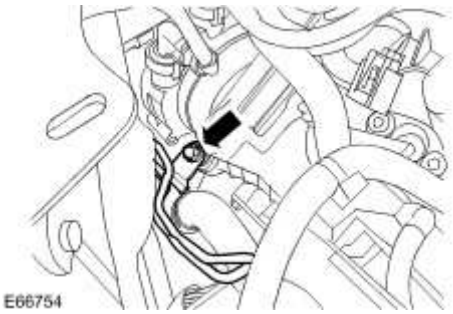

5 . Install the fuel rail securing bracket.

- Tighten to 24 Nm.

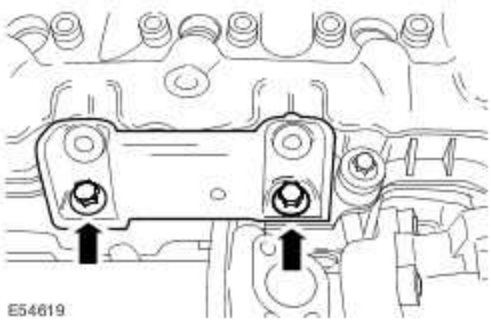

6 . Install the fuel rail.

- Tighten to 24 Nm.

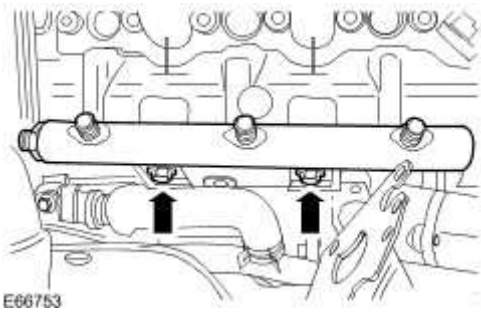

7 Install a new high-pressure fuel supply line.

.

- Tighten the high-pressure fuel supply line in the sequence shown:

www.JagDocs.com

- Tighten the high-pressure fuel supply line union 1 to fuel diverter rail to 15 Nm.
- Tighten the high-pressure fuel supply line union 2 to fuel rail to 15 Nm.
- Tighten the high-pressure fuel supply line union 1 to fuel diverter rail to 30 Nm.
- Tighten the high-pressure fuel supply line union 2 to fuel rail to 30 Nm.

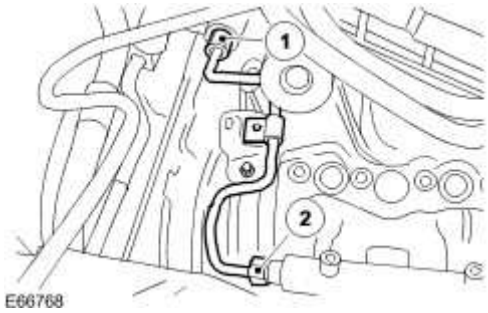

8 . Install the high-pressure fuel supply line retaining bolt.

- Tighten to 10 Nm.

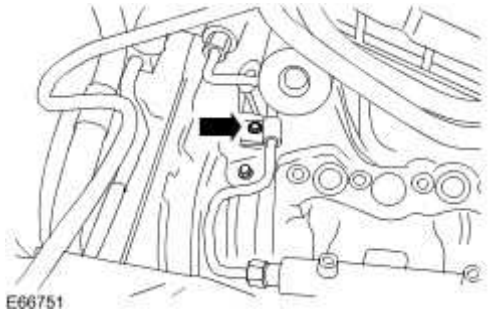

9 . Connect the port deactivation vacuum pipe.

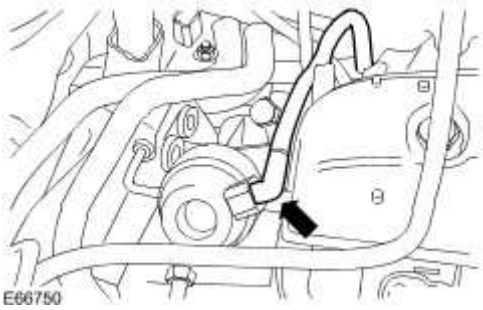

10 . Install the engine cover mounting bracket.

- Tighten to 4 Nm.

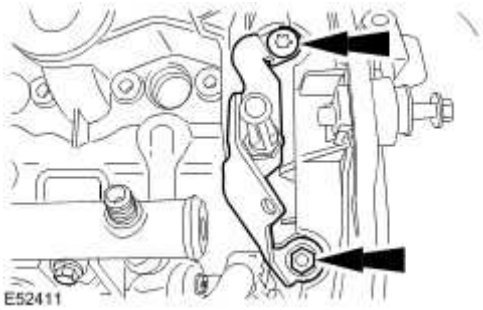

11 . Tighten the right-hand timing cover retaining bolt.

- Tighten to 10 Nm.

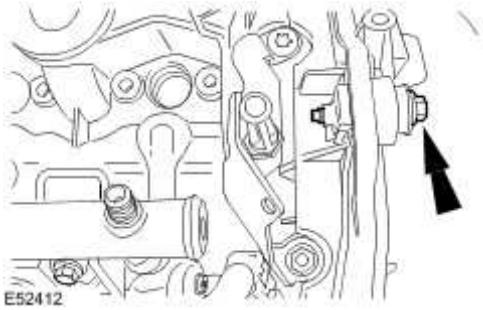

12 . Attach the engine breather pipe.

www.JagDocs.com

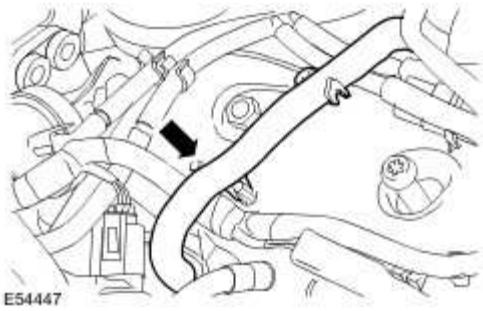

13 . Attach the glow plug electrical connector to the valve cover.

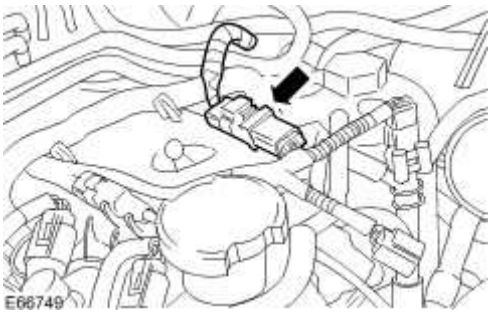

14 . Connect the KS electrical connector.

- Attach the KS electrical connector to the valve cover.

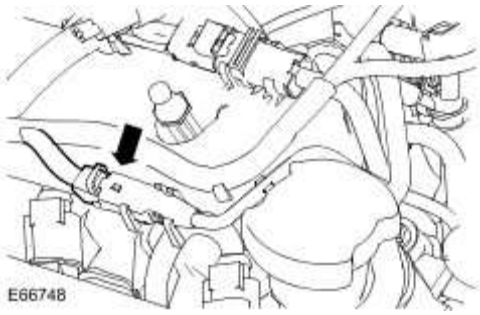

15 . **CAUTION: Make sure the fuel return line valve retaining clip is not damaged. Failure to follow this instruction may result in damage to the vehicle.**

Install the intake air shutoff throttle.

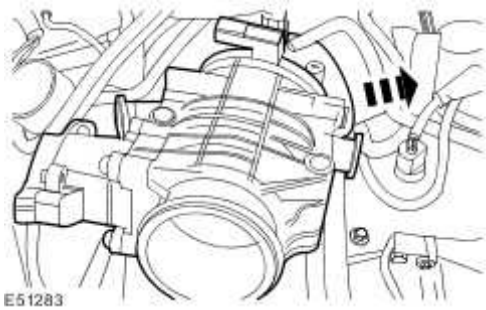

16 . Attach the fuel return line valve onto the intake air shutoff throttle.

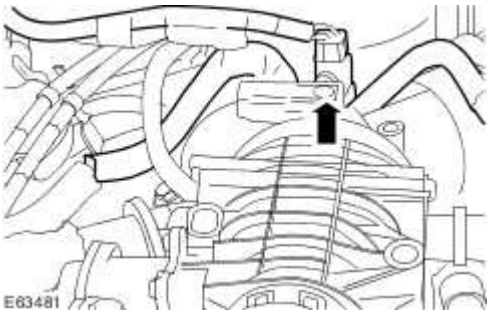

17 . Connect the MAP sensor electrical connector.

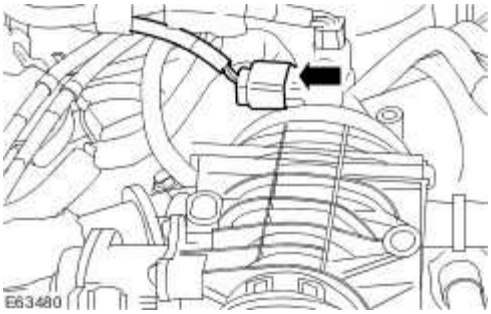

18 . Install the intake air shutoff throttle retaining bolt.

- Tighten to 10 Nm.

www.JagDocs.com

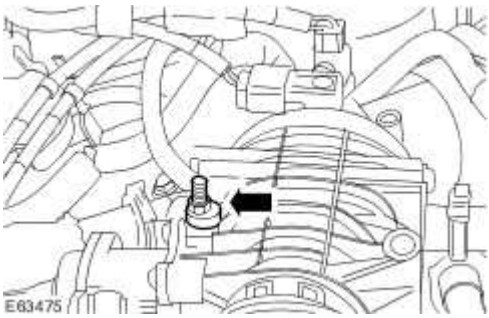

19 . Attach the vacuum hoses.

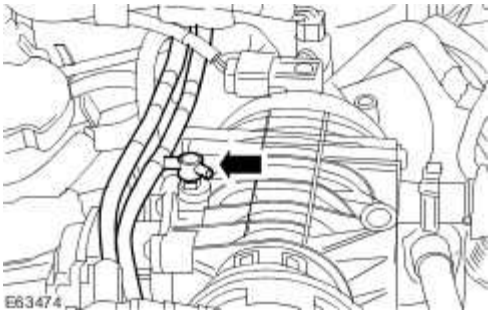

20 . Attach the inake air shutoff throttle elbow.

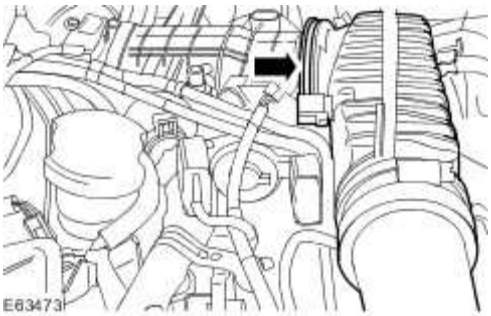

21 . Connect the intake air shutoff throttle electrical connectors.

22 . Install the intake air shutoff throttle elbow retaining bolt.

Tighten to 10 Nm.

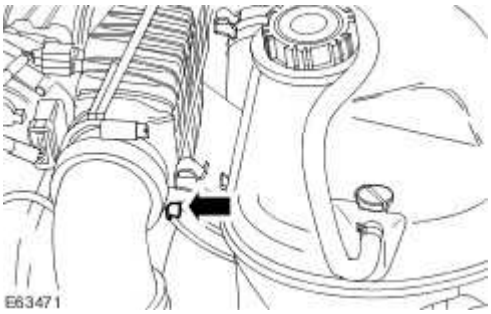

23 . Attach the coolant hose.

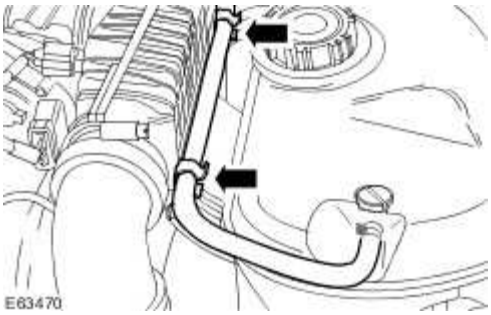

24 . Install the fuel injectors.
For additional information, refer to

www.JagDocs.com

Specifications

Lubricants, Fluids, Sealers and Adhesives

Description	Specification
Jaguar Premium Cooling System Fluid	WSS M97B44-D
Jaguar Premium Cooling System Flush	EGR-M14P7-A

Cooling System Refill Capacities

Engine	Capacity
3.0L	9.4L
3.5L/4.2L	13.3L

Torque Specifications

Description	Nm	lb-ft	lb-in
Auxiliary water pump retaining bolts	10	-	89
Condenser core retaining stud	7	-	62
Coolant expansion tank bleed screw	3	-	27
Coolant expansion tank retaining bolt	3	-	27
Cooling fan motor and shroud retaining nuts	7	-	62
Cooling module retaining bolts - 4.2L SC	7	-	62
Oil cooler inlet pipe	20	15	-
Oil cooler return pipe	20	15	-
Power steering oil cooler retaining nuts - 3.5L/4.2L	7	-	62
Radiator drain plug	1	-	9
Radiator mounting bracket retaining bolts	6	-	53
Thermostat housing retaining bolts - 3.0L	18	13	-
Thermostat housing retaining bolts - 3.5L/4.2L/4.2L SC	9	-	80
Water pump drive pulley retaining bolts - 3.5L/4.2L/4.2L SC	A	-	-
Water pump retaining bolts - 3.0L	25	18	-

Water pump retaining bolts - 3.5L/4.2L/4.2L SC	A	-	-
Water pump retaining bracket bolts - 4.2L SC	7	-	62
A = refer to the procedure for the correct torque sequence	-	-	-

www.JagDocs.com

Cooling System Backflushing

CAUTION: The heater core must be backflushed separately from the engine cooling system to prevent the engine cooling system particles from clogging the heater core tubes and reducing (or eliminating) coolant flow through the heater core. All engine cooling system flushing and backflushing procedures must include a separate backflushing of the heater core after the flushing or backflushing of the engine cooling system.

CAUTION: Heater core internal pressure must not exceed 100 kPa (14.5 psi). Failure to follow this instruction may cause damage to the heater core.

NOTE:

Cooling system backflushing should be carried out before the cooling system components are installed after the cooling system flushing procedure.

1. Disconnect the heater outlet coolant hose from the engine and connect the heater hose to a suitable hose pipe.

2. Disconnect the heater inlet coolant hose from the engine and allow the coolant to drain into a suitable container.

3. Turn the water supply valve to the hose ON and allow water pressure to flow through the heater core.

4. Allow water pressure to flow through the heater core for approximately five minutes.

5. Turn the water supply valve to the hose OFF and disconnect the hose pipe from the heater hose.

6. Connect the heater inlet coolant hose to the engine.

7. Connect the heater outlet coolant hose to the engine.

8. Fill the cooling system as described using a 50% mixture of Jaguar Premium Cooling

System Fluid, or equivalent meeting Jaguar specification WSS M97B44-D and 50% distilled water.

9. Test the system for correct heater performance with the specified engine cooling system conditions.

Radiator Backflushing

1. Remove the radiator.

2. Invert the radiator.

3. Connect a suitable hose pipe to the lower coolant hose connection of the radiator.

4. Turn the water supply valve to the hose ON and allow water pressure to flow through the radiator.

5. Allow water pressure to flow through the radiator for approximately five minutes.

6. Turn the water supply valve to the hose OFF and disconnect the hose pipe from the radiator.

7. Allow the coolant to drain from the radiator.

8. Install the radiator.

Engine Backflushing

1. Remove the thermostat before backflushing the engine.

2. Position the high-pressure water hose into the engine through the engine return and backflush the engine.

www.JagDocs.com

3. Connect a suitable hose pipe to the upper coolant hose connection of the engine.

4. Turn the water supply valve to the hose ON and allow water pressure to flow through the engine.

5. Allow water pressure to flow through the engine for approximately five minutes.

6. Turn the water supply valve to the hose OFF and disconnect the hose pipe from the upper coolant hose connection of the engine.

7. Connect the upper coolant hose to the engine.

8. Fill the cooling system as described using a 50% mixture of Jaguar Premium Cooling System Fluid or equivalent, meeting Jaguar specification WSS M97B44-D and 50% distilled water.

Cooling System Draining, Filling and Bleeding

1.

WARNING: Never remove the coolant pressure cap under any circumstances while the engine is operating. Failure to follow this instruction may result in personal injury. To avoid having scalding hot coolant or steam blow out of the cooling system, use extreme care when removing the coolant pressure cap from a hot cooling system. Wait until the engine has cooled, then wrap a thick cloth around the coolant pressure cap and turn it slowly until the pressure begins to release. Step back while the pressure is released from the system. When certain all the pressure has been released (still with a cloth) turn and remove the coolant pressure cap from the coolant expansion tank. Failure to follow these instructions may result in personal injury.

WARNING: To avoid the possibility of personal injury, do not operate the engine with the hood open until the fan blades have been examined for cracks and separation. Failure to follow this instruction may result in personal injury.

WARNING: Remove fuse 14 from the engine compartment fuse box prior to performing any under hood service in the area of the cooling fan when the engine is hot, since the cooling fan motor could operate if the engine has been switched OFF. Failure to follow this instruction may result in personal injury.

CAUTION: The engine cooling system must be maintained with the correct concentration and type of anti-freeze solution to prevent corrosion and frost damage. Failure to follow this instruction may result in damage to the engine.

CAUTION: Never remove the coolant pressure cap under any circumstances while the engine is operating. Failure to follow this instruction may result in damage to the engine.

Release the cooling system pressure.

- Remove the coolant expansion tank pressure cap.

2. Remove the radiator splash shield.
Radiator Splash Shield (76.22.90)

3. Remove the coolant drain plug.

www.JagDocs.com

- Drain the coolant into a suitable container.

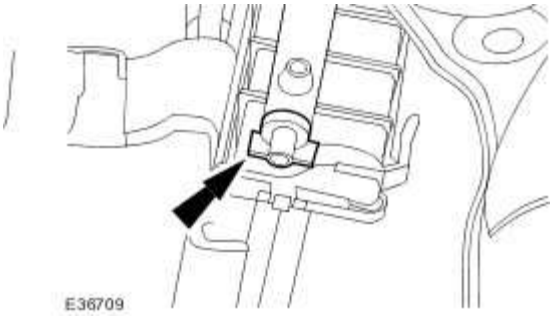

4.

CAUTION: Do not over tighten the drain plug. Failure to follow this instruction may cause damage to the vehicle.

Install the drain plug when all coolant has drained.

- Tighten to 1 Nm.

Remove the drain tray.

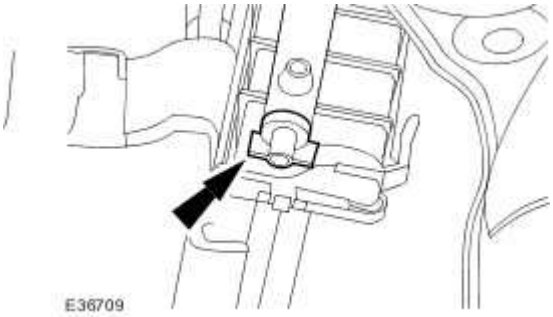

5. Install the radiator splash shield.
Radiator Splash Shield (76.22.90)

6. Remove the coolant expansion tank bleed screw.

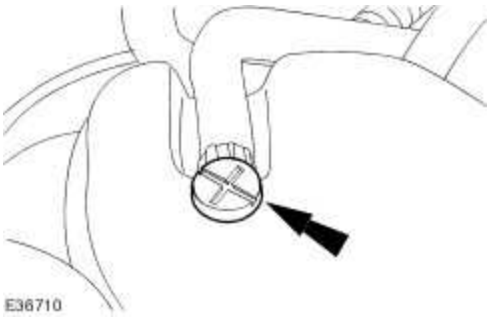

7. Fill the cooling system up to the MAX mark on the coolant expansion tank using a fifty percent mixture of Jaguar Premium Cooling System Fluid or equivalent, meeting Jaguar specification WSS M97B44-D and fifty percent water.

8.

CAUTION: Do not over tighten the coolant expansion tank bleed screw. Failure to follow this instruction may cause damage to the vehicle.

Install the coolant expansion tank bleed screw.

- Tighten to 3 Nm.

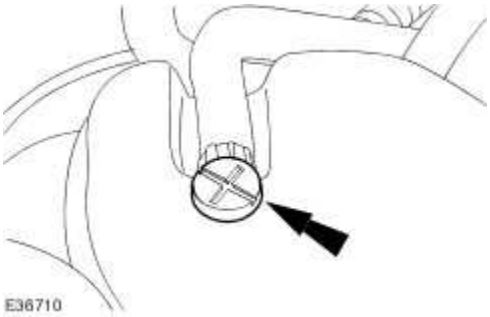

9. Install the coolant expansion tank pressure cap.

10.

CAUTION: Do not RUN the engine with the coolant expansion tank pressure cap removed. Failure to follow this instruction may cause damage to the vehicle.

START and RUN the engine.

11. SET the heating system to MAX heat, the blower motor to MAX speed and the air distribution to instrument panel registers.

12.

CAUTION: Observe the engine temperature gauge. If the engine starts to over-heat switch off immediately and allow to cool. Failure to follow this instruction may cause damage to the vehicle.

Allow the engine to RUN until hot air is emitted from the instrument panel registers, while observing the engine temperature gauge.

13. Switch off the engine.

14. Allow the engine to cool.

www.JagDocs.com

15. Release the cooling system pressure.
    - Remove the coolant expansion tank pressure cap.

16. Fill the cooling system up to the MAX mark on the coolant expansion tank using a fifty percent mixture of Jaguar Premium Cooling System Fluid or equivalent, meeting Jaguar specification WSS M97B44-D and fifty percent water.

17. Install the coolant expansion tank pressure cap.

Cooling System Draining and Vacuum Filling

WARNING: To avoid having scalding hot coolant or steam blow out of the cooling system, use extreme care when removing the coolant pressure cap from a hot cooling system. Wait until the engine has cooled, then wrap a thick cloth around the coolant pressure cap and turn it slowly until the pressure begins to release. Step back while the pressure is released from the system. When certain all the pressure has been released (still with a cloth) turn and remove the coolant pressure cap from the coolant expansion tank. Failure to follow these instructions may result in personal injury.

WARNING: Remove fuse 14 from the engine compartment fuse box prior to performing any under hood service in the area of the cooling fan when the engine is hot, since the cooling fan motor could operate if the engine has been switched OFF. Failure to follow this instruction may result in personal injury.

NOTE:

The engine cooling system must be maintained with the correct concentration and type of anti-freeze solution to prevent corrosion and frost damage. Failure to follow this instruction may result in damage to the vehicle.

NOTE:

Engine coolant will damage paint finished surfaces. If spilled, immediately remove coolant and clean area with water.

NOTE:

Vehicles fitted with supercharged engines shown, V8 NA and V6 engines similar.

1. Set the heater controls to maximum HOT.

2.

WARNING: Since injury such as scalding could be caused by escaping steam or coolant, do not remove the filler cap from the coolant expansion tank while the system is hot.

Remove coolant expansion tank filler cap.

3.

WARNING: Do not work on or under a vehicle supported only by a jack. Always support the vehicle on safety stands.

www.JagDocs.com

Raise and support the vehicle.

4. Remove the radiator splash shield.
Radiator Splash Shield (76.22.90)

5. Detach the electrical connectors.

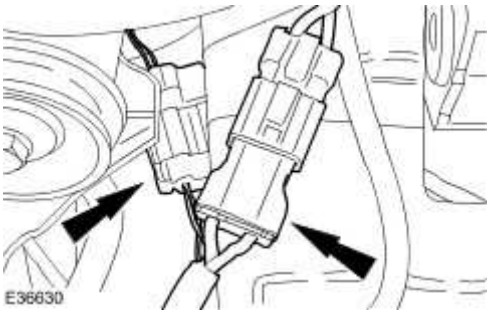

6. Remove the radiator lower cowl.

7.

WARNING: Eye protection must be worn.

Position container to collect coolant.

8. Remove the coolant drain plug.
   - Allow the coolant to drain.

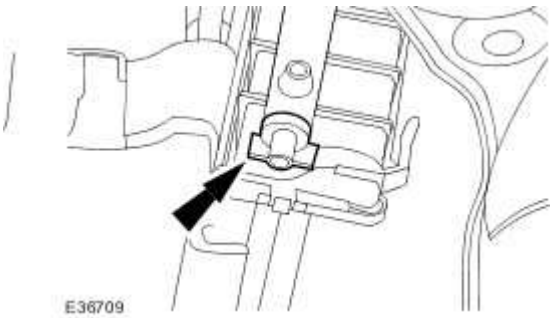

9.

CAUTION: Do not over tighten the drain plug. Failure to follow this instruction may cause damage to the vehicle.

Install the drain plug.

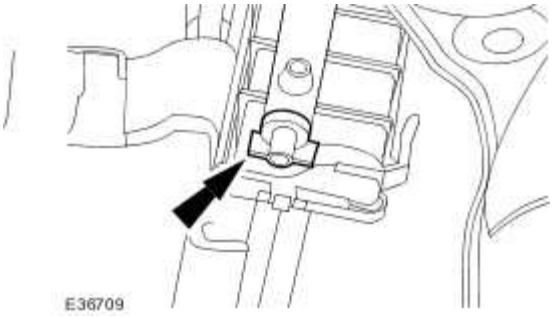

10. Disconnect the supercharger radiator bottom hose.
    - Release the clip.
    - Disconnect the hose.
    - Allow the coolant to drain.

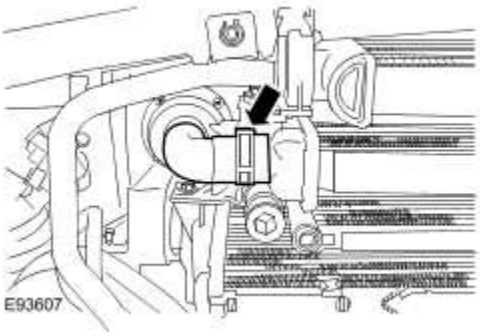

11. Connect the supercharger bottom hose.
    - Connect the hose.
    - Secure the clip.

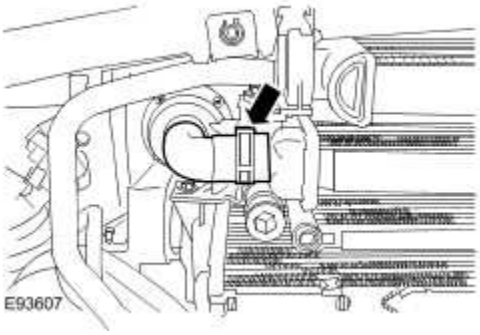

12. Install the radiator lower cowl.

www.JagDocs.com

13. Attach the electrical connectors.

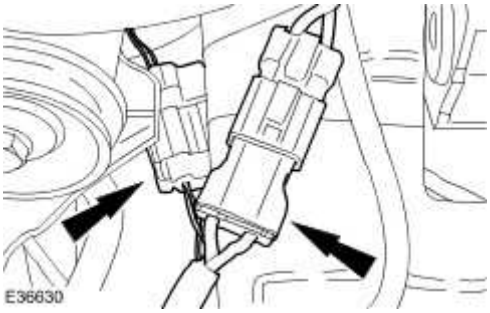

14. Install the radiator splash shield.
Radiator Splash Shield (76.22.90)

15. Install the cooling system vacuum refill adaptor to the expansion tank.

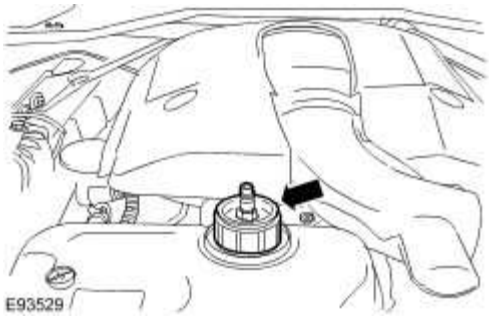

16. Install the vacuum filler gauge to the cooling system vacuum refill adaptor.

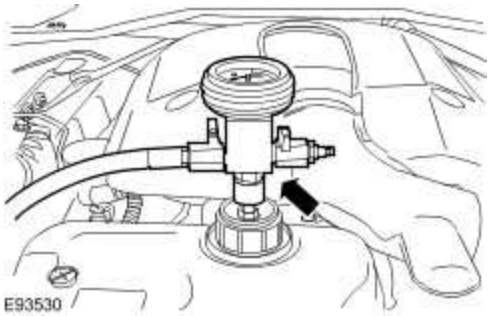

17. Install the venturi tube assembly to the vacuum filler gauge.

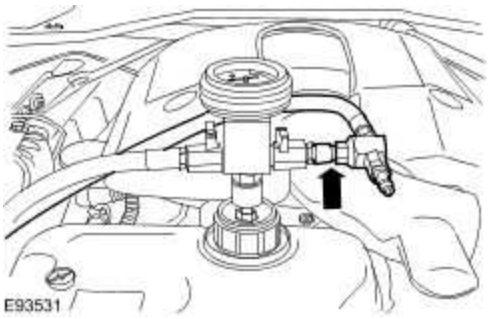

18. **NOTE:**
    Make sure both valves are in the closed position on the vacuum filler gauge assembly.

NOTE:
The coolant vacuum fill tool needs an air pressure of 6 to 8 bar (87 to 116 psi) to operate correctly.

NOTE:
Small diameter or long airlines may restrict airflow to the coolant vacuum fill tool.

Connect a regulated compressed air supply to the venturi tube assembly.

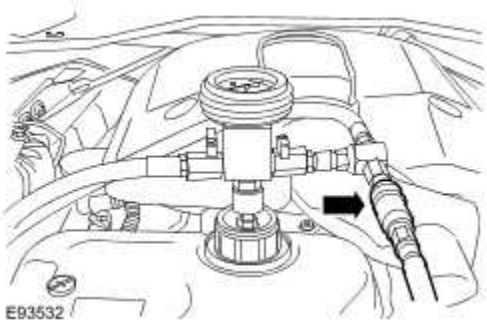

19. Open air supply valve.

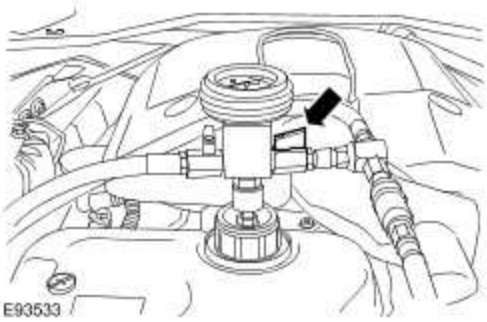

20. **NOTE:**
    Make sure the coolant supply hose is positioned into a container of fifty percent mixture of Jaguar Premium Cooling System Fluid or equivalent, meeting Jaguar specification WSS M97B44-D and fifty percent water. Make sure no air can enter the coolant supply hose.

www.JagDocs.com

Open coolant supply valve for 2 seconds to prime coolant supply hose.

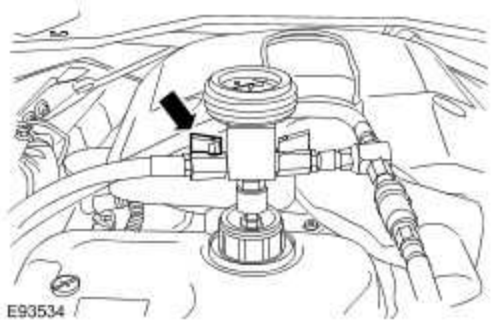

21. Apply air pressure progressively until the arrow on the vacuum filler gauge reaches the green segment.

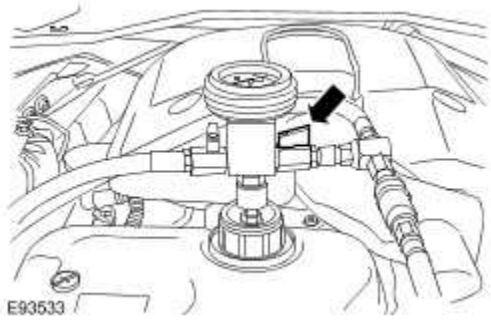

22. Close air supply valve and disconnect air supply.

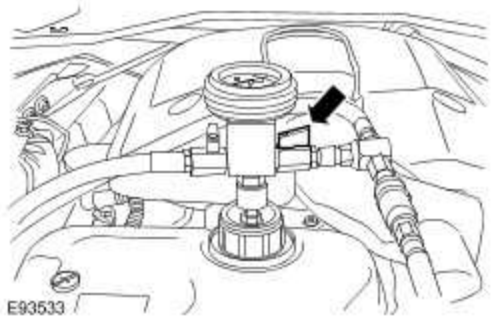

23. Allow 1 minute to check vacuum is held.

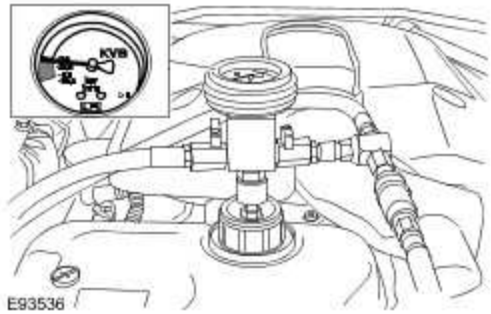

24. **NOTE:**
    Close the coolant supply valve when the coolant expansion tank MAX mark is reached or coolant movement has ceased.

Open coolant supply valve and allow coolant to be drawn into system.

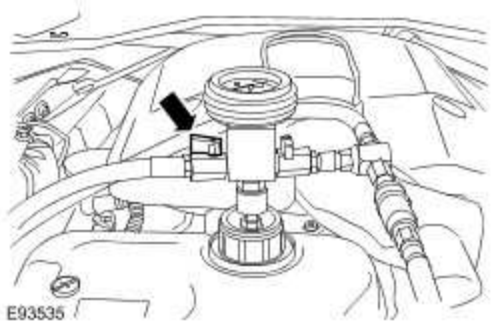

25. When expansion tank is full and coolant movement has ceased close coolant supply valve.

26. Remove vacuum refill adaptor and gauge from expansion tank.

27. Install the coolant expansion tank filler cap.

28. Remove the engine cover.

29. Remove the supercharger coolant filler plug.
    - Remove and discard the sealing washer.

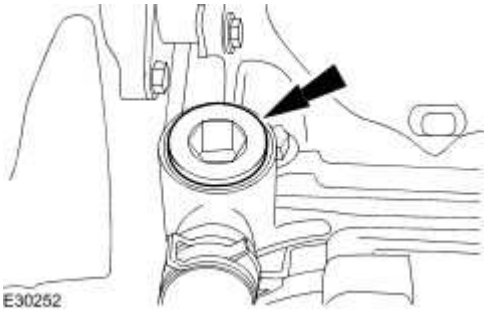

30. **NOTE:**
    Place a suitable cloth around supercharger fill port.

Top up the coolant through the supercharger fill port.

www.JagDocs.com

31.

CAUTION: Coolant may spill from supercharger fill port when ignition switched on.

Switch ignition on.

32.

CAUTION: Do not allow the supercharger water pump to run dry for more than one minute. Failure to follow this instruction may result in damage to the vehicle.

Allow the supercharger pump to run and top up the coolant through supercharger fill port.

33. Switch the ignition off.

34. Install the supercharger coolant fill plug.
    - Install a new sealing washer.
    - Tighten to 45 Nm.
    - Clean off any spillages.

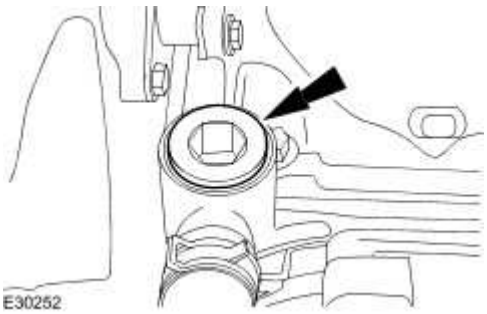

35. Install the engine cover.

36.

CAUTION: Do not RUN the engine with the coolant expansion tank pressure cap removed. Failure to follow this instruction may cause damage to the vehicle

START and RUN the engine.

37.

CAUTION: Observe the engine temperature gauge. If the engine starts to over-heat switch off immediately and allow to cool. Failure to follow this instruction may

cause damage to the vehicle.

Allow the engine to RUN until hot air is emitted from the instrument panel registers, while observing the engine temperature gauge.

38. Switch off the engine.

39. Allow the engine to cool.

40.

WARNING: Since injury such as scalding could be caused by escaping steam or coolant, do not remove the filler cap from the coolant expansion tank while the system is hot.

Check and top up the cooling system if required.

www.JagDocs.com

Cooling System Flushing

1. Remove the air cleaner. <<303-12A>>

2. Remove the air cleaner. <<303-12B>>

3. Remove the thermostat.
Thermostat - 4.2L, Vehicles With: Supercharger (26.45.07)

4. Detach the lower coolant hose from the radiator and position to one side.

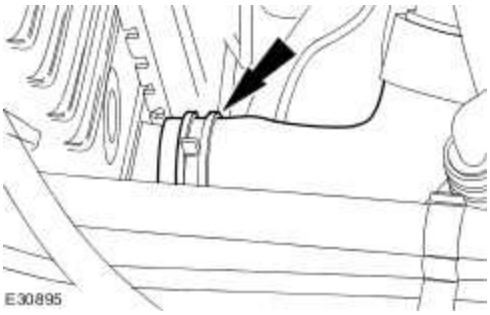

5. Detach the upper coolant hose from the radiator.

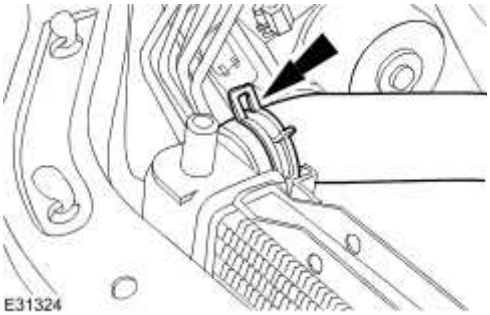

NOTE:

To remove rust, sludge and other foreign material from the cooling system, use Premium Cooling System flush, meeting Jaguar specification EGR-M14P7-A, which is safe for use with aluminium cooling systems. This cleaning restores cooling system efficiency and helps prevent overheating.

NOTE:

In severe cases where cleaning solvents will not properly clean the cooling system, it will be necessary to use the pressure flushing method using Cooling System Flusher, 164-R3670 to restore efficient operation.

NOTE:

A pulsating or reversed direction of flushing water will loosen sediment more quickly than a steady flow in the normal coolant flow direction.

NOTE:

Dispose of old coolant and flushing water contaminated with coolant and cleaning chemicals in accordance with local, state and federal laws.

6. Connect a hose pipe to the radiator upper coolant hose connection using a suitable connector.

7.

CAUTION: Radiator internal pressure must not exceed 100 kPa (14.5 psi). Failure to follow this instruction may cause damage to the radiator.

Flush the radiator using the hose pipe until the coolant flowing from the radiator lower coolant hose connection is clear.

8. Remove the hose pipe from the radiator upper coolant hose connection.

9. Connect a hose pipe to the upper coolant hose using a suitable connector.

10. Flush the engine using the hose pipe until the coolant flowing from the radiator lower coolant hose is clear.

11. Remove the hose pipe from the upper coolant hose connection.

12. Connect the upper coolant hose to the radiator.

13. Connect the lower coolant hose to the radiator.

14. Install the thermostat.

15. Fill the cooling system.

Cooling System Draining, Filling and Bleeding

www.JagDocs.com

16. Install the air cleaner. <<303-12A>>

17. Install the air cleaner. <<303-12B>>

Engine Cooling

Vehicles with 3.0L engine

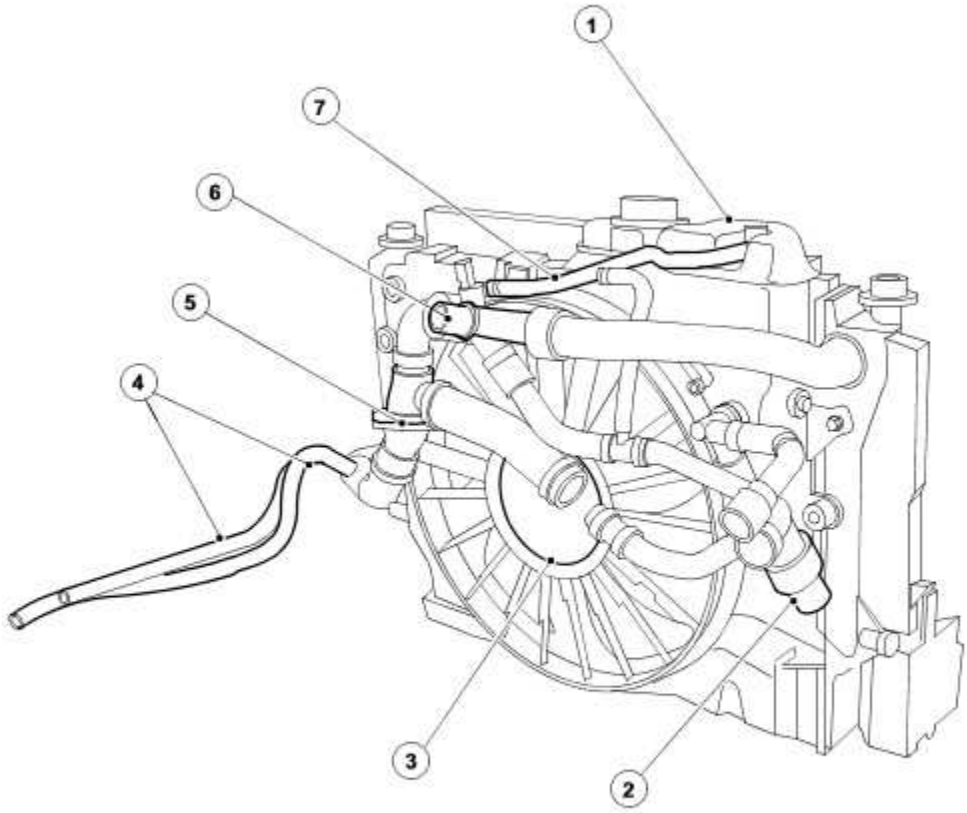

E37153

Item	Part Number	Description
1	—	Coolant expansion tank
2	—	Auxiliary coolant flow pump
3	—	Cooling fan motor
4	—	Oil cooler inlet and outlet hoses
5	—	Thermostat housing

www.JagDocs.com

6	—	Engine coolant outlet
7	—	Vent hose

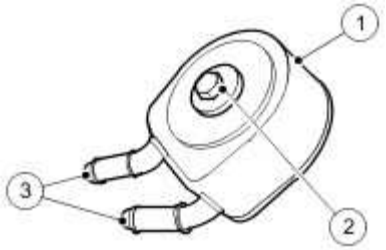

E31280

Item	Part Number	Description
1	—	Engine oil cooler
2	—	Retaining bolt
3	—	Engine oil cooler connections

Vehicles with 4.2L engine

Vehicles with 3.5L or 4.2L engine without supercharger

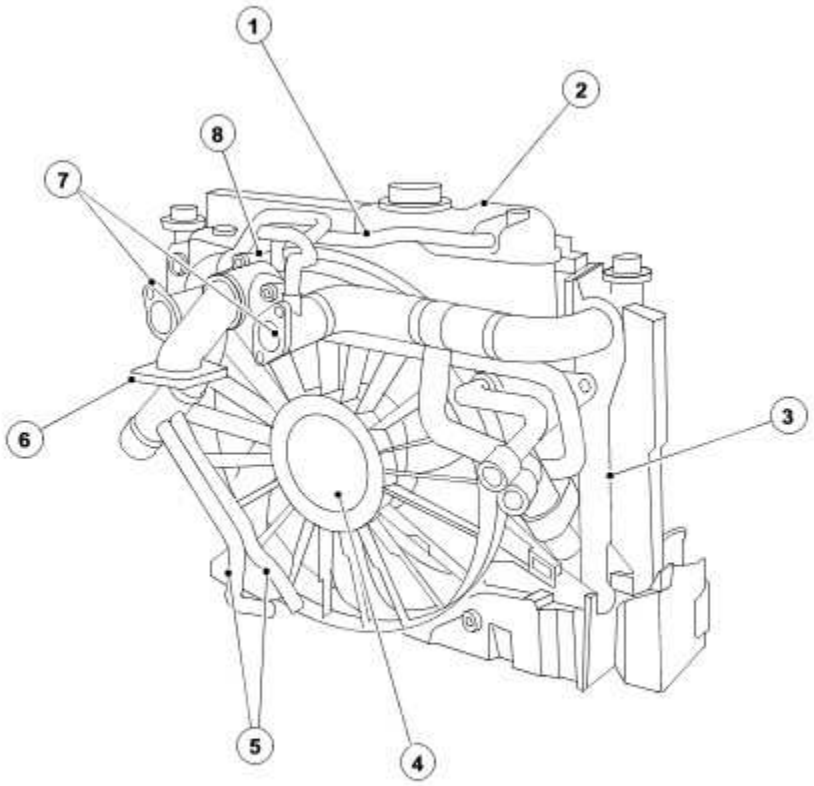

E37154

Item	Part Number	Description
1	—	Vent hose
2	—	Coolant expansion tank
3	—	Radiator
4	—	Cooling fan motor
5	—	Engine oil cooler connections
6	—	Engine coolant inlet
7	—	Engine coolant outlets

www.JagDocs.com

8	—	Thermostat housing

Vehicles with 4.2L engine with supercharger

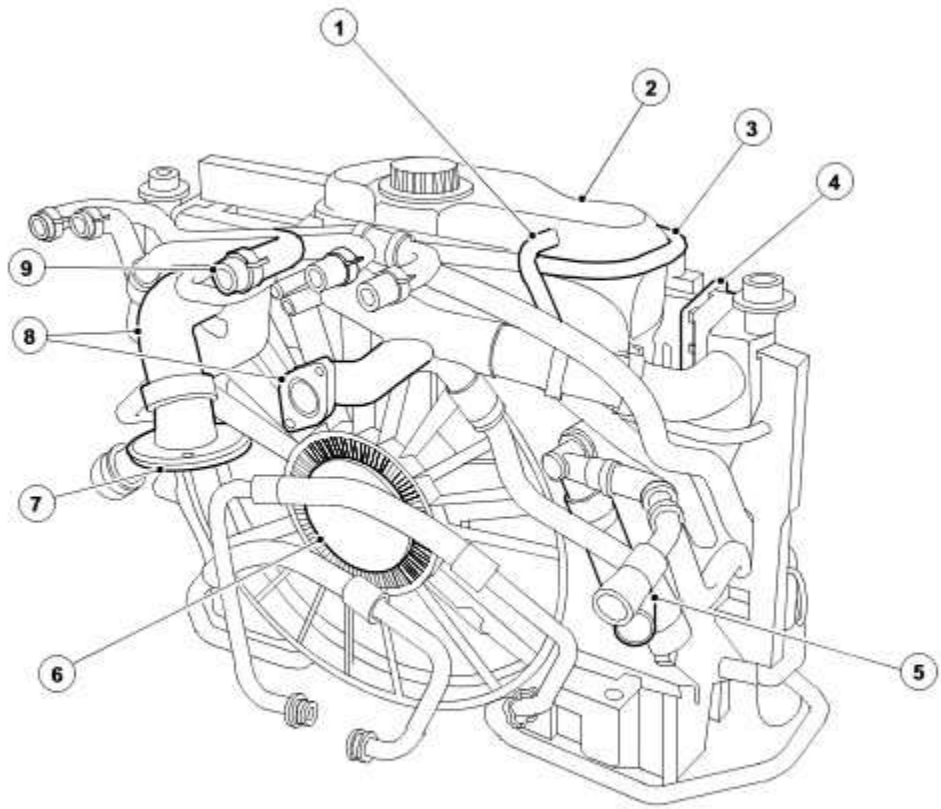

E37155

Item	Part Number	Description
1	—	Vent hose (SC radiator)
2	—	Coolant expansion tank
3	—	Vent hose
4	—	Radiator
5	—	Auxiliary coolant flow pump
6	—	Cooling fan motor

7	—	Engine coolant inlet
8	—	Engine coolant outlet
9	—	Thermostat housing

WARNING: Never remove the coolant pressure cap under any circumstances while the engine is operating. Failure to follow this instruction may result in personal injury. To avoid having scalding hot coolant or steam blow out of the cooling system, use extreme care when removing the coolant pressure cap from a hot cooling system. Wait until the engine has cooled, then wrap a thick cloth around the coolant pressure cap and turn it slowly until the pressure begins to release. Step back while the pressure is released from the system. When certain all the pressure has been released (still with a cloth) turn and remove the coolant pressure cap from the coolant expansion tank. Failure to follow these instructions may result in personal injury.

WARNING: To avoid the possibility of personal injury, do not operate the engine with the hood open until the fan blades have been examined for cracks and separation. Failure to follow this instruction may result in personal injury.

WARNING: Remove fuse 14 from the engine compartment fuse box prior to performing any under hood service in the area of the cooling fan when the engine is hot, since the cooling fan motor could operate if the engine has been switched OFF. Failure to follow this instruction may result in personal injury.

CAUTION: The engine cooling system must be maintained with the correct concentration and type of anti-freeze solution to prevent corrosion and frost damage.

CAUTION: Never remove the coolant pressure cap under any circumstances while the engine is operating. Failure to follow this instruction may result in damage to the engine.

The cooling system consists of the following:

www.JagDocs.com

- Radiator
- Coolant pressure cap
- Thermostat
- Water pump
- Electric cooling fan
- Coolant expansion tank
- Engine oil cooler

Water Pump

The water pump is of a conventional design and is driven by the crankshaft pulley through the accessory drive belt. The water pump belt tension is maintained by an automatic drive belt tensioner. <<303-05>>

Thermostat

The thermostat is located in the thermostat housing and allows rapid engine warm-up by restricting coolant flow through the radiator below 82°C (180°F). The thermostat also assists in keeping the engine operating temperature within predetermined limits. On the 4.2L supercharged engine the thermostat begins to open at 84°C (183°F) and is fully open at 98°C (208°F), on the 3.5L or 4.2L and 3.0L engine the thermostat begins to open at 88°C - 92°C (190°F - 198°F) and is fully open at 102°C (216°F).

When the engine is cold and the thermostat is closed, coolant flows from the water pump through the engine. It then returns to the water pump through the upper coolant hose.

When the engine is warm and the thermostat is open, coolant flows into the radiator through the upper coolant hose. It then returns to the water pump from the radiator through the lower coolant hose and engine oil cooler.

The heater core is on a parallel circuit and is unaffected by the position of the thermostat.

Radiator

The radiator is of aluminium construction with plastic end tanks. Foam seals are fitted to the radiator to prevent the cooling air from by passing the radiator core. A coolant drain plug is provided in the lower coolant end tank of the radiator for the draining of the coolant. The cooling fan shroud is attached to the radiator.

Cooling Fan

A single, variable speed cooling fan motor is attached to a fan shroud located behind the radiator. The speed is determined by the Engine Coolant Temperature (ECT) and the air conditioning pressure and transmission oil temperature.

Under hot operating conditions, the fan may continue to operate for four minutes after the engine has been switched off.

Engine Block Heater

For vehicle markets subject to very cold climate conditions, an engine block heater for connection to an external mains power supply, is fitted in place of the engine block drain plug.

Coolant Recovery System

A pressurized coolant expansion tank system is used which continuously separates the air from the cooling system and replenishes the system through the coolant expansion tank outlet hose, attached to the heater return hose.

A continuous vent from the engine and radiator to the coolant expansion tank prevents air locks from forming in the cooling system.

Manual bleed points are provided on the coolant reservoir.

The coolant expansion tank serves as the location for:

- service fill.
- coolant expansion during warm-up.
- air separation during operation.
- system pressurization by the coolant pressure cap.

The coolant expansion tank is designed to have approximately 0.5 to 1 liter of air when cold to allow for coolant expansion.

Engine Oil Cooler

The engine oil cooler is a Modine oil to water type. The oil cooler on the 3.0L engine is fitted to the oil filter housing. The oil cooler on the 3.5L or 4.2L engine is located at the front of the engine and is fitted between the oil filter housing and the oil filter. The oil cooler on the 4.2L engine with a supercharger is fitted behind the front bumper on the front of the cooling pack.

The coolant supply for the engine oil cooler is through the radiator bottom hose.

Engine Coolant

The long life engine coolant is formulated to last for five years or 240,000 km (150,000 miles). The coolant is silicate free and orange in color. The long life engine coolant must not be mixed with conventional engine coolant.

www.JagDocs.com

Vehicles with 3.0L engine

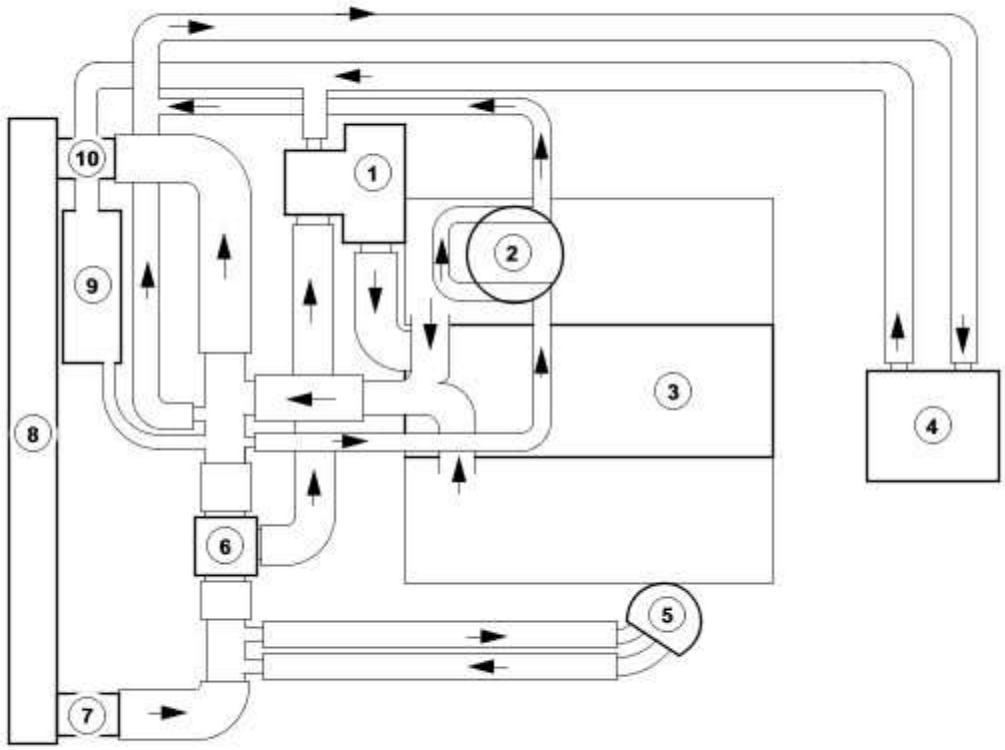

E36784

Item	Part Number	Description
1	—	Water pump
2	—	Throttle body
3	—	V6 engine
4	—	Heater core
5	—	Engine oil cooler
6	—	Thermostat
7	—	Lower hose
8	—	Radiator

9	—	Coolant expansion tank
10	—	Upper hose

Vehicles with 3.5L or 4.2L engine

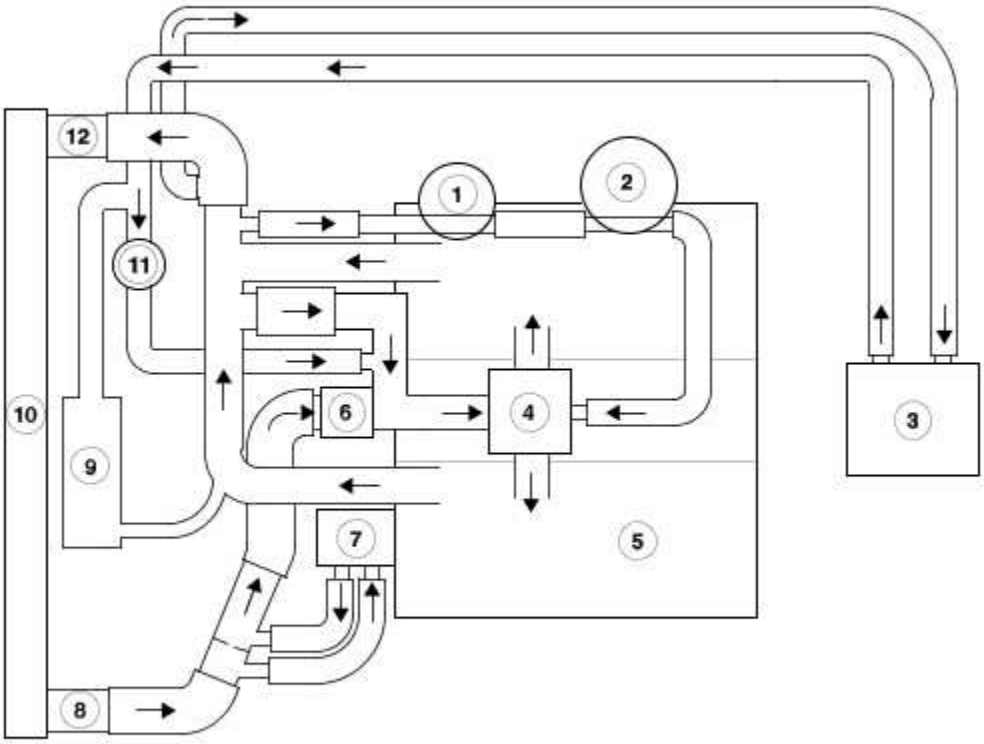

E36782

Item	Part Number	Description
1	—	EGR valve
2	—	Throttle body
3	—	Heater core
4	—	Water pump
5	—	Engine bank (left-hand)

www.JagDocs.com

6	—	Thermostat
7	—	Engine oil cooler
8	—	Lower hose
9	—	Coolant expansion tank
10	—	Radiator
11	—	Auxiliary coolant flow pump
12	—	Upper hose

Vehicles with 4.2L engine with supercharger

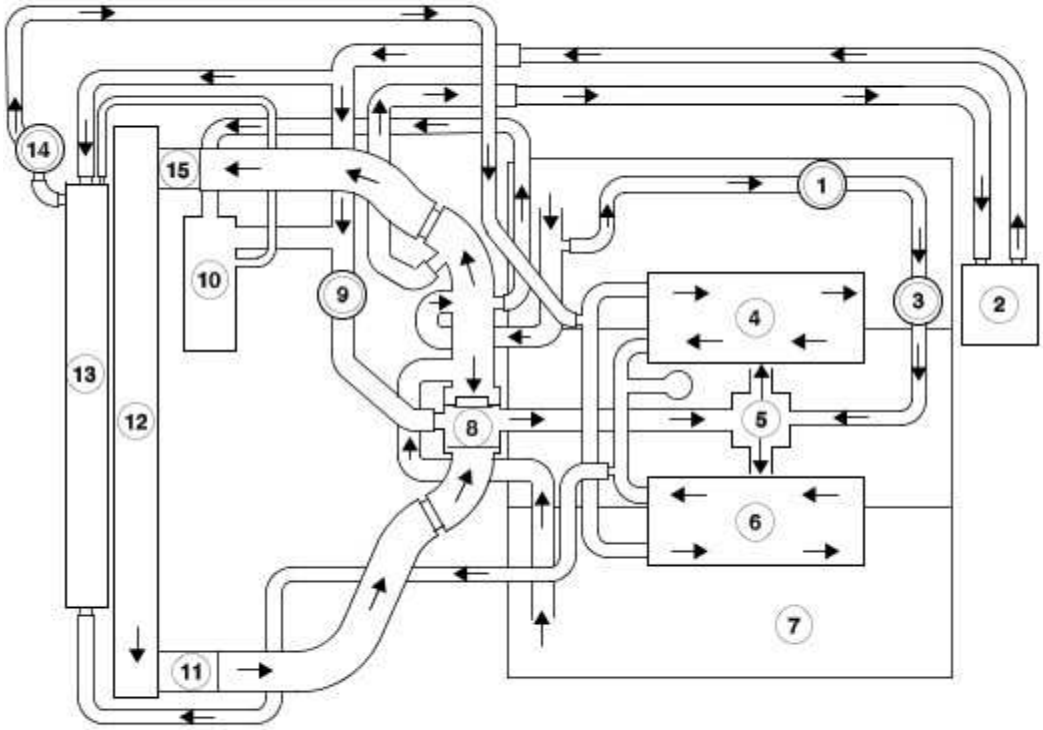

E36783

Item	Part Number	Description

1	—	EGR valve
2	—	Heater core
3	—	Throttle body
4	—	Charge air cooler (right-hand)
5	—	Water pump
6	—	Charge air cooler (left-hand)
7	—	Engine bank (left-hand)
8	—	Thermostat
9	—	Auxiliary coolant flow pump
10	—	Coolant expansion tank
11	—	Lower hose
12	—	Radiator
13	—	SC radiator
14	—	SC coolant pump
15	—	Upper hose

www.JagDocs.com

Engine Cooling

1 . Verify the customer concern.

2 . Visually inspect for obvious signs of mechanical or electrical damage.

Visual Inspection Chart

Mechanical	Electrical
Leaks	Fuse
Coolant expansion tank	Wiring harness
Electric fan	Loose or corroded connector(s)
Radiator	Engine cooling temperature (ECT) sensor or engine cylinder head temperature (CHT) sensor

1 . If an obvious cause for an observed or reported concern is found, correct the cause (if possible) before proceeding to the next step.

2 . If the concern is not visually evident, verify the symptom and refer to symptom chart.

DTC	Condition	Possible Source	Action
P0116	Concern with engine coolant temperature (range/performance)	• ECT sensor. • ECT sensor circuit(s). • Low/contaminated coolant. • Thermostat failure. • Overheating.	For V6 vehicles, <<303-14A>> For V8 Vehicles, <<303-14B>>
P0117	Concern with engine coolant temperature (low input)	• ECT sensor. • ECT sensor circuit (short to ground/open circuit).	For V6 vehicles, <<303-14A>> For V8 Vehicles, <<303-14B>>
P0118	Concern with engine coolant temperature (high input)	• ECT sensor. • ECT sensor circuit (short to ground/open circuit).	For V6 vehicles, <<303-14A>> For V8 Vehicles, <<303-14B>>

P0125	Concern with engine coolant temperature (insufficient for close loop control)	• ECT sensor. • ECT sensor circuit (short to ground/open circuit).	For V6 vehicles, <<303-14A>> For V8 Vehicles, <<303-14B>>
P1474	Concern with engine coolant temperature	Water pump malfunction.	Water Pump - 3.0L, VIN Range: G00442->G45703 (26.50.01) Water Pump - 4.2L, Vehicles With: Supercharger (26.50.01) Water Pump - 3.5L/4.2L, Vehicles Without: Supercharger (26.50.01)
None	Concern with coolant loss	• Hoses. • Hose connections. • Radiator. • Water pump. • Heater core. • Gaskets. • Engine casting cracks. • Engine block core plugs.	GO to Pinpoint Test G234419p1.
None	Concern with overheating	• Engine coolant (level/condition). • Thermostat. • Fan motor. • Fan motor fuses and/or circuits. • ECT sensor. • Engine control module (ECM). • Fan speed module.	GO to Pinpoint Test G234419p2.
None	Concern with engine not reaching normal temperature	• Thermostat. • Electric fan. • Fan speed module.	GO to Pinpoint Test G234419p3.

PINPOINT TEST G234419p1 : LOSS OF COOLANT

www.JagDocs.com

G234419t1 : VISUAL INSPECTION

1. Visually inspect for loss of coolant. 2. Carry out a system pressure test. See component tests in this section.

- **Is the engine cooling system leaking?**

-> Yes
Rectify the leak as indicated by the test result. TEST the system for normal operation.

-> No
Verify the customer complaint.

PINPOINT TEST G234419p2 : THE ENGINE OVERHEATS

G234419t2 : CHECK COOLANT

1. Check the coolant level and condition.

- **Does the system contain sufficient coolant of the correct specification?**

-> Yes
GO to Pinpoint Test G234419t3.

-> No
Top-up the system.
Cooling System Draining, Filling and Bleeding Check for coolant loss. GO to Pinpoint Test G234419p1.

G234419t3 : CHECK THERMOSTAT

1. Check the thermostat.
Thermostat - 3.0L (26.45.07)
Thermostat - 4.2L, Vehicles With: Supercharger (26.45.07)
Thermostat - 3.5L/4.2L, Vehicles Without: Supercharger (26.45.07) See component tests in this section.

- **Is the thermostat OK?**

-> Yes
<<303-14A>> Cooling fans, modules, circuits, sensors, etc. are tested in this section.

-> No
INSTALL a new thermostat.

Thermostat - 3.0L (26.45.07)
Thermostat - 4.2L, Vehicles With: Supercharger (26.45.07)
Thermostat - 3.5L/4.2L, Vehicles Without: Supercharger (26.45.07) TEST the system for normal operation.

PINPOINT TEST G234419p3 : THE ENGINE DOES NOT REACH NORMAL OPERATING TEMPERATURE

G234419t4 : CHECK THERMOSTAT

1. Check the thermostat.
Thermostat - 3.0L (26.45.07)
Thermostat - 4.2L, Vehicles With: Supercharger (26.45.07)
Thermostat - 3.5L/4.2L, Vehicles Without: Supercharger (26.45.07) See component tests in this section.

- **Is the thermostat OK?**

-> Yes
<<303-14A>> Cooling fans, modules, circuits, sensors, etc. are tested in this section.

-> No
INSTALL a new thermostat.
Thermostat - 3.0L (26.45.07)
Thermostat - 4.2L, Vehicles With: Supercharger (26.45.07)
Thermostat - 3.5L/4.2L, Vehicles Without: Supercharger (26.45.07) TEST the system for normal operation.

Component Tests

Pressure Test

WARNING: Never remove the coolant expansion tank cap under any circumstances while the engine is operating. Failure to follow these instructions may result in damage to the cooling system or engine and/or personal injury. To avoid having scalding hot water or steam blow out of the cooling system, use extreme care when removing the coolant expansion tank cap from a hot cooling system. Wait until the engine has cooled, then wrap a thick cloth around the coolant expansion tank cap and turn it slowly until the pressure begins to release, step back while the pressure is released from the system. When certain all the pressure has been released (still with a cloth) turn and remove the coolant expansion tank cap. Failure to follow these instructions may result in personal injury.

www.JagDocs.com

1 . Switch the engine off.

2 . Open the hood and install protective fender covers.

3 . Carefully remove the coolant expansion tank cap from the coolant expansion tank to relieve pressure in the cooling system. Add coolant to coolant expansion tank as necessary.

4 . Install the adapter fitting from Pressure Tester tightly between overflow/air purge nipple and overflow/air purge hose at the coolant expansion tank. Reinstall the coolant expansion tank cap.

5 . Attach the pressure pump and gauge to the adapter fitting and pressurize the cooling system to the coolant expansion tank cap lower limit. Refer to Specification.

6 . Pressurize the cooling system. Observe the gauge reading for approximately two minutes. Pressure should not drop during this time.

- If system holds pressure, proceed to step 8.

- If the pressure drops, check for leaks at the engine to heater core hoses, engine to radiator hoses, bypass hose, water valve hose (if applicable), thermostat housing gasket, radiator and heater core, etc. Also refer to engine system checks if a leak cannot be located in the cooling system. Correct any leaks found and recheck the system.

7 . Release the system pressure by loosening the coolant expansion tank cap. Check the coolant level. Replenish as necessary with the correct coolant solution.

8 . Check the radiator overflow hose for any obstructions which may block the flow of coolant either to or from the coolant expansion tank.

9 . Conduct the coolant expansion tank pressure cap pressure test in this section.

Coolant Expansion Tank Pressure Cap Pressure Test

WARNING: Never remove the coolant expansion tank cap under any circumstances while the engine is operating. Failure to follow these instructions may result in damage to the cooling system or engine and/or personal injury. To avoid having scalding hot water or steam blow out of the cooling system, use extreme care when removing the coolant expansion tank cap from a hot cooling system. Wait until the engine has cooled, then wrap a thick cloth around the coolant

expansion tank cap and turn it slowly until the pressure begins to release, step back while the pressure is released from the system. When certain all the pressure has been released (still with a cloth) turn and remove the coolant expansion tank cap. Failure to follow these instructions may result in personal injury.

1 . Remove the expansion tank cap from the radiator coolant expansion tank.

2 . Use water to clean in area of rubber seal and vacuum relief valve. Immerse expansion tank cap in water and install expansion tank cap pressure test adapter from Pressure Tester on the expansion tank cap.

3 . **NOTE:**

If the plunger of the pump is depressed too quickly, an erroneous pressure reading will result.

Slowly depress the plunger of the pressure test pump until the pressure gauge reading stops increasing, and note highest pressure reading obtained.

4 . Release pressure by turning the pressure relief screw counterclockwise. Then tighten the pressure relief screw and repeat Step 5 at least twice to make sure the pressure test reading is repeatable and within acceptable gauge reading limits of the expansion tank cap.

5 . If the pressure test gauge readings are not within acceptable gauge reading limits, install a new expansion tank cap.

Thermostat Test - mechanical

Remove and inspect the thermostat, note its opening temperature and immerse it in water. Heat the water until this temperature is reached. The thermostat should begin to open. If it does not begin to open, install a new thermostat. Continue to heat the water until the thermostat fully opens, 5.8 mm (0.2 in) or more off the valve seat. If it does not fully open, install a new thermostat.

Radiator Leak Test - removed from the vehicle

CAUTION: Do not leak test an aluminium radiator in the same water that is used to leak test copper/brass radiators. Flux and caustic cleaners may be present in the test water which will corrode aluminium.

Clean the radiator before leak testing to prevent contamination of the test tank. Leak test the radiator in clean water with 138 kPa (20 psi) air pressure.

A separate clean test tank is recommended for aluminium radiators. If a separate tank is not available for aluminium radiator testing, rinse the test tank each time before testing an aluminium radiator.

www.JagDocs.com

Coolant Expansion Tank (26.15.01)

Removal

Vehicles without supercharger

1 . **NOTE:**

Cap the vent hose to minimize coolant loss.

Detach the vent hose.

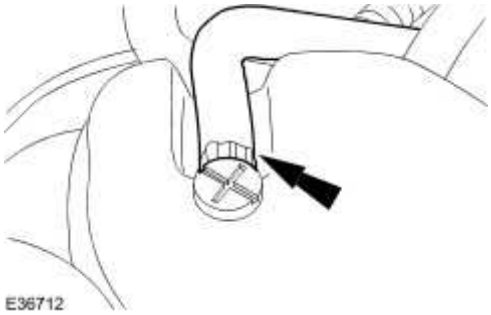

Vehicles with supercharger

2 . **NOTE:**

Cap the vent hoses to minimize coolant loss.

Detach the vent hoses.

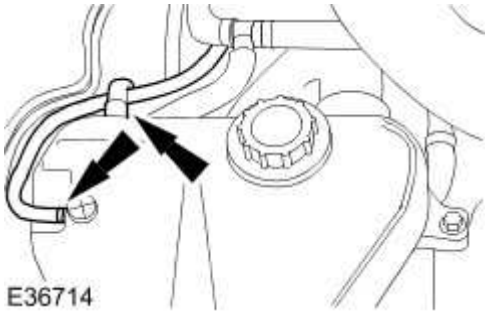

www.JagDocs.com

All vehicles

3 . Detach the coolant expansion tank.

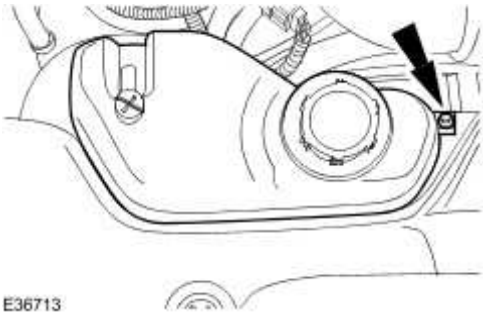

4 . Disconnect the coolant expansion tank low level sensor electrical connector.

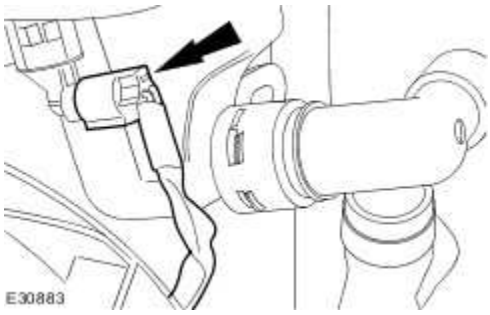

5 . **NOTE:**

Make sure the retaining clip is not removed.

NOTE:

Cap the coolant expansion tank lower hose to minimize coolant loss.

Detach the coolant expansion tank lower hose.

- Remove the coolant expansion tank.

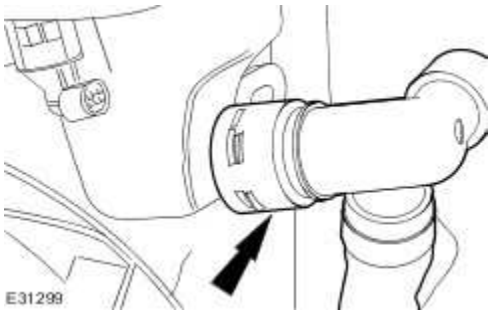

Installation

1 . To install, reverse the removal procedure.

Tighten to 3 Nm.

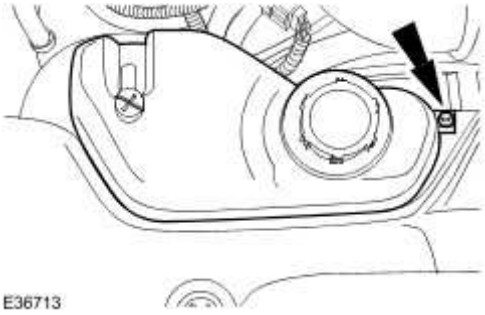

2 . Check and top up the cooling system as required.

www.JagDocs.com

Cooling Fan Motor and Shroud (26.25.25)

Removal

All Vehicles

1. Remove fuse 14 from the engine compartment fuse box prior to performing any under hood service in the area of the cooling fan.

2. Drain the cooling system.
   For additional information, refer to

3. Detach the electrical connectors.

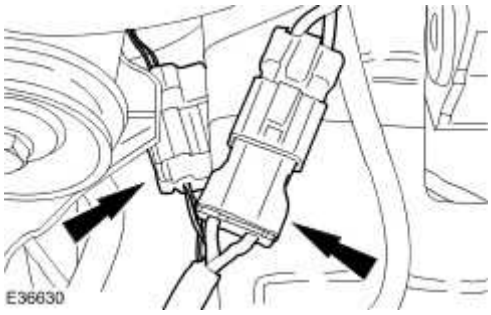

4. Disconnect the electric fan electrical connectors.

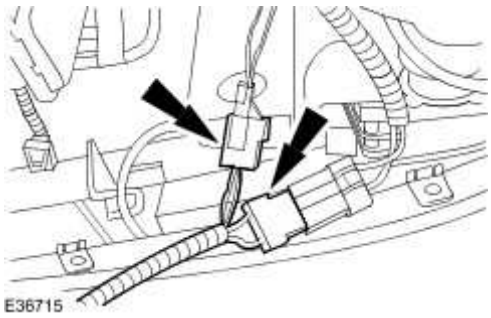

5. Detach the wiring harness.

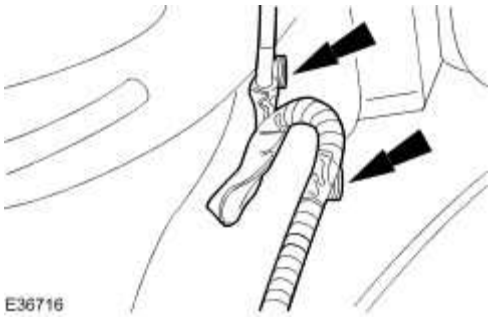

Vehicles with supercharger

6 . Disconnect the supercharger water pump electrical connector.

All vehicles

7 . Lower the vehicle.

8 . Remove the coolant expansion tank.
For additional information, refer to

Vehicles with 3.0L engine

9 . Remove the air cleaner. <<303-12A>>

Vehicles with 3.5L or 4.2L engine

10 . Remove the air cleaner. <<303-12B>>

All Vehicles

11 . Remove the radiator grille opening panel. <<501-02>>

www.JagDocs.com

12 . Remove the radiator mounting brackets.

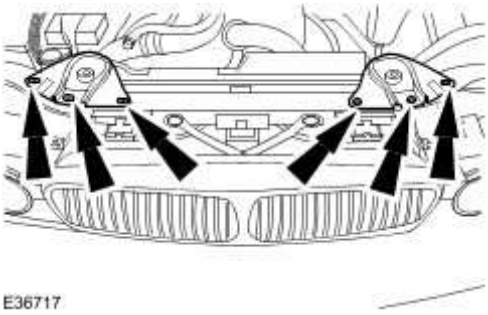

13 . Detach the upper coolant hose.

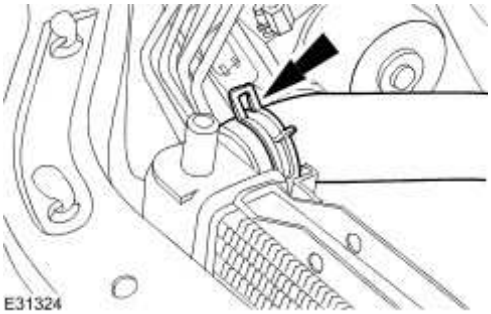

14 . Detach the wiring harness.

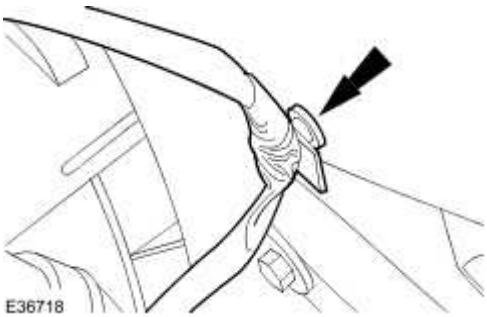

Vehicles with 3.5L or 4.2L engine

15 . Detach the auxiliary coolant flow pump.

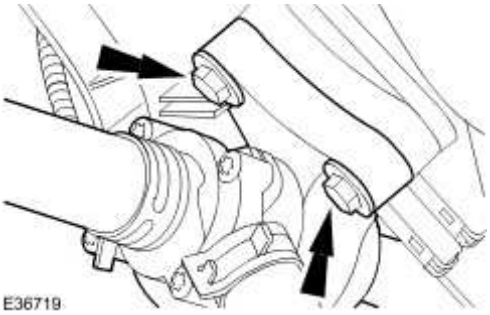

All vehicles

16 . **NOTE:**

Right-hand shown left-hand similar.

Remove the cooling fan motor and shroud retaining bolt.

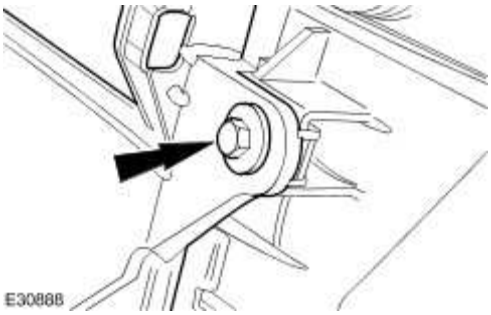

17 . **CAUTION: Make sure that the retaining lugs of the radiator are not damaged when detaching the cooling fan motor and shroud. Failure to follow this instruction may result in damage to the vehicle.**

NOTE:

Left-hand shown right-hand similar.

Detach the cooling fan motor and shroud retaining lugs from the radiator.

18 . **CAUTION: Make sure that the radiator is not damaged when removing the cooling fan motor and shroud. Failure to follow this instruction may result in damage to the**

www.JagDocs.com

vehicle.

Remove the cooling fan motor and shroud.

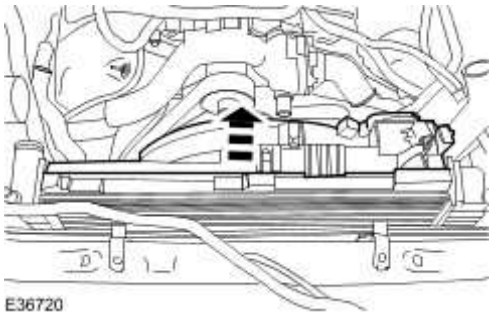

Installation

All vehicles

1. **CAUTION: Make sure that the radiator is not damaged when installing the cooling fan motor and shroud. Failure to follow this instruction may result in damage to the vehicle.**

CAUTION: Make sure that the retaining lugs of the radiator are not damaged when installing the cooling fan motor and shroud. Failure to follow this instruction may result in damage to the vehicle.

To install, reverse the removal procedure.

Tighten to 7 Nm.

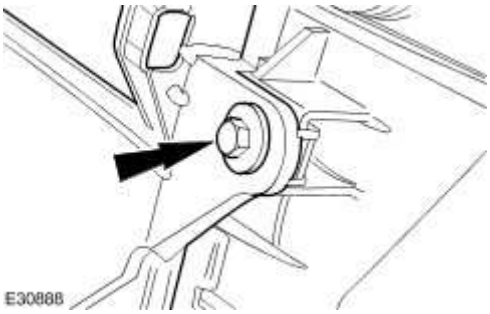

Vehicles with 3.5L or 4.2L engine

2 . Tighten to 10 Nm.

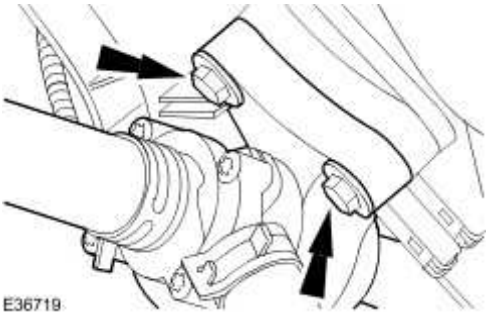

All vehicles

3 . Tighten to 9 Nm.

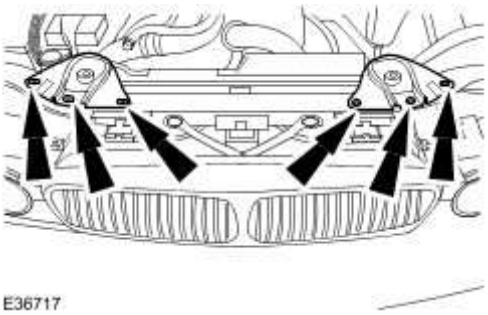

4 . Fill the cooling system.
For additional information, refer to

www.JagDocs.com

Radiator (26.40.01)

Removal

All vehicles

1 . Remove the cooling fan motor and shroud.
For additional information, refer to Cooling Fan Motor and Shroud (26.25.25)

2 . Detach the transmission oil cooler inlet and return pipes.

- Remove and discard the O-ring seals.
- Cap the oil cooler inlet and return pipes and the oil cooler.

3 . Detach the lower coolant hose.

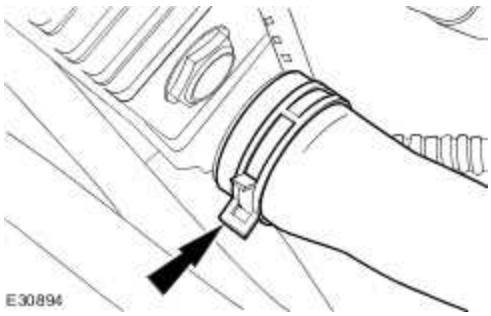

4 . Raise the vehicle.

5 . Remove the radiator lower cowl.

Vehicles with supercharger

6 . Remove the oil cooler.
For additional information, refer to Oil Cooler - Vehicles With: Supercharger (12.60.68)

7 . Disconnect the water pump coolant hoses.

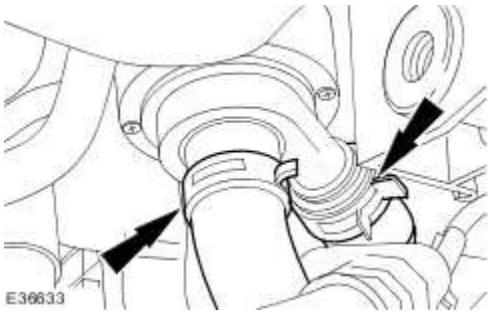

8 . Remove the water pump retaining bolt.

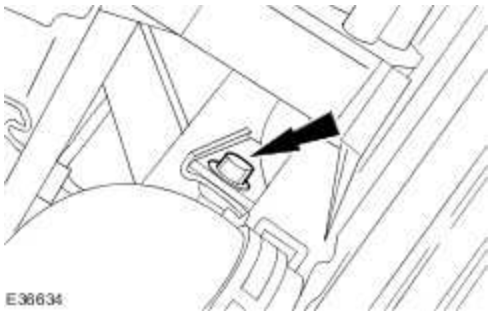

9 . Remove the water pump.

www.JagDocs.com

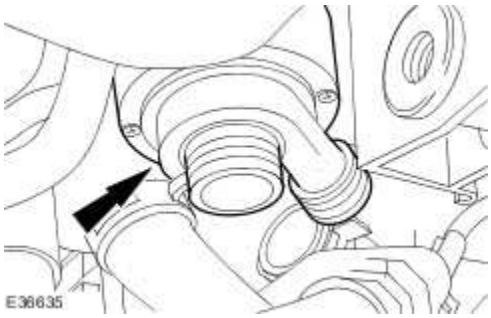

10 . Remove the water pump retaining bracket.

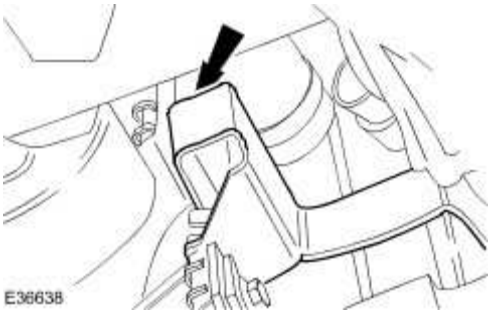

11 . **NOTE:**

Left-hand shown, right-hand similar.

Detach the power assisted steering oil cooler.

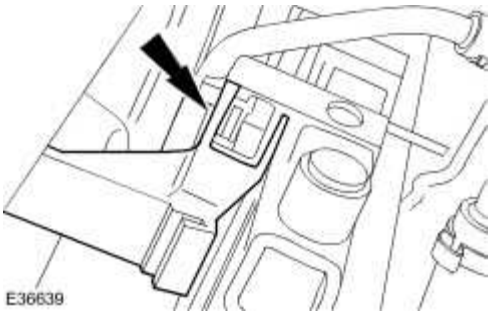

12 **NOTE:**

.

Left-hand shown, right-hand similar.

Remove the cooling module retaining bolt.

Secure the supercharger cooling radiator, condenser core and engine oil cooler using suitable retaining straps.

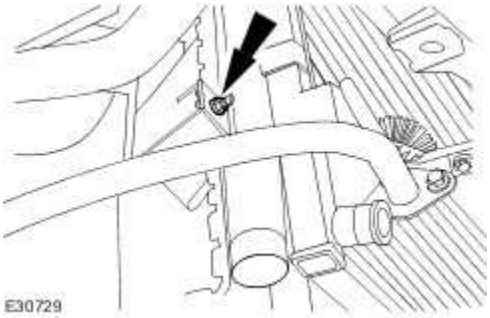

Vehicles without supercharger

13 . **NOTE:**

Left-hand shown, right-hand similar.

Detach the power steering oil cooler.

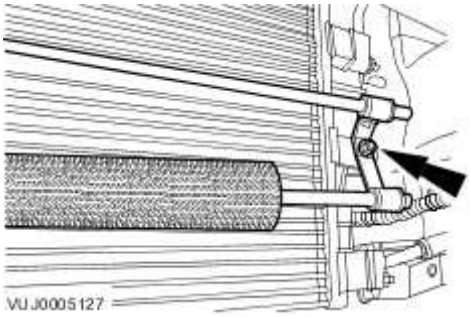

14 . **NOTE:**

Left-hand shown, right-hand similar.

Remove the condenser core retaining stud.

Secure the condenser core and PAS cooler using suitable retaining straps.

www.JagDocs.com

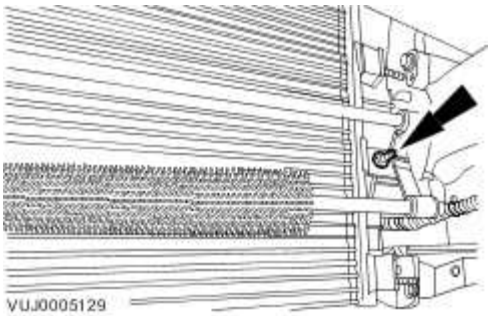

All vehicles

15 . Lower the vehicle.

16 . **CAUTION: Make sure that the radiator is not damaged when removed.**

Remove the radiator.

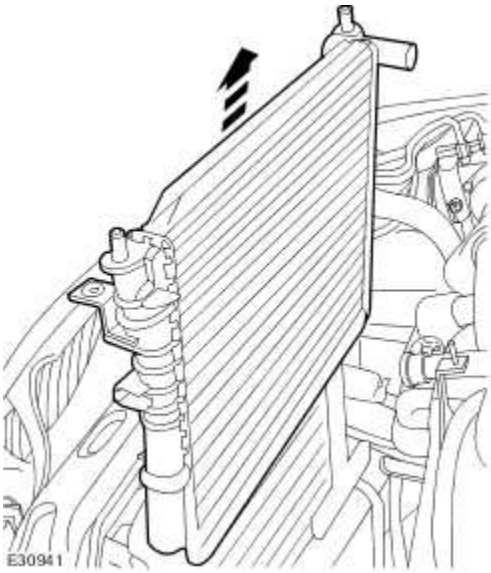

Installation

All vehicles

1 . **CAUTION: Make sure that the radiator is not damaged when installed.**

To install, reverse the removal procedure.

Vehicles without supercharger

2 . **NOTE:**

Left-hand shown, right-hand similar.

Tighten to 7 Nm.

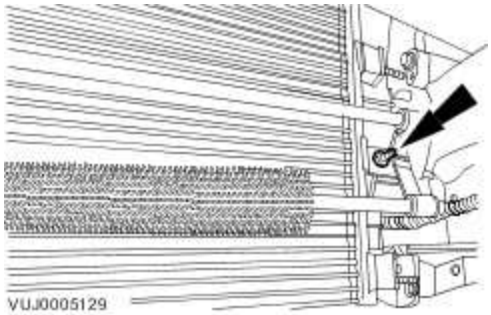

3 . **NOTE:**

Left-hand shown, right-hand similar.

Tighten to 7 Nm.

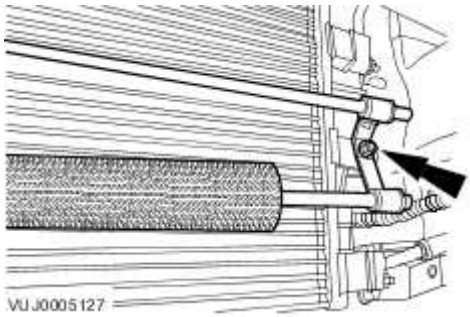

Vehicles with supercharger

4 . **NOTE:**

Left-hand shown, right-hand similar.

Tighten to 7 Nm.

www.JagDocs.com

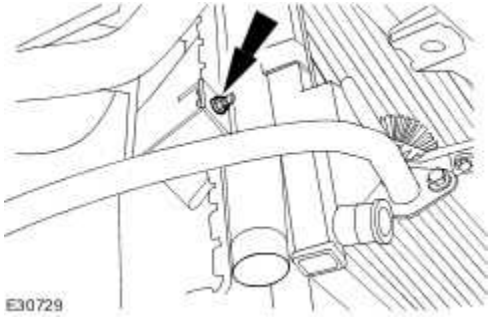

5 . Tighten to 7 Nm.

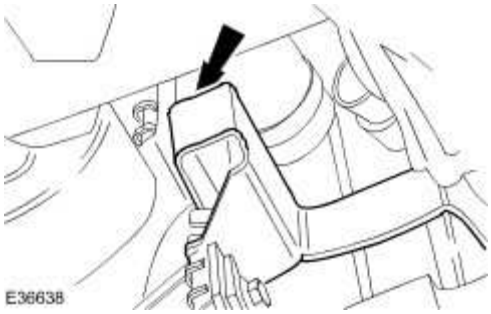

All vehicles

6 . **NOTE:**

Install new O-ring seals.

Tighten to 20 Nm.

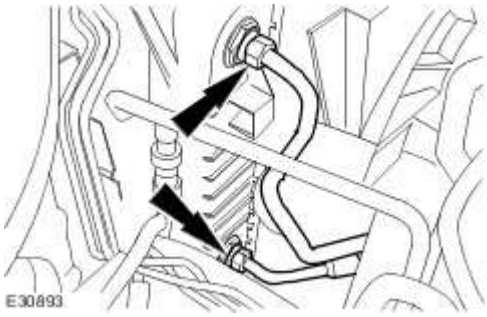

7 . Fill the cooling system.
For additional information, refer to Cooling System Draining, Filling and Bleeding

8 . Carry out transmission fluid level check.
For additional information, refer to Transmission Fluid Level Check

Thermostat - 3.0L (26.45.07)

Removal

1. Remove fuse 14 from the engine compartment fuse box prior to performing any under hood service in the area of the cooling fan.

2. Drain the cooling system.
   For additional information, refer to

3. Lower the vehicle.

4. Remove the air cleaner outlet pipe. <<303-12A>>

5. Remove the thermostat housing.

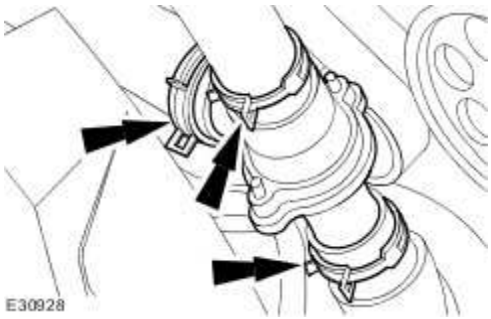

6. Remove the thermostat.

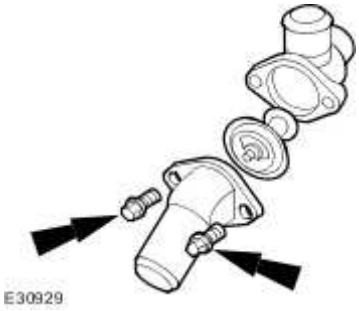

www.JagDocs.com

Installation

1 . To install, reverse the removal procedure.

- Install a new O-ring seal.
- Tighten to 18 Nm.

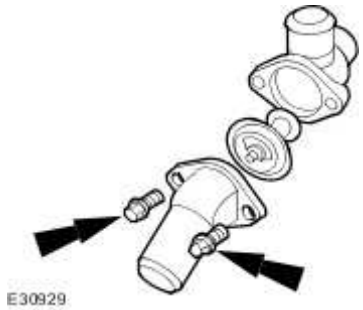

2 . Fill the cooling system.
For additional information, refer to

Thermostat - 3.5L/4.2L, Vehicles Without: Supercharger (26.45.07)

Removal

WARNING: Never remove the coolant pressure cap under any circumstances while the engine is operating. Failure to follow this instruction may result in personal injury. To avoid having scalding hot coolant or steam blow out of the cooling system, use extreme care when removing the coolant pressure cap from a hot cooling system. Wait until the engine has cooled, then wrap a thick cloth around the coolant pressure cap and turn it slowly until the pressure begins to release. Step back while the pressure is released from the system. When certain all the pressure has been released (still with a cloth) turn and remove the coolant pressure cap from the coolant expansion tank. Failure to follow these instructions may result in personal injury.

WARNING: To avoid the possibility of personal injury, do not operate the engine with the hood open until the fan blades have been examined for cracks and separation. Failure to follow this instruction may result in personal injury.

WARNING: Remove fuse 14 from the engine compartment fuse box prior to performing any under hood service in the area of the cooling fan when the engine is hot, since the cooling fan motor could operate if the engine has been switched OFF. Failure to follow this instruction may result in personal injury.

CAUTION: The engine cooling system must be maintained with the correct concentration and type of anti-freeze solution to prevent corrosion and frost damage. Failure to follow this instruction may result in damage to the engine.

CAUTION: Never remove the coolant pressure cap under any circumstances while the engine is operating. Failure to follow this instruction may result in damage to the engine.

1 Remove fuse 14 from the engine compartment fuse box prior to performing any under hood

www.JagDocs.com

. service in the area of the cooling fan.

2 . Remove the air cleaner outlet tube.
For additional information, refer to Air Cleaner Outlet Pipe (19.10.31)

3 . Detach the thermostat housing hose.

Clamp the relevant hoses, to minimise coolant loss.

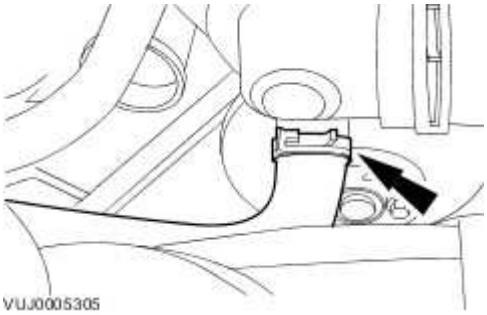

4 . Detach the thermostat housing hose.

Clamp the relevant hoses, to minimise coolant loss.

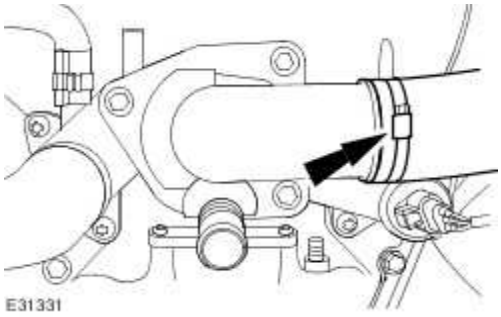

5 . Remove the thermostat.

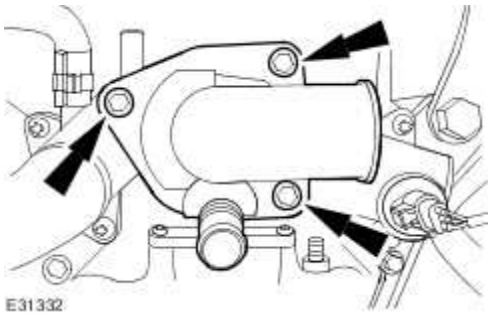

Installation

1 . To install, reverse the removal procedure.

Tighten to 9 Nm.

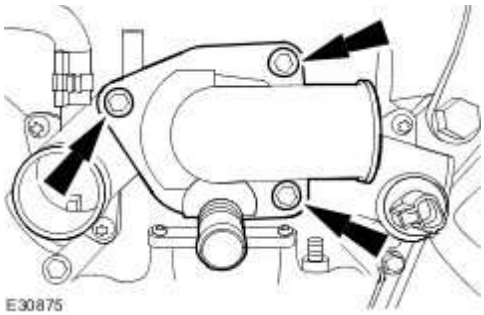

2 . Remove the coolant expansion tank bleed screw.

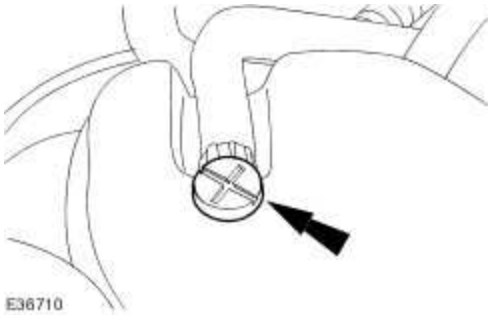

3 . Fill the cooling system up to the MAX mark on the coolant expansion tank using a fifty percent mixture of Jaguar Premium Cooling System Fluid or equivalent, meeting Jaguar specification WSS M97B44-D and fifty percent water.

www.JagDocs.com

4. **CAUTION: Do not over tighten the coolant expansion tank bleed screw. Failure to follow this instruction may cause damage to the vehicle.**

Install the coolant expansion tank bleed screw.

- Tighten to 3 Nm.

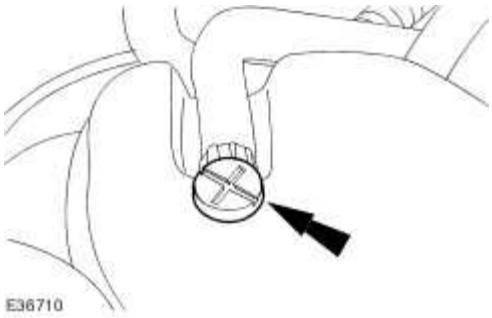

5 . Install the coolant expansion tank pressure cap.

6. **CAUTION: Do not RUN the engine with the coolant expansion tank pressure cap removed. Failure to follow this instruction may cause damage to the vehicle.**

START and RUN the engine.

7. SET the heating system to MAX heat, the blower motor to MAX speed and the air distribution to instrument panel registers.

8. **CAUTION: Observe the engine temperature gauge. If the engine starts to over-heat switch off immediately and allow to cool. Failure to follow this instruction may cause damage to the vehicle.**

Allow the engine to RUN until hot air is emitted from the instrument panel registers, while

observing the engine temperature gauge.

9 . Switch off the engine.

10 . Allow the engine to cool.

11 . Release the cooling system pressure.

- Remove the coolant expansion tank pressure cap.

12 Top up the cooling system.

.

- Fill the cooling system up to the MAX mark on the coolant expansion tank using a fifty percent mixture of Jaguar Premium Cooling System Fluid or equivalent, meeting Jaguar specification WSS M97B44-D and fifty percent water.

13 . Install the coolant expansion tank pressure cap.

www.JagDocs.com

Thermostat - 4.2L, Vehicles With: Supercharger (26.45.07)

Removal

WARNING: Never remove the coolant pressure cap under any circumstances while the engine is operating. Failure to follow this instruction may result in personal injury. To avoid having scalding hot coolant or steam blow out of the cooling system, use extreme care when removing the coolant pressure cap from a hot cooling system. Wait until the engine has cooled, then wrap a thick cloth around the coolant pressure cap and turn it slowly until the pressure begins to release. Step back while the pressure is released from the system. When certain all the pressure has been released (still with a cloth) turn and remove the coolant pressure cap from the coolant expansion tank. Failure to follow these instructions may result in personal injury.

WARNING: To avoid the possibility of personal injury, do not operate the engine with the hood open until the fan blades have been examined for cracks and separation. Failure to follow this instruction may result in personal injury.

WARNING: Remove fuse 14 from the engine compartment fuse box prior to performing any under hood service in the area of the cooling fan when the engine is hot, since the cooling fan motor could operate if the engine has been switched OFF. Failure to follow this instruction may result in personal injury.

CAUTION: The engine cooling system must be maintained with the correct concentration and type of anti-freeze solution to prevent corrosion and frost damage. Failure to follow this instruction may result in damage to the engine.

CAUTION: Never remove the coolant pressure cap under any circumstances while the engine is operating. Failure to follow this instruction may result in damage to the engine.

1 Remove fuse 14 from the engine compartment fuse box prior to performing any under hood

. service in the area of the cooling fan.

2 . Remove the air cleaner outlet tube.
For additional information, refer to Air Cleaner Outlet Pipe (19.10.31)

3 . Detach the thermostat housing coolant hose.

- Clamp the relevant hose, to minimise coolant loss.

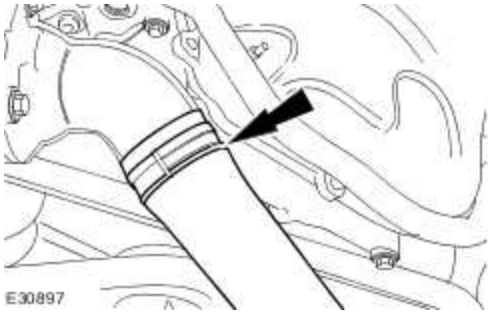

4 . Remove the thermostat.

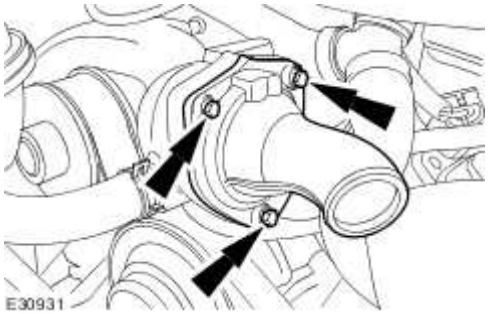

Installation

1 . To install, reverse the removal procedure.

- Tighten to 9 Nm.

www.JagDocs.com

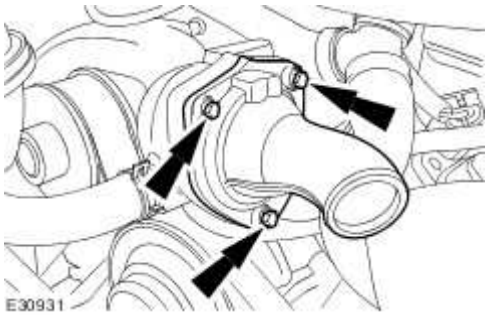

2 . Remove the coolant expansion tank bleed screw.

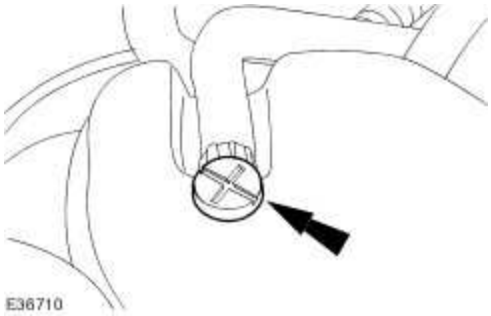

3 . Fill the cooling system up to the MAX mark on the coolant expansion tank using a fifty percent mixture of Jaguar Premium Cooling System Fluid or equivalent, meeting Jaguar specification WSS M97B44-D and fifty percent water.

4 . **CAUTION: Do not over tighten the coolant expansion tank bleed screw. Failure to follow this instruction may cause damage to the vehicle.**

Install the coolant expansion tank bleed screw.

- Tighten to 3 Nm.

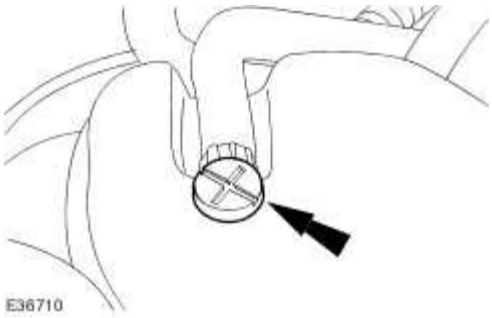

5 . Install the coolant expansion tank pressure cap.

6 . **CAUTION: Do not RUN the engine with the coolant expansion tank pressure cap removed. Failure to follow this instruction may cause damage to the vehicle.**

START and RUN the engine.

7 . SET the heating system to MAX heat, the blower motor to MAX speed and the air distribution to instrument panel registers.

8 . **CAUTION: Observe the engine temperature gauge. If the engine starts to over-heat switch off immediately and allow to cool. Failure to follow this instruction may cause damage to the vehicle.**

Allow the engine to RUN until hot air is emitted from the instrument panel registers, while observing the engine temperature gauge.

9 . Switch off the engine.

10 . Allow the engine to cool.

www.JagDocs.com

11 . Release the cooling system pressure.

- Remove the coolant expansion tank pressure cap.

12 Top up the cooling system.

.

- Fill the cooling system up to the MAX mark on the coolant expansion tank using a fifty percent mixture of Jaguar Premium Cooling System Fluid or equivalent, meeting Jaguar specification WSS M97B44-D and fifty percent water.

13 . Install the coolant expansion tank pressure cap.

Water Pump - 3.0L, VIN Range: G00442->G45703 (26.50.01)

Removal

1. Remove fuse 14 from the engine compartment fuse box prior to performing any under hood service in the area of the cooling fan.

2. Drain the cooling system.
   For additional information, refer to

3. Lower the vehicle.

4. Remove the air cleaner outlet pipe. <<303-12A>>

5. Remove the accessory drive belt.

   1) Rotate the accessory drive belt tensioner counter-clockwise.

      Use a 3/8 inch square drive bar to rotate the accessory drive belt tensioner.

   2) Remove the accessory drive belt.

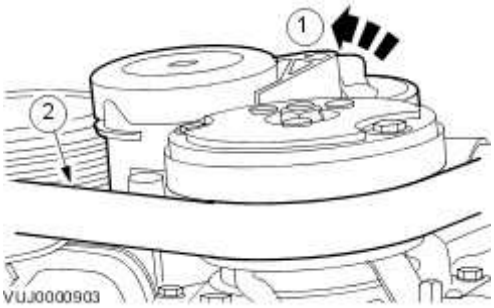

6. Remove the intake manifold support bracket.

www.JagDocs.com

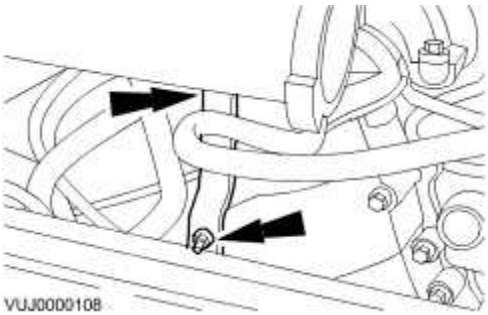

7 . Disconnect the radiator top coolant hose.

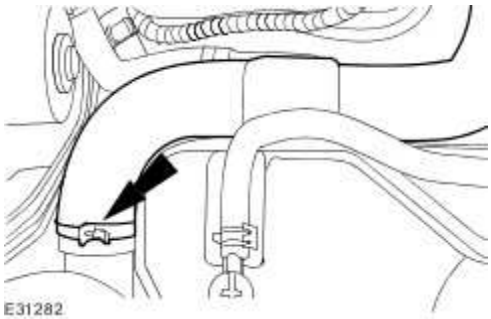

8 . Detach the coolant hose from the housing assembly.

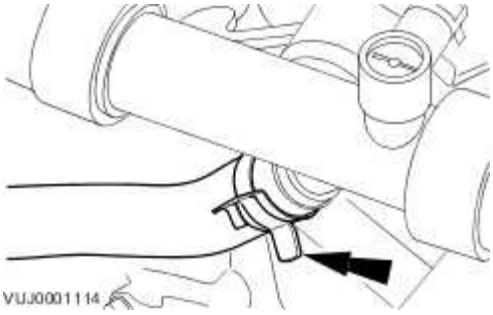

9 . Disconnect the coolant hoses.

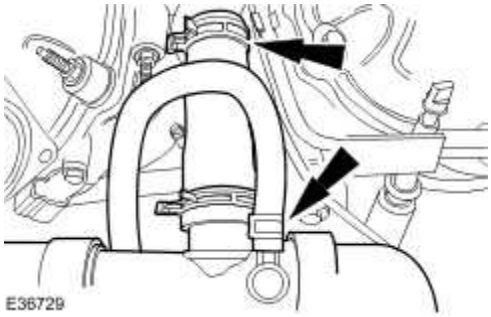

10 . Remove the hoses and thermostat housing assembly.

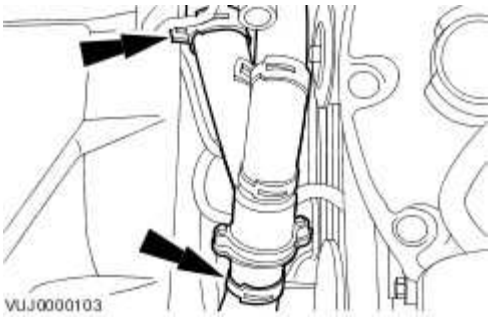

11 . Remove the coolant hose.

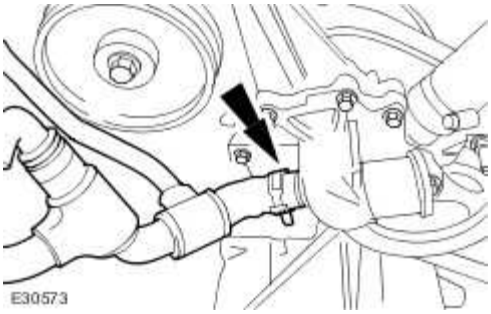

12 . Remove the coolant hose from the water pump to lower housing.

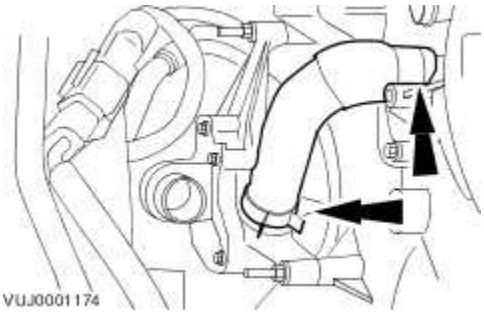

13 . Remove the water pump.

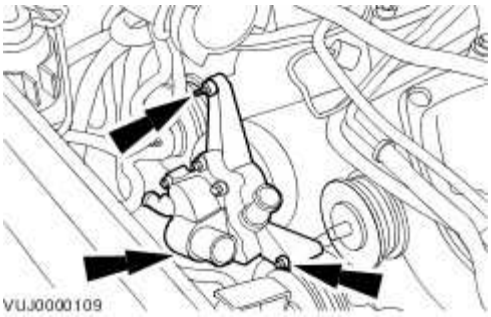

www.JagDocs.com

Installation

1 . To install, reverse the removal procedure.

Tighten to 25 Nm.

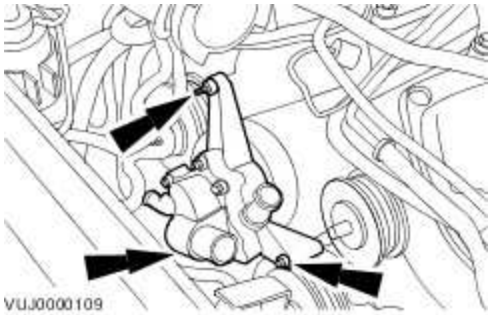

2 . Fill the cooling system.
For additional information, refer to

Water Pump - 3.0L, VIN Range: G45704->G99999 (26.50.01)

Removal

1 Remove the accessory drive belt.
. For additional information, refer to Accessory Drive Belt - 3.0L, VIN Range: G45704->G99999 (12.10.40)

2 . Drain the cooling system.
For additional information, refer to Cooling System Draining, Filling and Bleeding

3 . Remove the secondary air injection (AIR) control valve.
For additional information, refer to Secondary Air Injection (AIR) Control Valve - 3.0L

4 . Lower the vehicle.

5 . **NOTE:**

This bracket retains the evaporative emission cannister purge valve.

Remove the intake manifold support bracket.

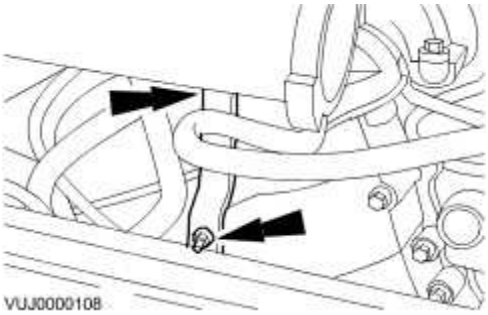

6 . Disconnect the radiator top coolant hose.

www.JagDocs.com

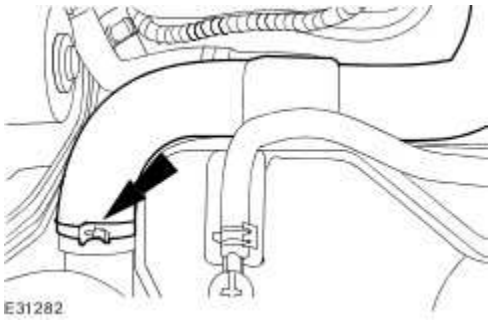

7 . Disconnect the coolant hose from the housing assembly.

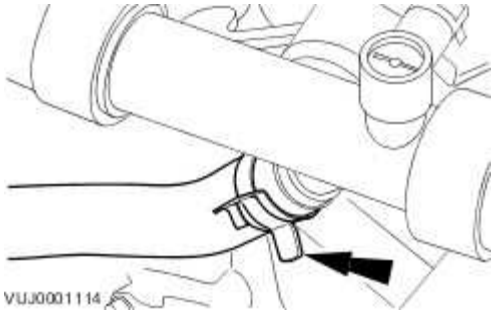

8 . Disconnect the coolant hoses.

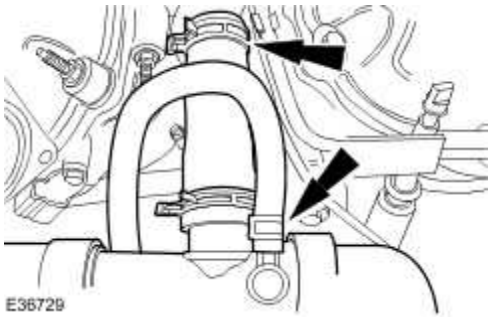

9 . Remove the coolant hoses and thermostat housing assembly.

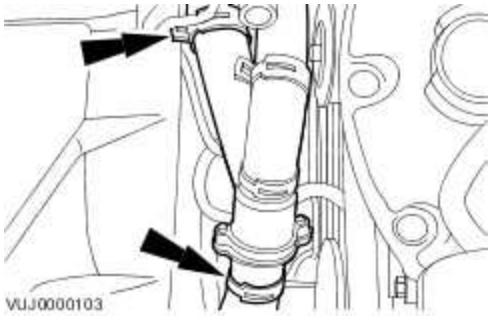

10 . Remove the coolant hose.

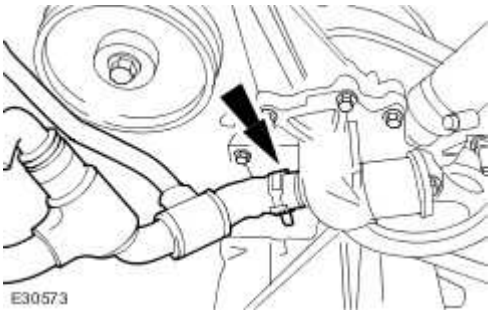

11 . Remove the coolant hose from the water pump to lower housing.

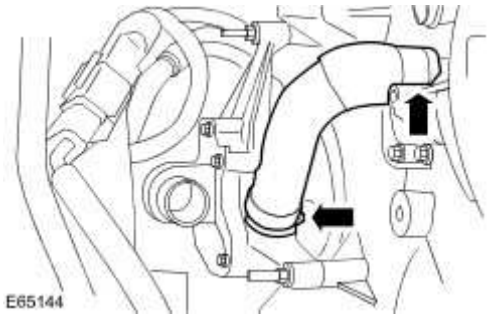

12 . Remove the water pump.

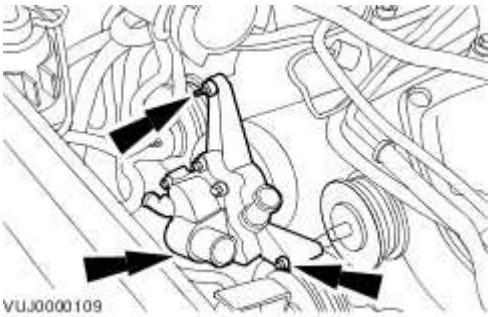

Installation

1 . To install, reverse the removal procedure.

Tighten to 25 Nm.

www.JagDocs.com

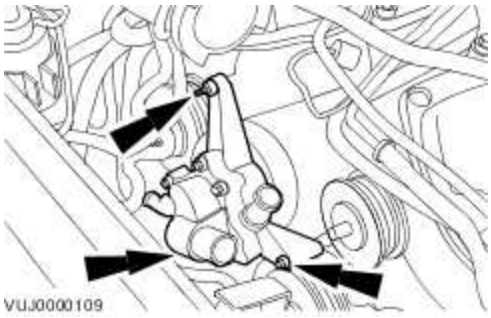

2 . Tighten to 5 Nm.

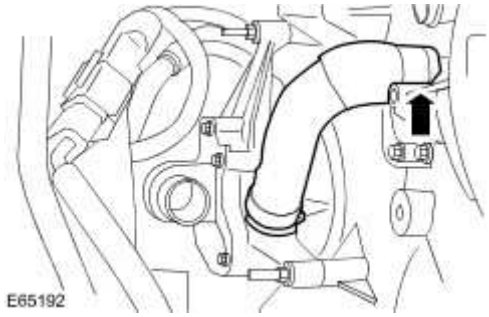

3 . Tighten to 3 Nm.

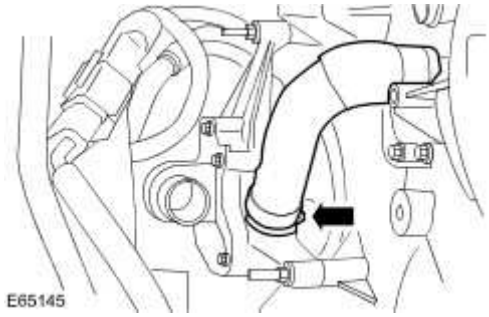

4 . Fill the cooling system.
For additional information, refer to Cooling System Draining, Filling and Bleeding

Water Pump - 3.5L/4.2L, Vehicles Without: Supercharger (26.50.01)

Removal

1. Remove fuse 14 from the engine compartment fuse box prior to performing any under hood service in the area of the cooling fan.

2. Drain the cooling system.
   For additional information, refer to

3. Lower the vehicle.

4. Remove the air cleaner outlet tube. <<303-12B>>

5. Loosen the water pump pulley bolts.

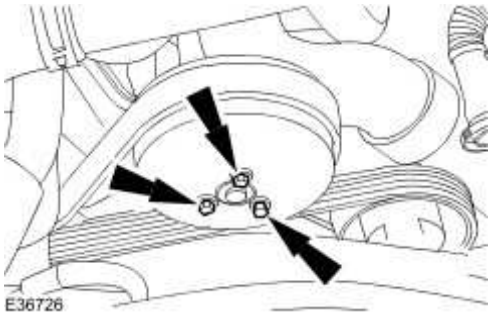

6. Detach the accessory drive belt.

   1) Rotate the accessory drive belt tensioner counter-clockwise.

      Use a 3/8 inch square drive bar to rotate the accessory drive belt tensioner.

   2) Detach the accessory drive belt.

www.JagDocs.com

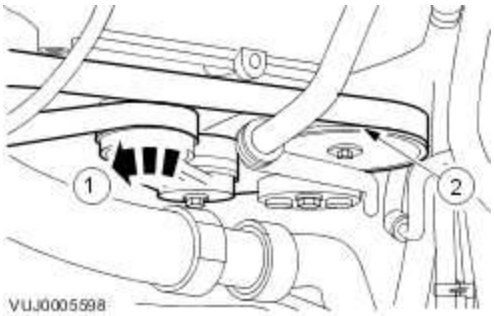

7 . Remove the water pump pulley.

- Discard the water pump pulley retaining bolts.

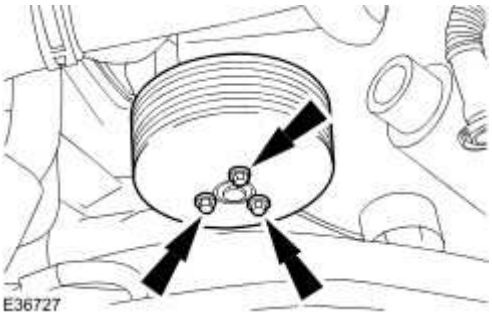

8 . Remove the water pump.

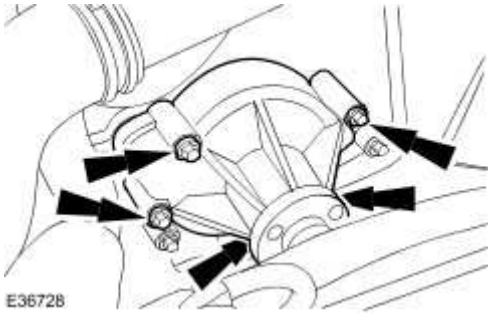

Installation

1 . To install, reverse the removal procedure.

- Install a new water pump gasket and O-ring seal.

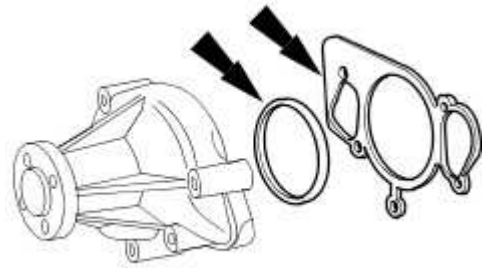

2 . Tighten to 8 Nm + 90°.

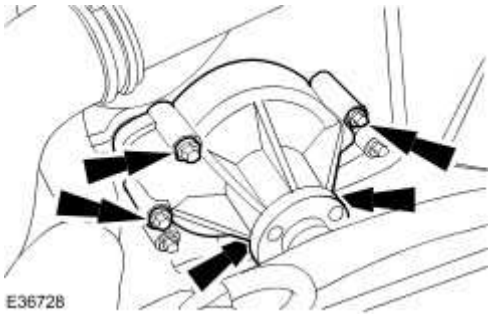

3 . Tighten to 10 Nm + 45°.

Install new retaining bolts.

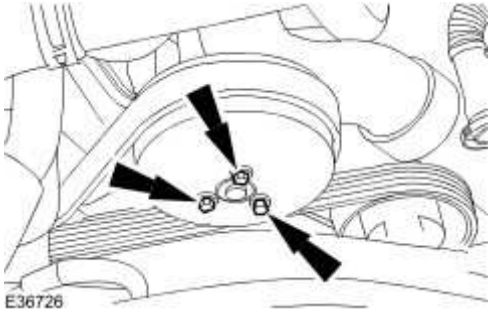

4 . Fill the cooling system.
For additional information, refer to

www.JagDocs.com

Water Pump - 4.2L, Vehicles With: Supercharger (26.50.01)

Removal

1. Remove fuse 14 from the engine compartment fuse box prior to performing any under hood service in the area of the cooling fan.

2. Drain the cooling system.
   For additional information, refer to

3. Lower the vehicle.

4. Remove the air cleaner outlet tube. <<303-12B>>

5. Detach the supercharger belt.

   - Use a 1/2 inch square drive bar to rotate the supercharger belt tensioner.
   - Detach the supercharger belt.

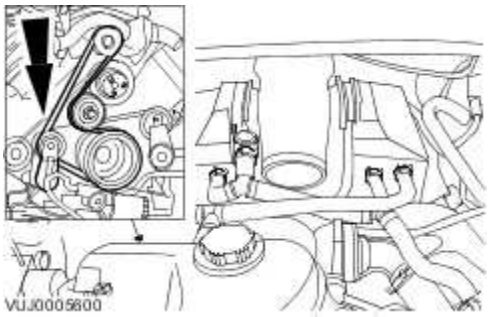

6. Loosen the water pump pulley bolts.

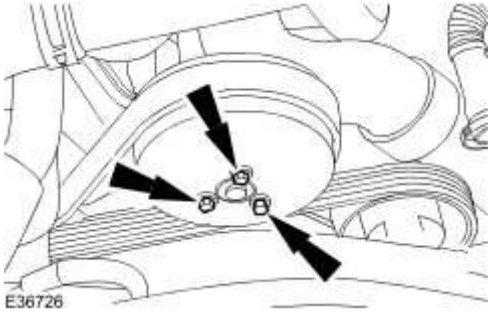

7 Detach the accessory drive belt.

.

1) Rotate the accessory drive belt tensioner counter-clockwise.

Use a 3/8 inch square drive bar to rotate the accessory drive belt tensioner.

2) Detach the accessory drive belt.

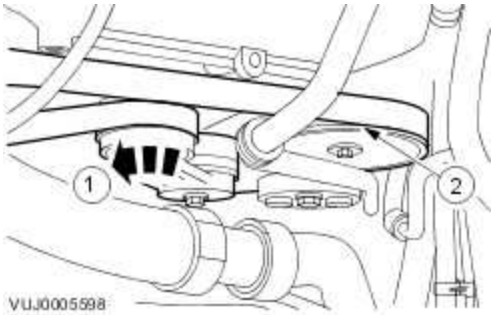

8 . Remove the water pump pulley.

Discard the water pump pulley retaining bolts.

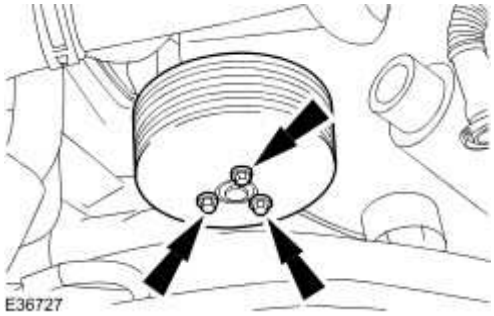

www.JagDocs.com

9 . Remove the water pump.

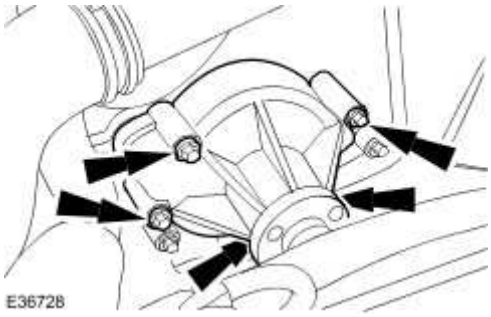

Installation

1 . To install, reverse the removal procedure.

- Install a new water pump gasket and O-ring seal.

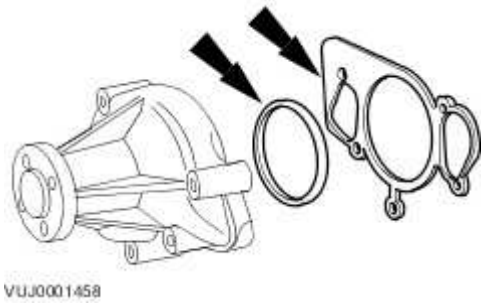

2 . Tighten to 8 Nm + 90°.

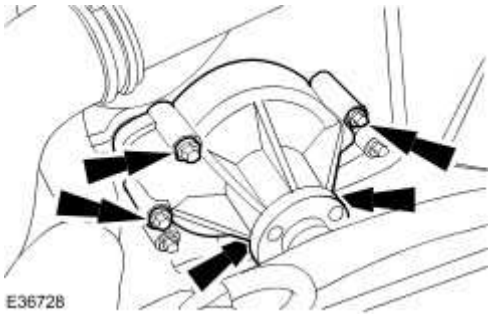

3 . Tighten to 10 Nm + 45°.

- Install new retaining bolts.

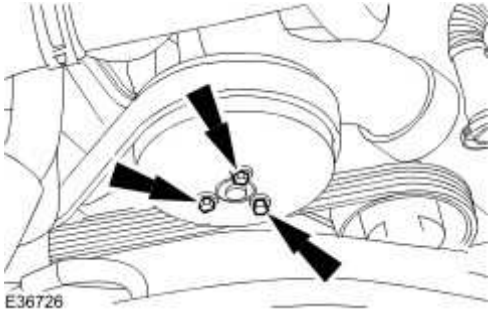

4 . Fill the cooling system.
For additional information, refer to

www.JagDocs.com

Specifications

Torque Specifications

Description	Nm	lb-ft	lb-in
Supercharger radiator retaining bolts	7	-	62
Supercharger water pump bracket retaining bolt	7	-	62
Supercharger radiator drain plug	1	-	9
Coolant expansion tank bleed screw	1	-	9
Supercharger coolant fill plug	45	33	-

Lubricants, Fluids, Sealers and Adhesives

Description	Specification
Jaguar Premium Cooling System Fluid	WSS M97B44-D

Supercharger Cooling System Draining, Filling and Bleeding

1.

WARNING: Never remove the coolant pressure cap under any circumstances while the engine is operating. Failure to follow this instruction may result in personal injury.

WARNING: To avoid having scalding hot coolant or steam blow out of the cooling system, use extreme care when removing the coolant pressure cap from a hot cooling system. Wait until the engine has cooled, then wrap a thick cloth around the coolant pressure cap and turn it slowly until the pressure begins to release. Step back while the pressure is released from the system. When certain all the pressure has been released (still with a cloth) turn and remove the coolant pressure cap from the coolant expansion tank. Failure to follow these instructions may result in personal injury.

WARNING: To avoid the possibility of personal injury, do not operate the engine with the hood open until the fan blades have been examined for cracks and separation. Failure to follow this instruction may result in personal injury.

WARNING: Remove fuse 14 from the engine compartment fuse box prior to performing any under hood service in the area of the cooling fan when the engine is hot, since the cooling fan motor could operate if the engine has been switched OFF. Failure to follow this instruction may result in personal injury.

CAUTION: The engine cooling system must be maintained with the correct concentration and type of anti-freeze solution to prevent corrosion and frost damage. Failure to follow this instruction may result in damage to the engine.

CAUTION: Never remove the coolant pressure cap under any circumstances while the engine is operating. Failure to follow this instruction may result in damage to the engine.

Release the cooling system pressure.

- Remove the coolant expansion tank pressure cap.

www.JagDocs.com

2. Remove the radiator splash shield. <<501-02>>

3. Detach the electrical connectors.

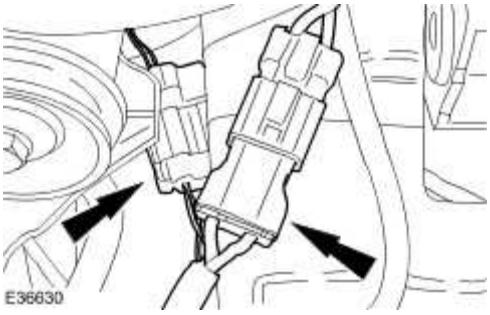

4. Remove the radiator lower cowl.

5. Remove the radiator drain plug.
   - Drain the coolant into a suitable container.

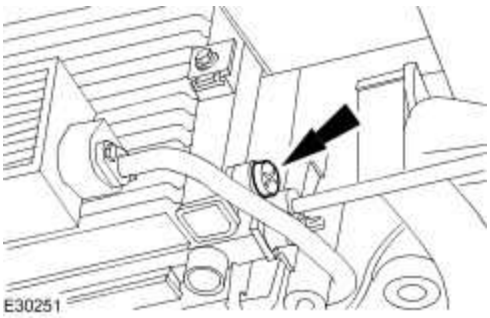

6.

CAUTION: Do not over tighten the radiator drain plug. Failure to follow this instruction may cause damage to the vehicle.

Install the radiator drain plug when all coolant has drained.

- Tighten to 1 Nm.
- Remove the container.

- Clean off any spillages.

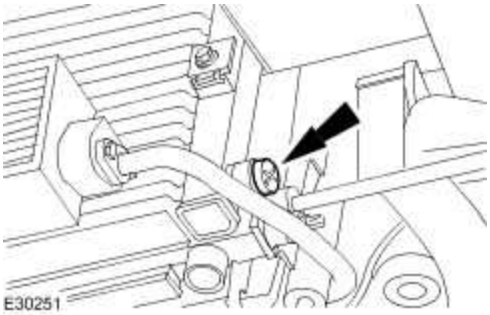

7. Install the radiator lower cowl.

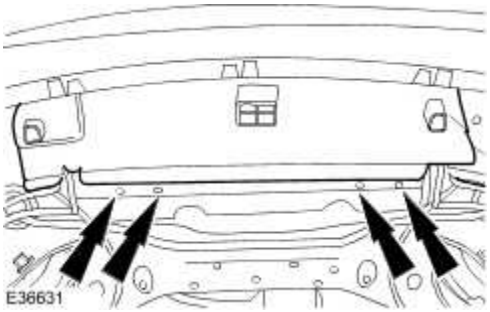

8. Connect the electrical connectors.

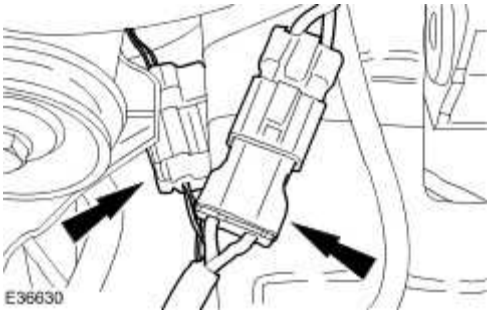

9. Install the radiator splash shield. <<501-02>>

10. Remove the coolant expansion tank bleed screw.

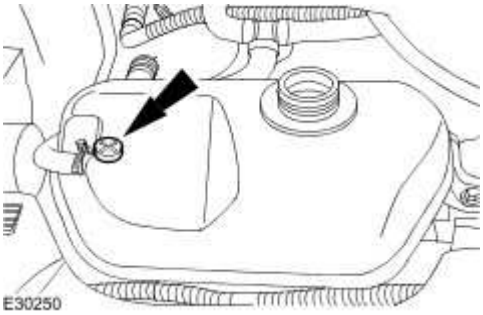

www.JagDocs.com

11.

CAUTION: The supercharger cooling system must be maintained with the correct concentration and type of coolant solution to prevent corrosion and frost damage. Failure to follow this instruction may result in damage to the vehicle.

Fill the cooling system up to the MAX mark on the coolant expansion tank using a fifty percent mixture of Jaguar Premium Cooling System Fluid or equivalent, meeting Jaguar specification WSS M97B44-D and fifty percent water.

12.

CAUTION: Do not over tighten the coolant expansion tank bleed screw. Failure to follow this instruction may cause damage to the vehicle

Install the coolant expansion tank bleed screw.

- Tighten to 1 Nm.

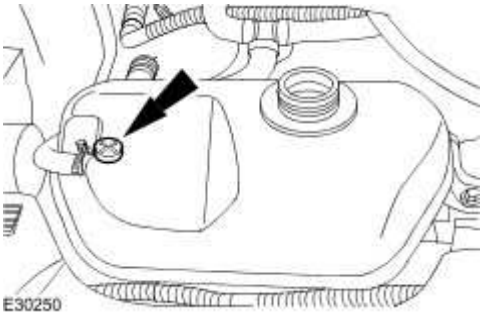

13. Install the coolant expansion tank pressure cap.

14. Remove the engine cover.

15. Remove the supercharger coolant filler plug.
    - Remove and discard the sealing washer.

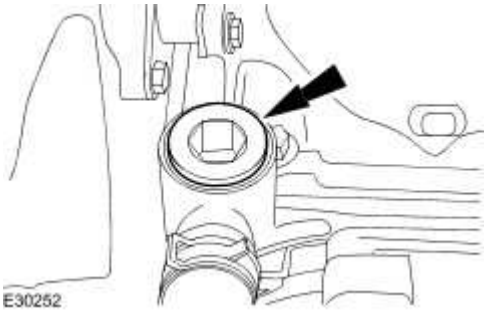

16. **NOTE:**
    Place a suitable cloth around supercharger fill port.

Top up the coolant through the supercharger fill port.

17.

CAUTION: Coolant may spill from supercharger fill port when ignition switched on.

Switch ignition on.

18. **NOTE:**
    Do not allow the supercharger water pump to run dry for more than one minute. Failure to follow this instruction may result in damage to the vehicle.

Allow the supercharger pump to run and top up the coolant through supercharger fill port.

19. Switch the ignition off.

20. Install the supercharger coolant fill plug.
    - Install a new sealing washer.
    - Tighten to 45 Nm.
    - Clean off any spillages.

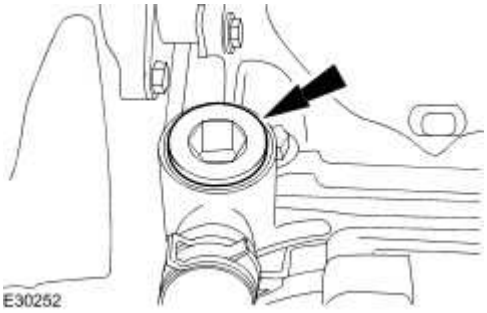

21. Install the engine cover.

22.

CAUTION: Do not RUN the engine with the coolant expansion tank pressure cap removed. Failure to follow this instruction may cause damage to the vehicle

START and RUN the engine.

23. SET the heating system to MAX heat, the blower motor to MAX speed and the air

www.JagDocs.com

distribution to instrument panel registers.

24.

CAUTION: Observe the engine temperature gauge. If the engine starts to overheat switch off immediately and allow to cool. Failure to follow this instruction may cause damage to the vehicle.

Allow the engine to RUN until hot air is emitted from the instrument panel registers, while observing the engine temperature gauge.

25. Switch off the engine.

26. Allow the engine to cool.

27. Release the cooling system pressure.
    - Remove the coolant expansion tank pressure cap.

28. Fill the cooling system up to the MAX mark on the coolant expansion tank using a fifty percent mixture of Jaguar Premium Cooling System Fluid or equivalent, meeting Jaguar specification WSS M97B44-D and fifty percent water.

29. Install the coolant expansion tank pressure cap.

Supercharger Cooling

1 . Verify the customer concern by operating the system.

2 . Visually inspect for obvious signs of mechanical and electrical damage.

Visual Inspection Chart

Mechanical	Electrical
• Leak(s) • Hose(s) • Charge air cooler radiator • Supercharger cooling water pump • Coolant expansion tank • Coolant pressure cap • Radiator • Engine cooling water pump • Cooling fan	• Fuse(S) • Wiring harness • Electrical connector(S) • Engine coolant temperature sensor • Cooling fan motor • Supercharger cooling water pump

1 . If an obvious cause for an observed or reported concern is found, correct the cause (if possible) before proceeding to the next step.

2 . If the cause is not visually evident, verify the symptom and refer to the Jaguar Approved Diagnostic System.

Component tests

Pressure test. <<303-03>> Coolant pressure cap pressure test. <<303-03>> Thermostat test. <<303-03>> Radiator leak test. <<303-03>>

www.JagDocs.com

Radiator

Removal

1 . Remove the water pump.
For additional information, refer to

2 . Lower the vehicle.

3 . Remove the radiator grille opening panel. <<501-02>>

4 . Disconnect the radiator coolant vent hose.

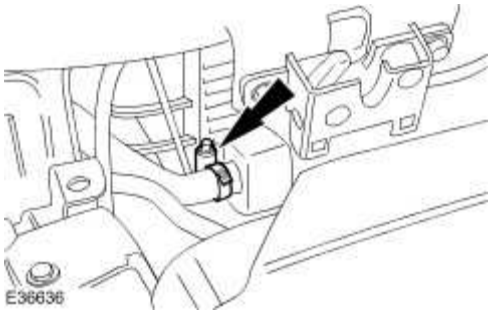

5 . Raise the vehicle.

6 . Disconnect the right-hand radiator hose.

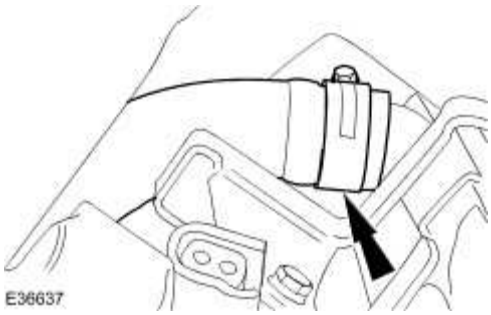

7 . Disconnect the left-hand radiator hose.

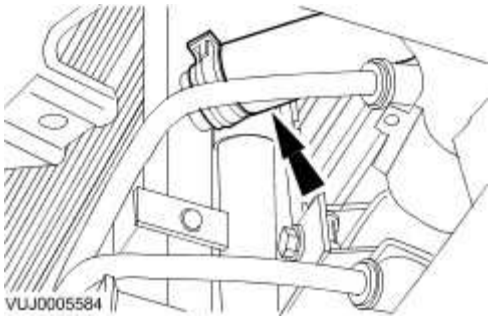

8 . Remove the water pump retaining bracket.

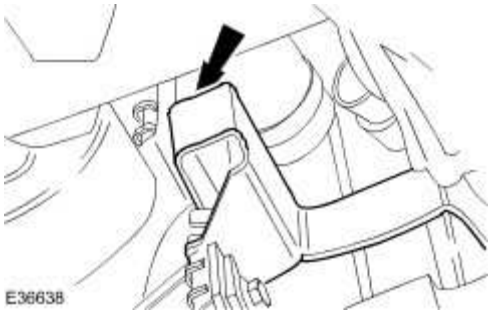

9 . **NOTE:**

Right-hand shown, left-hand similar.

Detach the power assisted steering oil cooler.

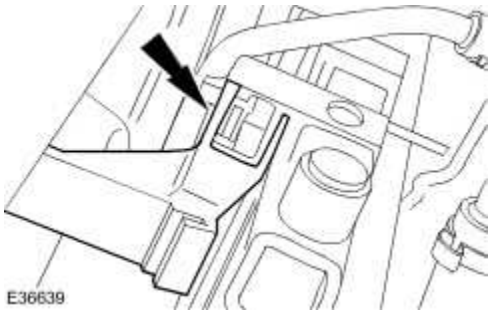

10 . **NOTE:**

Right-hand shown, left-hand similar.

Remove the radiator retaining bolt.

www.JagDocs.com

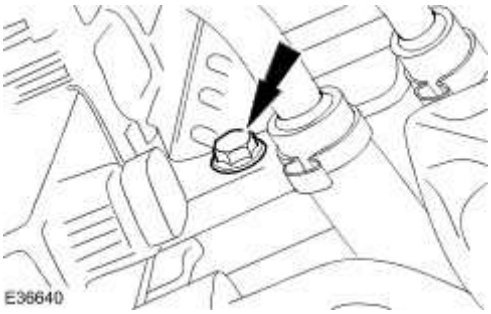

11 . Remove the radiator.

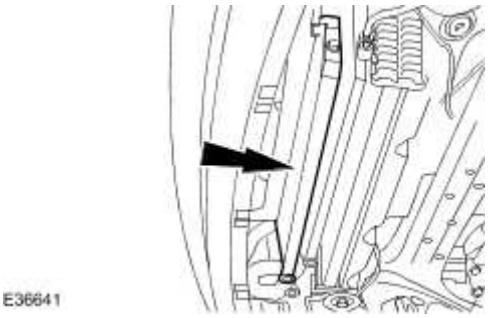

Installation

1 . To install, reverse the removal procedure.

Tighten to 7 Nm.

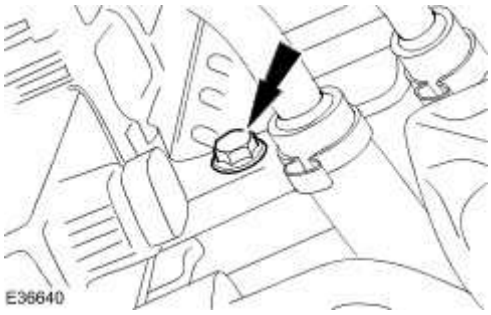

2 . Tighten to 7 Nm.

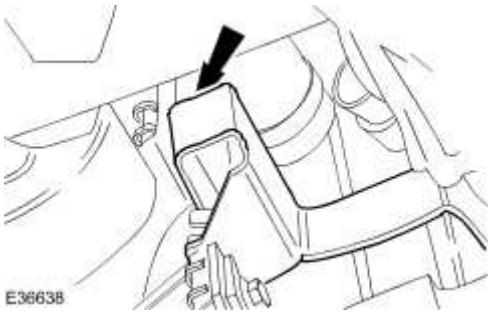

www.JagDocs.com

Water Pump

Removal

1 Carry out the supercharging cooling system draining procedure.
. For additional information, refer to Supercharger Cooling System Draining, Filling and Bleeding

2 . Remove the engine oil cooler.
For additional information, refer to Oil Cooler - Vehicles With: Supercharger (12.60.68)

3 . Disconnect the water pump electrical connector.

4 . Disconnect the water pump coolant hoses.

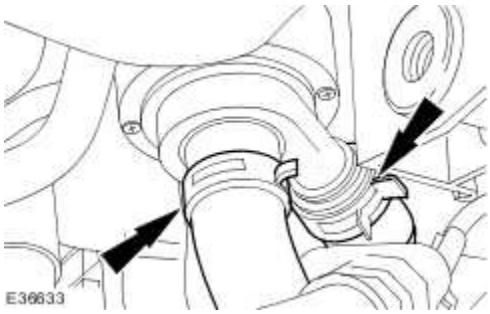

5 . Remove the water pump retaining bolt.

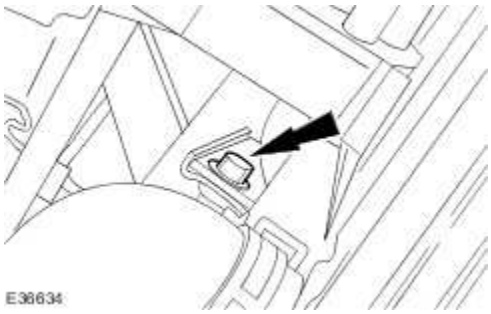

6 . Remove the water pump.

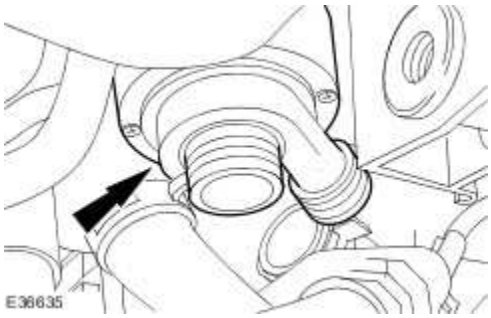

Installation

1 . To install, reverse the removal procedure.

Tighten to 7 Nm.

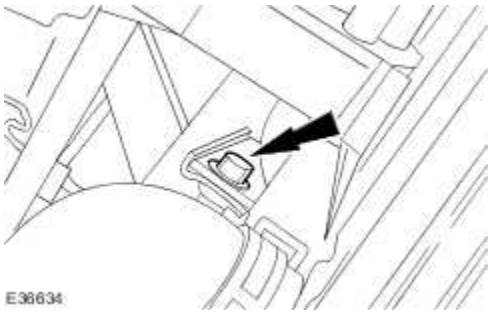

2 . Carry out the supercharging cooling system filling and bleeding procedure.
For additional information, refer to Supercharger Cooling System Draining, Filling and Bleeding

www.JagDocs.com

3 **NOTE:**
.

For NAS vehicles only.

If required, carry out a long drive cycle.
For additional information, refer to Powertrain Control Module (PCM) Long Drive Cycle Self-Test

Specifications

Lubricants, Fluids, Sealers and Adhesives

Description	Specification
Jaguar Premium Cooling System Fluid	WSS M97B44-D
Jaguar Premium Cooling System Flush	EGR-M14P7-A

Capacities

Description	Liters
Cooling system refill	13.5

Torque Specifications

Description	Nm	lb-ft	lb-in
Coolant expansion tank retaining bolt	7	-	62
Coolant expansion tank bleed screw	3	-	27
Cooling fan motor and shroud retaining bolts	7	-	62
Water pump retaining bolts	10	-	89
Water pump pulley retaining bolts	24	18	-
Charge air cooler to radiator retaining bolts	7	-	62
Air conditioning condenser retaining bolts	7	-	62
Radiator mounting bracket retaining bolts	7	-	62
Charge air cooler intake elbow	7	-	62
Radiator drain plug	2	-	13

www.JagDocs.com

Cooling System Draining, Filling and Bleeding

1.

WARNING: To avoid having scalding hot coolant or steam blow out of the cooling system, use extreme care when removing the coolant pressure cap from a hot cooling system. Wait until the engine has cooled, then wrap a thick cloth around the coolant pressure cap and turn it slowly until the pressure begins to release. Step back while the pressure is released from the system. When certain all the pressure has been released (still with a cloth) turn and remove the coolant pressure cap from the coolant expansion tank. Failure to follow these instructions may result in personal injury.

WARNING: Relieve the cooling system pressure by unscrewing the coolant pressure cap. Failure to follow these instructions may result in personal injury.

CAUTION: The engine cooling system must be maintained with the correct concentration and type of anti-freeze solution to prevent corrosion and frost damage. Failure to follow this instruction may result in damage to the vehicle.

Remove the coolant expansion tank pressure cap.

2. Remove the radiator splash shield.

3. **NOTE:**
   Remove and discard the radiator drain plug O-ring seal.

Remove the coolant drain plug.

- Drain the coolant into a suitable container.

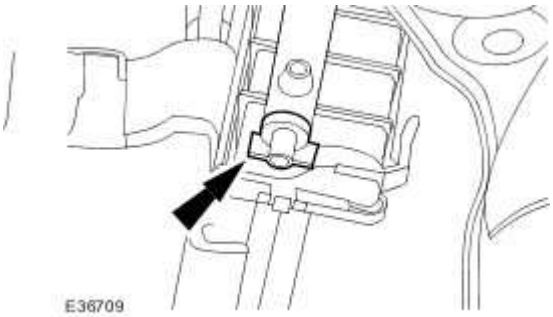

4. Allow the coolant to drain.

5. **NOTE:**
   Install a new O-ring seal.

NOTE:
Do not over tighten the drain plug. Failure to follow this instruction may result in damage to the vehicle.

Install the coolant drain plug.

- Remove the drain tray.

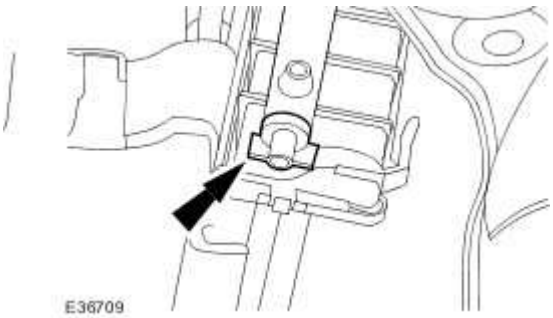

6. Lower the vehicle.

7. Remove the coolant expansion tank bleed screw.

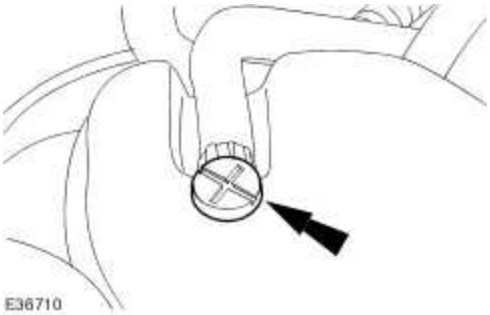

8. Fill the cooling system up to the MAX mark on the coolant expansion tank using a fifty percent mixture of Jaguar Premium Cooling System Fluid or equivalent, meeting Jaguar

www.JagDocs.com

specification WSS M97B44-D and fifty percent water.

9.

CAUTION: Do not over tighten the coolant expansion tank bleed screw. Failure to follow this instruction may result in damage to the vehicle.

Install the coolant expansion tank bleed screw.

- Tighten to 3 Nm.

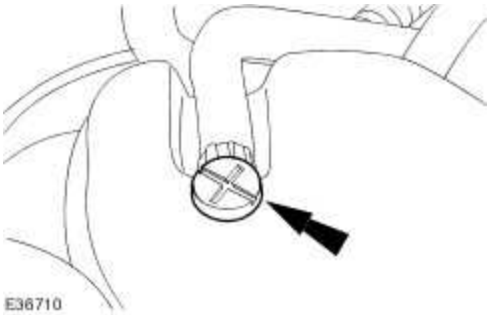

10. Set the heating system to the COLD position.

11. Using an assistant, turn the ignition key to the ON position.

12. **NOTE:**
    Do not allow the expansion tank to empty when the electric coolant pump starts.

Fill the cooling system up to the MAX mark on the coolant expansion tank using a fifty percent mixture of Jaguar Premium Cooling System Fluid or equivalent, meeting Jaguar specification WSS M97B44-D and fifty percent water.

13. After 3 minutes, set the heating system to the HOT position.

14. Maintain the coolant level in the coolant expansion tank at the MAX mark using a fifty percent mixture of Jaguar Premium Cooling System Fluid or equivalent, meeting Jaguar specification WSS M97B44-D and fifty percent water.

15. After four minutes, refit the coolant expansion tank pressure cap.

16. Start the engine and allow to idle for five minutes.

17. Raise the engine to 2500 RPM for 30 seconds.

18. Turn the ignition key to the OFF position.

19. Allow the engine to cool.

20.

WARNING: To avoid having scalding hot coolant or steam blow out of the cooling system, use extreme care when removing the coolant pressure cap from a hot cooling system. Wait until the engine has cooled, then wrap a thick cloth around the coolant pressure cap and turn it slowly until the pressure begins to release. Step back while the pressure is released from the system. When certain all the pressure has been released (still with a cloth) turn and remove the coolant pressure cap from the coolant expansion tank. Failure to follow these instructions may result in personal injury.

After two minutes, release the cooling system pressure.

- Remove the coolant expansion tank pressure cap.

21. **NOTE:**
    Make sure the heating system is set to the HOT position.

Turn the ignition key to the ON position.

22. Maintain the coolant level in the coolant expansion tank using a fifty percent mixture of Jaguar Premium Cooling System Fluid or equivalent, meeting Jaguar specification WSS M97B44-D and fifty percent water.

23. After three minutes, refit the coolant expansion tank pressure cap.

24. Drive the vehicle on the road at varying speeds until the engine reaches normal operating temperature.

25. Allow the engine to cool.

26.

WARNING: To avoid having scalding hot coolant or steam blow out of the cooling system, use extreme care when removing the coolant pressure cap from a hot cooling system. Wait until the engine has cooled, then wrap a thick cloth around the coolant pressure cap and turn it slowly until the pressure begins to release. Step back

www.JagDocs.com

while the pressure is released from the system. When certain all the pressure has been released (still with a cloth) turn and remove the coolant pressure cap from the coolant expansion tank. Failure to follow these instructions may result in personal injury.

Release the cooling system pressure.

- Remove the coolant expansion tank pressure cap.

27. Fill the cooling system up to the MAX mark on the coolant at the MAX mark expansion tank using a fifty percent mixture of Jaguar Premium Cooling System Fluid or equivalent, meeting Jaguar specification WSS M97B44-D and fifty percent water.

28. Raise the vehicle.

29. Check for water leaks.

30. Install the radiator splash shield.

Cooling System Draining and Vacuum Filling

No data

www.JagDocs.com

Engine Cooling

2.7 Diesel Engine Cooling System

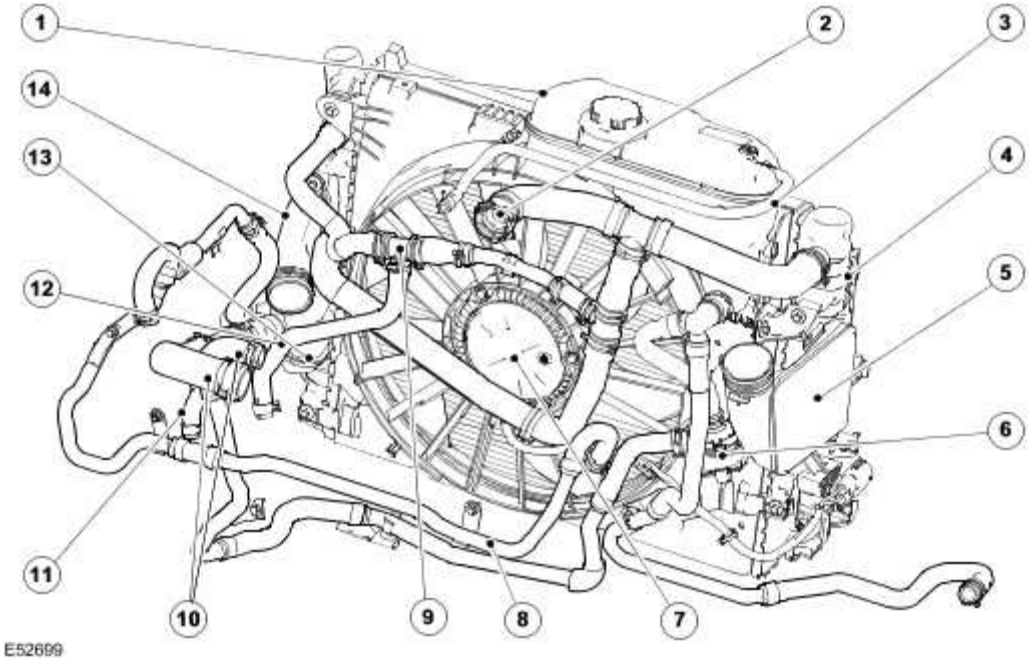

Item	Part Number	Description
1	—	Coolant expansion tank
2	—	Engine coolant outlet
3	—	Vent hose
4	—	Radiator
5	—	Charge air cooler outlet
6	—	Auxiliary coolant flow pump
7	—	Cooling fan motor
8	—	Exhaust gas re-circulation coolant hose
9	—	Transmission oil cooler coolant control valve

10	—	Engine coolant inlet
11	—	Transmission oil cooler outlet
12	—	Transmission oil cooler inlet
13	—	Thermostat housing
14		Charge air cooler inlet

Engine Cooling System Components

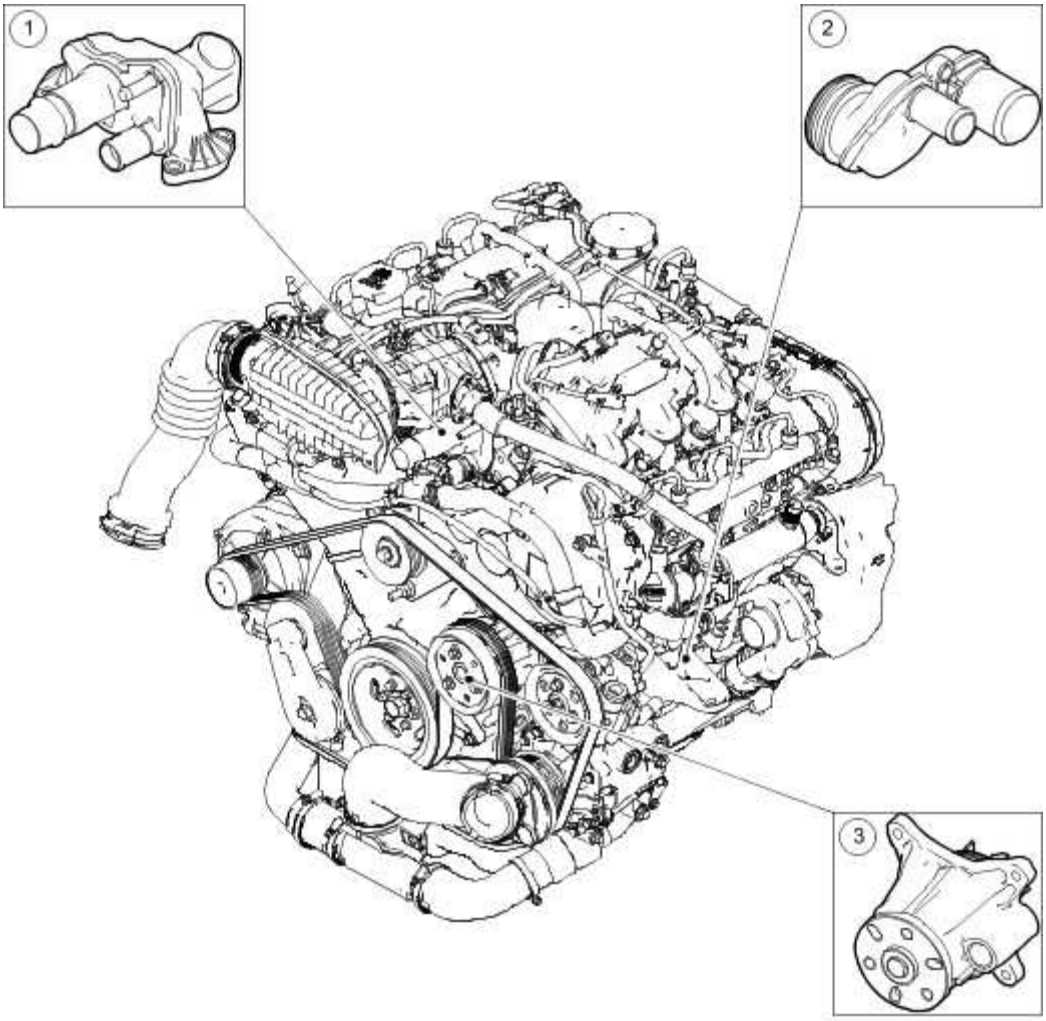

E52700

Item	Part Number	Description
1	—	Engine coolant outlet assembly
2	—	Engine coolant inlet assembly

www.JagDocs.com

3	—	Water pump

Water Pump

The water pump is of a conventional design and is driven by the crankshaft pulley through the accessory drive belt. The water pump belt tension is maintained by an automatic drive belt tensioner. For additional information, refer to Accessory Drive Belt Tensioner - 2.7L Diesel (303-05)

Thermostat

The thermostat is located in the thermostat housing and allows rapid engine warm-up by restricting coolant flow through the radiator below approximately 92°C (198°F). The thermostat also assists in keeping the engine operating temperature within predetermined limits.

When the engine is cold and the thermostat is closed, coolant flows from the water pump through the engine. It then returns to the water pump through the upper coolant hose.

When the engine is warm and the thermostat is open, coolant flows into the radiator through the upper coolant hose. It then returns to the water pump from the radiator through the lower coolant hose.

The heater core is on a parallel circuit and is unaffected by the position of the thermostat.

Radiator

The radiator is of aluminium construction with plastic end tanks. Foam seals are fitted to the radiator to prevent the cooling air from by passing the radiator core. A coolant drain plug is provided in the lower coolant end tank of the radiator for the draining of the coolant. The cooling fan shroud is attached to the radiator.

Cooling Fan

A single, variable speed cooling fan motor is attached to a fan shroud located behind the radiator. The speed is determined by the Engine Coolant Temperature (ECT) and the air conditioning pressure and transmission oil temperature.

Under hot operating conditions, the fan may continue to operate for four minutes after the engine has been switched off.

Coolant Recovery System

A pressurized coolant expansion tank system is used which continuously separates the air from the cooling system and replenishes the system through the coolant expansion tank outlet hose, attached to the heater return hose.

A continuous vent from the engine and radiator to the coolant expansion tank prevents air locks from forming in the cooling system.

A manual bleed point is provided on the coolant reservoir.

The coolant expansion tank serves as the location for:

- Service fill.
- Coolant expansion during warm-up.
- Air separation during operation.
- System pressurization by the coolant pressure cap.
- The coolant expansion tank is designed to have approximately 0.5 to 1 liter of air when cold to allow for coolant expansion.

Engine Coolant

The long life engine coolant is formulated to last for five years or 240,000 km (150,000 miles). The coolant is silicate free and orange in color. The long life engine coolant must not be mixed with conventional engine coolant.

Coolant Flow Diagram (Thermostat open)

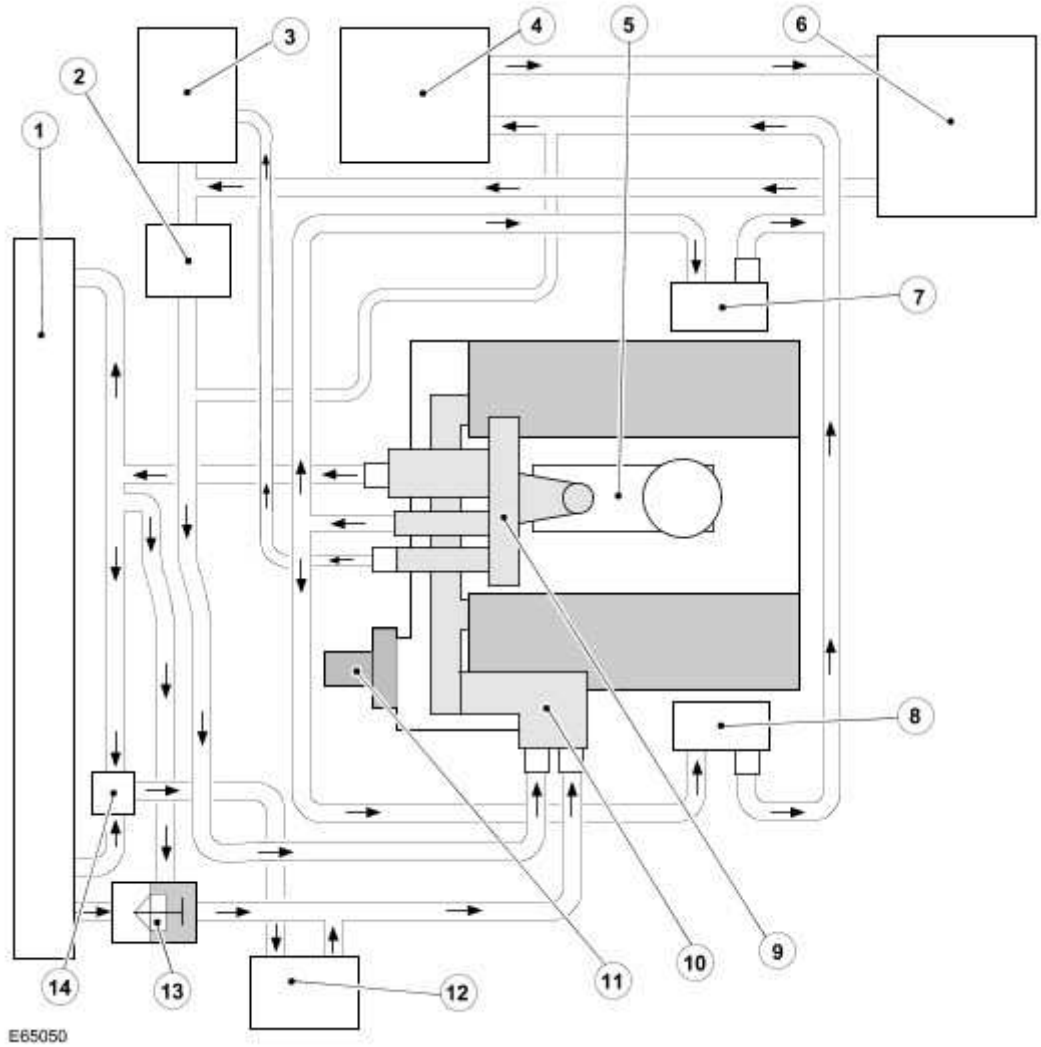

www.JagDocs.com

Item	Part Number	Description
1	—	Radiator
2	—	Auxiliary coolant flow pump
3	—	Coolant expansion tank
4	—	Auxiliary heater
5	—	Engine oil and fuel cooler
6	—	Heater matrix
7	—	Right-hand exhaust gas recirculation cooler
8	—	Left-hand exhaust gas recirculation cooler
9	—	Engine coolant outlet
10	—	Engine coolant inlet
11	—	Water pump
12	—	Transmission oil cooler
13	—	Thermostat
14	—	Transmission oil cooler coolant control valve

Engine Cooling

Inspection and Verification

1 . Verify the customer concern.

2 . Visually inspect for obvious signs of mechanical or electrical damage.

Mechanical	Electrical
• Coolant leaks • Hoses • Expansion tank • Radiator • Accessory drive belt • Cooling fan	• Battery charge and condition • Fuses • Harnesses and connectors • Engine coolant temperature (ECT) sensor (if equipped)

3 . If an obvious cause for an observed or reported concern is found, correct the cause (if possible) before proceeding to the next step.

4 . If the cause is not visually evident, use the Jaguar approved diagnostic system or a scan tool to retrieve the fault codes. For a full list of powertrain DTCs,
Electronic Engine Controls

Pinpoint tests

PINPOINT TEST G557183p1 : LOSS OF COOLANT

G557183t1 : VISUAL INSPECTION

1. Visually inspect for loss of coolant 2. Following the instructions for your workshop's pressure tester, carry out a system pressure test.

- **Is the engine cooling system leaking?**

-> Yes
Rectify the source of the leak as indicated by the test.
Cooling System Draining, Filling and Bleeding TEST the system for normal operation.

www.JagDocs.com

-> No
Verify the customer complaint.

PINPOINT TEST G557183p2 : THE ENGINE OVERHEATS

G557183t2 : CHECK THE COOLANT LEVEL AND CONDITION

1. Check the coolant level and condition.

- **Does the system contain sufficient coolant of the correct specification?**

-> Yes
GO to Pinpoint Test G557183t3.

-> No
Top-up the system,
Cooling System Draining, Filling and Bleeding Check for coolant loss. GO to Pinpoint Test G557183p1.

G557183t3 : CHECK THE OPERATION OF THE COOLING SYSTEM PRESSURE CAP

1. Check the opening pressure of the cooling system pressure cap. 2. **NOTE:**

> Make sure the pressure is built up steadily when testing the pressure cap. Rapid increases in pressure may indicate a failure in a correctly operating pressure cap.

Following the instructions for your workshop pressure tester, test the pressure cap to the pressure indicated. 3. Check that the pressure cap holds to the pressure indicated, and releases once that pressure is reached.

- **Does the pressure cap operate correctly?**

-> Yes
GO to Pinpoint Test G557183t4.

-> No
INSTALL a new pressure cap. TEST the system for normal operation.

G557183t4 : CHECK THE OPERATION OF THE WATER PUMP

1. Remove the cooling system pressure cap and make sure there is sufficient coolant in the system. 2. Make sure the parking brake is applied and **Park** or **Neutral** is selected. 3. Start the engine and hold

the engine speed at 1,500 to 2,000 rpm for one minute while observing the coolant through the expansion tank filler neck. 4. Allow the engine to idle and switch off.

- **Is there coolant movement in the expansion tank while the engine is running?**

-> Yes
GO to Pinpoint Test G557183t5.

-> No
Check the accessory drive belt condition and tension,
Accessory Drive - 2.7L Diesel

G557183t5 : CHECK THAT THE THERMOSTAT OPENS

1. Remove and inspect the thermostat.
Cooling System Draining, Filling and Bleeding
Thermostat (26.45.07) 2. Note the opening temperature and immerse the thermostat in water. 3. Heat the water until this temperature is reached. The thermostat should begin to open.

- **Does the thermostat open?**

-> Yes
Check the cooling fan, modules, circuits, sensors, etc,
Electronic Engine Controls

-> No
INSTALL a new thermostat,
Cooling System Draining, Filling and Bleeding
Thermostat (26.45.07) TEST the system for normal operation.

PINPOINT TEST G557183p3 : THE ENGINE DOES NOT REACH NORMAL OPERATING TEMPERATURE

G557183t6 : CHECK THAT THE THERMOSTAT CLOSES

1. Remove and inspect the thermostat.
Cooling System Draining, Filling and Bleeding
Thermostat (26.45.07) 2. Allow the thermostat to cool.

- **Does the thermostat fully close?**

-> Yes
Check the cooling fans, modules, circuits, sensors, etc,
Electronic Engine Controls

www.JagDocs.com

-> No
INSTALL a new thermostat,
Cooling System Draining, Filling and Bleeding
Thermostat (26.45.07) TEST the system for normal operation.

Coolant Expansion Tank (26.15.01)

Removal

1. **WARNING: To avoid having scalding hot coolant or steam blow out of the cooling system, use extreme care when removing the coolant pressure cap from a hot cooling system. Wait until the engine has cooled, then wrap a thick cloth around the coolant pressure cap and turn it slowly until the pressure begins to release. Step back while the pressure is released from the system. When certain all the pressure has been released (still with a cloth) turn and remove the coolant pressure cap from the coolant expansion tank. Failure to follow this instruction may result in personal injury.**

CAUTION: The engine cooling system must be maintained with the correct concentration and type of anti-freeze solution to prevent corrosion and frost damage. Failure to follow this instruction may result in damage to the vehicle.

Remove the coolant expansion tank pressure cap.

2 . Using a suitable tool, drain the coolant out of the expansion tank.

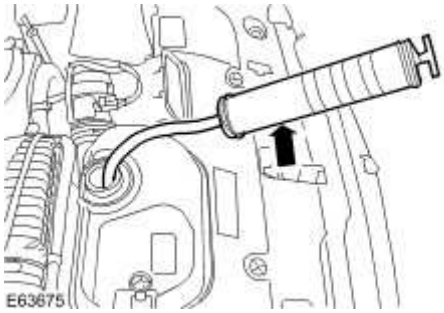

3 . **NOTE:**

Cap the vent hose to minimize coolant loss.

Detach the vent hose.

www.JagDocs.com

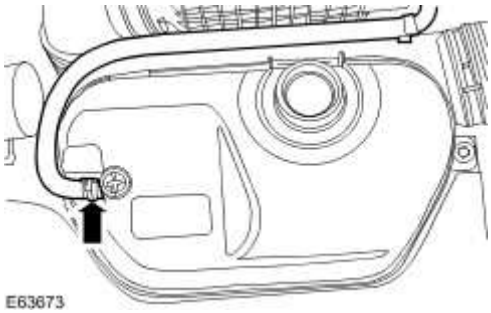

4 . Remove the coolant expansion tank retaining bolt.

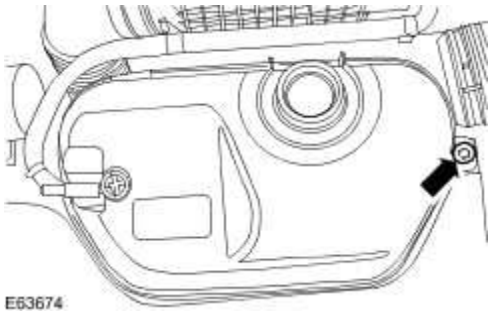

5 . Detach the coolant expansion tank.

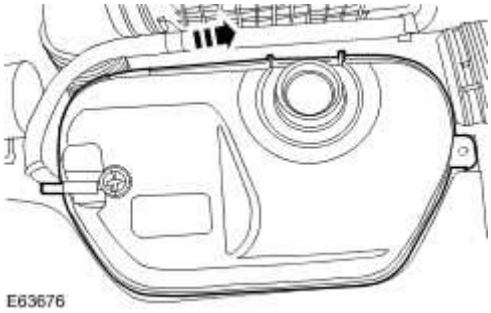

6 . Disconnect the coolant expansion tank level sensor electrical connector.

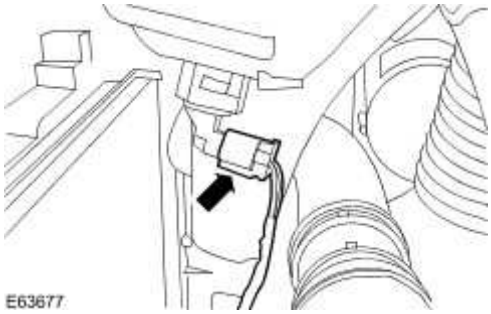

7 . **NOTE:**

Make sure the retaining clip is not removed.

NOTE:

Clamp the coolant expansion tank lower hose to minimize coolant loss.

Remove the coolant expansion tank.

- Detach the coolant expansion tank lower hose.

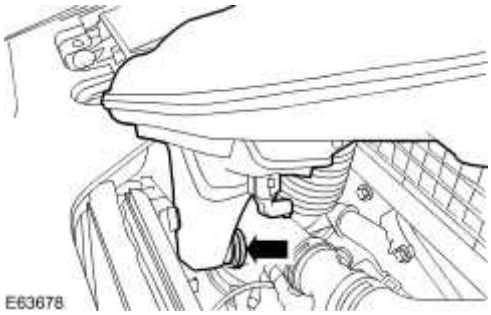

Installation

1 . To install, reverse the removal procedure.

- Tighten to 7 Nm.

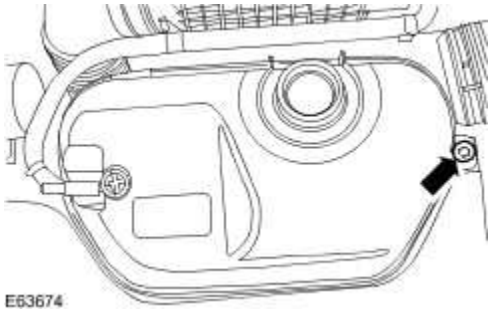

2 . Check and top up the cooling system as required.

www.JagDocs.com

Cooling Fan Motor and Shroud (26.25.25)

Removal

1 . Disconnect the battery ground cable.
For additional information, refer to Battery Disconnect and Connect

2 . Remove the radiator splash shield.
For additional information, refer to Radiator Splash Shield (76.22.90)

3 . Disconnect the cooling fan motor and shroud electrical connectors.

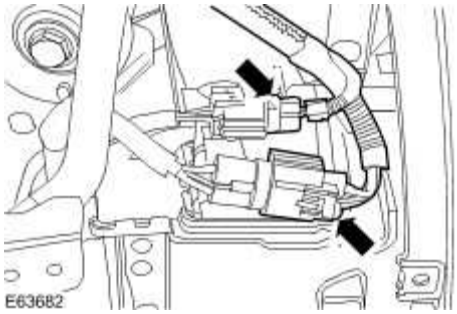

4 . Detach the cooling fan motor and shroud electrical connectors from the cooling fan motor and shroud.

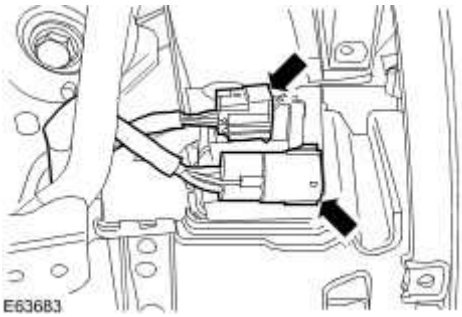

5 . Detach the cooling fan motor and shroud wiring harness from the cooling fan motor and shroud.

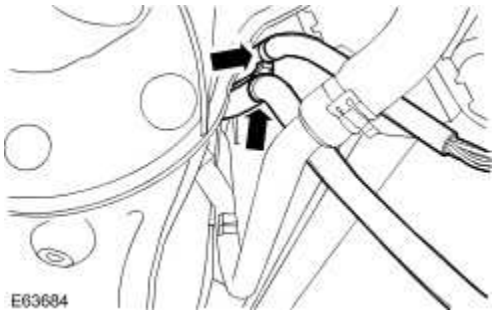

6 . Detach the air conditioning pipe.

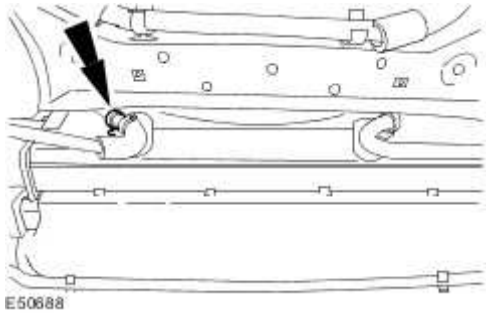

7 . Detach the fuel fired heater hose.

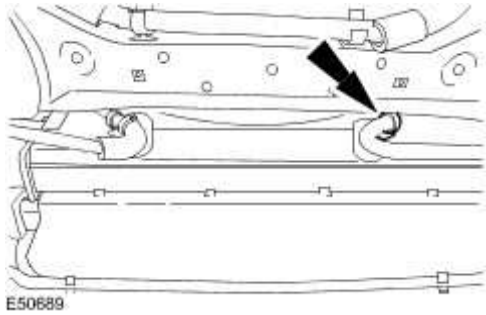

8 . Disconnect the auxiliary coolant flow pump electrical connector.

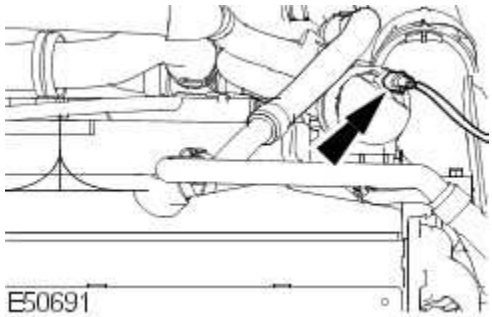

www.JagDocs.com

9 . Lower the vehicle.

10 . Remove the air cleaner.
For additional information, refer to Air Cleaner (19.10.05)

11 . Remove the coolant expansion tank.
For additional information, refer to Coolant Expansion Tank (26.15.01)

12 . Detach the auxiliary coolant flow pump.

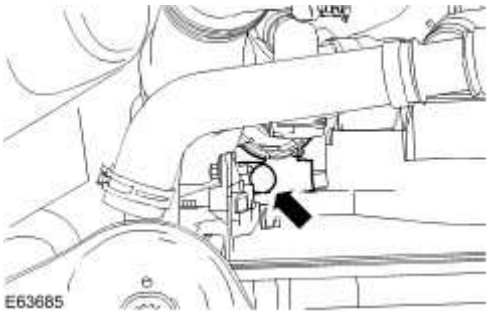

13 . Detach the coolant hoses from the cooling fan motor and shroud.

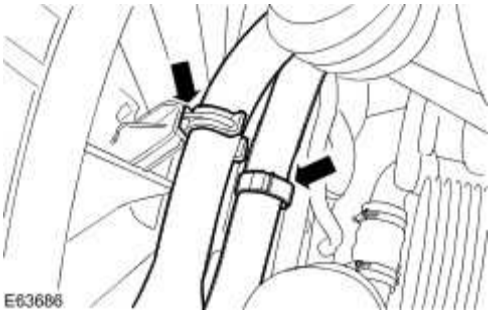

14 . Remove the cooling fan motor and shroud retaining bracket.

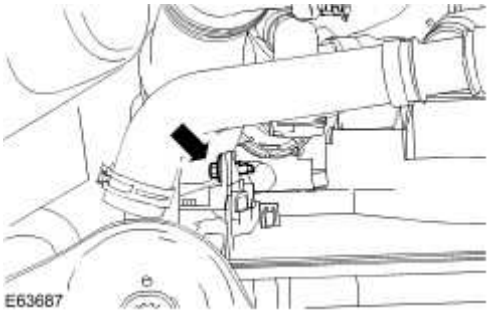

15 . Remove the cooling fan motor and shroud retaining bolt.

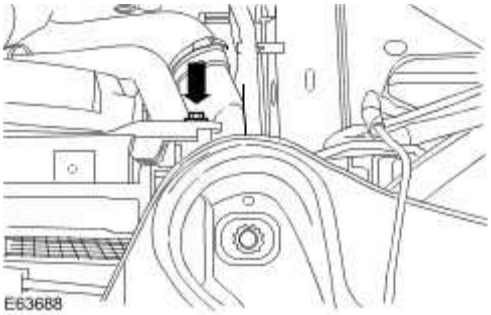

16 . Remove the cooling fan motor and shroud.

Reposition the cooling fan motor and shroud wiring harness.

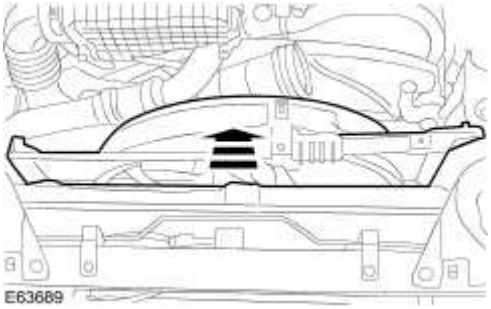

www.JagDocs.com

Installation

1 . To install, reverse the removal procedure.

Tighten to 7 Nm.

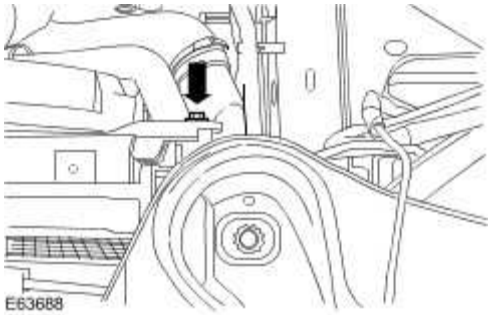

2 . Tighten to 7 Nm.

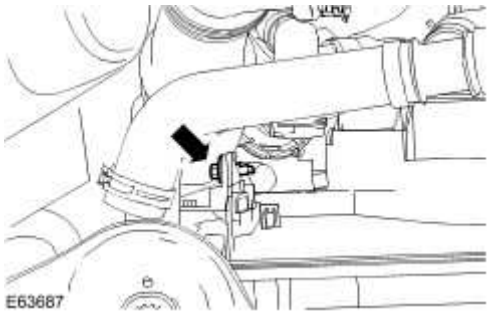

Radiator (26.40.01)

Removal

1 . Drain the cooling system.
For additional information, refer to Cooling System Draining, Filling and Bleeding

2 . Remove the cooling fan motor and shroud.
For additional information, refer to Cooling Fan Motor and Shroud (26.25.25)

3 . Remove the air intake elbow pipe.

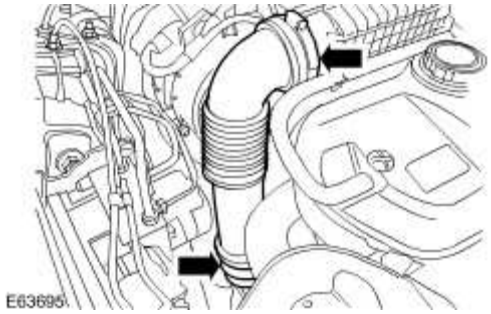

4 . Disconnect the radiator top hose.

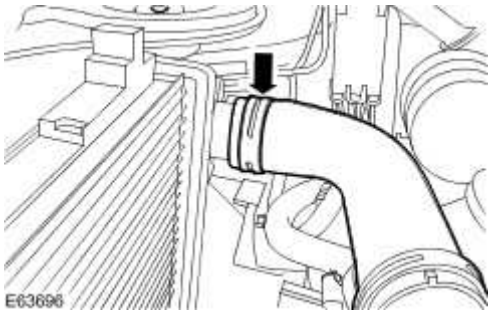

5 . Disconnect the coolant hose.

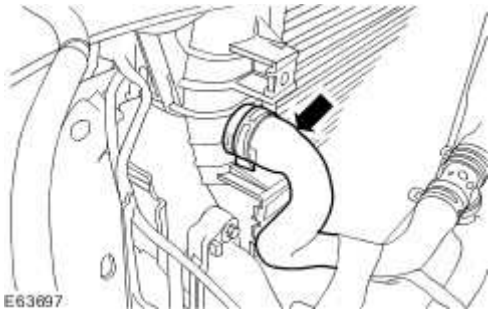

www.JagDocs.com

6 . Detach the charge air cooler intake elbow.

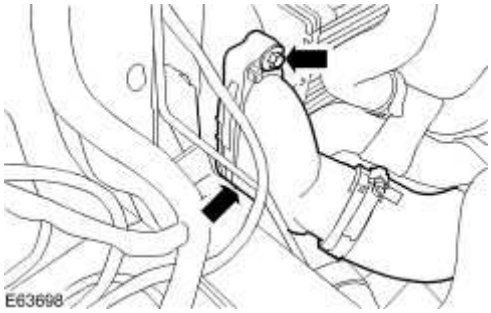

7 . Detach the thermostat.

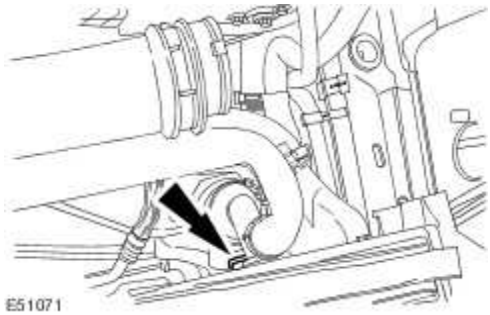

8 . Remove the radiator mounting brackets.

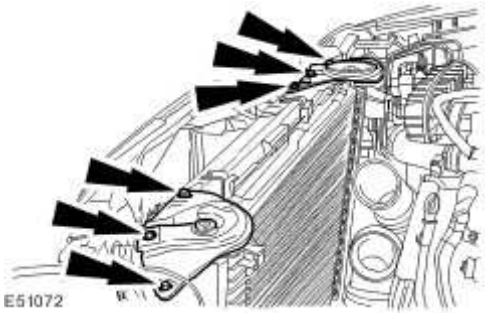

9 . Using suitable tie straps, support the condensor.

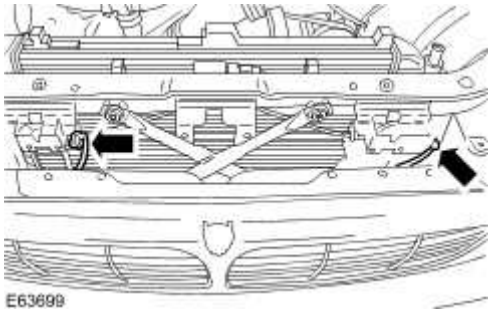

10 . Raise the vehicle.
For additional information, refer to Lifting

11 . Remove the radiator lower cowl.

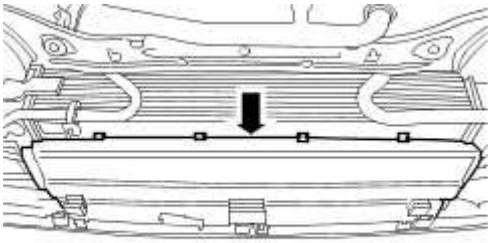

E63700

12 . Remove the right-hand air conditioning condensor retaining bolt.

1) Remove the foam insulation pad.

2) Remove the right-hand air conditioning condensor retaining bolt.

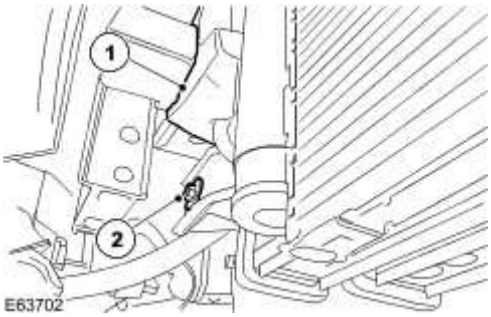

E63702

13 . Remove the left-hand air conditioning condensor retaining bolt.

1) Remove the foam insulation pad.

2) Remove the left-hand air conditioning condensor retaining bolt.

www.JagDocs.com

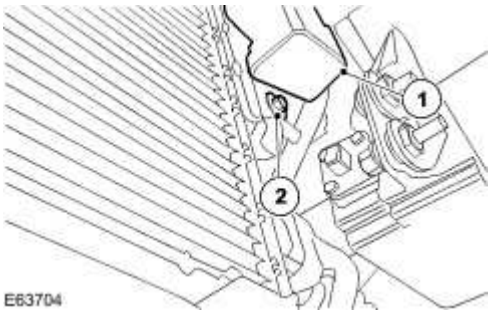

14 . Lower the vehicle.

15 . Reposition the radiator rearwards.

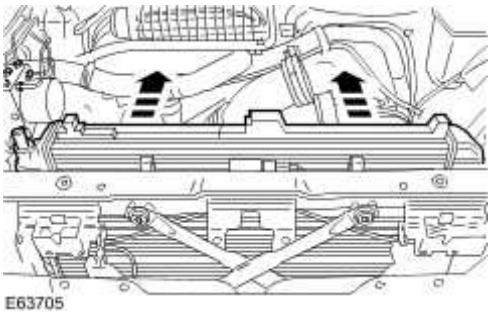

16 . Reposition the radiator to the left.

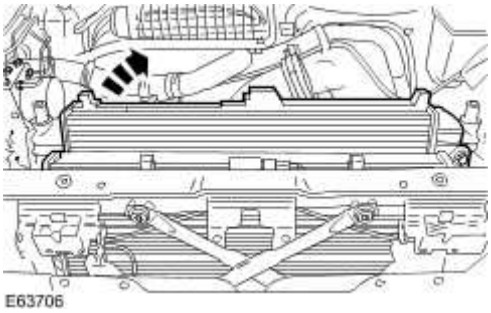

17 . Remove the radiator assembly.

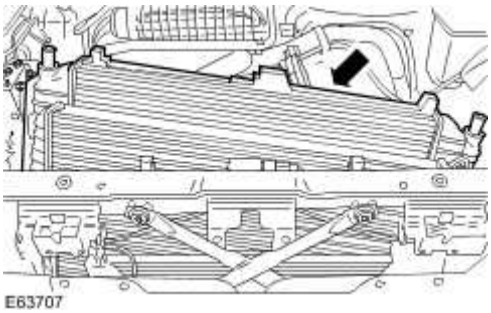

18 . Detach the foam insulation pads.

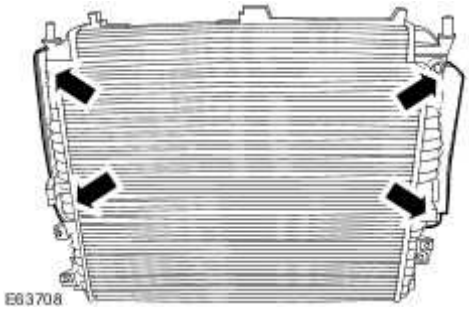

19 . Remove the charge air cooler from the radiator.

1) Remove the charge air cooler retaining bolts.

2) Remove the charge air cooler from the radiator.

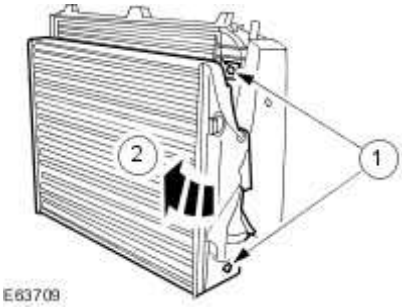

Installation

1 . Install the charge air cooler retaining bolts.

1) Install the charge air cooler to the radiator.

www.JagDocs.com

2) Install the charge air cooler retaining bolts.

Tighten to 7 Nm.

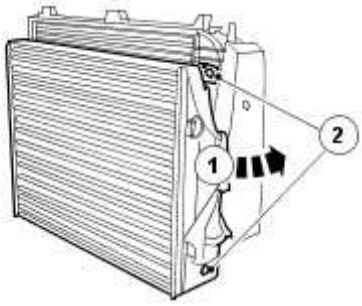

2 . Fit the foam insulation pads.

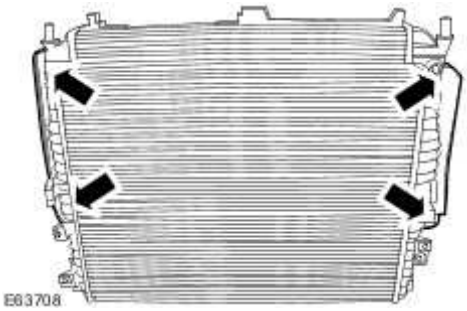

3 . Install the radiator assembly.

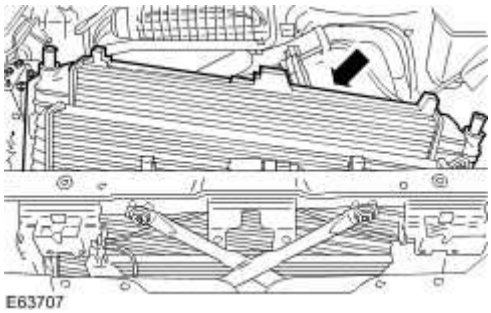

4 . Reposition the radiator forwards.

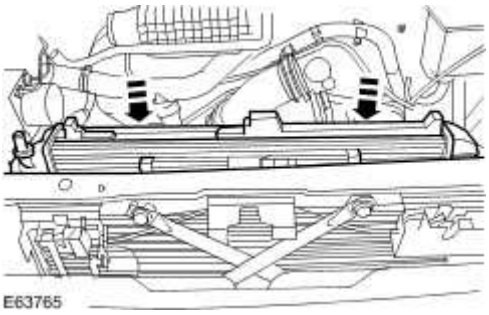

5 . Raise the vehicle.
For additional information, refer to Lifting

6 . Install the left-hand air conditioning condensor retaining bolt.

1) Install the foam insulation pad.

2) Install the left-hand air conditioning condensor retaining bolt.

Tighten to 7 Nm.

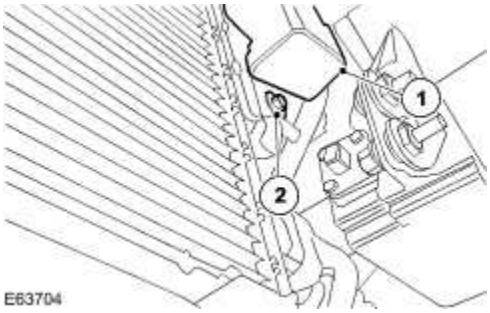

7 . Install the right-hand air conditioning condensor retaining bolt.

1) Install the foam insulation pad.

2) Install the right-hand air conditioning condensor retaining bolt.

3) Tighten to 7 Nm.

www.JagDocs.com

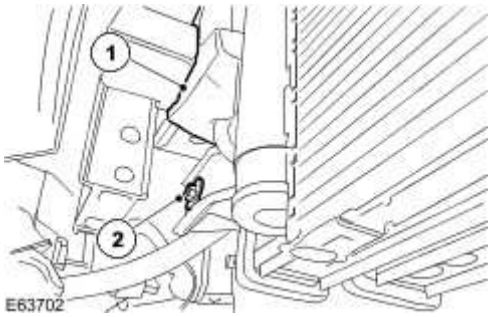

8 . Install the radiator lower cowl.

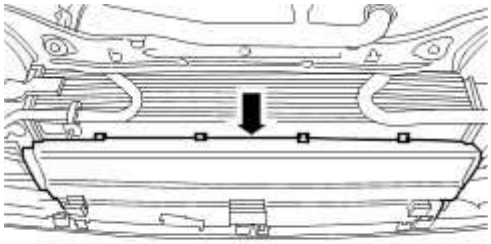

9 . Lower the vehicle.

10 . Remove the tie straps supporting the condensor.

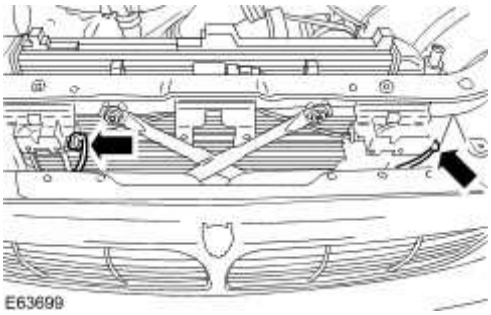

11 . Install the radiator mounting brackets.

Tighten to 7 Nm.

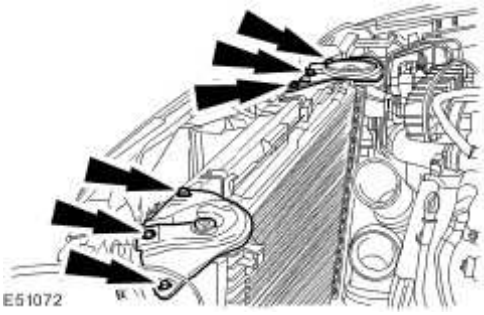

12 . **NOTE:**

Make sure the retaining clip is fully installed.

Attach the thermostat.

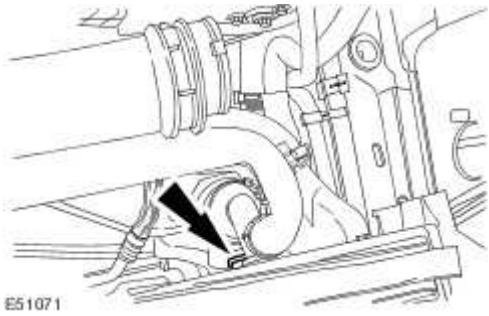

13 . Attach the charge air cooler intake elbow.

Tighten to 7 Nm.

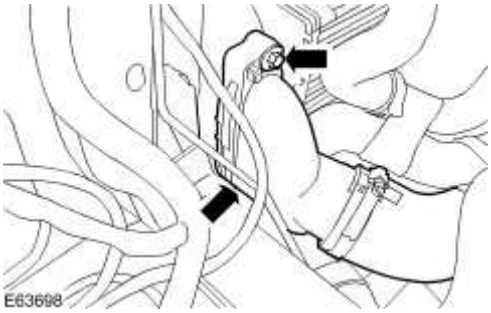

14 . Connect the coolant hose.

www.JagDocs.com

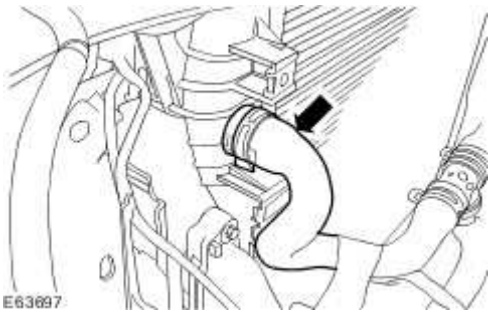

15 . Connect the radiator top hose.

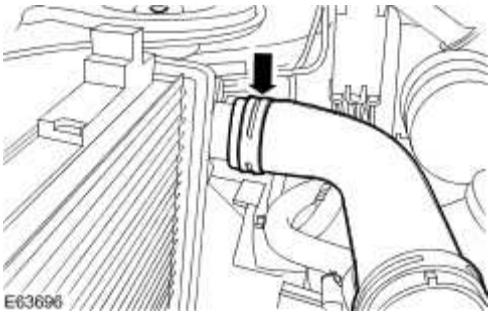

16 . Install the air intake elbow pipe.

Tighten to 4 Nm.

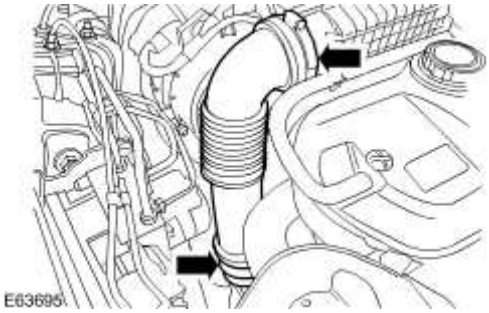

17 . Install the cooling fan motor and shroud.
For additional information, refer to Cooling Fan Motor and Shroud (26.25.25)

18 . Fill and bleed cooling system.
For additional information, refer to Cooling System Draining, Filling and Bleeding

Thermostat (26.45.07)

Special Service Tools

Remover/Install, Cooling Hose Clamp
303-397

Removal

1 . Drain the cooling system.
For additional information, refer to Cooling System Draining, Filling and Bleeding

2 . Lower the vehicle.

3 . Remove the air cleaner.
For additional information, refer to Air Cleaner (19.10.05)

4 . Detach the charge air cooler inlet hose.

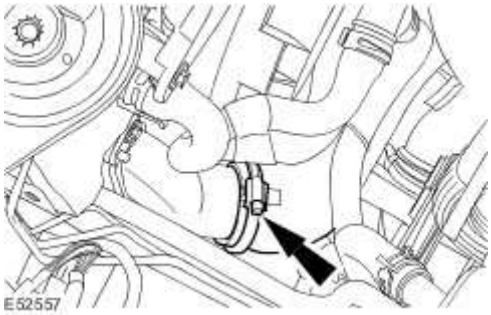

5 . Remove the charge air cooler inlet elbow.

www.JagDocs.com

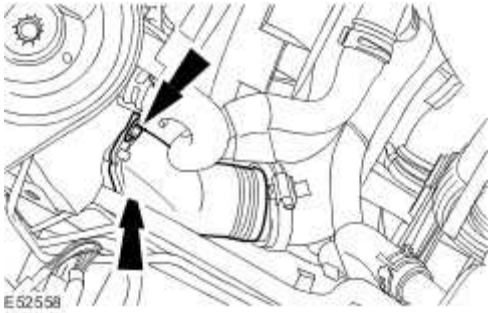

6 . Detach the coolant hoses.

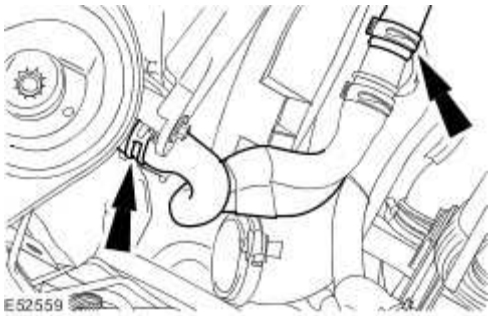

7 . Detach the transmission cooler hose.

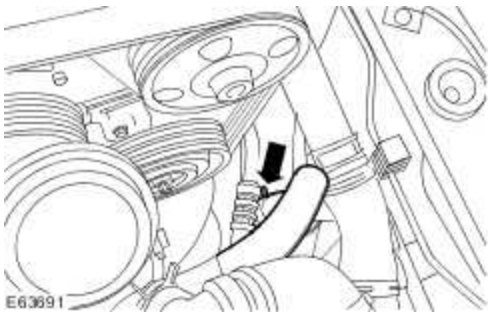

8 . Remove the coolant expansion tank.
For additional information, refer to Coolant Expansion Tank (26.15.01)

9 . Detach the coolant hose.

10 . Detach the thermostat and hose assembly.

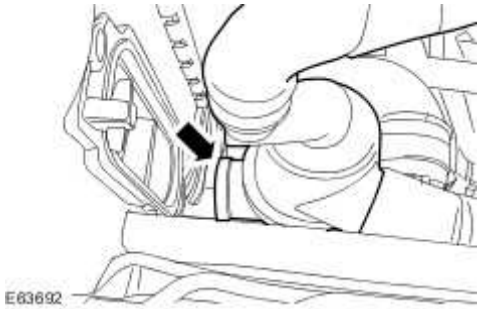

11 . Remove the thermostat and hose assembly.

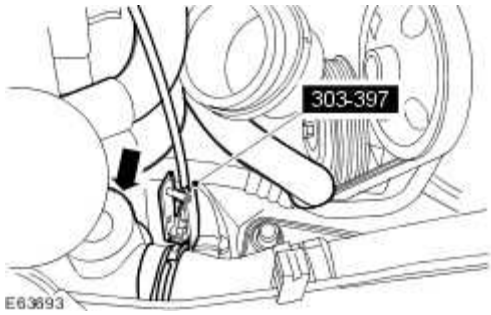

Installation

1 . Install the thermostat and hose assembly.

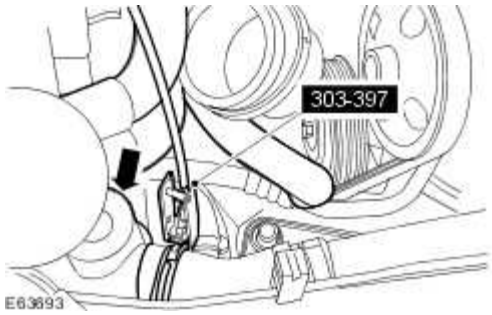

www.JagDocs.com

2 . **NOTE:**

Make sure the retaining clip is fully installed.

Attach the thermostat and hose assembly.

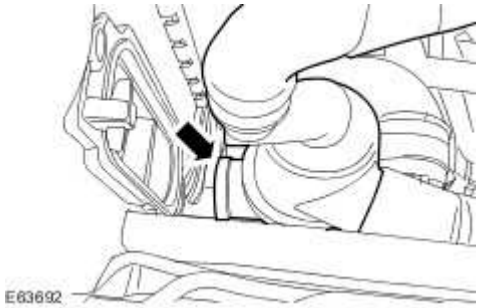

3 . Attach the coolant hose.

4 . Install the coolant expansion tank.
For additional information, refer to Coolant Expansion Tank (26.15.01)

5 . Attach the transmission cooler hose.

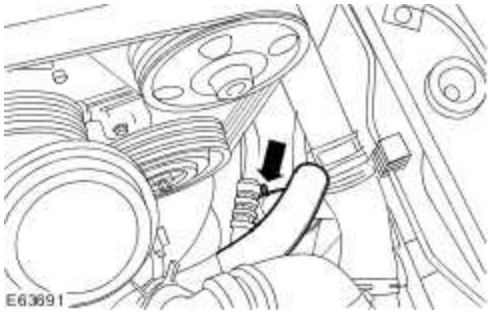

6 . Attach the coolant hoses.

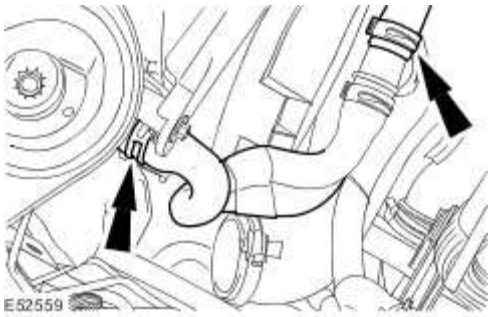

7 . Install the charge air cooler inlet elbow.

Tighten to 7 Nm.

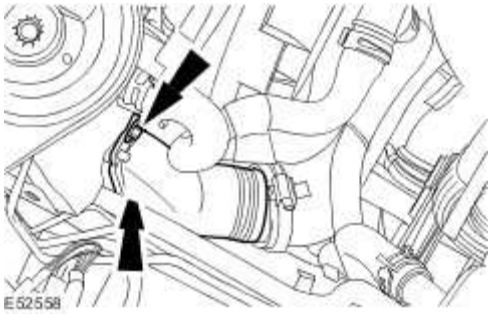

8 . Attach the charge air cooler inlet hose.

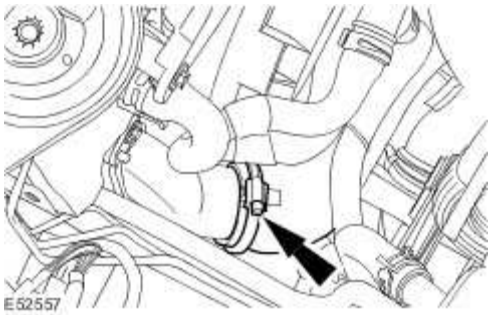

9 . Install the air cleaner.
For additional information, refer to Air Cleaner (19.10.05)

10 . Fill the cooling system.

For additional information, refer to Cooling System Draining, Filling and Bleeding

www.JagDocs.com

Water Pump (26.50.01)

Special Service Tools

Accessory belt detensioner
303-703

Removal

1 . Disconnect the battery ground cable.
For additional information, refer to Battery Disconnect and Connect

2 . Remove the air cleaner.
For additional information, refer to Air Cleaner (19.10.05)

3 . Drain the cooling system.
For additional information, refer to Cooling System Draining, Filling and Bleeding

4 . Remove the air deflector.
For additional information, refer to Air Deflector (76.11.41)

5 . Detach the accessory drive belt.

1) Using the special tool, rotate the belt tensioner counter clockwise.

2) Detach the accessory drive belt.

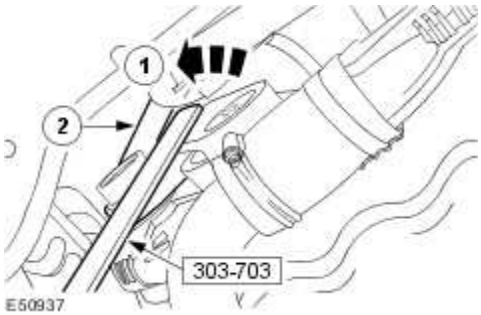

6 . **NOTE:**

Discard the water pump pulley retaining bolts.

Remove the water pump pulley.

Using a suitable 6mm bar, retain the water pump pulley.

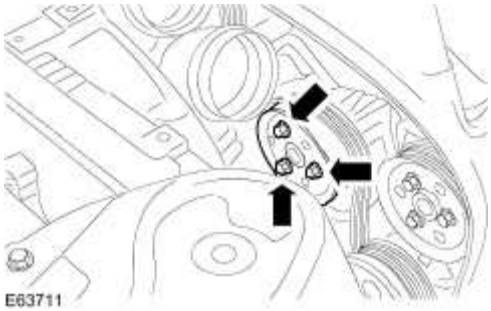

7 . **CAUTION: Reposition the accessory drive belt to prevent contamination from the coolant. Failure to follow this instruction may result in damage to the vehicle.**

Reposition the accessory drive belt.

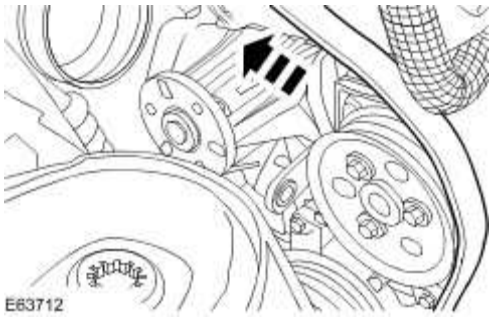

www.JagDocs.com

8 . **NOTE:**

Discard the water pump O-ring seal.

Remove the water pump.

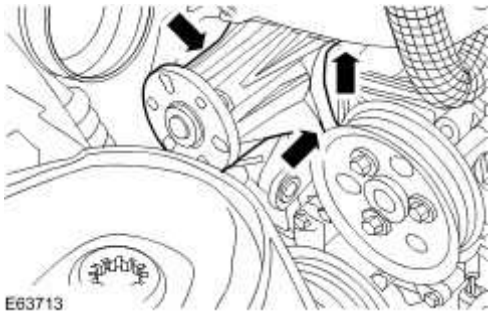

Installation

1 . **NOTE:**

Install a new O-ring seal.

Install the water pump.

Tighten to 10Nm.

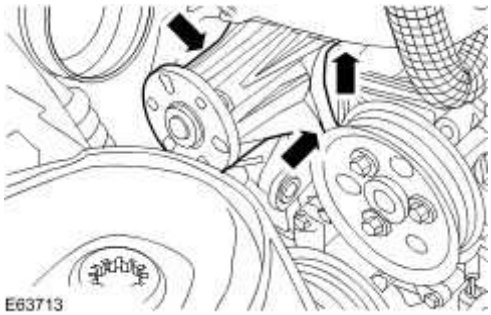

2 . Align the accessory drive belt.

3 . **NOTE:**

Install new water pump pulley retaining bolts.

Install the water pump pulley.

- Using a suitable 6mm bar, retain the water pump pulley.
- Tighten to 24 Nm.
- Align the accessory drive belt.

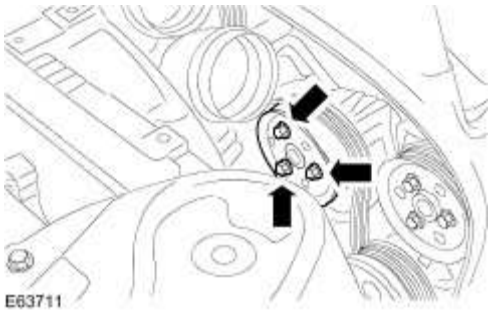

4 . Attach the accessory drive belt.

1) Using the special tool, rotate the belt tensioner counter clockwise.

2) Attach the accessory drive belt.

www.JagDocs.com

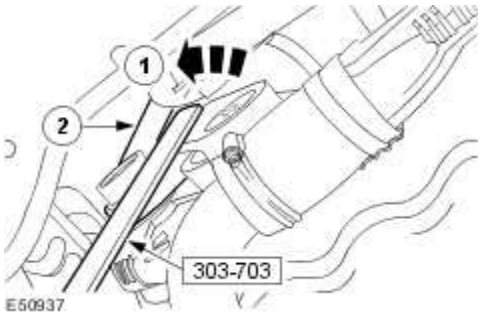

5 . Fill the cooling system.
For additional information, refer to Cooling System Draining, Filling and Bleeding

6 . Install the air deflector.
For additional information, refer to Air Deflector (76.11.41)

7 . Install the air cleaner.
For additional information, refer to Air Cleaner (19.10.05)

8 . Reconnect the battery ground cable.
For additional information, refer to Battery Connect (86.15.15)

Specifications

Torque Specifications

Description	Nm	lb-ft	lb-in
Lower intake manifold retaining bolts	10	-	89
Fuel injection supply manifold retaining bolts	10	-	89
Fuel pressure sensor	10	-	89
Throttle body	10	-	89
Fuel pressure sensor bracket retaining bolts, lower	10	-	89
Fuel pressure sensor bracket retaining bolts, upper	6	-	53

www.JagDocs.com

Fuel Charging and Controls

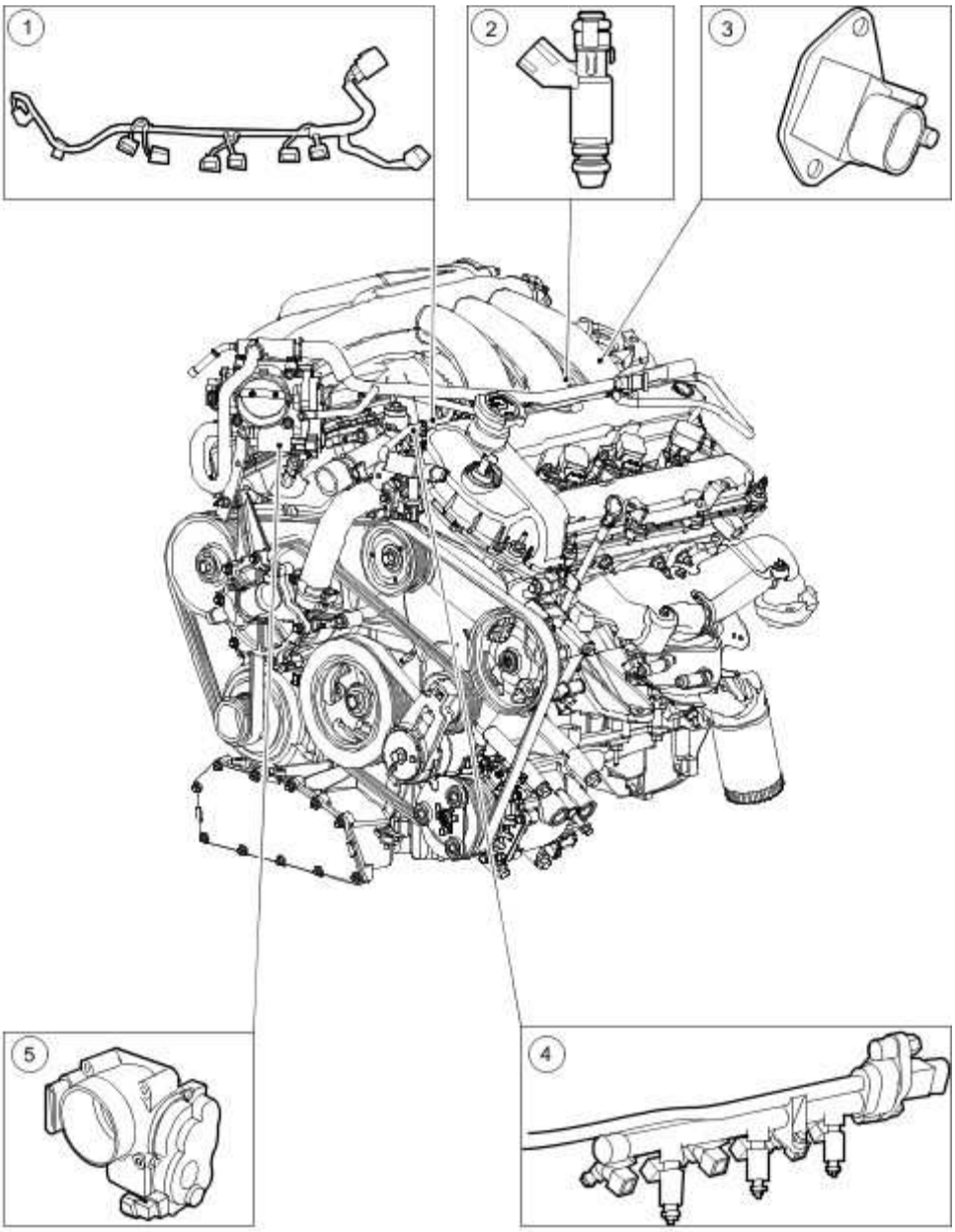

E31242

Item	Part Number	Description
1	—	Fuel charging wiring harness
2	—	Fuel injector
3	—	Fuel pressure sensor
4	—	Fuel injection supply manifold
5	—	Throttle body

The electronic returnless fuel system has the advantages of reduced fuel temperature and fuel tank vapor caused by constant fuel recirculation. The system delivers the correct amount of fuel to the engine under all conditions and at a constant pressure differential with respect to manifold absolute pressure.

Fuel is supplied at high pressure to the fuel injectors via a fuel injection supply manifold which incorporates fuel injectors, a fuel pressure sensor and a fuel temperature sensor. The engine control module (ECM) increases the fuel pressure to minimize fuel vapor formation to maintain fuel flow across the injectors.

The throttle body assembly is calibrated during assembly, no adjustments are required or permitted. The throttle motor is a 12 volt DC motor which, via movement of the throttle blade, controls the amount of air flowing into the engine.

www.JagDocs.com

Fuel Charging and Controls - VIN Range: G00442->G45703

Inspection and Verification

1 . Verify the customer concern.

2 . Confirm which, if any, warning lights and/or messages were displayed on the instrument cluster.

NOTE:

If any warning lights and/or messages were displayed when the fault occurred, refer to the Driver Information table for DTCs associated with the display, then to the DTC index table for possible sources and actions. Some warnings will appear to clear when the ignition is cycled. This is often because the warning has flagged as a result of one of the vehicle's on-board diagnostic routines having run to detect the fault. If the same routine is not run when the ignition is switched **ON**, the warning will not reflag until the routine does run. See the DTC summaries for drive cycle routines.

3 . Visually inspect for obvious signs of mechanical or electrical damage.

Visual Inspection Chart

Mechanical	Electrical
• Engine oil level • Cooling system coolant level • Fuel level • Fuel contamination/grade/quality • Throttle body • Poly-vee belt	• Fuses • Wiring harness • Electrical connector(s) • Sensor(s) • Engine control module (ECM) • Transmission control module

1 . Verify the following systems are working correctly:

- Air intake system
- Cooling system
- Charging system
- Ignition system

2 . If an obvious cause for an observed or reported concern is found, correct the cause (if possible) before proceeding to the next step.

3 . Where the Jaguar approved diagnostic system is available, complete the S93 report before clearing any or all fault codes from the vehicle.

NOTE:

If a DTC cannot be cleared, then there is a permanent fault present that flags again as soon as it is cleared. (The exception to this is P1260, which will only clear following an ignition **OFF/ON** cycle after rectification).

4 . If the cause is not visually evident and the Jaguar approved diagnostic system is not available, use a fault code reader to retrieve the fault codes before proceeding to the Diagnostic Trouble Code (DTC) Index Chart, or the Symptom Chart if no DTCs are set.

5 . Using the Jaguar approved diagnostic system where available, and a scan tool where not, check the freeze frame data for information on the conditions applicable when the fault was flagged. The format of this will vary, depending on the tool used, but can provide information useful to the technician in diagnosing the fault.

CAUTION: When probing connectors to take measurements in the course of the pinpoint tests, use the adaptor kit, part number 3548-1358-00.

NOTE:

When performing electrical voltage or resistance tests, always use a digital multimeter (DMM) accurate to 3 decimal places, and with an up-to-date calibration certificate. When testing resistance, always take the resistance of the DMM leads into account.

NOTE:

Check and rectify basic faults before beginning diagnostic routines involving pinpoint tests.

Symptom	Possible source	Action
Engine cranks, but does not fire	• Engine breather system disconnected/restricted • Ignition system • Fuel system • Harness • CKP sensor • ECM fault	Check engine breather system, <<303-08>> For ignition system, <<303-07>> Check fuel pressure, <<310-01>> For CKP tests, <<303-14>> Contact dealer technical support for advice on possible ECM failure.

www.JagDocs.com

Engine cranks and fires, but will not start	• Purge valve • Fuel pump • Engine coolant temperature (ECT) sensor • Spark plugs • HT short to ground (tracking) check rubber boots for cracks/damage • Ignition coil failure(s) • Harness	For evaporative emissions components, <<303-13>> Check fuel pressure, <<310-01>> For ECT sensor tests, <<303-14>> For ignition system <<303-07>>
Difficult to start cold	• Check coolant anti-freeze content • Battery • CKP sensor • EGR valve stuck open • Fuel pump • Engine coolant temperature (ECT) sensor • Purge valve	Check engine coolant level and condition. For battery information, <<414-01>> For CKP sensor tests, <<303-14>> For EGR system information, <<303-08>> Check fuel pressure. <<310-01>> For ECT sensor tests, <<303-14>> For evaporative emissions components, <<303-13>>
Difficult to start hot	• Injector leak • Fuel temperature sensor • IAT sensor • MAF sensor • Purge valve • Fuel pump • Ignition system • Engine coolant temperature (ECT) sensor • EGR valve stuck open	For fuel injector information, Fuel Injectors (18.10.02) For fuel temperature sensor, IAT sensor and MAF sensor tests, <<303-14>> For evaporative emissions components, <<303-13>> Check fuel pressure. <<310-01>> For ignition system, <<303-07>> For ECT sensor tests, <<303-14>> For EGR information, <<303-08>>
Difficult to start after hot soak (vehicle standing after engine has reached operating temperature)	• Injector leak • Fuel temperature sensor • IAT sensor • MAF sensor • Purge valve • Fuel pump • Ignition system • Engine coolant temperature (ECT) sensor • EGR valve stuck open	For fuel injector information, For fuel temperature sensor, IAT sensor and MAF sensor tests, <<303-14>> For evaporative emissions components, <<303-13>> Check fuel pressure. <<310-01>> For ignition system, <<303-07>> For ECT sensor tests, <<303-14>> For EGR information, <<303-08>>

Engine stalls soon after start	• Breather system disconnected/restricted • ECM relay • Harness • MAF sensor • Engine coolant temperature (ECT) sensor • Ignition system • Air filter restricted • Fuel lines • Fuel rail pressure sensor • Air leakage	For breather system information, <<303-08>> For ECM relay, MAF sensor and ECT sensor tests, <<303-14>> For ignition system, <<303-07>> For air filter information, <<303-12>> For fuel line information, <<310-01>> For fuel rail pressure sensor tests, GO to Pinpoint Test G206886p2. . For intake system information, <<303-12>>
Engine hesitates/poor acceleration	• Fuel pump • Injector leak • Fuel pressure • Fuel lines • Air leakage • Throttle sensors • Throttle motor • Ignition system • Exhaust gas recirculation • HO2 sensors • Transmission malfunction • Restricted pedal travel (carpet, etc) • APP sensor	Check fuel pressure. <<310-01>> For fuel rail pressure sensor tests, GO to Pinpoint Test G206886p2. . For fuel line information, <<310-01>> For intake system, <<303-12>> For throttle position sensor and throttle motor tests, <<303-14>> For ignition system, <<303-07>> For exhaust gas recirculation, <<303-08>> Check for DTCs indicating a faulty HO2 sensor. Refer to the DTC index. For transmission information, <<307-01>> Check accelerator pedal travel. For APP sensor tests, <<303-14>>
Engine backfires	• Fuel pump • Fuel lines • Air leakage • MAF sensor • Oxygen sensors • Ignition system • Sticking VCT hub • APP sensor	Check fuel pressure. <<310-01>> For fuel line information, <<310-01>> For intake system, <<303-12>> For MAF sensor tests, <<303-14>> Check for DTCs indicating a faulty HO2 sensor. Refer to the DTC index. For ignition system, <<303-07>> Check DTCs for VCT range/performance fault. For VCT information, <<303-01>> For APP sensor tests, <<303-14>>
Engine surges	• Fuel pump • Fuel lines • MAF sensor • Harness • Throttle sensors • Throttle motor	Check fuel pressure. <<310-01>> For fuel line information, <<310-01>> For MAF sensor, throttle sensor, and throttle motor relay tests, <<303-14>> For ignition system, <<303-07>>

www.JagDocs.com

	• Ignition system	
Engine detonates/knocks	• KS/circuit malfunction • Fuel pump • Fuel lines • FRP sensor • MAF sensor • Oxygen sensors • Air leakage • Sticking VCT hub • BARO sensor malfunction	For KS circuit tests, <<303-14>> Check fuel pressure. <<310-01>> For fuel line information, <<310-01>> For fuel rail pressure sensor tests, GO to Pinpoint Test G206886p2. . For MAF sensor and oxygen sensor tests, <<303-14>> For intake system, <<303-12>> Check DTCs for VCT range/performance fault. For VCT information, <<303-01>> For BARO sensor, contact dealer technical support for advice on possible ECM failure
No throttle response	• APP sensor malfunction • Throttle sensors • Throttle motor	For APP sensor, throttle position sensor and throttle motor relay tests, <<303-14>>
Poor throttle response	• APP sensor malfunction • Throttle sensors • Engine coolant temperature (ECT) sensor • MAF sensor • Transmission malfunction • Traction control event • Air leakage • Breather system disconnected/restricted	For APP sensor, throttle position sensor, ECT sensor and MAF sensor tests, <<303-14>> For transmission information, <<307-01>> For intake system, <<303-12>> For breather system information, <<303-08>>

Driver Information Chart

Warning light	Message	Default Mode	DTC
Red	Engine systems fault	Engine shut-down (all cylinders fuel cut)	P1224
Red	Engine systems fault	Limp-Home	P1229
Red	Engine systems fault	Limp-Home	P0121, P0122, P0123, P0222, P0223

Red	Engine systems fault	Limp-Home	P1251, P1631
Red	Engine systems fault	Limp-Home	P1611
Red	Engine systems fault	Limp-Home	P1633
Red	Engine systems fault	High idle	P1344, P1122, P1123, P1215, P1216
Red	Restricted Performance	Limp-Home unavailable	P1254
Red	Restricted Performance	Limp-Home unavailable	P1250
Red	Restricted Performance	Safety redundancy	P1657, P1658
Red	Restricted Performance	Safety redundancy	P16634
Amber	Restricted Performance	Engine speed limited	P0116, P0117, P0118, P0125
Amber	Restricted Performance	Engine speed limited	P0101, P0102, P0103, P0104
Amber	Restricted Performance	Engine speed limited	P0300, P0301, p0302, P0303, P0304, P0305, P0306, P0307, P0308, P1313, P1314
Amber	Restricted Performance	Engine speed limited	P0327, P0328, P0332, P0333, P1648
Amber	Restricted Performance	Engine speed limited	P0351, P0352, P0353, P0354, P0355, P0356, P0357, P0358, P1367, P1368
Amber	Restricted Performance	Engine speed limited	P0171, P0172, P0174, P0175
Amber	Restricted Performance	Engine speed limited	P0201, P0202, P0203, P0204, P0205, P0206, P0207, P0208
Amber	Restricted Performance	Engine speed limited	P0335, P0336
Amber	Restricted Performance	Engine speed limited, Reverse throttle progression enabled	P1642
Amber	Restricted Performance	Engine speed limited, Reverse throttle progression	P1643

www.JagDocs.com

		enabled	
Amber	Restricted Performance	Engine speed limited, Reverse throttle progression enabled	P0096, P0097, P0098
Amber	Restricted Performance	Engine speed limited, Reverse throttle progression enabled	P1474
Amber	Restricted Performance	Engine speed limited	P1234, P1236, P1338
Amber	None	None	P0506, P0507
Amber	None	None	P1656
Amber	Gearbox fault/Restricted performance	Gearbox default to set gear	P0725
Amber	Gearbox fault/Restricted performance	Gearbox default to set gear	P1796
Amber	Gearbox fault/Restricted performance	Gearbox default to set gear	P0701
Amber	Gearbox fault/Restricted performance	Gearbox default to set gear	P1603
Amber	Gearbox fault/Restricted performance	Gearbox default to set gear	P0605
Amber	Gearbox fault/Restricted performance	Gearbox default to set gear	P1719
Amber	Gearbox fault/Restricted performance	Gearbox default to set gear	P0720
Amber	Gearbox	Gearbox default to set gear	P0715

	fault/Restricted performance		
Amber	Gearbox fault/Restricted performance	Gearbox default to set gear	P0705
Amber	Gearbox fault/Restricted performance	Gearbox default to set gear	P0610
Amber	Gearbox fault/Restricted performance	Gearbox default to set gear	P0606
Amber	Gearbox fault/Restricted performance	Gearbox default to set gear	P0750
Amber	Gearbox fault/Restricted performance	Gearbox default to set gear	P0753
Amber	Gearbox fault/Restricted performance	Gearbox default to set gear	P0755
Amber	Gearbox fault/Restricted performance	Gearbox default to set gear	P0758
Amber	Gearbox fault/Restricted performance	Gearbox default to set gear	P0760
Amber	Gearbox fault/Restricted performance	Gearbox default to set gear	P0763
Amber	Gearbox fault/Restricted performance	Gearbox default to set gear	P0765
Amber	Gearbox fault/Restricted	Gearbox default to set gear	P0768

www.JagDocs.com

	performance		
Amber	Gearbox fault/Restricted performance	Gearbox default to set gear	P0770
Amber	Gearbox fault/Restricted performance	Gearbox default to set gear	P0773
Amber	Gearbox fault/Restricted performance	Gearbox default to set gear	P0740
Amber	Gearbox fault/Restricted performance	Gearbox default to set gear	P0743
Amber	Gearbox fault/Restricted performance	Gearbox default to set gear	P0787
Amber	Gearbox fault/Restricted performance	Gearbox default to set gear	P0788
Amber	Gearbox fault/Restricted performance	Gearbox default to set gear	P0730
Amber	Gearbox fault/Restricted performance	Gearbox default to set gear	P0731
Amber	Gearbox fault/Restricted performance	Gearbox default to set gear	P0732
Amber	Gearbox fault/Restricted performance	Gearbox default to set gear	P0733
Amber	Gearbox fault/Restricted	Gearbox default to set gear	P0734

	performance		
Amber	Gearbox fault/Restricted performance	Gearbox default to set gear	P0735
Amber	Gearbox fault/Restricted performance	Gearbox default to set gear	P0729
Amber	Gearbox fault/Restricted performance	Gearbox default to set gear	P0781
Amber	Gearbox fault/Restricted performance	Gearbox default to set gear	P0782
Amber	Gearbox fault/Restricted performance	Gearbox default to set gear	P0783
Amber	Gearbox fault/Restricted performance	Gearbox default to set gear	P0784
Amber	Gearbox fault/Restricted performance	Gearbox default to set gear	P0829
Amber	Gearbox fault/Restricted performance	Engine speed limited, reverse throttle progression enabled	P1797
Amber	Gearbox fault/Restricted performance	Gearbox default to set gear	P0641
Amber	Gearbox fault/Restricted performance	Gearbox default to set gear	P0651
Amber	Gearbox fault/Restricted	Gearbox default to set gear	P0860

www.JagDocs.com

	performance		
Amber	Gearbox fault/Restricted performance	Limp-home	P1783

Default mode Definitions

LIMP-HOME MODE

- Throttle motor off
- Throttle motor relay off
- Throttle motor circuit off
- Fuel intervention
- Cruise control inhibited

LIMP-HOME UNAVAILABLE

- Power limitation
- Vehicle speed limited to 120 kph
- Reverse throttle progression enabled
- Cruise control Inhibited

REVERSE THROTTLE PROGRESSION

- Throttle opening limited to maximum 30%

NOTE:

The throttle operation uses the same map as for reverse gear.

ENGINE SPEED LIMITED

- Engine runs normally, up to 3000 rpm
- Engine speed restricted to 3000 rpm maximum, by fuel cut-off

HIGH IDLE

- Throttle valve kept in fixed position by motor
- Cruise control Inhibited

SAFETY REDUNDANCY

- Power limitation
- Vehicle speed limited to 120 kph
- Reverse throttle progression enabled
- Cruise Control Inhibited

Diagnostic Trouble Code (DTC) index

DTC	Condition	Possible Causes	Action
P0171	Right-hand cylinders combustion too lean	• Air intake leak between mass air flow (MAF) sensor and cylinder head • Fuel filter/system restriction • Fuel injector restriction • Fuel rail pressure (FRP) sensor fault (low fuel pressure) • Low fuel pump output • HO2S/catalyst monitor sensor harness wiring condition fault • EFT sensor fault (low fuel temperature) • Mass air flow (MAF) sensor fault (low intake air flow) • Exhaust leak (before catalyst) • ECM receiving incorrect signal from one or more of the following sensors; ECT, MAF*, IAT, fuel rail temperature	For intake system, <<303-12>> For fuel injector, Fuel Injectors (18.10.02) For fuel filter and pump, <<310-01>> For FRP sensor circuit tests, GO to Pinpoint Test G206886p2. . For HO2S/Catalyst monitor sensor tests, <<303-14>> For exhaust system, <<309-00>> For sensor tests, <<303-14>> * If this DTC is flagged, pay particular attention to the MAF sensor.
P0172	Right-hand cylinders combustion too rich	• Engine misfire • Restricted air filter • Leaking fuel injector(s) • FRP sensor failure (high fuel pressure) • EFT sensor fault (high fuel temperature) • MAF sensor fault (high intake air flow) • HO2S/catalyst monitor sensor harness wiring condition fault • ECM receiving incorrect signal from one or more of the following sensors; ECT, MAF, IAT, FRP, EFT.	Check for "misfire detected" DTCs in this section; For intake system, <<303-12>> For fuel injector, Fuel Injectors (18.10.02) For FRP sensor circuit tests, GO to Pinpoint Test G206886p2. . For other sensor tests, <<303-14>>
P0174	Left-hand cylinders combustion too lean	• Air intake leak between MAF sensor and cylinder head • Fuel filter/system restriction	For intake system, <<303-12>> For fuel injectors, Fuel Injectors (18.10.02) For fuel filter, pump and

www.JagDocs.com

		• Fuel injector restriction • FRP sensor failure (low fuel pressure) • Low fuel pump output • HO2S/catalyst monitor sensor harness wiring condition fault • EFT sensor fault (low fuel temperature) • Mass air flow (MAF) sensor fault (low intake air flow) • Exhaust leak (before catalyst) • ECM receiving incorrect signal from one or more of the following sensors; ECT, MAF*, IAT, FRP, EFT, TP.	lines, <<310-01>> For HO2S/catalyst monitor sensor tests, <<303-14>> For exhaust system, <<309-00>> For FRP sensor tests, GO to Pinpoint Test G206886p2. . For other sensor tests, <<303-14>> * If this DTC is flagged, pay particular attention to the MAF sensor.
P0175	Left-hand cylinders combustion too rich	• Engine misfire • Restricted air filter • Leaking fuel injector(s) • FRP sensor failure (high fuel pressure) • ECM receiving incorrect signal from one or more of the following sensors; ECT, MAF, IAT, fuel rail pressure, fuel rail temperature	Check for "misfire detected" DTCs in this section. For intake system, <<303-12>> For fuel injectors, Fuel Injectors (18.10.02) For FRP sensor tests, GO to Pinpoint Test G206886p2. . For other sensor tests, <<303-14>>
P0191	Fuel rail pressure (FRP) sensor circuit range/performance	• Fuel filter/system restriction • Fuel system leak • Incorrect fuel pump output • FRP sensor to ECM sensing circuit; high resistance, open circuit, short circuit to high voltage • FRP sensor to splice in sensor supply circuit; high resistance, open circuit • FRP sensor to splice in sensor ground circuit; high resistance, open circuit, short circuit to ground, short circuit to high voltage • FRP sensor failure	For fuel filter, pump and lines, <<310-01>> For FRP sensor tests, GO to Pinpoint Test G206886p2. .
P0192	Fuel rail pressure (FRP) sensor circuit low voltage	• FRP sensor disconnected • FRP sensor to ECM sensing	For FRP sensor tests, GO to Pinpoint Test G206886p2.

	(low pressure)	circuit; open circuit or short circuit to ground • FRP sensor to splice in sensor supply circuit; high resistance, open circuit • FRP sensor failure	.
P0193	Fuel rail pressure (FRP) sensor circuit high voltage (high pressure)	• FRP sensor to ECM wiring (supply/sense); short circuit to each other • FRP sensor to ECM sense circuit; short circuit to high voltage • FRP sensor to splice in sensor ground circuit; open circuit • FRP sensor failure	For FRP sensor tests, GO to Pinpoint Test G206886p2. .
P0201	Fuel injector circuit malfunction, Cyl 1	• Injector disconnected • Injector wiring open or short circuit • Injector failure	For fuel injectors, Fuel Injectors (18.10.02) For fuel injector circuit tests, GO to Pinpoint Test G206886p1. .
P0202	Fuel injector circuit malfunction, Cyl 2	• Injector disconnected • Injector wiring open or short circuit • Injector failure	For fuel injectors, Fuel Injectors (18.10.02) For fuel injector circuit tests, GO to Pinpoint Test G206886p1. .
P0203	Fuel injector circuit malfunction, Cyl 3	• Injector disconnected • Injector wiring open or short circuit • Injector failure	For fuel injectors, Fuel Injectors (18.10.02) For fuel injector circuit tests, GO to Pinpoint Test G206886p1. .
P0204	Fuel injector circuit malfunction, Cyl 4	• Injector disconnected • Injector wiring open or short circuit • Injector failure	For fuel injectors, Fuel Injectors (18.10.02) For fuel injector circuit tests, GO to Pinpoint Test G206886p1. .

www.JagDocs.com

P0205	Fuel injector circuit malfunction, Cyl 5	• Injector disconnected • Injector wiring open or short circuit • Injector failure	For fuel injectors, Fuel Injectors (18.10.02) For fuel injector circuit tests, GO to Pinpoint Test G206886p1. .
P0206	Fuel injector circuit malfunction, Cyl 6	• Injector disconnected • Injector wiring open or short circuit • Injector failure	For fuel injectors, Fuel Injectors (18.10.02) For fuel injector circuit tests, GO to Pinpoint Test G206886p1. .
P0300	Random misfire detected	• ECM to ignition coil primary circuit fault (cylinder misfire detected DTC also flagged) • Ignition coil failure • Spark plug failure/fouled/incorrect gap • Fuel injector circuit fault(s) (injector DTCs also flagged) • Fuel delivery pressure high/low • Fuel injectors restricted/leaking • Fuel injectors continuously open • Fuel contamination • Worn camshaft/broken valve springs	For ignition system, <<303-07>> For injector circuit tests, GO to Pinpoint Test G206886p1. . Check fuel pressure, <<310-01>> For fuel injectors, Fuel Injectors (18.10.02) For engine information, <<303-01>>
P0301	Misfire detected, cylinder 1	• ECM to ignition coil primary circuit fault (cylinder misfire detected DTC also flagged) • Ignition coil failure • Spark plug failure/fouled/incorrect gap • Fuel injector circuit fault(s) (injector DTCs also flagged) • Fuel delivery pressure high/low • Fuel injectors restricted/leaking • Fuel injectors continuously	For ignition system, <<303-07>> For injector circuit tests, GO to Pinpoint Test G206886p1. . Check fuel pressure, <<310-01>> For fuel injectors, Fuel Injectors (18.10.02) For engine information, <<303-01>>

		open • Fuel contamination • Worn camshaft/broken valve springs	
P0302	Misfire detected, cylinder 2	• ECM to ignition coil primary circuit fault (cylinder misfire detected DTC also flagged) • Ignition coil failure • Spark plug failure/fouled/incorrect gap • Fuel injector circuit fault(s) (injector DTCs also flagged) • Fuel delivery pressure high/low • Fuel injectors restricted/leaking • Fuel injectors continuously open • Fuel contamination • Worn camshaft/broken valve springs	For ignition system, <<303-07>> For injector circuit tests, GO to Pinpoint Test G206886p1. . Check fuel pressure, <<310-01>> For fuel injectors, Fuel Injectors (18.10.02) For engine information, <<303-01>>
P0303	Misfire detected, cylinder 3	• ECM to ignition coil primary circuit fault (cylinder misfire detected DTC also flagged) • Ignition coil failure • Spark plug failure/fouled/incorrect gap • Fuel injector circuit fault(s) (injector DTCs also flagged) • Fuel delivery pressure high/low • Fuel injectors restricted/leaking • Fuel injectors continuously open • Fuel contamination • Worn camshaft/broken valve springs	For ignition system, <<303-07>> For injector circuit tests, GO to Pinpoint Test G206886p1. . Check fuel pressure, <<310-01>> For fuel injectors, Fuel Injectors (18.10.02) For engine information, <<303-01>>
P0304	Misfire detected, cylinder 4	• ECM to ignition coil primary circuit fault (cylinder misfire detected DTC also flagged) • Ignition coil failure	For ignition system, <<303-07>> For injector circuit tests, GO to Pinpoint Test G206886p1.

www.JagDocs.com

		• Spark plug failure/fouled/incorrect gap • Fuel injector circuit fault(s) (injector DTCs also flagged) • Fuel delivery pressure high/low • Fuel injectors restricted/leaking • Fuel injectors continuously open • Fuel contamination • Worn camshaft/broken valve springs	. Check fuel pressure, <<310-01>> For fuel injectors, Fuel Injectors (18.10.02) For engine information, <<303-01>>
P0305	Misfire detected, cylinder 5	• ECM to ignition coil primary circuit fault (cylinder misfire detected DTC also flagged) • Ignition coil failure • Spark plug failure/fouled/incorrect gap • Fuel injector circuit fault(s) (injector DTCs also flagged) • Fuel delivery pressure high/low • Fuel injectors restricted/leaking • Fuel injectors continuously open • Fuel contamination • Worn camshaft/broken valve springs	For ignition system, <<303-07>> For injector circuit tests, GO to Pinpoint Test G206886p1. . Check fuel pressure, <<310-01>> For fuel injectors, Fuel Injectors (18.10.02) For engine information, <<303-01>>
P0306	Misfire detected, cylinder 6	• ECM to ignition coil primary circuit fault (cylinder misfire detected DTC also flagged) • Ignition coil failure • Spark plug failure/fouled/incorrect gap • Fuel injector circuit fault(s) (injector DTCs also flagged) • Fuel delivery pressure high/low • Fuel injectors restricted/leaking • Fuel injectors continuously	For ignition system, <<303-07>> For injector circuit tests, GO to Pinpoint Test G206886p1. . Check fuel pressure, <<310-01>> For fuel injectors, Fuel Injectors (18.10.02) For engine information, <<303-01>>

		open • Fuel contamination • Worn camshaft/broken valve springs	
P0460	Fuel level sensor circuit range/performance	• Fuel level sensor to rear electronic control module circuit(s); intermittent short circuit, open circuit, high resistance • Fuel level sensor failure • Rear electronic control module fault (incorrect fuel level data)	For fuel level sensor and circuit tests, <<310-01>>
P1224	Throttle control position error	• Throttle motor failure • Throttle body failure	This DTC can only be accurately diagnosed using the Jaguar approved diagnostic system. If this is not available, INSTALL a new throttle body. Throttle Body - VIN Range: G00442->G45703 (19.70.04) CLEAR the DTC, TEST the system for normal operation.
P1229	Throttle motor control circuit malfunction	• Throttle motor disconnected • Throttle motor to ECM drive circuits; short circuit or open circuit • ECM ground circuit fault(s) (EM80-04, 05, 54) • Throttle motor failure • Throttle body failure	For throttle motor and circuit tests, and for ECM ground tests, <<303-14>> For throttle body, Throttle Body - VIN Range: G00442->G45703 (19.70.04)
P1234	No fuel pump commands received by ECM	• ECM to fuel pump module drive circuit; open circuit, short circuit, high resistance • Fuel pump module failure	For fuel pump module circuit tests, <<310-01>>
P1236	Fuel pump not activated when requested by ECM	• ECM to fuel pump module drive circuit; open circuit, short circuit, high resistance	For fuel pump module circuit tests, <<310-01>>

www.JagDocs.com

		• Fuel pump module failure	
P1250	Throttle return spring failure malfunction	Throttle return spring failure (throttle body failure)	This DTC can only be accurately diagnosed using the Jaguar approved diagnostic system. If this is not available, INSTALL a new throttle body. Throttle Body - VIN Range: G00442->G45703 (19.70.04) CLEAR the DTC, TEST the system for normal operation.
P1251	Throttle motor relay **OFF** failure	• Throttle motor relay coil power supply circuit; open circuit • Throttle motor relay failure • Throttle motor relay coil to ECM circuit; open circuit • ECM ground circuit fault (relay coil drive)	For throttle motor relay tests, <<303-14>>
P1254	Throttle limp-home spring malfunction	Throttle body	This DTC can only be accurately diagnosed using the Jaguar approved diagnostic system. If this is not available, INSTALL a new throttle body. Throttle Body - VIN Range: G00442->G45703 (19.70.04) CLEAR the DTC, TEST the system for normal operation.
P1313	Right-hand cylinders misfire rate catalyst damage (this DTC will flag only when accompanied by an individual cylinder misfire DTC; P0300-P0306)	Refer to P0300 possible sources	Refer to P0300 Actions
P1314	Left-hand cylinders misfire rate catalyst damage (this DTC will flag only when	Refer to P0300 possible sources	Refer to P0300 Actions

	accompanied by an individual cylinder misfire DTC; P0300-P0306)		
P1316	Misfire excess emission (Note: This DTC will flag only when accompanied by an individual cylinder misfire DTC; P0300 to P0306)	Refer to P0300 possible sources	Refer to P0300 Actions
P1338	Fuel pump drive circuit low/high voltage	• Fuel pump module to fuel pump drive circuit; open circuit, short circuit, high resistance • Fuel pump module failure • Fuel pump failure	For fuel pump module circuit tests, <<310-01>>
P1631	Throttle motor power relay coil activation circuit failure	• Throttle motor relay coil to ECM circuit; open circuit • Throttle motor relay failure • Throttle motor relay coil to ECM drive circuit; open circuit, short circuit to ground	For throttle motor relay tests, <<303-14>>
P1634	Throttle watchdog circuit malfunction	• ECM failure	Contact dealer technical support for advice on possible ECM failure.
P1656	Throttle position (TP) sensor amplifier circuit malfunction	• ECM failure	Contact dealer technical support for advice on possible ECM failure.
P1657	Throttle motor relay coil drive circuit **ON** failure	• Throttle motor relay failure • Throttle motor relay coil to ECM drive circuit; short circuit to B+ voltage	For throttle motor relay tests, <<303-14>>
P1658	Throttle motor relay **ON** failure	• Throttle motor relay failure • Throttle motor relay coil to ECM drive circuit; short circuit to B+ voltage	For throttle motor relay tests, <<303-14>>

www.JagDocs.com

Pinpoint Tests

PINPOINT TEST G206886p1 : DTC P0201, P0202, P0203, P0204, P0205, P0206; FUEL INJECTORS

G206886t1 : CHECK THE INJECTOR COIL RESISTANCE

1. Turn the ignition switch to the **OFF** position. 2. Disconnect the battery negative terminal. 3. Disconnect the relevant injector electrical connector (IL03 to IL08). 4. Measure the resistance between the injector pins.

- **Is the resistance between 12 and 16 ohms?**

-> Yes
GO to Pinpoint Test G206886t2.

-> No
INSTALL a new injector.
Fuel Injectors (18.10.02) CLEAR the DTC. TEST the system for normal operation.

G206886t2 : CHECK THE INJECTOR COIL INSULATION

1. Measure the resistance between the injector pin 01 and the injector body. 2. Measure the resistance between the injector pin 02 and the injector body.

- **Is either resistance less than 10,000 ohms?**

-> Yes
INSTALL a new injector.
Fuel Injectors (18.10.02) CLEAR the DTC. TEST the system for normal operation.

-> No
GO to Pinpoint Test G206886t3.

G206886t3 : CHECK THE INJECTOR SUPPLY VOLTAGE

1. Reconnect the battery negative terminal. 2. Turn the ignition switch to the **ON** position. 3. Disconnect the relevant injector harness electrical connector (IL03 to IL08). 4. Measure the voltage between the relevant injector harness electrical connector (IL03 to IL08) pin 02 and GROUND.

- **Is the voltage less than 10 Volts?**

-> Yes
REPAIR the circuit between the relevant injector harness electrical connector (IL03 to IL08) pin 02

and battery. This circuit includes the front power distribution box, fuse 13, and the EMS relay. For additional information, refer to the wiring diagrams. CLEAR the DTC. TEST the system for normal operation.

-> No
GO to Pinpoint Test G206886t4.

G206886t4 : CHECK THE INJECTOR GROUND CIRCUIT

1. Turn the ignition switch to the **OFF** position. 2. Disconnect the battery negative terminal. 3. Disconnect the ECM electrical connector PI01. 4. Measure the resistance between the relevant injector harness electrical connector (IL03 to IL08) pin 01 and PI01 pins as follows:

- Injector Cyl 1 pin 01 (BG) and PI01, pin 115 (BG).
- Injector Cyl 2 pin 01 (BR) and PI01, pin 120 (BR).
- Injector Cyl 3 pin 01 (BK) and PI01, pin 114 (BK).
- Injector Cyl 4 pin 01 (BO) and PI01, pin 119 (BO).
- Injector Cyl 5 pin 01 (BG) and PI01, pin 113 (BG).
- Injector Cyl 6 pin 01 (U) and PI01, pin 118 (U).

- **Is the resistance greater than 5 ohms?**

-> Yes
REPAIR the high resistance circuit. For additional information, refer to the wiring diagrams. CLEAR the DTC. TEST the system for normal operation.

-> No
GO to Pinpoint Test G206886t5.

G206886t5 : CHECK THE INJECTOR GROUND CIRCUIT FOR SHORT CIRCUIT TO BATTERY

1. Reconnect the battery negative terminal. 2. Turn the ignition switch to the **ON** position. 3. Measure the voltage between the relevant injector harness electrical connector (IL03 to IL08) pin 01 and GROUND.

- **Is the voltage greater than 3 volts?**

-> Yes
REPAIR the short circuit. For additional information, refer to the wiring diagrams. CLEAR the DTC. TEST the system for normal operation.

-> No
GO to Pinpoint Test G206886t6.

www.JagDocs.com

G206886t6 : CHECK THE INJECTOR GROUND CIRCUIT FOR SHORT CIRCUIT TO GROUND

1. Measure the resistance between the relevant injector harness electrical connector (IL03 to IL08) pin 01 and GROUND.

- **Is the resistance less than 10,000 ohms?**

-> Yes
REPAIR the short circuit. For additional information, refer to the wiring diagrams. CLEAR the DTC. TEST the system for normal operation.

-> No
Contact dealer technical support for advice on possible ECM failure.

PINPOINT TEST G206886p2 : DTC P0190, P0192, P0193; FUEL RAIL PRESSURE (FRP) SENSOR

G206886t7 : CHECK THE FRP SENSOR SIGNAL CIRCUIT FOR HIGH RESISTANCE

1. Turn the ignition switch to the **OFF** position. 2. Disconnect the battery negative terminal. 3. Disconnect the FRP sensor electrical connector, IL12. 4. Measure the resistance between IL12 pin 03 (U) and PI01 pin 73 (U).

- **Is the resistance greater than 5 ohms?**

-> Yes
REPAIR the high resistance circuit. For additional information, refer to the wiring diagrams. CLEAR the DTC. TEST the system for normal operation.

-> No
GO to Pinpoint Test G206886t8.

G206886t8 : CHECK THE FRP SENSOR SIGNAL CIRCUIT FOR SHORT TO HIGH VOLTAGE

1. Reconnect the battery negative terminal. 2. Turn the ignition switch to the **ON** position. 3. Measure the voltage between IL12 pin 03 (U) and GROUND.

- **Is the voltage greater than 3 volts?**

-> Yes
REPAIR the short circuit. For additional information, refer to the wiring diagrams. CLEAR the DTC.

TEST the system for normal operation.

-> No
GO to Pinpoint Test G206886t9.

G206886t9 : CHECK THE FRP SENSOR SIGNAL CIRCUIT FOR SHORT TO GROUND

1. Turn the ignition switch to the **OFF** position. 2. Measure the resistance between the FRP sensor electrical connector IL12 pin 03 (U) and GROUND.

- **Is the resistance less than 10,000 ohms?**

-> Yes
REPAIR the short circuit. For additional information, refer to the wiring diagrams. CLEAR the DTC. TEST the system for normal operation.

-> No
Recheck the DTCs. Check the sensor supply and ground circuits. <<303-14>>

www.JagDocs.com

Fuel Charging and Controls - VIN Range: G45704->G99999

Overview

There are changes to the engine management system (EMS) for 2006 my, the most obvious of which will be the change to 7-digit diagnostic trouble codes (DTCs) from the familiar 5-digit.

Refer to the DTC index in this section for guidance on how to use these codes with the Jaguar approved diagnostic system or a scan tool.

Inspection and Verification

1 . Verify the customer concern.

2 . Visually inspect for obvious signs of mechanical or electrical damage.

Mechanical	Electrical
• Fuel leaks • Damaged fuel lines • Damaged push connect fittings • Fuel level • Fuel contamination/grade/quality • Throttle body • Damaged fuel tank filler pipe cap • Damaged fuel tank filler pipe	• Fuses • Inertia switch • Loose or corroded electrical connectors • Harnesses • Sensor(s) • Engine control module (ECM)

3 . If an obvious cause for an observed or reported concern is found, correct the cause (if possible) before proceeding to the next step.

4 . If the cause is not visually evident use the Jaguar approved diagnostic system or a scan tool to retrieve the fault codes before proceeding to the diagnostic trouble code (DTC) index.

Symptom Chart

Symptom	Possible source	Action
Engine cranks, but does not fire	• Engine breather system disconnected/restricted • Ignition system • Fuel system • Harness • Crankshaft position (CKP) sensor • ECM fault	Check the engine breather system, Engine Emission Control - VIN Range: G45704->G99999 For ignition system tests, Engine Ignition - VIN Range: G45704->G99999 Check the fuel pressure, Fuel Tank and Lines - 3.0L/3.5L/4.2L,

		VIN Range: G45704->G99999 For CKP tests, Electronic Engine Controls - VIN Range: G45704->G99999 Refer to the warranty policy and procedures manual if an ECM is suspect.
Engine cranks and fires, but will not start	• Evaporative emissions purge valve • Fuel pump • Spark plugs • HT short circuit to ground (tracking) check rubber boots for cracks/damage • Ignition coil failure(s) • Harness	For purge valve tests, Evaporative Emissions - VIN Range: G45704->G99999 Check the fuel pressure, Fuel Tank and Lines - 3.0L/3.5L/4.2L, VIN Range: G45704->G99999 For ignition system tests, Engine Ignition - VIN Range: G45704->G99999
Difficult to start cold	• Check coolant anti-freeze content • Battery • CKP sensor • Exhaust gas recirculation (EGR) valve stuck open • Fuel pump • Purge valve	Check the engine coolant level and condition. For battery information, Battery For CKP sensor tests, Electronic Engine Controls - VIN Range: G45704->G99999 For EGR system information, Engine Emission Control - VIN Range: G45704->G99999 Check the fuel pressure, Fuel Tank and Lines - 3.0L/3.5L/4.2L, VIN Range: G45704->G99999 For purge valve tests, Evaporative Emissions - VIN Range: G45704->G99999
Difficult to start hot	• Injector leak • Engine fuel temperature (EFT) sensor • Intake air temperature (IAT) sensor • Mass air flow (MAF) sensor • Purge valve • Fuel pump • Ignition system • EGR valve stuck open	For fuel injector information, Fuel Injectors (18.10.02) For EFT, IAT and MAF sensor tests, Electronic Engine Controls - VIN Range: G45704->G99999 For purge valve tests, Evaporative Emissions - VIN Range: G45704->G99999 Check the fuel pressure, Fuel Tank and Lines - 3.0L/3.5L/4.2L, VIN Range: G45704->G99999 For ignition system tests, Engine Ignition - VIN Range:

www.JagDocs.com

		G45704->G99999 For EGR system information, Engine Emission Control - VIN Range: G45704->G99999
Difficult to start after hot soak (vehicle standing after engine has reached operating temperature)	• Injector leak • EFT sensor • IAT sensor • MAF sensor • Purge valve • Fuel pump • Ignition system • EGR valve stuck open	For fuel injector information, Fuel Charging and Controls - VIN Range: G45704->G99999 For EFT, IAT and MAF sensor tests, Electronic Engine Controls - VIN Range: G45704->G99999 For purge valve tests, Evaporative Emissions - VIN Range: G45704->G99999 Check the fuel pressure, Fuel Tank and Lines - 3.0L/3.5L/4.2L, VIN Range: G45704->G99999 For ignition system tests, Engine Ignition - VIN Range: G45704->G99999 For EGR system information, Engine Emission Control - VIN Range: G45704->G99999
Engine stalls soon after start	• Breather system disconnected/restricted • ECM relay • Harness • MAF sensor • Fuel rail pressure (FRP) sensor • Ignition system • Air filter restricted • Air leakage • Fuel lines	For breather system information, Engine Emission Control - VIN Range: G45704->G99999 For ECM relay, MAFand FRP sensor tests, Electronic Engine Controls - VIN Range: G45704->G99999 For ignition system tests, Engine Ignition - VIN Range: G45704->G99999 For air filter and intake system information, Intake Air Distribution and Filtering - VIN Range: G45704->G99999 For fuel line information, Fuel Tank and Lines - 3.0L/3.5L/4.2L, VIN Range: G45704->G99999
Engine hesitates/poor acceleration	• Fuel pump • Fuel pressure • Fuel lines • Injector leak • Air leakage	Check the fuel pressure, check the fuel lines, Fuel Tank and Lines - 3.0L/3.5L/4.2L, VIN Range: G45704->G99999 For injector information,

	• Throttle position (TP) sensors • Accelerator pedal position (APP) sensor • Throttle motor • Restricted pedal travel (carpet, etc) • Ignition system • EGR valve stuck open • HO2 sensors • Transmission malfunction	Fuel Injectors (18.10.02) For intake system information, Intake Air Distribution and Filtering - VIN Range: G45704->G99999 For TP, APP sensor and throttle motor tests, Electronic Engine Controls - VIN Range: G45704->G99999 Check the accelerator pedal travel. For ignition system tests, Engine Ignition - VIN Range: G45704->G99999 For EGR system information, Engine Emission Control - VIN Range: G45704->G99999 Check for DTCs indicating a faulty HO2 sensor. Refer to the DTC index. For transmission information,
Engine backfires	• Fuel pump • Fuel lines • Air leakage • MAF sensor • APP sensor • HO2 sensors • Ignition system • Sticking variable camshaft timing (VCT) hub	Check the fuel pressure, check the fuel lines, Fuel Tank and Lines - 3.0L/3.5L/4.2L, VIN Range: G45704->G99999 For intake system, Intake Air Distribution and Filtering - VIN Range: G45704->G99999 For MAF and APP sensor tests, Electronic Engine Controls - VIN Range: G45704->G99999 Check for DTCs indicating a faulty HO2 sensor. Refer to the DTC index. For ignition system tests, Engine Ignition - VIN Range: G45704->G99999 Check DTCs for VCT range/performance fault. For VCT information, Engine
Engine surges	• Fuel pump • Fuel lines • MAF sensor • Harness • TP sensors • Throttle motor	Check the fuel pressure, check the fuel lines, Fuel Tank and Lines - 3.0L/3.5L/4.2L, VIN Range: G45704->G99999 For MAF, TP sensor, and throttle motor

www.JagDocs.com

	• Ignition system	tests, Electronic Engine Controls - VIN Range: G45704->G99999 For ignition system tests, Engine Ignition - VIN Range: G45704->G99999
Engine detonates/knocks	• Knock sensor (KS) circuit malfunction • FRP sensor • MAF sensor • HO2 sensors • Fuel pump • Fuel lines • Air leakage • Sticking VCT hub • BARO sensor malfunction (internal ECM fault)	For KS, FRP, MAF and HO2 sensor tests, Electronic Engine Controls - VIN Range: G45704->G99999 Check the fuel pressure, check the fuel lines, Fuel Tank and Lines - 3.0L/3.5L/4.2L, VIN Range: G45704->G99999 For intake system information, Intake Air Distribution and Filtering - VIN Range: G45704->G99999 Check DTCs for VCT range/performance fault. For VCT information, Engine Refer to the warranty policy and procedures manual if an ECM is suspect.
No throttle response	• APP sensor malfunction • TP sensors • Throttle motor	For APP, TP sensor and throttle motor tests, Electronic Engine Controls - VIN Range: G45704->G99999
Poor throttle response	• APP sensor malfunction • TP sensors • ECT sensor • MAF sensor • Transmission malfunction • Traction control event • Air leakage • Breather system disconnected/restricted	For APP, TP, ECT and MAF sensor tests, Electronic Engine Controls - VIN Range: G45704->G99999 For transmission information, For intake system, Intake Air Distribution and Filtering - VIN Range: G45704->G99999 For breather system information, Engine Emission Control - VIN Range: G45704->G99999

Diagnostic trouble code (DTC) index

NOTE:

Generic scan tools may not read the codes listed, or may read only 5-digit codes. Match the 5 digits from the scan tool to the first 5 digits of the 7-digit code listed to identify the fault (the last 2 digits give extra information read by the manufacturer-approved diagnostic system).

NOTE:

For a full list of DTCs,
Electronic Engine Controls - VIN Range: G45704->G99999

DTC	Description	Possible Causes	Action
P008700	Fuel rail/system pressure - too low	• FRP sensor disconnected • FRP sensor to ECM sensing circuit: open circuit or short circuit to ground • FRP sensor supply circuit: high resistance • FRP sensor failure • Fuel pump failure • Fuel line leak • Restricted fuel line	For FRP sensor circuit tests, Electronic Engine Controls - VIN Range: G45704->G99999 For fuel pump circuit and fuel line tests, Fuel Tank and Lines - 3.0L/3.5L/4.2L, VIN Range: G45704->G99999
P008800	Fuel rail/system pressure - too high	• FRP sensor to ECM wiring (supply/sense): short circuit to each other • FRP sensor to ECM sense circuit: short circuit to high voltage • FRP sensor ground circuit: high resistance • FRP sensor failure • Restricted fuel line • Fuel pump short circuit to battery	For FRP sensor tests, Electronic Engine Controls - VIN Range: G45704->G99999 For fuel pump circuit and fuel line tests, Fuel Tank and Lines - 3.0L/3.5L/4.2L, VIN Range: G45704->G99999
P017100	System too lean (right hand bank)	• Air intake leak between MAF sensor and cylinder head • Fuel filter/system restriction • Low fuel pressure • Fuel injector restriction • MAF sensor fault (low intake air flow) • Exhaust leak (before catalyst) • Evaporative emission system fault	For intake system information, Intake Air Distribution and Filtering - VIN Range: G45704->G99999 Check the fuel pressure, check the fuel lines, Fuel Tank and Lines - 3.0L/3.5L/4.2L, VIN Range: G45704->G99999 For fuel

www.JagDocs.com

			injector information, Fuel Injectors (18.10.02) For MAF sensor circuit tests, Electronic Engine Controls - VIN Range: G45704->G99999 Check the exhaust system (before catalyst) for condition and security, For evaporative emission system tests, Evaporative Emissions - VIN Range: G45704->G99999
P017200	System too rich (right hand bank)	• Restricted air filter • High fuel pressure • Leaking fuel injector(s) • Oil contaminated with fuel (too many cold starts with vehicle subsequently not getting hot enough for long enough) • MAF sensor fault (high intake air flow) • Evaporative emission system fault	For intake system information, Intake Air Distribution and Filtering - VIN Range: G45704->G99999 Check the fuel pressure, Fuel Tank and Lines - 3.0L/3.5L/4.2L, VIN Range: G45704->G99999 For fuel injector information, Fuel Injectors (18.10.02) Check the oil condition, if contamination is present, renew the engine oil and filter. For MAF sensor circuit tests, Electronic Engine Controls - VIN Range: G45704->G99999 For evaporative emission system tests, Evaporative Emissions - VIN Range: G45704->G99999
P017400	System too lean (left hand bank)	• Air intake leak between MAF sensor and cylinder head • Fuel filter/system restriction • Low fuel pressure • Fuel injector restriction	For intake system information, Intake Air Distribution and Filtering - VIN Range: G45704->G99999 Check

		• MAF sensor fault (low intake air flow) • Exhaust leak (before catalyst) • Evaporative emission system fault	the fuel pressure, check the fuel lines, Fuel Tank and Lines - 3.0L/3.5L/4.2L, VIN Range: G45704->G99999 For fuel injector information, Fuel Injectors (18.10.02) For MAF sensor circuit tests, Electronic Engine Controls - VIN Range: G45704->G99999 Check the exhaust system (before catalyst) for condition and security, For evaporative emission system tests, Evaporative Emissions - VIN Range: G45704->G99999
P017500	System too rich (left hand bank)	• Restricted air filter • High fuel pressure • Leaking fuel injector(s) • Oil contaminated with fuel (too many cold starts with vehicle subsequently not getting hot enough for long enough) • MAF sensor fault (high intake air flow) • Evaporative emission system fault	For intake system information, Intake Air Distribution and Filtering - VIN Range: G45704->G99999 Check the fuel pressure, Fuel Tank and Lines - 3.0L/3.5L/4.2L, VIN Range: G45704->G99999 For fuel injector information, Fuel Injectors (18.10.02) Check the oil condition, if contamination is present, renew the engine oil and filter. For MAF sensor circuit tests, Electronic Engine Controls - VIN Range: G45704->G99999 For evaporative emission system tests, Evaporative Emissions - VIN Range: G45704->G99999

www.JagDocs.com

P020100	Cylinder 1 injector circuit/open	• Injector disconnected • Injector harness wiring: short circuit • Injector failure	For injector circuit tests, GO to Pinpoint Test G531324p1.
P020200	Cylinder 2 injector circuit/open	• Injector disconnected • Injector harness wiring: short circuit • Injector failure	For injector circuit tests, GO to Pinpoint Test G531324p1.
P020300	Cylinder 3 injector circuit/open	• Injector disconnected • Injector harness wiring: short circuit • Injector failure	For injector circuit tests, GO to Pinpoint Test G531324p1.
P020400	Cylinder 4 injector circuit/open	• Injector disconnected • Injector harness wiring: short circuit • Injector failure	For injector circuit tests, GO to Pinpoint Test G531324p1.
P020500	Cylinder 5 injector circuit/open	• Injector disconnected • Injector harness wiring: short circuit • Injector failure	For injector circuit tests, GO to Pinpoint Test G531324p1.
P020600	Cylinder 6 injector circuit/open	• Injector disconnected • Injector harness wiring: short circuit • Injector failure	For injector circuit tests, GO to Pinpoint Test G531324p1.
P131500	Persistent misfire	• ECM to ignition coil primary circuit fault (cylinder misfire detected DTC also flagged) • Fuel delivery pressure low • Fuel injector circuit fault(s) (injector DTCs also flagged) • Ignition coil failure • Spark plug failure/fouled/incorrect gap • Cylinder compression low	For ignition coil circuit tests, Engine Ignition - VIN Range: G45704->G99999 Check the fuel pressure, Fuel Tank and Lines - 3.0L/3.5L/4.2L, VIN Range: G45704->G99999 For injector circuit tests, GO to Pinpoint Test G531324p1. For ignition coil circuit and spark plug tests, Engine Ignition - VIN Range: G45704->G99999 Check the cylinder compressions.

			Engine - 3.0L/3.5L/4.2L
P131600	Injector driver misfire - emissions damage	• Injector driver module codes detected	Check for associated DTCs and refer to the DTC index.
P210129	Throttle range performance - sub-processor	• Jammed throttle blade, gearing or motor	Check for a message in the instrument cluster. Replace the throttle body. Throttle Body - VIN Range: G45704->G99999 (19.70.04)
P210164	Throttle range performance	• Jammed throttle blade, gearing or motor	Check for a message in the instrument cluster. Replace the throttle body. Throttle Body - VIN Range: G45704->G99999 (19.70.04)
P210329	Throttle actuator motor control circuit high	• Control circuit: short circuit to power • ECM fault	For throttle actuator motor circuit tests, GO to Pinpoint Test G531324p3. Refer to the warranty policy and procedures manual if an ECM is suspect.
P210364	Throttle actuator motor control circuit high - signal plausibility failure	• Control circuit: short circuit to power • ECM fault	For throttle actuator motor circuit tests, GO to Pinpoint Test G531324p3. Refer to the warranty policy and procedures manual if an ECM is suspect.
P210500	Throttle actuator control system - forced engine shutdown	• Throttle MIL request due to fuel cut	Check for DTCs indicating the reason for the fuel cut. Follow the action indicated for those DTCs.
P210629	Throttle actuator control system - forced limited power	• Signal invalid	Check for a message in the instrument cluster. Replace the throttle body. Throttle Body - VIN Range: G45704->G99999

www.JagDocs.com

			(19.70.04)
P210664	Throttle actuator control system - forced limited power	• Signal plausibility failure	Check for a message in the instrument cluster. Replace the throttle body. Throttle Body - VIN Range: G45704->G99999 (19.70.04)
P211800	Throttle actuator motor control current range/performance	• Control circuit: short circuit to power, short circuit to ground, high resistance • ECM fault	For throttle actuator motor circuit tests, GO to Pinpoint Test G531324p3. Refer to the warranty policy and procedures manual if an ECM is suspect.
P211900	Throttle actuator control throttle body range/performance	• Throttle spring faulty	Check for a message in the instrument cluster. Replace the throttle body. Throttle Body - VIN Range: G45704->G99999 (19.70.04)

Pinpoint Tests

CAUTION: When probing connectors to take measurements in the course of the pinpoint tests, use the adaptor kit, part number 3548-1358-00.

NOTE:

When performing electrical voltage or resistance tests, always use a digital multimeter (DMM) accurate to 3 decimal places, and with an up-to-date calibration certificate. When testing resistance, always take the resistance of the DMM leads into account.

NOTE:

Check and rectify basic faults before beginning diagnostic routines involving pinpoint tests.

PINPOINT TEST G531324p1 : FUEL INJECTORS

G531324t1 : CHECK THE INJECTOR COIL RESISTANCE

1. Disconnect the relevant injector electrical connector:

Injector connector
Cylinder 1, IL03
Cylinder 2, IL06
Cylinder 3, IL04
Cylinder 4, IL07
Cylinder 5, IL05
Cylinder 6, IL08

2. Measure the resistance between the injector pins.

- **Is the resistance between 12 and 16 ohms?**

-> Yes
GO to Pinpoint Test G531324t2.

-> No
INSTALL a new injector.
Fuel Injectors (18.10.02) CLEAR the DTC and test the system for normal operation.

G531324t2 : CHECK THE INJECTOR COIL INSULATION

1. Measure the resistance between:

Injector, component side	Injector body
Pin 01	Injector body
Pin 02	Injector body

- **Is either resistance less than 10,000 ohms?**

www.JagDocs.com

-> Yes
INSTALL a new injector.
Fuel Injectors (18.10.02) CLEAR the DTC and test the system for normal operation.

-> No
GO to Pinpoint Test G531324t3.

G531324t3 : CHECK THE INJECTOR SUPPLY VOLTAGE

1. Key on, engine off. 2. Make sure the EMS relay is energized. 3. Measure the voltage between:

Injector connector, harness side	Battery
Pin 02	Negative terminal

- **Is the voltage less than 10 Volts?**

-> Yes
REPAIR the circuit between the relevant injector harness electrical connector pin 02 and battery. This circuit includes fuse 13 of the front power distribution box and the EMS relay. For additional information, refer to the wiring diagrams. CLEAR the DTC and test the system for normal operation.

-> No
GO to Pinpoint Test G531324t4.

G531324t4 : CHECK THE INJECTOR CONTROL CIRCUIT FOR SHORT CIRCUIT TO GROUND

1. Key off. 2. Measure the resistance between:

Injector connector, harness side	Battery
Pin 01	Negative terminal

- **Is the resistance less than 10,000 ohms?**

-> Yes
REPAIR the short circuit. For additional information, refer to the wiring diagrams. CLEAR the DTC and test the system for normal operation.

-> No

GO to Pinpoint Test G531324t5.

G531324t5 : CHECK THE INJECTOR CONTROL CIRCUIT FOR SHORT CIRCUIT TO POWER

1. Measure the resistance between:

Injector connector, harness side	Battery
Pin 01	Positive terminal

- **Is the resistance less than 10,000 ohms?**

-> Yes
REPAIR the short circuit. For additional information, refer to the wiring diagrams. CLEAR the DTC and test the system for normal operation.

-> No
GO to Pinpoint Test G531324t6.

G531324t6 : CHECK THE INJECTOR CONTROL CIRCUIT FOR HIGH RESISTANCE

1. Disconnect the ECM electrical connector PI300. 2. Measure the resistance between:

Cylinder 1 injector connector, harness side	ECM connector PI300, harness side
IL03, pin 01	Pin 78

Cylinder 2 injector connector, harness side	ECM connector PI300, harness side
IL06, pin 01	Pin 79

Cylinder 3 injector connector, harness side	ECM connector PI300, harness side
IL04, pin 01	Pin 80

www.JagDocs.com

Cylinder 4 injector connector, harness side	ECM connector PI300, harness side
IL07, pin 01	Pin 81

Cylinder 5 injector connector, harness side	ECM connector PI300, harness side
IL05, pin 01	Pin 82

Cylinder 6 injector connector, harness side	ECM connector PI300, harness side
IL08, pin 01	Pin 83

- **Is the resistance greater than 5 ohms?**

-> Yes
REPAIR the high resistance circuit. For additional information, refer to the wiring diagrams. CLEAR the DTC and test the system for normal operation.

-> No
INSTALL a new injector.
Fuel Injectors (18.10.02) CLEAR the DTC and test the system for normal operation.

PINPOINT TEST G531324p3 : THROTTLE BODY

G531324t14 : CHECK THE THROTTLE ACTUATOR CONTROL MOTOR SUPPLY CIRCUIT FOR SHORT CIRCUIT TO GROUND

1. Disconnect the throttle body electrical connector, PI26. 2. Measure the resistance between:

Throttle body connector PI26, harness side	Battery
Pin 02	Negative terminal

- **Is the resistance less than 10,000 ohms?**

-> Yes
REPAIR the short circuit. For additional information, refer to the wiring diagrams. CLEAR the DTC and

test the system for normal operation.

-> No
GO to Pinpoint Test G531324t15.

G531324t15 : CHECK THE THROTTLE ACTUATOR CONTROL MOTOR SUPPLY CIRCUIT FOR SHORT CIRCUIT TO POWER

1. Measure the resistance between:

Throttle body connector PI26, harness side	Battery
Pin 02	Positive terminal

- **Is the resistance less than 10,000 ohms?**

-> Yes
REPAIR the short circuit. For additional information, refer to the wiring diagrams. CLEAR the DTC and test the system for normal operation.

-> No
GO to Pinpoint Test G531324t16.

G531324t16 : CHECK THE THROTTLE ACTUATOR CONTROL MOTOR NEGATIVE CIRCUIT FOR SHORT CIRCUIT TO GROUND

1. Measure the resistance between:

Throttle body connector PI26, harness side	Battery
Pin 01	Negative terminal

- **Is the resistance less than 10,000 ohms?**

-> Yes
REPAIR the short circuit. For additional information, refer to the wiring diagrams. CLEAR the DTC and test the system for normal operation.

-> No
GO to Pinpoint Test G531324t17.

www.JagDocs.com

G531324t17 : CHECK THE THROTTLE ACTUATOR CONTROL MOTOR NEGATIVE CIRCUIT FOR SHORT CIRCUIT TO POWER

1. Measure the resistance between:

Throttle body connector PI26, harness side	Battery
Pin 01	Positive terminal

- **Is the resistance less than 10,000 ohms?**

-> Yes
REPAIR the short circuit. For additional information, refer to the wiring diagrams. CLEAR the DTC and test the system for normal operation.

-> No
GO to Pinpoint Test G531324t18.

G531324t18 : CHECK THE THROTTLE ACTUATOR CONTROL MOTOR SUPPLY CIRCUIT FOR HIGH RESISTANCE

1. Disconnect the ECM electrical connector, PI300. 2. Measure the resistance between:

Throttle body connector PI26, harness side	ECM connector PI300, harness side
Pin 02	Pin 75

- **Is the resistance greater than 5 ohms?**

-> Yes
REPAIR the high resistance circuit. For additional information, refer to the wiring diagrams. CLEAR the DTC and test the system for normal operation.

-> No
GO to Pinpoint Test G531324t19.

G531324t19 : CHECK THE THROTTLE ACTUATOR CONTROL MOTOR NEGATIVE CIRCUIT FOR HIGH RESISTANCE

1. Measure the resistance between:

Throttle body connector PI26, harness side	ECM connector PI300, harness side

Pin 01	Pin 74

- **Is the resistance greater than 5 ohms?**

-> Yes
REPAIR the high resistance circuit. For additional information, refer to the wiring diagrams. CLEAR the DTC and test the system for normal operation.

-> No
INSTALL a new throttle body assembly.
Throttle Body - VIN Range: G45704->G99999 (19.70.04) CLEAR the DTC and test the system for normal operation.

www.JagDocs.com

Fuel Charging Wiring Harness (86.70.22)

Removal

1 . Remove the intake manifold. <<303-01A>>

2 . Disconnect the spring lock coupling. <<310-00>>

3 . Disconnect the fuel temperature sensor electrical connector.

- Detach the fuel charging wiring harness.

4 . Disconnect the fuel pressure sensor connector.

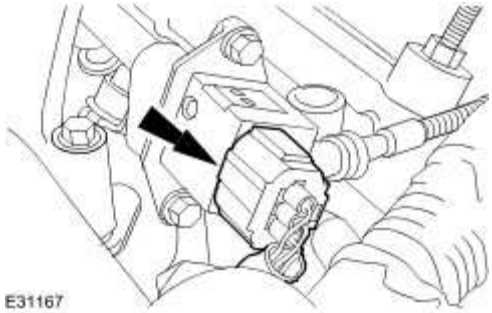

5 . Detach the fuel pressure sensor vacuum line.

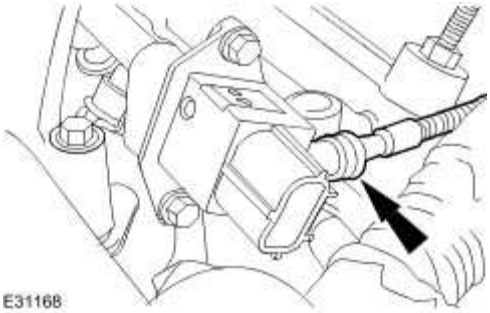

6 . Disconnect the fuel charging wiring harness.

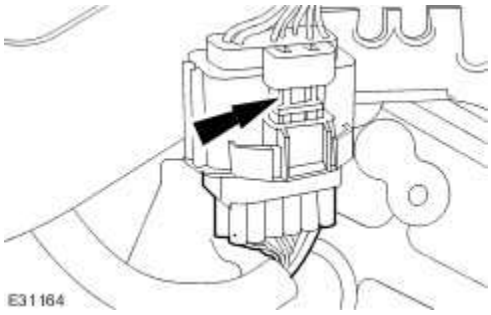

7 . **NOTE:**

Fuel may still be present in the fuel injection supply manifold.

Remove the fuel injection supply manifold, lower intake manifold and place to one side.

- Remove and discard the lower intake manifold O-ring seals.

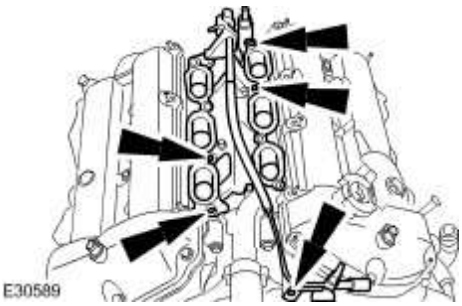

8 . Remove the lower intake manifolds.

- Remove and discard the fuel injector O-ring seals.

www.JagDocs.com

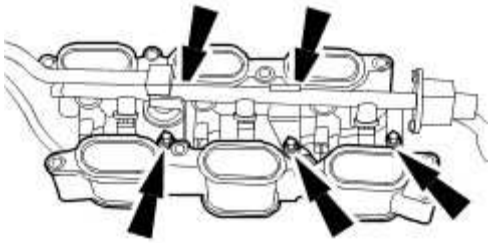

E31165

9 . Remove the fuel charging wiring harness.

- Disconnect the electrical connectors.

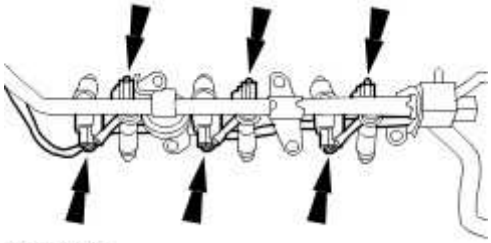

VUJ0003075

Installation

1 . **NOTE:**

Install new fuel injector O-ring seals.

NOTE:

Install new lower intake manifold O-ring seals.

To install, reverse the removal procedure.

- Tighten to 10 Nm.

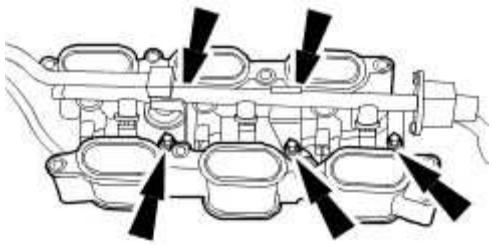

E31165

2 . Tighten to 10 Nm.

Tighten in the sequence shown.

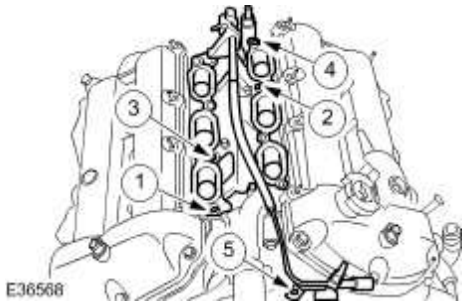

E36568

www.JagDocs.com

Fuel Injectors (18.10.02)

Removal

1 . Remove the fuel charging wiring harness.
For additional information, refer to

2 . Remove the fuel injectors.

- Remove the fuel injector locating clips.

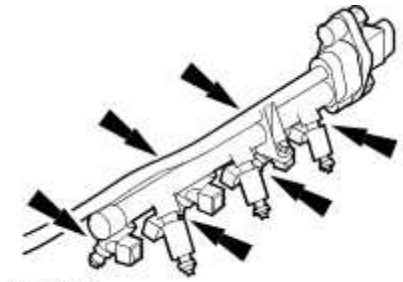

3 . Remove and discard the O-ring seals.

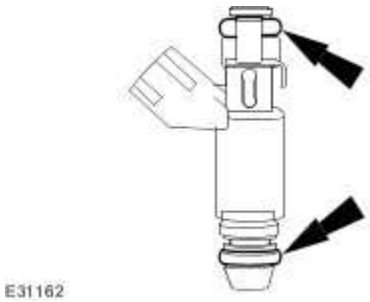

Installation

1 . **NOTE:**

Install new fuel injector O-ring seals.

To install, reverse the removal procedure.

- Lubricate the fuel injector O-ring seals with clean engine oil.

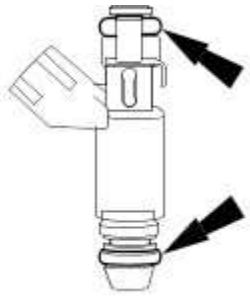

E31162

www.JagDocs.com

Fuel Injection Supply Manifold (19.60.13)

Removal

1 . Remove the fuel injectors.
For additional information, refer to Fuel Injectors (18.10.02)

2 . Remove the fuel pressure sensor.

- Remove and discard the O-ring seals.

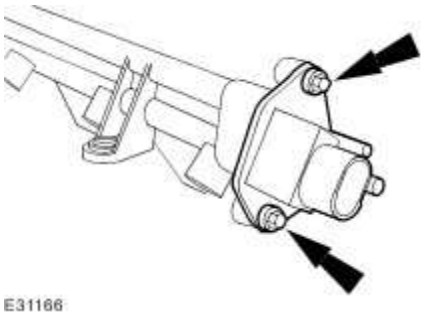

Installation

1 . **NOTE:**

Install new O-ring seals.

To install, reverse the removal procedure.

- Tighten to 10 Nm.

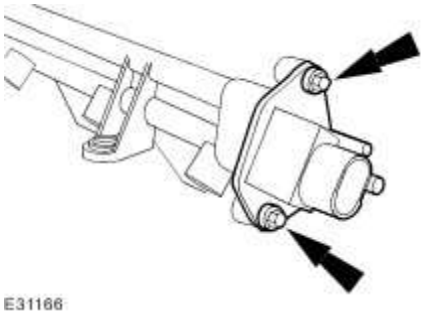

Throttle Body - VIN Range: G00442->G45703 (19.70.04)

Removal

1. **WARNING: When relieving cooling system pressure, cover the expansion tank cap with a thick cloth to prevent the possibility of scalding. Failure to follow these instructions may result in personal injury.**

   Remove the expansion tank cap to relieve the cooling system pressure.

2. **CAUTION: Do not attempt to clean the throttle body. The bore and the throttle plate has a special coating applied during manufacture which should not be removed.**

   Remove the air cleaner outlet tube. <<303-12A>>

3 . Disconnect the throttle motor electrical connector.

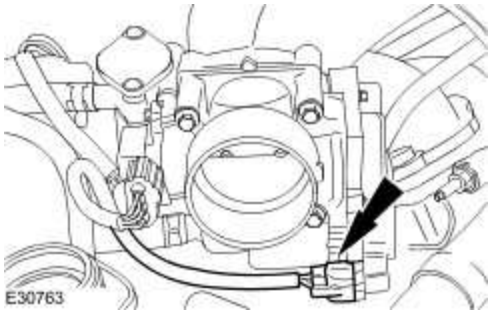

4 . Disconnect the throttle position (TP) sensor electrical connector.

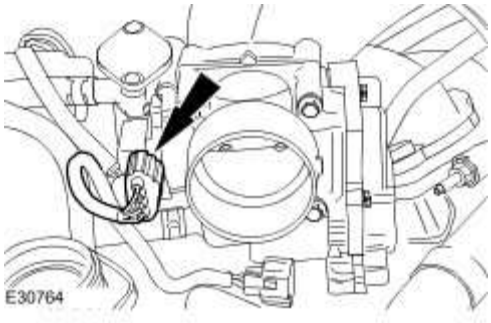

www.JagDocs.com

5 . **NOTE:**

Cap the coolant hoses to minimize coolant loss.

Detach the coolant hoses from the throttle body.

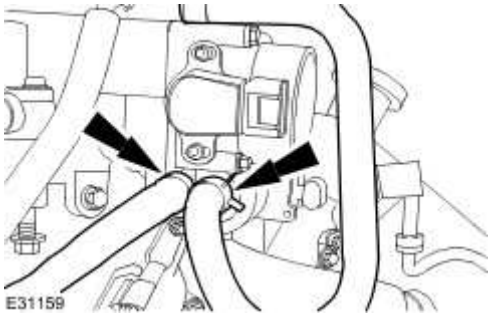

6 . Remove the throttle body.

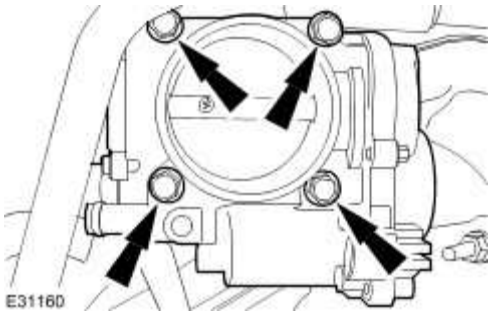

7 . Remove and discard the O-ring seal.

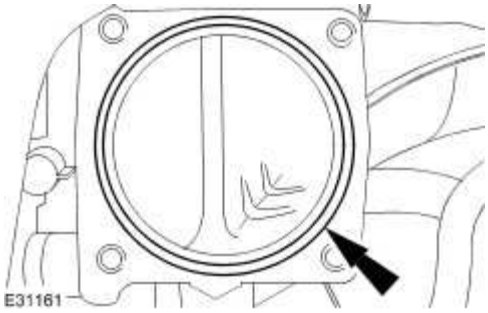

Installation

1 . **CAUTION: Do not attempt to clean the throttle body. The bore and the throttle**

plate has a special coating applied during manufacture which should not be removed.

To install, reverse the removal procedure.

- Install a new O-ring seal.

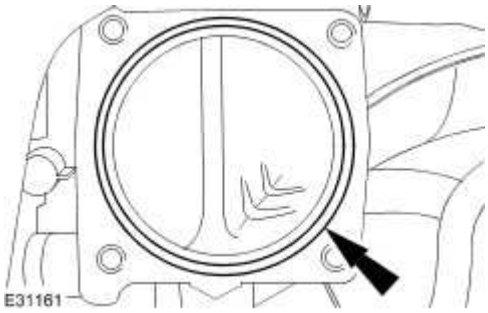

2 . Tighten to 10 Nm.

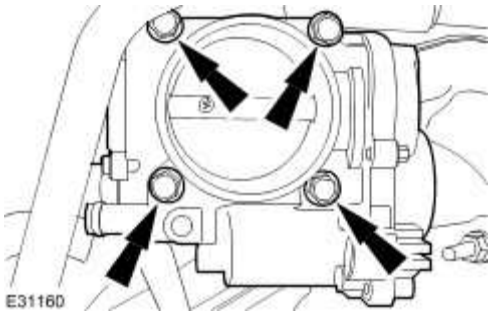

3 . Check and top up the cooling system as required.

www.JagDocs.com

Throttle Body - VIN Range: G45704->G99999 (19.70.04)

Removal

1. **WARNING: When relieving cooling system pressure, cover the expansion tank cap with a thick cloth to prevent the possibility of scalding. Failure to follow these instructions may result in personal injury.**

   Remove the expansion tank cap to relieve the cooling system pressure.

2. **CAUTION: Do not attempt to clean the throttle body. The bore and the throttle plate has a special coating applied during manufacture which should not be removed.**

   Remove the air cleaner outlet pipe.
   For additional information, refer to

3. Disconnect the throttle body electrical connector.

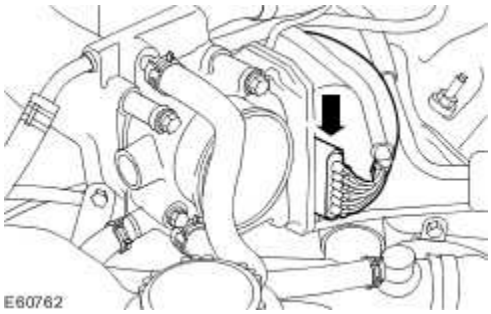

4. **NOTE:**

   Clamp the coolant hose to minimize coolant loss.

   Disconnect the coolant hose.

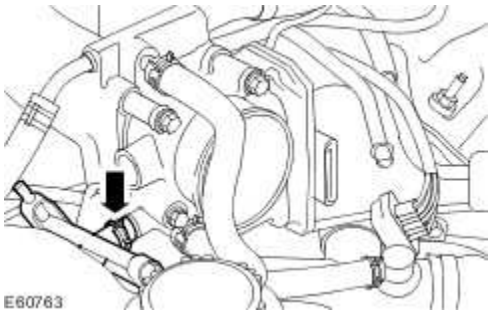

5 . **NOTE:**

Clamp the coolant hose to minimize coolant loss.

Disconnect the coolant hose.

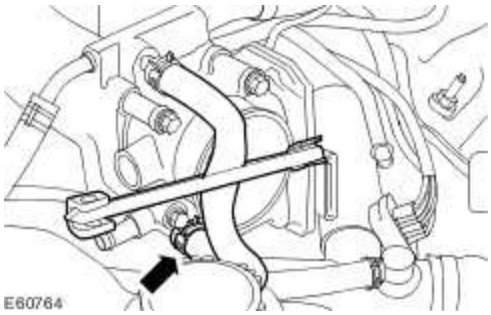

6 . Remove the throttle body.

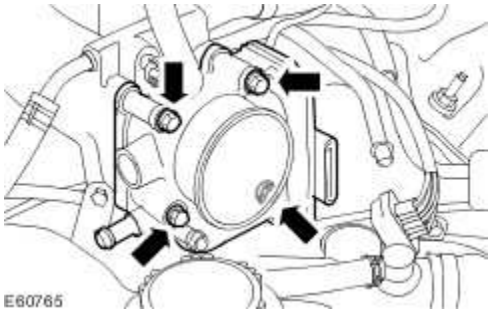

7 . Remove and discard the O-ring seal.

www.JagDocs.com

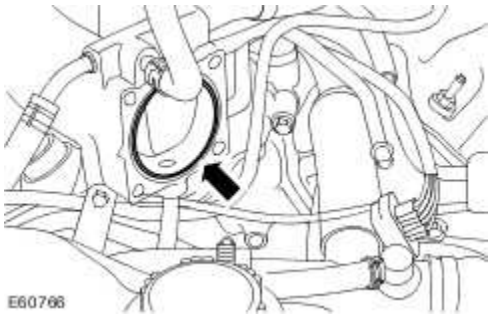

Installation

1. **CAUTION: Do not attempt to clean the throttle body. The bore and the throttle plate has a special coating applied during manufacture which should not be removed.**

To install, reverse the removal procedure.

- Install a new O-ring seal.

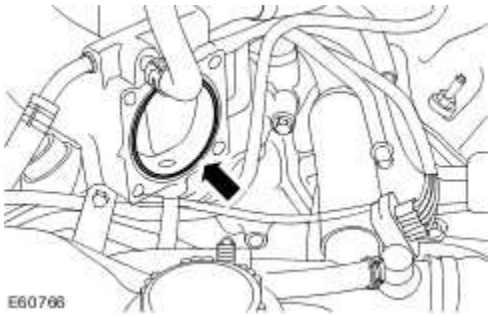

2 . Tighten to 10 Nm.

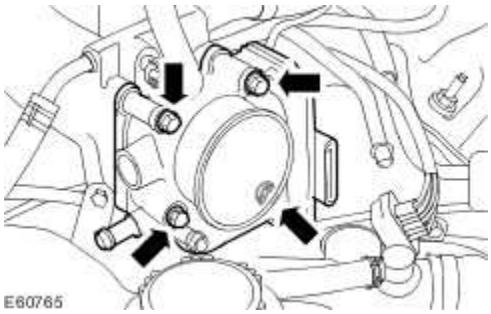

3 . Check and top up the cooling system as required.

Specifications

Torque Specifications

Description	Nm	lb-ft	lb-in
Fuel injection supply manifold vehicles with supercharger	7	-	62
Fuel injection supply manifold vehicles without supercharger	22	16	-
Fuel pressure sensor	5	-	44
Throttle body	10	-	89
Engine cover bracket	6	-	53

www.JagDocs.com

Fuel Charging and Controls

3.5L/4.2L Engines without Supercharger

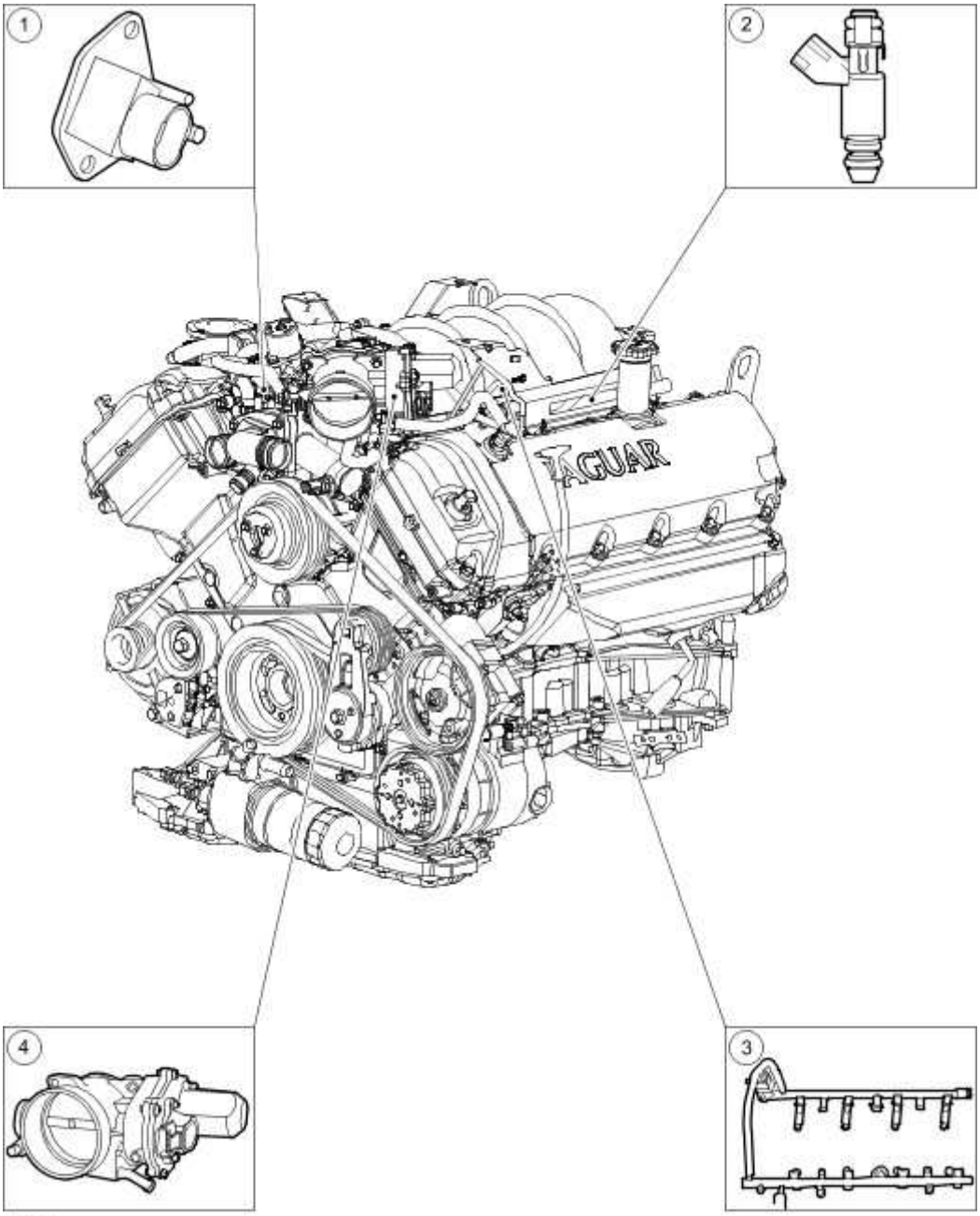

E31187

Item	Part Number	Description
1	—	Fuel pressure sensor

2	—	Fuel injector
3	—	Fuel injection supply manifold
4	—	Throttle body

4.2L Engines with Supercharger

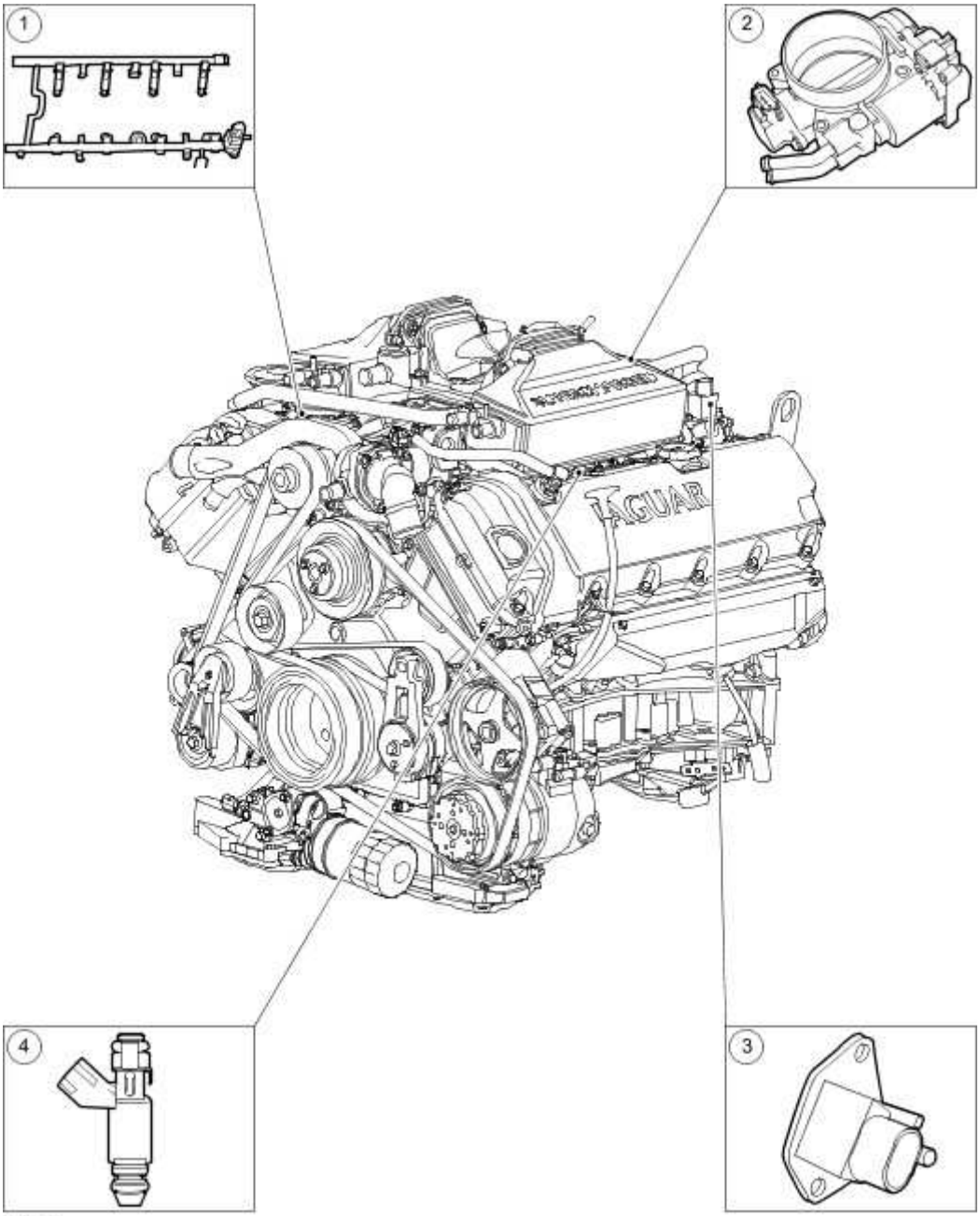

E31188

Item	Part Number	Description

www.JagDocs.com

1		Fuel injection supply manifold
2		Throttle body
3		Fuel pressure sensor
4		Fuel injector

The electronic returnless fuel system has the advantages of reduced fuel temperature and fuel tank vapor caused by constant fuel recirculation. The system delivers the correct amount of fuel to the engine under all conditions and at a constant pressure differential with respect to manifold absolute pressure.

Fuel is supplied at high pressure to the fuel injectors via a fuel injection supply manifold which incorporates fuel injectors, a fuel pressure sensor and a fuel temperature sensor. The engine control module (ECM) increases the fuel pressure to minimize fuel vapor formation to maintain fuel flow across the injectors.

The throttle body assembly is calibrated during assembly, no adjustments are required or permitted. The throttle motor is a 12 volt DC motor which, via movement of the throttle blade, controls the amount of air flowing into the engine.

Fuel Charging and Controls - VIN Range: G00442->G45703

Inspection and Verification

1 . Verify the customer concern.

2 . Visually inspect for obvious signs of mechanical or electrical damage.

Visual Inspection Chart

Mechanical	Electrical
Engine oil level	Fuses
Cooling system coolant level	Wiring harness
Fuel level	Electrical connector(s)
Fuel contamination/grade/quality	Sensor(s)
Throttle body	Engine control module (ECM)
Poly-vee belt	Transmission control module (TCM)

1 . Verify the following systems are working correctly:

Air intake system

Cooling system

Charging system

Ignition system

2 . If an obvious cause for an observed or reported concern is found, correct the cause (if possible) before proceeding to the next step.

3 . If the cause is not visually evident and the Jaguar approved diagnostic system is not available, use a fault code reader to retrieve the fault codes before proceeding to the diagnostic trouble code (DTC) index chart, or the symptom chart if no DTCs are set.

CAUTION: When probing connectors to take measurements in the course of the pinpoint

www.JagDocs.com

tests, use the adaptor kit, part number 3548-1358-00.

NOTE:

When performing electrical voltage or resistance tests, always use a digital multimeter (DMM) accurate to 3 decimal places, and with an up-to-date calibration certificate. When testing resistance, always take the resistance of the DMM leads into account.

NOTE:

Check and rectify basic faults before beginning diagnostic routines involving pinpoint tests.

Symptom	Possible source	Action
Engine cranks, but does not fire	Engine breather system disconnected/restricted Ignition system Fuel system Harness CKP sensor ECM fault	Check engine breather system, Engine Emission Control - VIN Range: G00442->G45703 For ignition system, Engine Ignition - VIN Range: G00442->G45703 Check fuel pressure, Fuel Tank and Lines - 3.0L/3.5L/4.2L, VIN Range: G00442->G45703 For CKP tests, Electronic Engine Controls - VIN Range: G00442->G45703 Contact dealer technical support for advice on possible ECM failure.
Engine cranks and fires, but will not start	Purge valve Fuel pump Engine coolant temperature (ECT) sensor Spark plugs HT short to ground (tracking) check rubber boots for cracks/damage Ignition coil failure(s) Harness	For evaporative emissions components, Evaporative Emissions - VIN Range: G00442->G45703 Check fuel pressure. Fuel Tank and Lines - 3.0L/3.5L/4.2L, VIN Range: G00442->G45703 For ECT sensor tests, Electronic Engine Controls - VIN Range: G00442->G45703 For ignition system Engine Ignition - VIN Range: G00442->G45703

Difficult to start cold	Check coolant anti-freeze content Battery CKP sensor EGR valve stuck open Fuel pump ECT sensor Purge valve	For battery information, Battery For CKP sensor tests, Electronic Engine Controls - VIN Range: G00442->G45703 For EGR system information, Engine Emission Control - VIN Range: G00442->G45703 Check fuel pressure. Fuel Tank and Lines - 3.0L/3.5L/4.2L, VIN Range: G00442->G45703 For ECT sensor tests, Electronic Engine Controls - VIN Range: G00442->G45703 For evaporative emissions components, Evaporative Emissions - VIN Range: G00442->G45703
Difficult to start hot	Injector leak Fuel temperature (FT) sensor IAT sensor MAF sensor Purge valve Fuel pump Ignition system ECT sensor EGR valve stuck open	For fuel injector information, Fuel Injectors (18.10.02) For FT sensor, IAT sensor and MAF sensor tests, Electronic Engine Controls - VIN Range: G00442->G45703 For evaporative emissions components, Evaporative Emissions - VIN Range: G00442->G45703 Check fuel pressure. Fuel Tank and Lines - 3.0L/3.5L/4.2L, VIN Range: G00442->G45703 For ignition system, Engine Ignition - VIN Range: G00442->G45703 For ECT sensor tests, Electronic Engine Controls - VIN Range: G00442->G45703 For EGR information, Engine Emission Control - VIN Range: G00442->G45703
Difficult to start after hot soak (vehicle standing after engine has reached operating temperature)	Injector leak FT sensor IAT sensor	For fuel injector information, Fuel Injectors (18.10.02) For FT sensor, IAT sensor and MAF sensor tests, Electronic Engine Controls - VIN Range: G00442->G45703 For evaporative emissions components,

www.JagDocs.com

	MAF sensor Purge valve Fuel pump Ignition system ECT sensor EGR valve stuck open	Evaporative Emissions - VIN Range: G00442->G45703 Check fuel pressure. Fuel Tank and Lines - 3.0L/3.5L/4.2L, VIN Range: G00442->G45703 For ignition system, Engine Ignition - VIN Range: G00442->G45703 For ECT sensor tests, Electronic Engine Controls - VIN Range: G00442->G45703 For EGR information, Engine Emission Control - VIN Range: G00442->G45703
Engine stalls soon after start	Breather system disconnected/restricted ECM relay Harness MAF sensor ECT sensor Ignition system Air filter restricted Fuel lines Fuel Rail Pressure (FRP) sensor Air leakage	For breather system, Engine Emission Control - VIN Range: G00442->G45703 For ECM relay, MAF sensor and ECT sensor tests, Electronic Engine Controls - VIN Range: G00442->G45703 For ignition system, Engine Ignition - VIN Range: G00442->G45703 For air filter information, Intake Air Distribution and Filtering - VIN Range: G00442->G45703 For fuel line information, Fuel Tank and Lines - 3.0L/3.5L/4.2L, VIN Range: G00442->G45703 For FRP sensor tests, GO to Pinpoint Test G290117p2. For intake system information, Intake Air Distribution and Filtering - VIN Range: G00442->G45703
Engine hesitates/poor acceleration	Fuel pump Injector leak Fuel pressure Fuel lines Air leakage Throttle sensors	Check fuel pressure. Fuel Tank and Lines - 3.0L/3.5L/4.2L, VIN Range: G00442->G45703 For FRP sensor tests, GO to Pinpoint Test G290117p2. For fuel line information, Fuel Tank and Lines - 3.0L/3.5L/4.2L, VIN Range: G00442->G45703 For intake system, Intake Air Distribution and Filtering - VIN Range: G00442->G45703 For

	Throttle motor Ignition system EGR system HO2 sensors Transmission malfunction Restricted pedal travel (carpet, etc) APP sensor	throttle position sensor and throttle motor tests, Electronic Engine Controls - VIN Range: G00442->G45703 For ignition system, Engine Ignition - VIN Range: G00442->G45703 For EGR system, Engine Emission Control - VIN Range: G00442->G45703 Check for DTCs relating to HO2 sensors. Refer to the DTC index for pinpoint tests. For transmission information, Check accelerator pedal travel. For APP sensor tests, Electronic Engine Controls - VIN Range: G00442->G45703
Engine backfires	Fuel pump Fuel lines Air leakage MAF sensor HO2 sensors Ignition system Sticking VCT hub APP sensor	Check fuel pressure. Fuel Tank and Lines - 3.0L/3.5L/4.2L, VIN Range: G00442->G45703 For fuel line information, Fuel Tank and Lines - 3.0L/3.5L/4.2L, VIN Range: G00442->G45703 For intake system, Intake Air Distribution and Filtering - VIN Range: G00442->G45703 For MAF sensor tests, Electronic Engine Controls - VIN Range: G00442->G45703 Check for DTCs relating to HO2 sensors. Refer to the DTC index for pinpoint tests. For ignition system, Engine Ignition - VIN Range: G00442->G45703 For VCT information, Engine For APP sensor tests, Electronic Engine Controls - VIN Range: G00442->G45703
Engine surges	Fuel pump Fuel lines MAF sensor	Check fuel pressure. Fuel Tank and Lines - 3.0L/3.5L/4.2L, VIN Range: G00442->G45703 For fuel line information, Fuel Tank and Lines - 3.0L/3.5L/4.2L, VIN Range: G00442->G45703 For MAF sensor, throttle sensor, and

www.JagDocs.com

	Harness Throttle sensors Throttle motor Ignition system	throttle motor relay tests, Electronic Engine Controls - VIN Range: G00442->G45703 For ignition system, Engine Ignition - VIN Range: G00442->G45703
Engine detonates/knocks	KS/circuit malfunction Fuel pump Fuel lines FRP sensor MAF sensor HO2 sensors Air leakage Sticking VCT hub BARO sensor malfunction	For KS circuit tests, Electronic Engine Controls - VIN Range: G00442->G45703 Check fuel pressure. For fuel line information, Fuel Tank and Lines - 3.0L/3.5L/4.2L, VIN Range: G00442->G45703 For FRP sensor tests, GO to Pinpoint Test G290117p2. . For MAF and HO2 sensor tests, Electronic Engine Controls - VIN Range: G00442->G45703 For intake system, Intake Air Distribution and Filtering - VIN Range: G00442->G45703 Check DTCs for VCT range/performance fault. For VCT information, Engine For BARO sensor, contact dealer technical support for advice on possible ECM failure.
No throttle response	APP sensor malfunction Throttle sensors Throttle motor	For APP sensor, throttle position sensor and throttle motor relay tests, Electronic Engine Controls - VIN Range: G00442->G45703
Poor throttle response	APP sensor malfunction Throttle sensors ECT sensor MAF sensor Transmission malfunction Traction control event Air leakage	For APP sensor, throttle position sensor, ECT sensor and MAF sensor tests, Electronic Engine Controls - VIN Range: G00442->G45703 For transmission information, For intake system, Intake Air Distribution and Filtering - VIN Range: G00442->G45703 For breather system information, Engine Emission Control - VIN Range: G00442->G45703

	Breather system disconnected/restricted	

Diagnostic Trouble Code (DTC) index

DTC	Condition	Possible Causes	Action
P0171	Right-hand cylinders combustion too lean	Air intake leak between mass air flow (MAF) sensor and cylinder head Fuel filter/system restriction Fuel injector restriction FRP sensor fault (low fuel pressure) Low fuel pump output HO2S/Catalyst monitor sensor harness wiring condition fault EFT sensor fault (low fuel temperature) Mass air flow (MAF) sensor fault (low intake air flow) Exhaust leak (before catalyst) ECM receiving incorrect signal from one or more of the following sensors: ECT, MAF*, IAT, FRP, fuel rail temperature, TP	For intake system, Intake Air Distribution and Filtering - VIN Range: G00442->G45703 For fuel injector information, Fuel Injectors (18.10.02) For fuel filter and pump, Fuel Tank and Lines - 3.0L/3.5L/4.2L, VIN Range: G00442->G45703 For FRP sensor tests, GO to Pinpoint Test G290117p2. For HO2S/catalyst monitor sensor tests, Electronic Engine Controls - VIN Range: G00442->G45703 For exhaust system, For sensor tests, Electronic Engine Controls - VIN Range: G00442->G45703 * If this DTC is flagged, pay particular attention to the MAF sensor.
P0172	Right-hand cylinders combustion too rich	Engine misfire Restricted air filter Leaking fuel injector(s) FRP sensor failure (high fuel pressure) Engine fuel temperature (EFT) sensor fault (high fuel	Check for "misfire detected" DTCs in this section. For intake system, Intake Air Distribution and Filtering - VIN Range: G00442->G45703 For fuel injector information, Fuel Injectors (18.10.02) For FRP sensor tests, GO to Pinpoint Test

www.JagDocs.com

		temperature) MAF sensor fault (high intake air flow) HO2S/Catalyst monitor sensor harness wiring condition fault ECM receiving incorrect signal from one or more of the following sensors; ECT, MAF, IAT, FRP, EFT	G290117p2. For other sensor tests, Electronic Engine Controls - VIN Range: G00442->G45703
P0174	Left-hand cylinders combustion too lean	Air intake leak between MAF sensor and cylinder head Fuel filter/system restriction Fuel injector restriction FRP sensor failure (low fuel pressure) Low fuel pump output HO2S/Catalyst monitor sensor harness wiring condition fault EFT sensor fault (low fuel temperature) Mass air flow (MAF) sensor fault (low intake air flow) Exhaust leak (before catalyst) ECM receiving incorrect signal from one or more of the following sensors; ECT, MAF*, IAT, FRP, EFT, TP	For intake system, Intake Air Distribution and Filtering - VIN Range: G00442->G45703 For fuel injector information, Fuel Injectors (18.10.02) For fuel filter, pump and lines, Fuel Tank and Lines - 3.0L/3.5L/4.2L, VIN Range: G00442->G45703 For HO2S/catalyst monitor sensor tests, Electronic Engine Controls - VIN Range: G00442->G45703 For exhaust system, For FRP sensor tests, GO to Pinpoint Test G290117p2. For other sensor tests, Electronic Engine Controls - VIN Range: G00442->G45703 * If this DTC is flagged, pay particular attention to the MAF sensor.
P0175	Left-hand cylinders combustion too rich	Engine misfire Restricted air filter	Check for "misfire detected" DTCs in this section. For intake system,

		Leaking fuel injector(s) FRP sensor failure (high fuel pressure) ECM receiving incorrect signal from one or more of the following sensors; ECT, MAF, IAT, FRP, EFT	Intake Air Distribution and Filtering - VIN Range: G00442->G45703 For fuel injectors, Fuel Injectors (18.10.02) For FRP sensor tests, GO to Pinpoint Test G290117p2. For other sensor tests, Electronic Engine Controls - VIN Range: G00442->G45703
P0191	Fuel rail pressure (FRP) sensor circuit range/performance	Fuel filter/system restriction Fuel system leak Incorrect fuel pump output FRP sensor to ECM sensing circuit; high resistance, open circuit, short circuit to high voltage FRP sensor to splice in sensor supply circuit; high resistance, open circuit FRP sensor to splice in sensor ground circuit; high resistance, open circuit, short circuit to ground, short circuit to high voltage FRP sensor failure	For fuel filter, pump and lines, Fuel Tank and Lines - 3.0L/3.5L/4.2L, VIN Range: G00442->G45703 For FRP sensor tests, GO to Pinpoint Test G290117p2.
P0192	Fuel rail pressure (FRP) sensor circuit low voltage (low pressure)	FRP sensor disconnected FRP sensor to ECM sensing circuit; open circuit or short circuit to ground FRP sensor to splice in sensor supply circuit; high resistance, open circuit FRP sensor failure	For FRP sensor tests, GO to Pinpoint Test G290117p2.
P0193	Fuel rail pressure (FRP) sensor circuit high voltage (high	FRP sensor to ECM wiring (supply/sense); short circuit	For FRP sensor tests, GO to Pinpoint Test

www.JagDocs.com

	pressure)	to each other FRP sensor to ECM sense circuit; short circuit to high voltage FRP sensor to splice in sensor ground circuit; open circuit FRP sensor failure	G290117p2.
P0201	Fuel injector circuit malfunction, Cyl 1	Injector disconnected Injector wiring open or short circuit Injector failure	For injector circuit tests for vehicles without supercharger, GO to Pinpoint Test G290117p1. For vehicles with supercharger, GO to Pinpoint Test G290117p3.
P0202	Fuel injector circuit malfunction, Cyl 3	Injector disconnected Injector wiring open or short circuit Injector failure	For injector circuit tests for vehicles without supercharger, GO to Pinpoint Test G290117p1. For vehicles with supercharger, GO to Pinpoint Test G290117p3.
P0203	Fuel injector circuit malfunction, Cyl 5	Injector disconnected Injector wiring open or short circuit Injector failure	For injector circuit tests for vehicles without supercharger, GO to Pinpoint Test G290117p1. For vehicles with supercharger, GO to Pinpoint Test G290117p3.
P0204	Fuel injector circuit malfunction, Cyl 7	Injector disconnected Injector wiring open or short circuit Injector failure	For injector circuit tests for vehicles without supercharger, GO to Pinpoint Test G290117p1. For vehicles with

			supercharger, GO to Pinpoint Test G290117p3.
P0205	Fuel injector circuit malfunction, Cyl 2	Injector disconnected Injector wiring open or short circuit Injector failure	For injector circuit tests for vehicles without supercharger, GO to Pinpoint Test G290117p1. For vehicles with supercharger, GO to Pinpoint Test G290117p3.
P0206	Fuel injector circuit malfunction, Cyl 4	Injector disconnected Injector wiring open or short circuit Injector failure	For injector circuit tests for vehicles without supercharger, GO to Pinpoint Test G290117p1. For vehicles with supercharger, GO to Pinpoint Test G290117p3.
P0207	Fuel injector circuit malfunction, Cyl 6	Injector disconnected Injector wiring open or short circuit Injector failure	For injector circuit tests for vehicles without supercharger, GO to Pinpoint Test G290117p1. For vehicles with supercharger, GO to Pinpoint Test G290117p3.
P0208	Fuel injector circuit malfunction, Cyl 8	Injector disconnected Injector wiring open or short circuit Injector failure	For injector circuit tests for vehicles without supercharger, GO to Pinpoint Test G290117p1. For vehicles with supercharger, GO to Pinpoint Test G290117p3.

www.JagDocs.com

P0300	Random misfire detected	ECM to ignition coil primary circuit fault (cylinder misfire detected DTC also flagged) Ignition coil failure Spark plug failure/fouled/incorrect gap Fuel injector circuit fault(s) (injector DTCs also flagged) Fuel delivery pressure high/low Fuel injectors restricted/leaking Fuel injectors continuously open Fuel contamination Worn camshaft/broken valve springs	For ignition system, Engine Ignition - VIN Range: G00442->G45703 For injector circuit tests for vehicles without supercharger, GO to Pinpoint Test G290117p1. For vehicles with supercharger, GO to Pinpoint Test G290117p3. Check fuel pressure, Fuel Tank and Lines - 3.0L/3.5L/4.2L, VIN Range: G00442->G45703 For fuel injector information, Fuel Injectors (18.10.02) For engine information, Engine
P0301	Misfire detected, cylinder 1	ECM to ignition coil primary circuit fault (cylinder misfire detected DTC also flagged) Ignition coil failure Spark plug failure/fouled/incorrect gap Fuel injector circuit fault(s) (injector DTCs also flagged) Fuel delivery pressure high/low Fuel injectors restricted/leaking Fuel injectors continuously open Fuel contamination Worn camshaft/broken valve springs	For ignition system, Engine Ignition - VIN Range: G00442->G45703 For injector circuit tests for vehicles without supercharger, GO to Pinpoint Test G290117p1. For vehicles with supercharger, GO to Pinpoint Test G290117p3. Check fuel pressure, Fuel Tank and Lines - 3.0L/3.5L/4.2L, VIN Range: G00442->G45703 For fuel injector information, Fuel Injectors (18.10.02) For engine information, Engine

P0302	Misfire detected, cylinder 2	ECM to ignition coil primary circuit fault (cylinder misfire detected DTC also flagged) Ignition coil failure Spark plug failure/fouled/incorrect gap Fuel injector circuit fault(s) (injector DTCs also flagged) Fuel delivery pressure high/low Fuel injectors restricted/leaking Fuel injectors continuously open Fuel contamination Worn camshaft/broken valve springs	For ignition system, Engine Ignition - VIN Range: G00442->G45703 For injector circuit tests for vehicles without supercharger, GO to Pinpoint Test G290117p1. For vehicles with supercharger, GO to Pinpoint Test G290117p3. Check fuel pressure, Fuel Tank and Lines - 3.0L/3.5L/4.2L, VIN Range: G00442->G45703 For fuel injector information, Fuel Injectors (18.10.02) For engine information, Engine
P0303	Misfire detected, cylinder 3	ECM to ignition coil primary circuit fault (cylinder misfire detected DTC also flagged) Ignition coil failure Spark plug failure/fouled/incorrect gap Fuel injector circuit fault(s) (injector DTCs also flagged) Fuel delivery pressure high/low Fuel injectors restricted/leaking Fuel injectors continuously open Fuel contamination Worn camshaft/broken valve springs	For ignition system, Engine Ignition - VIN Range: G00442->G45703 For injector circuit tests for vehicles without supercharger, GO to Pinpoint Test G290117p1. For vehicles with supercharger, GO to Pinpoint Test G290117p3. Check fuel pressure, Fuel Tank and Lines - 3.0L/3.5L/4.2L, VIN Range: G00442->G45703 For fuel injector information, Fuel Injectors (18.10.02) For engine information, Engine

www.JagDocs.com

P0304	Misfire detected, cylinder 4	ECM to ignition coil primary circuit fault (cylinder misfire detected DTC also flagged) Ignition coil failure Spark plug failure/fouled/incorrect gap Fuel injector circuit fault(s) (injector DTCs also flagged) Fuel delivery pressure high/low Fuel injectors restricted/leaking Fuel injectors continuously open Fuel contamination Worn camshaft/broken valve springs	For ignition system, Engine Ignition - VIN Range: G00442->G45703 For injector circuit tests for vehicles without supercharger, GO to Pinpoint Test G290117p1. For vehicles with supercharger, GO to Pinpoint Test G290117p3. Check fuel pressure, Fuel Tank and Lines - 3.0L/3.5L/4.2L, VIN Range: G00442->G45703 For fuel injector information, Fuel Injectors (18.10.02) For engine information, Engine
P0305	Misfire detected, cylinder 5	ECM to ignition coil primary circuit fault (cylinder misfire detected DTC also flagged) Ignition coil failure Spark plug failure/fouled/incorrect gap Fuel injector circuit fault(s) (injector DTCs also flagged) Fuel delivery pressure high/low Fuel injectors restricted/leaking Fuel injectors continuously open Fuel contamination Worn camshaft/broken valve springs	For ignition system, Engine Ignition - VIN Range: G00442->G45703 For injector circuit tests for vehicles without supercharger, GO to Pinpoint Test G290117p1. For vehicles with supercharger, GO to Pinpoint Test G290117p3. Check fuel pressure, Fuel Tank and Lines - 3.0L/3.5L/4.2L, VIN Range: G00442->G45703 For fuel injector information, Fuel Injectors (18.10.02) For engine information, Engine

P0306	Misfire detected, cylinder 6	ECM to ignition coil primary circuit fault (cylinder misfire detected DTC also flagged) Ignition coil failure Spark plug failure/fouled/incorrect gap Fuel injector circuit fault(s) (injector DTCs also flagged) Fuel delivery pressure high/low Fuel injectors restricted/leaking Fuel injectors continuously open Fuel contamination Worn camshaft/broken valve springs	For ignition system, Engine Ignition - VIN Range: G00442->G45703 For injector circuit tests for vehicles without supercharger, GO to Pinpoint Test G290117p1. For vehicles with supercharger, GO to Pinpoint Test G290117p3. Check fuel pressure, Fuel Tank and Lines - 3.0L/3.5L/4.2L, VIN Range: G00442->G45703 For fuel injector information, Fuel Injectors (18.10.02) For engine information, Engine
P0307	Misfire detected, cylinder 7	ECM to ignition coil primary circuit fault (cylinder misfire detected DTC also flagged) Ignition coil failure Spark plug failure/fouled/incorrect gap Fuel injector circuit fault(s) (injector DTCs also flagged) Fuel delivery pressure high/low Fuel injectors restricted/leaking Fuel injectors continuously open Fuel contamination Worn camshaft/broken valve springs	For ignition system, Engine Ignition - VIN Range: G00442->G45703 For injector circuit tests for vehicles without supercharger, GO to Pinpoint Test G290117p1. For vehicles with supercharger, GO to Pinpoint Test G290117p3. Check fuel pressure, Fuel Tank and Lines - 3.0L/3.5L/4.2L, VIN Range: G00442->G45703 For fuel injector information, Fuel Injectors (18.10.02) For engine information, Engine

www.JagDocs.com

P0308	Misfire detected, cylinder 8	ECM to ignition coil primary circuit fault (cylinder misfire detected DTC also flagged) Ignition coil failure Spark plug failure/fouled/incorrect gap Fuel injector circuit fault(s) (injector DTCs also flagged) Fuel delivery pressure high/low Fuel injectors restricted/leaking Fuel injectors continuously open Fuel contamination Worn camshaft/broken valve springs	For ignition system, Engine Ignition - VIN Range: G00442->G45703 For injector circuit tests for vehicles without supercharger, GO to Pinpoint Test G290117p1. For vehicles with supercharger, GO to Pinpoint Test G290117p3. Check fuel pressure, Fuel Tank and Lines - 3.0L/3.5L/4.2L, VIN Range: G00442->G45703 For fuel injector information, Fuel Injectors (18.10.02) For engine information, Engine
P0460	Fuel level sensor circuit range/performance	Fuel level sensor to rear electronic control module circuit(s); intermittent short circuit, open circuit, high resistance Fuel level sensor failure Rear electronic control module fault (incorrect fuel level data)	For fuel level sensor and circuit tests, Fuel Tank and Lines - 3.0L/3.5L/4.2L, VIN Range: G00442->G45703
P1224	Throttle control position error	Throttle motor failure Throttle body failure	This DTC can only be accurately diagnosed using the Jaguar approved diagnostic system. If this is not available, INSTALL a new throttle body. Throttle Body - VIN Range: G00442->G45703 (19.70.04) CLEAR the DTC, TEST the system for normal operation.

P1229	Throttle motor control circuit malfunction	Throttle motor disconnected Throttle motor to ECM drive circuits; short circuit or open circuit ECM ground circuit fault(s) (EM80-04, 05, 54) Throttle motor failure Throttle body failure	For throttle motor and circuit tests, and for ECM ground tests, Electronic Engine Controls - VIN Range: G00442->G45703 For throttle body, Throttle Body - VIN Range: G00442->G45703 (19.70.04)
P1234	No fuel pump commands received by ECM	ECM to fuel pump module drive circuit; open circuit, short circuit, high resistance Fuel pump module failure	For fuel pump module circuit tests, Fuel Tank and Lines - 3.0L/3.5L/4.2L, VIN Range: G00442->G45703
P1236	Fuel pump not activated when requested by ECM	ECM to fuel pump module drive circuit; open circuit, short circuit, high resistance Fuel pump module failure	For fuel pump module circuit tests, Fuel Tank and Lines - 3.0L/3.5L/4.2L, VIN Range: G00442->G45703
P1250	Throttle return spring failure malfunction	Throttle return spring failure (throttle body failure)	This DTC can only be accurately diagnosed using the Jaguar approved diagnostic system. If this is not available, INSTALL a new throttle body. Throttle Body - VIN Range: G00442->G45703 (19.70.04) CLEAR the DTC, TEST the system for normal operation.
P1251	Throttle motor relay **OFF** failure	Throttle motor relay coil power supply circuit; open circuit Throttle motor relay failure Throttle motor relay coil to ECM circuit; open circuit	For throttle motor relay tests, Electronic Engine Controls - VIN Range: G00442->G45703

www.JagDocs.com

		ECM ground circuit fault (relay coil drive)	
P1254	Throttle limp-home spring malfunction	Throttle body	This DTC can only be accurately diagnosed using the Jaguar approved diagnostic system. If this is not available, INSTALL a new throttle body. Throttle Body - VIN Range: G00442->G45703 (19.70.04) CLEAR the DTC, TEST the system for normal operation.
P1313	Right-hand cylinders misfire rate catalyst damage (Note: this DTC will flag only when accompanied by an individual cylinder misfire DTC; P0300-P0308)	Refer to P0300 possible sources	Refer to P0300 Actions.
P1314	Left-hand cylinders misfire rate catalyst damage (Note: this DTC will flag only when accompanied by an individual cylinder misfire DTC; P0300-P0308)	Refer to P0300 possible sources	Refer to P0300 Actions.
P1316	Misfire excess emission (Note: This DTC will flag only when accompanied by an individual cylinder misfire DTC; P0300 to P0308)	Refer to P0300 possible sources	Refer to P0300 Actions.
P1338	Fuel pump drive circuit low/high voltage	Fuel pump module to fuel pump drive circuit; open circuit, short circuit, high resistance Fuel pump module failure Fuel pump failure	For fuel pump module and pump circuit tests, Fuel Tank and Lines - 3.0L/3.5L/4.2L, VIN Range: G00442->G45703
P1631	Throttle motor power relay coil activation circuit failure	Throttle motor relay coil to ECM circuit; open circuit	For throttle motor relay tests,

		Throttle motor relay failure Throttle motor relay coil to ECM drive circuit; open circuit, short circuit to ground	Electronic Engine Controls - VIN Range: G00442->G45703
P1634	Throttle watchdog circuit malfunction	ECM failure	Contact dealer technical support for advice on possible ECM failure.
P1656	Throttle position (TP) sensor amplifier circuit malfunction	ECM failure	Contact dealer technical support for advice on possible ECM failure.
P1657	Throttle motor relay coil drive circuit **ON** failure	Throttle motor relay failure Throttle motor relay coil to ECM drive circuit; short circuit to B+ voltage	For throttle motor relay tests, Electronic Engine Controls - VIN Range: G00442->G45703
P1658	Throttle motor relay **ON** failure	Throttle motor relay failure Throttle motor relay coil to ECM drive circuit; short circuit to B+ voltage	For throttle motor relay tests, Electronic Engine Controls - VIN Range: G00442->G45703

www.JagDocs.com

Pinpoint Tests

PINPOINT TEST G290117p1 : DTC P0201, P0202, P0203, P0204, P0205, P0206, P0207, P0208; FUEL INJECTORS, VEHICLES WITHOUT SUPERCHARGER

G290117t1 : CHECK THE INJECTOR COIL RESISTANCE

1. Turn the ignition switch to the **OFF** position. 2. Disconnect the relevant injector electrical connector (IS01 to IS04 for right-hand cylinders, IS07 to IS10 for left-hand cylinders). 3. Measure the resistance between the injector pins.

Is the resistance between 12 and 16 ohms?

-> Yes
GO to Pinpoint Test G290117t2.

-> No
INSTALL a new injector.
Fuel Injectors (18.10.02) CLEAR the DTC. TEST the system for normal operation.

G290117t2 : CHECK THE INJECTOR COIL INSULATION

1. Measure the resistance between the injector pin 01 and the injector body. 2. Measure the resistance between the injector pin 02 and the injector body.

Is either resistance less than 10,000 ohms?

-> Yes
INSTALL a new injector.
Fuel Injectors (18.10.02) CLEAR the DTC. TEST the system for normal operation.

-> No
GO to Pinpoint Test G290117t3.

G290117t3 : CHECK THE INJECTOR SUPPLY VOLTAGE

1. Turn the ignition switch to the **ON** position. 2. Disconnect the relevant injector harness electrical connector (IS01 to IS04 for right-hand cylinders, IS07 to IS10 for left-hand cylinders). 3. Measure the voltage between the relevant injector harness electrical connector (IS01 to IS04 for right-hand cylinders, IS07 to IS10 for left-hand cylinders) pin 02 and GROUND.

Is the voltage less than 10 Volts?

-> Yes
REPAIR the circuit between the relevant injector harness electrical connector (IS01 to IS04 for right-hand cylinders, IS07 to IS10 for left-hand cylinders) pin 02 and battery. This circuit includes the front power distribution fuse box, fuse 13, and the EMS control relay. For additional information, refer to the wiring diagrams. CLEAR the DTC. TEST the system for normal operation.

-> No
GO to Pinpoint Test G290117t4.

G290117t4 : CHECK THE INJECTOR GROUND CIRCUIT

1. Turn the ignition switch to the **OFF** position. 2. Disconnect the battery negative terminal. 3. Disconnect the ECM electrical connector PI01. 4. Measure the resistance between the relevant injector harness electrical connector (IS01 to IS04 for right-hand cylinders, IS07 to IS10 for left-hand cylinders) pin 001 and the ECM electrical connector PI01, pins as follows:

Injector Cyl 1, IS01 pin 01 (BG) and PI01 pin 120 (BG).

Injector Cyl 2, IS07 pin 01 (BR) and PI01 pin 115 (BR).

Injector Cyl 3, IS02 pin 01 (BK) and PI01 pin 114 (BK).

Injector Cyl 4, IS08 pin 01 (BO) and PI01 pin 119 (BO).

Injector Cyl 5, IS03 pin 01 (BG) and PI01 pin 113 (BG).

Injector Cyl 6, IS09 pin 01 (U) and PI01 pin 118 (U).

Injector Cyl 7, IS04 pin 01 (BW) and PI01 pin 117 (BW).

Injector Cyl 8, IS10 pin 01 (UY) and PI01 pin 112 (UY).

Is the resistance greater than 5 ohms?

-> Yes
REPAIR the circuit between the relevant injector harness electrical connector pin 01 and the engine control module electrical connector. For additional information, refer to wiring diagrams. CLEAR the DTC. TEST the system for normal operation.

-> No
GO to Pinpoint Test G290117t5.

G290117t5 : CHECK THE INJECTOR GROUND CIRCUIT FOR SHORT CIRCUIT TO BATTERY

1. Reconnect the battery negative terminal. 2. Measure the voltage between the relevant injector harness electrical connector (PI32 to PI39) pin 01 and GROUND.

Is the voltage greater than 3 volts?

-> Yes
REPAIR the short circuit. For additional information, refer to wiring diagrams. CLEAR the DTC. TEST the system for normal operation.

-> No
GO to Pinpoint Test G290117t6.

G290117t6 : CHECK THE INJECTOR GROUND CIRCUIT FOR SHORT CIRCUIT TO GROUND

1. Measure the resistance between the relevant injector harness electrical connector (PI32 to PI39) pin 01 and GROUND.

www.JagDocs.com

Is the resistance less than 10,000 ohms?

-> Yes
REPAIR the short circuit. For additional information, refer to wiring diagrams. CLEAR the DTC. TEST the system for normal operation.

-> No
Contact dealer technical support for advice on possible ECM failure.

PINPOINT TEST G290117p2 : DTC P0190, P0192, P0193; FUEL PRESSURE (FRP) SENSOR

G290117t7 : CHECK THE FRP SENSOR SIGNAL CIRCUIT FOR HIGH RESISTANCE

1. Disconnect the battery negative terminal. 2. Disconnect the FRP sensor electrical connector PI28. 3. Disconnect the ECM electrical connector PI01. 4. Measure the resistance between PI28 pin 03 (U) and PI01 pin 73 (U).

Is the resistance greater than 5 ohms?

-> Yes
REPAIR the high resistance circuit. For additional information, refer to the wiring diagrams. CLEAR the DTC. TEST the system for normal operation.

-> No
GO to Pinpoint Test G290117t8.

G290117t8 : CHECK THE FRP SENSOR SIGNAL CIRCUIT FOR SHORT TO HIGH VOLTAGE

1. Reconnect the battery negative terminal. 2. Turn the ignition switch to the **ON** position. 3. Measure the voltage between PI28 pin 03 (U) and GROUND.

Is the voltage greater than 3 volts?

-> Yes
REPAIR the short circuit. For additional information, refer to the wiring diagrams. CLEAR the DTC. TEST the system for normal operation.

-> No
GO to Pinpoint Test G290117t9.

G290117t9 : CHECK THE FRP SENSOR SIGNAL CIRCUIT FOR SHORT TO GROUND

1. Disconnect the ECM electrical connector PI01. 2. Measure the resistance between the FRP sensor electrical connector PI28 pin 03 (U) and GROUND.

Is the resistance less than 10,000 ohms?

-> Yes
REPAIR the short circuit. For additional information, refer to the wiring diagrams. CLEAR the DTC. TEST the system for normal operation.

-> No
Recheck the DTCs. Check the sensor supply and ground circuits.
Electronic Engine Controls - VIN Range: G00442->G45703

PINPOINT TEST G290117p3 : DTC P0201, P0202, P0203, P0204, P0205, P0206, P0207, P0208; FUEL INJECTORS, VEHICLES WITH SUPERCHARGER

G290117t10 : CHECK THE INJECTOR COIL RESISTANCE

1. Turn the ignition switch to the **OFF** position. 2. Disconnect the relevant injector electrical connector (PI32 to PI39). 3. Measure the resistance between the injector pins.

Is the resistance between 12 and 16 ohms?

-> Yes
GO to Pinpoint Test G290117t11.

-> No
INSTALL a new injector.
Fuel Injectors (18.10.02) CLEAR the DTC. TEST the system for normal operation.

G290117t11 : CHECK THE INJECTOR COIL INSULATION

1. Measure the resistance between the injector pin 01 and the injector body. 2. Measure the resistance between the injector pin 02 and the injector body.

Is either resistance less than 10,000 ohms?

-> Yes
INSTALL a new injector.
Fuel Injectors (18.10.02) CLEAR the DTC. TEST the system for normal operation.

www.JagDocs.com

-> No
GO to Pinpoint Test G290117t12.

G290117t12 : CHECK THE INJECTOR SUPPLY VOLTAGE

1. Turn the ignition switch to the **ON** position. 2. Disconnect the relevant injector harness electrical connector (PI32 to PI39). 3. Measure the voltage between the relevant injector harness electrical connector (PI32 to PI39) pin 02 and GROUND.

Is the voltage less than 10 Volts?

-> Yes
REPAIR the circuit between the relevant injector harness electrical connector (PI32 to PI39) pin 02 and battery. This circuit includes the front power distribution fuse box, fuse 13, and the EMS control relay. For additional information, refer to the wiring diagrams. CLEAR the DTC. TEST the system for normal operation.

-> No
GO to Pinpoint Test G290117t13.

G290117t13 : CHECK THE INJECTOR GROUND CIRCUIT

1. Turn the ignition switch to the **OFF** position. 2. Disconnect the battery negative terminal. 3. Disconnect the ECM electrical connector PI01. 4. Measure the resistance between the relevant injector harness electrical connector (PI32 to PI39) pin 001 and the ECM electrical connector PI01, pins as follows:

Injector Cyl 1, PI32 pin 01 (BG) and PI01 pin 120 (BG).

Injector Cyl 2, PI36 pin 01 (BR) and PI01 pin 115 (BR).

Injector Cyl 3, PI33 pin 01 (BK) and PI01 pin 114 (BK).

Injector Cyl 4, PI37 pin 01 (BO) and PI01 pin 119 (BO).

Injector Cyl 5, PI34 pin 01 (BG) and PI01 pin 113 (BG).

Injector Cyl 6, PI38 pin 01 (U) and PI01 pin 118 (U).

Injector Cyl 7, PI35 pin 01 (BW) and PI01 pin 117 (BW).

Injector Cyl 8, PI39 pin 01 (UY) and PI01 pin 112 (UY).

Is the resistance greater than 5 ohms?

-> Yes
REPAIR the circuit between the relevant injector harness electrical connector pin 01 and the engine

control module electrical connector. For additional information, refer to wiring diagrams. CLEAR the DTC. TEST the system for normal operation.

-> No
GO to Pinpoint Test G290117t14.

G290117t14 : CHECK THE INJECTOR GROUND CIRCUIT FOR SHORT CIRCUIT TO BATTERY

1. Reconnect the battery negative terminal. 2. Measure the voltage between the relevant injector harness electrical connector (PI32 to PI39) pin 01 and GROUND.

Is the voltage greater than 3 volts?

-> Yes
REPAIR the short circuit. For additional information, refer to wiring diagrams. CLEAR the DTC. TEST the system for normal operation.

-> No
GO to Pinpoint Test G290117t15.

G290117t15 : CHECK THE INJECTOR GROUND CIRCUIT FOR SHORT CIRCUIT TO GROUND

1. Measure the resistance between the relevant injector harness electrical connector (PI32 to PI39) pin 01 and GROUND.

Is the resistance less than 10,000 ohms?

-> Yes
REPAIR the short circuit. For additional information, refer to wiring diagrams. CLEAR the DTC. TEST the system for normal operation.

-> No
Contact dealer technical support for advice on possible ECM failure.

www.JagDocs.com

Fuel Charging and Controls - VIN Range: G45704->G99999

Overview

There are changes to the engine management system (EMS) for 2006 my, the most obvious of which will be the change to 7-digit diagnostic trouble codes (DTCs) from the familiar 5-digit.

Refer to the DTC index in this section for guidance on how to use these codes with the Jaguar approved diagnostic system or a scan tool.

Inspection and Verification

1 . Verify the customer concern.

2 . Visually inspect for obvious signs of mechanical or electrical damage.

Mechanical	Electrical
Fuel leaks	
Damaged fuel lines	Fuses
Damaged push connect fittings	Inertia switch
Fuel level	Loose or corroded electrical connectors
Fuel contamination/grade/quality	Harnesses
Throttle body	Sensor(s)
Damaged fuel tank filler pipe cap	Engine control module (ECM)
Damaged fuel tank filler pipe	

3 . If an obvious cause for an observed or reported concern is found, correct the cause (if possible) before proceeding to the next step.

4 . If the cause is not visually evident use the Jaguar approved diagnostic system or a scan tool to retrieve the fault codes before proceeding to the diagnostic trouble code (DTC) Index.

Symptom Chart

Symptom	Possible source	Action
Engine cranks, but does not fire	Engine breather system disconnected/restricted	Check the engine breather system, Engine Emission Control - VIN Range: G45704->G99999 For ignition

	Ignition system Fuel system Harness Crankshaft position (CKP) sensor ECM fault	system tests, Engine Ignition - VIN Range: G45704->G99999 Check the fuel pressure, Fuel Tank and Lines - 3.0L/3.5L/4.2L, VIN Range: G45704->G99999 For CKP tests, Electronic Engine Controls - VIN Range: G45704->G99999 Refer to the warranty policy and procedures manual if an ECM is suspect.
Engine cranks and fires, but will not start	Evaporative emissions purge valve Fuel pump Spark plugs HT short to ground (tracking) check rubber boots for cracks/damage Ignition coil failure(s) Harness	For purge valve tests, Evaporative Emissions - VIN Range: G45704->G99999 Check the fuel pressure, Fuel Tank and Lines - 3.0L/3.5L/4.2L, VIN Range: G45704->G99999 For ignition system tests, Engine Ignition - VIN Range: G45704->G99999
Difficult to start cold	Check coolant anti-freeze content Battery CKP sensor Exhaust gas recirculation (EGR) valve stuck open Fuel pump Purge valve	Check the engine coolant level and condition. For battery information, Battery For CKP sensor tests, Electronic Engine Controls - VIN Range: G45704->G99999 For EGR system information, Engine Emission Control - VIN Range: G45704->G99999 Check the fuel pressure, Fuel Tank and Lines - 3.0L/3.5L/4.2L, VIN Range: G45704->G99999 For purge valve tests, Evaporative Emissions - VIN Range: G45704->G99999
Difficult to start hot	Injector leak Engine fuel temperature (EFT) sensor Intake air temperature (IAT)	For fuel injector information, Fuel Injectors (18.10.02) For EFT, IAT and MAF sensor tests, Electronic Engine Controls - VIN Range: G45704->G99999 For purge valve tests,

www.JagDocs.com

	sensor Mass air flow (MAF) sensor Purge valve Fuel pump Ignition system EGR valve stuck open	Evaporative Emissions - VIN Range: G45704->G99999 Check the fuel pressure, Fuel Tank and Lines - 3.0L/3.5L/4.2L, VIN Range: G45704->G99999 For ignition system tests, Engine Ignition - VIN Range: G45704->G99999 For EGR system information, Engine Emission Control - VIN Range: G45704->G99999
Difficult to start after hot soak (vehicle standing after engine has reached operating temperature)	Injector leak EFT sensor IAT sensor MAF sensor Purge valve Fuel pump Ignition system EGR valve stuck open	For fuel injector information, Fuel Charging and Controls - VIN Range: G45704->G99999 For EFT, IAT and MAF sensor tests, Electronic Engine Controls - VIN Range: G45704->G99999 For purge valve tests, Evaporative Emissions - VIN Range: G45704->G99999 Check the fuel pressure, Fuel Tank and Lines - 3.0L/3.5L/4.2L, VIN Range: G45704->G99999 For ignition system tests, Engine Ignition - VIN Range: G45704->G99999 For EGR system information, Engine Emission Control - VIN Range: G45704->G99999
Engine stalls soon after start	Breather system disconnected/restricted ECM relay Harness MAF sensor Fuel rail pressure (FRP) sensor Ignition system	For breather system information, Engine Emission Control - VIN Range: G45704->G99999 For ECM relay, MAF and FRP sensor tests, Electronic Engine Controls - VIN Range: G45704->G99999 For ignition system tests, Engine Ignition - VIN Range: G45704->G99999 For air filter and intake system information, Intake Air Distribution and Filtering - VIN Range: G45704->G99999 For fuel line information, Fuel Tank and Lines - 3.0L/3.5L/4.2L,

	Air filter restricted Air leakage Fuel lines	VIN Range: G45704->G99999
Engine hesitates/poor acceleration	Fuel pump Fuel pressure Fuel lines Injector leak Air leakage Throttle position (TP) sensors Accelerator pedal position (APP) sensor Throttle motor Restricted pedal travel (carpet, etc) Ignition system EGR valve stuck open HO2 sensors Transmission malfunction	Check the fuel pressure, check the fuel lines, Fuel Tank and Lines - 3.0L/3.5L/4.2L, VIN Range: G45704->G99999 For injector information, Fuel Injectors (18.10.02) For intake system information, Intake Air Distribution and Filtering - VIN Range: G45704->G99999 For TP, APP sensor and throttle motor tests, Electronic Engine Controls - VIN Range: G45704->G99999 Check the accelerator pedal travel. For ignition system tests, Engine Ignition - VIN Range: G45704->G99999 For EGR system information, Engine Emission Control - VIN Range: G45704->G99999 Check for DTCs indicating a faulty HO2 sensor. Refer to the DTC index. For transmission information,
Engine backfires	Fuel pump Fuel lines Air leakage MAF sensor APP sensor HO2 sensors Ignition system Sticking variable camshaft timing (VCT) hub	Check the fuel pressure, check the fuel lines, Fuel Tank and Lines - 3.0L/3.5L/4.2L, VIN Range: G45704->G99999 For intake system, Intake Air Distribution and Filtering - VIN Range: G45704->G99999 For MAF and APP sensor tests, Electronic Engine Controls - VIN Range: G45704->G99999 Check for DTCs indicating a faulty HO2 sensor. Refer to the DTC index. For ignition system tests, Engine Ignition - VIN Range: G45704->G99999 Check DTCs for VCT range/performance fault. For VCT

www.JagDocs.com

		information, Engine
Engine surges	Fuel pump Fuel lines MAF sensor Harness TP sensors Throttle motor Ignition system	Check the fuel pressure, check the fuel lines, Fuel Tank and Lines - 3.0L/3.5L/4.2L, VIN Range: G45704->G99999 For MAF, TP sensor and throttle motor tests, Electronic Engine Controls - VIN Range: G45704->G99999 For ignition system tests, Engine Ignition - VIN Range: G45704->G99999
Engine detonates/knocks	Knock sensor (KS) circuit malfunction FRP sensor MAF sensor HO2 sensors Fuel pump Fuel lines Air leakage Sticking VCT hub BARO sensor malfunction (internal ECM fault)	For KS, FRP, MAF and HO2 sensor tests, Electronic Engine Controls - VIN Range: G45704->G99999 Check the fuel pressure, check the fuel lines, Fuel Tank and Lines - 3.0L/3.5L/4.2L, VIN Range: G45704->G99999 For intake system information, Intake Air Distribution and Filtering - VIN Range: G45704->G99999 Check DTCs for VCT range/performance fault. For VCT information, Engine Refer to the warranty policy and procedures manual if an ECM is suspect.
No throttle response	APP sensor malfunction TP sensors Throttle motor	For APP, TP sensor and throttle motor tests, Electronic Engine Controls - VIN Range: G45704->G99999
Poor throttle response	APP sensor malfunction TP sensors ECT sensor MAF sensor	For APP, TP, ECT and MAF sensor tests, Electronic Engine Controls - VIN Range: G45704->G99999 For transmission information, For intake system, Intake Air Distribution and Filtering -

	Transmission malfunction Traction control event Air leakage Breather system disconnected/restricted	VIN Range: G45704->G99999 For breather system information, Engine Emission Control - VIN Range: G45704->G99999

DTC index

NOTE:

Generic scan tools may not read the codes listed, or may read only 5-digit codes. Match the 5 digits from the scan tool to the first 5 digits of the 7-digit code listed to identify the fault (the last 2 digits give extra information read by the manufacturer-approved diagnostic system).

NOTE:

For a full list of DTCs,
Electronic Engine Controls - VIN Range: G45704->G99999

DTC	Description	Possible Causes	Action
P008700	Fuel rail/system pressure - too low	FRP sensor disconnected FRP sensor to ECM sensing circuit: open circuit or short circuit to ground FRP sensor supply circuit: high resistance FRP sensor failure Fuel pump failure Fuel line leak Restricted fuel line	For FRP sensor circuit tests, Electronic Engine Controls - VIN Range: G45704->G99999 For fuel pump circuit and fuel line tests, Fuel Tank and Lines - 3.0L/3.5L/4.2L, VIN Range: G45704->G99999
P008800	Fuel rail/system pressure - too high	FRP sensor to ECM wiring (supply/sense): short circuit to each other FRP sensor to ECM sense circuit:	For FRP sensor tests, Electronic Engine Controls - VIN Range: G45704->G99999 For fuel pump circuit and fuel line tests,

www.JagDocs.com

		short circuit to high voltage FRP sensor ground circuit: high resistance FRP sensor failure Restricted fuel line Fuel pump short circuit to battery	Fuel Tank and Lines - 3.0L/3.5L/4.2L, VIN Range: G45704->G99999
P017100	System too lean (right hand bank)	Air intake leak between MAF sensor and cylinder head Fuel filter/system restriction Low fuel pressure Fuel injector restriction MAF sensor fault (low intake air flow) Exhaust leak (before catalyst) Evaporative emission system fault	For intake system information, Intake Air Distribution and Filtering - VIN Range: G45704->G99999 Check the fuel pressure, check the fuel lines, Fuel Tank and Lines - 3.0L/3.5L/4.2L, VIN Range: G45704->G99999 For fuel injector information, Fuel Injectors (18.10.02) For MAF sensor circuit tests, Electronic Engine Controls - VIN Range: G45704->G99999 Check the exhaust system (before catalyst) for condition and security, For evaporative emission system tests, Evaporative Emissions - VIN Range: G45704->G99999
P017200	System too rich (right hand bank)	Restricted air filter High fuel pressure Leaking fuel injector(s) Oil contaminated with fuel (too many cold starts with vehicle subsequently not getting hot enough for long enough) MAF sensor fault (high intake air	For intake system information, Intake Air Distribution and Filtering - VIN Range: G45704->G99999 Check the fuel pressure, Fuel Tank and Lines - 3.0L/3.5L/4.2L, VIN Range: G45704->G99999 For fuel injector information, Fuel Injectors (18.10.02) Check the oil condition, if

		flow) Evaporative emission system fault	contamination is present, renew the engine oil and filter. For MAF sensor circuit tests, Electronic Engine Controls - VIN Range: G45704->G99999 For evaporative emission system tests, Evaporative Emissions - VIN Range: G45704->G99999
P017400	System too lean (left hand bank)	Air intake leak between MAF sensor and cylinder head Fuel filter/system restriction Low fuel pressure Fuel injector restriction MAF sensor fault (low intake air flow) Exhaust leak (before catalyst) Evaporative emission system fault	For intake system information, Intake Air Distribution and Filtering - VIN Range: G45704->G99999 Check the fuel pressure, check the fuel lines, Fuel Tank and Lines - 3.0L/3.5L/4.2L, VIN Range: G45704->G99999 For fuel injector information, Fuel Injectors (18.10.02) For MAF sensor circuit tests, Electronic Engine Controls - VIN Range: G45704->G99999 Check the exhaust system (before catalyst) for condition and security, For evaporative emission system tests, Evaporative Emissions - VIN Range: G45704->G99999
P017500	System too rich (left hand bank)	Restricted air filter High fuel pressure Leaking fuel injector(s) Oil contaminated with fuel (too many cold starts with vehicle subsequently not getting hot enough for long enough)	For intake system information, Intake Air Distribution and Filtering - VIN Range: G45704->G99999 Check the fuel pressure, Fuel Tank and Lines - 3.0L/3.5L/4.2L, VIN Range: G45704->G99999 For fuel injector information, Fuel Injectors (18.10.02)

www.JagDocs.com

		MAF sensor fault (high intake air flow) Evaporative emission system fault	Check the oil condition, if contamination is present, renew the engine oil and filter. For MAF sensor circuit tests, Electronic Engine Controls - VIN Range: G45704->G99999 For evaporative emission system tests, Evaporative Emissions - VIN Range: G45704->G99999
P020100	Cylinder 1 injector circuit/open	Injector disconnected Injector harness wiring: short circuit Injector failure	For injector circuit tests on vehicles without supercharger, GO to Pinpoint Test G240048p1. For injector circuit tests on vehicles with supercharger, GO to Pinpoint Test G240048p3.
P020200	Cylinder 2 injector circuit/open	Injector disconnected Injector harness wiring: short circuit Injector failure	For injector circuit tests on vehicles without supercharger, GO to Pinpoint Test G240048p1. For injector circuit tests on vehicles with supercharger, GO to Pinpoint Test G240048p3.
P020300	Cylinder 3 injector circuit/open	Injector disconnected Injector harness wiring: short circuit Injector failure	For injector circuit tests on vehicles without supercharger, GO to Pinpoint Test G240048p1. For injector circuit tests on vehicles with supercharger, GO to Pinpoint Test G240048p3.
P020400	Cylinder 4 injector circuit/open	Injector disconnected Injector harness wiring: short circuit Injector failure	For injector circuit tests on vehicles without supercharger, GO to Pinpoint Test G240048p1. For injector circuit tests on vehicles with supercharger,

			GO to Pinpoint Test G240048p3.
P020500	Cylinder 5 injector circuit/open	Injector disconnected Injector harness wiring: short circuit Injector failure	For injector circuit tests on vehicles without supercharger, GO to Pinpoint Test G240048p1. For injector circuit tests on vehicles with supercharger, GO to Pinpoint Test G240048p3.
P020600	Cylinder 6 injector circuit/open	Injector disconnected Injector harness wiring: short circuit Injector failure	For injector circuit tests on vehicles without supercharger, GO to Pinpoint Test G240048p1. For injector circuit tests on vehicles with supercharger, GO to Pinpoint Test G240048p3.
P020700	Cylinder 7 injector circuit/open	Injector disconnected Injector harness wiring: short circuit Injector failure	For injector circuit tests on vehicles without supercharger, GO to Pinpoint Test G240048p1. For injector circuit tests on vehicles with supercharger, GO to Pinpoint Test G240048p3.
P020800	Cylinder 8 injector circuit/open	Injector disconnected Injector harness wiring: short circuit Injector failure	For injector circuit tests on vehicles without supercharger, GO to Pinpoint Test G240048p1. For injector circuit tests on vehicles with supercharger, GO to Pinpoint Test G240048p3.
P131500	Persistent misfire	ECM to ignition coil primary circuit fault (cylinder misfire detected DTC also flagged) Fuel delivery pressure low Fuel injector circuit fault(s)	For ignition coil circuit tests, Engine Ignition - VIN Range: G45704->G99999 Check the fuel pressure, Fuel Tank and Lines - 3.0L/3.5L/4.2L, VIN Range:

www.JagDocs.com

		(injector DTCs also flagged) Ignition coil failure Spark plug failure/fouled/incorrect gap Cylinder compression low	G45704->G99999 For injector circuit tests (vehicles without supercharger), GO to Pinpoint Test G240048p1. For injector circuit tests (vehicles with supercharger), GO to Pinpoint Test G240048p3. For spark plug tests, Engine Ignition - VIN Range: G45704->G99999
P131600	Injector driver misfire - emissions damage	Injector driver module codes detected	Check for associated DTCs and refer to the DTC index.
P210129	Throttle range/performance - sub-processor	Jammed throttle blade, gearing or motor	Check for a message in the instrument cluster. Replace the throttle body. Throttle Body - Vehicles With: Supercharger, VIN Range: G45704->G99999 (19.70.04) Throttle Body - Vehicles Without: Supercharger, VIN Range: G45704->G99999 (19.70.04)
P210164	Throttle range/performance	Jammed throttle blade, gearing or motor	Check for a message in the instrument cluster. Replace the throttle body. Throttle Body - Vehicles With: Supercharger, VIN Range: G45704->G99999 (19.70.04) Throttle Body - Vehicles Without: Supercharger, VIN Range: G45704->G99999 (19.70.04)
P210329	Throttle actuator motor control circuit high	Control circuit: short circuit to power ECM fault	For throttle actuator motor circuit tests on vehicles without supercharger, GO to Pinpoint Test G240048p4.

			For throttle actuator motor circuit tests on vehicles with supercharger, GO to Pinpoint Test G240048p5. Refer to the warranty policy and procedures manual if an ECM is suspect.
P210364	Throttle actuator motor control circuit high - signal plausibility failure	Control circuit: short circuit to power ECM fault	For throttle actuator motor circuit tests on vehicles without supercharger, GO to Pinpoint Test G240048p4. For throttle actuator motor circuit tests on vehicles with supercharger, GO to Pinpoint Test G240048p5. Refer to the warranty policy and procedures manual if an ECM is suspect.
P210500	Throttle actuator control system - forced engine shutdown	Throttle MIL request due to fuel cut	Check for DTCs indicating the reason for the fuel cut. Follow the action indicated for those DTCs.
P210629	Throttle actuator control system - forced limited power	Signal invalid	Check for a message in the instrument cluster. Replace the throttle body. Throttle Body - Vehicles With: Supercharger, VIN Range: G45704->G99999 (19.70.04) Throttle Body - Vehicles Without: Supercharger, VIN Range: G45704->G99999 (19.70.04)
P210664	Throttle actuator control system - forced limited power	Signal plausibility failure	Check for a message in the instrument cluster. Replace the throttle body. Throttle Body - Vehicles With: Supercharger, VIN Range: G45704->G99999 (19.70.04)

www.JagDocs.com

			Throttle Body - Vehicles Without: Supercharger, VIN Range: G45704->G99999 (19.70.04)
P211800	Throttle actuator motor control current range/performance	Control circuit: short circuit to power, short circuit to ground, high resistance ECM fault	For throttle actuator motor circuit tests on vehicles without supercharger, GO to Pinpoint Test G240048p4. For throttle actuator motor circuit tests on vehicles with supercharger, GO to Pinpoint Test G240048p5. Refer to the warranty policy and procedures manual if an ECM is suspect.
P211900	Throttle actuator control throttle body range/performance	Throttle spring faulty	Check for a message in the instrument cluster. Replace the throttle body. Throttle Body - Vehicles With: Supercharger, VIN Range: G45704->G99999 (19.70.04) Throttle Body - Vehicles Without: Supercharger, VIN Range: G45704->G99999 (19.70.04)

Pinpoint Tests

CAUTION: When probing connectors to take measurements in the course of the pinpoint tests, use the adaptor kit, part number 3548-1358-00.

NOTE:

When performing electrical voltage or resistance tests, always use a digital multimeter (DMM) accurate to 3 decimal places, and with an up-to-date calibration certificate. When testing resistance, always take the resistance of the DMM leads into account.

NOTE:

Check and rectify basic faults before beginning diagnostic routines involving pinpoint tests.

PINPOINT TEST G240048p1 : FUEL INJECTOR CIRCUITS (VEHICLES WITHOUT SUPERCHARGER)

G240048t1 : CHECK THE INJECTOR COIL RESISTANCE

1. Disconnect the relevant injector electrical connector:

Injector connector
Cylinder 1, PI32
Cylinder 2, PI36
Cylinder 3, PI33
Cylinder 4, PI37
Cylinder 5, PI34
Cylinder 6, PI38
Cylinder 7, PI35
Cylinder 8, PI39

2. Measure the resistance between the injector pins.

Is the resistance between 12 and 16 ohms?

-> Yes
GO to Pinpoint Test G240048t2.

-> No
INSTALL a new injector.
Fuel Injectors (18.10.02) CLEAR the DTC and test the system for normal operation.

G240048t2 : CHECK THE INJECTOR COIL INSULATION

1. Measure the resistance between:

www.JagDocs.com

Injector, component side	Injector body
Pin 01	Injector body
Pin 02	Injector body

Is either resistance less than 10,000 ohms?

-> Yes
INSTALL a new injector.
Fuel Injectors (18.10.02) CLEAR the DTC and test the system for normal operation.

-> No
GO to Pinpoint Test G240048t3.

G240048t3 : CHECK THE INJECTOR SUPPLY VOLTAGE

1. Key on, engine off. 2. Make sure the EMS relay is energized. 3. Measure the voltage between:

Injector connector, harness side	Battery
Pin 02	Negative terminal

Is the voltage less than 10 Volts?

-> Yes
REPAIR the circuit between the relevant injector harness electrical connector pin 02 and battery. This circuit includes fuse 13 of the front power distribution box and the EMS relay. For additional information, refer to the wiring diagrams. CLEAR the DTC and test the system for normal operation.

-> No
GO to Pinpoint Test G240048t6.

G240048t6 : CHECK THE INJECTOR CONTROL CIRCUIT FOR SHORT CIRCUIT TO GROUND

1. Key off. 2. Measure the resistance between:

Injector connector, harness side	Battery
Pin 01	Negative terminal

Is the resistance less than 10,000 ohms?

-> Yes
REPAIR the short circuit. For additional information, refer to the wiring diagrams. CLEAR the DTC and test the system for normal operation.

-> No
GO to Pinpoint Test G240048t5.

G240048t5 : CHECK THE INJECTOR CONTROL CIRCUIT FOR SHORT CIRCUIT TO POWER

1. Measure the resistance between:

Injector connector, harness side	Battery
Pin 01	Positive terminal

Is the resistance less than 10,000 ohms?

-> Yes
REPAIR the short circuit. For additional information, refer to the wiring diagrams. CLEAR the DTC and test the system for normal operation.

-> No
GO to Pinpoint Test G240048t4.

G240048t4 : CHECK THE INJECTOR CONTROL CIRCUIT FOR HIGH RESISTANCE

1. Disconnect the ECM electrical connector PI300. 2. Measure the resistance between:

Cylinder 1 injector connector, harness side	ECM connector PI300, harness side
PI32, pin 01	Pin 78

Cylinder 2 injector connector, harness side	ECM connector PI300, harness side
PI36, pin 01	Pin 79

www.JagDocs.com

Cylinder 3 injector connector, harness side	ECM connector PI300, harness side
PI33, pin 01	Pin 80

Cylinder 4 injector connector, harness side	ECM connector PI300, harness side
PI37, pin 01	Pin 81

Cylinder 5 injector connector, harness side	ECM connector PI300, harness side
PI34, pin 01	Pin 82

Cylinder 6 injector connector, harness side	ECM connector PI300, harness side
PI38, pin 01	Pin 83

Cylinder 7 injector connector, harness side	ECM connector PI300, harness side
PI35, pin 01	Pin 84

Cylinder 8 injector connector, harness side	ECM connector PI300, harness side
PI39, pin 01	Pin 85

Is the resistance greater than 5 ohms?

-> Yes
REPAIR the high resistance circuit. For additional information, refer to the wiring diagrams. CLEAR the DTC and test the system for normal operation.

-> No
INSTALL a new injector.
Fuel Injectors (18.10.02) CLEAR the DTC and test the system for normal operation.

PINPOINT TEST G240048p3 : FUEL INJECTOR CIRCUITS (VEHICLES WITH SUPERCHARGER)

G240048t13 : CHECK THE INJECTOR COIL RESISTANCE

1. Disconnect the relevant injector electrical connector:

Injector connector
Injector Cylinder 1, IS01
Injector Cylinder 2, IS07
Injector Cylinder 3, IS02
Injector Cylinder 4, IS08
Injector Cylinder 5, IS03
Injector Cylinder 6, IS09
Injector Cylinder 7, IS04
Injector Cylinder 8, IS10

2. Measure the resistance between the injector pins.

Is the resistance between 12 and 16 ohms?

-> Yes
GO to Pinpoint Test G240048t14.

-> No
INSTALL a new injector.
Fuel Injectors (18.10.02) CLEAR the DTC and test the system for normal operation.

G240048t14 : CHECK THE INJECTOR COIL INSULATION

1. Measure the resistance between:

Injector, component side	Injector body

www.JagDocs.com

Pin 01	Injector body
Pin 02	Injector body

Is either resistance less than 10,000 ohms?

-> Yes
INSTALL a new injector.
Fuel Injectors (18.10.02) CLEAR the DTC and test the system for normal operation.

-> No
GO to Pinpoint Test G240048t15.

G240048t15 : CHECK THE INJECTOR SUPPLY VOLTAGE

1. Key on, engine off. 2. Make sure the EMS relay is energized. 3. Measure the voltage between:

Injector connector, harness side	Battery
Pin 02	Negative terminal

Is the voltage less than 10 Volts?

-> Yes
REPAIR the circuit between the relevant injector harness electrical connector pin 02 and battery. This circuit includes fuse 13 of the front power distribution box and the EMS relay. For additional information, refer to the wiring diagrams. CLEAR the DTC and test the system for normal operation.

-> No
GO to Pinpoint Test G240048t16.

G240048t16 : CHECK THE INJECTOR CONTROL CIRCUIT FOR SHORT CIRCUIT TO GROUND

1. Key off. 2. Measure the resistance between:

Injector connector, harness side	Battery
Pin 01	Negative terminal

Is the resistance less than 10,000 ohms?

-> Yes
REPAIR the short circuit. For additional information, refer to the wiring diagrams. CLEAR the DTC and test the system for normal operation.

-> No
GO to Pinpoint Test G240048t17.

G240048t17 : CHECK THE INJECTOR CONTROL CIRCUIT FOR SHORT CIRCUIT TO POWER

1. Measure the resistance between:

Injector connector, harness side	Battery
Pin 01	Positive terminal

Is the resistance less than 10,000 ohms?

-> Yes
REPAIR the short circuit. For additional information, refer to the wiring diagrams. CLEAR the DTC and test the system for normal operation.

-> No
GO to Pinpoint Test G240048t18.

G240048t18 : CHECK THE INJECTOR CONTROL CIRCUIT FOR HIGH RESISTANCE

1. Disconnect the ECM electrical connector PI300. 2. Measure the resistance between:

Cylinder 1 injector connector, harness side	ECM connector PI300, harness side
IS01, pin 01	Pin 78

Cylinder 2 injector connector, harness side	ECM connector PI300, harness side
IS07, pin 01	Pin 79

www.JagDocs.com

Cylinder 3 injector connector, harness side	ECM connector PI300, harness side
IS02, pin 01	Pin 80

Cylinder 4 injector connector, harness side	ECM connector PI300, harness side
IS08, pin 01	Pin 81

Cylinder 5 injector connector, harness side	ECM connector PI300, harness side
IS03, pin 01	Pin 82

Cylinder 6 injector connector, harness side	ECM connector PI300, harness side
IS09, pin 01	Pin 83

Cylinder 7 injector connector, harness side	ECM connector PI300, harness side
IS04, pin 01	Pin 84

Cylinder 8 injector connector, harness side	ECM connector PI300, harness side
IS10, pin 01	Pin 85

Is the resistance greater than 5 ohms?

-> Yes
REPAIR the high resistance circuit. For additional information, refer to the wiring diagrams. CLEAR the DTC and test the system for normal operation.

-> No
INSTALL a new injector.
Fuel Injectors (18.10.02) CLEAR the DTC and test the system for normal operation.

PINPOINT TEST G240048p4 : THROTTLE BODY MOTOR CIRCUIT (VEHICLES WITHOUT SUPERCHARGER)

G240048t19 : CHECK THE THROTTLE ACTUATOR CONTROL MOTOR SUPPLY CIRCUIT FOR SHORT CIRCUIT TO GROUND

1. Disconnect the throttle body electrical connector, PI26. 2. Measure the resistance between:

Throttle body connector PI26, harness side	Battery
Pin 05	Negative terminal

Is the resistance less than 10,000 ohms?

-> Yes
REPAIR the short circuit. For additional information, refer to the wiring diagrams. CLEAR the DTC and test the system for normal operation.

-> No
GO to Pinpoint Test G240048t20.

G240048t20 : CHECK THE THROTTLE ACTUATOR CONTROL MOTOR SUPPLY CIRCUIT FOR SHORT CIRCUIT TO POWER

1. Measure the resistance between:

Throttle body connector PI26, harness side	Battery
Pin 05	Positive terminal

Is the resistance less than 10,000 ohms?

-> Yes
REPAIR the short circuit. For additional information, refer to the wiring diagrams. CLEAR the DTC and test the system for normal operation.

-> No

www.JagDocs.com

GO to Pinpoint Test G240048t21.

G240048t21 : CHECK THE THROTTLE ACTUATOR CONTROL MOTOR NEGATIVE CIRCUIT FOR SHORT CIRCUIT TO GROUND

1. Measure the resistance between:

Throttle body connector PI26, harness side	Battery
Pin 06	Negative terminal

Is the resistance less than 10,000 ohms?

-> Yes
REPAIR the short circuit. For additional information, refer to the wiring diagrams. CLEAR the DTC and test the system for normal operation.

-> No
GO to Pinpoint Test G240048t22.

G240048t22 : CHECK THE THROTTLE ACTUATOR CONTROL MOTOR NEGATIVE CIRCUIT FOR SHORT CIRCUIT TO POWER

1. Measure the resistance between:

Throttle body connector PI26, harness side	Battery
Pin 06	Positive terminal

Is the resistance less than 10,000 ohms?

-> Yes
REPAIR the short circuit. For additional information, refer to the wiring diagrams. CLEAR the DTC and test the system for normal operation.

-> No
GO to Pinpoint Test G240048t23.

G240048t23 : CHECK THE THROTTLE ACTUATOR CONTROL MOTOR SUPPLY CIRCUIT FOR HIGH RESISTANCE

1. Disconnect the ECM electrical connector, PI300. 2. Measure the resistance between:

Throttle body connector PI26, harness side	ECM connector PI300, harness side
Pin 05	Pin 75

Is the resistance greater than 5 ohms?

-> Yes
REPAIR the high resistance circuit. For additional information, refer to the wiring diagrams. CLEAR the DTC and test the system for normal operation.

-> No
GO to Pinpoint Test G240048t24.

G240048t24 : CHECK THE THROTTLE ACTUATOR CONTROL MOTOR NEGATIVE CIRCUIT FOR HIGH RESISTANCE

1. Measure the resistance between:

Throttle body connector PI26, harness side	ECM connector PI300, harness side
Pin 06	Pin 74

Is the resistance greater than 5 ohms?

-> Yes
REPAIR the high resistance circuit. For additional information, refer to the wiring diagrams. CLEAR the DTC and test the system for normal operation.

-> No
INSTALL a new throttle body assembly
Throttle Body - Vehicles Without: Supercharger, VIN Range: G45704->G99999 (19.70.04) CLEAR the DTC and test the system for normal operation.

PINPOINT TEST G240048p5 : THROTTLE BODY MOTOR CIRCUIT (VEHICLES WITH SUPERCHARGER)

www.JagDocs.com

G240048t25 : CHECK THE THROTTLE ACTUATOR CONTROL MOTOR SUPPLY CIRCUIT FOR SHORT CIRCUIT TO GROUND

1. Disconnect the throttle body electrical connector, PI26. 2. Measure the resistance between:

Throttle body connector PI26, harness side	Battery
Pin 01	Negative terminal

Is the resistance less than 10,000 ohms?

-> Yes

REPAIR the short circuit. For additional information, refer to the wiring diagrams. CLEAR the DTC and test the system for normal operation.

-> No

GO to Pinpoint Test G240048t26.

G240048t26 : CHECK THE THROTTLE ACTUATOR CONTROL MOTOR SUPPLY CIRCUIT FOR SHORT CIRCUIT TO POWER

1. Measure the resistance between:

Throttle body connector PI26, harness side	Battery
Pin 01	Positive terminal

Is the resistance less than 10,000 ohms?

-> Yes

REPAIR the short circuit. For additional information, refer to the wiring diagrams. CLEAR the DTC and test the system for normal operation.

-> No

GO to Pinpoint Test G240048t27.

G240048t27 : CHECK THE THROTTLE ACTUATOR CONTROL MOTOR NEGATIVE CIRCUIT FOR SHORT CIRCUIT TO GROUND

1. Measure the resistance between:

Throttle body connector PI26, harness side	Battery

Pin 02	Negative terminal

Is the resistance less than 10,000 ohms?

-> Yes
REPAIR the short circuit. For additional information, refer to the wiring diagrams. CLEAR the DTC and test the system for normal operation.

-> No
GO to Pinpoint Test G240048t28.

G240048t28 : CHECK THE THROTTLE ACTUATOR CONTROL MOTOR NEGATIVE CIRCUIT FOR SHORT CIRCUIT TO POWER

1. Measure the resistance between:

Throttle body connector PI26, harness side	Battery
Pin 02	Positive terminal

Is the resistance less than 10,000 ohms?

-> Yes
REPAIR the short circuit. For additional information, refer to the wiring diagrams. CLEAR the DTC and test the system for normal operation.

-> No
GO to Pinpoint Test G240048t29.

G240048t29 : CHECK THE THROTTLE ACTUATOR CONTROL MOTOR SUPPLY CIRCUIT FOR HIGH RESISTANCE

1. Disconnect the ECM electrical connector, PI300. 2. Measure the resistance between:

Throttle body connector PI26, harness side	ECM connector PI300, harness side
Pin 01	Pin 75

Is the resistance greater than 5 ohms?

www.JagDocs.com

-> Yes
REPAIR the high resistance circuit. For additional information, refer to the wiring diagrams. CLEAR the DTC and test the system for normal operation.

-> No
GO to Pinpoint Test G240048t30.

G240048t30 : CHECK THE THROTTLE ACTUATOR CONTROL MOTOR NEGATIVE CIRCUIT FOR HIGH RESISTANCE

1. Measure the resistance between:

Throttle body connector PI26, harness side	ECM connector PI300, harness side
Pin 02	Pin 74

Is the resistance greater than 5 ohms?

-> Yes
REPAIR the high resistance circuit. For additional information, refer to the wiring diagrams. CLEAR the DTC and test the system for normal operation.

-> No
INSTALL a new throttle body assembly
Throttle Body - Vehicles With: Supercharger, VIN Range: G45704->G99999 (19.70.04) CLEAR the DTC and test the system for normal operation.

Fuel Injection Supply Manifold (19.60.13)

Removal

1. **WARNING: Do not smoke or carry lighted tobacco or open flame of any type when working on or near any fuel related components. Highly flammable vapors are always present and may ignite. Failure to follow these instructions can result in personal injury.**

WARNING: Do not carry or operate cellular phones when working on or near any fuel related components. Highly flammable vapors are always present and may ignite. Failure to follow these instructions may result in personal injury.

Remove the fuel injection supply manifold.
For additional information, refer to

2 . Remove the fuel pressure sensor.

- Remove the securing bolts.
- Remove and discard the O-ring seals.

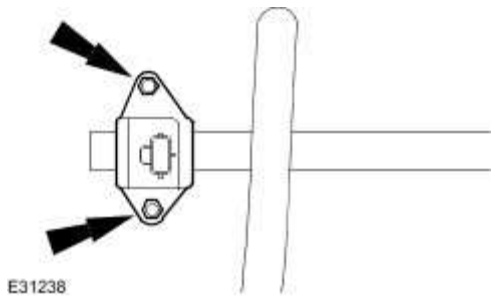

www.JagDocs.com

Installation

1. **WARNING: Do not smoke or carry lighted tobacco or open flame of any type when working on or near any fuel related components. Highly flammable vapors are always present and may ignite. Failure to follow these instructions can result in personal injury.**

WARNING: Do not carry or operate cellular phones when working on or near any fuel related components. Highly flammable vapors are always present and may ignite. Failure to follow these instructions may result in personal injury.

To install, reverse removal procedure.

- Install new fuel pressure sensor O-ring seals. Lubricate the O-ring seals with clean engine oil to aid installation.
- Tighten to 5 Nm.

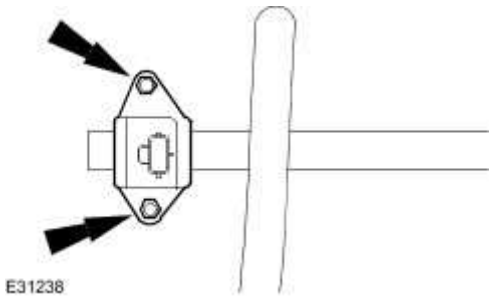

Fuel Injectors (18.10.02)

Removal

Vehicles with supercharger

1 . Remove the charge air coolers. <<303-12B>>

Vehicles without supercharger

2 . Remove the engine cover.

3 . **NOTE:**

Right-hand shown, left-hand similar.

Remove the engine cover bracket.

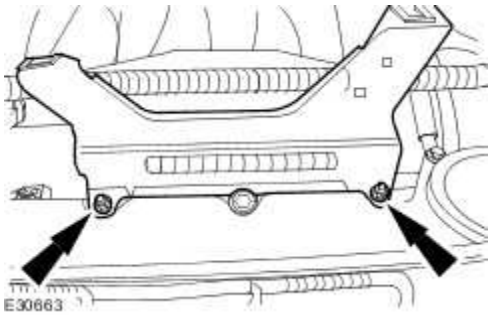

All vehicles

4 . Disconnect the fuel line. <<310-00>>

5 . Disconnect the fuel pressure sensor.

1) Disconnect the electrical connector.

2) Detach the vacuum hose.

www.JagDocs.com

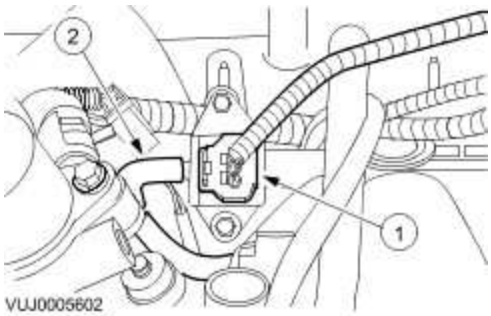

6 . **NOTE:**

Right-hand shown, left-hand similar.

Detach the engine wiring harness.

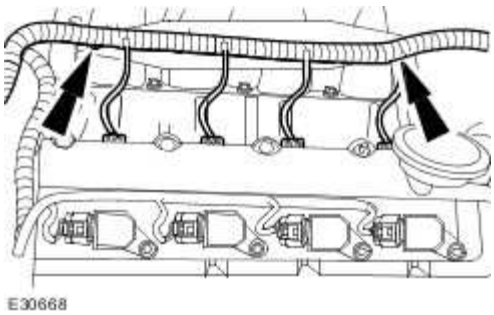

7 . **NOTE:**

Right-hand shown, left-hand similar.

Disconnect the electrical connectors.

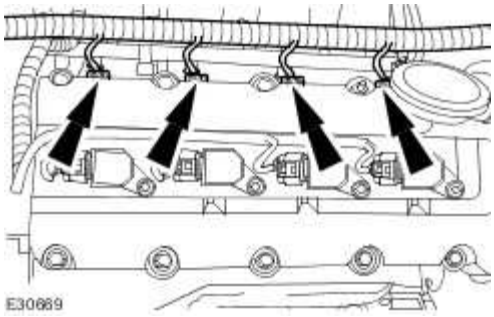

8 . Disconnect the fuel temperature sensor electrical connector.

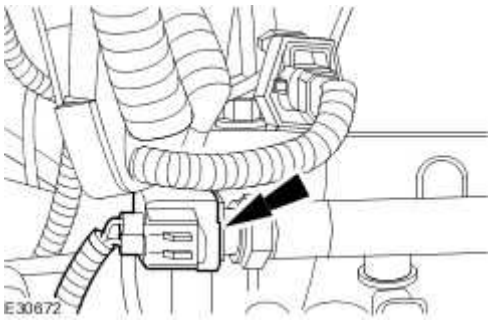

Vehicles without supercharger

9 . Remove the fuel injection supply manifold.

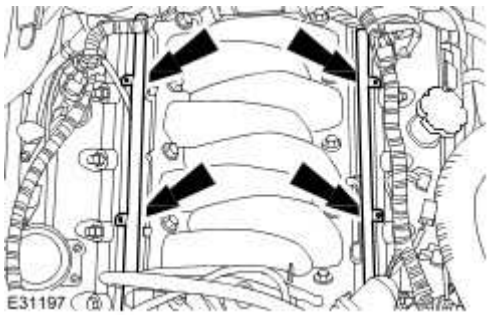

Vehicles with supercharger

10 . **NOTE:**

Left-hand shown, right-hand similar.

Remove the fuel injection supply manifold.

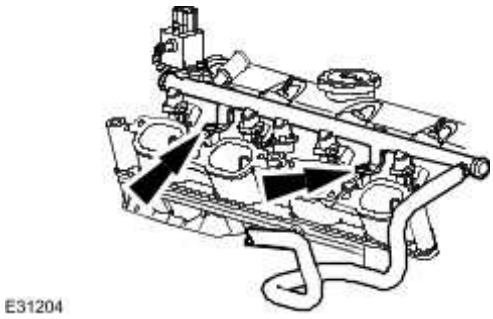

All vehicles

11 . Remove the fuel injectors.

Release the retaining clip.

www.JagDocs.com

- Remove and discard the O-ring seals.

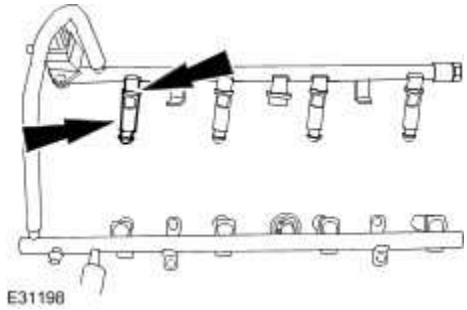

Installation

All vehicles

1. **WARNING: Do not smoke or carry lighted tobacco or open flame of any type when working on or near any fuel related components. Highly flammable vapors are always present and may ignite. Failure to follow these instructions may result in personal injury.**

WARNING: Do not carry or operate cellular phones when working on or near any fuel related components. Highly flammable vapors are always present and may ignite. Failure to follow these instructions may result in personal injury.

To install, reverse the removal procedure.

- Install new fuel injector O-ring seals. Lubricate the O-ring seals with clean engine oil to aid installation.

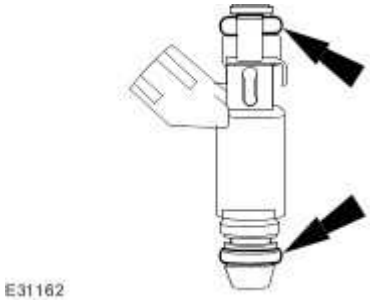

Vehicles with supercharger

2 . Tighten to 7 Nm.

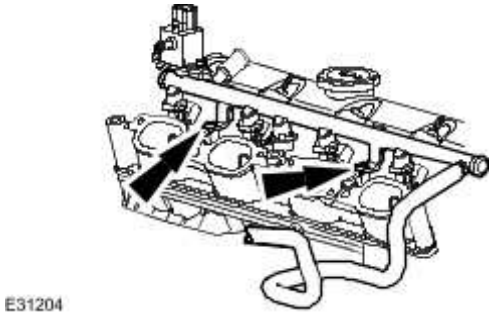

Vehicles without supercharger

3 . Tighten to 22 Nm.

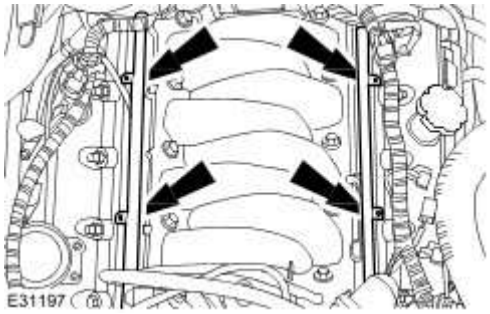

4 . Tighten to 6 Nm.

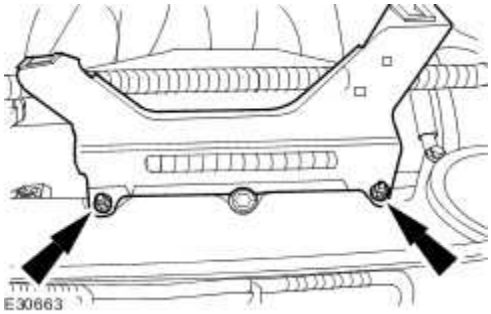

www.JagDocs.com

Throttle Body - Vehicles With: Supercharger, VIN Range: G00442->G45703 (19.70.04)

Removal

1. **WARNING: When relieving cooling system pressure, cover the expansion tank cap with a thick cloth to prevent the possibility of scalding. Failure to follow these instructions may result in personal injury.**

   Remove the expansion tank cap to relieve the cooling system pressure.

2. **CAUTION: Do not attempt to clean the throttle body. The bore and the throttle plate has a special coating applied during manufacture which should not be removed.**

   Remove the air outlet pipe.
   For additional information, refer to Air Cleaner Outlet Pipe (19.10.31)

3. Remove the cowl vent screen.
   For additional information, refer to Cowl Vent Screen (76.10.01)

4. Remove the throttle body intake pipe.

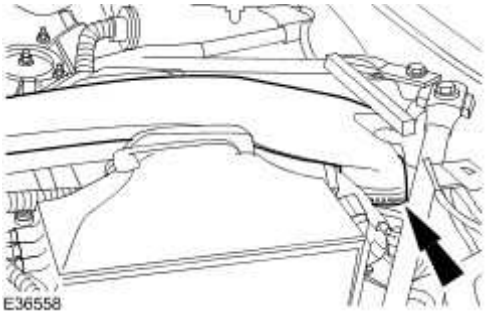

5. Detach the brake servo pipe.

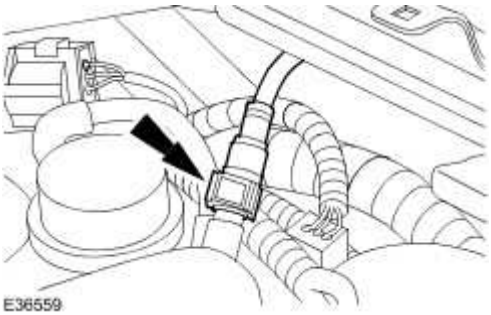

6 . Disconnect the throttle body electrical connectors.

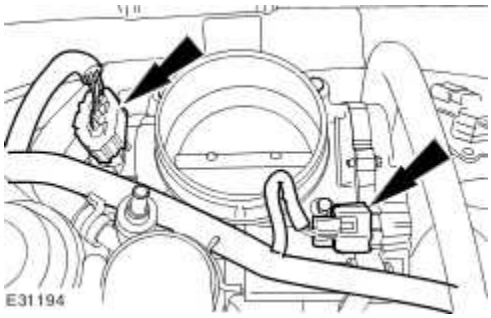

7 . **NOTE:**

Cap the coolant hoses to minimize coolant loss.

Detach the coolant hoses from the throttle body.

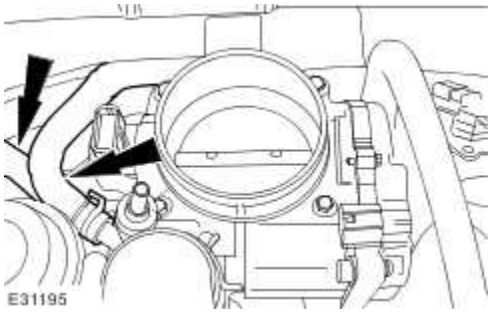

8 . Remove the throttle body.

- Remove and discard the gasket.

www.JagDocs.com

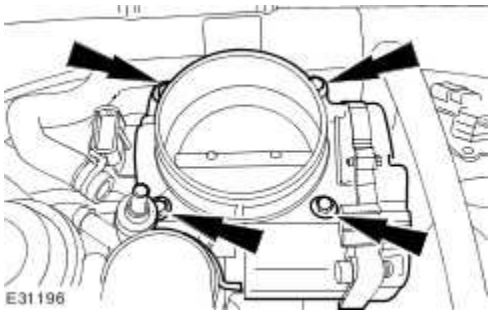

Installation

1. **CAUTION: Do not attempt to clean the throttle body. The bore and the throttle plate has a special coating applied during manufacture which should not be removed.**

To install, reverse the removal procedure.

- Install a new throttle body gasket.
- Tighten to 10 Nm.

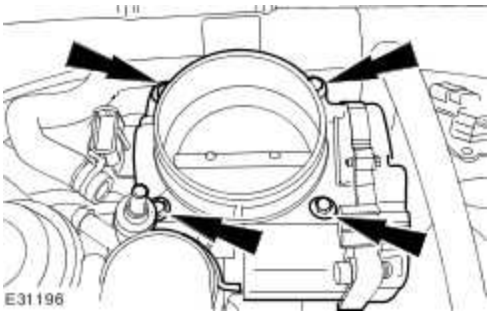

2 . Check and top up the cooling system.

Throttle Body - Vehicles With: Supercharger, VIN Range: G45704->G99999 (19.70.04)

Removal

1. **WARNING: When relieving cooling system pressure, cover the expansion tank cap with a thick cloth to prevent the possibility of scalding. Failure to follow these instructions may result in personal injury.**

   Remove the expansion tank cap to relieve the cooling system pressure.

2. Remove the cowl vent screen.
   For additional information, refer to Cowl Vent Screen (76.10.01)

3. **CAUTION: Do not attempt to clean the throttle body. The bore and the throttle plate has a special coating applied during manufacture which should not be removed.**

   Remove the throttle body intake pipe.

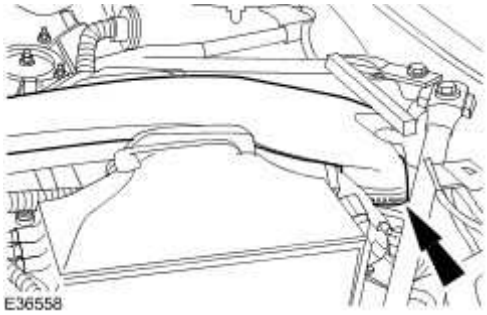

4. Disconnect the brake servo pipe.

www.JagDocs.com

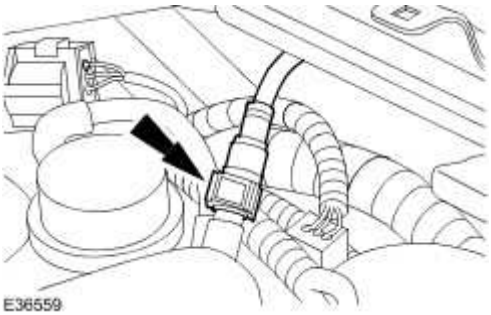

5 . Remove the throttle body intake duct.

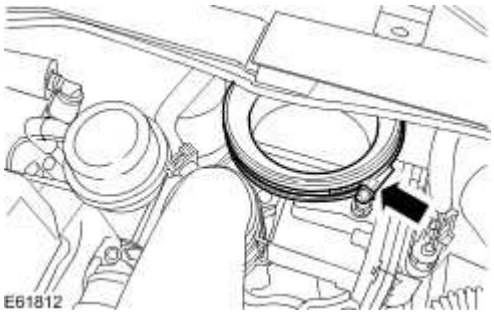

6 . Disconnect the throttle body electrical connector.

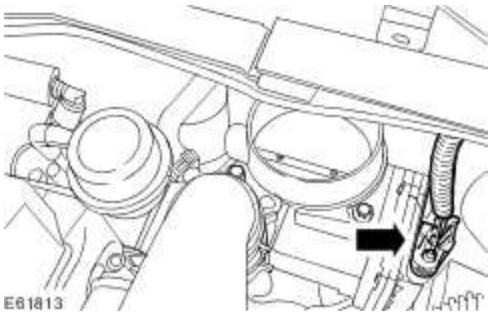

7 . Detach the throttle body.

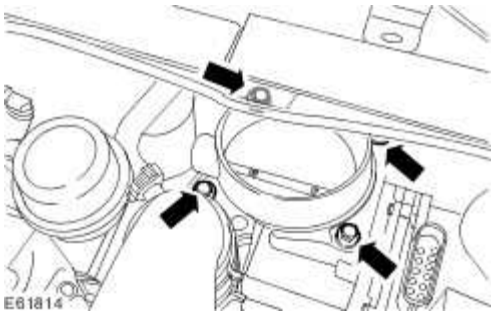

8 . **NOTE:**

Cap the coolant hose to minimize coolant loss.

Disconnect the coolant hose.

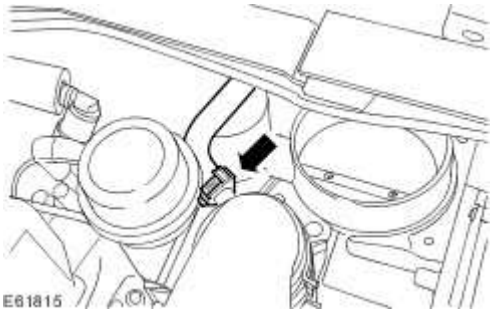

9 . **NOTE:**

Cap the coolant hose to minimize coolant loss.

Remove the throttle body.

- Disconnect the coolant hose.

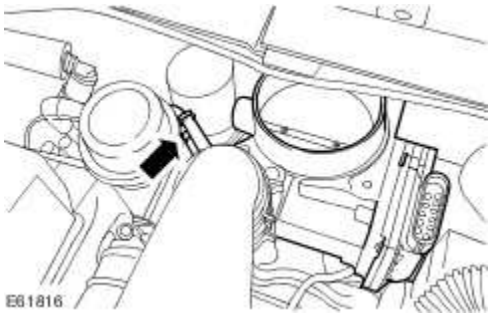

10 . Remove and discard the gasket.

www.JagDocs.com

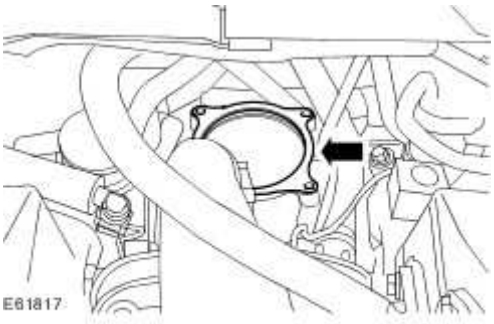

Installation

1. **CAUTION: Do not attempt to clean the throttle body. The bore and the throttle plate has a special coating applied during manufacture which should not be removed.**

To install, reverse the removal procedure.

- Install a new gasket.

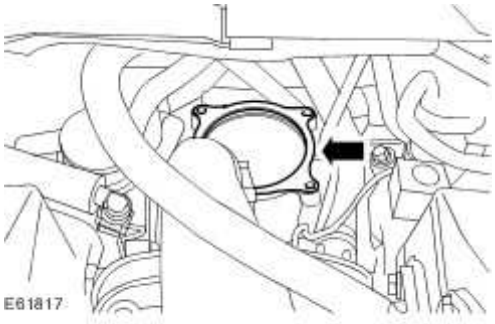

2 . Tighten to 10 Nm.

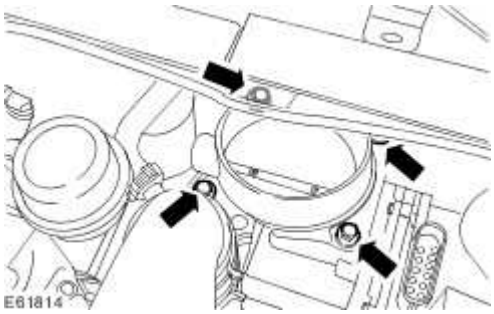

3 . Check and top up the cooling system as required.

www.JagDocs.com

Throttle Body - Vehicles Without: Supercharger, VIN Range: G00442->G45703 (19.70.04)

Removal

1. **WARNING: When relieving cooling system pressure, cover the expansion tank cap with a thick cloth to prevent the possibility of scalding. Failure to follow these instructions may result in personal injury.**

   Remove the expansion tank cap to relieve the cooling system pressure.

2. **CAUTION: Do not attempt to clean the throttle body. The bore and the throttle plate has a special coating applied during manufacture which should not be removed.**

   Remove the air outlet pipe.
   For additional information, refer to Air Cleaner Outlet Pipe (19.10.31)

3 . Disconnect the electrical connector.

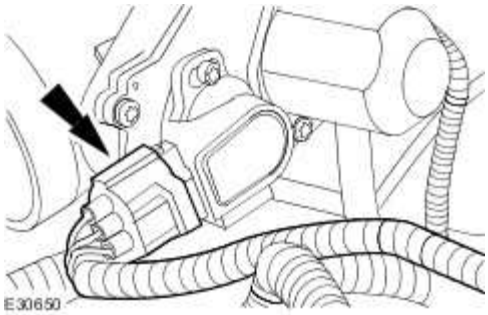

4 . Disconnect the electrical connector.

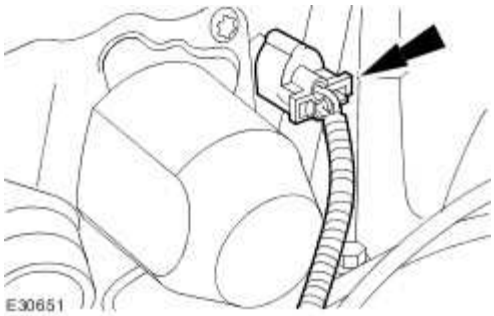

5 . Detach the throttle body.

- Remove the retaining bolts.

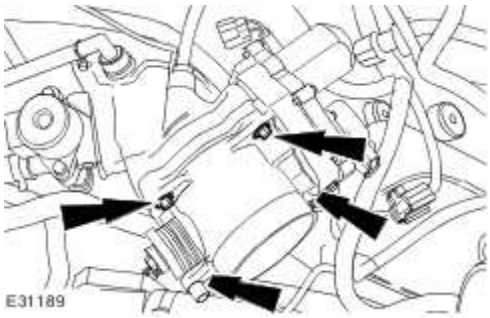

6 . Remove and discard the gasket.

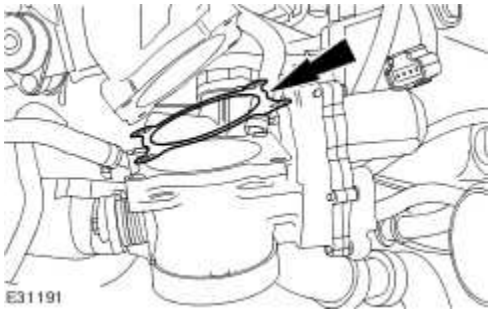

7 . **NOTE:**

Cap the coolant hoses to minimize coolant loss.

Remove the throttle body.

- Detach the coolant hoses from the throttle body.

www.JagDocs.com

Installation

1. **CAUTION: Do not attempt to clean the throttle body. The bore and the throttle plate has a special coating applied during manufacture which should not be removed.**

To install, reverse the removal procedure.

- Install a new throttle body gasket.
- Tighten to 10 Nm.

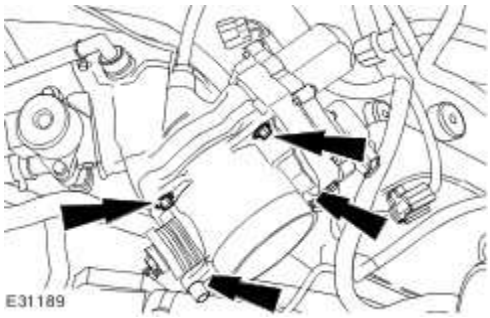

2 . Check and top up the cooling system.

Throttle Body - Vehicles Without: Supercharger, VIN Range: G45704->G99999 (19.70.04)

Removal

1. **WARNING: When relieving cooling system pressure, cover the expansion tank cap with a thick cloth to prevent the possibility of scalding. Failure to follow these instructions may result in personal injury.**

   Remove the expansion tank cap to relieve the cooling system pressure.

2. **CAUTION: Do not attempt to clean the throttle body. The bore and the throttle plate has a special coating applied during manufacture which should not be removed.**

   Remove the air outlet tube.
   For additional information, refer to Air Cleaner Outlet Pipe (19.10.31)

3. Disconnect the throttle body electrical connector.

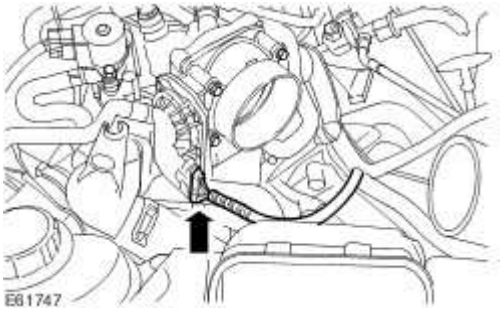

4. Detach the throttle body.

www.JagDocs.com

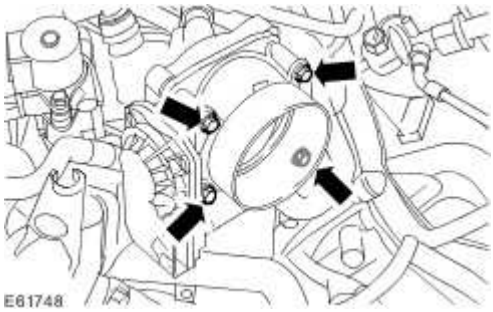

5 . Remove and discard the gasket.

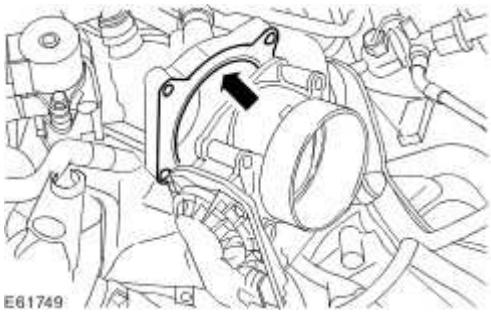

6 . **NOTE:**

Cap the coolant hoses to minimize coolant loss.

Remove the throttle body.

- Detach the coolant hoses from the throttle body.

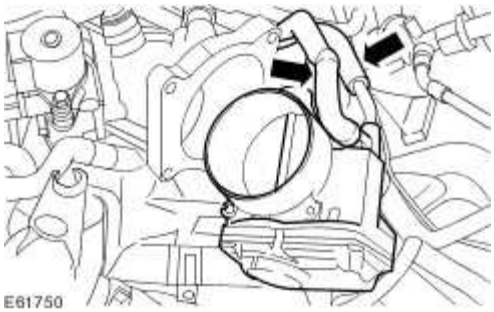

Installation

1. **CAUTION: Do not attempt to clean the throttle body. The bore and the throttle plate has a special coating applied during manufacture which should not be removed.**

To install, reverse the removal procedure.

- Install the new throttle body gasket.
- Tighten to 10 Nm.

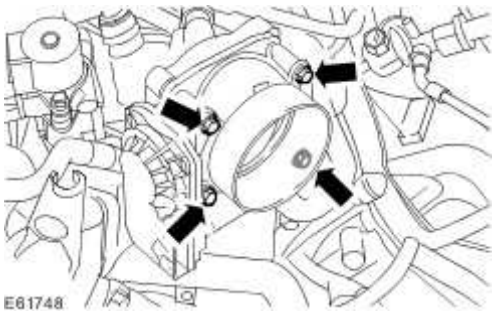

2 . Check and top up the cooling system.

www.JagDocs.com

Specifications

Torque Specifications

Description	Nm	lb-ft	lb-in
High-pressure fuel supply line unions	A	–	–
High-pressure fuel supply line support bracket retaining nut	10	–	89
Fuel injector retaining bolts	10	–	89
Fuel injector high pressure fuel inlet adaptor union	42	31	–
Fuel injection diverter rail retaining bolts	23	16	–
Fuel injection supply manifold retaining bolts	23	16	–
Fuel injection supply manifold support bracket retaining bolts	23	16	–
Fuel pump retaining bolts	23	16	–
Fuel injection pump belt rear cover retaining bolts	7	–	62
Camshaft rear pulley retaining bolt	A	–	–
Fuel injection pump belt tensioner retaining bolt	25	18	–
Fuel injection pump pulley retaining nut	50	37	–
Fuel injection pump high pressure fuel outlet adaptor union	37	27	–
Exhaust gas recirculation (EGR) valve retaining bolts	10	–	89
Intake manifold retaining nuts	15	11	–

A = refer to the procedure for the correct torque sequence

Fuel Injection Component Cleaning

WARNING: Do not carry out any repairs to the fuel system with the engine running. The fuel pressure within the system can be as high as 2000 bar. Failure to follow this instruction may result in personal injury.

WARNING: Do not smoke or carry lighted tobacco or open flame of any type when working on or near any fuel related components. Highly flammable vapors are always present and may ignite. Failure to follow these instructions may result in personal injury.

WARNING: If fuel contacts the eyes, flush the eyes with cold water or eyewash solution and seek immediate medical attention.

WARNING: Place the vehicle in a well ventilated, quarantined area and arrange ' No Smoking/Petrol Fumes' signs about the vehicle.

WARNING: Wait at least 30 seconds after the engine stops before commencing any repair to the high-pressure fuel injection system. Failure to follow this instruction may result in personal injury.

WARNING: Wash hands thoroughly after fuel handling, as prolonged contact may cause irritation. Should irritation develop, seek medical attention.

WARNING: Do not carry or operate cellular phones when working on or near any fuel related components. Highly flammable vapors are always present and may ignite. Failure to follow these instructions may result in personal injury.

CAUTION: Before using the cleaning fluid, protect all electrical components and connectors with lint-free non-flocking material.

CAUTION: Make sure that all parts removed from the vehicle are placed on the lint-free non-flocking material.

www.JagDocs.com

CAUTION: Make sure that any protective clothing worn is clean and made from lint-free non-flocking material.

CAUTION: Make sure that clean non-plated tools are used. Clean tools using a new brush that will not lose its bristles and fresh cleaning fluid, prior to starting work on the vehicle.

CAUTION: Use a steel topped workbench and cover it with clean, lint-free non-flocking material.

CAUTION: Make sure the workshop area in which the vehicle is being worked on is as clean and as dust free as possible. Foreign matter from work on clutches, brakes or from machining or welding operations can contaminate the fuel system and may result in later malfunction.

NOTE:

Pneumatic vacuum gun

1. Using a new brush that will not lose its bristles, brush cleaning fluid onto the components being removed and onto the surrounding area.

2. Using a pneumatic vacuum gun, remove all traces of cleaning fluid and foreign material.

3. Dispose of any used cleaning fluid and the brush after completing the repair.

Fuel Charging and Controls

High Pressure Fuel Injection Components

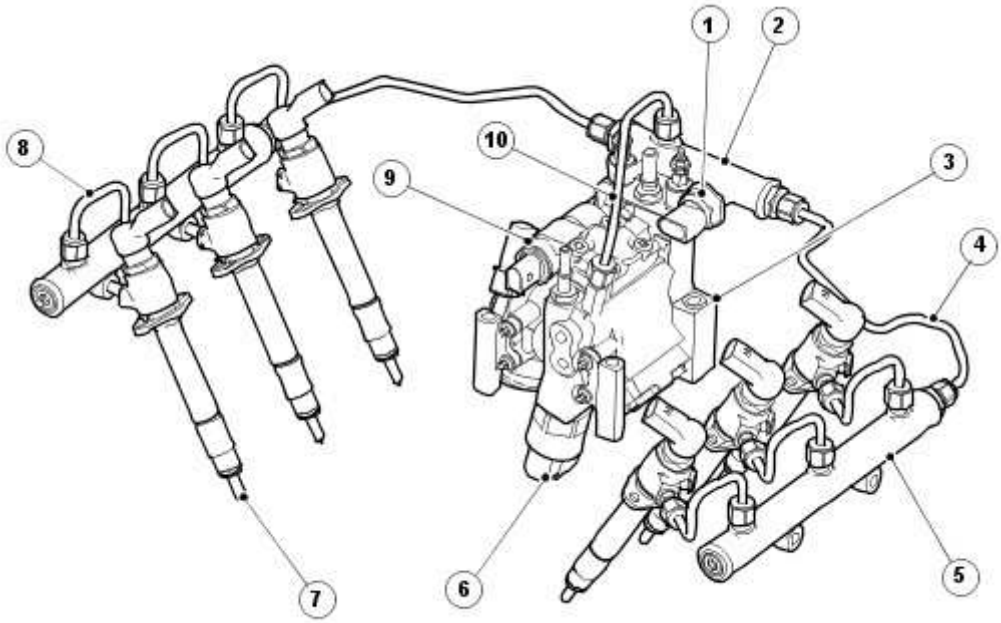

E52629

Item	Part Number	Description
1	—	Fuel rail pressure pressure sensor
2	—	Fuel injection diverter rail
3	—	Fuel injection pump
4	—	High-pressure fuel supply line (fuel injection diverter rail to fuel injection supply manifold)
5	—	Fuel injection supply manifold
6	—	Pressure control valve (PCV)
7	—	Fuel injector
8	—	High-pressure fuel supply line (fuel injection supply manifold to fuel injector)

www.JagDocs.com

9	—	Volume control valve (VCV)
10		High-pressure fuel supply line (fuel injection pump to fuel injection diverter rail)

Fuel Injection Pump

The fuel injection pump is located at the rear of the engine between the cylinder heads and is driven by a toothed drive belt attached to a pulley on the left hand exhaust camshaft. The fuel injection pump is not timed to the engine. The fuel injection pump assembly contains two different types of pump, a transfer pump and a high pressure pump.

Fuel is supplied to the fuel injection pump by an electric fuel pump in the fuel tank via the fuel filter. Fuel then passes through the transfer pump to the high pressure pump. The amount of fuel supplied to the high pressure pump from the transfer pump is determined by the volume control valve (VCV) which is controlled using a pulse width modulated (PWM) signal from the engine control module (ECM). The VCV makes it possible to match the high pressure pump delivery to the requirements of the engine from the low pressure side. This keeps the amount of fuel flowing back to the main supply line to a minimum and reduces the load on the high pressure pump, improving engine efficiency.

The high pressure pump contains three radial pumping elements, capable of generating a fuel pressure of up to 1650 Bar (23,200 lb ft), connected together which leads via a pressure control valve (PCV) to the high pressure outlet of the pump.

The PCV is located between the high pressure and the fuel return line outlet of the pump. The PCV is controlled using a PWM signal from the ECM, and controls the fuel pressure in the fuel diverter rail and fuel injection supply manifolds. Opening of the PCV diverts fuel to the fuel return line and back to the fuel filter. At the same time as the PCV opens to reduce fuel pressure, the ECM closes the VCV to reduce the amount of fuel delivered to the high pressure pump. When the engine is stopped the VCV closes and the PCV opens, this relieves the pressure in the system and returns the fuel to the main fuel supply line.

The PCV and VCV must not be disassembled from fuel injection pump. If either of these components are found to be faulty, the fuel injection pump must be replaced.

CAUTION: If any of the high pressure fuel pipe retaining nuts are loosened, the high pressure fuel pipe it is installed to must be renewed. Failure to follow this instruction may allow metal fragments to enter the fuel system and result in damage to the fuel system components or engine.

CAUTION: The high pressure fuel line olive end deforms and work hardens during installation. If any of the high pressure fuel pipe retaining nuts are loosened, the high pressure fuel

pipe it is installed to must be renewed. Failure to follow this instruction may allow the high-pressure fuel line to leak.

Fuel Injection Supply Manifold

The fuel injection supply manifolds are reservoirs for the pressurized fuel that is produced by the fuel pump. The two fuel injection supply manifolds are connected by high pressure fuel pipes to a fuel injection diverter rail mounted on the fuel injection pump. The fuel injection diverter rail also incorporates a pressure sensor so that the ECM can monitor/adjust the pressure of the fuel to be injected into the each cylinder. The fuel injection diverter rail and the pressure sensor are serviced as an assembly and must not under any circumstances be disassembled.

www.JagDocs.com

Fuel Injector

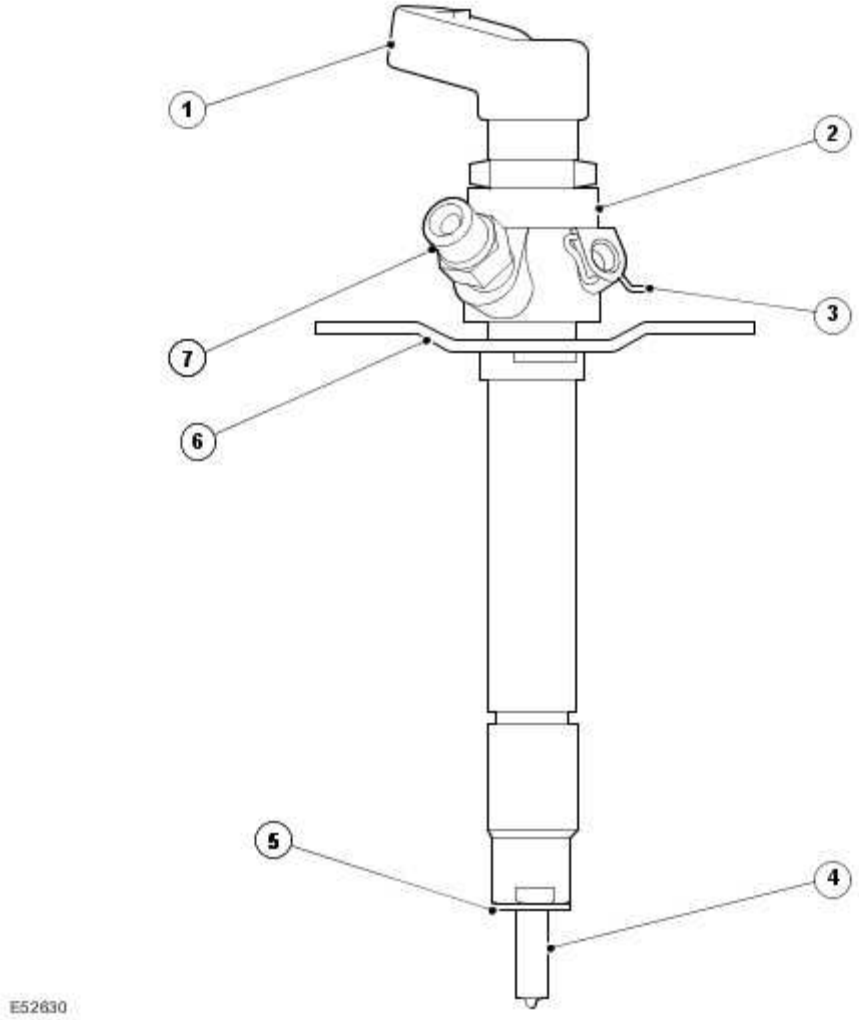

Item	Part Number	Description
1	—	Electrical connector
2	—	Fuel injector body
3	—	Fuel injector leak-off retaining clip
4	—	Fuel injector nozzle

5	—	Fuel injector sealing washer
6		Fuel injector retaining clamp
7		High pressure fuel line connection

CAUTION: If any of the high pressure fuel pipe retaining nuts are loosened, the high pressure fuel pipe it is installed to must be renewed. Failure to follow this instruction may allow metal fragments to enter the fuel system and result in damage to the fuel system components or engine.

CAUTION: The high pressure fuel line olive end deforms and work hardens during installation. If any of the high pressure fuel pipe retaining nuts are loosened, the high pressure fuel pipe it is installed to must be renewed. Failure to follow this instruction may allow the high-pressure fuel line to leak.

www.JagDocs.com

Fuel Injectors

The fuel injectors are operated electrically by the engine control module (ECM) and inject a precise amount of fuel into the combustion chamber at the required time.

The injectors have been designed to:

allow pilot and main injections with short intervals between each injection.

be fully electrically controlled.

Fuel Filter

The diesel fuel filter is located on the left-hand side of the engine compartment. Incorporated in to the fuel filter housing is a bimetallic valve which will start to close at 30°C (86°F) and will fully close at 50°C (122°F).

When the bimetallic valve is open, **warm** fuel is directed in to the fuel filter to prevent waxing. When the fuel temperature increases, the bimetallic valve closes, diverting fuel through the under-floor fuel cooler which then lowers the fuel temperature before returning the fuel back to the fuel filter. This allows fuel to be supplied to the fuel injection pump at the optimum inlet temperature of between -30°C to 80°C.

Fuel Charging and Controls

Principle of operation

Common rail diesel

The 2.7L fuel injection system is a common-rail design, running at the high-pressures (up to 1,650 bar or 23,930 lb/in²) typical of such systems.

The fuel is drawn from the fuel tank by an electric fuel pump module and delivered to the transfer pump side of a fuel injection pump driven by the engine. For additional information on the fuel injection pump,
Fuel Charging and Controls

The fuel volume control valve (FVCV) regulates the amount of fuel supplied to the high-pressure side of the fuel injection pump, while the fuel pressure control valve (FPCV) regulates the pressure.

The high-pressure fuel is delivered to the fuel rail where it is stored, ready for use by the fuel injectors.

The fuel injectors are Piezo type, and are controlled by the engine control module (ECM) from inputs from the engine management sensors.

The fuel injectors operate in stages, giving a pilot injection before the main injection to reduce detonation noise and help improve the efficiency of the engine.

For additional information,
Fuel Charging and Controls

Overview

There are changes to the engine management system (EMS) for 2006 my, the most obvious of which will be the change to 7-digit diagnostic trouble codes (DTCs) from the familiar 5-digit.

Refer to the DTC index in this section for guidance on how to use these codes with the Jaguar approved diagnostic system or a scan tool.

Inspection and Verification

WARNING: Do NOT carry out any work on the fuel system with the engine running. The fuel pressure within the system can be as high as 1650 bar (23,930 lb/in²). Failure to follow this instruction may result in personal injury.

WARNING: Eye protection must be worn at all times when working on or near any fuel related components. Failure to follow this instruction may result in personal injury.

WARNING: This procedure involves fuel handling. Be prepared for fuel spillage at all times and always observe fuel handling precautions. Failure to follow this instruction may result in personal injury.

WARNING: After carrying out repairs, the fuel system must be checked visually for leaks. This should be done after the engine has been run, but with the engine switched OFF. Failure to follow this instruction may result in personal injury.

WARNING: If taken internally, DO NOT induce vomiting. Seek immediate medical attention. Failure to follow this instruction may result in personal injury.

WARNING: If fuel contacts the eyes, flush the eyes with cold water or eyewash solution and seek medical attention. Failure to follow this instruction may result in personal injury.

WARNING: Wash hands thoroughly after handling, as prolonged contact may cause irritation. Should irritation develop, seek medical attention. Failure to follow this instruction may result in personal injury.

CAUTION: Before disconnecting any part of the system, it is imperative that all dust, dirt and debris is removed from around components to prevent ingress of foreign matter into the fuel system. Failure to follow this instruction may result in damage to the vehicle.

www.JagDocs.com

CAUTION: The fuel pipes between the injectors and the rail must be discarded after each use, and new pipes installed. Failure to follow this instruction may result in damage to the vehicle.

CAUTION: It is essential that absolute cleanliness is observed when working with these components. Always install blanking plugs to any open orifices or lines. Failure to follow this instruction may result in damage to the vehicle.

CAUTION: Make sure that the workshop area in which the vehicle is being worked on is as clean and dust-free as possible. Areas in which work on clutches, brakes or where welding or machining are carried out are not suitable in view of the risk of contamination to the fuel system. Failure to follow this instruction may result in damage to the vehicle.

CAUTION: Make sure that any protective clothing worn is clean and made from lint-free non-flocking material. Failure to follow this instruction may result in damage to the vehicle.

CAUTION: Make sure that any protective gloves worn are new and are of the non-powdered latex type. Failure to follow this instruction may result in damage to the vehicle.

CAUTION: Make sure that clean, non-plated tools are used. Clean tools using a new brush that will not lose it's bristles and fresh cleaning fluid prior to starting work on the vehicle. Failure to follow this instruction may result in damage to the vehicle.

CAUTION: Use a steel-topped work bench and cover it with clean, lint-free, non-flocking material. Failure to follow this instruction may result in damage to the vehicle.

CAUTION: When probing connectors to take measurements in the course of the pinpoint tests, use the adaptor kit, part number 3548-1358-00. Failure to follow this instruction may result in damage to the vehicle.

NOTE:

This section contains references to Parameter Identifiers (PIDs). Where the Jaguar approved diagnostic system is not available, a scantool may be used to access these PIDs, all of which give information, and some of which can be used to both read information and to activate components. The format of the information may vary, depending on the tool used.

NOTE:

When performing voltage or resistance tests, always use a digital multimeter (DMM) accurate to 3 decimal places, and with an up-to-date calibration certificate. When testing resistance, always take the resistance of the DMM leads into account.

NOTE:

Check and rectify basic faults before beginning diagnostic routines involving pinpoint tests.

NOTE:

If diagnostic trouble codes (DTCs) are recorded and the symptom is not present when performing the pinpoint tests, an intermittent concern may be the cause. Always check for loose connections and corroded terminals.

1 . Verify the customer concern.

2 . Confirm which, if any, warning lights and/or messages were displayed on the instrument cluster.

3 . Visually inspect for obvious signs of mechanical or electrical damage.

Mechanical	Electrical
Fuel level	Glow plug indicator
Contaminated fuel	Inertia fuel shutoff (IFS) switch
Fuel supply line(s)	Fuel pump module

www.JagDocs.com

Fuel return line(s) High-pressure fuel supply line(s) Fuel tank filler pipe Fuel leak(s) Fuel tank Fuel filler cap Fuel filter Push connect fittings Fuel rail Fuel injection pump Exhaust gas recirculation (EGR) system	Sensor(s) Engine control module (ECM) Fuel volume control valve (FVCV) Fuel pressure control valve (FPCV) Fuel rail pressure (FRP) sensor Fuel temperature sensor Fuel injector(s) EGR system

4 . If an obvious cause for an observed or reported concern is found, correct the cause (if possible) before proceeding to the next step.

5 . If the cause is not visually evident use the Jaguar approved diagnostic system or a scan tool to retrieve the fault codes before proceeding to the DTC index, or the symptom chart if no DTCs are set.

Symptom Chart

Symptom	Possible source	Action
Engine cranks, but does not start	IFS switch Low/contaminated fuel Air ingress Low pressure circuit fault Fuel pump module fault Blocked fuel filter FVCV blocked/contaminated FPCV blocked/contaminated Fuel injection pump failure	Check that the inertia switch has not tripped. Check the fuel level/condition, GO to Pinpoint Test G552275p3. Check the low pressure circuit for leaks/damage, Fuel Tank and Lines - 2.7L Diesel Check the fuel pump module operation, GO to Pinpoint Test G552275p2. Check the fuel filter, GO to Pinpoint Test G552275p4. Check the FVCV and FPCV, GO to Pinpoint Test G552275p5. GO to Pinpoint Test G552275p7. Check the fuel injection pump, Fuel Injection Pump For CKP sensor cicuit

	Crankshaft position (CKP) sensor ECM fault	tests, Electronic Engine Controls Refer to the warranty policy and procedures manual if an ECM is suspect.
Difficult to start	Low/Contaminated fuel Fuel pump module fault Air ingress Low pressure circuit fault Blocked fuel filter FVCV blocked/contaminated FPCV blocked/contaminated Low pressure circuit fault EGR valve(s) fault	Check the fuel level/condition, GO to Pinpoint Test G552275p3. Check the fuel pump module operation, GO to Pinpoint Test G552275p2. Check the low pressure circuit for leaks/damage, Fuel Tank and Lines - 2.7L Diesel Check the fuel filter, GO to Pinpoint Test G552275p4. Check the FVCV and FPCV, GO to Pinpoint Test G552275p5. GO to Pinpoint Test G552275p7. For EGR tests, Engine Emission Control
Rough idle	Low/Contaminated fuel Air ingress Low pressure circuit fault Blocked fuel filter FVCV blocked/contaminated FPCV blocked/contaminated EGR valve(s) fault	Check the fuel level/condition, GO to Pinpoint Test G552275p3. Check the low pressure circuit for leaks/damage, Fuel Tank and Lines - 2.7L Diesel Check the fuel filter, GO to Pinpoint Test G552275p4. Check the FVCV and FPCV, GO to Pinpoint Test G552275p5. GO to Pinpoint Test G552275p7. For EGR tests, Engine Emission Control
Lack of power when accelerating	Air intake circuit fault Catalyst converter blocked Low fuel pressure EGR valve(s) fault Turbocharger(s) fault	Check the air intake circuit, Intake Air Distribution and Filtering Check for a blocked catalytic converter, Exhaust System Check the fuel pressure PID, GO to Pinpoint Test G552275p6. For EGR tests, Engine Emission Control For turbocharger tests, Turbocharger
Engine stops/stalls	Low/Contaminated fuel	Check the fuel level/condition, GO to Pinpoint Test G552275p3.

www.JagDocs.com

	Air ingress Low pressure circuit fault FVCV blocked/contaminated FPCV blocked/contaminated High pressure fuel leak EGR valve(s) fault	Check the low pressure circuit for leaks/damage, Fuel Tank and Lines - 2.7L Diesel Check the FVCV and FPCV, GO to Pinpoint Test G552275p5. GO to Pinpoint Test G552275p7. Check for fuel system leaks, GO to Pinpoint Test G552275p1. For EGR tests, Engine Emission Control
Engine judders	Low/Contaminated fuel Air ingress Low pressure circuit fault Fuel metering valve blocked/contaminated FVCV blocked/contaminated FPCV blocked/contaminated High pressure fuel leak Fuel injection pump fault	Check the fuel level/condition, GO to Pinpoint Test G552275p3. Check the low pressure circuit for leaks/damage, Fuel Tank and Lines - 2.7L Diesel Check the FVCV and FPCV, GO to Pinpoint Test G552275p5. GO to Pinpoint Test G552275p7. Check for fuel system leaks, GO to Pinpoint Test G552275p1. Check the fuel injection pump, Fuel Injection Pump
Excessive fuel consumption	Low pressure circuit fault FVCV blocked/contaminated FPCV blocked/contaminated Fuel temperature sensor leak High pressure fuel leak Injector(s) failure EGR valve(s) fault	Check the low pressure circuit for leaks/damage, Fuel Tank and Lines - 2.7L Diesel Check the FVCV and FPCV, GO to Pinpoint Test G552275p5. GO to Pinpoint Test G552275p7. Check the fuel temperature sensor, fuel injection pump, etc for leaks, GO to Pinpoint Test G552275p1. Check for injector DTCs. For EGR tests, Engine Emission Control

DTC index

NOTE:

Generic scan tools may not read the codes listed, or may read only 5-digit codes. Match the 5 digits from the scan tool to the first 5 digits of the 7-digit code listed to identify the fault (the last

2 digits give extra information read by the manufacturer-approved diagnostic system).

NOTE:

For a full list of powertrain DTCs,
Electronic Engine Controls

DTC	Condition	Possible source	Action
P000100	Fuel volume control valve (FVCV) control circuit open	FVCV circuit: high resistance FVCV circuit: short circuit to ground FVCV failure ECM failure	For FVCV tests, GO to Pinpoint Test G552275p5. Refer to the warranty policy and procedures manual if an ECM is suspect.
P000200	Fuel volume control valve (FVCV) circuit range/performance	FVCV circuit: high resistance FVCV circuit: short circuit to ground FVCV circuit: short circuit to power FVCV failure ECM failure	For FVCV tests, GO to Pinpoint Test G552275p5. Refer to the warranty policy and procedures manual if an ECM is suspect.
P000300	Fuel volume control valve (FVCV) control circuit low	FVCV circuit: high resistance FVCV circuit: short circuit to ground FVCV failure ECM failure	For FVCV tests, GO to Pinpoint Test G552275p5. Refer to the warranty policy and procedures manual if an ECM is suspect.
P000400	Fuel volume control valve (FVCV) control circuit high	FVCV circuit: short circuit to power FVCV failure ECM failure	For FVCV tests, GO to Pinpoint Test G552275p5. Refer to the warranty policy and procedures manual if an ECM is suspect.

www.JagDocs.com

P008700	Fuel rail/system pressure too low	Pressure too low Fuel rail pressure (FRP) sensor circuit failure Fuel rail pressure (FRP) sensor failure	For FRP tests, GO to Pinpoint Test G552275p6.
P008800	Fuel rail/system pressure too high	Pressure too high Fuel rail pressure (FRP) sensor circuit failure Fuel rail pressure (FRP) sensor failure	For FRP tests, GO to Pinpoint Test G552275p6.
P009000	Fuel pressure control valve (FPCV) control circuit open	FPCV circuit: high resistance FPCV circuit: short circuit to ground FPCV failure ECM failure	For FPCV tests, GO to Pinpoint Test G552275p7. Refer to the warranty policy and procedures manual if an ECM is suspect.
P009100	Fuel pressure control valve (FPCV) control circuit low	FPCV circuit: high resistance FPCV circuit: short circuit to ground FPCV failure ECM failure	For FPCV tests, GO to Pinpoint Test G552275p7. Refer to the warranty policy and procedures manual if an ECM is suspect.
P009200	Fuel pressure control valve (FPCV) control circuit high	FPCV circuit: short circuit to power FPCV failure ECM failure	For FPCV tests, GO to Pinpoint Test G552275p7. Refer to the warranty policy and procedures manual if an ECM is suspect.
P018100	Fuel temperature sensor circuit range/performance	Fuel temperature sensor circuit: high resistance Fuel temperature sensor circuit: short circuit to ground Fuel temperature sensor circuit: short circuit to	For fuel temperature sensor and circuit tests, Electronic Engine Controls Refer to the warranty policy and procedures manual if an ECM is suspect.

		power Fuel temperature sensor failure ECM failure	
P018200	Fuel temperature sensor circuit low input	Fuel temperature sensor circuit: high resistance Fuel temperature sensor circuit: short circuit to ground Fuel temperature sensor circuit: short circuit to power Fuel temperature sensor failure ECM failure	For fuel temperature sensor and circuit tests, Electronic Engine Controls Refer to the warranty policy and procedures manual if an ECM is suspect.
P018300	Fuel temperature sensor circuit high input	Fuel temperature sensor circuit: high resistance Fuel temperature sensor circuit: short circuit to ground Fuel temperature sensor circuit: short circuit to power Fuel temperature sensor failure ECM failure	For fuel temperature sensor and circuit tests, Electronic Engine Controls Refer to the warranty policy and procedures manual if an ECM is suspect.
P018400	Fuel temperature sensor circuit intermittent	Fuel temperature sensor circuit: high resistance Fuel temperature sensor circuit: short circuit to ground Fuel temperature sensor circuit: short circuit to power Fuel temperature sensor failure	For fuel temperature sensor and circuit tests, Electronic Engine Controls Refer to the warranty policy and procedures manual if an ECM is suspect.

www.JagDocs.com

		ECM failure	
P019100	Fuel rail pressure (FRP) sensor circuit range/performance	FRP sensor circuit: high resistance FRP sensor circuit: short circuit to ground FRP sensor circuit: short circuit to power FRP sensor failure ECM failure	For FRP sensor tests, GO to Pinpoint Test G552275p6. Refer to the warranty policy and procedures manual if an ECM is suspect.
P019200	Fuel rail pressure (FRP) sensor circuit low input	FRP sensor circuit: high resistance FRP sensor circuit: short circuit to ground FRP sensor circuit: short circuit to power FRP sensor failure ECM failure	For FRP sensor tests, GO to Pinpoint Test G552275p6. Refer to the warranty policy and procedures manual if an ECM is suspect.
P019300	Fuel rail pressure (FRP) sensor circuit high input	FRP sensor circuit: high resistance FRP sensor circuit: short circuit to ground FRP sensor circuit: short circuit to power FRP sensor failure ECM failure	For FRP sensor tests, GO to Pinpoint Test G552275p6. Refer to the warranty policy and procedures manual if an ECM is suspect.
P019400	Fuel rail pressure (FRP) sensor circuit intermittent/erratic	FRP sensor circuit: high resistance FRP sensor circuit: short circuit to ground FRP sensor circuit: short circuit to power FRP sensor failure ECM failure	For FRP sensor tests, GO to Pinpoint Test G552275p6. Refer to the warranty policy and procedures manual if an ECM is suspect.

P020100	Fuel injector high-resistance, cylinder 1	Fuel injector circuit: high resistance Fuel injector circuit: short circuit to ground Fuel injector circuit: short circuit to power Fuel injector failure ECM failure	For cylinder 1 fuel injector tests, GO to Pinpoint Test G552275p8. Refer to the warranty policy and procedures manual if an ECM is suspect.
P020200	Fuel injector high-resistance, cylinder 2	Fuel injector circuit: high resistance Fuel injector circuit: short circuit to ground Fuel injector circuit: short circuit to power Fuel injector failure ECM failure	For cylinder 2 fuel injector tests, GO to Pinpoint Test G552275p9. Refer to the warranty policy and procedures manual if an ECM is suspect.
P020300	Fuel injector high-resistance, cylinder 3	Fuel injector circuit: high resistance Fuel injector circuit: short circuit to ground Fuel injector circuit: short circuit to power Fuel injector failure ECM failure	For cylinder 3 fuel injector tests, GO to Pinpoint Test G552275p10. Refer to the warranty policy and procedures manual if an ECM is suspect.
P020400	Fuel injector high-resistance, cylinder 4	Fuel injector circuit: high resistance Fuel injector circuit: short circuit to ground Fuel injector circuit: short circuit to power Fuel injector failure ECM failure	For cylinder 4 fuel injector tests, GO to Pinpoint Test G552275p11. Refer to the warranty policy and procedures manual if an ECM is suspect.

www.JagDocs.com

P020500	Fuel injector high-resistance, cylinder 5	Fuel injector circuit: high resistance Fuel injector circuit: short circuit to ground Fuel injector circuit: short circuit to power Fuel injector failure ECM failure	For cylinder 5 fuel injector tests, GO to Pinpoint Test G552275p12. Refer to the warranty policy and procedures manual if an ECM is suspect.
P020600	Fuel injector high-resistance, cylinder 6	Fuel injector circuit: high resistance Fuel injector circuit: short circuit to ground Fuel injector circuit: short circuit to power Fuel injector failure ECM failure	For cylinder 6 fuel injector tests, GO to Pinpoint Test G552275p13. Refer to the warranty policy and procedures manual if an ECM is suspect.
P020A00	Fuel injection timing, cylinder 1	Fuel injector circuit: high resistance Fuel injector circuit: short circuit to ground Fuel injector circuit: short circuit to power Fuel injector failure ECM failure	For cylinder 1 fuel injector tests, GO to Pinpoint Test G552275p8. Refer to the warranty policy and procedures manual if an ECM is suspect.
P020B00	Fuel injection timing, cylinder 2	Fuel injector circuit: high resistance Fuel injector circuit: short circuit to ground Fuel injector circuit: short circuit to power Fuel injector failure ECM failure	For cylinder 2 fuel injector tests, GO to Pinpoint Test G552275p9. Refer to the warranty policy and procedures manual if an ECM is suspect.

P020C00	Fuel injection timing, cylinder 3	Fuel injector circuit: high resistance Fuel injector circuit: short circuit to ground Fuel injector circuit: short circuit to power Fuel injector failure ECM failure	For cylinder 3 fuel injector tests, GO to Pinpoint Test G552275p10. Refer to the warranty policy and procedures manual if an ECM is suspect.
P020D00	Fuel injection timing, cylinder 4	Fuel injector circuit: high resistance Fuel injector circuit: short circuit to ground Fuel injector circuit: short circuit to power Fuel injector failure ECM failure	For cylinder 4 fuel injector tests, GO to Pinpoint Test G552275p11. Refer to the warranty policy and procedures manual if an ECM is suspect.
P020E00	Fuel injection timing, cylinder 5	Fuel injector circuit: high resistance Fuel injector circuit: short circuit to ground Fuel injector circuit: short circuit to power Fuel injector failure ECM failure	For cylinder 5 fuel injector tests, GO to Pinpoint Test G552275p12. Refer to the warranty policy and procedures manual if an ECM is suspect.
P020F00	Fuel injection timing, cylinder 6	Fuel injector circuit: high resistance Fuel injector circuit: short circuit to ground Fuel injector circuit: short circuit to power Fuel injector failure ECM failure	For cylinder 6 fuel injector tests, GO to Pinpoint Test G552275p13. Refer to the warranty policy and procedures manual if an ECM is suspect.

www.JagDocs.com

P026300	Fuel injector circuit, cylinder 1	Fuel injector circuit: range/performance Fuel injector failure	For cylinder 1 fuel injector tests, GO to Pinpoint Test G552275p8.
P026600	Fuel injector circuit, cylinder 2	Fuel injector circuit: range/performance Fuel injector failure	For cylinder 2 fuel injector tests, GO to Pinpoint Test G552275p9.
P026900	Fuel injector circuit, cylinder 3	Fuel injector circuit: range/performance Fuel injector failure	For cylinder 3 fuel injector tests, GO to Pinpoint Test G552275p10.
P027200	Fuel injector circuit, cylinder 4	Fuel injector circuit: range/performance Fuel injector failure	For cylinder 4 fuel injector tests, GO to Pinpoint Test G552275p11.
P027500	Fuel injector circuit, cylinder 5	Fuel injector circuit: range/performance Fuel injector failure	For cylinder 5 fuel injector tests, GO to Pinpoint Test G552275p12.
P027800	Fuel injector circuit, cylinder 6	Fuel injector circuit: range/performance Fuel injector failure	For cylinder 6 fuel injector tests, GO to Pinpoint Test G552275p13.
P062D00	Fuel injector driver circuit performance (right hand bank)	Injector(s) disconnected Injector circuit(s): high resistance, short circuit to ground, short circuit to power Injector failure ECM failure	Identify the fuel injector concerned from the DTC stored in the ECM. Refer to the relevant test for the code logged. Refer to the warranty policy and procedures manual if an ECM is suspect.
P062E00	Fuel injector driver circuit performance (left hand bank)	Injector(s) disconnected Injector circuit(s): high resistance, short circuit to ground, short circuit to power Injector failure ECM failure	Identify the fuel injector concerned from the DTC stored in the ECM. Refer to the relevant test for the code logged. Refer to the warranty policy and procedures manual if an ECM is suspect.
P120E00	Fuel rail pressure (FRP) sensor - excessive fuel	FRP sensor circuit: high resistance	For FRP sensor tests, GO to Pinpoint Test G552275p6. Refer to the warranty policy

	pressure variation	FRP sensor circuit: short circuit to ground FRP sensor failure ECM failure	and procedures manual if an ECM is suspect.
P120F00	Fuel rail pressure (FRP) regulator - fuel pressure low at start	FRP sensor circuit: high resistance FRP sensor circuit: short circuit to ground FRP sensor circuit: short circuit to power FRP sensor failure Restricted fuel line Fuel pump failure ECM failure	For FRP sensor tests, GO to Pinpoint Test G552275p6. Refer to the warranty policy and procedures manual if an ECM is suspect.
P150A00	Fuel injector circuit range/performance cylinder 1	Fuel injector disconnected Fuel injector harness wiring: high resistance, short circuit to ground, short circuit to power Fuel injector failure ECM failure	For cylinder 1 fuel injector tests, GO to Pinpoint Test G552275p8. Refer to the warranty policy and procedures manual if an ECM is suspect.
P150B00	Fuel injector circuit range/performance cylinder 2	Fuel injector disconnected Fuel injector harness wiring: high resistance, short circuit to ground, short circuit to power Fuel injector failure ECM failure	For cylinder 2 fuel injector tests, GO to Pinpoint Test G552275p9. Refer to the warranty policy and procedures manual if an ECM is suspect.
P150C00	Fuel injector circuit range/performance cylinder 3	Fuel injector disconnected Fuel injector harness wiring: high resistance, short	For cylinder 3 fuel injector tests, GO to Pinpoint Test G552275p10. Refer to the warranty policy and procedures manual if an

www.JagDocs.com

		circuit to ground, short circuit to power Fuel injector failure ECM failure	ECM is suspect.
P155400	Fuel injector circuit range/performance cylinder 4	Fuel injector disconnected Fuel injector harness wiring: high resistance, short circuit to ground, short circuit to power Fuel injector failure ECM failure	For cylinder 4 fuel injector tests, GO to Pinpoint Test G552275p11. Refer to the warranty policy and procedures manual if an ECM is suspect.
P155500	Fuel injector circuit range/performance cylinder 5	Fuel injector disconnected Fuel injector harness wiring: high resistance, short circuit to ground, short circuit to power Fuel injector failure ECM failure	For cylinder 5 fuel injector tests, GO to Pinpoint Test G552275p12. Refer to the warranty policy and procedures manual if an ECM is suspect.
P155600	Fuel injector circuit range/performance cylinder 6	Fuel injector disconnected Fuel injector harness wiring: high resistance, short circuit to ground, short circuit to power Fuel injector failure ECM failure	For cylinder 6 fuel injector tests, GO to Pinpoint Test G552275p13. Refer to the warranty policy and procedures manual if an ECM is suspect.
P228800	Injector control pressure too high - fuel pressure control valve (FPCV) minimum limit reached	Fuel injector control pressure: too high FPCV circuit fault FPCV failure Fuel pump module circuit: short circuit to power	For fuel pressure and fuel pump module circuit tests, Fuel Tank and Lines - 2.7L Diesel For FPCV and circuit tests, GO to Pinpoint Test G552275p7. For fuel injection pump, Fuel Injection Pump

		Fuel pump module failure Fuel injection pump failure	
P229000	Injector control pressure too low - fuel pressure control valve (FPCV) maximum limit reached	Fuel injector control pressure: too low Fuel line leak Fuel filter/system restriction FPCV circuit fault FPCV failure Fuel pump module circuit: short circuit to ground Fuel pump module failure Fuel injection pump failure	For fuel lines, fuel pressure and fuel pump module circuit tests, Fuel Tank and Lines - 2.7L Diesel For FPCV and circuit tests, GO to Pinpoint Test G552275p7. For fuel injection pump, Fuel Injection Pump
P229200	Injector control pressure erratic - fuel pressure control valve (FPCV) dynamic	Fuel injector control pressure: erratic FPCV circuit fault FPCV failure Fuel pump module circuit(s): high resistance, short circuit to ground, short circuit to power Fuel pump module failure Fuel injection pump failure	For fuel lines, fuel pressure and fuel pump module circuit tests, Fuel Tank and Lines - 2.7L Diesel For FPCV and circuit tests, GO to Pinpoint Test G552275p7. For fuel injection pump, Fuel Injection Pump

Pinpoint test

WARNING: Wait at least 30 seconds after the engine stops before commencing any repair to the high pressure fuel injection system. Failure to follow this instruction may result in personal injury.

www.JagDocs.com

WARNING: This procedure involves fuel handling. Be prepared for fuel spillage at all times and always observe fuel handling precautions. Failure to follow this instruction may result in personal injury.

CAUTION: It is essential that absolute cleanliness is observed when working with these components. Always install blanking plugs to any open orifices or lines. Failure to follow this instruction may result in damage to the vehicle.

CAUTION: When probing connectors to take measurements in the course of the pinpoint tests, use the adaptor kit, part number 3548-1358-00. Failure to follow this instruction may result in damage to the vehicle.

NOTE:

When performing voltage or resistance tests, always use a digital multimeter (DMM) accurate to 3 decimal places, and with an up-to-date calibration certificate. When testing resistance, always take the resistance of the DMM leads into account.

NOTE:

Check and rectify basic faults before beginning diagnostic routines involving pinpoint tests.

NOTE:

If DTCs are recorded and a fault is not present when performing the pinpoint tests, an intermittent concern may be the cause. Always check for loose connections and corroded terminals.

PINPOINT TEST G552275p1 : CHECK FOR FUEL SYSTEM LEAKS

G552275t1 : CHECK FOR FUEL SYSTEM LEAKS

1. Start and run the engine for five minutes. 2. Key off. 3. Inspect the fuel lines, pump, etc, in the engine bay for cracks/damage. 4. Raise and support the vehicle.

Lifting 5. Inspect the fuel lines for cracks/damage. 6. Check the integrity of the joints in the supply and return lines between the fuel tank and the fuel pump. 7. Carefully check around the fuel pipes, injectors and pump for evidence of leakage. 8. If there is evidence of a significant leak, clean the engine and repeat the test.

Is there any evidence of leakage?

-> Yes
RECTIFY the leak as necessary. Test the system for normal operation.

-> No
CHECK for other possible causes for the customer concern.

PINPOINT TEST G552275p2 : CHECK THE FUEL PUMP MODULE FUNCTION

G552275t2 : CHECK THE FUEL PUMP MODULE FUNCTION

1. After thoroughly cleaning around the connections, disconnect the inlet pipe from the fuel filter. 2. Position a suitable container beneath the fuel filter inlet pipe to collect fuel. 3. Key on, engine off (the pump should run for a short period, depending on temperature, etc). 4. Check that fuel is pumped from the fuel filter inlet pipe.

Is fuel pumped from the fuel filter inlet pipe?

-> Yes
CHECK the drive belt to the fuel injection pump.
Fuel Injection Pump Belt Check for DTCs. Test the system for normal operation.

-> No
CHECK the fuel pump module and circuit,
Fuel Tank and Lines - 2.7L Diesel

PINPOINT TEST G552275p3 : CHECK FOR CONTAMINATED FUEL

G552275t3 : CHECK FOR UNUSUAL ODOURS FROM THE FUEL FILLER

1. Gather as much information as possible from the owner/driver regarding refuelling practices. 2. Remove the fuel filler cap and check for unusual odours.

Are there any unusual odours from the fuel filler neck?

-> Yes
DRAIN the fuel tank and refill with fresh fuel. Install a new fuel filter.

www.JagDocs.com

Fuel Filter - 2.7L Diesel (19.25.02) Test the vehicle for normal operation.

-> No
GO to Pinpoint Test G552275t4.

G552275t4 : CHECK FOR WATER IN THE FUEL

1. After thoroughly cleaning around the connections, disconnect the inlet pipe from the fuel filter. 2. Position a suitable clear container beneath the fuel filter inlet pipe to collect fuel. 3. Key on, engine off (the pump should run for a short period, depending on temperature, etc. It may be necessary to turn the ignition on and off more than once to obtain the desired amount of fuel). 4. Collect approximately one liter of fuel. 5. Allow the fuel to stand for at least one minute. 6. Without disturbing the fuel, check for separation of the fuel into layers (a significant amount of water in the fuel will result in a clear separation between the two fluids, with the water being at the bottom).

Does the fuel show clear separation?

-> Yes
DRAIN the fuel tank and refill with fresh fuel. Install a new fuel filter.
Fuel Filter - 2.7L Diesel (19.25.02) Test the vehicle for normal operation.

-> No
CHECK for other contaminants in the fuel.

PINPOINT TEST G552275p4 : CHECK FOR BLOCKED FUEL FILTER

G552275t5 : CHECK THE FLOW OF FUEL THROUGH THE FILTER

1. After thoroughly cleaning around the connections, disconnect the fuel filter outlet pipe to the fuel injection pump. 2.

WARNING: During this test, fuel will flow backwards through the fuel filter because of the fuel cooler circuit.

Position a suitable container beneath the fuel filter outlet to collect fuel. 3. Key on, engine off (the pump should run for a short period, depending on temperature, etc).

Is there an unrestricted flow of fuel through the filter?

-> Yes
CHECK for DTCs, check for another cause of customer complaint.

-> No

INSTALL a new fuel filter.
Fuel Filter - 2.7L Diesel (19.25.02) Test the vehicle for normal operation.

PINPOINT TEST G552275p5 : FUEL VOLUME CONTROL VALVE AND CIRCUIT

G552275t6 : CHECK FOR POWER TO THE FVCV

1.

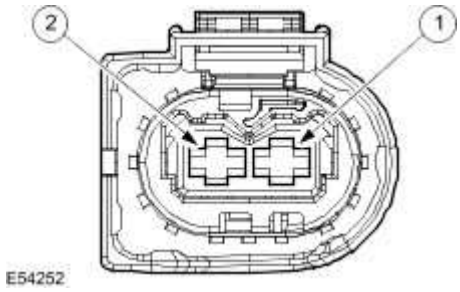

Circuit	Pin
Power	01
Signal from ECM	02

2.

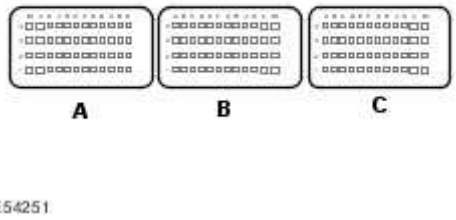

Circuit	Pin
Fuel volume control valve - signal	J4

3. Key off. 4. Disconnect the FVCV connector, C42. 5. Key on, engine off. 6. Measure the voltage between:

C42, harness side	Battery

www.JagDocs.com

Pin 01	Negative terminal

Is the voltage between 9 and 15 volts?

-> Yes
GO to Pinpoint Test G552275t12.

-> No
REPAIR the power circuit. For additional information, refer to the wiring diagrams. Clear any DTCs, test the system for normal operation.

G552275t7 : CHECK THE FVCV CONTROL CIRCUIT FOR SHORT CIRCUIT TO GROUND

1. Measure the resistance between:

C42, harness side	Battery
Pin 02	Negative terminal

Is the resistance greater than 100 Kohms?

-> Yes
GO to Pinpoint Test G552275t8.

-> No
GO to Pinpoint Test G552275t11.

G552275t8 : CHECK THE FVCV CONTROL CIRCUIT FOR SHORT CIRCUIT TO POWER

1. Measure the resistance between:

C42, harness side	Battery
Pin 02	Positive terminal

Is the resistance greater than 100 Kohms?

-> Yes
GO to Pinpoint Test G552275t9.

-> No
GO to Pinpoint Test G552275t12.

G552275t9 : CHECK THE FVCV CONTROL CIRCUIT FOR HIGH RESISTANCE

1. Key off. 2. Disconnect the ECM connector, C100. 3. Measure the resistance between:

C42, harness side	C100, harness side
Pin 02	J4

Is the resistance less than 10 ohms?

-> Yes
GO to Pinpoint Test G552275t10.

-> No
REPAIR the high-resistance circuit. For additional information, refer to the wiring diagrams. Clear any DTCs, test the system for normal operation.

G552275t10 : CHECK THE COMPONENT RESISTANCE

1. Measure the resistance between:

C42, component side	C42, component side
Pin 02	Pin 01

Is the resistance between 1.5 and 15 ohms?

-> Yes
An intermittent fault may be present in the wiring harness. Visually check for chaffed wires or other physical damage to the harness. If no fault is found in the circuit, suspect the following component(s): **-** FVCV connector **-** FVCV **-** ECM connector **-** ECM

-> No
INSTALL a new fuel injection pump.
Fuel Injection Pump Clear any DTCs, test the system for normal operation.

www.JagDocs.com

G552275t11 : CHECK WHETHER THE SHORT CIRCUIT TO GROUND IS IN THE HARNESS OR THE MODULE

1. Key off. 2. Disconnect the ECM connector, C100. 3. Key on, engine off. 4. Measure the resistance between:

C42, harness side	Battery
Pin 02	Negative terminal

Is the resistance greater than 100 Kohms?

-> Yes
Harness is OK. Suspect: **-** ECM

-> No
REPAIR the short circuit. For additional information, refer to the wiring diagrams. Clear any DTCs, test the system for normal operation.

G552275t12 : CHECK WHETHER THE SHORT CIRCUIT TO POWER IS IN THE HARNESS OR THE MODULE

1. Key off. 2. Disconnect the ECM connector, C100. 3. Key on, engine off. 4. Measure the resistance between:

C42, harness side	Battery
Pin 02	Positive terminal

Is the resistance greater than 100 Kohms?

-> Yes
Harness is OK. Suspect: **-** ECM

-> No
REPAIR the short circuit. For additional information, refer to the wiring diagrams. Clear any DTCs, test the system for normal operation.

PINPOINT TEST G552275p6 : FUEL RAIL PRESSURE (FRP) SENSOR AND CIRCUIT

G552275t13 : CHECK THE FRP SENSOR RETURN CIRCUIT

1.

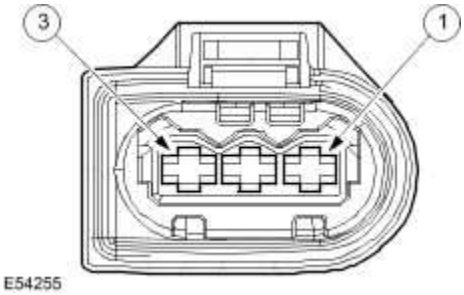

Circuit	Pin
Signal from ECM	01
Ground from ECM	02
Power from ECM	03

2.

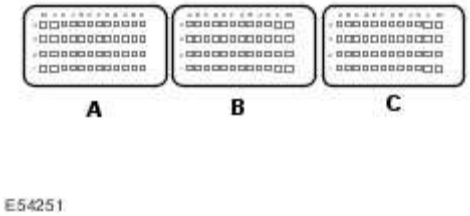

Circuit	Pin
FRP sensor - signal	D1
FRP sensor - ground	E2
FRP sensor - power	D2

3. Key off. 4. Disconnect the FRP sensor connector, C30. 5. Key on, engine off. 6. Measure the resistance between:

C30, harness side	Battery
Pin 02	Negative terminal

www.JagDocs.com

Is the resistance less than 10 ohms?

-> Yes
GO to Pinpoint Test G552275t14.

-> No
GO to Pinpoint Test G552275t26.

G552275t14 : CHECK THE POWER SUPPLY TO THE FRP

1. Measure the voltage between:

C30, harness side	Battery
Pin 03	Negative terminal

Is the voltage between 4.8 and 5.2 volts?

-> Yes
GO to Pinpoint Test G552275t15.

-> No
GO to Pinpoint Test G552275t23.

G552275t15 : CHECK THE FRP SIGNAL CIRCUIT FOR SHORT CIRCUIT TO GROUND

1. Measure the resistance between:

C30, harness side	Battery
Pin 01	Negative terminal

Is the resistance greater than 100 Kohms?

-> Yes
GO to Pinpoint Test G552275t16.

-> No

GO to Pinpoint Test G552275t19.

G552275t16 : CHECK THE FRP SIGNAL CIRCUIT FOR SHORT CIRCUIT TO POWER

1. Measure the resistance between:

C30, harness side	Battery
Pin 01	Positive terminal

Is the resistance greater than 100 Kohms?

-> Yes
GO to Pinpoint Test G552275t17.

-> No
GO to Pinpoint Test G552275t21.

G552275t17 : CHECK THE FRP SIGNAL CIRCUIT FOR SHORT CIRCUIT TO SENSOR POWER

1. Measure the resistance between:

C30, harness side	C30, harness side
Pin 01	Pin 03

Is the resistance greater than 100 Kohms?

-> Yes
GO to Pinpoint Test G552275t18.

-> No
GO to Pinpoint Test G552275t22.

G552275t18 : CHECK THE FRP SIGNAL CIRCUIT FOR HIGH RESISTANCE

1. Key off. 2. Disconnect the ECM connector, C100. 3. Measure the resistance between:

www.JagDocs.com

C30, harness side	C100, harness side
Pin 01	Pin D1

Is the resistance less than 10 ohms?

-> Yes
An intermittent fault may be present in the wiring harness. Visually check for chaffed wires or other physical damage to the harness. If no fault is found in the circuit, suspect the following component(s): **-** FRP connector **-** ECM connector **-** FRP **-** ECM

-> No
REPAIR the high resistance circuit. For additional information, refer to the wiring diagrams. Clear any DTCs, test the system for normal operation.

G552275t19 : CHECK FOR SIGNAL AND RETURN CIRCUITS SHORT CIRCUIT TO EACH OTHER

1. Key off. 2. Disconnect the ECM connector, C100. 3. Key on, engine off. 4. Measure the resistance between:

C30, harness side	C30, harness side
Pin 01	Pin 02

Is the resistance greater than 100 Kohms?

-> Yes
GO to Pinpoint Test G552275t20.

-> No
REPAIR the short circuit. For additional information, refer to the wiring diagrams. Clear any DTCs, test the system for normal operation.

G552275t20 : CHECK WHETHER THE SHORT CIRCUIT TO GROUND IS IN THE HARNESS OR THE MODULE

1. Measure the resistance between:

C30, harness side	Battery
Pin 01	Negative terminal

Is the resistance greater than 100 Kohms?

-> Yes
An intermittent fault may be present in the wiring harness. Visually check for chaffed wires or other physical damage to the harness. If no fault is found in the circuit, suspect the following component(s): **-** ECM

-> No
REPAIR the short circuit. For additional information, refer to the wiring diagrams. Clear any DTCs, test the system for normal operation.

G552275t21 : CHECK WHETHER THE SHORT CIRCUIT TO POWER IS IN THE HARNESS OR THE MODULE

1. Key off. 2. Disconnect the ECM connector, C100. 3. Key on, engine off. 4. Measure the resistance between:

C30, harness side	Battery
Pin 01	Positive terminal

Is the resistance greater than 100 Kohms?

-> Yes
An intermittent fault may be present in the wiring harness. Visually check for chaffed wires or other physical damage to the harness. If no fault is found in the circuit, suspect the following component(s): **-** ECM

-> No
REPAIR the short circuit. For additional information, refer to the wiring diagrams. Clear any DTCs, test the system for normal operation.

G552275t22 : CHECK WHETHER THE SHORT CIRCUIT IS IN THE HARNESS OR THE MODULE

1. Key off. 2. Disconnect the ECM connector, C100. 3. Key on, engine off. 4. Measure the resistance between:

C30, harness side	C30, harness side
Pin 01	Pin 03

www.JagDocs.com

Is the resistance greater than 100 Kohms?

-> Yes
An intermittent fault may be present in the wiring harness. Visually check for chaffed wires or other physical damage to the harness. If no fault is found in the circuit, suspect the following component(s): **-** ECM

-> No
REPAIR the short circuit. For additional information, refer to the wiring diagrams. Clear any DTCs, test the system for normal operation.

G552275t23 : CHECK THE 5 VOLT SUPPLY CIRCUIT FOR SHORT CIRCUIT TO GROUND

1. Measure the resistance between:

C30, harness side	Battery
Pin 03	Negative terminal

Is the resistance greater than 100 Kohms?

-> Yes
GO to Pinpoint Test G552275t24.

-> No
GO to Pinpoint Test G552275t29.

G552275t24 : CHECK THE 5 VOLT SUPPLY CIRCUIT FOR SHORT CIRCUIT TO POWER

1. Measure the resistance between:

C30, harness side	Battery
Pin 03	Positive terminal

Is the resistance greater than 100 Kohms?

-> Yes
GO to Pinpoint Test G552275t25.

-> No
GO to Pinpoint Test G552275t31.

G552275t25 : CHECK THE FRP 5 VOLT SUPPLY CIRCUIT FOR HIGH RESISTANCE

1. Key off. 2. Disconnect the ECM connector, C100. 3. Measure the resistance between:

C30, harness side	C100, harness side
Pin 03	Pin D2

Is the resistance less than 10 ohms?

-> Yes
An intermittent fault may be present in the wiring harness. Visually check for chaffed wires or other physical damage to the harness. If no fault is found in the circuit, suspect the following component(s): **-** ECM connector **-** ECM

-> No
REPAIR the high resistance circuit. For additional information, refer to the wiring diagrams. Clear any DTCs, test the system for normal operation.

G552275t26 : CHECK THE FRP SENSOR RETURN CIRCUIT FOR SHORT CIRCUIT TO POWER

1. Measure the resistance between:

C30, harness side	Battery
Pin 02	Positive terminal

Is the resistance greater than 100 Kohms?

-> Yes
GO to Pinpoint Test G552275t27.

-> No
GO to Pinpoint Test G552275t32.

www.JagDocs.com

G552275t27 : CHECK FOR 5 VOLT SUPPLY AND SIGNAL RETURN CIRCUITS SHORT CIRCUIT TO EACH OTHER

1. Key off. 2. Disconnect the ECM connector, C100. 3. Key on, engine off. 4. Measure the resistance between:

C30, harness side	C30, harness side
Pin 03	Pin 02

Is the resistance greater than 100 Kohms?

-> Yes
GO to Pinpoint Test G552275t28.

-> No
REPAIR the short circuit. For additional information, refer to the wiring diagrams. Clear any DTCs, test the system for normal operation.

G552275t28 : CHECK THE FRP SENSOR RETURN CIRCUIT FOR HIGH RESISTANCE

1. Measure the resistance between:

C30, harness side	C100, harness side
Pin 02	Pin E2

Is the resistance less than 10 ohms?

-> Yes
An intermittent fault may be present in the wiring harness. Visually check for chaffed wires or other physical damage to the harness. If no fault is found in the circuit, suspect the following component(s): **-** ECM connector **-** ECM

-> No
REPAIR the high resistance circuit. For additional information, refer to the wiring diagrams. Clear any DTCs, test the system for normal operation.

G552275t29 : CHECK FOR 5 VOLT SUPPLY AND SIGNAL RETURN CIRCUITS SHORT CIRCUIT TO EACH OTHER

1. Key off. 2. Disconnect the ECM connector, C100. 3. Measure the resistance between:

C30, harness side	C30, harness side
Pin 03	Pin 02

Is the resistance greater than 100 Kohms?

-> Yes
GO to Pinpoint Test G552275t30.

-> No
REPAIR the short circuit. For additional information, refer to the wiring diagrams. Clear any DTCs, test the system for normal operation.

G552275t30 : CHECK WHETHER THE SHORT CIRCUIT TO GROUND IS IN THE HARNESS OR THE MODULE

1. Measure the resistance between:

C30, harness side	Battery
Pin 03	Negative terminal

Is the resistance greater than 100 Kohms?

-> Yes
An intermittent fault may be present in the wiring harness. Visually check for chaffed wires or other physical damage to the harness. If no fault is found in the circuit, suspect the following component(s): **-** ECM

-> No
REPAIR the short circuit. For additional information, refer to the wiring diagrams. Clear any DTCs, test the system for normal operation.

G552275t31 : CHECK WHETHER THE SHORT CIRCUIT TO POWER IS IN THE HARNESS OR THE MODULE

1. Key off. 2. Disconnect the ECM connector, C100. 3. Key on, engine off. 4. Measure the resistance between:

C30, harness side	Battery
Pin 03	Positive terminal

www.JagDocs.com

Is the resistance greater than 100 Kohms?

-> Yes
An intermittent fault may be present in the wiring harness. Visually check for chaffed wires or other physical damage to the harness. If no fault is found in the circuit, suspect the following component(s): **-** ECM

-> No
REPAIR the short circuit. For additional information, refer to the wiring diagrams. Clear any DTCs, test the system for normal operation.

G552275t32 : CHECK WHETHER THE SHORT CIRCUIT TO POWER IS IN THE HARNESS OR THE MODULE

1. Key off. 2. Disconnect the ECM connector, C100. 3. Key on, engine off. 4. Measure the resistance between:

C30, harness side	Battery
Pin 02	Positive terminal

Is the resistance greater than 100 Kohms?

-> Yes
An intermittent fault may be present in the wiring harness. Visually check for chaffed wires or other physical damage to the harness. If no fault is found in the circuit, suspect the following component(s): **-** ECM

-> No
REPAIR the short circuit. For additional information, refer to the wiring diagrams. Clear any DTCs, test the system for normal operation.

PINPOINT TEST G552275p7 : FUEL PRESSURE CONTROL VALVE (FPCV) AND CIRCUIT

G552275t33 : CHECK THE POWER SUPPLY TO THE FPCV

1.

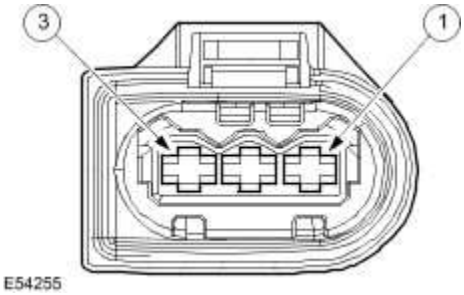

Circuit	Pin
Power	01
Signal from ECM	02

2.

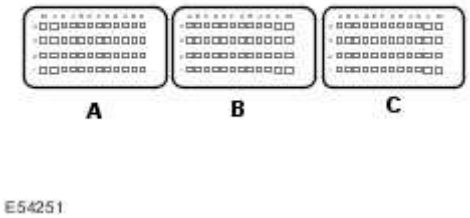

Circuit	Pin
Fuel pressure control valve - signal	K3

3. Key off. 4. Disconnect the FPCV connector, C43. 5. Key on, engine off. 6. Measure the voltage between:

C43, harness side	Battery
Pin 01	Negative terminal

Is the voltage between 9 and 15 volts?

-> Yes

GO to Pinpoint Test G552275t34.

www.JagDocs.com

-> No
No supply to the FPCV circuit. Check and repair the circuit as necessary. For additional information, refer to the wiring diagrams. Clear any DTCs, test the system for normal operation.

G552275t34 : CHECK THE FPCV CONTROL CIRCUIT FOR SHORT CIRCUIT TO GROUND

1. Measure the resistance between:

C43, harness side	Battery
Pin 02	Negative terminal

Is the resistance greater than 100 Kohms?

-> Yes
GO to Pinpoint Test G552275t35.

-> No
GO to Pinpoint Test G552275t38.

G552275t35 : CHECK THE FPCV CONTROL CIRCUIT FOR SHORT CIRCUIT TO POWER

1. Measure the resistance between:

C43, harness side	Battery
Pin 02	Positive terminal

Is the resistance greater than 100 Kohms?

-> Yes
GO to Pinpoint Test G552275t36.

-> No
GO to Pinpoint Test G552275t39.

G552275t36 : CHECK THE FPCV CONTROL CIRCUIT FOR HIGH RESISTANCE

1. Key off. 2. Disconnect the ECM connector, C100. 3. Measure the resistance between:

C43, harness side	C100, harness side
Pin 02	Pin K3

Is the resistance less than 10 ohms?

-> Yes
GO to Pinpoint Test G552275t37.

-> No
REPAIR the high resistance circuit. For additional information, refer to the wiring diagrams. Clear any DTCs, test the system for normal operation.

G552275t37 : CHECK THE COMPONENT RESISTANCE

1. Measure the resistance between:

C43, component side	C43, component side
Pin 01	Pin 02

Is the resistance between 0 and 5.5 ohms?

-> Yes
An intermittent fault may be present in the wiring harness. Visually check for chaffed wires or other physical damage to the harness. If no fault is found in the circuit, suspect the following component(s): - FPCV connector - FPCV - ECM connector - ECM

-> No
INSTALL a new fuel injection pump.
Fuel Injection Pump Clear any DTCs, test the system for normal operation.

G552275t38 : CHECK WHETHER THE SHORT CIRCUIT TO GROUND IS IN THE HARNESS OR THE MODULE

1. Key off. 2. Disconnect the ECM connector, C100. 3. Key on, engine off. 4. Measure the resistance between:

C43, harness side	Battery

www.JagDocs.com

Pin 02	Negative terminal

Is the resistance greater than 100 Kohms?

-> Yes
An intermittent fault may be present in the wiring harness. Visually check for chaffed wires or other physical damage to the harness. If no fault is found in the circuit, suspect the following component(s): **-** ECM

-> No
REPAIR the short circuit. For additional information, refer to the wiring diagrams. Clear any DTCs, test the system for normal operation.

G552275t39 : CHECK WHETHER THE SHORT CIRCUIT TO POWER IS IN THE HARNESS OR THE MODULE

1. Key off. 2. Disconnect the ECM connector, C100. 3. Key on, engine off. 4. Measure the resistance between:

C43, harness side	Battery
Pin 02	Positive terminal

Is the resistance greater than 100 Kohms?

-> Yes
An intermittent fault may be present in the wiring harness. Visually check for chaffed wires or other physical damage to the harness. If no fault is found in the circuit, suspect the following component(s): **-** ECM

-> No
REPAIR the short circuit. For additional information, refer to the wiring diagrams. Clear any DTCs, test the system for normal operation.

PINPOINT TEST G552275p8 : FUEL INJECTOR AND CIRCUIT, CYLINDER 1

G552275t40 : CHECK THE COMPONENT RESISTANCE

1.

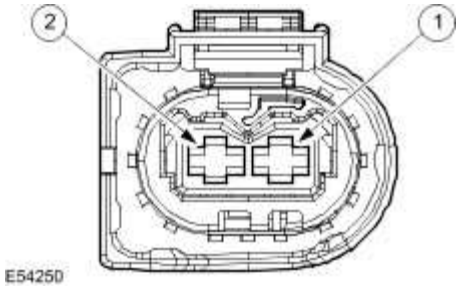

Circuit	Pin
Fuel injector, cylinder 1 - ground	01
Fuel injector, cylinder 1 - control	02

2.

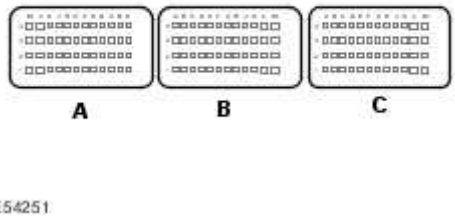

Circuit	Pin
Fuel injector, cylinder 1 - ground	L3
Fuel injector, cylinder 1 - control	M3

3. Key off. 4. Disconnect the fuel injector 1 (INJ0) connector, C44. 5. Measure the resistance between:

C44, component side	C44, component side
Pin 02	Pin 01

Is the resistance between 180 and 220 Kohms?

-> Yes

GO to Pinpoint Test G552275t41.

www.JagDocs.com

-> No
INSTALL a new fuel injector.
Fuel Injector (18.10.01) Clear any DTCs, test the system for normal operation.

G552275t41 : CHECK THE COMBINED FUEL INJECTOR AND HARNESS RESISTANCE

1. Key off. 2. Connect the fuel injector 1 (INJ0) connector, C44. 3. Disconnect the ECM connector, C101. 4. Measure the resistance between:

C101, harness side	C101, harness side
Pin M3	Pin L3

Is the resistance between 180 and 220 Kohms?

-> Yes
GO to Pinpoint Test G552275t44.

-> No
GO to Pinpoint Test G552275t42.

G552275t42 : CHECK FOR SIGNAL AND RETURN CIRCUITS SHORT CIRCUIT TO EACH OTHER

1. Measure the resistance between:

C101, harness side	C101, harness side
Pin M3	Pin L3

Is the resistance greater than 100 Kohms?

-> Yes
GO to Pinpoint Test G552275t43.

-> No
GO to Pinpoint Test G552275t48.

G552275t43 : CHECK THE FUEL INJECTOR CIRCUIT FOR HIGH RESISTANCE

1. Disconnect the fuel injector 1 (INJ0) connector, C44. 2. Measure the resistance between:

C44, harness side	C101, harness side
Pin 02	Pin M3
Pin 01	Pin L3

Are the resistances less than 10 ohms?

-> Yes

An intermittent fault may be present in the wiring harness. Visually check for chaffed wires or other physical damage to the harness. If no fault is found in the circuit, suspect the following component(s): - Fuel injector 1 (INJ0) connector - ECM connector - Fuel injector 1 (INJ0)

-> No

REPAIR the high resistance circuit. For additional information, refer to the wiring diagrams. Clear any DTCs, test the system for normal operation.

G552275t44 : CHECK THE FUEL INJECTOR CIRCUIT FOR SHORT CIRCUIT TO GROUND

1. Key on, engine off. 2. Measure the resistance between:

C101, harness side	Battery
Pin M3	Negative terminal
Pin L3	Negative terminal

Are the resistances greater than 100 Kohms?

-> Yes

GO to Pinpoint Test G552275t46.

-> No

GO to Pinpoint Test G552275t45.

www.JagDocs.com

G552275t45 : CHECK WHETHER THE SHORT CIRCUIT TO GROUND IS IN THE HARNESS OR THE FUEL INJECTOR

1. Key off. 2. Disconnect the fuel injector 1 (INJ0) connector, C44. 3. Key on, engine off. 4. Measure the resistance between:

C101, harness side	Battery
Pin M3	Negative terminal
Pin L3	Negative terminal

Are the resistances greater than 100 Kohms?

-> Yes
An intermittent fault may be present in the wiring harness. Visually check for chaffed wires or other physical damage to the harness. If no fault is found in the circuit, suspect the following component(s): - Fuel injector 1 (INJ0)

-> No
REPAIR the short circuit. For additional information, refer to the wiring diagrams. Clear any DTCs, test the system for normal operation.

G552275t46 : CHECK THE FUEL INJECTOR CIRCUIT FOR SHORT CIRCUIT TO POWER

1. Measure the resistance between:

C101, harness side	Battery
Pin M3	Positive terminal
Pin L3	Positive terminal

Are the resistances greater than 100 Kohms?

-> Yes
An intermittent fault may be present in the wiring harness. Visually check for chaffed wires or other physical damage to the harness. If no fault is found in the circuit, suspect the following component(s): - Fuel injector 1 (INJ0) connector - Fuel injector 1 (INJ0) - ECM connector - ECM

-> No
GO to Pinpoint Test G552275t47.

G552275t47 : CHECK WHETHER THE SHORT CIRCUIT TO POWER IS IN THE HARNESS OR THE FUEL INJECTOR

1. Key off. 2. Disconnect the fuel injector 1 (INJ0) connector, C44. 3. Key on, engine off. 4. Measure the resistance between:

C101, harness side	Battery
Pin M3	Positive terminal
Pin L3	Positive terminal

Are the resistances greater than 100 Kohms?

-> Yes
An intermittent fault may be present in the wiring harness. Visually check for chaffed wires or other physical damage to the harness. If no fault is found in the circuit, suspect the following component(s): **-** Fuel injector 1 (INJ0)

-> No
REPAIR the short circuit. For additional information, refer to the wiring diagrams. Clear any DTCs, test the system for normal operation.

G552275t48 : CHECK WHETHER THE SHORT CIRCUIT IS IN THE HARNESS OR THE THE FUEL INJECTOR

1. Key off. 2. Disconnect the fuel injector 1 (INJ0) connector, C44. 3. Key on, engine off. 4. Measure the resistance between:

C101, harness side	C101, harness side
Pin M3	Pin L3

Is the resistance greater than 100 Kohms?

-> Yes
An intermittent fault may be present in the wiring harness. Visually check for chaffed wires or other physical damage to the harness. If no fault is found in the circuit, suspect the following component(s): **-** Fuel injector 1 (INJ0)

-> No
REPAIR the short circuit. For additional information, refer to the wiring diagrams. Clear any DTCs, test the system for normal operation.

www.JagDocs.com

PINPOINT TEST G552275p9 : FUEL INJECTOR AND CIRCUIT, CYLINDER 2

G552275t49 : CHECK THE COMPONENT RESISTANCE

1.

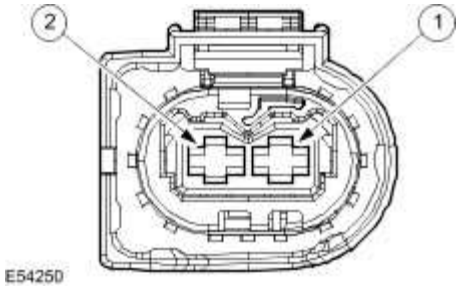

Circuit	Pin
Fuel injector, cylinder 2 - ground	01
Fuel injector, cylinder 2 - control	02

2.

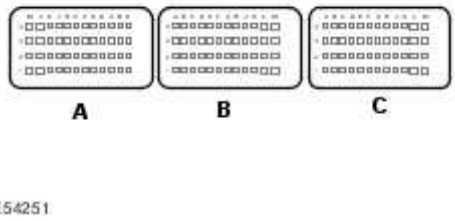

Circuit	Pin
Fuel injector, cylinder 2 - ground	L2
Fuel injector, cylinder 2 - control	M2

3. Key off. 4. Disconnect the fuel injector 2 (INJ2) connector, C46. 5. Measure the resistance between:

C46, component side	C46, component side
Pin 02	Pin 01

Is the resistance between 180 and 220 Kohms?

-> Yes
GO to Pinpoint Test G552275t50.

-> No
INSTALL a new fuel injector.
Fuel Injector (18.10.01) Clear any DTCs, test the system for normal operation.

G552275t50 : CHECK THE COMBINED FUEL INJECTOR AND HARNESS RESISTANCE

1. Key off. 2. Connect the fuel injector 2 (INJ2) connector, C46 connected. 3. Disconnect the ECM connector, C101. 4. Measure the resistance between:

C101, harness side	C101, harness side
Pin M2	Pin L2

Is the resistance between 180 and 220 Kohms?

-> Yes
GO to Pinpoint Test G552275t53.

-> No
GO to Pinpoint Test G552275t51.

G552275t51 : CHECK for short CIRCUIT BETWEEN THE SIGNAL AND RETURN CIRCUITS

1. Measure the resistance between:

C101, harness side	C101, harness side
Pin M2	Pin L2

Is the resistance greater than 100 Kohms?

-> Yes
GO to Pinpoint Test G552275t52.

www.JagDocs.com

-> No
GO to Pinpoint Test G552275t57.

G552275t52 : CHECK THE FUEL INJECTOR CIRCUIT FOR HIGH RESISTANCE

1. Disconnect the fuel injector 2 (INJ2) connector, C46. 2. Measure the resistance between:

C46, harness side	C101, harness side
Pin 02	Pin M2
Pin 01	Pin L2

Are the resistances less than 10 ohms?

-> Yes
An intermittent fault may be present in the wiring harness. Visually check for chaffed wires or other physical damage to the harness. If no fault is found in the circuit, suspect the following component(s): **-** Fuel injector 2 (INJ2) connector **-** ECM connector **-** Fuel injector 2 (INJ2)

-> No
REPAIR the high-resistance. For additional information, refer to the wiring diagrams. Clear any DTCs, test the system for normal operation.

G552275t53 : CHECK THE FUEL INJECTOR CIRCUIT FOR SHORT CIRCUIT TO GROUND

1. Key on, engine off. 2. Measure the resistance between:

C101, harness side	Battery
Pin M2	Negative terminal
Pin L2	Negative terminal

Are the resistances greater than 100 Kohms?

-> Yes
GO to Pinpoint Test G552275t55.

-> No

GO to Pinpoint Test G552275t54.

G552275t54 : CHECK WHETHER THE SHORT CIRCUIT TO GROUND IS IN THE HARNESS OR THE FUEL INJECTOR

1. Key off. 2. Disconnect the fuel injector 2 (INJ2) connector, C46. 3. Key on, engine off. 4. Measure the resistance between:

C101, harness side	Battery
Pin M2	Negative terminal
Pin L2	Negative terminal

Are the resistances greater than 100 Kohms?

-> Yes
An intermittent fault may be present in the wiring harness. Visually check for chaffed wires or other physical damage to the harness. If no fault is found in the circuit, suspect the following component(s): - Fuel injector 2 (INJ2)

-> No
REPAIR the short circuit. For additional information, refer to the wiring diagrams. Clear any DTCs, test the system for normal operation.

G552275t55 : CHECK THE FUEL INJECTOR CIRCUIT FOR SHORT CIRCUIT TO POWER

1. Measure the resistance between:

C101, harness side	Battery
Pin M2	Positive terminal
Pin L2	Positive terminal

Are the resistances greater than 100 Kohms?

-> Yes
An intermittent fault may be present in the wiring harness. Visually check for chaffed wires or other physical damage to the harness. If no fault is found in the circuit, suspect the following component(s): - Fuel injector 2 (INJ2) connector - Fuel injector 2 (INJ2) - ECM connector - ECM

www.JagDocs.com

-> No
GO to Pinpoint Test G552275t56.

G552275t56 : CHECK WHETHER THE SHORT CIRCUIT TO POWER IS IN THE HARNESS OR THE FUEL INJECTOR

1. Key off. 2. Disconnect the fuel injector 2 (INJ2) connector, C46. 3. Key on, engine off. 4. Measure the resistance between:

C101, harness side	Battery
Pin M2	Positive terminal
Pin L2	Positive terminal

Are the resistances greater than 100 Kohms?

-> Yes
An intermittent fault may be present in the wiring harness. Visually check for chaffed wires or other physical damage to the harness. If no fault is found in the circuit, suspect the following component(s): **-** Fuel injector 2 (INJ2)

-> No
REPAIR the short circuit. For additional information, refer to the wiring diagrams. Clear any DTCs, test the system for normal operation.

G552275t57 : CHECK WHETHER THE SHORT CIRCUIT IS IN THE HARNESS OR THE FUEL INJECTOR

1. Key off. 2. Disconnect the fuel injector 2 (INJ2) connector, C46. 3. Key on, engine off. 4. Measure the resistance between:

C101, harness side	C101, harness side
Pin M2	Pin L2

Is the resistance greater than 100 Kohms?

-> Yes
An intermittent fault may be present in the wiring harness. Visually check for chaffed wires or other physical damage to the harness. If no fault is found in the circuit, suspect the following component(s): **-** Fuel injector 2 (INJ2)

-> No

REPAIR the short circuit. For additional information, refer to the wiring diagrams. Clear any DTCs, test the system for normal operation.

PINPOINT TEST G552275p10 : FUEL INJECTOR AND CIRCUIT, CYLINDER 3

G552275t58 : CHECK THE COMPONENT RESISTANCE

1.

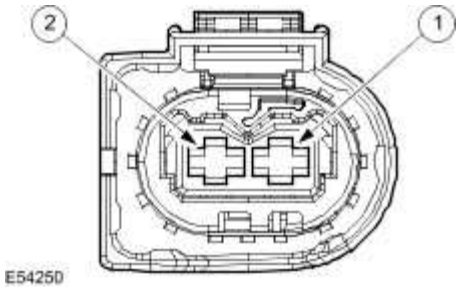

Circuit	Pin
Fuel injector, cylinder 2 - ground	01
Fuel injector, cylinder 2 - control	02

2.

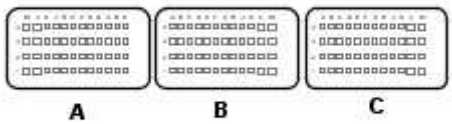

E54251

Circuit	Pin
Fuel injector, cylinder 3 - ground	L4
Fuel injector, cylinder 3 - control	M4

3. Key off. 4. Disconnect the fuel injector 3 (INJ4) connector, C48. 5. Measure the resistance between:

C48, component side	C48, component side

www.JagDocs.com

Pin 02	Pin 01

Is the resistance between 180 and 220 Kohms?

-> Yes
GO to Pinpoint Test G552275t59.

-> No
INSTALL a new fuel injector.
Fuel Injector (18.10.01) Clear any DTCs, test the system for normal operation.

G552275t59 : CHECK THE COMBINED FUEL INJECTOR AND HARNESS RESISTANCE

1. Key off. 2. Connect the fuel injector 3 (INJ4) connector, C48. 3. Disconnect the ECM connector, C101. 4. Measure the resistance between:

C101, harness side	**C101, harness side**
Pin M4	Pin L4

Is the resistance between 180 and 220 Kohms?

-> Yes
GO to Pinpoint Test G552275t62.

-> No
GO to Pinpoint Test G552275t60.

G552275t60 : CHECK FOR SIGNAL AND RETURN CIRCUITS SHORT CIRCUIT TO EACH OTHER

1. Measure the resistance between:

C101, harness side	**C101, harness side**
Pin M4	Pin L4

Is the resistance greater than 100 Kohms?

-> Yes
GO to Pinpoint Test G552275t61.

-> No
GO to Pinpoint Test G552275t66.

G552275t61 : CHECK THE FUEL INJECTOR CIRCUIT FOR HIGH RESISTANCE

1. Disconnect the fuel injector 3 (INJ4) connector, C48. 2. Measure the resistance between:

C48, harness side	C101, harness side
Pin 02	Pin M4
Pin 01	Pin L4

Are the resistances less than 10 ohms?

-> Yes
An intermittent fault may be present in the wiring harness. Visually check for chaffed wires or other physical damage to the harness. If no fault is found in the circuit, suspect the following component(s): **-** Fuel injector 3 (INJ4) connector **-** ECM connector **-** Fuel injector 3 (INJ4)

-> No
REPAIR the high resistance circuit. For additional information, refer to the wiring diagrams. Clear any DTCs, test the system for normal operation.

G552275t62 : CHECK THE FUEL INJECTOR CIRCUIT FOR SHORT CIRCUIT TO GROUND

1. Key on, engine off. 2. Measure the resistance between:

C101, harness side	Battery
Pin M4	Negative terminal
Pin L4	Negative terminal

Are the resistances greater than 100 Kohms?

-> Yes
GO to Pinpoint Test G552275t64.

www.JagDocs.com

-> No
GO to Pinpoint Test G552275t63.

G552275t63 : CHECK WHETHER THE SHORT CIRCUIT TO GROUND IS IN THE HARNESS OR THE FUEL INJECTOR

1. Key off. 2. Disconnect the fuel injector 3 (INJ4) connector, C48. 3. Key on, engine off. 4. Measure the resistance between:

C101, harness side	Battery
Pin M4	Negative terminal
Pin L4	Negative terminal

Are the resistances greater than 100 Kohms?

-> Yes
An intermittent fault may be present in the wiring harness. Visually check for chaffed wires or other physical damage to the harness. If no fault is found in the circuit, suspect the following component(s): **-** Fuel injector 3 (INJ4)

-> No
REPAIR the short circuit. For additional information, refer to the wiring diagrams. Clear any DTCs, test the system for normal operation.

G552275t64 : CHECK THE FUEL INJECTOR CIRCUIT FOR SHORT CIRCUIT TO POWER

1. Measure the resistance between:

C101, harness side	Battery
Pin M4	Positive terminal
Pin L4	Positive terminal

Are the resistances greater than 100 Kohms?

-> Yes
An intermittent fault may be present in the wiring harness. Visually check for chaffed wires or other

physical damage to the harness. If no fault is found in the circuit, suspect the following component(s): - Fuel injector 3 (INJ4) connector - Fuel injector 3 (INJ4) - ECM connector - ECM

-> No
GO to Pinpoint Test G552275t65.

G552275t65 : CHECK WHETHER THE SHORT CIRCUIT TO POWER IS IN THE HARNESS OR THE FUEL INJECTOR

1. Key off. 2. Disconnect the fuel injector 3 (INJ4) connector, C48. 3. Key on, engine off. 4. Measure the resistance between:

C101, harness side	Battery
Pin M4	Positive terminal
Pin L4	Positive terminal

Are the resistances greater than 100 Kohms?

-> Yes
An intermittent fault may be present in the wiring harness. Visually check for chaffed wires or other physical damage to the harness. If no fault is found in the circuit, suspect the following component(s): - Fuel injector 3 (INJ4)

-> No
REPAIR the short circuit. For additional information, refer to the wiring diagrams. Clear any DTCs, test the system for normal operation.

G552275t66 : CHECK WHETHER THE SHORT CIRCUIT IS IN THE HARNESS OR THE FUEL INJECTOR

1. Key off. 2. Disconnect the fuel injector 3 (INJ4) connector, C48. 3. Key on, engine off. 4. Measure the resistance between:

C101, harness side	C101, harness side
Pin M4	Pin L4

Is the resistance greater than 100 Kohms?

-> Yes
An intermittent fault may be present in the wiring harness. Visually check for chaffed wires or other

www.JagDocs.com

physical damage to the harness. If no fault is found in the circuit, suspect the following component(s): - Fuel injector 3 (INJ4)

-> No
REPAIR the short circuit. For additional information, refer to the wiring diagrams. Clear any DTCs, test the system for normal operation.

PINPOINT TEST G552275p11 : FUEL INJECTOR AND CIRCUIT, CYLINDER 4

G552275t67 : CHECK THE COMPONENT RESISTANCE

1.

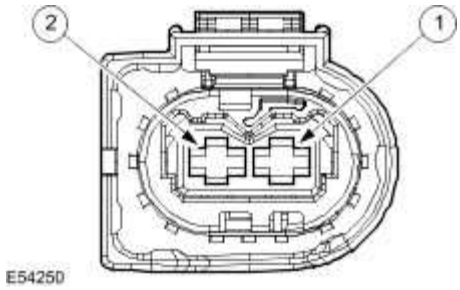

Circuit	Pin
Fuel injector, cylinder 4 - ground	01
Fuel injector, cylinder 4 - control	02

2.

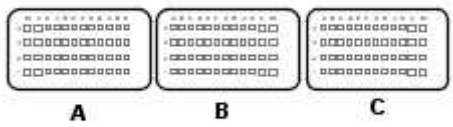

E54251

Circuit	Pin
Fuel injector, cylinder 4 - ground	L2
Fuel injector, cylinder 4 - control	L1

3. Key off. 4. Disconnect the fuel injector 4 (INJ1) connector, C45. 5. Measure the resistance between:

C45, component side	C45, component side
Pin 02	Pin 01

Is the resistance between 180 and 220 Kohms?

-> Yes
GO to Pinpoint Test G552275t68.

-> No
INSTALL a new fuel injector.
Fuel Injector (18.10.01) Clear any DTCs, test the system for normal operation.

G552275t68 : CHECK THE COMBINED FUEL INJECTOR AND HARNESS RESISTANCE

1. Key off. 2. Connect the fuel injector 4 (INJ1) connector, C45. 3. Disconnect the ECM connector, C100. 4. Measure the resistance between:

C100, harness side	C100, harness side
Pin L1	Pin L2

Is the resistance between 180 and 220 Kohms?

-> Yes
GO to Pinpoint Test G552275t71.

-> No
GO to Pinpoint Test G552275t69.

G552275t69 : CHECK FOR SIGNAL AND RETURN CIRCUITS SHORT CIRCUIT TO EACH OTHER

1. Measure the resistance between:

C100, harness side	C100, harness side
Pin L1	Pin L2

www.JagDocs.com

Is the resistance greater than 100 Kohms?

-> Yes
GO to Pinpoint Test G552275t70.

-> No
GO to Pinpoint Test G552275t75.

G552275t70 : CHECK THE FUEL INJECTOR CIRCUIT FOR HIGH RESISTANCE

1. Disconnect the fuel injector 4 (INJ1) connector, C45. 2. Measure the resistance between:

C45, harness side	C100, harness side
Pin 02	Pin L1
Pin 01	Pin L2

Are the resistances less than 10 ohm?

-> Yes
An intermittent fault may be present in the wiring harness. Visually check for chaffed wires or other physical damage to the harness. If no fault is found in the circuit, suspect the following component(s): - Fuel injector 4 (INJ1) connector - ECM connector - Fuel injector 4 (INJ1)

-> No
REPAIR the high resistance circuit. For additional information, refer to the wiring diagrams. Clear any DTCs, test the system for normal operation.

G552275t71 : CHECK THE FUEL INJECTOR CIRCUIT FOR SHORT CIRCUIT TO GROUND

1. Key on, engine off. 2. Measure the resistance between:

C100, harness side	Battery
Pin L1	Negative terminal
Pin L2	Negative terminal

Are the resistances greater than 100 Kohms?

-> Yes
GO to Pinpoint Test G552275t73.

-> No
GO to Pinpoint Test G552275t72.

G552275t72 : CHECK WHETHER THE SHORT CIRCUIT TO GROUND IS IN THE HARNESS OR THE FUEL INJECTOR

1. Key off. 2. Disconnect the fuel injector 4 (INJ1) connector, C45. 3. Key on, engine off. 4. Measure the resistance between:

C100, harness side	Battery
Pin L1	Negative terminal
Pin L2	Negative terminal

Are the resistances greater than 100 Kohms?

-> Yes
An intermittent fault may be present in the wiring harness. Visually check for chaffed wires or other physical damage to the harness. If no fault is found in the circuit, suspect the following component(s): **-** Fuel injector 4 (INJ1)

-> No
REPAIR the short circuit. For additional information, refer to the wiring diagrams. Clear any DTCs, test the system for normal operation.

G552275t73 : CHECK THE FUEL INJECTOR CIRCUIT FOR SHORT CIRCUIT TO POWER

1. Measure the resistance between:

C100, harness side	Battery
Pin L1	Positive terminal
Pin L2	Positive terminal

Are the resistances greater than 100 Kohms?

www.JagDocs.com

-> Yes
An intermittent fault may be present in the wiring harness. Visually check for chaffed wires or other physical damage to the harness. If no fault is found in the circuit, suspect the following component(s): - Fuel injector 4 (INJ1) connector - Fuel Injector 4 (INJ1) - ECM connector - ECM

-> No
GO to Pinpoint Test G552275t74.

G552275t74 : CHECK WHETHER THE SHORT CIRCUIT TO POWER IS IN THE HARNESS OR THE FUEL INJECTOR

1. Key off. 2. Disconnect the fuel injector 4 (INJ1) connector, C45. 3. Key on, engine off. 4. Measure the resistance between:

C100, harness side	Battery
Pin L1	Positive terminal
Pin L2	Positive terminal

Are the resistances greater than 100 Kohms?

-> Yes
An intermittent fault may be present in the wiring harness. Visually check for chaffed wires or other physical damage to the harness. If no fault is found in the circuit, suspect the following component(s): - Fuel injector 4 (INJ1)

-> No
REPAIR the short circuit. For additional information, refer to the wiring diagrams. Clear any DTCs, test the system for normal operation.

G552275t75 : CHECK WHETHER THE SHORT CIRCUIT IS IN THE HARNESS OR THE FUEL INJECTOR

1. Key off. 2. Disconnect the fuel injector 4 (INJ1) connector, C45. 3. Key on, engine off. 4. Measure the resistance between:

C100, harness side	C100, harness side
Pin L1	Pin L2

Is the resistance greater than 100 Kohms?

-> Yes
An intermittent fault may be present in the wiring harness. Visually check for chaffed wires or other physical damage to the harness. If no fault is found in the circuit, suspect the following component(s): **-** Fuel injector 4 (INJ1)

-> No
REPAIR the short circuit. For additional information, refer to the wiring diagrams. Clear any DTCs, test the system for normal operation.

PINPOINT TEST G552275p12 : FUEL INJECTOR AND CIRCUIT, CYLINDER 5

G552275t76 : CHECK THE COMPONENT RESISTANCE

1.

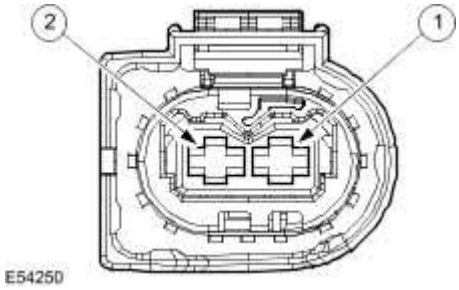

Circuit	Pin
Fuel injector, cylinder 5 - ground	01
Fuel injector, cylinder 5 - control	02

2.

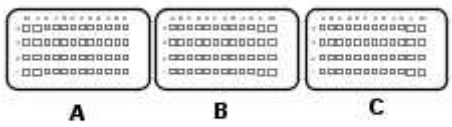

E54251

Circuit	Pin
Fuel injector, cylinder 5 - ground	L3

www.JagDocs.com

Fuel injector, cylinder 5 - control	M1

3. Key off. 4. Disconnect the fuel injector 5 (INJ3) connector, C47. 5. Measure the resistance between:

C47, component side	C47, component side
Pin 02	Pin 01

Is the resistance between 180 and 220 Kohms?

-> Yes
GO to Pinpoint Test G552275t77.

-> No
INSTALL a new fuel injector.
Fuel Injector (18.10.01) Clear any DTCs, test the system for normal operation.

G552275t77 : CHECK THE COMBINED FUEL INJECTOR AND HARNESS RESISTANCE

1. Key off. 2. Connect the fuel injector 5 (INJ3) connector, C47. 3. Disconnect the ECM connector, C100. 4. Measure the resistance between:

C100, harness side	C100, harness side
Pin M1	Pin L3

Is the resistance between 180 and 220 Kohms?

-> Yes
GO to Pinpoint Test G552275t80.

-> No
GO to Pinpoint Test G552275t78.

G552275t78 : CHECK FOR SHORT CIRCUIT BETWEEN THE SIGNAL AND RETURN CIRCUITS

1. Measure the resistance between:

C100, harness side	C100, harness side
Pin M1	Pin L3

Is the resistance greater than 100 Kohms?

-> Yes
GO to Pinpoint Test G552275t79.

-> No
GO to Pinpoint Test G552275t84.

G552275t79 : CHECK THE FUEL INJECTOR CIRCUIT FOR HIGH RESISTANCE

1. Disconnect the fuel injector 5 (INJ3) connector, C47. 2. Measure the resistance between:

C47, harness side	C100, harness side
Pin 02	Pin M1
Pin 01	Pin L3

Are the resistances less than 10 ohms?

-> Yes
An intermittent fault may be present in the wiring harness. Visually check for chaffed wires or other physical damage to the harness. If no fault is found in the circuit, suspect the following component(s): - Fuel injector 5 (INJ3) connector - ECM connector - Fuel injector 5 (INJ3)

-> No
REPAIR the high resistance circuit. For additional information, refer to the wiring diagrams. Clear any DTCs, test the system for normal operation.

G552275t80 : CHECK THE FUEL INJECTOR CIRCUIT FOR SHORT CIRCUIT TO GROUND

1. Key on, engine off. 2. Measure the resistance between:

C100, harness side	Battery
Pin M1	Negative terminal

www.JagDocs.com

Pin L3	Negative terminal

Are the resistances greater than 100 Kohms?

-> Yes
GO to Pinpoint Test G552275t82.

-> No
GO to Pinpoint Test G552275t81.

G552275t81 : CHECK WHETHER THE SHORT CIRCUIT TO GROUND IS IN THE HARNESS OR THE FUEL INJECTOR

1. Key off. 2. Disconnect the fuel injector 5 (INJ3) connector, C47. 3. Key on, engine off. 4. Measure the resistance between:

C100, harness side	Battery
Pin M1	Negative terminal
Pin L3	Negative terminal

Are the resistances greater than 100 Kohms?

-> Yes
An intermittent fault may be present in the wiring harness. Visually check for chaffed wires or other physical damage to the harness. If no fault is found in the circuit, suspect the following component(s): **-** Fuel injector 5 (INJ3)

-> No
REPAIR the short circuit. For additional information, refer to the wiring diagrams. Clear any DTCs, test the system for normal operation.

G552275t82 : CHECK THE FUEL INJECTOR CIRCUIT FOR SHORT CIRCUIT TO POWER

1. Measure the resistance between:

C100, harness side	Battery
Pin M1	Positive terminal

Pin L3	Positive terminal

Are the resistances greater than 100 Kohms?

-> Yes
An intermittent fault may be present in the wiring harness. Visually check for chaffed wires or other physical damage to the harness. If no fault is found in the circuit, suspect the following component(s): - Fuel injector 5 (INJ3) connector - Fuel injector 5 (INJ3) - ECM connector - ECM

-> No
GO to Pinpoint Test G552275t83.

G552275t83 : CHECK WHETHER THE SHORT CIRCUIT TO POWER IS IN THE HARNESS OR THE FUEL INJECTOR

1. Key off. 2. Disconnect the fuel injector 5 (INJ3) connector, C47. 3. Key on, engine off. 4. Measure the resistance between:

C100, harness side	Battery
Pin M1	Positive terminal
Pin L3	Positive terminal

Are the resistances greater than 100 Kohms?

-> Yes
An intermittent fault may be present in the wiring harness. Visually check for chaffed wires or other physical damage to the harness. If no fault is found in the circuit, suspect the following component(s): - Fuel injector 5 (INJ3)

-> No
REPAIR the short circuit. For additional information, refer to the wiring diagrams. Clear any DTCs, test the system for normal operation.

G552275t84 : CHECK WHETHER THE SHORT CIRCUIT IS IN THE HARNESS OR THE FUEL INJECTOR

1. Key off. 2. Disconnect the fuel injector 5 (INJ3) connector, C47. 3. Key on, engine off. 4. Measure the resistance between:

C100, harness side	C100, harness side

www.JagDocs.com

Pin M1	Pin L3

Is the resistance greater than 100 Kohms?

-> Yes
An intermittent fault may be present in the wiring harness. Visually check for chaffed wires or other physical damage to the harness. If no fault is found in the circuit, suspect the following component(s): **-** Fuel injector 5 (INJ3)

-> No
REPAIR the short circuit. For additional information, refer to the wiring diagrams. Clear any DTCs, test the system for normal operation.

PINPOINT TEST G552275p13 : FUEL INJECTOR AND CIRCUIT, CYLINDER 6

G552275t85 : CHECK THE COMPONENT RESISTANCE

1.

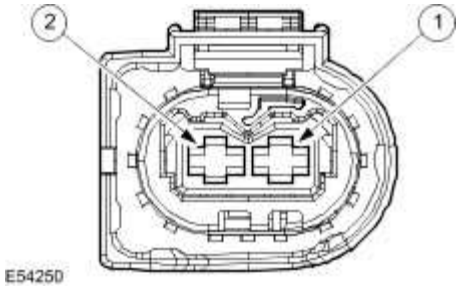

Circuit	Pin
Fuel injector, cylinder 6 - ground	01
Fuel injector, cylinder 6 - control	02

2.

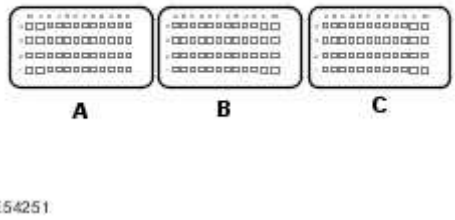

Circuit	Pin
Fuel injector, cylinder 6 - ground	M3
Fuel injector, cylinder 6 - control	M2

3. Key off. 4. Disconnect the fuel injector 6 (INJ5) connector, C49. 5. Measure the resistance between:

C49, component side	C49, component side
Pin 02	Pin 01

Is the resistance between 180 and 220 Kohms?

-> Yes
GO to Pinpoint Test G552275t86.

-> No
INSTALL a new fuel injector.
Fuel Injector (18.10.01) Clear any DTCs, test the system for normal operation.

G552275t86 : CHECK THE COMBINED FUEL INJECTOR AND HARNESS RESISTANCE

1. Key off. 2. Connect the fuel injector 6 (INJ5) connector, C49. 3. Disconnect the ECM connector, C100. 4. Measure the resistance between:

C100, harness side	C100, harness side
Pin M2	Pin M3

Is the resistance between 180 and 220 Kohms?

-> Yes
GO to Pinpoint Test G552275t89.

-> No
GO to Pinpoint Test G552275t87.

www.JagDocs.com

G552275t87 : CHECK FOR SHORT CIRCUIT BETWEEN THE SIGNAL AND RETURN CIRCUITS

1. Measure the resistance between:

C100, harness side	C100, harness side
Pin M2	Pin M3

Is the resistance greater than 100 Kohms?

-> Yes
GO to Pinpoint Test G552275t88.

-> No
GO to Pinpoint Test G552275t93.

G552275t88 : CHECK THE FUEL INJECTOR CIRCUIT FOR HIGH RESISTANCE

1. Disconnect the fuel injector 6 (INJ5) connector, C49. 2. Measure the resistance between:

C49, harness side	C100, harness side
Pin 02	Pin M2
Pin 01	Pin M3

Are the resistances less than 10 ohms?

-> Yes
An intermittent fault may be present in the wiring harness. Visually check for chaffed wires or other physical damage to the harness. If no fault is found in the circuit, suspect the following component(s): - Fuel injector 6 (INJ5) connector - ECM connector - Fuel injector 6 (INJ5)

-> No
REPAIR the high resistance circuit. For additional information, refer to the wiring diagrams. Clear any DTCs, test the system for normal operation.

G552275t89 : CHECK THE FUEL INJECTOR CIRCUIT FOR SHORT CIRCUIT TO GROUND

1. Key on, engine off. 2. Measure the resistance between:

C100, harness side	Battery
Pin M2	Negative terminal
Pin M3	Negative terminal

Are the resistances greater than 100 Kohms?

-> Yes
GO to Pinpoint Test G552275t91.

-> No
GO to Pinpoint Test G552275t90.

G552275t90 : CHECK WHETHER THE SHORT CIRCUIT TO GROUND IS IN THE HARNESS OR the Fuel injector

1. Key off. 2. Disconnect the fuel injector 6 (INJ5) connector, C49. 3. Key on, engine off. 4. Measure the resistance between:

C100, harness side	Battery
Pin M2	Negative terminal
Pin M3	Negative terminal

Are the resistances greater than 100 Kohms?

-> Yes
An intermittent fault may be present in the wiring harness. Visually check for chaffed wires or other physical damage to the harness. If no fault is found in the circuit, suspect the following component(s): - Fuel injector 6 (INJ5)

-> No
REPAIR the short circuit. For additional information, refer to the wiring diagrams. Clear any DTCs, test the system for normal operation.

G552275t91 : CHECK THE FUEL INJECTOR CIRCUIT FOR SHORT CIRCUIT TO POWER

1. Measure the resistance between:

www.JagDocs.com

C100, harness side	Battery
Pin M2	Positive terminal
Pin M3	Positive terminal

Are the resistances greater than 100 Kohms?

-> Yes
An intermittent fault may be present in the wiring harness. Visually check for chaffed wires or other physical damage to the harness. If no fault is found in the circuit, suspect the following component(s): - Fuel injector 6 (INJ5) connector - Fuel injector 6 (INJ5) - ECM connector - ECM

-> No
GO to Pinpoint Test G552275t92.

G552275t92 : CHECK WHETHER THE SHORT CIRCUIT TO POWER IS IN THE HARNESS OR THE FUEL INJECTOR

1. Key off. 2. Disconnect the fuel injector 6 (INJ5) connector, C49. 3. Key on, engine off. 4. Measure the resistance between:

C100, harness side	Battery
Pin M2	Positive terminal
Pin M3	Positive terminal

Are the resistances greater than 100 Kohms?

-> Yes
An intermittent fault may be present in the wiring harness. Visually check for chaffed wires or other physical damage to the harness. If no fault is found in the circuit, suspect the following component(s): - Fuel injector 6 (INJ5)

-> No
REPAIR the short circuit. For additional information, refer to the wiring diagrams. Clear any DTCs, test the system for normal operation.

G552275t93 : CHECK WHETHER THE SHORT CIRCUIT IS IN THE HARNESS OR THE FUEL INJECTOR

1. Key off. 2. Disconnect the fuel injector 6 (INJ5) connector, C49. 3. Key on, engine off. 4. Measure the resistance between:

C100, harness side	C100, harness side
Pin M2	Pin M3

Is the resistance greater than 100 Kohms?

-> Yes

An intermittent fault may be present in the wiring harness. Visually check for chaffed wires or other physical damage to the harness. If no fault is found in the circuit, suspect the following component(s): **-** Fuel injector 6 (INJ5)

-> No

REPAIR the short circuit. For additional information, refer to the wiring diagrams. Clear any DTCs, test the system for normal operation.

www.JagDocs.com

Fuel Charging and Controls

Principle of operation

Common rail diesel

The 2.7L fuel injection system is a common-rail design, running at the high-pressures (up to 1,650 bar or 23,930 lb/in²) typical of such systems.

The fuel is drawn from the fuel tank by an electric fuel pump module and delivered to the transfer pump side of a fuel injection pump driven by the engine. For additional information on the fuel injection pump,
Fuel Charging and Controls

The fuel volume control valve (FVCV) regulates the amount of fuel supplied to the high-pressure side of the fuel injection pump, while the fuel pressure control valve (FPCV) regulates the pressure.

The high-pressure fuel is delivered to the fuel rail where it is stored, ready for use by the fuel injectors.

The fuel injectors are Piezo type, and are controlled by the engine control module (ECM) from inputs from the engine management sensors.

The fuel injectors operate in stages, giving a pilot injection before the main injection to reduce detonation noise and help improve the efficiency of the engine.

For additional information,
Fuel Charging and Controls

Overview

There are changes to the engine management system (EMS) for 2006 my, the most obvious of which will be the change to 7-digit diagnostic trouble codes (DTCs) from the familiar 5-digit.

Refer to the DTC index in this section for guidance on how to use these codes with the Jaguar approved diagnostic system or a scan tool.

Inspection and Verification

WARNING: Do NOT carry out any work on the fuel system with the engine running. The fuel pressure within the system can be as high as 1650 bar (23,930 lb/in²). Failure to follow this instruction may result in personal injury.

WARNING: Eye protection must be worn at all times when working on or near any fuel

related components. Failure to follow this instruction may result in personal injury.

WARNING: This procedure involves fuel handling. Be prepared for fuel spillage at all times and always observe fuel handling precautions. Failure to follow this instruction may result in personal injury.

WARNING: After carrying out repairs, the fuel system must be checked visually for leaks. This should be done after the engine has been run, but with the engine switched OFF. Failure to follow this instruction may result in personal injury.

WARNING: If taken internally, DO NOT induce vomiting. Seek immediate medical attention. Failure to follow this instruction may result in personal injury.

WARNING: If fuel contacts the eyes, flush the eyes with cold water or eyewash solution and seek medical attention. Failure to follow this instruction may result in personal injury.

WARNING: Wash hands thoroughly after handling, as prolonged contact may cause irritation. Should irritation develop, seek medical attention. Failure to follow this instruction may result in personal injury.

CAUTION: Before disconnecting any part of the system, it is imperative that all dust, dirt and debris is removed from around components to prevent ingress of foreign matter into the fuel system. Failure to follow this instruction may result in damage to the vehicle.

CAUTION: The fuel pipes between the injectors and the rail must be discarded after each use, and new pipes installed. Failure to follow this instruction may result in damage to the vehicle.

www.JagDocs.com

CAUTION: It is essential that absolute cleanliness is observed when working with these components. Always install blanking plugs to any open orifices or lines. Failure to follow this instruction may result in damage to the vehicle.

CAUTION: Make sure that the workshop area in which the vehicle is being worked on is as clean and dust-free as possible. Areas in which work on clutches, brakes or where welding or machining are carried out are not suitable in view of the risk of contamination to the fuel system. Failure to follow this instruction may result in damage to the vehicle.

CAUTION: Make sure that any protective clothing worn is clean and made from lint-free non-flocking material. Failure to follow this instruction may result in damage to the vehicle.

CAUTION: Make sure that any protective gloves worn are new and are of the non-powdered latex type. Failure to follow this instruction may result in damage to the vehicle.

CAUTION: Make sure that clean, non-plated tools are used. Clean tools using a new brush that will not lose it's bristles and fresh cleaning fluid prior to starting work on the vehicle. Failure to follow this instruction may result in damage to the vehicle.

CAUTION: Use a steel-topped work bench and cover it with clean, lint-free, non-flocking material. Failure to follow this instruction may result in damage to the vehicle.

CAUTION: When probing connectors to take measurements in the course of the pinpoint tests, use the adaptor kit, part number 3548-1358-00. Failure to follow this instruction may result in damage to the vehicle.

NOTE:

This section contains references to Parameter Identifiers (PIDs). Where the Jaguar approved diagnostic system is not available, a scantool may be used to access these PIDs, all of which give information, and some of which can be used to both read information and to activate components. The format of the information may vary, depending on the tool used.

NOTE:

When performing voltage or resistance tests, always use a digital multimeter (DMM) accurate to 3 decimal places, and with an up-to-date calibration certificate. When testing resistance, always take the resistance of the DMM leads into account.

NOTE:

Check and rectify basic faults before beginning diagnostic routines involving pinpoint tests.

NOTE:

If diagnostic trouble codes (DTCs) are recorded and the symptom is not present when performing the pinpoint tests, an intermittent concern may be the cause. Always check for loose connections and corroded terminals.

1 . Verify the customer concern.

2 . Confirm which, if any, warning lights and/or messages were displayed on the instrument cluster.

3 . Visually inspect for obvious signs of mechanical or electrical damage.

Mechanical	Electrical
Fuel level	Glow plug indicator
Contaminated fuel	Inertia fuel shutoff (IFS) switch
Fuel supply line(s)	Fuel pump module
Fuel return line(s)	Sensor(s)
High-pressure fuel supply line(s)	Engine control module (ECM)
Fuel tank filler pipe	Fuel volume control valve (FVCV)

www.JagDocs.com

Fuel leak(s) Fuel tank Fuel filler cap Fuel filter Push connect fittings Fuel rail Fuel injection pump Exhaust gas recirculation (EGR) system	Fuel pressure control valve (FPCV) Fuel rail pressure (FRP) sensor Fuel temperature sensor Fuel injector(s) EGR system

4 . If an obvious cause for an observed or reported concern is found, correct the cause (if possible) before proceeding to the next step.

5 . If the cause is not visually evident use the Jaguar approved diagnostic system or a scan tool to retrieve the fault codes before proceeding to the DTC index, or the symptom chart if no DTCs are set.

Symptom Chart

Symptom	Possible source	Action
Engine cranks, but does not start	IFS switch Low/contaminated fuel Air ingress Low pressure circuit fault Fuel pump module fault Blocked fuel filter FVCV blocked/contaminated FPCV blocked/contaminated Fuel injection pump failure Crankshaft position (CKP) sensor ECM fault	Check that the inertia switch has not tripped. Check the fuel level/condition, GO to Pinpoint Test G552275p3. Check the low pressure circuit for leaks/damage, Fuel Tank and Lines - 2.7L Diesel Check the fuel pump module operation, GO to Pinpoint Test G552275p2. Check the fuel filter, GO to Pinpoint Test G552275p4. Check the FVCV and FPCV, GO to Pinpoint Test G552275p5. GO to Pinpoint Test G552275p7. Check the fuel injection pump, Fuel Injection Pump For CKP sensor cicuit tests, Electronic Engine Controls Refer to the warranty policy and procedures manual if an ECM is suspect.

Difficult to start	Low/Contaminated fuel Fuel pump module fault Air ingress Low pressure circuit fault Blocked fuel filter FVCV blocked/contaminated FPCV blocked/contaminated Low pressure circuit fault EGR valve(s) fault	Check the fuel level/condition, GO to Pinpoint Test G552275p3. Check the fuel pump module operation, GO to Pinpoint Test G552275p2. Check the low pressure circuit for leaks/damage, Fuel Tank and Lines - 2.7L Diesel Check the fuel filter, GO to Pinpoint Test G552275p4. Check the FVCV and FPCV, GO to Pinpoint Test G552275p5. GO to Pinpoint Test G552275p7. For EGR tests, Engine Emission Control
Rough idle	Low/Contaminated fuel Air ingress Low pressure circuit fault Blocked fuel filter FVCV blocked/contaminated FPCV blocked/contaminated EGR valve(s) fault	Check the fuel level/condition, GO to Pinpoint Test G552275p3. Check the low pressure circuit for leaks/damage, Fuel Tank and Lines - 2.7L Diesel Check the fuel filter, GO to Pinpoint Test G552275p4. Check the FVCV and FPCV, GO to Pinpoint Test G552275p5. GO to Pinpoint Test G552275p7. For EGR tests, Engine Emission Control
Lack of power when accelerating	Air intake circuit fault Catalyst converter blocked Low fuel pressure EGR valve(s) fault Turbocharger(s) fault	Check the air intake circuit, Intake Air Distribution and Filtering Check for a blocked catalytic converter, Exhaust System Check the fuel pressure PID, GO to Pinpoint Test G552275p6. For EGR tests, Engine Emission Control For turbocharger tests, Turbocharger
Engine stops/stalls	Low/Contaminated fuel Air ingress Low pressure circuit fault FVCV blocked/contaminated	Check the fuel level/condition, GO to Pinpoint Test G552275p3. Check the low pressure circuit for leaks/damage, Fuel Tank and Lines - 2.7L Diesel Check the FVCV and FPCV, GO to Pinpoint Test G552275p5.

www.JagDocs.com

	FPCV blocked/contaminated High pressure fuel leak EGR valve(s) fault	GO to Pinpoint Test G552275p7. Check for fuel system leaks, GO to Pinpoint Test G552275p1. For EGR tests, Engine Emission Control
Engine judders	Low/Contaminated fuel Air ingress Low pressure circuit fault Fuel metering valve blocked/contaminated FVCV blocked/contaminated FPCV blocked/contaminated High pressure fuel leak Fuel injection pump fault	Check the fuel level/condition, GO to Pinpoint Test G552275p3. Check the low pressure circuit for leaks/damage, Fuel Tank and Lines - 2.7L Diesel Check the FVCV and FPCV, GO to Pinpoint Test G552275p5. GO to Pinpoint Test G552275p7. Check for fuel system leaks, GO to Pinpoint Test G552275p1. Check the fuel injection pump, Fuel Injection Pump
Excessive fuel consumption	Low pressure circuit fault FVCV blocked/contaminated FPCV blocked/contaminated Fuel temperature sensor leak High pressure fuel leak Injector(s) failure EGR valve(s) fault	Check the low pressure circuit for leaks/damage, Fuel Tank and Lines - 2.7L Diesel Check the FVCV and FPCV, GO to Pinpoint Test G552275p5. GO to Pinpoint Test G552275p7. Check the fuel temperature sensor, fuel injection pump, etc for leaks, GO to Pinpoint Test G552275p1. Check for injector DTCs. For EGR tests, Engine Emission Control

DTC index

NOTE:

Generic scan tools may not read the codes listed, or may read only 5-digit codes. Match the 5 digits from the scan tool to the first 5 digits of the 7-digit code listed to identify the fault (the last 2 digits give extra information read by the manufacturer-approved diagnostic system).

NOTE:

For a full list of powertrain DTCs,
Electronic Engine Controls

DTC	Condition	Possible source	Action
P000100	Fuel volume control valve (FVCV) control circuit open	FVCV circuit: high resistance FVCV circuit: short circuit to ground FVCV failure ECM failure	For FVCV tests, GO to Pinpoint Test G552275p5. Refer to the warranty policy and procedures manual if an ECM is suspect.
P000200	Fuel volume control valve (FVCV) circuit range/performance	FVCV circuit: high resistance FVCV circuit: short circuit to ground FVCV circuit: short circuit to power FVCV failure ECM failure	For FVCV tests, GO to Pinpoint Test G552275p5. Refer to the warranty policy and procedures manual if an ECM is suspect.
P000300	Fuel volume control valve (FVCV) control circuit low	FVCV circuit: high resistance FVCV circuit: short circuit to ground FVCV failure ECM failure	For FVCV tests, GO to Pinpoint Test G552275p5. Refer to the warranty policy and procedures manual if an ECM is suspect.
P000400	Fuel volume control valve (FVCV) control circuit high	FVCV circuit: short circuit to power FVCV failure ECM failure	For FVCV tests, GO to Pinpoint Test G552275p5. Refer to the warranty policy and procedures manual if an ECM is suspect.
P008700	Fuel rail/system pressure too low	Pressure too low Fuel rail pressure (FRP) sensor circuit failure	For FRP tests, GO to Pinpoint Test G552275p6.

www.JagDocs.com

		Fuel rail pressure (FRP) sensor failure	
P008800	Fuel rail/system pressure too high	Pressure too high Fuel rail pressure (FRP) sensor circuit failure Fuel rail pressure (FRP) sensor failure	For FRP tests, GO to Pinpoint Test G552275p6.
P009000	Fuel pressure control valve (FPCV) control circuit open	FPCV circuit: high resistance FPCV circuit: short circuit to ground FPCV failure ECM failure	For FPCV tests, GO to Pinpoint Test G552275p7. Refer to the warranty policy and procedures manual if an ECM is suspect.
P009100	Fuel pressure control valve (FPCV) control circuit low	FPCV circuit: high resistance FPCV circuit: short circuit to ground FPCV failure ECM failure	For FPCV tests, GO to Pinpoint Test G552275p7. Refer to the warranty policy and procedures manual if an ECM is suspect.
P009200	Fuel pressure control valve (FPCV) control circuit high	FPCV circuit: short circuit to power FPCV failure ECM failure	For FPCV tests, GO to Pinpoint Test G552275p7. Refer to the warranty policy and procedures manual if an ECM is suspect.
P018100	Fuel temperature sensor circuit range/performance	Fuel temperature sensor circuit: high resistance Fuel temperature sensor circuit: short circuit to ground Fuel temperature sensor circuit: short circuit to power Fuel temperature sensor failure ECM failure	For fuel temperature sensor and circuit tests, Electronic Engine Controls Refer to the warranty policy and procedures manual if an ECM is suspect.

P018200	Fuel temperature sensor circuit low input	Fuel temperature sensor circuit: high resistance Fuel temperature sensor circuit: short circuit to ground Fuel temperature sensor circuit: short circuit to power Fuel temperature sensor failure ECM failure	For fuel temperature sensor and circuit tests, Electronic Engine Controls Refer to the warranty policy and procedures manual if an ECM is suspect.
P018300	Fuel temperature sensor circuit high input	Fuel temperature sensor circuit: high resistance Fuel temperature sensor circuit: short circuit to ground Fuel temperature sensor circuit: short circuit to power Fuel temperature sensor failure ECM failure	For fuel temperature sensor and circuit tests, Electronic Engine Controls Refer to the warranty policy and procedures manual if an ECM is suspect.
P018400	Fuel temperature sensor circuit intermittent	Fuel temperature sensor circuit: high resistance Fuel temperature sensor circuit: short circuit to ground Fuel temperature sensor circuit: short circuit to power Fuel temperature sensor failure ECM failure	For fuel temperature sensor and circuit tests, Electronic Engine Controls Refer to the warranty policy and procedures manual if an ECM is suspect.
P019100	Fuel rail pressure (FRP) sensor circuit range/performance	FRP sensor circuit: high resistance FRP sensor circuit: short	For FRP sensor tests, GO to Pinpoint Test G552275p6. Refer to the warranty policy and procedures manual if an

www.JagDocs.com

		circuit to ground FRP sensor circuit: short circuit to power FRP sensor failure ECM failure	ECM is suspect.
P019200	Fuel rail pressure (FRP) sensor circuit low input	FRP sensor circuit: high resistance FRP sensor circuit: short circuit to ground FRP sensor circuit: short circuit to power FRP sensor failure ECM failure	For FRP sensor tests, GO to Pinpoint Test G552275p6. Refer to the warranty policy and procedures manual if an ECM is suspect.
P019300	Fuel rail pressure (FRP) sensor circuit high input	FRP sensor circuit: high resistance FRP sensor circuit: short circuit to ground FRP sensor circuit: short circuit to power FRP sensor failure ECM failure	For FRP sensor tests, GO to Pinpoint Test G552275p6. Refer to the warranty policy and procedures manual if an ECM is suspect.
P019400	Fuel rail pressure (FRP) sensor circuit intermittent/erratic	FRP sensor circuit: high resistance FRP sensor circuit: short circuit to ground FRP sensor circuit: short circuit to power FRP sensor failure ECM failure	For FRP sensor tests, GO to Pinpoint Test G552275p6. Refer to the warranty policy and procedures manual if an ECM is suspect.
P020100	Fuel injector high-resistance, cylinder 1	Fuel injector circuit: high resistance Fuel injector circuit: short	For cylinder 1 fuel injector tests, GO to Pinpoint Test G552275p8. Refer to the warranty policy

		circuit to ground Fuel injector circuit: short circuit to power Fuel injector failure ECM failure	and procedures manual if an ECM is suspect.
P020200	Fuel injector high-resistance, cylinder 2	Fuel injector circuit: high resistance Fuel injector circuit: short circuit to ground Fuel injector circuit: short circuit to power Fuel injector failure ECM failure	For cylinder 2 fuel injector tests, GO to Pinpoint Test G552275p9. Refer to the warranty policy and procedures manual if an ECM is suspect.
P020300	Fuel injector high-resistance, cylinder 3	Fuel injector circuit: high resistance Fuel injector circuit: short circuit to ground Fuel injector circuit: short circuit to power Fuel injector failure ECM failure	For cylinder 3 fuel injector tests, GO to Pinpoint Test G552275p10. Refer to the warranty policy and procedures manual if an ECM is suspect.
P020400	Fuel injector high-resistance, cylinder 4	Fuel injector circuit: high resistance Fuel injector circuit: short circuit to ground Fuel injector circuit: short circuit to power Fuel injector failure ECM failure	For cylinder 4 fuel injector tests, GO to Pinpoint Test G552275p11. Refer to the warranty policy and procedures manual if an ECM is suspect.
P020500	Fuel injector high-resistance, cylinder 5	Fuel injector circuit: high resistance Fuel injector circuit: short	For cylinder 5 fuel injector tests, GO to Pinpoint Test G552275p12. Refer to the warranty policy

www.JagDocs.com

		circuit to ground Fuel injector circuit: short circuit to power Fuel injector failure ECM failure	and procedures manual if an ECM is suspect.
P020600	Fuel injector high-resistance, cylinder 6	Fuel injector circuit: high resistance Fuel injector circuit: short circuit to ground Fuel injector circuit: short circuit to power Fuel injector failure ECM failure	For cylinder 6 fuel injector tests, GO to Pinpoint Test G552275p13. Refer to the warranty policy and procedures manual if an ECM is suspect.
P020A00	Fuel injection timing, cylinder 1	Fuel injector circuit: high resistance Fuel injector circuit: short circuit to ground Fuel injector circuit: short circuit to power Fuel injector failure ECM failure	For cylinder 1 fuel injector tests, GO to Pinpoint Test G552275p8. Refer to the warranty policy and procedures manual if an ECM is suspect.
P020B00	Fuel injection timing, cylinder 2	Fuel injector circuit: high resistance Fuel injector circuit: short circuit to ground Fuel injector circuit: short circuit to power Fuel injector failure ECM failure	For cylinder 2 fuel injector tests, GO to Pinpoint Test G552275p9. Refer to the warranty policy and procedures manual if an ECM is suspect.
P020C00	Fuel injection timing, cylinder 3	Fuel injector circuit: high resistance Fuel injector circuit: short	For cylinder 3 fuel injector tests, GO to Pinpoint Test G552275p10. Refer to the warranty policy

		circuit to ground Fuel injector circuit: short circuit to power Fuel injector failure ECM failure	and procedures manual if an ECM is suspect.
P020D00	Fuel injection timing, cylinder 4	Fuel injector circuit: high resistance Fuel injector circuit: short circuit to ground Fuel injector circuit: short circuit to power Fuel injector failure ECM failure	For cylinder 4 fuel injector tests, GO to Pinpoint Test G552275p11. Refer to the warranty policy and procedures manual if an ECM is suspect.
P020E00	Fuel injection timing, cylinder 5	Fuel injector circuit: high resistance Fuel injector circuit: short circuit to ground Fuel injector circuit: short circuit to power Fuel injector failure ECM failure	For cylinder 5 fuel injector tests, GO to Pinpoint Test G552275p12. Refer to the warranty policy and procedures manual if an ECM is suspect.
P020F00	Fuel injection timing, cylinder 6	Fuel injector circuit: high resistance Fuel injector circuit: short circuit to ground Fuel injector circuit: short circuit to power Fuel injector failure ECM failure	For cylinder 6 fuel injector tests, GO to Pinpoint Test G552275p13. Refer to the warranty policy and procedures manual if an ECM is suspect.
P026300	Fuel injector circuit, cylinder 1	Fuel injector circuit: range/performance Fuel injector failure	For cylinder 1 fuel injector tests, GO to Pinpoint Test G552275p8.

www.JagDocs.com

P026600	Fuel injector circuit, cylinder 2	Fuel injector circuit: range/performance Fuel injector failure	For cylinder 2 fuel injector tests, GO to Pinpoint Test G552275p9.
P026900	Fuel injector circuit, cylinder 3	Fuel injector circuit: range/performance Fuel injector failure	For cylinder 3 fuel injector tests, GO to Pinpoint Test G552275p10.
P027200	Fuel injector circuit, cylinder 4	Fuel injector circuit: range/performance Fuel injector failure	For cylinder 4 fuel injector tests, GO to Pinpoint Test G552275p11.
P027500	Fuel injector circuit, cylinder 5	Fuel injector circuit: range/performance Fuel injector failure	For cylinder 5 fuel injector tests, GO to Pinpoint Test G552275p12.
P027800	Fuel injector circuit, cylinder 6	Fuel injector circuit: range/performance Fuel injector failure	For cylinder 6 fuel injector tests, GO to Pinpoint Test G552275p13.
P062D00	Fuel injector driver circuit performance (right hand bank)	Injector(s) disconnected Injector circuit(s): high resistance, short circuit to ground, short circuit to power Injector failure ECM failure	Identify the fuel injector concerned from the DTC stored in the ECM. Refer to the relevant test for the code logged. Refer to the warranty policy and procedures manual if an ECM is suspect.
P062E00	Fuel injector driver circuit performance (left hand bank)	Injector(s) disconnected Injector circuit(s): high resistance, short circuit to ground, short circuit to power Injector failure ECM failure	Identify the fuel injector concerned from the DTC stored in the ECM. Refer to the relevant test for the code logged. Refer to the warranty policy and procedures manual if an ECM is suspect.
P120E00	Fuel rail pressure (FRP) sensor - excessive fuel pressure variation	FRP sensor circuit: high resistance FRP sensor circuit: short circuit to ground	For FRP sensor tests, GO to Pinpoint Test G552275p6. Refer to the warranty policy and procedures manual if an ECM is suspect.

		FRP sensor failure ECM failure	
P120F00	Fuel rail pressure (FRP) regulator - fuel pressure low at start	FRP sensor circuit: high resistance FRP sensor circuit: short circuit to ground FRP sensor circuit: short circuit to power FRP sensor failure Restricted fuel line Fuel pump failure ECM failure	For FRP sensor tests, GO to Pinpoint Test G552275p6. Refer to the warranty policy and procedures manual if an ECM is suspect.
P150A00	Fuel injector circuit range/performance cylinder 1	Fuel injector disconnected Fuel injector harness wiring: high resistance, short circuit to ground, short circuit to power Fuel injector failure ECM failure	For cylinder 1 fuel injector tests, GO to Pinpoint Test G552275p8. Refer to the warranty policy and procedures manual if an ECM is suspect.
P150B00	Fuel injector circuit range/performance cylinder 2	Fuel injector disconnected Fuel injector harness wiring: high resistance, short circuit to ground, short circuit to power Fuel injector failure ECM failure	For cylinder 2 fuel injector tests, GO to Pinpoint Test G552275p9. Refer to the warranty policy and procedures manual if an ECM is suspect.
P150C00	Fuel injector circuit range/performance cylinder 3	Fuel injector disconnected Fuel injector harness wiring: high resistance, short circuit to ground, short circuit to power	For cylinder 3 fuel injector tests, GO to Pinpoint Test G552275p10. Refer to the warranty policy and procedures manual if an ECM is suspect.

www.JagDocs.com

		Fuel injector failure ECM failure	
P155400	Fuel injector circuit range/performance cylinder 4	Fuel injector disconnected Fuel injector harness wiring: high resistance, short circuit to ground, short circuit to power Fuel injector failure ECM failure	For cylinder 4 fuel injector tests, GO to Pinpoint Test G552275p11. Refer to the warranty policy and procedures manual if an ECM is suspect.
P155500	Fuel injector circuit range/performance cylinder 5	Fuel injector disconnected Fuel injector harness wiring: high resistance, short circuit to ground, short circuit to power Fuel injector failure ECM failure	For cylinder 5 fuel injector tests, GO to Pinpoint Test G552275p12. Refer to the warranty policy and procedures manual if an ECM is suspect.
P155600	Fuel injector circuit range/performance cylinder 6	Fuel injector disconnected Fuel injector harness wiring: high resistance, short circuit to ground, short circuit to power Fuel injector failure ECM failure	For cylinder 6 fuel injector tests, GO to Pinpoint Test G552275p13. Refer to the warranty policy and procedures manual if an ECM is suspect.
P228800	Injector control pressure too high - fuel pressure control valve (FPCV) minimum limit reached	Fuel injector control pressure: too high FPCV circuit fault FPCV failure Fuel pump module circuit: short circuit to power Fuel pump module failure Fuel injection pump failure	For fuel pressure and fuel pump module circuit tests, Fuel Tank and Lines - 2.7L Diesel For FPCV and circuit tests, GO to Pinpoint Test G552275p7. For fuel injection pump, Fuel Injection Pump

P229000	Injector control pressure too low - fuel pressure control valve (FPCV) maximum limit reached	Fuel injector control pressure: too low Fuel line leak Fuel filter/system restriction FPCV circuit fault FPCV failure Fuel pump module circuit: short circuit to ground Fuel pump module failure Fuel injection pump failure	For fuel lines, fuel pressure and fuel pump module circuit tests, Fuel Tank and Lines - 2.7L Diesel For FPCV and circuit tests, GO to Pinpoint Test G552275p7. For fuel injection pump, Fuel Injection Pump
P229200	Injector control pressure erratic - fuel pressure control valve (FPCV) dynamic	Fuel injector control pressure: erratic FPCV circuit fault FPCV failure Fuel pump module circuit(s): high resistance, short circuit to ground, short circuit to power Fuel pump module failure Fuel injection pump failure	For fuel lines, fuel pressure and fuel pump module circuit tests, Fuel Tank and Lines - 2.7L Diesel For FPCV and circuit tests, GO to Pinpoint Test G552275p7. For fuel injection pump, Fuel Injection Pump

Pinpoint test

WARNING: Wait at least 30 seconds after the engine stops before commencing any repair to the high pressure fuel injection system. Failure to follow this instruction may result in personal injury.

WARNING: This procedure involves fuel handling. Be prepared for fuel spillage at all times and always observe fuel handling precautions. Failure to follow this instruction may result in personal injury.

www.JagDocs.com

CAUTION: It is essential that absolute cleanliness is observed when working with these components. Always install blanking plugs to any open orifices or lines. Failure to follow this instruction may result in damage to the vehicle.

CAUTION: When probing connectors to take measurements in the course of the pinpoint tests, use the adaptor kit, part number 3548-1358-00. Failure to follow this instruction may result in damage to the vehicle.

NOTE:

When performing voltage or resistance tests, always use a digital multimeter (DMM) accurate to 3 decimal places, and with an up-to-date calibration certificate. When testing resistance, always take the resistance of the DMM leads into account.

NOTE:

Check and rectify basic faults before beginning diagnostic routines involving pinpoint tests.

NOTE:

If DTCs are recorded and a fault is not present when performing the pinpoint tests, an intermittent concern may be the cause. Always check for loose connections and corroded terminals.

PINPOINT TEST G552275p1 : CHECK FOR FUEL SYSTEM LEAKS

G552275t1 : CHECK FOR FUEL SYSTEM LEAKS

1. Start and run the engine for five minutes. 2. Key off. 3. Inspect the fuel lines, pump, etc, in the engine bay for cracks/damage. 4. Raise and support the vehicle.
Lifting 5. Inspect the fuel lines for cracks/damage. 6. Check the integrity of the joints in the supply and return lines between the fuel tank and the fuel pump. 7. Carefully check around the fuel pipes, injectors and pump for evidence of leakage. 8. If there is evidence of a significant leak, clean the engine and repeat the test.

Is there any evidence of leakage?

-> Yes
RECTIFY the leak as necessary. Test the system for normal operation.

-> No
CHECK for other possible causes for the customer concern.

PINPOINT TEST G552275p2 : CHECK THE FUEL PUMP MODULE FUNCTION

G552275t2 : CHECK THE FUEL PUMP MODULE FUNCTION

1. After thoroughly cleaning around the connections, disconnect the inlet pipe from the fuel filter. 2. Position a suitable container beneath the fuel filter inlet pipe to collect fuel. 3. Key on, engine off (the pump should run for a short period, depending on temperature, etc). 4. Check that fuel is pumped from the fuel filter inlet pipe.

Is fuel pumped from the fuel filter inlet pipe?

-> Yes
CHECK the drive belt to the fuel injection pump.
Fuel Injection Pump Belt Check for DTCs. Test the system for normal operation.

-> No
CHECK the fuel pump module and circuit,
Fuel Tank and Lines - 2.7L Diesel

PINPOINT TEST G552275p3 : CHECK FOR CONTAMINATED FUEL

G552275t3 : CHECK FOR UNUSUAL ODOURS FROM THE FUEL FILLER

1. Gather as much information as possible from the owner/driver regarding refuelling practices. 2. Remove the fuel filler cap and check for unusual odours.

Are there any unusual odours from the fuel filler neck?

-> Yes
DRAIN the fuel tank and refill with fresh fuel. Install a new fuel filter.
Fuel Filter - 2.7L Diesel (19.25.02) Test the vehicle for normal operation.

-> No
GO to Pinpoint Test G552275t4.

www.JagDocs.com

G552275t4 : CHECK FOR WATER IN THE FUEL

1. After thoroughly cleaning around the connections, disconnect the inlet pipe from the fuel filter. 2. Position a suitable clear container beneath the fuel filter inlet pipe to collect fuel. 3. Key on, engine off (the pump should run for a short period, depending on temperature, etc. It may be necessary to turn the ignition on and off more than once to obtain the desired amount of fuel). 4. Collect approximately one liter of fuel. 5. Allow the fuel to stand for at least one minute. 6. Without disturbing the fuel, check for separation of the fuel into layers (a significant amount of water in the fuel will result in a clear separation between the two fluids, with the water being at the bottom).

Does the fuel show clear separation?

-> Yes
DRAIN the fuel tank and refill with fresh fuel. Install a new fuel filter.
Fuel Filter - 2.7L Diesel (19.25.02) Test the vehicle for normal operation.

-> No
CHECK for other contaminants in the fuel.

PINPOINT TEST G552275p4 : CHECK FOR BLOCKED FUEL FILTER

G552275t5 : CHECK THE FLOW OF FUEL THROUGH THE FILTER

1. After thoroughly cleaning around the connections, disconnect the fuel filter outlet pipe to the fuel injection pump. 2.

WARNING: During this test, fuel will flow backwards through the fuel filter because of the fuel cooler circuit.

Position a suitable container beneath the fuel filter outlet to collect fuel. 3. Key on, engine off (the pump should run for a short period, depending on temperature, etc).

Is there an unrestricted flow of fuel through the filter?

-> Yes
CHECK for DTCs, check for another cause of customer complaint.

-> No
INSTALL a new fuel filter.
Fuel Filter - 2.7L Diesel (19.25.02) Test the vehicle for normal operation.

PINPOINT TEST G552275p5 : FUEL VOLUME CONTROL VALVE AND CIRCUIT

G552275t6 : CHECK FOR POWER TO THE FVCV

1.

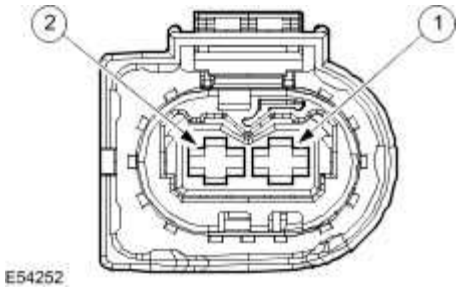

Circuit	Pin
Power	01
Signal from ECM	02

2.

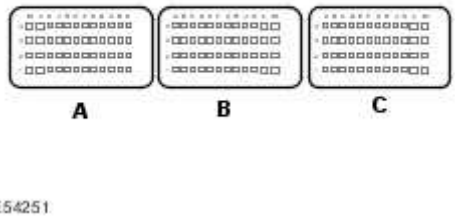

Circuit	Pin
Fuel volume control valve - signal	J4

3. Key off. 4. Disconnect the FVCV connector, C42. 5. Key on, engine off. 6. Measure the voltage between:

C42, harness side	Battery
Pin 01	Negative terminal

www.JagDocs.com

Is the voltage between 9 and 15 volts?

-> Yes
GO to Pinpoint Test G552275t12.

-> No
REPAIR the power circuit. For additional information, refer to the wiring diagrams. Clear any DTCs, test the system for normal operation.

G552275t7 : CHECK THE FVCV CONTROL CIRCUIT FOR SHORT CIRCUIT TO GROUND

1. Measure the resistance between:

C42, harness side	Battery
Pin 02	Negative terminal

Is the resistance greater than 100 Kohms?

-> Yes
GO to Pinpoint Test G552275t8.

-> No
GO to Pinpoint Test G552275t11.

G552275t8 : CHECK THE FVCV CONTROL CIRCUIT FOR SHORT CIRCUIT TO POWER

1. Measure the resistance between:

C42, harness side	Battery
Pin 02	Positive terminal

Is the resistance greater than 100 Kohms?

-> Yes
GO to Pinpoint Test G552275t9.

-> No
GO to Pinpoint Test G552275t12.

G552275t9 : CHECK THE FVCV CONTROL CIRCUIT FOR HIGH RESISTANCE

1. Key off. 2. Disconnect the ECM connector, C100. 3. Measure the resistance between:

C42, harness side	C100, harness side
Pin 02	J4

Is the resistance less than 10 ohms?

-> Yes
GO to Pinpoint Test G552275t10.

-> No
REPAIR the high-resistance circuit. For additional information, refer to the wiring diagrams. Clear any DTCs, test the system for normal operation.

G552275t10 : CHECK THE COMPONENT RESISTANCE

1. Measure the resistance between:

C42, component side	C42, component side
Pin 02	Pin 01

Is the resistance between 1.5 and 15 ohms?

-> Yes
An intermittent fault may be present in the wiring harness. Visually check for chaffed wires or other physical damage to the harness. If no fault is found in the circuit, suspect the following component(s): - FVCV connector - FVCV - ECM connector - ECM

-> No
INSTALL a new fuel injection pump.
Fuel Injection Pump Clear any DTCs, test the system for normal operation.

www.JagDocs.com

G552275t11 : CHECK WHETHER THE SHORT CIRCUIT TO GROUND IS IN THE HARNESS OR THE MODULE

1. Key off. 2. Disconnect the ECM connector, C100. 3. Key on, engine off. 4. Measure the resistance between:

C42, harness side	Battery
Pin 02	Negative terminal

Is the resistance greater than 100 Kohms?

-> Yes
Harness is OK. Suspect: **-** ECM

-> No
REPAIR the short circuit. For additional information, refer to the wiring diagrams. Clear any DTCs, test the system for normal operation.

G552275t12 : CHECK WHETHER THE SHORT CIRCUIT TO POWER IS IN THE HARNESS OR THE MODULE

1. Key off. 2. Disconnect the ECM connector, C100. 3. Key on, engine off. 4. Measure the resistance between:

C42, harness side	Battery
Pin 02	Positive terminal

Is the resistance greater than 100 Kohms?

-> Yes
Harness is OK. Suspect: **-** ECM

-> No
REPAIR the short circuit. For additional information, refer to the wiring diagrams. Clear any DTCs, test the system for normal operation.

PINPOINT TEST G552275p6 : FUEL RAIL PRESSURE (FRP) SENSOR AND CIRCUIT

G552275t13 : CHECK THE FRP SENSOR RETURN CIRCUIT

1.

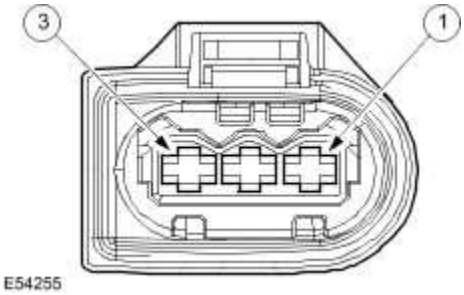

Circuit	Pin
Signal from ECM	01
Ground from ECM	02
Power from ECM	03

2.

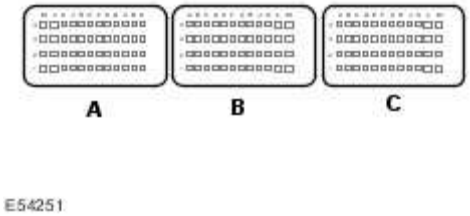

Circuit	Pin
FRP sensor - signal	D1
FRP sensor - ground	E2
FRP sensor - power	D2

3. Key off. 4. Disconnect the FRP sensor connector, C30. 5. Key on, engine off. 6. Measure the resistance between:

C30, harness side	Battery
Pin 02	Negative terminal

www.JagDocs.com

Is the resistance less than 10 ohms?

-> Yes
GO to Pinpoint Test G552275t14.

-> No
GO to Pinpoint Test G552275t26.

G552275t14 : CHECK THE POWER SUPPLY TO THE FRP

1. Measure the voltage between:

C30, harness side	Battery
Pin 03	Negative terminal

Is the voltage between 4.8 and 5.2 volts?

-> Yes
GO to Pinpoint Test G552275t15.

-> No
GO to Pinpoint Test G552275t23.

G552275t15 : CHECK THE FRP SIGNAL CIRCUIT FOR SHORT CIRCUIT TO GROUND

1. Measure the resistance between:

C30, harness side	Battery
Pin 01	Negative terminal

Is the resistance greater than 100 Kohms?

-> Yes
GO to Pinpoint Test G552275t16.

-> No

GO to Pinpoint Test G552275t19.

G552275t16 : CHECK THE FRP SIGNAL CIRCUIT FOR SHORT CIRCUIT TO POWER

1. Measure the resistance between:

C30, harness side	Battery
Pin 01	Positive terminal

Is the resistance greater than 100 Kohms?

-> Yes
GO to Pinpoint Test G552275t17.

-> No
GO to Pinpoint Test G552275t21.

G552275t17 : CHECK THE FRP SIGNAL CIRCUIT FOR SHORT CIRCUIT TO SENSOR POWER

1. Measure the resistance between:

C30, harness side	C30, harness side
Pin 01	Pin 03

Is the resistance greater than 100 Kohms?

-> Yes
GO to Pinpoint Test G552275t18.

-> No
GO to Pinpoint Test G552275t22.

G552275t18 : CHECK THE FRP SIGNAL CIRCUIT FOR HIGH RESISTANCE

1. Key off. 2. Disconnect the ECM connector, C100. 3. Measure the resistance between:

www.JagDocs.com

C30, harness side	C100, harness side
Pin 01	Pin D1

Is the resistance less than 10 ohms?

-> Yes
An intermittent fault may be present in the wiring harness. Visually check for chaffed wires or other physical damage to the harness. If no fault is found in the circuit, suspect the following component(s): **-** FRP connector **-** ECM connector **-** FRP **-** ECM

-> No
REPAIR the high resistance circuit. For additional information, refer to the wiring diagrams. Clear any DTCs, test the system for normal operation.

G552275t19 : CHECK FOR SIGNAL AND RETURN CIRCUITS SHORT CIRCUIT TO EACH OTHER

1. Key off. 2. Disconnect the ECM connector, C100. 3. Key on, engine off. 4. Measure the resistance between:

C30, harness side	C30, harness side
Pin 01	Pin 02

Is the resistance greater than 100 Kohms?

-> Yes
GO to Pinpoint Test G552275t20.

-> No
REPAIR the short circuit. For additional information, refer to the wiring diagrams. Clear any DTCs, test the system for normal operation.

G552275t20 : CHECK WHETHER THE SHORT CIRCUIT TO GROUND IS IN THE HARNESS OR THE MODULE

1. Measure the resistance between:

C30, harness side	Battery
Pin 01	Negative terminal

Is the resistance greater than 100 Kohms?

-> Yes
An intermittent fault may be present in the wiring harness. Visually check for chaffed wires or other physical damage to the harness. If no fault is found in the circuit, suspect the following component(s): **-** ECM

-> No
REPAIR the short circuit. For additional information, refer to the wiring diagrams. Clear any DTCs, test the system for normal operation.

G552275t21 : CHECK WHETHER THE SHORT CIRCUIT TO POWER IS IN THE HARNESS OR THE MODULE

1. Key off. 2. Disconnect the ECM connector, C100. 3. Key on, engine off. 4. Measure the resistance between:

C30, harness side	Battery
Pin 01	Positive terminal

Is the resistance greater than 100 Kohms?

-> Yes
An intermittent fault may be present in the wiring harness. Visually check for chaffed wires or other physical damage to the harness. If no fault is found in the circuit, suspect the following component(s): **-** ECM

-> No
REPAIR the short circuit. For additional information, refer to the wiring diagrams. Clear any DTCs, test the system for normal operation.

G552275t22 : CHECK WHETHER THE SHORT CIRCUIT IS IN THE HARNESS OR THE MODULE

1. Key off. 2. Disconnect the ECM connector, C100. 3. Key on, engine off. 4. Measure the resistance between:

C30, harness side	C30, harness side
Pin 01	Pin 03

www.JagDocs.com

Is the resistance greater than 100 Kohms?

-> Yes
An intermittent fault may be present in the wiring harness. Visually check for chaffed wires or other physical damage to the harness. If no fault is found in the circuit, suspect the following component(s): **-** ECM

-> No
REPAIR the short circuit. For additional information, refer to the wiring diagrams. Clear any DTCs, test the system for normal operation.

G552275t23 : CHECK THE 5 VOLT SUPPLY CIRCUIT FOR SHORT CIRCUIT TO GROUND

1. Measure the resistance between:

C30, harness side	Battery
Pin 03	Negative terminal

Is the resistance greater than 100 Kohms?

-> Yes
GO to Pinpoint Test G552275t24.

-> No
GO to Pinpoint Test G552275t29.

G552275t24 : CHECK THE 5 VOLT SUPPLY CIRCUIT FOR SHORT CIRCUIT TO POWER

1. Measure the resistance between:

C30, harness side	Battery
Pin 03	Positive terminal

Is the resistance greater than 100 Kohms?

-> Yes
GO to Pinpoint Test G552275t25.

-> No
GO to Pinpoint Test G552275t31.

G552275t25 : CHECK THE FRP 5 VOLT SUPPLY CIRCUIT FOR HIGH RESISTANCE

1. Key off. 2. Disconnect the ECM connector, C100. 3. Measure the resistance between:

C30, harness side	C100, harness side
Pin 03	Pin D2

Is the resistance less than 10 ohms?

-> Yes
An intermittent fault may be present in the wiring harness. Visually check for chaffed wires or other physical damage to the harness. If no fault is found in the circuit, suspect the following component(s): **-** ECM connector **-** ECM

-> No
REPAIR the high resistance circuit. For additional information, refer to the wiring diagrams. Clear any DTCs, test the system for normal operation.

G552275t26 : CHECK THE FRP SENSOR RETURN CIRCUIT FOR SHORT CIRCUIT TO POWER

1. Measure the resistance between:

C30, harness side	Battery
Pin 02	Positive terminal

Is the resistance greater than 100 Kohms?

-> Yes
GO to Pinpoint Test G552275t27.

-> No
GO to Pinpoint Test G552275t32.

www.JagDocs.com

G552275t27 : CHECK FOR 5 VOLT SUPPLY AND SIGNAL RETURN CIRCUITS SHORT CIRCUIT TO EACH OTHER

1. Key off. 2. Disconnect the ECM connector, C100. 3. Key on, engine off. 4. Measure the resistance between:

C30, harness side	C30, harness side
Pin 03	Pin 02

Is the resistance greater than 100 Kohms?

-> Yes
GO to Pinpoint Test G552275t28.

-> No
REPAIR the short circuit. For additional information, refer to the wiring diagrams. Clear any DTCs, test the system for normal operation.

G552275t28 : CHECK THE FRP SENSOR RETURN CIRCUIT FOR HIGH RESISTANCE

1. Measure the resistance between:

C30, harness side	C100, harness side
Pin 02	Pin E2

Is the resistance less than 10 ohms?

-> Yes
An intermittent fault may be present in the wiring harness. Visually check for chaffed wires or other physical damage to the harness. If no fault is found in the circuit, suspect the following component(s): **-** ECM connector **-** ECM

-> No
REPAIR the high resistance circuit. For additional information, refer to the wiring diagrams. Clear any DTCs, test the system for normal operation.

G552275t29 : CHECK FOR 5 VOLT SUPPLY AND SIGNAL RETURN CIRCUITS SHORT CIRCUIT TO EACH OTHER

1. Key off. 2. Disconnect the ECM connector, C100. 3. Measure the resistance between:

C30, harness side	C30, harness side
Pin 03	Pin 02

Is the resistance greater than 100 Kohms?

-> Yes
GO to Pinpoint Test G552275t30.

-> No
REPAIR the short circuit. For additional information, refer to the wiring diagrams. Clear any DTCs, test the system for normal operation.

G552275t30 : CHECK WHETHER THE SHORT CIRCUIT TO GROUND IS IN THE HARNESS OR THE MODULE

1. Measure the resistance between:

C30, harness side	Battery
Pin 03	Negative terminal

Is the resistance greater than 100 Kohms?

-> Yes
An intermittent fault may be present in the wiring harness. Visually check for chaffed wires or other physical damage to the harness. If no fault is found in the circuit, suspect the following component(s): **-** ECM

-> No
REPAIR the short circuit. For additional information, refer to the wiring diagrams. Clear any DTCs, test the system for normal operation.

G552275t31 : CHECK WHETHER THE SHORT CIRCUIT TO POWER IS IN THE HARNESS OR THE MODULE

1. Key off. 2. Disconnect the ECM connector, C100. 3. Key on, engine off. 4. Measure the resistance between:

C30, harness side	Battery
Pin 03	Positive terminal

www.JagDocs.com

Is the resistance greater than 100 Kohms?

-> Yes
An intermittent fault may be present in the wiring harness. Visually check for chaffed wires or other physical damage to the harness. If no fault is found in the circuit, suspect the following component(s): **-** ECM

-> No
REPAIR the short circuit. For additional information, refer to the wiring diagrams. Clear any DTCs, test the system for normal operation.

G552275t32 : CHECK WHETHER THE SHORT CIRCUIT TO POWER IS IN THE HARNESS OR THE MODULE

1. Key off. 2. Disconnect the ECM connector, C100. 3. Key on, engine off. 4. Measure the resistance between:

C30, harness side	Battery
Pin 02	Positive terminal

Is the resistance greater than 100 Kohms?

-> Yes
An intermittent fault may be present in the wiring harness. Visually check for chaffed wires or other physical damage to the harness. If no fault is found in the circuit, suspect the following component(s): **-** ECM

-> No
REPAIR the short circuit. For additional information, refer to the wiring diagrams. Clear any DTCs, test the system for normal operation.

PINPOINT TEST G552275p7 : FUEL PRESSURE CONTROL VALVE (FPCV) AND CIRCUIT

G552275t33 : CHECK THE POWER SUPPLY TO THE FPCV

1.

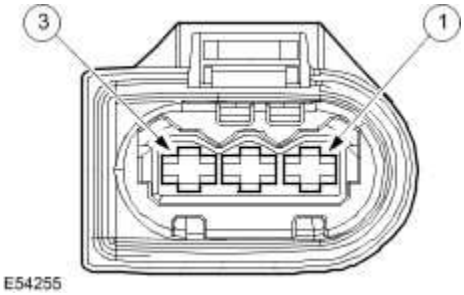

Circuit	Pin
Power	01
Signal from ECM	02

2.

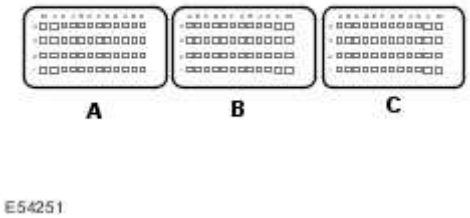

Circuit	Pin
Fuel pressure control valve - signal	K3

3. Key off. 4. Disconnect the FPCV connector, C43. 5. Key on, engine off. 6. Measure the voltage between:

C43, harness side	Battery
Pin 01	Negative terminal

Is the voltage between 9 and 15 volts?

-> Yes

GO to Pinpoint Test G552275t34.

www.JagDocs.com

-> No
No supply to the FPCV circuit. Check and repair the circuit as necessary. For additional information, refer to the wiring diagrams. Clear any DTCs, test the system for normal operation.

G552275t34 : CHECK THE FPCV CONTROL CIRCUIT FOR SHORT CIRCUIT TO GROUND

1. Measure the resistance between:

C43, harness side	Battery
Pin 02	Negative terminal

Is the resistance greater than 100 Kohms?

-> Yes
GO to Pinpoint Test G552275t35.

-> No
GO to Pinpoint Test G552275t38.

G552275t35 : CHECK THE FPCV CONTROL CIRCUIT FOR SHORT CIRCUIT TO POWER

1. Measure the resistance between:

C43, harness side	Battery
Pin 02	Positive terminal

Is the resistance greater than 100 Kohms?

-> Yes
GO to Pinpoint Test G552275t36.

-> No
GO to Pinpoint Test G552275t39.

G552275t36 : CHECK THE FPCV CONTROL CIRCUIT FOR HIGH RESISTANCE

1. Key off. 2. Disconnect the ECM connector, C100. 3. Measure the resistance between:

C43, harness side	C100, harness side
Pin 02	Pin K3

Is the resistance less than 10 ohms?

-> Yes
GO to Pinpoint Test G552275t37.

-> No
REPAIR the high resistance circuit. For additional information, refer to the wiring diagrams. Clear any DTCs, test the system for normal operation.

G552275t37 : CHECK THE COMPONENT RESISTANCE

1. Measure the resistance between:

C43, component side	C43, component side
Pin 01	Pin 02

Is the resistance between 0 and 5.5 ohms?

-> Yes
An intermittent fault may be present in the wiring harness. Visually check for chaffed wires or other physical damage to the harness. If no fault is found in the circuit, suspect the following component(s): - FPCV connector - FPCV - ECM connector - ECM

-> No
INSTALL a new fuel injection pump.
Fuel Injection Pump Clear any DTCs, test the system for normal operation.

G552275t38 : CHECK WHETHER THE SHORT CIRCUIT TO GROUND IS IN THE HARNESS OR THE MODULE

1. Key off. 2. Disconnect the ECM connector, C100. 3. Key on, engine off. 4. Measure the resistance between:

C43, harness side	Battery

www.JagDocs.com

Pin 02	Negative terminal

Is the resistance greater than 100 Kohms?

-> Yes
An intermittent fault may be present in the wiring harness. Visually check for chaffed wires or other physical damage to the harness. If no fault is found in the circuit, suspect the following component(s): **-** ECM

-> No
REPAIR the short circuit. For additional information, refer to the wiring diagrams. Clear any DTCs, test the system for normal operation.

G552275t39 : CHECK WHETHER THE SHORT CIRCUIT TO POWER IS IN THE HARNESS OR THE MODULE

1. Key off. 2. Disconnect the ECM connector, C100. 3. Key on, engine off. 4. Measure the resistance between:

C43, harness side	Battery
Pin 02	Positive terminal

Is the resistance greater than 100 Kohms?

-> Yes
An intermittent fault may be present in the wiring harness. Visually check for chaffed wires or other physical damage to the harness. If no fault is found in the circuit, suspect the following component(s): **-** ECM

-> No
REPAIR the short circuit. For additional information, refer to the wiring diagrams. Clear any DTCs, test the system for normal operation.

PINPOINT TEST G552275p8 : FUEL INJECTOR AND CIRCUIT, CYLINDER 1

G552275t40 : CHECK THE COMPONENT RESISTANCE

1.

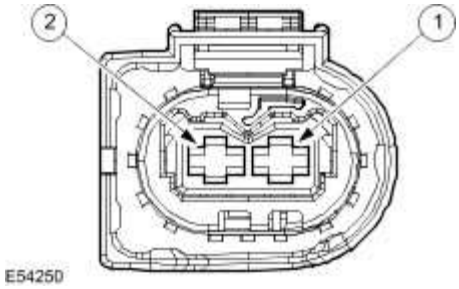

Circuit	Pin
Fuel injector, cylinder 1 - ground	01
Fuel injector, cylinder 1 - control	02

2.

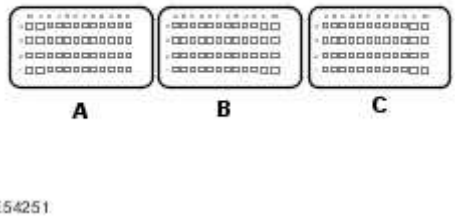

Circuit	Pin
Fuel injector, cylinder 1 - ground	L3
Fuel injector, cylinder 1 - control	M3

3. Key off. 4. Disconnect the fuel injector 1 (INJ0) connector, C44. 5. Measure the resistance between:

C44, component side	C44, component side
Pin 02	Pin 01

Is the resistance between 180 and 220 Kohms?

-> Yes

GO to Pinpoint Test G552275t41.

www.JagDocs.com

-> No
INSTALL a new fuel injector.
Fuel Injector (18.10.01) Clear any DTCs, test the system for normal operation.

G552275t41 : CHECK THE COMBINED FUEL INJECTOR AND HARNESS RESISTANCE

1. Key off. 2. Connect the fuel injector 1 (INJ0) connector, C44. 3. Disconnect the ECM connector, C101. 4. Measure the resistance between:

C101, harness side	C101, harness side
Pin M3	Pin L3

Is the resistance between 180 and 220 Kohms?

-> Yes
GO to Pinpoint Test G552275t44.

-> No
GO to Pinpoint Test G552275t42.

G552275t42 : CHECK FOR SIGNAL AND RETURN CIRCUITS SHORT CIRCUIT TO EACH OTHER

1. Measure the resistance between:

C101, harness side	C101, harness side
Pin M3	Pin L3

Is the resistance greater than 100 Kohms?

-> Yes
GO to Pinpoint Test G552275t43.

-> No
GO to Pinpoint Test G552275t48.

G552275t43 : CHECK THE FUEL INJECTOR CIRCUIT FOR HIGH RESISTANCE

1. Disconnect the fuel injector 1 (INJ0) connector, C44. 2. Measure the resistance between:

C44, harness side	C101, harness side
Pin 02	Pin M3
Pin 01	Pin L3

Are the resistances less than 10 ohms?

-> Yes

An intermittent fault may be present in the wiring harness. Visually check for chaffed wires or other physical damage to the harness. If no fault is found in the circuit, suspect the following component(s): - Fuel injector 1 (INJ0) connector - ECM connector - Fuel injector 1 (INJ0)

-> No

REPAIR the high resistance circuit. For additional information, refer to the wiring diagrams. Clear any DTCs, test the system for normal operation.

G552275t44 : CHECK THE FUEL INJECTOR CIRCUIT FOR SHORT CIRCUIT TO GROUND

1. Key on, engine off. 2. Measure the resistance between:

C101, harness side	Battery
Pin M3	Negative terminal
Pin L3	Negative terminal

Are the resistances greater than 100 Kohms?

-> Yes

GO to Pinpoint Test G552275t46.

-> No

GO to Pinpoint Test G552275t45.

www.JagDocs.com

G552275t45 : CHECK WHETHER THE SHORT CIRCUIT TO GROUND IS IN THE HARNESS OR THE FUEL INJECTOR

1. Key off. 2. Disconnect the fuel injector 1 (INJ0) connector, C44. 3. Key on, engine off. 4. Measure the resistance between:

C101, harness side	Battery
Pin M3	Negative terminal
Pin L3	Negative terminal

Are the resistances greater than 100 Kohms?

-> Yes
An intermittent fault may be present in the wiring harness. Visually check for chaffed wires or other physical damage to the harness. If no fault is found in the circuit, suspect the following component(s): - Fuel injector 1 (INJ0)

-> No
REPAIR the short circuit. For additional information, refer to the wiring diagrams. Clear any DTCs, test the system for normal operation.

G552275t46 : CHECK THE FUEL INJECTOR CIRCUIT FOR SHORT CIRCUIT TO POWER

1. Measure the resistance between:

C101, harness side	Battery
Pin M3	Positive terminal
Pin L3	Positive terminal

Are the resistances greater than 100 Kohms?

-> Yes
An intermittent fault may be present in the wiring harness. Visually check for chaffed wires or other physical damage to the harness. If no fault is found in the circuit, suspect the following component(s): - Fuel injector 1 (INJ0) connector - Fuel injector 1 (INJ0) - ECM connector - ECM

-> No
GO to Pinpoint Test G552275t47.

G552275t47 : CHECK WHETHER THE SHORT CIRCUIT TO POWER IS IN THE HARNESS OR THE FUEL INJECTOR

1. Key off. 2. Disconnect the fuel injector 1 (INJ0) connector, C44. 3. Key on, engine off. 4. Measure the resistance between:

C101, harness side	Battery
Pin M3	Positive terminal
Pin L3	Positive terminal

Are the resistances greater than 100 Kohms?

-> Yes
An intermittent fault may be present in the wiring harness. Visually check for chaffed wires or other physical damage to the harness. If no fault is found in the circuit, suspect the following component(s): **-** Fuel injector 1 (INJ0)

-> No
REPAIR the short circuit. For additional information, refer to the wiring diagrams. Clear any DTCs, test the system for normal operation.

G552275t48 : CHECK WHETHER THE SHORT CIRCUIT IS IN THE HARNESS OR THE THE FUEL INJECTOR

1. Key off. 2. Disconnect the fuel injector 1 (INJ0) connector, C44. 3. Key on, engine off. 4. Measure the resistance between:

C101, harness side	C101, harness side
Pin M3	Pin L3

Is the resistance greater than 100 Kohms?

-> Yes
An intermittent fault may be present in the wiring harness. Visually check for chaffed wires or other physical damage to the harness. If no fault is found in the circuit, suspect the following component(s): **-** Fuel injector 1 (INJ0)

-> No
REPAIR the short circuit. For additional information, refer to the wiring diagrams. Clear any DTCs, test the system for normal operation.

www.JagDocs.com

PINPOINT TEST G552275p9 : FUEL INJECTOR AND CIRCUIT, CYLINDER 2

G552275t49 : CHECK THE COMPONENT RESISTANCE

1.

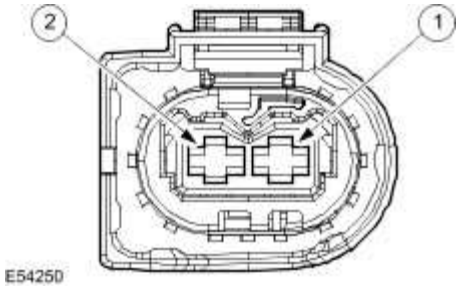

Circuit	Pin
Fuel injector, cylinder 2 - ground	01
Fuel injector, cylinder 2 - control	02

2.

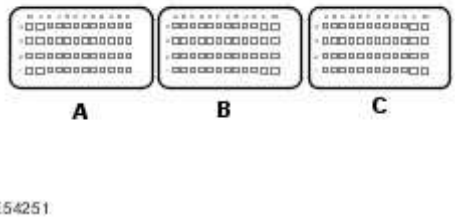

Circuit	Pin
Fuel injector, cylinder 2 - ground	L2
Fuel injector, cylinder 2 - control	M2

3. Key off. 4. Disconnect the fuel injector 2 (INJ2) connector, C46. 5. Measure the resistance between:

C46, component side	C46, component side
Pin 02	Pin 01

Is the resistance between 180 and 220 Kohms?

-> Yes
GO to Pinpoint Test G552275t50.

-> No
INSTALL a new fuel injector.
Fuel Injector (18.10.01) Clear any DTCs, test the system for normal operation.

G552275t50 : CHECK THE COMBINED FUEL INJECTOR AND HARNESS RESISTANCE

1. Key off. 2. Connect the fuel injector 2 (INJ2) connector, C46 connected. 3. Disconnect the ECM connector, C101. 4. Measure the resistance between:

C101, harness side	C101, harness side
Pin M2	Pin L2

Is the resistance between 180 and 220 Kohms?

-> Yes
GO to Pinpoint Test G552275t53.

-> No
GO to Pinpoint Test G552275t51.

G552275t51 : CHECK for short CIRCUIT BETWEEN THE SIGNAL AND RETURN CIRCUITS

1. Measure the resistance between:

C101, harness side	C101, harness side
Pin M2	Pin L2

Is the resistance greater than 100 Kohms?

-> Yes
GO to Pinpoint Test G552275t52.

www.JagDocs.com

-> No
GO to Pinpoint Test G552275t57.

G552275t52 : CHECK THE FUEL INJECTOR CIRCUIT FOR HIGH RESISTANCE

1. Disconnect the fuel injector 2 (INJ2) connector, C46. 2. Measure the resistance between:

C46, harness side	C101, harness side
Pin 02	Pin M2
Pin 01	Pin L2

Are the resistances less than 10 ohms?

-> Yes
An intermittent fault may be present in the wiring harness. Visually check for chaffed wires or other physical damage to the harness. If no fault is found in the circuit, suspect the following component(s): **-** Fuel injector 2 (INJ2) connector **-** ECM connector **-** Fuel injector 2 (INJ2)

-> No
REPAIR the high-resistance. For additional information, refer to the wiring diagrams. Clear any DTCs, test the system for normal operation.

G552275t53 : CHECK THE FUEL INJECTOR CIRCUIT FOR SHORT CIRCUIT TO GROUND

1. Key on, engine off. 2. Measure the resistance between:

C101, harness side	Battery
Pin M2	Negative terminal
Pin L2	Negative terminal

Are the resistances greater than 100 Kohms?

-> Yes
GO to Pinpoint Test G552275t55.

-> No

GO to Pinpoint Test G552275t54.

G552275t54 : CHECK WHETHER THE SHORT CIRCUIT TO GROUND IS IN THE HARNESS OR THE FUEL INJECTOR

1. Key off. 2. Disconnect the fuel injector 2 (INJ2) connector, C46. 3. Key on, engine off. 4. Measure the resistance between:

C101, harness side	Battery
Pin M2	Negative terminal
Pin L2	Negative terminal

Are the resistances greater than 100 Kohms?

-> Yes
An intermittent fault may be present in the wiring harness. Visually check for chaffed wires or other physical damage to the harness. If no fault is found in the circuit, suspect the following component(s): - Fuel injector 2 (INJ2)

-> No
REPAIR the short circuit. For additional information, refer to the wiring diagrams. Clear any DTCs, test the system for normal operation.

G552275t55 : CHECK THE FUEL INJECTOR CIRCUIT FOR SHORT CIRCUIT TO POWER

1. Measure the resistance between:

C101, harness side	Battery
Pin M2	Positive terminal
Pin L2	Positive terminal

Are the resistances greater than 100 Kohms?

-> Yes
An intermittent fault may be present in the wiring harness. Visually check for chaffed wires or other physical damage to the harness. If no fault is found in the circuit, suspect the following component(s): - Fuel injector 2 (INJ2) connector - Fuel injector 2 (INJ2) - ECM connector - ECM

www.JagDocs.com

-> No
GO to Pinpoint Test G552275t56.

G552275t56 : CHECK WHETHER THE SHORT CIRCUIT TO POWER IS IN THE HARNESS OR THE FUEL INJECTOR

1. Key off. 2. Disconnect the fuel injector 2 (INJ2) connector, C46. 3. Key on, engine off. 4. Measure the resistance between:

C101, harness side	Battery
Pin M2	Positive terminal
Pin L2	Positive terminal

Are the resistances greater than 100 Kohms?

-> Yes
An intermittent fault may be present in the wiring harness. Visually check for chaffed wires or other physical damage to the harness. If no fault is found in the circuit, suspect the following component(s): **-** Fuel injector 2 (INJ2)

-> No
REPAIR the short circuit. For additional information, refer to the wiring diagrams. Clear any DTCs, test the system for normal operation.

G552275t57 : CHECK WHETHER THE SHORT CIRCUIT IS IN THE HARNESS OR THE FUEL INJECTOR

1. Key off. 2. Disconnect the fuel injector 2 (INJ2) connector, C46. 3. Key on, engine off. 4. Measure the resistance between:

C101, harness side	C101, harness side
Pin M2	Pin L2

Is the resistance greater than 100 Kohms?

-> Yes
An intermittent fault may be present in the wiring harness. Visually check for chaffed wires or other physical damage to the harness. If no fault is found in the circuit, suspect the following component(s): **-** Fuel injector 2 (INJ2)

-> No

REPAIR the short circuit. For additional information, refer to the wiring diagrams. Clear any DTCs, test the system for normal operation.

PINPOINT TEST G552275p10 : FUEL INJECTOR AND CIRCUIT, CYLINDER 3

G552275t58 : CHECK THE COMPONENT RESISTANCE

1.

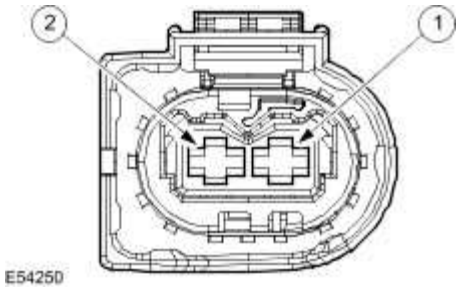

Circuit	Pin
Fuel injector, cylinder 2 - ground	01
Fuel injector, cylinder 2 - control	02

2.

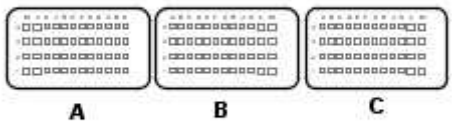

E54251

Circuit	Pin
Fuel injector, cylinder 3 - ground	L4
Fuel injector, cylinder 3 - control	M4

3. Key off. 4. Disconnect the fuel injector 3 (INJ4) connector, C48. 5. Measure the resistance between:

C48, component side	C48, component side

www.JagDocs.com

Pin 02	Pin 01

Is the resistance between 180 and 220 Kohms?

-> Yes
GO to Pinpoint Test G552275t59.

-> No
INSTALL a new fuel injector.
Fuel Injector (18.10.01) Clear any DTCs, test the system for normal operation.

G552275t59 : CHECK THE COMBINED FUEL INJECTOR AND HARNESS RESISTANCE

1. Key off. 2. Connect the fuel injector 3 (INJ4) connector, C48. 3. Disconnect the ECM connector, C101. 4. Measure the resistance between:

C101, harness side	**C101, harness side**
Pin M4	Pin L4

Is the resistance between 180 and 220 Kohms?

-> Yes
GO to Pinpoint Test G552275t62.

-> No
GO to Pinpoint Test G552275t60.

G552275t60 : CHECK FOR SIGNAL AND RETURN CIRCUITS SHORT CIRCUIT TO EACH OTHER

1. Measure the resistance between:

C101, harness side	**C101, harness side**
Pin M4	Pin L4

Is the resistance greater than 100 Kohms?

-> Yes
GO to Pinpoint Test G552275t61.

-> No
GO to Pinpoint Test G552275t66.

G552275t61 : CHECK THE FUEL INJECTOR CIRCUIT FOR HIGH RESISTANCE

1. Disconnect the fuel injector 3 (INJ4) connector, C48. 2. Measure the resistance between:

C48, harness side	C101, harness side
Pin 02	Pin M4
Pin 01	Pin L4

Are the resistances less than 10 ohms?

-> Yes
An intermittent fault may be present in the wiring harness. Visually check for chaffed wires or other physical damage to the harness. If no fault is found in the circuit, suspect the following component(s): **-** Fuel injector 3 (INJ4) connector **-** ECM connector **-** Fuel injector 3 (INJ4)

-> No
REPAIR the high resistance circuit. For additional information, refer to the wiring diagrams. Clear any DTCs, test the system for normal operation.

G552275t62 : CHECK THE FUEL INJECTOR CIRCUIT FOR SHORT CIRCUIT TO GROUND

1. Key on, engine off. 2. Measure the resistance between:

C101, harness side	Battery
Pin M4	Negative terminal
Pin L4	Negative terminal

Are the resistances greater than 100 Kohms?

-> Yes
GO to Pinpoint Test G552275t64.

www.JagDocs.com

-> No
GO to Pinpoint Test G552275t63.

G552275t63 : CHECK WHETHER THE SHORT CIRCUIT TO GROUND IS IN THE HARNESS OR THE FUEL INJECTOR

1. Key off. 2. Disconnect the fuel injector 3 (INJ4) connector, C48. 3. Key on, engine off. 4. Measure the resistance between:

C101, harness side	Battery
Pin M4	Negative terminal
Pin L4	Negative terminal

Are the resistances greater than 100 Kohms?

-> Yes
An intermittent fault may be present in the wiring harness. Visually check for chaffed wires or other physical damage to the harness. If no fault is found in the circuit, suspect the following component(s): **-** Fuel injector 3 (INJ4)

-> No
REPAIR the short circuit. For additional information, refer to the wiring diagrams. Clear any DTCs, test the system for normal operation.

G552275t64 : CHECK THE FUEL INJECTOR CIRCUIT FOR SHORT CIRCUIT TO POWER

1. Measure the resistance between:

C101, harness side	Battery
Pin M4	Positive terminal
Pin L4	Positive terminal

Are the resistances greater than 100 Kohms?

-> Yes
An intermittent fault may be present in the wiring harness. Visually check for chaffed wires or other

physical damage to the harness. If no fault is found in the circuit, suspect the following component(s): - Fuel injector 3 (INJ4) connector - Fuel injector 3 (INJ4) - ECM connector - ECM

-> No
GO to Pinpoint Test G552275t65.

G552275t65 : CHECK WHETHER THE SHORT CIRCUIT TO POWER IS IN THE HARNESS OR THE FUEL INJECTOR

1. Key off. 2. Disconnect the fuel injector 3 (INJ4) connector, C48. 3. Key on, engine off. 4. Measure the resistance between:

C101, harness side	Battery
Pin M4	Positive terminal
Pin L4	Positive terminal

Are the resistances greater than 100 Kohms?

-> Yes
An intermittent fault may be present in the wiring harness. Visually check for chaffed wires or other physical damage to the harness. If no fault is found in the circuit, suspect the following component(s): - Fuel injector 3 (INJ4)

-> No
REPAIR the short circuit. For additional information, refer to the wiring diagrams. Clear any DTCs, test the system for normal operation.

G552275t66 : CHECK WHETHER THE SHORT CIRCUIT IS IN THE HARNESS OR THE FUEL INJECTOR

1. Key off. 2. Disconnect the fuel injector 3 (INJ4) connector, C48. 3. Key on, engine off. 4. Measure the resistance between:

C101, harness side	C101, harness side
Pin M4	Pin L4

Is the resistance greater than 100 Kohms?

-> Yes
An intermittent fault may be present in the wiring harness. Visually check for chaffed wires or other

www.JagDocs.com

physical damage to the harness. If no fault is found in the circuit, suspect the following component(s): - Fuel injector 3 (INJ4)

-> No
REPAIR the short circuit. For additional information, refer to the wiring diagrams. Clear any DTCs, test the system for normal operation.

PINPOINT TEST G552275p11 : FUEL INJECTOR AND CIRCUIT, CYLINDER 4

G552275t67 : CHECK THE COMPONENT RESISTANCE

1.

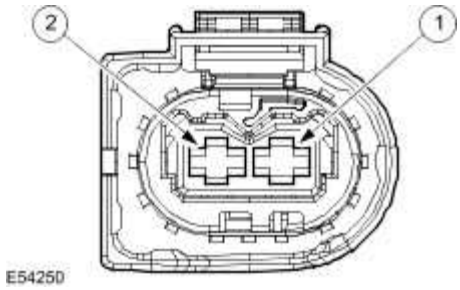

Circuit	Pin
Fuel injector, cylinder 4 - ground	01
Fuel injector, cylinder 4 - control	02

2.

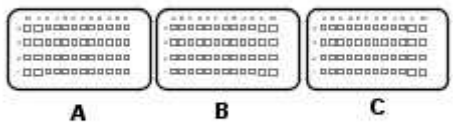

E54251

Circuit	Pin
Fuel injector, cylinder 4 - ground	L2
Fuel injector, cylinder 4 - control	L1

3. Key off. 4. Disconnect the fuel injector 4 (INJ1) connector, C45. 5. Measure the resistance between:

C45, component side	C45, component side
Pin 02	Pin 01

Is the resistance between 180 and 220 Kohms?

-> Yes
GO to Pinpoint Test G552275t68.

-> No
INSTALL a new fuel injector.
Fuel Injector (18.10.01) Clear any DTCs, test the system for normal operation.

G552275t68 : CHECK THE COMBINED FUEL INJECTOR AND HARNESS RESISTANCE

1. Key off. 2. Connect the fuel injector 4 (INJ1) connector, C45. 3. Disconnect the ECM connector, C100. 4. Measure the resistance between:

C100, harness side	C100, harness side
Pin L1	Pin L2

Is the resistance between 180 and 220 Kohms?

-> Yes
GO to Pinpoint Test G552275t71.

-> No
GO to Pinpoint Test G552275t69.

G552275t69 : CHECK FOR SIGNAL AND RETURN CIRCUITS SHORT CIRCUIT TO EACH OTHER

1. Measure the resistance between:

C100, harness side	C100, harness side
Pin L1	Pin L2

www.JagDocs.com

Is the resistance greater than 100 Kohms?

-> Yes
GO to Pinpoint Test G552275t70.

-> No
GO to Pinpoint Test G552275t75.

G552275t70 : CHECK THE FUEL INJECTOR CIRCUIT FOR HIGH RESISTANCE

1. Disconnect the fuel injector 4 (INJ1) connector, C45. 2. Measure the resistance between:

C45, harness side	C100, harness side
Pin 02	Pin L1
Pin 01	Pin L2

Are the resistances less than 10 ohm?

-> Yes
An intermittent fault may be present in the wiring harness. Visually check for chaffed wires or other physical damage to the harness. If no fault is found in the circuit, suspect the following component(s): - Fuel injector 4 (INJ1) connector - ECM connector - Fuel injector 4 (INJ1)

-> No
REPAIR the high resistance circuit. For additional information, refer to the wiring diagrams. Clear any DTCs, test the system for normal operation.

G552275t71 : CHECK THE FUEL INJECTOR CIRCUIT FOR SHORT CIRCUIT TO GROUND

1. Key on, engine off. 2. Measure the resistance between:

C100, harness side	Battery
Pin L1	Negative terminal
Pin L2	Negative terminal

Are the resistances greater than 100 Kohms?

-> Yes
GO to Pinpoint Test G552275t73.

-> No
GO to Pinpoint Test G552275t72.

G552275t72 : CHECK WHETHER THE SHORT CIRCUIT TO GROUND IS IN THE HARNESS OR THE FUEL INJECTOR

1. Key off. 2. Disconnect the fuel injector 4 (INJ1) connector, C45. 3. Key on, engine off. 4. Measure the resistance between:

C100, harness side	Battery
Pin L1	Negative terminal
Pin L2	Negative terminal

Are the resistances greater than 100 Kohms?

-> Yes
An intermittent fault may be present in the wiring harness. Visually check for chaffed wires or other physical damage to the harness. If no fault is found in the circuit, suspect the following component(s): **-** Fuel injector 4 (INJ1)

-> No
REPAIR the short circuit. For additional information, refer to the wiring diagrams. Clear any DTCs, test the system for normal operation.

G552275t73 : CHECK THE FUEL INJECTOR CIRCUIT FOR SHORT CIRCUIT TO POWER

1. Measure the resistance between:

C100, harness side	Battery
Pin L1	Positive terminal
Pin L2	Positive terminal

Are the resistances greater than 100 Kohms?

www.JagDocs.com

-> Yes
An intermittent fault may be present in the wiring harness. Visually check for chaffed wires or other physical damage to the harness. If no fault is found in the circuit, suspect the following component(s): - Fuel injector 4 (INJ1) connector - Fuel Injector 4 (INJ1) - ECM connector - ECM

-> No
GO to Pinpoint Test G552275t74.

G552275t74 : CHECK WHETHER THE SHORT CIRCUIT TO POWER IS IN THE HARNESS OR THE FUEL INJECTOR

1. Key off. 2. Disconnect the fuel injector 4 (INJ1) connector, C45. 3. Key on, engine off. 4. Measure the resistance between:

C100, harness side	Battery
Pin L1	Positive terminal
Pin L2	Positive terminal

Are the resistances greater than 100 Kohms?

-> Yes
An intermittent fault may be present in the wiring harness. Visually check for chaffed wires or other physical damage to the harness. If no fault is found in the circuit, suspect the following component(s): - Fuel injector 4 (INJ1)

-> No
REPAIR the short circuit. For additional information, refer to the wiring diagrams. Clear any DTCs, test the system for normal operation.

G552275t75 : CHECK WHETHER THE SHORT CIRCUIT IS IN THE HARNESS OR THE FUEL INJECTOR

1. Key off. 2. Disconnect the fuel injector 4 (INJ1) connector, C45. 3. Key on, engine off. 4. Measure the resistance between:

C100, harness side	C100, harness side
Pin L1	Pin L2

Is the resistance greater than 100 Kohms?

-> Yes
An intermittent fault may be present in the wiring harness. Visually check for chaffed wires or other physical damage to the harness. If no fault is found in the circuit, suspect the following component(s): **-** Fuel injector 4 (INJ1)

-> No
REPAIR the short circuit. For additional information, refer to the wiring diagrams. Clear any DTCs, test the system for normal operation.

PINPOINT TEST G552275p12 : FUEL INJECTOR AND CIRCUIT, CYLINDER 5

G552275t76 : CHECK THE COMPONENT RESISTANCE

1.

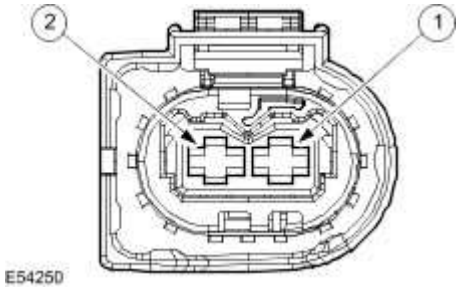

Circuit	Pin
Fuel injector, cylinder 5 - ground	01
Fuel injector, cylinder 5 - control	02

2.

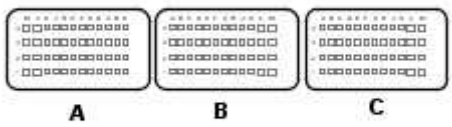

E54251

Circuit	Pin
Fuel injector, cylinder 5 - ground	L3

www.JagDocs.com

Fuel injector, cylinder 5 - control	M1

3. Key off. 4. Disconnect the fuel injector 5 (INJ3) connector, C47. 5. Measure the resistance between:

C47, component side	C47, component side
Pin 02	Pin 01

Is the resistance between 180 and 220 Kohms?

-> Yes
GO to Pinpoint Test G552275t77.

-> No
INSTALL a new fuel injector.
Fuel Injector (18.10.01) Clear any DTCs, test the system for normal operation.

G552275t77 : CHECK THE COMBINED FUEL INJECTOR AND HARNESS RESISTANCE

1. Key off. 2. Connect the fuel injector 5 (INJ3) connector, C47. 3. Disconnect the ECM connector, C100. 4. Measure the resistance between:

C100, harness side	C100, harness side
Pin M1	Pin L3

Is the resistance between 180 and 220 Kohms?

-> Yes
GO to Pinpoint Test G552275t80.

-> No
GO to Pinpoint Test G552275t78.

G552275t78 : CHECK FOR SHORT CIRCUIT BETWEEN THE SIGNAL AND RETURN CIRCUITS

1. Measure the resistance between:

C100, harness side	C100, harness side
Pin M1	Pin L3

Is the resistance greater than 100 Kohms?

-> Yes
GO to Pinpoint Test G552275t79.

-> No
GO to Pinpoint Test G552275t84.

G552275t79 : CHECK THE FUEL INJECTOR CIRCUIT FOR HIGH RESISTANCE

1. Disconnect the fuel injector 5 (INJ3) connector, C47. 2. Measure the resistance between:

C47, harness side	C100, harness side
Pin 02	Pin M1
Pin 01	Pin L3

Are the resistances less than 10 ohms?

-> Yes
An intermittent fault may be present in the wiring harness. Visually check for chaffed wires or other physical damage to the harness. If no fault is found in the circuit, suspect the following component(s): - Fuel injector 5 (INJ3) connector - ECM connector - Fuel injector 5 (INJ3)

-> No
REPAIR the high resistance circuit. For additional information, refer to the wiring diagrams. Clear any DTCs, test the system for normal operation.

G552275t80 : CHECK THE FUEL INJECTOR CIRCUIT FOR SHORT CIRCUIT TO GROUND

1. Key on, engine off. 2. Measure the resistance between:

C100, harness side	Battery
Pin M1	Negative terminal

www.JagDocs.com

Pin L3	Negative terminal

Are the resistances greater than 100 Kohms?

-> Yes
GO to Pinpoint Test G552275t82.

-> No
GO to Pinpoint Test G552275t81.

G552275t81 : CHECK WHETHER THE SHORT CIRCUIT TO GROUND IS IN THE HARNESS OR THE FUEL INJECTOR

1. Key off. 2. Disconnect the fuel injector 5 (INJ3) connector, C47. 3. Key on, engine off. 4. Measure the resistance between:

C100, harness side	Battery
Pin M1	Negative terminal
Pin L3	Negative terminal

Are the resistances greater than 100 Kohms?

-> Yes
An intermittent fault may be present in the wiring harness. Visually check for chaffed wires or other physical damage to the harness. If no fault is found in the circuit, suspect the following component(s): **-** Fuel injector 5 (INJ3)

-> No
REPAIR the short circuit. For additional information, refer to the wiring diagrams. Clear any DTCs, test the system for normal operation.

G552275t82 : CHECK THE FUEL INJECTOR CIRCUIT FOR SHORT CIRCUIT TO POWER

1. Measure the resistance between:

C100, harness side	Battery
Pin M1	Positive terminal

Pin L3	Positive terminal

Are the resistances greater than 100 Kohms?

-> Yes
An intermittent fault may be present in the wiring harness. Visually check for chaffed wires or other physical damage to the harness. If no fault is found in the circuit, suspect the following component(s): - Fuel injector 5 (INJ3) connector - Fuel injector 5 (INJ3) - ECM connector - ECM

-> No
GO to Pinpoint Test G552275t83.

G552275t83 : CHECK WHETHER THE SHORT CIRCUIT TO POWER IS IN THE HARNESS OR THE FUEL INJECTOR

1. Key off. 2. Disconnect the fuel injector 5 (INJ3) connector, C47. 3. Key on, engine off. 4. Measure the resistance between:

C100, harness side	Battery
Pin M1	Positive terminal
Pin L3	Positive terminal

Are the resistances greater than 100 Kohms?

-> Yes
An intermittent fault may be present in the wiring harness. Visually check for chaffed wires or other physical damage to the harness. If no fault is found in the circuit, suspect the following component(s): - Fuel injector 5 (INJ3)

-> No
REPAIR the short circuit. For additional information, refer to the wiring diagrams. Clear any DTCs, test the system for normal operation.

G552275t84 : CHECK WHETHER THE SHORT CIRCUIT IS IN THE HARNESS OR THE FUEL INJECTOR

1. Key off. 2. Disconnect the fuel injector 5 (INJ3) connector, C47. 3. Key on, engine off. 4. Measure the resistance between:

C100, harness side	C100, harness side

www.JagDocs.com

Pin M1	Pin L3

Is the resistance greater than 100 Kohms?

-> Yes
An intermittent fault may be present in the wiring harness. Visually check for chaffed wires or other physical damage to the harness. If no fault is found in the circuit, suspect the following component(s): **-** Fuel injector 5 (INJ3)

-> No
REPAIR the short circuit. For additional information, refer to the wiring diagrams. Clear any DTCs, test the system for normal operation.

PINPOINT TEST G552275p13 : FUEL INJECTOR AND CIRCUIT, CYLINDER 6

G552275t85 : CHECK THE COMPONENT RESISTANCE

1.

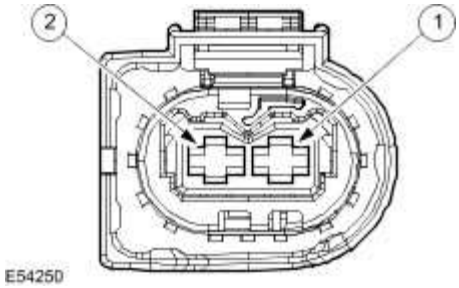

Circuit	Pin
Fuel injector, cylinder 6 - ground	01
Fuel injector, cylinder 6 - control	02

2.

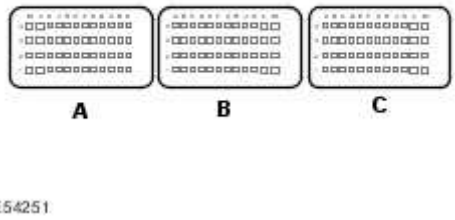

Circuit	Pin
Fuel injector, cylinder 6 - ground	M3
Fuel injector, cylinder 6 - control	M2

3. Key off. 4. Disconnect the fuel injector 6 (INJ5) connector, C49. 5. Measure the resistance between:

C49, component side	C49, component side
Pin 02	Pin 01

Is the resistance between 180 and 220 Kohms?

-> Yes
GO to Pinpoint Test G552275t86.

-> No
INSTALL a new fuel injector.
Fuel Injector (18.10.01) Clear any DTCs, test the system for normal operation.

G552275t86 : CHECK THE COMBINED FUEL INJECTOR AND HARNESS RESISTANCE

1. Key off. 2. Connect the fuel injector 6 (INJ5) connector, C49. 3. Disconnect the ECM connector, C100. 4. Measure the resistance between:

C100, harness side	C100, harness side
Pin M2	Pin M3

Is the resistance between 180 and 220 Kohms?

-> Yes
GO to Pinpoint Test G552275t89.

-> No
GO to Pinpoint Test G552275t87.

www.JagDocs.com

G552275t87 : CHECK FOR SHORT CIRCUIT BETWEEN THE SIGNAL AND RETURN CIRCUITS

1. Measure the resistance between:

C100, harness side	C100, harness side
Pin M2	Pin M3

Is the resistance greater than 100 Kohms?

-> Yes
GO to Pinpoint Test G552275t88.

-> No
GO to Pinpoint Test G552275t93.

G552275t88 : CHECK THE FUEL INJECTOR CIRCUIT FOR HIGH RESISTANCE

1. Disconnect the fuel injector 6 (INJ5) connector, C49. 2. Measure the resistance between:

C49, harness side	C100, harness side
Pin 02	Pin M2
Pin 01	Pin M3

Are the resistances less than 10 ohms?

-> Yes
An intermittent fault may be present in the wiring harness. Visually check for chaffed wires or other physical damage to the harness. If no fault is found in the circuit, suspect the following component(s): - Fuel injector 6 (INJ5) connector - ECM connector - Fuel injector 6 (INJ5)

-> No
REPAIR the high resistance circuit. For additional information, refer to the wiring diagrams. Clear any DTCs, test the system for normal operation.

G552275t89 : CHECK THE FUEL INJECTOR CIRCUIT FOR SHORT CIRCUIT TO GROUND

1. Key on, engine off. 2. Measure the resistance between:

C100, harness side	Battery
Pin M2	Negative terminal
Pin M3	Negative terminal

Are the resistances greater than 100 Kohms?

-> Yes
GO to Pinpoint Test G552275t91.

-> No
GO to Pinpoint Test G552275t90.

G552275t90 : CHECK WHETHER THE SHORT CIRCUIT TO GROUND IS IN THE HARNESS OR the Fuel injector

1. Key off. 2. Disconnect the fuel injector 6 (INJ5) connector, C49. 3. Key on, engine off. 4. Measure the resistance between:

C100, harness side	Battery
Pin M2	Negative terminal
Pin M3	Negative terminal

Are the resistances greater than 100 Kohms?

-> Yes
An intermittent fault may be present in the wiring harness. Visually check for chaffed wires or other physical damage to the harness. If no fault is found in the circuit, suspect the following component(s): - Fuel injector 6 (INJ5)

-> No
REPAIR the short circuit. For additional information, refer to the wiring diagrams. Clear any DTCs, test the system for normal operation.

G552275t91 : CHECK THE FUEL INJECTOR CIRCUIT FOR SHORT CIRCUIT TO POWER

1. Measure the resistance between:

www.JagDocs.com

C100, harness side	Battery
Pin M2	Positive terminal
Pin M3	Positive terminal

Are the resistances greater than 100 Kohms?

-> Yes
An intermittent fault may be present in the wiring harness. Visually check for chaffed wires or other physical damage to the harness. If no fault is found in the circuit, suspect the following component(s): - Fuel injector 6 (INJ5) connector - Fuel injector 6 (INJ5) - ECM connector - ECM

-> No
GO to Pinpoint Test G552275t92.

G552275t92 : CHECK WHETHER THE SHORT CIRCUIT TO POWER IS IN THE HARNESS OR THE FUEL INJECTOR

1. Key off. 2. Disconnect the fuel injector 6 (INJ5) connector, C49. 3. Key on, engine off. 4. Measure the resistance between:

C100, harness side	Battery
Pin M2	Positive terminal
Pin M3	Positive terminal

Are the resistances greater than 100 Kohms?

-> Yes
An intermittent fault may be present in the wiring harness. Visually check for chaffed wires or other physical damage to the harness. If no fault is found in the circuit, suspect the following component(s): - Fuel injector 6 (INJ5)

-> No
REPAIR the short circuit. For additional information, refer to the wiring diagrams. Clear any DTCs, test the system for normal operation.

G552275t93 : CHECK WHETHER THE SHORT CIRCUIT IS IN THE HARNESS OR THE FUEL INJECTOR

1. Key off. 2. Disconnect the fuel injector 6 (INJ5) connector, C49. 3. Key on, engine off. 4. Measure the resistance between:

C100, harness side	C100, harness side
Pin M2	Pin M3

Is the resistance greater than 100 Kohms?

-> Yes

An intermittent fault may be present in the wiring harness. Visually check for chaffed wires or other physical damage to the harness. If no fault is found in the circuit, suspect the following component(s): **-** Fuel injector 6 (INJ5)

-> No

REPAIR the short circuit. For additional information, refer to the wiring diagrams. Clear any DTCs, test the system for normal operation.

www.JagDocs.com

Fuel Diverter Rail

Removal

WARNING: Wait at least 30 seconds after the engine stops before commencing any repair to the high pressure fuel injection system. Failure to follow this instruction may result in personal injury.

WARNING: Do not smoke or carry lighted tobacco or open flame of any type when working on or near any fuel related components. Highly flammable mixtures are always present and may ignite. Failure to follow these instructions may result in personal injury.

WARNING: This procedure involves fuel handling. Be prepared for fuel spillage at all times and always observe fuel handling precautions. Failure to follow these instructions may result in personal injury.

WARNING: Do not carry out any repairs to the fuel system with the engine running. The fuel pressure within the high-pressure system can be as high as 1650 bar. Failure to follow this instruction may result in personal injury.

CAUTION: Make sure the workshop area in which the vehicle is being worked on is as clean and as dust free as possible. Foreign matter from work on clutches, brakes or from machining or welding operations can contaminate the fuel system and may result in later malfunction.

CAUTION: Always carry out the cleaning process before carrying out any repairs to the fuel injection system components. Failure to follow this instruction may result in foreign matter ingress to the fuel injection system.

CAUTION: Diesel fuel injection equipment is manufactured to very precise tolerances and fine clearances. It is therefore essential that absolute cleanliness is observed when working with these components. Always install blanking caps to any open orifices or lines.

CAUTION: Do not remove the fuel rail pressure sensor from the fuel injection diverter rail.

NOTE:

If a new fuel rail pressure sensor is to be installed, a new fuel injection diverter rail and fuel rail pressure sensor must be installed as an assembly.

1 . Remove the secondary bulkhead center panel.
For additional information, refer to Secondary Bulkhead Center Panel

2 . Clean around the low pressure fuel inlet and return lines, high-pressure fuel supply lines and surrounding areas.
For additional information, refer to Fuel Injection Component Cleaning

3 . Disconnect the low-pressure fuel inlet and return lines.

- Install suitable blanking caps to the fuel lines and unions.

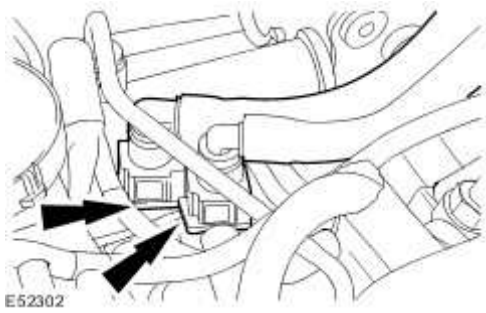

4 . Remove the injector sound proofing.

www.JagDocs.com

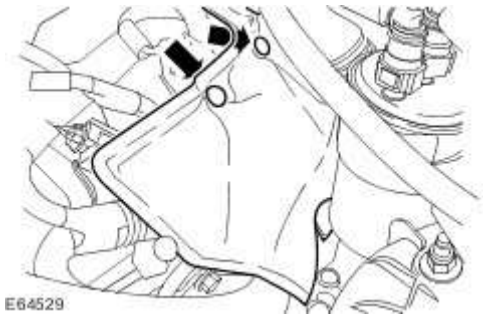

5 . **NOTE:**

Left-hand shown, right-hand similar.

Detach the high-pressure fuel supply line clamps.

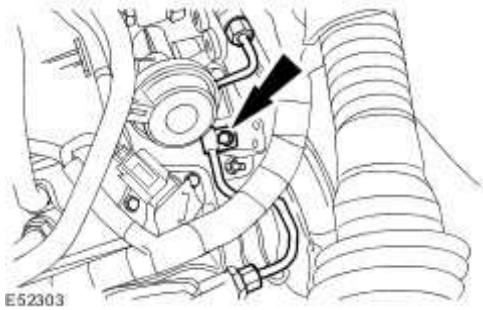

6 . **CAUTION: Make sure that the high-pressure fuel supply line remains in contact with the fuel injection supply manifold and fuel injection diverter rail until both unions have been detached and cleaned. Failure to follow this instruction may result in foreign matter ingress to the fuel injection system.**

NOTE:

Left-hand shown, right-hand similar.

Loosen the high-pressure fuel supply lines.

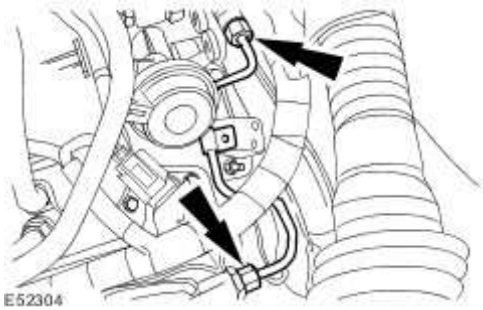

7. Using the pneumatic vacuum gun, vacuum foreign material from the high-pressure fuel supply lines, the fuel injection diverter rail and the fuel injection supply manifolds.
For additional information, refer to Fuel Injection Component Cleaning

8. **NOTE:**

Left-hand shown, right-hand similar.

Remove and discard the high-pressure fuel supply lines.

- Install suitable blanking caps to the open threaded ports on the fuel injection diverter rail and fuel injection supply manifold.

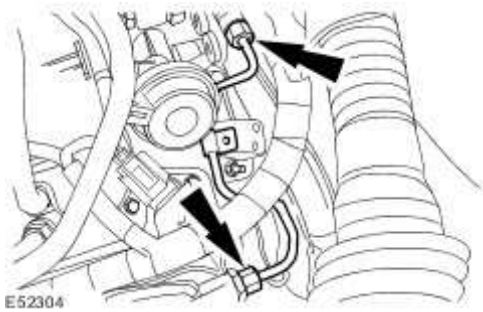

9. **CAUTION: Make sure that the high-pressure fuel supply line remains in contact with the fuel injection pump and fuel injection diverter rail until both unions have been detached and cleaned. Failure to follow this instruction may result in foreign matter ingress to the fuel injection system.**

www.JagDocs.com

CAUTION: Make sure the tool used to loosen the high-pressure fuel supply line unions is used at the top of the unions as this is where there is most material. Failure to follow this instruction may result in damage to the unions.

Loosen the high-pressure fuel supply line.

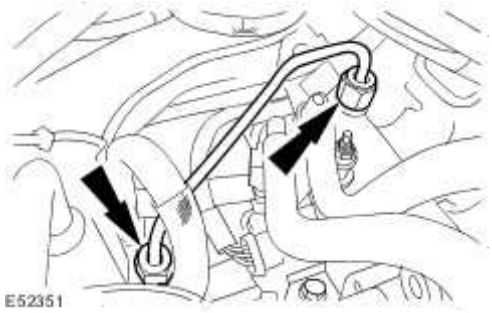

10 . Using the pneumatic vacuum gun, vacuum foreign material from the high-pressure fuel supply lines, the fuel injection diverter rail and the fuel injection pump.
For additional information, refer to Fuel Injection Component Cleaning

11 . Remove and discard the high-pressure fuel supply line.

- Install suitable blanking caps to the open threaded ports on the fuel injection diverter rail and fuel injection pump.

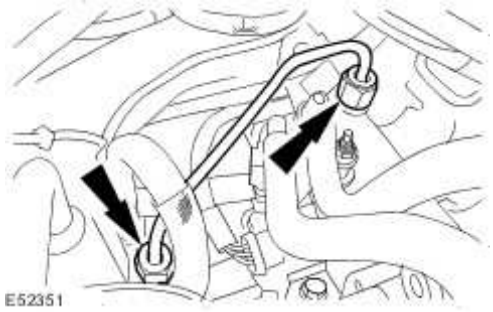

12 . Remove the low-pressure fuel line retaining nut.

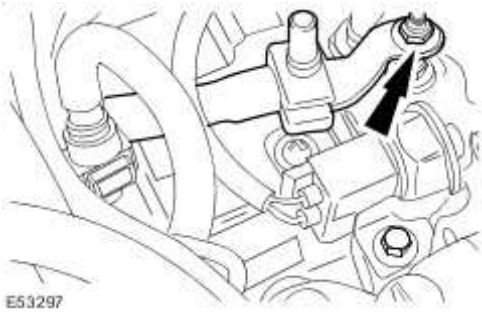

13 . Disconnect the fuel rail pressure (FRP) sensor electrical connector.

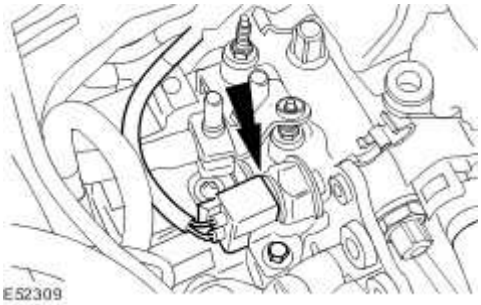

14 . Disconnect the low-pressure fuel line.

- Install suitable blanking caps to the fuel line and union.

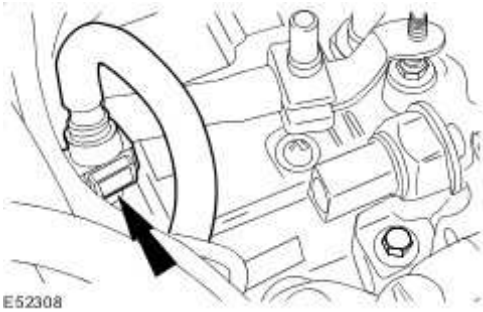

15 . Detach the low-pressure fuel line.

- Install suitable blanking caps to the fuel line and union.

www.JagDocs.com

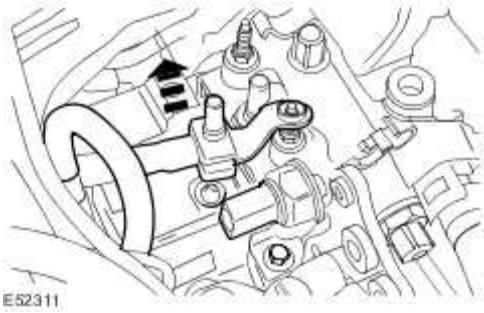

16. **CAUTION: Do not remove the fuel rail pressure sensor from the fuel injection diverter rail.**

NOTE:

If a new fuel rail pressure sensor is to be installed, a new fuel injection diverter rail and fuel rail pressure sensor must be installed as an assembly.

Remove the fuel injection diverter rail.

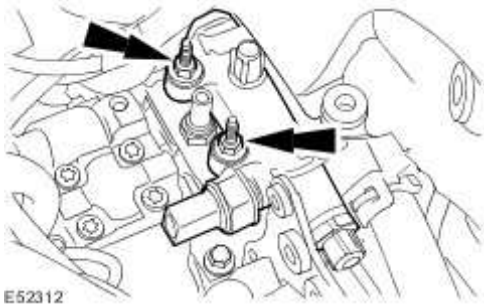

Installation

1. **WARNING: Do not smoke or carry lighted tobacco or open flame of any type when working on or near any fuel related components. Highly flammable mixtures are always present and may ignite. Failure to follow these instructions may result in personal injury.**

WARNING: This procedure involves fuel handling. Be prepared for fuel spillage at all times and always observe fuel handling precautions. Failure to follow these instructions

may result in personal injury.

WARNING: Do not carry out any repairs to the fuel injection system with the engine running. The fuel pressure within the system can be as high as 1650 bar. Failure to follow this instruction may result in personal injury.

CAUTION: Make sure the workshop area in which the vehicle is being worked on is as clean and as dust free as possible. Foreign matter from work on clutches, brakes or from machining or welding operations can contaminate the fuel system and may result in later malfunction. Failure to follow this instruction may result in damage to the vehicle.

CAUTION: Always carry out the cleaning process before carrying out any repairs to the fuel injection system components. Failure to follow this instruction may result in damage to the vehicle.

CAUTION: Diesel fuel injection equipment is manufactured to very precise tolerances and fine clearances. It is therefore essential that absolute cleanliness is observed when working with these components. Always install blanking caps to any open orifices or lines. Failure to follow this instruction may result in damage to the vehicle.

CAUTION: Do not remove the fuel rail pressure sensor from the fuel injection diverter rail.

NOTE:

If a new fuel rail pressure sensor is to be installed, a new fuel injection diverter rail and fuel rail pressure sensor must be installed as an assembly. Failure to follow this instruction may result in damage to the vehicle.

Install the fuel injection diverter rail.

www.JagDocs.com

- Do not fully tighten the fuel injection diverter rail retaining studs at this stage.

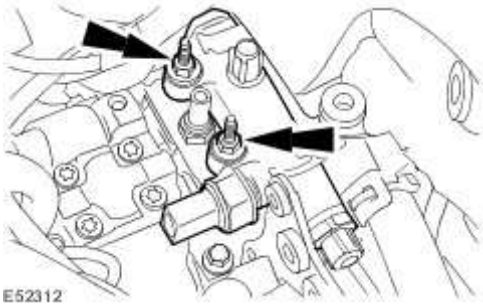

2 . **NOTE:**

Remove the blanking caps.

NOTE:

Left-hand shown, right-hand similar.

Install new high-pressure fuel supply lines.

- Tighten the high-pressure fuel supply line in the sequence shown:
- Tighten the high-pressure fuel supply line union 1 to diverter rail to 15 Nm.
- Tighten the high-pressure fuel supply line union 2 to fuel rail to 15 Nm.
- Tighten the high-pressure fuel supply line union 1 to diverter rail to 30 Nm.
- Tighten the high-pressure fuel supply line union 2 to fuel rail to 30 Nm.

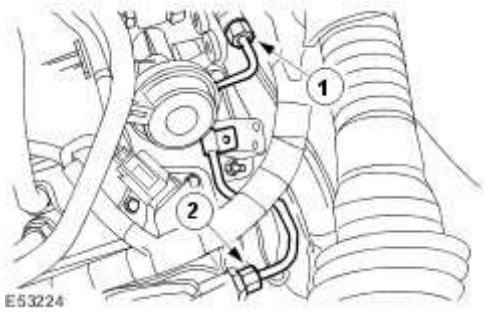

3 . Tighten the fuel injection diverter rail retaining studs to 23 Nm.

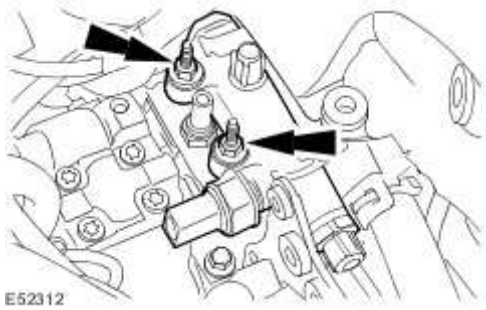

4 . **NOTE:**

Left-hand shown, right-hand similar.

Attach the high-pressure fuel supply line clamps.

Tighten to 10 Nm.

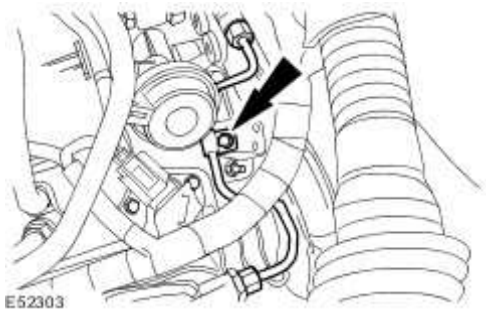

5 . **NOTE:**

Remove the blanking caps.

Attach the low-pressure fuel line.

www.JagDocs.com

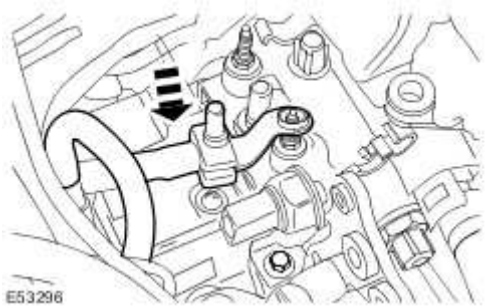

6 . **NOTE:**

Remove the blanking caps.

Connect the low-pressure fuel line.

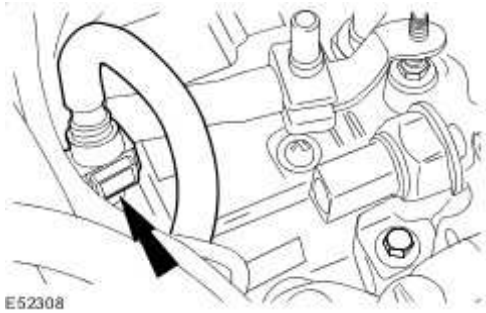

7 . Connect the FRP sensor electrical connector.

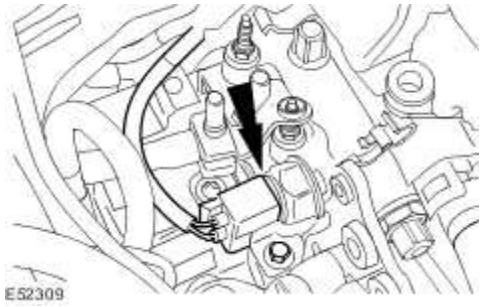

8 . Install the low-pressure fuel line retaining nut.

Tighten to 7 Nm.

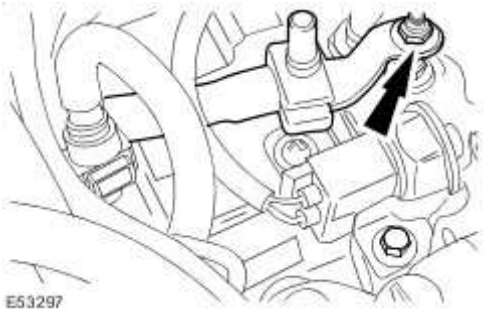

9 **NOTE:**

.

Remove the blanking caps.

Install a new high-pressure fuel supply line.

- Install but do not tighten the high-pressure fuel supply line.
- Tighten the high-pressure fuel supply line in the sequence shown in four stages:
- Tighten the high-pressure fuel supply line union 1 to fuel injection pump to 15 Nm.
- Tighten the high-pressure fuel supply line union 2 to diverter rail to 15 Nm.
- Tighten the high-pressure fuel supply line union 1 to fuel injection pump to 30 Nm.
- Tighten the high-pressure fuel supply line union 2 to diverter rail to 30 Nm.

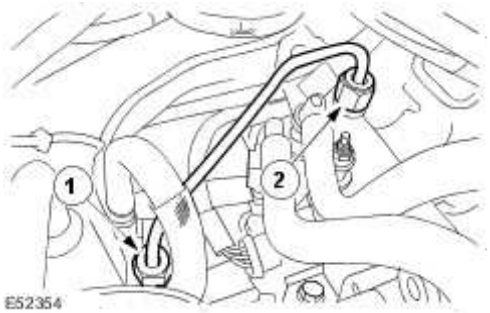

www.JagDocs.com

10 . **NOTE:**

Remove the blanking caps.

Connect the low-pressure fuel inlet and return lines.

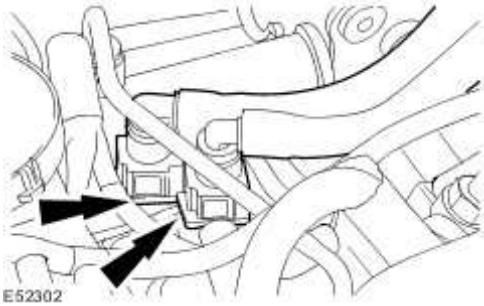

11 . Install the fuel injector sound proofing.

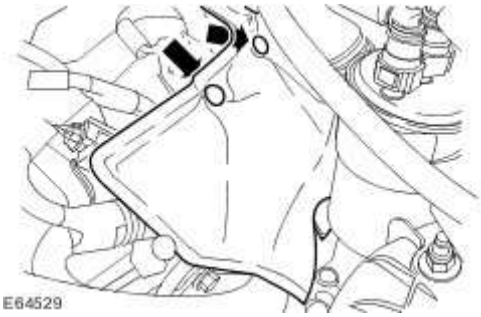

12 . Install the secondary bulkhead center panel.
For additional information, refer to Secondary Bulkhead Center Panel

Fuel Injection Pump

Special Service Tools

Reaction Arm - Fuel Pump Pulley
310-138

Holder - Fuel Pump Pulley
310-139

Holder - Camshaft Pulley Rear
303-1125

Removal

1. **WARNING: Wait at least 30 seconds after the engine stops before commencing any repair to the high pressure fuel injection system. Failure to follow this instruction may result in personal injury.**

   WARNING: Do not smoke or carry lighted tobacco or open flame of any type when working on or near any fuel related components. Highly flammable mixtures are always present and may ignite. Failure to follow these instructions may result in personal injury.

www.JagDocs.com

WARNING: This procedure involves fuel handling. Be prepared for fuel spillage at all times and always observe fuel handling precautions. Failure to follow these instructions may result in personal injury.

WARNING: Do not carry out any repairs to the fuel system with the engine running. The fuel pressure within the high-pressure system can be as high as 1650 bar. Failure to follow this instruction may result in personal injury.

CAUTION: Make sure the workshop area in which the vehicle is being worked on is as clean and as dust free as possible. Foreign matter from work on clutches, brakes or from machining or welding operations can contaminate the fuel system and may result in later malfunction.

CAUTION: Always carry out the cleaning process before carrying out any repairs to the fuel injection system components. Failure to follow this instruction may result in foreign matter ingress to the fuel injection system.

CAUTION: Diesel fuel injection equipment is manufactured to very precise tolerances and fine clearances. It is therefore essential that absolute cleanliness is observed when working with these components. Always install blanking caps to any open orifices or lines.

CAUTION: Do not disassemble or clean inside the fuel pump, even with an ultrasonic cleaner. Always install a new fuel pump when required.

NOTE:

If the fuel pump has suffered a major mechanical failure, new fuel injectors should also be installed.

Disconnect the battery ground cable.
For additional information, refer to Battery Disconnect and Connect

2 . Remove the secondary bulkhead center panel.
For additional information, refer to Secondary Bulkhead Center Panel

3 . Remove the fuel injection pump belt cover.

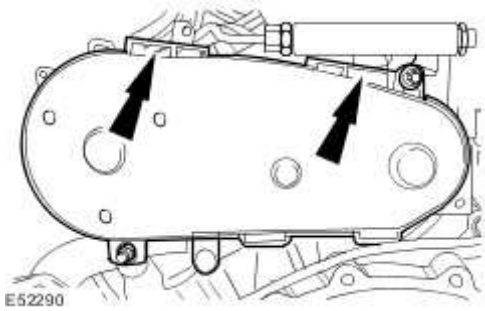

4 . **NOTE:**

The fuel injection pump belt is not timed to the engine.

Remove and discard the fuel injection pump belt tensioner.

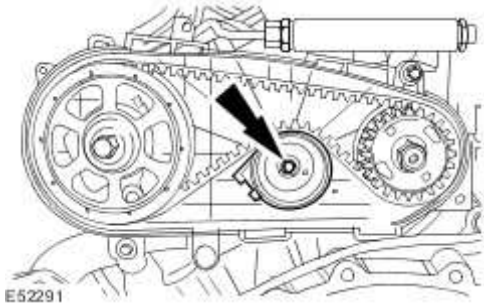

5 **NOTE:**
.

The fuel injection pump rotates in an anti-clockwise direction when viewed from the rear of the engine.

Note the direction of rotation of the fuel injection pump belt.

www.JagDocs.com

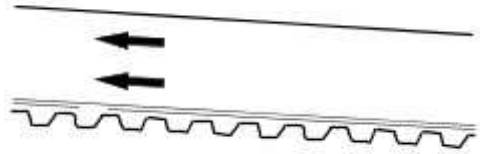

E52241

6 . Remove and discard the fuel injection pump belt.

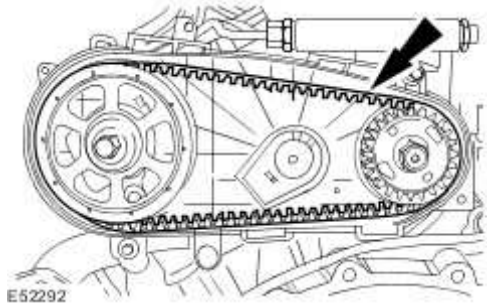

E52292

7 . Remove the camshaft rear pulley retaining bolt.

- Using the special tool, retain the camshaft rear pulley.
- Remove and discard the camshaft rear pulley retaining bolt.

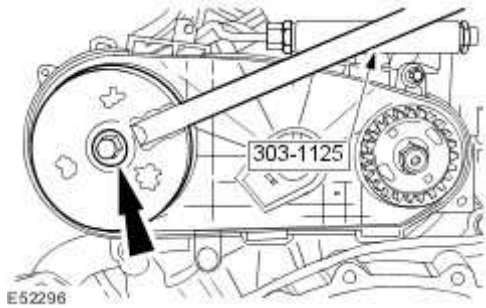

E52296

8 . Remove the camshaft rear pulley.

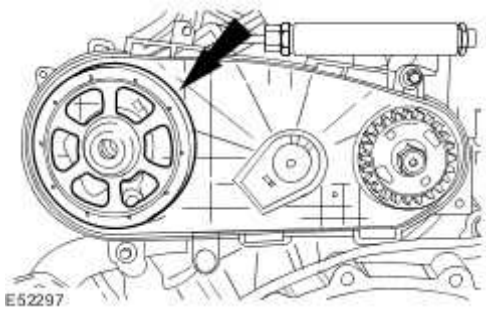

9 . Remove the injection pump pulley retaining nut.

- Using the special tool, retain the fuel injection pump pulley.
- Remove the injection pump pulley retaining nut.

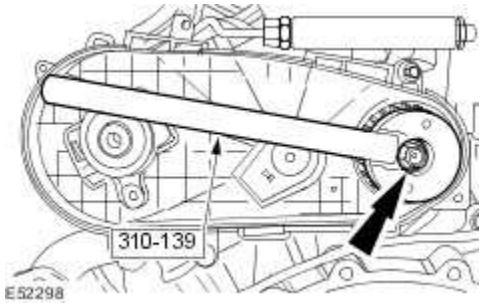

10 . Using the special tool, remove the fuel injection pump pulley.

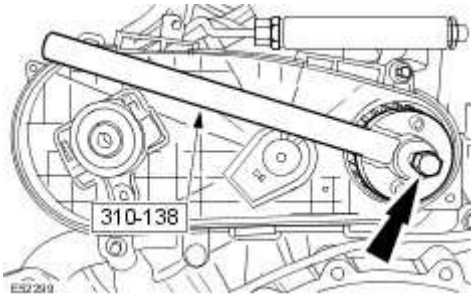

11 . Detach the exhaust gas recirculation (EGR) coolant outlet tube.

www.JagDocs.com

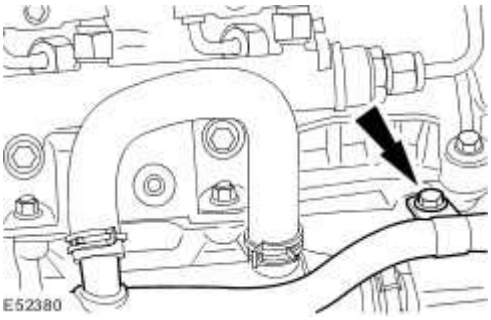

12 . Remove the fuel injection pump belt rear cover.

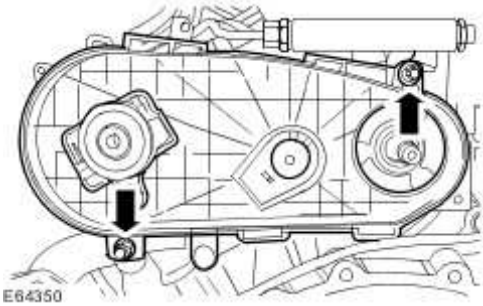

13 . Remove the injector sound proofing.

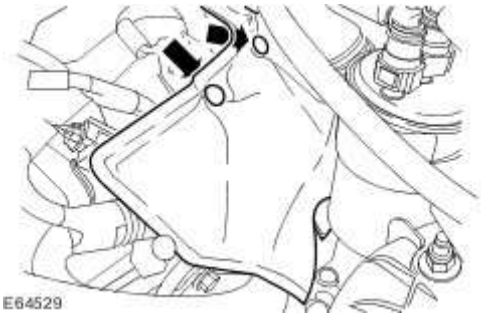

14 . Clean around the low pressure fuel inlet and return lines, high-pressure fuel supply lines and surrounding areas.
For additional information, refer to Fuel Injection Component Cleaning

15 . Disconnect the low pressure fuel inlet and return lines.

Install suitable blanking caps to the fuel lines and unions.

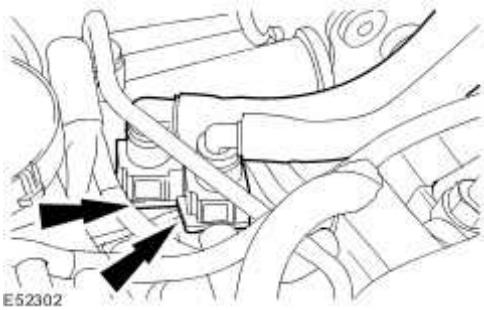

16 . **NOTE:**

Left-hand shown, right-hand similar.

Detach the high pressure fuel supply line clamps.

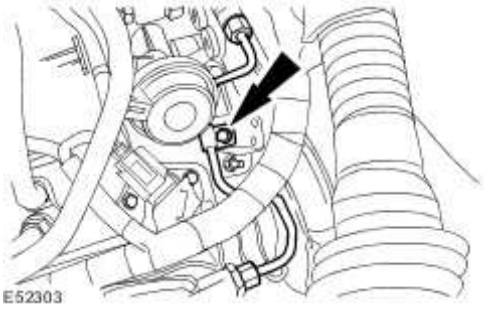

17 . **CAUTION: Make sure that the high-pressure fuel supply line remains in contact with the fuel injection supply manifold and fuel injection diverter rail until both unions have been detached and cleaned. Failure to follow this instruction may result in foreign matter ingress to the fuel injection system.**

CAUTION: Make sure the tool used to loosen the high-pressure fuel supply line unions is used at the top of the unions as this is where there is most material. Failure to follow this instruction may result in damage to the unions.

NOTE:

Left-hand shown, right-hand similar.

www.JagDocs.com

Loosen the high pressure fuel supply lines.

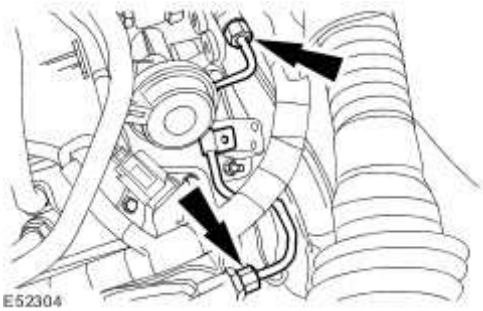

18. Using the pneumatic vacuum gun, vacuum foreign material from the high-pressure fuel supply lines, the fuel injection diverter rail and the fuel injection supply manifolds.
For additional information, refer to Fuel Injection Component Cleaning

19. **NOTE:**

Left-hand shown, right-hand similar.

Remove and discard the high pressure fuel supply lines.

Install suitable blanking caps to the open threaded ports on the fuel injection diverter rail and fuel rail.

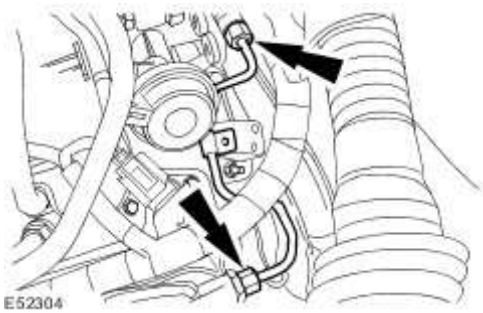

20. **CAUTION: Make sure that the high-pressure fuel supply line remains in contact with the fuel injection pump and fuel injection diverter rail until both unions have been detached and cleaned. Failure to follow this instruction may result in foreign matter ingress to the fuel injection system.**

CAUTION: Make sure the tool used to loosen the high-pressure fuel supply line unions is used at the top of the unions as this is where there is most material. Failure to follow this instruction may result in damage to the unions.

Loosen the high pressure fuel supply line.

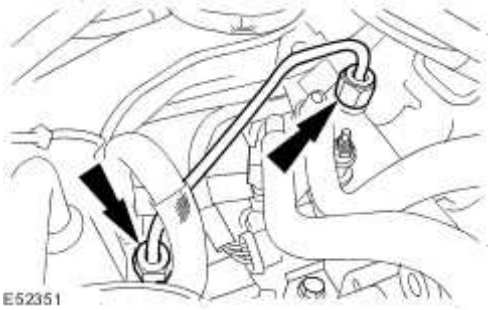

21 Using the pneumatic vacuum gun, vacuum foreign material from the high-pressure fuel
. supply lines, the fuel injection diverter rail and the fuel injection pump.
For additional information, refer to Fuel Injection Component Cleaning

22 Remove and discard the high pressure fuel supply line.
.

Install suitable blanking caps to the open threaded ports on the fuel injection diverter rail and fuel injection pump.

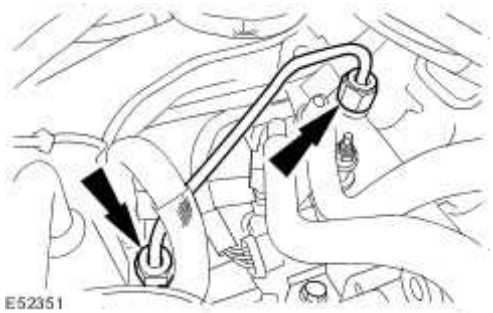

23 . Remove the fuel line retaining nut.

www.JagDocs.com

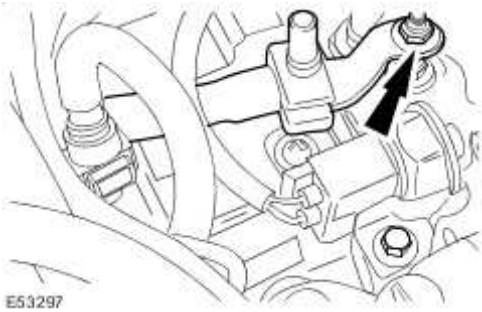

24 . Disconnect the fuel rail pressure (FRP) sensor electrical connector.

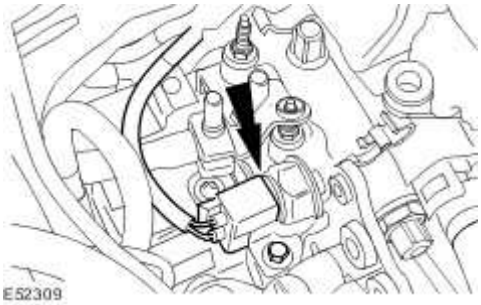

25 . Disconnect the fuel line.

- Install suitable blanking caps to the fuel line and union.

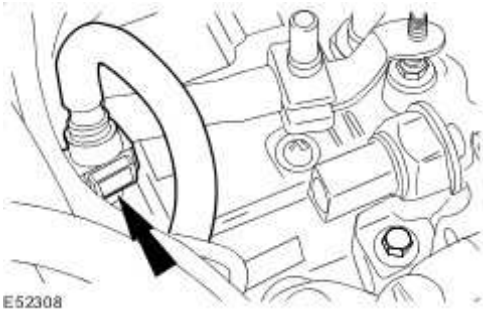

26 . Detach the fuel line.

- Install suitable blanking caps to the fuel line and union.

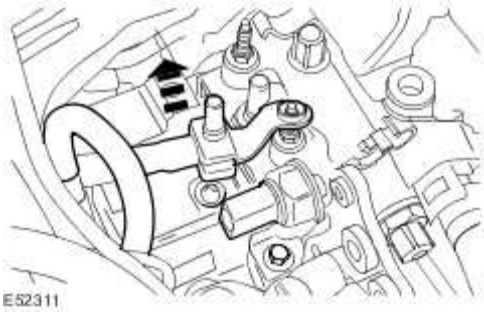

27 . **CAUTION: Do not remove the fuel rail pressure sensor from the fuel injection diverter rail.**

Remove the fuel injection diverter rail.

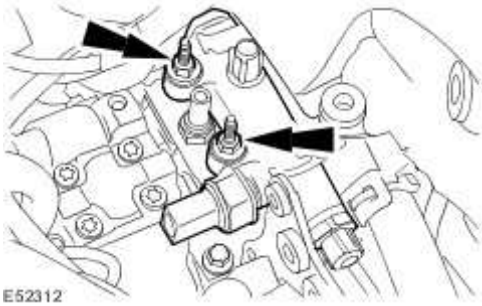

28 . Disconnect the left-hand camshaft cover breather hose.

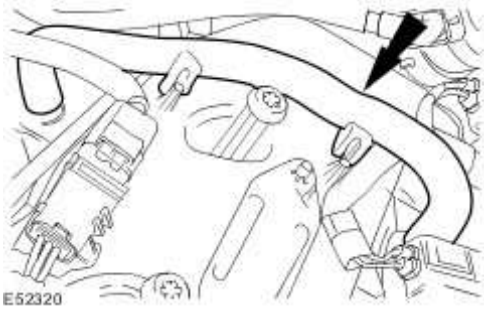

29 . Disconnect the right-hand camshaft cover breather hose.

www.JagDocs.com

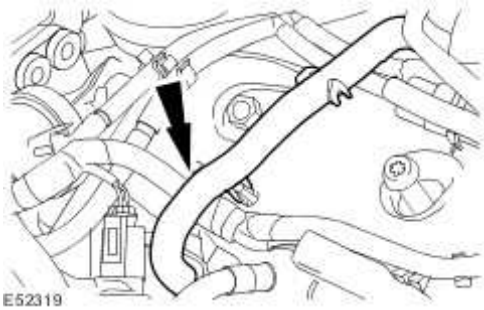

30 . Disconnect the left-hand inlet port deactivation vacuum hose.

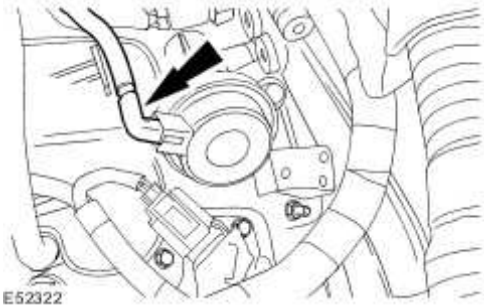

31 Remove the crankcase vent oil separator.

.

Remove and discard the crankcase vent oil separator and engine block seals.

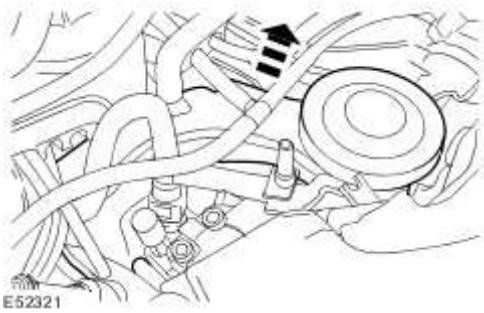

32 . Disconnect the fuel injection pump electrical connectors.

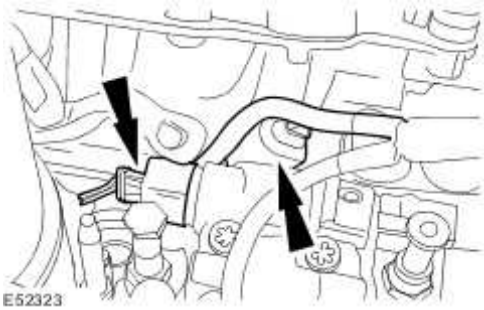

33 **NOTE:**

.

Remove and discard the O-ring seal.

Remove the oil filter element housing.

- Rotate the oil filter element housing five complete turns counter-clockwise.
- Allow the engine oil to drain from the oil filter element housing for two minutes.
- Remove the oil filter element housing.

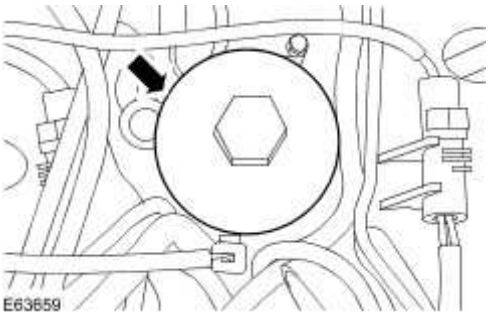

34 . Detach the left-hand glow plug electrical connector.

www.JagDocs.com

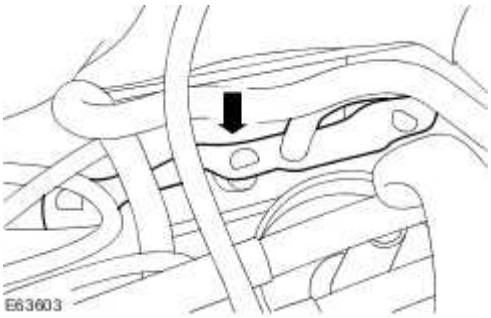

35 . Detach the right-hand glow plug electrical connector.

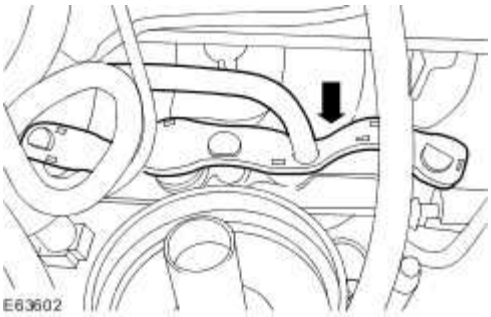

36 . Remove the right-hand rear engine lifting bracket.

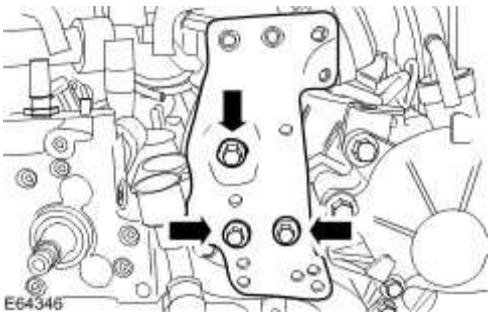

37 . Reposition the crankcase vent oil seperator pipes.

1) Detach the crankcase vent oil seperator pipes.

2) Reposition the crankcase vent oil seperator pipes.

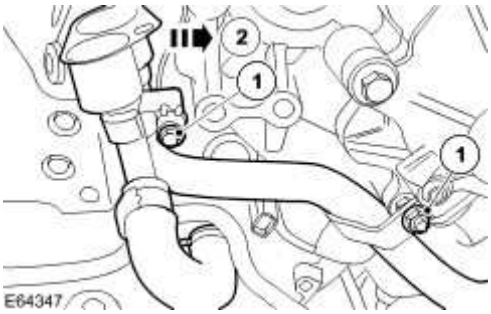

38 . Remove the fuel injection pump.

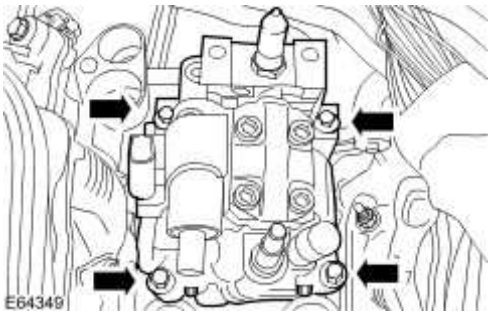

Installation

1 . **WARNING: Do not smoke or carry lighted tobacco or open flame of any type when working on or near any fuel related components. Highly flammable mixtures are always present and may ignite. Failure to follow these instructions may result in personal injury.**

WARNING: This procedure involves fuel handling. Be prepared for fuel spillage at all times and always observe fuel handling precautions. Failure to follow these instructions may result in personal injury.

CAUTION: Make sure the workshop area in which the vehicle is being worked on is as clean and as dust free as possible. Foreign matter from work on clutches, brakes or from machining or welding operations can contaminate the fuel system and may result in later malfunction.

www.JagDocs.com

CAUTION: Always carry out the cleaning process before carrying out any repairs to the fuel injection system components. Failure to follow this instruction may result in foreign matter ingress to the fuel injection system.

CAUTION: Diesel fuel injection equipment is manufactured to very precise tolerances and fine clearances. It is therefore essential that absolute cleanliness is observed when working with these components. Always install blanking plugs to any open orifices or lines.

CAUTION: Do not disassemble or clean inside the fuel pump, even with an ultrasonic cleaner. Always install a new fuel pump when required.

CAUTION: Install new high pressure fuel supply lines. Failure to follow this instruction may result in damage to the vehicle.

Install the fuel injection pump.

- Tighten to 23 Nm.

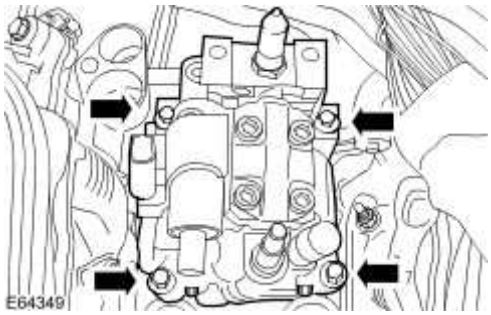

2 . Attach the crankcase vent oil seperator pipes.

1) Reposition the crankcase vent oil seperator pipes.

2) Attach the crankcase vent oil seperator pipes.

Tighten to 10 Nm.

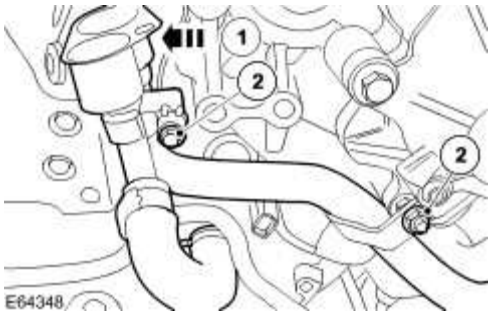

3 . Install the right-hand rear engine lifting bracket.

Tighten to 10 Nm.

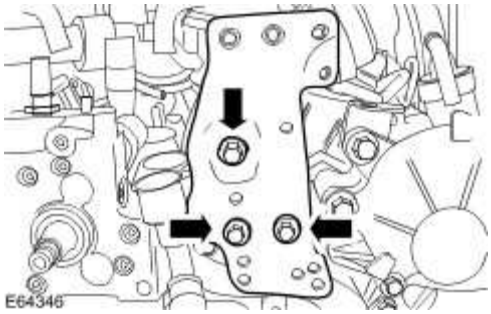

4 **NOTE:**

.

Make sure glow plug electrical connector is correctly fitted to all glow plugs on the right-hand bank.

Attach the right-hand glow plug electrical connector.

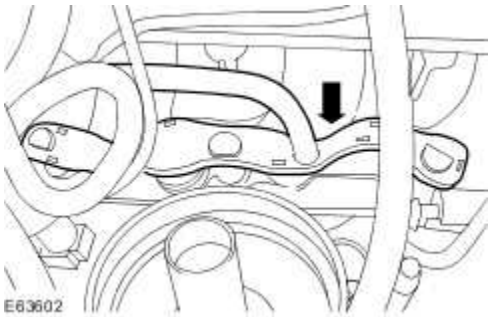

www.JagDocs.com

5 **NOTE:**

.

Make sure glow plug electrical connector is correctly fitted to all glow plugs on the left-hand bank.

Attach the left-hand glow plug electrical connector.

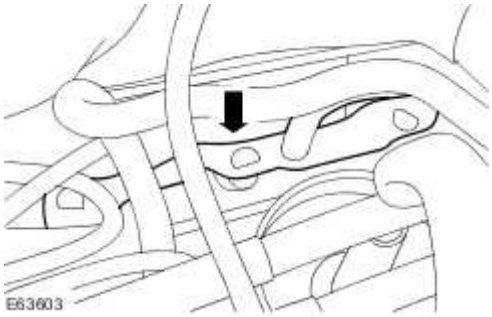

6 . **NOTE:**

Install a new O-ring seal.

Install the oil filter housing.

Tighten to 25 Nm.

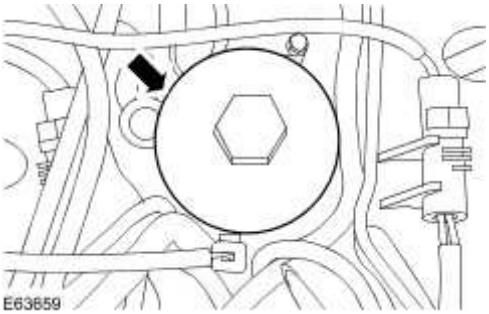

7 . Connect the fuel pump electrical connectors.

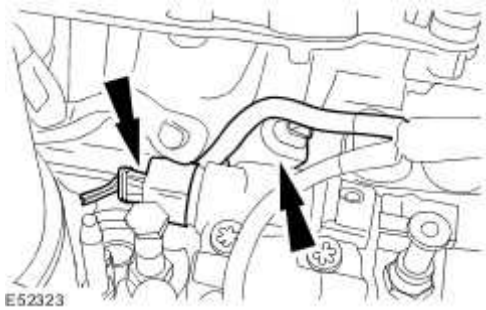

8 . Install the oil separator housing.

- Install new crankcase vent oil separator and engine block seals.

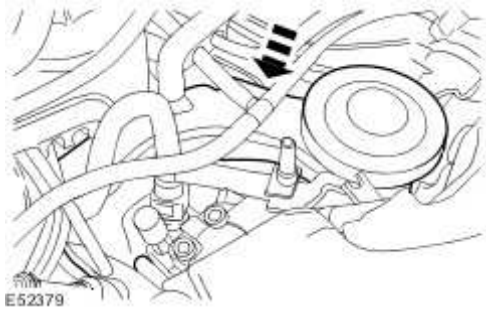

9 . Connect the left-hand inlet port deactivation vacuum hose.

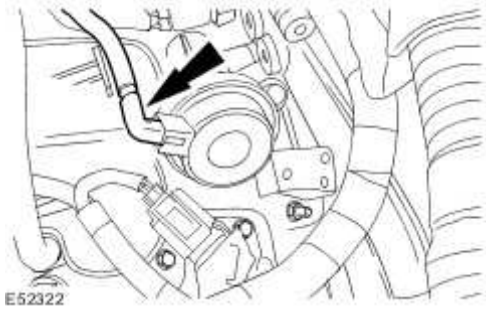

10 . Connect the left-hand camshaft cover breather hose.

www.JagDocs.com

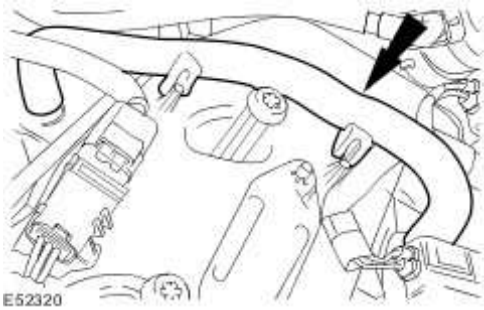

11 . Connect the right-hand camshaft cover breather hose.

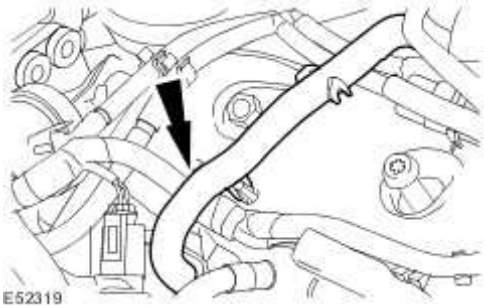

12 Install the fuel injection diverter rail.

.

Do not fully tighten the fuel injection diverter rail retaining bolts at this stage.

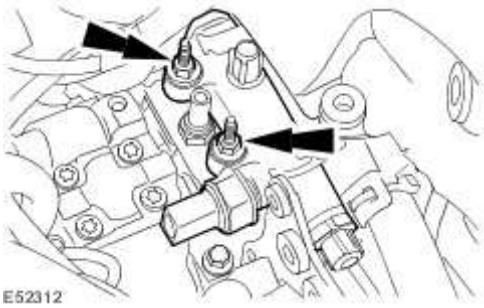

13 **NOTE:**

.

Left-hand shown, right-hand similar.

Install new high pressure fuel supply lines.

- Remove the blanking caps.
- Tighten the fuel injection diverter rail retaining bolts to 23 Nm.
- Tighten the high-pressure fuel supply line in the sequence shown in four stages:
  - Stage 1: Tighten the high-pressure fuel supply line union 1 to 15 Nm.
  - Stage 2: Tighten the high-pressure fuel supply line union 2 to 15 Nm.
  - Stage 3: Tighten the high-pressure fuel supply line union 1 to 30 Nm.
  - Stage 4: Tighten the high-pressure fuel supply line union 2 to 30 Nm.

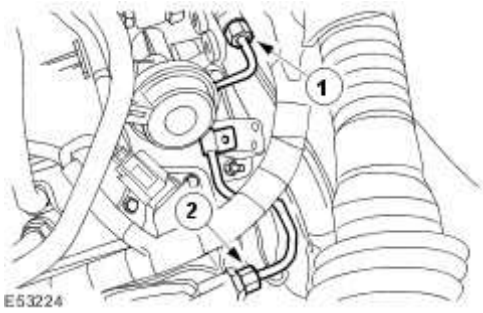

14 . **NOTE:**

Left-hand shown, right-hand similar.

Attach the high pressure fuel supply line clamps.

- Tighten to 10 Nm.

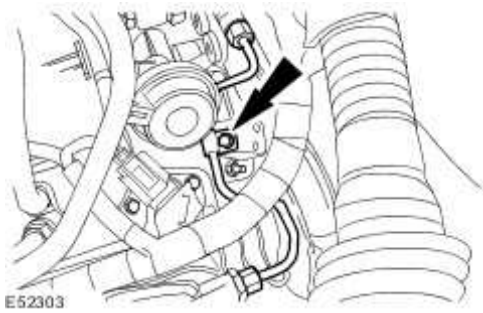

www.JagDocs.com

15 . Attach the fuel line.

- Remove and discard the blanking caps.

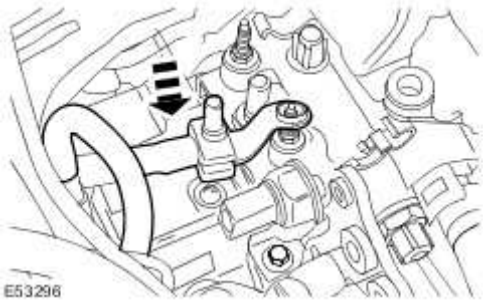

16 . Connect the fuel line.

- Remove and discard the blanking caps.

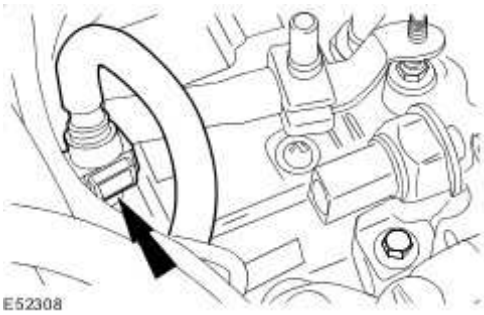

17 . Connect the FRP sensor electrical connector.

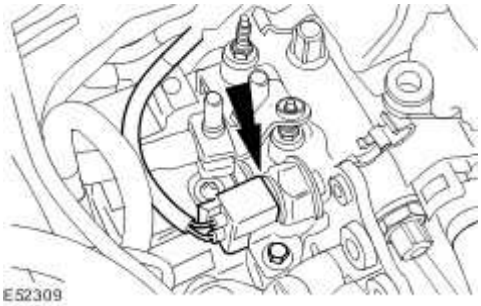

18 . Attach the fuel line retaining nut.

- Tighten to 7 Nm.

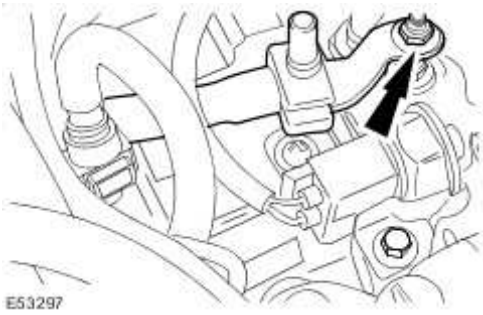

19 Install a new high pressure fuel supply line.

.

- Remove and discard the blanking caps.
- Install but do not tighten the high pressure fuel supply line.
- Tighten the high-pressure fuel supply line in the sequence shown in four stages:
  - Stage 1: Tighten the high-pressure fuel supply line union 1 to 15 Nm.
  - Stage 2: Tighten the high-pressure fuel supply line union 2 to 15 Nm.
  - Stage 3: Tighten the high-pressure fuel supply line union 1 to 30 Nm.
  - Stage 4: Tighten the high-pressure fuel supply line union 2 to 30 Nm.

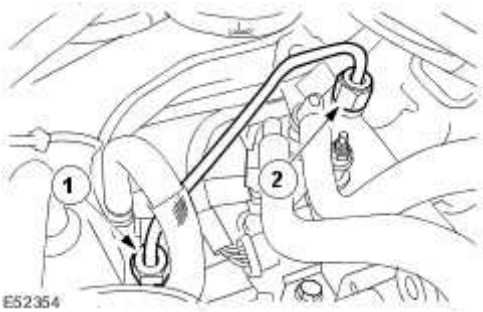

20 . Connect the low pressure fuel inlet and return lines.

- Remove and discard the blanking caps.

www.JagDocs.com

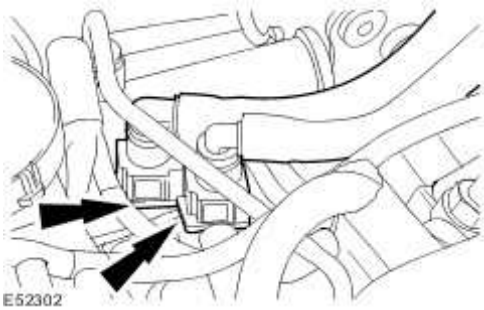

21 . Install the fuel injector sound proofing.

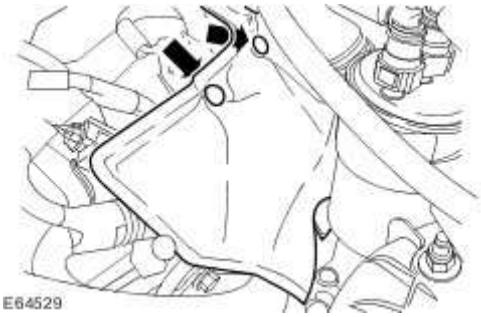

22 . Install the fuel injection pump belt rear cover.

- Tighten to 7 Nm.

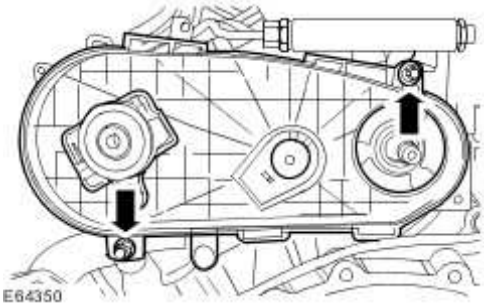

23 . Attach the EGR coolant outlet tube.

- Tighten to 10 Nm.

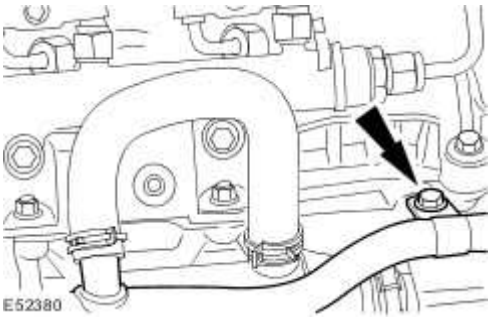

24 . Install the fuel injection pump pulley.

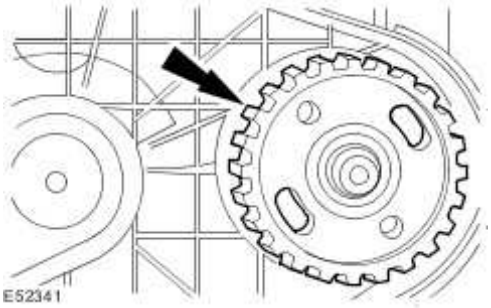

25 . Install the retaining nut.

- Using the special tool, retain the fuel injection pump pulley.
- Tighten to 50 Nm.

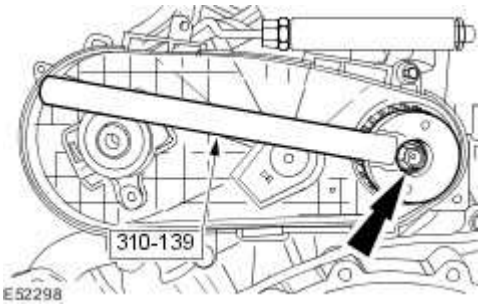

26 . Install the camshaft rear pulley.

www.JagDocs.com

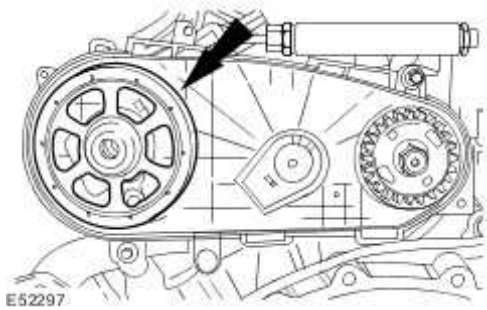

27 . Install the new camshaft rear pulley retaining bolt.

- Using the special tool, retain the camshaft rear pulley.
- Tighten the camshaft rear pulley retaining bolt in two stages:
- Tighten to 80 Nm.
- Tighten a further 90°.

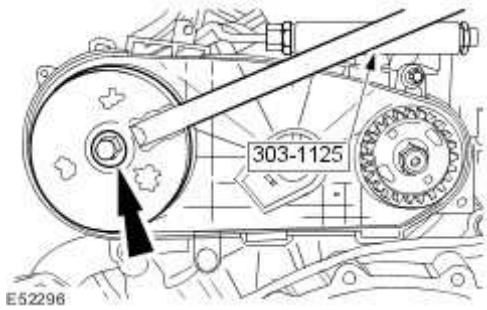

28 **NOTE:**

.

The fuel injection pump rotates in an anti-clockwise direction when view from the rear of the engine.

Note the direction of rotation of the fuel injection pump belt.

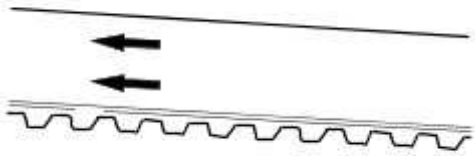

E52241

29. **CAUTION: Do not install the new fuel injection pump belt to the pulleys with the fuel injection pump belt tensioner installed. Failure to follow this instruction may result in damage to the fuel injection pump drive belt.**

NOTE:

Make sure the new fuel injection pump belt is correctly seated on to the fuel injection pump drive pulleys.

Install a new fuel injection pump belt.

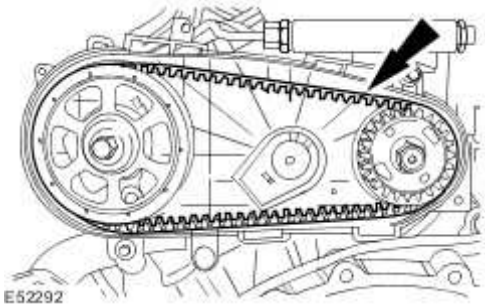

E52292

30. **CAUTION: Make sure the fuel injection pump belt tensioner tang is correctly located to the fuel injection pump cover backplate. Failure to follow this instruction may result in damage to the components.**

Install the new fuel injection pump belt tensioner.

- Locate the tang on the new fuel injection pump belt tensioner into the fuel injection pump cover backplate.

www.JagDocs.com

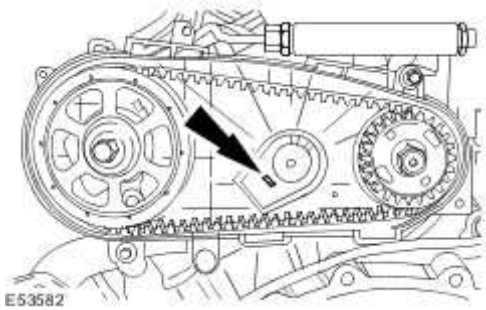

31 **NOTE:**

.

Do not remove the fuel injection pump belt tensioner locking pin before installing the new tensioner.

Install the new fuel injection pump belt tensioner retaining bolt.

- Tighten to 25 Nm.

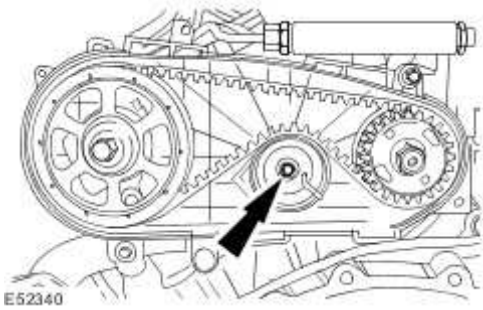

32 . Remove and discard the fuel injection pump belt tensioner locking pin.

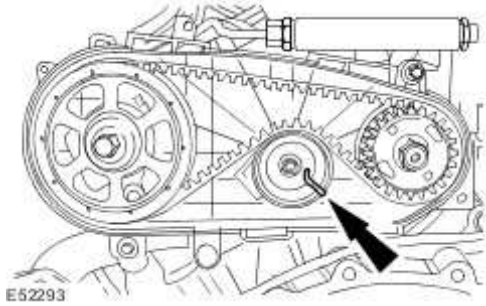

33 . Install the fuel injection pump belt cover.

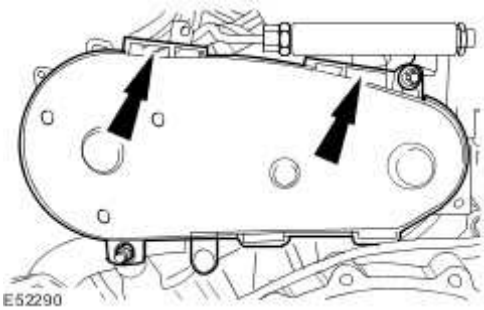

34 . Install the secondary bulkhead center panel.
For additional information, refer to Secondary Bulkhead Center Panel

35 . Connect the battery.
For additional information, refer to Battery Connect (86.15.15)

36 . Bleed the high-pressure fuel system.
For additional information, refer to

www.JagDocs.com

Fuel Injector (18.10.01)

Special Service Tools

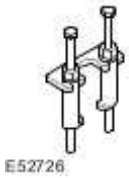

Fuel Injector Remover
303-1127

Removal

WARNING: Wait at least 30 seconds after the engine stops before commencing any repair to the high-pressure fuel injection system. Failure to follow this instruction may result in personal injury.

WARNING: Do not smoke or carry lighted tobacco or open flame of any type when working on or near any fuel related components. Highly flammable mixtures are always present and may ignite. Failure to follow these instructions may result in personal injury.

WARNING: This procedure involves fuel handling. Be prepared for fuel spillage at all times and always observe fuel handling precautions. Failure to follow these instructions may result in personal injury.

WARNING: Do not carry out any repairs to the fuel system with the engine running. The fuel pressure within the high-pressure fuel system can be as high as 1650 bar. Failure to follow this instruction may result in personal injury.

CAUTION: Do not disconnect the fuel injector electrical connectors with the engine running. Failure to follow this instruction may result in serious damage to the vehicle.

CAUTION: Make sure the workshop area in which the vehicle is being worked on is as clean and as dust free as possible. Foreign matter from work on clutches, brakes or from machining or welding operations can contaminate the fuel system and may result in later malfunction.

CAUTION: Always carry out the cleaning process before carrying out any repairs to the fuel injection system components. Failure to follow this instruction may result in foreign matter ingress to the fuel injection system.

CAUTION: Diesel fuel injection equipment is manufactured to very precise tolerances and fine clearances. It is therefore essential that absolute cleanliness is observed when working with these components. Always install blanking plugs to any exposed ports.

CAUTION: Do not disassemble the fuel injectors or clean the nozzles, even with an ultrasonic cleaner. Always install new fuel injectors when required.

1 . Disconnect the battery ground cable.
For additional information, refer to Battery Disconnect and Connect

2 . Remove the cowl vent screen.
For additional information, refer to Cowl Vent Screen (76.10.01)

3 . Remove the exhaust gas recirculation (EGR) valve outlet tube.
For additional information, refer to Exhaust Gas Recirculation (EGR) Valve Outlet Tube (17.45.11)

4 . Remove the injector sound proofing.

www.JagDocs.com

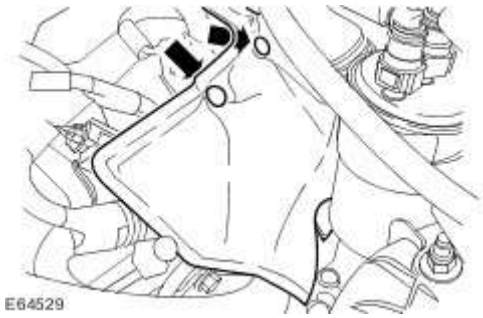

5 . Remove the engine harness cover.

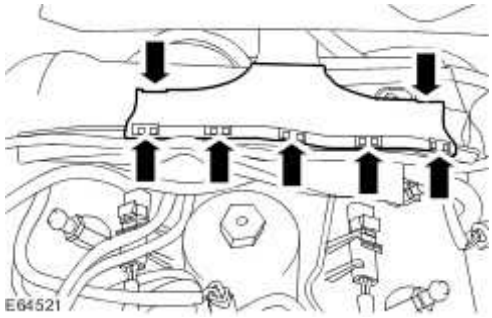

6 . Remove the engine harness casing.

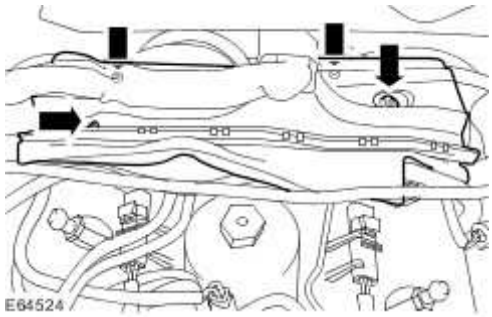

7 . **CAUTION: Protect the fuel injector electrical connectors with lint-free material to prevent contamination from the cleaning fluid. Failure to follow this instruction may result in serious damage to the vehicle.**

Clean the fuel injector, high-pressure fuel supply line and surrounding areas.
For additional information, refer to Fuel Injection Component Cleaning

8 . **NOTE:**

Left-hand shown, right-hand similar.

Disconnect the fuel injector electrical connectors.

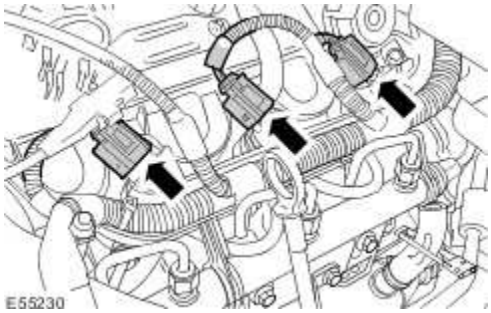

9 . **NOTE:**

Left-hand shown, right-hand similar.

Detach the fuel injection wiring harness.

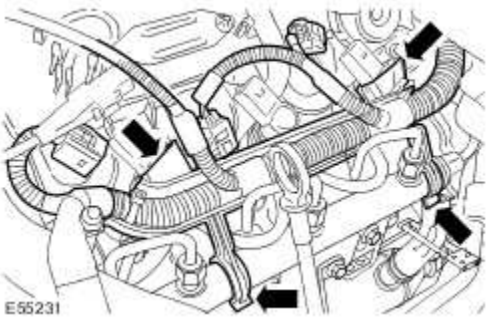

10 . Clean around the fuel injector, high-pressure fuel supply line and surrounding areas.
For additional information, refer to Fuel Injection Component Cleaning

11 . **CAUTION: Make sure that the high-pressure fuel supply line remains in contact with both the fuel injector and the fuel injection supply manifold until both unions have been detached and cleaned. Failure to follow this instruction may result in foreign matter ingress to the fuel injection system.**

www.JagDocs.com

CAUTION: Make sure that the fuel injector adaptor union does not move when loosening the high-pressure fuel supply lines. Failure to follow this instruction may result in serious damage to the vehicle.

NOTE:

Left-hand shown, right-hand similar.

Loosen the high-pressure fuel supply line from the fuel injector and fuel rail.

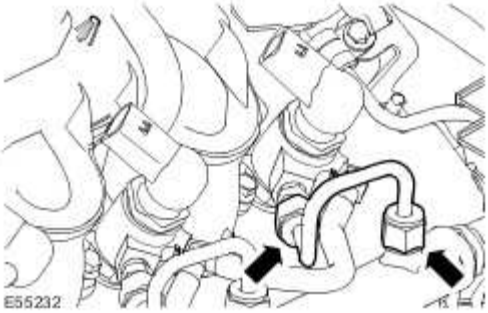

12. **CAUTION: Make sure that the high-pressure fuel supply line remains in contact with both the fuel injector and the fuel injection supply manifold until both unions have been detached and cleaned. Failure to follow this instruction may result in foreign matter ingress to the fuel injection system.**

Using the pneumatic vacuum gun, vacuum foreign material from the high-pressure fuel supply line, the fuel injector and the fuel rail.
For additional information, refer to Fuel Injection Component Cleaning

13. **NOTE:**

Left-hand shown, right-hand similar.

Remove and discard the high-pressure fuel supply line.

- Install suitable blanking caps to the open threaded ports on the fuel injector and the fuel rail.

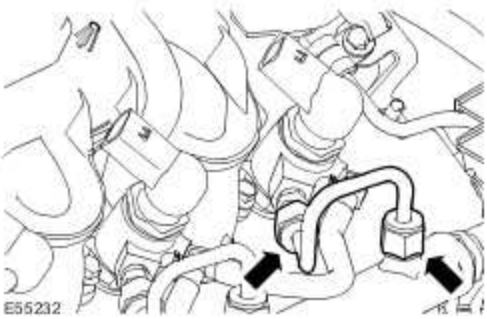

14 Using the pneumatic vacuum gun, vacuum foreign material from the fuel injector and the
. fuel rail.
For additional information, refer to Fuel Injection Component Cleaning

15 **NOTE:**
.

Left-hand shown, right-hand similar.

Disconnect the fuel return line from the fuel injector.

- Remove and discard the fuel return line retaining clip from the fuel injector.
- Disconnect the fuel return line from the fuel injector.

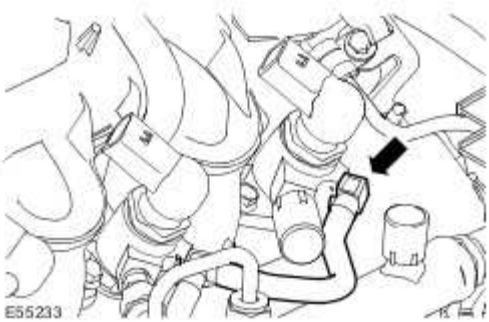

16 . **NOTE:**

Left-hand shown, right-hand similar.

www.JagDocs.com

Remove the fuel injector retaining bolts.

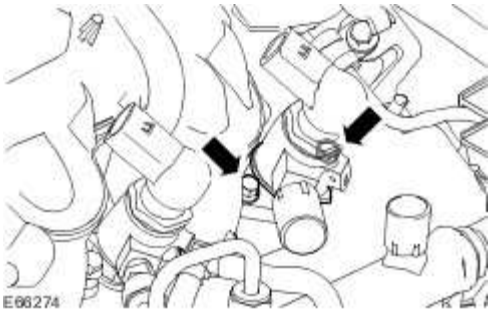

17 . **NOTE:**

Left-hand shown, right-hand similar.

Install the special tool studs.

18 . **CAUTION: Make sure the fuel injector remover legs are correctly engaged to the fuel injector. Failure to follow this instruction may result in damage to the component.**

NOTE:

Left-hand shown, right-hand similar.

Install the special tool puller legs to the studs.

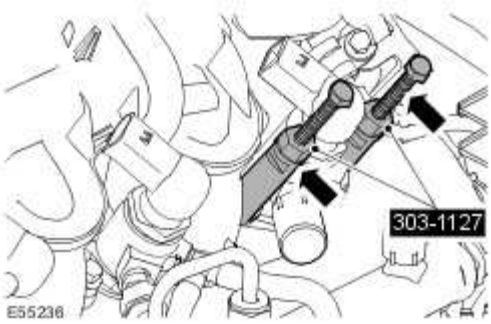

19. **CAUTION: Make sure the special tool puller bolts are rotated evenly. Failure to follow this instruction may result in damage to the special tool or fuel injector.**

NOTE:

Left-hand shown, right-hand similar.

Using the special tool, remove the fuel injector.

- Install the special tool locking plate to the puller legs.
- Rotate the bolts evenly, in a clockwise direction.
- Remove the fuel injector.
- Remove the special tool.
- Remove and discard the fuel injector retaining clamp.
- Remove and discard the fuel injector sealing washer.

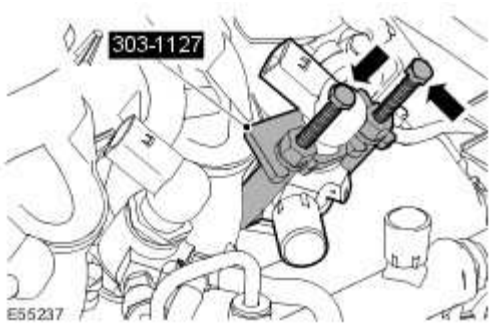

www.JagDocs.com

Installation

WARNING: Wait at least 30 seconds after the engine stops before commencing any repair to the high-pressure fuel injection system. Failure to follow this instruction may result in personal injury.

WARNING: Do not smoke or carry lighted tobacco or open flame of any type when working on or near any fuel related components. Highly flammable mixtures are always present and may ignite. Failure to follow these instructions may result in personal injury.

WARNING: This procedure involves fuel handling. Be prepared for fuel spillage at all times and always observe fuel handling precautions. Failure to follow these instructions may result in personal injury.

WARNING: Do not carry out any repairs to the fuel system with the engine running. The fuel pressure within the high-pressure fuel system can be as high as 1650 bar. Failure to follow this instruction may result in personal injury.

CAUTION: Do not disconnect the fuel injector electrical connectors with the engine running. Failure to follow this instruction may result in serious damage to the vehicle.

CAUTION: Make sure the workshop area in which the vehicle is being worked on is as clean and as dust free as possible. Foreign matter from work on clutches, brakes or from machining or welding operations can contaminate the fuel system and may result in later malfunction.

CAUTION: Always carry out the cleaning process before carrying out any repairs to the fuel

injection system components. Failure to follow this instruction may result in foreign matter ingress to the fuel injection system.

CAUTION: Diesel fuel injection equipment is manufactured to very precise tolerances and fine clearances. It is therefore essential that absolute cleanliness is observed when working with these components. Always install blanking plugs to any exposed ports.

CAUTION: Do not disassemble the fuel injectors or clean the nozzles, even with an ultrasonic cleaner. Always install new fuel injectors when required.

1. **CAUTION: Do not use tools to install the new fuel return line retaining clip. Failure to follow this instruction may result in damage to the retaining clip.**

NOTE:

Install a new fuel return line retaining clip.

NOTE:

Install a new fuel injector sealing washer.

NOTE:

Install a new fuel injector retaining clamp.

Install a new fuel injector retaining clamp.

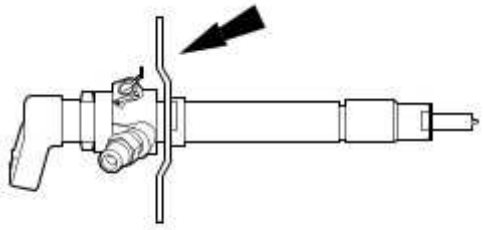

E52071

www.JagDocs.com

2 . **NOTE:**

Left-hand shown, right-hand similar.

Install the fuel injector.

- Tighten to 10 Nm.

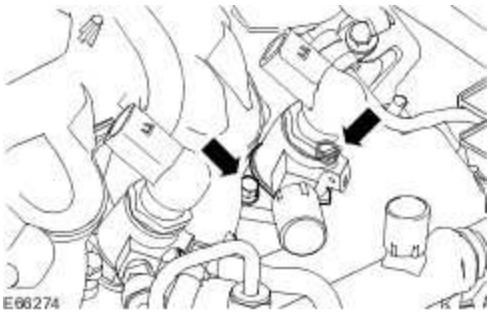

3 . **CAUTION: Make sure the fuel return line retaining clip is correctly installed to the fuel injector before installing the fuel return line.**

NOTE:

Left-hand shown, right-hand similar.

Connect the fuel return line to the fuel injector.

- Visually inspect the fuel return line O-ring for damage.
- Apply a light coating of petroleum jelly to the fuel line return line O-ring.
- Connect the fuel return line to the fuel injector.

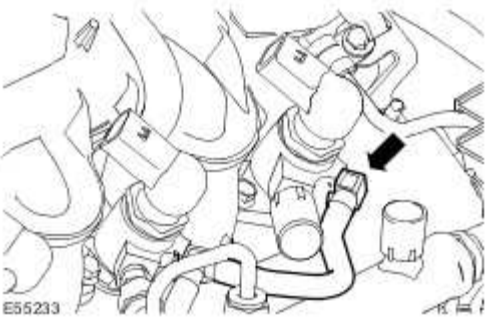

4. **CAUTION: Do not allow the unions to hit the olive ends of the high-pressure fuel supply line as this may damage the ends of the line and allow foreign matter enter the fuel injection system.**

Position the high-pressure fuel supply line as near to the final installation position as possible and then remove and discard the blanking plugs from the high-pressure fuel supply line.

5. **CAUTION: Maintain pressure on the high-pressure fuel supply line to keep the olives in contact with the fuel injectors and the fuel injection supply manifold cones while installing the unions.**

NOTE:

Install the high-pressure fuel supply lines to the fuel rail end first followed by the fuel injector end.

NOTE:

Left-hand shown, right-hand similar.

Install the new high-pressure fuel supply line.

- Tighten the high-pressure fuel supply line in the sequence shown:
- Tighten the high-pressure fuel supply line union 1 to fuel injector to 15 Nm.
- Tighten the high-pressure fuel supply line union 2 to fuel rail to 15 Nm.

www.JagDocs.com

- Tighten the high-pressure fuel supply line union 1 to fuel injector to 30 Nm.
- Tighten the high-pressure fuel supply line union 2 to fuel rail to 30 Nm.

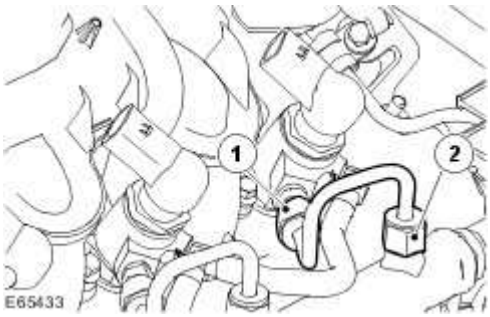

6 . **NOTE:**

Left-hand shown, right-hand similar.

Attach the fuel injection wiring harness.

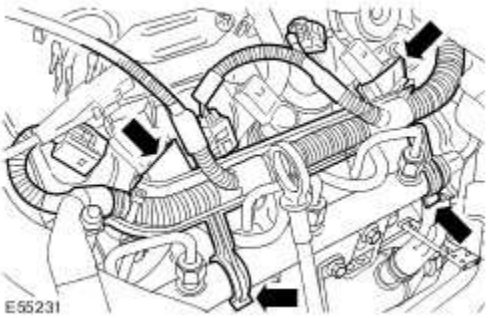

7 . **NOTE:**

Left-hand shown, right-hand similar.

Connect the fuel injector electrical connectors.

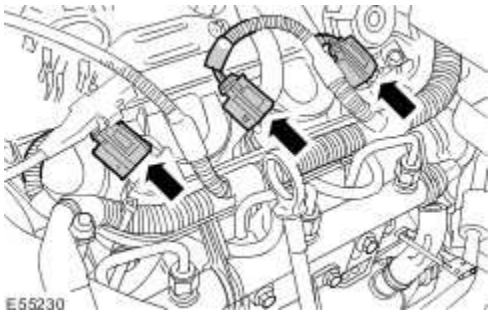

8 . Install the engine harness casing.

Tighten to 4 Nm.

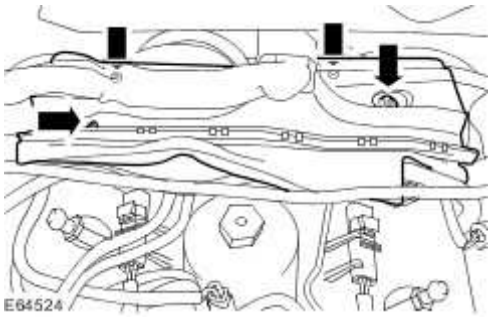

9 . Install the engine harness cover.

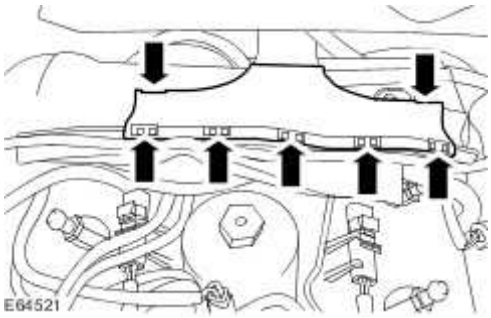

10 . Install the injector sound proofing.

www.JagDocs.com

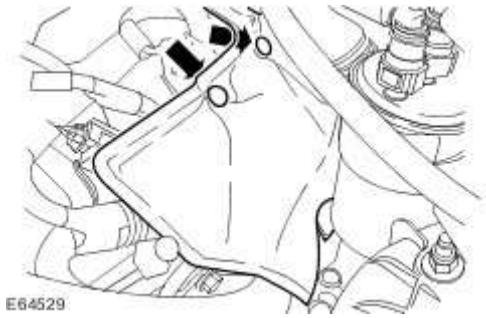

11 Install the EGR valve outlet tube.
. For additional information, refer to Exhaust Gas Recirculation (EGR) Valve Outlet Tube (17.45.11)

12 . Install the cowl vent screen.
For additional information, refer to Cowl Vent Screen (76.10.01)

13 . Connect the battery ground cable.
For additional information, refer to Battery Connect (86.15.15)

14
. **WARNING: Do not carry out any repairs to the fuel system with the engine running. The fuel pressure within the high-pressure system can be as high as 1650 bar. Failure to follow this instruction may result in personal injury.**

NOTE:

The fuel return line must be renewed if any leaks are found from the fuel return line O-rings.

Start the engine and check visually for fuel leaks.

Fuel Rail

Removal

1. **WARNING: Wait at least 30 seconds after the engine stops before commencing any repair to the high pressure fuel injection system. Failure to follow this instruction may result in personal injury.**

WARNING: Do not smoke or carry lighted tobacco or open flame of any type when working on or near any fuel related components. Highly flammable mixtures are always present and may ignite. Failure to follow these instructions may result in personal injury.

WARNING: This procedure involves fuel handling. Be prepared for fuel spillage at all times and always observe fuel handling precautions. Failure to follow these instructions may result in personal injury.

WARNING: Do not carry out any repairs to the fuel system with the engine running. The fuel pressure within the high-pressure system can be as high as 1650 bar. Failure to follow this instruction may result in personal injury.

CAUTION: Make sure the workshop area in which the vehicle is being worked on is as clean and as dust free as possible. Foreign matter from work on clutches, brakes or from machining or welding operations can contaminate the fuel system and may result in later malfunction.

CAUTION: Always carry out the cleaning process before carrying out any repairs to the fuel injection system components. Failure to follow this instruction may result in foreign matter ingress to the fuel injection system.

www.JagDocs.com

CAUTION: Diesel fuel injection equipment is manufactured to very precise tolerances and fine clearances. It is therefore essential that absolute cleanliness is observed when working with these components. Always install blanking caps to any open orifices or lines.

Disconnect the battery ground cable.
For additional information, refer to Battery Disconnect and Connect

2 . Remove the secondary bulkhead center panel.
For additional information, refer to Secondary Bulkhead Center Panel

3 . **NOTE:**

Left-hand shown, right-hand similar.

Remove the injector sound proofing.

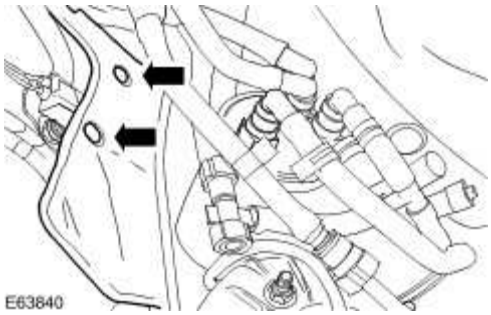

4 . **NOTE:**

Left-hand shown, right-hand similar.

Detach the injector harness from the fuel rail.

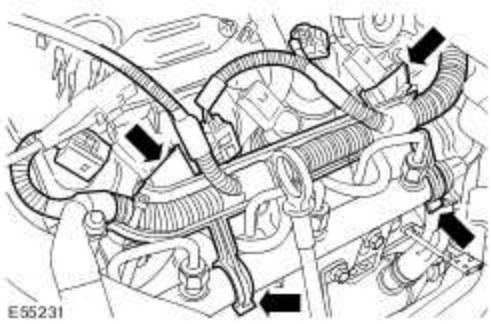

5 . Clean around the high-pressure fuel supply line and surrounding areas.
For additional information, refer to Fuel Injection Component Cleaning

6 . **NOTE:**

Left-hand shown, right-hand similar.

Remove the high pressure fuel supply line clamp retaining bolt.

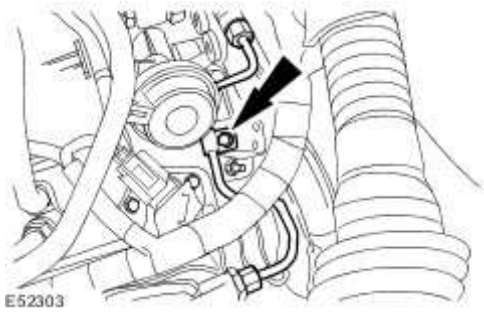

7 . **CAUTION: Make sure that the high-pressure fuel supply line remains in contact with the fuel rail and fuel injection diverter rail until both unions have been detached and cleaned. Failure to follow this instruction may result in foreign matter ingress to the fuel injection system.**

CAUTION: Make sure the tool used to loosen the high-pressure fuel supply line unions is used at the top of the unions as this is where there is most material. Failure to follow this instruction may result in damage to the unions.

www.JagDocs.com

NOTE:

Left-hand shown, right-hand similar.

Loosen the high pressure fuel supply line.

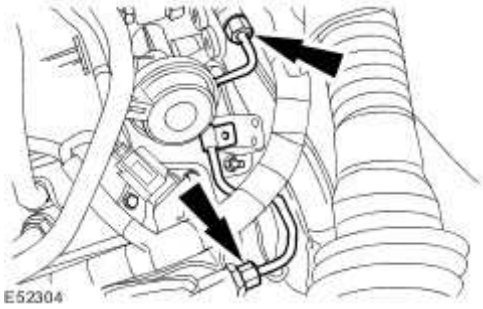

8. Using the pneumatic vacuum gun, vacuum foreign material from the high-pressure fuel supply line, the fuel injection diverter rail and the fuel rail.
For additional information, refer to Fuel Injection Component Cleaning

9. **NOTE:**

Left-hand shown, right-hand similar.

Remove and discard the high pressure fuel supply line.

- Install suitable blanking caps to the open threaded ports on the fuel injection diverter rail and fuel rail.

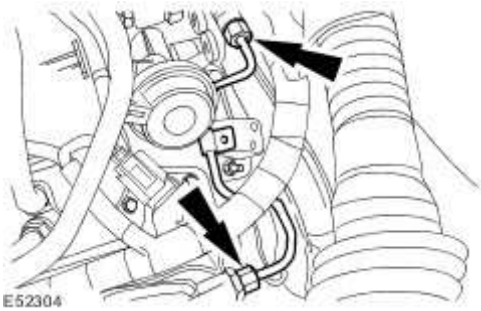

10. **CAUTION: Make sure that the high-pressure fuel supply lines remain in contact**

with both the fuel injectors and the fuel rail until all unions have been detached and cleaned. Failure to follow this instruction may result in foreign matter ingress to the fuel injection system.

CAUTION: Do not use any aggressive cleaning fluid or a wire brush to clean the fluid injector nozzle.

Using the pneumatic vacuum gun, vacuum foreign material from the high-pressure fuel supply lines, the fuel injectors and the fuel injection supply manifold.
For additional information, refer to Fuel Injection Component Cleaning

11. **CAUTION: Make sure that the high-pressure fuel supply lines remain in contact with both the fuel injectors and the fuel rail until all unions have been detached and cleaned. Failure to follow this instruction may result in foreign matter ingress to the fuel injection system.**

CAUTION: Make sure that the fuel injector adaptor unions do not move when loosening the high-pressure fuel supply lines. Failure to follow this instruction may result in damage to the fuel injectors or the fuel injector adaptor unions.

NOTE:

Left-hand shown, Right hand similar.

Loosen the high-pressure fuel supply lines from the fuel injectors and fuel rail.

www.JagDocs.com

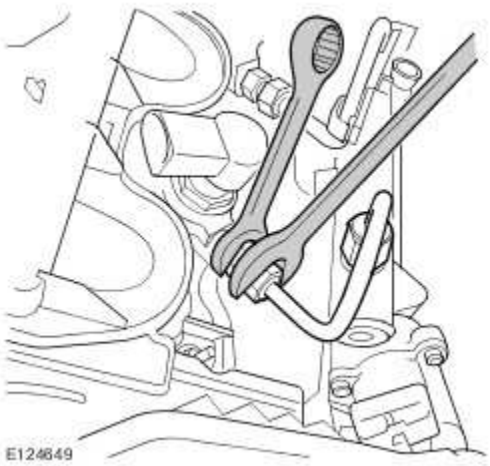

12 **NOTE:**

.

Left-hand shown, Right hand similar.

Remove and discard the high-pressure fuel supply lines.

Install suitable blanking caps to the open threaded ports on the fuel injectors and the fuel rail.

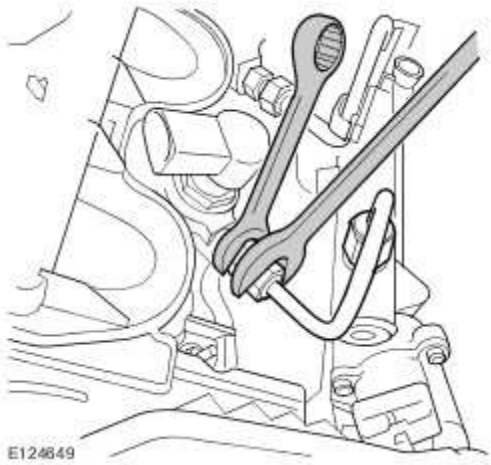

13 . **NOTE:**

Left-hand shown, right-hand similar.

Remove the fuel rail.

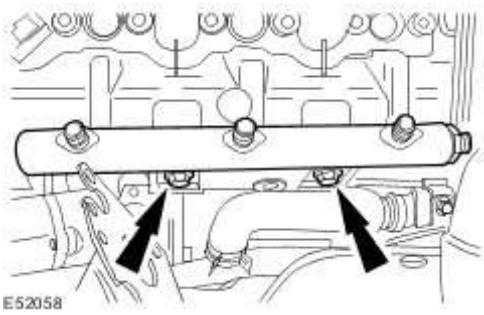

Installation

1. **WARNING: Do not smoke or carry lighted tobacco or open flame of any type when working on or near any fuel related components. Highly flammable mixtures are always present and may ignite. Failure to follow these instructions may result in personal injury.**

WARNING: This procedure involves fuel handling. Be prepared for fuel spillage at all times and always observe fuel handling precautions. Failure to follow these instructions may result in personal injury.

WARNING: Do not carry out any repairs to the fuel system with the engine running. The fuel pressure within the high-pressure system can be as high as 1650 bar. Failure to follow this instruction may result in personal injury.

CAUTION: Make sure the workshop area in which the vehicle is being worked on is as clean and as dust free as possible. Foreign matter from work on clutches, brakes or from machining or welding operations can contaminate the fuel system and may result in later malfunction.

CAUTION: Always carry out the cleaning process before carrying out any repairs to the fuel injection system components. Failure to follow this instruction may result in

www.JagDocs.com

foreign matter ingress to the fuel injection system.

CAUTION: Diesel fuel injection equipment is manufactured to very precise tolerances and fine clearances. It is therefore essential that absolute cleanliness is observed when working with these components. Always install blanking caps to any open orifices or lines.

NOTE:

Left-hand shown, right-hand similar.

Install the fuel rail.

- Tighten to 24 Nm.

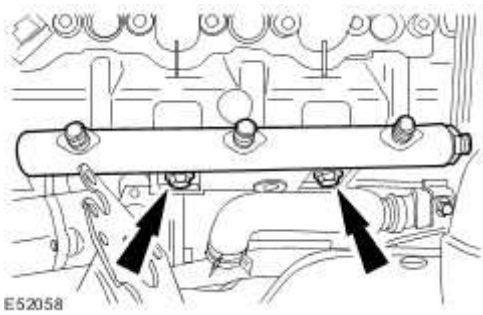

2. **CAUTION: Do not allow the unions to hit the olive ends of the high-pressure fuel supply line as this may damage the ends of the line and allow foreign matter enter the fuel injection system.**

Position the high-pressure fuel supply lines as near to the final installation position as possible and then remove and discard the blanking plugs from the high-pressure fuel supply lines and fuel rail.

3. **CAUTION: Do not allow the unions to hit the olive end of the high-pressure fuel**

supply line and allow foreign matter to enter the fuel injection system.

CAUTION: Maintain pressure on the high pressure fuel supply line to keep the olives in contact with the fuel injectors and the fuel rail cones while installing unions.

NOTE:

Remove and discard the blanking caps.

Install the new high-pressure fuel supply lines.

1) Install the new high-pressure fuel supply line, tighten the fuel supply line unions finger tight.

- Tighten the high-pressure fuel supply lines in the sequence shown in four stages:
- Stage 1: Tighten the high-pressure fuel supply line union 1 to 15 Nm.
- Stage 2: Tighten the high-pressure fuel supply line union 2 to 15 Nm.
- Stage 3: Tighten the high-pressure fuel supply line union 1 to 30 Nm.
- Stage 4: Tighten the high-pressure fuel supply line union 2 to 30 Nm.

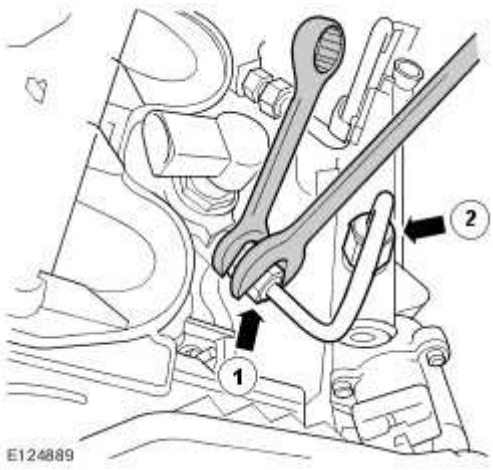

www.JagDocs.com

4 . **CAUTION: Do not allow the unions to hit the olive ends of the high-pressure fuel supply line as this may damage the ends of the line and allow foreign matter enter the fuel injection system.**

NOTE:

Left-hand shown, right-hand similar.

Install new high-pressure fuel supply line.

1) Install the new high-pressure fuel supply line, tighten the fuel supply line unions finger tight.

- Tighten the high-pressure fuel supply line in the sequence shown in four stages:
- Stage 1: Tighten the high-pressure fuel supply line union 1 to 15 Nm.
- Stage 2: Tighten the high-pressure fuel supply line union 2 to 15 Nm.
- Stage 3: Tighten the high-pressure fuel supply line union 1 to 30 Nm.
- Stage 4: Tighten the high-pressure fuel supply line union 2 to 30 Nm.

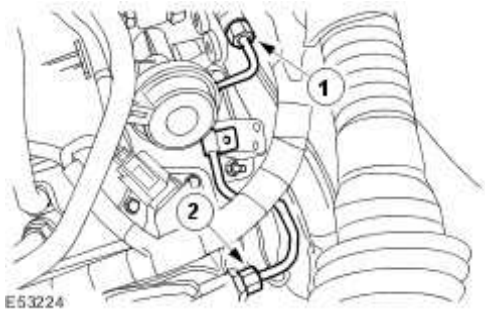

5 . **NOTE:**

Left-hand shown, right-hand similar.

Attach the injector harness to the fuel rail.

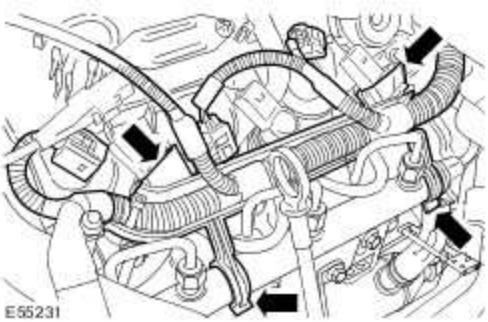

6 . **NOTE:**

Left-hand shown, right-hand similar.

Install the injector sound proofing.

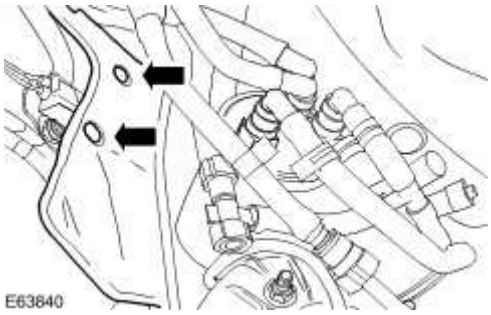

7 . Install the secondary bulkhead center panel.
For additional information, refer to Secondary Bulkhead Center Panel

8 . Connect the battery ground cable.
For additional information, refer to Battery Connect (86.15.15)

www.JagDocs.com

Intake Air Shutoff Throttle

Removal

1 . Remove the oil filler cap.

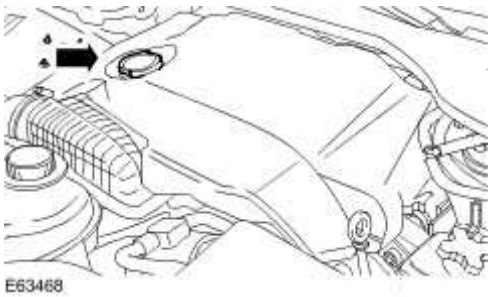

2 . Remove the engine cover.

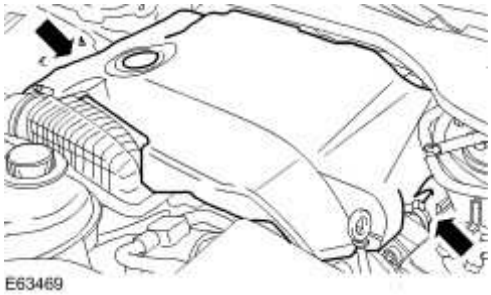

3 . Detach the coolant hose.

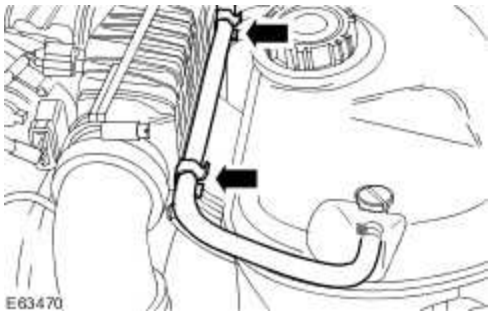

4 . Remove the retaining bolt.

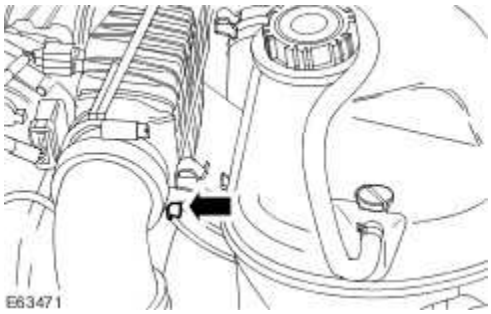

5 . Disconnect the electrical connectors.

6 . Detach the intake air shutoff throttle elbow.

- Release the retaining clip.

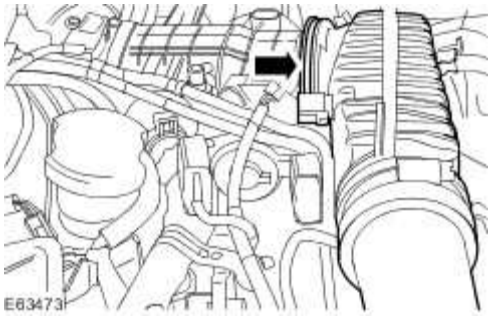

7 . Detach the vacuum hoses.

www.JagDocs.com

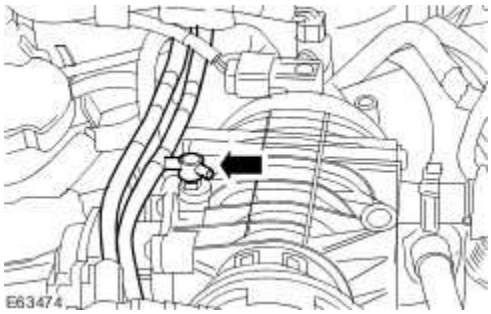

8 . Remove the retaining bolt.

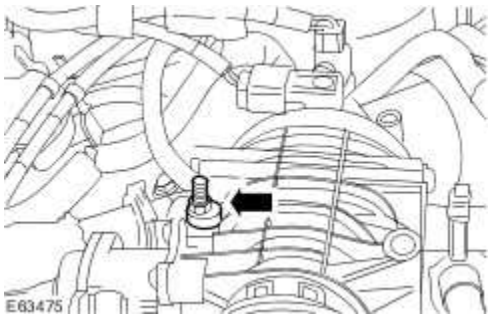

9 . Detach the exhaust gas recirculation (EGR) valve outlet tube retaining clips.

Discard the retaining clips.

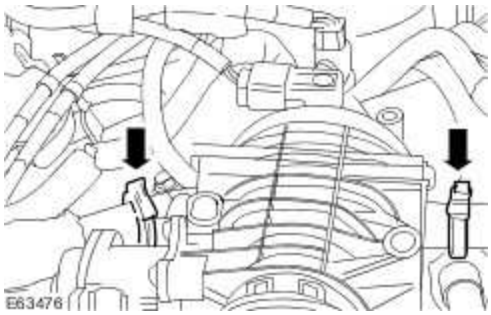

10 . Remove the right-hand EGR valve outlet tube retaining bolt.

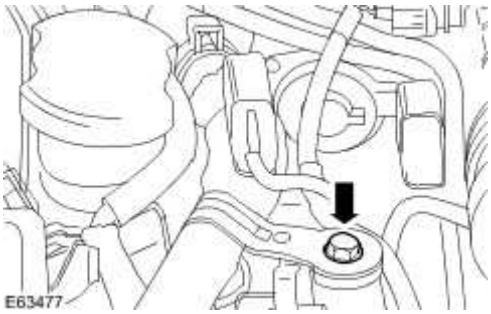

11 . Detach the wiring harness from the left-hand EGR valve outlet tube retaining bracket.

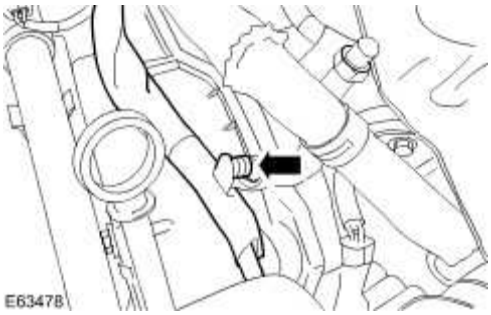

12 . Remove the left-hand EGR valve outlet tube retaining bolt.

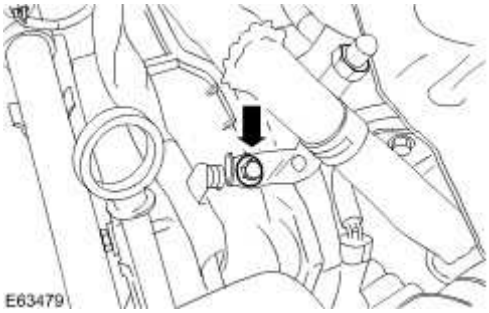

13 . **NOTE:**

Engine shown removed for clarity.

NOTE:

Right-hand shown, left-hand similar.

Remove the right-hand and left-hand EGR valve outlet tubes.

www.JagDocs.com

Discard the gaskets.

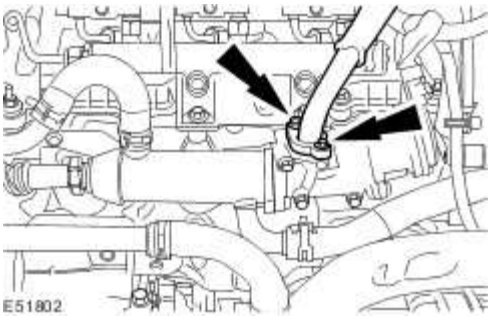

14 . Disconnect the electrical connector.

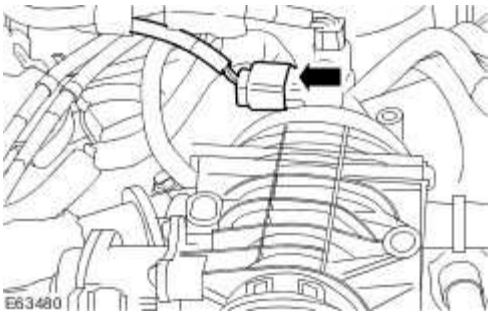

15 . Detach the fuel return line valve from the intake air shutoff throttle.

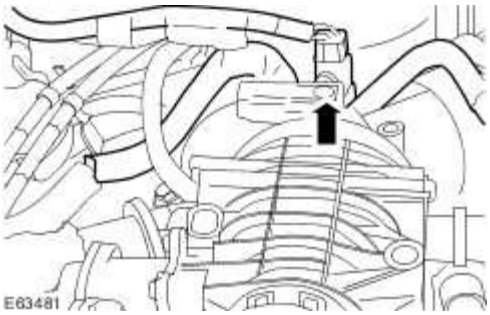

16 . **CAUTION: Make sure the fuel return line valve retaining clip is not damaged. Failure to follow this instruction may result in damage to the vehicle.**

Reposition the intake air shutoff throttle.

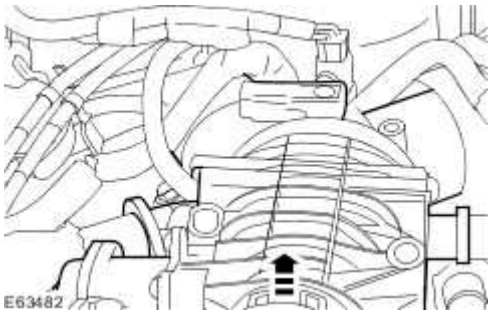

17 . **CAUTION: Make sure the fuel return line valve retaining clip is not damaged. Failure to follow this instruction may result in damage to the vehicle.**

Reposition the intake air shutoff throttle.

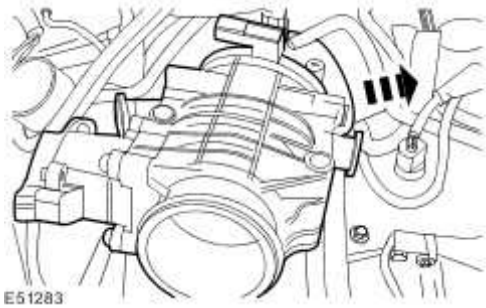

18 . **CAUTION: Make sure the fuel return line valve retaining clip is not damaged. Failure to follow this instruction may result in damage to the vehicle.**

Remove the intake air shutoff throttle.

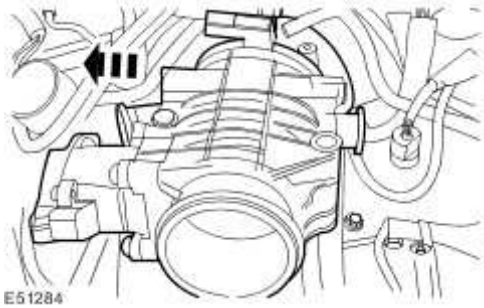

19 . Remove and discard the intake air shutoff throttle seals.

www.JagDocs.com

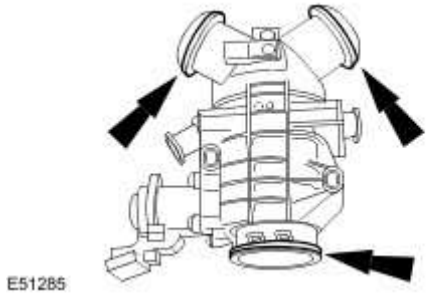

Installation

1 . **NOTE:**

Engine removed for clarity.

NOTE:

Right-hand shown, left-hand similar

To install, reverse the removal procedure.

1) Tighten to 10 Nm.

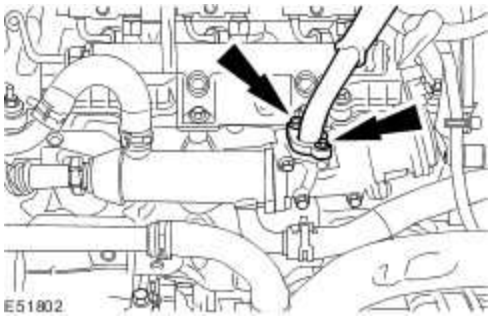

2 . Tighten to 5 Nm.

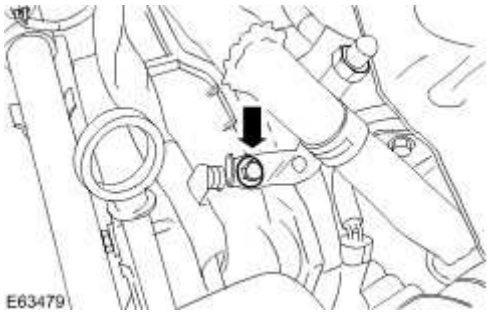

3 . Tighten to 5 Nm.

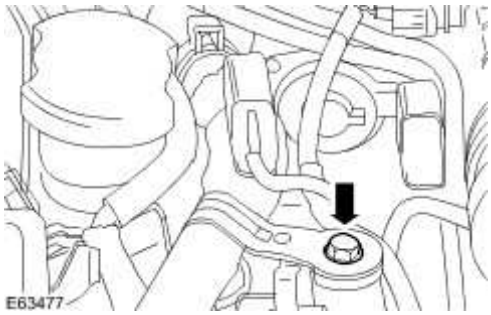

4 . Tighten to 10 Nm.

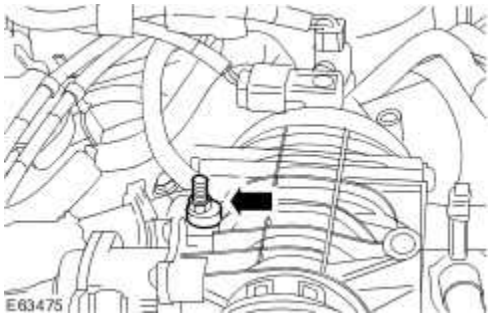

5 . Tighten to 10 Nm.

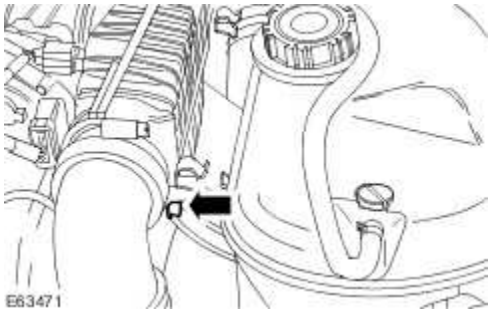

www.JagDocs.com

Swirl Plate Actuator Diaphragm

Removal

NOTE:

Removal steps in this procedure may contain installation details.

1 . Remove the cowl vent screen.
For additional information, refer to Cowl Vent Screen (76.10.01)

2 . Remove the wiring harness cover.

Release the 7 clips.

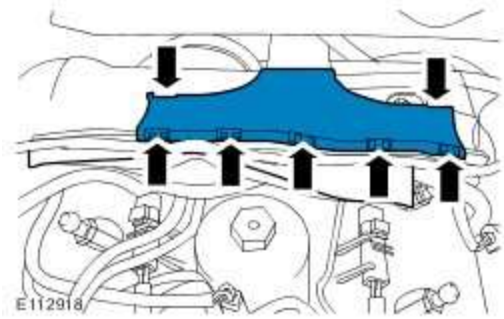

3 . Remove the wiring harness carrier.

Remove the 4 bolts.

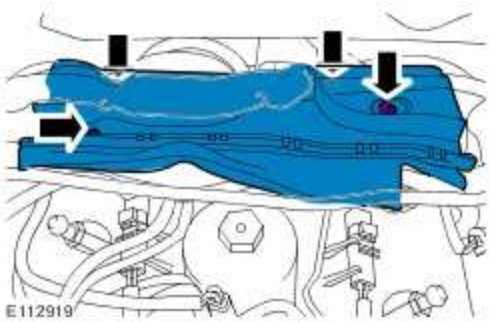

4 . Remove the RH injector sound proofing.

- Release the 2 clips.

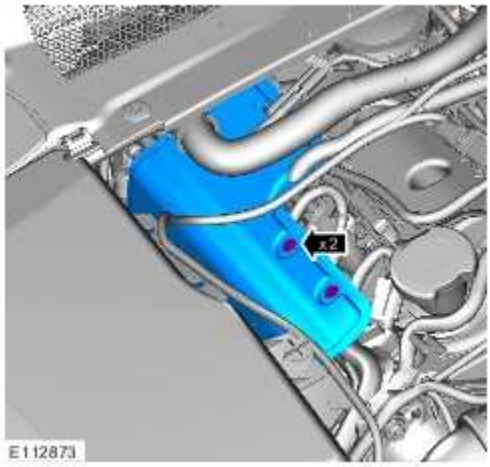

5 . Check the port deactivation hoses are a secure fit onto the stub pipe and for signs of being trapped or chaffing.

- If the valve does not hold vacuum continue with the replacement of the diaphragm.
- If the valve holds vacuum check the valve on the other side of the engine.
- If one side is found not to hold vacuum then both diaphragms are to be changed.

6 . Disconnect the port deactivation valve vacuum hoses.

www.JagDocs.com

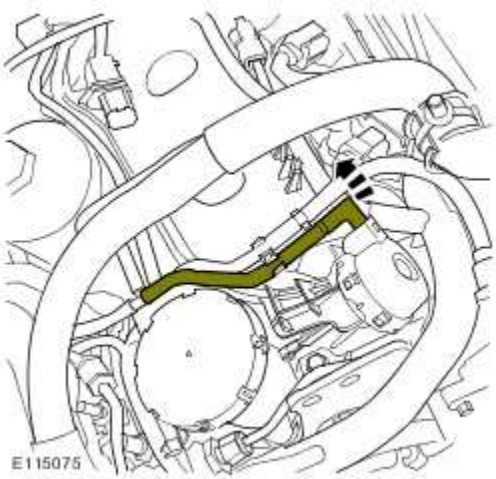

7 **NOTE:**

.

Check the vacuum gauge and any hoses to be used for leaks prior to using on the vehicle.

NOTE:

Make sure the vacuum gauge hose is a secure fit to the port deactivation diaphragm caps.

Using a vacuum gauge, check the port deactivation valve diaphragms.

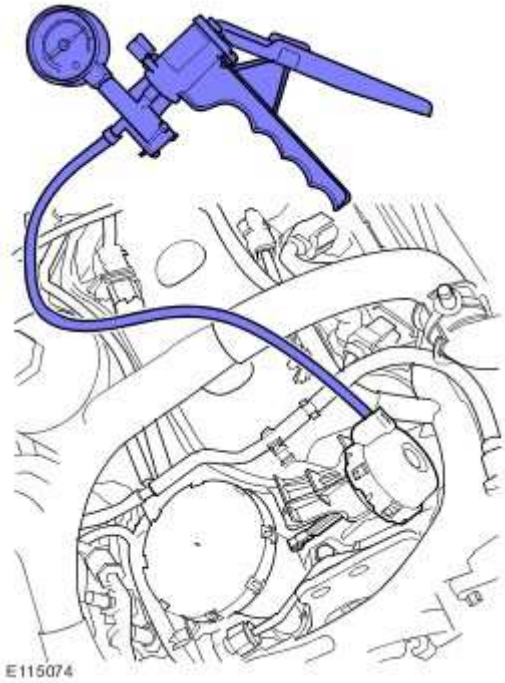

8 **NOTE:**

.

Some variation in the illustrations may occur, but the essential information is always correct.

Remove the engine bay brace.

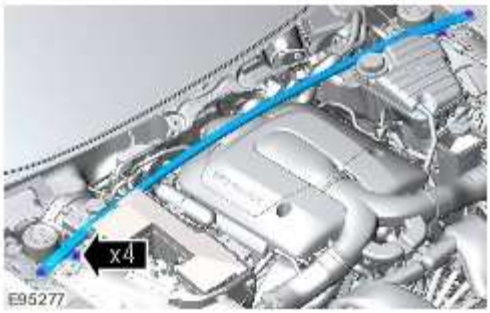

9 . Release the port deactivation valve connecting rod.

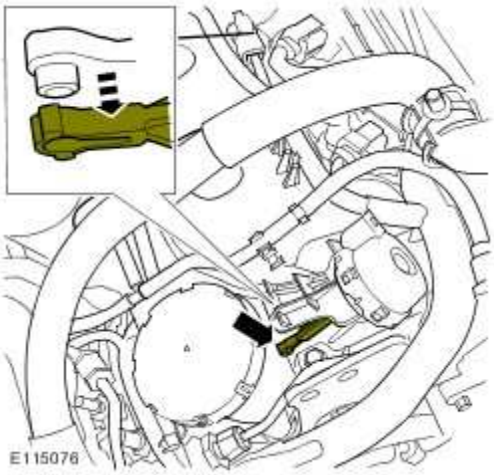

10 **NOTE:**

.

Cut the retaining clips off the old port deactivation diaphragm caps to aid removal.

NOTE:

Make sure the valve cover is not damaged during removal of the port deactivation diaphragm cap.

www.JagDocs.com

Remove the port deactivation valve cap.

- Release the 6 clips.
- Check the diaphragm for splits or damage.

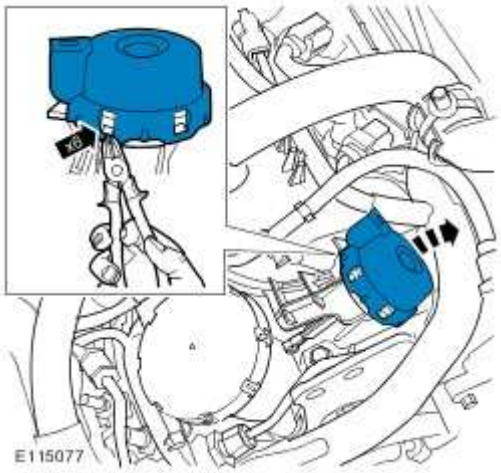

11 . Remove the port deactivation valve spring.

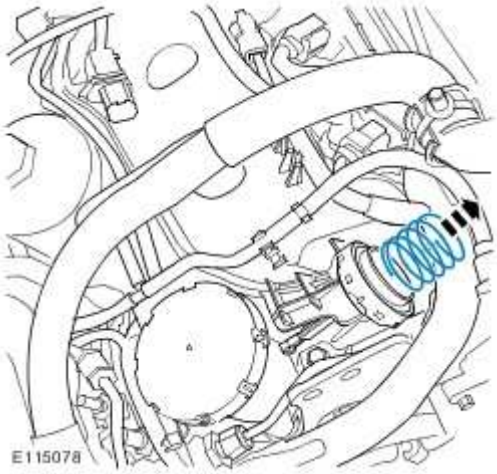

12 . Remove the port deactivation valve connecting rod and diaphragm.

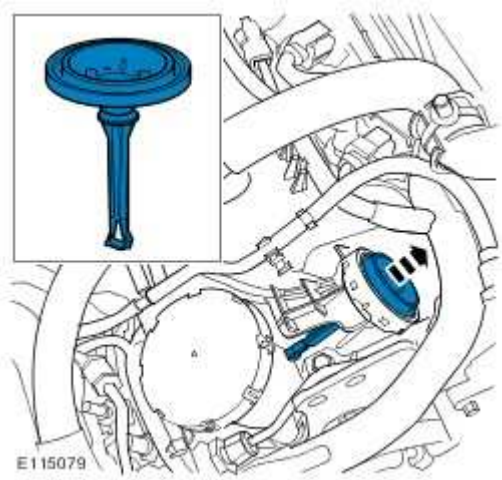

13 . Remove the oil filler cap.

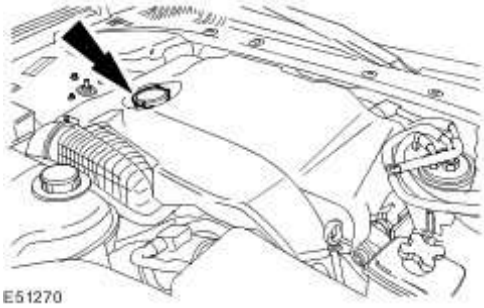

14 . Remove the engine cover.

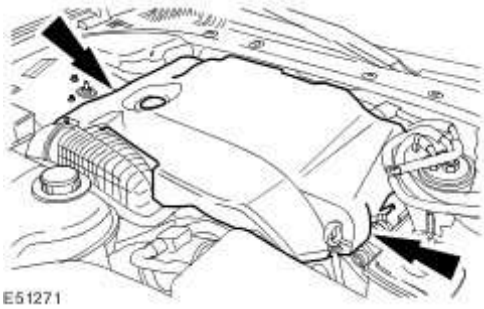

Installation

1 . **NOTE:**

Apply a small amount water to the diaphragm to aid installation.

www.JagDocs.com

NOTE:

Make sure the diaphragm is fully seated on the connecting rod.

Install the new port deactivation diaphragm to the new connecting rod.

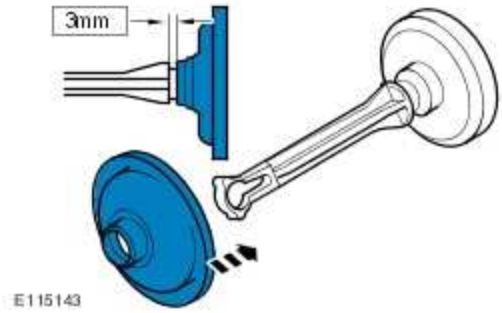

2. **CAUTION: Make sure that the mating faces are clean and free of foreign material.**

CAUTION: Make sure the port deactivation rod is correctly aligned to the port deactivation valve arm.

NOTE:

Make sue the new port deactivation diaphragm and rod are installed in the correct orientation to the port deactivation linkage.

Install the port deactivation vale connecting rod and diaphram.

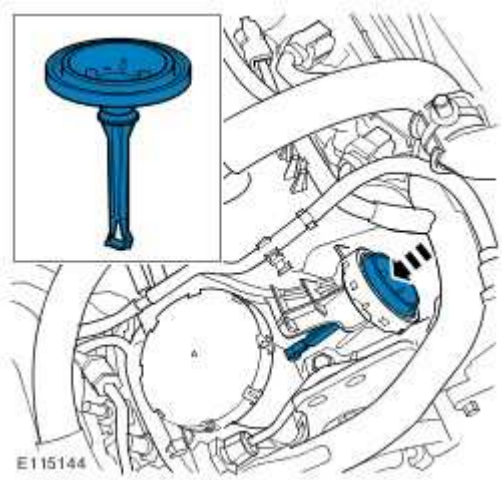

3 . Install the port deactivation valve spring.

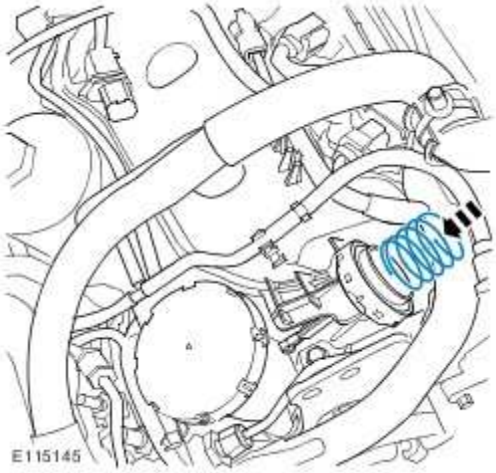

4 . **CAUTION: Using a mirror check all clips are fully latched.**

CAUTION: Make sure the port deactivation rod is not rotated once the cap has been installed, if rotation occurs the diaphragm will be damaged.

NOTE:

An audible click is heard when the clips are fully latched.

www.JagDocs.com

Install the port deactivation valve cap.

- Make sure the cap is correctly aligned within the timing marks.
- Secure the clips in the sequence shown.

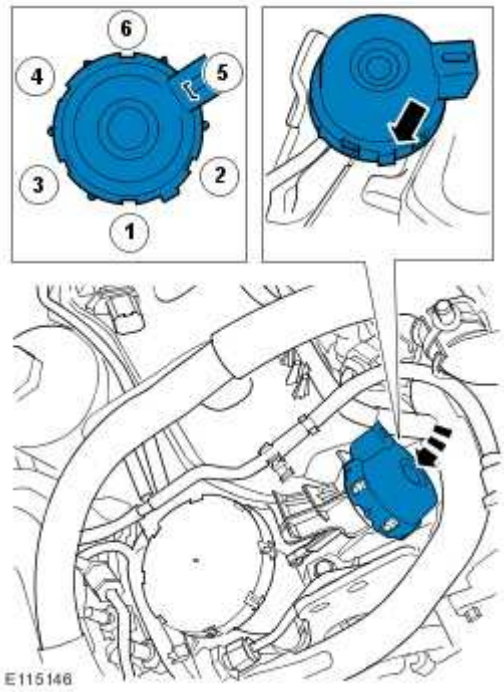

5 . Attach the port deactivation valve connecting rod.

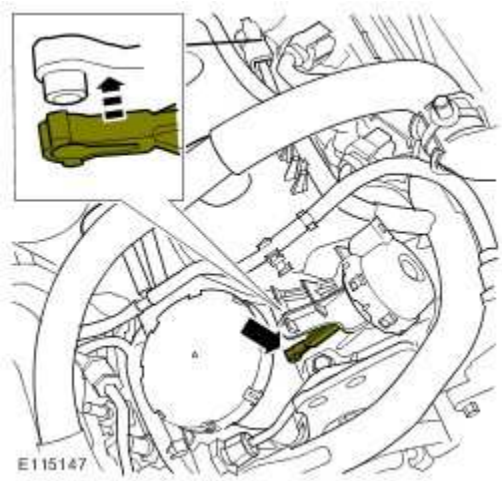

6 . Repeat the above procedure on the opposite side.

7 **NOTE:**

.

Check the vacuum gauge and any hoses to be used for leaks prior to using on the vehicle.

Check the port deactivation valve diaphragms using a vacuum gauge.

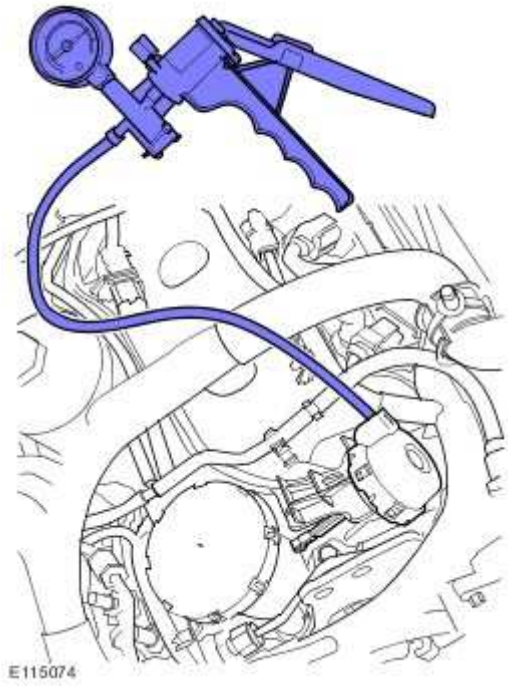

8 **NOTE:**

.

When the LH hose is re-connected to the valve the right angle bend must be turned downwards, make sure the hose lies correctly in the gap between the engine cover support and the valve cover.

Connect the port deactivation valve vacuum hoses.

www.JagDocs.com

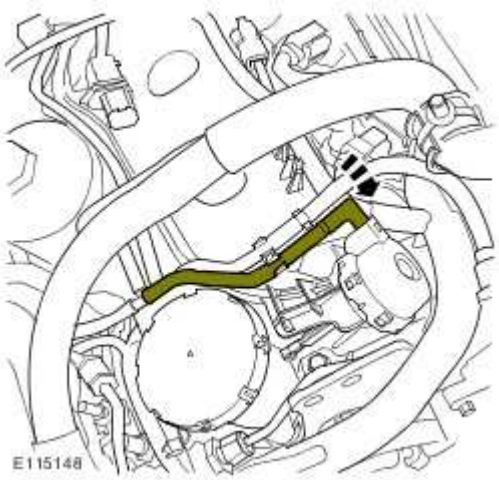

9 . Position the port deactivation hose as shown in illustration.

10 . Install the RH injector sound proofing.

Secure with the clips.

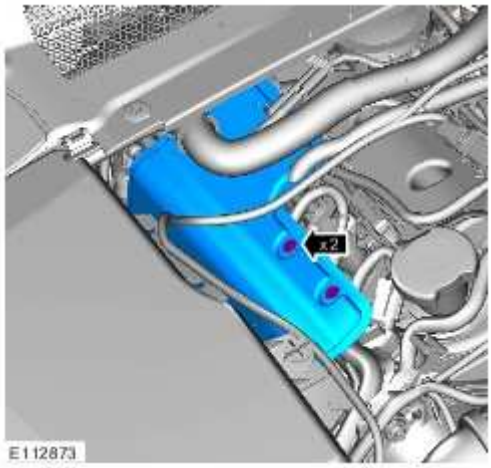

11 . Install the wiring harness cover.

Secure in the clips.

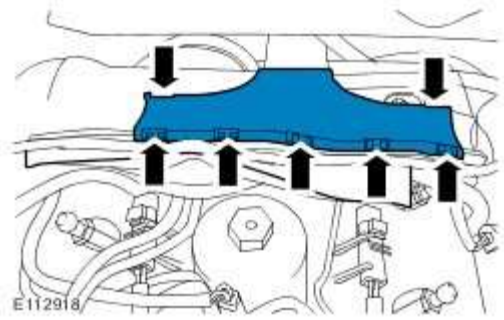

12 . Install the wiring harness carrier.

Install the bolts. TORQUE: 10 Nm

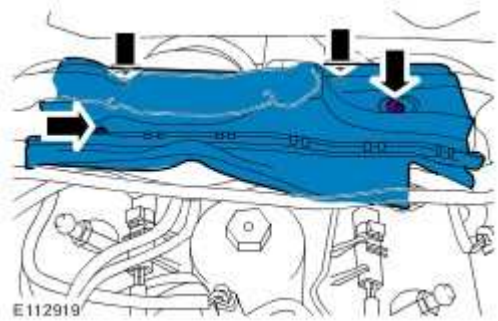

13 . Install the cowl vent screen.
For additional information, refer to Cowl Vent Screen (76.10.01)

14 . **CAUTION: Correct installation of the oil filler cap can be obtained by tightening the cap until an audible click is heard.**

Install the engine cover.

www.JagDocs.com

Specifications

Torque Specifications

Description	Nm	lb-ft	lb-in
Oil supply tube union to turbocharger retaining bolt	30	22	–
Oil supply tube to cylinder block retaining bolt	10	–	89
Oil return tube to turbocharger retaining bolts	10	–	89
Oil return tube to cylinder block retaining bolt	10	–	89
Turbocharger to exhaust manifold retaining nuts	23	17	–
Turbocharger support bracket retaining bolts	23	17	–
Turbocharger heatshield retaining bolts	10	–	89

Turbocharger

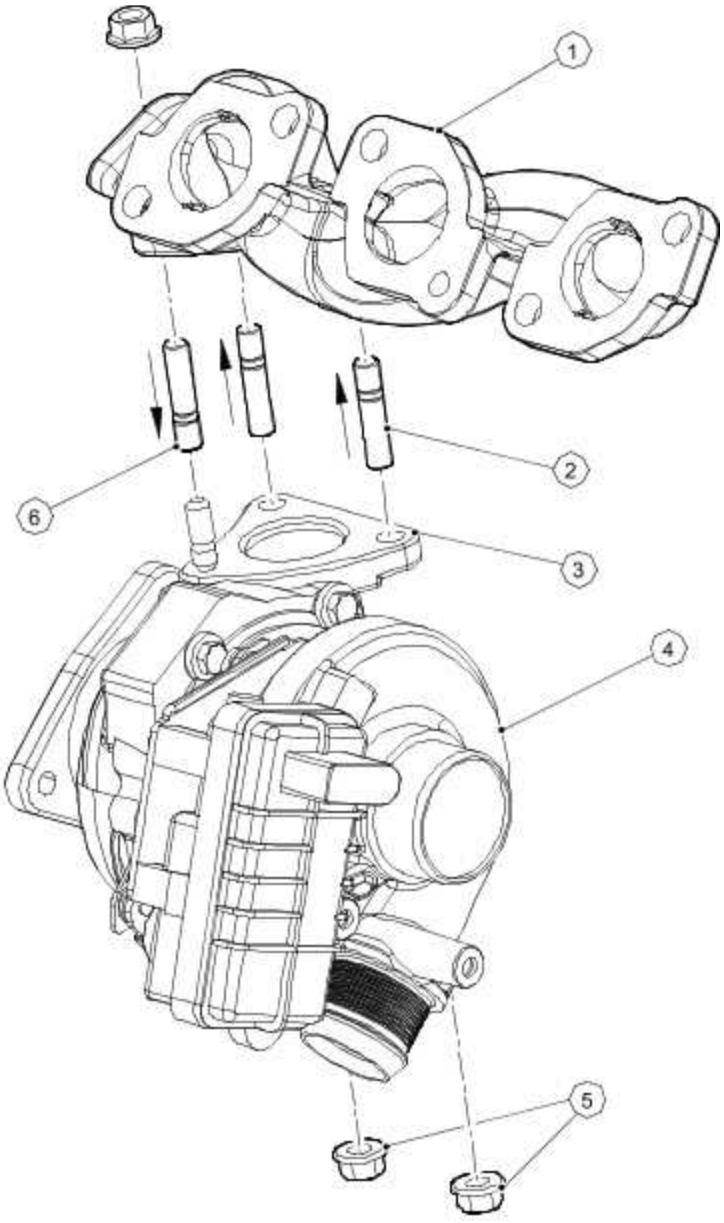

Item	Part Number	Description
1	—	Exhaust manifold
2	—	Exhaust manifold studs
3	—	Turbocharger mounting flange

www.JagDocs.com

4	—	Turbocharger
5		Turbocharger retaining nuts
6		Exhaust manifold stud (note orientation of stud)

Variable Vane Turbocharger

The engine is fitted with twin variable vane Turbochargers, electronically controlled, one to each bank. The turbochargers are fixed to the exhaust manifold by a three hole flange. The turbocharger consists of two elements, a turbine and a compressor both installed on a single shaft.

The turbocharger bearings are supplied with oil from the engine.

The turbine uses the flow of the exhaust gas to drive the compressor. The compressor draws air through the air cleaner and forces it into the intake manifold.

Principles of Operation - Variable vane turbocharger

The turbocharger is designed to improve engine induction and engine performance. The list below details the concerns relating to turbocharger performance.

High engine speed produces excessive turbine speed and therefore creates excessive turbocharger boost pressure.

Low engine speed does not produce sufficient turbine speed and therefore not enough turbocharger boost pressure is achieved.

The turbocharger does not have a wastegate control valve. Instead, it has variable turbocharger vanes which are located in the turbocharger turbine housing and these direct the air flow into the turbocharger turbine. The turbocharger vanes act as the control for the turbocharger boost pressure.

The turbocharger produces its full turbocharger boost pressure over the entire engine speed range, not just at high engine speed. This is achieved through the adjustment of the vanes and the resulting change in the flow of the exhaust gas.

The speed of the exhaust gas flow within the turbocharger is increased independent of engine speed by varying the intake cross section in front of the turbocharger turbine. This is achieved by adjusting the angle of the vanes controlling the air flow into the turbocharger turbine and this then drives the turbocharger turbine faster. The higher turbocharger speed produces a high turbocharger boost pressure at all engine speeds.

The engine control module (ECM) controls the turbocharger vanes by means of an electronic vane adjustment solenoid attached to the turbocharger.

Regulation at Low Engine Speed

At low engine speeds the ECM operates the vane adjustment solenoid. The vane adjustment solenoid moves the adjusting ring so that the vanes are set at a shallow angle. The shallow intake cross section this creates for the stream of exhaust gas allows the turbocharger boost pressure to build up rapidly and easily at low engine speeds.

Regulation at Moderate Engine Speed

As the engine speed increases and the quantity of exhaust gas increases, the vane adjustment solenoid moves the adjusting ring so that the vanes are set at a steeper angle. The steeper angle opens the intake cross section effectively reducing the gas flow, and turbine speed, while maintaining constant turbocharger boost pressure.

Regulation at Maximum Engine Speed

As the engine speed increases the intake cross section in front of the turbocharger turbine is continuously enlarged. The turbine speed and hence the quantity of the air supplied to the engine, is adjusted to suit the engine speed. This means that the turbocharger boost pressure remains optimized over all engine speeds.

The maximum position of the turbocharger vanes (maximum opening cross section) is also an emergency position, in the event of an electrical concern. This lowers the chance of engine damage due to excessive boost in the event of a turbocharger control concern.

www.JagDocs.com

Turbocharger

Principle of operation

The turbochargers used on the 2.7L diesel engine are **variable geometry** units, which means that the amount of boost generated can be varied according to the engine load, not just the engine speed.

The vane angles are varied by solenoids mounted on the turbochargers.

The solenoid operation is governed by the engine control module in response to engine load and conditions, ensuring the correct boost pressure for the prevailing conditions.

For information on the operation of the system,
Turbocharger

Overview

There are changes to the engine management system (EMS) for 2006 my, the most obvious of which will be the change to 7-digit diagnostic trouble codes (DTCs) from the familiar 5-digit.

Refer to the DTC index in this section for guidance on how to use these codes with the Jaguar approved diagnostic system or a scan tool.

Inspection and Verification

WARNING: The following tests may involve working in close proximity to hot components. Make sure adequate protection is used. Failure to follow this instruction may result in personal injury.

WARNING: The turbochargers can continue to rotate after the engine has stopped. Do not attempt to check the turbochargers until one minute has elapsed since the engine was switched off. Failure to follow this instruction may result in personal injury.

NOTE:

Check and rectify basic faults before beginning diagnostic routines involving pinpoint tests.

NOTE:

If diagnostic trouble codes (DTCs) are recorded and the symptom is not present when performing the pinpoint tests, an intermittent concern may be the cause. Always check for loose connections and corroded terminals.

NOTE:

This section contains references to Parameter Identifiers (PIDs). Where the Jaguar approved diagnostic system is not available, a scantool may be used to access these PIDs, all of which give information, and some of which can be used to both read information and to activate components. The format of the information may vary, depending on the tool used.

1 . Verify the customer concern.

2 . Visually inspect for obvious signs of mechanical or electrical damage.

Mechanical	Electrical
Intake air system Hose(s)/hose connections Turbocharger(s) General engine condition.	Circuit(s) Turbocharger actuator(s) Engine control module (ECM) Electrical connections and harnesses to the turbocharger(s)

3 . If an obvious cause for an observed or reported concern is found, correct the cause (if possible) before proceeding to the next step.

4 . If the cause is not visually evident use the Jaguar approved diagnostic system or a scan tool to retrieve the fault codes before proceeding to the DTC index, or the symptom chart if no DTCs are set.

Symptom chart

Symptom	Possible source	Action
Poor performance	Low/Contaminated fuel Restricted air intake system General engine condition ECM failure	Check the fuel level and condition, Fuel Charging and Controls Check the air intake for restriction, Intake Air Distribution and Filtering Check the engine condition, compressions, etc, Engine - 2.7L Diesel Check for DTCs. Refer to the warranty policy and procedures manual if an ECM is suspect.

www.JagDocs.com

No boost	Electrical connections and harnesses to the turbocharger(s) Restricted air intake system Charge air cooler restricted/leaking Turbocharger actuator failure(s) Turbocharger failure(s) ECM failure	Check the electrical connections and harnesses to the turbocharger(s). Check the air intake for restriction/leakage (see visual inspection). For air intake checks, Intake Air Distribution and Filtering For turbocharger actuator tests, GO to Pinpoint Test G552276p2. and GO to Pinpoint Test G552276p3. For turbocharger mechanical checks, GO to Pinpoint Test G552276p1. Refer to the warranty policy and procedures manual if an ECM is suspect.
No boost/excessive noise	Turbocharger failure	For turbocharger mechanical checks, GO to Pinpoint Test G552276p1.

DTC index

NOTE:

Generic scan tools may not read the codes listed, or may read only 5-digit codes. Match the 5 digits from the scan tool to the first 5 digits of the 7-digit code listed to identify the fault (the last 2 digits give extra information read by the manufacturer-approved diagnostic system).

NOTE:

For a full list of powertrain DTCs,
Electronic Engine Controls

DTC	Condition	Possible source	Action
P004500	Variable geometry turbocharger (VGT) actuator open circuit (right hand bank)	VGT actuator circuit: high resistance VGT actuator circuit: short circuit to ground VGT actuator failure ECM failure	For right hand bank VGT actuator circuit tests, GO to Pinpoint Test G552276p2. Refer to the warranty policy and procedures manual if an ECM is suspect.

P004700	Variable geometry turbocharger (VGT) actuator circuit low (right hand bank)	VGT actuator circuit: high resistance VGT actuator circuit: short circuit to ground VGT actuator failure ECM failure	For right hand bank VGT actuator circuit tests, GO to Pinpoint Test G552276p2. Refer to the warranty policy and procedures manual if an ECM is suspect.
P004800	Variable geometry turbocharger (VGT) actuator circuit high (right hand bank)	VGT actuator circuit: short circuit to power VGT actuator failure ECM failure	For right hand bank VGT actuator circuit tests, GO to Pinpoint Test G552276p2. Refer to the warranty policy and procedures manual if an ECM is suspect.
P004A00	Variable geometry turbocharger (VGT) actuator open circuit (left hand bank)	VGT actuator circuit: high resistance VGT actuator circuit: short circuit to ground VGT actuator failure ECM failure	For left hand bank VGT actuator circuit tests, GO to Pinpoint Test G552276p3. Refer to the warranty policy and procedures manual if an ECM is suspect.
P004C00	Variable geometry turbocharger (VGT) actuator circuit low (left hand bank)	VGT actuator circuit: short circuit to power VGT actuator failure ECM failure	For left hand bank VGT actuator circuit tests, GO to Pinpoint Test G552276p3. Refer to the warranty policy and procedures manual if an ECM is suspect.
P004D00	Variable geometry turbocharger (VGT) actuator circuit high (left hand bank)	VGT actuator circuit: short circuit to power VGT actuator failure ECM failure	For left hand bank VGT actuator circuit tests, GO to Pinpoint Test G552276p3. Refer to the warranty policy and procedures manual if an ECM is suspect.
P132A00	Variable geometry turbocharger (VGT) actuator H bridge fault (right hand bank)	VGT actuator circuit(s): high resistance, short circuit to ground, short circuit to power	For right hand bank VGT actuator circuit tests, GO to Pinpoint Test G552276p2. Refer to the warranty policy and procedure manual if an

www.JagDocs.com

		Turbocharger vanes stuck/sticking VGT actuator failure ECM failure	ECM is suspect.
P132B00	Variable geometry turbocharger (VGT) actuator performance (right hand bank)	VGT actuator circuit(s): high resistance, short circuit to ground, short circuit to power Turbocharger vanes stuck/sticking VGT actuator failure ECM failure	For right hand bank VGT actuator circuit tests, GO to Pinpoint Test G552276p2. Refer to the warranty policy and procedure manual if an ECM is suspect.
P132D00	Variable geometry turbocharger (VGT) actuator H bridge fault (left hand bank)	VGT actuator circuit(s): high resistance, short circuit to ground, short circuit to power Turbocharger vanes stuck/sticking VGT actuator failure ECM failure	For left hand bank VGT actuator circuit tests, GO to Pinpoint Test G552276p3. Refer to the warranty policy and procedure manual if an ECM is suspect.
P132E00	Variable geometry turbocharger (VGT) actuator performance (left hand bank)	VGT actuator circuit(s): high resistance, short circuit to ground, short circuit to power Turbocharger vanes stuck/sticking VGT actuator failure ECM failure	For left hand bank VGT actuator circuit tests, GO to Pinpoint Test G552276p3. Refer to the warranty policy and procedure manual if an ECM is suspect.
P132F00	Variable geometry turbocharger (VGT) actuator voltage plausibility (left hand bank)	VGT actuator circuit(s): high resistance, short circuit to ground, short circuit to power	For left hand bank VGT actuator circuit tests, GO to Pinpoint Test G552276p3. Refer to the warranty policy and procedure manual if an ECM is suspect.

		VGT actuator failure ECM failure	
P138E00	Variable geometry turbocharger (VGT) actuator adaption (right hand bank)	VGT actuator circuit(s): high resistance, short circuit to ground, short circuit to power VGT actuator failure	For right hand bank VGT actuator circuit tests, GO to Pinpoint Test G552276p2.
P023400	Turbocharger overboost condition, manifold absolute pressure (MAP) sensor control deviation	Air leakage MAP sensor circuit: high resistance MAP sensor circuit: short circuit to ground MAP sensor circuit: short circuit to power MAP sensor failure Exhaust gas recirculation (EGR) fault Turbocharger fault ECM failure	Check for air leakage. Intake Air Distribution and Filtering For MAP sensor tests. Electronic Engine Controls For EGR tests. Engine Emission Control Check for DTCs indicating a turbocharger fault. Refer to the warranty policy and procedures manual if an ECM is suspect.
P023600	Variable geometry turbocharger (VGT) actuator circuit range/performance (right hand bank)	VGT actuator circuit: high resistance VGT actuator circuit: short circuit to ground VGT actuator circuit: short circuit to power VGT actuator failure ECM failure	For right hand bank VGT actuator circuit tests, GO to Pinpoint Test G552276p2. Refer to the warranty policy and procedures manual if an ECM is suspect.
P023700	Variable geometry turbocharger (VGT) actuator	VGT actuator circuit: high resistance	For right hand bank VGT actuator circuit tests, GO to Pinpoint Test G552276p2.

www.JagDocs.com

	circuit low (right hand bank)	VGT actuator circuit: short circuit to ground VGT actuator failure ECM failure	Refer to the warranty policy and procedures manual if an ECM is suspect.
P023800	Variable geometry turbocharger (VGT) actuator circuit high (right hand bank)	VGT actuator circuit: short circuit to power VGT actuator failure ECM failure	For right hand bank VGT actuator circuit tests, GO to Pinpoint Test G552276p2. Refer to the warranty policy and procedures manual if an ECM is suspect.
P024000	Variable geometry turbocharger (VGT) actuator circuit range/performance (left hand bank)	VGT actuator circuit: high resistance VGT actuator circuit: short circuit to ground VGT actuator circuit: short circuit to power VGT actuator failure ECM failure	For left hand bank VGT actuator circuit tests, GO to Pinpoint Test G552276p3. Refer to the warranty policy and procedures manual if an ECM is suspect.
P024100	Variable geometry turbocharger (VGT) actuator circuit low (left hand bank)	VGT actuator circuit: high resistance VGT actuator circuit: short circuit to ground VGT actuator failure ECM failure	For left hand bank VGT actuator circuit tests, GO to Pinpoint Test G552276p3. Refer to the warranty policy and procedures manual if an ECM is suspect.
P024200	Variable geometry turbocharger (VGT) actuator circuit high (left hand bank)	VGT actuator circuit: short circuit to power VGT actuator failure ECM failure	For left hand bank VGT actuator circuit tests, GO to Pinpoint Test G552276p3. Refer to the warranty policy and procedures manual if an ECM is suspect.
P226300	Turbocharger boost system performance, manifold	IAT sensor circuit(s): high resistance, short circuit to	For IAT, MAP and MAF sensor tests.

	absolute pressure (MAP) sensor control deviation	ground, short circuit to power MAP sensor circuit(s): high resistance, short circuit to ground, short circuit to power MAF sensor circuit(s): high resistance, short circuit to ground, short circuit to power EGR circuit(s): high resistance, short circuit to ground, short circuit to power VGT actuator failure Turbocharger vanes stuck/sticking ECM failure	Electronic Engine Controls For EGR tests. Engine Emission Control For VGT actuator tests. GO to Pinpoint Test G552276p2. and GO to Pinpoint Test G552276p3. Refer to the warranty policy and procedures manual if an ECM is suspect.
P029900	Turbocharger underboost condition, manifold absolute pressure (MAP) sensor control deviation	MAP sensor circuit: high resistance MAP sensor circuit: short circuit to ground MAP sensor circuit: short circuit to power MAP sensor failure Exhaust gas recirculation (EGR) fault Turbocharger fault ECM failure	For MAP sensor tests. Electronic Engine Controls For EGR tests. Engine Emission Control Check for DTCs indicating a turbocharger fault. Refer to the warranty policy and procedures manual if an ECM is suspect.

www.JagDocs.com

Pinpoint Tests

CAUTION: Do not insert any tools into the turbocharger body. Failure to follow this instruction may result in damage to the vehicle.

CAUTION: When probing connectors to take measurements in the course of the pinpoint tests, use the adaptor kit, part number 3548-1358-00. Failure to follow this instruction may result in damage to the vehicle.

NOTE:

A small amount of oil inside the turbocharger body, visible when the hoses are disconnected, is normal.

NOTE:

A small amount of play in the turbine shaft is normal. If in any doubt, compare with a known good unit.

NOTE:

When performing voltage or resistance tests, always use a digital multimeter (DMM) accurate to 3 decimal places, and with an up-to-date calibration certificate. When testing resistance, always take the resistance of the DMM leads into account.

NOTE:

Check and rectify basic faults before beginning diagnostic routines involving pinpoint tests.

NOTE:

If DTCs are recorded and a fault is not present when performing the pinpoint tests, an intermittent concern may be the cause. Always check for loose connections and corroded terminals.

PINPOINT TEST G552276p1 : CHECK THE TURBOCHARGER MECHANICAL CONDITION

G552276t1 : CHECK FOR EXCESSIVE PLAY IN THE TURBOCHARGER SHAFT

1. Disconnect the intake and outlet hoses from the turbocharger. 2. Check that the turbocharger rotates freely, and without noise. 3. Grip the ends of the turbine shaft at either side of the turbocharger and assess the play.

Is the play in the shaft excessive? (Compare the play to a known good unit in the event of uncertainty).

-> Yes
INSTALL a new turbocharger.
Turbocharger LH
Turbocharger RH CLEAR any DTCs, test the vehicle for normal operation.

-> No
CHECK for other sources of noise. Refer to the symptom chart for diagnosing the turbocharger system for the cause of the lack of boost.

PINPOINT TEST G552276p2 : CHECK THE ROTARY ELECTRONIC ACTUATOR CIRCUIT A

G552276t2 : CHECK THE ROTARY ELECTRONIC ACTUATOR GROUND CIRCUIT FOR HIGH RESISTANCE

1. Rotary Electronic Actuator connector, C40,

Circuit	Pin
(+) pwm motor	C40 - 01
(-) pwm motor	C40 - 02
Ground	C40 - 03
ECM feedback	C40 - 04
5volt supply	C40 - 05

www.JagDocs.com

2. Powertrain Control Module (PCM) connector, C99,

Circuit	Pin
(+) pwm motor	C99 - J2
(-) pwm motor	C99 - K2
Ground	C99 - G3
PCM feedback	C99 - C4
5volt supply	C99 - D1

3. 4. Disconnect the connector, C40. 5. Key on, engine off. 6. Measure the resistance between:

C40, harness side	Battery
Pin 03	Negative terminal

Is the resistance less than 0.5 ohms?

-> Yes
GO to Pinpoint Test G552276t3.

-> No
Repair the high resistance circuit. For additional information, refer to the wiring diagrams. Clear any DTCs, test the system for normal operation.

G552276t3 : CHECK THE POWER SUPPLY TO THE ROTARY ELECTRONIC ACTUATOR

1. Measure the voltage between:

C40, harness side	Battery
Pin 05	Negative terminal

Is the voltage between 4.5 volts and 5 volts?

-> Yes
GO to Pinpoint Test G552276t4.

-> No
Repair the power circuit. For additional information, refer to the wiring diagrams. Clear any DTCs, test the system for normal operation.

G552276t4 : CHECK THE ROTARY ELECTRONIC ACTUATOR FEEDBACK CIRCUIT FOR SHORT CIRCUIT TO GROUND

1. 2. Measure the resistance between:

C40, harness side	Battery
Pin 04	Negative terminal

Is the resistance greater than 10 Kohms (+/-10%) ?

-> Yes
GO to Pinpoint Test G552276t5.

-> No
GO to Pinpoint Test G552276t7.

G552276t5 : CHECK THE ROTARY ELECTRONIC ACTUATOR FEEDBACK CIRCUIT FOR SHORT CIRCUIT TO POWER

1. Measure the resistance between:

C40, harness side	Battery
Pin 04	Positive terminal

Is the resistance greater than 10 Kohms (+/-10%) ?

-> Yes
GO to Pinpoint Test G552276t6.

-> No

www.JagDocs.com

GO to Pinpoint Test G552276t8.

G552276t6 : CHECK THE ROTARY ELECTRONIC ACTUATOR FEEDBACK CIRCUIT FOR HIGH RESISTANCE

1. Disconnect the ECM connector, C99. 2. Measure the resistance between:

C40, harness side	C99, harness side
Pin 04	Pin C4

Is the resistance less than 0.5 ohms?

-> Yes
GO to Pinpoint Test G552276t16.

-> No
Repair the high resistance circuit. For additional information, refer to the wiring diagrams. Clear any DTCs, test the system for normal operation.

G552276t7 : CHECK WHETHER THE SHORT CIRCUIT TO GROUND IS IN THE HARNESS OR THE MODULE

1. 2. Disconnect the ECM connector, C99. 3. Key on, Engine off. 4. Measure the resistance between:

C40, harness side	Battery
Pin 04	Negative terminal

Is the resistance greater than 10 Kohms (+/-10%) ?

-> Yes
An intermittent fault may be present in the wiring harness. Visually check for chaffed wires or other physical damage to the harness. If no fault is found in the circuit, suspect the following component(s): **-** ECM

-> No
Repair the short circuit. For additional information, refer to the wiring diagrams. Clear any DTCs, test the system for normal operation.

G552276t8 : CHECK WHETHER THE SHORT CIRCUIT TO POWER IS IN THE HARNESS OR THE MODULE

1. Key off. 2. Disconnect the ECM connector, C99. 3. Key on, Engine off. 4. Measure the resistance between:

C40, harness side	Battery
Pin 04	Positive terminal

Is the resistance greater than 10 Kohms (+/-10%) ?

-> Yes
An intermittent fault may be present in the wiring harness. Visually check for chaffed wires or other physical damage to the harness. If no fault is found in the circuit, suspect the following component(s): **-** ECM

-> No
Repair the short circuit. For additional information, refer to the wiring diagrams. Clear any DTCs, test the system for normal operation.

G552276t16 : CHECK THE ROTARY ELECTRONIC ACTUATOR PWM+ CIRCUIT FOR SHORT CIRCUIT TO GROUND

1. Measure the resistance between:

C40, harness side	Battery
Pin 01	Negative terminal

Is the resistance greater than 10 Kohms (+/-10%) ?

-> Yes
GO to Pinpoint Test G552276t17.

-> No
GO to Pinpoint Test G552276t19.

G552276t17 : CHECK THE ROTARY ELECTRONIC ACTUATOR PWM+ CIRCUIT FOR SHORT CIRCUIT TO POWER

1. Measure the resistance between:

www.JagDocs.com

C40, harness side	Battery
Pin 01	Positive terminal

Is the resistance greater than 10 Kohms (+/-10%) ?

-> Yes
GO to Pinpoint Test G552276t18.

-> No
GO to Pinpoint Test G552276t20.

G552276t18 : CHECK THE ROTARY ELECTRONIC ACTUATOR PWM+ CIRCUIT FOR HIGH RESISTANCE

1. Key off. 2. Disconnect the ECM connector, C99. 3. Measure the resistance between:

C40, harness side	C99, harness side
Pin 01	Pin J2

Is the resistance less than 0.5 ohms?

-> Yes
GO to Pinpoint Test G552276t21.

-> No
Repair the high resistance circuit. For additional information, refer to the wiring diagrams. Clear any DTCs, test the system for normal operation.

G552276t19 : CHECK WHETHER THE SHORT CIRCUIT TO GROUND IS IN THE HARNESS OR THE MODULE

1. Key off. 2. Disconnect the ECM connector, C99. 3. Key on, engine off. 4. Measure the resistance between:

C40, harness side	Battery
Pin 01	Negative terminal

Is the resistance greater than 10 Kohms (+/-10%) ?

-> Yes
An intermittent fault may be present in the wiring harness. Visually check for chaffed wires or other physical damage to the harness. If no fault is found in the circuit, suspect the following component(s): **-** ECM

-> No
Repair the short circuit. For additional information, refer to the wiring diagrams. Clear any DTCs, test the system for normal operation.

G552276t20 : CHECK WHETHER THE SHORT CIRCUIT TO POWER IS IN THE HARNESS OR THE MODULE

1. Key off. 2. Disconnect the ECM connector, C99. 3. Key on, engine off. 4. Measure the resistance between:

C40, harness side	Battery
Pin 01	Positive terminal

Is the resistance greater than 10 Kohms (+/-10%) ?

-> Yes
An intermittent fault may be present in the wiring harness. Visually check for chaffed wires or other physical damage to the harness. If no fault is found in the circuit, suspect the following component(s): **-** ECM

-> No
Repair the short circuit. For additional information, refer to the wiring diagrams. Clear any DTCs, test the system for normal operation.

G552276t21 : CHECK THE ROTARY ELECTRONIC ACTUATOR PWM- CIRCUIT FOR SHORT CIRCUIT TO GROUND

1. Measure the resistance between:

C40, harness side	C40, harness side
Pin 02	Pin 03

Is the resistance greater than 10 Kohms (+/-10%) ?

www.JagDocs.com

-> Yes
GO to Pinpoint Test G552276t22.

-> No
GO to Pinpoint Test G552276t24.

G552276t22 : CHECK THE TURBOCHARGER PWM- CIRCUIT FOR SHORT CIRCUIT TO POWER

1. Measure the resistance between:

C40, harness side	Battery
Pin 02	Positive terminal

Is the resistance greater than 10 Kohms (+/-10%) ?

-> Yes
GO to Pinpoint Test G552276t23.

-> No
GO to Pinpoint Test G552276t25.

G552276t23 : CHECK THE ROTARY ELECTRONIC ACTUATOR PWM- CIRCUIT FOR HIGH RESISTANCE

1. Key off. 2. Disconnect the ECM connector, C99. 3. Measure the resistance between:

C40, harness side	C99, harness side
Pin 02	Pin K2

Is the resistance less than 0.5 ohms?

-> Yes
An intermittent fault may be present in the wiring harness. Visually check for chaffed wires or other physical damage to the harness. If no fault is found in the circuit, suspect the following component(s): - Connector C40 - ECM connector - Turbocharger 1 (right-hand bank) - ECM

-> No

Repair the high resistance circuit. For additional information, refer to the wiring diagrams. Clear any DTCs, test the system for normal operation.

G552276t24 : CHECK WHETHER THE SHORT CIRCUIT TO GROUND IS IN THE HARNESS OR THE MODULE

1. Key off. 2. Disconnect the ECM connector, C99. 3. Key on, engine off. 4. Measure the resistance between:

C40, harness side	Battery
Pin 02	Negative terminal

Is the resistance greater than 10 Kohms (+/-10%) ?

-> Yes
An intermittent fault may be present in the wiring harness. Visually check for chaffed wires or other physical damage to the harness. If no fault is found in the circuit, suspect the following component(s): **-** ECM

-> No
Repair the short circuit. For additional information, refer to the wiring diagrams. Clear any DTCs, test the system for normal operation.

G552276t25 : CHECK WHETHER THE SHORT CIRCUIT TO POWER IS IN THE HARNESS OR THE MODULE

1. Key off. 2. Disconnect the ECM connector, C99. 3. Key on, engine off. 4. Measure the resistance between:

C40, harness side	Battery
Pin 02	Positive terminal

Is the resistance greater than 10 Kohms (+/-10%) ?

-> Yes
An intermittent fault may be present in the wiring harness. Visually check for chaffed wires or other physical damage to the harness. If no fault is found in the circuit, suspect the following component(s): **-** ECM

-> No
Repair the short circuit. For additional information, refer to the wiring diagrams. Clear any DTCs, test the system for normal operation.

www.JagDocs.com

PINPOINT TEST G552276p3 : CHECK THE ROTARY ELECTRONIC ACTUATOR CIRCUIT B

G552276t9 : CHECK THE ROTARY ELECTRONIC ACTUATOR GROUND CIRCUIT FOR HIGH RESISTANCE

1. Rotary Electronic Actuator connector, C41

Circuit	Pin
(+) pwm motor	C41 - 01
(-) pwm motor	C41 - 02
Ground	C41 - 03
PCM feedback	C41 - 04
5volt supply	C41 - 05

2. Powertrain Control Module (PCM) connector, C99,

Circuit	Pin
(+) pwm motor	C99 - J3
(-) pwm motor	C99 - K3
Ground	C99 - D2
PCM feedback	C99 - B4
5volt supply	C99 - D1

3. 4. Disconnect the connector, C41. 5. Key on, Engine off. 6. Measure the resistance between:

C41, harness side	Battery
Pin 03	Negative terminal

Is the resistance less than 0.5 ohms?

-> Yes
GO to Pinpoint Test G552276t10.

-> No
Repair the high resistance circuit. For additional information, refer to the wiring diagrams. Clear any DTCs, test the system for normal operation.

G552276t10 : CHECK THE POWER SUPPLY TO THE ROTARY ELECTRONIC ACTUATOR

1. Measure the voltage between:

C41, harness side	Battery
Pin 05	Negative terminal

Is the voltage 4.5 volts and 5 volts?

-> Yes
GO to Pinpoint Test G552276t11.

-> No
Repair the power circuit. For additional information, refer to the wiring diagrams. Clear any DTCs, test the system for normal operation.

G552276t11 : CHECK THE ROTARY ELECTRONIC ACTUATOR FEEDBACK CIRCUIT FOR SHORT CIRCUIT TO GROUND

1. 2. Measure the resistance between:

C41, harness side	Battery
Pin 04	Negative terminal

Is the resistance greater than 10 Kohms (+/-10%) ?

-> Yes
GO to Pinpoint Test G552276t12.

www.JagDocs.com

-> No
GO to Pinpoint Test G552276t14.

G552276t12 : CHECK THE ROTARY ELECTRONIC ACTUATOR FEEDBACK CIRCUIT FOR SHORT CIRCUIT TO POWER

1. Measure the resistance between:

C41, harness side	Battery
Pin 04	Positive terminal

Is the resistance greater than 10 Kohms (+/-10%) ?

-> Yes
GO to Pinpoint Test G552276t13.

-> No
GO to Pinpoint Test G552276t15.

G552276t13 : CHECK THE ROTARY ELECTRONIC ACTUATOR FEEDBACK CIRCUIT FOR HIGH RESISTANCE

1. Disconnect the ECM connector, C99. 2. Measure the resistance between:

C41, harness side	C99, harness side
Pin 04	Pin B4

Is the resistance less than 0.5 ohms?

-> Yes
GO to Pinpoint Test G552276t26.

-> No
Repair the high resistance circuit. For additional information, refer to the wiring diagrams. Clear any DTCs, test the system for normal operation.

G552276t14 : CHECK WHETHER THE SHORT CIRCUIT TO GROUND IS IN THE HARNESS OR THE MODULE

1. 2. Disconnect the ECM connector, C99. 3. Key on, engine off. 4. Measure the resistance between:

C41, harness side	Battery
Pin 04	Negative terminal

Is the resistance greater than 10 Kohms (+/-10%) ?

-> Yes
An intermittent fault may be present in the wiring harness. Visually check for chaffed wires or other physical damage to the harness. If no fault is found in the circuit, suspect the following component(s): **-** ECM

-> No
Repair the short circuit. For additional information, refer to the wiring diagrams. Clear any DTCs, test the system for normal operation.

G552276t15 : CHECK WHETHER THE SHORT CIRCUIT TO POWER IS IN THE HARNESS OR THE MODULE

1. Key off. 2. Disconnect the ECM connector, C99. 3. Key on, engine off. 4. Measure the resistance between:

C41, harness side	Battery
Pin 04	Positive terminal

Is the resistance greater than 10 Kohms (+/-10%) ?

-> Yes
An intermittent fault may be present in the wiring harness. Visually check for chaffed wires or other physical damage to the harness. If no fault is found in the circuit, suspect the following component(s): **-** ECM

-> No
Repair the short circuit. For additional information, refer to the wiring diagrams. Clear any DTCs, test the system for normal operation.

G552276t26 : CHECK THE ROTARY ELECTRONIC ACTUATOR PWM+ CIRCUIT FOR SHORT CIRCUIT TO GROUND

1. Measure the resistance between:

www.JagDocs.com

C41, harness side	Battery
Pin 01	Negative terminal

Is the resistance greater than 10 Kohms (+/-10%) ?

-> Yes
GO to Pinpoint Test G552276t27.

-> No
GO to Pinpoint Test G552276t29.

G552276t27 : CHECK THE ROTARY ELECTRONIC ACTUATOR PWM+ CIRCUIT FOR SHORT CIRCUIT TO POWER

1. Measure the resistance between:

C41, harness side	Battery
Pin 01	Positive terminal

Is the resistance greater than 10 Kohms (+/-10%) ?

-> Yes
GO to Pinpoint Test G552276t28.

-> No
GO to Pinpoint Test G552276t30.

G552276t28 : CHECK THE ROTARY ELECTRONIC ACTUATOR PWM+ CIRCUIT FOR HIGH RESISTANCE

1. Key off. 2. Disconnect the ECM connector, C99. 3. Measure the resistance between:

C41, harness side	C99, harness side
Pin 01	Pin J3

Is the resistance less than 0.5 ohms?

-> Yes
GO to Pinpoint Test G552276t31.

-> No
Repair the high resistance circuit. For additional information, refer to the wiring diagrams. Clear any DTCs, test the system for normal operation.

G552276t29 : CHECK WHETHER THE SHORT CIRCUIT TO GROUND IS IN THE HARNESS OR THE MODULE

1. Key off. 2. Disconnect the ECM connector, C99. 3. Key on, engine off. 4. Measure the resistance between:

C41, harness side	Battery
Pin 01	Negative terminal

Is the resistance greater than 10 Kohms (+/-10%) ?

-> Yes
An intermittent fault may be present in the wiring harness. Visually check for chaffed wires or other physical damage to the harness. If no fault is found in the circuit, suspect the following component(s): - ECM

-> No
Repair the short circuit. For additional information, refer to the wiring diagrams. Clear any DTCs, test the system for normal operation.

G552276t30 : CHECK WHETHER THE SHORT CIRCUIT TO POWER IS IN THE HARNESS OR THE MODULE

1. Key off. 2. Disconnect the ECM connector, C99. 3. Key on, engine off. 4. Measure the resistance between:

C41, harness side	Battery
Pin 01	Positive terminal

Is the resistance greater than 10 Kohms (+/-10%) ?

www.JagDocs.com

-> Yes
An intermittent fault may be present in the wiring harness. Visually check for chaffed wires or other physical damage to the harness. If no fault is found in the circuit, suspect the following component(s): **-** ECM

-> No
Repair the short circuit. For additional information, refer to the wiring diagrams. Clear any DTCs, test the system for normal operation.

G552276t31 : CHECK THE ROTARY ELECTRONIC ACTUATOR PWM- CIRCUIT FOR SHORT CIRCUIT TO GROUND

1. Measure the resistance between:

C41, harness side	Battery
Pin 02	Negative terminal

Is the resistance greater than 10 Kohms (+/-10%) ?

-> Yes
GO to Pinpoint Test G552276t32.

-> No
GO to Pinpoint Test G552276t34.

G552276t32 : CHECK THE ROTARY ELECTRONIC ACTUATOR PWM- CIRCUIT FOR SHORT CIRCUIT TO POWER

1. Measure the resistance between:

C41, harness side	Battery
Pin 02	Positive terminal

Is the resistance greater than 10 Kohms (+/-10%) ?

-> Yes
GO to Pinpoint Test G552276t33.

-> No

GO to Pinpoint Test G552276t35.

G552276t33 : CHECK THE ROTARY ELECTRONIC ACTUATOR PWM- CIRCUIT FOR HIGH RESISTANCE

1. Key off. 2. Disconnect the ECM connector, C99. 3. Measure the resistance between:

C41, harness side	C99, harness side
Pin 02	Pin K3

Is the resistance less than 0.5 ohms?

-> Yes
An intermittent fault may be present in the wiring harness. Visually check for chaffed wires or other physical damage to the harness. If no fault is found in the circuit, suspect the following component(s): **-** Connector C41 **-** ECM connector **-** Turbocharger 2 (left-hand bank) **-** ECM

-> No
Repair the high resistance circuit. For additional information, refer to the wiring diagrams. Clear any DTCs, test the system for normal operation.

G552276t34 : CHECK WHETHER THE SHORT CIRCUIT TO GROUND IS IN THE HARNESS OR THE MODULE

1. Key off. 2. Disconnect the ECM connector, C99. 3. Key on, engine off. 4. Measure the resistance between:

C41, harness side	Battery
Pin 02	Negative terminal

Is the resistance greater than 10 Kohms (+/-10%) ?

-> Yes
An intermittent fault may be present in the wiring harness. Visually check for chaffed wires or other physical damage to the harness. If no fault is found in the circuit, suspect the following component(s): **-** ECM

-> No
Repair the short circuit. For additional information, refer to the wiring diagrams. Clear any DTCs, test the system for normal operation.

www.JagDocs.com

G552276t35 : CHECK WHETHER THE SHORT CIRCUIT TO POWER IS IN THE HARNESS OR THE MODULE

1. Key off. 2. Disconnect the ECM connector, C99. 3. Key on, engine off. 4. Measure the resistance between:

C41, harness side	Battery
Pin 02	Positive terminal

Is the resistance greater than 10 Kohms (+/-10%) ?

-> Yes

An intermittent fault may be present in the wiring harness. Visually check for chaffed wires or other physical damage to the harness. If no fault is found in the circuit, suspect the following component(s): **-** ECM

-> No

Repair the short circuit. For additional information, refer to the wiring diagrams. Clear any DTCs, test the system for normal operation.

Turbocharger LH

Removal

1 . Remove the air deflector.
For additional information, refer to Air Deflector (76.11.41)

2 . Remove the left-hand catalytic converter.
For additional information, refer to Catalytic Converter - 2.7L Diesel (17.50.05)

3 . Remove the turbocharger heatshield.

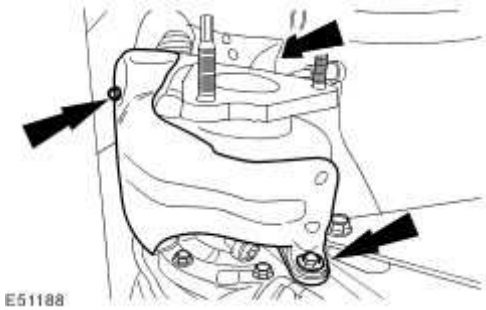

4 . Remove the turbocharger support bracket.

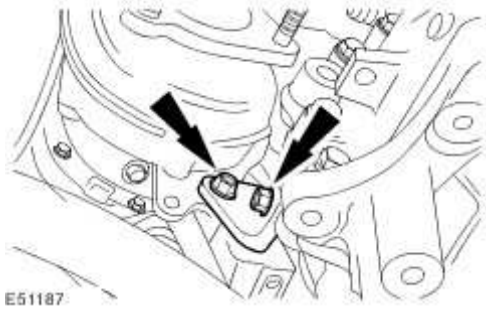

5 . Remove the turbocharger outlet pipe retaining bolt.

www.JagDocs.com

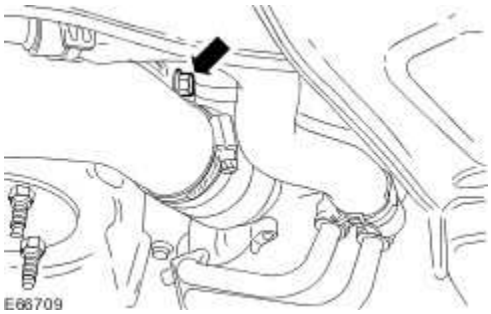

6 . Disconnect the turbocharger outlet pipe.

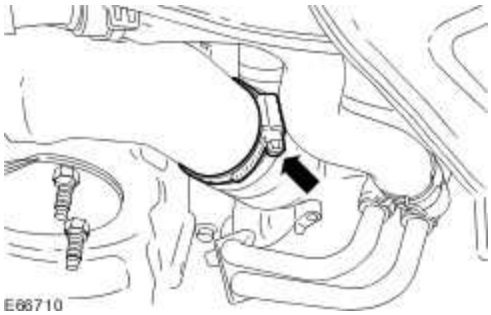

7 . Remove the turbocharger outlet pipe from the turbocharger.

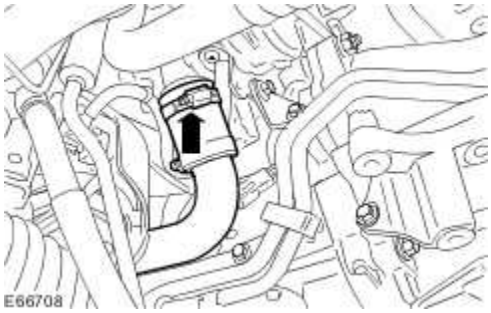

8 . Detach the crankshaft position (CKP) sensor wiring harness from the oil return tube retaining plate.

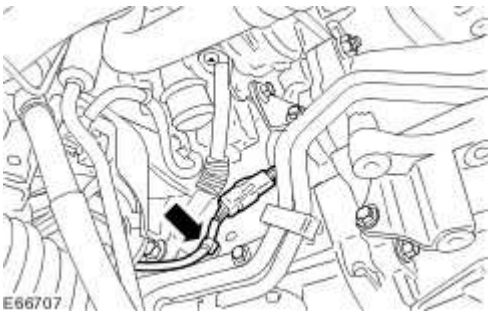

9 . Detach the turbocharger oil return tube.

- Remove and discard the O-ring seal.
- Install blanking caps to the exposed ports.

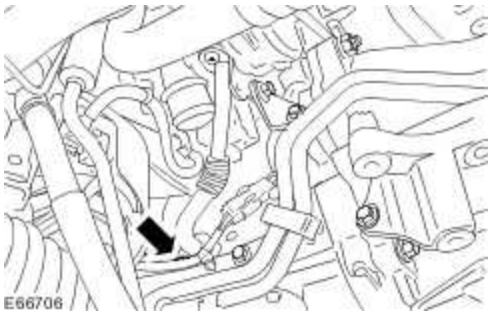

10 . Remove the turbocharger oil return tube from the turbocharger.

- Remove and discard the gasket.
- Install blanking caps to the exposed ports.

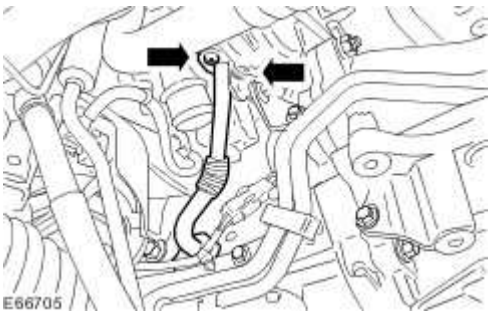

11 . Detach the turbocharger intake tube.

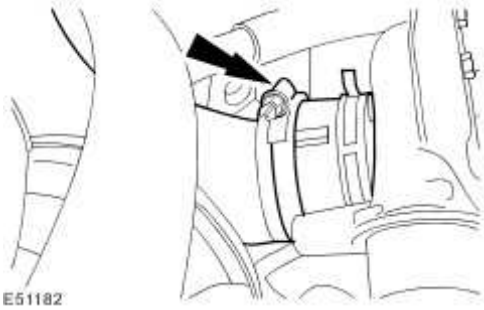

www.JagDocs.com

12 . Disconnect the turbocharger solenoid electrical connector.

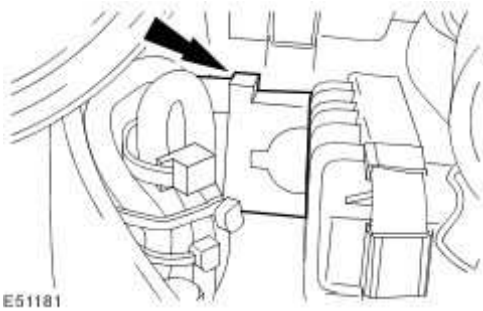

13 . Lower the vehicle.

14 . Disconnect the turbocharger oil supply tube.

- Remove and discard the sealing washer.
- Install blanking caps to the exposed ports.

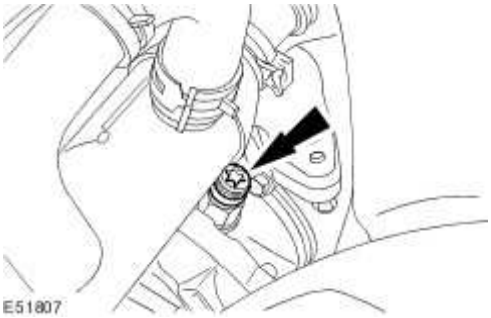

15 . Raise the vehicle.

16 Remove the turbocharger.

.

- Remove and discard the turbocharger retaining nuts.
- Remove and discard the turbocharger to exhaust manifold retaining studs.
- Install blanking caps to the exposed ports.

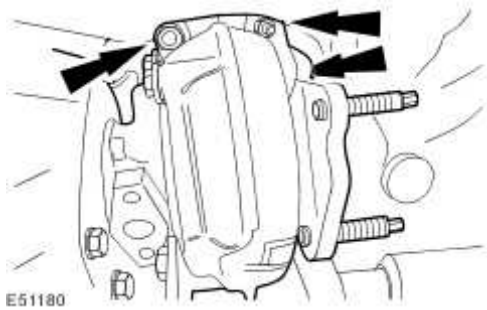

Installation

1 . Install the turbocharger.

- Remove the blanking caps.
- Install new turbocharger to exhaust manifold retaining studs.
- Install new turbocharger retaining nuts.
- Tighten to 23 Nm.

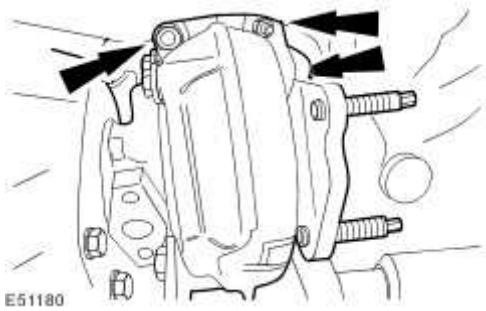

2 . Lower the vehicle.

3 . Connect the turbocharger oil supply tube.

- Remove the blanking caps.
- Install a new sealing washer.
- Tighten to 30 Nm.

www.JagDocs.com

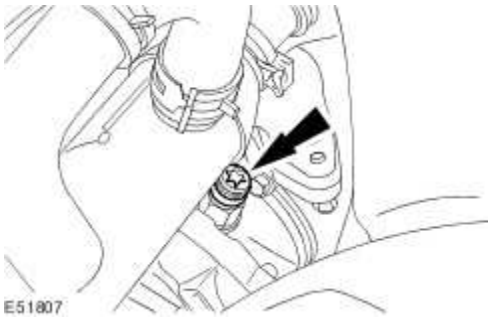

4 . Raise the vehicle.

5 . Connect the turbocharger solenoid electrical connector.

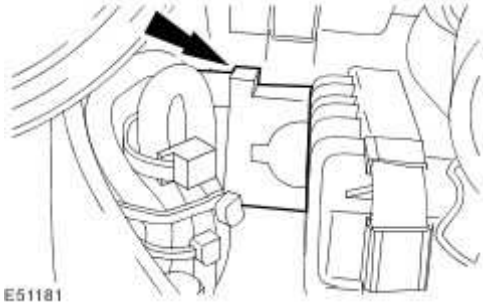

6 . Attach the air cleaner lower outlet tube.

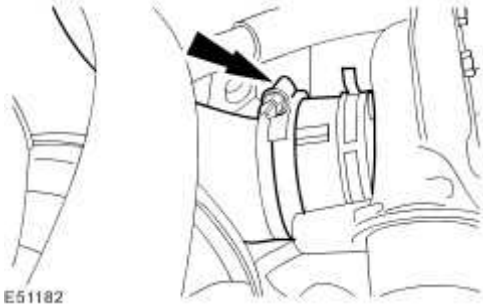

7 . Install the turbocharger oil return tube to the turbocharger.

- Remove the blanking caps.
- Install a new gasket.

- Tighten to 10 Nm.

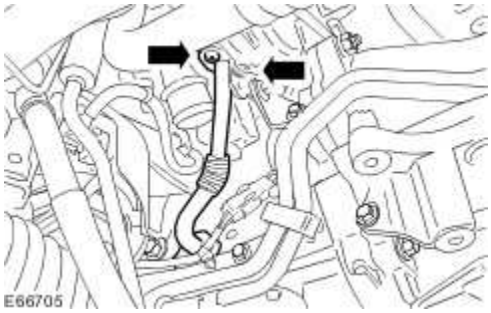

8 . Attach the turbocharger oil return tube.

- Remove the blanking caps.
- Install a new O-ring seal.
- Tighten to 10 Nm.

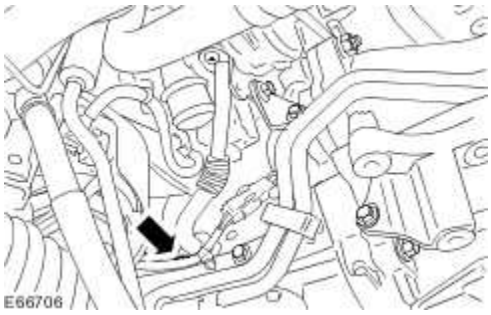

9 . Attach the CKP sensor wiring harness to the oil return tube retaining plate.

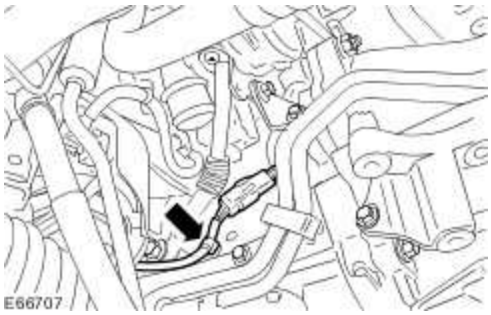

10 . Install the turbocharger outlet hose to the turbocharger.

www.JagDocs.com

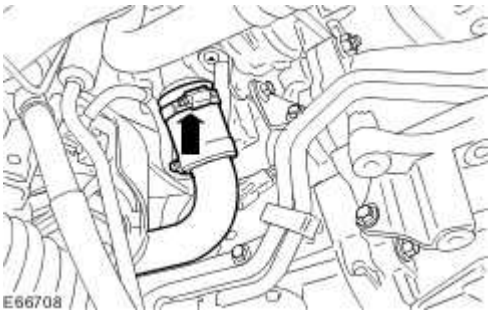

11 . Connect the turbocharger outlet pipe.

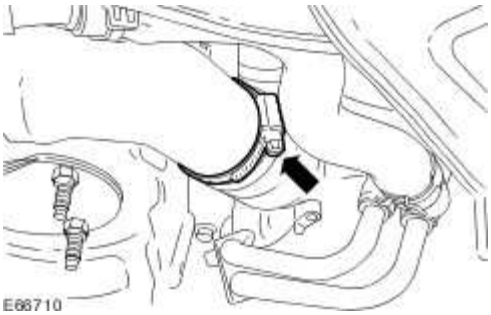

12 . Install the turbocharger outlet pipe retaining bolt.

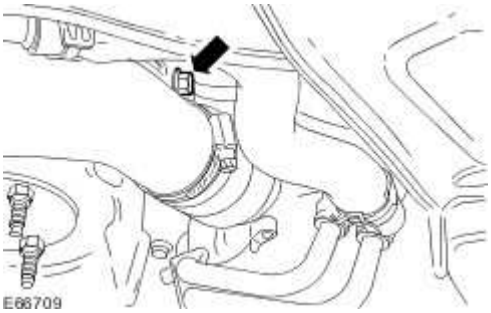

13 . Install the turbocharger support bracket.

Tighten to 23 Nm.

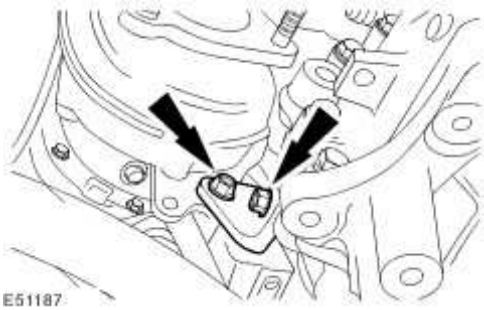

14 . Install the turbocharger heatshield.

Tighten to 6 Nm.

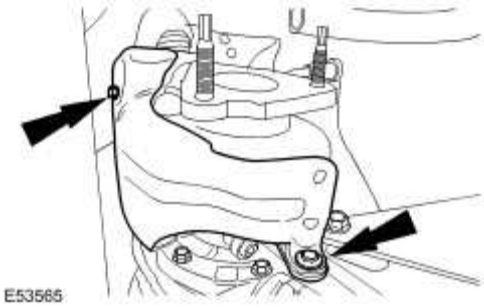

15 . Install the turbocharger heatshield retaining nut.

Tighten to 10 Nm.

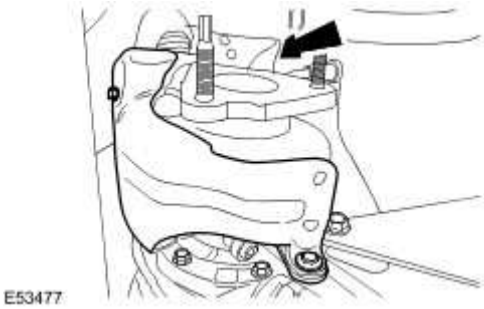

16 . Install the left-hand catalytic converter.
For additional information, refer to Catalytic Converter - 2.7L Diesel (17.50.05)

17 . Install the air deflector.
For additional information, refer to Air Deflector (76.11.41)

www.JagDocs.com

Turbocharger RH

Removal

1 . Remove the right-hand catalytic converter.
For additional information, refer to Catalytic Converter - 2.7L V6 - TdV6 (17.50.05)

2 . Remove the right-hand engine mount.
For additional information, refer to Engine Mount RH (12.45.03)

3 . Detach the steering gear.

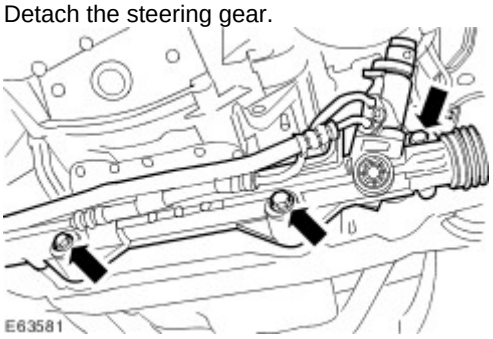

4 . Using a suitable piece of string, secure the steering gear.

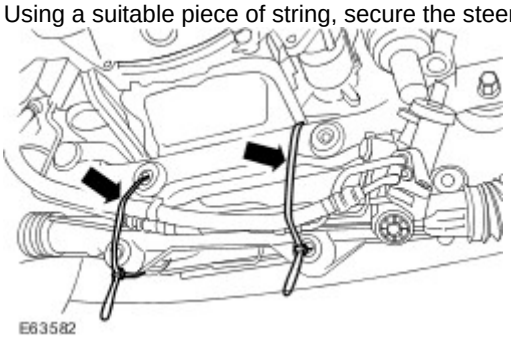

5 . Remove the starter motor securing bracket.

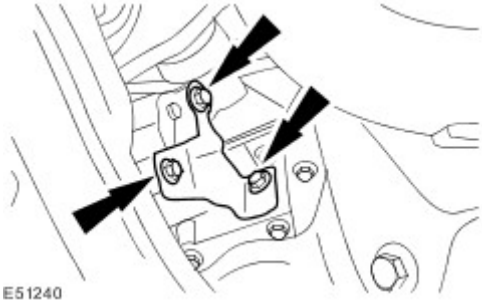

6 . Detach the starter motor solenoid harness.

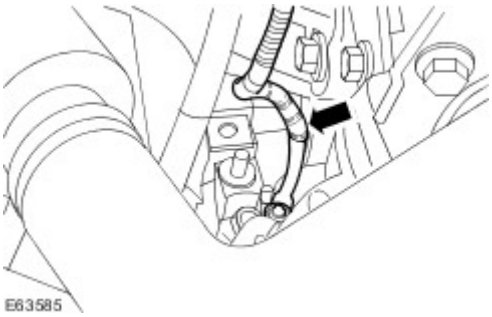

7 . Remove the starter motor.

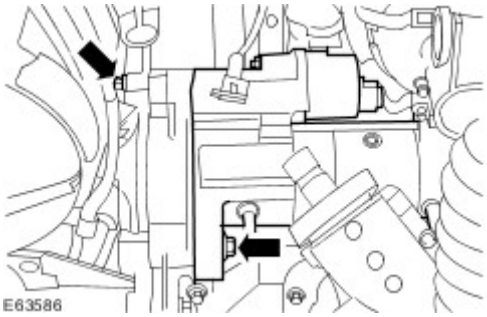

8 . Detach the wiring harness from the engine mount retaining bracket.

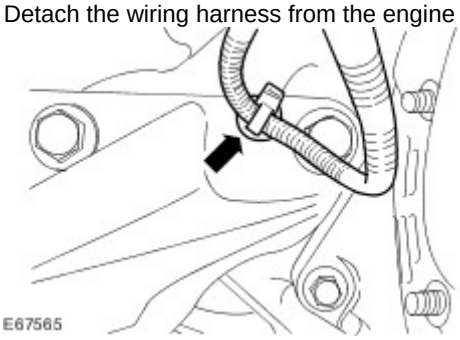

9 . Remove the engine mount retaining bracket.

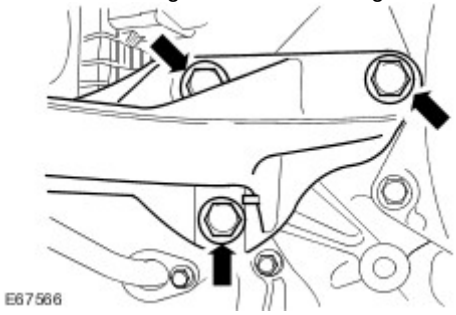

www.JagDocs.com

10 . Remove the turbocharger heatshield.

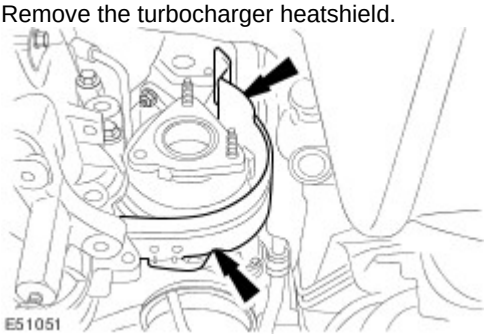

11 . Remove the turbocharger support bracket.

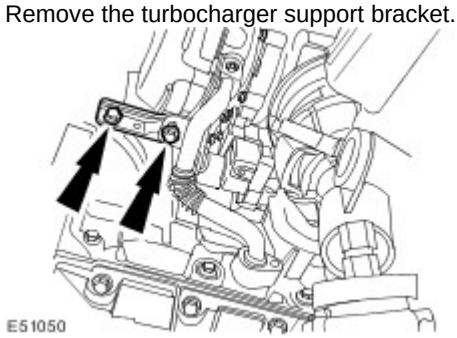

12 . Disconnect the oil return tube from the turbocharger.

Remove and discard the gasket.

13 . Remove the oil return tube retaining plate.

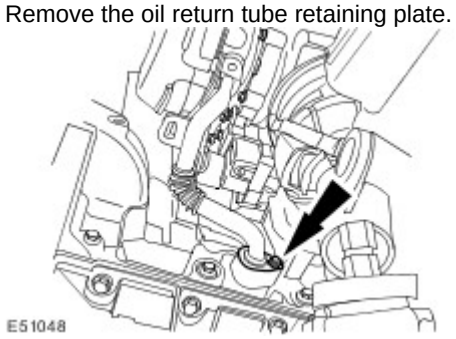

14 . Remove the oil return tube.

- Remove and discard the O-ring seal.

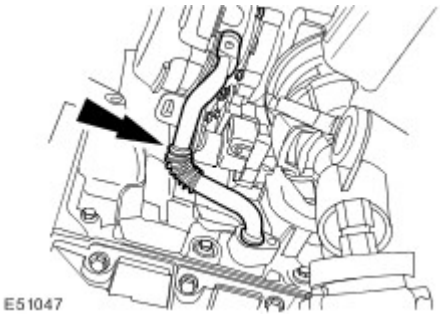

15 . Disconnect the turbocharger solenoid electrical connector.

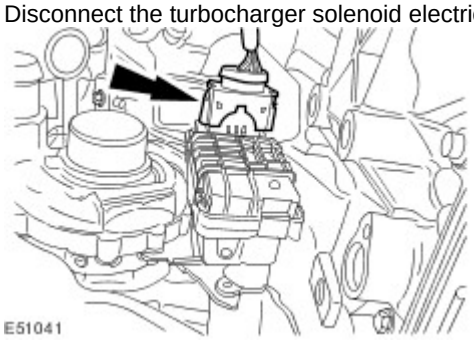

16 . Disconnect the turbocharger oil supply tube.

- Remove and discard the sealing washer.

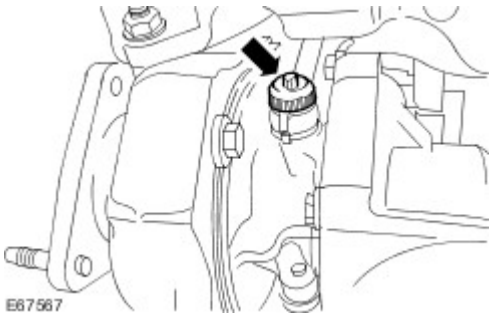

17 . Remove the turbocharger.

- Remove and discard the turbocharger retaining nuts.
- Remove and discard the turbocharger to exhaust manifold retaining studs.

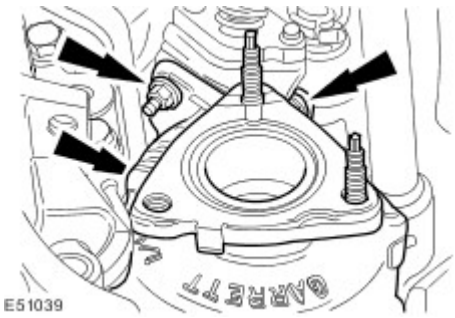

www.JagDocs.com

Installation

1 . To install, reverse the removal procedure.

- Install new turbocharger to exhaust manifold retaining studs.
- Install new turbocharger retaining nuts.
- Tighten to 23 Nm.

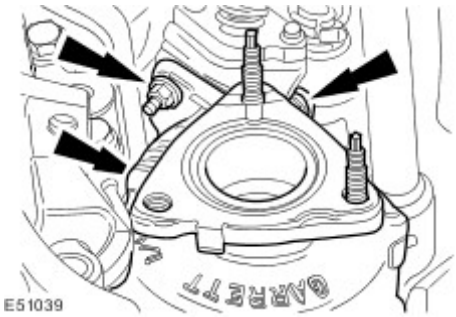

2 . Tighten to 30 Nm.

- Install a new sealing washer.

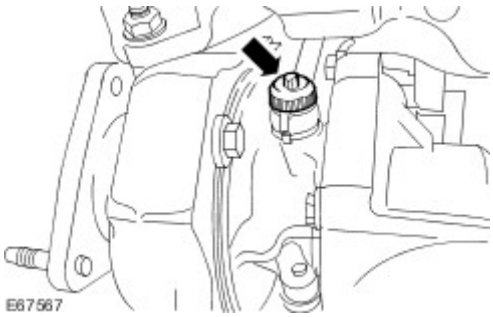

3 . Tighten to 10 Nm.

- Install a new O-ring seal.

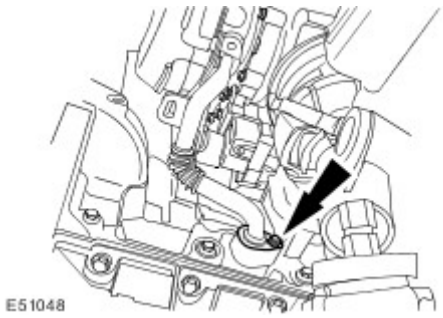

4 . Tighten to 10 Nm.

Install a new gasket.

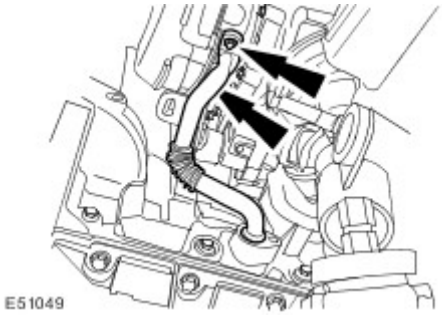

5 . Tighten to 23 Nm.

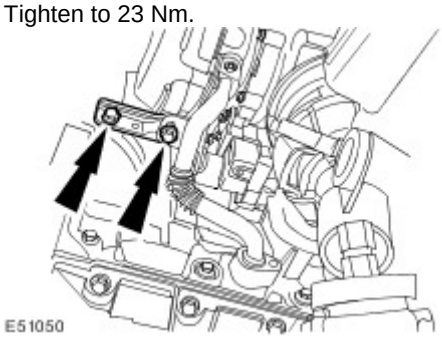

6 . Tighten to 10 Nm.

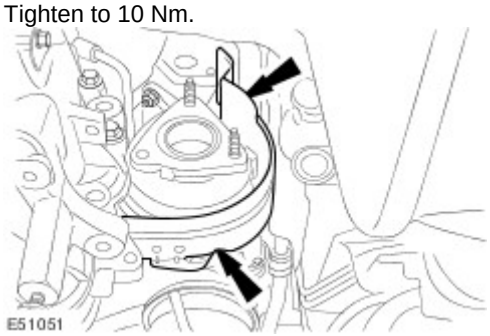

7 . Tighten to 90 Nm.

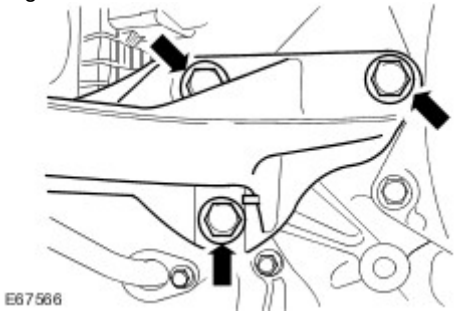

www.JagDocs.com

8 . Tighten to 48 Nm.

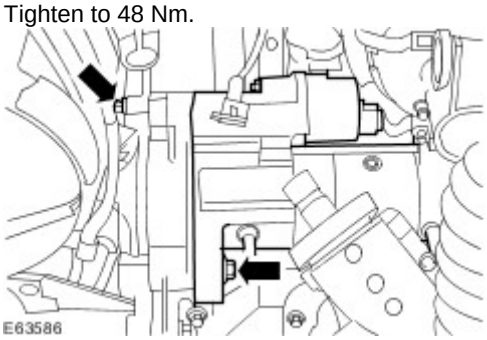

9 . Tighten to 7 Nm.

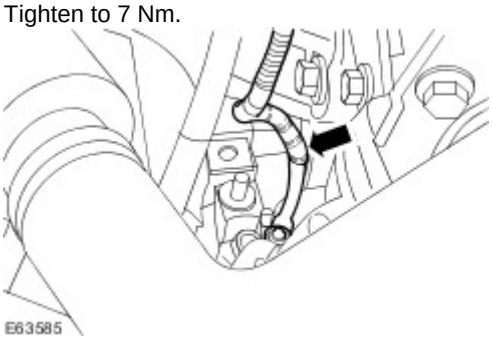

10 . Tighten to 23 Nm.

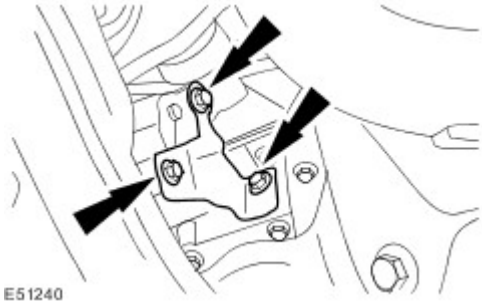

11 . Tighten to 100 Nm.

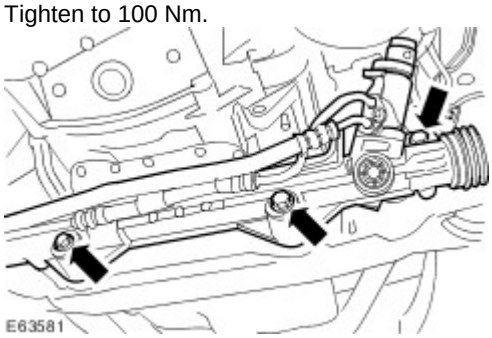

Specifications

Torque Specifications

Description	Nm	lb-ft	lb-in
Accessory drive belt tensioner retaining bolt - Vehicles with 3.0L engine	45	33	-
Accessory drive belt tensioner retaining bolt - Vehicles with 2.7L diesel engine	47	35	-
Accessory drive belt tensioner retaining bolt - Vehicles with 3.5L or 4.2L engine	40	30	-
Accessory drive belt idler pulley retaining bolt - Vehicles with 3.0L, 3.5L or 4.2L engine	25	18	-
Accessory drive belt idler pulley retaining bolt - Vehicles with 2.7L diesel engine	47	35	-
Fuel injection pump belt rear cover retaining bolts - Vehicles fitted with 2.7L diesel engine	7	-	62
Camshaft rear pulley retaining bolt - Vehicles fitted with 2.7L diesel engine	A	-	-
Fuel injection pump pulley - Vehicles fitted with 2.7L diesel engine	50	37	-
Fuel injection pump belt tensioner retaining bolt - Vehicles fitted with 2.7L diesel engine	25	18	-
Supercharger belt tensioner retaining bolt	40	30	-
Supercharger belt idler pulley retaining bolt	25	18	-

A = refer to procedure for correct tightening sequence

www.JagDocs.com

Accessory Drive

Vehicles with 3.0L engine

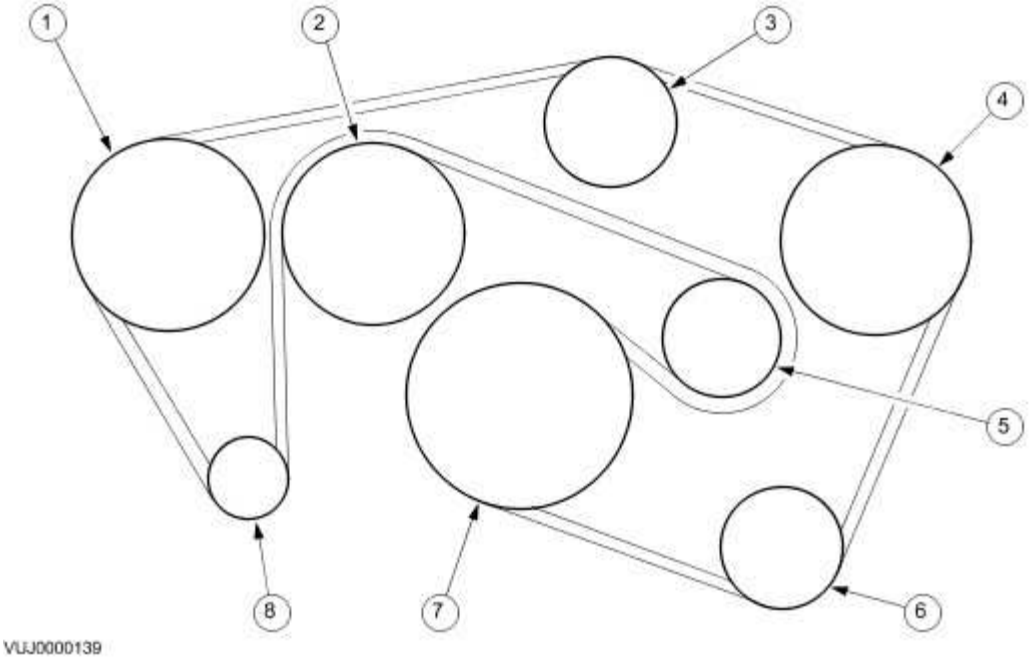

Item	Part Number	Description
1	—	Accessory drive belt idler pulley
2	—	Water pump pulley
3	—	Accessory drive belt idler pulley
4	—	Power steering pump pulley
5	—	Accessory drive belt tensioner
6	—	Air conditioning (A/C) compressor pulley
7	—	Crankshaft pulley
8	—	Generator pulley

Vehicles with 2.7L diesel engine

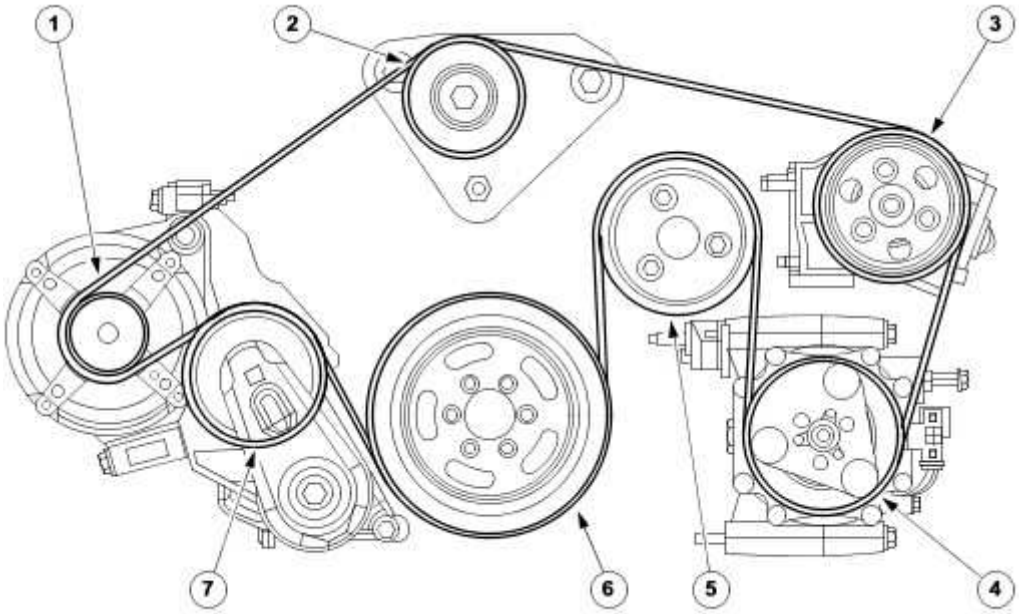

E50935

Item	Part Number	Description
1		Generator pulley
2		Accessory drive belt idler pulley
3		Power steering pump pulley
4		Air conditioning (A/C) compressor pulley
5		Water pump pulley
6		Crankshaft pulley
7		Accessory drive belt tensioner

www.JagDocs.com

Vehicles with 3.5L or 4.2L engine

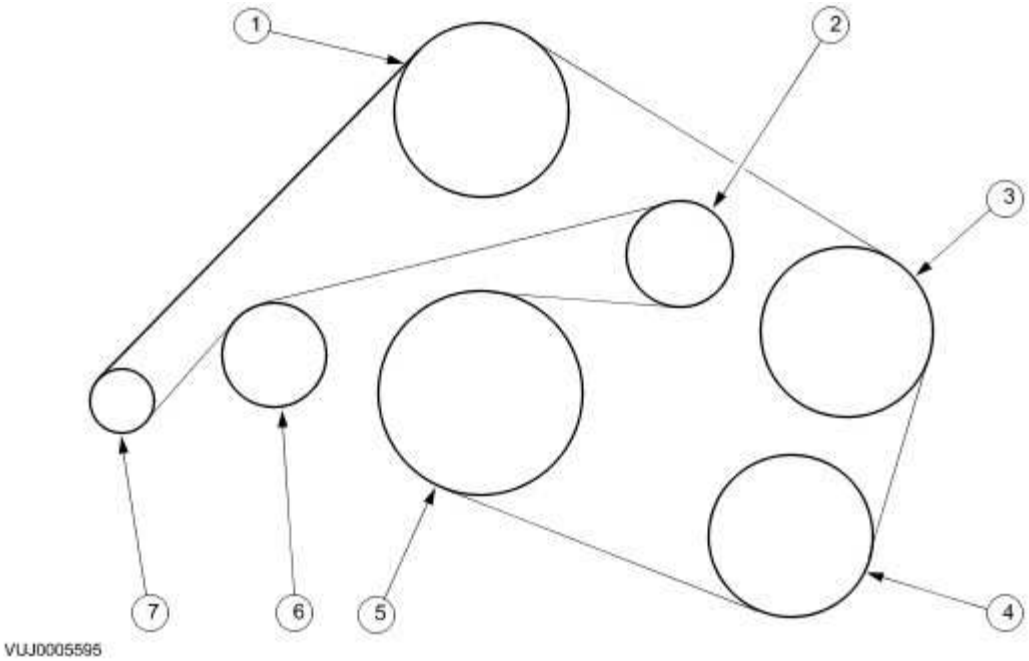

Item	Part Number	Description
1	—	Water pump pulley
2	—	Accessory drive belt tensioner
3	—	Power steering pump pulley
4	—	Air conditioning (A/C) compressor pulley
5	—	Crankshaft pulley
6	—	Accessory drive belt idler pulley
7	—	Generator pulley

Vehicles with supercharger

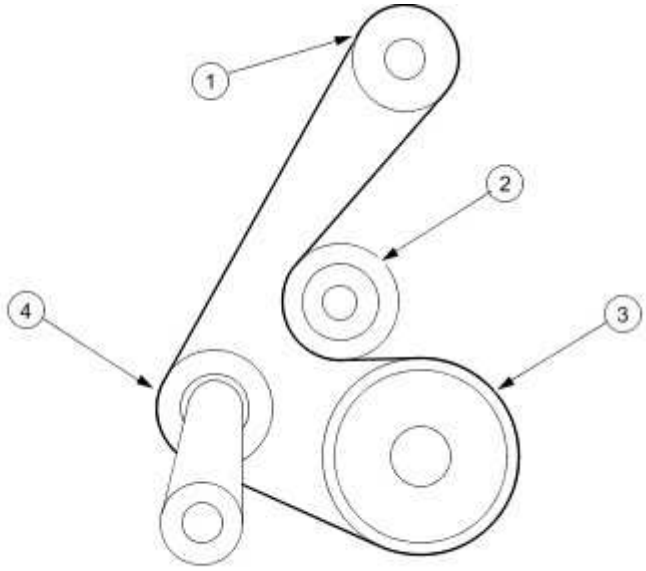

E30190

Item	Part Number	Description
1	—	Supercharger pulley
2	—	Supercharger belt idler pulley
3	—	Crankshaft pulley
4	—	Supercharger belt tensioner

www.JagDocs.com

Crankshaft Pulley

The combined crankshaft pulley and torsional vibration damper drives a single, six ribbed vee belt. The belt drives all of the engine-mounted accessories such as the generator, the power assisted steering pump, the air-conditioning compressor and the coolant water pump.

Air Conditioning Compressor Pulley

This is positioned at the lowest point of the front-end accessory drive on the left-hand side accessory mounting.

Power Assisted Steering Pump Pulley

The power assisted steering pump pulley is located on the left-hand side, above the air conditioning compressor.

Generator Pulley

The generator is fitted on the right-hand accessory mounting.

Supercharger Pulley

The supercharger is located between the left-hand and right-hand cylinders and retained at three mounting points.

Accessory drive belt tensioner and supercharger belt tensioner

The accessory drive belt tensioner and supercharger belt tensioner is calibrated to provide the correct amount of tension to the belt for a given drive system. Unless a spring within the tensioner assembly breaks, or some other mechanical part of the tensioner fails, there is no need to check the tensioner for correct tension.

Accessory drive belt and supercharger belt

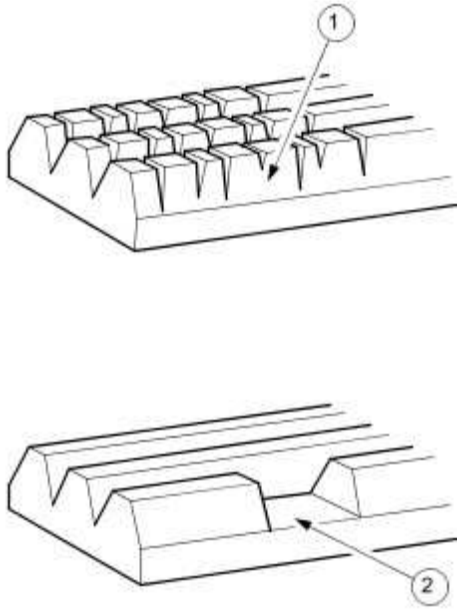

VUJ0000908

Item	Description
1	Acceptable drive belt cracking
2	Unacceptable drive belt damage

The accessory drive belt and the supercharger belt should be inspected at every routine service for excessive wear and damage. A drive belt which displays symptoms of cracking may be perfectly fit for further service.

Should cracking be detected, serviceability may be assessed using the following guidelines:

Fifteen cracks per rib over a 100 mm length of drive belt is acceptable.

Section(s) of belt missing from any rib is not acceptable and the drive belt must be renewed.

Accessory drive belt tensioner

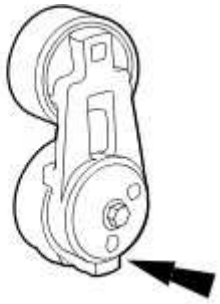

E30135

The accessory drive belt tensioner consists of an idler pulley which is free to rotate on a bearing, located at the end of a spring-loaded pivot arm.

The pivot arm can be turned counter-clockwise (viewed from the front of the engine) for accessory drive belt removal and installation.

The accessory drive belt wear indicators are incorporated on the bottom of the accessory drive belt tensioner. When the indicators are aligned the accessory drive belt requires replacing.

www.JagDocs.com

Accessory Drive - 3.0L/3.5L/4.2L

No data

Accessory Drive - 2.7L Diesel

Principles of Operation

The 2.7L diesel engine uses two accessory drive systems, the front end accessory drive (FEAD), and the fuel injection pump drive.

FEAD

The FEAD drives: the coolant pump, the generator, the power assisted steering pump, and the air conditioning compressor, driven from the crankshaft pulley via a single six-ribbed belt.

Fuel injection pump drive

The fuel injection pump is driven from the exhaust camshaft of the left-hand cylinder bank, by a single, toothed belt.

The fuel injection pump is **NOT** timed to the engine.

www.JagDocs.com

Inspection and Verification

1 . Verify the customer concern.

2 . Visually inspect for obvious mechanical faults.

FEAD	Fuel injection pump belt
Belt condition (cracking/damage/contamination) Belt tension Function of driven components (siezed, etc) Pulley alignment	Security/correct fitment of cover Check for debris inside the cover Belt condition (cracking/damage/contamination) Belt tension

3 . If an obvious cause for an observed or reported concern is found, correct the cause (if possible) before proceeding to the next step.

Noise definitions

Description of noise	Definition/Possible cause
Squeal	Continuous shriek, most noticeable when the engine is accelerated (usually associated with lack of belt tension, contamination or wet slip)

Chirp	Twittering noise that usually stops at engine speeds above idle. Usually associated with misaligned pulleys
Whine	Continuous noise, changing frequency with engine speed, generally associated with rotating components (generator, idler, etc)
Rattle	Metallic knocking, often a loose component or tensioner fault
Rumble	Bearing noise

Symptoms (FEAD)

Symptom	Possible cause	Action
Noise (see definitions above)	Belt condition Belt tension Pulleys misaligned Driven components	Check the belt condition (see visual inspection). Check the tensioner function. GO to Pinpoint Test G552803p1. Check the pulley alignment. Check the driven components for excessive resistance to rotation. Rectify as necessary.
Drive belt does not hold tension	Belt condition Tensioner fault	Check the belt condition (see visual inspection). Check the tensioner function. Rectify as necessary.

Symptoms (Fuel injection pump belt)

Symptom	Possible cause	Action
Noise (see definitions above)	Belt condition Belt fouling cover Tensioner bearing failure Fuel injection pump failure	Check the belt condition (see visual inspection). Check the belt cover for indications of fouling (this may indicate a pump misalignment), Fuel Injection Pump The belt tensioner must be renewed if the belt is removed, making a check of the bearing impractical. Remove the belt, check the fuel injection pump pulley for security. Check the fuel injection pump for excessive resistance to rotation (excessive resistance in the pump will cause the pulley securing nut to loosen as a design feature). Check for diagnostic trouble codes (DTCs) indicating a pump malfunction, Fuel Charging and Controls

Loss of drive (with no drive to the fuel injection pump, the engine will not run)	Belt broken/stripped teeth Drive pulleys loose	Investigate the cause of the belt breakage/damage (a belt broken at a 45 degree angle normally indicates a shear, a break straight across the belt normally indicates that the belt has been crimped). Check the fuel injection pump for excessive resistance to rotation (excessive resistance in the pump will cause the pulley securing nut to loosen as a design feature). Check for DTCs indicating a pump malfunction, Fuel Charging and Controls

Pinpoint tests

PINPOINT TEST G552803p1 : ELIMINATE THE FEAD AS THE SOURCE OF NOISE

G552803t1 : CHECK FOR THE PRESENCE OF NOISE WITH THE FEAD BELT DISCONNECTED

1. Remove the ignition key. 2. Disconnect the FEAD belt,
Accessory Drive Belt - 2.7L Diesel (12.10.40) 3. Start the engine and allow to idle. 4. Check for the presence of the noise.

Is the noise still apparent?

-> Yes
The FEAD is not the cause of the noise. Confirm the symptoms, check for alternative causes.

-> No
Inspect the FEAD belt and driven components. Check the driven components for excessive resistance to rotation.

www.JagDocs.com

Accessory Drive Belt - 3.0L, VIN Range: G00442->G45703 (12.10.40)

Removal

1 . Disconnect the battery ground cable. <<414-01>>

2 . Remove the air deflector. <<501-02>>

3 Remove the accessory drive belt.

.

1) Rotate the accessory drive belt tensioner counter-clockwise.

Use a 3/8 inch square drive bar to rotate the accessory drive belt tensioner.

2) Remove the accessory drive belt.

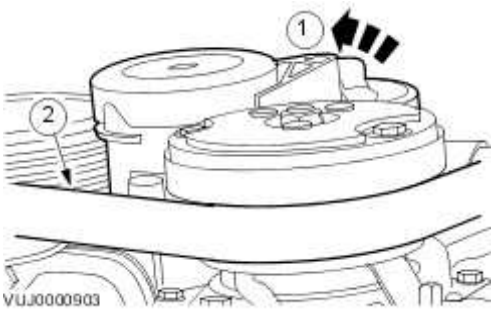

Installation

1 . To install, reverse the removal procedure.

Accessory Drive Belt - 3.0L, VIN Range: G45704->G99999 (12.10.40)

Removal

1 . Disconnect the battery ground cable.
For additional information, refer to Battery Disconnect and Connect

2 . Remove the air cleaner outlet pipe.
For additional information, refer to Air Cleaner Outlet Pipe (19.10.31)

3 Detach the accessory drive belt.
.

1) Rotate the accessory drive belt tensioner counter-clockwise.

Use a 3/8 inch square drive bar or a 1 inch open ended wrench to rotate the accessory drive belt tensioner.

2) Detach the accessory drive belt.

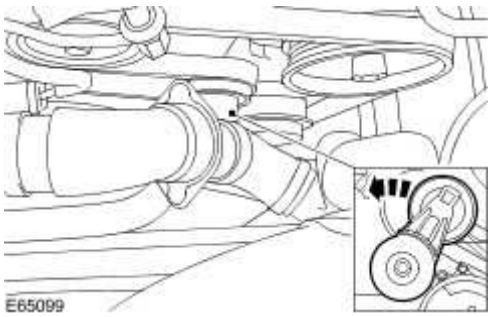

4 . Remove the air deflector.
For additional information, refer to Air Deflector (76.11.41)

5 . Remove the accessory drive belt.

www.JagDocs.com

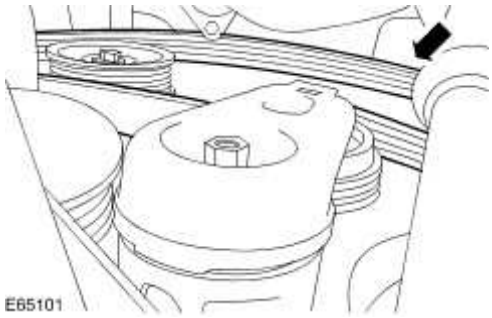

Installation

1 . To install, reverse the removal procedure.

Accessory Drive Belt - 3.5L/4.2L (12.10.40)

Removal

All vehicles

1 . Disconnect the battery ground cable.
For additional information, refer to

2 . Remove the air cleaner outlet pipe.
For additional information, refer to Air Cleaner Outlet Pipe (19.10.31)

Vehicles with supercharger

3 . Remove the supercharger belt.
For additional information, refer to Supercharger Belt - VIN Range: G00442->G45703 (18.50.08)

All vehicles

4 . Detach the accessory drive belt.

1) Rotate the accessory drive belt tensioner counter-clockwise.

Use a 3/8 inch square drive bar to rotate the accessory drive belt tensioner.

2) Detach the accessory drive belt.

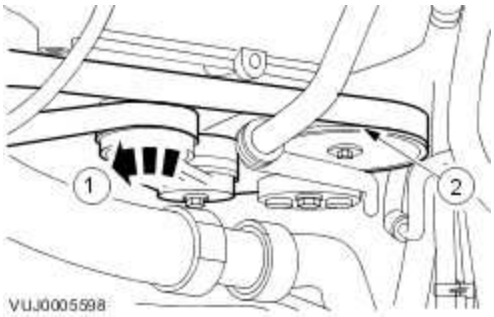

5 . Remove the accessory drive belt.

www.JagDocs.com

1) Remove the accessory drive belt tensioner retaining bolt.

2) Remove the accessory drive belt tensioner.

3) Remove the accessory drive belt.

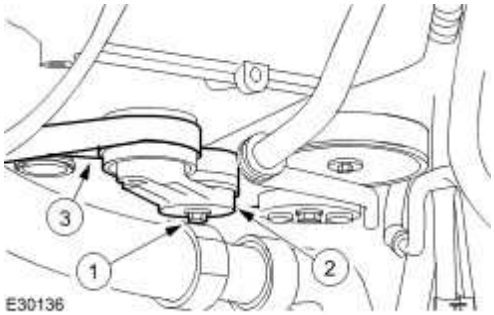

Installation

1 . To install, reverse the removal procedure.

Tighten to 40 Nm.

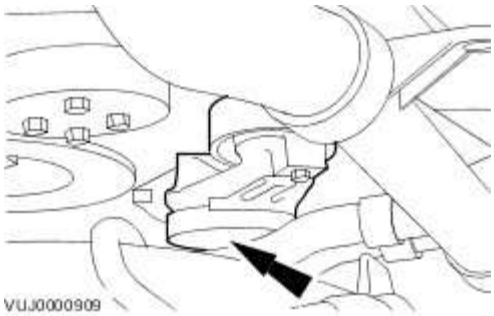

Accessory Drive Belt - 2.7L Diesel (12.10.40)

Special Service Tools

Accessory belt detensioner
303-703

Removal

1 . Disconnect the battery ground cable.
For additional information, refer to Battery Disconnect and Connect

2 . Disconnect the top intake tube off the air filter housing.

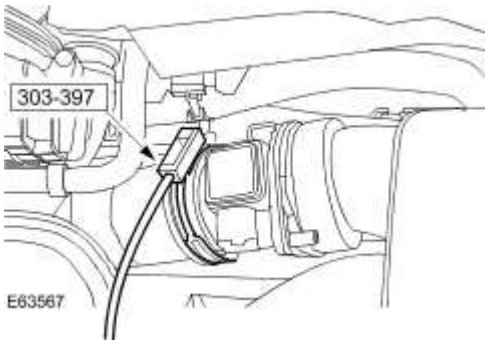

3 . Remove the air deflector.
For additional information, refer to Air Deflector (76.11.41)

4 . Reposition the air intake to right-hand turbo charger tube.

- Remove the retaining nut.

www.JagDocs.com

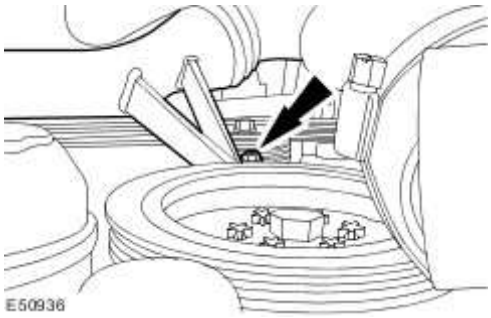

5 Remove the accessory drive belt.

.

1) Using the special tool, rotate the accessory drive belt tensioner counter clockwise.

2) Remove the accessory drive belt.

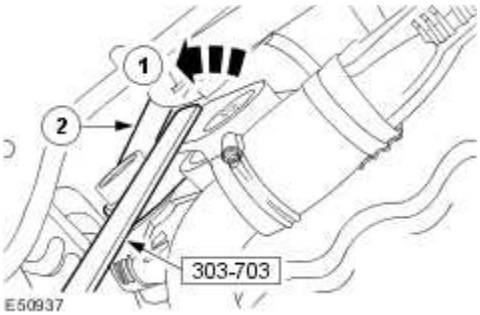

Installation

1 . To install, reverse the removal procedure.

Tighten to 8 Nm.

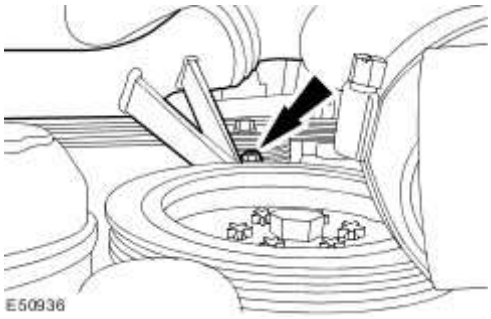

Accessory Drive Belt Idler Pulley - 3.0L, VIN Range: G00442->G45703 (12.10.43)

Removal

1 Remove the accessory drive belt.
. For additional information, refer to Accessory Drive Belt - 3.0L, VIN Range: G00442->G45703 (12.10.40)

2 . Lower the vehicle.

3 . Remove the accessory drive belt idler pulley.

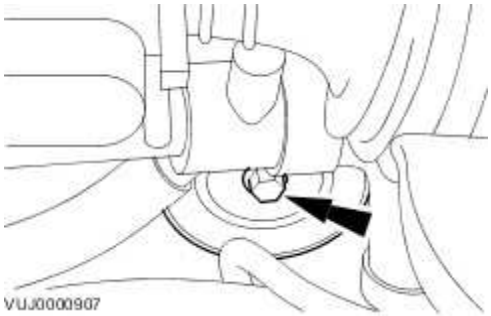

Installation

1 . To install, reverse the removal procedure.

Tighten to 25 Nm.

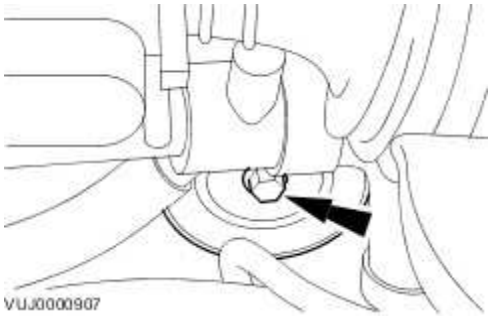

www.JagDocs.com

Accessory Drive Belt Idler Pulley - 3.0L, VIN Range: G45704->G99999 (12.10.43)

Removal

1 . Disconnect the battery ground cable.
For additional information, refer to Battery Disconnect and Connect

2 . Remove the air cleaner outlet pipe.
For additional information, refer to Air Cleaner Outlet Pipe (19.10.31)

3 Detach the accessory drive belt.
.

1) Rotate the accessory drive belt tensioner counter-clockwise.

Use a 3/8 inch square drive bar or a 1 inch open ended wrench to rotate the accessory drive belt tensioner.

2) Detach the accessory drive belt.

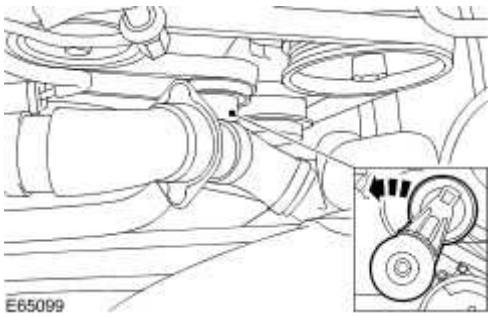

4 . Remove the accessory drive belt idler pulley.

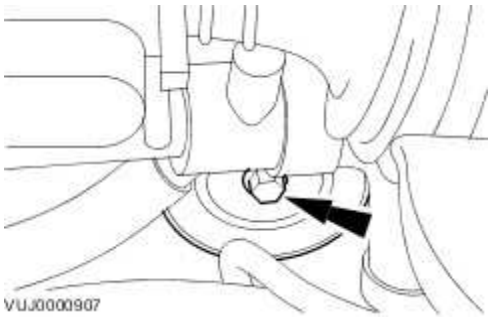

Installation

1 . To install, reverse the removal procedure.

Tighten to 25 Nm.

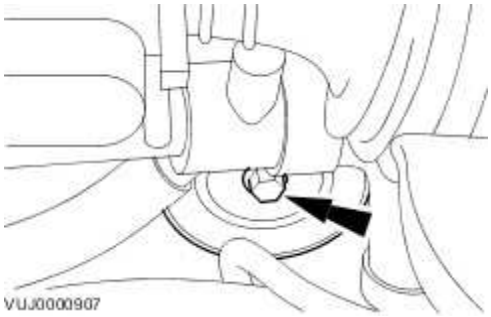

www.JagDocs.com

Accessory Drive Belt Idler Pulley - 3.5L/4.2L, VIN Range: G00442->G45703 (12.10.43)

Removal

All vehicles

1 . Disconnect the battery ground cable.
For additional information, refer to

2 . Remove the air cleaner outlet pipe.
For additional information, refer to Air Cleaner Outlet Pipe (19.10.31)

Vehicles with supercharger

3 Remove the supercharger belt.
. For additional information, refer to Supercharger Belt - VIN Range: G00442->G45703 (18.50.08)

All vehicles

4 Detach the accessory drive belt.
.

1) Rotate the accessory drive belt tensioner counter-clockwise.

Use a 3/8 inch square drive bar to rotate the accessory drive belt tensioner.

2) Detach the accessory drive belt.

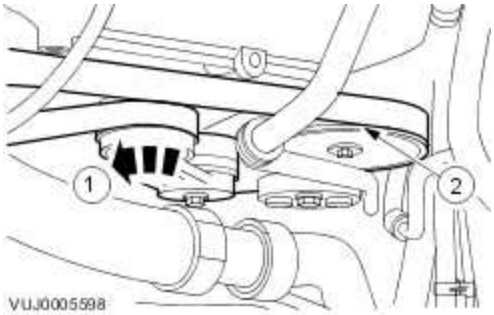

5 . Remove the accessory drive belt idler pulley.

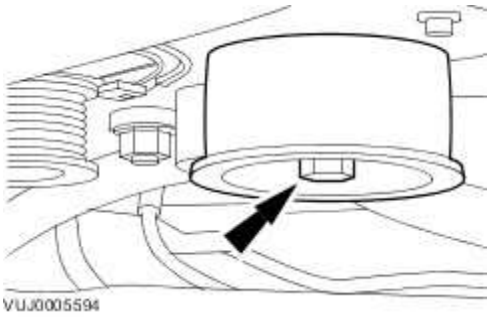

Installation

1 . To install, reverse the removal procedure.

Tighten to 25 Nm.

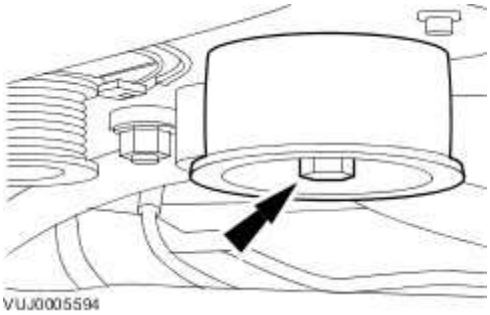

www.JagDocs.com

Accessory Drive Belt Idler Pulley - 3.5L/4.2L, VIN Range: G45704->G99999 (12.10.43)

Removal

All vehicles

1 . Disconnect the battery ground cable.
For additional information, refer to Battery Disconnect and Connect

2 . Remove the air cleaner outlet pipe.
For additional information, refer to Air Cleaner Outlet Pipe (19.10.31)

Vehicles with supercharger

3 Remove the supercharger belt.
. For additional information, refer to Supercharger Belt - VIN Range: G45704->G99999 (18.50.08)

All vehicles

4 Detach the accessory drive belt.
.

- Using a 3/8 inch square drive bar, rotate the accessory drive belt tensioner counter-clockwise.
- Detach the accessory drive belt.

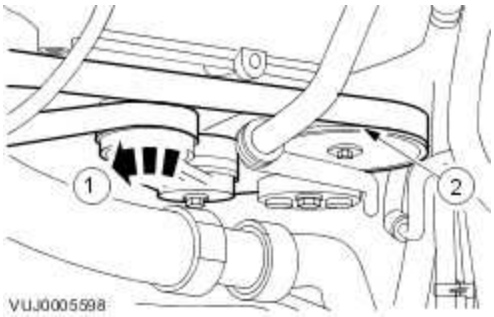

Vehicles without supercharger

5 . **NOTE:**

Vehicles with supercharger shown, vehicles without supercharger similar.

Release the secondary air injection (AIR) control valve.

- Remove the 2 bolts.

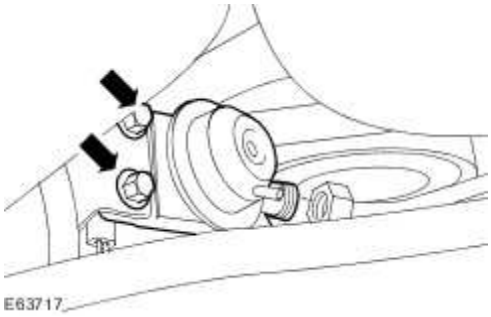

6 . Remove the air deflector.
For additional information, refer to Air Deflector (76.11.41)

7 . **CAUTION: Care must be taken when disconnecting the AIR control valve to exhaust manifold tube. Failure to follow these instructions may result in damage to the A/C pipes.**

Disconnect the AIR control valve to exhaust manifold tube from the LH exhaust manifold.

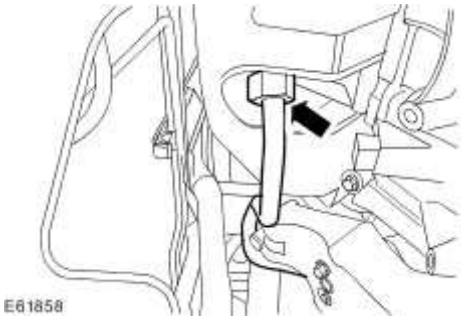

All vehicles

8 . Remove the accessory drive belt idler pulley.

www.JagDocs.com

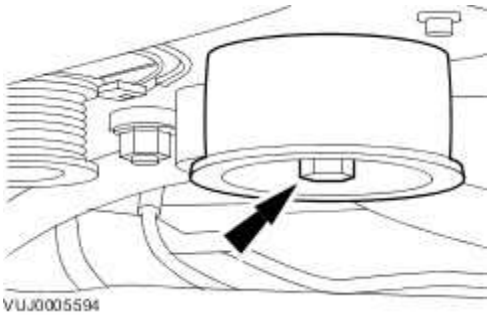

Installation

All vehicles

1 . To install, reverse the removal procedure.

Tighten to 25 Nm.

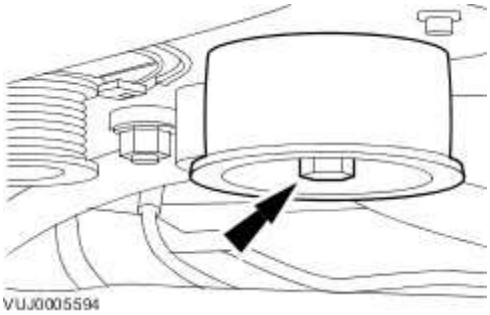

Vehicles without supercharger

2 . Tighten to 35 Nm.

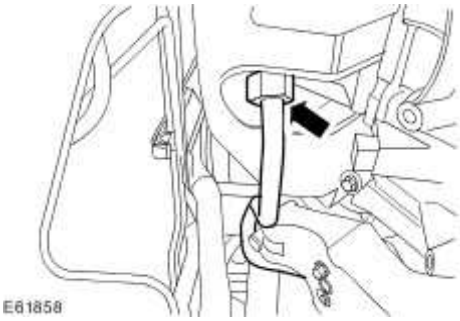

3 . Tighten to 25 Nm.

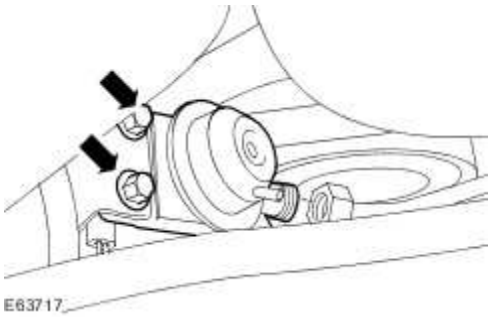

www.JagDocs.com

Accessory Drive Belt Idler Pulley - 2.7L Diesel (12.10.43)

Special Service Tools

Accessory belt detensioner.
303-703

Removal

1 . Disconnect the battery.
For additional information, refer to Battery Disconnect and Connect

2 . Remove the air deflector.
For additional information, refer to Air Deflector (76.11.41)

3 Detach the accessory drive belt.
.

1) Using the special tool, rotate the accessory drive belt tensioner counter clockwise.

2) Detach the accessory drive belt.

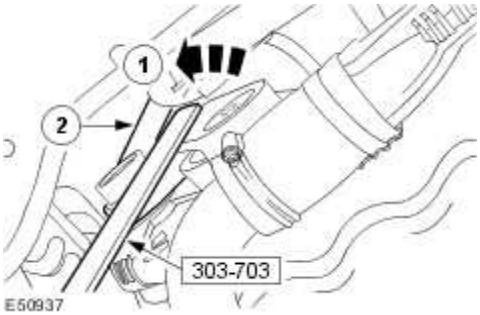

4 . Remove the accessory drive belt idler pulley.

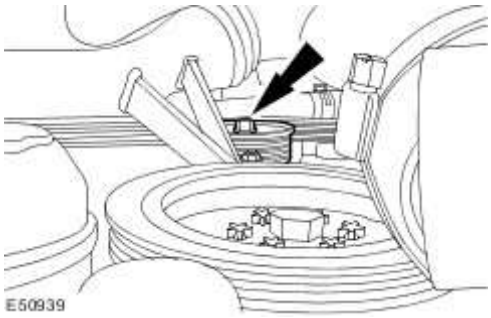

Installation

1 . To install, reverse the removal procedure.

Tighten to 47 Nm.

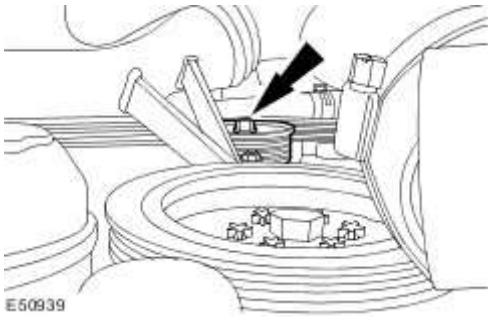

www.JagDocs.com

Accessory Drive Belt Tensioner - 3.0L, VIN Range: G00442->G45703 (12.10.41)

Removal

1 Remove the accessory drive belt.
. For additional information, refer to Accessory Drive Belt - 3.0L, VIN Range: G00442->G45703 (12.10.40)

2 . Remove the accessory drive belt tensioner.

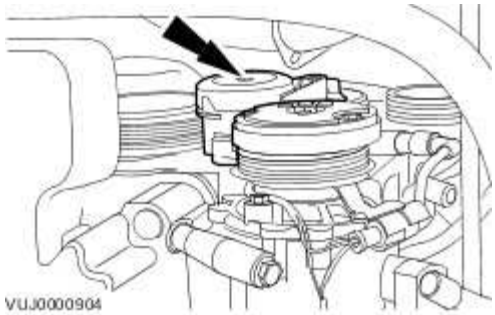

Installation

1 . To install, reverse the removal procedure.

Tighten to 45 Nm.

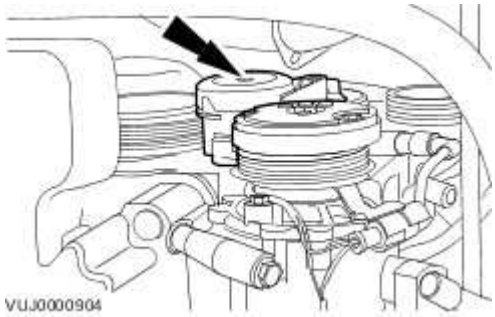

Accessory Drive Belt Tensioner - 3.0L, VIN Range: G45704->G99999 (12.10.41)

Removal

1 . Disconnect the battery ground cable.
For additional information, refer to Battery Disconnect and Connect

2 . Remove the air cleaner outlet pipe.
For additional information, refer to Air Cleaner Outlet Pipe (19.10.31)

3 Detach the accessory drive belt.
.

1) Rotate the accessory drive belt tensioner counter-clockwise.

Use a 3/8 inch square drive bar or a 1 inch open ended wrench to rotate the accessory drive belt tensioner.

2) Detach the accessory drive belt.

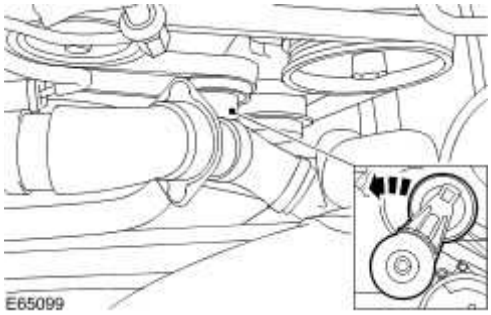

4 . Remove the accessory drive belt tensioner.

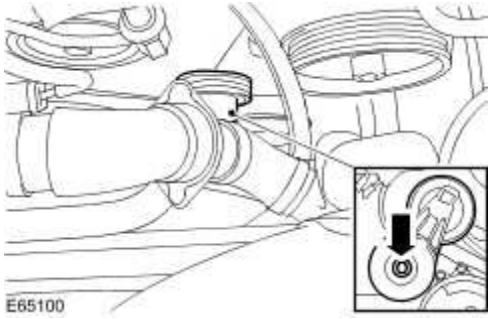

www.JagDocs.com

Installation

1 . To install, reverse the removal procedure.

Tighten to 45 Nm.

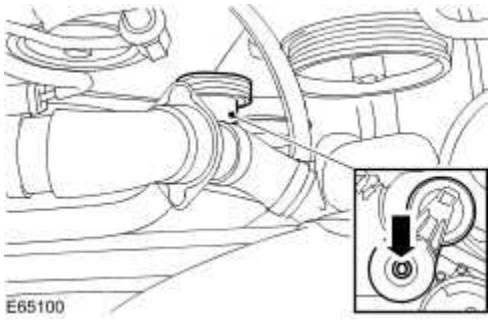

Accessory Drive Belt Tensioner - 3.5L/4.2L (12.10.41)

Removal

1 . Disconnect the battery ground cable.
For additional information, refer to

2 . Remove the air cleaner outlet pipe.
For additional information, refer to Air Cleaner Outlet Pipe (19.10.31)

3 Detach the accessory drive belt.
.

1) Rotate the accessory drive belt tensioner counter-clockwise.

Use a 3/8 inch square drive bar to rotate the accessory drive belt tensioner.

2) Detach the accessory drive belt.

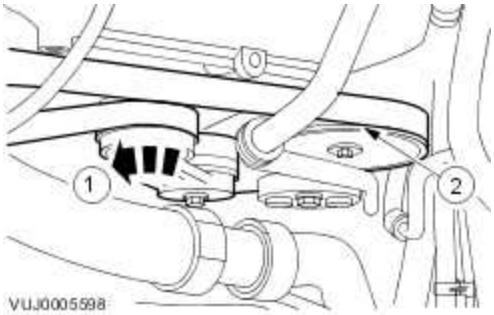

4 . Remove the accessory drive belt tensioner.

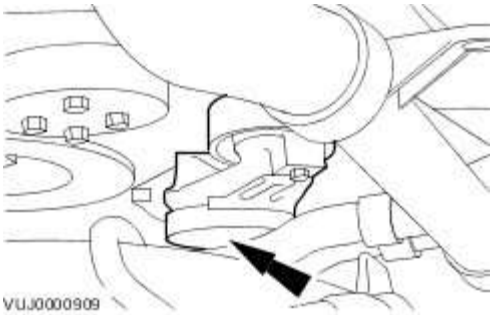

www.JagDocs.com

Installation

1 . To install, reverse the removal procedure.

Tighten to 40 Nm.

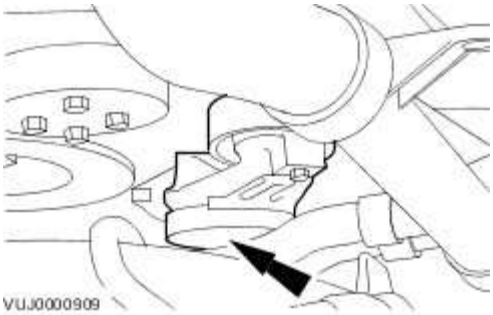

Accessory Drive Belt Tensioner - 2.7L Diesel (12.10.41)

Special Service Tools

Accessory belt detensioner.
303-703

Removal

1 . Disconnect the battery.
For additional information, refer to Battery Disconnect and Connect

2 . Remove the air deflector.
For additional information, refer to Air Deflector (76.11.41)

3 Detach the accessory drive belt.
.

1) Using the special tool, rotate the accessory drive belt tensioner counter clockwise.

2) Detach the accessory drive belt.

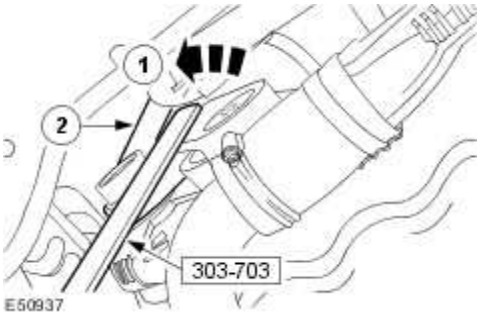

4 . Remove the accessory drive belt tensioner.

www.JagDocs.com

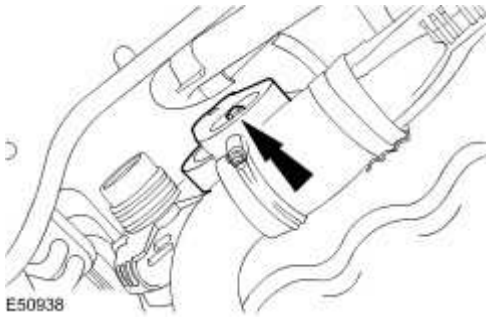

Installation

1 . To install, reverse the removal procedure.

Tighten to 47 Nm.

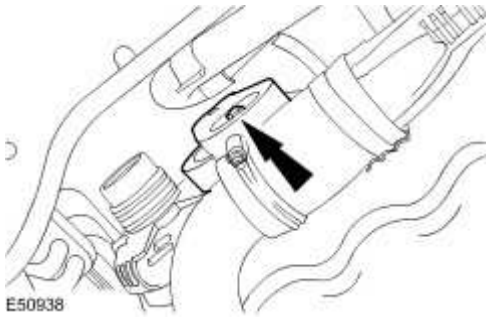

Fuel Injection Pump Belt

Removal

1 . Disconnect the battery ground cable.
For additional information, refer to Battery Disconnect and Connect

2 . Remove the secondary bulkhead centre panel.
For additional information, refer to Secondary Bulkhead Center Panel

3 . Remove the fuel injection pump belt cover.

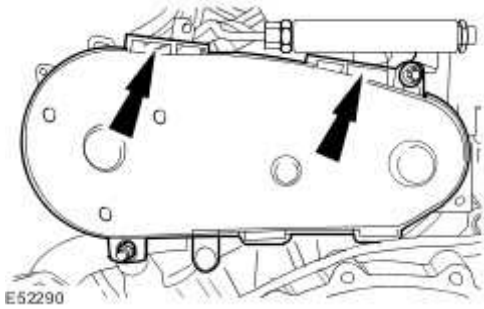

4 . Remove and discard the fuel injection pump belt tensioner.

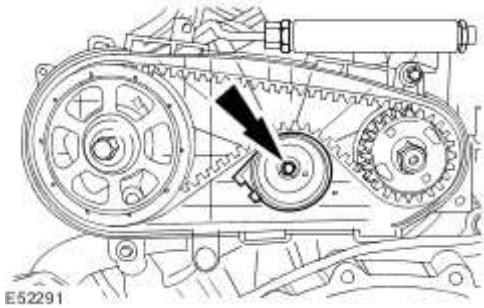

5 . Note the direction of rotation of the fuel injection pump belt.

www.JagDocs.com

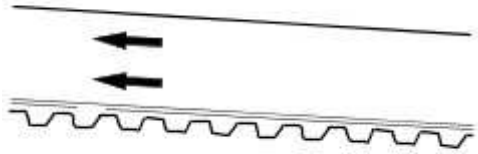

E52241

6 . Remove and discard the fuel injection pump belt.

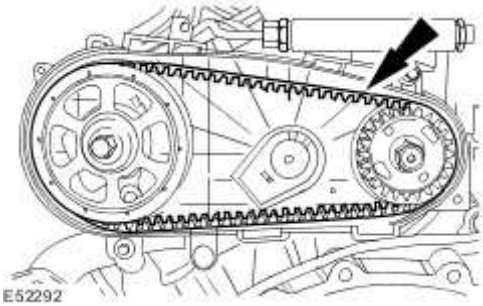

E52292

Installation

1 **NOTE:**

.

The fuel injection pump rotates in an anti-clockwise direction when viewed from the rear of the engine.

Note the direction of rotation of the new fuel injection pump belt.

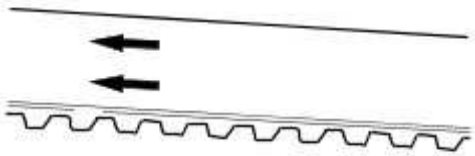

E52241

2

. **CAUTION: Do not install the fuel injection pump belt to the pulleys with the fuel injection pump belt tensioner installed. Failure to follow this instruction may result in**

damage to the fuel injection pump drive belt.

NOTE:

Make sure the fuel injection pump belt is correctly seated on to the fuel injection pump drive pulleys.

Install a new fuel injection pump belt.

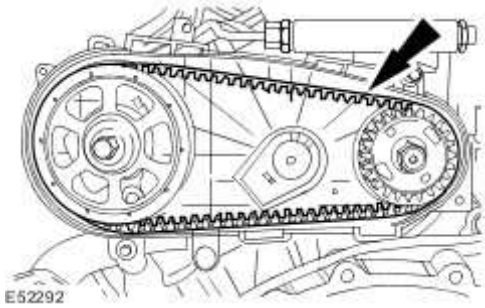

3. **CAUTION: Make sure the fuel injection pump belt tensioner is correctly located in to the fuel injection pump cover backplate. Failure to follow this instruction may result in damage to the components.**

Install the fuel injection pump belt tensioner.

- Locate the tang on the new fuel injection pump belt tensioner in to the fuel injection pump cover backplate.

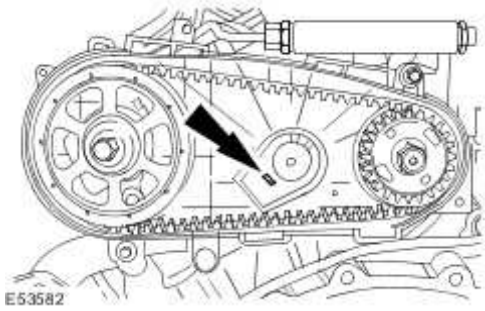

www.JagDocs.com

4 **NOTE:**

.

Do not remove the fuel injection pump belt tensioner locking pin before installing the tensioner.

Install the fuel injection pump belt tensioner retaining bolt.

- Tighten to 25 Nm.

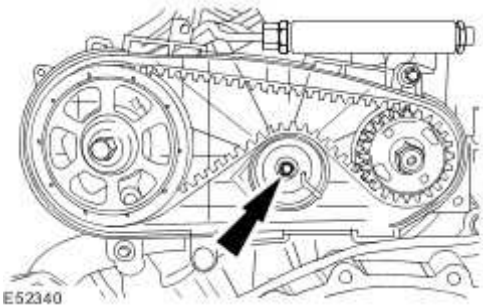

5 . Remove and discard the fuel injection pump belt tensioner locking pin.

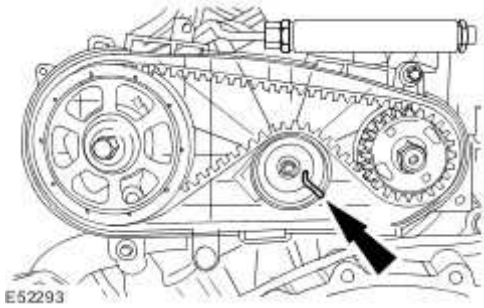

6 . Install the fuel injection pump belt cover.

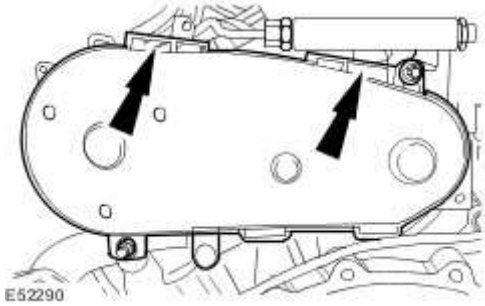

7 . Install the secondary bulkhead centre panel.
For additional information, refer to Secondary Bulkhead Center Panel

8 . Connect the battery ground cable.
For additional information, refer to Battery Connect (86.15.15)

www.JagDocs.com

Fuel Injection Pump Pulley

Special Service Tools

Reaction arm - fuel pump pulley
303-138

Holder - fuel pump pulley
303-139

Removal

1 . Remove and discard the fuel injection pump belt.
For additional information, refer to Fuel Injection Pump Belt

2 . Remove the injection pump pulley retaining nut.

- Using the special tool, retain the fuel injection pump pulley.
- Remove the special tool.

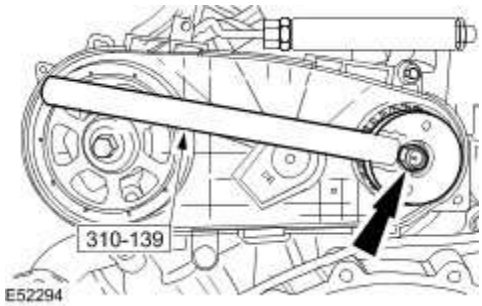

3 . Using the special tool, remove the fuel injection pump pulley.

- Remove the special tool.

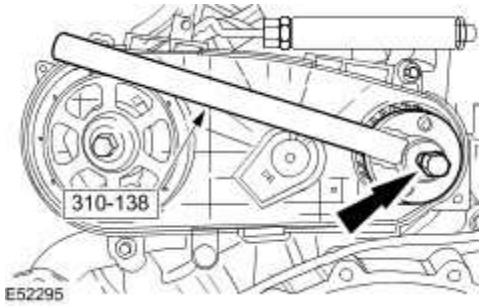

Installation

1 . Install the fuel injection pump pulley.

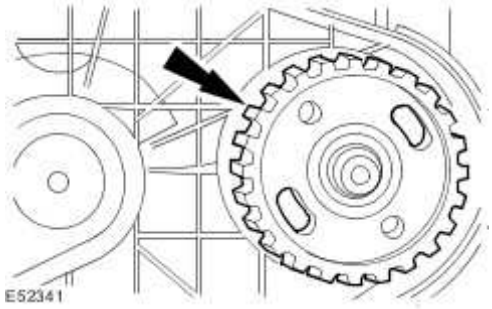

2 . Install the retaining nut.

- Using the special tool, retain the fuel injection pump pulley.
- Tighten to 50 Nm.

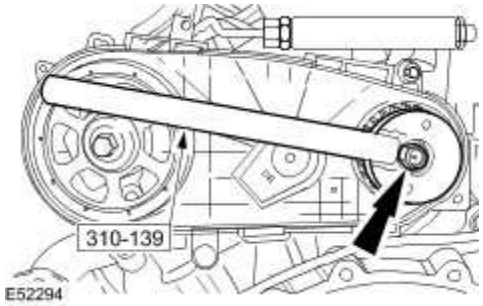

3 . Install a new fuel injection pump belt.

For additional information, refer to Fuel Injection Pump Belt

www.JagDocs.com

Supercharger Belt - VIN Range: G00442->G45703 (18.50.08)

Removal

1 . Disconnect the battery ground cable.
For additional information, refer to

2 . Remove the air cleaner outlet pipe.
For additional information, refer to Air Cleaner Outlet Pipe (19.10.31)

3 . Detach the supercharger belt.

- Use a 1/2 inch square drive bar to rotate the supercharger belt tensioner.

2) Detach the supercharger belt.

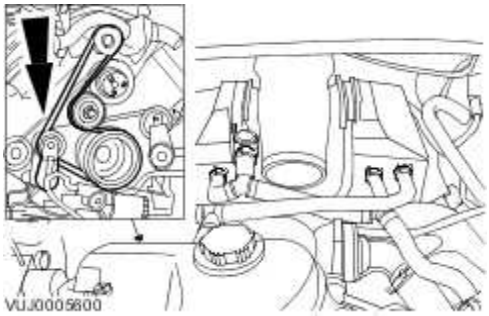

4 . Remove the air deflector.
For additional information, refer to

5 . Reposition the supercharger belt tensioner.

- Loosen the supercharger belt tensioner retaining bolt.
- Reposition the supercharger belt tensioner.

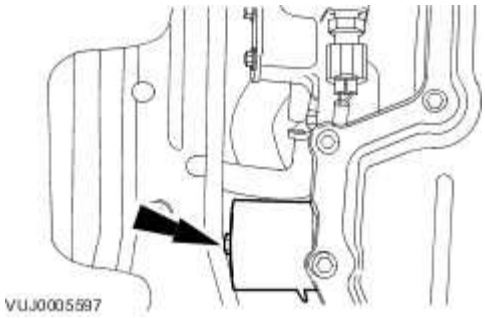

6 . Lower the vehicle.

7 . Remove the supercharger belt.

Installation

1 . To install, reverse the removal procedure.

Tighten to 40 Nm.

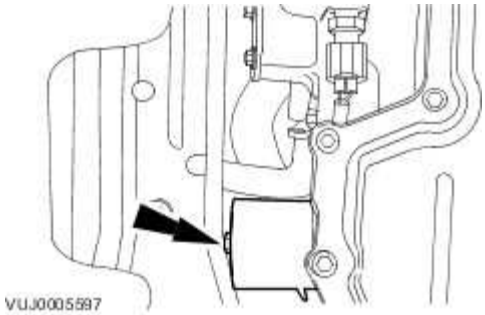

www.JagDocs.com

Supercharger Belt - VIN Range: G45704->G99999 (18.50.08)

Removal

1 . Disconnect the battery ground cable.
For additional information, refer to Battery Disconnect and Connect

2 . Remove the air cleaner outlet pipe.
For additional information, refer to Air Cleaner Outlet Pipe (19.10.31)

3 . Remove the coolant expansion tank.
For additional information, refer to Coolant Expansion Tank (26.15.01)

4 . Remove the supercharger belt.

Use a 1/2 inch square drive bar to rotate the supercharger belt tensioner.

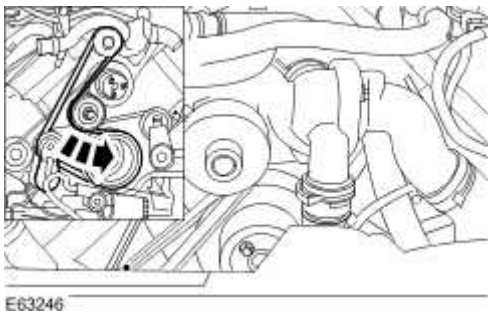

Installation

1 . To install, reverse the removal procedure.

Supercharger Belt Idler Pulley - VIN Range: G04422->G45703 (18.50.09)

Removal

1 . Disconnect the battery ground cable.
For additional information, refer to

2 . Remove the air cleaner outlet pipe.
For additional information, refer to Air Cleaner Outlet Pipe (19.10.31)

3 . Detach the supercharger belt.

Use a 1/2 inch square drive bar to rotate the supercharger belt tensioner.

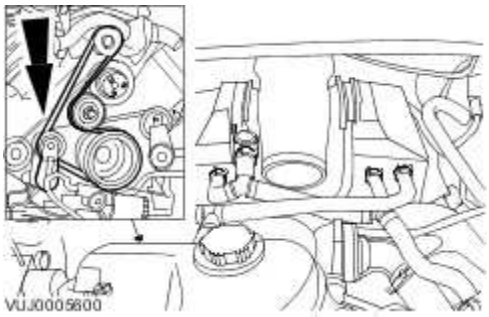

4 . Remove the supercharger belt idler pulley.

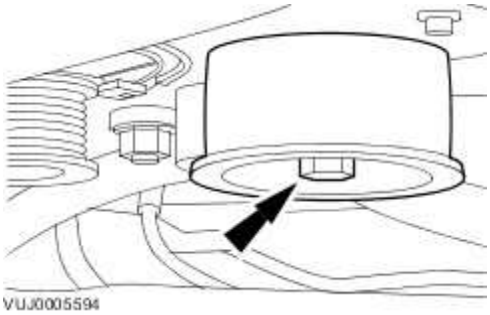

Installation

1 . To install, reverse the removal procedure.

www.JagDocs.com

- Tighten to 40 Nm.

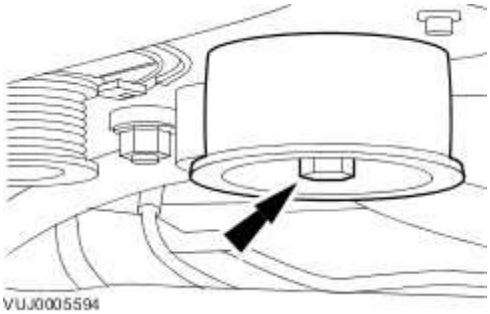

Supercharger Belt Idler Pulley - VIN Range: G45704->G99999 (18.50.09)

Removal

1 . Disconnect the battery ground cable.
For additional information, refer to Battery Disconnect and Connect

2 . Remove the air cleaner outlet pipe.
For additional information, refer to Air Cleaner Outlet Pipe (19.10.31)

3 . Remove the coolant expansion tank.
For additional information, refer to Coolant Expansion Tank (26.15.01)

4 . Using the special tool, detach the supercharger belt.

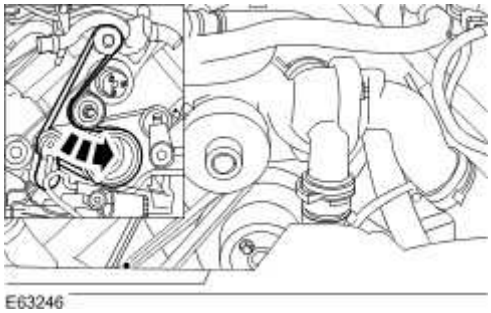

5 . Loosen the water pump pulley retaining bolts.

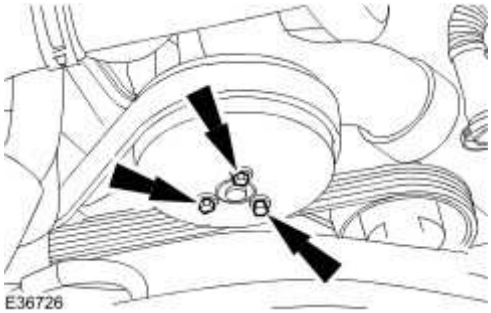

6 Detach the accessory drive belt.
.

www.JagDocs.com

1) Rotate the accessory drive belt tensioner counter-clockwise.

- Use a 3/8 inch square drive bar to rotate the accessory drive belt tensioner.

2) Detach the accessory drive belt.

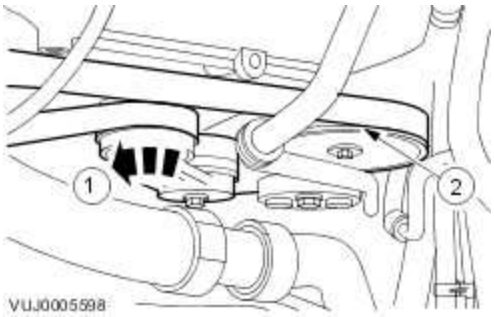

7 . Remove the water pump pulley.

- Discard the water pump pulley retaining bolts.

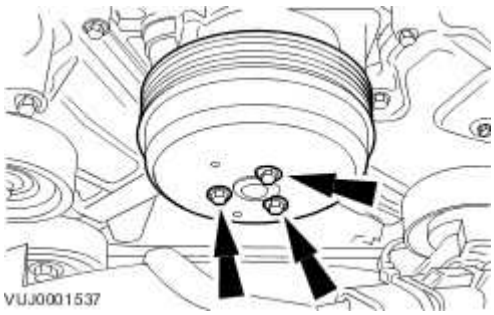

8 . Remove the supercharger belt idler pulley and bracket assembly.

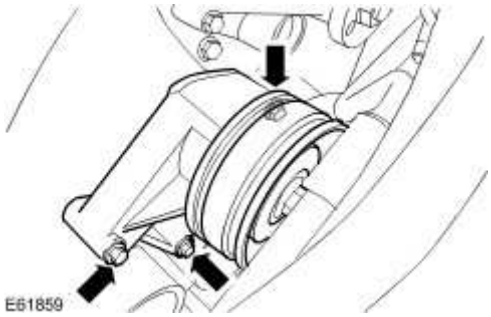

9 . Remove the supercharger belt idler pulley.

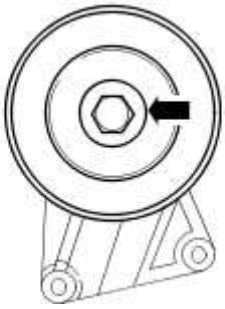

Installation

1 . To install, reverse the removal procedure.

Tighten to 40 Nm.

2 . Tighten to 9 Nm.

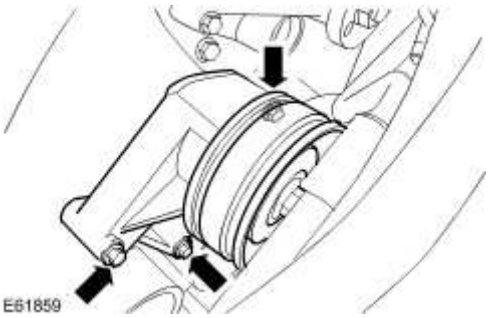

3 . Tighten to 10 Nm + 45°.

www.JagDocs.com

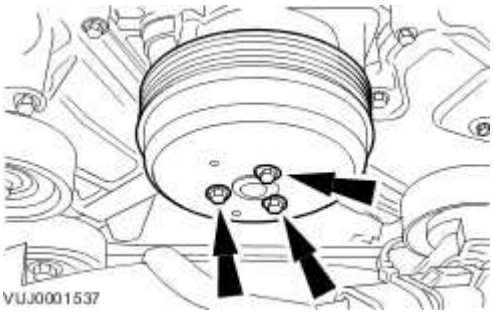
VUJ0001537

Supercharger Belt Tensioner (18.50.24)

Removal

1 . Disconnect the battery ground cable.
For additional information, refer to

2 . Remove the air cleaner outlet pipe.
For additional information, refer to Air Cleaner Outlet Pipe (19.10.31)

3 . Detach the supercharger belt.

- Use a 1/2 inch square drive bar to rotate the supercharger belt tensioner.
- Detach the supercharger belt.

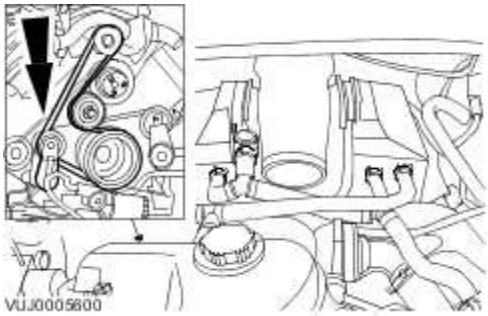

4 . Remove the air deflector.
For additional information, refer to

5 . **NOTE:**

Remove and discard the oil cooler pipe O-ring seal.

Detach the oil cooler pipe from the oil filter adaptor.

1) Remove the the oil cooler pipe retaining bolt.

www.JagDocs.com

2) Detach the oil cooler pipe from the oil filter adaptor.

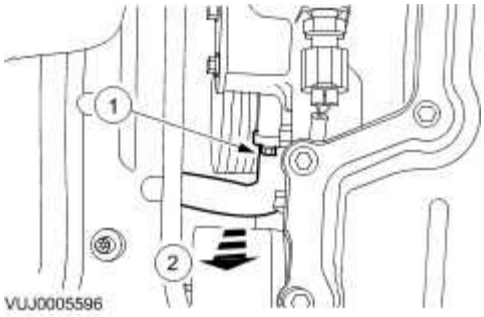

6 . Remove the supercharger belt tensioner.

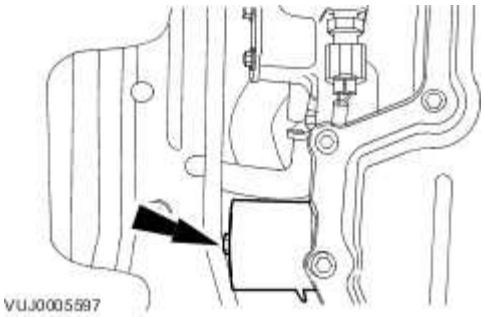

Installation

1 . **NOTE:**

Install a new O-ring seal to oil cooler pipe.

To install, reverse the removal procedure.

Tighten to 40 Nm.

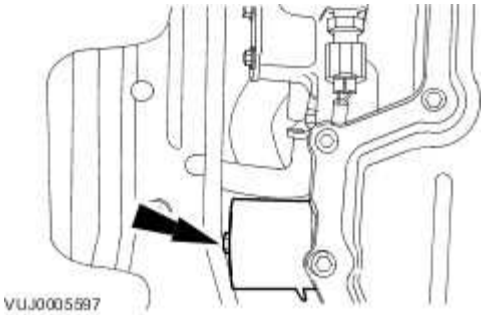

Specifications

Torque Specifications

Description	Nm	lb-ft	lb-in
Starter motor retaining bolts - Vehicles fitted with 3.0L engines	25	18	-
Starter motor retaining bolts - Vehicles fitted with 3.5L or 4.2L engines	45	33	-
Starter motor retaining bolts - Vehicles fitted with 2.7L diesel engines	48	35	-
Battery positive terminal integral connector retaining nut - Vehicles fitted with 3.0L engines	11	9	-
Battery positive terminal integral connector retaining nut - Vehicles fitted with 3.5L or 4.2L engines	9	-	80
Battery positive terminal integral connector retaining nut - Vehicles fitted with 2.7L diesel engines	11	9	-
Solenoid terminal integral connector retaining nut	7	-	62

www.JagDocs.com

Starting System

The function of the starting system is to crank the engine fast enough to allow the engine to start. Heavy cables, connectors and switches are used in the system because of the large currents required.

The starting system consists of a pre-engaged type starter motor, battery, remote control switch (ignition switch) and relay. When the starter is operated from the ignition switch, the engagement lever moves the pinion into mesh with the engine ring gear teeth, the electrical contacts within the solenoid complete the high power circuit and the starter motor operates to turn the engine.

Vehicles equipped with automatic transmission have a transmission range sensor attached to the circuit which prevents operation of the starter motor unless NEUTRAL or PARK are selected.

The sequence of operation is as follows:

Ignition switch in the start position III.

Starter relay activated.

Voltage provided to the starter motor solenoid.

Starter solenoid engages the drive pinion to the flywheel or flexiplate.

Starter solenoid switches the battery current to the starter motor.

System remains engaged until the ignition switch is returned to the run position.

Starting System

Overview

There are changes to the engine management system (EMS) for 2006 my, the most obvious of which will be the change to 7-digit diagnostic trouble codes (DTCs) from the familiar 5-digit.

Refer to the DTC index in this section for guidance on how to use these codes with the Jaguar approved diagnostic system or a scan tool.

For information on the operation of the system,
Starting System

Inspection and verification

1 . Verify the customer concern.

2 . Visually inspect for obvious signs of mechanical or electrical damage.

Mechanical	Electrical
Gear selector lever cable adjustment (vehicles with automatic transmission) Starter Motor Battery	Battery charge and condition Fuses Wiring harness(es) Damaged, loose or corroded connectors Ignition switch Starter relay Transmission control module (TCM) Engine control module (ECM)

3 . If an obvious cause for an observed or reported concern is found, correct the cause (if possible) before proceeding to the next step.

4 . If the cause is not visually evident use the Jaguar approved diagnostic system or a scan tool to retrieve the fault codes before proceeding to the DTC index, or the symptom chart if no DTCs are set.

www.JagDocs.com

Symptom chart

Symptom	Possible cause(s)	Action
The engine does not crank (starter motor does **not** turn)	Gear selector not in **P** or **N** position (vehicles with automatic transmission) Battery Harness/Connectors Starter motor Starter relay Ignition switch Transmission control module (TCM) Engine control module (ECM) Engine siezed	Make sure the gear selector is in the **P** or **N** position and correctly adjusted. Selector Lever Cable Adjustment (44.15.07) Check the battery condition and state of charge. Battery Check the starter motor and harness, GO to Pinpoint Test G557182p1. Check the starter relay and circuits. GO to Pinpoint Test G557182p2. Check that the engine turns.
The engine does not crank (starter motor **does** turn)	Starter motor fitment Starter motor Flywheel/Drive plate ring gear	Check the starter motor fitment (fasteners tight, starter motor square to engine, etc). Check the flywheel/drive plate ring gear teeth for damage, foreign objects, etc.
Engine cranks too slowly	Battery Harness/Connectors Starter motor Oil grade	Check the battery condition and state of charge. Battery Check the starter motor and harness, GO to Pinpoint Test G557182p3. Check the oil specification.
Excessive starter motor noise	Starter motor Flywheel/Drive plate ring gear Starter motor fitment/casing	Check the starter motor fitment (fasteners tight, motor square to engine, etc). Check the starter motor casing condition. Check the flywheel/drive plate ring gear teeth for damage, foreign objects, etc.

DTC index

NOTE:

Generic scan tools may not read the codes listed, or may read only 5-digit codes. Match the 5 digits from the scan tool to the first 5 digits of the 7-digit code listed to identify the fault (the last 2 digits give extra information read by the manufacturer-approved diagnostic system).

NOTE:

For a full list of powertrain DTCs,
Electronic Engine Controls - VIN Range: G00442->G45703
Electronic Engine Controls - VIN Range: G45704->G99999
Electronic Engine Controls - VIN Range: G00442->G45703
Electronic Engine Controls - VIN Range: G45704->G99999
Electronic Engine Controls

DTC	Description	Possible causes	Action
P05120C	Starter request circuit - circuit voltage above threshold	Starter relay coil to ECM/ignition switch circuit: short circuit to power Ignition switch failure	For starter request circuit tests, GO to Pinpoint Test G557182p2.
P05120E	Starter request circuit - circuit voltage below threshold	Starter relay coil to ECM/ignition switch circuit: short circuit to ground Starter relay coil to ECM/ignition switch circuit: high resistance Ignition switch failure	For starter request circuit tests, GO to Pinpoint Test G557182p2.
P06160E	Starter relay circuit low	Starter relay drive circuit: short circuit to ground Starter relay drive circuit: high resistance Starter relay failure	For starter relay and circuit tests, GO to Pinpoint Test G557182p2.
P061700	Starter relay circuit high	Starter relay drive circuit: short circuit to power Starter relay failure	For starter relay and circuit tests, GO to Pinpoint Test G557182p2.
P06170C	Starter relay circuit high	Starter relay drive circuit: short circuit to power	For starter relay and circuit tests, GO to Pinpoint Test

www.JagDocs.com

		Starter relay failure	G557182p2.

Pinpoint tests

CAUTION: When probing connectors to take measurements in the course of the pinpoint tests, use the adaptor kit, part number 3548-1358-00. Failure to follow this instruction may result in damage to the vehicle.

NOTE:

When performing voltage or resistance tests, always use a digital multimeter (DMM) accurate to 3 decimal places, and with an up-to-date calibration certificate. When testing resistance, always take the resistance of the DMM leads into account.

NOTE:

Check and rectify basic faults before beginning diagnostic routines involving pinpoint tests.

NOTE:

If diagnostic trouble codes (DTCs) are recorded and the symptom is not present when performing the pinpoint tests, an intermittent concern may be the cause. Always check for loose connections and corroded terminals.

PINPOINT TEST G557182p1 : BASE STARTER CIRCUIT TESTS

G557182t1 : CHECK THE SUPPLY VOLTAGE AT THE STARTER MOTOR

1. Key off. 2. Measure the voltage between:

Starter motor	Battery
Permanent supply terminal	Negative terminal

Is the voltage greater than 10 volts?

-> Yes
GO to Pinpoint Test G557182t2.

-> No
REPAIR the battery power supply circuit as necessary. For additional information, refer to the wiring diagrams. Test the system for normal operation.

G557182t2 : CHECK THE GROUND AT THE STARTER MOTOR

1. Measure the resistance between:

Starter motor	Battery
Outer casing	Negative terminal

Is the resistance less than 10 ohms?

-> Yes
GO to Pinpoint Test G557182t3.

-> No
REPAIR the ground circuit as necessary. For additional information, refer to the wiring diagrams. Test the system for normal operation.

G557182t3 : BYPASS THE RELAY START SIGNAL

1. Disconnect the starter solenoid connector:

Vehicle	Connector
3.0L/3.5L/4.2L VIN Range: G00442->G45703	EL2
3.0L/3.5L/4.2L VIN Range: G45704->G99999	PI62
2.7L Diesel	C60

2. Connect a suitable remote start device between the starter solenoid connection and battery positive. 3. Operate the remote start device.

Does the engine crank?

-> Yes
CHECK the starter relay circuits. GO to Pinpoint Test G557182p2.

www.JagDocs.com

-> No
INSTALL a new starter motor.
Starter Motor - 4.2L NA V8 - AJV8/4.2L SC V8 - AJV8/3.0L NA V6 - AJ27/3.5L NA V8 - AJV8 (86.60.01)
Starter Motor - 2.7L V6 - TdV6 (86.60.01) Test the system for normal operation.

PINPOINT TEST G557182p2 : STARTER RELAY CIRCUIT TESTS

G557182t4 : CHECK THE STARTER RELAY OUTPUT VOLTAGE AT THE SOLENOID

1. **Engine control module connector, PI1 (3.0L/3.5L/4.2L VIN Range: G00442->G45703)**

Circuit	Pin
Crank request	06
Starter relay - control	41

2. **Engine control module connector, EC300 (3.0L/3.5L/4.2L VIN Range: G45704->G99999)**

Circuit	Pin
Crank request	17
Starter relay - control	51

3. **Engine control module connector, EC66 (2.7L Diesel)**

Circuit	Pin
Crank request	F3
Starter relay - control	B1

4. **Front power distribution box connector, EC04**

Circuit	Pin

Starter motor solenoid - supply	03

5. **Front power distribution box connector, EC41**

Circuit	Pin
Starter motor relay - switched supply	01

6. **Front power distribution box connector, EC28**

Circuit	Pin
Starter motor relay - control	08

7. Key off. 8. Disconnect the starter solenoid connector (this is an eyelet):

Vehicle	Connector
3.0L/3.5L/4.2L VIN Range: G00442->G45703	EL2
3.0L/3.5L/4.2L VIN Range: G45704->G99999	PI62
2.7L Diesel	C60

9. Key on, engine cranking. 10. Measure the voltage between:

Connector, component side	Battery
EL2	Negative terminal
PI62	
C60	

Is the voltage greater than 10 volts?

-> Yes
RECHECK the starter motor. Possible connection fault between the starter motor solenoid connector and the solenoid. Rectify as necessary, test the system for normal operation.

-> No

www.JagDocs.com

GO to Pinpoint Test G557182t8.

G557182t8 : CHECK THE STARTER RELAY OUTPUT VOLTAGE AT THE FUSE BOX

1. Key off. 2. Disconnect the front power distribution box connector, EC04. 3. Key on, engine cranking. 4. Measure the voltage between:

EC04, component side	Battery
Pin 03	Negative terminal

Is the voltage less than 10 volts?

-> Yes
GO to Pinpoint Test G557182t6.

-> No
REPAIR the solenoid supply circuit as necessary. For additional information, refer to the wiring diagrams. Test the system for normal operation.

G557182t6 : CHECK THE IGNITION SWITCHED SUPPLY TO THE STARTER RELAY

1. Key off. 2. Disconnect the front power distribution box connector, EC41. 3. Key on, engine cranking. 4. Measure the voltage between:

EC41, harness side	Battery
Pin 01	Negative terminal

Is the voltage greater than 10 volts?

-> Yes
GO to Pinpoint Test G557182t9.

-> No
REPAIR the switched supply circuit as necessary. For additional information, refer to the wiring diagrams. Test the system for normal operation.

G557182t9 : CHECK THE STARTER RELAY COIL RESISTANCE

1. .

Coil temperature (degrees C)	Coil temperature (degrees F)	Coil resistance (ohms)
23	73	70 to 86
85	185	84 to 100

2. Key off. 3. Disconnect the front power distribution box connector, EC28. 4. Measure the resistance between:

EC41, harness side	EC28, harness side
Pin 01	Pin 08

Is the reading as expected for the current engine temperature? (Refer to the table)

-> Yes

GO to Pinpoint Test G557182t5.

-> No

INSTALL a new front power distribution box (the relay cannot be changed separately). Test the system for normal operation.

G557182t5 : CHECK THE CRANK REQUEST SIGNAL TO THE ECM

1. Disconnect the engine control module connector:

Vehicle	Connector
3.0L/3.5L/4.2L VIN Range: G00442->G45703	PI1
3.0L/3.5L/4.2L VIN Range: G45704->G99999	EC300
2.7L Diesel	EC66

2. Key on, engine cranking. 3. Measure the voltage between:

ECM Connector	Pin, harness side	Battery

www.JagDocs.com

PI1	06	Negative terminal
EC300	17	
EC66	F3	

Is the voltage greater than 10 volts?

-> Yes
GO to Pinpoint Test G557182t7.

-> No
REPAIR the crank request circuit as necessary. For additional information, refer to the wiring diagrams. Test the system for normal operation.

G557182t7 : CHECK THE STARTER RELAY CONTROL CIRCUIT FOR HIGH RESISTANCE

1. Measure the resistance between:

ECM Connector	Pin, harness side	EC28, harness side
PI1	41	Pin 08
EC300	51	
EC66	B1	

Is the resistance less than 10 ohms?

-> Yes
CHECK for DTCs indicating a possible ECM or TCM fault. If no DTCs are set, an intermittent fault may be present in the wiring harness. Visually check for chaffed wires or other physical damage to the harness. If no fault is found in the circuit, suspect the following component(s): - Front power distribution box connector. - Front power distribution box (starter relay). - ECM connector. - ECM.

-> No
REPAIR the high resistance circuit. For additional information, refer to the wiring diagrams. Test the system for normal operation.

PINPOINT TEST G557182p3 : THE ENGINE CRANKS TOO SLOWLY

G557182t11 : CHECK THE VOLT DROP IN THE STARTER POSITIVE CIRCUIT

1. Connect a voltmeter between:

Starter motor	Battery
Permanent supply terminal	Positive terminal

2. Key on, engine cranking.

Is the voltage greater than 0.5 volts?

-> Yes
CLEAN and tighten all battery cable connections. Test the system for normal operation. Check the resistance of the battery cable, replace as necessary.

-> No
GO to Pinpoint Test G557182t12.

G557182t12 : CHECK THE VOLT DROP IN THE STARTER NEGATIVE CIRCUIT

1. Connect a voltmeter between:

Starter motor	Battery
Outer casing	Negative terminal

2. Key on, engine cranking.

Is the voltage greater than 0.5 volts?

-> Yes
CLEAN and tighten all battery cable connections, starter motor mounting and body to engine ground strap. Test the system for normal operation. Check the resistance of the ground cables, replace as necessary.

-> No
INSTALL a new starter motor.
Starter Motor - 4.2L NA V8 - AJV8/4.2L SC V8 - AJV8/3.0L NA V6 - AJ27/3.5L NA V8 - AJV8 (86.60.01)
Starter Motor - 2.7L V6 - TdV6 (86.60.01) Test the system for normal operation.

www.JagDocs.com

Starter Motor - 4.2L NA V8 - AJV8/4.2L SC V8 - AJV8/3.0L NA V6 - AJ27/3.5L NA V8 - AJV8 (86.60.01)

Removal

All vehicles

1 . Disconnect the battery ground cable.
For additional information, refer to Battery Disconnect and Connect

2 . Remove the air deflector.
For additional information, refer to Air Deflector (76.11.41)

3 . Disconnect the engine ground cable.

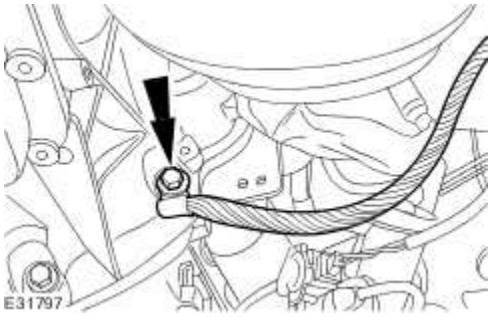

Vehicles fitted with 3.0L engine

4 . Remove the starter motor positive cable cover.

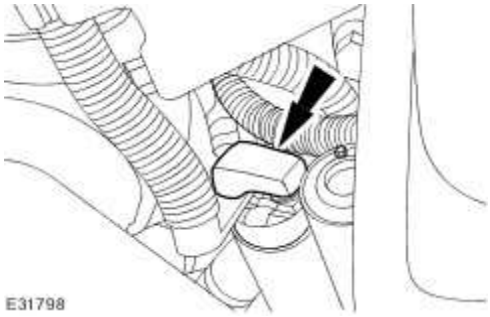

5 . Detach the starter motor positive cables.

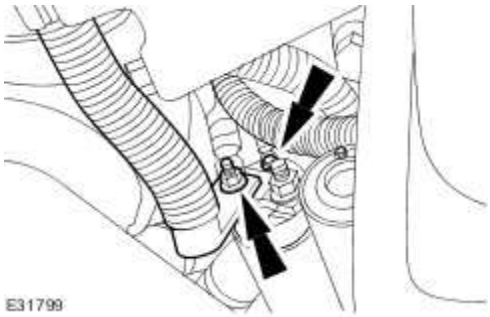

6 . Remove the starter motor.

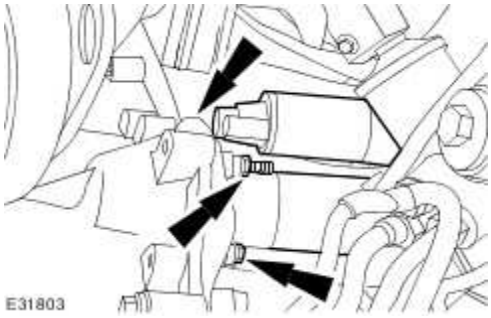

Vehicles fitted with 3.5L or 4.2L engine

7 . Remove the starter motor positive cable cover.

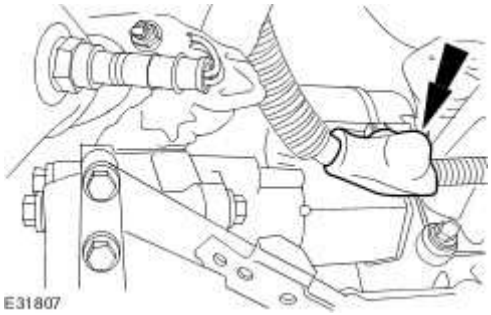

8 . Detach the starter motor positive cables.

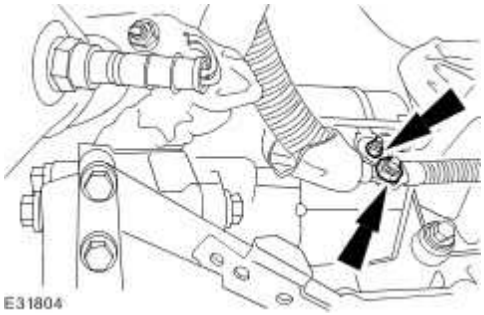

www.JagDocs.com

9 . Remove the starter motor.

1) Remove the starter motor retaining bolts.

2) Remove the starter motor.

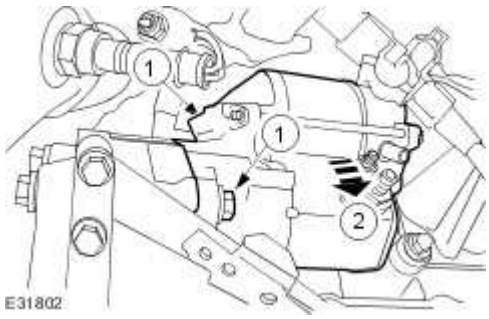

Installation

Vehicles with 3.0L engine

1 . To install, reverse the removal procedure.

Tighten to 25Nm

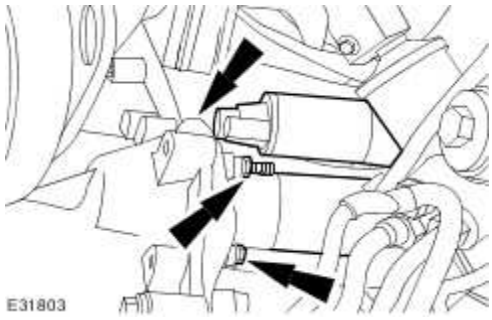

2 . Tighten to 7 Nm.

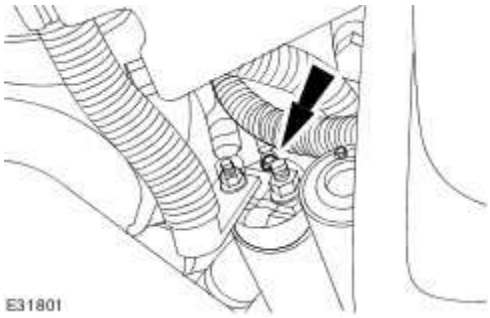

3 . Tighten to 13 Nm.

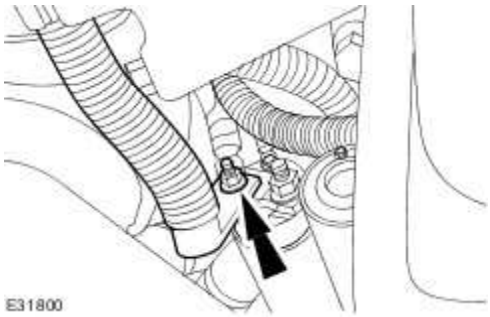

Vehicles with 3.5L or 4.2L engine

4 . Tighten to 45 Nm.

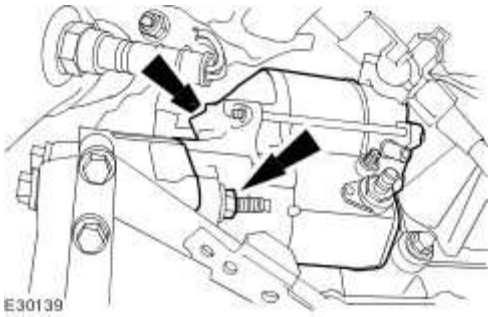

5 . Tighten to 10 Nm.

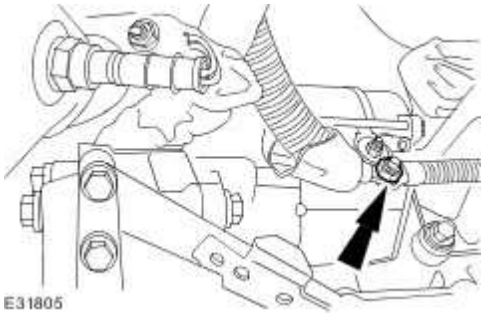

www.JagDocs.com

6 . Tighten to 7 Nm.

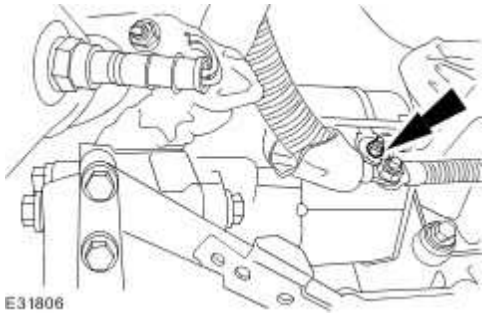

Starter Motor - 2.7L V6 - TdV6 (86.60.01)

Removal

1 . Disconnect the battery ground cable.
For additional information, refer to Battery Disconnect and Connect

2 . Remove the air deflector.
For additional information, refer to Air Deflector (76.11.41)

3 . Make sure the alignment mark on the steering gear pinion seal protection cover is central to the steering gear pinion casting.

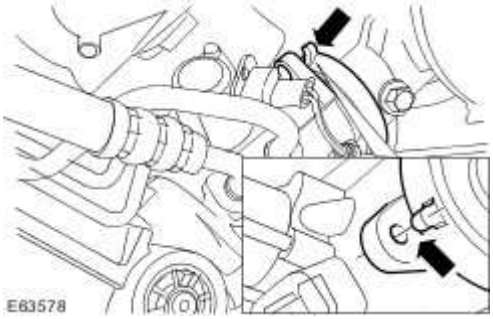

4 . Disconnect the power steering control valve actuator electrical connector.

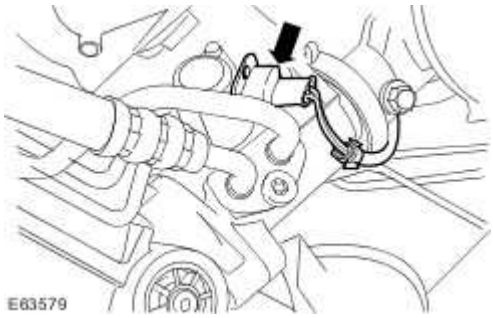

5 . Detach the lower steering column.

- Remove the steering gear shaft pinch bolt.

www.JagDocs.com

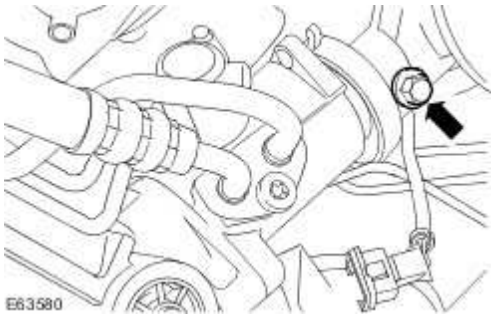

6 . Detach the steering gear.

- Remove the steering gear retaining bolts.

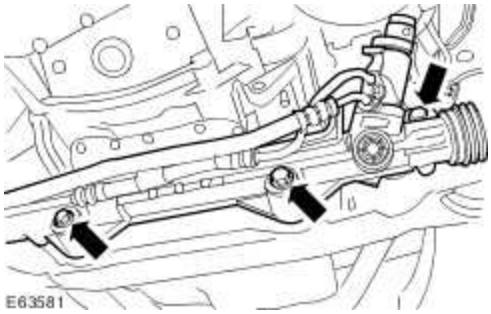

7 . Using a suitable piece of string secure the steering gear.

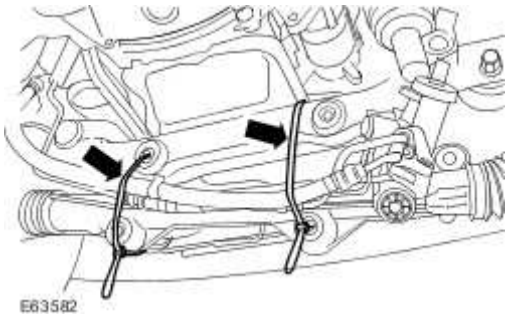

8 . Remove the generator cooling duct.

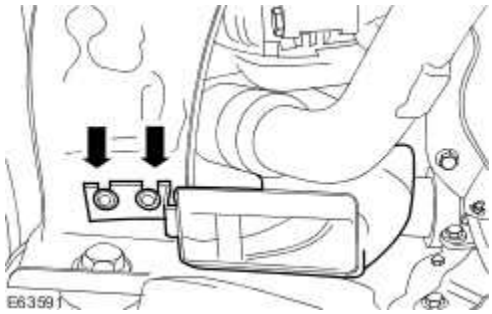

9 . Remove the starter motor retaining bracket.

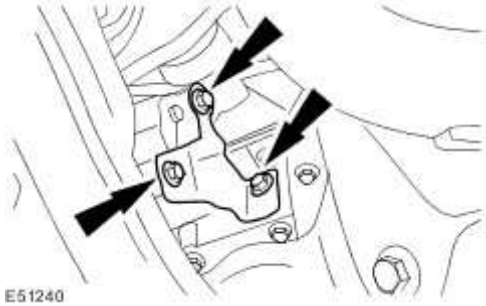

10 . Detach the starter motor positive cable.

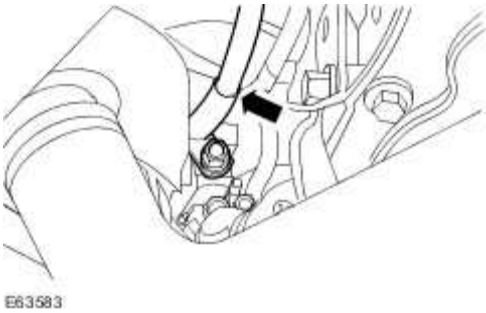

11 . Reposition the starter motor positive cable.

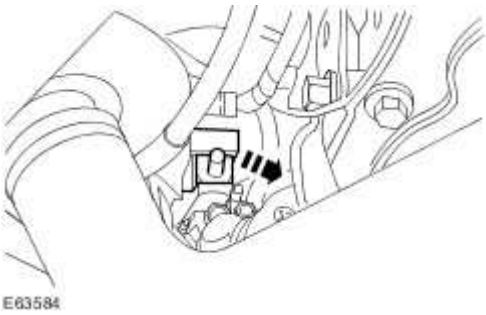

www.JagDocs.com

12 . Detach the starter motor solenoid harness.

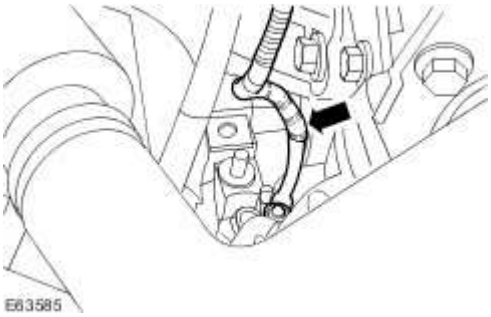

13 . Remove the starter motor.

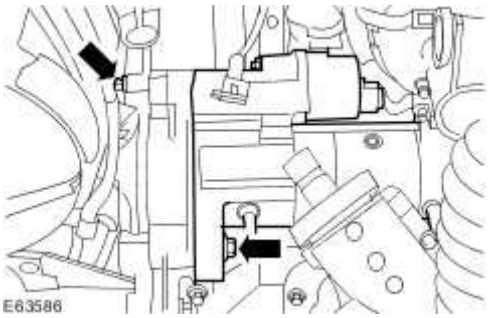

Installation

1 . To install, reverse the removal procedure.

Tighten to 48 Nm.

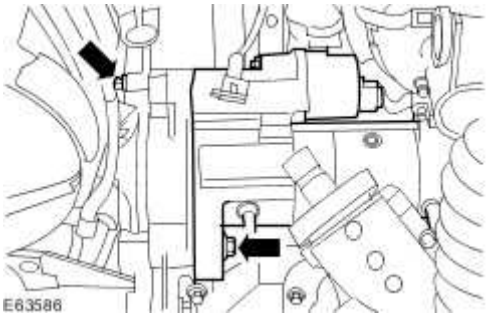

2 . Tighten to 7 Nm.

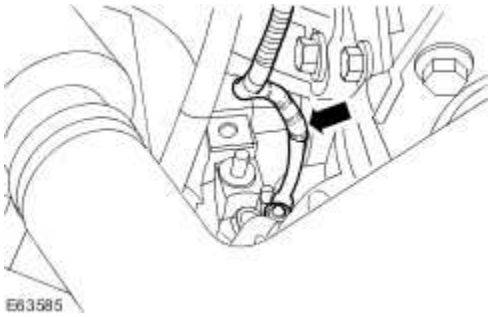

3 . Tighten to 10 Nm.

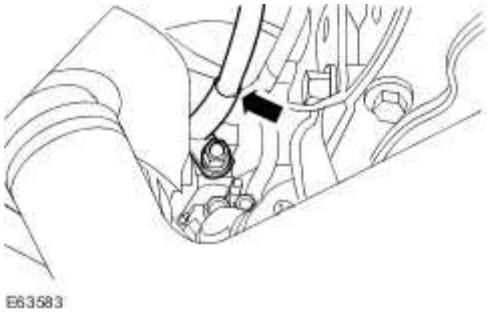

4 . Tighten to 23 Nm.

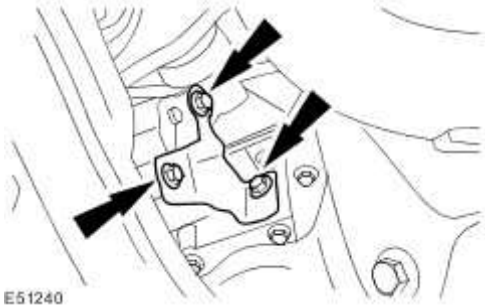

5 . Tighten to 100 Nm.

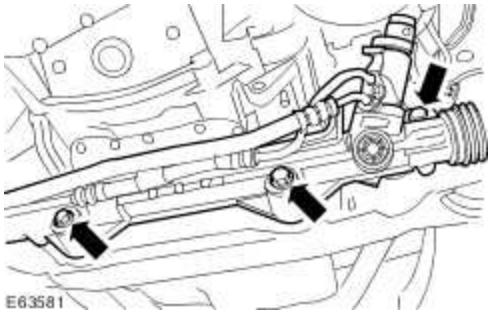

www.JagDocs.com

6 . Tighten to 35 Nm.

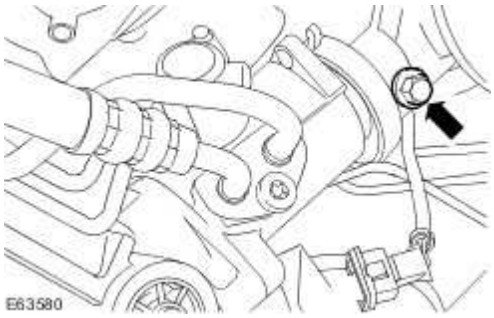

7 . Connect the battery ground cable.
For additional information, refer to Battery Connect (86.15.15)

Specifications

General Specifications

Item	Specification
Firing order	1-4-2-5-3-6
Spark plug gap	1.3-1.45mm (0.051-0.057in)
Spark plug type	AWSF22FS
High temperature nickel anti-seize lubricant F6AZ-9L494-AA (Spark plug thread)	ESE-M12A4-A

Torque Specifications

Description	Nm	lb-ft	lb-in
Spark plugs	15	11	-
Ignition coil-on-plug retaining bolts	6	-	53

www.JagDocs.com

Engine Ignition

Component Locations

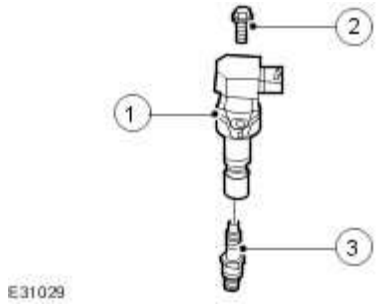

Item	Part Number	Description
1	-	Ignition coil-on-plug
2	-	Ignition coil-on-plug retaining bolt
3	-	Spark plug

The right-hand cylinders are numbered 5,3,1 and the left-hand cylinders are numbered 6,4,2 when viewed from the rear of the engine.

The ignition system consists of an ignition coil located on each individual cylinder and each individual spark plug. The ignition timing can now be adjusted more rapidly and independently.

The crankshaft position sensor signal is the basis for ignition timing calculations. The alternating voltage signal from the crankshaft position sensor is converted by the engine control module (ECM). This digital signal is then used to position the closing time of the primary circuit of the ignition coil. The effective range for ignition timing control is increased to the fact that there are no rotating parts.

On the basis of engine speed and load inputs, the powertrain control module determines the ignition timing. This function also takes other inputs into consideration such as engine temperature, throttle position, knock control, cam position, traction control and electronic transmission control inputs.

This ignition system enables the customer to drive the vehicle home if a coil or coil wiring failure occurs. In the event of a wiring failure between the powertrain control module and the coil, the coil will fail instead of the coil fuse blowing, which will allow the remaining coils to continue to function and the engine to limp home.

Engine Ignition - VIN Range: G00442->G45703

Inspection and Verification

1 . Verify the customer concern.

2 . Confirm which, if any, warning lights and/or messages were displayed on the instrument cluster.

NOTE:

If any warning lights and/or messages were displayed when the fault occurred, refer to the driver information table for DTCs associated with the display, then to the DTC index table for possible sources and actions. Some warnings will appear to clear when the ignition is cycled. This is often because the warning has flagged as a result of one of the vehicle's on-board diagnostic routines having run to detect the fault. If the same routine is not run when the ignition is switched **ON**, the warning will not reflag until the routine does run. See the DTC summaries for drive cycle routines.

3 . Visually inspect for obvious signs of mechanical or electrical damage.

Visual Inspection Chart

Mechanical	Electrical
Engine oil level	Fuses
Cooling system coolant level	Wiring harness
Fuel level	Electrical connector(s)
Fuel contamination/grade/quality	Sensor(s)
Throttle body	Engine control module (ECM)
Poly-vee belt	Transmission control module

1 . Verify the following systems are working correctly:

Air intake system

Cooling system

www.JagDocs.com

Charging system

Fuel system

2 . If an obvious cause for an observed or reported concern is found, correct the cause (if possible) before proceeding to the next step.

3 . Where the Jaguar approved diagnostic system is available, complete the S93 report before clearing any or all fault codes from the vehicle.

NOTE:

If a DTC cannot be cleared, then there is a permanent fault present that flags again as soon as it is cleared. (The exception to this is P1260, which will only clear following an ignition **OFF/ON** cycle after rectification).

4 . If the cause is not visually evident and the Jaguar approved diagnostic system is not available, use a fault code reader to retrieve the fault codes before proceeding to the Diagnostic Trouble Code (DTC) Index Chart, or the Symptom Chart if no DTCs are set.

5 . Using the Jaguar approved diagnostic system where available, and a scan tool where not, check the freeze frame data for information on the conditions applicable when the fault was flagged. The format of this will vary, depending on the tool used, but can provide information useful to the technician in diagnosing the fault.

CAUTION: When probing connectors to take measurements in the course of the pinpoint tests, use the adaptor kit, part number 3548-1358-00.

NOTE:

When performing electrical voltage or resistance tests, always use a digital multimeter (DMM) accurate to 3 decimal places, and with an up-to-date calibration certificate. When testing resistance, always take the resistance of the DMM leads into account.

NOTE:

Check and rectify basic faults before beginning diagnostic routines involving pinpoint tests.

Symptom	Possible source	Action
Engine cranks, but does	Engine breather system disconnected/restricte	Check engine breather system, <<303-08>>

not fire	d Ignition system Fuel system Harness CKP sensor ECM fault	For ignition system tests, refer to pinpoint tests in this section. Check fuel pressure. For CKP tests, <<303-14>> Contact dealer technical support for advice on possible ECM failure.
Engine cranks and fires, but will not start	Purge valve Fuel pump Engine coolant temperature (ECT) sensor Spark plugs HT short to ground (tracking) check rubber boots for cracks/damage Ignition coil failure(s) Harness	For evaporative emissions components, <<303-13>> Check fuel pressure, <<310-01>> For ECT sensor tests, <<303-14>> For ignition coil circuit tests, GO to Pinpoint Test G290075p1. . For ignition coil information, Ignition Coil-On-Plug LH (18.20.44) and Ignition Coil-On-Plug RH (18.20.43)
Difficult to start cold	Check coolant anti-freeze content Battery CKP sensor EGR valve stuck open Fuel pump Engine coolant temperature (ECT) sensor Purge valve	For battery information, <<414-01>> For CKP sensor tests, <<303-14>> For EGR system information, <<303-08>> Check fuel pressure. For ECT sensor tests, <<303-14>> For evaporative emissions components, <<303-13>>
Difficult to start hot	Injector leak Engine fuel temperature	For fuel injectors, <<303-04>> For EFT sensor, IAT sensor and MAF sensor tests, <<303-14>> For evaporative emissions components, <<303-13>> Check fuel

www.JagDocs.com

	(EFT) sensor IAT sensor MAF sensor Purge valve Fuel pump Ignition system ECT sensor EGR valve stuck open	pressure. <<310-01>> For ignition coil circuit tests, GO to Pinpoint Test G290075p1. . For ignition coil information, Ignition Coil-On-Plug LH (18.20.44) and Ignition Coil-On-Plug RH (18.20.43) For ECT sensor tests, <<303-14>> For EGR information, <<303-08>>
Difficult to start after hot soak (vehicle standing after engine has reached operating temperature)	Injector leak EFT sensor IAT sensor MAF sensor Purge valve Fuel pump Ignition system ECT sensor EGR valve stuck open	For fuel injectors, <<303-04>> For EFT sensor, IAT sensor and MAF sensor tests, <<303-14>> For evaporative emissions components, <<303-13>> Check fuel pressure. <<310-01>> For ignition coil circuit tests, GO to Pinpoint Test G290075p1. . For ignition coil information, Ignition Coil-On-Plug LH (18.20.44) and Ignition Coil-On-Plug RH (18.20.43) For ECT sensor tests, <<303-14>> For EGR information, <<303-08>>
Engine stalls soon after start	Breather system disconnected/restricted ECM relay Harness MAF sensor ECT sensor Ignition system Air filter restricted Fuel lines	For breather system, <<303-08>> For ECM relay, MAF sensor and ECT sensor tests, <<303-14>> For ignition coil circuit tests, GO to Pinpoint Test G290075p1. . For ignition coil information, Ignition Coil-On-Plug LH (18.20.44) and Ignition Coil-On-Plug RH (18.20.43) For air filter information, <<303-12>> For fuel line information, <<310-01>> For FRP sensor tests, <<303-04>> For intake system information, <<303-12>>

	FRP sensor Air leakage	
Engine hesitates/poor acceleration	Fuel pump Injector leak Fuel pressure Fuel lines Air leakage Throttle sensors Throttle motor Ignition system Exhaust gas recirculation HO2 sensors Transmission malfunction Restricted pedal travel (carpet, etc) APP sensor	Check fuel pressure, <<310-01>> For FRP sensor tests, <<303-04>> For fuel line information, <<310-01>> For intake system, <<303-12>> For throttle position sensor and throttle motor tests, <<303-14>> For ignition coil circuit tests, GO to Pinpoint Test G290075p1. . For ignition coil information, Ignition Coil-On-Plug LH (18.20.44) and Ignition Coil-On-Plug RH (18.20.43) For EGR system, <<303-08>> Check for DTCs relating to HO2 sensors. Refer to the DTC index for pinpoint tests for DTC set. For transmission information, <<307-01>> Check accelerator pedal travel. For APP sensor tests, <<303-14>>
Engine backfires	Fuel pump Fuel lines Air leakage MAF sensor HO2 sensors Ignition system Sticking VCT hub APP sensor	Check fuel pressure. For fuel line information, <<310-01>> For intake system, <<303-12>> For MAF sensor tests, <<303-14>> Check for DTCs relating to HO2 sensors. Refer to the DTC index for pinpoint tests for DTC set. For ignition coil circuit tests, GO to Pinpoint Test G290075p1. . For ignition coil information, Ignition Coil-On-Plug LH (18.20.44) and Ignition Coil-On-Plug RH (18.20.43) For VCT information, <<303-01>> For APP sensor tests, <<303-14>>
Engine surges	Fuel pump Fuel lines	Check fuel pressure. For fuel line information, <<310-01>> For MAF sensor, throttle sensor, and throttle motor relay tests, <<303-14>> For ignition coil circuit tests, GO to Pinpoint Test G290075p1.

www.JagDocs.com

	MAF sensor Harness Throttle sensors Throttle motor Ignition system	. For ignition coil information, Ignition Coil-On-Plug LH (18.20.44) and Ignition Coil-On-Plug RH (18.20.43)
Engine detonates/knocks	KS/circuit malfunction Fuel pump Fuel lines FRP sensor MAF sensor HO2 sensors Air leakage Sticking VCT hub BARO sensor malfunction	For KS circuit tests, <<303-14>> Check fuel pressure. For fuel line information, <<310-01>> For FRP sensor tests, <<303-04>> For MAF sensor and HO2 sensor tests, <<303-14>> For intake system, <<303-12>> Check DTCs for VCT range/performance fault. For VCT information, <<303-01>> For BARO sensor, contact dealer technical support for advice on possible ECM failure
No throttle response	APP sensor malfunction Throttle sensors Throttle motor	For APP sensor, throttle position sensor and throttle motor relay tests, <<303-14>>
Poor throttle response	APP sensor malfunction Throttle sensors ECT sensor MAF sensor Transmission malfunction Traction control event Air leakage Breather system disconnected/restricted	For APP sensor, throttle position sensor, ECT sensor and MAF sensor tests, <<303-14>> For transmission information, <<307-01>> For intake system, <<303-12>> For breather system information, <<303-08>>

Driver Information Chart

Warning light	Message	Default Mode	DTC
Red	Engine systems fault	Engine shut-down (all cylinders fuel cut)	P1224
Red	Engine systems fault	Limp-Home	P1229
Red	Engine systems fault	Limp-Home	P0121, P0122, P0123, P0222, P0223
Red	Engine systems fault	Limp-Home	P1251, P1631
Red	Engine systems fault	Limp-Home	P1611
Red	Engine systems fault	Limp-Home	P1633
Red	Engine systems fault	High idle	P1344, P1122, P1123, P1215, P1216
Red	Restricted Performance	Limp-Home unavailable	P1254
Red	Restricted Performance	Limp-Home unavailable	P1250
Red	Restricted Performance	Safety redundancy	P1657, P1658
Red	Restricted Performance	Safety redundancy	P16634
Amber	Restricted Performance	Engine speed limited	P0116, P0117, P0118, P0125
Amber	Restricted Performance	Engine speed limited	P0101, P0102, P0103, P0104
Amber	Restricted Performance	Engine speed limited	P0300, P0301, p0302, P0303, P0304, P0305, P0306, P0307, P0308, P1313, P1314
Amber	Restricted Performance	Engine speed limited	P0327, P0328, P0332, P0333, P1648
Amber	Restricted Performance	Engine speed limited	P0351, P0352, P0353, P0354, P0355, P0356, P0357, P0358, P1367, P1368
Amber	Restricted Performance	Engine speed limited	P0171, P0172, P0174, P0175

www.JagDocs.com

Amber	Restricted Performance	Engine speed limited	
Amber	Restricted Performance	Engine speed limited	P0201, P0202, P0203, P0204, P0205, P0206, P0207, P0208
Amber	Restricted Performance	Engine speed limited	P0335, P0336
Amber	Restricted Performance	Engine speed limited, Reverse throttle progression enabled	P1642
Amber	Restricted Performance	Engine speed limited, Reverse throttle progression enabled	P1643
Amber	Restricted Performance	Engine speed limited, Reverse throttle progression enabled	P0096, P0097, P0098
Amber	Restricted Performance	Engine speed limited, Reverse throttle progression enabled	P1474
Amber	Restricted Performance	Engine speed limited	P1234, P1236, P1338
Amber	None	None	P0506, P0507
Amber	None	None	P1656
Amber	Gearbox fault/Restricted performance	Gearbox default to set gear	P0725
Amber	Gearbox fault/Restricted performance	Gearbox default to set gear	P1796
Amber	Gearbox fault/Restricted performance	Gearbox default to set gear	P0701
Amber	Gearbox fault/Restricted performance	Gearbox default to set gear	P1603

Amber	Gearbox fault/Restricted performance	Gearbox default to set gear	P0605
Amber	Gearbox fault/Restricted performance	Gearbox default to set gear	P1719
Amber	Gearbox fault/Restricted performance	Gearbox default to set gear	P0720
Amber	Gearbox fault/Restricted performance	Gearbox default to set gear	P0715
Amber	Gearbox fault/Restricted performance	Gearbox default to set gear	P0705
Amber	Gearbox fault/Restricted performance	Gearbox default to set gear	P0610
Amber	Gearbox fault/Restricted performance	Gearbox default to set gear	P0606
Amber	Gearbox fault/Restricted performance	Gearbox default to set gear	P0750
Amber	Gearbox fault/Restricted performance	Gearbox default to set gear	P0753
Amber	Gearbox fault/Restricted performance	Gearbox default to set gear	P0755
Amber	Gearbox fault/Restricted performance	Gearbox default to set gear	P0758

www.JagDocs.com

Amber	Gearbox fault/Restricted performance	Gearbox default to set gear	P0760
Amber	Gearbox fault/Restricted performance	Gearbox default to set gear	P0763
Amber	Gearbox fault/Restricted performance	Gearbox default to set gear	P0765
Amber	Gearbox fault/Restricted performance	Gearbox default to set gear	P0768
Amber	Gearbox fault/Restricted performance	Gearbox default to set gear	P0770
Amber	Gearbox fault/Restricted performance	Gearbox default to set gear	P0773
Amber	Gearbox fault/Restricted performance	Gearbox default to set gear	P0740
Amber	Gearbox fault/Restricted performance	Gearbox default to set gear	P0743
Amber	Gearbox fault/Restricted performance	Gearbox default to set gear	P0787
Amber	Gearbox fault/Restricted performance	Gearbox default to set gear	P0788
Amber	Gearbox fault/Restricted performance	Gearbox default to set gear	P0730

Amber	Gearbox fault/Restricted performance	Gearbox default to set gear	P0731
Amber	Gearbox fault/Restricted performance	Gearbox default to set gear	P0732
Amber	Gearbox fault/Restricted performance	Gearbox default to set gear	P0733
Amber	Gearbox fault/Restricted performance	Gearbox default to set gear	P0734
Amber	Gearbox fault/Restricted performance	Gearbox default to set gear	P0735
Amber	Gearbox fault/Restricted performance	Gearbox default to set gear	P0729
Amber	Gearbox fault/Restricted performance	Gearbox default to set gear	P0781
Amber	Gearbox fault/Restricted performance	Gearbox default to set gear	P0782
Amber	Gearbox fault/Restricted performance	Gearbox default to set gear	P0783
Amber	Gearbox fault/Restricted performance	Gearbox default to set gear	P0784
Amber	Gearbox fault/Restricted performance	Gearbox default to set gear	P0829

www.JagDocs.com

Amber	Gearbox fault/Restricted performance	Engine speed limited, reverse throttle progression enabled	P1797
Amber	Gearbox fault/Restricted performance	Gearbox default to set gear	P0641
Amber	Gearbox fault/Restricted performance	Gearbox default to set gear	P0651
Amber	Gearbox fault/Restricted performance	Gearbox default to set gear	P0860
Amber	Gearbox fault/Restricted performance	Limp-home	P1783

Default mode Definitions

LIMP-HOME MODE

Throttle motor off

Throttle motor relay off

Throttle motor circuit off

Fuel intervention

Cruise control inhibited

LIMP-HOME UNAVAILABLE

Power limitation

Vehicle speed limited to 120 kph

Reverse throttle progression enabled

Cruise control inhibited

REVERSE THROTTLE PROGRESSION

Throttle opening limited to maximum 30%

NOTE:

The throttle operation uses the same map as for reverse gear.

ENGINE SPEED LIMITED

Engine runs normally, up to 3000 rpm

Engine speed restricted to 3000 rpm maximum, by fuel cut-off

HIGH IDLE

Throttle valve kept in fixed position by motor

Cruise control inhibited

SAFETY REDUNDANCY

Power limitation

Vehicle speed limited to 120 kph

Reverse throttle progression enabled

Cruise control inhibited

Diagnostic Trouble Code (DTC) Index

DTC	Description	Possible Source	Action
P0300	Random misfire detected	ECM to ignition coil primary circuit fault (cylinder misfire detected DTC also flagged) Fuel injector circuit fault(s) (injector DTCs also flagged) Ignition coil failure Spark plug failure/fouled/incorrect gap Cylinder compression low Fuel delivery pressure (low/high) Fuel injectors	For ignition coil circuit tests, GO to Pinpoint Test G290075p1. . For fuel system, <<303-04>> Check spark plug condition/gap. For spark plug test, GO to Pinpoint Test G290075p2. For engine information, <<303-00>>

www.JagDocs.com

		restricted/leaking Fuel injectors continuously open Fuel contamination Worn camshaft/broken valve springs	
P0301	Misfire detected, Cyl 1	REFER to possible sources for P0300	REFER to actions for P0300
P0302	Misfire detected, Cyl 2	REFER to possible sources for P0300	REFER to actions for P0300
P0303	Misfire detected, Cyl 3	REFER to possible sources for P0300	REFER to actions for P0300
P0304	Misfire detected, Cyl 4	REFER to possible sources for P0300	REFER to actions for P0300
P0305	Misfire detected, Cyl 5	REFER to possible sources for P0300	REFER to actions for P0300
P0306	Misfire detected, Cyl 6	REFER to possible sources for P0300	REFER to actions for P0300
P0351	Ignition coil primary/secondary circuit malfunction, cyl 1	ECM to ignition coil primary circuit open circuit, short circuit to ground, high resistance Ignition coil ground circuit open circuit, high resistance Ignition coil failure	For ignition coil circuit tests, GO to Pinpoint Test G290075p1.
P0352	Ignition coil primary/secondary circuit malfunction, cyl 2	ECM to ignition coil primary circuit open circuit, short circuit to ground, high resistance Ignition coil ground circuit open circuit, high resistance Ignition coil failure	For ignition coil circuit tests, GO to Pinpoint Test G290075p1.

P0353	Ignition coil primary/secondary circuit malfunction, cyl 3	ECM to ignition coil primary circuit open circuit, short circuit to ground, high resistance Ignition coil ground circuit open circuit, high resistance Ignition coil failure	For ignition coil circuit tests, GO to Pinpoint Test G290075p1.
P0354	Ignition coil primary/secondary circuit malfunction, cyl 4	ECM to ignition coil primary circuit open circuit, short circuit to ground, high resistance Ignition coil ground circuit open circuit, high resistance Ignition coil failure	For ignition coil circuit tests, GO to Pinpoint Test G290075p1.
P0355	Ignition coil primary/secondary circuit malfunction, cyl 5	ECM to ignition coil primary circuit open circuit, short circuit to ground, high resistance Ignition coil ground circuit open circuit, high resistance Ignition coil failure	For ignition coil circuit tests, GO to Pinpoint Test G290075p1.
P0356	Ignition coil primary/secondary circuit malfunction, cyl 6	ECM to ignition coil primary circuit open circuit, short circuit to ground, high resistance Ignition coil ground circuit open circuit, high resistance Ignition coil failure	For ignition coil circuit tests, GO to Pinpoint Test G290075p1.
P0603	ECM data corrupted	ECM	Contact dealer technical support for advice on possible ECM failure.
P1000	System checks not complete since last memory clear	OBD monitors have not completed	Carry out comprehensive component monitor drive cycle. Refer to the DTC section of JTIS,

www.JagDocs.com

			accessed by the icon on the opening page.
P1111	System checks complete since last memory clear	OBD monitors have completed	No action necessary
P1313	Misfire rate catalyst damage, right-hand cylinders. NOTE. This DTC will flag only when accompanied by a random or individual cylinder misfire DTC; P0300 to P0306	Refer to P0300 possible sources	Refer to P0300 Actions
P1314	Misfire rate catalyst damage, left-hand cylinders. NOTE. This DTC will flag only when accompanied by a random or individual cylinder misfire DTC; P0300 to P0306	Refer to P0300 possible sources	Refer to P0300 Actions
P1316	Misfire excess emission. NOTE. This DTC will flag only when accompanied by an individual cylinder misfire DTC; P0300 to P0306	Refer to P0300 possible sources	Refer to P0300 Actions
P1367	Ignition monitor (right-hand cylinders)	Ignition monitoring circuit between splice and ECM open circuit, short circuit to ground, or short circuit to B+ voltage Ignition coil group ground circuit fault Ignition coil relay failure	For coil circuit tests, GO to Pinpoint Test G290075p1.
P1368	Ignition monitor (left-hand cylinders)	Ignition monitoring circuit between splice and ECM open circuit, short circuit to ground, or short circuit to B+ voltage Ignition coil group ground circuit fault Ignition coil relay failure	For coil circuit tests, GO to Pinpoint Test G290075p1.

Pinpoint Tests

PINPOINT TEST G290075p1 : DTC P0300, P0301-0306, P0351-0356; RANDOM MISFIRE DETECTED, MISFIRE DETECTED, (CYLINDERS 1-6) IGNITION COIL PRIMARY CIRCUIT MALFUNCTION, (CYLINDERS 1-6)

G290075t1 : CHECK COIL FUNCTION BY SUBSTITUTION

1. Swap the suspect coil for a known good unit. 2. CLEAR the DTC. TEST the system for normal operation.

Does the same DTC reoccur? The DTC will indicate if the same cylinder is misfiring.

-> Yes
INSTALL a new coil.
Ignition Coil-On-Plug LH (18.20.44)
Ignition Coil-On-Plug RH (18.20.43) CLEAR the DTC. TEST the system for normal operation.

-> No
GO to Pinpoint Test G290075t2.

G290075t2 : CHECK THE IGNITION COIL SUPPLY VOLTAGE CIRCUIT

1. Disconnect the relevant ignition coil electrical connector(s), (PI02 to PI04, right-hand cylinders, PI06 to PI08, left-hand cylinders). 2. Turn the ignition switch to the **ON** position. 3. Make sure the ignition relay is energized. 4. Measure the voltage between:

Cyl 1 PI02, pin 01 (RW) and GROUND.

Cyl 2 PI06, pin 01 (RW) and GROUND.

Cyl 3 PI03, pin 01 (RW) and GROUND.

Cyl 4 PI07, pin 01 (RW) and GROUND.

Cyl 5 PI04, pin 01 (RW) and GROUND.

Cyl 6 PI08, pin 01 (RW) and GROUND.

Is the voltage less than 10.5 Volts?

www.JagDocs.com

-> Yes
REPAIR the relevant ignition coil supply voltage circuit. This circuit includes the ignition relay, and the front power distribution box (fuse 30). For additional information, refer to the wiring diagrams. CLEAR the DTCs. TEST the system for normal operation.

-> No
GO to Pinpoint Test G290075t3.

G290075t3 : CHECK THE IGNITION COIL GROUND CIRCUIT

1. Turn the ignition switch to the **OFF** position. 2. Disconnect the relevant ignition coil electrical connector(s), (PI02 to PI04, right-hand cylinders, PI06 to PI08, left-hand cylinders). 3. Measure the resistance between:

Cyl 1 PI02, pin 03 (B) and GROUND.

Cyl 2 PI06, pin 03 (B) and GROUND.

Cyl 3 PI03, pin 03 (B) and GROUND.

Cyl 4 PI07, pin 03 (B) and GROUND.

Cyl 5 PI04, pin 03 (B) and GROUND.

Cyl 6 PI08, pin 03 (B) and GROUND.

Is the resistance greater than 5 ohms?

-> Yes
REPAIR the high resistance circuit. For additional information, refer to the wiring diagrams. CLEAR the DTCs. TEST the system for normal operation.

-> No
GO to Pinpoint Test G290075t4.

G290075t4 : CHECK THE IGNITION COIL SWITCHING CIRCUITS FOR HIGH RESISTANCE

1. Disconnect the battery negative terminal. 2. Disconnect the ECM electrical connector PI01. 3. Disconnect the relevant ignition coil electrical connector(s), (PI02 to PI04, right-hand cylinders, PI06 to PI08, left-hand cylinders). 4. Measure the resistance between:

Cyl 1 PI02, pin 04 (GU) and PI01, pin 87 (GU).

Cyl 2 PI06, pin 04 (GW) and PI01, pin 61 (GW).

Cyl 3 PI03, pin 04 (Y) and PI01, pin 88 (Y).

Cyl 4 PI07, pin 04 (GW) and PI01, pin 62 (GW).

Cyl 5 PI04, pin 04 (YR) and PI01, pin 89 (GO).

Cyl 6 PI08, pin 4 (GR) and PI01, pin 63 (GR).

Is the resistance greater than 5 ohms?

-> Yes
REPAIR the high resistance circuit. For additional information, refer to the wiring diagrams. CLEAR the DTCs. TEST the system for normal operation.

-> No
GO to Pinpoint Test G290075t5.

G290075t5 : CHECK THE IGNITION COIL (CYLS 1, 3, 5) MONITOR CIRCUITS FOR HIGH RESISTANCE

1. Disconnect the relevant ignition coil electrical connector(s), (PI02 to PI04). 2. Measure the resistance between:

Cyl 1 PI02, pin 02 (GB) and PI01, pin 131 (GB).

Cyl 3 PI03, pin 02 (GB) and PI01, pin 131 (GB).

Cyl 5 PI04, pin 02 (GB) and PI01, pin 131 (GB).

Is the resistance greater than 5 ohms?

-> Yes
REPAIR the high resistance circuit. This circuit includes the harness splice, PIS09. For additional information, refer to the wiring diagrams. CLEAR the DTCs. TEST the system for normal operation.

-> No
GO to Pinpoint Test G290075t6.

G290075t6 : CHECK THE IGNITION COIL (CYLS 1, 3, 5) MONITOR CIRCUITS FOR SHORT TO B+ VOLTAGE

1. Reconnect the battery negative terminal. 2. Disconnect the relevant ignition coil electrical connector(s). 3. Measure the voltage between:

Cyl 1 PI02, pin 02 (GB) and GROUND.

Cyl 3 PI03, pin 02 (GB) and GROUND.

Cyl 5 PI04, pin 02 (GB) and GROUND.

www.JagDocs.com

Is the voltage greater than 3 volts?

-> Yes
REPAIR the short to B+ voltage. For additional information, refer to the wiring diagrams. CLEAR the DTCs. TEST the system for normal operation.

-> No
GO to Pinpoint Test G290075t7.

G290075t7 : CHECK THE IGNITION COIL (CYLS 1, 3, 5) MONITOR CIRCUITS FOR SHORT TO GROUND

1. Disconnect the relevant ignition coil electrical connector(s). 2. Measure the resistance between:

Cyl 1 PI02, pin 02 (GB) and GROUND.

Cyl 3 PI03, pin 02 (GB) and GROUND.

Cyl 5 PI04, pin 02 (GB) and GROUND.

Is the resistance less than 10,000 ohms?

-> Yes
REPAIR the short to GROUND. For additional information, refer to the wiring diagrams. CLEAR the DTCs. TEST the system for normal operation.

-> No
GO to Pinpoint Test G290075t8.

G290075t8 : CHECK THE IGNITION COIL (CYLS 2, 4, 6) MONITOR CIRCUITS FOR HIGH RESISTANCE

1. Disconnect the relevant ignition coil electrical connector(s), (PI06 to PI08). 2. Measure the resistance between:

Cyl 2 PI06, pin 02 (YB) and PI01, pin 132 (YB).

Cyl 4 PI07, pin 02 (YB) and PI01, pin 132 (YB).

Cyl 6 PI08, pin 02 (YB) and PI01, pin 132 (YB).

Is the resistance greater than 5 ohms?

-> Yes
REPAIR the high resistance circuit. This circuit includes the harness splice, PIS12. For additional information, refer to the wiring diagrams. CLEAR the DTCs. TEST the system for normal operation.

-> No
GO to Pinpoint Test G290075t9.

G290075t9 : CHECK THE IGNITION COIL (CYLS 2, 4, 6) MONITOR CIRCUITS FOR SHORT TO B+ VOLTAGE

1. Reconnect the battery negative terminal. 2. Disconnect the relevant ignition coil electrical connector(s), (PI06 to PI08). 3. Measure the voltage between:

Cyl 2 PI06, pin 02 (YB) and GROUND.

Cyl 4 PI07, pin 02 (YB) and GROUND.

Cyl 6 PI08, pin 02 (YB) and GROUND.

Is the voltage greater than 3 volts?

-> Yes
REPAIR the short to B+ voltage. For additional information, refer to the wiring diagrams. CLEAR the DTCs. TEST the system for normal operation.

-> No
GO to Pinpoint Test G290075t10.

G290075t10 : CHECK THE IGNITION COIL (CYLS 2, 4, AND 6) MONITOR CIRCUITS FOR SHORT TO GROUND

1. Disconnect the relevant ignition coil electrical connector(s), (PI06 to PI08). 2. Measure the resistance between:

Cyl 2 PI06, pin 02 (YB) and GROUND.

Cyl 4 PI07, pin 02 (YB) and GROUND.

Cyl 6 PI08, pin 02 (YB) and GROUND.

Is the resistance less than 10,000 ohms?

-> Yes
REPAIR the short to GROUND. For additional information, refer to the wiring diagrams. CLEAR the DTCs. TEST the system for normal operation.

-> No
Contact dealer technical support for advice on possible ECM failure.

www.JagDocs.com

PINPOINT TEST G290075p2 : CHECK SPARK PLUG RESISTANCE

G290075t11 : CHECK SPARK PLUG RESISTANCE

1. Remove the suspect spark plug(s). 2. Measure the resistance between the spark plug center electrode tip and the spark plug HT contact.

Is the resistance between 8,000 and 12,000 ohms? (nominal 10,000 ohms)

-> Yes

Check ignition coil and circuits. See possible sources list for misfire.

-> No

INSTALL a new spark plug. CLEAR the DTC. TEST the system for normal operation.

Engine Ignition - VIN Range: G45704->G99999

Overview

There are changes to the engine management system (EMS) for 2006 my, the most obvious of which will be the change to 7-digit diagnostic trouble codes (DTCs) from the familiar 5-digit.

Refer to the DTC index in this section for guidance on how to use these codes with the Jaguar approved diagnostic system or a scan tool.

Inspection and Verification

1 . Verify the customer concern.

2 . Visually inspect for obvious signs of mechanical or electrical damage.

Mechanical	Electrical
Engine oil level Cooling system coolant level Fuel level Fuel contamination/grade/quality	Fuses Wiring harness Loose or corroded electrical connectors Ignition coils Sensor(s) Engine control module (ECM) Transmission control module (TCM)

3 . If an obvious cause for an observed or reported concern is found, correct the cause (if possible) before proceeding to the next step.

4 . If the cause is not visually evident use the Jaguar approved diagnostic system or a scan tool to retrieve the fault codes before proceeding to the DTC Index.

Symptom Chart

Symptom	Possible source	Action
Engine cranks, but does not fire	Engine breather system disconnected/restricted Ignition system	Check the engine breather system, Engine Emission Control - VIN Range: G45704->G99999 For ignition system tests, refer to pinpoint tests in this

www.JagDocs.com

	Fuel system Harness Crankshaft position (CKP) sensor ECM fault	section. Check the fuel pressure, Fuel Tank and Lines - 4.2L NA V8 - AJV8/4.2L SC V8 - AJV8/3.0L NA V6 - AJ27/3.5L NA V8 - AJV8, VIN Range: G45704->G99999 For CKP tests, Electronic Engine Controls - VIN Range: G45704->G99999 Refer to the warranty policy and procedures manual if an ECM is suspect.
Engine cranks and fires, but will not start	Evaporative emissions purge valve Fuel pump Spark plugs HT short to ground (tracking) check rubber boots for cracks/damage Ignition coil failure(s) Harness	For purge valve tests, Evaporative Emissions - VIN Range: G45704->G99999 Check the fuel pressure, Fuel Tank and Lines - 4.2L NA V8 - AJV8/4.2L SC V8 - AJV8/3.0L NA V6 - AJ27/3.5L NA V8 - AJV8, VIN Range: G45704->G99999 For spark plug tests, GO to Pinpoint Test G531326p2. For ignition coil circuit tests, GO to Pinpoint Test G531326p1.
Difficult to start cold	Coolant anti-freeze content Battery CKP sensor Exhaust gas recirculation (EGR) valve stuck open Fuel pump Purge valve	Check the anti-freeze content. For battery information, Battery For CKP sensor tests, Electronic Engine Controls - VIN Range: G45704->G99999 For EGR valve tests, Engine Emission Control - VIN Range: G45704->G99999 Check the fuel pressure, Fuel Tank and Lines - 4.2L NA V8 - AJV8/4.2L SC V8 - AJV8/3.0L NA V6 - AJ27/3.5L NA V8 - AJV8, VIN Range: G45704->G99999 For purge valve tests, Evaporative Emissions - VIN Range: G45704->G99999
Difficult to start hot	Injector leak Engine fuel temperature (EFT) sensor Intake air temperature (IAT)	For fuel injectors, Fuel Injectors (18.10.02) For EFT, IAT and MAF sensor tests, Electronic Engine Controls - VIN Range: G45704->G99999 For purge valve tests, Evaporative Emissions - VIN Range:

	sensor Mass air flow (MAF) sensor Purge valve Fuel pump Ignition system EGR valve stuck open	G45704->G99999 Check the fuel pressure, Fuel Tank and Lines - 4.2L NA V8 - AJV8/4.2L SC V8 - AJV8/3.0L NA V6 - AJ27/3.5L NA V8 - AJV8, VIN Range: G45704->G99999 For ignition coil circuit tests, GO to Pinpoint Test G531326p1. For EGR valve tests, Engine Emission Control - VIN Range: G45704->G99999
Difficult to start after hot soak (vehicle standing after engine has reached operating temperature)	Injector leak EFT sensor IAT sensor MAF sensor Purge valve Fuel pump Ignition system EGR valve stuck open	For fuel injectors, Fuel Injectors (18.10.02) For EFT, IAT and MAF sensor tests, Electronic Engine Controls - VIN Range: G45704->G99999 For purge valve tests, Evaporative Emissions - VIN Range: G45704->G99999 Check the fuel pressure, Fuel Tank and Lines - 4.2L NA V8 - AJV8/4.2L SC V8 - AJV8/3.0L NA V6 - AJ27/3.5L NA V8 - AJV8, VIN Range: G45704->G99999 For ignition coil circuit tests, GO to Pinpoint Test G531326p1. For EGR valve tests, Engine Emission Control - VIN Range: G45704->G99999
Engine stalls soon after start	Breather system disconnected/restricted ECM relay Harness MAF sensor Ignition system Air filter restricted Fuel lines	For breather system, Engine Emission Control - VIN Range: G45704->G99999 For ECM relay and MAF sensor tests, Electronic Engine Controls - VIN Range: G45704->G99999 For ignition coil circuit tests, GO to Pinpoint Test G531326p1. For air filter information, Intake Air Distribution and Filtering - VIN Range: G45704->G99999 Check the fuel lines, Fuel Tank and Lines - 4.2L NA V8 - AJV8/4.2L SC V8 - AJV8/3.0L NA V6 - AJ27/3.5L NA V8 - AJV8, VIN Range:

www.JagDocs.com

	FRP sensor Air leakage	G45704->G99999 For FRP sensor tests, Electronic Engine Controls - VIN Range: G45704->G99999 For intake system information, Intake Air Distribution and Filtering - VIN Range: G45704->G99999
Engine hesitates/poor acceleration	Fuel pump Injector leak Fuel pressure Fuel lines Air leakage Throttle position (TP) sensors Throttle motor Ignition system EGR valve stuck open HO2 sensors Transmission malfunction Restricted pedal travel (carpet, etc) Accelerator pedal position (APP) sensor	Check the fuel pressure, check the fuel lines, Fuel Tank and Lines - 4.2L NA V8 - AJV8/4.2L SC V8 - AJV8/3.0L NA V6 - AJ27/3.5L NA V8 - AJV8, VIN Range: G45704->G99999 For intake system, Intake Air Distribution and Filtering - VIN Range: G45704->G99999 For TP sensor and throttle motor tests, Electronic Engine Controls - VIN Range: G45704->G99999 For ignition coil circuit tests, GO to Pinpoint Test G531326p1. For EGR valve tests, Engine Emission Control - VIN Range: G45704->G99999 Check for DTCs relating to HO2 sensors. Refer to the DTC index for pinpoint tests for DTC set. For transmission information, Check the accelerator pedal travel. For APP sensor tests, Electronic Engine Controls - VIN Range: G45704->G99999
Engine backfires	Fuel pump Fuel lines Air leakage MAF sensor HO2 sensors Ignition system Sticking variable camshaft	Check the fuel pressure, check the fuel lines, Fuel Tank and Lines - 4.2L NA V8 - AJV8/4.2L SC V8 - AJV8/3.0L NA V6 - AJ27/3.5L NA V8 - AJV8, VIN Range: G45704->G99999 For intake system, Intake Air Distribution and Filtering - VIN Range: G45704->G99999 For MAF sensor tests, Electronic Engine Controls - VIN Range: G45704->G99999 Check for DTCs relating to HO2 sensors. Refer to the

	timing (VCT) hub APP sensor	DTC index for pinpoint tests for DTC set. For ignition coil circuit tests, GO to Pinpoint Test G531326p1. For VCT information, Engine For APP sensor tests, Electronic Engine Controls - VIN Range: G45704->G99999
Engine surges	Fuel pump Fuel lines MAF sensor Harness TP sensors Throttle motor Ignition system	Check the fuel pressure, check the fuel lines, Fuel Tank and Lines - 4.2L NA V8 - AJV8/4.2L SC V8 - AJV8/3.0L NA V6 - AJ27/3.5L NA V8 - AJV8, VIN Range: G45704->G99999 For MAF, TP sensor and throttle motor tests, Electronic Engine Controls - VIN Range: G45704->G99999 For ignition coil circuit tests, GO to Pinpoint Test G531326p1.
Engine detonates/knocks	Knock sensor (KS) circuit malfunction Fuel pump Fuel lines FRP sensor MAF sensor HO2 sensors Air leakage Sticking VCT hub BARO sensor malfunction (internal ECM fault)	For KS circuit tests, Electronic Engine Controls - VIN Range: G45704->G99999 Check the fuel pressure, check the fuel lines, Fuel Tank and Lines - 4.2L NA V8 - AJV8/4.2L SC V8 - AJV8/3.0L NA V6 - AJ27/3.5L NA V8 - AJV8, VIN Range: G45704->G99999 For FRP, MAF and HO2 sensor tests, Electronic Engine Controls - VIN Range: G45704->G99999 For intake system, Intake Air Distribution and Filtering - VIN Range: G45704->G99999 Check DTCs for VCT range/performance fault. For VCT information, Engine Refer to the warranty policy and procedures manual if an ECM is suspect.
No throttle response	APP sensor malfunction TP sensors Throttle motor	For APP, TP sensor and throttle motor tests, Electronic Engine Controls - VIN Range: G45704->G99999
Poor throttle response	APP sensor malfunction	For APP, TP, ECT, and MAF sensor tests, Electronic Engine Controls - VIN Range:

www.JagDocs.com

	TP sensors ECT sensor MAF sensor Transmission malfunction Traction control event Air leakage Breather system disconnected/restricted	G45704->G99999 For transmission information, For intake system, Intake Air Distribution and Filtering - VIN Range: G45704->G99999 For breather system information, Engine Emission Control - VIN Range: G45704->G99999

DTC Index

NOTE:

Generic scan tools may not read the codes listed, or may read only 5-digit codes. Match the 5 digits from the scan tool to the first 5 digits of the 7-digit code listed to identify the fault (the last 2 digits give extra information read by the manufacturer-approved diagnostic system).

NOTE:

For a full list of DTCs,
Electronic Engine Controls - VIN Range: G45704->G99999

DTC	Description	Possible causes	Action
P035100	Cylinder 1 ignition coil primary/secondary circuit	ECM to ignition module/coil drive circuit: short circuit to ground, high resistance Ignition module/coil ground circuit: high resistance Ignition module/coil supply circuit: open circuit (including relay)	For ignition coil tests, GO to Pinpoint Test G531326p1.
P035200	Cylinder 2 ignition coil primary/secondary circuit	ECM to ignition module/coil drive circuit: short circuit to ground, high resistance Ignition module/coil ground	For ignition coil tests, GO to Pinpoint Test G531326p1.

		circuit: high resistance Ignition module/coil supply circuit: open circuit (including relay)	
P035300	Cylinder 3 ignition coil primary/secondary circuit	ECM to ignition module/coil drive circuit: short circuit to ground, high resistance Ignition module/coil ground circuit: high resistance Ignition module/coil supply circuit: open circuit (including relay)	For ignition coil tests, GO to Pinpoint Test G531326p1.
P035400	Cylinder 4 ignition coil primary/secondary circuit	ECM to ignition module/coil drive circuit: short circuit to ground, high resistance Ignition module/coil ground circuit: high resistance Ignition module/coil supply circuit: open circuit (including relay)	For ignition coil tests, GO to Pinpoint Test G531326p1.
P035500	Cylinder 5 ignition coil primary/secondary circuit	ECM to ignition module/coil drive circuit: short circuit to ground, high resistance Ignition module/coil ground circuit: high resistance Ignition module/coil supply circuit: open circuit (including relay)	For ignition coil tests, GO to Pinpoint Test G531326p1.
P035600	Cylinder 6 ignition coil primary/secondary circuit	ECM to ignition module/coil drive circuit: short circuit to ground, high resistance Ignition module/coil ground circuit: high resistance Ignition module/coil supply circuit: open circuit (including relay)	For ignition coil tests, GO to Pinpoint Test G531326p1.
P131500	Persistent misfire	Spark plug failure/fouled/incorrect gap ECM to ignition coil primary	For spark plug tests, GO to Pinpoint Test G531326p2. For ignition coil circuit tests, GO to Pinpoint Test

www.JagDocs.com

		circuit fault (cylinder misfire detected DTC also flagged) Fuel delivery pressure low Fuel injector circuit fault(s) (injector DTCs also flagged) Ignition coil failure Cylinder compression low	G531326p1. Check the fuel pressure, Fuel Tank and Lines - 4.2L NA V8 - AJV8/4.2L SC V8 - AJV8/3.0L NA V6 - AJ27/3.5L NA V8 - AJV8, VIN Range: G45704->G99999 For injector circuit tests, Fuel Charging and Controls - VIN Range: G45704->G99999 Check the cylinder compressions, Engine - 4.2L NA V8 - AJV8/4.2L SC V8 - AJV8/3.0L NA V6 - AJ27/3.5L NA V8 - AJV8
P136700	Ignition amplifier group A	Ignition monitoring circuit to ECM: open circuit, short circuit to ground, short circuit to power Ignition module/coils right hand bank ground circuit fault	For ignition coil circuit tests, GO to Pinpoint Test G531326p1.
P136800	Ignition amplifier group B	Ignition monitoring circuit to ECM: open circuit, short circuit to ground, short circuit to power Ignition module/coils left hand bank ground circuit fault	For ignition coil circuit tests, GO to Pinpoint Test G531326p1.

Pinpoint Tests

CAUTION: When probing connectors to take measurements in the course of the pinpoint tests, use the adaptor kit, part number 3548-1358-00.

NOTE:

When performing electrical voltage or resistance tests, always use a digital multimeter (DMM) accurate to 3 decimal places, and with an up-to-date calibration certificate. When testing resistance, always take the resistance of the DMM leads into account.

NOTE:

Check and rectify basic faults before beginning diagnostic routines involving pinpoint tests.

PINPOINT TEST G531326p1 : IGNITION COIL CIRCUITS

G531326t2 : CHECK THE IGNITION COIL SUPPLY VOLTAGE CIRCUIT

1. Disconnect the relevant ignition coil electrical connector:

Ignition coil connector
Cylinder 1, PI02
Cylinder 2, PI06
Cylinder 3, PI03
Cylinder 4, PI07
Cylinder 5, PI04
Cylinder 6, PI08

2. Key on, engine off. 3. Make sure the ignition relay is energized. 4. Measure the voltage between:

Ignition coil connector, harness side	Battery
Pin 01	Negative terminal

Is the voltage less than 10.5 Volts?

-> Yes
REPAIR the relevant ignition coil supply circuit. This circuit includes fuse 15 of the front power distribution box and the ignition relay. For additional information, refer to the wiring diagrams. CLEAR the DTCs and test the system for normal operation.

-> No
GO to Pinpoint Test G531326t4.

www.JagDocs.com

G531326t4 : CHECK THE IGNITION COIL SWITCHING CIRCUITS FOR SHORT CIRCUIT TO GROUND

1. Key off. 2. Measure the resistance between:

Ignition coil connector, harness side	Battery
Pin 04	Negative terminal

Is the resistance less than 10,000 ohms?

-> Yes
REPAIR the short circuit. For additional information, refer to the wiring diagrams. CLEAR the DTCs and test the system for normal operation.

-> No
GO to Pinpoint Test G531326t12.

G531326t12 : CHECK THE IGNITION COIL SWITCHING CIRCUITS FOR SHORT CIRCUIT TO POWER

1. Measure the resistance between:

Ignition coil connector, harness side	Battery
Pin 04	Positive terminal

Is the resistance less than 10,000 ohms?

-> Yes
REPAIR the short circuit. For additional information, refer to the wiring diagrams. CLEAR the DTCs and test the system for normal operation.

-> No
GO to Pinpoint Test G531326t5.

G531326t5 : CHECK THE IGNITION COIL MONITOR CIRCUITS FOR SHORT CIRCUIT TO GROUND

1. Measure the resistance between:

Ignition coil connector, harness side	Battery

Pin 02	Negative terminal

Is the resistance less than 10,000 ohms?

-> Yes
REPAIR the short circuit. For additional information, refer to the wiring diagrams. CLEAR the DTCs and test the system for normal operation.

-> No
GO to Pinpoint Test G531326t6.

G531326t6 : CHECK THE IGNITION COIL MONITOR CIRCUITS FOR SHORT CIRCUIT TO POWER

1. Measure the resistance between:

Ignition coil connector, harness side	Battery
Pin 02	Positive terminal

Is the resistance less than 10,000 ohms?

-> Yes
REPAIR the short circuit. For additional information, refer to the wiring diagrams. CLEAR the DTCs and test the system for normal operation.

-> No
GO to Pinpoint Test G531326t3.

G531326t3 : CHECK THE IGNITION COIL GROUND CIRCUIT FOR HIGH RESISTANCE

1. Measure the resistance between:

Cylinder 1 ignition coil connector, harness side	Battery
PI02, pin 03	Negative terminal

Cylinder 2 ignition coil connector, harness side	Battery

www.JagDocs.com

PI06, pin 03	Negative terminal

Cylinder 3 ignition coil connector, harness side	Battery
PI03, pin 03	Negative terminal

Cylinder 4 ignition coil connector, harness side	Battery
PI07, pin 03	Negative terminal

Cylinder 5 ignition coil connector, harness side	Battery
PI04, pin 03	Negative terminal

Cylinder 6 ignition coil connector, harness side	Battery
PI08, pin 03	Negative terminal

Is the resistance greater than 5 ohms?

-> Yes
REPAIR the high resistance circuit. For additional information, refer to the wiring diagrams. CLEAR the DTCs and test the system for normal operation.

-> No
GO to Pinpoint Test G531326t13.

G531326t13 : CHECK THE IGNITION COIL SWITCHING CIRCUITS FOR HIGH RESISTANCE

1. Disconnect the ECM electrical connector, PI300. 2. Measure the resistance between:

Cylinder 1 ignition coil connector, harness side	ECM connector PI300, harness side
PI02, pin 04	Pin 61

Cylinder 2 ignition coil connector, harness side	ECM connector PI300, harness side
PI06, pin 04	Pin 60

Cylinder 3 ignition coil connector, harness side	ECM connector PI300, harness side
PI03, pin 04	Pin 59

Cylinder 4 ignition coil connector, harness side	ECM connector PI300, harness side
PI07, pin 04	Pin 58

Cylinder 5 ignition coil connector, harness side	ECM connector PI300, harness side
PI04, pin 04	Pin 57

Cylinder 6 ignition coil connector, harness side	ECM connector PI300, harness side
PI08, pin 04	Pin 56

www.JagDocs.com

Is the resistance greater than 5 ohms?

-> Yes
REPAIR the high resistance circuit. For additional information, refer to the wiring diagrams. CLEAR the DTCs and test the system for normal operation.

-> No
GO to Pinpoint Test G531326t14.

G531326t14 : CHECK THE IGNITION COIL MONITOR CIRCUITS FOR HIGH RESISTANCE

1. Measure the resistance between:

Cylinder 1 ignition coil connector, harness side	ECM connector PI300, harness side

PI02, pin 02	Pin 62

Cylinder 2 ignition coil connector, harness side	ECM connector PI300, harness side
PI06, pin 02	Pin 64

Cylinder 3 ignition coil connector, harness side	ECM connector PI300, harness side
PI03, pin 02	Pin 64

Cylinder 4 ignition coil connector, harness side	ECM connector PI300, harness side
PI07, pin 02	Pin 62

Cylinder 5 ignition coil connector, harness side	ECM connector PI300, harness side
PI04, pin 02	Pin 64

Cylinder 6 ignition coil connector, harness side	ECM connector PI300, harness side
PI08, pin 02	Pin 62

Is the resistance greater than 5 ohms?

-> Yes
REPAIR the high resistance circuit. For additional information, refer to the wiring diagrams. CLEAR the DTCs and test the system for normal operation.

-> No
INSTALL a new ignition coil to the relevant cylinder.
Ignition Coil-On-Plug LH (18.20.44) or
Ignition Coil-On-Plug RH (18.20.43) Clear the DTC and test the system for normal operation. Refer to the warranty policy and procedures manual if an ECM is suspect.

PINPOINT TEST G531326p2 : CHECK SPARK PLUG RESISTANCE

G531326t11 : CHECK SPARK PLUG RESISTANCE

1. Remove the suspect spark plug(s). 2. Measure the resistance between:

Spark plug	Spark plug
Center electrode tip	HT contact

Is the resistance between 8,000 and 12,000 ohms? (nominal 10,000 ohms)

-> Yes

CHECK the ignition coil and circuits. GO to Pinpoint Test G531326p1.

-> No

INSTALL a new spark plug. CLEAR the DTC and test the system for normal operation.

www.JagDocs.com

Ignition Coil-On-Plug LH (18.20.44)

Removal

1 . Disconnect the ignition coil-on-plug electrical connector.

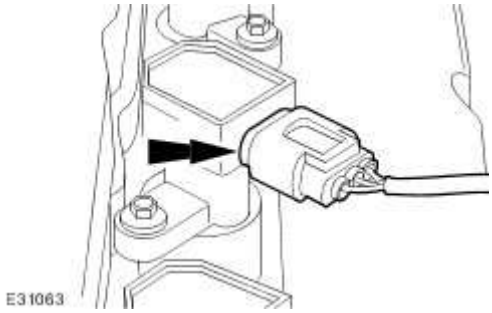

2 . Remove the ignition coil-on-plug.

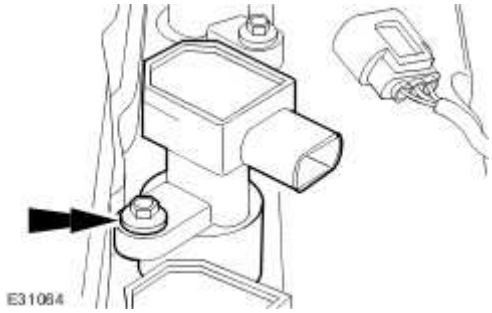

Installation

1 . To install, reverse the removal procedure.

Tighten to 6 Nm.

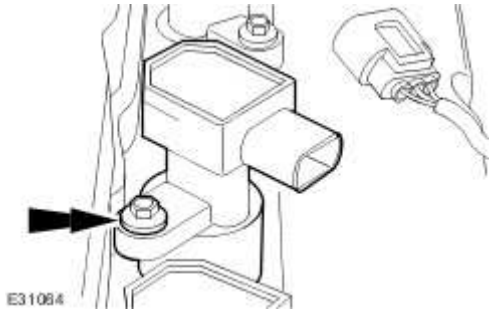

Ignition Coil-On-Plug RH (18.20.43)

Removal

1 . Remove the intake manifold. <<303-01A>>

2 . Disconnect the ignition coil-on-plug electrical connector.

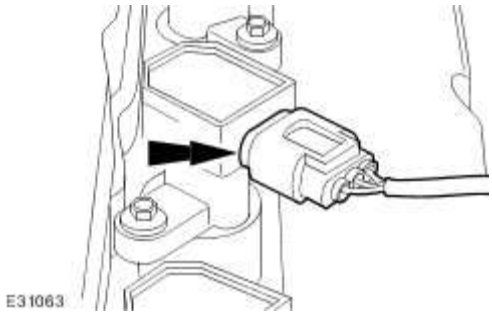

3 . Remove the ignition coil-on-plug.

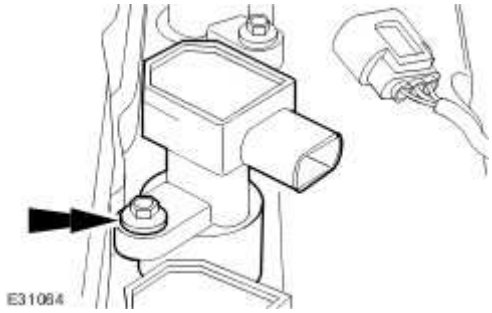

Installation

1 . To install, reverse the removal procedure.

Tighten to 6 Nm.

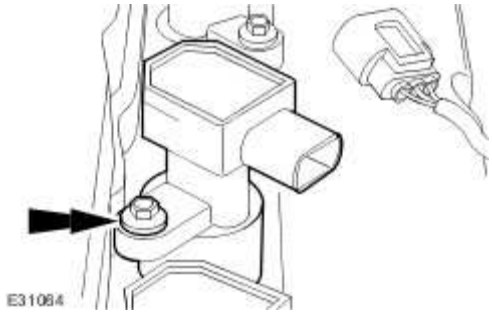

www.JagDocs.com

Specifications

General Specifications

Item	Specification
Firing order	1-5-4-2-6-3-7-8
Spark plug type - Vehicles with supercharger	NGK-IFR-5N10
Spark plug type - Vehicles without supercharger	NGK-IFR-5N10

Torque Specifications

Description	Nm	lb-ft	lb-in
Spark plugs	27	18	-
Ignition coil-on-plug retaining bolts	5	-	44

Engine Ignition

Component Locations

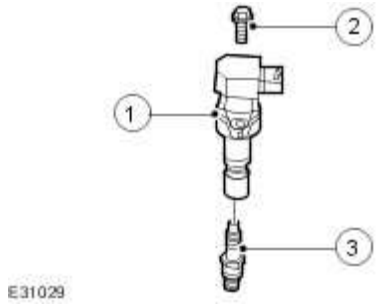

Item	Part Number	Description
1	-	Ignition coil-on-plug
2	-	Ignition coil-on-plug retaining bolt
3	-	Spark plug

The right-hand cylinders are numbered 7, 5, 3, 1 and the left-hand cylinders are numbered 8, 6, 4, 2 when viewed from the rear of the engine.

An ignition coil is located on each individual spark plug allowing the ignition timing to be adjusted independently.

The crankshaft position (CKP) sensor signal is the basis for ignition timing calculations. The alternating voltage signal from the CKP sensor is converted to a digital signal by the engine control module (ECM). This digital signal is then used to position the closing time of the primary circuit of the ignition coil. The effective range for ignition timing control is increased to the fact that there are no rotating parts.

On the basis of engine speed and load inputs, the ECM determines the ignition timing. This function also takes other inputs into consideration such as engine temperature, throttle position, knock control, camshaft position, traction control and electronic transmission control inputs.

This ignition system enables the customer to drive the vehicle home if an ignition coil or ignition coil wiring failure occurs. In the event of a wiring failure between the ECM and the ignition coil, the ignition coil will fail instead of the ignition coil fuse blowing, which will allow the remaining ignition coils to continue to function and the engine to limp home.

www.JagDocs.com

Engine Ignition - VIN Range: G00442->G45703

Inspection and Verification

1 . Verify the customer concern.

2 . Confirm which, if any, warning lights and/or messages were displayed on the instrument cluster.

NOTE:

If any warning lights and/or messages were displayed when the fault occurred, refer to the Driver Information table for DTCs associated with the display, then to the DTC index table for possible sources and actions. Some warnings will appear to clear when the ignition is cycled. This is often because the warning has flagged as a result of one of the vehicle's on-board diagnostic routines having run to detect the fault. If the same routine is not run when the ignition is switched **ON**, the warning will not reflag until the routine does run. See the DTC summaries for drive cycle routines.

3 . Visually inspect for obvious signs of mechanical or electrical damage.

Visual Inspection Chart

Mechanical	Electrical
Engine oil level	Fuses
Cooling system coolant level	Wiring harness
Fuel level	Electrical connector(s)
Fuel contamination/grade/quality	Sensor(s)
Throttle body	Engine control module (ECM)
Poly-vee belt	Transmission control module

1 . Verify the following systems are working correctly:

Air intake system

Cooling system

Charging system

Fuel system

2 . If an obvious cause for an observed or reported concern is found, correct the cause (if possible) before proceeding to the next step.

3 . Where the Jaguar approved diagnostic system is available, complete the S93 report before clearing any or all fault codes from the vehicle.

NOTE:

If a DTC cannot be cleared, then there is a permanent fault present that flags again as soon as it is cleared. (The exception to this is P1260, which will only clear following an ignition **OFF/ON** cycle after rectification).

4 . If the cause is not visually evident and the Jaguar approved diagnostic system is not available, use a fault code reader to retrieve the fault codes before proceeding to the Diagnostic Trouble Code (DTC) Index Chart, or the Symptom Chart if no DTCs are set.

5 . Using the Jaguar approved diagnostic system where available, and a scan tool where not, check the freeze frame data for information on the conditions applicable when the fault was flagged. The format of this will vary, depending on the tool used, but can provide information useful to the technician in diagnosing the fault.

CAUTION: When probing connectors to take measurements in the course of the pinpoint tests, use the adaptor kit, part number 3548-1358-00.

NOTE:

When performing electrical voltage or resistance tests, always use a digital multimeter (DMM) accurate to 3 decimal places, and with an up-to-date calibration certificate. When testing resistance, always take the resistance of the DMM leads into account.

NOTE:

Check and rectify basic faults before beginning diagnostic routines involving pinpoint tests.

Symptom	Possible source	Action
Engine cranks, but does	Engine breather system disconnected/restricte	Check engine breather system, <<303-08>>

www.JagDocs.com

not fire	d Ignition system Fuel system Harness CKP sensor ECM fault	For ignition system circuit tests, GO to Pinpoint Test G290076p1. . Check fuel pressure, <<310-01>> For CKP tests, <<303-14>> Contact dealer technical support for advice on possible ECM failure.
Engine cranks and fires, but will not start	Purge valve Fuel pump Engine coolant temperature (ECT) sensor Spark plugs Check for water ingress into spark plug wells HT short to ground (tracking) check rubber boots for cracks/damage Ignition coil failure(s) Harness	For evaporative emissions components, <<303-13>> Check fuel pressure, <<310-01>> For ECT sensor tests, <<303-14>> For ignition system circuit tests, GO to Pinpoint Test G290076p1. .
Difficult to start cold	Check coolant anti-freeze content Battery CKP sensor EGR valve stuck open Fuel pump Engine coolant temperature (ECT) sensor Purge valve	For battery information, <<414-01>> For CKP sensor tests, <<303-14>> For EGR system information, <<303-08>> Check fuel pressure. For ECT sensor tests, <<303-14>> For evaporative emissions components, <<303-13>>

Difficult to start hot	Injector leak Fuel temperature sensor IAT sensor MAF sensor Purge valve Fuel pump Ignition system Engine coolant temperature (ECT) sensor EGR valve stuck open	For fuel injectors, <<303-04>> For fuel temperature sensor, IAT sensor and MAF sensor tests, <<303-14>> For evaporative emissions components, <<303-13>> Check fuel pressure. For ignition system circuit tests, GO to Pinpoint Test G290076p1. . For ECT sensor tests, <<303-14>>
Difficult to start after hot soak (vehicle standing after engine has reached operating temperature)	Injector leak Fuel temperature sensor IAT sensor MAF sensor Purge valve Fuel pump Ignition system Engine coolant temperature (ECT) sensor EGR valve stuck open	For fuel injectors, <<303-04>> For fuel temperature sensor, IAT sensor and MAF sensor tests, <<303-14>> For evaporative emissions components, <<303-13>> Check fuel pressure. For ignition system circuit tests, GO to Pinpoint Test G290076p1. . For ECT sensor tests, <<303-14>> For EGR information, <<303-08>>
Engine stalls soon after start	Breather system disconnected/restricted ECM relay Harness MAF sensor Engine coolant temperature (ECT)	For breather system, <<303-08>> For ECM relay, MAF sensor and ECT sensor tests, <<303-14>> For ignition system circuit tests, GO to Pinpoint Test G290076p1. . For air filter information, <<303-12>> For fuel line information, <<310-01>> For fuel pressure sensor tests, <<303-04>> For intake system information, <<303-12>>

www.JagDocs.com

	sensor Ignition system Air filter restricted Fuel lines Fuel pressure sensor Air leakage	
Engine hesitates/poor acceleration	Fuel pump Injector leak Fuel pressure Fuel lines Air leakage Throttle sensors Throttle motor Ignition system Exhaust gas recirculation HO2 sensors Transmission malfunction Restricted pedal travel (carpet, etc) APP sensor	Check fuel pressure, <<310-01>> For fuel pressure sensor tests, <<303-04>> For fuel line information, <<310-01>> For intake system, <<303-12>> For throttle position sensor and throttle motor tests, <<303-14>> For ignition system circuit tests, GO to Pinpoint Test G290076p1. . For exhaust gas recirculation, <<303-08>> Check for DTCs relating to HO2 sensors. For transmission information, <<307-01>> Check accelerator pedal travel. For APP sensor tests, <<303-14>>
Engine backfires	Fuel pump Fuel lines Air leakage MAF sensor HO2 sensors Ignition system	Check fuel pressure. For fuel line information, <<310-01>> For intake system, <<303-12>> For MAF sensor tests, <<303-14>> Check for DTCs relating to HO2 sensors. For ignition system circuit tests, GO to Pinpoint Test G290076p1. . For VCT information, <<303-01>> For APP sensor tests, <<303-14>>

	Sticking VCT hub APP sensor	
Engine surges	Fuel pump Fuel lines MAF sensor Harness Throttle sensors Throttle motor Ignition system	Check fuel pressure. For fuel line information, <<310-01>> For MAF sensor, throttle sensor, and throttle motor relay tests, <<303-14>> For ignition system circuit tests, GO to Pinpoint Test G290076p1. .
Engine detonates/knocks	KS/circuit malfunction Fuel pump Fuel lines Fuel pressure sensor MAF sensor HO2 sensors Air leakage Sticking VCT hub BARO sensor malfunction	For KS circuit tests, <<303-14>> Check fuel pressure. For fuel line information, <<310-01>> For fuel pressure sensor tests, <<303-04>> For MAF sensor and HO2 sensor tests, <<303-14>> For intake system, <<303-12>> Check DTCs for VCT range/performance fault. For VCT information, <<303-01>> For BARO sensor, contact dealer technical support for advice on possible ECM failure
No throttle response	APP sensor malfunction Throttle sensors Throttle motor	For APP sensor, throttle position sensor and throttle motor relay tests, <<303-14>>
Poor throttle response	APP sensor malfunction Throttle sensors Engine coolant temperature (ECT) sensor MAF sensor	For APP sensor, throttle position sensor, ECT sensor and MAF sensor tests, <<303-14>> For transmission information, <<307-01>> For intake system, <<303-12>> For breather system information, <<303-08>>

www.JagDocs.com

	Transmission malfunction Traction control event Air leakage Breather system disconnected/restricted	

Driver Information Chart

Warning light	Message	Default Mode	DTC
Red	Engine systems fault	Engine shut-down (all cylinders fuel cut)	P1224
Red	Engine systems fault	Limp-Home	P1229
Red	Engine systems fault	Limp-Home	P0121, P0122, P0123, P0222, P0223
Red	Engine systems fault	Limp-Home	P1251, P1631
Red	Engine systems fault	Limp-Home	P1611
Red	Engine systems fault	Limp-Home	P1633
Red	Engine systems fault	High idle	P1344, P1122, P1123, P1215, P1216
Red	Restricted Performance	Limp-Home unavailable	P1254
Red	Restricted Performance	Limp-Home unavailable	P1250
Red	Restricted Performance	Safety redundancy	P1657, P1658
Red	Restricted Performance	Safety redundancy	P16634
Amber	Restricted Performance	Engine speed limited	P0116, P0117, P0118, P0125
Amber	Restricted Performance	Engine speed limited	P0101, P0102, P0103, P0104
Amber	Restricted Performance	Engine speed limited	P0300, P0301, p0302, P0303, P0304, P0305, P0306, P0307,

			P0308, P1313, P1314
Amber	Restricted Performance	Engine speed limited	P0327, P0328, P0332, P0333, P1648
Amber	Restricted Performance	Engine speed limited	P0351, P0352, P0353, P0354, P0355, P0356, P0357, P0358, P1367, P1368
Amber	Restricted Performance	Engine speed limited	P0171, P0172, P0174, P0175
Amber	Restricted Performance	Engine speed limited	
Amber	Restricted Performance	Engine speed limited	P0201, P0202, P0203, P0204, P0205, P0206, P0207, P0208
Amber	Restricted Performance	Engine speed limited	P0335, P0336
Amber	Restricted Performance	Engine speed limited, Reverse throttle progression enabled	P1642
Amber	Restricted Performance	Engine speed limited, Reverse throttle progression enabled	P1643
Amber	Restricted Performance	Engine speed limited, Reverse throttle progression enabled	P0096, P0097, P0098
Amber	Restricted Performance	Engine speed limited, Reverse throttle progression enabled	P1474
Amber	Restricted Performance	Engine speed limited	P1234, P1236, P1338
Amber	None	None	P0506, P0507
Amber	None	None	P1656
Amber	Gearbox fault/Restricted performance	Gearbox default to set gear	P0725
Amber	Gearbox	Gearbox default to set gear	P1796

www.JagDocs.com

	fault/Restricted performance		
Amber	Gearbox fault/Restricted performance	Gearbox default to set gear	P0701
Amber	Gearbox fault/Restricted performance	Gearbox default to set gear	P1603
Amber	Gearbox fault/Restricted performance	Gearbox default to set gear	P0605
Amber	Gearbox fault/Restricted performance	Gearbox default to set gear	P1719
Amber	Gearbox fault/Restricted performance	Gearbox default to set gear	P0720
Amber	Gearbox fault/Restricted performance	Gearbox default to set gear	P0715
Amber	Gearbox fault/Restricted performance	Gearbox default to set gear	P0705
Amber	Gearbox fault/Restricted performance	Gearbox default to set gear	P0610
Amber	Gearbox fault/Restricted performance	Gearbox default to set gear	P0606
Amber	Gearbox fault/Restricted performance	Gearbox default to set gear	P0750
Amber	Gearbox fault/Restricted	Gearbox default to set gear	P0753

	performance		
Amber	Gearbox fault/Restricted performance	Gearbox default to set gear	P0755
Amber	Gearbox fault/Restricted performance	Gearbox default to set gear	P0758
Amber	Gearbox fault/Restricted performance	Gearbox default to set gear	P0760
Amber	Gearbox fault/Restricted performance	Gearbox default to set gear	P0763
Amber	Gearbox fault/Restricted performance	Gearbox default to set gear	P0765
Amber	Gearbox fault/Restricted performance	Gearbox default to set gear	P0768
Amber	Gearbox fault/Restricted performance	Gearbox default to set gear	P0770
Amber	Gearbox fault/Restricted performance	Gearbox default to set gear	P0773
Amber	Gearbox fault/Restricted performance	Gearbox default to set gear	P0740
Amber	Gearbox fault/Restricted performance	Gearbox default to set gear	P0743
Amber	Gearbox fault/Restricted	Gearbox default to set gear	P0787

www.JagDocs.com

	performance		
Amber	Gearbox fault/Restricted performance	Gearbox default to set gear	P0788
Amber	Gearbox fault/Restricted performance	Gearbox default to set gear	P0730
Amber	Gearbox fault/Restricted performance	Gearbox default to set gear	P0731
Amber	Gearbox fault/Restricted performance	Gearbox default to set gear	P0732
Amber	Gearbox fault/Restricted performance	Gearbox default to set gear	P0733
Amber	Gearbox fault/Restricted performance	Gearbox default to set gear	P0734
Amber	Gearbox fault/Restricted performance	Gearbox default to set gear	P0735
Amber	Gearbox fault/Restricted performance	Gearbox default to set gear	P0729
Amber	Gearbox fault/Restricted performance	Gearbox default to set gear	P0781
Amber	Gearbox fault/Restricted performance	Gearbox default to set gear	P0782
Amber	Gearbox fault/Restricted	Gearbox default to set gear	P0783

	performance		
Amber	Gearbox fault/Restricted performance	Gearbox default to set gear	P0784
Amber	Gearbox fault/Restricted performance	Gearbox default to set gear	P0829
Amber	Gearbox fault/Restricted performance	Engine speed limited, reverse throttle progression enabled	P1797
Amber	Gearbox fault/Restricted performance	Gearbox default to set gear	P0641
Amber	Gearbox fault/Restricted performance	Gearbox default to set gear	P0651
Amber	Gearbox fault/Restricted performance	Gearbox default to set gear	P0860
Amber	Gearbox fault/Restricted performance	Limp-home	P1783

www.JagDocs.com

Default mode Definitions

LIMP-HOME MODE

Throttle motor off

Throttle motor relay off

Throttle motor circuit off

Fuel intervention

Cruise control inhibited

LIMP-HOME UNAVAILABLE

Power limitation

Vehicle speed limited to 120 kph

Reverse throttle progression enabled

Cruise Control Inhibited

REVERSE THROTTLE PROGRESSION

Throttle opening limited to maximum 30%

NOTE:

The throttle operation uses the same map as for reverse gear.

ENGINE SPEED LIMITED

Engine runs normally, up to 3000 rpm

Engine speed restricted to 3000 rpm maximum, by fuel cut-off

HIGH IDLE

Throttle valve kept in fixed position by motor

Cruise control Inhibited

SAFETY REDUNDANCY

Power limitation

Vehicle speed limited to 120 kph

Reverse throttle progression enabled

Cruise control Inhibited

Diagnostic Trouble Code (DTC) Index

DTC	Description	Possible Source	Action
P0300	Random misfire detected	ECM to ignition coil primary circuit fault (cylinder misfire detected DTC also flagged) Fuel injector circuit fault(s) (injector DTCs also flagged)	For ignition coil circuit tests, GO to Pinpoint Test G290076p1. . For fuel system, <<303-04>> Check spark plug condition/gap, For spark plug test, GO to Pinpoint

		Ignition coil failure Spark plug failure/fouled/incorrect gap Cylinder compression low Fuel delivery pressure (low/high) Fuel injectors restricted/leaking Fuel injectors continuously open Fuel contamination Worn camshaft/broken valve springs	Test G290076p2. . For engine information, <<303-00>>
P0301	Misfire detected, Cyl 1	REFER to possible sources for P0300	REFER to actions for P0300
P0302	Misfire detected, Cyl 3	REFER to possible sources for P0300	REFER to actions for P0300
P0303	Misfire detected, Cyl 5	REFER to possible sources for P0300	REFER to actions for P0300
P0304	Misfire detected, Cyl 7	REFER to possible sources for P0300	REFER to actions for P0300
P0305	Misfire detected, Cyl 2	REFER to possible sources for P0300	REFER to actions for P0300
P0306	Misfire detected, Cyl 4	REFER to possible sources for P0300	REFER to actions for P0300
P0307	Misfire detected, Cyl 6	REFER to possible sources for P0300	REFER to actions for P0300
P0308	Misfire detected, Cyl 8	REFER to possible sources for P0300	REFER to actions for P0300
P0351	Ignition coil primary/secondary	REFER to possible sources for	REFER to actions for

www.JagDocs.com

	circuit malfunction, cyl 1	P0300	P0300
P0352	Ignition coil primary/secondary circuit malfunction, cyl 3	REFER to possible sources for P0300	REFER to actions for P0300
P0353	Ignition coil primary/secondary circuit malfunction, cyl 5	REFER to possible sources for P0300	REFER to actions for P0300
P0354	Ignition coil primary/secondary circuit malfunction, cyl 7	REFER to possible sources for P0300	REFER to actions for P0300
P0355	Ignition coil primary/secondary circuit malfunction, cyl 2	REFER to possible sources for P0300	REFER to actions for P0300
P0356	Ignition coil primary/secondary circuit malfunction, cyl 4	REFER to possible sources for P0300	REFER to actions for P0300
P0357	Ignition coil primary/secondary circuit malfunction, cyl 6	REFER to possible sources for P0300	REFER to actions for P0300
P0358	Ignition coil primary/secondary circuit malfunction, cyl 8	REFER to possible sources for P0300	REFER to actions for P0300
P0603	ECM data corrupted	ECM	Contact dealer technical support for advice on possible ECM failure.
P1000	System checks not complete since last memory clear	OBD monitors have not completed	Carry out comprehensive component monitor drive cycle. Refer to the DTC section of JTIS, accessed by the icon on the opening page.
P1111	System checks complete since last memory clear	OBD monitors have completed	No action necessary
P1313	Misfire rate catalyst damage, right-hand cylinders. NOTE. This DTC will flag only when accompanied by a random or individual cylinder misfire DTC; P0300, P0301 to P0304	Refer to P0300 possible sources	Refer to P0300 Actions

P1314	Misfire rate catalyst damage, left-hand cylinders. NOTE. This DTC will flag only when accompanied by a random or individual cylinder misfire DTC; P0300 to P0308	Refer to P0300 possible sources	Refer to P0300 Actions
P1316	Misfire excess emission. NOTE. This DTC will flag only when accompanied by an individual cylinder misfire DTC; P0300 to P0308	Refer to P0300 possible sources	Refer to P0300 Actions
P1367	Ignition monitor (right-hand cylinders)	Ignition monitoring circuit between splice and ECM open circuit, short circuit to ground, or short circuit to B+ voltage Ignition coil group ground circuit fault Ignition coil relay failure	For coil circuit tests, GO to Pinpoint Test G290076p1. .
P1368	Ignition monitor (left-hand cylinders)	Ignition monitoring circuit between splice and ECM open circuit, short circuit to ground, or short circuit to B+ voltage Ignition coil group ground circuit fault Ignition coil relay failure	For coil circuit tests, GO to Pinpoint Test G290076p1. .

Pinpoint Tests

PINPOINT TEST G290076p1 : DTC P0300, P0301-0308, P0351-0358; RANDOM MISFIRE DETECTED, MISFIRE DETECTED, (CYLINDERS 1-8)

www.JagDocs.com

IGNITION COIL PRIMARY CIRCUIT MALFUNCTION, (CYLINDERS 1-8)

G290076t1 : CHECK COIL FUNCTION BY SUBSTITUTION

1. Swap the suspect coil for a known good unit. 2. CLEAR the DTC. TEST the system for normal operation.

Does the same DTC reoccur? The DTC will indicate if the same cylinder is misfiring.

-> Yes
INSTALL a new coil.
Ignition Coil-On-Plug (18.20.40) CLEAR the DTC. TEST the system for normal operation.

-> No
GO to Pinpoint Test G290076t2.

G290076t2 : CHECK THE IGNITION COIL SUPPLY VOLTAGE CIRCUIT

1. Disconnect the relevant ignition coil electrical connector(s), (PI02 to PI09). 2. Turn the ignition switch to the **ON** position. 3. Make sure the ignition relay is energised. 4. Measure the voltage between:

Cyl 1 PI02, pin 01 (RW) and GROUND.

Cyl 2 PI06, pin 01 (RW) and GROUND.

Cyl 3 PI03, pin 01 (RW) and GROUND.

Cyl 4 PI07, pin 01 (RW) and GROUND.

Cyl 5 PI04, pin 01 (RW) and GROUND.

Cyl 6 PI08, pin 01 (RW) and GROUND.

Cyl 7 PI05, pin 01 (RW) and GROUND.

Cyl 8 PI09, pin 01 (RW) and GROUND.

Is the voltage less than 10.5 Volts?

-> Yes
REPAIR the relevant ignition coil supply voltage circuit. This circuit includes the ignition relay, and the front power distribution box (fuse 1). For additional information, refer to the wiring diagrams. CLEAR the DTCs. TEST the system for normal operation.

-> No

GO to Pinpoint Test G290076t3.

G290076t3 : CHECK THE IGNITION COIL GROUND CIRCUIT

1. Turn the ignition switch to the **OFF** position. 2. Disconnect the relevant ignition coil electrical connector(s), (PI02 to PI09). 3. Measure the resistance between:

Cyl 1 PI02, pin 03 (B) and GROUND.

Cyl 2 PI06, pin 03 (B) and GROUND.

Cyl 3 PI03, pin 03 (B) and GROUND.

Cyl 4 PI07, pin 03 (B) and GROUND.

Cyl 5 PI04, pin 03 (B) and GROUND.

Cyl 6 PI08, pin 03 (B) and GROUND.

Cyl 7 PI05, pin 03 (B) and GROUND.

Cyl 8 PI09, pin 03 (B) and GROUND.

Is the resistance greater than 5 ohms?

-> Yes
REPAIR the high resistance circuit. For additional information, refer to the wiring diagrams. CLEAR the DTCs. TEST the system for normal operation.

-> No
GO to Pinpoint Test G290076t4.

G290076t4 : CHECK THE IGNITION COIL SWITCHING CIRCUITS FOR HIGH RESISTANCE

1. Disconnect the battery negative terminal. 2. Disconnect the ECM electrical connector, PI01. 3. Disconnect the relevant ignition coil electrical connector(s), (PI02 to PI09). 4. Measure the resistance between:

Cyl 1 PI02, pin 04 (GU) and PI01, pin 87 (GU).

Cyl 2 PI06, pin 04 (GW) and PI01, pin 61 (GW).

Cyl 3 PI03, pin 04 (Y) and PI01, pin 88 (Y).

Cyl 4 PI07, pin 04 (GW) and PI01, pin 62 (GW).

Cyl 5 PI04, pin 04 (YR) and PI01, pin 89 (YR).

www.JagDocs.com

Cyl 6 PI08, pin 04 (GR) and PI01, pin 63 (GR).

Cyl 7 PI05, pin 04 (GR) and PI01, pin 90 (GR).

Cyl 8 PI09, pin 04 (YR) and PI01, pin 64 (YR).

Is the resistance greater than 5 ohms?

-> Yes
REPAIR the high resistance circuit. For additional information, refer to the wiring diagrams. CLEAR the DTCs. TEST the system for normal operation.

-> No
GO to Pinpoint Test G290076t5.

G290076t5 : CHECK THE IGNITION COIL (CYLS 1, 4, 6, AND 7) MONITOR CIRCUITS FOR HIGH RESISTANCE

1. Disconnect the relevant ignition coil electrical connector(s), (PI02 to PI09). 2. Measure the resistance between:

Cyl 1 PI02, pin 02 (GB) and PI01, pin 131 (GB).

Cyl 4 PI07, pin 02 (GB) and PI01, pin 131 (GB).

Cyl 6 PI08, pin 02 (GB) and PI01, pin 131 (GB).

Cyl 7 PI05, pin 02 (GB) and PI01, pin 131 (GB).

Is the resistance greater than 5 ohms?

-> Yes
REPAIR the high resistance circuit. This circuit includes the harness splice, PIS09. For additional information, refer to the wiring diagrams. CLEAR the DTCs. TEST the system for normal operation.

-> No
GO to Pinpoint Test G290076t6.

G290076t6 : CHECK THE IGNITION COIL (CYLS 1, 4, 6, AND 7) MONITOR CIRCUITS FOR SHORT TO B+ VOLTAGE

1. Reconnect the battery negative terminal. 2. Disconnect the relevant ignition coil electrical connector(s), (PI02 to PI09). 3. Measure the voltage between:

Cyl 1 PI02, pin 02 (GB) and GROUND.

Cyl 4 PI07, pin 02 (GB) and GROUND.

Cyl 6 PI08, pin 02 (GB) and GROUND.

Cyl 7 PI05, pin 02 (GB) and GROUND.

Is the voltage greater than 3 volts?

-> Yes
REPAIR the short to B+ voltage. For additional information, refer to the wiring diagrams. CLEAR the DTCs. TEST the system for normal operation.

-> No
GO to Pinpoint Test G290076t7.

G290076t7 : CHECK THE IGNITION COIL (CYLS 1, 4, 6, AND 7) MONITOR CIRCUITS FOR SHORT TO GROUND

1. Disconnect the relevant ignition coil electrical connector(s), (PI02 to PI09). 2. Measure the resistance between:

Cyl 1 PI02, pin 02 (GB) and GROUND.

Cyl 4 PI07, pin 02 (GB) and GROUND.

Cyl 6 PI08, pin 02 (GB) and GROUND.

Cyl 7 PI05, pin 02 (GB) and GROUND.

Is the resistance less than 10,000 ohms?

-> Yes
REPAIR the short to GROUND. For additional information, refer to the wiring diagrams. CLEAR the DTCs. TEST the system for normal operation.

-> No
GO to Pinpoint Test G290076t8.

G290076t8 : CHECK THE IGNITION COIL (CYLS 2, 3, 5, AND 8) MONITOR CIRCUITS FOR HIGH RESISTANCE

1. Disconnect the relevant ignition coil electrical connector(s), (PI02 to PI09). 2. Measure the resistance between:

Cyl 2 PI06, pin 02 (YB) and PI01, pin 132 (YB).

Cyl 3 PI03, pin 02 (YB) and PI01, pin 132 (YB).

Cyl 5 PI04, pin 02 (YB) and PI01, pin 132 (YB).

www.JagDocs.com

Cyl 8 PI09, pin 02 (YB) and PI01, pin 132 (YB).

Is the resistance greater than 5 ohms?

-> Yes
REPAIR the high resistance circuit. This circuit includes the harness splice, PIS10. For additional information, refer to the wiring diagrams. CLEAR the DTCs. TEST the system for normal operation.

-> No
GO to Pinpoint Test G290076t9.

G290076t9 : CHECK THE IGNITION COIL (CYLS 2, 3, 5, AND 8) MONITOR CIRCUITS FOR SHORT TO B+ VOLTAGE

1. Reconnect the battery negative terminal. 2. Disconnect the relevant ignition coil electrical connector(s), (PI02 to PI09). 3. Measure the voltage between:

Cyl 2 PI06, pin 02 (YB) and GROUND.

Cyl 3 PI03, pin 02 (YB) and GROUND.

Cyl 5 PI04, pin 02 (YB) and GROUND.

Cyl 8 PI09, pin 02 (YB) and GROUND.

Is the voltage greater than 3 volts?

-> Yes
REPAIR the short to B+ voltage. For additional information, refer to the wiring diagrams. CLEAR the DTCs. TEST the system for normal operation.

-> No
GO to Pinpoint Test G290076t10.

G290076t10 : CHECK THE IGNITION COIL (CYLS 2, 3, 5, AND 8) MONITOR CIRCUITS FOR SHORT TO GROUND

1. Disconnect the relevant ignition coil electrical connector(s), (PI02 to PI09). 2. Measure the resistance between:

Cyl 2 PI06, pin 02 (YB) and GROUND.

Cyl 3 PI03, pin 02 (YB) and GROUND.

Cyl 5 PI04, pin 02 (YB) and GROUND.

Cyl 8 PI09, pin 02 (YB) and GROUND.

Is the resistance less than 10,000 ohms?

-> Yes
REPAIR the short to GROUND. For additional information, refer to the wiring diagrams. CLEAR the DTCs. TEST the system for normal operation.

-> No
Contact dealer technical support for advice on possible ECM failure.

PINPOINT TEST G290076p2 : CHECK SPARK PLUG RESISTANCE

G290076t11 : CHECK SPARK PLUG RESISTANCE

1. Remove the suspect spark plug(s). 2. Measure the resistance between the spark plug center electrode tip and the spark plug HT contact.

Is the resistance between 8,000 and 12,000 ohms? (nominal 10,000 ohms)

-> Yes
Check ignition coil and circuits. See possible sources list for misfire.

-> No
INSTALL a new spark plug. CLEAR the DTC. TEST the system for normal operation.

www.JagDocs.com

Engine Ignition - VIN Range: G45704->G99999

Overview

There are changes to the engine management system (EMS) for 2006 my, the most obvious of which will be the change to 7-digit diagnostic trouble codes (DTCs) from the familiar 5-digit.

Refer to the DTC index in this section for guidance on how to use these codes with the Jaguar approved diagnostic system or a scan tool.

Inspection and Verification

1 . Verify the customer concern.

2 . Visually inspect for obvious signs of mechanical or electrical damage.

Mechanical	Electrical
Engine oil level Cooling system coolant level Fuel level Fuel contamination/grade/quality	Fuses Wiring harness Loose or corroded electrical connectors Ignition coils Sensor(s) Engine control module (ECM) Transmission control module (TCM)

3 . If an obvious cause for an observed or reported concern is found, correct the cause (if possible) before proceeding to the next step.

4 . If the cause is not visually evident use the Jaguar approved diagnostic system or a scan tool to retrieve the fault codes before proceeding to the DTC Index.

Symptom Chart

Symptom	Possible source	Action
Engine cranks, but does not fire	Engine breather system disconnected/restricted Ignition system	Check the engine breather system, Engine Emission Control - VIN Range: G45704->G99999 For ignition system tests, refer to pinpoint tests in this

	Fuel system Harness Crankshaft position (CKP) sensor ECM fault	section. Check the fuel pressure, Fuel Tank and Lines - 4.2L NA V8 - AJV8/4.2L SC V8 - AJV8/3.0L NA V6 - AJ27/3.5L NA V8 - AJV8, VIN Range: G45704->G99999 For CKP tests, Electronic Engine Controls - VIN Range: G45704->G99999 Refer to the warranty policy and procedures manual if an ECM is suspect.
Engine cranks and fires, but will not start	Evaporative emissions purge valve Fuel pump Spark plugs HT short to ground (tracking) check rubber boots for cracks/damage Ignition coil failure(s) Harness	For purge valve tests, Evaporative Emissions - VIN Range: G45704->G99999 Check the fuel pressure, Fuel Tank and Lines - 4.2L NA V8 - AJV8/4.2L SC V8 - AJV8/3.0L NA V6 - AJ27/3.5L NA V8 - AJV8, VIN Range: G45704->G99999 For spark plug tests, GO to Pinpoint Test G531328p2. For ignition coil circuit tests, GO to Pinpoint Test G531328p1.
Difficult to start cold	Coolant anti-freeze content Battery CKP sensor Exhaust gas recirculation (EGR) valve stuck open Fuel pump Purge valve	Check the anti-freeze content. For battery information, Battery For CKP sensor tests, Electronic Engine Controls - VIN Range: G45704->G99999 For EGR valve tests, Engine Emission Control - VIN Range: G45704->G99999 Check the fuel pressure, Fuel Tank and Lines - 4.2L NA V8 - AJV8/4.2L SC V8 - AJV8/3.0L NA V6 - AJ27/3.5L NA V8 - AJV8, VIN Range: G45704->G99999 For purge valve tests, Evaporative Emissions - VIN Range: G45704->G99999
Difficult to start hot	Injector leak Engine fuel temperature (EFT) sensor Intake air temperature (IAT)	For fuel injectors, Fuel Injectors (18.10.02) For EFT, IAT and MAF sensor tests, Electronic Engine Controls - VIN Range: G45704->G99999 For purge valve tests, Evaporative Emissions - VIN Range:

www.JagDocs.com

	sensor Mass air flow (MAF) sensor Purge valve Fuel pump Ignition system EGR valve stuck open	G45704->G99999 Check the fuel pressure, Fuel Tank and Lines - 4.2L NA V8 - AJV8/4.2L SC V8 - AJV8/3.0L NA V6 - AJ27/3.5L NA V8 - AJV8, VIN Range: G45704->G99999 For ignition coil circuit tests, GO to Pinpoint Test G531328p1. For EGR valve tests, Engine Emission Control - VIN Range: G45704->G99999
Difficult to start after hot soak (vehicle standing after engine has reached operating temperature)	Injector leak EFT sensor IAT sensor MAF sensor Purge valve Fuel pump Ignition system EGR valve stuck open	For fuel injectors, Fuel Injectors (18.10.02) For EFT, IAT and MAF sensor tests, Electronic Engine Controls - VIN Range: G45704->G99999 For purge valve tests, Evaporative Emissions - VIN Range: G45704->G99999 Check the fuel pressure, Fuel Tank and Lines - 4.2L NA V8 - AJV8/4.2L SC V8 - AJV8/3.0L NA V6 - AJ27/3.5L NA V8 - AJV8, VIN Range: G45704->G99999 For ignition coil circuit tests, GO to Pinpoint Test G531328p1. For EGR valve tests, Engine Emission Control - VIN Range: G45704->G99999
Engine stalls soon after start	Breather system disconnected/restricted ECM relay Harness MAF sensor Ignition system Air filter restricted Fuel lines	For breather system, Engine Emission Control - VIN Range: G45704->G99999 For ECM relay and MAF sensor tests, Electronic Engine Controls - VIN Range: G45704->G99999 For ignition coil circuit tests, GO to Pinpoint Test G531328p1. For air filter information, Intake Air Distribution and Filtering - VIN Range: G00442->G45703 Check the fuel lines, Fuel Tank and Lines - 4.2L NA V8 - AJV8/4.2L SC V8 - AJV8/3.0L NA V6 - AJ27/3.5L NA V8 - AJV8, VIN Range:

	FRP sensor Air leakage	G45704->G99999 For FRP sensor tests, Electronic Engine Controls - VIN Range: G45704->G99999 For intake system information, Intake Air Distribution and Filtering - VIN Range: G00442->G45703
Engine hesitates/poor acceleration	Fuel pump Injector leak Fuel pressure Fuel lines Air leakage Throttle position (TP) sensors Throttle motor Ignition system EGR valve stuck open HO2 sensors Transmission malfunction Restricted pedal travel (carpet, etc) Accelerator pedal position (APP) sensor	Check the fuel pressure, check the fuel lines, Fuel Tank and Lines - 4.2L NA V8 - AJV8/4.2L SC V8 - AJV8/3.0L NA V6 - AJ27/3.5L NA V8 - AJV8, VIN Range: G45704->G99999 For intake system, Intake Air Distribution and Filtering - VIN Range: G00442->G45703 For TP sensor and throttle motor tests, Electronic Engine Controls - VIN Range: G45704->G99999 For ignition coil circuit tests, GO to Pinpoint Test G531328p1. For EGR valve tests, Engine Emission Control - VIN Range: G45704->G99999 Check for DTCs relating to HO2 sensors. Refer to the DTC index for pinpoint tests for DTC set. For transmission information, Check the accelerator pedal travel. For APP sensor tests, Electronic Engine Controls - VIN Range: G45704->G99999
Engine backfires	Fuel pump Fuel lines Air leakage MAF sensor HO2 sensors Ignition system Sticking variable camshaft	Check the fuel pressure, check the fuel lines, Fuel Tank and Lines - 4.2L NA V8 - AJV8/4.2L SC V8 - AJV8/3.0L NA V6 - AJ27/3.5L NA V8 - AJV8, VIN Range: G45704->G99999 For intake system, Intake Air Distribution and Filtering - VIN Range: G00442->G45703 For MAF sensor tests, Electronic Engine Controls - VIN Range: G45704->G99999 Check for DTCs relating to HO2 sensors. Refer to the

www.JagDocs.com

	timing (VCT) hub APP sensor	DTC index for pinpoint tests for DTC set. For ignition coil circuit tests, GO to Pinpoint Test G531328p1. For VCT information, Engine For APP sensor tests, Electronic Engine Controls - VIN Range: G45704->G99999
Engine surges	Fuel pump Fuel lines MAF sensor Harness TP sensors Throttle motor Ignition system	Check the fuel pressure, check the fuel lines, Fuel Tank and Lines - 4.2L NA V8 - AJV8/4.2L SC V8 - AJV8/3.0L NA V6 - AJ27/3.5L NA V8 - AJV8, VIN Range: G45704->G99999 For MAF, TP sensor and throttle motor tests, Electronic Engine Controls - VIN Range: G45704->G99999 For ignition coil circuit tests, GO to Pinpoint Test G531328p1.
Engine detonates/knocks	Knock sensor (KS) circuit malfunction Fuel pump Fuel lines FRP sensor MAF sensor HO2 sensors Air leakage Sticking VCT hub BARO sensor malfunction (internal ECM fault)	For KS circuit tests, Electronic Engine Controls - VIN Range: G45704->G99999 Check the fuel pressure, check the fuel lines, Fuel Tank and Lines - 4.2L NA V8 - AJV8/4.2L SC V8 - AJV8/3.0L NA V6 - AJ27/3.5L NA V8 - AJV8, VIN Range: G45704->G99999 For FRP, MAF and HO2 sensor tests, Electronic Engine Controls - VIN Range: G45704->G99999 For intake system, Intake Air Distribution and Filtering - VIN Range: G00442->G45703 Check DTCs for VCT range/performance fault. For VCT information, Engine Refer to the warranty policy and procedures manual if an ECM is suspect.
No throttle response	APP sensor malfunction TP sensors Throttle motor	For APP, TP sensor and throttle motor tests, Electronic Engine Controls - VIN Range: G45704->G99999
Poor throttle response	APP sensor malfunction	For APP, TP, ECT and MAF sensor tests, Electronic Engine Controls - VIN Range:

	TP sensors ECT sensor MAF sensor Transmission malfunction Traction control event Air leakage Breather system disconnected/restricted	G45704->G99999 For transmission information, For intake system, Intake Air Distribution and Filtering - VIN Range: G00442->G45703 For breather system information, Engine Emission Control - VIN Range: G45704->G99999

Diagnostic Trouble Code (DTC) Index

NOTE:

Generic scan tools may not read the codes listed, or may read only 5-digit codes. Match the 5 digits from the scan tool to the first 5 digits of the 7-digit code listed to identify the fault (the last 2 digits give extra information read by the manufacturer-approved diagnostic system).

NOTE:

For a full list of DTCs,
Electronic Engine Controls - VIN Range: G45704->G99999

DTC	Description	Possible causes	Action
P035100	Cylinder 1 ignition coil primary/secondary circuit	ECM to ignition module/coil drive circuit: short circuit to ground, high resistance Ignition module/coil ground circuit: high resistance Ignition module/coil supply circuit: open circuit (including relay)	For ignition coil tests, GO to Pinpoint Test G531328p1.
P035200	Cylinder 2 ignition coil primary/secondary circuit	ECM to ignition module/coil drive circuit: short circuit to ground, high resistance Ignition module/coil ground	For ignition coil tests, GO to Pinpoint Test G531328p1.

www.JagDocs.com

		circuit: high resistance Ignition module/coil supply circuit: open circuit (including relay)	
P035300	Cylinder 3 ignition coil primary/secondary circuit	ECM to ignition module/coil drive circuit: short circuit to ground, high resistance Ignition module/coil ground circuit: high resistance Ignition module/coil supply circuit: open circuit (including relay)	For ignition coil tests, GO to Pinpoint Test G531328p1.
P035400	Cylinder 4 ignition coil primary/secondary circuit	ECM to ignition module/coil drive circuit: short circuit to ground, high resistance Ignition module/coil ground circuit: high resistance Ignition module/coil supply circuit: open circuit (including relay)	For ignition coil tests, GO to Pinpoint Test G531328p1.
P035500	Cylinder 5 ignition coil primary/secondary circuit	ECM to ignition module/coil drive circuit: short circuit to ground, high resistance Ignition module/coil ground circuit: high resistance Ignition module/coil supply circuit: open circuit (including relay)	For ignition coil tests, GO to Pinpoint Test G531328p1.
P035600	Cylinder 6 ignition coil primary/secondary circuit	ECM to ignition module/coil drive circuit: short circuit to ground, high resistance Ignition module/coil ground circuit: high resistance Ignition module/coil supply circuit: open circuit (including relay)	For ignition coil tests, GO to Pinpoint Test G531328p1.
P035700	Cylinder 7 ignition coil primary/secondary circuit	ECM to ignition module/coil drive circuit: short circuit to ground, high resistance	For ignition coil tests, GO to Pinpoint Test G531328p1.

		Ignition module/coil ground circuit: high resistance Ignition module/coil supply circuit: open circuit (including relay)	
P035800	Cylinder 8 ignition coil primary/secondary circuit	ECM to ignition module/coil drive circuit: short circuit to ground, high resistance Ignition module/coil ground circuit: high resistance Ignition module/coil supply circuit: open circuit (including relay)	For ignition coil tests, GO to Pinpoint Test G531328p1.
P131500	Persistent misfire	Spark plug failure/fouled/incorrect gap Ignition coil failure ECM to ignition coil primary circuit fault (cylinder misfire detected DTC also flagged) Fuel delivery pressure low Fuel injector circuit fault(s) (injector DTCs also flagged) Cylinder compression low	For spark plug tests, GO to Pinpoint Test G531328p2. For ignition coil circuit tests, GO to Pinpoint Test G531328p1. Check the fuel pressure, Fuel Tank and Lines - 4.2L NA V8 - AJV8/4.2L SC V8 - AJV8/3.0L NA V6 - AJ27/3.5L NA V8 - AJV8, VIN Range: G45704->G99999 For injector circuit tests, Fuel Charging and Controls - VIN Range: G45704->G99999 Check the cylinder compressions, Engine - 4.2L NA V8 - AJV8/4.2L SC V8 - AJV8/3.0L NA V6 - AJ27/3.5L NA V8 - AJV8
P136700	Ignition amplifier group A	Ignition monitoring circuit to ECM: open circuit, short circuit to ground, short circuit to power Ignition module/coils right hand bank ground circuit fault	For ignition coil tests, GO to Pinpoint Test G531328p1.
P136800	Ignition amplifier group B	Ignition monitoring circuit to ECM: open circuit, short circuit to ground, short	For ignition coil tests, GO to Pinpoint Test G531328p1.

www.JagDocs.com

		circuit to power Ignition module/coils left hand bank ground circuit fault	

Pinpoint Tests

CAUTION: When probing connectors to take measurements in the course of the pinpoint tests, use the adaptor kit, part number 3548-1358-00.

NOTE:

When performing electrical voltage or resistance tests, always use a digital multimeter (DMM) accurate to 3 decimal places, and with an up-to-date calibration certificate. When testing resistance, always take the resistance of the DMM leads into account.

NOTE:

Check and rectify basic faults before beginning diagnostic routines involving pinpoint tests.

PINPOINT TEST G531328p1 : IGNITION COIL CIRCUITS

G531328t2 : CHECK THE IGNITION COIL SUPPLY VOLTAGE CIRCUIT

1. Disconnect the relevant ignition coil electrical connector:

Ignition coil connector
Cylinder 1, PI02
Cylinder 2, PI06
Cylinder 3, PI03
Cylinder 4, PI07
Cylinder 5, PI04
Cylinder 6, PI08

Cylinder 7, PI05
Cylinder 8, PI09

2. Key on, engine off. 3. Make sure the ignition relay is energized. 4. Measure the voltage between:

Ignition coil connector, harness side	Battery
Pin 01	Negative terminal

Is the voltage less than 10.5 Volts?

-> Yes
REPAIR the relevant ignition coil supply circuit. This circuit includes fuse 30 of the front power distribution box and the ignition relay. For additional information, refer to the wiring diagrams. CLEAR the DTCs and test the system for normal operation.

-> No
GO to Pinpoint Test G531328t12.

G531328t12 : CHECK THE IGNITION COIL SWITCHING CIRCUITS FOR SHORT CIRCUIT TO GROUND

1. Key off. 2. Measure the resistance between:

Ignition coil connector, harness side	Battery
Pin 04	Negative terminal

Is the resistance less than 10,000 ohms?

-> Yes
REPAIR the short circuit. For additional information, refer to the wiring diagrams. CLEAR the DTCs and test the system for normal operation.

-> No
GO to Pinpoint Test G531328t13.

www.JagDocs.com

G531328t13 : CHECK THE IGNITION COIL SWITCHING CIRCUITS FOR SHORT CIRCUIT TO POWER

1. Measure the resistance between:

Ignition coil connector, harness side	Battery
Pin 04	Positive terminal

Is the resistance less than 10,000 ohms?

-> Yes
REPAIR the short circuit. For additional information, refer to the wiring diagrams. CLEAR the DTCs and test the system for normal operation.

-> No
GO to Pinpoint Test G531328t4.

G531328t4 : CHECK THE IGNITION COIL MONITOR CIRCUITS FOR SHORT CIRCUIT TO GROUND

1. Measure the resistance between:

Ignition coil connector, harness side	Battery
Pin 02	Negative terminal

Is the resistance less than 10,000 ohms?

-> Yes
REPAIR the short circuit. For additional information, refer to the wiring diagrams. CLEAR the DTCs and test the system for normal operation.

-> No
GO to Pinpoint Test G531328t5.

G531328t5 : CHECK THE IGNITION COIL MONITOR CIRCUITS FOR SHORT CIRCUIT TO POWER

1. Measure the resistance between:

Ignition coil connector, harness side	Battery

Pin 02	Positive terminal

Is the resistance less than 10,000 ohms?

-> Yes
REPAIR the short circuit. For additional information, refer to the wiring diagrams. CLEAR the DTCs and test the system for normal operation.

-> No
GO to Pinpoint Test G531328t3.

G531328t3 : CHECK THE IGNITION COIL GROUND CIRCUIT FOR HIGH RESISTANCE

1. Measure the resistance between:

Cylinder 1 ignition coil connector, harness side	**Battery**
PI02, pin 03	Negative terminal

Cylinder 2 ignition coil connector, harness side	**Battery**
PI06, pin 03	Negative terminal

Cylinder 3 ignition coil connector, harness side	**Battery**
PI03, pin 03	Negative terminal

Cylinder 4 ignition coil connector, harness side	**Battery**
PI07, pin 03	Negative terminal

Cylinder 5 ignition coil connector, harness side	**Battery**
PI04, pin 03	Negative terminal

www.JagDocs.com

Cylinder 6 ignition coil connector, harness side	Battery
PI08, pin 03	Negative terminal

Cylinder 7 ignition coil connector, harness side	Battery
PI05, pin 03	Negative terminal

Cylinder 8 ignition coil connector, harness side	Battery
PI09, pin 03	Negative terminal

Is the resistance greater than 5 ohms?

-> Yes
REPAIR the high resistance circuit. For additional information, refer to the wiring diagrams. CLEAR the DTCs and test the system for normal operation.

-> No
GO to Pinpoint Test G531328t6.

G531328t6 : CHECK THE IGNITION COIL SWITCHING CIRCUITS FOR HIGH RESISTANCE

1. Disconnect the ECM electrical connector, PI300. 2. Measure the resistance between:

Cylinder 1 ignition coil connector, harness side	ECM connector PI300, harness side
PI02, pin 04	Pin 61

Cylinder 2 ignition coil connector, harness side	ECM connector PI300, harness side
PI06, pin 04	Pin 60

Cylinder 3 ignition coil connector, harness side	ECM connector PI300, harness side

PI03, pin 04	Pin 59

Cylinder 4 ignition coil connector, harness side	ECM connector PI300, harness side
PI07, pin 04	Pin 58

Cylinder 5 ignition coil connector, harness side	ECM connector PI300, harness side
PI04, pin 04	Pin 57

Cylinder 6 ignition coil connector, harness side	ECM connector PI300, harness side
PI08, pin 04	Pin 56

Cylinder 7 ignition coil connector, harness side	ECM connector PI300, harness side
PI05, pin 04	Pin 55

Cylinder 8 ignition coil connector, harness side	ECM connector PI300, harness side
PI09, pin 04	Pin 54

Is the resistance greater than 5 ohms?

-> Yes
REPAIR the high resistance circuit. For additional information, refer to the wiring diagrams. CLEAR the DTCs and test the system for normal operation.

-> No
GO to Pinpoint Test G531328t7.

G531328t7 : CHECK THE IGNITION COIL MONITOR CIRCUITS FOR HIGH RESISTANCE

1. Measure the resistance between:

www.JagDocs.com

Cylinder 1 ignition coil connector, harness side	ECM connector PI300, harness side
PI02, pin 02	Pin 62

Cylinder 2 ignition coil connector, harness side	ECM connector PI300, harness side
PI06, pin 02	Pin 64

Cylinder 3 ignition coil connector, harness side	ECM connector PI300, harness side
PI03, pin 02	Pin 64

Cylinder 4 ignition coil connector, harness side	ECM connector PI300, harness side
PI07, pin 02	Pin 62

Cylinder 5 ignition coil connector, harness side	ECM connector PI300, harness side
PI04, pin 02	Pin 64

Cylinder 6 ignition coil connector, harness side	ECM connector PI300, harness side
PI08, pin 02	Pin 62

Cylinder 7 ignition coil connector, harness side	ECM connector PI300, harness side
PI05, pin 02	Pin 62

Cylinder 8 ignition coil connector, harness side	ECM connector PI300, harness side
PI09, pin 02	Pin 64

Is the resistance greater than 5 ohms?

-> Yes
REPAIR the high resistance circuit. For additional information, refer to the wiring diagrams. CLEAR the DTCs and test the system for normal operation.

-> No
INSTALL a new ignition coil to the relevant cylinder.
Ignition Coil-On-Plug (18.20.40) Clear the DTC and test the system for normal operation. Refer to the warranty policy and procedures manual if an ECM is suspect.

PINPOINT TEST G531328p2 : CHECK SPARK PLUG RESISTANCE

G531328t11 : CHECK SPARK PLUG RESISTANCE

1. Remove the suspect spark plug(s). 2. Measure the resistance between:

Spark plug	Spark plug
Center electrode tip	HT contact

Is the resistance between 8,000 and 12,000 ohms? (nominal 10,000 ohms)

-> Yes
Check ignition coil and circuits. See possible sources list for misfire.

-> No
INSTALL a new spark plug. CLEAR the DTC and test the system for normal operation.

www.JagDocs.com

Ignition Coil-On-Plug (18.20.40)

Removal

1 . Remove the oil level indicator.

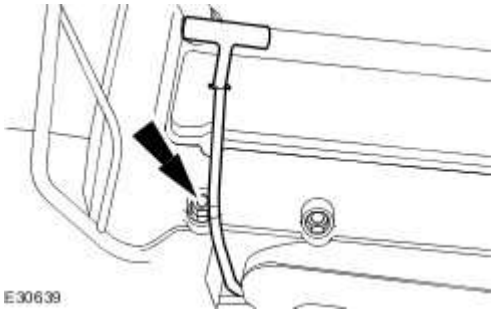

2 . **NOTE:**

Left-hand shown, right hand similar.

Remove the ignition coil-on-plug cover.

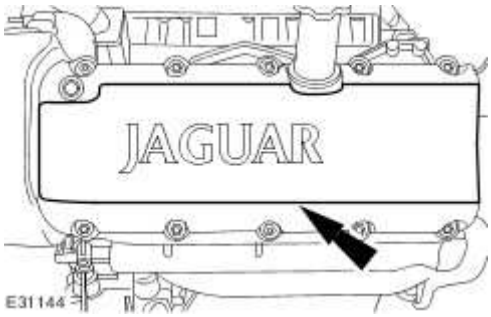

3 . Disconnect the ignition coil-on-plug electrical connector.

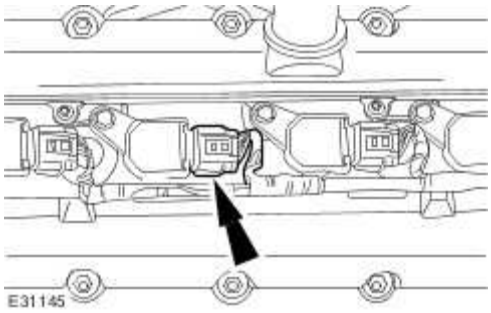

4 . Remove the ignition coil-on-plug.

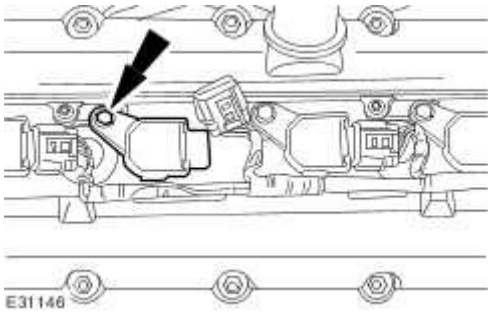

Installation

1 . To install, reverse the removal procedure.

2 . Tighten to 5 Nm.

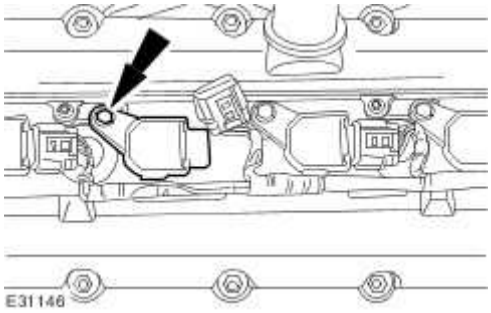

www.JagDocs.com

Specifications

Description	Nm	lb-ft	lb-in
Glow plug	10	-	89

Glow Plug System

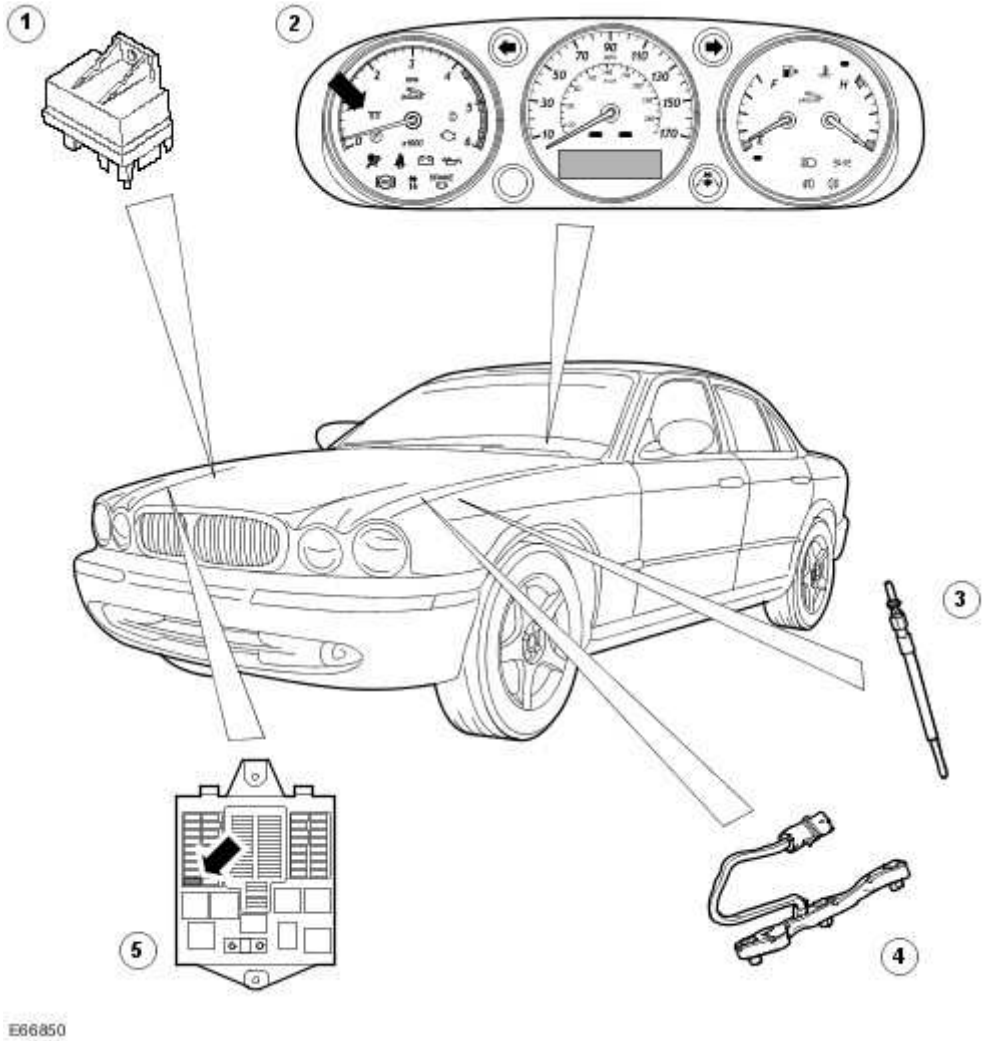

Item	Part Number	Description
1		Glow plug module
2		Pre-heat warning light
3		Glow plug
4		Glow plug harness
5		Glow plug fuse

The fundamental purpose of the glow plugs is to improve the cold start capability, cold start emissions and customer perception of the vehicle, such as short glow plug times and minimum cranking times, as well as low combustion noise at low ambient temperatures.

The maximum current when switched on will be approximately 18 Amps per glow plug at 40°

www.JagDocs.com

C (104° F) with a 12 Volt supply.

The glow plug control module (GPCM) is located in the engine bay on the right-hand side. It acts as a switch for the current to the glow plugs and is controlled via the engine control module (ECM). Above a given coolant temperature, glow plugs will not be switched on before, during or after starting. Within a certain coolant temperature range, the glow plugs will be active before cranking to increase combustion chamber temperature, during cranking to assist engine starting, and after the engine has started in order to reduce the emissions of white and possibility black smoke from the tail pipe immediately following a cold start.

The ECM is connected to the GPCM via a reference control line and a diagnostic line. The former will be pulled down by the ECM causing the GPCM to switch on and to remain switched on while the reference voltage is low. The ECM will store the error information generated by the GPCM in the case of glow plug failure.

Glow Plug System

Overview

There are changes to the engine management system (EMS) for 2006 my, the most obvious of which will be the change to 7-digit diagnostic trouble codes (DTCs) from the familiar 5-digit.

Refer to the DTC index in this section for guidance on how to use these codes with the Jaguar approved diagnostic system or a scan tool.

For information on the operation of the system,
Glow Plug System

Inspection and Verification

1 . Verify the customer concern.

2 . Visually inspect for obvious signs of electrical damage.

Electrical
Glow plug lamp
Fuses (100 Amp midifuse and fuse 9 of the front power distribution box)
Glow plug control module (GPCM)
Engine management control relay
Wiring harness(es)
Electrical connector(s)
Glow plug(s)
Engine control module (ECM)

3 . If an obvious cause for an observed or reported concern is found, correct the cause (if possible) and test the system for normal operation before proceeding to the next step.

4 . If the cause is not visually evident use the Jaguar approved diagnostic system or a scan tool to retrieve the fault codes before proceeding to the DTC index, or the symptom chart if no DTCs are set.

www.JagDocs.com

Symptom chart

Symptom	Possible cause	Action
Poor starting (extreme weather conditions)	Glow plugs inoperative/inefficient Fuel temperature too low	Check the glow plug harnesses at the glow plugs and at the connection to the main harness. For additional information, refer to the wiring diagrams. Check for DTCs indicating a control module or circuit fault. The fuel system recycles fuel until operating temperature is reached to reduce this possibility.
High cold-engine emissions	After-glow phase inoperative	Check the glow plug harnesses at the glow plugs and at the connection to the main harness. For additional information, refer to the wiring diagrams. Check for DTCs indicating a control module or circuit fault. After-glow is designed to function at engine temperatures below 50° C (122° F), and below 2500 rpm.
High cold-engine noise, vibration or harshness	After-glow phase inoperative	Check the glow plug harnesses at the glow plugs and at the connection to the main harness. For additional information, refer to the wiring diagrams. Check for DTCs indicating a control module or circuit fault. After-glow is designed to function at engine temperatures below 50° C (122° F), and below 2500 rpm.

DTC index

NOTE:

Generic scan tools may not read the codes listed, or may read only 5-digit codes. Match the 5 digits from the scan tool to the first 5 digits of the 7-digit code listed to identify the fault (the last 2 digits give extra information read by the manufacturer-approved diagnostic system).

NOTE:

For a full list of powertrain DTCs,
Electronic Engine Controls

DTC	Description	Possible source	Action
P038000	Glow plug control module (GPCM)	The GPCM is driven, but the glow plugs are not powered	For GPCM circuit tests, GO to Pinpoint Test G552799p2.

P038200	Glow plug control module (GPCM)	The GPCM is not driven, but the glow plugs are powered	For GPCM circuit tests, GO to Pinpoint Test G552799p2.
P038300	Glow plug control module (GPCM) circuit low	GPCM control circuit: short circuit to ground	For GPCM control circuit tests, GO to Pinpoint Test G552799p1.
P038400	Glow plug control module (GPCM) circuit high	GPCM control circuit: short circuit to power	For GPCM control circuit tests, GO to Pinpoint Test G552799p1.
P067000	Glow plug control module (GPCM) circuit open	GPCM control circuit: high resistance	For GPCM control circuit tests, GO to Pinpoint Test G552799p1.

Pinpoint Tests

CAUTION: When probing connectors to take measurements in the course of the pinpoint tests, use the adaptor kit, part number 3548-1358-00. Failure to follow this instruction may result in damage to the vehicle.

NOTE:

When performing voltage or resistance tests, always use a digital multimeter (DMM) accurate to 3 decimal places, and with an up-to-date calibration certificate. When testing resistance, always take the resistance of the DMM leads into account.

NOTE:

Check and rectify basic faults before beginning diagnostic routines involving pinpoint tests.

NOTE:

If DTCs are recorded and a fault is not present when performing the pinpoint tests, an intermittent concern may be the cause. Always check for loose connections and corroded terminals.

www.JagDocs.com

PINPOINT TEST G552799p1 : GLOW PLUG CONTROL MODULE (GPCM) CONTROL CIRCUIT

G552799t1 : CHECK THE GPCM CONTROL CIRCUIT FOR SHORT CIRCUIT TO GROUND

1.

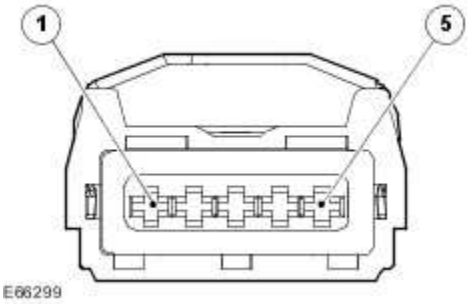

Circuit	Pin
Ground	01
Control from ECM	02
Power supply from FPDB	03
Logic monitor	05

2.

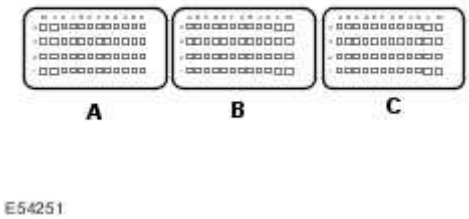

Circuit	Pin
Glow plug control module signal	G3
Logic monitor	E3

3. Key off. 4. Disconnect the GPCM electrical connector, EC69. 5. Measure the resistance between:

E69, harness side	Battery
Pin 02	Negative terminal

Is the resistance greater than 10 Kohms?

-> Yes
GO to Pinpoint Test G552799t3.

-> No
GO to Pinpoint Test G552799t2.

G552799t2 : CHECK WHETHER THE SHORT CIRCUIT IS IN THE HARNESS OR THE MODULE

1. Disconnect the ECM connector, C100. 2. Measure the resistance between:

EC69, harness side	Battery
Pin 02	Negative terminal

Is the resistance greater than 10 Kohms?

-> Yes
An intermittent fault may be present in the wiring harness. Visually check for chaffed wires or other physical damage to the harness.

-> No
REPAIR the short circuit. For additional information, refer to the wiring diagrams. Clear the DTC, test the system for normal operation.

G552799t3 : CHECK THE GPCM CONTROL CIRCUIT FOR SHORT CIRCUIT TO POWER

1. Key off. 2. Measure the resistance between:

EC69, harness side	Battery

www.JagDocs.com

Pin 02	Positive terminal

Is the resistance greater than 10 Kohms?

-> Yes
GO to Pinpoint Test G552799t5.

-> No
GO to Pinpoint Test G552799t4.

G552799t4 : CHECK WHETHER THE SHORT CIRCUIT IS IN THE HARNESS OR THE module

1. Disconnect the ECM connector, C100. 2. Measure the resistance between:

EC69, harness side	Battery
Pin 02	Positive terminal

Is the resistance greater than 10 Kohms?

-> Yes
An intermittent fault may be present in the wiring harness. Visually check for chaffed wires or other physical damage to the harness.

-> No
REPAIR the short circuit. For additional information, refer to the wiring diagrams. Clear the DTC, test the system for normal operation.

G552799t5 : CHECK THE GPCM CONTROL CIRCUIT FOR HIGH RESISTANCE

1. Disconnect the ECM connector, C100. 2. Measure the resistance between:

EC69, harness side	C100, harness side
Pin 02	Pin G3

Is the resistance less than 10 ohms?

-> Yes
An intermittent fault may be present in the wiring harness. Visually check for chaffed wires or other physical damage to the harness. Refer to the warranty policy and procedures manual if a module is suspect.

-> No
REPAIR the high resistance circuit. This circuit includes connector, PI41. For additional information, refer to the wiring diagrams. Clear the DTC, test the system for normal operation.

PINPOINT TEST G552799p2 : GLOW PLUG CONTROL MODULE (GPCM) OUTPUT

G552799t6 : CHECK THE PERMANENT POWER SUPPLY TO THE GPCM

1.

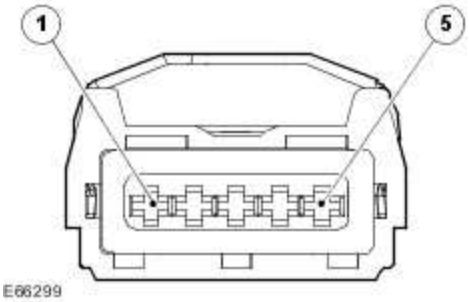

Circuit	Pin
Ground	01
Control from ECM	02
Power supply from FPDB	03
Logic monitor	05

2.

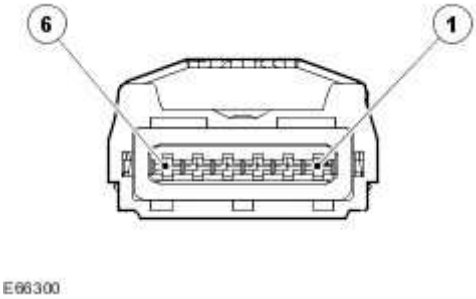

www.JagDocs.com

Circuit	Pin
Cylinder 1 output	Pin 01
Cylinder 2 output	Pin 02
Cylinder 3 output	Pin 03
Cylinder 4 output	Pin 04
Cylinder 5 output	Pin 05
Cylinder 6 output	Pin 06

3.

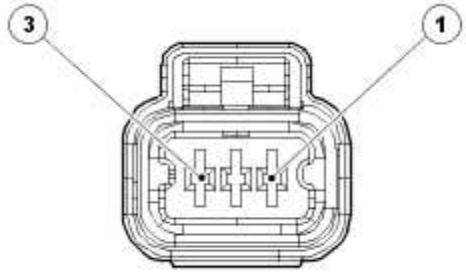

E66319

Circuit	Pin
Cylinder 1	01
Cylinder 2	02
Cylinder 3	03

4.

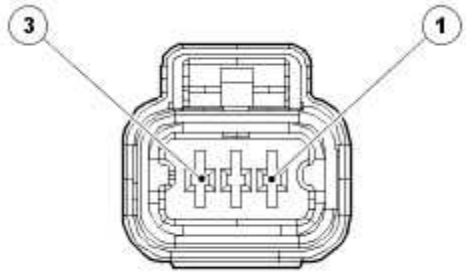

E66319

Circuit	Pin

Cylinder 4	01
Cylinder 5	02
Cylinder 6	03

5. Disconnect the glow plug module connector, EC73 (this is an eyelet). 6. Measure the voltage between:

EC73, harness side	Battery
Pin 01	Negative terminal

Is the voltage greater than 10 volts?

-> Yes
GO to Pinpoint Test G552799t7.

-> No
REPAIR the permanent power supply circuit. This circuit includes the 100A midi fuse. For additional information, refer to the wiring diagrams. Clear any DTCs, test the system for normal operation.

G552799t7 : CHECK THE IGNITION POWER SUPPLY TO THE GPCM

1. Disconnect the glow plug module connector, EC69. 2. Key on, engine off.

Make sure the EMS relay is energized 3. Measure the voltage between:

EC69, harness side	Battery
Pin 03	Negative terminal

Is the voltage greater than 10 volts?

-> Yes
GO to Pinpoint Test G552799t8.

-> No
REPAIR the ignition power supply circuit. This circuit includes fuse 9 of the front power distribution

www.JagDocs.com

box. For additional information, refer to the wiring diagrams. Clear any DTCs, test the system for normal operation.

G552799t8 : CHECK THE GROUND TO THE GPCM

1. Key off. 2. Measure the resistance between:

EC69, harness side	Battery
Pin 01	Negative terminal

Is the resistance less than 10 ohms?

-> Yes
GO to Pinpoint Test G552799t9.

-> No
REPAIR the high resistance circuit. For additional information, refer to the wiring diagrams. Clear any DTCs, test the system for normal operation.

G552799t9 : CHECK THE GLOW PLUG OUTPUT CIRCUITS FOR SHORT CIRCUIT TO GROUND

1. Key off. 2. Disconnect the glow plug module connector, EC74 3. Disconnect the glow plug connectors, EC76 and EC77. 4. Measure the resistance between:

EC76, harness side	Battery
Pin 01	Negative terminal
Pin 02	
Pin 03	

EC77, harness side	Battery
Pin 04	Negative terminal
Pin 05	
Pin 06	

Is the resistance greater than 100 Kohms?

-> Yes
GO to Pinpoint Test G552799t10.

-> No
REPAIR the short circuit. For additional information, refer to the wiring diagrams. Clear any DTCs, test the system for normal operation.

G552799t10 : CHECK THE GLOW PLUG OUTPUT CIRCUITS FOR SHORT CIRCUIT TO POWER

1. Measure the resistance between:

EC76, harness side	Battery
Pin 01	Positive terminal
Pin 02	
Pin 03	

EC77, harness side	Battery
Pin 04	Positive terminal
Pin 05	
Pin 06	

Is the resistance greater than 100 Kohms?

-> Yes
GO to Pinpoint Test G552799t11.

-> No
REPAIR the short circuit. For additional information, refer to the wiring diagrams. Clear any DTCs, test the system for normal operation.

www.JagDocs.com

G552799t11 : CHECK THE GLOW PLUG OUTPUT CIRCUITS FOR HIGH RESISTANCE

1. Measure the resistance between:

EC74, harness side	EC76, harness side
Pin 01	Pin 01
Pin 02	Pin 02
Pin 03	Pin 03

EC74, harness side	EC77, harness side
Pin 04	Pin 01
Pin 05	Pin 02
Pin 06	Pin 03

Is the resistance less than 10 ohms?

-> Yes
If DTCs P0380 or P0382 are logged and the tests above have not identified a circuit fault, a control module may be at fault.

-> No
REPAIR the high resistance circuit. For additional information, refer to the wiring diagrams. Clear the DTC, test the system for normal operation.

Glow Plugs

Removal

1 . Remove the intake air shutoff throttle.
For additional information, refer to Intake Air Shutoff Throttle

2 . Remove the crankcase vent oil separator.
For additional information, refer to Crankcase Vent Oil Separator

3 **NOTE:**
.
Remove and discard the O-ring seal.

Remove the oil filter element housing.

- Rotate the oil filter element housing five complete turns counter-clockwise.
- Allow the engine oil to drain from the oil filter element housing for two minutes.
- Remove the oil filter element housing.

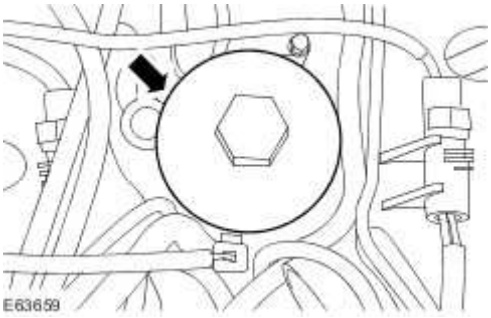

4 . Detach the right-hand glow plug electrical connector.

www.JagDocs.com

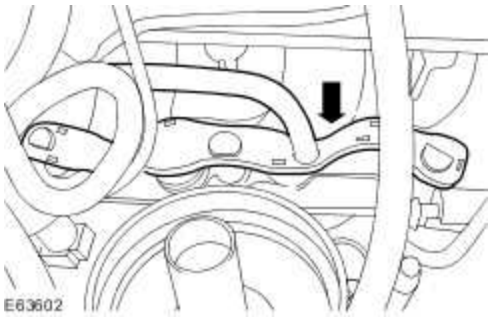

5 . Detach the left-hand glow plug electrical connector.

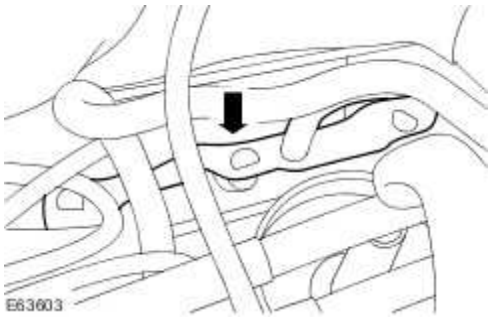

6 . Remove the right-hand bank glow plugs.

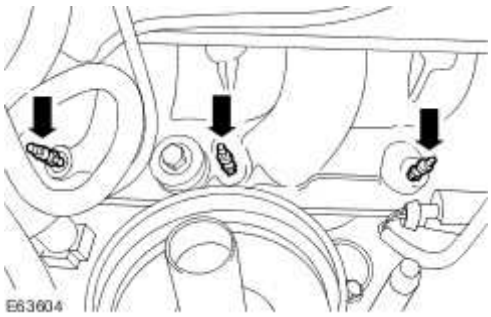

7 . Remove the left-hand bank glow plugs.

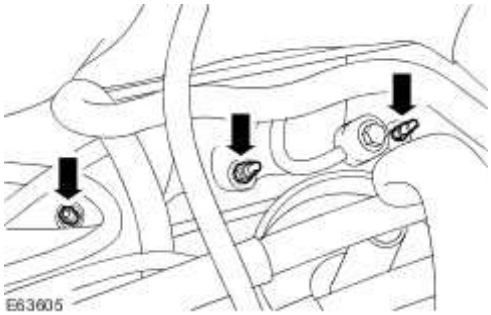

Installation

1 **NOTE:**

.

Make sure glow plug electrical connector is correctly fitted to all glow plugs on the left-hand bank.

To install, reverse the removal procedure.

Tighten to 10 Nm.

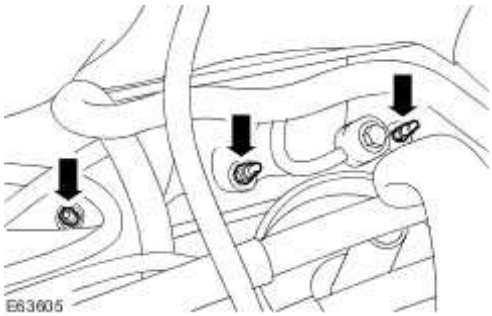

2 **NOTE:**

.

Make sure glow plug electrical connector is correctly fitted to all glow plugs on the right-hand bank.

Tighten to 10 Nm.

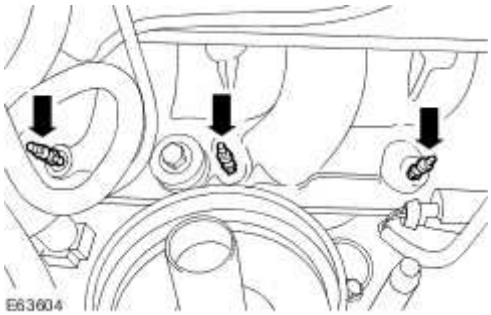

3 . **NOTE:**

Install a new O-ring seal.

Tighten to 25 Nm.

www.JagDocs.com

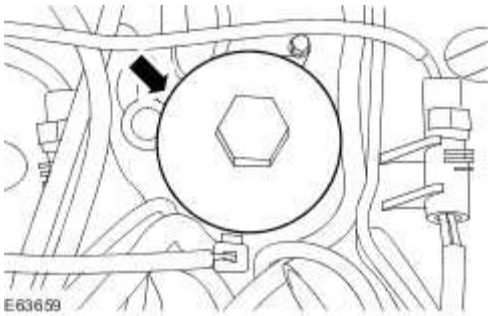
E63659

Specifications

Torque Specifications

Description	Nm	lb-ft	lb-in
Exhaust gas recirculation (EGR) valve to intake manifold retaining bolts	10	7	-
EGR valve tube to EGR valve retaining bolts	21	15	-
Exhaust manifold to EGR valve tube retaining nuts	21	15	-

www.JagDocs.com

Specifications

Torque Specifications

Description	Nm	lb-ft	lb-in
Exhaust gas recirculation (EGR) valve to intake manifold retaining bolts - Vehicles with 3.5L or 4.2L engine	10	7	-
EGR valve tube to EGR valve retaining bolts - Vehicles with 3.5L or 4.2L engine	21	15	-
Exhaust manifold to EGR valve tube retaining nuts - Vehicles with 3.5L or 4.2L engine	21	15	-
Secondary air injection (AIR) control valve to exhaust manifold tube retaining nuts	35	26	-
AIR control valve to exhaust manifold tube to exhaust manifold adaptor	35	26	-
Exhaust manifold blanking plug - Vehicles without AIR	35	26	-
AIR control valve bracket retaining bolt - Vehicles with 3.0L engine	8	-	71
AIR control valve bracket retaining nut - Vehicles with 3.0L engine	8	-	71
AIR control valve retaining bolts - Vehicles with 3.5L or 4.2L engine	25	18	-
AIR pump retaining nuts	20	15	-
AIR vacuum reservoir retaining nut	5	-	44
AIR vacuum reservoir retaining bolt	5	-	44

Engine Emission Control - VIN Range: G00442->G45703

Positive Crankcase Ventilation System

Vehicles fitted with 3.5L or 4.2L engine

On vehicles fitted with a 3.5L or 4.2L engine the positive crankcase ventilation (PCV) system consists of a PCV valve, and two PCV hoses. The PCV valve is mounted on the right-hand valve cover and a hose is connected between PCV valve and the throttle body elbow. The PCV valve regulates the amount of ventilation air and crankcase gas supplied to the intake manifold and also prevents backfiring into the crankcase. The left-hand valve cover PCV hose is connected to the air cleaner outlet pipe.

Vehicles fitted with 3.0L engine

On vehicles fitted with 3.0L engine the PCV system consists of two hoses, connected between the left-hand valve cover and the intake manifold and the right-hand valve cover and the air cleaner outlet pipe.

The PCV system recycles crankcase gases back through the engine where they mix with incoming air/fuel charge.

The positive crankcase ventilation system helps to reduce hydrocarbon emissions from the engine.

Exhaust Gas Recirculation System

Exhaust Gas Recirculation (EGR) Valve

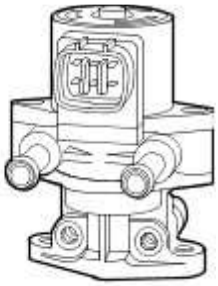

E30253

www.JagDocs.com

Exhaust Manifold to Exhaust Gas Recirculation (EGR) Valve Tube

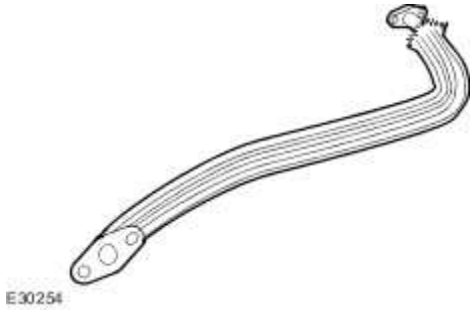

The exhaust gas recirculation (EGR) system is fitted on all vehicles fitted with a 3.5L or 4.2L engine. It comprises of an EGR valve and exhaust manifold to EGR valve tube. The EGR system allows a measured quantity of exhaust gas to be directed back to the intake manifold. The exhaust gas is introduced to the incoming charge in the intake manifold, where it mixes with the air/fuel mixture and lowers the peak gas temperature, reducing nitrogen oxide (NOX) exhaust emissions. The gas is drawn through the exhaust manifold to EGR valve tube from the exhaust to the inlet manifold via the EGR valve. The EGR valve is electrically operated and is controlled via an input from the engine control module (ECM).

On vehicles without supercharger the EGR valve is mounted on the intake manifold. On vehicles with supercharger the EGR valve is mounted on the throttle body elbow.

The ECM can monitor the operation of the EGR system by receiving inputs from the manifold absolute pressure (MAP) sensor. The MAP sensor monitors the EGR flow by the change in intake manifold pressure when the EGR valve is operated. If at any time the input signal to the ECM exceeds pre-defined thresholds due to low pressure reading for a calibrated period of time, a diagnostic trouble code (DTC) is recorded.

On vehicles without supercharger the MAP sensor is mounted on the rear of intake manifold. On vehicles with supercharger the MAP sensor is mounted on the rear of the throttle body elbow.
<<303-14B>>

Engine Emission Control - VIN Range: G45704->G99999

Positive Crankcase Ventilation (PCV) System

The PCV system recycles crankcase gases back through the engine where they mix with incoming air/fuel charge and help to reduce hydrocarbon emissions.

Vehicles with 3.0L engine

The PCV system consists of two hoses, connected between the left-hand valve cover and the intake manifold and the right-hand valve cover and the air cleaner outlet pipe.

Vehicles with 3.5L or 4.2L engine

The PCV system consists of a valve, and two hoses. The PCV valve is mounted on the right-hand valve cover and a hose is connected between PCV valve and the throttle body elbow. The left-hand valve cover PCV hose is connected to the air cleaner outlet pipe.

The PCV valve regulates the amount of ventilation air and crankcase gas supplied to the intake manifold and also prevents backfiring into the crankcase.

Exhaust Gas Recirculation (EGR) System - Vehicles with 3.5L or 4.2L engine

EGR Valve

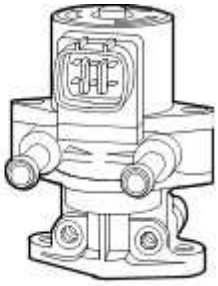

E30253

EGR Valve Tube

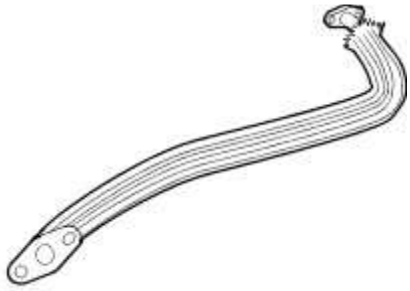

E30254

The EGR system comprises of an EGR valve and exhaust manifold to EGR valve tube. The EGR system allows a measured quantity of exhaust gas to be directed back to the intake manifold. The exhaust gas is introduced to the incoming charge air in the intake manifold, where it mixes with the air/fuel mixture and lowers the peak gas temperature, reducing nitrogen oxide (NOx) exhaust emissions. The

www.JagDocs.com

gas is drawn through the exhaust manifold to EGR valve tube from the exhaust to the inlet manifold through the EGR valve. The EGR valve is electrically operated and is controlled through an input from the engine control module (ECM).

On vehicles without a supercharger the EGR valve is mounted on the intake manifold. On vehicles with a supercharger the EGR valve is mounted on the throttle body elbow.

The ECM monitors the operation of the EGR system from inputs from the manifold absolute pressure (MAP) sensor and can detect high or low flow through the valve as a result of changes to the pressure readings.

High or low flow outside the expected range results in the setting of a diagnostic trouble code (DTC).

On vehicles without a supercharger the MAP sensor is mounted on the rear of intake manifold. On vehicles with a supercharger the MAP sensor is mounted on the rear of the throttle body elbow. For additional information, refer to Electronic Engine Controls (303-14B)

Secondary Air Injection (AIR) System

To assist in the reduction of exhaust emissions to meet European Union (EU) Stage 4 and Federal Petrol Emission standards, AIR is fitted to the vehicle.

Item	Part Number	Description
1		AIR vacuum reservoir
2		AIR switching valve
3		Exhaust manifolds
4		AIR pump
5		AIR control valve

The AIR pump is used to provide a supply of air into the exhaust manifolds during the cold start period of the engine. The AIR cycle lasts for up to 65 seconds. The hot unburnt fuel particles leaving the combustion chamber mix with the air injected into the exhaust manifolds and immediately combust.

www.JagDocs.com

This subsequent combustion of the unburnt and partially burnt carbon monoxide (CO) and hydrocarbon (HC) particles help to reduce the emission of these pollutants from the exhaust system. The additional heat generated in the exhaust manifold also provides rapid heating of the exhaust system catalytic converters. The additional oxygen which is delivered to the catalytic converters also generates an exothermic reaction which causes the catalytic converters to reach their optimum operating temperature and 'light off' quickly.

The catalytic converters only start to provide effective treatment of emission pollutants when they reach an operating temperature of approximately 250°C (482°F) and need to be between temperatures of 400°C (752°F) and 800°C (1472°F) for optimum efficiency. Consequently, the heat produced by the AIR 'afterburning' reduces the time delay before the catalysts reach an efficient operating temperature.

The AIR system comprises the following components:

AIR pump

AIR switching valve

AIR control valve

AIR vacuum reservoir

AIR pump relay

AIR pressure sensor (North American specification vehicles only)

AIR Pump

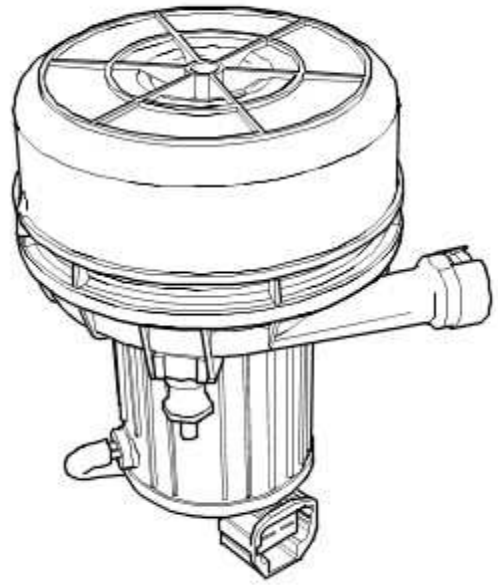

E62274

The AIR pump is located behind the right-hand side of the front bumper cover. The pump is fitted on rubber mountings to help prevent noise which is generated by AIR pump operation. The AIR pump is powered from the vehicle battery by a dedicated relay and supplies approximately 10 to 15 kg/hr (22 to 33 lb/hr) of air when the engine is at idle speed and the ambient temperature is below 20°C (68°F).

Air is drawn into the AIR pump through vents in its front cover and is then passed through a foam filter. The air is delivered to the exhaust manifold on each side of the engine through a combination of plastic pipes and stainless steel tubes.

One second after the AIR pump is energised, the ECM switches on the AIR switching valve, which opens to allow vacuum from the AIR vacuum reservoir to be applied to the vacuum operated AIR control valve. When the vacuum is applied to the AIR control valve, it opens to allow the air from the AIR pump through to the exhaust manifolds.

When the ECM switches off the AIR switching valve, the vacuum supply to the AIR control valve is cut-off and the valve closes to prevent further air being injected into the exhaust manifolds. With an approximate five second delay after as the AIR switching valve is closed, the ECM removes power from the AIR pump relay, and this in turn stops the AIR pump from operating.

www.JagDocs.com

AIR Switching Valve

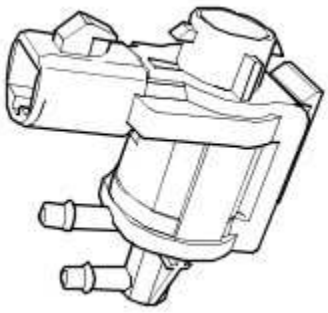

E62276

The ECM switches on the AIR switching valve with a one second delay after initiating AIR pump operation. When the AIR switching valve is open, a steady vacuum supply is allowed through to open the vacuum operated AIR control valve. When the ECM switches off the AIR switching valve, the valve closes and immediately shuts off the vacuum supply to the AIR control valve. The pump continues to operate for a further five seconds for system diagnostic purposes.

When the AIR switching valve is switched off, the vacuum supply line opens to atmosphere, and this causes the AIR switching valve to close automatically to prevent any further injection of air.

AIR Control Valve

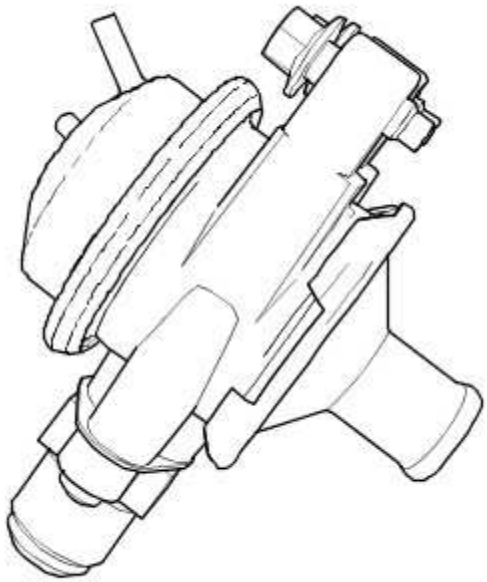

E62275

The injected air from the AIR pump is controlled by the AIR control valve. This allows the correct amount of air to be injected directly into the exhaust manifolds. The AIR control valve prevents exhaust gasses from blowing back into the AIR pump.

The AIR control valve is assisted in operation by a vacuum source from the AIR vacuum reservoir located in the right-hand side of the engine bay. This assistance allows the actuation of the AIR control valve independently from the intake manifold vacuum levels available.

When the pressure in the exhaust system is higher than in the AIR system, the AIR control valve closes the circuit, and this protects the AIR system from exhaust gasses blowing back into the AIR system.

Vacuum to the AIR switching valve is provided from the intake manifold vacuum by the AIR vacuum reservoir. A small bore vacuum hose provides the vacuum route between the AIR vacuum reservoir and AIR switching valve. A further small bore vacuum hose is used to connect the AIR switching valve to the AIR control valve.

AIR Vacuum Reservoir

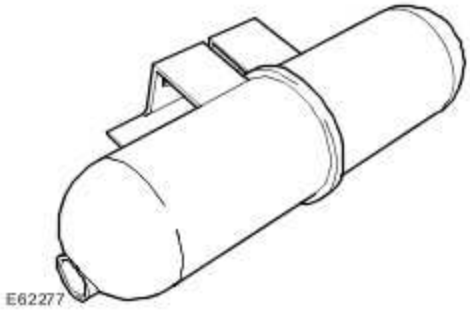

The AIR vacuum reservoir is located on the right-hand side of the engine bay.

The AIR vacuum reservoir is included in the vacuum supply line between the intake manifold and the AIR switching valve.

The AIR vacuum reservoir contains a one-way valve to stop vacuum leaking back towards the intake manifold side. The AIR vacuum reservoir holds a constant vacuum so that the AIR control valve opens as soon as the AIR switching valve is switched on.

AIR Pump Relay

The AIR pump relay is located on the AIR pump mounting bracket. The ECM is used to control the operation of the AIR pump by the AIR pump relay.

The AIR system receives its voltage supply through the AIR pump relay. The ECM monitors the state of the relay for correct operation as part of its system diagnostic.

AIR Pressure Sensor - North American specification vehicles only

The AIR system is monitored by measuring the system pressure by using the AIR pressure sensor at several instances during its cycle of operation.

The AIR system pressure is measured before operation of the AIR pump. The AIR pump is then switched on and with a one second delay, the AIR switching valve is opened. After a stabilizing period, the system pressure is measured again, this time by taking the average of a one second duration of readings, and normalising for variations in battery voltage and atmospheric pressure. If the system pressure measured at this time has not risen enough with respect to the initial AIR

www.JagDocs.com

pressure reading then a failure will be flagged.

A second pressure measurement is made after the requirement for AIR into the exhaust system has expired, but continuing on from the same period of AIR pump operation, i.e. the pump is left running, against a closed AIR switching valve. Again this pressure measurement is the average of a one second duration of readings normalised for variations in battery voltage and atmospheric pressure. If the system pressure measured at this time has not risen enough or has risen too much with respect to the system pressure during normal operation of AIR then a failure will be flagged.

A final pressure reading is taken after the AIR system has been switched off to ensure the system shuts down.

Engine Emission Control - VIN Range: G00442->G45703

1 . Verify the customer concern by operating the system.

2 . Visually inspect for obvious signs of mechanical or electrical damage.

3 . If an obvious cause for an observed or reported concern is found, correct the cause (if possible) before proceeding to the next step.

4 . If the concern is not visually evident, refer to the Symptom Chart.

Diagnostic Trouble Code (DTC) P0400 indicates exhaust gas recirculation (EGR) system flow malfunction.

Possible Source(s):

Exhaust manifold to EGR valve pipe tube blocked.
Exhaust manifold to EGR valve pipe tube cracked.
EGR valve stuck closed.
EGR valve stuck open.
EGR valve loose.
Fuse 37 in the front power distribution box (FPDB).
Relay 5 in the FPDB
Electrical harness.
Electrical connector(s)

Action(s) to take:

GO to Pinpoint Test A.

Diagnostic Trouble Code (DTC) P0405 indicates exhaust gas recirculation (EGR) valve malfunction, short to battery/12volts (V).

Possible Source(s):

Electrical harness.
Electrical connector(s).
Engine control module (ECM).
EGR valve.

Action(s) to take:

www.JagDocs.com

GO to Pinpoint Test B.

Diagnostic Trouble Code (DTC) P0406 indicates exhaust gas recirculation (EGR) valve malfunction, short to ground/open circuit.

Possible Source(s):

Electrical harness.
Electrical connector(s).
ECM.
EGR valve.

Action(s) to take:

GO to Pinpoint Test C.

PINPOINT TEST G187746p1 : Diagnostic Trouble Code (DTC) P0400 indicates exhaust gas recirculation (EGR) system flow malfunction.

G187746t24 : CHECK EGR VALVE FOR CORRECT FITMENT TO INTAKE MANIFOLD

1. Check the EGR valve retaining bolts for correct torque.
Exhaust Gas Recirculation (EGR) Valve (17.45.01)

Was the EGR valve fitted correctly?

-> Yes
GO to Pinpoint Test G187746t2.

-> No
GO to Pinpoint Test G187746t1.

G187746t1 : CHECK EXHAUST GAS RECIRCULATION (EGR) VALVE TO MANIFOLD/INTAKE ELBOW GASKET FOR CORRECT SEAL

1. Visually inspect the gasket for external damage.

Is the gasket damaged?

-> Yes
INSTALL a new gasket, make sure valve is seated correctly and retaining bolts installed to the correct

torque.
Exhaust Gas Recirculation (EGR) Valve (17.45.01) CLEAR DTC. To validate fix drive vehicle between 30 mph (48 kph) and 40 mph (64 kph). Allow vehicle to idle for 2 minutes.

-> No
GO to Pinpoint Test G187746t2.

G187746t2 : CHECK FOR EXHAUST MANIFOLD TO EGR VALVE TUBE FOR DAMAGE or BLOCKAGES

1. Visually inspect the exhaust manifold to EGR valve tube.

Is the tube damaged or blocked?

-> Yes
If the tube is damaged INSTALL a new tube.
Exhaust Manifold to Exhaust Gas Recirculation (EGR) Valve Tube (17.45.11) CLEAR the DTC. To validate fix drive vehicle between 30 mph (48 kph) and 40 mph (64 kph). Allow vehicle to idle for 2 minutes. If the tube is blocked, unblock the tube. CLEAR DTC. TEST the system for normal operation.

-> No
GO to Pinpoint Test G187746t3.

G187746t3 : CHECK FOR POWER SUPPLY TO EGR VALVE

1. Disconnect EGR valve electrical connector PI 15 2. TURN ignition switch to the ON position 3. MEASURE the voltage at PI 15 pin 2 (GU)

Is the voltage less than 10 volts

-> Yes
GO to Pinpoint Test G187746t4.

-> No
GO to Pinpoint Test G187746t4.

G187746t4 : CHECK FUSE 37 IN THE FRONT POWER DISTRIBUTION BOX (FPDB)

1. Check the fuse.

Is the fuse ok?

-> Yes
GO to Pinpoint Test G187746t6.

www.JagDocs.com

-> No
GO to Pinpoint Test G187746t19.

G187746t5 : CHECK HARNESS BETWEEN FPDB AND EGR FOR SHORT TO GROUND

1. Disconnect the EGR valve electrical connector PI 15. 2. CHECK the resistance between PI 15 pin 2 (GU) and ground.

Is the resistance less than 10,000 Ohms?

-> Yes
REPAIR the circuit between the EGR valve and FPDB. INSTALL a new fuse. CLEAR DTC. To validate fix drive vehicle between 30 mph (48 kph) and 40 mph (64 kph). Allow vehicle to idle for 2 minutes.

-> No
INSTALL a new fuse. CLEAR DTC. To validate fix drive vehicle between 30 mph (48 kph) and 40 mph (64 kph). Allow vehicle to idle for 2 minutes.

G187746t6 : CHECK FOR BATTERY VOLTAGE AT FPDB

1. CHECK for voltage at FPDB electrical connector FH 32 pin 43 (GU).

Is the voltage less than 10 volts?

-> Yes
REPAIR the circuit between FPDB electrical connector FH 32 pin 43 (GU) and FPDB relay 5.

-> No
REPAIR the circuit between FPDB electrical connector FH 32 pin 43 (GU) and EGR valve electrical connector PI 15 pin 2 (GU). CLEAR DTC. To validate fix drive vehicle between 30 mph (48 kph) and 40 mph (64 kph). Allow vehicle to idle for 2 minutes.

G187746t19 : CHECK FOR POWER SUPPLY TO EGR VALVE

1. Disconnect EGR valve electrical connector PI 15 2. MEASURE the voltage at PI 15 pin 5 (GU)

Is the voltage less than 10 volts?

-> Yes
REPAIR the circuit between PI 15 pin 5 (GU) and splice PIS 15. CLEAR DTC. TEST the system for normal operation.

-> No
INSTALL a new EGR valve. CLEAR DTC. To validate fix drive vehicle between 30 mph (48 kph) and 40 mph (64 kph). Allow vehicle to idle for 2 minutes.

PINPOINT TEST G187746p2 : Diagnostic Trouble Code (DTC) P0405 indicates exhaust gas recirculation (EGR) valve malfunction, short to battery/12volts

G187746t7 : CHECK FOR A SHORT TO BATTERY VOLTAGE

1. Disconnect the EGR valve electrical connectror PI 15. 2. TURN ignition switch to the ON position. 3. Measure the voltage at PI 15 pin 4 (YU).

Is the voltage more than 1 volt?

-> Yes
GO to Pinpoint Test G187746t8.

-> No
GO to Pinpoint Test G187746t9.

G187746t8 : CHECK FOR A SHORT TO BATTERY VOLTAGE IN ECM

1. Disconnect ECM electrical connector PI 1. 2. Measure the voltage at PI 15 pin 4 (YU).

Is the voltage more than 1 volt?

-> Yes
REPAIR circuit between the PI 1 pin 57 (YU) and the EGR valve electrical connector PI 15 pin 4 (YU). CLEAR DTC. To validate fix drive vehicle between 30 mph (48 kph) and 40 mph (64 kph). Allow vehicle to idle for 2 minutes.

-> No
INSTALL a new ECM. <<303-14B>>CLEAR DTC. To validate fix drive vehicle between 30 mph (48 kph) and 40 mph (64 kph). Allow vehicle to idle for 2 minutes.

G187746t9 : CHECK FOR A SHORT TO BATTERY VOLTAGE

1. Measure the voltage at PI 15 pin 1 (YG).

Is the voltage more than 1 volt?

-> Yes
GO to Pinpoint Test G187746t10.

-> No

www.JagDocs.com

GO to Pinpoint Test G187746t11.

G187746t10 : CHECK FOR A SHORT TO BATTERY VOLTAGE IN ECM

1. Disconnect ECM electrical connector PI 1. 2. Measure the voltage at PI 15 pin 1 (YG).

Is the voltage more than 1 volt?

-> Yes

REPAIR circuit between the PI 1 pin 58 (YG) and the EGR valve electrical connector PI 15 pin 1 (YG). CLEAR DTC. To validate fix drive vehicle between 30 mph (48 kph) and 40 mph (64 kph). Allow vehicle to idle for 2 minutes.

-> No

INSTALL a new ECM. <<303-14B>>CLEAR DTC. To validate fix drive vehicle between 30 mph (48 kph) and 40 mph (64 kph). Allow vehicle to idle for 2 minutes.

G187746t11 : CHECK FOR A SHORT TO BATTERY VOLTAGE

1. Measure the voltage at PI 15 pin 6 (YR).

Is the voltage more than 1 Volt?

-> Yes

GO to Pinpoint Test G187746t12.

-> No

GO to Pinpoint Test G187746t20.

G187746t12 : CHECK FOR A SHORT TO BATTERY VOLTAGE IN ECM

1. Disconnect ECM electrical connector PI 1. 2. Measure the voltage at PI 15 pin 6 (YR).

Is the voltage more than 1 volt?

-> Yes

REPAIR circuit between the PI 1 pin 59 (YR) and the EGR valve electrical connector PI 15 pin 6 (YR). CLEAR DTC. To validate fix drive vehicle between 30 mph (48 kph) and 40 mph (64 kph). Allow vehicle to idle for 2 minutes.

-> No

INSTALL a new ECM. <<303-14B>>CLEAR DTC. To validate fix drive vehicle between 30 mph (48 kph) and 40 mph (64 kph). Allow vehicle to idle for 2 minutes.

G187746t20 : CHECK FOR A SHORT TO BATTERY VOLTAGE

1. Measure the voltage at PI 15 pin 3 (YU).

Is the voltage more than 1 Volt?

-> Yes
GO to Pinpoint Test G187746t21.

-> No
INSTALL a new EGR valve. CLEAR DTC. To validate fix drive vehicle between 30 mph (48 kph) and 40 mph (64 kph). Allow vehicle to idle for 2 minutes.

G187746t21 : CHECK FOR A SHORT TO BATTERY VOLTAGE IN ECM

1. Disconnect ECM electrical connector PI 1. 2. Measure the voltage at PI 15 pin 3 (YU).

Is the voltage more than 1 volt?

-> Yes
REPAIR circuit between the PI 1 pin 60 (YU) and the EGR valve electrical connector PI 15 pin 3 (YU). CLEAR DTC. To validate fix drive vehicle between 30 mph (48 kph) and 40 mph (64 kph). Allow vehicle to idle for 2 minutes.

-> No
INSTALL a new ECM. <<303-14B>>CLEAR DTC. To validate fix drive vehicle between 30 mph (48 kph) and 40 mph (64 kph). Allow vehicle to idle for 2 minutes.

PINPOINT TEST G187746p3 : Diagnostic Trouble Code (DTC) P0406 indicates exhaust gas recirculation (EGR) valve malfunction, short to ground/open circuit.

G187746t13 : CHECK FOR A SHORT TO GROUND

1. Disconnect the EGR valve electrical connectror PI 15. 2. Disconnect the engine control module (ECM) electrical connectror PI 1. 3. Measure the resistance between the EGR valve electrical connector PI 15 pin 4 (YU) and GROUND.

Is the resistance less than 10,000 ohms?

-> Yes
REPAIR the circuit between EGR valve electrical connector PI 15 pin 4 (YU) and ECM electrical connector PI 1 pin 57 (YU). CLEAR DTC. To validate fix drive vehicle between 30 mph (48 kph) and 40 mph (64 kph). Allow vehicle to idle for 2 minutes.

-> No

www.JagDocs.com

GO to Pinpoint Test G187746t14.

G187746t14 : CHECK FOR AN OPEN CIRCUIT

1. Measure the resistance between the EGR valve electrical connector PI 15 pin 4 (YU) and ECM electrical connector PI 1 pin 57 (YU).

Is the resistance more than 5.0 ohms?

-> Yes
REPAIR the circuit between EGR valve electrical connector PI 15 pin 4 (YU) and ECM electrical connector PI 1 pin 57 (YU). CLEAR DTC. To validate fix drive vehicle between 30 mph (48 kph) and 40 mph (64 kph). Allow vehicle to idle for 2 minutes.

-> No
GO to Pinpoint Test G187746t15.

G187746t15 : CHECK FOR A SHORT TO GROUND

1. Measure the resistance between the EGR valve electrical connector PI 15 pin 1 (YG) and GROUND.

Is the resistance less than 10,000 ohms?

-> Yes
REPAIR the circuit between EGR valve electrical connector PI 15 pin 1 (YG) and ECM electrical connector PI 1 pin 58 (YG). CLEAR DTC. To validate fix drive vehicle between 30 mph (48 kph) and 40 mph (64 kph). Allow vehicle to idle for 2 minutes.

-> No
GO to Pinpoint Test G187746t16.

G187746t16 : CHECK FOR AN OPEN CIRCUIT

1. Measure the resistance between the EGR valve electrical connector PI 15 pin 1 (YG) and ECM electrical connector PI 1 pin 58 (YG).

Is the resistance more than 5.0 Ohms?

-> Yes
REPAIR the circuit between EGR valve electrical connector PI 15 pin 1 (YG) and ECM electrical connector PI 1 pin 58 (YG). CLEAR DTC. To validate fix drive vehicle between 30 mph (48 kph) and 40 mph (64 kph). Allow vehicle to idle for 2 minutes.

-> No
GO to Pinpoint Test G187746t17.

G187746t17 : CHECK FOR A SHORT TO GROUND

1. Measure the resistance between the EGR valve electrical connector PI 15 pin 6 (YR) and GROUND.

Is the resistance less than 10,000 ohms?

-> Yes

REPAIR the circuit between EGR valve electrical connector PI 15 pin 6 (YR) and ECM electrical connector PI 1 pin 59 (YR). CLEAR DTC. TEST the system for normal operation.

-> No

GO to Pinpoint Test G187746t18.

G187746t18 : CHECK FOR AN OPEN CIRCUIT

1. Measure the resistance between the EGR valve electrical connector PI 15 pin 6 (YR) and ECM electrical connector PI 1 pin 59 (YR).

Is the resistance more than 5.0 Ohms?

-> Yes

REPAIR the circuit between EGR valve electrical connector PI 15 pin 6 (YR) and ECM electrical connector PI 1 pin 59 (YR). CLEAR DTC. TEST the system for normal operation.

-> No

GO to Pinpoint Test G187746t22.

G187746t22 : CHECK FOR A SHORT TO GROUND

1. Measure the resistance between the EGR valve electrical connector PI 15 pin 3 (YU) and GROUND.

Is the resistance less than 10,000 ohms?

-> Yes

REPAIR the circuit between EGR valve electrical connector PI 15 pin 3 (YU) and ECM electrical connector PI 1 pin 60 (YU). CLEAR DTC. TEST the system for normal operation.

-> No

GO to Pinpoint Test G187746t23.

G187746t23 : CHECK FOR AN OPEN CIRCUIT

1. Measure the resistance between the EGR valve electrical connector PI 15 pin 3 (Yu) and ECM electrical connector PI 1 pin 60 (YU).

Is the resistance more than 5.0 Ohms?

www.JagDocs.com

-> Yes
REPAIR the circuit between EGR valve electrical connector PI 15 pin 3 (YU) and ECM electrical connector PI 1 pin 60 (YU). CLEAR DTC. TEST the system for normal operation.

-> No
INSTALL a new EGR valve. CLEAR DTC. TEST the system for normal operation. If DTC is repeated INSTALL a new ECM. CLEAR DTC. TEST the system for normal operation.

Engine Emission Control - VIN Range: G45704->G99999

Overview

There are changes to the engine management system (EMS) for 2006 my, the most obvious of which will be the change to 7-digit diagnostic trouble codes (DTCs) from the familiar 5-digit, and the introduction of secondary air injection.

For additional information on the operation of the emission control systems.
Engine Emission Control - VIN Range: G45704->G99999

Inspection and verification

1 . Verify the customer concern.

2 . Visually inspect for obvious signs of mechanical or electrical damage.

Mechanical	Electrical
Engine breather hoses Cyclone separator Exhaust gas recirculation (EGR) pipes (check for cracks) EGR valve	Fuses Wiring harness Loose or corroded electrical connectors Sensor(s) Stepper motor(s) Secondary air injection pump Secondary air injection valve Engine control module (ECM)

3 . If an obvious cause for an observed or reported concern is found, correct the cause (if possible) before proceeding to the next step.

4 . If the cause is not visually evident use the Jaguar approved diagnostic system or a scan tool to retrieve the fault codes before proceeding to the DTC Index.

Symptom Chart

Symptom (general)	Symptom (specific)	Possible source	Action

www.JagDocs.com

Non-Start	Engine cranks, but does not fire	Engine breather system disconnected/restricted	Check the engine breather system hoses, separator, etc. Rectify as necessary.
Difficult to start	Difficult to start cold	Exhaust gas recirculation (EGR) valve stuck open	Check the EGR valve, Exhaust Gas Recirculation (EGR) Valve (17.45.01) Check the pipework.
Engine stalls	Engine stalls soon after start	Breather system disconnected/restricted	Check the engine breather system hoses, separator, etc. Rectify as necessary.
	Engine stops/stalls	EGR valve stuck open	Check the EGR valve. Exhaust Gas Recirculation (EGR) Valve (17.45.01)
Rough running	Poor idle quality	EGR valve stuck open	Check the EGR valve. Exhaust Gas Recirculation (EGR) Valve (17.45.01)
Poor driveability	Engine hesitates/poor acceleration	EGR valve stuck open	Check the EGR valve. Exhaust Gas Recirculation (EGR) Valve (17.45.01)
	Poor throttle response	Breather system disconnected/restricted	Check the engine breather system hoses, separator, etc. Rectify as necessary.
Excessive:	Fuel consumption Black smoke Emissions	EGR valve stuck open EGR system not operating Crankcase ventilation system restricted	Check the EGR valve. Exhaust Gas Recirculation (EGR) Valve (17.45.01) For EGR valve circuit tests. GO to Pinpoint Test G528708p1. Check the engine breather system hoses, separator, etc. Rectify as necessary.
Noisy	Loud 'ticking' noise with engine running	EGR pipes cracked	Inspect the EGR pipes, paying particular attention to the ribbed sections. Replace as necessary.
Oil leakage	Engine oil leaks	Crankcase ventilation system restricted	Check the engine breather system hoses, separator, etc.

			Rectify as necessary.

DTC index

NOTE:

Generic scan tools may not read the codes listed, or may read only 5-digit codes. Match the 5 digits from the scan tool to the first 5 digits of the 7-digit code listed to identify the fault (the last 2 digits give extra information read by the manufacturer-approved diagnostic system).

NOTE:

For a full list of DTCs.
Electronic Engine Controls - VIN Range: G45704->G99999 or
Electronic Engine Controls - VIN Range: G45704->G99999

DTC	Description	Possible causes	Action
P040100	EGR flow insufficient	EGR valve incorrectly fitted or loose EGR valve stuck closed, blocked EGR pipe blocked EGR valve mechanical failure	Check the fitment of the EGR valve. Exhaust Gas Recirculation (EGR) Valve (17.45.01) Check the EGR pipework.
P041300	Secondary air injection valve circuit	Secondary air valve control circuit: short circuit to power	For secondary air injection valve circuit tests, GO to Pinpoint Test G528708p4.
P041400	Secondary air injection valve circuit	Secondary air valve control circuit: short circuit to ground Secondary air valve control circuit: high resistance	For secondary air injection valve circuit tests, GO to Pinpoint Test G528708p4.
P048900	Exhaust gas recirculation (EGR) control circuit low	EGR valve power supply circuit: short circuit to ground EGR valve power supply circuit: high resistance	For EGR stepper circuit tests, GO to Pinpoint Test G528708p1.

www.JagDocs.com

P049000	Exhaust gas recirculation (EGR) control circuit high	EGR valve to ECM drive circuit: short circuit to power	For EGR stepper circuit tests, GO to Pinpoint Test G528708p1.
P243100	Secondary air injection system air flow/pressure sensor circuit range/performance	Secondary air injection pump/valve/pipework leaks Secondary air injection pump Secondary air injection valve	Check the secondary air injection system pipework, etc. For pump tests. GO to Pinpoint Test G528708p2. For valve tests. GO to Pinpoint Test G528708p4.
P243200	Secondary air injection system air flow/pressure sensor circuit low	Secondary air injection manifold pressure (MAP) sensor circuit: short circuit to ground Secondary air injection manifold pressure (MAP) sensor circuit: high resistance	For secondary air injection MAP sensor tests, GO to Pinpoint Test G528708p3.
P243300	Secondary air injection system air flow/pressure sensor circuit high	Secondary air injection manifold pressure (MAP) sensor circuit: short circuit to power	For secondary air injection MAP sensor tests, GO to Pinpoint Test G528708p3.
P244400	Secondary air injection system pump stuck **ON**	Secondary air injection pump control circuit: short circuit to ground	For secondary air injection pump circuit tests, GO to Pinpoint Test G528708p2.
P244500	Secondary air injection system pump stuck **OFF**	Secondary air injection pump control circuit: short circuit to power	For secondary air injection pump circuit tests, GO to Pinpoint Test G528708p2.

Pinpoint tests

CAUTION: When probing connectors to take measurements in the course of the pinpoint tests, use the adaptor kit, part number 3548-1358-00.

NOTE:

When performing electrical voltage or resistance tests, always use a digital multimeter (DMM) accurate to 3 decimal places, and with an up-to-date calibration certificate. When testing resistance, always take the resistance of the DMM leads into account.

NOTE:

Check and rectify basic faults before beginning diagnostic routines involving pinpoint tests.

PINPOINT TEST G528708p1 : CHECK THE EGR STEPPER SUPPLY AND CONTROL CIRCUITS

G528708t1 : CHECK THE EGR STEPPER SUPPLY VOLTAGE CIRCUITS

1. Key off. 2. Disconnect the EGR stepper electrical connector, PI15. 3. Key on, ignition off.

Make sure the EMS relay is energized. 4. Measure the voltage between:

EGR stepper connector, PI15	Battery
Pin 02	Negative terminal
Pin 05	

Is the voltage less than 10 volts?

-> Yes
REPAIR the relevant EGR stepper supply voltage circuit. This circuit includes the front power distribution box (fuse 14) and the EMS control relay. For additional information, refer to the wiring diagrams. CLEAR the DTCs and test the system for normal operation.

-> No
GO to Pinpoint Test G528708t2.

G528708t2 : CHECK THE EGR STEPPER CONTROL CIRCUITS FOR SHORT CIRCUIT TO GROUND

1. Key off. 2. Measure the resistance between:

www.JagDocs.com

EGR stepper connector, PI15	Battery
Pin 04	Negative terminal
Pin 01	
Pin 06	
Pin 03	

Is the resistance less than 10,000 ohms?

-> Yes
REPAIR the short circuit. For additional information, refer to the wiring diagrams. CLEAR the DTCs and test the system for normal operation.

-> No
GO to Pinpoint Test G528708t3.

G528708t3 : CHECK THE EGR STEPPER CONTROL CIRCUITS FOR SHORT CIRCUIT TO POWER

1. Measure the resistance between:

EGR stepper connector, PI15	Battery
Pin 04	Positive terminal
Pin 01	
Pin 06	
Pin 03	

Is the resistance less than 10,000 ohms?

-> Yes
REPAIR the short circuit. For additional information, refer to the wiring diagrams. CLEAR the DTCs and test the system for normal operation.

-> No

GO to Pinpoint Test G528708t4.

G528708t4 : CHECK THE EGR STEPPER CONTROL CIRCUITS FOR HIGH RESISTANCE

1. Key off. 2. Disconnect the ECM electrical connector, EC300. 3. Measure the resistance between:

EGR stepper connector, PI15	ECM connector, EC300
Pin 04	Pin 53
Pin 01	Pin 52
Pin 06	Pin 51
Pin 03	Pin 50

Is the resistance greater than 5 ohms?

-> Yes
REPAIR the high resistance circuit. For additional information, refer to the wiring diagrams. CLEAR the DTC and test the system for normal operation.

-> No
INSTALL a new EGR valve.
Exhaust Gas Recirculation (EGR) Valve (17.45.01) CLEAR the DTC and test the system for normal operation. Refer to the warranty policy and procedures manual if an ECM is suspect.

PINPOINT TEST G528708p2 : CHECK THE SECONDARY AIR INJECTION PUMP CIRCUITS

G528708t5 : CHECK THE SECONDARY AIR INJECTION PUMP RELAY SUPPLY VOLTAGES

1. Key off. 2. Remove the secondary air injection pump relay. 3. Measure the voltage between:

Secondary air injection relay base	Battery
Pin 01	Negative terminal

www.JagDocs.com

Pin 03	

Is the voltage less than 10 volts?

-> Yes
REPAIR the circuit between the relay base and battery. This circuit includes in-line (fuse 2) and the mega fuses. For additional information, refer to the wiring diagrams. CLEAR the DTC and test the system for normal operation.

-> No
GO to Pinpoint Test G528708t10.

G528708t10 : CHECK THE SECONDARY AIR INJECTION RELAY TO PUMP SUPPLY CIRCUIT FOR SHORT CIRCUIT TO GROUND

1. Disconnect the secondary air injection pump electrical connector, EC93. 2. Measure the resistance between:

Secondary air injection relay base	Battery
Pin 05	Negative terminal

Is the resistance less than 10,000 ohms?

-> Yes
REPAIR the short circuit. For additional information, refer to the wiring diagrams. CLEAR the DTC and test the system for normal operation.

-> No
GO to Pinpoint Test G528708t11.

G528708t11 : CHECK THE SECONDARY AIR INJECTION RELAY TO PUMP SUPPLY CIRCUIT FOR SHORT CIRCUIT TO POWER

1. Measure the resistance between:

Secondary air injection relay base	Battery
Pin 05	Positive terminal

Is the resistance less than 10,000 ohms?

-> Yes
REPAIR the short circuit. For additional information, refer to the wiring diagrams. CLEAR the DTC and test the system for normal operation.

-> No
GO to Pinpoint Test G528708t6.

G528708t6 : CHECK THE SECONDARY AIR INJECTION PUMP SIGNAL CIRCUIT FOR SHORT CIRCUIT TO GROUND

1. Measure the resistance between:

Secondary air injection relay base	Battery
Pin 02	Negative terminal

Is the resistance less than 10,000 ohms?

-> Yes
REPAIR the short circuit. For additional information, refer to the wiring diagrams. CLEAR the DTC and test the system for normal operation.

-> No
GO to Pinpoint Test G528708t7.

G528708t7 : CHECK THE SECONDARY AIR INJECTION PUMP SIGNAL CIRCUIT FOR SHORT CIRCUIT TO POWER

1. Measure the resistance between:

Secondary air injection relay base	Battery
Pin 02	Positive terminal

Is the resistance less than 10,000 ohms?

-> Yes
REPAIR the short circuit. For additional information, refer to the wiring diagrams. CLEAR the DTC and test the system for normal operation.

www.JagDocs.com

-> No
GO to Pinpoint Test G528708t12.

G528708t12 : CHECK THE SECONDARY AIR INJECTION RELAY TO PUMP SUPPLY CIRCUIT FOR HIGH RESISTANCE

1. Disconnect the secondary air pump connector, EC93. 2. Measure the resistance between:

Secondary air injection relay base	Secondary air pump connector, EC93
Pin 05	Pin 02

Is the resistance greater than 5 ohms?

-> Yes
REPAIR the high resistance circuit. For additional information, refer to the wiring diagrams. CLEAR the DTC and test the system for normal operation.

-> No
GO to Pinpoint Test G528708t13.

G528708t13 : CHECK THE SECONDARY AIR INJECTION PUMP GROUND CIRCUIT FOR HIGH RESISTANCE

1. Measure the resistance between:

Secondary air pump connector, EC93	Battery
Pin 01	Negative terminal

Is the resistance greater than 5 ohms?

-> Yes
REPAIR the high resistance circuit. For additional information, refer to the wiring diagrams. CLEAR the DTC and test the system for normal operation.

-> No
GO to Pinpoint Test G528708t8.

G528708t8 : CHECK THE SECONDARY AIR INJECTION PUMP SIGNAL CIRCUIT FOR HIGH RESISTANCE

1. Disconnect the ECM electrical connector, EC300. 2. Measure the resistance between:

Secondary air injection relay base	ECM connector, EC300
Pin 02	Pin 50

Is the resistance greater than 5 ohms?

-> Yes

REPAIR the high resistance circuit. For additional information, refer to the wiring diagrams. CLEAR the DTC and test the system for normal operation.

-> No

INSTALL a new secondary air injection pump relay. CLEAR the DTC and test the system for normal operation.

PINPOINT TEST G528708p3 : (V8 N/A FEDERAL SPECIFICATION ONLY) CHECK THE SECONDARY AIR INJECTION MAP SENSOR CIRCUITS

G528708t9 : CHECK THE SECONDARY AIR INJECTION MAP SENSOR SUPPLY CIRCUIT FOR SHORT CIRCUIT TO GROUND

1. Key off. 2. Disconnect the secondary air injection MAP sensor electrical connector, EC120. 3. Measure the resistance between:

Secondary air injection MAP sensor connector, EC120	Battery
Pin 01	Negative terminal

Is the resistance less than 10,000 ohms?

-> Yes

REPAIR the short circuit. For additional information, refer to the wiring diagrams. CLEAR the DTC and test the system for normal operation.

-> No

www.JagDocs.com

GO to Pinpoint Test G528708t14.

G528708t14 : CHECK THE SECONDARY AIR INJECTION MAP SENSOR SUPPLY CIRCUIT FOR SHORT CIRCUIT TO POWER

1. Measure the resistance between:

Secondary air injection MAP sensor connector, EC120	Battery
Pin 01	Positive terminal

Is the resistance less than 10,000 ohms?

-> Yes
REPAIR the short circuit. For additional information, refer to the wiring diagrams. CLEAR the DTC and test the system for normal operation.

-> No
GO to Pinpoint Test G528708t15.

G528708t15 : CHECK THE SECONDARY AIR INJECTION MAP SENSOR SIGNAL CIRCUIT FOR SHORT CIRCUIT TO GROUND

1. Measure the resistance between:

Secondary air injection MAP sensor connector, EC120	Battery
Pin 02	Negative terminal

Is the resistance less than 10,000 ohms?

-> Yes
REPAIR the short circuit. For additional information, refer to the wiring diagrams. CLEAR the DTC and test the system for normal operation.

-> No
GO to Pinpoint Test G528708t16.

G528708t16 : CHECK THE SECONDARY AIR INJECTION MAP SENSOR SIGNAL CIRCUIT FOR SHORT CIRCUIT TO POWER

1. Measure the resistance between:

Secondary air injection MAP sensor connector, EC120	Battery
Pin 02	Positive terminal

Is the resistance less than 10,000 ohms?

-> Yes
REPAIR the short circuit. For additional information, refer to the wiring diagrams. CLEAR the DTC and test the system for normal operation.

-> No
GO to Pinpoint Test G528708t17.

G528708t17 : CHECK THE SECONDARY AIR INJECTION MAP SENSOR SUPPLY CIRCUIT FOR HIGH RESISTANCE

1. Disconnect the ECM electrical connector, EC300. 2. Measure the resistance between:

Secondary air injection MAP sensor connector, EC120	ECM connector, EC300
Pin 01	Pin 19

Is the resistance greater than 5 ohms?

-> Yes
REPAIR the high resistance circuit. For additional information, refer to the wiring diagrams. CLEAR the DTC and test the system for normal operation.

-> No
GO to Pinpoint Test G528708t18.

G528708t18 : CHECK THE SECONDARY AIR INJECTION MAP SENSOR SIGNAL CIRCUIT FOR HIGH RESISTANCE

1. Measure the resistance between:

Secondary air injection MAP sensor connector, EC120	ECM connector, EC300
Pin 02	Pin 13

www.JagDocs.com

Is the resistance greater than 5 ohms?

-> Yes
REPAIR the high resistance circuit. For additional information, refer to the wiring diagrams. CLEAR the DTC and test the system for normal operation.

-> No
GO to Pinpoint Test G528708t19.

G528708t19 : CHECK THE SECONDARY AIR INJECTION MAP SENSOR GROUND CIRCUIT FOR HIGH RESISTANCE

1. Measure the resistance between:

Secondary air injection MAP sensor connector, EC120	ECM connector, EC300
Pin 03	Pin 07

Is the resistance greater than 5 ohms?

-> Yes
REPAIR the high resistance circuit. For additional information, refer to the wiring diagrams. CLEAR the DTC and test the system for normal operation.

-> No
INSTALL a new secondary air injection MAP sensor. CLEAR the DTC and test the system for normal operation.

PINPOINT TEST G528708p4 : CHECK THE SECONDARY AIR INJECTION VALVE CIRCUITS

G528708t20 : CHECK THE SECONDARY AIR INJECTION VALVE SUPPLY VOLTAGE

1. Key off. 2. Disconnect the secondary air injection valve electrical connector, PI90. 3. Key on, engine off. 4. Measure the voltage between:

Secondary air injection valve connector, PI90	Battery
Pin 02	Negative terminal

Is the voltage less than 10 volts?

-> Yes
REPAIR the supply circuit between the secondary air injection valve and battery. This circuit includes fuse 27 of the front power distribution box and the mega fuse. For additional information, refer to the wiring diagrams. CLEAR the DTC and test the system for normal operation.

-> No
GO to Pinpoint Test G528708t21.

G528708t21 : CHECK THE SECONDARY AIR INJECTION VALVE CONTROL CIRCUIT FOR SHORT CIRCUIT TO GROUND

1. Measure the resistance between:

Secondary air injection valve connector, PI90	Battery
Pin 01	Negative terminal

Is the resistance less than 10,000 ohms?

-> Yes
REPAIR the short circuit. For additional information, refer to the wiring diagrams. CLEAR the DTC and test the system for normal operation.

-> No
GO to Pinpoint Test G528708t22.

G528708t22 : CHECK THE SECONDARY AIR INJECTION VALVE CONTROL CIRCUIT FOR SHORT CIRCUIT TO POWER

1. Measure the resistance between:

Secondary air injection valve connector, PI90	Battery
Pin 01	Positive terminal

Is the resistance less than 10,000 ohms?

-> Yes
REPAIR the short circuit. For additional information, refer to the wiring diagrams. CLEAR the DTC and test the system for normal operation.

www.JagDocs.com

-> No
GO to Pinpoint Test G528708t23.

G528708t23 : CHECK THE SECONDARY AIR INJECTION VALVE CONTROL CIRCUIT FOR HIGH RESISTANCE

1. Disconnect the ECM electrical connector, EC300. 2. Measure the resistance between:

Secondary air injection valve connector, PI90	ECM connector, EC300
Pin 01	Pin 55

Is the resistance greater than 5 ohms?

-> Yes
REPAIR the high resistance circuit. For additional information, refer to the wiring diagrams. CLEAR the DTC and test the system for normal operation.

-> No
INSTALL a new secondary air injection valve.
Secondary Air Injection (AIR) Control Valve - 3.0L NA V6 - AJ27
Secondary Air Injection (AIR) Control Valve - 4.2L NA V8 - AJV8/3.5L NA V8 - AJV8
Secondary Air Injection (AIR) Control Valve - 4.2L SC V8 - AJV8 CLEAR the DTC and test the system for normal operation.

Exhaust Gas Recirculation (EGR) Valve (17.45.01)

Removal

Left-hand drive vehicles with Supercharger

1 . Remove the cabin air filter.
For additional information, refer to Cabin Air Filter (76.10.09)

2 . Remove the cabin air filter housing retaining nut.

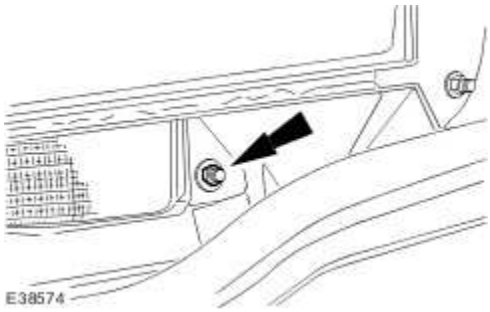

3 . Remove the cabin air filter housing.

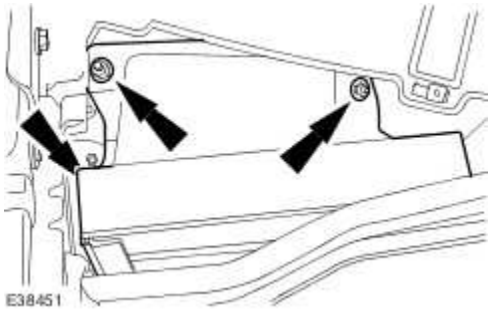

4 . Remove the engine compartment panel.

www.JagDocs.com

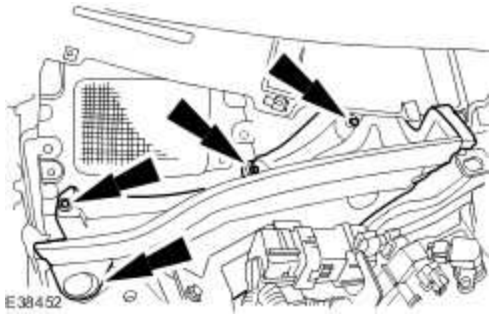

Vehicles with supercharger

5 Remove the throttle body.

. For additional information, refer to Throttle Body - 4.2L SC V8 - AJV8, VIN Range: G00442->G45703 (19.70.04)

For additional information, refer to Throttle Body - 4.2L SC V8 - AJV8, VIN Range: G45704->G99999 (19.70.04)

6 . Disconnect the exhaust gas recirculation (EGR) valve electrical connector.

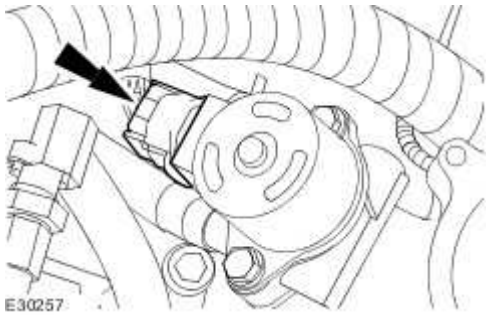

7 . **NOTE:**

Cap the exposed ports.

Disconnect the coolant hoses.

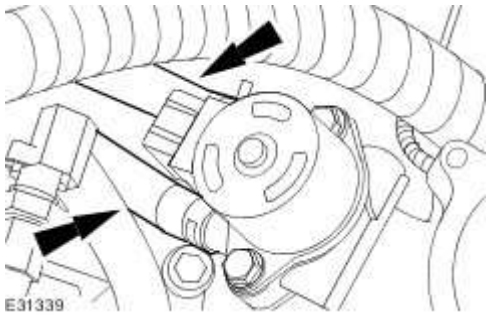

8 . Remove the exhaust manifold to EGR valve tube retaining nuts.

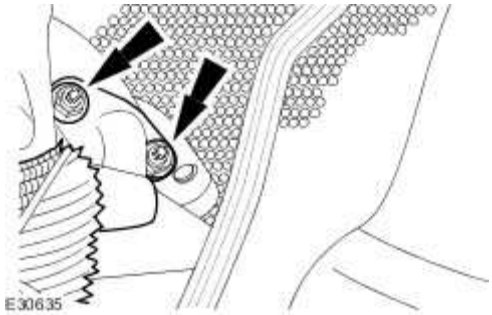

9 . Remove the EGR valve and the exhaust manifold to EGR valve tube.

- Remove the retaining bolts.
- Remove and discard the exhaust manifold to EGR valve tube gasket.
- Remove and discard the EGR valve to air intake elbow gasket.

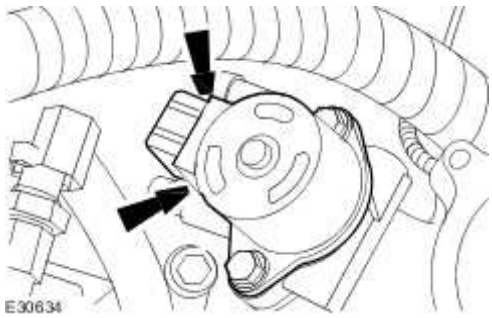

10 Remove the EGR valve.

.

- Remove and discard the EGR valve to exhaust manifold to EGR valve tube gasket.

www.JagDocs.com

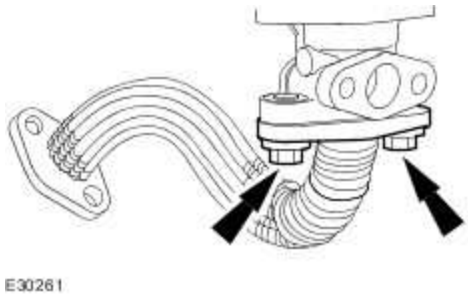

Vehicles without supercharger

11 . **NOTE:**

Cap the exposed ports.

Disconnect the EGR valve coolant hoses.

1) Disconnect the EGR valve electrical connector.

2) Disconnect the EGR valve coolant hoses.

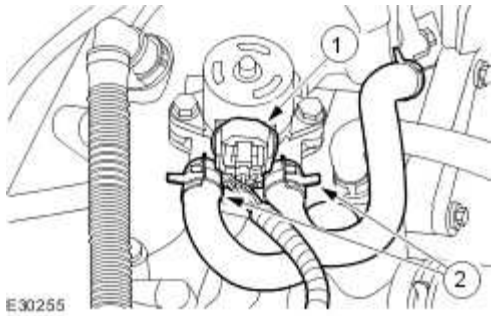

12 . Remove the retaining bolts.

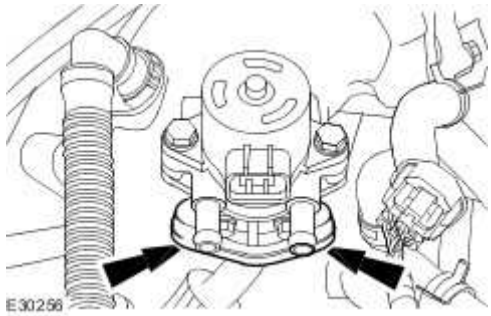

13 Remove the EGR valve.

.

- Remove and discard the EGR valve to exhaust manifold to EGR valve tube gasket.
- Remove and discard the EGR valve to intake manifold gasket.

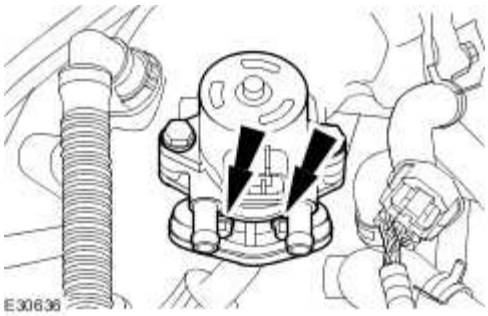

Installation

Vehicles with supercharger

1 . Install the EGR valve.

- Install a new EGR valve to exhaust manifold to EGR valve tube gasket.
- Tighten to 21 Nm.

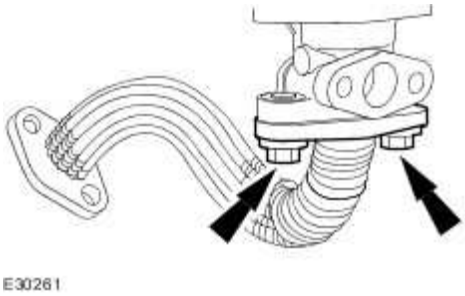

2 . Install the EGR valve and the exhaust manifold to EGR valve tube.

- Install a new exhaust manifold to EGR valve tube gasket.
- Install a new EGR valve to air intake elbow gasket.

www.JagDocs.com

Tighten to 10 Nm.

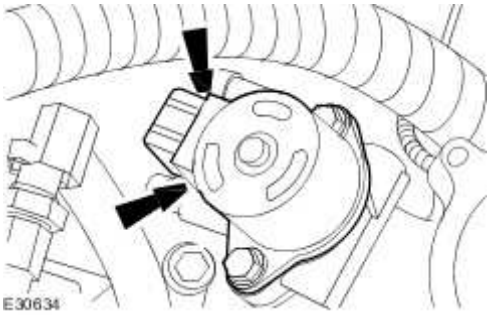

3 . Tighten to 21 Nm.

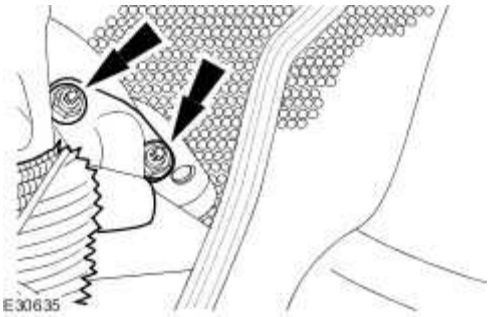

4 . **NOTE:**

Un-cap the exposed ports.

Connect the coolant hoses.

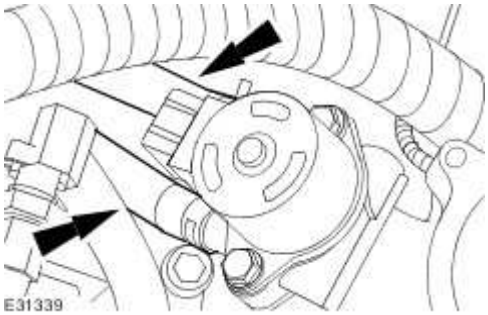

5 . Connect the EGR valve electrical connector.

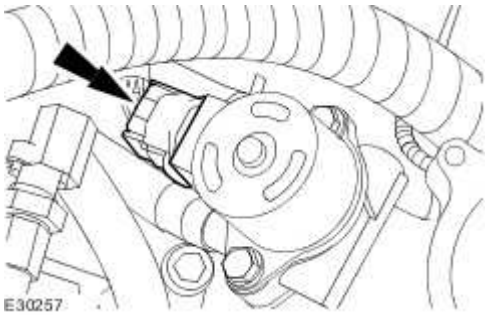

6 Install the throttle body.

. For additional information, refer to Throttle Body - 4.2L SC V8 - AJV8, VIN Range: G00442->G45703 (19.70.04)
For additional information, refer to Throttle Body - 4.2L SC V8 - AJV8, VIN Range: G45704->G99999 (19.70.04)

www.JagDocs.com

Vehicles without supercharger

7 . Install the EGR valve.

- Install a new EGR valve to exhaust manifold to EGR valve tube gasket.
- Install a new EGR valve to intake manifold gasket.
- Tighten to 10 Nm.

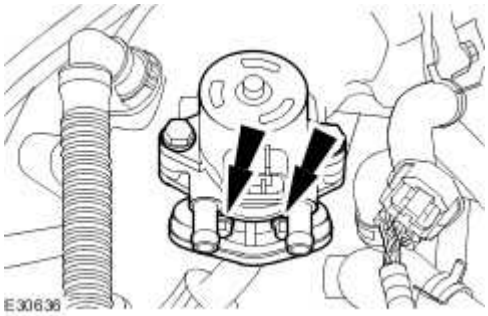

8 . Tighten to 21 Nm.

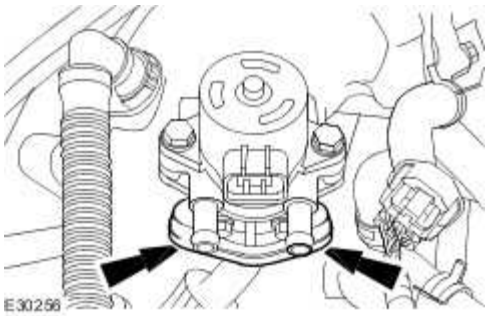

9 . **NOTE:**

Un-cap the exposed ports.

Connect the EGR valve electrical connector.

1) Connect the EGR valve coolant hoses.

2) Connect the EGR valve electrical connector.

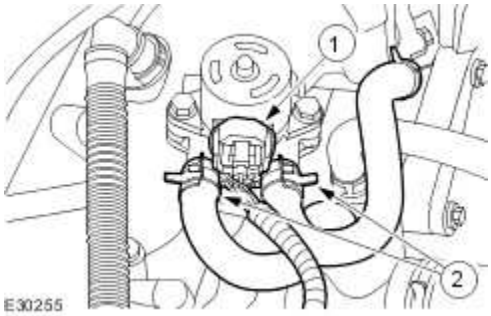

Left-hand drive vehicles with Supercharger

10 . Install the engine compartment panel.

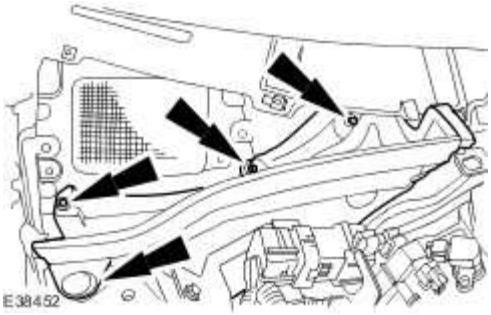

11 . Install the cabin air filter housing.

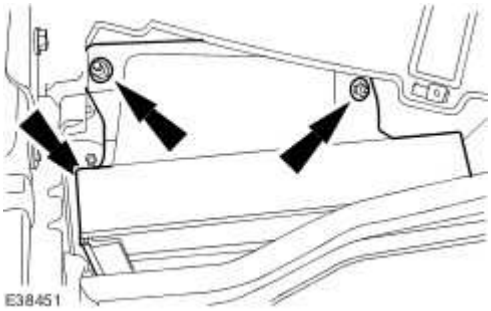

12 . Install the cabin air filter housing retaining nut.

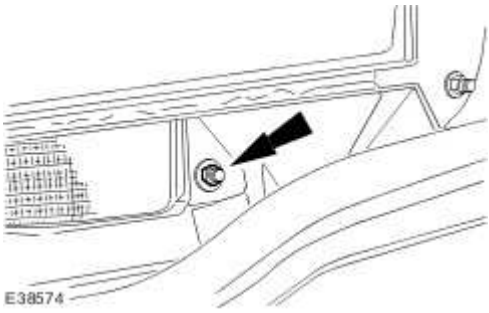

13 . Install the cabin air filter.
For additional information, refer to Cabin Air Filter (76.10.09)

All vehicles

14 . Check and top up the coolant expansion tank.

15 **NOTE:**
.
For NAS vehicles only.

If required, carry out a long drive cycle.
For additional information, refer to Powertrain Control Module (PCM) Long Drive Cycle Self-Test

www.JagDocs.com

Exhaust Manifold to Exhaust Gas Recirculation (EGR) Valve Tube (17.45.11)

Removal

Vehicles with supercharger

1 Remove the exhaust gas recirculation (EGR) valve.
. For additional information, refer to Exhaust Manifold to Exhaust Gas Recirculation (EGR) Valve Tube (17.45.11)

Vehicles without supercharger

2 . Remove the intake manifold.
For additional information, refer to Intake Manifold - VIN Range: G00442->G45703 (30.15.01)
For additional information, refer to Intake Manifold - VIN Range: G45704->G99999 (30.15.01)

3 . Remove the exhaust manifold to exhaust gas recirculation (EGR) valve tube.

Remove and discard the gasket.

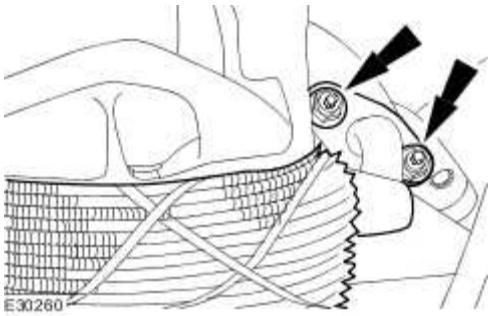

Installation

Vehicles with supercharger

1 . Install the EGR valve.
For additional information, refer to Exhaust Gas Recirculation (EGR) Valve (17.45.01)

Vehicles without supercharger

2 . Install the exhaust manifold to exhaust gas recirculation (EGR) valve tube.

- Install a new gasket.
- Tighten to 21 Nm.

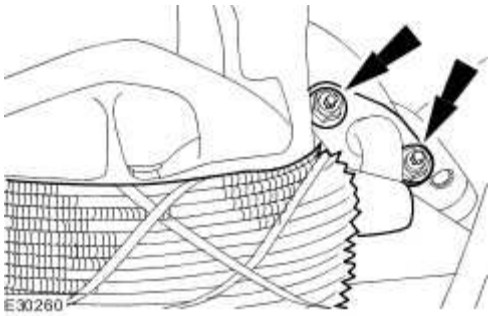

3 . Install the intake manifold.
For additional information, refer to Intake Manifold - VIN Range: G00442->G45703 (30.15.01)
For additional information, refer to Intake Manifold - VIN Range: G45704->G99999 (30.15.01)

www.JagDocs.com

Secondary Air Injection (AIR) Control Valve - 3.0L NA V6 - AJ27

Removal

1 Remove the secondary air injection (AIR) control valve to exhaust manifold right-hand tube.
. For additional information, refer to Secondary Air Injection (AIR) Control Valve to Exhaust Manifold Tube RH - 3.0L NA V6 - AJ27

2 . Disconnect the AIR switching valve electrical connector.

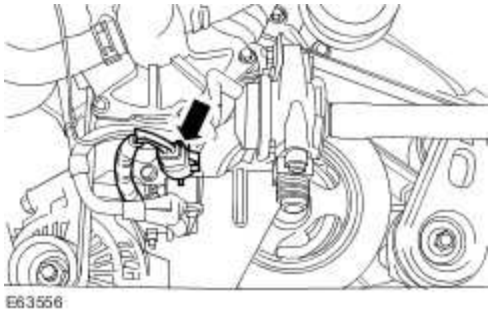

3 . Disconnect the AIR switching valve vacuum hoses.

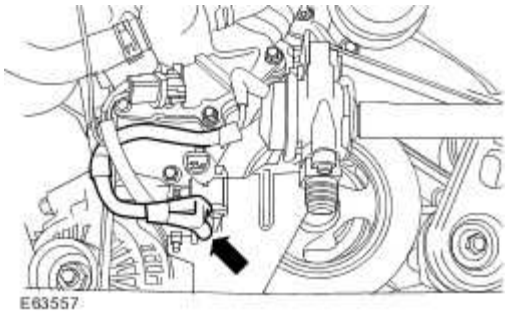

4 . Detach the AIR wiring harness.

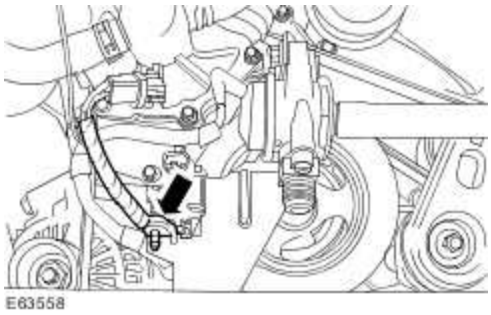

5 . Disconnect the AIR control valve vacuum hose.

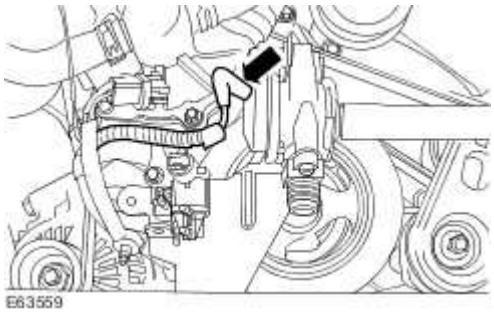

6 . **NOTE:**

Note the position of the timing marks on the AIR control valve and the AIR supply hose.

Disconnect the AIR supply hose.

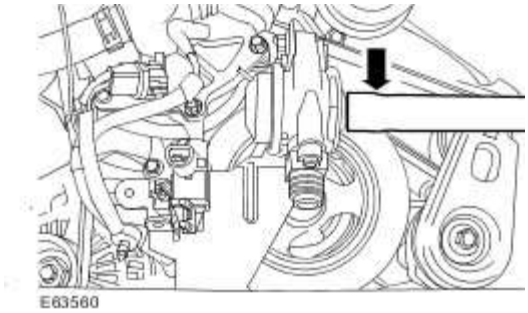

7 . Remove the AIR control valve and bracket assembly.

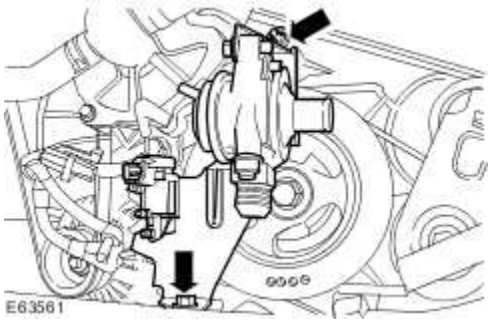

Installation

1 . To install, reverse the removal procedure.

Tighten to 8 Nm.

www.JagDocs.com

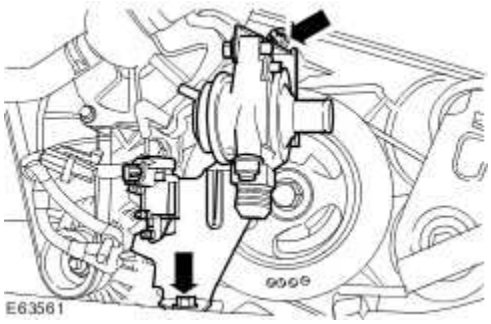
E63561

Secondary Air Injection (AIR) Control Valve - 4.2L NA V8 - AJV8/3.5L NA V8 - AJV8

Removal

1 . Disconnect the battery ground cable.
For additional information, refer to Battery Disconnect and Connect

2 . Remove the air cleaner.
For additional information, refer to Air Cleaner (19.10.05)

3 . Disconnect the secondary air injection (AIR) control valve vacuum hose.

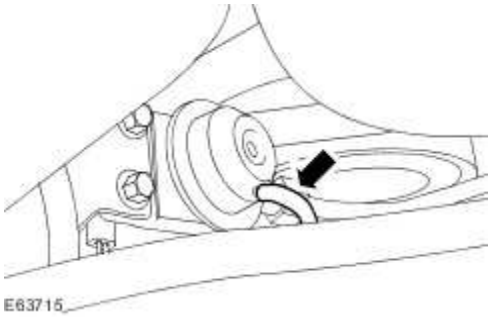

4 . Disconnect the AIR control valve to exhaust manifold tube.

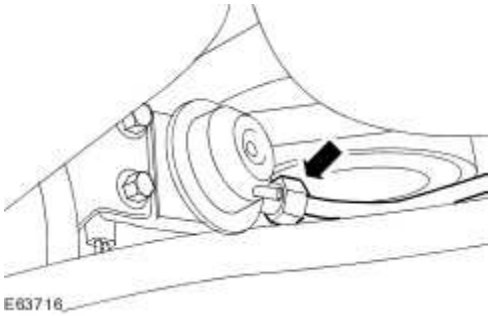

5 . Reposition the AIR control valve downwards.

Remove the AIR control valve retaining bolts.

www.JagDocs.com

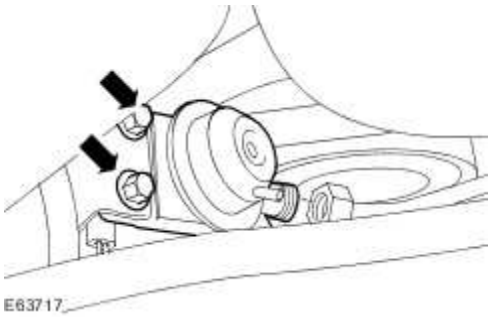

6 . Remove the air deflector.
For additional information, refer to Air Deflector (76.11.41)

7 . Remove the AIR control valve.

- Disconnect the AIR control valve supply hose.

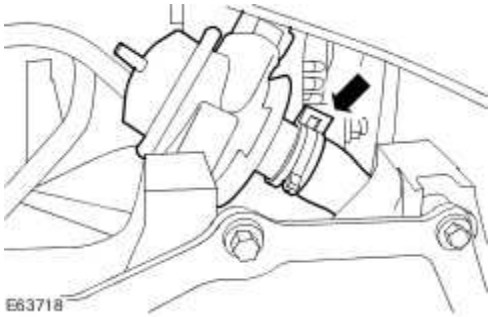

Installation

1 . To install, reverse the removal procedure.

- Tighten to 25 Nm.

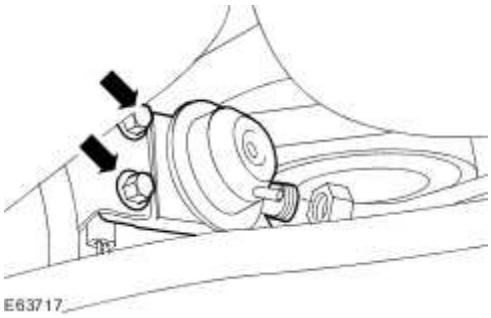

2 . Tighten to 35 Nm.

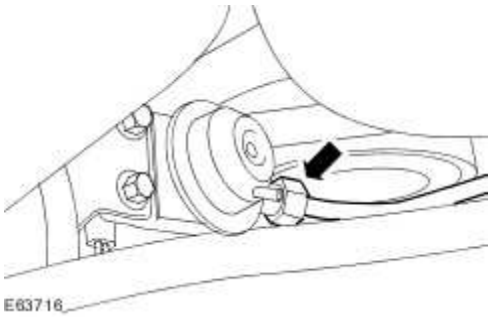

3 **NOTE:**

.

For NAS vehicles only.

If required, carry out a short drive cycle.
For additional information, refer to Powertrain Control Module (PCM) Short Drive Cycle Self-Test

www.JagDocs.com

Secondary Air Injection (AIR) Control Valve - 4.2L SC V8 - AJV8

Removal

1 . Disconnect the battery ground cable.
For additional information, refer to

2 . Remove the radiator grille opening panel.
For additional information, refer to

3 . Remove the air cleaner outlet pipe.
For additional information, refer to Air Cleaner Outlet Pipe (19.10.31)

4 . Remove the air cleaner intake duct.

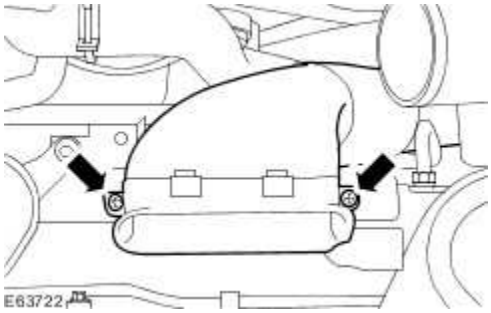

5 . Disconnect the secondary air injection (AIR) control valve to exhaust manifold tube.

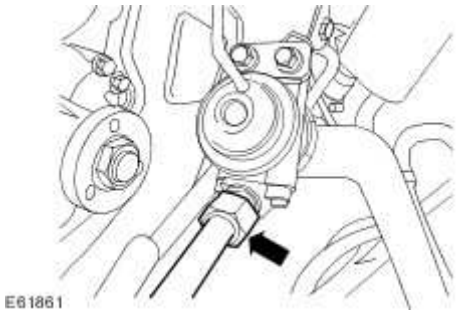

6 . Disconnect the AIR control valve vacuum hose.

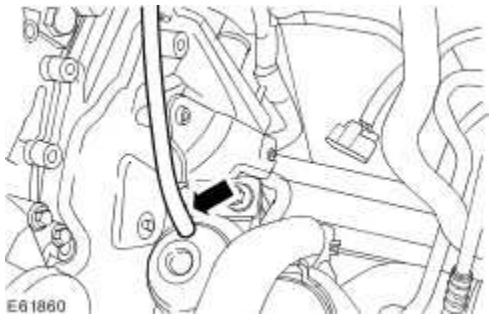

7 . Release the hose from the cooling fan motor and shroud.

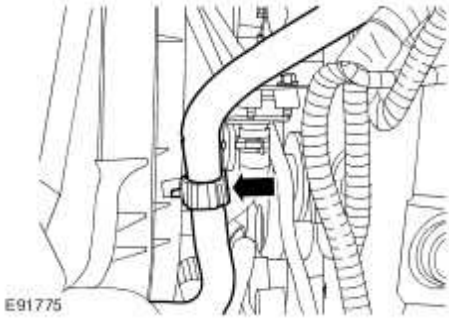

8 . Disconnect the AIR control valve air supply hose.

1) Release the hose from the cooling fan motor and shroud.

2) Disconnect the AIR control valve air supply hose.

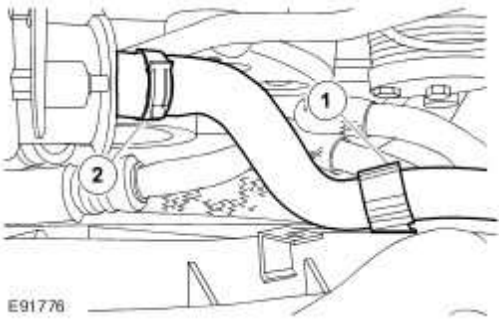

9 . Remove the AIR control valve.

www.JagDocs.com

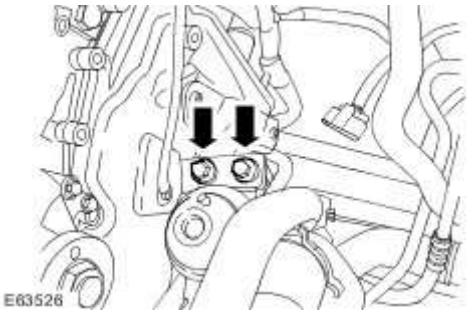

Installation

1 . Install the AIR control valve.

Tighten to 25 Nm.

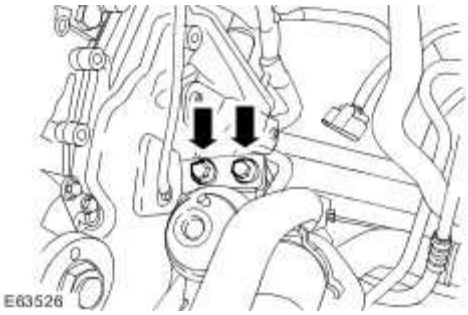

2 . Connect the AIR control valve air supply hose.

1) Connect the AIR control valve air supply hose.

2) Secure the hose to the cooling fan motor and shroud.

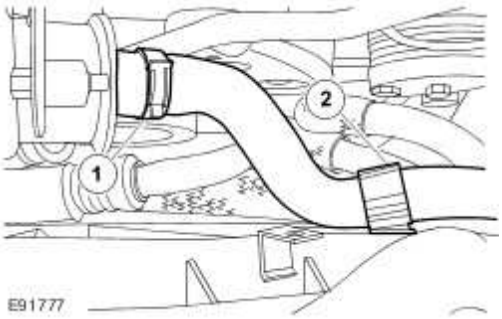

3 . Secure the hose to the cooling fan motor and shroud.

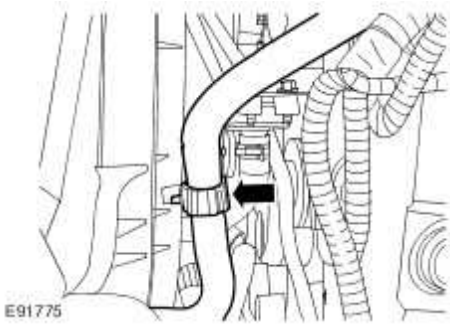

4 . Connect the AIR control valve vacuum hose.

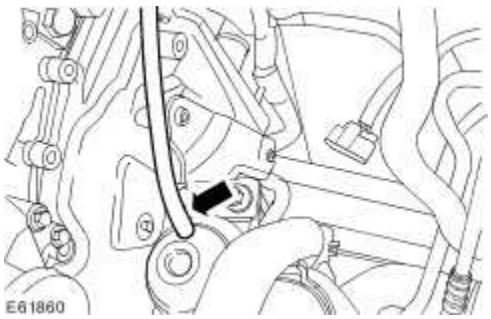

5 . Connect the AIR control valve to exhaust manifold tube.

Tighten to 35 Nm.

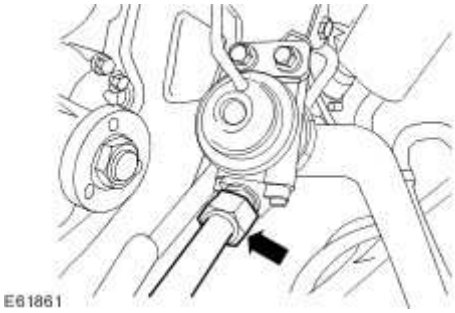

6 . Install the air cleaner intake duct.

www.JagDocs.com

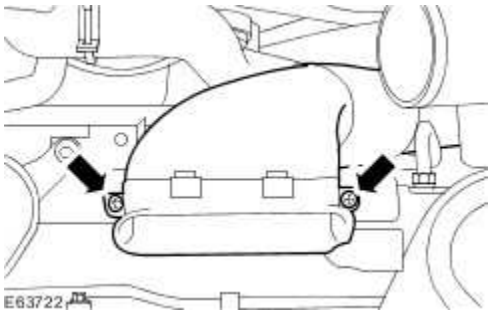

7 . Install the air cleaner outlet pipe.
For additional information, refer to Air Cleaner Outlet Pipe (19.10.31)

8 . Install the radiator grille opening panel.
For additional information, refer to

9 . Connect the battery ground cable.
For additional information, refer to

10 **NOTE:**
.

For NAS vehicles only.

If required, carry out a short drive cycle.
For additional information, refer to Powertrain Control Module (PCM) Short Drive Cycle Self-Test

Secondary Air Injection (AIR) Control Valve to Exhaust Manifold Tube LH - 3.0L NA V6 - AJ27

Removal

1 . Remove the air deflector.
For additional information, refer to Air Deflector (76.11.41)

2 **NOTE:**
.

Note the position of the timing mark on the secondary air injection (AIR) control valve to exhaust manifold left-hand tube. The timing mark indicates the correct end of the AIR control valve to exhaust manifold left-hand tube that should be connected to the AIR control valve to exhaust manifold right-hand tube.

Disconnect the secondary air injection (AIR) control valve to exhaust manifold left-hand tube.

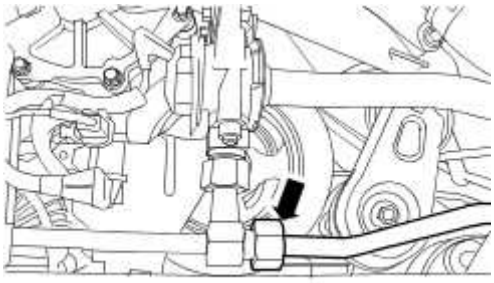

E63553

3 Remove the AIR control valve to exhaust manifold left-hand tube from the left-hand exhaust
. manifold.

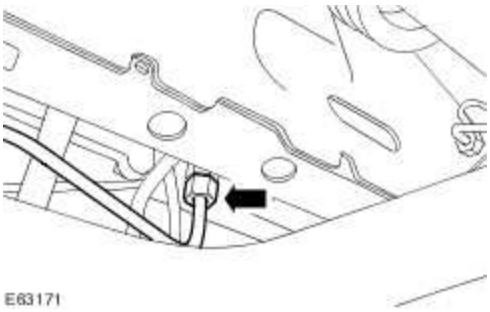

E63171

www.JagDocs.com

Installation

1 . To install, reverse the removal procedure.

Tighten to 35 Nm.

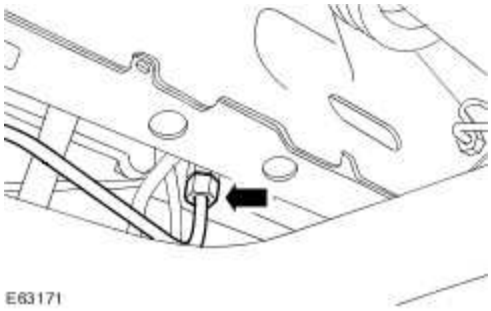

2 **NOTE:**

.

Make sure that the timing mark on the AIR control valve to exhaust manifold left-hand tube is correctly aligned.

Tighten to 35 Nm.

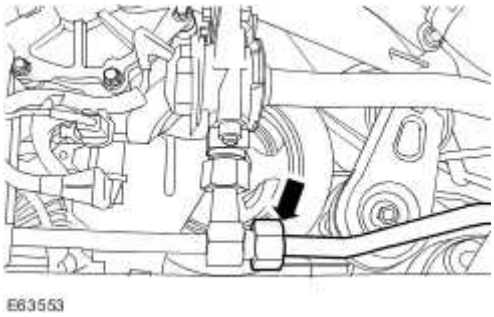

Secondary Air Injection (AIR) Control Valve to Exhaust Manifold Tube RH - 3.0L NA V6 - AJ27

Removal

1 . Disconnect the battery ground cable.
For additional information, refer to Battery Disconnect and Connect

2 . Remove the air deflector.
For additional information, refer to Air Deflector (76.11.41)

3 . Disconnect the secondary air injection (AIR) control valve to exhaust manifold right-hand tube from the right-hand exhaust manifold.

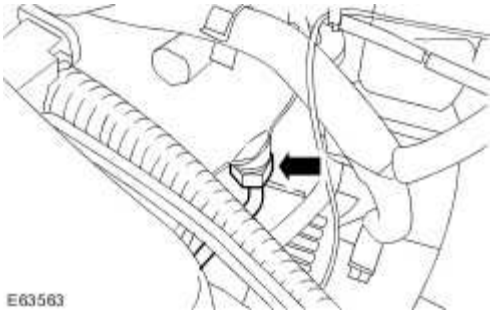

4 . Disconnect the AIR control valve to exhaust manifold left-hand tube.

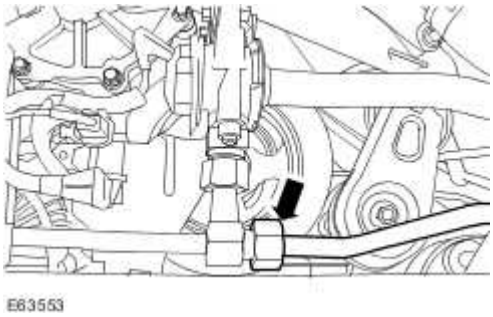

5 . Disconnect the AIR control valve to exhaust manifold right-hand tube.

www.JagDocs.com

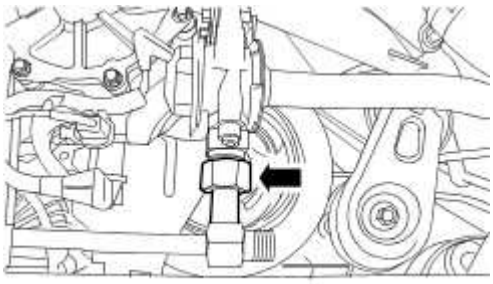

E63554

6 . Remove the AIR control valve to exhaust manifold right-hand tube.

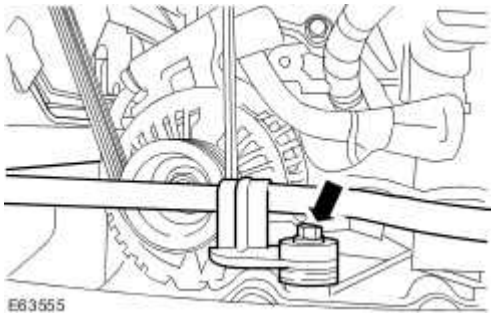

E63555

Installation

1 . To install, reverse the removal procedure.

Tighten to 8 Nm.

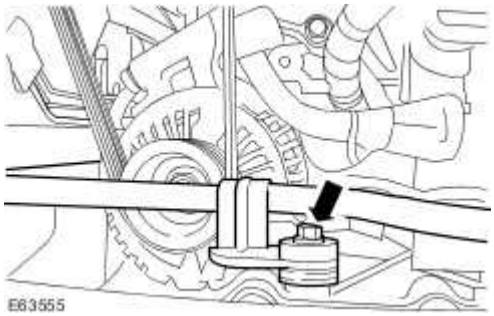

E63555

2 . Tighten to 35 Nm.

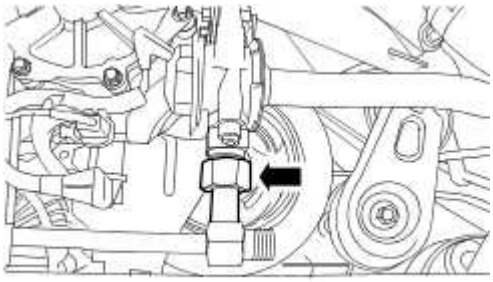

E63554

3 . Tighten to 35 Nm.

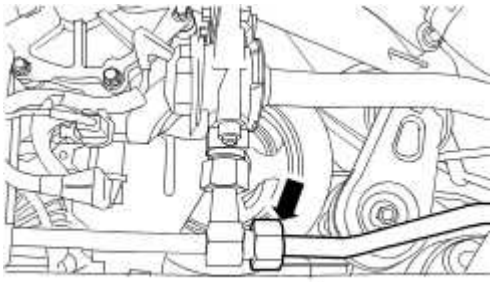

E63553

4 . Tighten to 35 Nm.

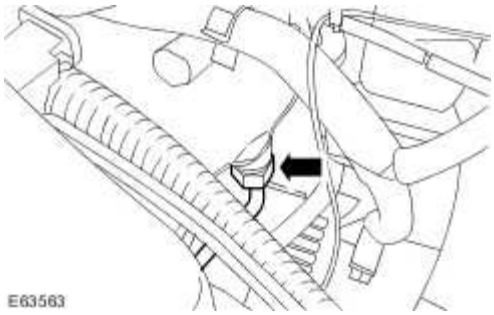

E63563

www.JagDocs.com

Secondary Air Injection (AIR) Control Valve to Exhaust Manifold Tube - 4.2L NA V8 - AJV8/3.5L NA V8 - AJV8, 4.2L

Removal

Right-hand drive vehicles

1 . Center the steering wheel.

Lock in position, remove the ignition key.

All vehicles

2 . Remove the cooling fan motor and shroud.
For additional information, refer to Cooling Fan Motor and Shroud (26.25.25)

3 . Remove the right-hand exhaust manifold heat shield upper retaining bolts.

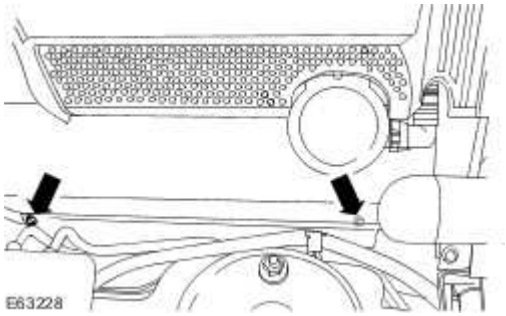

4 . Remove the air deflector.
For additional information, refer to Air Deflector (76.11.41)

5 . Disconnect the secondary air injection (AIR) control valve to exhaust manifold tube from the left-hand exhaust manifold.

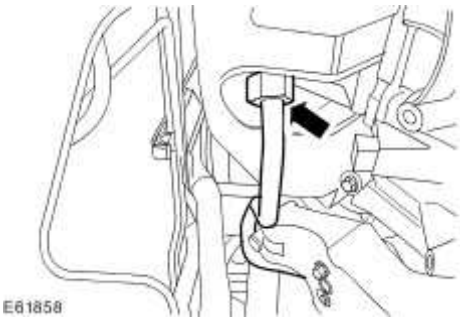

Right-hand drive vehicles

6 . Remove the steering gear coupling upper pinch bolt

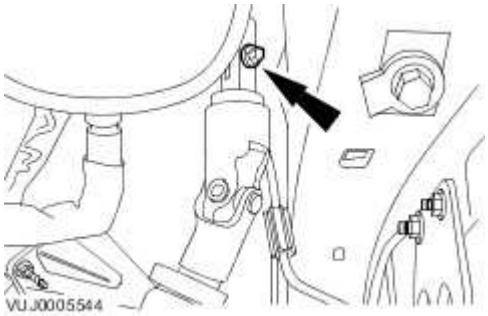

7 . Remove the steering gear coupling.

- Remove the steering gear coupling lower pinch bolt.

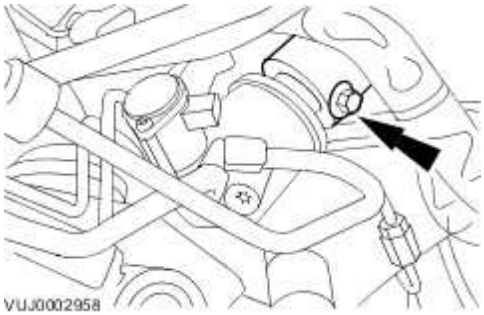

All vehicles

8 . Remove the right-hand heated oxygen sensor (HO2S).
For additional information, refer to Heated Oxygen Sensor (HO2S)

9 . Remove the right-hand exhaust manifold heat shield.

www.JagDocs.com

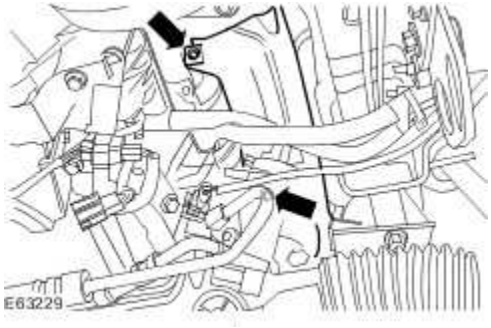

10 . Disconnect the AIR control valve to exhaust manifold tube from the right-hand exhaust manifold.

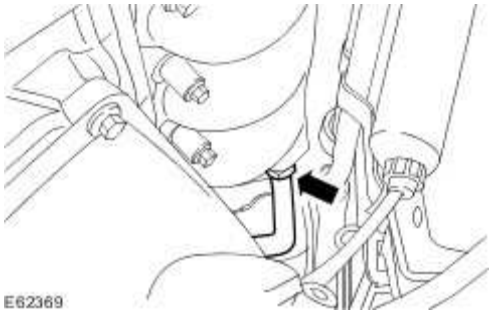

11 . Lower the vehicle.

12 . Disconnect the coolant hose.

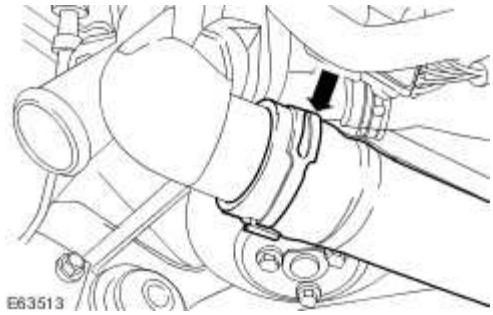

13 . **NOTE:**

Vehicles with supercharger shown, vehicles without supercharger similar.

Disconnect the AIR control valve to exhaust manifold tube.

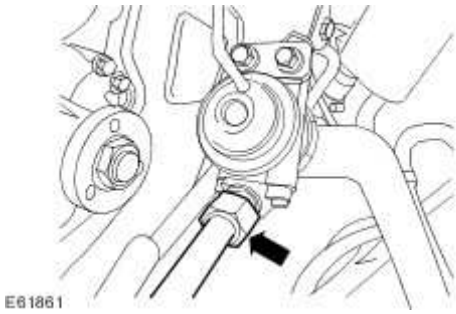

14 . **NOTE:**

Vehicles with supercharger shown, vehicles without supercharger similar.

Remove the AIR control valve to exhaust manifold tube.

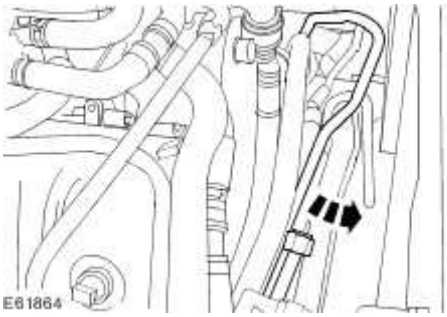

Installation

All vehicles

1 . **NOTE:**

Vehicles with supercharger shown, vehicles without supercharger similar.

To install, reverse the removal procedure.

- Tighten to 35 Nm.

www.JagDocs.com

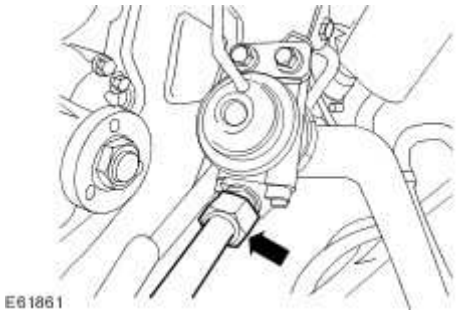

2 . Tighten to 35 Nm.

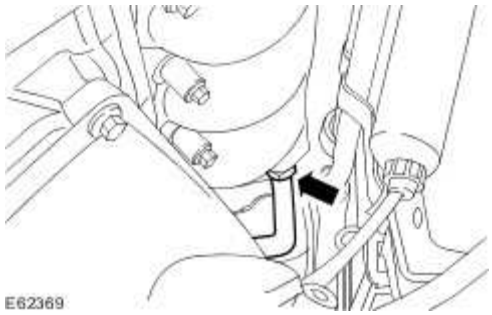

3 . Tighten to 3 Nm.

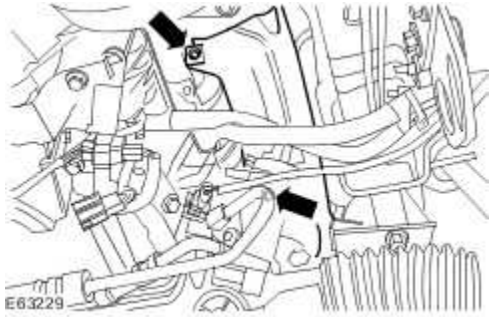

Right-hand drive vehicles

4 . Tighten to 35 Nm.

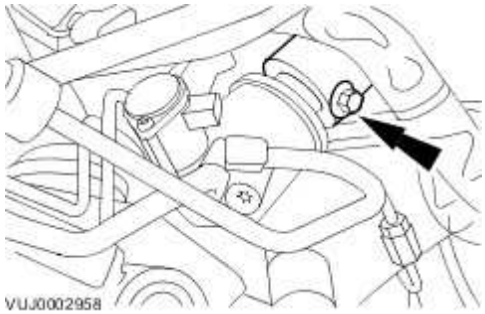

5 . Tighten to 35 Nm.

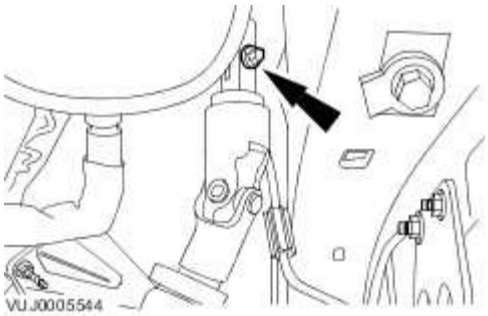

All vehicles

6 . Tighten to 35 Nm.

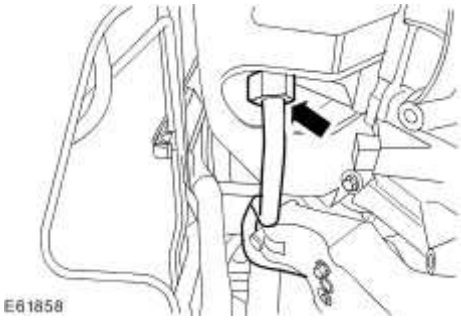

7 . Tighten to 3 Nm.

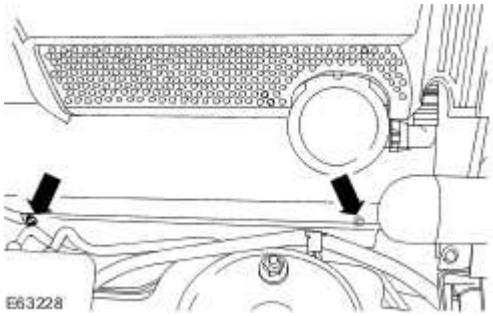

www.JagDocs.com

Secondary Air Injection (AIR) Control Valve to Exhaust Manifold Tube - 4.2L SC V8 - AJV8, 4.2L

Removal

1 . Remove the cooling fan motor and shroud.
For additional information, refer to Cooling Fan Motor and Shroud (26.25.25)

2 . Raise the vehicle.

3 . Disconnect the secondary air injection (AIR) control valve to exhaust manifold tube from the left-hand exhaust manifold.

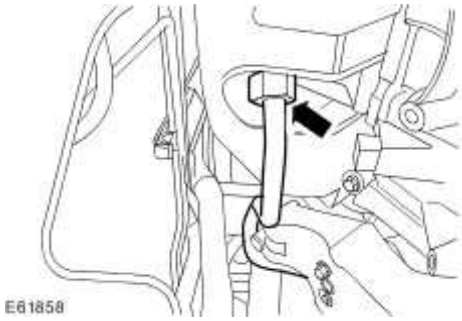

4 . Lower the vehicle.

5 . Disconnect the coolant hose.

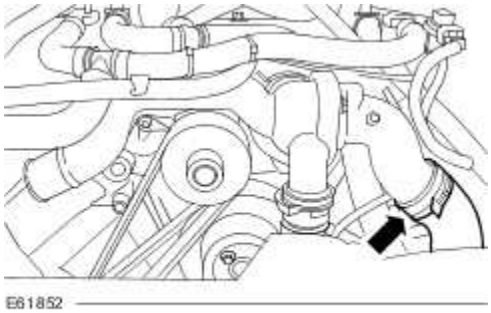

6 . Disconnect the AIR control valve to exhaust manifold tube.

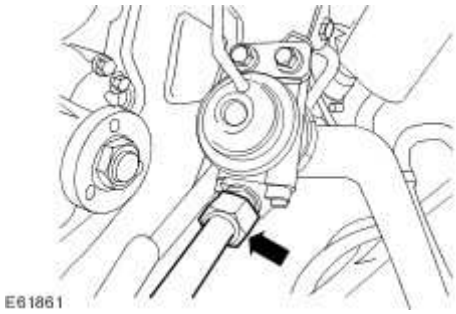

7 . Disconnect the AIR control valve to exhaust manifold tube from the right-hand exhaust manifold.

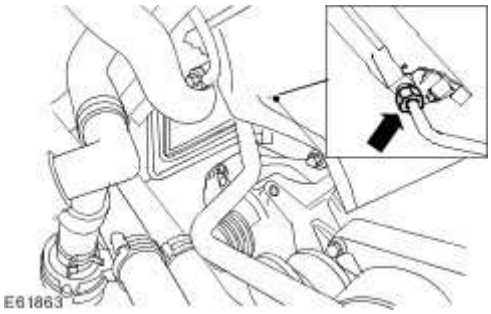

8 . Remove the AIR control valve to exhaust manifold tube.

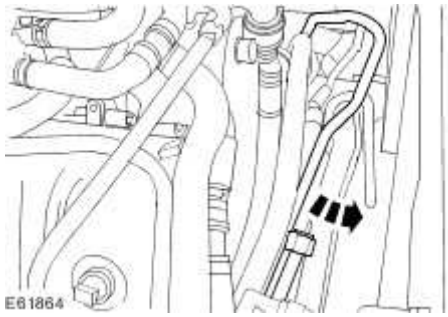

Installation

1 . To install, reverse the removal procedure.

- Tighten to 35 Nm.

www.JagDocs.com

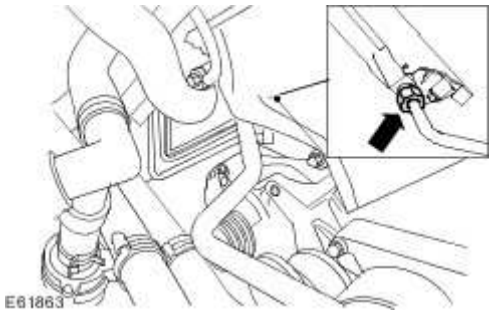

2 . Tighten to 35 Nm.

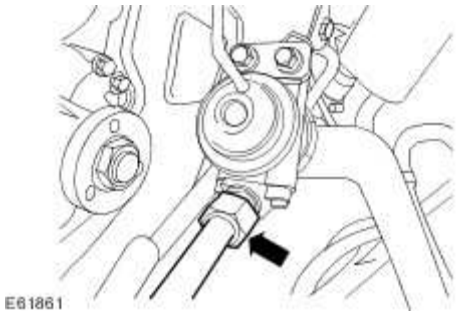

3 . Tighten to 35 Nm.

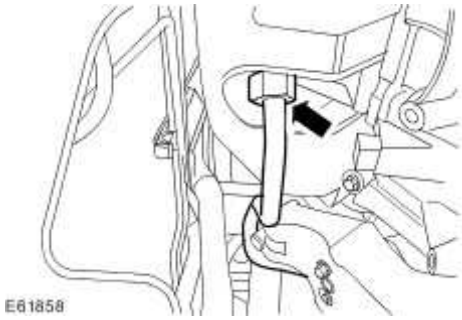

Secondary Air Injection (AIR) Pump

Removal

1 Remove the front bumper cover.

. For additional information, refer to Front Bumper Cover - VIN Range: G00442->H18679 (76.22.78)

2 . Disconnect the secondary air pump relay electrical connector.

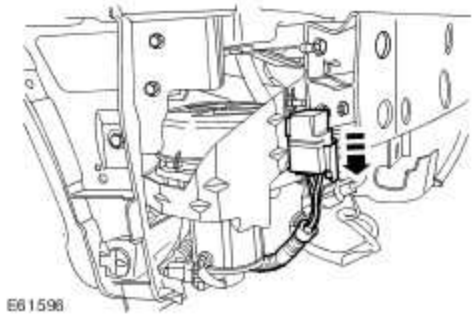

3 . Disconnect the secondary air pump electrical connector.

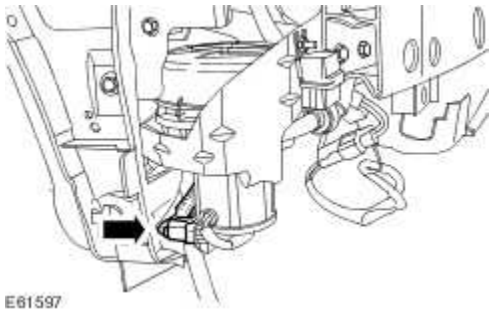

4 . Disconnect the secondary air pump hose.

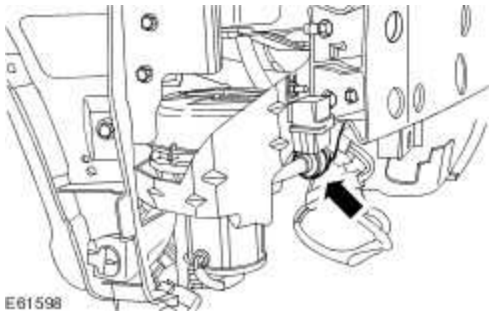

www.JagDocs.com

5 . Remove the secondary air pump.

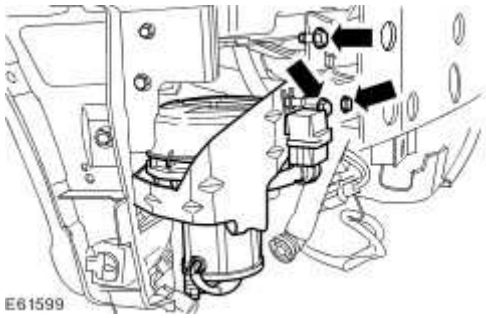

Installation

1 . To install, reverse the removal procedure.

Tighten to 20 Nm.

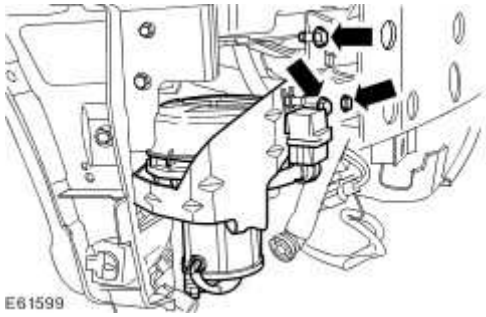

2 **NOTE:**

.

For NAS vehicles only.

If required, carry out a short drive cycle.
For additional information, refer to Powertrain Control Module (PCM) Short Drive Cycle Self-Test

Specifications

Torque Specifications

Description	Nm	lb-ft	lb-in
Exhaust gas recirculation (EGR) valve to cylinder head retaining bolts	10	–	89
EGR valve to EGR cooler retaining bolts	10	–	89
EGR valve tube to exhaust manifold retaining bolts	10	–	89
EGR valve cooler mounting bracket retaining bolt	10	–	89
EGR valve outlet tube to EGR valve retaining bolts	10	–	89
EGR valve outlet tube to timing cover retaining bolt	5	–	44
Fuel filter mounting bracket retaining 10 mm bolt	25	18	–
Fuel filter mounting bracket retaining 6 mm bolt	10	–	89

www.JagDocs.com

Engine Emission Control

Crankcase Ventilation

The crankcase ventilation system on the 2.7L Diesel ensures that all gases emitted from the crankcase during engine running are separated from any oil particles.

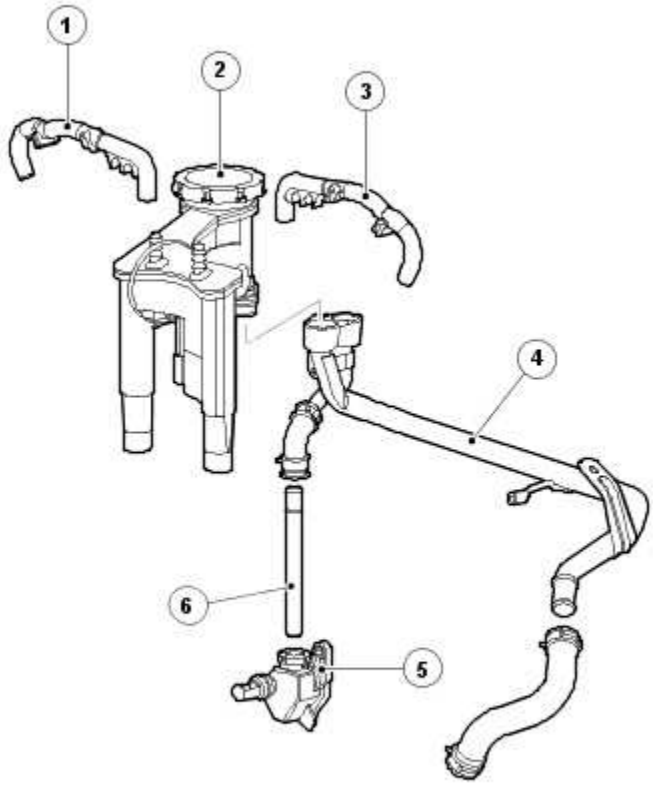

E66813

Item	Part Number	Description
1		Left-hand breather tube
2		Crankcase vent oil seperator
3		Right-hand breather tube

4		Crankcase oil return tube
5		Crankcase oil return valve
6		Oil return tube

Crankcase ventilation is by a cyclone seperator. The oil seperator is constructed from a plastic composite material. The oil seperator is located between the 'V' at the back of the engine block by means of three seals. The oil seperator contains a diaphragm and spring which opens under intake vacuum.

The ventilation systems first chamber is a horizontal void cavity fed by eight points. Once primary separation is complete, the partially cleaned vapor is sucked through a cyclone where the process further reduces the oil content. Prior to the vapor entering the air supply at the compressor, a diaphragm pressure balance valve operates to minimize the crankcase pressure variations caused by engine air demand and service condition.

Due to the shape and design of the cyclone unit, the oil and vapor are seperated more effectively. Vapor is directed into the inlet system and the heavier oil drains back into the engine.

Exhaust Emission Control

The exhaust of a diesel engine contains the following pollutants:

Carbon Monoxide (CO)

Hydrocarbons (HC)

Particulates

Oxides of Nitrogen (NOx)

These pollutants are primarily produced as a result of incomplete combustion of the fuel.

The particulates in the exhaust gases consist of pure carbon and various compounds such as metal oxide and sulphur.

www.JagDocs.com

Exhaust Gas Re-Circulation

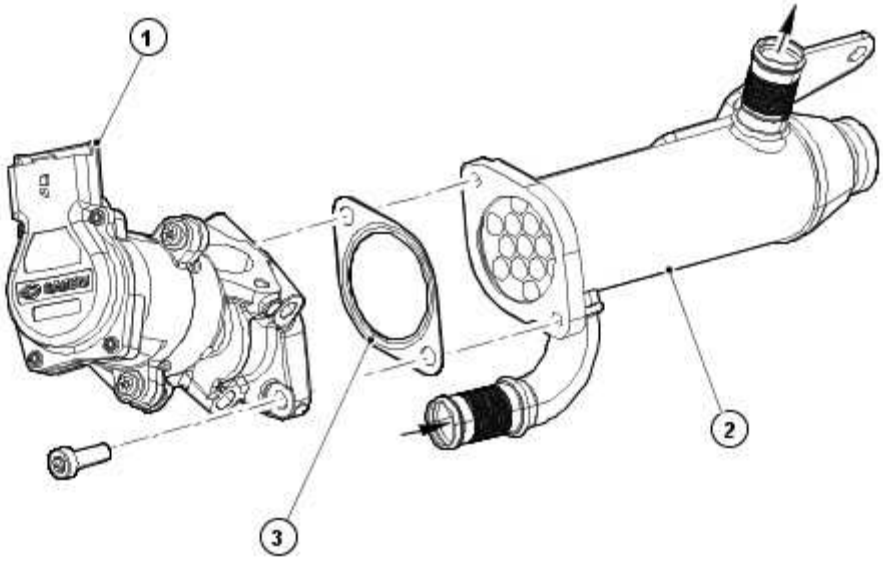

E52628

Item	Part Number	Description
1		Exhaust gas recirculation (EGR) valve
2		EGR cooler
3		Gasket

The exhaust gas re-circulation (EGR) system is fitted to the engine in order to reduce the amount of nitrogen oxide (NOx). This is done by reducing the temperature of the combustion process by introducing some waste exhaust gases into the inlet manifold. The effect of this is that there is a depletion of oxygen which reduces the temperature of the combustion process and in turn reduces the amount of NOx produced.

The engine control module (ECM) will determine the amount of EGR operation depending on the engine rpm, intake air temperature, coolant temperature and fuel flow rate. The amount of exhaust gas being recirculated is measured by a combination of position sensing of the valves and a mass air flow (MAF) sensor.

The EGR valves are operated through their full range at each engine start-up. This is to clear any carbon deposits that may have built up whilst the engine was running.

The EGR system is continually monitored for faults. Depending on how the system fails, the ECM will dictate whether the malfunction indication light (MIL) is on or off. In the event of a failure of the EGR system, the ECM will use substitute values and the EGR function will become inoperative.

The EGR cooler is connected to the vehicle cooling system via hoses and is there to cool the exhaust gases being recirculated.

The EGR valve and cooler are supplied as separate components. The EGR valve itself should not be disassembled.

www.JagDocs.com

Engine Emission Control

Principle of operation

Exhaust gas recirculation (EGR)

The EGR system recycles exhaust gases back through the combustion process to reduce NOx emissions.

By introducing this gas into the air intake, oxygen content and combustion temperatures are reduced, which reduces the NOx emissions.

High EGR flow is necessary during cruising and mid-range acceleration, when combustion temperatures are typically very high, while lower EGR flow is needed during low speed and light load conditions.

No EGR flow should occur during conditions when it could adversely affect engine operating efficiency or vehicle driveability, such as engine warm-up, idle, etc.

The EGR function of the 2.7 L engine is managed by the engine control module (ECM), which controls the operation of stepper motors, allowing precise control of the EGR valve actuators.

The ECM determines the optimum EGR flow using inputs from sensors in the engine management system, including the mass air flow meters, coolant temperature sensor, and intake air temperature sensor.

Positive crankcase ventilation

The crankcase ventilation system uses the depression created in the air intake to draw vapors from the crankcase through the engine where they are burnt with the fuel/air charge.

By doing this, any build-up of pressure inside the crankcase is avoided, reducing blow-by and potential oil leakage problems, while still reducing emissions into the atmosphere.

The 2.7 L engine crankcase ventilation is through a cyclone separator mounted in the engine 'V'.

The separator consists of a diaphragm and spring inside the casing which respond to crankcase pressure variations and separate the oil from the vapor, allowing the oil back into the engine while the vapor is directed to the intake system.

Overview

There are changes to the engine management system (EMS) for 2006 my, the most obvious of which will be the change to 7-digit diagnostic trouble codes (DTCs) from the familiar 5-digit.

Refer to the DTC index in this section for guidance on how to use these codes with the Jaguar approved diagnostic system or a scan tool.

Inspection and verification

1 . Verify the customer concern.

2 . Visually inspect for obvious signs of mechanical or electrical damage.

Mechanical	Electrical
Engine breather hoses Cyclone separator EGR Pipes (check for cracks)	Electrical connections to the stepper motor(s) Stepper motor(s) Harnesses Mass air flow (MAF) sensors Manifold absolute pressure (MAP) sensor Intake air temperature (IAT) sensor Intake air shutoff throttle Engine control module (ECM)

3 . If an obvious cause for an observed or reported concern is found, correct the cause (if possible) before proceeding to the next step.

4 . If the cause is not visually evident use the Jaguar approved diagnostic system or a scan tool to retrieve the fault codes before proceeding to the DTC index, or the symptom chart if no DTCs are set.

Symptom chart

Symptom	Possible source	Action
Difficult to start	EGR valve stuck open	Inspect the system (see visual inspection). Check for DTCs.
Poor idle quality	EGR valve stuck open	Inspect the system (see visual inspection). Check for DTCs.
Lack of power when accelerating	EGR valve stuck open	Inspect the system (see visual inspection). Check for DTCs.
Engine stops/stalls	EGR valve stuck	Inspect the system (see visual inspection). Check for

www.JagDocs.com

	open	DTCs.
Excessive fuel consumption	EGR valve stuck open	Inspect the system (see visual inspection). Check for DTCs.
Excessive black smoke	EGR valve stuck open	Inspect the system (see visual inspection). Check for DTCs.
Excessive emissions	EGR system not operating	Inspect the system (see visual inspection). Check for DTCs.
Loud 'ticking' noise with engine running	EGR pipes cracked	Closely inspect the pipes for cracks (particularly at the corrugated sections).
Excessive blow-by	Crankcase ventilation system restricted	Inspect the hoses. Check each hose for restriction/blockage by gently blowing through. Check for blockage of the separator.
Engine oil leaks	Crankcase ventilation system restricted	Inspect the hoses. Check each hose for restriction/blockage by gently blowing through. Check for blockage of the separator.

DTC index

NOTE:

Generic scan tools may not read the codes listed, or may read only 5-digit codes. Match the 5 digits from the scan tool to the first 5 digits of the 7-digit code listed to identify the fault (the last 2 digits give extra information read by the manufacturer-approved diagnostic system).

NOTE:

For a full list of powertrain DTCs,
Electronic Engine Controls

DTC	Condition	Possible source	Action
P040100	Exhaust gas recirculation (EGR) insufficient flow detected	EGR valve incorrectly fitted or loose EGR pipe blocked	Check pipework for restriction. Check the mechanical function of the throttle valve. For EGR actuator and circuit tests, GO to Pinpoint Test G552800p2.

		EGR valve stuck closed, blocked EGR valve failure MAF sensor fault	and GO to Pinpoint Test G552800p4. For MAF sensor circuit tests, Electronic Engine Controls
P040200	Exhaust gas recirculation (EGR) excessive flow detected	EGR valve incorrectly fitted or loose EGR pipe blocked EGR valve stuck closed, blocked EGR valve failure MAF sensor fault	Check pipework for restriction. Check the mechanical function of the throttle valve. For EGR actuator and circuit tests, GO to Pinpoint Test G552800p2. and GO to Pinpoint Test G552800p4. For MAF sensor circuit tests, Electronic Engine Controls
P040300	Exhaust gas recirculation (EGR) valve H-bridges (right hand bank)	EGR valve circuit(s): high resistance EGR valve circuit(s): short circuit to ground EGR valve circuit(s): short circuit to power EGR valve failure ECM failure	For EGR actuator and circuit tests, GO to Pinpoint Test G552800p2. Refer to the warranty policy and procedure manual if an ECM is suspect.
P040400	Exhaust gas recirculation (EGR) control circuit range/performance (right hand bank)	IAT sensor fault MAP sensor fault MAF sensor fault EGR valve stuck closed, blocked EGR valve circuit(s): high resistance EGR valve circuit(s): short circuit to ground EGR valve circuit(s): short circuit to	For IAT, MAP and MAF sensor circuit tests, Electronic Engine Controls For right hand bank EGR valve and circuit tests, GO to Pinpoint Test G552800p2.

www.JagDocs.com

		power EGR valve failure	
P040500	Exhaust gas recirculation (EGR) valve circuit low (right hand bank)	EGR valve circuit(s): high resistance EGR valve circuit(s): short circuit to ground EGR valve failure	For EGR sensor and circuit tests, GO to Pinpoint Test G552800p2.
P040600	Exhaust gas recirculation (EGR) valve circuit high (right hand bank)	EGR valve circuit(s): short circuit to power EGR valve failure	For EGR sensor and circuit tests, GO to Pinpoint Test G552800p2.
P040700	Exhaust gas recirculation (EGR) - intake air shutoff throttle circuit low	Intake air shutoff throttle circuit(s): high resistance Intake air shutoff throttle circuit(s): short circuit to ground Intake air shutoff throttle failure	For intake air shutoff throttle and circuit tests, GO to Pinpoint Test G552800p1.
P040800	Exhaust gas recirculation (EGR) - intake air shutoff throttle circuit high	Intake air shutoff throttle circuit(s): short circuit to power Intake air shutoff throttle failure	For intake air shutoff throttle and circuit tests, GO to Pinpoint Test G552800p1.
P048700	Exhaust gas recirculation (EGR) valve H-bridges (left hand bank)	EGR valve circuit(s): high resistance EGR valve circuit(s): short circuit to ground EGR valve circuit(s): short circuit to power EGR valve failure	For EGR sensor and circuit tests, GO to Pinpoint Test G552800p4. Refer to the warranty policy and procedure manual if an ECM is suspect.

		ECM failure	
P133400	Exhaust gas recirculation (EGR) - intake air shutoff throttle minimum/maximum stop performance	EGR valve stuck/sticking EGR valve circuit(s): high resistance EGR valve circuit(s): short circuit to ground EGR valve circuit(s): short circuit to power Intake air shut off throttle stuck/sticking Intake air shut off throttle circuit(s): high resistance Intake air shut off throttle circuit(s): short circuit to ground Intake air shut off throttle circuit(s): short circuit to power Intake air shut off throttle failure ECM failure	For intake air shutoff throttle and circuit tests, GO to Pinpoint Test G552800p1. For EGR actuator and circuit tests, GO to Pinpoint Test G552800p2. and GO to Pinpoint Test G552800p4. Refer to the warranty policy and procedure manual if an ECM is suspect.
P140A00	Exhaust gas recirculation (EGR) valve circuit low (left hand bank)	EGR valve circuit(s): high resistance EGR valve circuit(s): short circuit to ground EGR valve failure	For EGR actuator and circuit tests, GO to Pinpoint Test G552800p4.
P140B00	Exhaust gas recirculation (EGR) valve circuit high (left hand	EGR valve circuit(s): short circuit to	For EGR actuator and circuit tests, GO to Pinpoint Test

www.JagDocs.com

	bank)	power EGR valve failure	G552800p4.
P140C00	Exhaust gas recirculation (EGR) - intake air shutoff throttle H bridges	Intake air shutoff throttle circuit(s): high resistance Intake air shutoff throttle circuit(s): short circuit to ground Intake air shutoff throttle circuit(s): short circuit to power Intake air shutoff throttle failure ECM failure	For intake air shutoff throttle and circuit tests, GO to Pinpoint Test G552800p1. Refer to the warranty policy and procedure manual if an ECM is suspect.
P140D00	Exhaust gas recirculation (EGR) control circuit range/performance (left hand bank)	IAT sensor fault MAP sensor fault MAF sensor fault EGR valve stuck closed, blocked EGR valve circuit(s): high resistance EGR valve circuit(s): short circuit to ground EGR valve circuit(s): short circuit to power EGR valve failure	For IAT, MAP and MAF sensor circuit tests, Electronic Engine Controls For EGR actuator and circuit tests, GO to Pinpoint Test G552800p4.
P140E00	Exhaust gas recirculation (EGR) valve circuit adaption (left hand bank)	EGR valve circuit(s): high resistance EGR valve circuit(s): short circuit to	For EGR actuator and circuit tests, GO to Pinpoint Test G552800p4. Refer to the warranty policy and procedure manual if an ECM is

		ground EGR valve circuit(s): short circuit to power EGR valve failure ECM failure	suspect.
P141A00	Exhaust gas recirculation (EGR) valve circuit intermittent/erratic (right hand bank)	EGR valve circuit(s): high resistance EGR valve circuit(s): short circuit to ground EGR valve circuit(s): short circuit to power EGR valve failure ECM failure	For EGR actuator and circuit tests, GO to Pinpoint Test G552800p2. Refer to the warranty policy and procedure manual if an ECM is suspect.
P141B00	Exhaust gas recirculation (EGR) - intake air shutoff throttle circuit intermittent/erratic	Intake air shutoff throttle circuit(s): high resistance Intake air shutoff throttle circuit(s): short circuit to ground Intake air shutoff throttle circuit(s): short circuit to power Intake air shutoff throttle failure ECM failure	For intake air shutoff throttle and circuit tests, GO to Pinpoint Test G552800p1. Refer to the warranty policy and procedure manual if an ECM is suspect.
P141C00	Exhaust gas recirculation (EGR) valve circuit intermittent/erratic (left hand bank)	EGR valve circuit(s): high resistance EGR valve circuit(s): short circuit to ground	For EGR actuator and circuit tests, GO to Pinpoint Test G552800p4. Refer to the warranty policy and procedure manual if an ECM is

www.JagDocs.com

		EGR valve circuit(s): short circuit to power EGR valve failure ECM failure	suspect.
P141D00	Exhaust gas recirculation (EGR) valve circuit adaption (right hand bank)	EGR valve circuit(s): high resistance EGR valve circuit(s): short circuit to ground EGR valve circuit(s): short circuit to power EGR valve failure ECM failure	For EGR actuator and circuit tests, GO to Pinpoint Test G552800p2. Refer to the warranty policy and procedure manual if an ECM is suspect.
P214100	Exhaust gas recirculation (EGR) - intake air shutoff throttle control deviation below minimum threshold	EGR valve stuck/sticking EGR valve circuit(s): high resistance EGR valve circuit(s): short circuit to ground EGR valve circuit(s): short circuit to power Intake air shutoff throttle stuck/sticking Intake air shutoff throttle circuit(s): high resistance Intake air shutoff throttle circuit(s): short circuit to ground	For intake air shutoff throttle and circuit tests, GO to Pinpoint Test G552800p1. For EGR actuator and circuit tests, GO to Pinpoint Test G552800p2. and GO to Pinpoint Test G552800p4. Refer to the warranty policy and procedure manual if an ECM is suspect.

		Intake air shutoff throttle circuit(s): short circuit to power Intake air shutoff throttle failure ECM failure	
P214200	Exhaust gas recirculation (EGR) - intake air shutoff throttle control deviation above maximum threshold	EGR valve stuck/sticking EGR valve circuit(s): high resistance EGR valve circuit(s): short circuit to ground EGR valve circuit(s): short circuit to power Intake air shutoff throttle stuck/sticking Intake air shutoff throttle circuit(s): high resistance Intake air shutoff throttle circuit(s): short circuit to ground Intake air shutoff throttle circuit(s): short circuit to power Intake air shutoff throttle failure ECM failure	For intake air shutoff throttle and circuit tests, GO to Pinpoint Test G552800p1. For EGR actuator and circuit tests, GO to Pinpoint Test G552800p2. and GO to Pinpoint Test G552800p4. Refer to the warranty policy and procedure manual if an ECM is suspect.

www.JagDocs.com

Pinpoint Tests

CAUTION: When probing connectors to take measurements in the course of the pinpoint tests, use the adaptor kit, part number 3548-1358-00. Failure to follow this instruction may result in damage to the vehicle.

NOTE:

When performing voltage or resistance tests, always use a digital multimeter (DMM) accurate to 3 decimal places, and with an up-to-date calibration certificate. When testing resistance, always take the resistance of the DMM leads into account.

NOTE:

Check and rectify basic faults before beginning diagnostic routines involving pinpoint tests.

NOTE:

If DTCs are recorded and a fault is not present when performing the pinpoint tests, an intermittent concern may be the cause. Always check for loose connections and corroded terminals.

PINPOINT TEST G552800p1 : INTAKE AIR SHUTOFF THROTTLE ACTUATOR

G552800t1 : CHECK THE INTAKE AIR SHUTOFF THROTTLE SENSOR RETURN CIRCUIT

1.

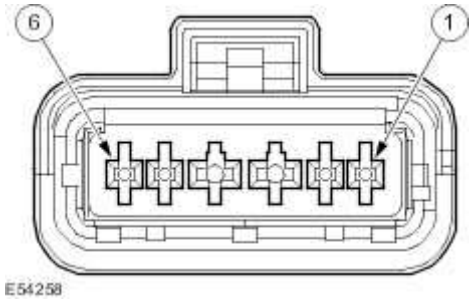

Circuit	Pin

Signal from ECM	02
Ground from ECM	01
Power from ECM	06

2.

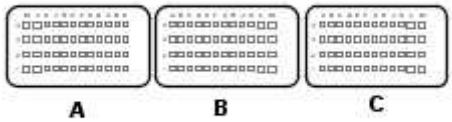

E54251

Circuit	Pin
Intake air throttle - signal	E1
Intake air throttle - ground	F2
Intake air throttle - power	F1

3. Key off. 4. Disconnect the intake air throttle connector, C39. 5. Key on, engine off. 6. Measure the resistance between:

C39, harness side	Battery
Pin 01	Negative terminal

Is the resistance less than 10 ohms?

-> Yes
GO to Pinpoint Test G552800t2.

-> No
GO to Pinpoint Test G552800t14.

www.JagDocs.com

G552800t2 : CHECK THE POWER SUPPLY TO THE INTAKE AIR SHUTOFF THROTTLE

1. Measure the voltage between:

C39, harness side	Battery
Pin 06	Negative terminal

Is the voltage between 4.8 and 5.2 volts?

-> Yes
GO to Pinpoint Test G552800t3.

-> No
GO to Pinpoint Test G552800t11.

G552800t3 : CHECK THE INTAKE AIR SHUTOFF THROTTLE SIGNAL CIRCUIT FOR SHORT CIRCUIT TO GROUND

1. Measure the resistance between:

C39, harness side	Battery
Pin 02	Negative terminal

Is the resistance greater than 100 Kohms?

-> Yes
GO to Pinpoint Test G552800t4.

-> No
GO to Pinpoint Test G552800t7.

G552800t4 : CHECK THE INTAKE AIR SHUTOFF THROTTLE SIGNAL CIRCUIT FOR SHORT CIRCUIT TO POWER

1. Measure the resistance between:

C39, harness side	Battery

Pin 02	Positive terminal

Is the resistance greater than 100 Kohms?

-> Yes
GO to Pinpoint Test G552800t5.

-> No
GO to Pinpoint Test G552800t9.

G552800t5 : CHECK THE INTAKE AIR SHUTOFF THROTTLE SIGNAL CIRCUIT FOR SHORT CIRCUIT TO SENSOR POWER

1. Measure the resistance between:

C39, harness side	**C39, harness side**
Pin 02	Pin 06

Is the resistance greater than 100 Kohms?

-> Yes
GO to Pinpoint Test G552800t6.

-> No
GO to Pinpoint Test G552800t10.

G552800t6 : CHECK THE INTAKE AIR SHUTOFF THROTTLE SIGNAL CIRCUIT FOR HIGH RESISTANCE

1. Key off. 2. Disconnect the ECM connector, C100. 3. Measure the resistance between:

C39, harness side	**C100, harness side**
Pin 02	Pin E1

Is the resistance less than 10 ohms?

www.JagDocs.com

-> Yes
An intermittent fault may be present in the wiring harness. Visually check for chaffed wires or other physical damage to the harness. If no fault is found in the circuit, suspect the following component(s): - Intake air shutoff throttle connector - ECM connector - Intake air shutoff throttle - ECM

-> No
REPAIR the high resistance circuit. For additional information, refer to the wiring diagrams. Clear any DTCs, test the system for normal operation.

G552800t7 : CHECK THE SIGNAL AND RETURN CIRCUITS FOR SHORT CIRCUIT TO EACH OTHER

1. Measure the resistance between:

C39, harness side	C39, harness side
Pin 02	Pin 01

Is the resistance greater than 100 Kohms?

-> Yes
GO to Pinpoint Test G552800t8.

-> No
REPAIR the short circuit. For additional information, refer to the wiring diagrams. Clear any DTCs, test the system for normal operation.

G552800t8 : CHECK WHETHER THE SHORT CIRCUIT IS IN THE HARNESS OR THE MODULE

1. Key off. 2. Disconnect the ECM connector, C100. 3. Key on, engine off. 4. Measure the resistance between:

C39, harness side	C39, harness side
Pin 02	Pin 01

Is the resistance greater than 100 Kohms?

-> Yes
An intermittent fault may be present in the wiring harness. Visually check for chaffed wires or other physical damage to the harness. If no fault is found in the circuit, suspect the following

component(s): - ECM

-> No
REPAIR the short circuit. For additional information, refer to the wiring diagrams. Clear any DTCs, test the system for normal operation.

G552800t9 : CHECK WHETHER THE SHORT CIRCUIT TO POWER IS IN THE HARNESS OR THE MODULE

1. Key off. 2. Disconnect the ECM connector, C100. 3. Key on, engine off. 4. Measure the resistance between:

C39, harness side	Battery
Pin 02	Positive terminal

Is the resistance greater than 100 Kohms?

-> Yes
An intermittent fault may be present in the wiring harness. Visually check for chaffed wires or other physical damage to the harness. If no fault is found in the circuit, suspect the following component(s): - ECM

-> No
REPAIR the short circuit. For additional information, refer to the wiring diagrams. Clear any DTCs, test the system for normal operation.

G552800t10 : CHECK WHETHER THE SHORT CIRCUIT IS IN THE HARNESS OR THE MODULE

1. Key off. 2. Disconnect the ECM connector, C100. 3. Key on, engine off. 4. Measure the resistance between:

C39, harness side	C39, harness side
Pin 02	Pin 06

Is the resistance greater than 100 Kohms?

-> Yes
An intermittent fault may be present in the wiring harness. Visually check for chaffed wires or other physical damage to the harness. If no fault is found in the circuit, suspect the following component(s): - ECM

www.JagDocs.com

-> No
REPAIR the short circuit. For additional information, refer to the wiring diagrams. Clear any DTCs, test the system for normal operation.

G552800t11 : CHECK THE SUPPLY CIRCUIT FOR SHORT CIRCUIT TO GROUND

1. Measure the resistance between:

C39, harness side	Battery
Pin 06	Negative terminal

Is the resistance greater than 100 Kohms?

-> Yes
GO to Pinpoint Test G552800t12.

-> No
GO to Pinpoint Test G552800t17.

G552800t12 : CHECK THE SUPPLY CIRCUIT FOR SHORT CIRCUIT TO POWER

1. Measure the resistance between:

C39, harness side	Battery
Pin 02	Positive terminal

Is the resistance greater than 100 Kohms?

-> Yes
GO to Pinpoint Test G552800t13.

-> No
GO to Pinpoint Test G552800t19.

G552800t13 : CHECK THE INTAKE AIR SHUTOFF THROTTLE SUPPLY CIRCUIT FOR HIGH RESISTANCE

1. Key off. 2. Disconnect the ECM connector, C100. 3. Measure the resistance between:

C39, harness side	C100, harness side
Pin 06	Pin F1

Is the resistance less than 10 ohms?

-> Yes
An intermittent fault may be present in the wiring harness. Visually check for chaffed wires or other physical damage to the harness. If no fault is found in the circuit, suspect the following component(s): **-** ECM connector **-** ECM

-> No
REPAIR the high resistance. For additional information, refer to the wiring diagrams. Clear any DTCs, test the system for normal operation.

G552800t14 : CHECK THE INTAKE AIR SHUTOFF THROTTLE RETURN CIRCUIT FOR SHORT CIRCUIT TO POWER

1. Measure the resistance between:

C39, harness side	Battery
Pin 01	Positive terminal

Is the resistance greater than 100 Kohms?

-> Yes
GO to Pinpoint Test G552800t15.

-> No
GO to Pinpoint Test G552800t20.

G552800t15 : CHECK THE SIGNAL AND RETURN CIRCUITS FOR SHORT CIRCUIT TO EACH OTHER

1. Key off. 2. Disconnec the ECM connector, C100. 3. Key on, engine off. 4. Measure the resistance between:

C39, harness side	C39, harness side
Pin 06	Pin 01

www.JagDocs.com

Is the resistance greater than 100 Kohms?

-> Yes
GO to Pinpoint Test G552800t16.

-> No
REPAIR the short circuit. For additional information, refer to the wiring diagrams. Clear any DTCs, test the system for normal operation.

G552800t16 : CHECK THE INTAKE AIR SHUTOFF THROTTLE RETURN CIRCUIT FOR HIGH RESISTANCE

1. Measure the resistance between:

C39, harness side	C100, harness side
Pin 01	Pin F2

Is the resistance less than 10 ohms?

-> Yes
An intermittent fault may be present in the wiring harness. Visually check for chaffed wires or other physical damage to the harness. If no fault is found in the circuit, suspect the following component(s): **-** ECM connector **-** ECM

-> No
REPAIR the high resistance. For additional information, refer to the wiring diagrams. Clear any DTCs, test the system for normal operation.

G552800t17 : CHECK THE SIGNAL AND RETURN CIRCUITS FOR SHORT CIRCUIT TO EACH OTHER

1. Key off. 2. Disconnec the ECM connector, C100. 3. Key on, engine off. 4. Measure the resistance between:

C39, harness side	C39, harness side
Pin 06	Pin 01

Is the resistance greater than 100 Kohms?

-> Yes
GO to Pinpoint Test G552800t18.

-> No
REPAIR the short circuit. For additional information, refer to the wiring diagrams. Clear any DTCs, test the system for normal operation.

G552800t18 : CHECK WHETHER THE SHORT CIRCUIT TO GROUND IS IN THE HARNESS OR THE MODULE

1. Measure the resistance between:

C39, harness side	Battery
Pin 06	Negative terminal

Is the resistance greater than 100 Kohms?

-> Yes
An intermittent fault may be present in the wiring harness. Visually check for chaffed wires or other physical damage to the harness. If no fault is found in the circuit, suspect the following component(s): **-** ECM

-> No
REPAIR the short circuit. For additional information, refer to the wiring diagrams. Clear any DTCs, test the system for normal operation.

G552800t19 : CHECK WHETHER THE SHORT CIRCUIT TO POWER IS IN THE HARNESS OR THE MODULE

1. Key off. 2. Disconnect the ECM connector, C100. 3. Key on, engine off. 4. Measure the resistance between:

C39, harness side	Battery
Pin 06	Positive terminal

Is the resistance greater than 100 Kohms?

-> Yes
An intermittent fault may be present in the wiring harness. Visually check for chaffed wires or other physical damage to the harness. If no fault is found in the circuit, suspect the following component(s): **-** ECM

www.JagDocs.com

-> No
REPAIR the short circuit. For additional information, refer to the wiring diagrams. Clear any DTCs, test the system for normal operation.

G552800t20 : CHECK WHETHER THE SHORT CIRCUIT TO POWER IS IN THE HARNESS OR THE MODULE

1. Key off. 2. Disconnect the ECM connector, C100. 3. Key on, engine off. 4. Measure the resistance between:

C39, harness side	Battery
Pin 01	Positive terminal

Is the resistance greater than 100 Kohms?

-> Yes
An intermittent fault may be present in the wiring harness. Visually check for chaffed wires or other physical damage to the harness. If no fault is found in the circuit, suspect the following component(s): **-** ECM

-> No
REPAIR the short circuit. For additional information, refer to the wiring diagrams. Clear any DTCs, test the system for normal operation.

PINPOINT TEST G552800p2 : RIGHT HAND BANK EGR ACTUATOR

G552800t55 : CHECK THE RIGHT HAND BANK EGR ACTUATOR RETURN CIRCUIT

1.

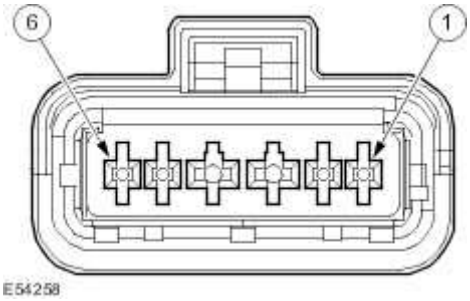

Circuit	Pin

Signal from ECM	02
Ground from ECM	04
Power from ECM	03

2.

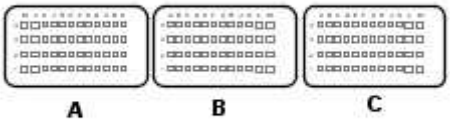

E54251

Circuit	Pin
EGR actuator - signal	A3
EGR actuator - ground	H2
EGR actuator - power	H1

3. Key off. 4. Disconnect the EGR actuator connector, C70. 5. Key on, engine off. 6. Measure the resistance between:

C70, harness side	Battery
Pin 01	Negative terminal

Is the resistance less than 10 ohms?

-> Yes
GO to Pinpoint Test G552800t51.

-> No
GO to Pinpoint Test G552800t54.

www.JagDocs.com

G552800t51 : CHECK THE POWER SUPPLY TO THE EGR ACTUATOR

1. Measure the voltage between:

C70, harness side	Battery
Pin 03	Negative terminal

Is the voltage between 4.8 and 5.2 volts?

-> Yes
GO to Pinpoint Test G552800t21.

-> No
GO to Pinpoint Test G552800t50.

G552800t21 : CHECK THE EGR ACTUATOR SIGNAL CIRCUIT FOR A SHORT CIRCUIT TO GROUND

1. Key off. 2. Disconnect the EGR actuator connector, C70. 3. Key on, engine off. 4. Measure the resistance between:

C70, harness side	Battery
Pin 02	Negative terminal

Is the resistance greater than 100 Kohms?

-> Yes
GO to Pinpoint Test G552800t22.

-> No
GO to Pinpoint Test G552800t24.

G552800t22 : CHECK THE EGR ACTUATOR SIGNAL CIRCUIT FOR A SHORT CIRCUIT TO POWER

1. Measure the resistance between:

C70, harness side	Battery

Pin 02	Positive terminal

Is the resistance greater than 100 Kohms?

-> Yes
GO to Pinpoint Test G552800t23.

-> No
GO to Pinpoint Test G552800t25.

G552800t23 : CHECK THE EGR ACTUATOR SIGNAL CIRCUIT FOR HIGH RESISTANCE

1. Key off. 2. Disconnect the ECM connector, C101. 3. Measure the resistance between:

C70, harness side	C101, harness side
Pin 02	Pin A3

Is the resistance less than 10 ohms?

-> Yes
An intermittent fault may be present in the wiring harness. Visually check for chaffed wires or other physical damage to the harness. If no fault is found in the circuit, suspect the following component(s): - ETV connector - ECM connector - ETV - ECM

-> No
REPAIR the high resistance circuit. For additional information, refer to the wiring diagrams. Clear any DTCs, test the system for normal operation.

G552800t24 : CHECK WHETHER THE SHORT CIRCUIT TO GROUND IS IN THE HARNESS OR THE MODULE

1. Key off. 2. Disconnect the ECM connector, C101. 3. Key on, engine off. 4. Measure the resistance between:

C70, harness side	Battery
Pin 02	Negative terminal

www.JagDocs.com

Is the resistance greater than 100 Kohms?

-> Yes
An intermittent fault may be present in the wiring harness. Visually check for chaffed wires or other physical damage to the harness. If no fault is found in the circuit, suspect the following component(s): **-** ECM

-> No
REPAIR the short circuit. For additional information, refer to the wiring diagrams. Clear any DTCs, test the system for normal operation.

G552800t25 : CHECK WHETHER THE SHORT CIRCUIT TO POWER IS IN THE HARNESS OR THE MODULE

1. Key off. 2. Disconnect the ECM connector, C101. 3. Key on, engine off. 4. Measure the resistance between:

C70, harness side	Battery
Pin 02	Positive terminal

Is the resistance greater than 100 Kohms?

-> Yes
An intermittent fault may be present in the wiring harness. Visually check for chaffed wires or other physical damage to the harness. If no fault is found in the circuit, suspect the following component(s): **-** ECM

-> No
REPAIR the short circuit. For additional information, refer to the wiring diagrams. Clear any DTCs, test the system for normal operation.

G552800t50 : CHECK THE SUPPLY CIRCUIT FOR SHORT CIRCUIT TO GROUND

1. Measure the resistance between:

C70, harness side	Battery
Pin 03	Negative terminal

Is the resistance greater than 100 Kohms?

-> Yes
GO to Pinpoint Test G552800t52.

-> No
GO to Pinpoint Test G552800t61.

G552800t52 : CHECK THE SUPPLY CIRCUIT FOR SHORT CIRCUIT TO POWER

1. Measure the resistance between:

C70, harness side	Battery
Pin 03	Positive terminal

Is the resistance greater than 100 Kohms?

-> Yes
GO to Pinpoint Test G552800t53.

-> No
GO to Pinpoint Test G552800t62.

G552800t53 : CHECK THE SUPPLY CIRCUIT FOR HIGH RESISTANCE

1. Key off. 2. Disconnect the ECM connector, C101. 3. Measure the resistance between:

C70, harness side	C101, harness side
Pin 03	Pin H1

Is the resistance less than 10 ohms?

-> Yes
An intermittent fault may be present in the wiring harness. Visually check for chaffed wires or other physical damage to the harness. If no fault is found in the circuit, suspect the following component(s): **-** ECM connector **-** ECM

-> No
REPAIR the high resistance circuit. For additional information, refer to the wiring diagrams. Clear any DTCs, test the system for normal operation.

www.JagDocs.com

G552800t61 : CHECK THE SIGNAL AND RETURN CIRCUITS FOR SHORT CIRCUIT TO EACH OTHER

1. Key off. 2. Disconnect the ECM connector, C101. 3. Key on, engine off. 4. Measure the resistance between:

C70, harness side	C70, harness side
Pin 04	Pin 03

Is the resistance greater than 100 Kohms?

-> Yes
GO to Pinpoint Test G552800t60.

-> No
REPAIR the short circuit. For additional information, refer to the wiring diagrams. Clear any DTCs, test the system for normal operation.

G552800t60 : CHECK WHETHER THE SHORT CIRCUIT TO GROUND IS IN THE HARNESS OR THE MODULE

1. Measure the resistance between:

C70, harness side	Battery
Pin 03	Negative terminal

Is the resistance greater than 100 Kohms?

-> Yes
An intermittent fault may be present in the wiring harness. Visually check for chaffed wires or other physical damage to the harness. If no fault is found in the circuit, suspect the following component(s): **-** ECM

-> No
REPAIR the short circuit. For additional information, refer to the wiring diagrams. Clear any DTCs, test the system for normal operation.

G552800t62 : CHECK WHETHER THE SHORT CIRCUIT TO POWER IS IN THE HARNESS OR THE MODULE

1. Key off. 2. Disconnect the ECM connector, C101. 3. Key on, engine off. 4. Measure the resistance between:

C70, harness side	Battery
Pin 03	Positive terminal

Is the resistance greater than 100 Kohms?

-> Yes
An intermittent fault may be present in the wiring harness. Visually check for chaffed wires or other physical damage to the harness. If no fault is found in the circuit, suspect the following component(s): **-** ECM

-> No
REPAIR the short circuit. For additional information, refer to the wiring diagrams. Clear any DTCs, test the system for normal operation.

G552800t54 : CHECK THE EGR ACTUATOR RETURN CIRCUIT FOR SHORT CIRCUIT TO POWER

1. Measure the resistance between:

C70, harness side	Battery
Pin 04	Positive terminal

Is the resistance greater than 100 Kohms?

-> Yes
GO to Pinpoint Test G552800t56.

-> No
GO to Pinpoint Test G552800t58.

G552800t56 : CHECK THE SIGNAL AND RETURN CIRCUITS FOR SHORT CIRCUIT TO EACH OTHER

1. Key off. 2. Disconnect the ECM connector, C101. 3. Key on, engine off. 4. Measure the resistance between:

C70, harness side	C70, harness side
Pin 04	Pin 03

www.JagDocs.com

Is the resistance greater than 100 Kohms?

-> Yes
GO to Pinpoint Test G552800t59.

-> No
REPAIR the short circuit. For additional information, refer to the wiring diagrams. Clear any DTCs, test the system for normal operation.

G552800t59 : CHECK THE EGR ACTUATOR RETURN CIRCUIT FOR HIGH RESISTANCE

1. Measure the resistance between:

C70, harness side	C101, harness side
Pin 04	Pin H2

Is the resistance less than 10 ohms?

-> Yes
An intermittent fault may be present in the wiring harness. Visually check for chaffed wires or other physical damage to the harness. If no fault is found in the circuit, suspect the following component(s): **-** ECM connector **-** ECM

-> No
REPAIR the high resistance circuit. For additional information, refer to the wiring diagrams. Clear any DTCs, test the system for normal operation.

G552800t58 : CHECK WHETHER THE SHORT CIRCUIT TO POWER IS IN THE HARNESS OR THE MODULE

1. Key off. 2. Disconnect the ECM connector, C101. 3. Key on, engine off. 4. Measure the resistance between:

C70, harness side	Battery
Pin 01	Positive terminal

Is the resistance greater than 100 Kohms?

-> Yes
An intermittent fault may be present in the wiring harness. Visually check for chaffed wires or other physical damage to the harness. If no fault is found in the circuit, suspect the following component(s): **-** ECM

-> No
REPAIR the short circuit. For additional information, refer to the wiring diagrams. Clear any DTCs, test the system for normal operation.

PINPOINT TEST G552800p4 : LEFT HAND BANK EGR ACTUATOR

G552800t26 : CHECK THE LEFT HAND BANK EGR ACTUATOR RETURN CIRCUIT

1.

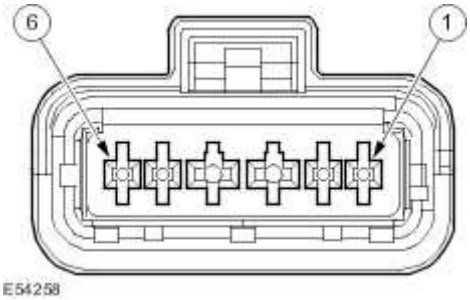

Circuit	Pin
Signal from ECM	02
Ground from ECM	04
Power from ECM	03

2.

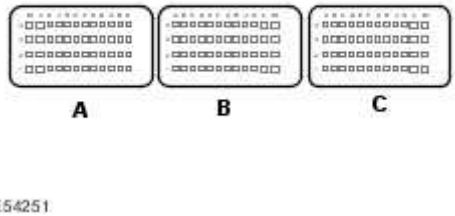

Circuit	Pin

www.JagDocs.com

EGR actuator - signal	A2
EGR actuator - ground	K1
EGR actuator - power	J1

3. Key off. 4. Disconnect the EGR actuator connector, C71. 5. Key on, engine off. 6. Measure the resistance between:

C71, harness side	Battery
Pin 01	Negative terminal

Is the resistance less than 10 ohms?

-> Yes
GO to Pinpoint Test G552800t27.

-> No
GO to Pinpoint Test G552800t39.

G552800t27 : CHECK THE POWER SUPPLY TO THE EGR ACTUATOR

1. Measure the voltage between:

C70, harness side	Battery
Pin 03	Negative terminal

Is the voltage between 4.8 and 5.2 volts?

-> Yes
GO to Pinpoint Test G552800t28.

-> No
GO to Pinpoint Test G552800t33.

G552800t28 : CHECK THE EGR ACTUATOR SIGNAL CIRCUIT FOR SHORT CIRCUIT TO GROUND

1. Key off. 2. Disconnect the EGR actuator connector, C71. 3. Key on, engine off. 4. Measure the resistance between:

C71, harness side	Battery
Pin 02	Negative terminal

Is the resistance greater than 100 Kohms?

-> Yes
GO to Pinpoint Test G552800t29.

-> No
GO to Pinpoint Test G552800t31.

G552800t29 : CHECK THE EGR ACTUATOR SIGNAL CIRCUIT FOR SHORT CIRCUIT TO POWER

1. Measure the resistance between:

C71, harness side	Battery
Pin 02	Positive terminal

Is the resistance greater than 100 Kohms?

-> Yes
GO to Pinpoint Test G552800t30.

-> No
GO to Pinpoint Test G552800t32.

G552800t30 : CHECK THE EGR ACTUATOR SIGNAL CIRCUIT FOR HIGH RESISTANCE

1. Key off. 2. Disconnect the ECM connector, C101. 3. Measure the resistance between:

www.JagDocs.com

C71, harness side	C101, harness side
Pin 02	Pin A2

Is the resistance less than 10 ohms?

-> Yes
An intermittent fault may be present in the wiring harness. Visually check for chaffed wires or other physical damage to the harness. If no fault is found in the circuit, suspect the following component(s): **-** ETV connector **-** ECM connector **-** ETV **-** ECM

-> No
REPAIR the high resistance circuit. For additional information, refer to the wiring diagrams. Clear any DTCs, test the system for normal operation.

G552800t31 : CHECK WHETHER THE SHORT CIRCUIT TO GROUND IS IN THE HARNESS OR THE MODULE

1. Key off. 2. Disconnect the ECM connector, C101. 3. Key on, engine off. 4. Measure the resistance between:

C71, harness side	Battery
Pin 02	Negative terminal

Is the resistance greater than 100 Kohms?

-> Yes
An intermittent fault may be present in the wiring harness. Visually check for chaffed wires or other physical damage to the harness. If no fault is found in the circuit, suspect the following component(s): **-** ECM

-> No
REPAIR the short circuit. For additional information, refer to the wiring diagrams. Clear any DTCs, test the system for normal operation.

G552800t32 : CHECK WHETHER THE SHORT CIRCUIT TO POWER IS IN THE HARNESS OR THE MODULE

1. Key off. 2. Disconnect the ECM connector, C101. 3. Key on, engine off. 4. Measure the resistance between:

C71, harness side	Battery

Pin 02	Positive terminal

Is the resistance greater than 100 Kohms?

-> Yes
An intermittent fault may be present in the wiring harness. Visually check for chaffed wires or other physical damage to the harness. If no fault is found in the circuit, suspect the following component(s): **-** ECM

-> No
REPAIR the short circuit. For additional information, refer to the wiring diagrams. Clear any DTCs, test the system for normal operation.

G552800t33 : CHECK THE SUPPLY CIRCUIT FOR SHORT CIRCUIT TO GROUND

1. Measure the resistance between:

C71, harness side	Battery
Pin 03	Negative terminal

Is the resistance greater than 100 Kohms?

-> Yes
GO to Pinpoint Test G552800t34.

-> No
GO to Pinpoint Test G552800t36.

G552800t34 : CHECK THE SUPPLY CIRCUIT FOR SHORT CIRCUIT TO POWER

1. Measure the resistance between:

C71, harness side	Battery
Pin 03	Positive terminal

Is the resistance greater than 100 Kohms?

www.JagDocs.com

-> Yes
GO to Pinpoint Test G552800t35.

-> No
GO to Pinpoint Test G552800t38.

G552800t35 : CHECK THE SUPPLY CIRCUIT FOR HIGH RESISTANCE

1. Key off. 2. Disconnect the ECM connector, C101. 3. Measure the resistance between:

C71, harness side	C101, harness side
Pin 03	Pin J1

Is the resistance less than 10 ohms?

-> Yes
An intermittent fault may be present in the wiring harness. Visually check for chaffed wires or other physical damage to the harness. If no fault is found in the circuit, suspect the following component(s): **-** ECM connector **-** ECM

-> No
REPAIR the high resistance circuit. For additional information, refer to the wiring diagrams. Clear any DTCs, test the system for normal operation.

G552800t36 : CHECK THE SUPPLY AND SIGNAL CIRCUITS FOR SHORT CIRCUIT TO EACH OTHER

1. Key off. 2. Disconnect the ECM connector, C101. 3. Key on, engine off. 4. Measure the resistance between:

C71, harness side	C71, harness side
Pin 04	Pin 03

Is the resistance greater than 100 Kohms?

-> Yes
GO to Pinpoint Test G552800t37.

-> No

REPAIR the short circuit. For additional information, refer to the wiring diagrams. Clear any DTCs, test the system for normal operation.

G552800t37 : CHECK WHETHER THE SHORT CIRCUIT TO GROUND IS IN THE HARNESS OR THE MODULE

1. Measure the resistance between:

C71, harness side	Battery
Pin 03	Negative terminal

Is the resistance greater than 100 Kohms?

-> Yes
An intermittent fault may be present in the wiring harness. Visually check for chaffed wires or other physical damage to the harness. If no fault is found in the circuit, suspect the following component(s): **-** ECM

-> No
REPAIR the short circuit. For additional information, refer to the wiring diagrams. Clear any DTCs, test the system for normal operation.

G552800t38 : CHECK WHETHER THE SHORT CIRCUIT TO POWER IS IN THE HARNESS OR THE MODULE

1. Key off. 2. Disconnect the ECM connector, C101. 3. Key on, engine off. 4. Measure the resistance between:

C71, harness side	Battery
Pin 03	Positive terminal

Is the resistance greater than 100 Kohms?

-> Yes
An intermittent fault may be present in the wiring harness. Visually check for chaffed wires or other physical damage to the harness. If no fault is found in the circuit, suspect the following component(s): **-** ECM

-> No
REPAIR the short circuit. For additional information, refer to the wiring diagrams. Clear any DTCs, test the system for normal operation.

www.JagDocs.com

G552800t39 : CHECK THE EGR ACTUATOR RETURN CIRCUIT FOR SHORT CIRCUIT TO POWER

1. Measure the resistance between:

C71, harness side	Battery
Pin 04	Positive terminal

Is the resistance greater than 100 Kohms?

-> Yes
GO to Pinpoint Test G552800t40.

-> No
GO to Pinpoint Test G552800t42.

G552800t40 : CHECK THE SIGNAL AND RETURN CIRCUITS FOR SHORT CIRCUIT TO EACH OTHER

1. Key off. 2. Disconnect the ECM connector, C101. 3. Key on, engine off. 4. Measure the resistance between:

C71, harness side	C71, harness side
Pin 04	Pin 03

Is the resistance greater than 100 Kohms?

-> Yes
GO to Pinpoint Test G552800t41.

-> No
REPAIR the short circuit. For additional information, refer to the wiring diagrams. Clear any DTCs, test the system for normal operation.

G552800t41 : CHECK THE EGR ACTUATOR RETURN CIRCUIT FOR HIGH RESISTANCE

1. Measure the resistance between:

C71, harness side	C101, harness side
Pin 04	Pin K1

Is the resistance less than 10 ohms?

-> Yes
An intermittent fault may be present in the wiring harness. Visually check for chaffed wires or other physical damage to the harness. If no fault is found in the circuit, suspect the following component(s): **-** ECM connector **-** ECM

-> No
REPAIR the high resistance. For additional information, refer to the wiring diagrams. Clear any DTCs, test the system for normal operation.

G552800t42 : CHECK WHETHER THE SHORT CIRCUIT TO POWER IS IN THE HARNESS OR THE MODULE

1. Key off. 2. Disconnect the ECM connector, C101. 3. Key on, engine off. 4. Measure the resistance between:

C71, harness side	Battery
Pin 01	Positive terminal

Is the resistance greater than 100 Kohms?

-> Yes
An intermittent fault may be present in the wiring harness. Visually check for chaffed wires or other physical damage to the harness. If no fault is found in the circuit, suspect the following component(s): **-** ECM

-> No
REPAIR the short circuit. For additional information, refer to the wiring diagrams. Clear any DTCs, test the system for normal operation.

www.JagDocs.com

Crankcase Vent Oil Separator

Removal

Right-hand drive vehicles

1 . Remove the secondary bulkhead center panel.
For additional information, refer to Secondary Bulkhead Center Panel

Left-hand drive vehicles

2 . Remove the cowl vent screen.
For additional information, refer to Cowl Vent Screen (76.10.01)

3 . Remove the engine harness cover.

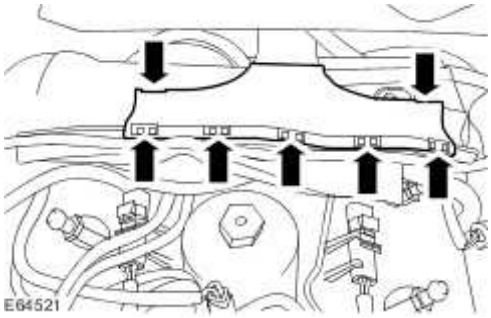

4 . Detach the brake booster vacuum pipe.

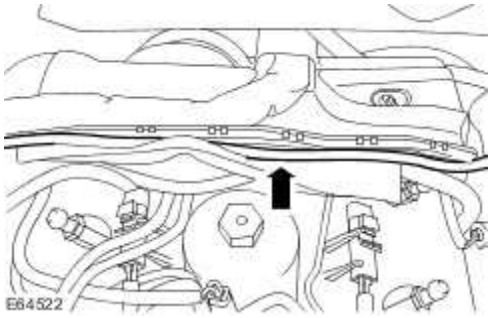

5 . Reposition the engine harness from the casing.

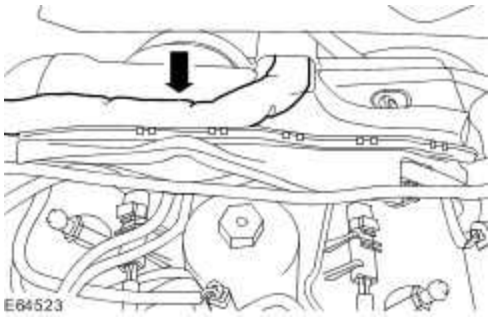

6 . Remove the engine harness casing.

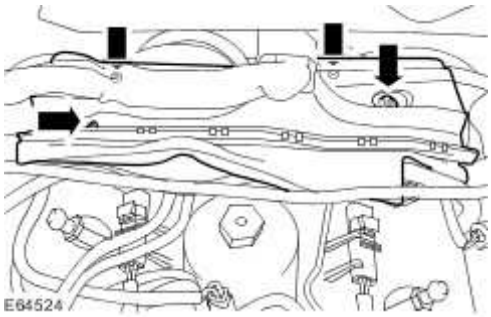

All vehicles

7 . Disconnect the left-hand port deactivation vacuum hose.

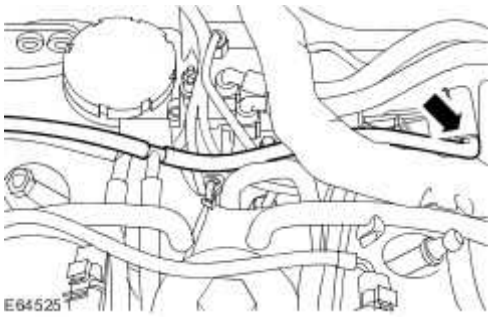

8 . Detach the crankcase vent oil separator breather hoses.

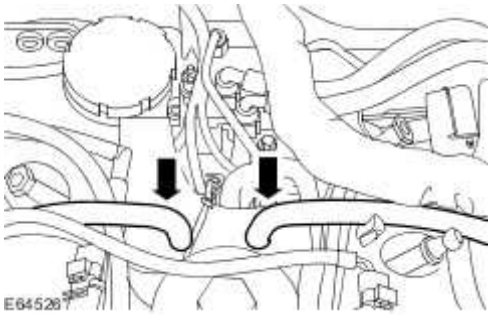

www.JagDocs.com

Left-hand drive vehicles

9 **NOTE:**

.

Remove and discard the O-ring seal.

Remove the oil filter element housing.

- Rotate the oil filter element housing five complete turns counter-clockwise.
- Allow the engine oil to drain from the oil filter element housing for two minutes.
- Remove the oil filter element housing.

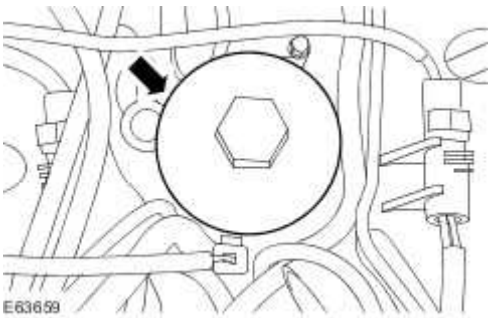

All vehicles

10 . **NOTE:**

Remove and discard the seals.

Remove the crankcase vent oil separator.

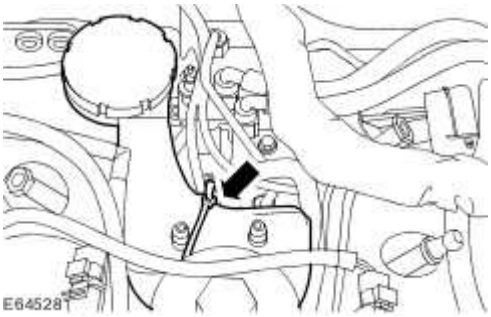

Installation

All vehicles

1. **CAUTION: Make sure the crankcase vent oil seperator is correctly located on the alignment dowel before fully seating. Failure to follow this instruction may result in damage to the component.**

Install the crankcase vent oil separator.

- Install new seals.

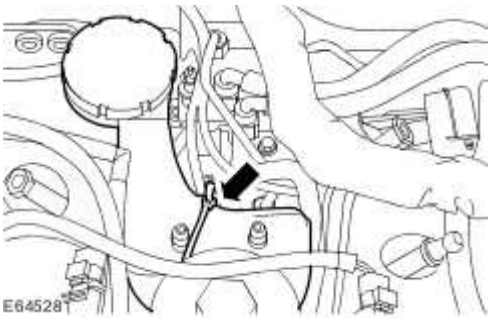

Left-hand drive vehicles

2 . **NOTE:**

Install a new O-ring seal.

Install the oil filter element housing.

- Tighten to 25 Nm.

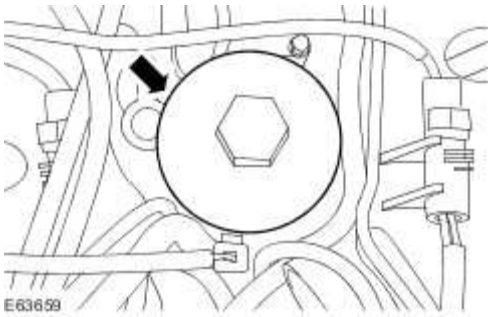

www.JagDocs.com

All vehicles

3 . Attach the crankcase vent oil separator breather hoses.

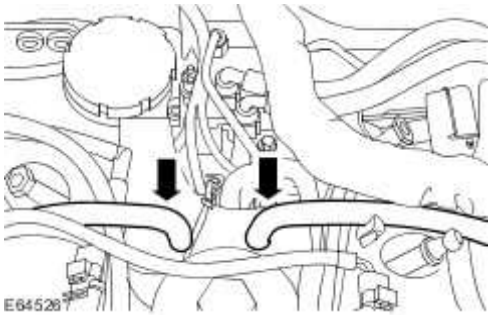

4 . Connect the left-hand port deactivation vacuum hose.

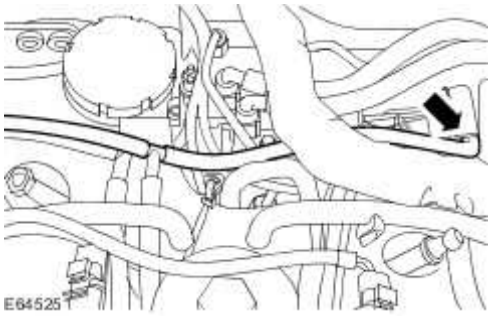

Left-hand drive vehicles

5 . Install the engine harness casing.

Tighten to 4 Nm.

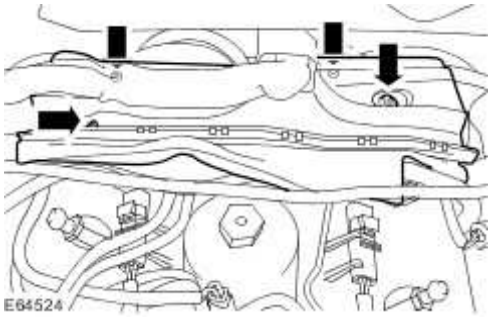

6 . Reposition the engine harness into the casing.

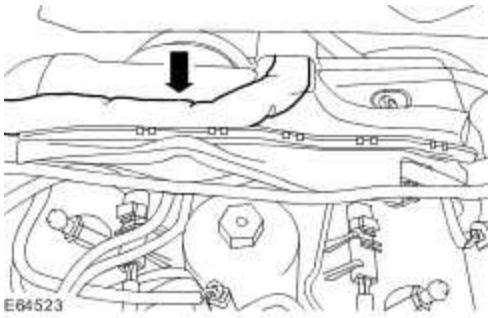

7 . Attach the brake booster vacuum pipe.

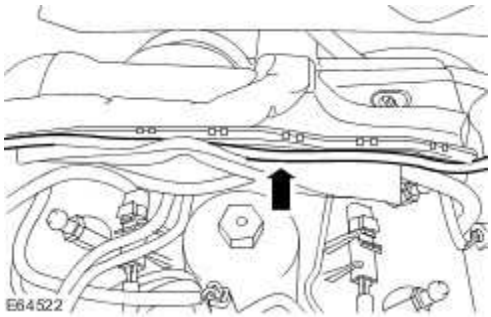

8 . Install the engine harness cover.

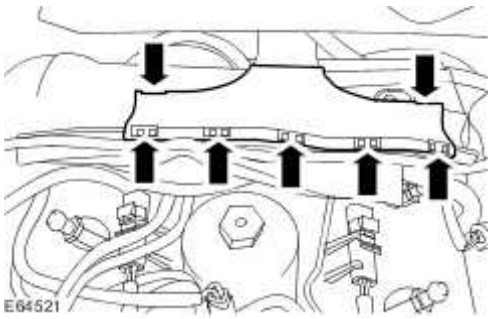

9 . Install the cowl vent screen.
For additional information, refer to Cowl Vent Screen (76.10.01)

Right-hand drive vehicles

10 . Install the secondary bulkhead center panel.
For additional information, refer to Secondary Bulkhead Center Panel

www.JagDocs.com

Exhaust Gas Recirculation (EGR) Valve LH

Removal

1. **WARNING: Do not smoke or carry lighted tobacco or open flame of any type when working on or near any fuel related components. Highly flammable mixtures are always present and may ignite. Failure to follow these instructions may result in personal injury.**

WARNING: This procedure involves fuel handling. Be prepared for fuel spillage at all times and always observe fuel handling precautions. Failure to follow these instructions may result in personal injury.

CAUTION: Diesel fuel injection equipment is manufactured to very precise tolerances and fine clearances. It is therefore essential that absolute cleanliness is observed when working with these components. Always install blanking plugs to any open orifices or lines. Failure to follow this procedure may result in damage to the vehicle.

Drain the cooling system.
For additional information, refer to Cooling System Draining, Filling and Bleeding

2. Remove the exhaust gas recirculation (EGR) valve outlet tube.
For additional information, refer to Exhaust Gas Recirculation (EGR) Valve Outlet Tube (17.45.11)

3 . Remove the injector sound proofing.

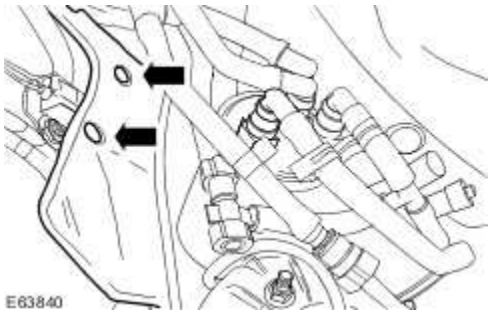

4 . Disconnect the EGR valve electrical connector.

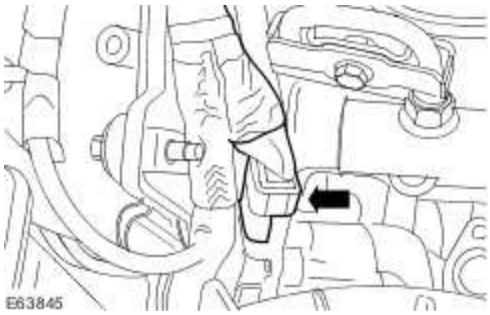

5 . **NOTE:**

Fit suitable blanking caps to fuel filter unions, fuel supply lines and fuel return lines.

Detach the fuel filter supply and return lines.

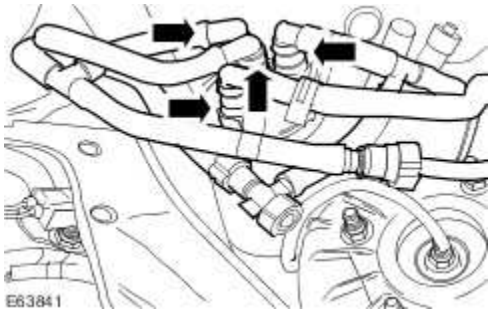

6 . Loosen the fuel filter securing bolt.

www.JagDocs.com

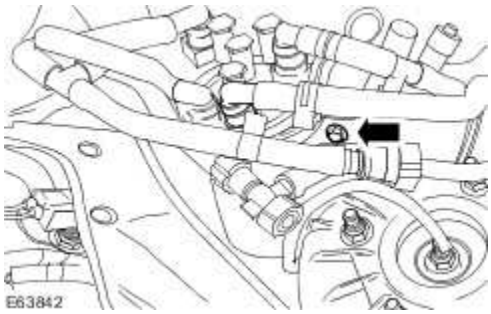

7 . Remove the fuel filter from the retaining bracket.

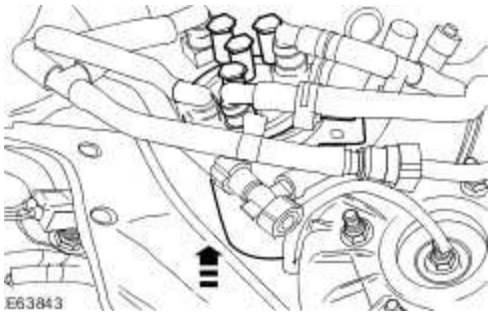

8 . Remove the fuel filter retaining bracket.

- Remove the retaining bolts.

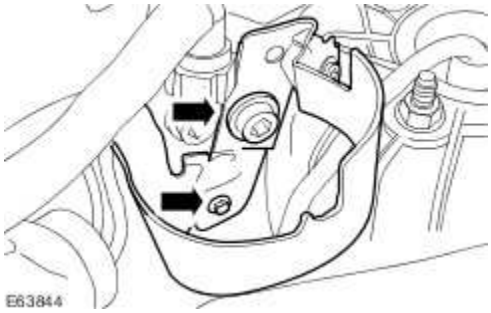

9 . Detach the EGR valve coolant outlet hose.

- Remove the retaining bolt.

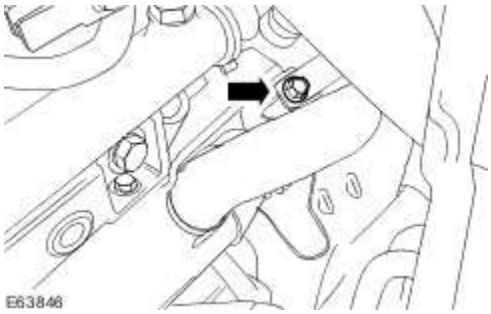

10 . Disconnect the EGR valve coolant outlet hose.

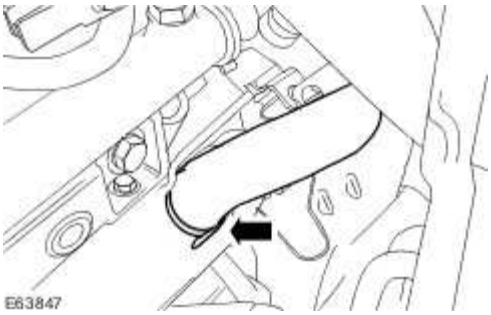

11 . **NOTE:**

Discard the EGR valve inlet tube securing clip.

Remove the EGR valve inlet tube securing clip.

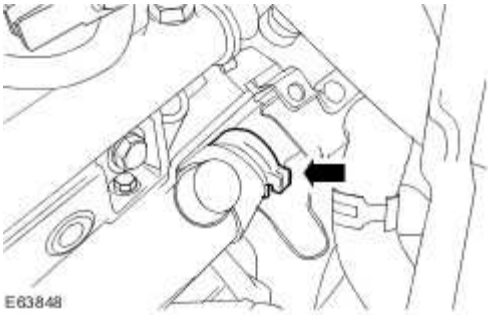

12 . Detach the vent hose.

www.JagDocs.com

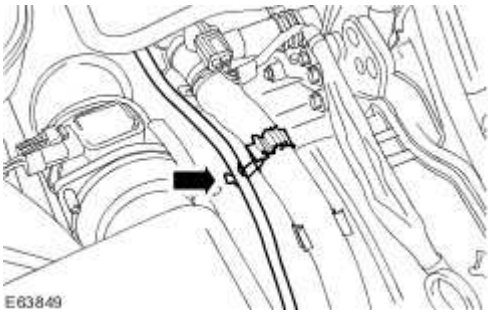

13 . Detach the coolant inlet hose from the timing cover.

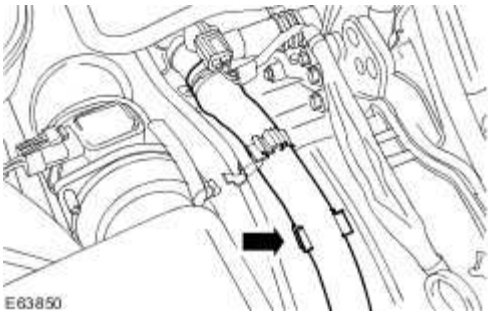

14 . Disconnect the coolant inlet hose.

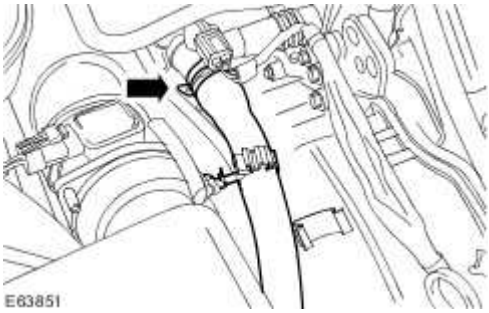

15 . Remove the EGR valve and cooler assembly securing bolts.

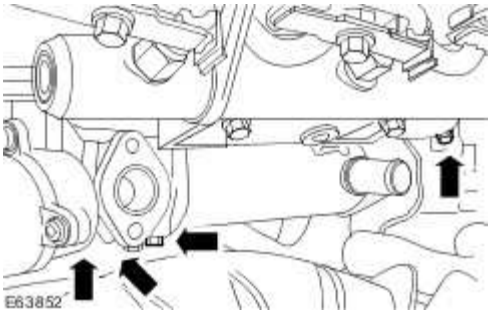

16 . Reposition the EGR valve and cooler assembly.

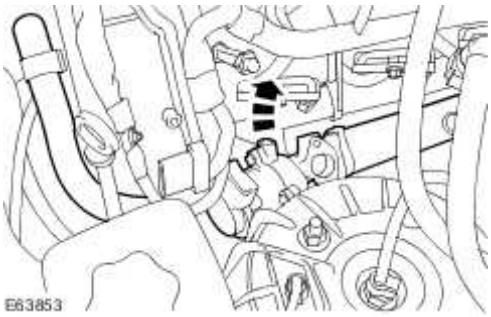

17 . Remove the EGR valve and cooler assembly.

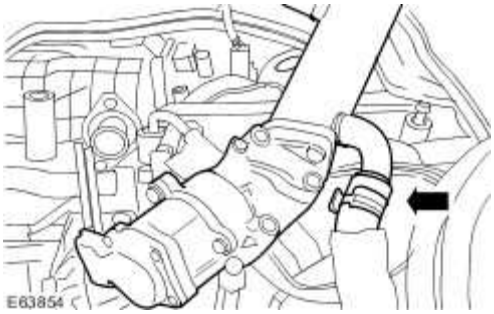

18 . Remove the EGR valve.

Remove and discard the gasket.

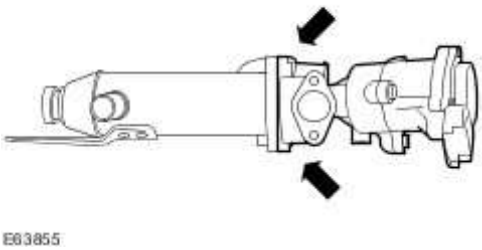

Installation

1 . **NOTE:**

Install a new gasket.

www.JagDocs.com

To install, reverse the removal procedure.

- Tighten to 10 Nm.

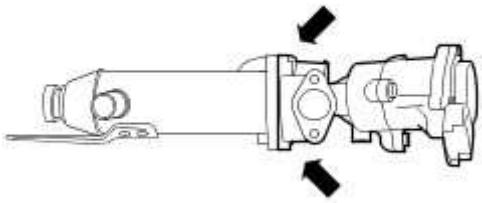

E63855

2 . Tighten to 10 Nm.

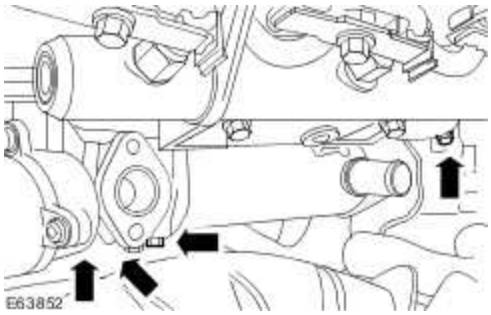

E63852

3 . Tighten to 10 Nm.

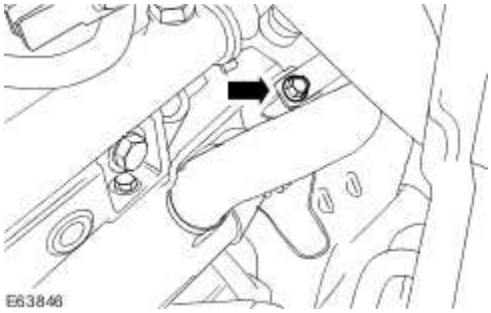

E63846

4 . Tighten the fuel filter retaining bracket.

- Tighten 10 mm (0.394 inch's) bolt to 25 Nm.
- Tighten 6 mm (0.236 inch's) bolt to 10 Nm.

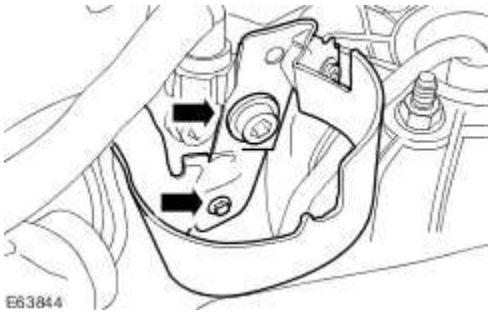

5 . Tighten to 7 Nm.

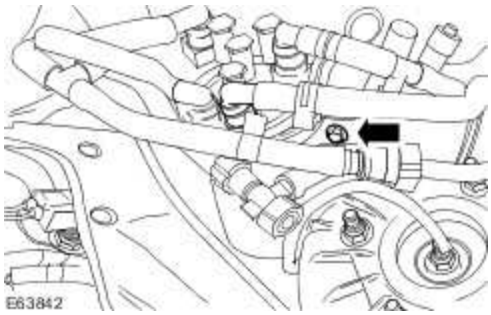

6 . Fill and bleed the cooling system.
For additional information, refer to Cooling System Draining, Filling and Bleeding

www.JagDocs.com

Exhaust Gas Recirculation (EGR) Valve Outlet Tube (17.45.11)

Removal

1 . Remove the oil filler cap.

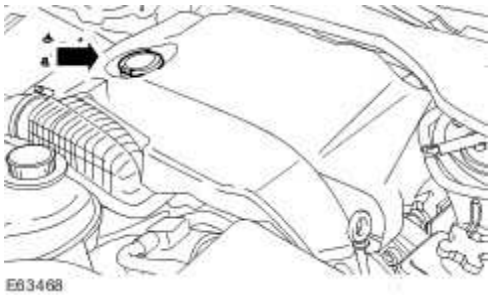

2 . Remove the engine cover.

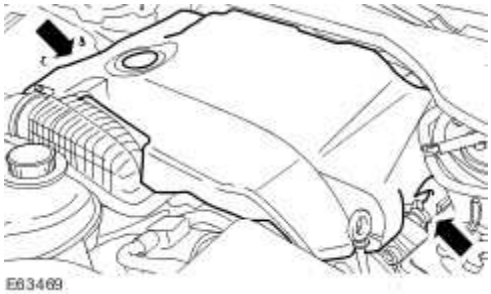

3 . Install the engine oil filler cap to prevent foreign material entering the valve cover.

4 . **NOTE:**

Right-hand shown, left-hand similar.

Detach the exhaust gas recirculation (EGR) valve outlet tube.

5 . **NOTE:**

Right-hand shown, left-hand similar.

Detach the wiring harness.

6 . **NOTE:**

Right-hand shown, left-hand similar.

Detach the EGR valve outlet tube.

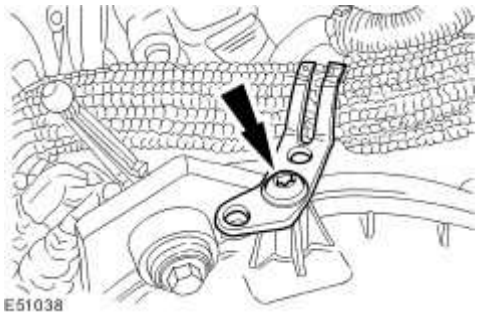

7 . **NOTE:**

Right-hand shown, left-hand similar.

Remove the EGR valve outlet tube.

- Discard the gasket.

www.JagDocs.com

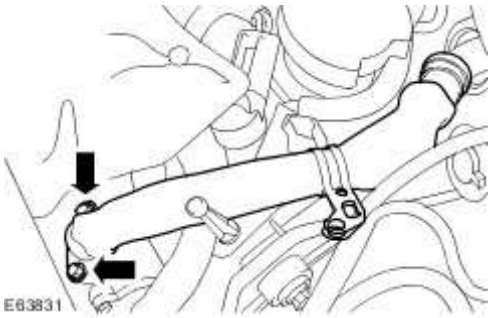

Installation

1 . **NOTE:**

Right-hand shown, left-hand similar.

Loosley install the EGR valve outlet tube.

- Install a new retaining clip.
- Do not fully close the retaining clip at this stage.

2 . **NOTE:**

Right-hand shown, left-hand similar.

Install the EGR valve outlet tube retaining bolts.

- Install a new gasket
- Do not fully tighten the retaining bolts at this stage.

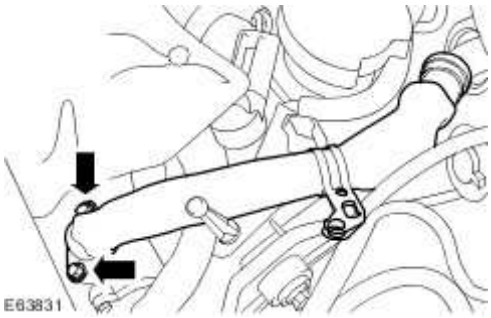

3 . **NOTE:**

Right-hand shown, left-hand similar.

Attach the EGR valve outlet tube.

Do not fully tighten the retaining bolt at this stage.

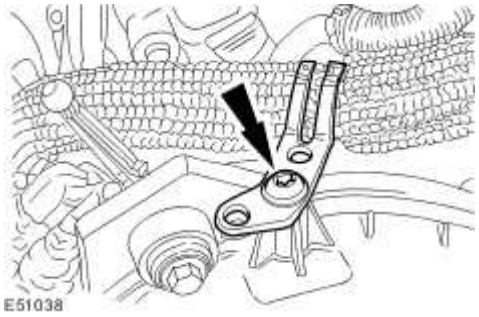

4 . **NOTE:**

Right-hand shown, left-hand similar.

Fully close the EGR valve outlet tube retaining clip.

www.JagDocs.com

5 . **NOTE:**

Right-hand shown, left-hand similar.

Tighten to 10 Nm.

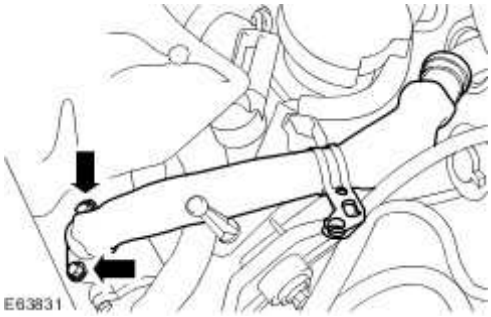

6 . **NOTE:**

Right-hand shown, left-hand similar.

Tighten to 5 Nm.

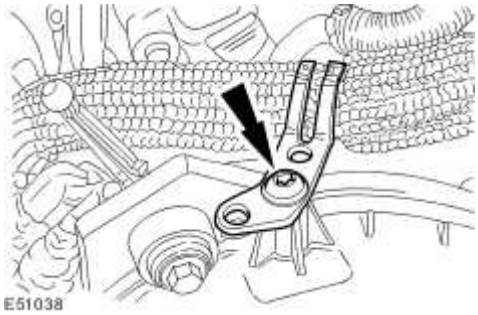

7 . Attach the wiring harness.

8 . Remove the engine oil filler cap.

9 . Install the engine cover.

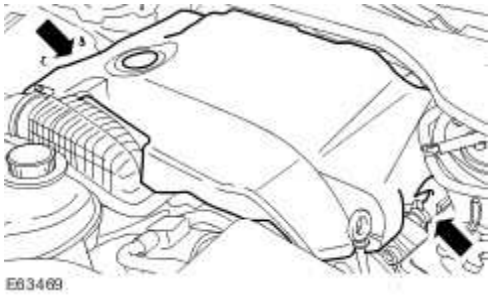

10 . Install the oil filler cap.

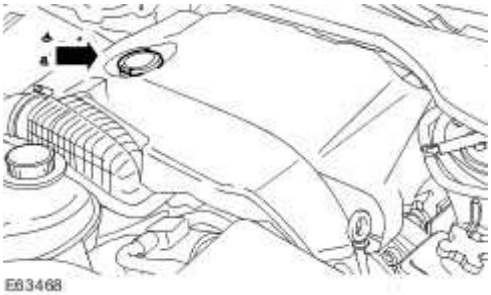

www.JagDocs.com

Exhaust Gas Recirculation (EGR) Valve RH

Removal

1 . Drain the cooling system.
For additional information, refer to Cooling System Draining, Filling and Bleeding

2 . Remove the exhaust gas recirculation (EGR) valve outlet tube.
For additional information, refer to Exhaust Gas Recirculation (EGR) Valve Outlet Tube (17.45.11)

3 . Remove the injector sound proofing.

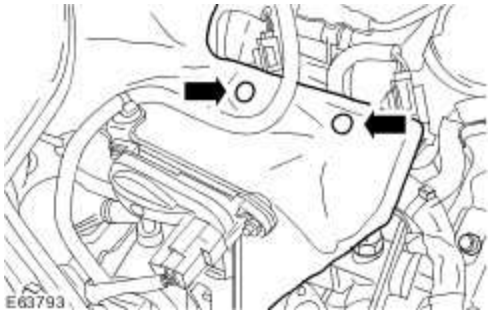

4 . Disconnect the EGR valve electrical connector.

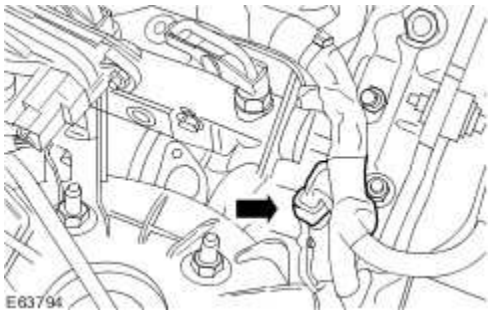

5 . Detach the wiring harness.

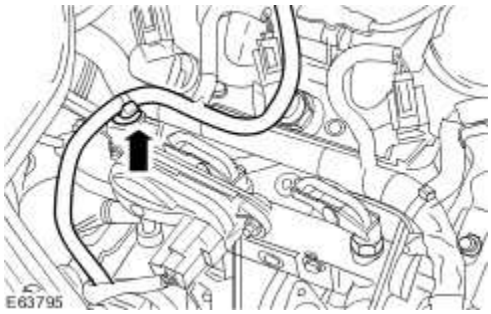

6 . Disconnect the diesel particulate filter differential pressure sensor electrical connector.

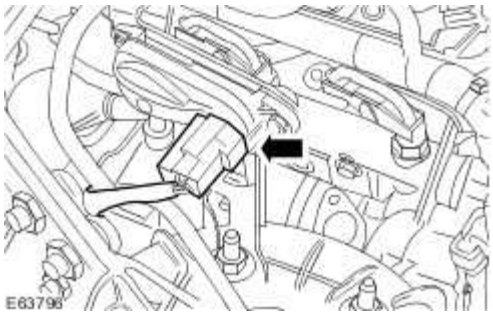

7 . Detach the diesel particulate filter differential pressure sensor and glow plug module securing bracket.

- Remove the retaining nut.

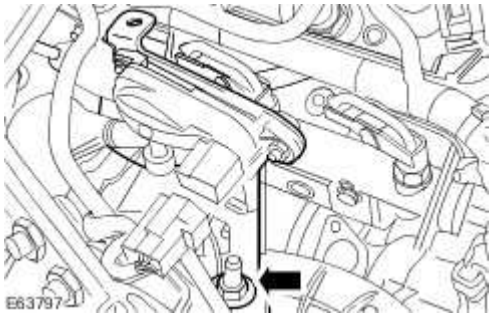

8 . **CAUTION: Make a note of the connection orientation of the high and low pressure hoses to the sensor ports. Make sure the hoses are located to the correct sensor port when installed. Failure to follow these instructions may result in damage to the vehicle.**

Detach the diesel particulate filter differential pressure sensor high pressure and low pressure

www.JagDocs.com

hoses.

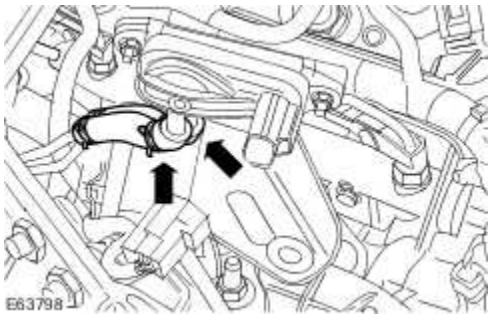

9 . Disconnect the glow plug module electrical connectors.

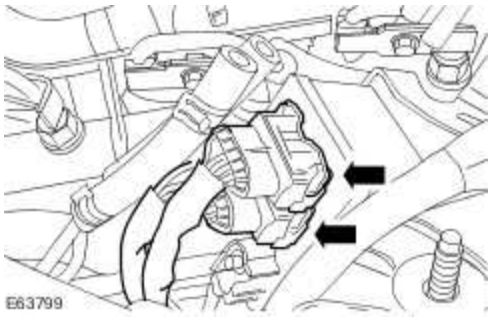

10 . Remove the diesel particulate filter differential pressure sensor and glow plug module securing bracket.

- Remove the glow plug module positive cable retaining nut.

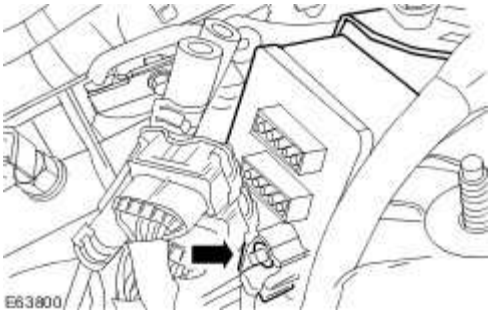

11 . Detach the diesel particulate filter differential pressure sensor high and low pressure pipes.

- Remove the retaining nut.

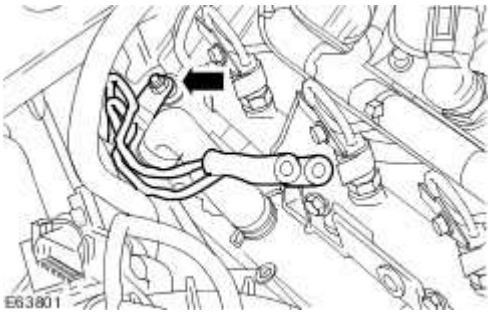

12 . Remove the EGR valve coolant outlet hose.

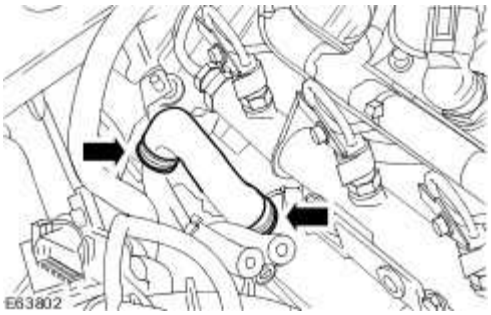

13 . **NOTE:**

Discard the EGR valve inlet tube securing clip.

Remove the EGR valve inlet tube securing clip.

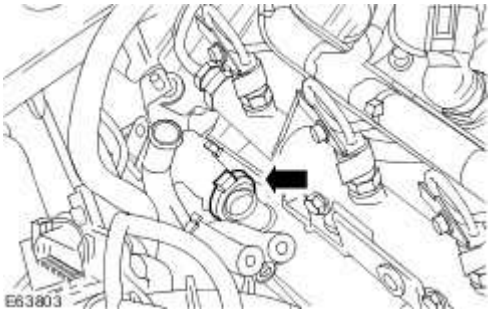

14 . Detach the EGR cooler outlet pipe from the timing cover.

- Loosen the timing belt cover securing bolt.

www.JagDocs.com

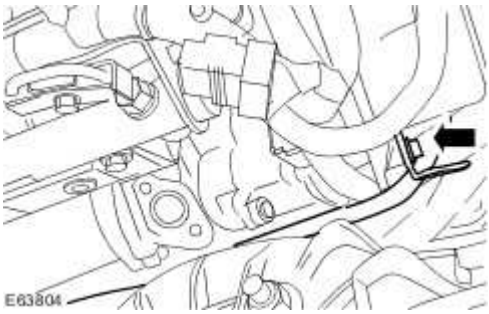

15 . Detach the vent hose.

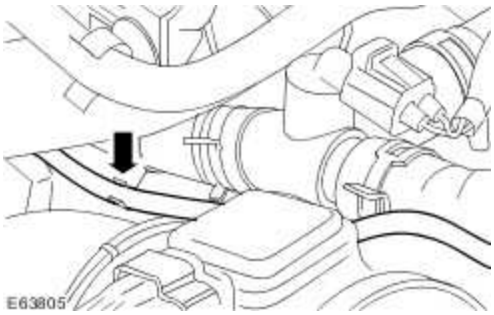

16 . Disconnect the coolant inlet hose.

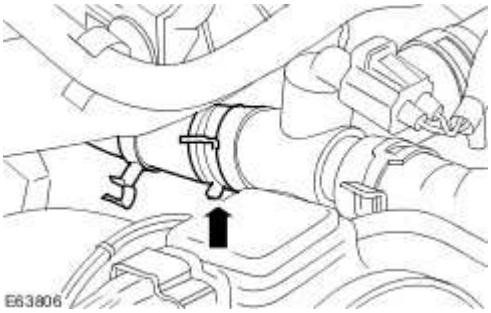

17 . Detach the coolant inlet hose from the timing cover.

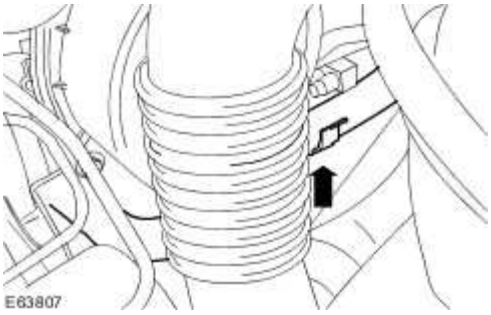

18 . Remove the EGR valve and cooler assembly securing bolts.

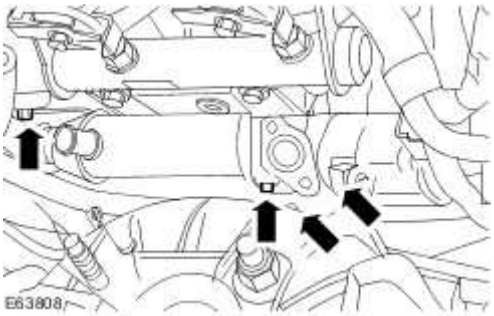

19 . Reposition the EGR valve and cooler assembly.

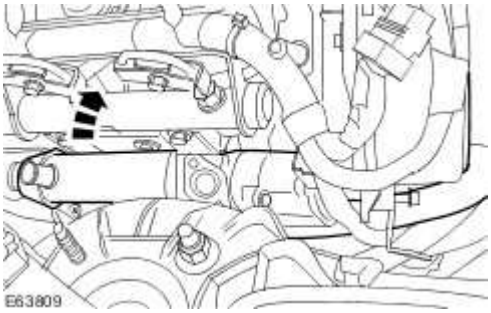

20 . Remove the EGR valve and cooler assembly.

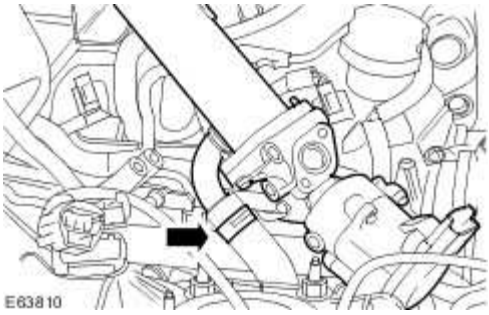

21 . Remove the EGR valve.

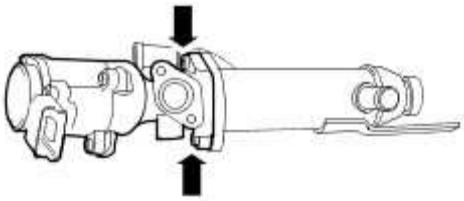

E63817

www.JagDocs.com

Installation

1 . To install, reverse the removal procedure.

Tighten to 10 Nm.

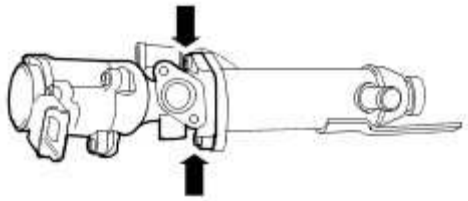

E63817

2 . Tighten to 10 Nm.

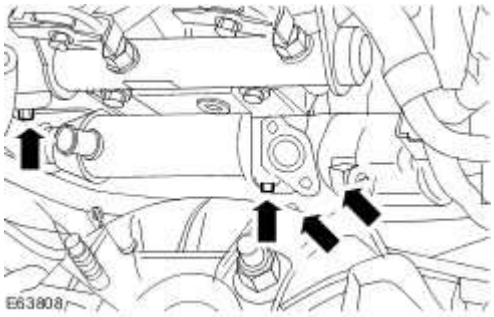

E63808

3 . Tighten to 10 Nm.

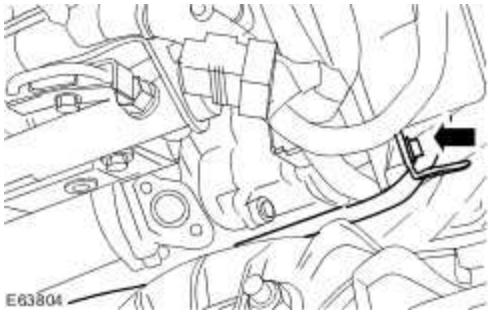

E63804

4 . Tighten to 10 Nm.

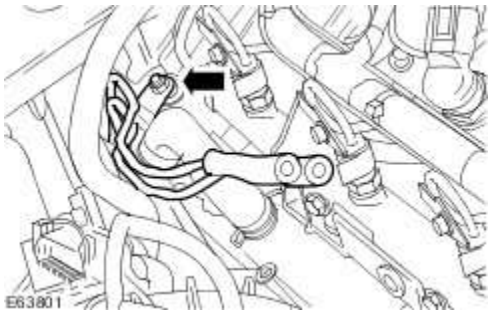

5 . Tighten to 5 Nm.

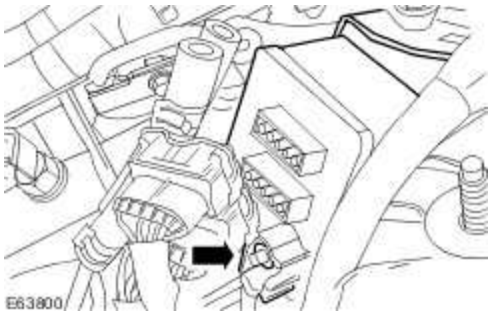

6
. **CAUTION: Make sure the high and low pressure hoses are fully installed and the retaining clips are positioned in their original position.**

Tighten to 25 Nm.

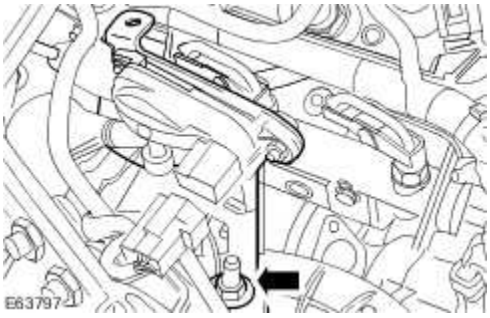

7 . Fill and bleed the cooling system.
For additional information, refer to Cooling System Draining, Filling and Bleeding

www.JagDocs.com

Specifications

Torque Specifications

Description	Nm	lb-ft	lb-in
Air cleaner	8	—	71

Intake Air Distribution and Filtering

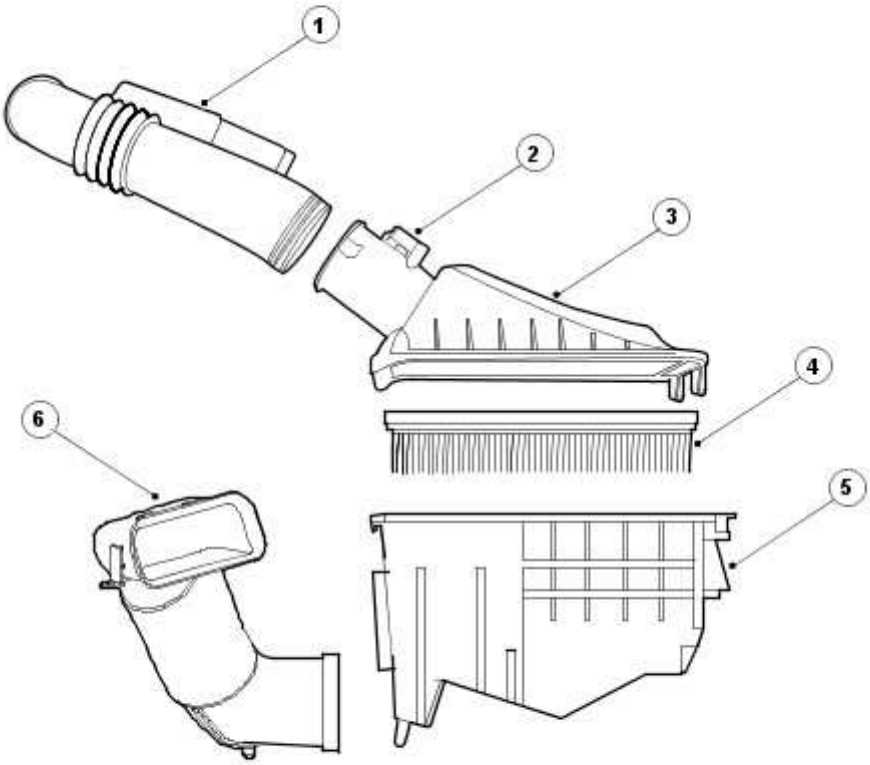

E31808

Item	Part Number	Description
1	—	Air cleaner outlet pipe
2	—	Mass air flow (MAF) sensor
3	—	Air cleaner cover
4	—	Air cleaner element
5	—	Air cleaner
6	—	Air cleaner intake pipe

www.JagDocs.com

Intake Air Distribution and Filtering - VIN Range: G00442->G45703

Inspection and Verification

1 . Verify the customer concern.

2 . Visually inspect for obvious signs of mechanical damage.

Visual Inspection Chart

Mechanical
Air cleaner intake pipe
Air cleaner outlet pipe
Air cleaner element

1 . If an obvious cause for an observed or reported concern is found, correct the cause (if possible) before proceeding to the next step.

2 . If the cause is not visually evident, verify the symptom and refer to the Jaguar Approved Diagnostic System.

Intake Air Distribution and Filtering - VIN Range: G45704->G99999

Inspection and Verification

1 . Verify the customer concern.

2 . Visually inspect for obvious signs of damage.

Mechanical	Electrical
Hoses and ducts (damage/connections) Air cleaner element (contaminated/blocked) Restricted air intake Seals and gaskets	Mass air flow (MAF) sensor Manifold absolute pressure (MAP) sensor Throttle body Harness (security/damage) Connections (security/damage) Intake manifold tuning (IMT) valves

3 . If an obvious cause for an observed or reported concern is found, correct the cause (if possible) before proceeding to the next step.

4 . If the cause is not visually evident use the Jaguar approved diagnostic system or a scan tool to retrieve the fault codes before proceeding to the DTC index chart.

Symptom chart

Symptom	Possible cause	Action
Vehicle does not start/hard starting/poor performance	Restricted/blocked air intake Restricted/blocked air cleaner element	Clear the restriction, Air Cleaner (19.10.05) Replace the air cleaner element as necessary, Air Cleaner Element (19.10.08)
Excessive intake noise	Intake pipe disconnected/damaged after the air cleaner Air cleaner assembly incorrectly assembled/damaged	Check the intake system and hoses for correct installation/damage, Air Cleaner (19.10.05)

www.JagDocs.com

DTC index

NOTE:

Generic scan tools may not read the codes listed, or may read only 5-digit codes. Match the 5 digits from the scan tool to the first 5 digits of the 7-digit code listed to identify the fault (the last 2 digits give extra information read by the manufacturer-approved diagnostic system).

NOTE:

For a full list of DTCs,
Electronic Engine Controls - VIN Range: G45704->G99999

DTC	Description	Possible causes	Action
P010100	Mass or volume air flow A circuit range/performance	Blocked air cleaner Air intake leak Engine breather leak Mass air flow (MAF) sensor to ECM sensing circuit: high resistance, intermittent short circuit to ground MAF sensor supply circuit: high resistance Throttle adaption fault (check throttle position voltage at Ignition ON)	Check the air cleaner and intake ducts, etc, check the engine breather system. Engine Emission Control - VIN Range: G45704->G99999 For MAF and throttle tests. Electronic Engine Controls - VIN Range: G45704->G99999
P010600	Manifold absolute pressure (MAP)/BARO sensor range/performance	Intake manifold air leak (loose or missing component) MAP sensor to ECM circuit(s) fault Throttle adaption fault (check throttle position voltage at Ignition ON) MAP sensor failure	Check the air intake manifold and intake system. For MAF, MAP and throttle tests. Electronic Engine Controls - VIN Range: G45704->G99999
P017100	System too lean (right hand	Air intake leak between MAF sensor and	Check the air intake system for leaks, etc. Check the fuel

	bank)	cylinder head Fuel filter/system restriction Fuel injector restriction MAF sensor fault (low intake air flow) Exhaust leak (before catalyst)	filter and lines. Fuel Tank and Lines - 4.2L NA V8 - AJV8/4.2L SC V8 - AJV8/3.0L NA V6 - AJ27/3.5L NA V8 - AJV8, VIN Range: G45704->G99999 For injector tests. Fuel Charging and Controls - VIN Range: G45704->G99999 For MAF sensor tests. Electronic Engine Controls - VIN Range: G45704->G99999 For exhaust system tests.
P017200	System too rich (right hand bank)	Restricted air cleaner Leaking fuel injector(s) Oil contaminated with fuel (too many cold starts with vehicle subsequently not getting hot enough for long enough) MAF sensor fault (high intake air flow)	Check the air cleaner and intake system. For fuel injector information, Fuel Injectors (18.10.02) Check the oil condition, if contamination is present, renew the engine oil and filter. For MAF sensor circuit tests. Electronic Engine Controls - VIN Range: G45704->G99999
P017400	System too lean (left hand bank)	Air intake leak between MAF sensor and cylinder head Fuel filter/system restriction Fuel injector restriction MAF sensor fault (low intake air flow) Exhaust leak (before catalyst)	Check the intake system. Check the fuel pressure, check the fuel lines. Fuel Tank and Lines - 4.2L NA V8 - AJV8/4.2L SC V8 - AJV8/3.0L NA V6 - AJ27/3.5L NA V8 - AJV8, VIN Range: G45704->G99999 For fuel injector information. Fuel Injectors (18.10.02) For MAF sensor circuit tests. Electronic Engine Controls - VIN Range: G45704->G99999 Check the exhaust

www.JagDocs.com

			system (before catalyst) for condition and security.
P017500	System too rich (left hand bank)	Restricted air cleaner Leaking fuel injector(s) Oil contaminated with fuel (too many cold starts with vehicle subsequently not getting hot enough for long enough) MAF sensor fault (high intake air flow)	Check the air cleaner and intake system. For fuel injector information. Fuel Injectors (18.10.02) Check the oil condition, if contamination is present, renew the engine oil and filter. For MAF sensor circuit tests. Electronic Engine Controls - VIN Range: G45704->G99999
P050600	Idle air control system RPM lower than expected	Air intake restriction Accessory drive overload (defective/seized component)	Check the air cleaner and intake system. Check the accessory drive belt and components. Accessory Drive Belt - 3.0L NA V6 - AJ27, VIN Range: G00442->G45703 (12.10.40)
P050624	Idle control system RPM lower than expected cold start emission strategy ISC system lower than expected	Air intake restriction Accessory drive overload (defective/seized component)	Check the air cleaner and intake system. Check the accessory drive belt and components. Accessory Drive Belt - 3.0L NA V6 - AJ27, VIN Range: G00442->G45703 (12.10.40)
P050700	Idle air control system RPM higher than expected	Intake air leak between MAF sensor and throttle Intake air leak between throttle and engine Engine crankcase breather leak	Check the intake system. Check the engine breather system, Engine Emission Control - VIN Range: G45704->G99999
P050723	Idle control system RPM higher than expected cold start emission strategy ISC	Intake air leak between MAF sensor and throttle	Check the intake system. Check the engine breather system,

	system higher than expected	Intake air leak between throttle and engine Engine crankcase breather leak	Engine Emission Control - VIN Range: G45704->G99999
P066100	Intake manifold tuning (IMT) valve control circuit low - right hand	IMT circuit(s): short circuit to ground IMT circuit(s): high resistance	Electronic Engine Controls - VIN Range: G45704->G99999
P066200	Intake manifold tuning (IMT) valve control circuit high - right hand	IMT circuit(s): short circuit to power	Electronic Engine Controls - VIN Range: G45704->G99999
P066400	Intake manifold tuning (IMT) valve control circuit low - left hand	IMT circuit(s): short circuit to ground IMT circuit(s): high resistance	Electronic Engine Controls - VIN Range: G45704->G99999
P066500	Intake manifold tuning (IMT) valve control circuit high - left hand	IMT circuit(s): short circuit to power	Electronic Engine Controls - VIN Range: G45704->G99999

1 . Confirm the DTC and follow the action instruction from the index.

www.JagDocs.com

Air Cleaner (19.10.05)

Removal

1 . Remove the radiator grill opening panel. <<501-02>>

2 . Remove the air cleaner outlet pipe.
For additional information, refer to

3 . Disconnect the mass air flow (MAF) sensor electrical connector.

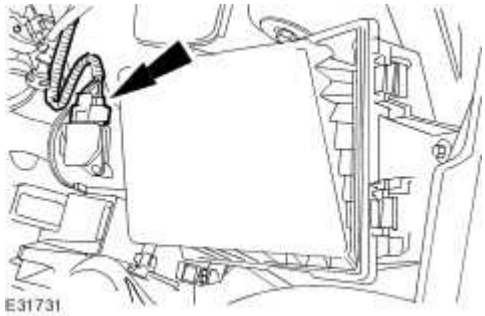

4 . Disconnect the extra air flap actuator electrical connector.

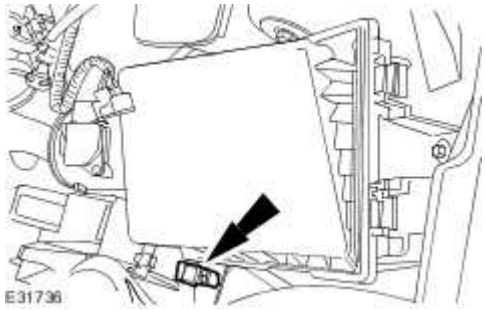

5 . Remove the air cleaner retaining bolt.

6 . Remove the air cleaner.

Installation

1 **NOTE:**

.

When installing the air cleaner, make sure the locating pegs fit securely in the grommets located in the inner wing.

To install, reverse the removal procedure.

Tighten to 8Nm.

www.JagDocs.com

Air Cleaner Element (19.10.08)

Removal

1 . Remove the air cleaner outlet pipe.
For additional information, refer to

2 . Disconnect the mass air flow sensor (MAF) electrical connector.

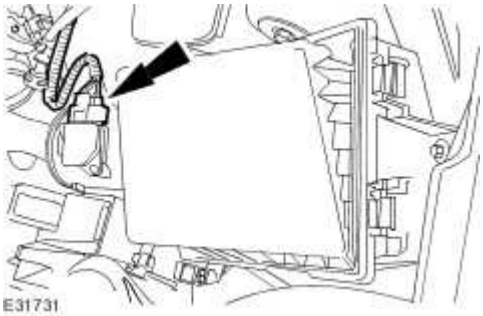

3 . Remove the air cleaner cover.

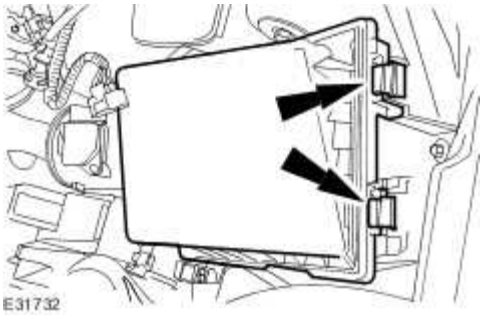

4 . Remove the air cleaner element.

Installation

1 . To install, reverse the removal procedure.

www.JagDocs.com

Air Cleaner Outlet Pipe (19.10.31)

Removal

1 . Disconnect the engine breather hose.

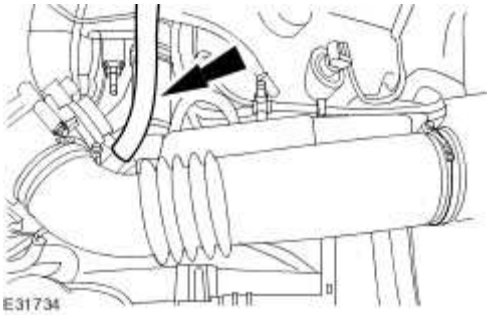

2 . Remove the air cleaner outlet pipe.

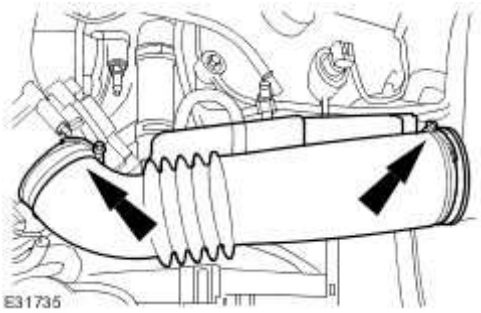

Installation

1 . To install, reverse the removal procedure.

Specifications

Torque Specifications

Description	Nm	lb-ft	lb-in
Air cleaner retaining bolt	8	-	71
Supercharger outlet pipe retaining nuts	9	-	80
Supercharger outlet pipe retaining bolts	9	-	80
Supercharger retaining bolts	24	18	-
Air intake elbow retaining bolts	24	18	-
Air intake elbow lower bracket retaining bolts	20	15	-
Exhaust gas recirculation (EGR) valve retaining bolts	10	7	-
Exhaust manifold to EGR valve tube retaining bolts	21	15	-
Exhaust manifold to EGR valve tube retaining nuts	21	15	-
Thermostat housing retaining bolts	10	7	-
Throttle body intake hose retaining clip	5	-	45

www.JagDocs.com

Intake Air Distribution and Filtering

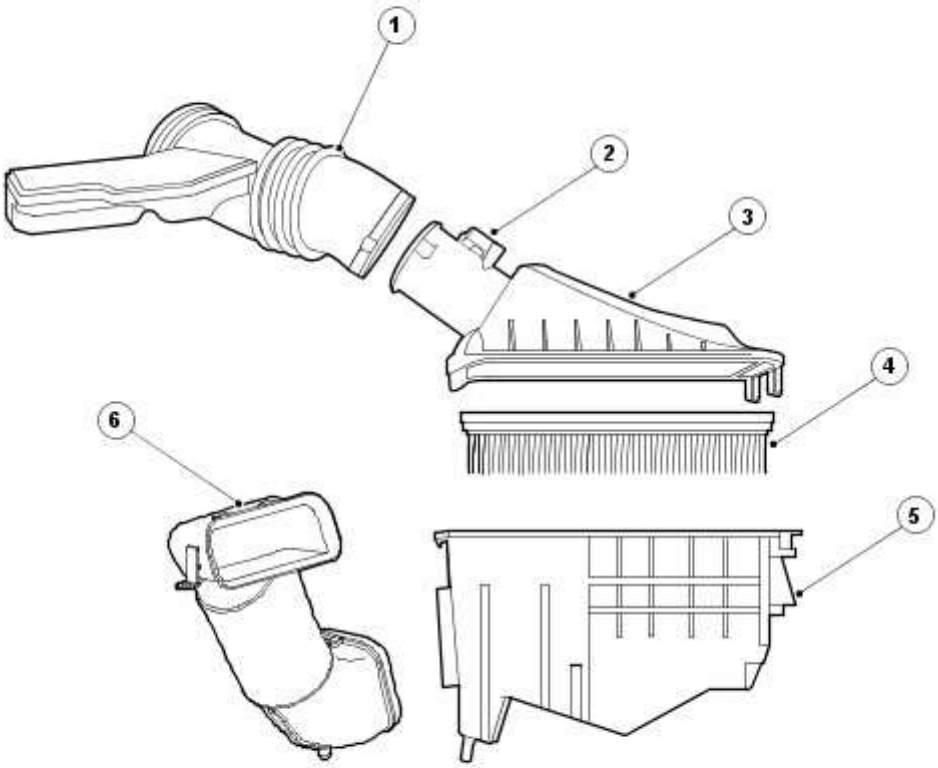

E36581

Item	Part Number	Description
1	—	Air cleaner outlet pipe
2	—	Mass air flow (MAF) sensor
3	—	Air cleaner cover
4	—	Air cleaner element
5	—	Air cleaner

6	—	Air cleaner intake pipe

Vehicles with supercharger

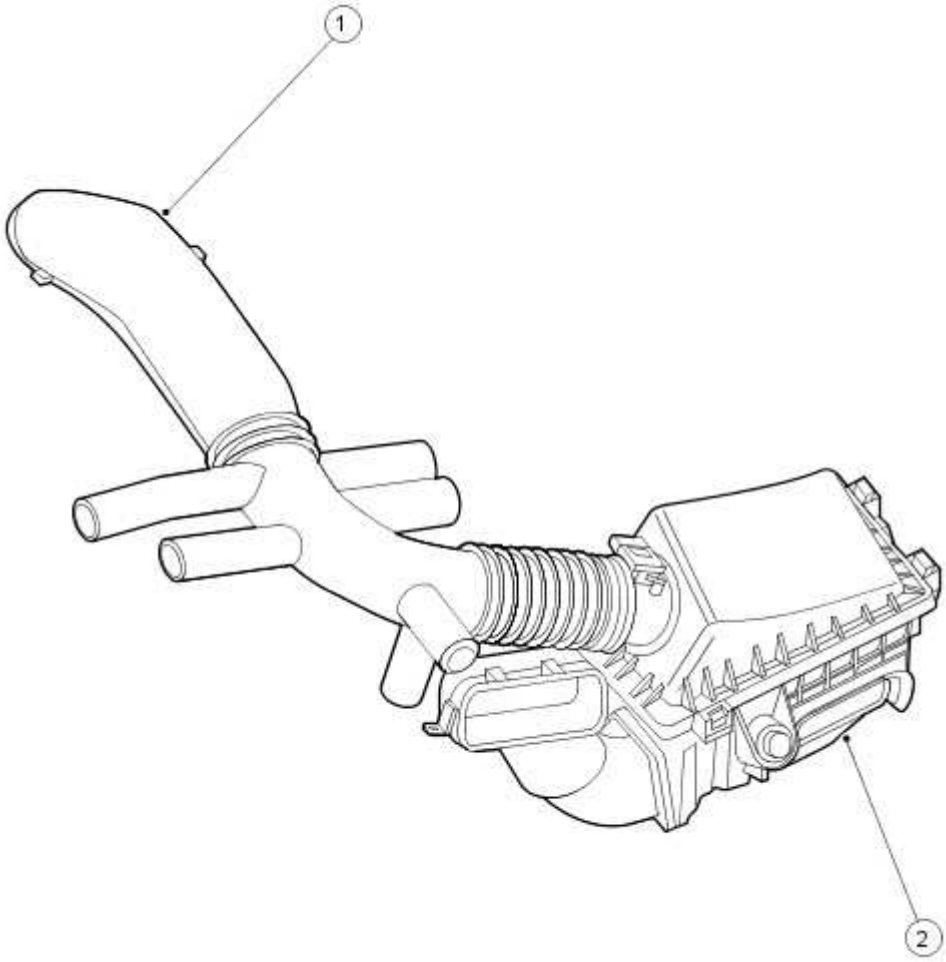

E30249

Item	Part Number	Description
1	—	Throttle body intake pipe
2	—	Additional air inlet actuator

www.JagDocs.com

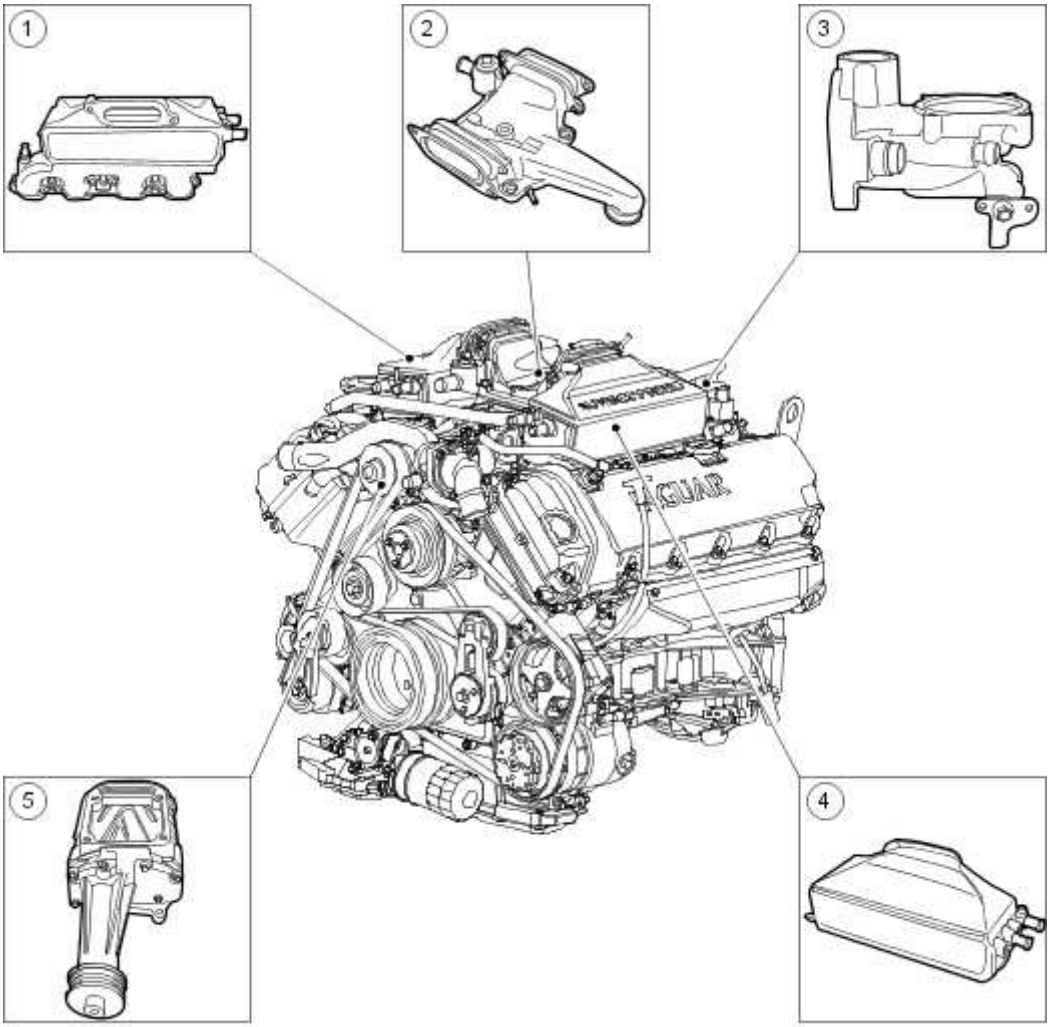

E30233

Item	Part Number	Description
1	—	Charge air cooler
2	—	Supercharger outlet pipe
3	—	Throttle body elbow
4	—	Charge air cooler
5	—	Supercharger

Intake air distribution and filtering for vehicles with supercharger

Air is supplied to the supercharger via the air cleaner, air cleaner outlet pipe, throttle body intake pipe, throttle body and throttle body elbow. The supercharger delivers pressurized air to two separate charge air cooler units, each unit being mounted on the cylinder bank it supplies.

Pressurized cooled air is fed from the charge air coolers directly into each inlet port. The air cleaner outlet pipe differs from the normally aspirated by having tuned resonators to reduce inlet noise levels. An intake air temperature sensor is fitted at the outlet of the bank 1 charge air cooler. The sensor provides an input to the engine control module (ECM). <<303-14B>> The intake elbow directs the metered airflow from the throttle body outlet (underside of the throttle body) into the intake of the supercharger. The supercharger by-pass valve assembly is part of the intake elbow. The butterfly valve inside the assembly is opened by a diaphragm actuator operated by vacuum feed from the elbow. At closed or partially open throttle positions, the butterfly valve opens, allowing the airflow from the two charge air cooler inlets to be directed back to the supercharger inlet. This action inhibits the supercharging effect and reduces engine torque. Progressive opening of the throttle causes the by-pass valve to gradually close.

Supercharger

The supercharger is attached to the three mounting bosses between the two cylinder heads. The supercharger has a filled for life internal lubrication system. The supercharger is positively aligned with the drive belt by a doweled mounting bracket.

Charge Air Cooler

Each cylinder bank is fitted with a charge air cooler which supplies pressurized air to the four cylinders. The inlet ports to the two charge air coolers are connected to the supercharger via the supercharger outlet pipe consisting of adjustable metal ducts with bonded rubber seals. The charge air coolers are water cooled via a radiator and water pump. <<303-03B>>

www.JagDocs.com

Intake Air Distribution and Filtering - VIN Range: G00442->G45703

Inspection and Verification

1 . Verify the customer concern by operating the system.

2 . Visually inspect for obvious signs of mechanical damage.

Visual Inspection Chart

Mechanical
Air cleaner intake pipe
Air cleaner outlet pipe
Air cleaner element
Throttle body intake pipe
Throttle body gasket
Throttle body
Supercharger outlet pipe to charge air cooler duct(s)
Supercharger outlet pipe gasket
Supercharger outlet pipe
Air intake elbow
Air intake elbow gasket
Air intake elbow retaining bolt seal(s)
Supercharger
Charge air cooler gasket(s)
Charge air cooler(s)

1 . If an obvious cause for an observed or reported concern is found, correct the cause (if possible) before proceeding to the next step.

2 . If the cause is not visually evident, verify the symptom and refer to the Jaguar Approved Diagnostic System.

Intake Air Distribution and Filtering - VIN Range: G45704->G99999

Overview

There are changes to the engine management system (EMS) for 2006 my, the most obvious of which will be the change to 7-digit diagnostic trouble codes (DTCs) from the familiar 5-digit, plus the addition of secondary air injection and changes to evaporative emissions and exhaust gas recirculation to comply with stage four emissions requirements.

For more information on these systems,
Evaporative Emissions - VIN Range: G00442->G45703
Engine Emission Control

Inspection and Verification

1 . Verify the customer concern.

2 . Visually inspect for obvious signs of damage.

Mechanical	Electrical
Hoses and ducts (damage/connections)	
Air cleaner element (contaminated/blocked)	
Restricted air intake	Mass air flow (MAF) sensor
Supercharger	Manifold absolute pressure (MAP) sensor
Supercharger drive belt	Throttle body
Charge air coolers (damage/connection)	Harness (security/damage)
Supercharger outlet pipes and gaskets	Connections (security/damage)
Supercharger air intake elbow/hoses	
Seals and gaskets	

3 . If an obvious cause for an observed or reported concern is found, correct the cause (if possible) before proceeding to the next step.

4 . If the cause is not visually evident use the Jaguar approved diagnostic system or a scan tool to retrieve the fault codes before proceeding to the diagnostic trouble code (DTC) index.

www.JagDocs.com

Symptom chart (vehicles without supercharger)

Symptom	Possible cause	Action
Vehicle does not start/hard starting/poor performance	Restricted/blocked air intake Restricted/blocked air cleaner element	Clear the restriction, Air Cleaner (19.10.05) Replace the air cleaner element as necessary, Air Cleaner Element (19.10.08)
Excessive intake noise	Intake pipe disconnected/damaged after the air cleaner Air cleaner assembly incorrectly assembled/damaged	Check the intake system and hoses for correct installation/damage, Air Cleaner (19.10.05)

Symptom	Possible cause	Action
Lack of boost	Supercharger drive belt broken/slipping Supercharger fault supercharger air intake elbow fault Major air leakage (after the supercharger)	Check the supercharger and drive belt (see visual inspection). For supercharger air intake elbow tests, GO to Pinpoint Test G532443p1. Check the charge air coolers and pipework (see visual inspection).
Noise	Supercharger drive belt slipping Supercharger fault Major air leakage (after the supercharger)	Check the supercharger and drive belt (see visual inspection). Remove the supercharger drive belt and recheck for noise. Turn the supercharger by hand and check for excessive resistance. Check the supercharger pulley for excessive play. Check the charge air coolers and pipework (see visual inspection).

DTC index

NOTE:

Generic scan tools may not read the codes listed, or may read only 5-digit codes. Match the 5 digits from the scan tool to the first 5 digits of the 7-digit code listed to identify the fault (the last 2 digits give extra information read by the manufacturer-approved diagnostic system).

NOTE:

For a full list of DTCs.
Electronic Engine Controls - VIN Range: G45704->G99999

DTC	Description	Possible causes	Action
P010100	MAF circuit range/performance	Blocked air cleaner Air intake leak Engine breather leak MAF sensor to ECM sensing circuit: high resistance, intermittent short circuit to ground MAF sensor supply circuit: high resistance	Clear the restriction, Air Cleaner (19.10.05) Replace the air cleaner element as necessary, Air Cleaner Element (19.10.08) Inspect the engine breather system, For MAF sensor tests, Electronic Engine Controls - VIN Range: G45704->G99999
P010600	MAP/Barometric pressure circuit range/performance	Intake manifold air leak (loose or missing component) MAP sensor to ECM circuit(s) fault MAP sensor failure	Check the intake system and hoses for correct installation/damage, Air Cleaner (19.10.05) Replace the air cleaner element as necessary, Air Cleaner Element (19.10.08) Check the intake manifold for correct installation/damage, Intake Manifold - VIN Range: G45704->G99999 (30.15.01) For MAP sensor tests, Electronic Engine Controls - VIN Range: G45704->G99999 .
P017100	System too lean (right hand bank)	Air intake leak between MAF sensor and cylinder head Fuel filter/system restriction MAF sensor fault	Check the intake system and hoses for correct installation/damage, Air Cleaner (19.10.05) Check the fuel pressure, check the fuel lines, Fuel Tank and Lines - 4.2L NA V8 - AJV8/4.2L SC V8 - AJV8/3.0L NA V6 - AJ27/3.5L NA V8 - AJV8, VIN Range: G45704->G99999 Check the exhaust

www.JagDocs.com

		(low intake air flow) Exhaust leak (before catalyst)	system (before catalyst) for condition and security,
P017200	System too rich (right hand bank)	Restricted air filter MAF sensor fault (high intake air flow)	Clear the restriction, Air Cleaner (19.10.05) Replace the air cleaner element as necessary, Air Cleaner Element (19.10.08) For MAF sensor tests, Electronic Engine Controls - VIN Range: G45704->G99999 .
P017400	System too lean (left hand bank)	Air intake leak between MAF sensor and cylinder head Fuel filter/system restriction MAF sensor fault (low intake air flow) Exhaust leak (before catalyst)	Check the intake system and hoses for correct installation/damage, Air Cleaner (19.10.05) Check the fuel pressure, check the fuel lines, Fuel Tank and Lines - 4.2L NA V8 - AJV8/4.2L SC V8 - AJV8/3.0L NA V6 - AJ27/3.5L NA V8 - AJV8, VIN Range: G45704->G99999 Check the exhaust system (before catalyst) for condition and security,
P017500	System too rich (left hand bank)	Restricted air filter MAF sensor fault (high intake air flow)	Clear the restriction, Air Cleaner (19.10.05) Replace the air cleaner element as necessary, Air Cleaner Element (19.10.08) For MAF sensor tests, Electronic Engine Controls - VIN Range: G45704->G99999 .
P050600	Idle air control system RPM lower than expected	Restricted air cleaner element MAF sensor fault (high intake air flow)	Clear the restriction, Air Cleaner (19.10.05) Replace the air cleaner element as necessary, Air Cleaner Element (19.10.08) For MAF sensor tests, Electronic Engine Controls - VIN Range: G45704->G99999 .
P050700	Idle air control system RPM higher than expected	Intake air leak between MAF sensor and	Check the intake system and hoses for correct installation/damage, Air Cleaner (19.10.05) Inspect the

		throttle Intake air leak between throttle and engine Engine crankcase breather leak	engine breather system,

Pinpoint tests

NOTE:

Check and rectify basic faults before beginning diagnostic routines involving pinpoint tests.

PINPOINT TEST G532443p1 : CHECK THE SUPERCHARGER AIR INTAKE ELBOW

G532443t1 : CHECK THE AIR INTAKE ELBOW VACUUM LINE

1. Check the vacuum connection to the supercharger air intake elbow at both ends. 2. Check the vacuum line to the supercharger air intake elbow along its length.

Is the vacuum line connected and in good condition?

-> Yes
GO to Pinpoint Test G532443t2.

-> No
CONNECT or replace the vacuum line as necessary. Test the system for normal operation.

G532443t2 : CHECK THE OPERATION OF THE AIR INTAKE ELBOW ACTUATOR LINKAGE

1. Disconnect the vacuum line from the actuator diaphragm. 2. Connect a suitable hand vacuum pump to the actuator diaphragm. 3. Apply a vacuum to the actuator diaphragm. 4. Observe the actuator linkage operation.

Does the actuator linkage operate?

-> Yes
GO to Pinpoint Test G532443t3.

www.JagDocs.com

-> No
INSTALL a new supercharger air intake elbow. Test the system for normal operation.

G532443t3 : CHECK THE OPERATION OF THE AIR INTAKE ELBOW BUTTERFLY

1. Remove the air cleaner outlet pipe,
Air Cleaner Outlet Pipe (19.10.31) 2. Remove the supercharger outlet pipe,
Supercharger Outlet Pipe (18.50.16) 3. Apply a vacuum to the actuator diaphragm. 4. Observe the butterfly operation.

Does the butterfly operate?

-> Yes
Check for another cause of the malfunction.

-> No
INSTALL a new supercharger air intake elbow. Test the system for normal operation.

Air Cleaner (19.10.05)

Removal

1 . Remove the radiator grill opening panel. <<501-02>>

2 . Remove the air cleaner outlet pipe.
For additional information, refer to

3 . Disconnect the mass air flow (MAF) sensor electrical connector.

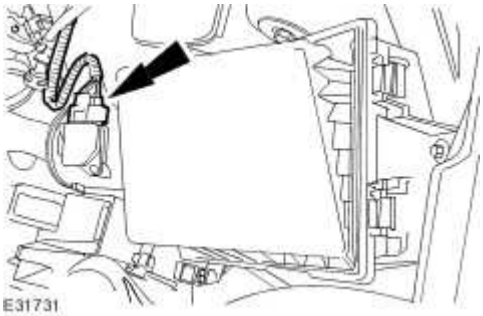

4 . Disconnect the extra air flap actuator electrical connector.

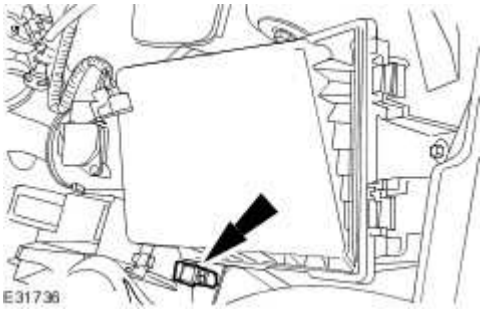

5 . Remove the air cleaner retaining bolt.

www.JagDocs.com

6 . Remove the air cleaner.

Installation

1 **NOTE:**

.

When installing the air cleaner, make sure the locating pegs fit securely in the grommets located in the inner wing.

To install, reverse the removal procedure.

Tighten to 8Nm.

Air Cleaner Element (19.10.08)

Removal

1 . Remove the air cleaner outlet pipe.
For additional information, refer to Air Cleaner Outlet Pipe (19.10.31)

2 . Disconnect the mass air flow sensor (MAF) electrical connector.

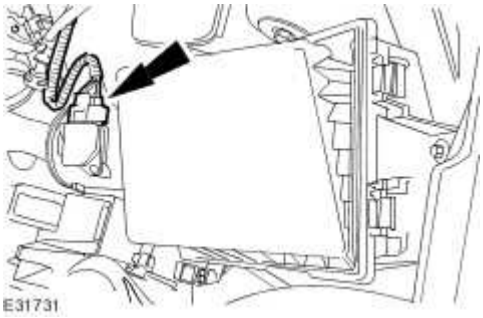

3 . Remove the air cleaner cover.

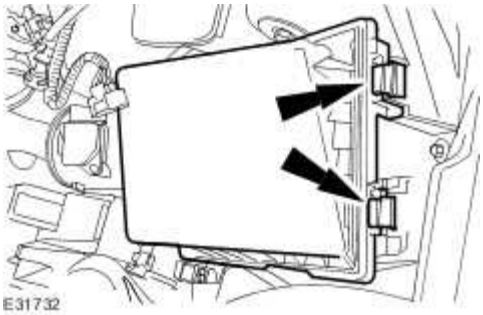

4 . Remove the air cleaner element.

Installation

1 . To install, reverse the removal procedure.

www.JagDocs.com

Cleaner Outlet Pipe (19.10.31)

Removal

1 . Remove the engine cover.

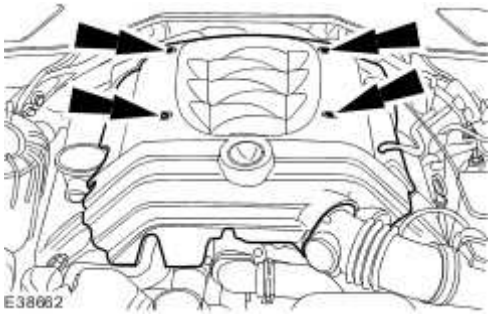

2 . Install the oil filler cap.

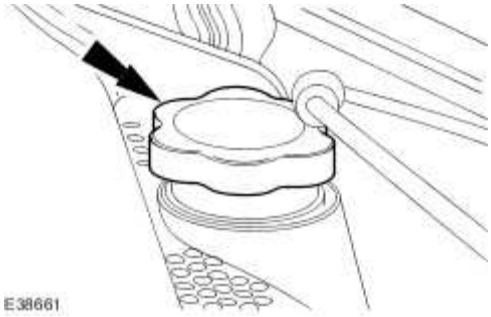

3 . Disconnect the engine breather hose.

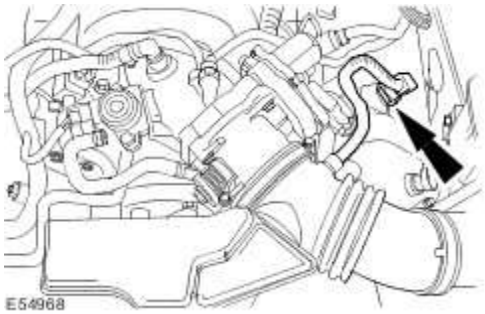

4 . Remove the air cleaner outlet pipe.

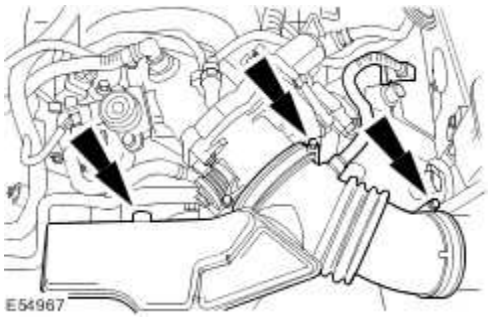

Installation

1 . To install, reverse the removal procedure.

www.JagDocs.com

Charge Air Cooler

Removal

1 . Remove the supercharger.
For additional information, refer to

2 . **CAUTION: Make sure no foreign matter enters the cylinder head ports.**

Remove the charge air cooler.

- Remove and discard the charge air cooler gasket.

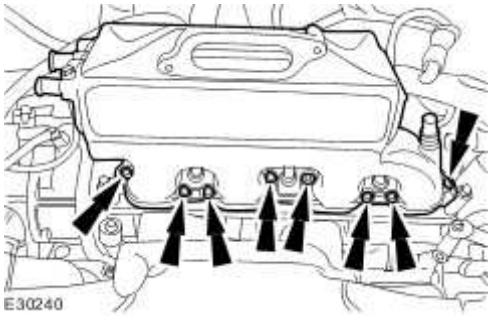

Installation

1 . Install the charge air cooler.

- Install a new charge air cooler gasket.
- Tighten to 13 Nm.

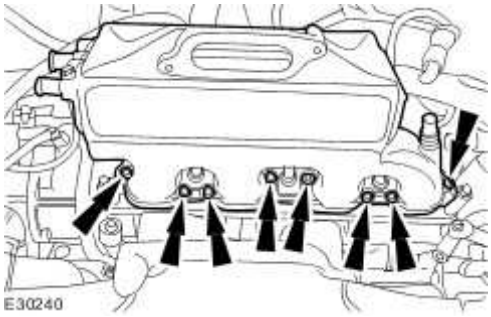

2 . Install the supercharger.
For additional information, refer to

Supercharger - VIN Range: G00442->G45703 (18.50.15)

Installation

1 . Install the supercharger.

- Tighten to 24 Nm.

2 . Connect the manifold absolute pressure (MAP) sensor.

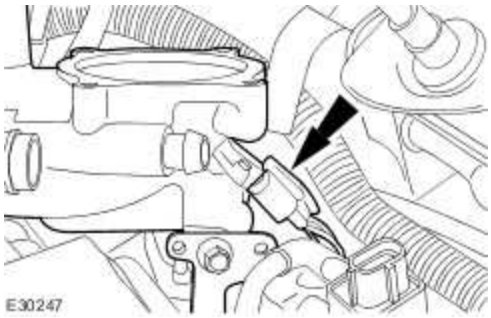

3 . Install the air intake elbow.

- Install a new gasket.
- Install new retaining bolt seals.
- Tighten to 24 Nm.

www.JagDocs.com

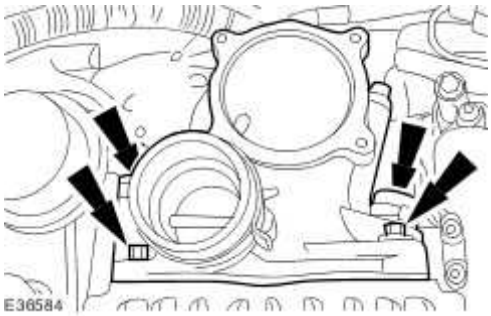

4 . Install the air intake elbow retaining bracket lower retaining bolts.

- Tighten to 20 Nm.

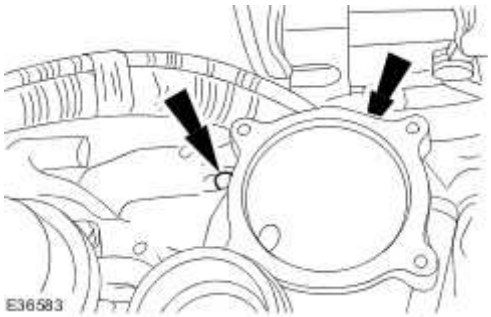

5 . Connect the air intake elbow pipes.

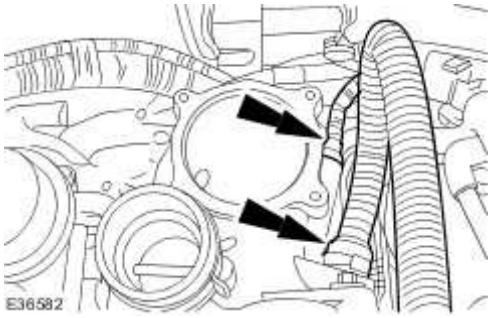

6 . Install the EGR valve and the exhaust manifold to EGR valve tube.

- Install a new exhaust manifold to EGR valve tube gasket.
- Install a new EGR valve to air intake elbow gasket.
- Tighten to 10 Nm.

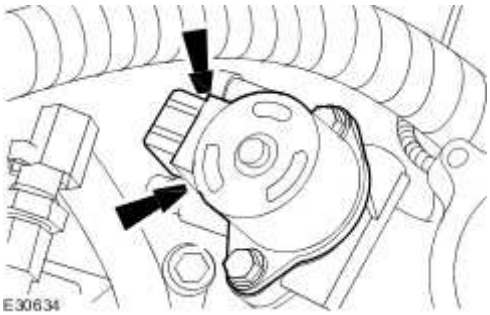

7 . Tighten to 21 Nm.

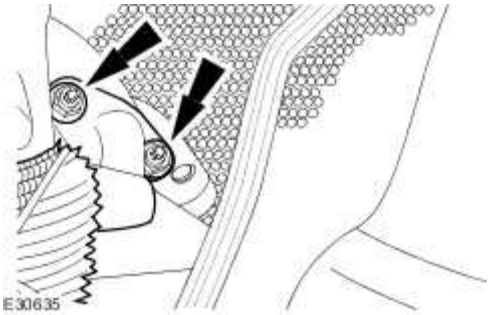

8 . **NOTE:**

Remove the sealing caps from the coolant ports.

Connect the coolant hoses.

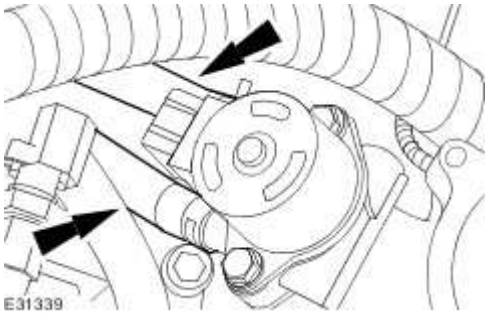

9 . Connect the exhaust gas recirculation (EGR) valve electrical connector.

www.JagDocs.com

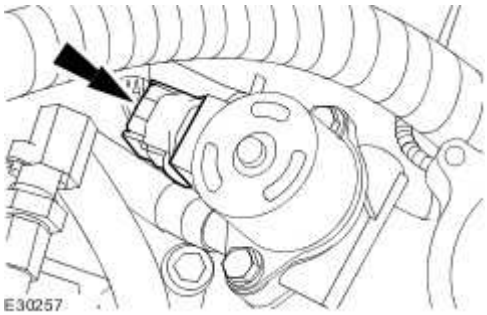

10 . Connect the IAT sensor electrical connector.

11 . Connect the charge air cooler coolant pipes.

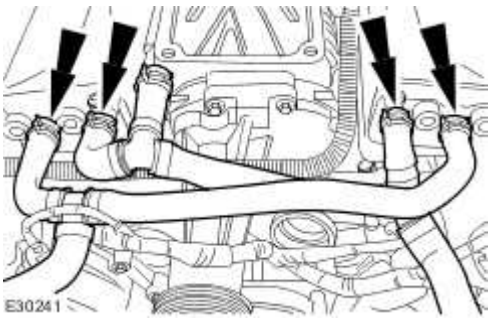

12 . **NOTE:**

Install new O-ring seals to the thermostat housing.

Install the thermostat housing.

- Tighten to 10 Nm.

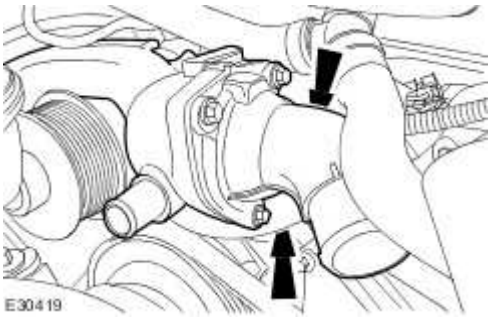

13 . Tighten to 10 Nm.

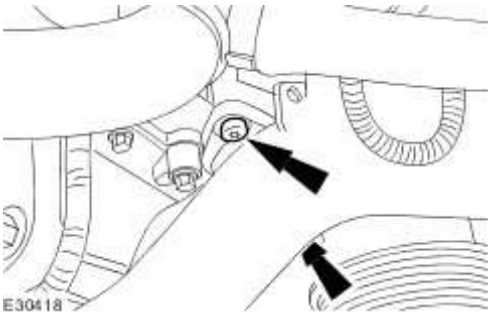

14 . Connect the hose.

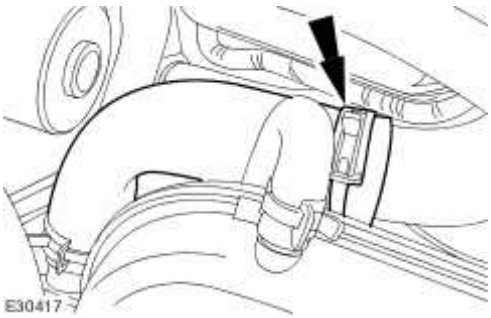

15 . Connect the hose.

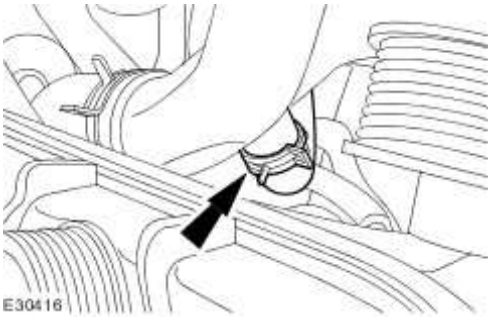

www.JagDocs.com

16 . Connect the hose.

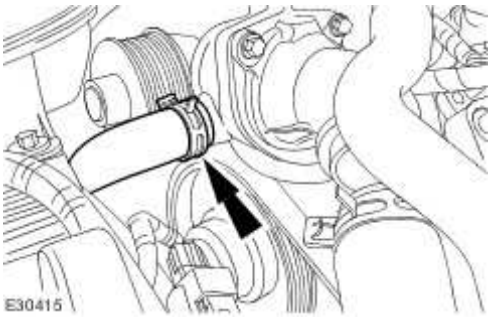

17 . Connect the hose.

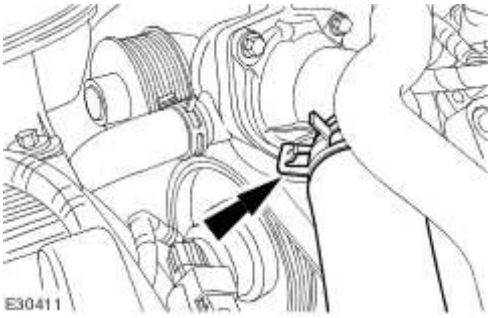

18 . Reposition the thermostat housing hose retaining clip.

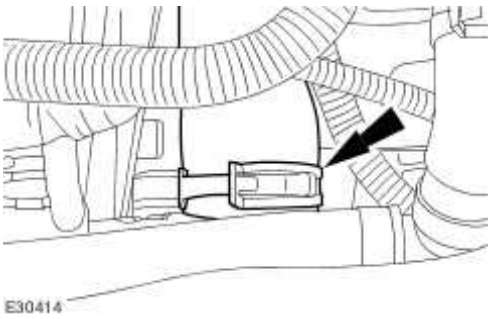

19 . Connect the coolant temperature sensor electrical connector.

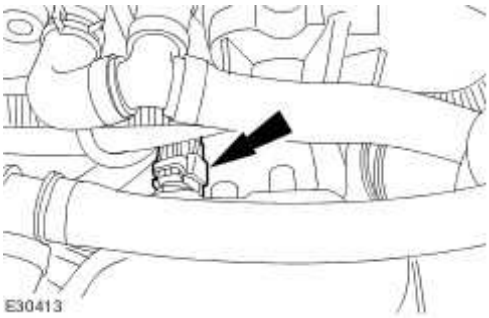

20 . Connect the thermostat housing hoses.

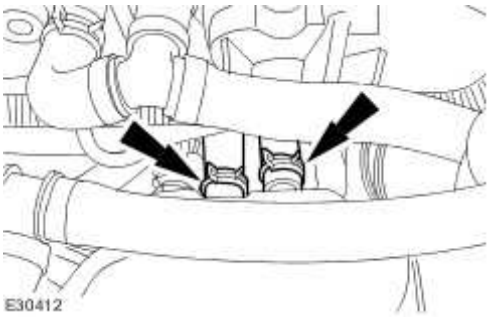

21 . Install new supercharger outlet pipe to charge air coolers ducts.

Tighten to 8 Nm.

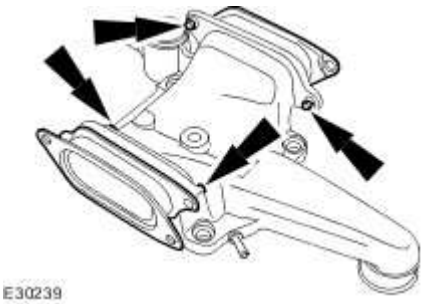

22 . Install a new supercharger outlet pipe gasket.

23 . Install new seals to the supercharger outlet pipe retaining bolts.

24 . **CAUTION: Make sure no foreign matter enters the supercharger.**

Install the supercharger outlet pipe.

www.JagDocs.com

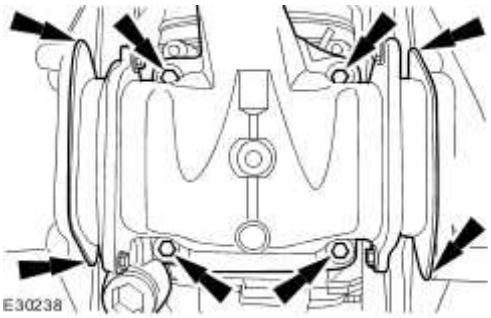

25 . **NOTE:**

Remove the sealing caps from the coolant ports.

Attach the supercharger outlet pipe coolant hose.

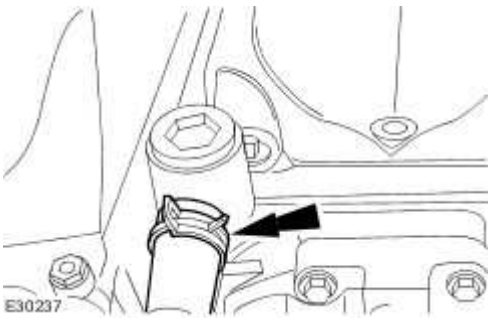

26 . Install the throttle body. <<303-04B>>

27 . Attach the hoses.

- Reposition the hose retaining clip.

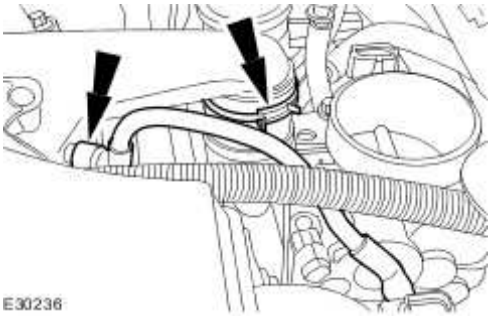

28 . Attach the supercharger belt.

- Use a 1/2 inch square drive bar to rotate the supercharger belt tensioner.
- Attach the supercharger belt.

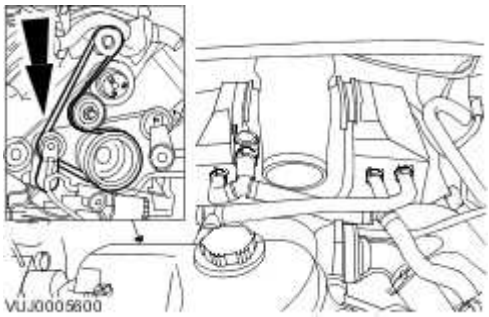

29 . Connect the battery ground cable. <<414-01>>

30 . Carry out the cooling system filling and bleeding procedure. <<303-03>>

www.JagDocs.com

Supercharger - VIN Range: G45704->G99999 (18.50.15)

Installation

1 . Install the supercharger.

- Tighten to 21 Nm.

2 . Connect the MAP sensor.

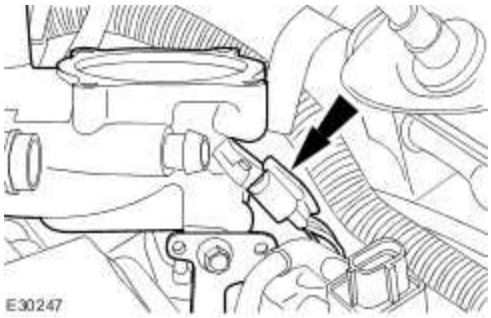

3 . Install the air intake elbow.

- Install a new gasket.
- Install new retaining bolt seals.
- Tighten to 21 Nm.

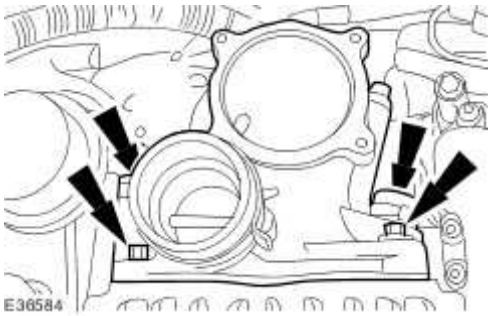

4 . Install the air intake elbow retaining bracket lower retaining bolts.

- Tighten to 18 Nm.

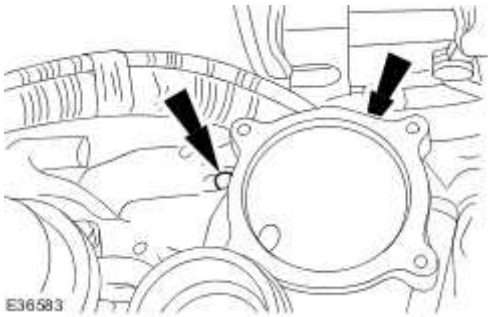

5 . Connect the air intake elbow pipes.

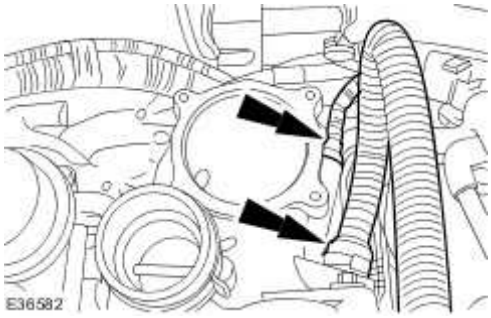

6 . Install the EGR valve and the exhaust manifold to EGR valve tube.

- Install a new exhaust manifold to EGR valve tube gasket.
- Install a new EGR valve to air intake elbow gasket.
- Tighten to 10 Nm.

www.JagDocs.com

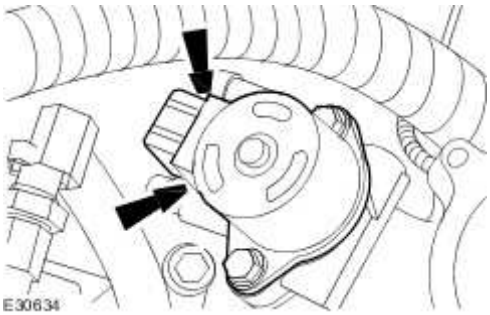

7 . Install the exhaust manifold to EGR valve tube retaining nuts.

Tighten to 21 Nm.

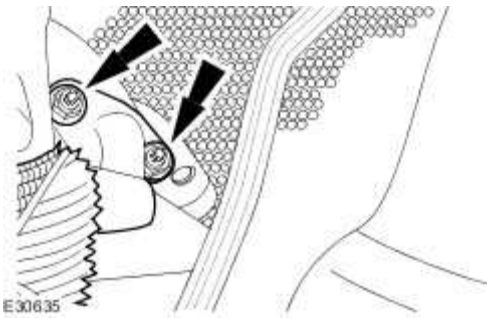

8 . **NOTE:**

Remove the sealing caps from the coolant ports.

Connect the coolant hoses.

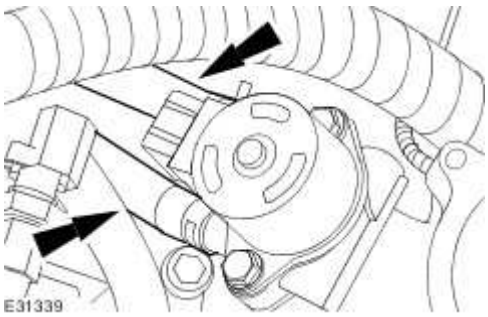

9 . Connect the EGR valve electrical connector.

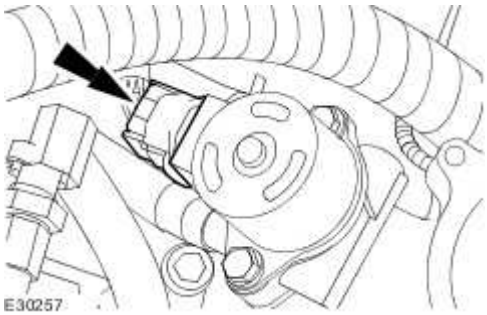

10 . Connect the IAT sensor electrical connector.

11 . Connect the charge air cooler coolant hoses.

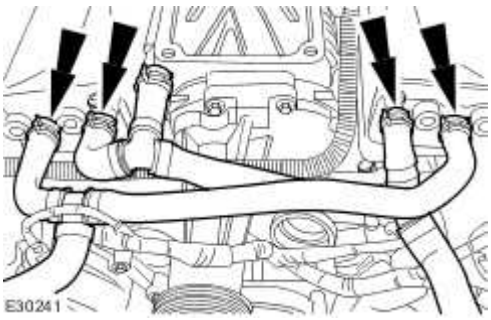

12 . Install the coolant assembly.

- Install new O-ring seals.
- Connect the coolant hose.

www.JagDocs.com

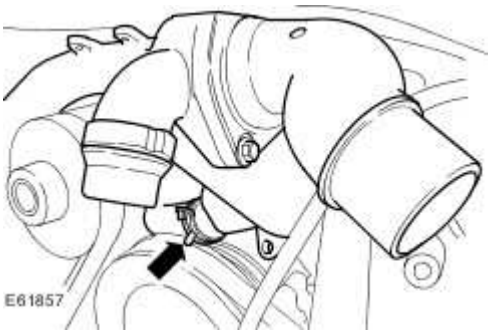

13 . Attach the coolant assembly.

Tighten to 10 Nm.

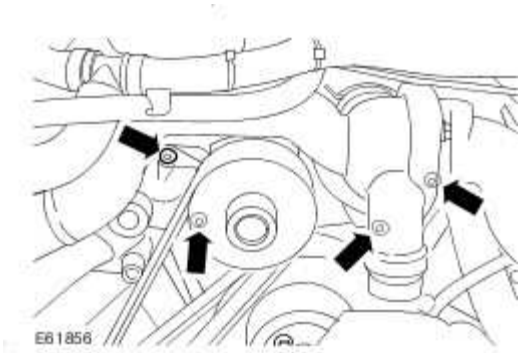

14 . Connect the coolant hose.

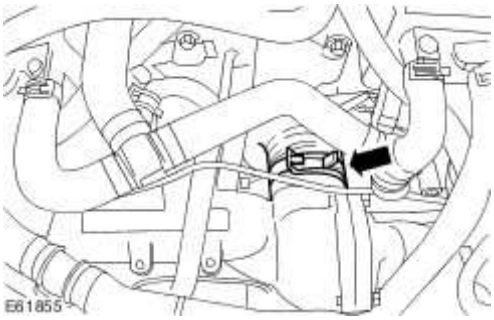

15 . Connect the coolant hose.

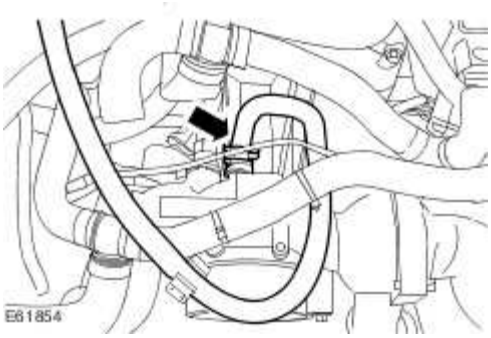

16 . Connect the ECT sensor electrical connector.

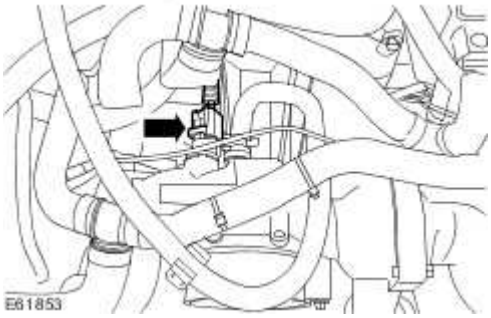

17 . Connect the coolant hose.

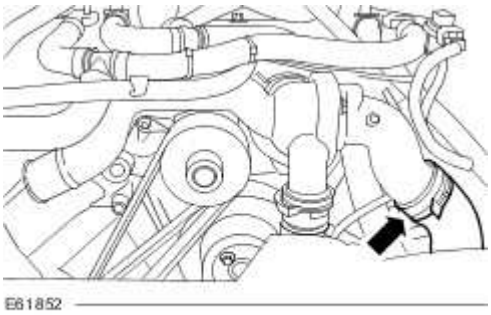

18 . Connect the coolant hose.

www.JagDocs.com

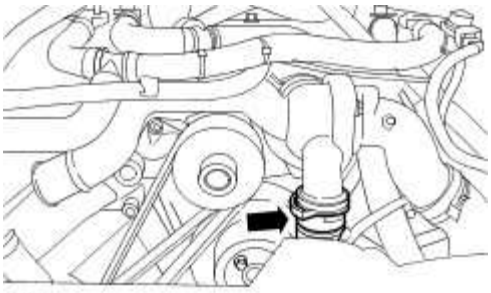

E61851

19 . Connect the coolant hose.

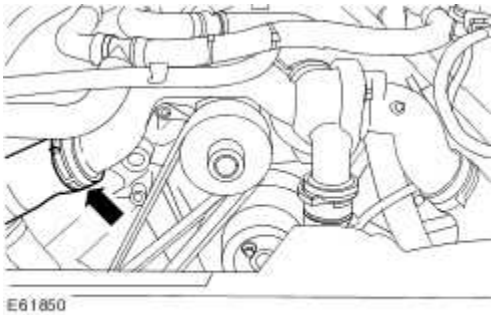

E61850

20 . Install new supercharger outlet pipe to charge air coolers ducts.

Tighten to 8 Nm.

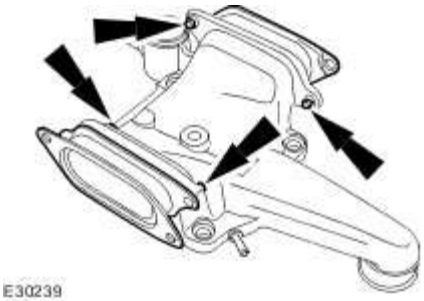

E30239

21 . Install a new supercharger outlet pipe gasket.

22 . Install new seals to the supercharger outlet pipe retaining bolts.

23 . **CAUTION: Make sure no foreign matter enters the supercharger.**

Install the supercharger outlet pipe.

1) Tighten the supercharger outlet pipe retaining bolts to 10 Nm.

2) Tighten the charge air cooler ducts retaining bolts to 9 Nm.

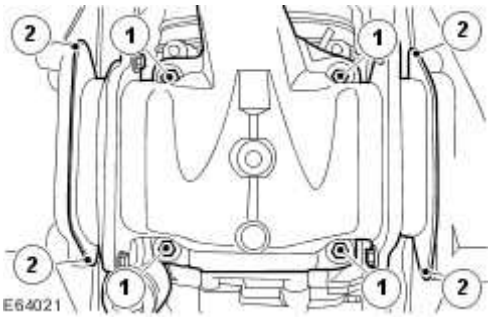

24 . **NOTE:**

Remove the blanking caps.

Attach the supercharger outlet pipe coolant hose.

25 Install the throttle body.
. For additional information, refer to Throttle Body - 4.2L SC V8 - AJV8, VIN Range: G45704->G99999 (19.70.04)

www.JagDocs.com

26 . Attach the hoses.

- Reposition the hose retaining clip.

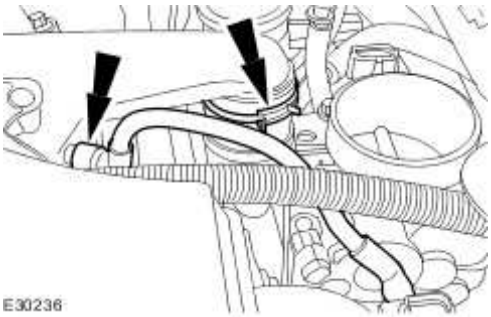

27 . Attach the supercharger belt.

- Use a 1/2 inch square drive bar to rotate the supercharger belt tensioner.

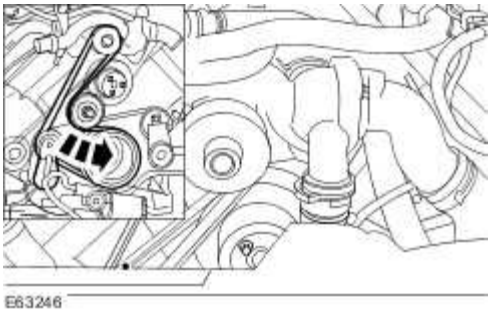

28 . Install the air cleaner outlet pipe.
For additional information, refer to Air Cleaner Outlet Pipe (19.10.31)

29 . Install the coolant expansion tank.
For additional information, refer to Coolant Expansion Tank (26.15.01)

30 . Connect the battery ground cable.
For additional information, refer to Battery Connect (86.15.15)

31 . Carry out the cooling system filling and bleeding procedure.
For additional information, refer to Cooling System Draining, Filling and Bleeding

Supercharger Outlet Pipe (18.50.16)

Installation

1 . Install new supercharger outlet pipe to charge air cooler ducts.

Tighten to 8 Nm.

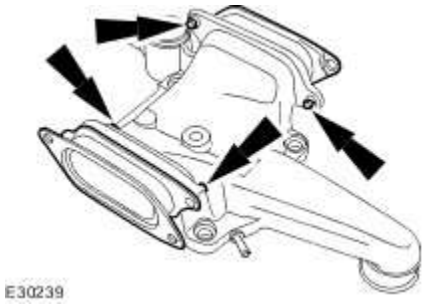

2 . Install a new supercharger outlet pipe gasket.

3 . Install new seals to the supercharger outlet pipe retaining bolts.

4 . Install the supercharger outlet pipe.

Tighten to 9 Nm.

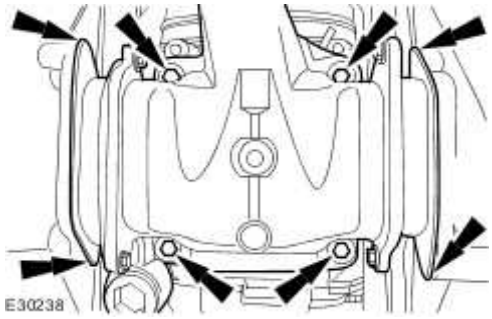

5 . **NOTE:**

Remove the sealing caps from the coolant ports.

www.JagDocs.com

Attach the supercharger outlet pipe coolant hose.

6 . Attach the hoses.

- Reposition the hose retaining clip.

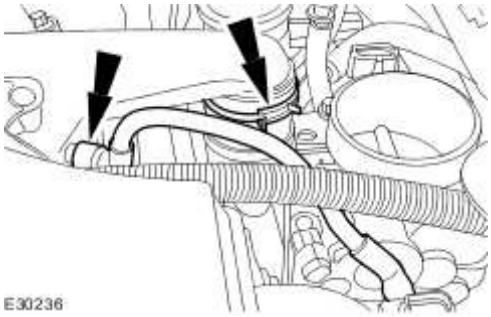

7 . Install the throttle body intake pipe.

- Tighten to 5 Nm.

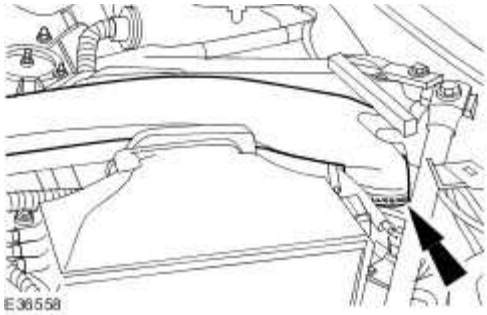

8 . Install the air cleaner outlet pipe.

For additional information, refer to Air Cleaner Outlet Pipe (19.10.31)

9 . Install the cowl vent screen. <<501-02>>

10 . Connect the battery ground cable. <<414-01>>

11 . Check and top up the coolant expansion tank.

www.JagDocs.com

Specifications

Torque Specifications

Description	Nm	lb-ft	lb-in
Air cleaner retaining bolt	8	-	71

Intake Air Distribution and Filtering

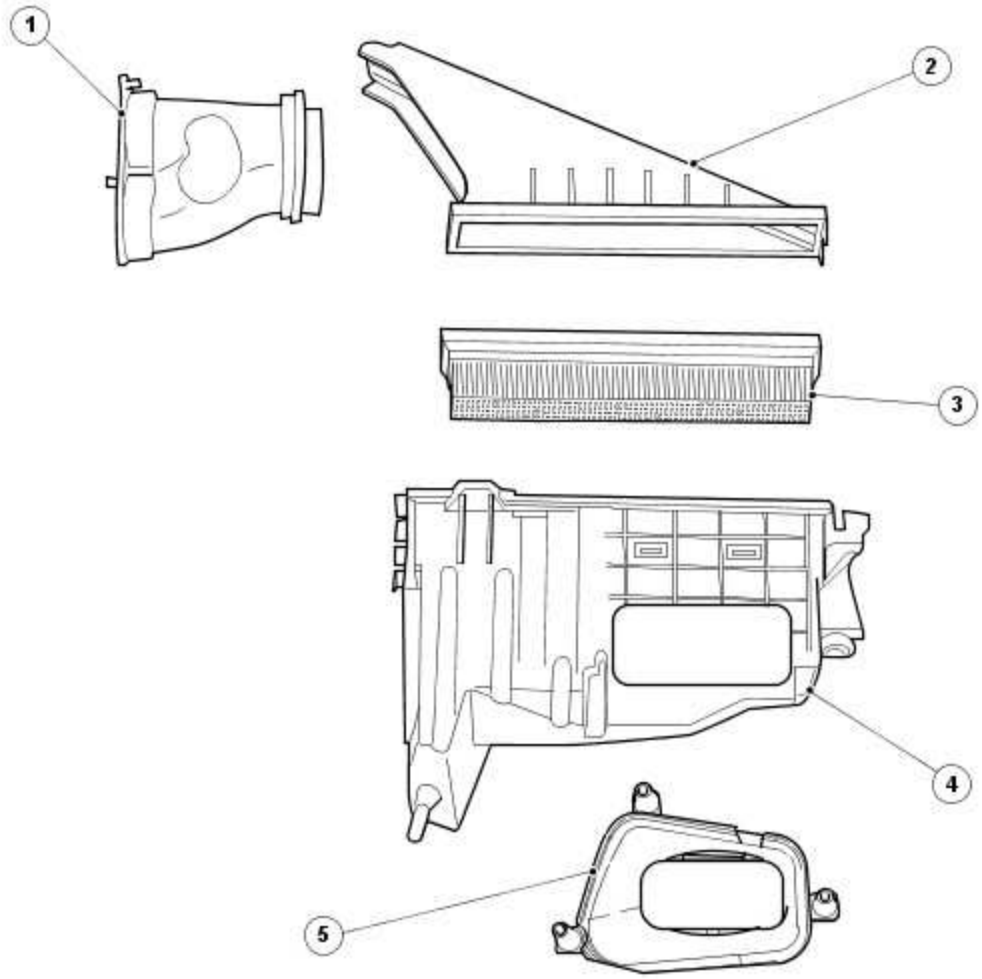

E66075

Item	Part Number	Description
1	—	Air cleaner outlet pipe
2	—	Air cleaner cover
3	—	Air cleaner element
4	—	Air cleaner base
5	—	Air cleaner intake pipe

NOTE:

The air cleaner outlet pipe and air cleaner cover are only supplied as an assembly and must not be disassembled.

www.JagDocs.com

The primary functional requirements of the air induction system is to:

deliver clean filtered air to the engine with minimum pressure loss.

to reduce the engine intake and structure related noises to within legal & vehicle requirements.

manage the induction of water, sand or snow to prevent adverse effect on vehicle operation.

minimize air temperature rise over ambient air temperature at the throttle body/turbo in high ambient conditions.

purge the hot air from the intake system quickly whilst the engine is hot, and after a period of rest. This is to maximize engine drive away performance.

Intake Air Distribution and Filtering

Overview

There are changes to the engine management system (EMS) for 2006 my, the most obvious of which will be the change to 7-digit diagnostic trouble codes (DTCs) from the familiar 5-digit.

Refer to the DTC index in this section for guidance on how to use these codes with the Jaguar approved diagnostic system or a scan tool.

For information on the operation of the system,
Intake Air Distribution and Filtering

Inspection and Verification

1 . Verify the customer concern.

2 . Visually inspect for obvious signs of mechanical and electrical damage.

Mechanical	Electrical
Hoses and ducts (damage/connections)	
Air cleaner element (contaminated/blocked)	Mass air flow (MAF) sensor(s)
Restricted air intake	Intake air shutoff throttle
Vacuum hoses	Harness (security/damage)
Pipework to turbochargers	Connections (security/damage)
Turbocharger(s)	Port de-activation system
Charge air coolers (contaminated/blocked)	

3 . If an obvious cause for an observed or reported concern is found, correct the cause (if possible) before proceeding to the next step.

4 . If the cause is not visually evident use the Jaguar approved diagnostic system or a scan tool to retrieve the fault codes before proceeding to the DTC index, or the symptom chart if no DTCs are set.

Symptom chart

Symptom	Possible cause	Action

www.JagDocs.com

Vehicle does not start/hard starting/poor performance	Restricted/blocked air intake Restricted/blocked air cleaner element Turbocharger fault Intake air shutoff throttle	Clear the restriction, Air Cleaner (19.10.05) Replace the air cleaner element as necessary, Air Cleaner Element (19.10.08) Check the turbochargers, Turbocharger Check the intake air shutoff throttle function (make sure the intake air shutoff throttle returns to the open position), Intake Air Shutoff Throttle
Excessive intake noise	Compressed intake air leak after the turbocharger Air intake pipe disconnected/damaged after the air cleaner Air cleaner assembly incorrectly assembled/damaged	Check the joint between the air cleaner outlet pipe and the intake air shutoff throttle. Check the joints between the intake air shutoff throttle and the intake manifolds, Intake Air Shutoff Throttle Check the charge air cooler seals, Charge Air Cooler Check the air intake system and hoses for correct installation/damage, Air Cleaner (19.10.05)
Excessive combustion noise	Port de-activation camshaft cover control valves	For control valve tests, GO to Pinpoint Test G552277p1.

DTC index

NOTE:

Generic scan tools may not read the codes listed, or may read only 5-digit codes. Match the 5 digits from the scan tool to the first 5 digits of the 7-digit code listed to identify the fault (the last 2 digits give extra information read by the manufacturer-approved diagnostic system).

NOTE:

For a full list of powertrain DTCs,
Electronic Engine Controls

DTC	Description	Possible cause	Action
P009700	Air charge temperature	Air charge temperature sensor circuit: low	For air charge temperature sensor tests,

	sensor circuit	input	Electronic Engine Controls
P009800	Air charge temperature sensor circuit	Air charge temperature sensor circuit: high input	For air charge temperature sensor tests, Electronic Engine Controls
P009900	Air charge temperature sensor circuit	Air charge temperature sensor circuit: intermittent/erratic	For air charge temperature sensor tests, Electronic Engine Controls
P010000	Mass air flow (MAF) sensor range/performance (right hand bank)	MAF sensor circuit: high resistance MAF sensor circuit: short circuit to ground MAF sensor circuit: short circuit to power MAF sensor failure ECM failure	For MAF sensor tests, Electronic Engine Controls Refer to the warranty policy and procedures manual if an ECM is suspect.
P010200	Mass air flow (MAF) too low on right hand bank	MAF sensor circuit: high resistance MAF sensor circuit: short circuit to ground MAF sensor failure Exhaust gas recirculation (EGR) valve stuck open/closed Air leakage Turbocharger fault ECM failure	For MAF sensor tests, Electronic Engine Controls For EGR system tests, Engine Emission Control Check for evidence of air leakage (see visual inspection). Check for turbocharger codes. For turbocharger tests, Turbocharger Refer to the warranty policy and procedures manual if an ECM is suspect.
P010300	Mass air flow (MAF) too high on right hand bank	MAF sensor circuit: short circuit to power MAF sensor failure Air leakage Turbocharger fault ECM failure	For MAF sensor tests, Electronic Engine Controls Check for evidence of air leakage (see visual inspection). Check for turbocharger codes. For turbocharger tests, Turbocharger Refer to the warranty policy and procedures

www.JagDocs.com

			manual if an ECM is suspect.
P010400	Mass air flow (MAF) sensor circuit intermittent/erratic (right hand bank)	MAF sensor circuit: high resistance MAF sensor circuit: short circuit to ground MAF sensor circuit: short circuit to power MAF sensor failure ECM failure	For MAF sensor tests, Electronic Engine Controls Refer to the warranty policy and procedures manual if an ECM is suspect.
P010A00	Mass air flow (MAF) sensor range/performance (left hand bank)	MAF sensor circuit: high resistance MAF sensor circuit: short circuit to ground MAF sensor circuit: short circuit to power MAF sensor failure ECM failure	For MAF sensor tests, Electronic Engine Controls Refer to the warranty policy and procedures manual if an ECM is suspect.
P010C00	Mass air flow (MAF) too low on left hand bank	MAF sensor circuit: high resistance MAF sensor circuit: short circuit to ground MAF sensor failure Exhaust gas recirculation (EGR) valve stuck open/closed Air leakage Turbocharger fault ECM failure	For MAF sensor tests, Electronic Engine Controls For EGR system tests, Engine Emission Control Check for evidence of air leakage (see visual inspection). Check for turbocharger codes. For turbocharger tests, Turbocharger Refer to the warranty policy and procedures manual if an ECM is suspect.
P010D00	Mass air flow (MAF) too high on left hand bank	MAF sensor circuit: short circuit to power MAF sensor failure	For MAF sensor tests, Electronic Engine Controls Check for evidence of air leakage (see visual inspection). Check for turbocharger codes.

		Air leakage Turbocharger fault ECM failure	For turbocharger tests, Turbocharger Refer to the warranty policy and procedures manual if an ECM is suspect.
P010E00	Mass air flow (MAF) sensor intermittent/erratic (left hand bank)	MAF sensor circuit: high resistance MAF sensor circuit: short circuit to ground MAF sensor circuit: short circuit to power MAF sensor failure ECM failure	For MAF sensor tests, Electronic Engine Controls Refer to the warranty policy and procedures manual if an ECM is suspect.
P010F00	Mass air flow (MAF) sensor correlation	MAF sensor(s) circuit: high resistance MAF sensor(s) circuit: short circuit to ground MAF sensor(s) circuit: short circuit to power MAF sensor failure Turbocharger actuator(s) circuit: high resistance Turbocharger actuator(s) circuit: short circuit to ground Turbocharger actuator(s) circuit: short circuit to power Turbocharger actuator failure ECM failure	For MAF sensor tests, Electronic Engine Controls Check for turbocharger codes. For turbocharger tests, Turbocharger Refer to the warranty policy and procedures manual if an ECM is suspect.
P011200	Intake air temperature (IAT) 1 sensor circuit	IAT1 sensor circuit: low input	For IAT1 sensor tests, Electronic Engine Controls

www.JagDocs.com

P011300	Intake air temperature (IAT) 1 sensor circuit	IAT1 sensor circuit: high input	For IAT1 sensor tests, Electronic Engine Controls
P011400	Intake air temperature (IAT) 1 sensor circuit	IAT1 sensor circuit: intermittent/erratic	For IAT1 sensor tests, Electronic Engine Controls
P200800	Port de-activation solenoid circuit	Port de-activation solenoid circuit: high resistance	For port de-activation solenoid circuit tests, GO to Pinpoint Test G552277p2.
P200900	Port de-activation solenoid circuit	Port de-activation solenoid circuit: short circuit to ground	For port de-activation solenoid circuit tests, GO to Pinpoint Test G552277p2.
P201000	Port de-activation solenoid circuit	Port de-activation solenoid circuit: short circuit to battery	For port de-activation solenoid circuit tests, GO to Pinpoint Test G552277p2.

Pinpoint tests

CAUTION: When probing connectors to take measurements in the course of the pinpoint tests, use the adaptor kit, part number 3548-1358-00. Failure to follow this instruction may result in damage to the vehicle.

NOTE:

When performing voltage or resistance tests, always use a digital multimeter (DMM) accurate to 3 decimal places, and with an up-to-date calibration certificate. When testing resistance, always take the resistance of the DMM leads into account.

NOTE:

Check and rectify basic faults before beginning diagnostic routines involving pinpoint tests.

NOTE:

If DTCs are recorded and a fault is not present when performing the pinpoint tests, an intermittent concern may be the cause. Always check for loose connections and corroded terminals.

PINPOINT TEST G552277p1 : CHECK THE OPERATION OF THE PORT DE-ACTIVATION CAMSHAFT COVER CONTROL VALVE(S)

G552277t1 : CHECK THE VACUUM LINES TO THE CONTROL VALVES

1. Check the vacuum lines for connection, security and condition.

Are the vacuum lines connected, secure and in good condition?

-> Yes
GO to Pinpoint Test G552277t2.

-> No
RECTIFY or replace as necessary. Test the system for normal operation.

G552277t2 : CHECK THE FUNCTION OF THE CONTROL VALVES

1. Disconnect the vacuum line to the suspect control valve actuator. 2. Connect a suitable hand vacuum pump to the control valve actuator. 3. Apply a vacuum to the actuator. 4. Observe the actuator linkage operation.

Does the actuator linkage operate?

-> Yes
CHECK for DTCs indicating an intake air shutoff throttle fault.

-> No
INSTALL a new camshaft cover. Test the system for normal operation.

PINPOINT TEST G552277p2 : PORT DE-ACTIVATION SOLENOID AND CIRCUIT

G552277t3 : CHECK FOR POWER TO THE PORT DE-ACTIVATION SOLENOID

1. **Port de-activation solenoid connector, C36**

Circuit	Pin
Power	01

www.JagDocs.com

Signal from ECM	02

2. **Engine control module (ECM) connector, C100**

Circuit	Pin
Port de-activation solenoid - signal	K4

3. Key off. 4. Disconnect the port de-activation solenoid connector, C36. 5. Key on, engine off. 6. Measure the voltage between:

C36, harness side	Battery
Pin 01	Negative terminal

Is the voltage between 9 and 15 volts?

-> Yes
GO to Pinpoint Test G552277t4.

-> No
REPAIR the power circuit. For additional information, refer to the wiring diagrams. Clear any DTCs, test the system for normal operation.

G552277t4 : CHECK THE PORT DE-ACTIVATION SOLENOID SIGNAL CIRCUIT FOR SHORT CIRCUIT TO GROUND

1. Measure the resistance between:

C36, harness side	Battery
Pin 02	Negative terminal

Is the resistance greater than 100 Kohms?

-> Yes
GO to Pinpoint Test G552277t5.

-> No

GO to Pinpoint Test G552277t8.

G552277t5 : CHECK THE PORT DE-ACTIVATION SOLENOID SIGNAL CIRCUIT FOR SHORT CIRCUIT TO POWER

1. Measure the resistance between:

C36, harness side	Battery
Pin 02	Positive terminal

Is the resistance greater than 100 Kohms?

-> Yes
GO to Pinpoint Test G552277t6.

-> No
GO to Pinpoint Test G552277t9.

G552277t6 : CHECK THE PORT DE-ACTIVATION SOLENOID SIGNAL CIRCUIT FOR HIGH RESISTANCE

1. Key off. 2. Disconnect the ECM connector, C100. 3. Measure the resistance between:

C36, harness side	C100, harness side
Pin 02	Pin K4

Is the resistance less than 10 ohms?

-> Yes
GO to Pinpoint Test G552277t7.

-> No
REPAIR the high resistance. For additional information, refer to the wiring diagrams. Clear any DTCs, test the system for normal operation.

G552277t7 : CHECK THE COMPONENT RESISTANCE

1. Measure the resistance between:

www.JagDocs.com

C36, component side	C36, component side
Pin 01	Pin 02

Is the resistance between 0 and 5.5 ohms?

-> Yes
An intermittent fault may be present in the wiring harness. Visually check for chaffed wires or other physical damage to the harness. If no fault is found in the circuit, suspect the following component(s): **-** Port de-activation solenoid connector **-** Port de-activation solenoid **-** ECM connector **-** ECM

-> No
INSTALL a new port de-activation solenoid. Clear any DTCs, test the system for normal operation.

G552277t8 : CHECK WHETHER THE SHORT CIRCUIT TO GROUND IS IN THE HARNESS OR THE MODULE

1. Key off. 2. Disconnect the ECM connector, C100. 3. Key on, engine off. 4. Measure the resistance between:

C36, harness side	Battery
Pin 02	Negative terminal

Is the resistance greater than 100 Kohms?

-> Yes
An intermittent fault may be present in the wiring harness. Visually check for chaffed wires or other physical damage to the harness. If no fault is found in the circuit, suspect the following component(s): **-** ECM

-> No
REPAIR the short circuit. For additional information, refer to the wiring diagrams. Clear any DTCs, test the system for normal operation.

G552277t9 : CHECK WHETHER THE SHORT CIRCUIT TO POWER IS IN THE HARNESS OR THE MODULE

1. Key off. 2. Disconnect the ECM connector, C100. 3. Key on, engine off. 4. Measure the resistance between:

C36, harness side	Battery

Pin 02	Positive terminal

Is the resistance greater than 100 Kohms?

-> Yes
An intermittent fault may be present in the wiring harness. Visually check for chaffed wires or other physical damage to the harness. If no fault is found in the circuit, suspect the following component(s): **-** ECM

-> No
REPAIR the short circuit. For additional information, refer to the wiring diagrams. Clear any DTCs, test the system for normal operation.

www.JagDocs.com

Air Cleaner (19.10.05)

Special Service Tools

Remover/Install, Cooling Hose Clamp
303-397

Removal

1 . Remove the radiator grille opening panel.
For additional information, refer to Radiator Grille Opening Panel (76.10.06)

2 . Detach the mass air flow (MAF) sensor wiring harness.

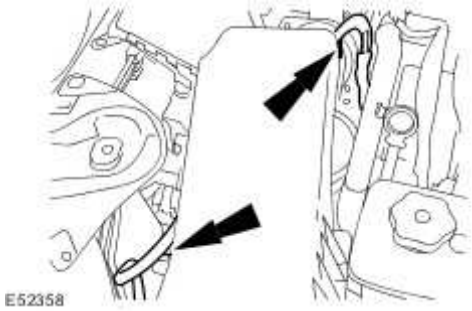

3 . Disconnect the MAF sensors electrical connectors.

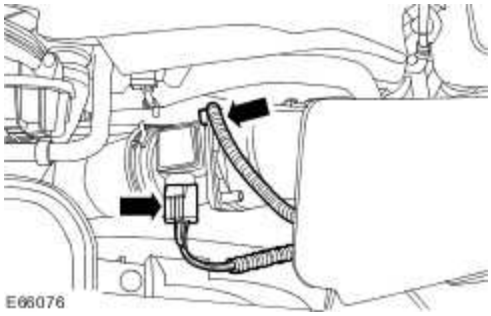

4 . Using the special tool, detach the MAF sensor outlet pipes.

1) Detach the upper MAF sensor outlet pipe.

2) Detach the lower MAF sensor outlet pipe.

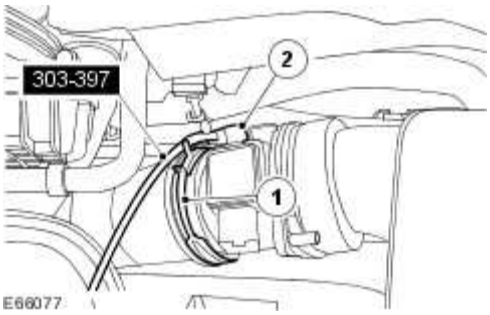

5 . Disconnect the port deactivation vacuum hose.

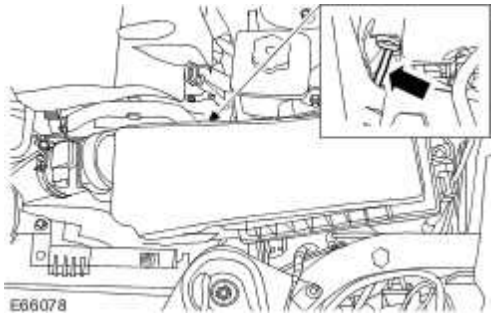

6 . Remove the air cleaner.

- Remove the air cleaner retaining bolt.

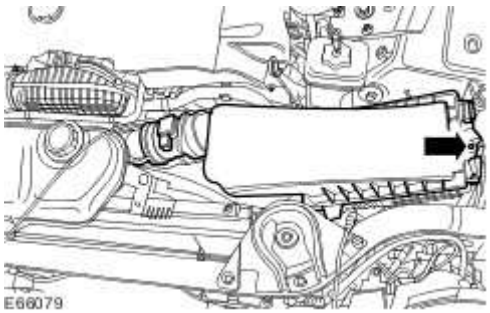

www.JagDocs.com

Installation

1 . To install, reverse the removal procedure.

Tighten to 8 Nm.

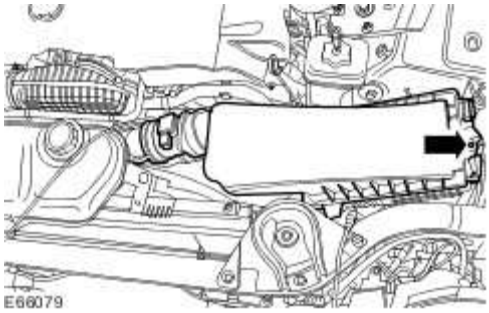

Air Cleaner Element (19.10.08)

Removal

1 . Remove the air cleaner.
For additional information, refer to Air Cleaner (19.10.05)

2 . Remove the air cleaner cover.

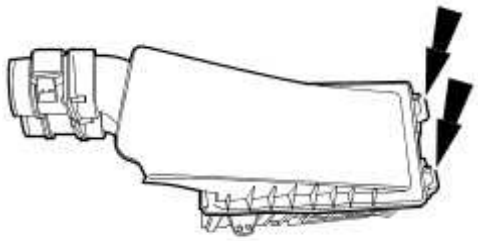

E50536

3 . Remove the air cleaner element.

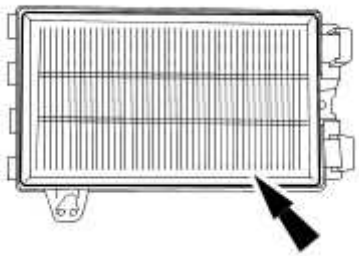

E50537

Installation

1 . To install, reverse the removal procedure.

www.JagDocs.com

Charge Air Cooler

1. The charge air cooler is removed as part of the radiator assembly and can be serviced separately.
   For additional information, refer to

Specifications

Torque Specifications

Description	Nm	lb-ft	lb-in
Evaporative emission canister carrier bolts	7	—	62

www.JagDocs.com

Evaporative Emissions - VIN Range: G00442->G45703

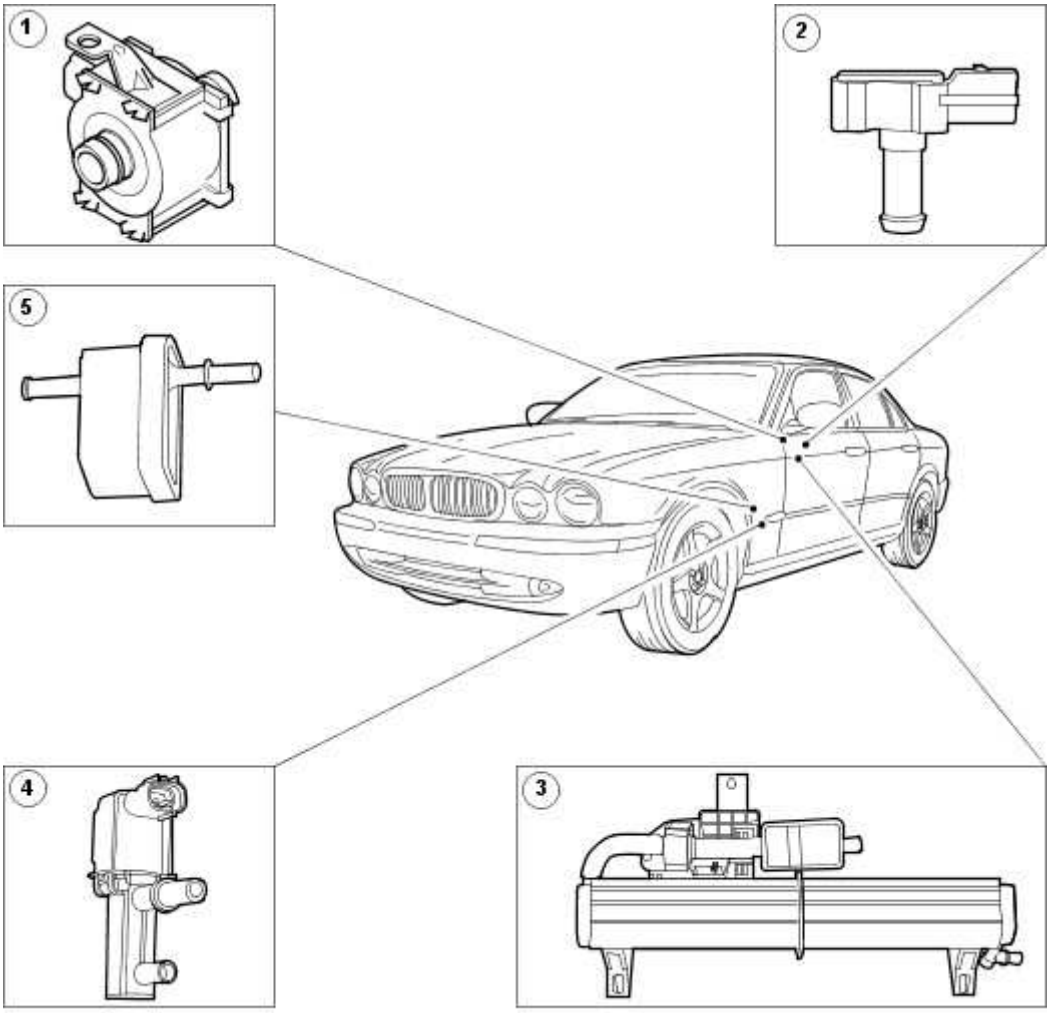

E37231

Item	Part Number	Description
1	—	Evaporative emission canister vent solenoid
2	—	Fuel tank pressure sensor
3	—	Evaporative emission canister
4	—	Evaporative emission canister purge valve

5	—	Evaporative emission canister purge valve resonator.

The evaporative emission fuel vapor management system consists of an evaporative emission canister, evaporative emission canister purge valve and an evaporative emission canister purge valve resonator. A combination of plastic pipes and rubber hoses connect the evaporative emission canister to the fuel tank and the evaporative emission canister purge valve to the intake manifold.

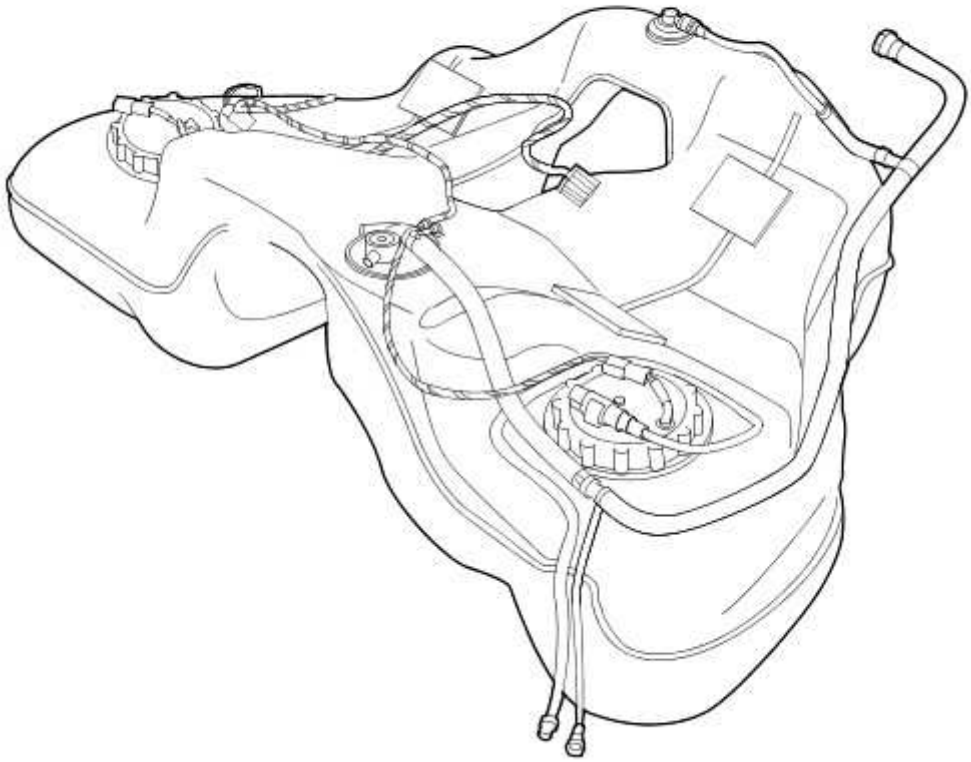

E37332

Onboard refuel vapour recovery (ORVR).

The vehicle is fitted with an onboard refuel vapour recovery (ORVR) type fuel tank. During refuelling all vapour is collected in the evaporative emission canister as well as in normal vehicle operations.

On Federal (USA) specification vehicles the fuel vapor management system uses a canister vent solenoid and a fuel tank pressure sensor which are used during the engine management system on board diagnostic routines.

When the evaporative emission canister purge valve is closed, the fuel tank is vented into the evaporative emission canister through the fuel tank roll-over valve. The evaporative emission

www.JagDocs.com

canister absorbs the fuel vapor and prevents the release of hydrocarbons into the atmosphere. When the vapor evaporative emission canister purge valve is opened, the canister is exposed to the intake manifold vacuum and the fuel vapor deposits are drawn into the manifold where they mix with the incoming air/fuel charge.

The evaporative emission fuel vapor management system is controlled by the engine control module according to calibrated data tables.

Evaporative Emissions - VIN Range: G45704->G99999

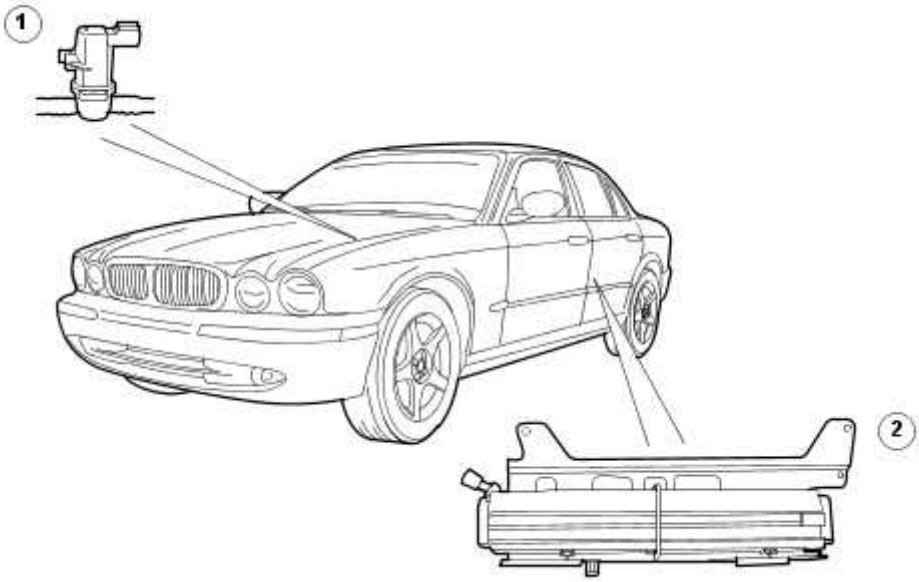

E63946

Item	Part Number	Description
1	—	Evaporative emission canister purge valve
2	—	Evaporative emission canister

The evaporative emission fuel vapor management system consists of an evaporative emission canister and an evaporative emission canister purge valve. A combination of plastic pipes and rubber hoses connect the evaporative emission canister to the fuel tank and the evaporative emission canister purge valve to the intake manifold.

www.JagDocs.com

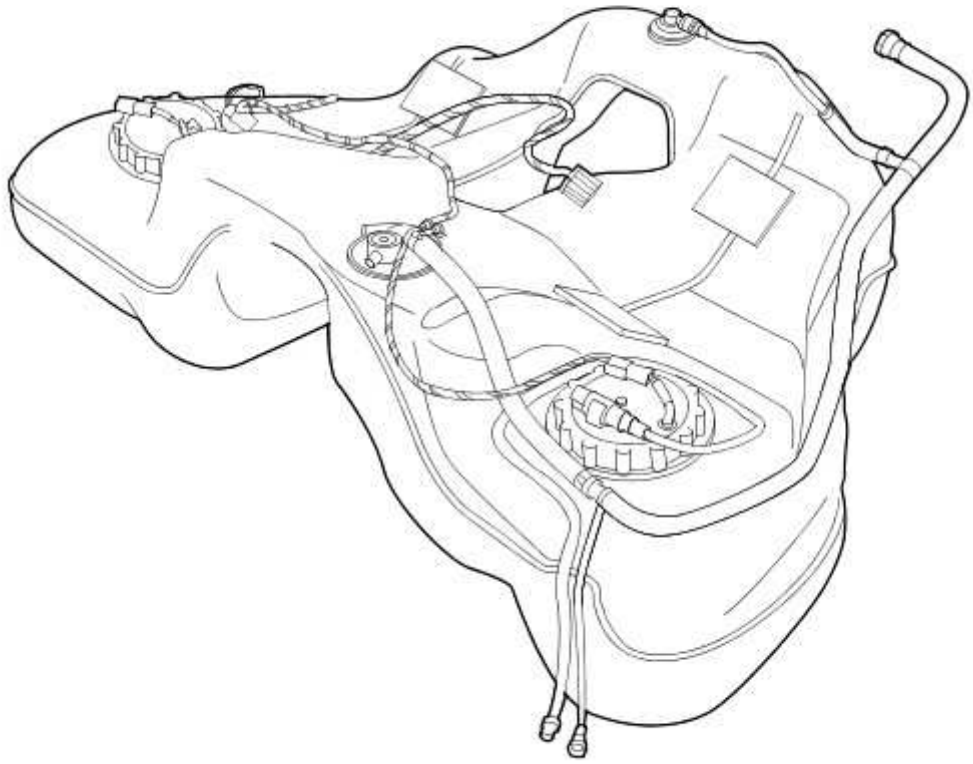

E37332

Onboard refuel vapor recovery (ORVR).

The vehicle is fitted with an onboard refuel vapor recovery (ORVR) type fuel tank. During refuelling all vapor is collected in the evaporative emission canister as well as in normal vehicle operations.

When the evaporative emission canister purge valve is closed, the fuel tank is vented into the evaporative emission canister through the fuel tank roll-over valve. The evaporative emission canister absorbs the fuel vapor and prevents the release of hydrocarbons into the atmosphere. When the vapor evaporative emission canister purge valve is opened, the canister is exposed to the intake manifold vacuum and the fuel vapor deposits are drawn into the manifold where they mix with the incoming air/fuel charge.

The evaporative emission fuel vapor management system is controlled by the engine control module (ECM) according to calibrated data tables.

Evaporative Emissions - VIN Range: G00442->G45703

Preliminary Inspection

1 . Visually inspect for obvious signs of mechanical or electrical damage, blown fuses, etc.

2 . If an obvious cause for an observed or reported concern is found, correct the cause (if possible) before proceeding to the next step.

3 . If the concern is not visually evident, verify the symptom and proceed with diagnosis, using the Jaguar approved diagnostic system, where available.

4 . Where K-Line or Vacutec equipment is available, it should be used as an aid to diagnosis. The equipment must be capable of testing to the 0.020 thou standard.

Diagnostic Drive Cycles

Following the setting of a DTC, the appropriate repairs must be carried out, and the normal operation of the system checked. This will be done by performing a series of drive cycles which will enable the vehicle to operate the evaporative emissions system as a function check. The following drive cycles cover the use of the Jaguar approved diagnostic system, a scan tool, and a test with no additional equipment, where possible.

Flow check monitor drive cycle conditions (non-Federal)

NOTE:

These conditions must be satisfied before the test is commenced.

This drive cycle should be performed following rectification work on the system.

Make sure the fuel tank is between one third and three quarters full. (Adding fuel will increase vapor generation; the diagnostic will not run if the vapor concentration is too great).

Make sure the ambient air temperature is above -5°C (23°F).

Flow check monitor drive cycle (non-Federal)

Drive the vehicle for a minimum of 15 minutes, avoiding severe or excessive fuel movement.

Avoiding excessive fuel movement, gently bring the vehicle to rest (coast to a stop).

Allow the vehicle to idle for two minutes.

www.JagDocs.com

Full Evaporative system monitor drive cycle conditions

NOTE:

These conditions must be satisfied before the test is commenced.

Make sure the fuel filler cap is correctly fitted.

Clear the DTCs. (Perform a code clear, even if no codes are present. This will reset TIDs).

Make sure the fuel tank is between one third and three quarters full (adding fuel will increase vapor generation; the diagnostic will not run if the vapor concentration is too great).

Drive the vehicle for a minimum of two minutes, and until fully warm (temperature gauge just below mid-point).

Make sure that the purge valve is operating, either by touch, sound, or using datalogger (purge vapor management valve-duty cycle). If the purge is not active, perform the "drive cycle for green ECM" in this section.

Full Evaporative system monitor drive cycle

Drive the vehicle to a suitable road where the test can be carried out, switch off the ignition.

Leave the ignition switched off for 30 seconds.

Restart the engine, accelerate briskly to 80 kilometers per hour (50 miles per hour), making sure that the engine speed reaches at least 3500 rpm for a minimum of five seconds.

40 thou test, using the Jaguar approved diagnostic system

Avoiding high engine loads, drive the vehicle steadily between 64 and 97 kilometers per hour (40 and 60 miles per hour). Using the Jaguar approved diagnostic system, monitor the evaporative valve duty cycle (purge vapor management valve-duty cycle), CCV status (canister close valve-vapor recovery system), and the FTPS (fuel tank pressure-vapor recovery system). The Jaguar approved diagnostic system will give an indication when the test is active. Dependant on the level of vapor concentration, it may take up to 30 minutes for the test to initialize. (Vapor concentration cannot be measured using the Jaguar approved diagnostic equipment). When the test has initialized (CCV closed), it will take up to 90 seconds to complete. Avoid excessive fuel movement while the test is active.

20 thou test, using the Jaguar approved diagnostic system

Continue driving the vehicle steadily between 64 and 97 kilometers per hour (40 and 60 miles per hour) avoiding high engine loads for a further 10 minutes.

Avoiding excessive fuel movement, gently bring the vehicle to rest (coast to a stop).

Allow the vehicle to idle for 2 minutes.

Use the Jaguar approved diagnostic system to monitor the evaporative valve duty cycle (purge vapor management valve-duty cycle), CCV status (canister close valve-vapor recovery system), and the FTPS (fuel tank pressure-vapor recovery system). The Jaguar approved diagnostic system will give an indication when the test is active. When the test has initialized (CCV closed), it will take up to 90 seconds to complete.

If the 20 thou test has not run, it is likely that the vapor concentration in the purge system is too great. In this case, carry out the following:

Drive the vehicle steadily for a further 30 minutes, avoiding excessive fuel movement.

Avoiding excessive fuel movement, gently bring the vehicle to rest (coast to a stop).

Allow the vehicle to idle for 2 minutes.

Use the Jaguar approved diagnostic system to monitor the evaporative valve duty cycle (purge vapor management valve-duty cycle), CCV status (canister close valve-vapor recovery system), and the FTPS (fuel tank pressure-vapor recovery system). The Jaguar approved diagnostic system will give an indication when the test is active. When the test has initialized (CCV closed), it will take up to 90 seconds to complete.

If the 20 thou test fails to run a second time, repeat the entire test.

Check for DTCs. Rectify as indicated.

40 thou test, using scan tool

Avoiding high engine loads, drive the vehicle steadily between 64 and 97 kilometers per hour (40 and 60 miles per hour).

When the test has initialized, using the scan tool, monitor the evaporative valve duty cycle, CCV status, and the FTPS (the scan tool should give an indication when the test is active).

When the test has initialized (CCV closed), it will take up to 90 seconds to complete.

To make sure that the test has completed, TID 08 in mode 6 must be checked (if the test has not completed, this TID will display 0. Any other value indicates test completion).

If the test did not complete, repeat the test.

20 thou test, using scan tool

Continue driving the vehicle steadily between 64 and 97 kilometers per hour (40 and 60 miles per hour) avoiding high engine loads for a further 10 minutes.

Avoiding excessive fuel movement, gently bring the vehicle to rest (coast to a stop).

Allow the vehicle to idle for 2 minutes.

www.JagDocs.com

When the test has initialized, using the scan tool, monitor the evaporative valve duty cycle, CCV status, and the FTPS (the scan tool should give an indication when the test is active).

When the test has initialized (CCV closed), it will take up to 90 seconds to complete.

To make sure that the test has completed, TID 06 in mode 6 must be checked (if the test has not completed, this TID will display 0. Any other value indicates test completion).

If the test did not complete, repeat the test.

If the 20 thou test has not run, it is likely that the vapor concentration in the purge system is too great. In this case, drive the vehicle steadily for a further 30 minutes, avoiding excessive fuel movement, then repeat the test.

Check for DTCs. Rectify as indicated.

40 thou and 20 thou tests using no additional equipment

The test procedure and conditions are as for the Jaguar approved diagnostic system or scan tool, but no confirmation of the test having run is possible without the use of one of these instruments. The DTC will be set if the fault still exists, but the possibility exists that the conditions for the test to run may not have been met, in which case, the DTC may not be set until the owner reproduces the conditions in which the fault originally occurred.

Drive cycle for "green" ECM

To enable the ECM to re-learn fuelling adaptations.

NOTE:

This procedure should be performed whenever the vehicle battery has been disconnected.

Due to component tolerance and wear during the normal running of a vehicle, fuelling and air requirements for an engine will vary over time. The ECM has the ability to adjust for this variation by "learning" the level of compensation that is required (these compensation values are referred to as adaptations).

If the vehicle battery is disconnected, all adaptations held within the ECM will be lost (ie, set to zero). The ECM is then referred to as "green". To enable the vehicle to function correctly, the ECM must "relearn" these adaptations.

There are five areas or sites that need to be relearnt:

Allow the vehicle to idle until fully warm (temperature gauge just below mid-point).

Allow to idle for a further three minutes, minimum.

Drive the vehicle with the air conditioning **OFF** on a level road using a constant throttle, or speed control if fitted, for at least one minute in the following gears, at the stated engine speeds for each of the sites below.

"Green" ECM drive cycle chart. Site 1

NOTE:

The vehicle speed is for guidance only. **DO NOT** use the vehicle speed as the target to set adaptions.

Monitor condition	Parameters
GEAR	P
ENGINE SPEED	Idle
VEHICLE SPEED (GUIDE ONLY)	0 mph

"Green" ECM drive cycle chart. Site 2

NOTE:

The vehicle speed is for guidance only. **DO NOT** use the vehicle speed as the target to set adaptions.

Monitor condition	Parameters
GEAR	2
ENGINE SPEED	1595 rpm
VEHICLE SPEED (GUIDE ONLY)	15.4 kph (9.56 mph)

Monitor condition	Parameters
GEAR	2
ENGINE SPEED	1295 rpm

www.JagDocs.com

VEHICLE SPEED (GUIDE ONLY)	11.0 kph (6.8 mph)

Monitor condition	Parameters
GEAR	2
ENGINE SPEED	1158 rpm
VEHICLE SPEED (GUIDE ONLY)	14.4 kph (8.7 mph)

Monitor condition	Parameters
GEAR	2
ENGINE SPEED	984 rpm
VEHICLE SPEED (GUIDE ONLY)	6.4 kph (4.0 mph)

"Green" ECM drive cycle chart. Site 3

NOTE:

The vehicle speed is for guidance only. **DO NOT** use the vehicle speed as the target to set adaptions.

Monitor condition	Parameters
GEAR	2
ENGINE SPEED	2385 rpm
VEHICLE SPEED (GUIDE ONLY)	37.5 kph (23.3 mph)

Monitor condition	Parameters
GEAR	2

ENGINE SPEED	1877 rpm
VEHICLE SPEED (GUIDE ONLY)	30.4 kph (18.9 mph)

Monitor condition	Parameters
GEAR	2
ENGINE SPEED	1831 rpm
VEHICLE SPEED (GUIDE ONLY)	32.0 kph (19.9 mph)

Monitor condition	Parameters
GEAR	2
ENGINE SPEED	1481 rpm
VEHICLE SPEED (GUIDE ONLY)	22.4 kph (14.0 mph)

"Green" ECM drive cycle chart. Site 4

NOTE:

The vehicle speed is for guidance only. **DO NOT** use the vehicle speed as the target to set adaptions.

Monitor condition	Parameters
GEAR	3
ENGINE SPEED	2635 rpm
VEHICLE SPEED (GUIDE ONLY)	66.5 kph (41.3 mph)

Monitor condition	Parameters

www.JagDocs.com

GEAR	3
ENGINE SPEED	1937 rpm
VEHICLE SPEED (GUIDE ONLY)	44.8 kph (27.8 mph)

Monitor condition	Parameters
GEAR	3
ENGINE SPEED	2152 rpm
VEHICLE SPEED (GUIDE ONLY)	57.6 kph (35.8 mph)

Monitor condition	Parameters
GEAR	3
ENGINE SPEED	2250 rpm
VEHICLE SPEED (GUIDE ONLY)	64.0 kph (39.8 mph)

"Green" ECM drive cycle chart. Site 5

NOTE:

The vehicle speed is for guidance only. **DO NOT** use the vehicle speed as the target to set adaptions.

Monitor condition	Parameters
GEAR	3
ENGINE SPEED	3500 rpm
VEHICLE SPEED (GUIDE ONLY)	89.0 kph (55.3 mph)

Monitor condition	Parameters
GEAR	3
ENGINE SPEED	3287 rpm
VEHICLE SPEED (GUIDE ONLY)	80.0 kph (50.0 mph)

Monitor condition	Parameters
GEAR	3
ENGINE SPEED	2891 rpm
VEHICLE SPEED (GUIDE ONLY)	80.0 kph (50.0 mph)

Monitor condition	Parameters
GEAR	3
ENGINE SPEED	2592 rpm
VEHICLE SPEED (GUIDE ONLY)	80.0 kph (50.0 mph)

Bring the vehicle to rest, allow to idle for one minute.

WARNING: The following tests may involve parts which are hot.

If sufficient adaptations have occurred, the canister purge valve should now be operating. This can be verified manually by either touching or listening to the valve. By touching the canister purge valve, it should be possible to feel the valve switching. Listening to the canister purge valve is best done using a workshop stethoscope, through which it should be possible to hear the valve operating.

Diagnostic Trouble Code (DTC) Index/Symptom Chart

1 . Where the Jaguar approved diagnostic system is available, complete the S93 report before clearing any or all fault codes from the vehicle.

www.JagDocs.com

NOTE:

If a DTC cannot be cleared, then there is a permanent fault present that flags again as soon as it is cleared. (The exception to this is P1260, which will only clear following an ignition **OFF/ON** cycle after rectification).

2 . If the cause is not visually evident and the Jaguar approved diagnostic system is not available, use a fault code reader to retrieve the fault codes before proceeding to the Diagnostic Trouble Code (DTC) Index Chart, or the Symptom Chart if no DTCs are set.

3 . Using the Jaguar approved diagnostic system where available, and a scan tool where not, check the freeze frame data for information on the conditions applicable when the fault was flagged. The format of this will vary, depending on the tool used, but can provide information useful to the technician in diagnosing the fault.

CAUTION: When probing connectors to take measurements in the course of the pinpoint tests, use the adaptor kit, part number 3548-1358-00.

NOTE:

When performing electrical voltage or resistance tests, always use a digital multimeter (DMM) accurate to 3 decimal places, and with an up-to-date calibration certificate. When testing resistance, always take the resistance of the DMM leads into account.

NOTE:

Check and rectify basic faults before beginning diagnostic routines involving pinpoint tests.

Symptom	Possible Source	Action
Difficulty in filling	Restriction in the vapor line between the fuel tank and the carbon canister outlet/atmospheric port	Refer to Action for DTC P0446
Fuel smell	Adaptations incomplete Purge valve inoperative	Carry out adaptations procedure, check purge valve operation
Message center display (see below)	Fuel filler cap missing/not tightened after refuelling	Check fuel filler cap, refer to Action for DTC P0455,

Warning Light	Message	Default Mode	DTC
Check engine (after two trips)	None	ECM default. (Canister purge inhibited, adaptive fuel metering inhibited).	P0441, P0442, P0443, P0444, P0445, P0446, P0447, P0448, P0455, P0456
Check engine (after two trips)	None	None	P0450, P0452, P0453
Red	Check fuel filler cap	ECM default. (Canister purge inhibited, adaptive fuel metering inhibited).	P0455

Diagnostic Trouble Code	Description	Possible Source	Action
P0441 (Euro only)	Incorrect purge flow	Evaporative canister purge pipe restricted, leaking, disconnected Evaporative canister vent restricted Evaporative canister purge valve to engine pipe(s) restricted, leaking, disconnected Evaporative canister purge valve failure	GO to Pinpoint Test G307413p1. .
P0442	Leak detected. 40 thou	Fuel tank filler cap seal defective System leak (canister damage, pipework damage) Canister close valve leaking Fuel tank leak	Check filler cap, system pipework, fuel tank. GO to Pinpoint Test G307413p2. . For fuel tank information, <<310-01>> Where K-Line or Vacutec equipment is available, carry out the appropriate test. See bulletin 05.1-29, or Vacutec operating instructions
P0443	Canister purge valve malfunction	Canister purge valve failure	Carry out system pressure check (K-Line or Vacutec equipment. See

www.JagDocs.com

	(leaking)		bulletin 05.1-29, or Vacutec operating instructions)
P0444	Canister purge valve circuit open circuit	Canister purge valve disconnected Canister purge valve to ECM drive circuit; open circuit, high resistance Canister purge valve failure	Check purge valve connections, GO to Pinpoint Test G307413p2. .
P0445	Canister purge valve circuit short circuit	Canister purge valve to ECM drive circuit; short circuit to ground Canister purge valve failure	GO to Pinpoint Test G307413p2. .
P0446	Canister close valve malfunction (CCV stuck closed)	Restricted flow through; air vent, filter, CCV or canister Canister close valve failure	Inspect the components listed, and interconnecting pipework for blockage, kinks or flattened areas
P0447	Canister close valve circuit open circuit.	Canister close valve power supply circuit; open circuit, short circuit Canister close valve to ECM drive circuit; open circuit, high resistance, short circuit to B+ voltage Canister close valve failure	GO to Pinpoint Test G307413p3. .
P0448	Canister close valve circuit short circuit	Canister close valve to ECM drive circuit; short circuit to ground Canister close valve failure	GO to Pinpoint Test G307413p3. .
P0450	Fuel tank pressure (FTP) sensor	FTP sensor disconnected	Check FTP sensor connections. GO to Pinpoint Test G307413p4.

	malfunction (output stuck/not changing)	FTP sensor failure	.
P0452	Fuel tank pressure (FTP) sensor circuit; low voltage (low pressure)	FTP sensor disconnected FTP sensor to ECM sense circuit; open circuit, short circuit to ground FTP sensor to splice in sensor supply circuit; open circuit, high resistance FTP sensor failure	For FTP sensor supply tests, <<303-14>> GO to Pinpoint Test G307413p4. .
P0453	Fuel tank pressure (FTP) sensor circuit; high voltage (high pressure)	FTP sensor to splice in sensor ground circuit; open circuit, high resistance FTP sensor to ECM sense circuit; open circuit, short circuit to high voltage FTP sensor failure	Check fuel filler cap and seal, pipework, etc. GO to Pinpoint Test G307413p2. . For fuel tank information, <<310-01>>
P0455	Leak detected-large	Fuel filler cap missing Fuel filler cap seal defective System leak (canister damage, pipework damage) CCV stuck open Canister purge valve to engine purge pipe; restricted, leaking, disconnected Canister purge valve stuck closed Fuel tank leak	Check fuel filler cap and seal, pipework, etc. GO to Pinpoint Test G307413p2. . For fuel tank information, <<310-01>>

www.JagDocs.com

P0456	Leak detected - 20 thou	Fuel filler cap seal defective System leak (canister damage, pipework damage) CCV leaking Fuel tank leak	Check fuel filler cap and seal, pipework, etc. GO to Pinpoint Test G307413p2. . For fuel tank information, <<310-01>>

Pinpoint Tests

PINPOINT TEST G307413p1 : DTC P0441; EVAPORATIVE SYSTEM INCORRECT PURGE FLOW

G307413t1 : CHECK FUEL FILLER CAP FITMENT AND CONDITION OF CANISTER, PIPES AND CONNECTORS

1. Make sure that the fuel filler cap is correctly installed and tightened. 2. Check the condition of the carbon canister. 3. Check the condition of all accessible pipes and connectors in the vapor line.

Are the canister and all pipes and connectors in good condition?

-> Yes
GO to Pinpoint Test G307413t2.

-> No
REPAIR as necessary. CLEAR the DTC. Carry out a full evaporative system monitor drive cycle. Recheck DTCs. For additional information, see "diagnostic drive cycles" above.

G307413t2 : CHECK EVAPORATIVE PURGE VALVE IS OPERATING

1. Disconnect the vapor pipe from the inlet port of the evaporative purge valve (ie, from fuel tank). 2. **RUN** the engine for 2 minutes, making sure that the engine reaches normal operating temperature. 3. Check that the evaporative purge valve is operating, by touch or by sound (using a stethoscope, it will be possible to hear the valve operating).

Is the valve operating?

-> Yes
Recheck DTCs. Carry out a flow check monitor drive cycle. For additional information, see "diagnostic drive cycles" above.

-> No
CHECK for DTC P0444, P0445. Conduct "green" ECM drive cycle. For additional information, see "diagnostic drive cycles" above.

PINPOINT TEST G307413p2 : DTC P0442, P0444, P0445, P0455, P0456; LEAK DETECTED: LARGE/20 THOU/40 THOU, PURGE VALVE CIRCUIT MALFUNCTION, OPEN/SHORT CIRCUIT,

G307413t3 : CHECK FUEL FILLER CAP FITMENT AND CONDITION OF CANISTER, PIPES AND CONNECTORS

1. Make sure that the fuel filler cap is correctly installed and tightened. 2. Check the condition of the carbon canister. 3. Check the condition of all accessible pipes and connectors in the vapor line.

Are the canister and all pipes and connectors in good condition?

-> Yes
GO to Pinpoint Test G307413t4.

-> No
REPAIR as necessary. CLEAR the DTC. Carry out a full evaporative system monitor drive cycle. Recheck DTCs. For additional information, see "diagnostic drive cycles" above.

G307413t4 : CHECK THE CANISTER PURGE VALVE DRIVE CIRCUIT FOR HIGH RESISTANCE

1. Disconnect the battery negative terminal. 2. Disconnect the canister purge valve electrical connector, EC63. 3. Disconnect the ECM electrical connector, PI01. 4. Measure the resistance between EC63, pin 02 (UY) and PI01, pin 66 (UY).

Is the resistance greater than 5 ohms?

-> Yes
REPAIR the high resistance circuit. For additional information, refer to the wiring diagrams. CLEAR the DTC. Carry out a full evaporative system monitor drive cycle.

-> No

www.JagDocs.com

GO to Pinpoint Test G307413t5.

G307413t5 : CHECK THE CANISTER PURGE VALVE DRIVE CIRCUIT FOR SHORT TO HIGH VOLTAGE

1. Reconnect the battery negative terminal. 2. Turn the ignition switch to the **ON** position. 3. Measure the voltage between EC63, pin 02 (UY) and GROUND.

Is the voltage greater than 3 volts?

-> Yes
REPAIR the short circuit. For additional information, refer to the wiring diagrams. CLEAR the DTC. Carry out a full evaporative system monitor drive cycle.

-> No
GO to Pinpoint Test G307413t6.

G307413t6 : CHECK THE CANISTER PURGE VALVE DRIVE CIRCUIT FOR SHORT TO GROUND

1. Turn the ignition switch to the **OFF** position. 2. Measure the resistance between EC63, pin 02 (UY) and GROUND.

Is the resistance less than 10,000 ohms?

-> Yes
REPAIR the short circuit. For additional information, refer to the wiring diagrams. CLEAR the DTC. Carry out a full evaporative system monitor drive cycle.

-> No
GO to Pinpoint Test G307413t7.

G307413t7 : CHECK THE CANISTER PURGE VALVE POWER SUPPLY

1. Turn the ignition switch to the **ON** position.

Make sure the EMS relay is energized. 2. Measure the voltage between EC63, pin 01 (GU) and GROUND.

Is the voltage less than 10 volts?

-> Yes
REPAIR the circuit between the canister purge valve and battery. This circuit includes the front power distribution box, fuse 14, the EMS relay, and the high power protection module. For additional information, refer to the wiring diagrams. CLEAR the DTC. Carry out a full evaporative system monitor drive cycle.

-> No
INSTALL a new canister purge valve.
Evaporative Emission Canister Purge Valve - VIN Range: G00442->G45703 (17.15.30) Carry out a full evaporative system monitor drive cycle. Recheck DTCs. For additional information, see "diagnostic drive cycles" above.

PINPOINT TEST G307413p3 : DTC P0447, P0448; CANISTER CLOSE VALVE (CCV) CIRCUIT MALFUNCTION, OPEN /SHORT CIRCUIT

G307413t8 : CHECK THE CANISTER CLOSE VALVE POWER SUPPLY

1. Disconnect the CCV electrical connector, CV02. 2. Turn the ignition switch to the **ON** position.

Make sure the EMS relay is energized. 3. Measure the voltage between CV02, pin 02 (GU) and GROUND.

Is the voltage greater than 10 volts?

-> Yes
GO to Pinpoint Test G307413t9.

-> No
REPAIR the circuit between the CCV and battery. This circuit includes the front power distribution box, fuse 14, the EMS relay and the high power protection module. For additional information, refer to the wiring diagrams. CLEAR the DTC. Carry out a full evaporative system monitor drive cycle.

G307413t9 : CHECK THE CANISTER CLOSE VALVE POWER SUPPLY CIRCUIT FOR SHORT CIRCUIT

1. Turn the ignition switch to the **OFF** position. 2. Measure the voltage between CV02, pin 02 (GU) and GROUND.

Is the voltage greater than 3 volts?

-> Yes
REPAIR the short circuit. For additional information, refer to the wiring diagrams. CLEAR the DTC. Carry out a full evaporative system monitor drive cycle.

-> No

www.JagDocs.com

GO to Pinpoint Test G307413t10.

G307413t10 : CHECK THE CANISTER CLOSE VALVE DRIVE CIRCUIT FOR HIGH RESISTANCE

1. Disconnect the battery negative terminal. 2. Disconnect the ECM electrical connector, PI01. 3. Measure the resistance between CV02, pin 01 (O) and PI01, pin 67 (O).

Is the resistance greater than 5 ohms?

-> Yes
REPAIR the high resistance circuit. For additional information, refer to the wiring diagrams. CLEAR the DTC. Carry out a full evaporative system monitor drive cycle.

-> No
GO to Pinpoint Test G307413t11.

G307413t11 : CHECK THE CANISTER CLOSE VALVE DRIVE CIRCUIT FOR SHORT TO HIGH VOLTAGE

1. Reconnect the battery negative terminal. 2. Measure the voltage between CV02, pin 01 (O) and GROUND.

Is the voltage greater than 3 volts?

-> Yes
REPAIR the short circuit. For additional information, refer to the wiring diagrams. CLEAR the DTC. Carry out a full evaporative system monitor drive cycle.

-> No
GO to Pinpoint Test G307413t12.

G307413t12 : CHECK THE CANISTER CLOSE VALVE DRIVE CIRCUIT FOR SHORT TO GROUND

1. Measure the resistance between CV02, pin 01 (O) and GROUND.

Is the resistance less than 10,000 ohms?

-> Yes
REPAIR the short circuit. For additional information, refer to the wiring diagrams. CLEAR the DTC. Carry out a full evaporative system monitor drive cycle.

-> No
INSTALL a new CCV. CLEAR the DTC. Carry out a full evaporative system monitor drive cycle.

PINPOINT TEST G307413p4 : DTC P0450, P0452, P0453; FUEL TANK PRESSURE (FTP) SENSOR CIRCUIT MALFUNCTION, LOW/HIGH VOLTAGE

G307413t13 : CHECK THE FTP SENSOR SENSE CIRCUIT FOR HIGH RESISTANCE

1. Disconnect the battery negative terminal. 2. Disconnect the FTP sensor electrical connector, FP01. 3. Disconnect the ECM electrical connector, PI01. 4. Measure the resistance between FP01, pin 02 (RG) and PI01, pin 104 (RG).

Is the resistance greater than 5 ohms?

-> Yes
REPAIR the high resistance circuit. For additional information, refer to the wiring diagrams. CLEAR the DTC. Carry out a full evaporative system monitor drive cycle.

-> No
GO to Pinpoint Test G307413t14.

G307413t14 : CHECK THE FTP SENSOR SENSE CIRCUIT FOR SHORT TO HIGH VOLTAGE

1. Reconnect the battery negative terminal. 2. Turn the ignition switch to the **ON** position. 3. Measure the voltage between FP01, pin 02 (RG) and GROUND.

Is the voltage greater than 3 volts?

-> Yes
REPAIR the short circuit. For additional information, refer to the wiring diagrams. CLEAR the DTC. Carry out a full evaporative system monitor drive cycle.

-> No
GO to Pinpoint Test G307413t15.

G307413t15 : CHECK THE FTP SENSOR SENSE CIRCUIT FOR SHORT TO GROUND

1. Measure the resistance between FP01, pin 02 (RG) and GROUND.

Is the resistance less than 10,000 ohms?

www.JagDocs.com

-> Yes
REPAIR the short circuit. For additional information, refer to the wiring diagrams. CLEAR the DTC. Carry out a full evaporative system monitor drive cycle.

-> No
INSTALL a new FTP sensor.
Fuel Tank Pressure Sensor (19.55.31) CLEAR the DTC. Carry out a full evaporative system monitor drive cycle.

Evaporative Emissions - VIN Range: G45704->G99999

Overview

2006my changes

There are changes to the engine management system (EMS) for 2006 my, the most obvious of which will be the change to 7-digit diagnostic trouble codes (DTCs) from the familiar 5-digit, plus the addition of secondary air injection and changes to Federal evaporative emissions (Europe is unchanged) and all market exhaust gas recirculation to comply with stage four emissions requirements.

The hardware changes to the Federal evaporative emissions system are the deletion of the canister close valve and the fuel tank pressure sensor, which have been replaced with a combined unit incorporating a DMTL (diagnostic monitoring of tank leakage) pump and a COV (change-over valve) into one module.

The software changes will have more effect on the technician, as there is no longer the need to carry out extensive drive cycles to confirm the success of a repair.

DMTL conditions

The DMTL test is performed after the engine has stopped following a 10 minute run, providing that the vehicle fuel tank is between 15 and 85 percent full and that the ambient temperature is above 0°C (32°F) and less than 40°C (104°F).

The DMTL pump is driven to pressurize the fuel tank and the current is measured with the change-over valve in different states.

A comparison of the current draw in each state indicates the degree of any leak, and the ECM then sets the appropriate DTC.

Inspection and verification

1 . Visually inspect for obvious signs of mechanical or electrical damage.

2 . If an obvious cause for an observed or reported concern is found, correct the cause (if possible) before proceeding to the next step.

Mechanical	Electrical
Fuel filler cap and seal Fuel filler neck	Fuses Connectors

www.JagDocs.com

DMTL fresh air filter (restriction, etc) Fuel tank (leaks, damage, etc) Fuel lines and joints, etc Carbon canister Purge valve DMTL pump module	Harness(es) Purge valve DMTL pump

3 . If the cause is not visually evident use the Jaguar approved diagnostic system or a scan tool to retrieve the fault codes before proceeding to the DTC Index.

4 . **NOTE:**

On all vehicles equipped with Diagnostic Monitor Tank Leakage (DMTL), there is a requirement to blank off the ventilation port (large diameter stub pipe) of the DMTL module, to prevent mis-diagnosis when carrying out a smoke test.

Where K-Line, Vacutec or other proprietary smoke test equipment is available, it should be utilised to assist with Evaporative Emissions System leak diagnosis.

Symptom Chart

Symptom	Possible Source	Action
Difficulty in filling	Restriction in the vapor line between the fuel tank and the carbon canister outlet/atmospheric port	Check for restrictions/damage, etc (see visual inspection).
Fuel smell	System leak Purge valve inoperative	Check for leaks, check the purge valve operation. GO to Pinpoint Test G532445p1.
Message center display (refer to the owners handbook)	Fuel filler cap missing/not tightened after refuelling	Check the fuel filler cap and seal (see visual inspection).

Diagnostic Trouble Code	Description	Possible Source	Action
P044100	Incorrect purge flow	Evaporative canister purge pipe restricted,	For basic checks. GO to Pinpoint Test G532445p1.

		leaking, disconnected Evaporative canister vent restricted Evaporative canister purge valve to engine pipe(s) restricted, leaking, disconnected Evaporative canister purge valve failure	Check for DTCs indicating a purge valve fault.
P044700	Change-over valve (COV) control circuit	DMTL COV circuit short circuit to ground	For COV circuit tests, GO to Pinpoint Test G532445p3.
P044800	COV control circuit	DMTL COV circuit short circuit to power	For COV circuit tests, GO to Pinpoint Test G532445p3.
P045600	Leak detected (very small leak)	DMTL has detected a leak in the fuel system	Check the fuel system integrity (see visual inspection). Carry out K line or Vacutec tests to identify the leak.
P045800	Purge valve control circuit	Purge valve control circuit: short circuit to ground Purge valve control circuit: high resistance	For purge valve circuit tests. GO to Pinpoint Test G532445p2.
P045900	Purge valve control circuit	Purge valve control circuit: short circuit to power	For purge valve circuit tests. GO to Pinpoint Test G532445p2.
P240100	DMTL pump control circuit	DMTL pump control circuit: short circuit to ground	For DMTL pump circuit tests. GO to Pinpoint Test G532445p4.
P240200	DMTL pump control circuit	DMTL pump control circuit: short circuit to power	For DMTL pump circuit tests. GO to Pinpoint Test G532445p4.
P240429	DMTL pump sense circuit range/performance - signal invalid	DMTL reference leak DMTL pump circuit: short circuit, high resistance DMTL pipework	Check the DMTL pipework. For DMTL pump tests, GO to Pinpoint Test G532445p4.

www.JagDocs.com

		blocked/leaking	
P24042F	DMTL pump sense circuit range/performance - signal erratic	DMTL reference leak DMTL pump circuit: short circuit, high resistance DMTL pipework blocked/leaking	Check the DMTL pipework. For DMTL pump tests, GO to Pinpoint Test G532445p4.
P240500	DMTL pump sense circuit low	DMTL pump circuit: short circuit, high resistance	For DMTL pump tests, GO to Pinpoint Test G532445p4.
P240600	DMTL pump sense circuit high	DMTL pump circuit: short circuit, high resistance	For DMTL pump tests, GO to Pinpoint Test G532445p4.
P240B00	DMTL pump heater circuit low	DMTL heater control circuit: short circuit to ground DMTL heater control circuit: high resistance	For DMTL heater circuit tests. GO to Pinpoint Test G532445p5.
P240C00	DMTL pump heater circuit high	DMTL heater control circuit: short circuit to power	For DMTL heater circuit tests. GO to Pinpoint Test G532445p5.
P245000	COV performance/stuck open	DMTL pump circuit: short circuit, high resistance DMTL COV stuck open	For DMTL pump tests, GO to Pinpoint Test G532445p4. For DMTL COV tests, GO to Pinpoint Test G532445p3. If the circuits are good, replace the DMTL assembly.
P245100	COV performance/stuck closed	DMTL pump circuit: short circuit, high resistance DMTL COV stuck closed	For DMTL pump tests, GO to Pinpoint Test G532445p4. For DMTL COV tests, GO to Pinpoint Test G532445p3. If the circuits are good, replace the DMTL assembly.

Pinpoint Tests

CAUTION: When probing connectors to take measurements in the course of the pinpoint tests, use the adaptor kit, part number 3548-1358-00.

NOTE:

When performing electrical voltage or resistance tests, always use a digital multimeter (DMM) accurate to 3 decimal places, and with an up-to-date calibration certificate. When testing resistance, always take the resistance of the DMM leads into account.

NOTE:

Check and rectify basic faults before beginning diagnostic routines involving pinpoint tests.

www.JagDocs.com

PINPOINT TEST G532445p1 : EVAPORATIVE SYSTEM INCORRECT PURGE FLOW

G532445t1 : CHECK FUEL FILLER CAP FITMENT AND CONDITION OF CANISTER, PIPES AND CONNECTORS

1. Make sure that the fuel filler cap is correctly installed and tightened. 2. Check the condition of the carbon canister. 3. Check the condition of all accessible pipes and connectors in the vapor line.

Are the canister and all pipes and connectors in good condition?

-> Yes
GO to Pinpoint Test G532445t2.

-> No
REPAIR as necessary. CLEAR the DTC, test the system for normal operation.

G532445t2 : CHECK THAT THE PURGE VALVE IS OPERATING

1. Disconnect the vapor pipe from the inlet port of the evaporative purge valve. 2. **RUN** the engine for 2 minutes, making sure that the engine reaches normal operating temperature. 3. Check that the evaporative purge valve is operating, by touch or by sound (using a stethoscope, it will be possible to hear the valve operating).

Is the valve operating?

-> Yes
CHECK for related DTCs. Refer to the index above.

-> No
CHECK the purge valve circuits. GO to Pinpoint Test G532445p2.

PINPOINT TEST G532445p3 : CHANGE-OVER VALVE (COV) CONTROL CIRCUIT

G532445t8 : CHECK THE COV CONTROL CIRCUIT FOR SHORT CIRCUIT TO GROUND

1. Key off. 2. Disconnect the DMTL electrical connector, CV09. 3. Measure the resistance between:

DMTL connector CV09, harness side	Battery
Pin 03	Negative terminal

Is the resistance less than 10,000 ohms?

-> Yes
REPAIR the short circuit. For additional information, refer to the wiring diagrams. Clear the DTC, test the system for normal operation.

-> No
GO to Pinpoint Test G532445t9.

G532445t9 : CHECK THE COV CONTROL CIRCUIT FOR SHORT CIRCUIT TO POWER

1. Measure the resistance between:

DMTL connector CV09, harness side	Battery
Pin 03	Positive terminal

Is the resistance less than 10,000 ohms?

-> Yes
REPAIR the short circuit. For additional information, refer to the wiring diagrams. Clear the DTC, test the system for normal operation.

-> No
GO to Pinpoint Test G532445t10.

G532445t10 : CHECK THE COV CONTROL CIRCUIT FOR HIGH RESISTANCE

1. Disconnect the ECM electrical connector, EC300. 2. Measure the resistance between:

DMTL connector CV09, harness side	ECM connector EC300, harness side
Pin 03	Pin 48

Is the resistance greater than 5 ohms?

-> Yes
REPAIR the high resistance circuit. For additional information, refer to the wiring diagrams. Clear the DTC, test the system for normal operation.

-> No
INSTALL a new DMTL assembly. If the DTC is repeated, refer to the warranty policy and procedures manual if an ECM is suspect.

PINPOINT TEST G532445p2 : PURGE VALVE CONTROL CIRCUIT

G532445t3 : CHECK THE POWER SUPPLY TO THE PURGE VALVE

1. Disconnect the purge valve connector, PI363. 2. Key on, engine off. 3. Measure the voltage between:

Purge valve connector PI363, harness side	Battery
Pin 01	Negative terminal

Is the voltage less than 10 volts?

-> Yes
REPAIR the circuit between the purge valve and battery. This circuit includes harness splices and fuse 14 of the front power distribution box. For additional information, refer to the wiring diagrams. Clear

www.JagDocs.com

the DTC, test the system for normal operation.

-> No
GO to Pinpoint Test G532445t4.

G532445t4 : CHECK THE PURGE VALVE CONTROL CIRCUIT FOR SHORT CIRCUIT TO GROUND

1. Key off. 2. Measure the resistance between:

Purge valve connector PI363, harness side	Battery
Pin 02	Negative terminal

Is the resistance less than 10,000 ohms?

-> Yes
REPAIR the short circuit. For additional information, refer to the wiring diagrams. Clear the DTC, test the system for normal operation.

-> No
GO to Pinpoint Test G532445t5.

G532445t5 : CHECK THE PURGE VALVE CONTROL CIRCUIT FOR SHORT CIRCUIT TO POWER

1. Measure the resistance between:

Purge valve connector PI363, harness side	Battery
Pin 02	Positive terminal

Is the resistance less than 10,000 ohms?

-> Yes
REPAIR the short circuit. For additional information, refer to the wiring diagrams. Clear the DTC, test the system for normal operation.

-> No
GO to Pinpoint Test G532445t6.

G532445t6 : CHECK THE PURGE VALVE CONTROL CIRCUIT FOR HIGH RESISTANCE

1. Disconnect the ECM electrical connector, PI300. 2. Measure the resistance between:

Purge valve connector PI363, harness side	ECM connector PI300, harness side
Pin 02	Pin 92

Is the resistance greater than 5 ohms?

-> Yes

REPAIR the high resistance circuit. For additional information, refer to the wiring diagrams. Clear the DTC, test the system for normal operation.

-> No

INSTALL a new purge valve. Clear the DTC, test the system for normal operation. If the DTC is repeated, refer to the warranty policy and procedures manual if an ECM is suspect.

PINPOINT TEST G532445p4 : DIAGNOSTIC MONITORING OF FUEL TANK LEAKAGE (DMTL) PUMP CONTROL CIRCUIT

G532445t7 : CHECK THE POWER SUPPLY TO THE DMTL PUMP

1. Key off. 2. Disconnect the DMTL pump electrical connector, CV09. 3. Key on, engine off. 4. Measure the voltage between:

DMTL pump connector CV09, harness side	Battery
Pin 04	Negative terminal

Is the voltage less than 10 volts?

-> Yes

REPAIR the circuit between the DMTL pump and battery. This circuit includes harness splice ECS20 and fuse 14 of the front power distribution box. For additional information, refer to the wiring diagrams. Clear the DTC, test the system for normal operation.

-> No

www.JagDocs.com

GO to Pinpoint Test G532445t11.

G532445t11 : CHECK THE DMTL PUMP CONTROL CIRCUIT FOR SHORT CIRCUIT TO GROUND

1. Key off. 2. Measure the resistance between:

DMTL pump connector CV09, harness side	Battery
Pin 01	Negative terminal

Is the resistance less than 10,000 ohms?

-> Yes
REPAIR the short circuit. For additional information, refer to the wiring diagrams. Clear the DTC, test the system for normal operation.

-> No
GO to Pinpoint Test G532445t12.

G532445t12 : CHECK THE DMTL PUMP CONTROL CIRCUIT FOR SHORT CIRCUIT TO POWER

1. Measure the resistance between:

DMTL pump connector CV09, harness side	Battery
Pin 01	Positive terminal

Is the resistance less than 10,000 ohms?

-> Yes
REPAIR the short circuit. For additional information, refer to the wiring diagrams. Clear the DTC, test the system for normal operation.

-> No
GO to Pinpoint Test G532445t13.

G532445t13 : CHECK THE DMTL PUMP CONTROL CIRCUIT FOR HIGH RESISTANCE

1. Disconnect the ECM electrical connector, EC300. 2. Measure the resistance between:

DMTL pump connector CV09, harness side	ECM connector EC300, harness side
Pin 01	Pin 33

Is the resistance greater than 5 ohms?

-> Yes
REPAIR the high resistance circuit. For additional information, refer to the wiring diagrams. Clear the DTC, test the system for normal operation.

-> No
INSTALL a new DMTL pump. Clear the DTC, test the system for normal operation. If the DTC is repeated, refer to the warranty policy and procedures manual if an ECM is suspect.

PINPOINT TEST G532445p5 : DIAGNOSTIC MONITORING OF FUEL TANK LEAKAGE (DMTL) HEATER CIRCUIT

G532445t14 : CHECK THE POWER SUPPLY TO THE DMTL PUMP

1. Key off. 2. Disconnect the DMTL pump electrical connector, CV09. 3. Key on, engine off. 4. Measure the voltage between:

DMTL pump connector CV09, harness side	Battery
Pin 04	Negative terminal

Is the voltage less than 10 volts?

-> Yes
REPAIR the circuit between the DMTL pump and battery. This circuit includes harness splice ECS20 and fuse 14 of the front power distribution box. For additional information, refer to the wiring diagrams. Clear the DTC, test the system for normal operation.

-> No
GO to Pinpoint Test G532445t15.

www.JagDocs.com

G532445t15 : CHECK THE DMTL HEATER CONTROL CIRCUIT FOR SHORT CIRCUIT TO GROUND

1. Key off. 2. Measure the resistance between:

DMTL pump connector CV09, harness side	Battery
Pin 02	Negative terminal

Is the resistance less than 10,000 ohms?

-> Yes
REPAIR the short circuit. For additional information, refer to the wiring diagrams. Clear the DTC, test the system for normal operation.

-> No
GO to Pinpoint Test G532445t16.

G532445t16 : CHECK THE DMTL HEATER CONTROL CIRCUIT FOR SHORT CIRCUIT TO POWER

1. Measure the resistance between:

DMTL pump connector CV09, harness side	Battery
Pin 02	Positive terminal

Is the resistance less than 10,000 ohms?

-> Yes
REPAIR the short circuit. For additional information, refer to the wiring diagrams. Clear the DTC, test the system for normal operation.

-> No
GO to Pinpoint Test G532445t17.

G532445t17 : CHECK THE DMTL HEATER CONTROL CIRCUIT FOR HIGH RESISTANCE

1. Disconnect the ECM electrical connector, EC300. 2. Measure the resistance between:

DMTL pump connector CV09, harness side	ECM connector EC300, harness side

Pin 02	Pin 23

Is the resistance greater than 5 ohms?

-> Yes
REPAIR the high resistance circuit. For additional information, refer to the wiring diagrams. Clear the DTC, test the system for normal operation.

-> No
INSTALL a new DMTL pump. Clear the DTC, test the system for normal operation. If the DTC is repeated, refer to the warranty policy and procedures manual if an ECM is suspect.

www.JagDocs.com

Evaporative Emission Canister - VIN Range: G00442->G45703 (17.15.13)

Special Service Tools

Powertrain assembly jack
HTJ1200-2

Removal

All vehicles

1 . Remove the luggage compartment floor covering.

1) Remove the luggage compartment floor covering securing screws.

2) Remove the luggage compartment floor covering.

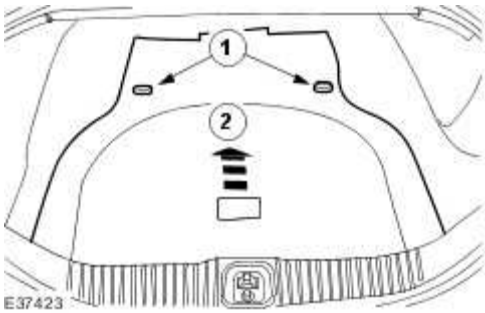

2 . Remove the left-hand luggage compartment side trim panel.

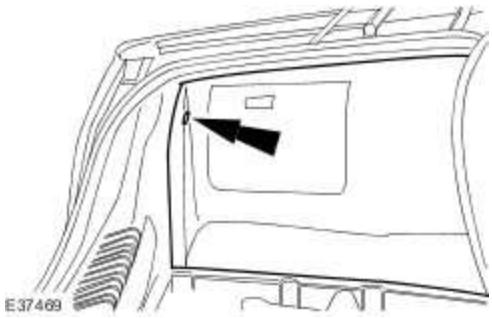

3 . Remove the left-hand air spring trim panel.

4 . Disconnect the left-hand air spring electrical connector.

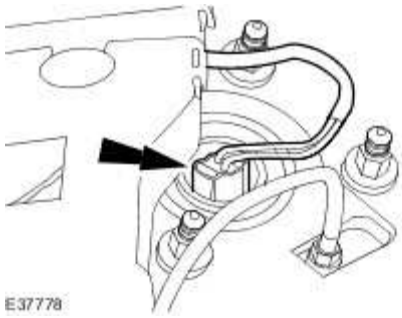

5 . **WARNING: Loosen the pipe no more than one full turn to allow the stored air pressure to vent for a minimum of one minute.**

Detach the left-hand air pipe.

www.JagDocs.com

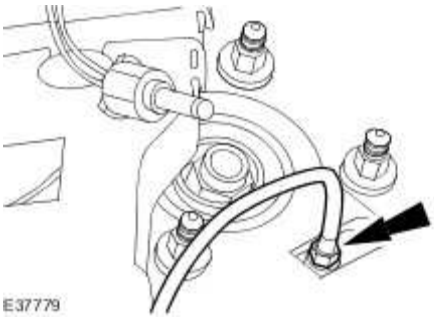

6 . Remove the left-hand air spring retaining nuts.

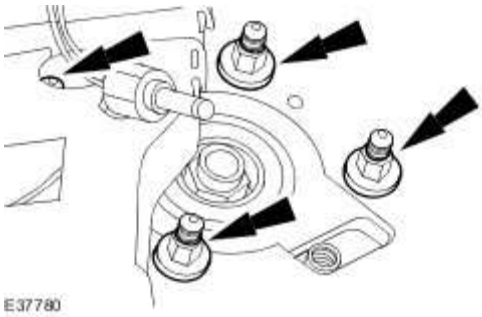

7 . Raise and support the vehicle.
For additional information, refer to Lifting

8 . Remove both rear mufflers and tail pipes.
For additional information, refer to Muffler and Tailpipe (30.10.52)

9 . **CAUTION: Under no circumstances must the flexible coupling (or its fixings) be loosened or removed from the driveshaft**

Detach the driveshaft from the rear drive axle flange.

- Mark the position of the driveshaft in relation to the rear drive axle flange.
- Mark the position of the balance nut in relation to the rear drive axle flange (if fitted).
- Mark the position of each nut and bolt in relation to the rear drive axle

flexible joint.

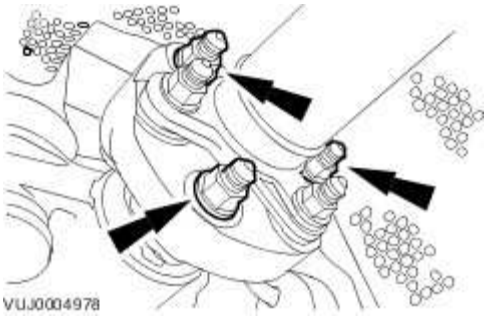

10 . Remove both rear wheels and tires.
For additional information, refer to Wheel and Tire (74.20.05)

Vehicles without Brembo brakes

11 . **NOTE:**

Left-hand shown, right-hand similar.

Detach the brake caliper.

1) Remove and discard the brake caliper retaining bolts.

Detach the brake caliper.

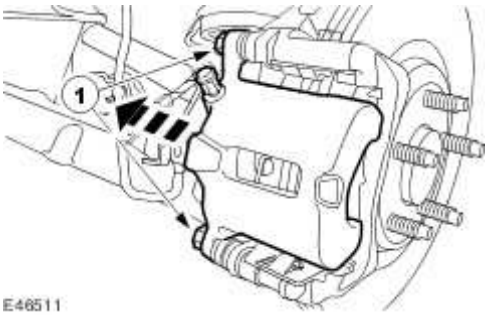

12 . **CAUTION: The brake caliper must be supported at all times.**

www.JagDocs.com

NOTE:

Left-hand shown, right-hand similar.

Using a suitable tie strap, secure the caliper to one side.

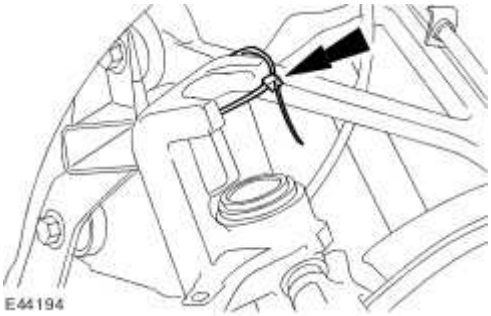

Vehicles with Brembo brakes

13 . **CAUTION: The brake caliper must be supported at all times.**

NOTE:

Left-hand shown, right-hand similar.

Detach the brake caliper and secure to one side.

- Remove and discard the brake caliper retaining bolts.
- Using a suitable tie strap, secure the caliper to one side.

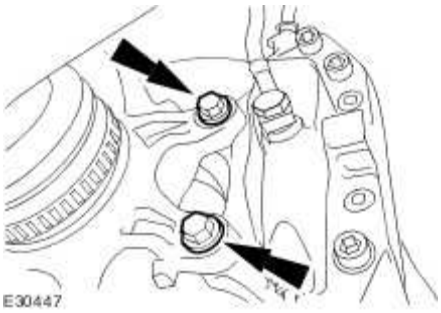

All vehicles

14 . **NOTE:**

Right-hand shown, left-hand similar.

Detach the air springs.

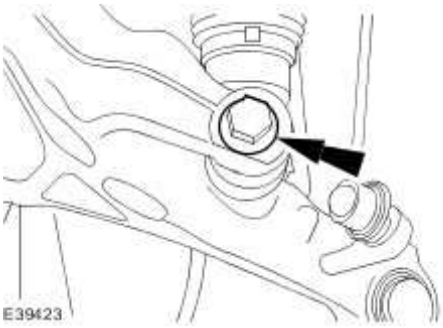

15 . **NOTE:**

Left-hand shown, right-hand similar.

Remove the noise, vibration and harshness brace retaining bolts.

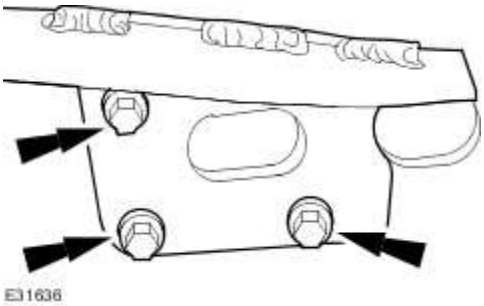

16 . Install the special tool to support the rear subframe.

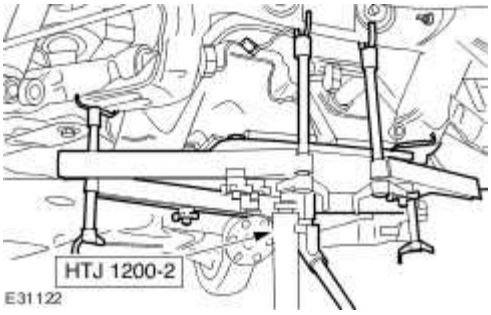

www.JagDocs.com

17 . **NOTE:**

Left-hand shown, right-hand similar.

Remove and discard the rear subframe rear retaining bolt.

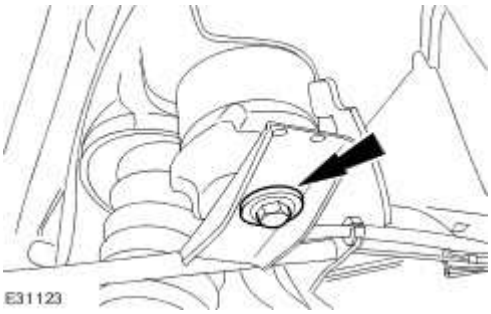

18 . **NOTE:**

Left-hand shown, right-hand similar.

Remove and discard the rear subframe front retaining bolt.

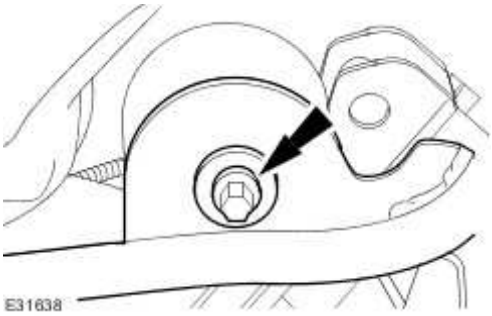

19 . **CAUTION: Make sure the rear subframe does not come into contact with the fuel tank filler pipe.**

Lower the rear subframe to a suitable height.

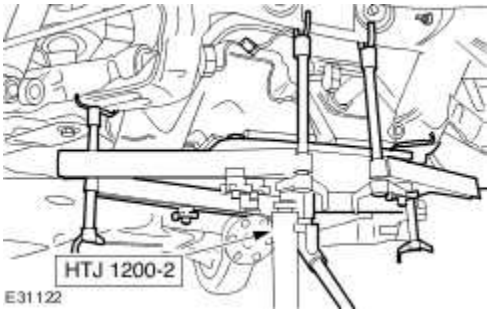

20 . Disconnect the emission hose.

Disconnect the carbon canister electrical connector (if equipped).

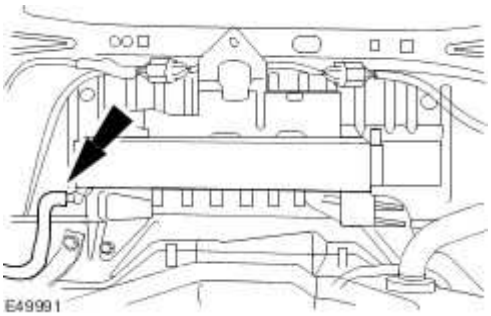

21 . **NOTE:**

Rear subframe shown removed for clarity.

Detach the evaporative emission canister.

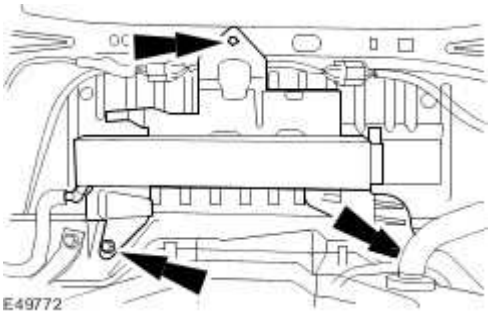

22 . **NOTE:**

Remove the evaporative emission canister between the subframe and vehicle body.

Remove the evaporative emission canister.

www.JagDocs.com

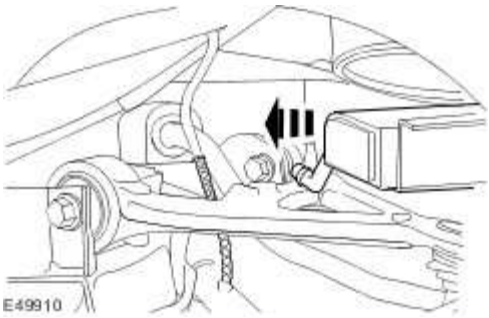

Installation

All vehicles

1 . **NOTE:**

Install the evaporative emission canister between the subframe and vehicle body.

Install the evaporative emission canister.

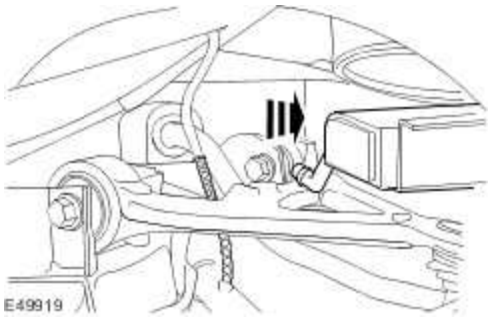

2 . To install, reverse the removal procedure.

Tighten to 7 Nm.

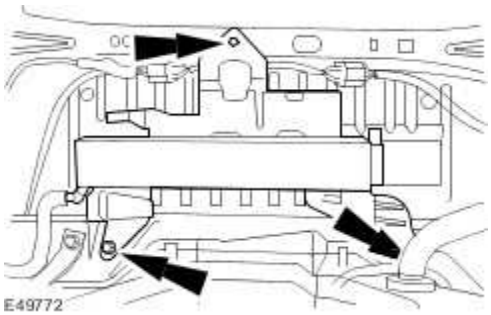

3 . Connect the emission hose.

- Connect the carbon canister electrical connector (if equipped).

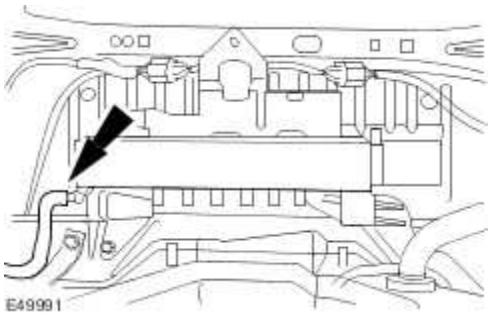

4 . **NOTE:**

Left-hand shown, right-hand similar.

Loosely install the rear subframe front retaining bolt.

- Install a new retaining bolt.

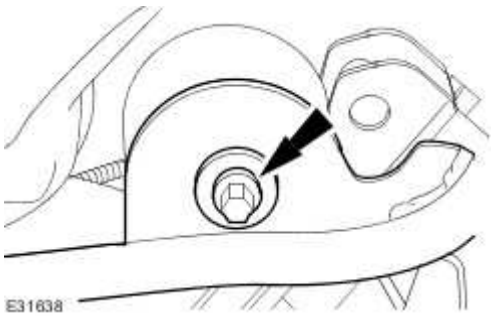

5 . **NOTE:**

Left-hand shown, right-hand similar.

Loosely install the noise, vibration and harshness brace retaining bolts.

www.JagDocs.com

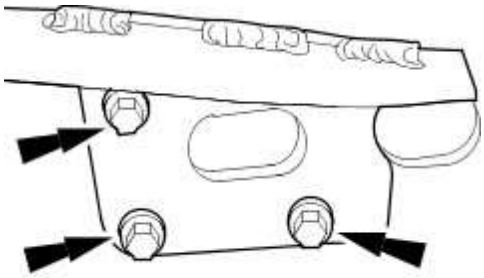

6 . Tighten to 125 Nm.

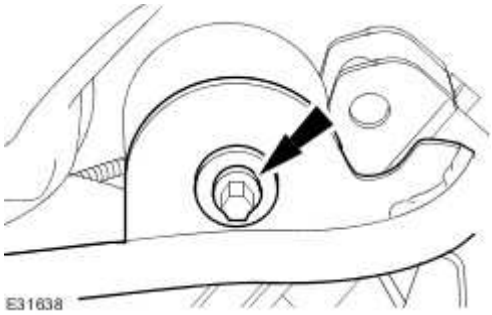

7 . **NOTE:**

Left-hand shown, right-hand similar.

Install the rear subframe rear retaining bolt.

- Install a new retaining bolt.
- Tighten to 125 Nm.

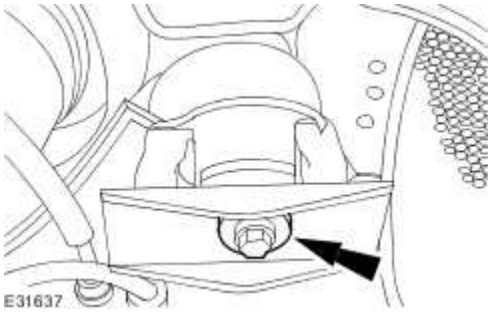

8 . **NOTE:**

Left-hand shown, right-hand similar.

Tighten to 48 Nm.

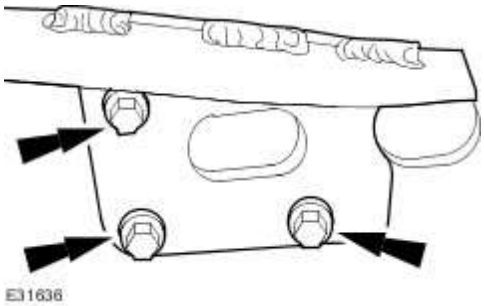

9 . Remove the special tool.

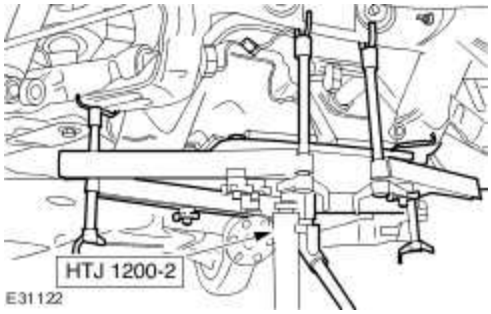

10 . **NOTE:**

Right-hand shown, left-hand similar.

Attach the rear air springs.

- Tighten to 133 Nm.

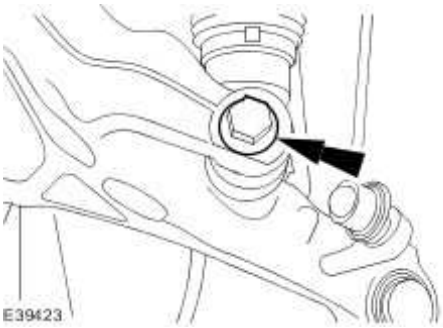

www.JagDocs.com

Vehicles with Brembo brakes

11 . **CAUTION: The brake caliper must be supported at all times.**

NOTE:

Left-hand shown, right-hand similar.

Attach the brake caliper.

- Remove the tie strap.
- Install new brake caliper retaining bolts.
- Tighten to 70 Nm.

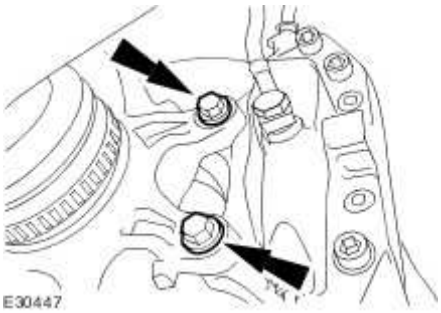

Vehicles without Brembo brakes

12 . **CAUTION: The brake caliper must be supported at all times.**

NOTE:

Left-hand shown, right-hand similar.

Remove the tie strap.

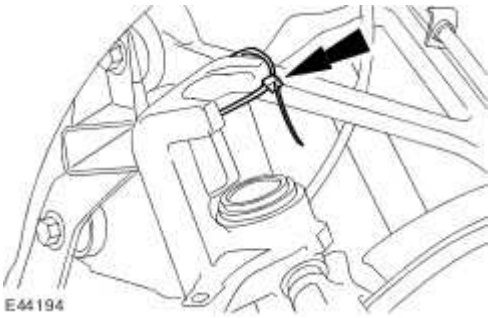

13 . **NOTE:**

Left-hand shown, right-hand similar.

Attach the caliper.

- Install new brake caliper retaining bolts.
- Tighten to 34 Nm.

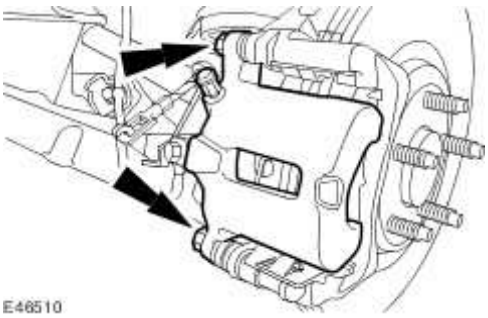

All vehicles

14 . Install both rear wheels and tires.
For additional information, refer to Wheel and Tire (74.20.05)

15 . Attach the driveshaft to the rear drive axle flange.

- Tighten to 88 Nm.

www.JagDocs.com

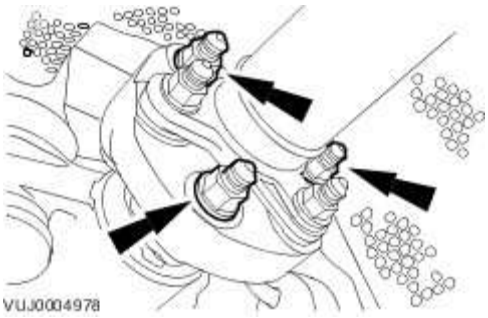

16 . Install both rear mufflers and tail pipes.
For additional information, refer to Muffler and Tailpipe (30.10.52)

17 . Lower the vehicle.

18 . Install the left-hand rear air spring retaining nuts.

Tighten to 25 Nm.

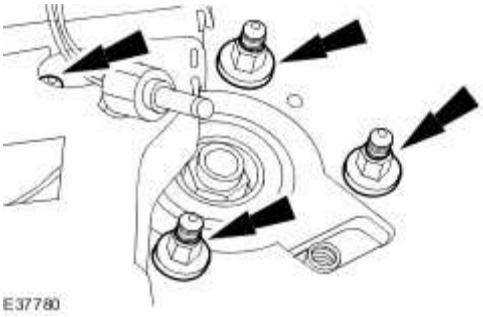

19 . Attach the left-hand air pipe.

Tighten to 5 Nm.

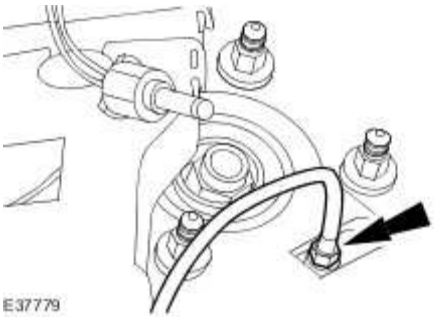

20 . Connect the air spring electrical connector.

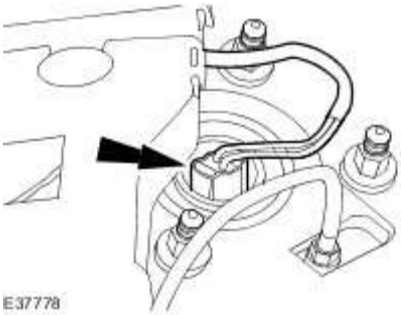

21 . Install the air spring trim panel.

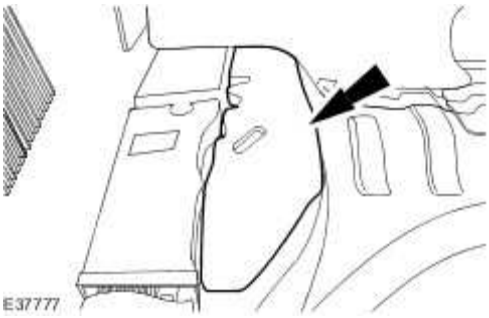

22 . Install the luggage compartment side trim panel.

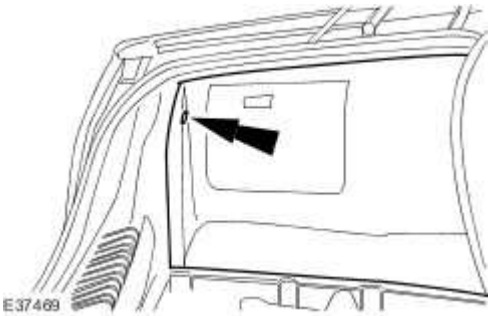

www.JagDocs.com

23 . Install the luggage compartment floor covering.

1) Install the luggage compartment floor covering.

2) Install the luggage compartment floor covering securing screws.

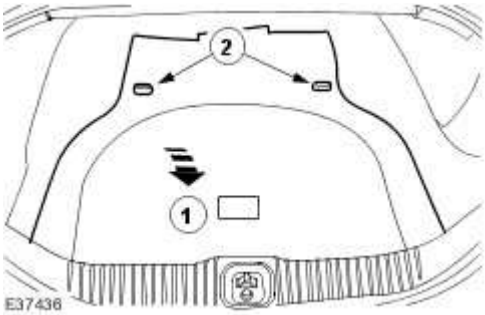

24 . Start and run the engine for 2 minutes to allow the air spring to recharge and to allow the compressor to replenish the reservoir.

Evaporative Emission Canister - VIN Range: G45704->G99999 (17.15.13)

Special Service Tools

Powertrain assembly jack
HTJ1200-2

Removal

All vehicles

1 . Drain the fuel tank.
For additional information, refer to Fuel Tank Draining - VIN Range: G00442->G45703

2 . Remove the rear wheels and tires.
For additional information, refer to Wheel and Tire (74.20.05)

3 . **CAUTION: The brake caliper must be supported at all times.**

NOTE:

Left-hand shown, right-hand similar.

Detach the brake caliper and anchor plate.

- Remove and discard the brake caliper anchor plate retaining bolts.

www.JagDocs.com

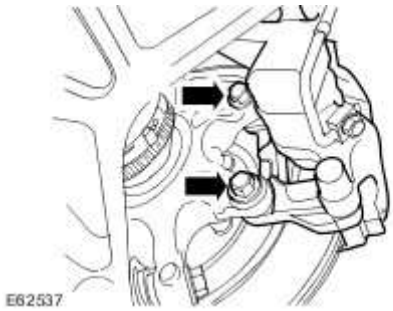

4 . **CAUTION: The brake caliper must be supported at all times.**

NOTE:

Left-hand shown, right-hand similar.

Remove the brake disc.

- Mark the brake disc position in relation to the hub.

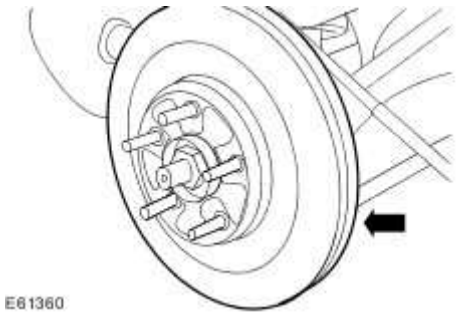

5 . **CAUTION: The brake caliper must be supported at all times.**

NOTE:

Left-hand shown, right-hand similar.

Using a suitable tie strap, secure the brake caliper to the upper arm.

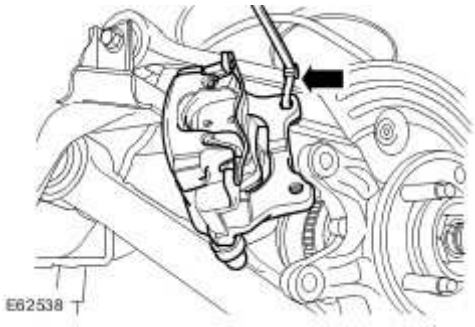

6 . **NOTE:**

Left-hand shown, right-hand similar.

Detach the air springs.

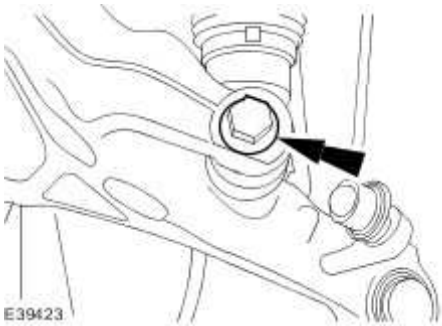

7 . Remove both rear exhaust mufflers and tail pipes.
For additional information, refer to Muffler and Tailpipe (30.10.52)

8 . **CAUTION: Under no circumstances must the flexible coupling (or its fixings) be loosened or removed from the driveshaft.**

Detach the driveshaft from the rear drive axle flange.

- Mark the position of the driveshaft in relation to the rear drive axle flange.
- Mark the position of the balance nut in relation to the rear drive axle flange (if fitted).
- Mark the position of each nut and bolt in relation to the rear drive axle

www.JagDocs.com

flexible joint.

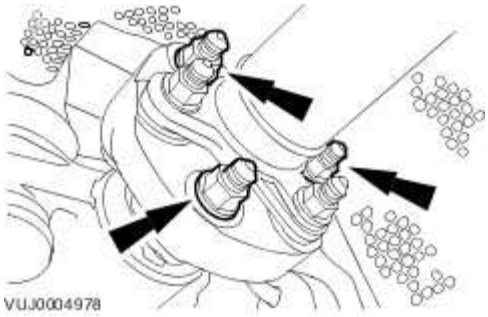

9 . Remove the fuel tank filler pipe to fuel tank hose.

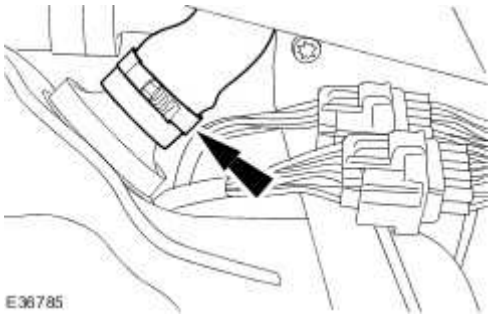

10 . Detach the rear axle electrical connectors.

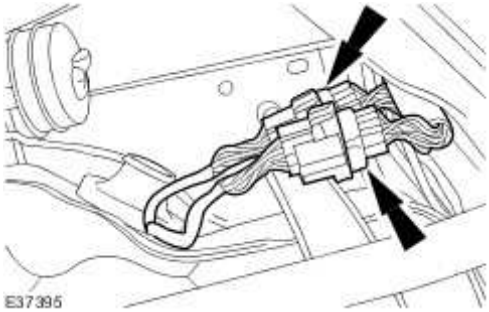

11 . **NOTE:**

Left-hand shown, right-hand similar.

NOTE:

Using a suitable tool, mark the position of the rear subframe to the vehicle body.

Remove the noise, vibration and harshness (NVH) brace retaining bolts.

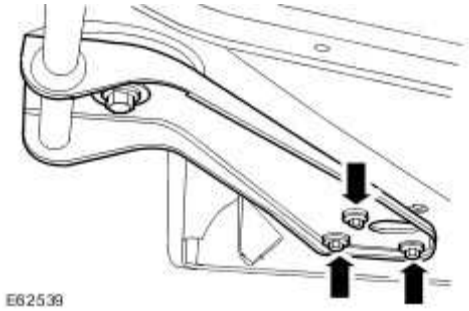

12 . **WARNING: Rotate the special tool height adjustment valve slowly. Failure to follow this instruction may result in personal injury.**

Install the special tool to support the rear subframe.

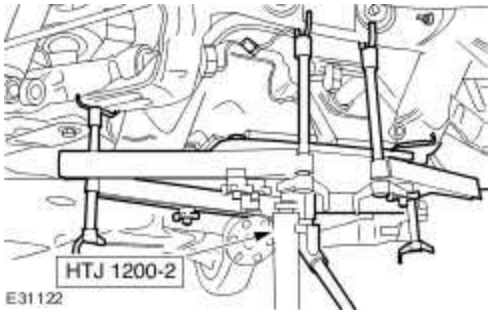

13 . **NOTE:**

Left-hand shown, right-hand similar.

Remove the NVH brace.

- Remove and discard the rear subframe front retaining bolts.

www.JagDocs.com

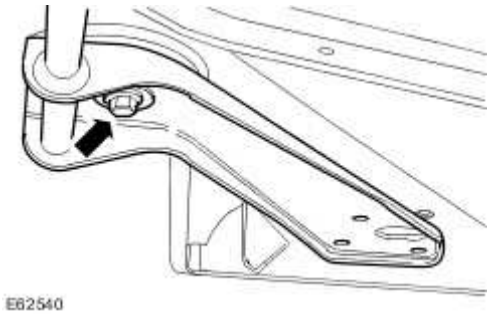

14 . **NOTE:**

Left-hand shown, right-hand similar.

Remove and discard the rear subframe rear retaining bolts.

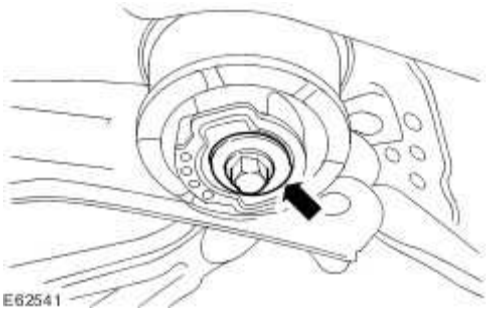

15 . **WARNING: Rotate the special tool height adjustment valve slowly. Failure to follow this instruction may result in personal injury.**

CAUTION: Make sure the rear subframe weight is evenly supported on the special tool. Failure to follow this instruction may result in damage to the vehicle.

CAUTION: Make sure when lowering the rear subframe damage does not occur to the surrounding components.

Using the special tool, lower the rear subframe to a maximum of 152mm (6 inch)

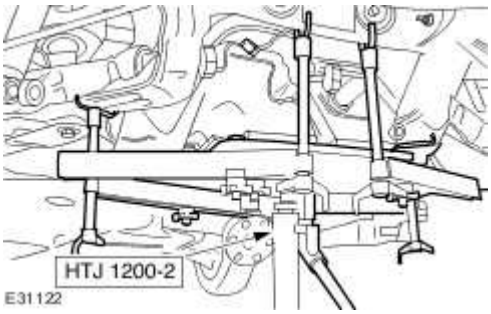

Vehicles with supercharger

16 . **NOTE:**

Rear subframe shown removed for clarity.

Disconnect the fuel pump driver module electrical connector.

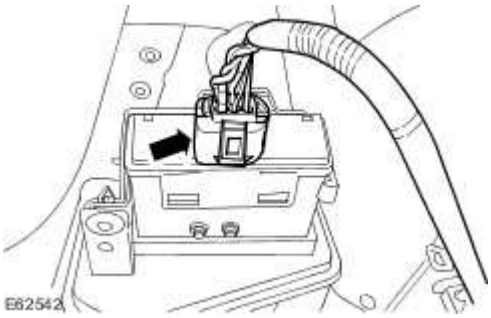

17 . **NOTE:**

Rear subframe shown removed for clarity.

Remove the fuel pump driver module.

- Remove the retaining clip.

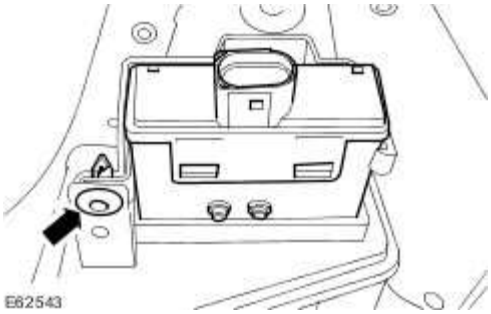

www.JagDocs.com

All vehicles

18 . **NOTE:**

Rear subframe shown removed for clarity.

Disconnect the evaporative emission canister vent solenoid vent hose.

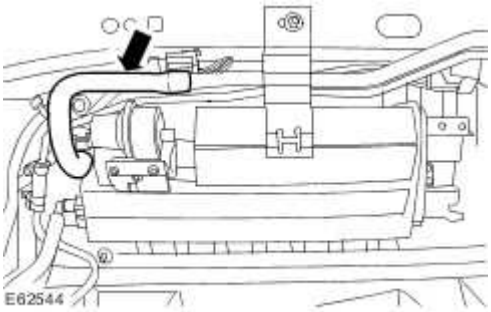

19 . **NOTE:**

Rear subframe shown removed for clarity.

Disconnect the evaporative emission canister vent solenoid electrical connector.

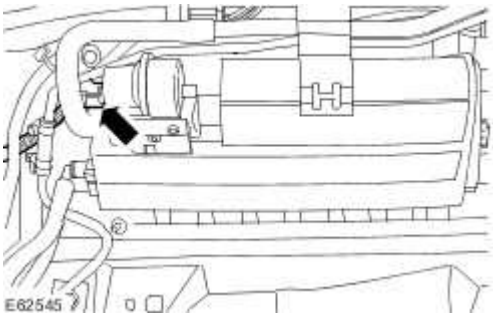

20 . **NOTE:**

Rear subframe shown removed for clarity.

Disconnect the evaporative emission canister vapor pipes.
For additional information, refer to Quick Release Coupling

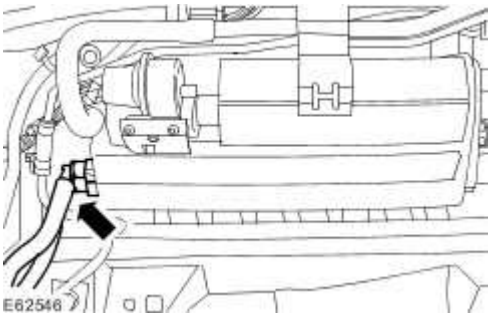

21 . **NOTE:**

Rear subframe shown removed for clarity.

Detach the evaporative emission canister.

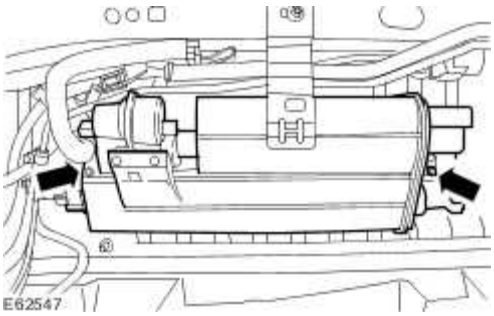

22 . Remove the evaporative emission canister.

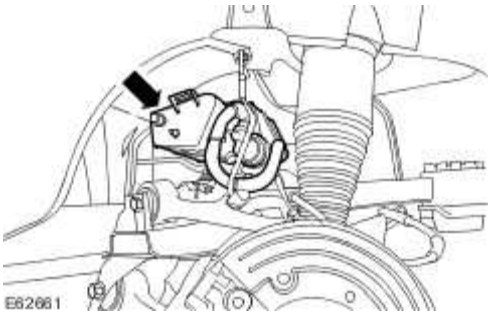

Installation

All vehicles

1 . Install the evaporative emission canister.

www.JagDocs.com

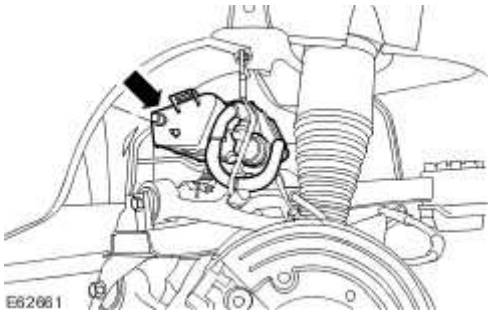

2 . **NOTE:**

Rear subframe shown removed for clarity.

Attach the evaporative emission canister.

Tighten to 7 Nm.

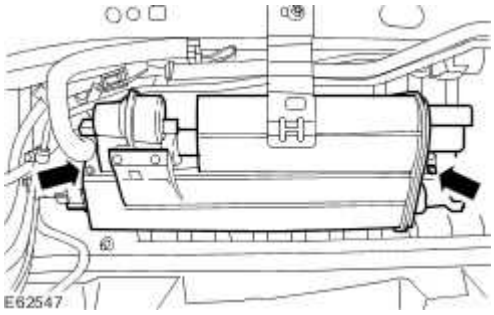

3 . **NOTE:**

Rear subframe shown removed for clarity.

Connect the evaporative emission canister vapor pipes.
For additional information, refer to Quick Release Coupling

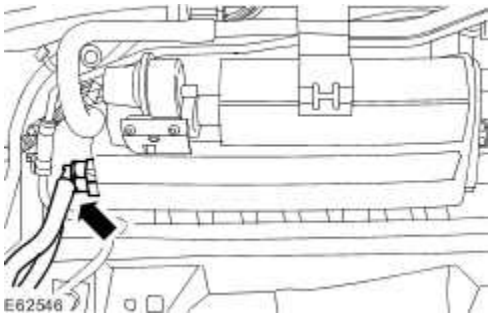

4 . **NOTE:**

Rear subframe shown removed for clarity.

Connect the evaporative emission canister vent solenoid electrical connector.

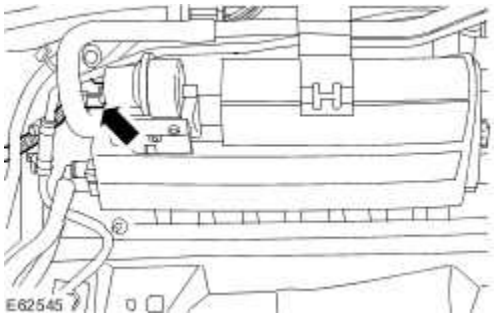

5 . **NOTE:**

Rear subframe shown removed for clarity.

Connect the evaporative emission canister vent solenoid vent hose.

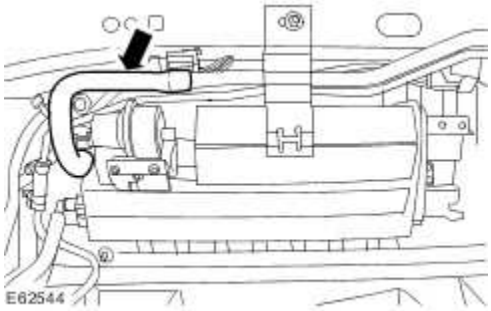

Vehicles with supercharger

6 . **NOTE:**

Rear subframe shown removed for clarity.

Install the fuel pump driver module.

- Install the retaining clip.

www.JagDocs.com

7 . **NOTE:**

Rear subframe shown removed for clarity.

Connect the fuel pump driver module electrical connector.

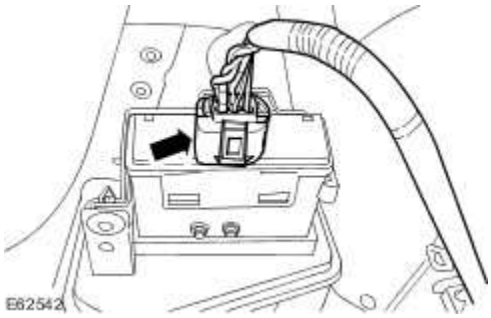

All vehicles

8 . **CAUTION: Make sure the rear subframe weight is evenly supported on the special tool. Failure to follow this instruction may result in damage to the vehicle.**

CAUTION: Make sure when raising the rear subframe damage does not occur to the surrounding components. Failure to follow this instruction may result in damage to the vehicle.

Using the special tool, raise the rear subframe to the vehicle body.

- Align the subframe to the original position in relation to the vehicle body.

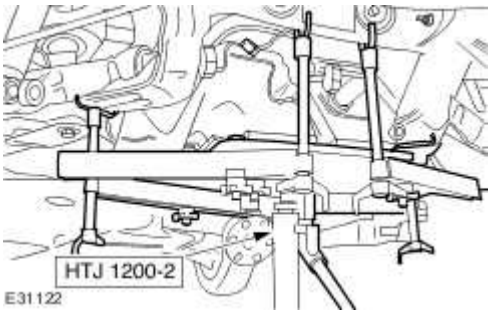

9 . **NOTE:**

Left-hand shown, right-hand similar.

NOTE:

Install new rear subframe retaining bolts.

Loosely install the rear subframe front retaining bolts.

Install the NVH brace

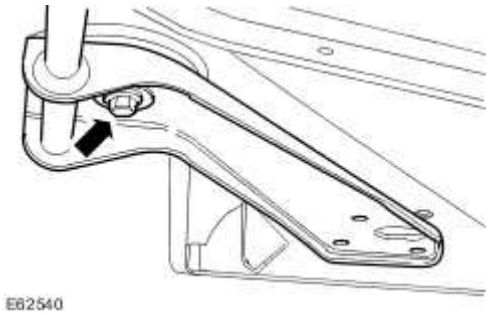

10 . **NOTE:**

Left-hand shown, right-hand similar.

Loosely install the NVH brace retaining bolts.

www.JagDocs.com

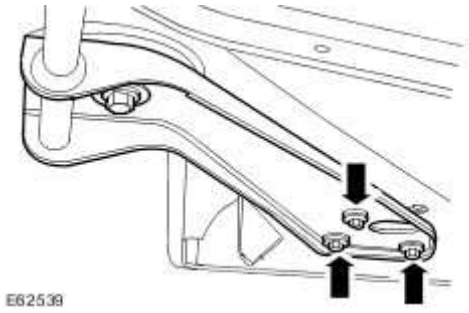

11 . **NOTE:**

Left-hand shown, right-hand similar.

NOTE:

Install new rear subframe retaining bolts.

Install the rear subframe rear retaining bolt.

- Tighten to 125 Nm.
- Align the subframe to the original position in relation to the vehicle body.

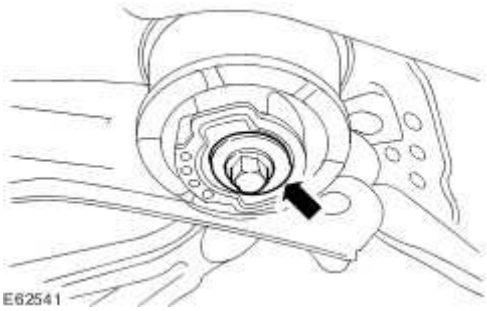

12 . **NOTE:**

Left-hand shown, right-hand similar.

Tighten the rear subframe front retaining bolt.

- Tighten to 125 Nm.

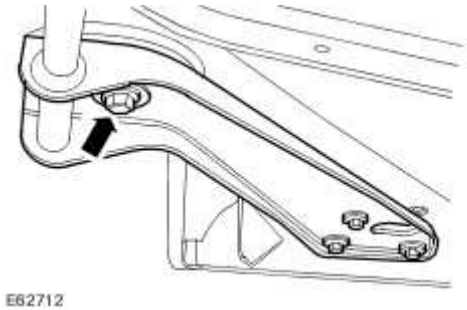

13 . **NOTE:**

Left-hand shown, right-hand similar.

Tighten the NVH brace retaining bolts.

Tighten to 48Nm.

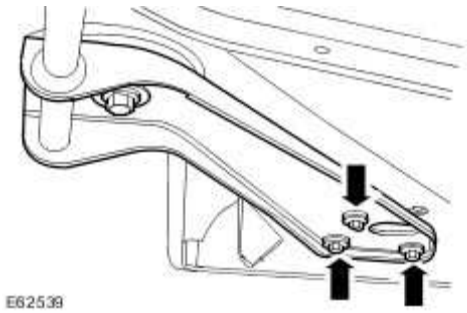

14 . **WARNING: Rotate the special tool height adjustment valve slowly. Failure to follow this instruction may result in personal injury.**

Remove the special tool from the rear subframe.

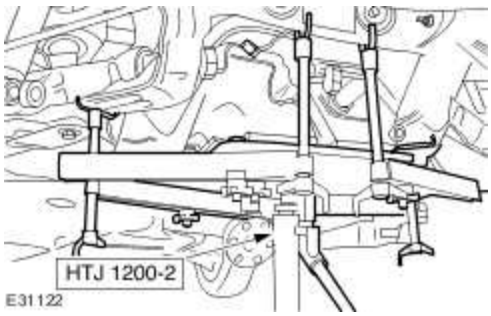

www.JagDocs.com

15 . Attach the rear axle electrical connectors.

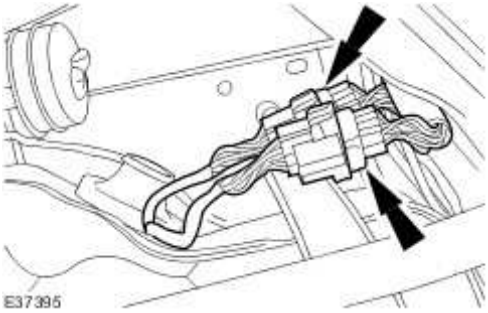

16 . Attach the fuel tank filler pipe to fuel tank hose.

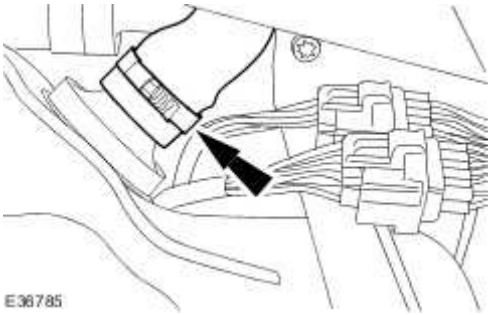

17 . **CAUTION: Under no circumstances must the flexible coupling (or its fixings) be loosened or removed from the driveshaft**

Attach the driveshaft to the rear drive axle flange.

- Install the driveshaft to the original position in relation to the rear drive axle flange.
- Tighten to 88 Nm.
- If a balance nut is fitted, install onto the original bolt position and tighten to 12 Nm .

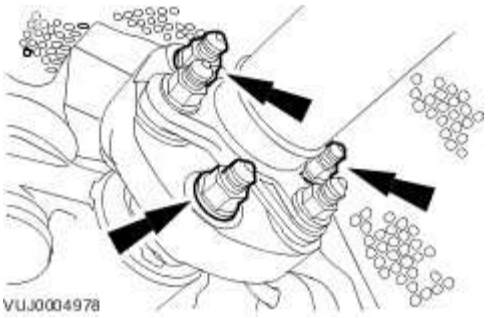

18 . **NOTE:**

Left-hand shown, right-hand similar.

Tighten to 133 Nm.

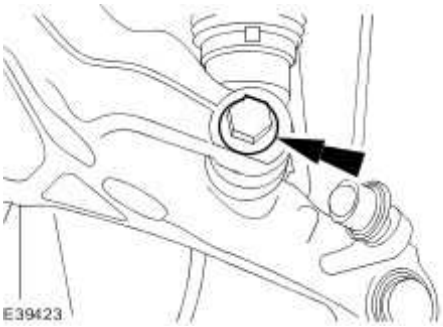

19 . **NOTE:**

Left-hand shown, right-hand similar.

Install the brake disc.

- Install the brake disc to the original position in relation to the hub.

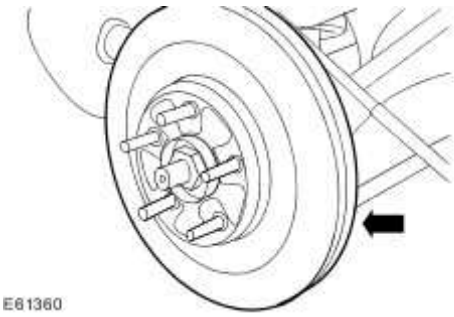

www.JagDocs.com

20 . **CAUTION: The brake caliper must be supported at all times.**

NOTE:

Left-hand shown, right-hand similar.

NOTE:

Remove and discard the securing tie strap.

NOTE:

Install new brake caliper anchor plate retaining bolts.

Attach the brake caliper and anchor plate.

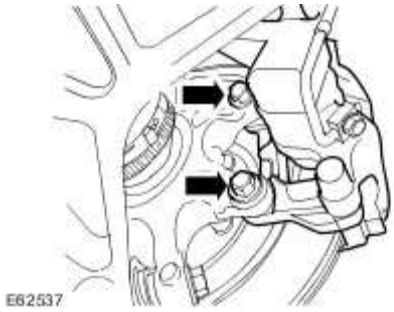

21 . Install the rear wheels and tires.
For additional information, refer to Wheel and Tire (74.20.05)

22 . Lower the vehicle.

23 . Fill the fuel tank with fuel.

Evaporative Emission Canister Purge Valve - VIN Range: G00442->G45703 (17.15.30)

Removal

1 . Raise and support the vehicle. <<100-02>>

2 . Remove the left-hand front wheel and tire. <<204-04>>

3 . Remove the left-hand front fender splash shield. <<501-02>>

4 . Remove the bulkhead drain tube.

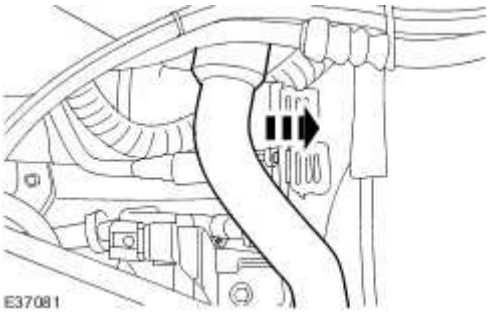

5 . Disconnect the evaporative emission canister purge valve electrical connector.

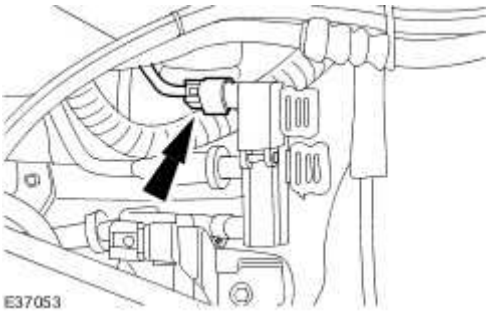

6 . Disconnect the evaporative emission canister purge valve outlet hose.

www.JagDocs.com

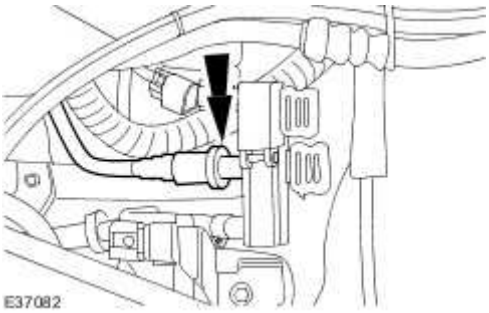

7 . Disconnect the evaporative emission canister purge valve inlet hose.

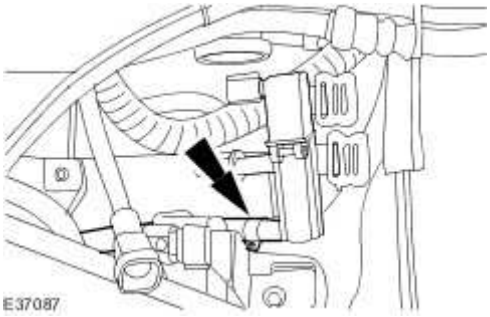

8 . Remove the evaporative emission canister purge valve.

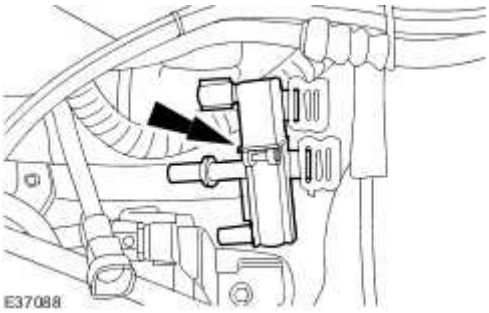

Installation

1 . To install, reverse the removal procedure.

Evaporative Emission Canister Purge Valve - 3.0L NA V6 - AJ27, VIN Range: G45704->G99999 (17.15.30)

Removal

1 . Remove the engine cover.

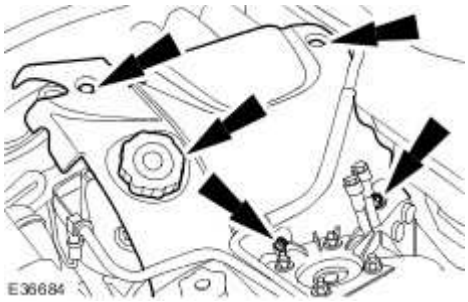

2 . Disconnect the evaporative emission canister purge valve hose.

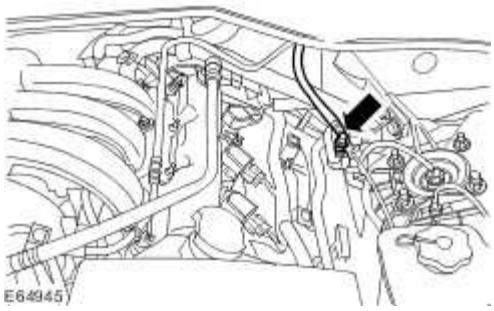

3 . Detach the evaporative emission canister purge valve hose.

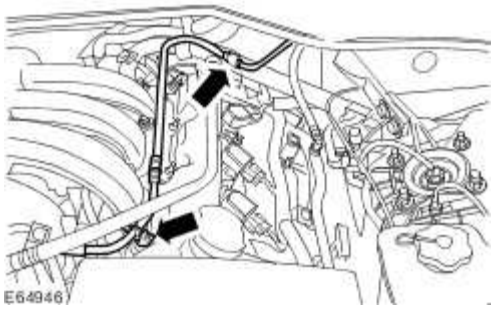

4 . Disconnect the evaporative emission canister purge valve electrical connector.

www.JagDocs.com

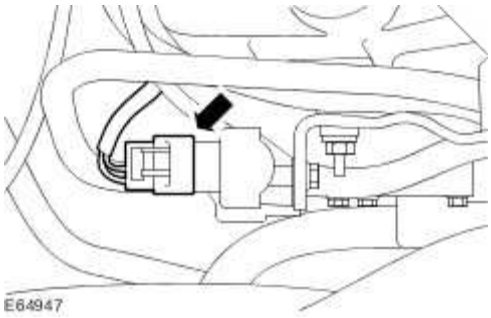

5 . Remove the evaporative emission canister purge valve retaining bolt.

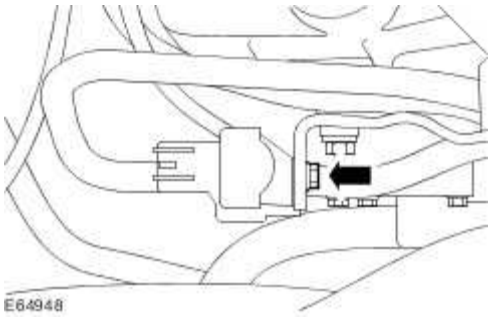

6 . Remove the evaporative emission canister purge valve.

- Disconnect the evaporative emission canister purge valve hose.

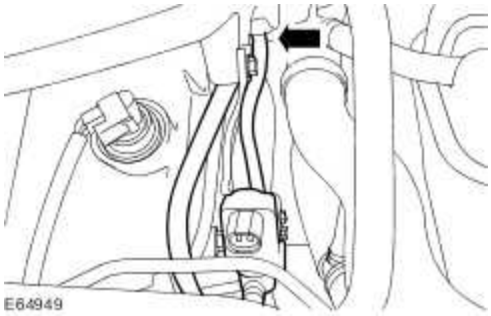

Installation

1 . To install, reverse the removal procedure.

- Tighten to 6 Nm.

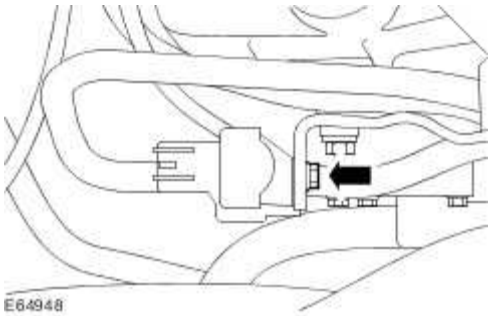

www.JagDocs.com

Evaporative Emission Canister Purge Valve - 4.2L SC V8 - AJV8/3.5L NA V8 - AJV8, VIN Range: G45171->G99999 (17.15.30)

Removal

1 Remove the throttle body.

. For additional information, refer to Throttle Body - 4.2L SC V8 - AJV8, VIN Range: G45704->G99999 (19.70.04)

2 . Disconnect the evaporative emission canister purge valve hose.

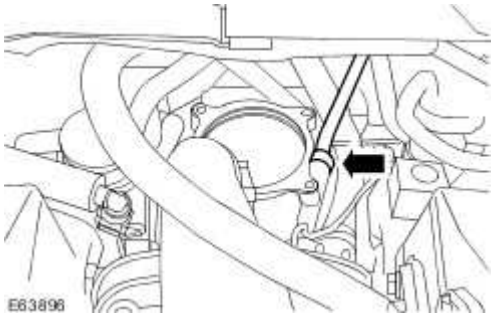

3 . Disconnect the evaporative emission canister purge valve hose.

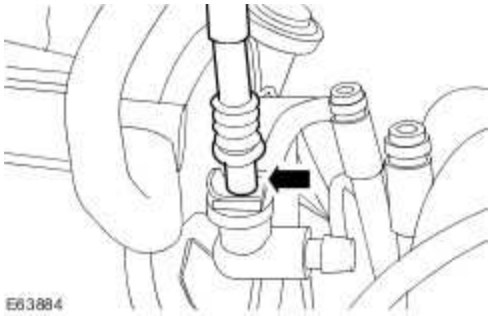

4 . Disconnect the evaporative emission canister purge valve electrical connector.

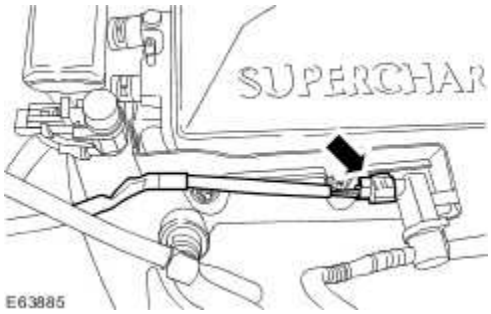

5 . Remove the evaporative emission canister purge valve.

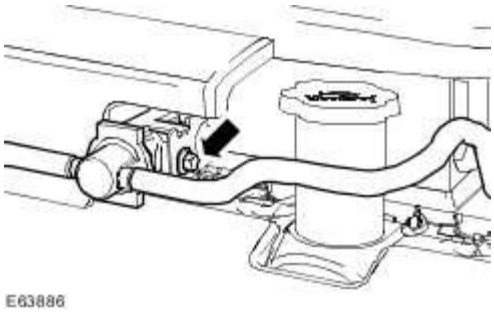

Installation

1 . To install, reverse the removal procedure.

Tighten to 10 Nm.

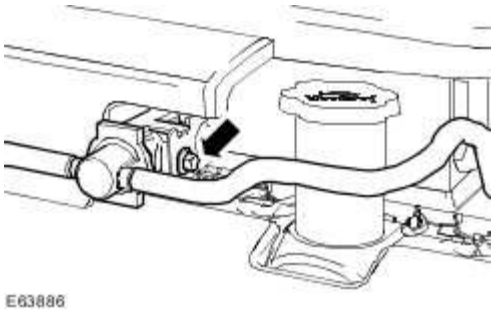

www.JagDocs.com

Evaporative Emission Canister Purge Valve - 4.2L NA V8 - AJV8/3.5L NA V8 - AJV8, VIN Range: G45171->G99999 (17.15.30)

Removal

1 . Remove the engine cover.

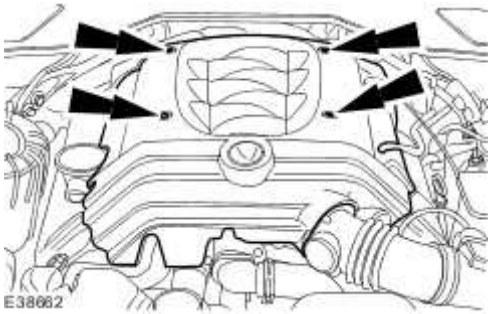

2 . Disconnect the evaporative emission canister purge valve hose.

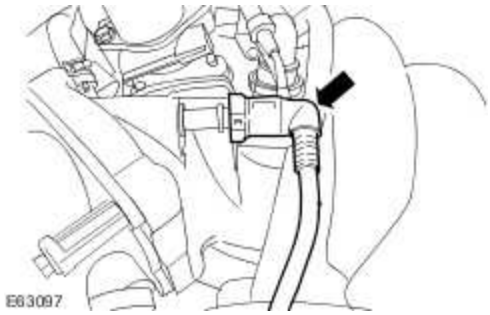

3 . Disconnect the evaporative emission canister purge valve hose.

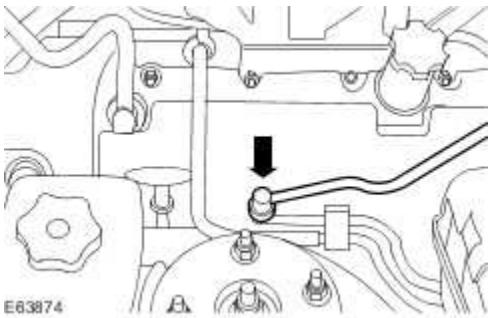

4 . Disconnect the evaporative emission canister purge valve electrical connector.

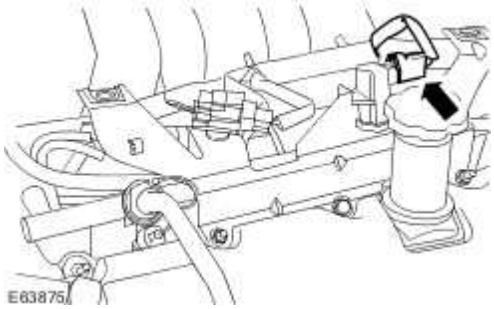

5 . Remove the evaporative emission canister purge valve retaining bolt.

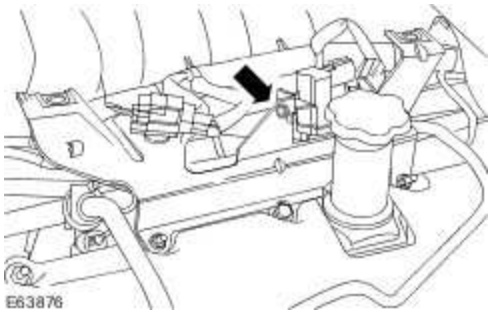

6 . Reposition the engine cover left-hand mounting bracket.

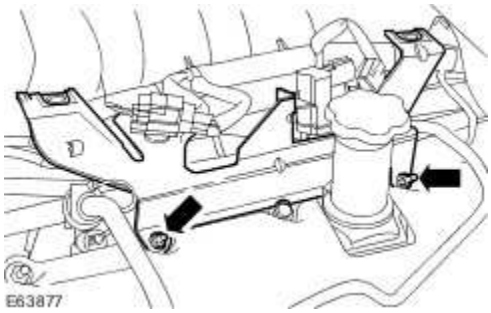

7 . Remove the evaporative emission canister purge valve.

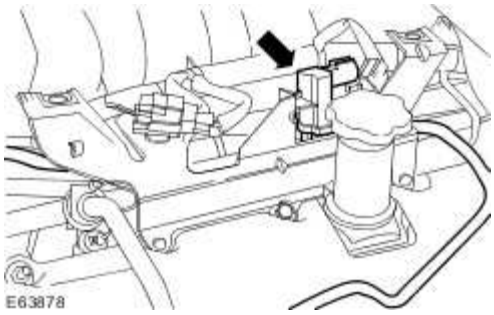

www.JagDocs.com

Installation

1 . To install, reverse the removal procedure.

Tighten to 10 Nm.

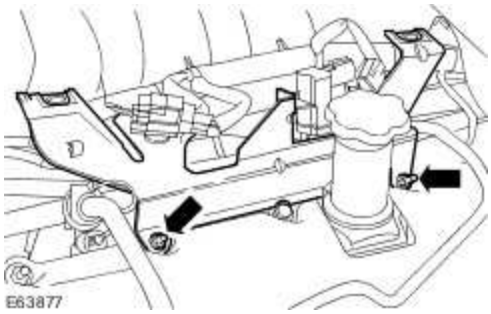

2 . Tighten to 10 Nm.

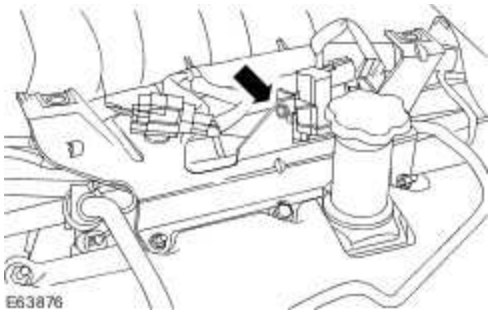

Evaporative Emission Canister Vent Solenoid (17.15.45)

Removal

WARNING: Do not smoke or carry lighted tobacco or open flame of any type when working on or near any fuel related components. Highly flammable vapors are always present and may ignite. Failure to follow these instructions may result in personal injury.

WARNING: Do not carry or operate cellular phones when working on or near any fuel related components. Highly flammable vapours are always present and may ignite. Failure to follow these instructions may result in personal injury.

1 . Raise and support the vehicle.
For additional information, refer to Lifting

2 . Disconnect the evaporative emission canister vent solenoid vapor hose.

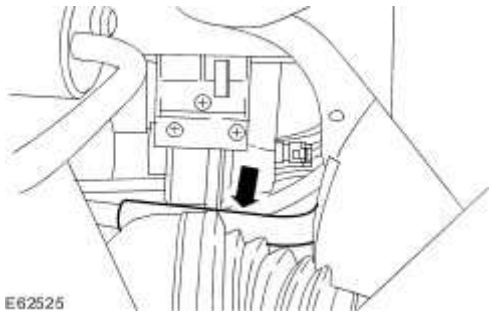

3 . Disconnect the evaporative emission canister vent solenoid electrical connector.

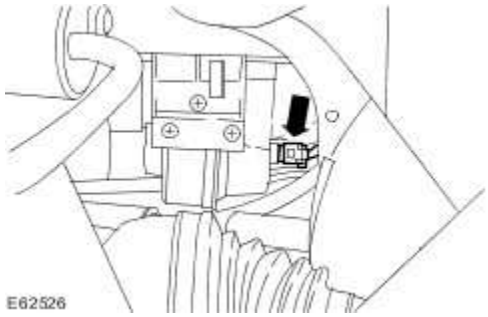

www.JagDocs.com

4 Remove the evaporative emission canister vent solenoid.

.

- Remove and discard the evaporative emission canister vent solenoid O-ring seal.

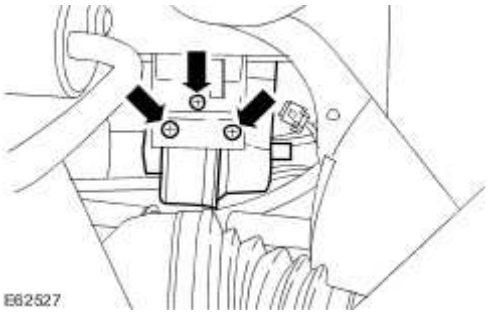

Installation

1 . **NOTE:**

Install a new evaporative emission canister vent solenoid O-ring seal.

To install, reverse the removal procedure.

- Tighten to 6 Nm.

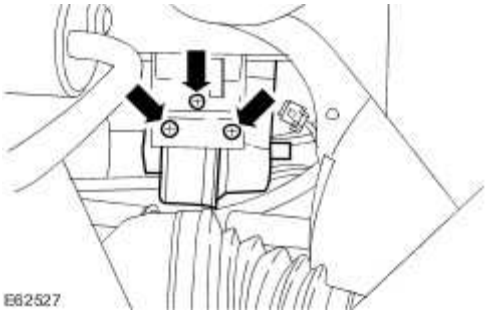

Fuel Tank Pressure Sensor (19.55.31)

Removal

1 . Remove the fuel tank. <<310-01>>

2 . Disconnect the fuel pressure sensor electrical connector.

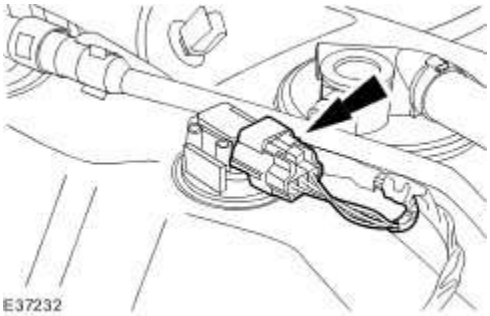

3 . Remove the fuel pressure sensor.

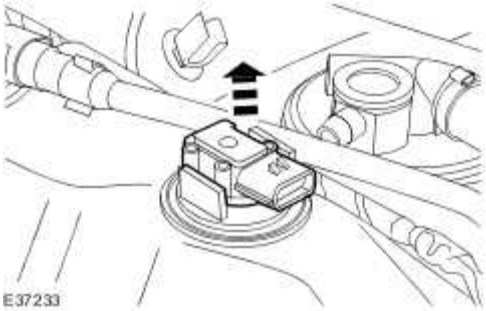

Installation

1 . To install, reverse the removal procedure.

www.JagDocs.com

Specifications

Torque Specifications

Description	Nm	lb-ft	lb-in
Camshaft position (CMP) sensor retaining bolt	7	-	62
Heated oxygen sensor (H02S)	40	30	-
Catalyst monitor sensor	40	30	
Crankshaft position (CKP) sensor retaining bolt	7	-	62
Knock sensor retaining bolt	25	18	-
Variable camshaft timing oil control solenoid retaining bolt	10	-	89
Intake manifold tuning (IMT) valve retaining bolts	10	-	89
Engine coolant temperature (ECT) sensor	17	13	-
Manifold absolute pressure (MAP) sensor retaining screws	10	-	89
Oil temperature sensor	15	11	-
Fuel rail pressure (FRP) sensor retaining bolts	10	-	89
Fuel rail pressure (FRP) sensor bracket upper retaining bolts	6	-	53
Fuel rail pressure (FRP) sensor bracket lower retaining bolt	10	-	89
Engine control module (ECM) electrical connector retaining bolt	5	-	44

Lubricants, fluids, sealers and adhesives

Description	Specification
Sealant	WSK-M4G-328-A3

Brake Pedal Position (BPP) Switch Adjustment

No Data Available

www.JagDocs.com

Electronic Engine Controls

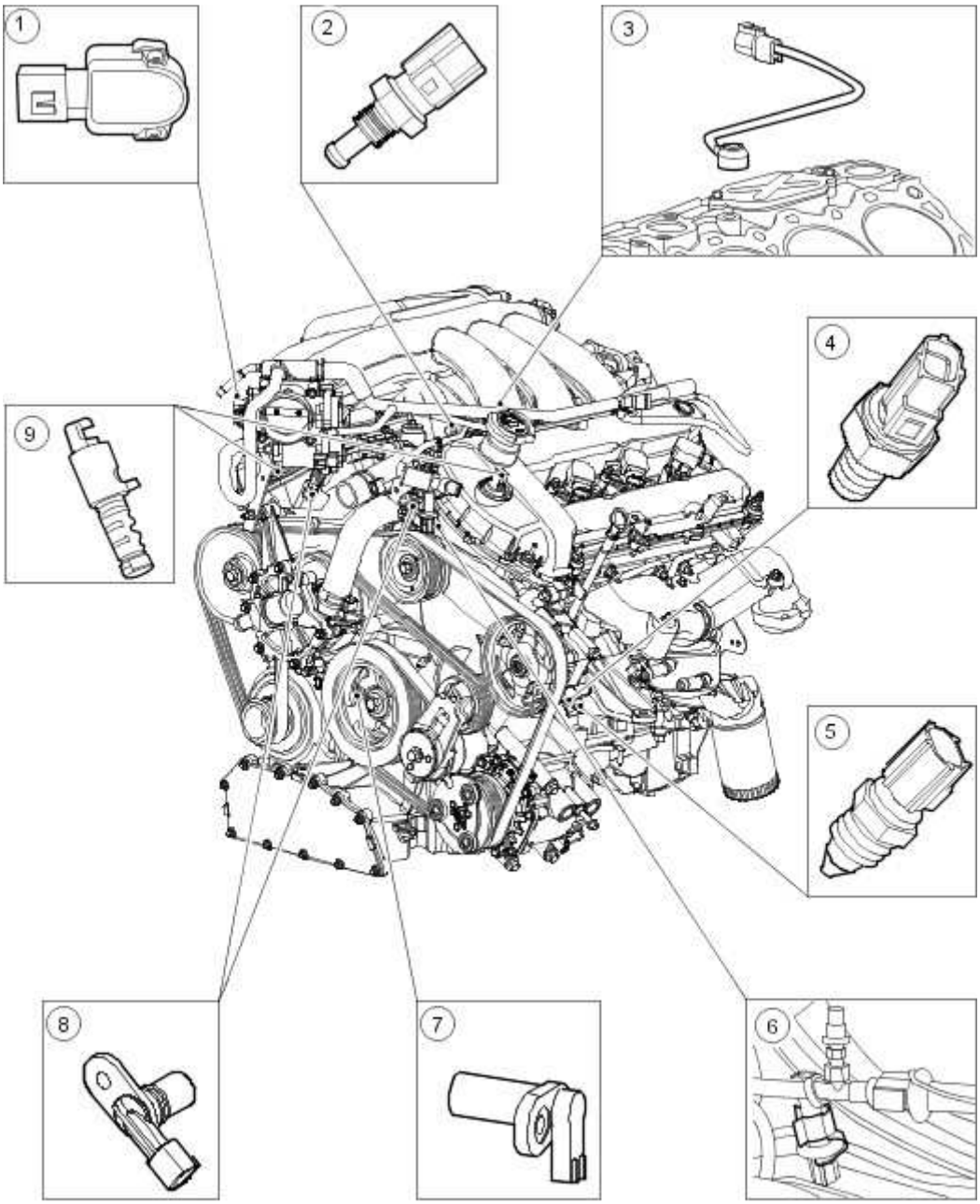

Item	Part Number	Description
1	—	Throttle position (TP) sensor
2	—	Engine coolant temperature (ECT) sensor

3	—	Knock sensor - LH
4	—	Oil pressure sensor
5	—	Oil temperature sensor
6	—	Fuel temperature sensor
7	—	Crankshaft position (CKP) sensor
8	—	Camshaft position (CMP) sensor
9	—	Variable camshaft timing oil control solenoid

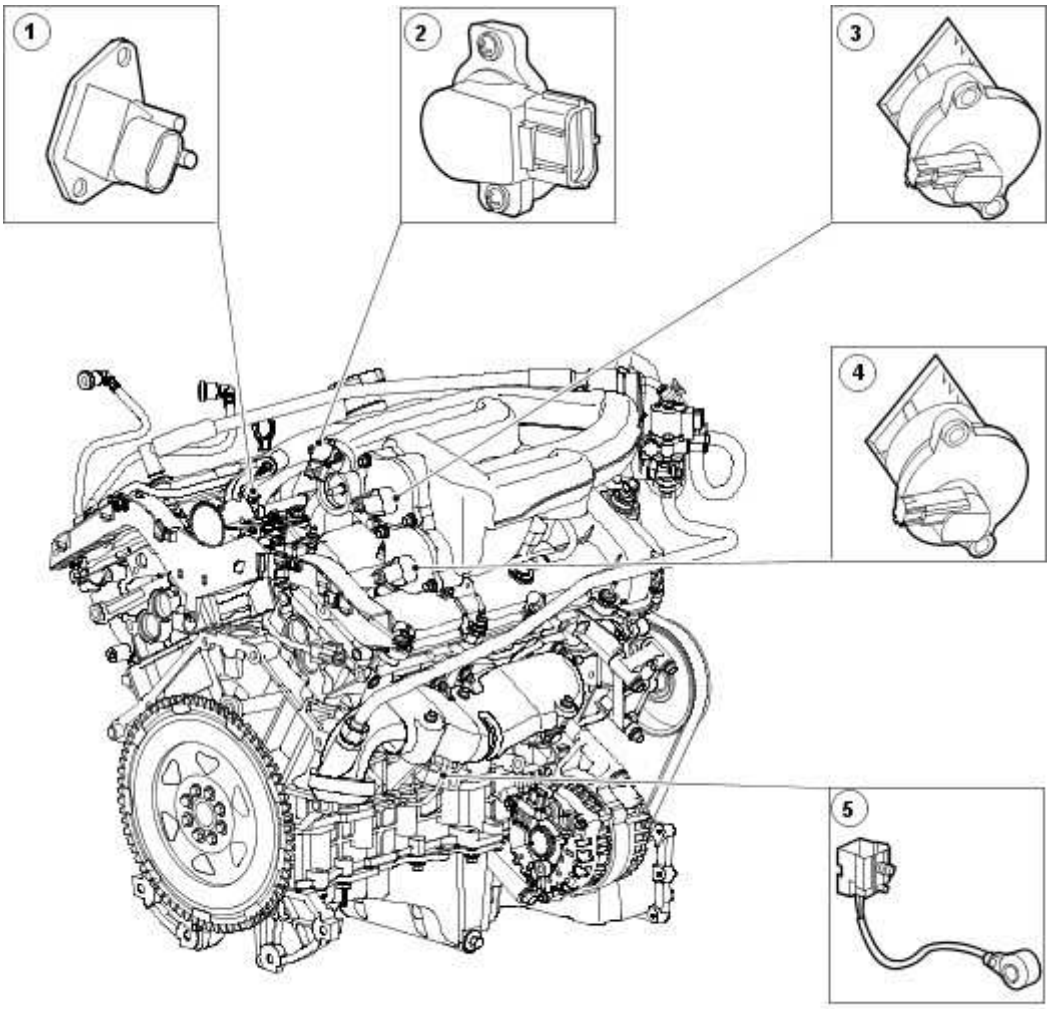

E37303

Item	Part Number	Description
1	—	Fuel rail pressure (FRP) sensor

www.JagDocs.com

2	—	Manifold absolute pressure (MAP) sensor
3	—	Intake manifold tuning (IMT) valve
4	—	Intake manifold tuning (IMT) valve
5	—	Knock sensor - RH

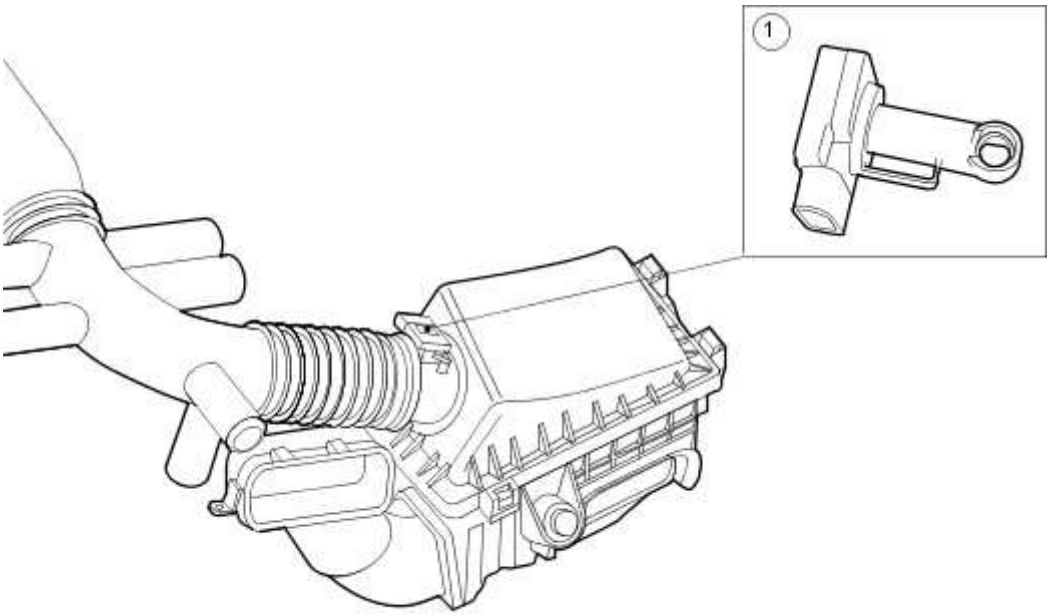

E30344

Item	Part Number	Description
1	—	Mass air flow (MAF) sensor

www.JagDocs.com

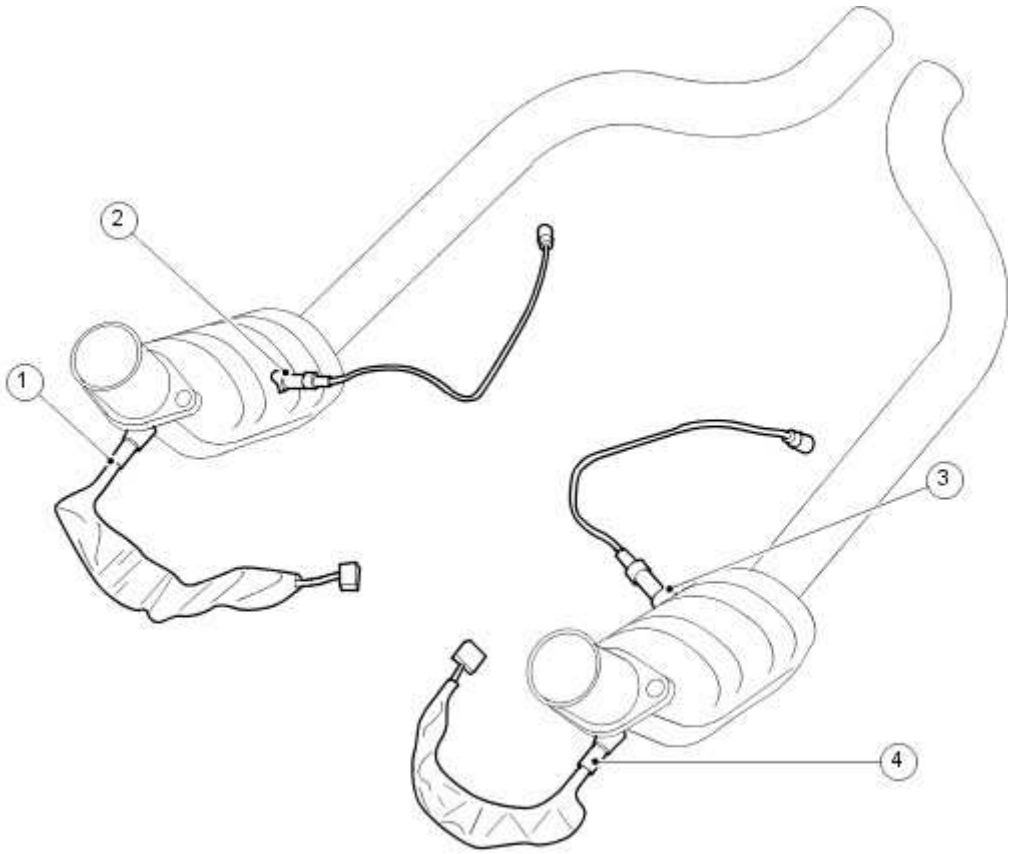

E30438

Item	Part Number	Description
1	—	Heated oxygen sensor (HO2S) - RH
2	—	Catalyst monitor sensor - RH
3	—	Catalyst monitor sensor - LH
4	—	Heated oxygen sensor (HO2S) - LH

Engine Control Module (ECM)

The electronic engine control system consists of a engine control module (ECM), located behind the glove compartment, and a number of sensing and actuating devices. The sensors supply the ECM with input signals which relate to the engine operating conditions and driver requirements. The sensor information is evaluated by the ECM using the results to activate the appropriate response from the actuating devices. The system provides the necessary engine control accuracy and adaptability to:

minimize exhaust emissions and fuel consumption.

www.JagDocs.com

provide optimum driver control under all conditions.

minimize evaporative emissions.

provide system diagnostics.

In addition to these functions the ECM also interfaces with other vehicle systems through the controller area network (CAN).

Camshaft Position (CMP) Sensor

The camshaft position (CMP) sensors monitor the position of both camshafts to allow the ECM to control the phase of the inlet camshafts relative to the position of the crankshaft.

Variable Camshaft Timing Oil Control Solenoid

The variable camshaft timing oil control solenoid is a hydraulic actuator, which advances and retards the inlet camshaft timing, thereby altering the camshaft to crankshaft phasing for optimum engine performance.

Intake Manifold Tuning (IMT) Valve

There are two intake manifold tuning (IMT) valves, an upper and a lower, sometimes referred to as number one and two respectively. They are a two position (open and close) device used to create a variable air intake system. The IMT valve positions are switched by signals from the ECM to optimize torque across the engine's speed and load range. The upper IMT valve opens between 4,100 and 6,150 rpm while the lower IMT valve opens between 3,900 and 6,150 rpm.

Knock Sensors (KS)

The knock sensors (KS) detect combustion knock within the engine cylinders and sends a signal to the ECM. The ECM uses this information to gradually adjust the ignition timing until the combustion knock is eliminated.

Mass Air flow (MAF) Sensor

The mass air flow (MAF) sensor informs the ECM of the rate of air flow entering the engine by producing a voltage which is proportional to the rate of air flow into the engine. The voltage produced by the MAF sensor increases as the rate of air flow increases. The ECM also takes into account the density of the air entering the air intake system so that it is possible to maintain the required air to fuel ratio, and to compensate for variations in atmospheric pressure.

Integral to the MAF sensor is the intake air temperature sensor (IAT) which measures the temperature of the air entering the air intake system. The ECM uses this information to compensate for higher than normal air intake temperatures.

Fuel Rail Pressure (FRP) Sensor

The fuel rail pressure (FRP) sensor is a pressure transducer device. A vacuum pipe connects to the intake manifold for manifold pressure. The ECM receives a voltage from the FRP sensor which is proportional to the fuel pressure in the fuel injection supply manifold.

Throttle Position (TP) Sensor

The ECM monitors the angle of the throttle blade within the throttle housing through the throttle position (TP) sensor. The TP sends a voltage to the ECM which is proportional to the angle of the throttle plate. The voltage from the TP increases with the angle of the throttle plate. There are two sensor tracks within the TP sensor.

Crankshaft Position (CKP) Sensor

The crankshaft position (CKP) sensor is an inductive pulse generator, which scans protrusions on a pulse ring fitted to the front of the crankshaft to inform the ECM of the crankshaft's position and speed. The CKP sensor produces an alternating voltage. The frequency of this voltage increases proportional to engine speed.

Engine Coolant Temperature (ECT) Sensor

The engine coolant temperature (ECT) sensor is a thermistor type sensor that provides an input signal to the ECM which is proportional to the engine coolant temperature. The ECT sensor is a negative temperature coefficient (NTC) sensor and its resistance decreases with a proportional increase in engine coolant temperature.

Oil Temperature Sensor

The oil temperature sensor is a thermistor type sensor that provides an input signal to the ECM which is proportional to the engine oil temperature.

Oil Pressure Switch

The oil pressure switch is connected to the instrument cluster and is not directly part of the electronic engine control system.

Heated Oxygen Sensor (HO2S)

The heated oxygen sensor (HO2S) is a linear characteristic type sensor, fitted forward of the exhaust system's catalytic converter. The ECM uses this as it's primary sensor to measure the oxygen content of the exhaust gasses within the exhaust system to provide closed-loop fuelling control.

Catalyst Monitor Sensor

The catalyst monitor sensor is a non-linear characteristic type sensor fitted to the exhaust system's catalytic converter. The ECM uses this as it's secondary sensor to measure the oxygen content of the exhaust gasses within the exhaust after they have passed through the catalytic converter. As well as providing additional closed-loop fuelling control the ECM uses this information to determine the efficiency of the catalytic converter.

www.JagDocs.com

Electronic Engine Controls - VIN Range: G00442->G45703

Inspection and Verification

1 . Verify the customer concern.

2 . Confirm which, if any, warning lights and/or messages were displayed on the instrument cluster.

NOTE:

If any warning lights and/or messages were displayed when the fault occurred, refer to the driver information table for Diagnostic Trouble Codes (DTCs) associated with the display, then to the DTC index table for possible sources and actions. Some warnings will appear to clear when the ignition is cycled. This is often because the warning has flagged as a result of one of the vehicle's on-board diagnostic routines having run to detect the fault. If the same routine is not run when the ignition is switched **ON**, the warning will not reflag until the routine does run. See the DTC summaries for drive cycle routines.

3 . Visually inspect for obvious signs of mechanical or electrical damage.

Visual Inspection Chart

Mechanical	Electrical
Engine oil level	
Cooling system coolant level	Fuses
Fuel level	Wiring harness
Fuel contamination/grade/quality	Electrical connector(s)
Throttle body	Sensor
Poly-vee belt	

Electronic Engine Controls - VIN Range: G45704->G99999

Overview

There are changes to the engine management system (EMS) for 2006 my, the most obvious of which will be the change to 7-digit diagnostic trouble codes (DTCs) from the familiar 5-digit, plus the addition of secondary air injection, changes to evaporative emissions and exhaust gas recirculation to comply with stage four emissions requirements.

For more information on these systems,
Engine Emission Control - VIN Range: G45704->G99999
Evaporative Emissions - VIN Range: G45704->G99999

Inspection and Verification

1 . Verify the customer concern.

2 . Visually inspect for obvious signs of mechanical or electrical damage.

Visual Inspection Chart

Mechanical	Electrical
Engine oil level and condition Cooling system coolant level Fuel level Fuel contamination/grade/quality Throttle body Poly-vee belt Air cleaner condition	Fuses Wiring harness Electrical connector(s) Sensor(s) Engine control module (ECM) Transmission control module (TCM)

1 . Verify the following systems are working correctly:

Air intake system

Cooling system

Charging system

Fuel charging system

Ignition system

www.JagDocs.com

2 . If an obvious cause for an observed or reported symptom is found, correct the cause (if possible) before proceeding to the next step.

3 . If the cause is not visually evident, use the Jaguar approved diagnostic system or a scan tool to retrieve the fault codes before proceeding to the DTC Index, or the symptom chart if no DTCs are set.

Symptom Chart

Symptom (general)	Symptom (specific)	Possible source	Action
Non-Start	Engine does not crank	Security system /Immobiliser engaged Engine in shut-down mode ECM relay Battery Park/Neutral switch Starting system Harness Engine seized	Check that the security system is disarmed. Check for DTCs. For ECM relay tests, GO to Pinpoint Test G531330p32. For battery information, Battery For Park/Neutral tests, External Controls For starting system, For engine information, Engine
	Engine cranks, but does not fire	Engine breather system disconnected/restricted Ignition system Fuel system Harness Crankshaft position (CKP) sensor ECM fault	Check the engine breather system, Engine Emission Control - VIN Range: G45704->G99999 For ignition system tests, Engine Ignition - VIN Range: G45704->G99999 For fuel system, Fuel Charging and Controls - VIN Range: G45704->G99999 For CKP tests, GO to Pinpoint Test G531330p17. Refer to the warranty policy and procedures manual if an ECM is suspect.
	Engine cranks and fires, but will not start	Evaporative emissions purge valve Fuel pump	For purge valve tests, Evaporative Emissions - VIN Range: G45704->G99999 For fuel pump circuit tests,

		Spark plugs Check for water ingress into spark plug wells HT short to ground (tracking) check rubber boots for cracks/damage Ignition coil failure(s) Harness	Fuel Charging and Controls - VIN Range: G45704->G99999 For ignition system, Engine Ignition - VIN Range: G45704->G99999
Difficult to start	Difficult to start cold	Coolant anti-freeze content Battery CKP sensor Exhaust gas recirculation (EGR) valve stuck open Fuel pump Purge valve	Check the coolant anti-freeze content. For battery information, Battery For CKP sensor tests, GO to Pinpoint Test G531330p17. For EGR valve tests, Engine Emission Control - VIN Range: G45704->G99999 Check the fuel pressure, Fuel Tank and Lines - 4.2L NA V8 - AJV8/4.2L SC V8 - AJV8/3.0L NA V6 - AJ27/3.5L NA V8 - AJV8, VIN Range: G45704->G99999 For purge valve tests, Evaporative Emissions - VIN Range: G45704->G99999
	Difficult to start hot	Injector leak Engine fuel temperature (EFT) sensor Intake air temperature (IAT) sensor Mass air flow (MAF) sensor Purge valve Fuel pump Ignition system	For injector information, Fuel Charging and Controls - VIN Range: G45704->G99999 For EFT sensor tests, GO to Pinpoint Test G531330p34. For IAT sensor tests, GO to Pinpoint Test G531330p2. For MAF sensor tests, GO to Pinpoint Test G531330p1. For purge valve tests, Evaporative Emissions - VIN Range: G45704->G99999

www.JagDocs.com

	Difficult to start after hot soak (vehicle standing after engine has reached operating temperature)	Injector leak EFT sensor IAT sensor MAF sensor Purge valve Fuel pump Ignition system	
	Engine cranks too fast/slow	Compressions high/low Battery Starting system	Check compressions, Engine For battery information, Battery For starting system,
Engine stalls	Engine stalls soon after start	Breather system disconnected/restricted ECM relay Harness MAF sensor Ignition system Fuel lines Fuel rail pressure (FRP) sensor Air filter restricted Air leakage	Check the engine breather system, Engine Emission Control - VIN Range: G45704->G99999 For ECM relay tests, GO to Pinpoint Test G531330p32. For MAF sensor tests, GO to Pinpoint Test G531330p1. For ignition system tests, Engine Ignition - VIN Range: G45704->G99999 Check the fuel lines, Fuel Tank and Lines - 4.2L NA V8 - AJV8/4.2L SC V8 - AJV8/3.0L NA V6 - AJ27/3.5L NA V8 - AJV8, VIN Range: G45704->G99999 For FRP sensor tests, GO to Pinpoint Test G531330p21. For air filter and intake system information, Intake Air Distribution and Filtering - VIN Range: G45704->G99999
	Engine stalls on	ECM relay	For ECM relay tests, GO to Pinpoint Test G531330p32.

	overrun	Throttle position (TP) sensors	For TP sensor tests, GO to Pinpoint Test G531330p4. and GO to Pinpoint Test G531330p5.
	Engine stalls at steady speed	ECM relay CKP sensor TP sensors Harness	For ECM relay tests, GO to Pinpoint Test G531330p32. For CKP sensor tests, GO to Pinpoint Test G531330p17. For TP sensor tests, GO to Pinpoint Test G531330p4. and GO to Pinpoint Test G531330p5.
	Engine stalls with speed control enabled	ECM relay Harness	For ECM relay tests, GO to Pinpoint Test G531330p32.
	Engine stalls when maneuvering	ECM relay TP sensors Additional engine loads (PAS, air conditioning, etc) Transmission malfunction Controller area network (CAN) network malfunction	For ECM relay tests, GO to Pinpoint Test G531330p32. For TP sensor tests, GO to Pinpoint Test G531330p4. and GO to Pinpoint Test G531330p5. For accessory drive information, For transmission information, For CAN network tests,
Poor driveability	Engine hesitates/poor acceleration	Fuel pump Fuel pressure Fuel lines Injector leak Air leakage TP sensors Throttle motor Ignition system EGR valve stuck open	Check the fuel pressure, check the fuel lines, Fuel Tank and Lines - 4.2L NA V8 - AJV8/4.2L SC V8 - AJV8/3.0L NA V6 - AJ27/3.5L NA V8 - AJV8, VIN Range: G45704->G99999 For injector information, Fuel Charging and Controls - VIN Range: G45704->G99999 For intake system, Intake Air Distribution and Filtering - VIN Range: G45704->G99999 For TP sensor tests, GO to Pinpoint Test G531330p4.

www.JagDocs.com

		HO2 sensors Transmission malfunction Restricted pedal travel (carpet, etc) Accelerator pedal position (APP) sensor	and GO to Pinpoint Test G531330p5. For throttle motor tests, GO to Pinpoint Test G531330p24. For ignition system tests, Engine Ignition - VIN Range: G45704->G99999 For EGR valve tests, Engine Emission Control - VIN Range: G45704->G99999 Check for DTCs relating to HO2 sensors. Refer to the DTC index for pinpoint tests for DTC set. For transmission information, Check accelerator pedal travel. For APP sensor tests, GO to Pinpoint Test G531330p22. and GO to Pinpoint Test G531330p23.
	Engine backfires	Fuel pump Fuel lines Air leakage MAF sensor HO2 sensors Ignition system Sticking variable camshaft timing (VCT) hub APP sensor	For fuel pump and line tests, Fuel Tank and Lines - 4.2L NA V8 - AJV8/4.2L SC V8 - AJV8/3.0L NA V6 - AJ27/3.5L NA V8 - AJV8, VIN Range: G45704->G99999 For intake system, Intake Air Distribution and Filtering - VIN Range: G45704->G99999 For MAF sensor tests, GO to Pinpoint Test G531330p1. Check for DTCs relating to HO2 sensors. Refer to the DTC index for pinpoint tests for DTC set. For ignition system tests, Engine Ignition - VIN Range: G45704->G99999 For VCT information, Variable Camshaft Timing (VCT) Oil Control Solenoid (18.30.90) For APP sensor tests, GO to Pinpoint Test G531330p22. and GO to Pinpoint Test

			G531330p23.
	Engine surges	Fuel pump Fuel lines MAF sensor Harness TP sensors Throttle motor Ignition system	For fuel pump and line tests, Fuel Tank and Lines - 4.2L NA V8 - AJV8/4.2L SC V8 - AJV8/3.0L NA V6 - AJ27/3.5L NA V8 - AJV8, VIN Range: G45704->G99999 For MAF sensor tests, GO to Pinpoint Test G531330p1. For TP sensor tests, GO to Pinpoint Test G531330p4. and GO to Pinpoint Test G531330p5. For throttle motor tests, GO to Pinpoint Test G531330p24. For ignition system tests, Engine Ignition - VIN Range: G45704->G99999
	Engine detonates/knocks	Knock sensor (KS)/circuit malfunction Fuel pump Fuel lines Fuel quality FRP sensor MAF sensor HO2 sensors Air leakage Sticking VCT hub BARO sensor malfunction (internal ECM fault)	For KS circuit tests, GO to Pinpoint Test G531330p15. and GO to Pinpoint Test G531330p16. For fuel pump and line tests, Fuel Tank and Lines - 4.2L NA V8 - AJV8/4.2L SC V8 - AJV8/3.0L NA V6 - AJ27/3.5L NA V8 - AJV8, VIN Range: G45704->G99999 For FRP sensor tests, GO to Pinpoint Test G531330p21. For MAF sensor tests, GO to Pinpoint Test G531330p1. Check for DTCs relating to HO2 sensors. Refer to the DTC index for pinpoint tests for DTC set. For intake system, Intake Air Distribution and Filtering - VIN Range: G45704->G99999 Check DTCs for VCT range/performance fault. For VCT information, Engine BARO sensor, refer to the warranty policy and

www.JagDocs.com

			procedures manual if an ECM is suspect.
	No throttle response	APP sensor malfunction TP sensors Throttle motor	For APP sensor tests, GO to Pinpoint Test G531330p22. , and GO to Pinpoint Test G531330p23. For TP sensor tests, GO to Pinpoint Test G531330p4. and GO to Pinpoint Test G531330p5. For throttle motor tests, GO to Pinpoint Test G531330p24.
	Speed control inhibited or disabled	Default mode enabled Speed control switch TP sensors Brake pedal switch CAN fault	Check the message center for default messages. For speed control switches, Speed Control - VIN Range: G45704->G99999 For TP sensor tests, GO to Pinpoint Test G531330p4. and GO to Pinpoint Test G531330p5. For brake pedal switch tests, GO to Pinpoint Test G531330p25.
	Poor throttle response	APP sensor malfunction TP sensors ECT sensor MAF sensor Transmission malfunction Traction control event Air leakage Breather system disconnected/restricted	For APP sensor tests, GO to Pinpoint Test G531330p22. and GO to Pinpoint Test G531330p23. For TP sensor tests, GO to Pinpoint Test G531330p4. and GO to Pinpoint Test G531330p5. For ECT sensor tests, GO to Pinpoint Test G531330p3. For MAF sensor tests, GO to Pinpoint Test G531330p1. For transmission information, For intake system, Intake Air Distribution and Filtering - VIN Range: G45704->G99999 For breather system information,

			Engine Emission Control - VIN Range: G45704->G99999
	Engine defaults, warning light and messages.	Park/Neutral switch TP sensors MAF sensor ECT sensor Harness	For Park/Neutral tests, External Controls For TP sensor tests, GO to Pinpoint Test G531330p4. and GO to Pinpoint Test G531330p5. For MAF sensor tests, GO to Pinpoint Test G531330p1. For ECT sensor tests, GO to Pinpoint Test G531330p3.

DTC index

NOTE:

Generic scan tools may not read the codes listed, or may read only 5-digit codes. Match the 5 digits from the scan tool to the first 5 digits of the 7-digit code listed to identify the fault (the last 2 digits give extra information read by the manufacturer-approved diagnostic system).

DTC	Description	Possible causes	Action
C003100	Left front wheel speed sensor	Invalid data received from ABS: left front wheel speed signal	Anti-Lock Control - Stability Assist - VIN Range: G45704->G99999
C003400	Right front wheel speed sensor	Invalid data received from ABS: right front wheel speed signal	Anti-Lock Control - Stability Assist - VIN Range: G45704->G99999
C003700	Left rear wheel speed sensor	Invalid data received from ABS: left rear wheel speed signal	Anti-Lock Control - Stability Assist - VIN Range: G45704->G99999
C003A00	Right rear wheel speed sensor	Invalid data received from ABS: right rear wheel speed signal	Anti-Lock Control - Stability Assist - VIN

www.JagDocs.com

			Range: G45704->G99999
P001100	Intake (A) camshaft position timing - over-advanced (right hand bank)	Cam timing has not been set up correctly Timing chain has slipped	Check the engine timing, Timing Drive Components (12.65.13)
P001200	Intake (A) camshaft position timing - over-retarded (right hand bank)	Cam timing has not been set up correctly Timing chain has slipped	Check the engine timing, Timing Drive Components (12.65.13)
P001600	Crankshaft position (CKP)/Camshaft position (CMP) sensor correlation, right hand bank	The relative positions of the CKP and CMP teeth are not correct Sensors incorrectly aligned on rebuild	Reset the sensor positions. Camshaft Position (CMP) Sensor LH (18.31.12) Camshaft Position (CMP) Sensor RH (18.31.11) Crankshaft Position (CKP) Sensor (18.30.12)
P001800	Crankshaft position (CKP)/Camshaft position (CMP) sensor correlation, left hand bank	The relative positions of the CKP and CMP teeth are not correct Sensors incorrectly aligned on rebuild	Reset the sensor positions. Camshaft Position (CMP) Sensor LH (18.31.12) Camshaft Position (CMP) Sensor RH (18.31.11) Crankshaft Position (CKP) Sensor (18.30.12)
P002100	Intake (A) camshaft position timing - over-advanced (left hand bank)	Cam timing has not been set up correctly Timing chain has slipped	Check the engine timing, Timing Drive Components (12.65.13)
P002200	Intake (A) camshaft position timing - over-retarded (left hand bank)	Cam timing has not been set up correctly Timing chain has slipped	Check the engine timing, Timing Drive Components (12.65.13)
P002672	Variable camshaft timing (VCT) control solenoid circuit range/performance (right hand bank) - actuator stuck open	Oil contamination VCT oil flow fault VCT solenoid fault VCT/Camshaft mechanical failure	For right hand bank VCT solenoid circuit tests, GO to Pinpoint Test G531330p29.
P002677	VCT control solenoid circuit range/performance (right	Oil contamination	For right hand bank VCT solenoid circuit tests, GO

	hand bank) - commanded position not reachable	VCT oil flow fault VCT solenoid fault VCT/Camshaft mechanical failure	to Pinpoint Test G531330p29.
P002872	VCT control solenoid circuit range/performance (left hand bank) - actuator stuck open	Oil contamination VCT oil flow fault VCT solenoid fault VCT/Camshaft mechanical failure	For left hand bank VCT solenoid circuit tests, GO to Pinpoint Test G531330p30.
P002877	VCT control solenoid circuit range/performance (left hand bank) - commanded position not reachable	Oil contamination VCT oil flow fault VCT solenoid fault VCT/Camshaft mechanical failure	For left hand bank VCT solenoid circuit tests, GO to Pinpoint Test G531330p30.
P003100	HO2S heater control circuit low (right hand bank)	HO2S heater power supply circuit: high resistance HO2S heater control circuit: high resistance HO2S heater ground circuit(s) fault HO2S heater failure	For right hand bank HO2S heater circuit tests, GO to Pinpoint Test G531330p7.
P003200	HO2S heater control circuit high (right hand bank)	HO2S heater power supply circuit: high resistance HO2S heater control circuit: high resistance HO2S heater ground circuit(s) fault HO2S heater failure	For right hand bank HO2S heater circuit tests, GO to Pinpoint Test G531330p7.
P003600	Catalyst monitor heater control circuit (right hand bank)	Catalyst monitor sensor heater control circuit: short circuit to ground Catalyst monitor sensor heater control circuit:	For right hand bank catalyst monitor heater circuit tests, GO to Pinpoint Test G531330p9.

www.JagDocs.com

		high resistance Catalyst monitor sensor heater failure	
P005100	HO2S heater control circuit low (left hand bank)	HO2S heater power supply circuit: high resistance HO2S heater control circuit: high resistance HO2S heater ground circuit(s) fault HO2S heater failure	For left hand bank HO2S heater circuit tests, GO to Pinpoint Test G531330p11.
P005200	HO2S heater control circuit high (left hand bank)	HO2S heater power supply circuit: high resistance HO2S heater control circuit: high resistance HO2S heater ground circuit(s) fault HO2S heater failure	For left hand bank HO2S heater circuit tests, GO to Pinpoint Test G531330p11.
P005600	Catalyst monitor heater control circuit (left hand bank)	Catalyst monitor sensor heater control circuit: short circuit to ground Catalyst monitor sensor heater control circuit: high resistance Catalyst monitor sensor heater failure	For left hand bank catalyst monitor heater circuit tests, GO to Pinpoint Test G531330p12.
P006900	Manifold absolute pressure (MAP) - Barometric pressure correlation	MAP sensor failure BARO sensor failure (internal ECM fault)	For MAP sensor circuit tests, GO to Pinpoint Test G531330p33. Refer to the warranty policy and procedure manual if an ECM is suspect.
P007100	Ambient air temperature sensor range/performance	Ambient temperature value missing from CAN bus	Control Components
P007200	Ambient air temperature sensor circuit low	Ambient air temperature sensor circuit: high	Control Components

		resistance Ambient air temperature sensor circuit: short circuit to ground	
P007300	Ambient air temperature sensor circuit high	Ambient air temperature sensor circuit: short circuit to power	Control Components
P007500	Variable camshaft timing (VCT) control circuit (right hand bank)	VCT solenoid valve disconnected VCT solenoid valve to ECM PWM drive circuit: high resistance VCT solenoid failure	For right hand bank VCT solenoid circuit tests, GO to Pinpoint Test G531330p29.
P007600	Variable camshaft timing (VCT) control circuit low (right hand bank)	VCT solenoid valve disconnected VCT solenoid valve to ECM PWM drive circuit: short circuit to ground VCT solenoid failure	For right hand bank VCT solenoid circuit tests, GO to Pinpoint Test G531330p29.
P007700	Variable camshaft timing (VCT) control circuit high (right hand bank)	VCT solenoid valve disconnected VCT solenoid valve to ECM PWM drive circuit: short circuit to power VCT solenoid failure	For right hand bank VCT solenoid circuit tests, GO to Pinpoint Test G531330p29.
P008100	Variable camshaft timing (VCT) control circuit (left hand bank)	VCT solenoid valve disconnected VCT solenoid valve to ECM PWM drive circuit: high resistance VCT solenoid failure	For left hand bank VCT solenoid circuit tests, GO to Pinpoint Test G531330p30.
P008200	Variable camshaft timing (VCT) control circuit low (left hand bank)	VCT solenoid valve disconnected VCT solenoid valve to ECM PWM drive circuit: short circuit to ground VCT solenoid failure	For left hand bank VCT solenoid circuit tests, GO to Pinpoint Test G531330p30.

www.JagDocs.com

P008300	Variable camshaft timing (VCT) control circuit high (left hand bank)	VCT solenoid valve disconnected VCT solenoid valve to ECM PWM drive circuit: short circuit to power VCT solenoid failure	For left hand bank VCT solenoid circuit tests, GO to Pinpoint Test G531330p30.
P008700	Fuel rail/system pressure - too low	Fuel rail pressure (FRP) sensor disconnected FRP sensor to ECM sensing circuit: high resistance or short circuit to ground FRP sensor supply circuit: high resistance FRP sensor failure Fuel pump failure Fuel line leak Restricted fuel line	For FRP sensor circuit tests, GO to Pinpoint Test G531330p21. Check the fuel pressure, check the fuel lines, Fuel Tank and Lines - 4.2L NA V8 - AJV8/4.2L SC V8 - AJV8/3.0L NA V6 - AJ27/3.5L NA V8 - AJV8, VIN Range: G45704->G99999
P008800	Fuel rail/system pressure - too high	FRP sensor to ECM wiring (supply/sense): short circuit to each other FRP sensor to ECM sense circuit: short circuit to power FRP sensor ground circuit: high resistance FRP sensor failure Restricted fuel line Fuel pump short circuit to battery	For FRP sensor tests, GO to Pinpoint Test G531330p21. For fuel line tests, Fuel Tank and Lines - 4.2L NA V8 - AJV8/4.2L SC V8 - AJV8/3.0L NA V6 - AJ27/3.5L NA V8 - AJV8, VIN Range: G45704->G99999 Check the fuel pressure, check the fuel lines, Fuel Tank and Lines - 4.2L NA V8 - AJV8/4.2L SC V8 - AJV8/3.0L NA V6 - AJ27/3.5L NA V8 - AJV8, VIN Range: G45704->G99999
P010100	Mass or volume air flow A circuit range/performance	Blocked air cleaner	For intake system information, Intake Air Distribution and

		Air intake leak Engine breather leak Mass air flow (MAF) sensor to ECM sensing circuit: high resistance, intermittent short circuit to ground MAF sensor supply circuit: high resistance Throttle adaption fault (check throttle position voltage at Ignition ON)	Filtering - VIN Range: G45704->G99999 Check the engine breather system, Engine Emission Control - VIN Range: G45704->G99999 For MAF sensor circuit tests, GO to Pinpoint Test G531330p1.
P010200	Mass or volume air flow A circuit low input	MAF sensor supply circuit: high resistance, short circuit to ground MAF sensor failure	For MAF sensor circuit tests, GO to Pinpoint Test G531330p1.
P010300	Mass or volume air flow A circuit high input	MAF sensor to ECM sensing circuit: short circuit to power MAF sensor to ECM sensor ground circuit: high resistance MAF sensor failure	For MAF sensor circuit tests, GO to Pinpoint Test G531330p1.
P010600	Manifold absolute pressure (MAP)/BARO sensor range/performance	Intake manifold air leak (loose or missing component) MAP sensor to ECM circuit(s) fault Throttle adaption fault (check throttle position voltage at Ignition ON) MAP sensor failure	For intake system information, Intake Air Distribution and Filtering - VIN Range: G45704->G99999 For MAP sensor circuit tests, GO to Pinpoint Test G531330p33.
P011123	Intake air temperature (IAT) sensor circuit range/performance - signal stuck low	IAT sensor to ECM wiring: high resistance IAT sensor failure	For IAT sensor circuit tests, GO to Pinpoint Test G531330p2.
P011124	IAT sensor circuit range/performance - signal stuck high	IAT sensor to ECM wiring: high resistance IAT sensor failure	For IAT sensor circuit tests, GO to Pinpoint Test G531330p2.

www.JagDocs.com

P011129	IAT sensor circuit range/performance - signal invalid	IAT sensor to ECM wiring: high resistance IAT sensor failure	For IAT sensor circuit tests, GO to Pinpoint Test G531330p2.
P011200	IAT sensor circuit low input	IAT sensor disconnected IAT sensor to ECM wiring: high resistance IAT sensor failure	For IAT sensor circuit tests, GO to Pinpoint Test G531330p2.
P011300	IAT sensor circuit high input	IAT sensor to ECM wiring: short circuit to ground IAT sensor to ECM sensing circuit: short circuit to power IAT sensor failure	For IAT sensor circuit tests, GO to Pinpoint Test G531330p2.
P011623	Engine coolant temperature (ECT) sensor circuit range/performance - signal stuck low	Low coolant level ECT sensor to ECM sensing circuit: intermittent high resistance Engine thermostat failure ECT sensor failure	For ECT sensor circuit tests, GO to Pinpoint Test G531330p3.
P011624	ECT sensor circuit range/performance - signal stuck high	Low coolant level ECT sensor to ECM sensing circuit: intermittent high resistance Engine coolant thermostat failure ECT sensor failure	For ECT sensor circuit tests, GO to Pinpoint Test G531330p3.
P011629	ECT sensor circuit range/performance - signal invalid	Low coolant level ECT sensor to ECM sensing circuit: intermittent high resistance Engine coolant thermostat failure ECT sensor failure	For ECT sensor circuit tests, GO to Pinpoint Test G531330p3.

P011700	ECT sensor circuit low input	ECT sensor disconnected ECT sensor to ECM sensing circuit: high resistance, short circuit to power ECT sensor failure	For ECT sensor circuit tests, GO to Pinpoint Test G531330p3.
P011800	ECT sensor 1 circuit high input	Engine overheat condition/cooling fan failure ECT sensor to ECM wiring: short circuit to ground ECT sensor failure	For cooling fan circuit tests, GO to Pinpoint Test G531330p19. For ECT sensor circuit tests, GO to Pinpoint Test G531330p3.
P012100	Throttle position (TP) sensor circuit range/performance, circuit 1 and 2	TP sensor to ECM wiring: high resistance TP sensor to ECM sensing circuits: (TP 1 or TP 2) short circuit to power TP sensor failure	For TP sensor circuit 1 tests, GO to Pinpoint Test G531330p4. For TP sensor circuit 2 tests, GO to Pinpoint Test G531330p5.
P012200	TP sensor circuit 1 low input	TP sensor to ECM sensing circuit 1: short circuit to ground, high resistance TP sensor failure	For TP sensor circuit 1 tests, GO to Pinpoint Test G531330p4.
P012300	TP sensor circuit 1 low input	TP sensor to ECM sensing circuit (TP1): short circuit to power TP sensor failure	For TP sensor circuit 1 tests, GO to Pinpoint Test G531330p4.
P012500	Insufficient coolant temp for closed loop fuel control	Low coolant level ECT sensor to ECM sensing circuit: intermittent high resistance Engine thermostat failure ECT sensor failure	Check the coolant level. For ECT sensor circuit tests, GO to Pinpoint Test G531330p3.
P012800	Coolant thermostat (coolant temp below thermostat regulating temperature)	Contaminated coolant Engine coolant thermostat failure ECT sensor failure ECT sensor DTC may also be flagged	Check the coolant anti-freeze content and condition. Check the thermostat condition and function. Check for ECT

www.JagDocs.com

			sensor DTCs.
P01311A	H02 sensor circuit low voltage (right hand bank)	H02S disconnected H02S to ECM variable current circuit fault ECM to HO2S constant current circuit fault H02S failure	For right hand bank HO2 sensor circuit tests, GO to Pinpoint Test G531330p6. and GO to Pinpoint Test G531330p7.
P01321B	H02 sensor circuit high voltage (right hand bank)	H02S disconnected H02S to ECM variable current circuit fault ECM to HO2S constant current circuit fault H02S failure	For right hand bank HO2 sensor circuit tests, GO to Pinpoint Test G531330p6. and GO to Pinpoint Test G531330p7.
P013300	HO2 sensor circuit slow response (right hand bank)	HO2S to ECM wiring shield high resistance Exhaust leak Fuel control system fault HO2 sensor failure	For right hand bank HO2 sensor circuit tests, GO to Pinpoint Test G531330p6. and GO to Pinpoint Test G531330p7.
P013400	HO2 sensor circuit no activity detected (right hand bank)	HO2S slow activation	For right hand bank HO2 sensor circuit tests, GO to Pinpoint Test G531330p6. and GO to Pinpoint Test G531330p7.
P013700	Catalyst monitor circuit low voltage (right hand bank)	Catalyst monitor sensor disconnected Catalyst monitor sensor to ECM wiring: high resistance Catalyst monitor sensor: short circuit to ground Catalyst monitor sensor failure	For right hand bank catalyst monitor circuit tests, GO to Pinpoint Test G531330p8. and GO to Pinpoint Test G531330p9.
P013800	Catalyst monitor circuit high	Catalyst monitor sensor sensing circuit: short	For right hand bank catalyst monitor circuit

	voltage (right hand bank)	circuit to power Catalyst monitor sensor ground braided shield: high resistance Catalyst monitor sensor failure	tests, GO to Pinpoint Test G531330p8. and GO to Pinpoint Test G531330p9.
P013900	Catalyst monitor sensor circuit slow response (right hand bank)	Catalyst monitor sensor slow response	For right hand bank catalyst monitor circuit tests, GO to Pinpoint Test G531330p8. and GO to Pinpoint Test G531330p9.
P014000	Catalyst monitor circuit no activity detected (right hand bank)	Catalyst monitor disconnected Catalyst monitor mechanical damage Catalyst monitor to ECM wiring: high resistance Catalyst monitor sensing circuit: short circuit to power Catalyst monitor: short circuit to ground Catalyst monitor ground (BRD braided shield) high resistance	For right hand bank catalyst monitor circuit tests, GO to Pinpoint Test G531330p8. and GO to Pinpoint Test G531330p9.
P014100	Catalyst monitor heater circuit (right hand bank)	Catalyst monitor sensor heater control circuit: high resistance Catalyst monitor sensor heater failure	For right hand bank catalyst monitor circuit tests, GO to Pinpoint Test G531330p8. and GO to Pinpoint Test G531330p9.
P01511A	H02 sensor circuit low voltage (left hand bank) - circuit resistance below threshold	HO2 sensing circuit: short circuit to ground, short circuit to power, high resistance HO2S failure	For left hand bank HO2S circuit tests, GO to Pinpoint Test G531330p10. and GO to Pinpoint Test G531330p11.

www.JagDocs.com

P01521B	H02 sensor circuit low voltage (left hand bank) - circuit resistance above threshold	H02S sensing circuit: short circuit to ground, short circuit to power, high resistance H02S failure	For left hand bank HO2S circuit tests, GO to Pinpoint Test G531330p10. and GO to Pinpoint Test G531330p11.
P015300	H02S circuit slow response (left hand bank)	H02S to ECM wiring shield high resistance Exhaust leak Fuel control system fault H02S failure	For left hand bank HO2S circuit tests, GO to Pinpoint Test G531330p10. and GO to Pinpoint Test G531330p11.
P015400	H02S circuit no activity detected (left hand bank)	H02S slow activation	For left hand bank HO2S circuit tests, GO to Pinpoint Test G531330p10. and GO to Pinpoint Test G531330p11.
P015700	Catalyst monitor sensor circuit low voltage (left hand bank)	Catalyst monitor sensor disconnected Catalyst monitor sensor to ECM wiring high resistance Catalyst monitor sensor short circuit to ground Fuel control system lean fault Catalyst monitor sensor failure	For left hand bank catalyst monitor circuit tests, GO to Pinpoint Test G531330p14. and GO to Pinpoint Test G531330p12.
P015800	Catalyst monitor sensor circuit high voltage (left hand bank)	Catalyst monitor sensor sensing circuit: short circuit to power Catalyst monitor sensor ground (BRD braided shield) high resistance Catalyst monitor sensor failure	For left hand bank catalyst monitor circuit tests, GO to Pinpoint Test G531330p14. and GO to Pinpoint Test G531330p12.
P015900	Catalyst monitor sensor circuit slow response (left	Catalyst monitor sensor slow response	For left hand bank catalyst monitor circuit tests, GO

	hand bank)		to Pinpoint Test G531330p14. and GO to Pinpoint Test G531330p12.
P016000	Catalyst monitor sensor circuit no activity detected (left hand bank)	Catalyst monitor sensor disconnected Catalyst monitor sensor mechanical damage Catalyst monitor sensor to ECM wiring high resistance Catalyst monitor sensor sensing circuit: short circuit to power Catalyst monitor sensor short circuit to ground Catalyst monitor sensor ground (BRD braided shield) high resistance	For left hand bank catalyst monitor circuit tests, GO to Pinpoint Test G531330p14. and GO to Pinpoint Test G531330p12.
P016100	Catalyst monitor sensor heater circuit (left hand bank)	Catalyst monitor sensor heater control circuit malfunction	For left hand bank catalyst monitor circuit tests, GO to Pinpoint Test G531330p14. and GO to Pinpoint Test G531330p12.
P017100	System too lean (right hand bank)	Air intake leak between MAF sensor and cylinder head Fuel filter/system restriction Fuel injector restriction MAF sensor fault (low intake air flow) Exhaust leak (before catalyst)	For intake system information, Intake Air Distribution and Filtering - VIN Range: G45704->G99999 Check the fuel pressure, check the fuel lines, Fuel Tank and Lines - 4.2L NA V8 - AJV8/4.2L SC V8 - AJV8/3.0L NA V6 - AJ27/3.5L NA V8 - AJV8, VIN Range: G45704->G99999 For fuel injector information, Fuel Injectors (18.10.02)

www.JagDocs.com

			For MAF sensor circuit tests, GO to Pinpoint Test G531330p1. Check the exhaust system (before catalyst) for condition and security,
P017200	System too rich (right hand bank)	Restricted air filter Leaking fuel injector(s) Oil contaminated with fuel (too many cold starts with vehicle subsequently not getting hot enough for long enough) MAF sensor fault (high intake air flow)	For intake system information, Intake Air Distribution and Filtering - VIN Range: G45704->G99999 For fuel injector information, Fuel Injectors (18.10.02) Check the oil condition, if contamination is present, renew the engine oil and filter. For MAF sensor circuit tests, GO to Pinpoint Test G531330p1.
P017400	System too lean (left hand bank)	Air intake leak between MAF sensor and cylinder head Fuel filter/system restriction Fuel injector restriction MAF sensor fault (low intake air flow) Exhaust leak (before catalyst)	For intake system information, Intake Air Distribution and Filtering - VIN Range: G45704->G99999 Check the fuel pressure, check the fuel lines, Fuel Tank and Lines - 4.2L NA V8 - AJV8/4.2L SC V8 - AJV8/3.0L NA V6 - AJ27/3.5L NA V8 - AJV8, VIN Range: G45704->G99999 For fuel injector information, Fuel Injectors (18.10.02) For MAF sensor circuit tests, GO to Pinpoint Test G531330p1. Check the exhaust system (before catalyst) for condition and security,

P017500	System too rich (left hand bank)	Restricted air filter Leaking fuel injector(s) Oil contaminated with fuel (too many cold starts with vehicle subsequently not getting hot enough for long enough) MAF sensor fault (high intake air flow)	For intake system information, Intake Air Distribution and Filtering - VIN Range: G45704->G99999 For fuel injector information, Fuel Injectors (18.10.02) Check the oil condition, if contamination is present, renew the engine oil and filter. For MAF sensor circuit tests, GO to Pinpoint Test G531330p1.
P018123	Engine fuel temperature (EFT) sensor A circuit range/performance - signal stuck low	EFT sensor to ECM sensing circuit: high resistance, short circuit to ground, short circuit to power EFT sensor ground circuit: high resistance EFT sensor failure	For EFT sensor circuit tests, GO to Pinpoint Test G531330p34.
P018124	EFT sensor circuit range/performance - signal stuck high	EFT sensor to ECM sensing circuit: high resistance, short circuit to ground, short circuit to power EFT sensor ground circuit: high resistance EFT sensor failure	For EFT sensor circuit tests, GO to Pinpoint Test G531330p34.
P018129	EFT sensor A circuit range/performance - signal invalid	EFT sensor to ECM sensing circuit: high resistance, short circuit to ground, short circuit to power EFT sensor ground circuit: high resistance EFT sensor failure	For EFT sensor circuit tests, GO to Pinpoint Test G531330p34.
P018200	EFT sensor circuit low input	EFT sensor to ECM sensing circuit: short circuit to ground EFT sensor to splice sensor ground circuit: short	For EFT sensor circuit tests, GO to Pinpoint Test G531330p34.

www.JagDocs.com

		circuit EFT sensor failure	
P018300	EFT sensor circuit high input	EFT sensor disconnected EFT sensor to ECM sensing circuit: high resistance, short circuit to power EFT sensor to splice sensor ground circuit: high resistance EFT sensor failure	For EFT sensor circuit tests, GO to Pinpoint Test G531330p34.
P019100	FRP sensor circuit range/performance	FRP sensor range and performance	For FRP sensor circuit tests, GO to Pinpoint Test G531330p21.
P019200	FRP sensor circuit low input	FRP sensor disconnected FRP sensor to ECM sensing circuit: high resistance or short circuit to ground FRP sensor to supply circuit: high resistance FRP sensor failure	For FRP sensor circuit tests, GO to Pinpoint Test G531330p21.
P019300	FRP sensor circuit high input	FRP sensor to ECM wiring (supply, sense): short circuit to each other FRP sensor to ECM sense circuit: short circuit to power FRP sensor ground circuit: high resistance FRP sensor failure	For FRP sensor circuit tests, GO to Pinpoint Test G531330p21.
P019623	Engine oil temperature (EOT) sensor circuit range/performance - signal stuck low	EOT sensor to ECM sensing circuit: intermittent high resistance EOT sensor failure	For EOT sensor circuit tests, GO to Pinpoint Test G531330p13.
P019624	EOT sensor circuit range/performance - signal	EOT sensor to ECM sensing circuit: intermittent high	For EOT sensor circuit tests, GO to Pinpoint Test

	stuck high	resistance EOT sensor failure	G531330p13.
P019629	EOT sensor circuit range/performance - signal invalid	EOT sensor to ECM sensing circuit: intermittent high resistance EOT sensor failure	For EOT sensor circuit tests, GO to Pinpoint Test G531330p13.
P019700	EOT sensor circuit low input	EOT sensor to ECM sensing circuit: short circuit to ground EOT sensor failure	For EOT sensor circuit tests, GO to Pinpoint Test G531330p13.
P019800	EOT sensor circuit high input	EOT sensor disconnected EOT sensor to ECM sensing circuit: high resistance, short circuit to power EOT sensor failure	For EOT sensor circuit tests, GO to Pinpoint Test G531330p13.
P020100	Cylinder 1 injector circuit/open	Injector disconnected Injector harness wiring: high resistance, short circuit to ground Injector failure	For injector circuit tests, Fuel Charging and Controls - VIN Range: G45704->G99999
P020200	Cylinder 2 injector circuit/open	Injector disconnected Injector harness wiring: high resistance, short circuit to ground Injector failure	For injector circuit tests, Fuel Charging and Controls - VIN Range: G45704->G99999
P020300	Cylinder 3 injector circuit/open	Injector disconnected Injector harness wiring: high resistance, short circuit to ground Injector failure	For injector circuit tests, Fuel Charging and Controls - VIN Range: G45704->G99999
P020400	Cylinder 4 injector circuit/open	Injector disconnected Injector harness wiring: high resistance, short circuit to ground Injector failure	For injector circuit tests, Fuel Charging and Controls - VIN Range: G45704->G99999

www.JagDocs.com

P020500	Cylinder 5 injector circuit/open	Injector disconnected Injector harness wiring: high resistance, short circuit to ground Injector failure	For injector circuit tests, Fuel Charging and Controls - VIN Range: G45704->G99999
P020600	Cylinder 6 injector circuit/open	Injector disconnected Injector harness wiring: high resistance, short circuit to ground Injector failure	For injector circuit tests, Fuel Charging and Controls - VIN Range: G45704->G99999
P022200	TP sensor circuit 2 low input	TP sensor circuit 2: short circuit to ground TP sensor circuit 2: high resistance	For TP sensor circuit 2 tests, GO to Pinpoint Test G531330p5.
P022300	TP sensor circuit 2 high input	TP sensor circuit 2: short circuit to power	For TP sensor circuit 2 tests, GO to Pinpoint Test G531330p5.
P022700	Accelerator pedal position (APP) sensor circuit 1 low input	APP sensor circuit 1: short circuit to ground Accelerator pedal position (APP) sensor circuit 1: high resistance	For APP sensor circuit 1 tests, GO to Pinpoint Test G531330p22.
P022800	APP sensor circuit 1 high input	APP sensor circuit 1: short circuit to power	For APP sensor circuit 1 tests, GO to Pinpoint Test G531330p22.
P030000	Random/multiple cylinder misfire detected	ECM to ignition coil primary circuit faults (cylinder misfire detected DTCs also logged) Ignition coil failure Spark plug failure/fouled/incorrect gap Cylinder compression low Fuel delivery pressure	For ignition coil and spark plug tests, Engine Ignition - VIN Range: G45704->G99999 Check the cylinder compressions, Engine Check the fuel pressure, Fuel Tank and Lines - 4.2L NA V8 - AJV8/4.2L SC V8 - AJV8/3.0L NA V6 - AJ27/3.5L NA V8 - AJV8, VIN Range: G45704-

		(low/high) Fuel injector circuit fault(s) (injector DTCs also logged) Fuel injectors restricted/leaking Fuel injectors continuously open Fuel contamination Worn camshaft/broken valve springs Valve clearance adjustment	>G99999 For fuel injector circuit tests, Fuel Charging and Controls - VIN Range: G45704->G99999 For injector information, Fuel Injectors (18.10.02) Check the fuel for contamination, grade and quality. For camshaft and valve information, Engine - 4.2L NA V8 - AJV8/4.2L SC V8 - AJV8/3.0L NA V6 - AJ27/3.5L NA V8 - AJV8
P030100	Cylinder 1 misfire detected	Refer to P030000 possible sources	Refer to P030000 actions
P030200	Cylinder 2 misfire detected	Refer to P030000 possible sources	Refer to P030000 actions
P030300	Cylinder 3 misfire detected	Refer to P030000 possible sources	Refer to P030000 actions
P030400	Cylinder 4 misfire detected	Refer to P030000 possible sources	Refer to P030000 actions
P030500	Cylinder 5 misfire detected	Refer to P030000 possible sources	Refer to P030000 actions
P030600	Cylinder 6 misfire detected	Refer to P030000 possible sources	Refer to P030000 actions
P031300	Misfire detected with low fuel	Misfire detected during low fuel level condition	Check for fuel level sensor codes, add fuel. Clear the DTC and test for normal operation.
P031600	Engine misfire detected on startup	Misfire detected on first 1000 revs Refer to P030000 possible sources	Carry out the tests indicated for a normal misfire code, but on a cold engine.

www.JagDocs.com

P032700	Knock sensor (KS) 1 circuit low input (right hand bank)	Poor sensor contact with the cylinder block KS to ECM sense circuit: short circuit to ground KS failure	For right hand bank KS circuit tests, GO to Pinpoint Test G531330p15.
P032800	KS 1 circuit high input (right hand bank)	Poor sensor contact with the cylinder block KS to ECM sense circuit: high resistance, short circuit to power KS failure	For right hand bank KS circuit tests, GO to Pinpoint Test G531330p15.
P033200	KS 2 circuit low input (left hand bank)	Poor sensor contact with the cylinder block KS to ECM sense circuit: short circuit to ground KS failure	For left hand bank KS circuit tests, GO to Pinpoint Test G531330p16.
P033300	KS 2 circuit high input (left hand bank)	Poor sensor contact with the cylinder block KS to ECM sense circuit: high resistance, short circuit to power KS failure	For left hand bank KS circuit tests, GO to Pinpoint Test G531330p16.
P033592	Crankshaft position (CKP) sensor A circuit - performance or incorrect operation	CKP sensor disconnected CKP Sensor gap incorrect/ foreign matter on sensor face /damaged teeth on rotor CKP sensor sensing circuit: high resistance, short circuit to ground, short circuit to power CKP sensor failure	For CKP sensor circuit tests, GO to Pinpoint Test G531330p17.
P033594	CKP sensor A circuit - unexpected operation	CKP sensor disconnected CKP sensor gap incorrect/ foreign matter on sensor face /damaged teeth on	For CKP sensor circuit tests, GO to Pinpoint Test G531330p17.

		rotor CKP sensor sensing circuit: high resistance, short circuit to ground, short circuit to power CKP sensor failure	
P033600	CKP sensor A circuit range/performance	CKP sensor gap incorrect/ foreign matter on sensor face /damaged teeth on rotor CKP sensor sensing circuit: intermittent high resistance, short circuit to ground, short circuit to power CKP sensor failure	For CKP sensor circuit tests, GO to Pinpoint Test G531330p17.
P034092	Camshaft position (CMP) sensor A circuit (right hand bank or single sensor) - performance or incorrect operation	CMP sensor disconnected CMP sensor gap incorrect/ foreign matter on sensor face /damaged rotor CMP sensor sensing circuit: high resistance, short circuit to ground, short circuit to power CMP sensor 1 failure	For right hand bank CMP circuit tests, GO to Pinpoint Test G531330p18.
P034094	CMP sensor A circuit (right hand bank or single sensor) - unexpected operation	CMP sensor disconnected CMP sensor gap incorrect/ foreign matter on sensor face /damaged rotor CMP sensor sensing circuit: high resistance, short circuit to ground, short circuit to power CMP sensor 1 failure	For right hand bank CMP circuit tests, GO to Pinpoint Test G531330p18.
P034100	CMP sensor A circuit range/performance (right hand bank or single sensor)	CMP sensor disconnected CMP sensor gap incorrect/ foreign matter on sensor	For right hand bank CMP circuit tests, GO to Pinpoint Test G531330p18.

www.JagDocs.com

		face /damaged rotor CMP sensor sensing circuit: high resistance, short circuit to ground, short circuit to power CMP sensor 1 failure	
P034592	CMP sensor A circuit (left hand bank) - performance or incorrect operation	CMP sensor disconnected CMP sensor gap incorrect/ foreign matter on sensor face /damaged rotor CMP sensor sensing circuit: high resistance, short circuit to ground, short circuit to power CMP sensor 2 failure	For left hand bank CMP circuit tests, GO to Pinpoint Test G531330p28.
P034594	CMP sensor A circuit (left hand bank) - unexpected operation	CMP sensor disconnected CMP sensor gap incorrect/ foreign matter on sensor face /damaged rotor CMP sensor sensing circuit: high resistance short circuit to ground, short circuit to power CMP sensor 2 failure	For left hand bank CMP circuit tests, GO to Pinpoint Test G531330p28.
P034600	CMP sensor A circuit range/performance (left hand bank)	CMP sensor disconnected CMP sensor gap incorrect/ foreign matter on sensor face /damaged rotor CMP sensor sensing circuit: high resistance, short circuit to ground, short circuit to power CMP sensor 2 failure	For left hand bank CMP circuit tests, GO to Pinpoint Test G531330p28.
P035100	Ignition coil 1 primary/secondary circuit	ECM to ignition module/coil drive circuit: high resistance, short circuit to ground	For ignition coil tests, Engine Ignition - VIN Range: G45704->G99999

		Ignition module/coil ground circuit: high resistance Ignition module/coil power supply circuit: high resistance (including relay, if fitted)	
P035200	Ignition coil 2 primary/secondary circuit	ECM to ignition module/coil drive circuit: short circuit to ground, high resistance Ignition module/coil ground circuit: high resistance Ignition module/coil power supply circuit: high resistance (including relay, if fitted)	For ignition coil tests, Engine Ignition - VIN Range: G45704->G99999
P035300	Ignition coil 3 primary/secondary circuit	ECM to ignition module/coil drive circuit: short circuit to ground, high resistance Ignition module/coil ground circuit: high resistance Ignition module/coil power supply circuit: high resistance (including relay, if fitted)	For ignition coil tests, Engine Ignition - VIN Range: G45704->G99999
P035400	Ignition coil 4 primary/secondary circuit	ECM to ignition module/coil drive circuit: short circuit to ground, high resistance Ignition module/coil ground circuit: high resistance Ignition module/coil power supply circuit: high resistance (including relay, if fitted)	For ignition coil tests, Engine Ignition - VIN Range: G45704->G99999
P035500	Ignition coil 5 primary/secondary circuit	ECM to ignition module/coil drive circuit: short circuit to ground, high resistance Ignition module/coil ground circuit: high resistance Ignition module/coil power supply circuit: high	For ignition coil tests, Engine Ignition - VIN Range: G45704->G99999

www.JagDocs.com

		resistance (including relay, if fitted)	
P035600	Ignition coil 6 primary/secondary circuit	ECM to ignition module/coil drive circuit: short circuit to ground, high resistance Ignition module/coil ground circuit: high resistance Ignition module/coil power supply circuit: high resistance (including relay, if fitted)	For ignition coil tests, Engine Ignition - VIN Range: G45704->G99999
P041300	Secondary air injection switching valve A circuit open	Secondary air check valve control circuit high	For secondary air injection tests, Engine Emission Control - VIN Range: G45704->G99999
P041400	Secondary air injection switching valve A circuit shorted	Secondary air check valve control circuit low	For secondary air injection tests, Engine Emission Control - VIN Range: G45704->G99999
P042000	Catalyst system efficiency below threshold (right hand bank)	Catalyst failure due to: overheating damage caused by misfire and/or lean combustion Catalyst failure due to: poisoning caused by excessive oil consumption and/or contaminated fuel	Check the oil and fuel condition/level. Check the catalysts for damage.
P043000	Catalyst system efficiency below threshold (left hand bank)	Catalyst failure due to: overheating damage caused by misfire and/or lean combustion Catalyst failure due to: poisoning caused by excessive oil consumption and/or contaminated fuel	Check the oil and fuel condition/level. Check the catalysts for damage.
P044100	Evaporative emission system incorrect purge flow	Purge valve range performance	For evaporative emission tests, Evaporative Emissions - VIN Range: G45704-

			>G99999
P044700	Diagnostic monitoring of fuel tank leakage (DMTL) system change-over valve (COV) control circuit open	DMTL COV circuit ground short	For evaporative emissions tests, Evaporative Emissions - VIN Range: G45704->G99999
P044800	DMTL system COV control circuit shorted	DMTL COV power supply circuit: high resistance, short circuit DMTL COV to ECM drive circuit: high resistance, short circuit to power DMTL COV failure	For evaporative emissions tests, Evaporative Emissions - VIN Range: G45704->G99999
P045600	Evaporative emission system leak detected (very small leak)	DMTL system has detected a leak	For evaporative emissions tests, Evaporative Emissions - VIN Range: G45704->G99999
P045800	Evaporative emission system purge control valve circuit low	Purge valve control circuit: short circuit to ground Purge valve control circuit: high resistance Purge valve failure	For evaporative emissions tests, Evaporative Emissions - VIN Range: G45704->G99999
P045900	Evaporative emission system purge control valve circuit high	Purge valve control circuit: short circuit to power	For evaporative emissions tests, Evaporative Emissions - VIN Range: G45704->G99999
P046129	Fuel level sensor A circuit range/performance - signal invalid	Fuel level sensor to rear electronic module (REM) circuits; intermittent short circuit or high resistance Fuel level sensor failure REM fault (incorrect fuel level data)	For fuel level sensor circuit tests, Fuel Tank and Lines - 4.2L NA V8 - AJV8/4.2L SC V8 - AJV8/3.0L NA V6 - AJ27/3.5L NA V8 - AJV8, VIN Range: G45704->G99999

www.JagDocs.com

P04612F	Fuel level sensor A circuit range/performance - signal erratic	Fuel level sensor to rear electronic module (REM) circuits; intermittent short circuit or high resistance Fuel level sensor failure REM fault (incorrect fuel level data)	For fuel level sensor circuit tests, Fuel Tank and Lines - 4.2L NA V8 - AJV8/4.2L SC V8 - AJV8/3.0L NA V6 - AJ27/3.5L NA V8 - AJV8, VIN Range: G45704->G99999
P046200	Fuel level sensor A circuit low input	Fuel level sensor to rear electronic module (REM) circuits; intermittent short circuit to ground or high resistance Fuel level sensor failure REM fault (incorrect fuel level data)	For fuel level sensor circuit tests, Fuel Tank and Lines - 4.2L NA V8 - AJV8/4.2L SC V8 - AJV8/3.0L NA V6 - AJ27/3.5L NA V8 - AJV8, VIN Range: G45704->G99999
P046300	Fuel level sensor A circuit high input	Fuel level sensor to rear electronic module (REM) circuits; intermittent short circuit to power Fuel level sensor failure REM fault (incorrect fuel level data)	For fuel level sensor circuit tests, Fuel Tank and Lines - 4.2L NA V8 - AJV8/4.2L SC V8 - AJV8/3.0L NA V6 - AJ27/3.5L NA V8 - AJV8, VIN Range: G45704->G99999
P048023	Fan 1 control circuit low	Electric fan control circuit: short circuit to ground Electric fan control circuit: high resistance	For cooling fan circuit tests, GO to Pinpoint Test G531330p19.
P048024	Fan 1 control circuit high	Electric fan control circuit: short circuit to battery	For cooling fan circuit tests, GO to Pinpoint Test G531330p19.
P048309	Fan rationality check	Cooling fan difficult to turn Fan/Motor damaged	Clear any obstruction, replace the fan as necessary.
P048316	Fan rationality check	Fan control module reports battery voltage less than 9 volts	Check the battery condition. Check the charging system and fan circuits.

P048317	Fan rationality check	Fan control module reports battery voltage greater than 18 volts	Check the charging system and fan circuits.
P048397	Fan rationality check	Cooling fan jammed	Clear any obstruction, replace the fan as necessary.
P050082	Vehicle speed sensor malfunction vehicle speed invalid signal received over CAN	Vehicle speed: invalid signal received over CAN	Check for ABS DTCs.
P050086	Vehicle speed sensor malfunction vehicle speed invalid signal received over CAN	Vehicle speed: invalid signal received over CAN	Check for TCM DTCs.
P050162	Vehicle speed sensor A range/performance - signal plausibility failure	Vehicle speed: range performance	Check for ABS/TCM DTCs.
P050400	Brake switch A/B correlation	The brake pressure reading does not agree with the brake light switch value	Anti-Lock Control - Stability Assist - VIN Range: G45704->G99999
P050401	Brake switch A/B correlation	Brake switch high fault: Brake lights stuck on Gearshift interlock inoperative Speed control inoperative Brake switch low fault: Brake lights inoperative Gearshift stuck in Park Reduced engine braking	For brake switch and circuit tests, GO to Pinpoint Test G531330p25.
P050600	Idle air control system RPM lower than expected	Air intake restriction Accessory drive overload (defective/seized component)	Check the air intake system. Intake Air Distribution and Filtering - VIN Range: G45704->G99999 Check the accessory drive belt and components. Accessory Drive Belt - 3.0L NA V6 - AJ27, VIN Range: G45704->G99999

www.JagDocs.com

			(12.10.40)
P050624	Idle control system RPM lower than expected cold start emission strategy ISC system lower than expected	Air intake restriction Accessory drive overload (defective/seized component)	Check the air intake system. Intake Air Distribution and Filtering - VIN Range: G45704->G99999 Check the accessory drive belt and components. Accessory Drive Belt - 3.0L NA V6 - AJ27, VIN Range: G45704->G99999 (12.10.40)
P050700	Idle air control system RPM higher than expected	Intake air leak between MAF sensor and throttle Intake air leak between throttle and engine Engine crankcase breather leak	Check the air intake system, Intake Air Distribution and Filtering - VIN Range: G45704->G99999 Inspect the engine breather system, Engine Emission Control - VIN Range: G45704->G99999
P050723	Idle control system RPM higher than expected cold start emission strategy ISC system higher than expected	Intake air leak between MAF sensor and throttle Intake air leak between throttle and engine Engine crankcase breather leak	Check the air intake system, Intake Air Distribution and Filtering - VIN Range: G45704->G99999 Inspect the engine breather system, Engine Emission Control - VIN Range: G45704->G99999
P050B84	Cold start ignition timing performance	Cold start emission reduction strategy engine spark timing too retarded	Check for engine ignition related codes. Engine Ignition - VIN Range: G45704->G99999
P050B85	Cold start ignition timing performance	Cold start emission reduction strategy engine spark timing too advanced	Check for engine ignition related codes. Engine Ignition - VIN

			Range: G45704->G99999
P05120C	Starter request circuit - circuit voltage above threshold	Starter relay coil to ECM/ignition switch circuit: short circuit to power Ignition switch failure	For starter request circuit tests, GO to Pinpoint Test G531330p27.
P05120E	Starter request circuit - circuit voltage below threshold	Starter relay coil to ECM/ignition switch circuit: short circuit to ground Starter relay coil to ECM/ignition switch circuit: high resistance Ignition switch failure	For starter request circuit tests, GO to Pinpoint Test G531330p27.
P051300	Incorrect immobilizer key	Security key invalid	Programme keys using the Jaguar approved diagnostic system.
P053200	Air conditioning (A/C) refrigerant pressure sensor A circuit low input	A/C refrigerant pressure sensor circuit low input	For A/C pressure sensor tests, GO to Pinpoint Test G531330p35.
P053300	A/C refrigerant pressure sensor A circuit high input	A/C Refrigerant pressure sensor circuit high input	For A/C pressure sensor tests, GO to Pinpoint Test G531330p35.
P056013	System voltage	Battery back-up malfunction	For battery back-up tests, GO to Pinpoint Test G531330p20.
P056100	System voltage unstable	System voltage comparison	For FRP sensor tests, GO to Pinpoint Test G531330p21. For MAP sensor tests, GO to Pinpoint Test G531330p33. For TP sensor tests, GO to Pinpoint Test G531330p4. and GO to Pinpoint Test G531330p5.
P056200	System voltage low	ECM to sensors sensor supply	For FRP sensor tests, GO

www.JagDocs.com

		voltage circuit(s): short circuit to ground	to Pinpoint Test G531330p21. For MAP sensor tests, GO to Pinpoint Test G531330p33. For TP sensor tests, GO to Pinpoint Test G531330p4. and GO to Pinpoint Test G531330p5.
P056300	System voltage high	ECM to sensors supply voltage circuit(s): high resistance, short circuit to power	For FRP sensor tests, GO to Pinpoint Test G531330p21. For MAP sensor tests, GO to Pinpoint Test G531330p33. For TP sensor tests, GO to Pinpoint Test G531330p4. and GO to Pinpoint Test G531330p5.
P057616	Speed control input circuit low	Speed control low input	For speed control, Speed Control - VIN Range: G45704->G99999
P057717	Speed control input circuit high	Speed control high input	For speed control, Speed Control - VIN Range: G45704->G99999
P057800	Speed control multi-function input A circuit stuck	Speed switch stuck fault	For speed control, Speed Control - VIN Range: G45704->G99999
P05791C	Speed control multi-function input A circuit range/performance	Speed control switch deadband detection	For speed control, Speed Control - VIN Range: G45704->G99999
P059000	Speed control multi-function input B circuit stuck	Active speed limiter fault	For speed control, Speed Control - VIN Range: G45704->G99999
P060143	Internal control module memory check sum error - special memory failure	CPU communication. - sub	Refer to the warranty policy and procedures manual if an ECM is

			suspect.
P060145	Internal control module memory check sum error - program memory failure	CPU communication	Refer to the warranty policy and procedures manual if an ECM is suspect.
P060442	Internal control module random access memory (RAM) error - general memory failure	Initial RAM test	Refer to the warranty policy and procedures manual if an ECM is suspect.
P060443	Internal control module random access memory (RAM) error - special memory failure	Shut off RAM test	Refer to the warranty policy and procedures manual if an ECM is suspect.
P060444	Internal control module random access memory (RAM) error - data memory failure	RAM check sum	Refer to the warranty policy and procedures manual if an ECM is suspect.
P060445	Internal control module random access memory (RAM) error - program memory failure	ECM failure	Refer to the warranty policy and procedures manual if an ECM is suspect.
P060500	Internal Control Module Read Only Memory (ROM) Error	EEPROM/flash checksum error	Refer to the warranty policy and procedures manual if an ECM is suspect.
P060529	Internal Control Module Read Only Memory (ROM) Error ROM Error	ROM error	Refer to the warranty policy and procedures manual if an ECM is suspect.
P060542	Internal control module read only memory (ROM) error - general memory failure	ROM check sum	Refer to the warranty policy and procedures manual if an ECM is suspect.
P060543	Internal control module read only memory (ROM) error - special memory	Shut off ROM test	Refer to the warranty policy and procedures manual if an ECM is

www.JagDocs.com

	failure		suspect.
P060544	Internal control module read only memory (ROM) error - data memory failure	Initial ROM test	Refer to the warranty policy and procedures manual if an ECM is suspect.
P060545	Internal control module read only memory (ROM) error - program memory failure	Continuous ROM test	Refer to the warranty policy and procedures manual if an ECM is suspect.
P060546	Internal control module read only memory (ROM) error	Continuous ROM test	Refer to the warranty policy and procedures manual if an ECM is suspect.
P060548	Internal control module read only memory (ROM) error - supervision software failure	Shut off ROM test	Refer to the warranty policy and procedures manual if an ECM is suspect.
P060564	Internal control module read only memory (ROM) error	ROM error - sub	Refer to the warranty policy and procedures manual if an ECM is suspect.
P060600	PCM processor fault	Watchdog error	Refer to the warranty policy and procedures manual if an ECM is suspect.
P060601	ECM/PCM processor - general electrical failure	Controller test - sub	Refer to the warranty policy and procedures manual if an ECM is suspect.
P060604	ECM/PCM processor	System internal failures	Refer to the warranty policy and procedures manual if an ECM is suspect.
P060605	ECM/PCM processor - system programming	Throttle return spring failure (throttle body failure)	Refer to the warranty policy and procedures manual if an ECM is

	failures		suspect.
P060641	ECM/PCM processor - general checksum failure	Watch dog timer fault - sub	Refer to the warranty policy and procedures manual if an ECM is suspect.
P060642	ECM/PCM processor - general memory failure	Error Capturing instructions (ECI)	Refer to the warranty policy and procedures manual if an ECM is suspect.
P060643	ECM/PCM processor - special memory failure	Duplication memory fault	Refer to the warranty policy and procedures manual if an ECM is suspect.
P060644	ECM/PCM processor - data memory failure	Duplication memory fault - sub	Refer to the warranty policy and procedures manual if an ECM is suspect.
P060645	ECM/PCM processor - program memory failure	Detection of write to internal ROM	Refer to the warranty policy and procedures manual if an ECM is suspect.
P060646	ECM/PCM processor - calibration/parameter memory failure	Detection of write to internal ROM - sub	Configure the module using the Jaguar approved diagnostic system.
P060647	ECM/PCM processor fault	Watch dog timer fault	Configure the module using the Jaguar approved diagnostic system.
P060648	ECM/PCM processor - supervision software failure	Scheduling sequence check	Configure the module using the Jaguar approved diagnostic system.
P060649	ECM/PCM processor - internal electronic failure	Controller test	Refer to the warranty policy and procedures manual if an ECM is suspect.

www.JagDocs.com

P060700	Control module performance	Sub - CPU watch dog	Refer to the warranty policy and procedures manual if an ECM is suspect.
P060A64	Internal control module monitoring processor performance	Internal control module monitoring processor performance	Clear the DTC and retest. If the DTC resets, refer to the warranty policy and procedure manual if an ECM is suspect.
P060A67	Internal control module monitoring processor performance	Internal control module monitoring processor performance	Clear the DTC and retest. If the DTC resets, refer to the warranty policy and procedure manual if an ECM is suspect.
P060D00	Internal control module accelerator pedal position performance	APP sensor communication	Refer to the warranty policy and procedures manual if an ECM is suspect.
P060E62	Internal control module throttle position performance - signal compare failure	Throttle motor amplifier failure for valve sensor malfunction	Refer to the warranty policy and procedures manual if an ECM is suspect.
P060E64	Internal control module throttle position performance - signal plausibility failure	TPS Communication	Refer to the warranty policy and procedures manual if an ECM is suspect.
P061043	Control module vehicle options error	VID block fault	Configure the module using the Jaguar approved diagnostic system.
P06160E	Starter relay circuit low	Starter relay drive circuit: short circuit to ground Starter relay drive circuit: high resistance Starter relay failure	For starter relay tests, GO to Pinpoint Test G531330p27.
P06170C	Starter relay circuit high	Starter relay drive circuit: short circuit to power	For starter relay tests, GO to Pinpoint Test

		Starter relay failure	G531330p27.
P061A00	Internal control module torque performance	Pedal follower error	Refer to the warranty policy and procedures manual if an ECM is suspect.
P061A29	Internal control module torque performance - signal invalid	Absolute engine torque calculation failure - sub-processor	Refer to the warranty policy and procedures manual if an ECM is suspect.
P061A64	Internal control module torque performance - signal plausibility failure	Absolute engine torque calculation failure	Refer to the warranty policy and procedures manual if an ECM is suspect.
P061B29	Internal control module torque calculation performance - signal invalid	Absolute and dynamic engine torque calculation failure	Refer to the warranty policy and procedures manual if an ECM is suspect.
P061B64	Internal control module torque calculation performance - signal plausibility failure	Absolute and dynamic engine torque calculation failure	Refer to the warranty policy and procedures manual if an ECM is suspect.
P062700	Fuel pump A control circuit/open	Invalid fuel pump duty requested by the ECM	For fuel pump tests, Fuel Tank and Lines - 4.2L NA V8 - AJV8/4.2L SC V8 - AJV8/3.0L NA V6 - AJ27/3.5L NA V8 - AJV8, VIN Range: G45704->G99999
P063000	VIN Not programmed or incompatible - ECM/PCM	CCF to CAN VIN mismatch	Configure the module using the Jaguar approved diagnostic system.
P066100	Intake manifold tuning (IMT) valve control circuit low, right hand bank	IMT circuit(s): short circuit to ground IMT circuit(s): high resistance	For IMT tests, GO to Pinpoint Test G531330p38.
P066200	IMT valve control circuit	IMT circuit(s): short circuit to power	For IMT tests, GO to Pinpoint Test

www.JagDocs.com

	high, right hand bank		G531330p38.
P066400	IMT valve control circuit low, left hand bank	IMT circuit(s): short circuit to ground IMT circuit(s): high resistance	For IMT tests, GO to Pinpoint Test G531330p37.
P066500	IMT valve control circuit high, left hand bank	IMT circuit(s): short circuit to power	For IMT tests, GO to Pinpoint Test G531330p37.
P068773	ECM/PCM power relay control circuit high	EMS control relay malfunction	For EMS relay tests, GO to Pinpoint Test G531330p32.
P072186	Output speed sensor circuit range/performance	TCM output shaft speed sensor error received	
P08510E	Park/Neutral switch input circuit low	Park/Neutral switch input circuit low	For Park/Neutral switch tests,
P08520C	Park/Neutral switch input circuit high	Park/Neutral switch input circuit high	For Park/Neutral switch tests,
P114600	Generator load low	Generator - C line circuit low	For generator tests,
P124400	Generator load high input (see P062600)	Generator - C line circuit high	For generator tests,
P125900	Immobilizer to PCM signal error	Incorrect ID received from instrument pack	Configure the system using the Jaguar approved diagnostic system.
P131500	Persistent misfire	ECM to ignition coil primary circuit fault (cylinder misfire detected DTC also flagged) Fuel delivery pressure low Fuel injector circuit fault(s) (injector DTCs also flagged)	For ignition coil circuit tests, Engine Ignition - VIN Range: G45704->G99999 Check the fuel pressure, Fuel Tank and Lines - 4.2L NA V8 - AJV8/4.2L SC V8 - AJV8/3.0L NA V6 - AJ27/3.5L NA V8 - AJV8, VIN Range: G45704-

		Ignition coil failure Spark plug failure/fouled/incorrect gap Cylinder compression low	>G99999 For injector circuit tests, Fuel Charging and Controls - VIN Range: G45704->G99999 For ignition coil circuit and spark plug tests, Engine Ignition - VIN Range: G45704->G99999 Check the cylinder compressions. Engine - 4.2L NA V8 - AJV8/4.2L SC V8 - AJV8/3.0L NA V6 - AJ27/3.5L NA V8 - AJV8
P131600	Injector driver misfire - emissions damage	Injector driver module codes detected	Check for associated DTCs and refer to the DTC index.
P136700	Ignition amplifier group A	Ignition monitoring circuit to ECM: high resistance, short circuit to ground, short circuit to power Ignition module/coils ground circuit fault, right hand bank	For ignition system tests, Engine Ignition - VIN Range: G45704->G99999
P136800	Ignition amplifier group B	Ignition monitoring circuit to ECM: high resistance, short circuit to ground, short circuit to power Ignition module/coils ground circuit fault left hand bank	For ignition system tests, Engine Ignition - VIN Range: G45704->G99999
P160300	EEPROM error	ECM fault	Refer to the warranty policy and procedure manual if an ECM is suspect.
P162600	Dynamic torque monitoring error	ECM electronic throttle monitoring / self test - torque monitoring problem	Refer to the warranty policy and procedure manual if an ECM is suspect.

www.JagDocs.com

P162900	Internal voltage regulator	Generator - F line failure	For generator tests,
P163200	Smart alternator faults sensor/circuit	Generator - L line failure	For generator tests,
P209600	Fuel trim too lean, right hand bank	HO2S fuel adaption - lean	Check for HO2 sensor codes. Check for air intake faults
P209700	Fuel trim too rich, right hand bank	HO2S fuel adaption - rich	Check for HO2 sensor codes. Check for air intake faults
P209800	Fuel trim too lean, left hand bank	HO2S fuel adaption - lean	Check for HO2 sensor codes. Check for air intake faults
P209900	Fuel trim too rich, left hand bank	HO2S fuel adaption - rich	Check for HO2 sensor codes. Check for air intake faults
P210129	Throttle range/performance - sub-processor	Jammed throttle blade, gearing or motor	Check for a message in the instrument cluster. Replace the throttle body. Throttle Body - VIN Range: G45704->G99999 (19.70.04)
P210162	Throttle actuator control motor circuit range/performance	Jammed throttle blade, gearing or motor	Check for a message in the instrument cluster. Replace the throttle body. Throttle Body - VIN Range: G45704->G99999 (19.70.04)
P210164	Throttle range/performance	Jammed throttle blade, gearing or motor	Check for a message in the instrument cluster. Replace the throttle body. Throttle Body - VIN Range: G45704->G99999 (19.70.04)
P210177	Throttle actuator motor control circuit	Throttle blade stuck open	Check for throttle related DTCs. Check the intake

	range/performance (commanded position not reachable)	Intake air system leak	system for leaks. Intake Air Distribution and Filtering - VIN Range: G45704->G99999
P210329	Throttle actuator motor control circuit high	Control circuit: short circuit to power ECM fault	For throttle actuator motor circuit tests, Fuel Charging and Controls - VIN Range: G45704->G99999 Refer to the warranty policy and procedures manual if an ECM is suspect.
P210364	Throttle actuator motor control circuit high - signal plausibility failure	Control circuit: short circuit to power ECM fault	For throttle actuator motor circuit tests, Fuel Charging and Controls - VIN Range: G45704->G99999 Refer to the warranty policy and procedures manual if an ECM is suspect.
P210500	Throttle actuator control system - forced engine shutdown	Throttle MIL request due to fuel cut	Check for DTCs indicating the reason for the fuel cut. Follow the action indicated for those DTCs.
P210629	Throttle actuator control system - forced limited power	Signal invalid	Check for a message in the instrument cluster. Replace the throttle body. Throttle Body - VIN Range: G45704->G99999 (19.70.04)
P210664	Throttle actuator control system - forced limited power	Signal plausibility failure	Check for a message in the instrument cluster. Replace the throttle body. Throttle Body - VIN Range: G45704->G99999 (19.70.04)
P211800	Throttle actuator motor control current	Control circuit: short circuit to power, short circuit to	For throttle actuator motor circuit tests, Fuel Charging and

www.JagDocs.com

	range/performance	ground, high resistance ECM fault	Controls - VIN Range: G45704->G99999 Refer to the warranty policy and procedures manual if an ECM is suspect.
P211900	Throttle actuator control throttle body range/performance	Throttle spring faulty	Check for a message in the instrument cluster. Replace the throttle body. Throttle Body - VIN Range: G45704->G99999 (19.70.04)
P212200	Accelerator pedal position (APP) sensor D circuit low input	APP sensor: circuit 2 low input	For APP sensor tests. GO to Pinpoint Test G531330p22. and GO to Pinpoint Test G531330p23.
P212300	Accelerator pedal position (APP) sensor D circuit high input	APP sensor: circuit 2 high input	For APP sensor tests. GO to Pinpoint Test G531330p22. and GO to Pinpoint Test G531330p23.
P213528	Accelerator pedal position (APP) sensor A/B voltage correlation	APP sensor: incorrect start value (not zero)	Check connections, etc, clear the DTCs and retest. If the code resets, replace the APP sensor.
P213529	Accelerator pedal position (APP) sensor voltage correlation	APP sensor: excessive difference between raw values of circuit 1 and 2 - sub-processor	Check connections, etc, clear the DTCs and retest. If the code resets, replace the APP sensor.
P213562	Accelerator pedal position (APP) sensor 1 and 2 voltage correlation	APP sensor: incorrect start value (not zero) sub-processor	Check connections, etc, clear the DTCs and retest. If the code resets, replace the APP sensor.
P213564	Accelerator pedal position (APP) sensor voltage correlation	APP sensor: excessive difference between raw values of circuit 1 and 2	Check connections, etc, clear the DTCs and retest. If the code resets, replace the APP sensor.

P222800	Barometric pressure circuit low input	BARO sensor failure (internal ECM fault)	Refer to the warranty policy and procedures manual if an ECM is suspect.
P222900	Barometric pressure circuit high input	BARO sensor failure (internal ECM fault)	Refer to the warranty policy and procedures manual if an ECM is suspect.
P240100	Evaporative emission system diagnostic monitoring of tank leakage (DMTL) pump control circuit low	DMTL pump circuit(s): short circuit to ground	For evaporative emissions tests, Evaporative Emissions - VIN Range: G45704->G99999
P240200	Evaporative emission system DMTL pump control circuit high	DMTL pump circuit(s): short circuit to power	For evaporative emissions tests, Evaporative Emissions - VIN Range: G45704->G99999
P240429	Evaporative emission system DMTL pump sense circuit range/performance - signal invalid	DMTL reference leak DMTL pump circuit: short circuit, high resistance DMTL pipework blocked/leaking	For evaporative emissions tests, Evaporative Emissions - VIN Range: G45704->G99999
P24042F	Evaporative emission system DMTL pump sense circuit range/performance - signal erratic	DMTL reference leak DMTL pump circuit: short circuit, high resistance DMTL pipework blocked/leaking	For evaporative emissions tests, Evaporative Emissions - VIN Range: G45704->G99999
P240500	Evaporative emission system DMTL pump sense circuit low	DMTL pump circuit: short circuit, high resistance	For evaporative emissions tests, Evaporative Emissions - VIN Range: G45704->G99999
P240600	Evaporative emission system DMTL pump sense circuit high	DMTL pump circuit: short circuit, high resistance	For evaporative emissions tests, Evaporative Emissions - VIN Range: G45704-

www.JagDocs.com

			>G99999
P240B00	Evaporative emission system DMTL pump heater circuit low	DMTL heater control circuit low	For evaporative emissions tests, Evaporative Emissions - VIN Range: G45704->G99999
P240C00	Evaporative emission system DMTL pump heater circuit high	DMTL heater control circuit high	For evaporative emissions tests, Evaporative Emissions - VIN Range: G45704->G99999
P243100	Secondary air injection system air flow/pressure sensor circuit range/performance, right hand bank	Secondary air injection pump/valve/pipework leaks Secondary air injection pump Secondary air injection valve	For secondary air injection tests, Engine Emission Control - VIN Range: G45704->G99999
P243200	Secondary air injection system air flow/pressure sensor circuit low input, right hand bank	Secondary air injection system MAP sensor circuit low	For secondary air injection tests, Engine Emission Control - VIN Range: G45704->G99999
P243300	Secondary air injection system air flow/pressure sensor circuit high input, right hand bank	Secondary air injection system MAP sensor circuit high	For secondary air injection tests, Engine Emission Control - VIN Range: G45704->G99999
P244400	Secondary air injection system pump stuck **ON**, right hand bank	Secondary air injection system pump control circuit low	For secondary air injection tests, Engine Emission Control - VIN Range: G45704->G99999
P244500	Secondary air injection system pump stuck **OFF**, right hand bank	Secondary air pump control circuit high	For secondary air injection pump circuit tests, Engine Emission Control - VIN Range: G45704->G99999

P245000	Evaporative emission (EVAP) system change-over valve (COV) performance/stuck open	DMTL pump circuit: short circuit, high resistance	For evaporative emissions tests, Evaporative Emissions - VIN Range: G45704->G99999
P245100	Evaporative emission control system COV stuck closed	DMTL pump circuit: short circuit, high resistance	For evaporative emissions tests, Evaporative Emissions - VIN Range: G45704->G99999
P250300	Charging system voltage low	Generator - range/performance - output voltage low when high requested	For charging system tests,
P250400	Charging system voltage high	Generator - range/performance - output voltage high when low requested	For charging system tests,
P261064	ECM/PCM Internal engine off timer performance	ECT sensor fault Ambient temperature sensor fault Body processor module fault (time) CAN error	Check for DTCs indicating a fault with any of the components listed. Follow the action listed for those DTCs.
P261087	ECM/PCM Internal engine off timer performance	ECT sensor fault Ambient temperature sensor fault Body processor module fault (time) CAN error	Check for DTCs indicating a fault with any of the components listed. Follow the action listed for those DTCs.
P263500	Fuel pump A low flow/performance (fuel pump not activated when requested by ECM)	ECM to rear electronic module (REM) drive circuit; short circuit, high resistance Fuel pump module failure REM failure	For REM to fuel pump module circuit tests, Fuel Tank and Lines - 4.2L NA V8 - AJV8/4.2L SC V8 - AJV8/3.0L NA V6 - AJ27/3.5L NA V8 - AJV8, VIN Range: G45704->G99999

www.JagDocs.com

U007300	Control module communication bus off	CAN Link circuit malfunction	For network tests,
U010100	Lost communication with transmission control module	CAN Link ECM/TCM network malfunction	For network tests,
U010300	Lost communication with gear shift control module	CAN Link ECM/gear shift network malfunction	For network tests,
U010400	Lost communication with speed control module	CAN Link ECM/ACC module network malfunction	For network tests,
U012100	Lost communication with anti-lock brake system (ABS) control module	CAN Link ECM/ABSCM network malfunction	For network tests,
U012800	Lost communication with park brake control module	CAN Link ECM/Electric park brake signal missing network malfunction	For network tests,
U013200	Lost communication with suspension control module	CAN Link ECM/suspension control module network malfunction	For network tests,
U015100	Lost communication with restraints control module	Lost comms - CAN or hardwired	For network tests,
U015500	Lost communication with instrument panel cluster (IPC) control module	CAN Link ECM/INSTCM network malfunction	For network tests,
U016400	Lost communication with heating ventilation and air conditioning control module	CAN Link ECM/HEVAC network malfunction	For network tests,
U016700	Lost communication with vehicle immobilizer control module	Security challenge response timeout	Programme the keys using the Jaguar approved diagnostic system.
U023500	Lost communication with speed control front distance range sensor	Adaptive speed control fault	For network tests,
U040264	Invalid data received From transmission control	Actual gear position status	For transmission tests.

	module		
U040267	Invalid data received from transmission control module	Gear shift position status	For transmission tests.
U040281	Invalid data received from TCM	Output shaft speed	For transmission tests.
U041500	Invalid data received from anti-lock brake system control module	BPS CAN node	For network tests,
U041564	Invalid data received from anti-lock brake system control module	MSR monitoring - plausibility	For network tests,
U041567	Invalid data received from anti-lock brake system control module	MSR monitoring - rationality	For network tests,
U042386	Invalid data received from instrument panel control module - signal invalid	Battery voltage level	For network tests,
U042481	Invalid data received from instrument pack control module	External ambient temp	For network tests,
U042600	Invalid data received from vehicle immobilizer control module	Security code mismatch	Configure the module using the Jaguar approved diagnostic system.
U206400	Warning indicator requested by another control module	Crash event has occurred	For network tests,

Pinpoint Tests

PINPOINT TEST G531330p1 : MASS AIR FLOW (MAF) SENSOR CIRCUIT

www.JagDocs.com

G531330t4 : CHECK THE MAF SENSOR SUPPLY CIRCUIT VOLTAGE

1. Disconnect the MAF sensor electrical connector, PI14. 2. Key on, engine off. 3. Measure the voltage between:

MAF sensor connector PI14, harness side	Battery
Pin 01	Negative terminal

Is the voltage greater than 10 volts?

-> Yes
GO to Pinpoint Test G531330t3.

-> No
REPAIR the circuit between the MAF sensor electrical connector and the battery. This circuit includes the EMS control relay and fuse 14 of the front power distribution box. For additional information, refer to the wiring diagrams. CLEAR the DTC and test the system for normal operation.

G531330t3 : CHECK THE MAF SENSOR SENSING CIRCUIT FOR SHORT CIRCUIT TO GROUND

1. Key off. 2. Measure the resistance between:

MAF sensor connector PI14, harness side	Battery
Pin 03	Negative terminal

Is the resistance less than 10,000 ohms?

-> Yes
REPAIR the short circuit. For additional information, refer to the wiring diagrams. CLEAR the DTC and test the system for normal operation.

-> No
GO to Pinpoint Test G531330t2.

G531330t2 : CHECK THE MAF SENSOR SENSING CIRCUIT FOR SHORT CIRCUIT TO POWER

1. Measure the resistance between:

MAF sensor connector PI14, harness side	Battery
Pin 03	Positive terminal

Is the resistance less than 10,000 ohms?

-> Yes
REPAIR the short circuit. For additional information, refer to the wiring diagrams. CLEAR the DTC and test the system for normal operation.

-> No
GO to Pinpoint Test G531330t82.

G531330t82 : CHECK THE MAF SENSOR GROUND CIRCUIT FOR SHORT CIRCUIT TO POWER

1. Measure the resistance between:

MAF sensor connector PI14, harness side	Battery
Pin 02	Positive terminal

Is the resistance less than 10,000 ohms?

-> Yes
REPAIR the short circuit. For additional information, refer to the wiring diagrams. CLEAR the DTC and test the system for normal operation.

-> No
GO to Pinpoint Test G531330t1.

G531330t1 : CHECK THE MAF SENSOR SENSING CIRCUIT FOR HIGH RESISTANCE

1. Disconnect the ECM electrical connector, PI300. 2. Measure the resistance between:

MAF sensor connector PI14, harness side	ECM connector PI300, harness side
Pin 03	Pin 70

www.JagDocs.com

Is the resistance greater than 5 ohms?

-> Yes
REPAIR the high resistance circuit. For additional information, refer to the wiring diagrams. CLEAR the DTC and test the system for normal operation.

-> No
GO to Pinpoint Test G531330t81.

G531330t81 : CHECK THE MAF SENSOR GROUND CIRCUIT FOR HIGH RESISTANCE

1. Measure the resistance between:

MAF sensor connector PI14, harness side	ECM connector PI300, harness side
Pin 02	Pin 18

Is the resistance greater than 5 ohms?

-> Yes
REPAIR the high resistance circuit. For additional information, refer to the wiring diagrams. CLEAR the DTC and test the system for normal operation.

-> No
INSTALL a new MAF sensor.
Mass Air Flow (MAF) Sensor (18.30.15) CLEAR the DTC and test the system for normal operation.

PINPOINT TEST G531330p2 : INTAKE AIR TEMPERATURE (IAT) SENSOR CIRCUIT

G531330t7 : CHECK THE IAT SENSOR SENSING CIRCUIT FOR SHORT CIRCUIT TO GROUND

1. Disconnect the MAF sensor electrical connector, PI14. 2. Measure the resistance between:

MAF sensor connector PI14, harness side	Battery
Pin 04	Negative terminal

Is the resistance less than 10,000 ohms?

-> Yes
REPAIR the short circuit. For additional information, refer to the wiring diagrams. CLEAR the DTC and test the system for normal operation.

-> No
GO to Pinpoint Test G531330t6.

G531330t6 : CHECK THE IAT SENSOR SENSING CIRCUIT FOR SHORT CIRCUIT TO POWER

1. Measure the resistance between:

MAF sensor connector PI14, harness side	Battery
Pin 04	Positive terminal

Is the resistance less than 10,000 ohms?

-> Yes
REPAIR the short circuit. For additional information, refer to the wiring diagrams. CLEAR the DTC and test the system for normal operation.

-> No
GO to Pinpoint Test G531330t5.

G531330t5 : CHECK THE IAT SENSOR SENSING CIRCUIT FOR HIGH RESISTANCE

1. Disconnect the ECM electrical connector, PI300. 2. Measure the resistance between:

MAF sensor connector PI14, harness side	ECM connector PI300, harness side
Pin 04	Pin 66

Is the resistance greater than 5 ohms?

-> Yes
REPAIR the high resistance circuit. For additional information, refer to the wiring diagrams. CLEAR the DTC and test the system for normal operation.

www.JagDocs.com

-> No
GO to Pinpoint Test G531330t99.

G531330t99 : CHECK THE IAT SENSOR GROUND CIRCUIT FOR HIGH RESISTANCE

1. Measure the resistance between:

MAF sensor connector PI14, harness side	ECM connector PI300, harness side
Pin 05	Pin 12

Is the resistance greater than 5 ohms?

-> Yes
REPAIR the high resistance circuit. For additional information, refer to the wiring diagrams. CLEAR the DTC and test the system for normal operation.

-> No
INSTALL a new MAF sensor.
Mass Air Flow (MAF) Sensor (18.30.15) CLEAR the DTC and test the system for normal operation.

PINPOINT TEST G531330p3 : ENGINE COOLANT TEMPERATURE (ECT) SENSOR CIRCUIT

G531330t10 : CHECK THE ECT SENSOR SENSING CIRCUIT FOR SHORT CIRCUIT TO GROUND

1. Disconnect the ECT sensor electrical connector, PI25. 2. Measure the resistance between:

ECT sensor connector PI25, harness side	Battery
Pin 02	Negative terminal

Is the resistance less than 10,000 ohms?

-> Yes
REPAIR the short circuit. For additional information, refer to the wiring diagrams. CLEAR the DTC and test the system for normal operation.

-> No
GO to Pinpoint Test G531330t9.

G531330t9 : CHECK THE ECT SENSOR SENSING CIRCUIT FOR SHORT CIRCUIT TO POWER

1. Measure the resistance between:

ECT sensor connector PI25, harness side	Battery
Pin 02	Positive terminal

Is the resistance less than 10,000 ohms?

-> Yes
REPAIR the short circuit. For additional information, refer to the wiring diagrams. CLEAR the DTC and test the system for normal operation.

-> No
GO to Pinpoint Test G531330t8.

G531330t8 : CHECK THE ECT SENSOR SENSING CIRCUIT FOR HIGH RESISTANCE

1. Disconnect the ECM electrical connector, PI300. 2. Measure the resistance between:

ECT sensor connector PI25, harness side	ECM connector PI300, harness side
Pin 02	Pin 68

Is the resistance greater than 5 ohms?

-> Yes
REPAIR the high resistance circuit. For additional information, refer to the wiring diagrams. CLEAR the DTC and test the system for normal operation.

-> No
GO to Pinpoint Test G531330t121.

www.JagDocs.com

G531330t121 : CHECK THE ECT SENSOR GROUND CIRCUIT FOR HIGH RESISTANCE

1. Measure the resistance between:

ECT sensor connector PI25, harness side	ECM connector PI300, harness side
Pin 01	Pin 12

Is the resistance greater than 5 ohms?

-> Yes
REPAIR the high resistance circuit. For additional information, refer to the wiring diagrams. CLEAR the DTC and test the system for normal operation.

-> No
INSTALL a new ECT sensor.
Engine Coolant Temperature (ECT) Sensor - VIN Range: G00442->G45703 (18.30.10) CLEAR the DTC. TEST the system for normal operation.

PINPOINT TEST G531330p4 : THROTTLE POSITION (TP) SENSOR 1 CIRCUIT

G531330t95 : CHECK THE TP SENSOR SUPPLY CIRCUIT VOLTAGE

1. Disconnect the TP sensor electrical connector, PI26. 2. Key on, engine off. 3. Measure the voltage between:

TP sensor connector PI26, harness side	Battery
Pin 05	Negative terminal

Is the voltage less than 4 volts?

-> Yes
REPAIR the 5 volt supply circuit between the TP sensor and the ECM. For additional information, refer to the wiring diagrams. CLEAR the DTC and test the system for normal operation.

-> No
GO to Pinpoint Test G531330t96.

G531330t96 : CHECK THE TP SENSOR SUPPLY CIRCUIT FOR SHORT CIRCUIT TO POWER

1. Key off. 2. Measure the resistance between:

TP sensor connector PI26, harness side	Battery
Pin 05	Positive terminal

Is the resistance less than 10,000 ohms?

-> Yes

REPAIR the short circuit. For additional information, refer to the wiring diagrams. CLEAR the DTC and test the system for normal operation.

-> No

GO to Pinpoint Test G531330t13.

G531330t13 : CHECK THE TP SENSOR SENSING CIRCUIT TP1 FOR SHORT CIRCUIT TO GROUND

1. Measure the resistance between:

TP sensor connector PI26, harness side	Battery
Pin 06	Negative terminal

Is the resistance less than 10,000 ohms?

-> Yes

REPAIR the short circuit. For additional information, refer to the wiring diagrams. CLEAR the DTC and test the system for normal operation.

-> No

GO to Pinpoint Test G531330t12.

G531330t12 : CHECK THE TP SENSOR SENSING CIRCUIT TP1 FOR SHORT CIRCUIT TO POWER

1. Measure the resistance between:

TP sensor connector PI26, harness side	Battery

www.JagDocs.com

Pin 06	Positive terminal

Is the resistance less than 10,000 ohms?

-> Yes
REPAIR the short circuit. For additional information, refer to the wiring diagrams. CLEAR the DTC and test the system for normal operation.

-> No
GO to Pinpoint Test G531330t11.

G531330t11 : CHECK THE TP SENSOR SENSING CIRCUIT TP1 FOR HIGH RESISTANCE

1. Disconnect the ECM electrical connector, PI300. 2. Measure the resistance between:

TP sensor connector PI26, harness side	ECM connector PI300, harness side
Pin 06	Pin 65

Is the resistance greater than 5 ohms?

-> Yes
REPAIR the high resistance circuit. For additional information, refer to the wiring diagrams. CLEAR the DTC and test the system for normal operation.

-> No
GO to Pinpoint Test G531330t97.

G531330t97 : CHECK THE TP SENSOR GROUND CIRCUIT FOR HIGH RESISTANCE

1. Measure the resistance between:

TP sensor connector PI26, harness side	ECM connector PI300, harness side
Pin 03	Pin 11

Is the resistance greater than 5 ohms?

-> Yes
REPAIR the high resistance circuit. For additional information, refer to the wiring diagrams. CLEAR the DTC and test the system for normal operation.

-> No
INSTALL a new TP sensor.
Throttle Body - VIN Range: G45704->G99999 (19.70.04) CLEAR the DTC and test the system for normal operation.

PINPOINT TEST G531330p5 : THROTTLE POSITION (TP) SENSOR 2 CIRCUIT

G531330t98 : CHECK THE TP SENSOR SUPPLY CIRCUIT VOLTAGE

1. Disconnect the TP sensor electrical connector, PI26. 2. Key on, engine off. 3. Measure the voltage between:

TP sensor connector PI26, harness side	Battery
Pin 05	Negative terminal

Is the voltage less than 4 volts?

-> Yes
REPAIR the 5 volt supply circuit between the TP sensor and the ECM. For additional information, refer to the wiring diagrams. CLEAR the DTC and test the system for normal operation.

-> No
GO to Pinpoint Test G531330t177.

G531330t177 : CHECK THE TP SENSOR SUPPLY CIRCUIT FOR SHORT CIRCUIT TO POWER

1. Key off. 2. Measure the resistance between:

TP sensor connector PI26, harness side	Battery
Pin 05	Positive terminal

Is the resistance less than 10,000 ohms?

www.JagDocs.com

-> Yes
REPAIR the short circuit. For additional information, refer to the wiring diagrams. CLEAR the DTC and test the system for normal operation.

-> No
GO to Pinpoint Test G531330t14.

G531330t14 : CHECK THE TP SENSOR SENSING CIRCUIT TP2 FOR SHORT CIRCUIT TO GROUND

1. Measure the resistance between:

TP sensor connector PI26, harness side	Battery
Pin 04	Negative terminal

Is the resistance less than 10,000 ohms?

-> Yes
REPAIR the short circuit. For additional information, refer to the wiring diagrams. CLEAR the DTC and test the system for normal operation.

-> No
GO to Pinpoint Test G531330t15.

G531330t15 : CHECK THE TP SENSOR SENSING CIRCUIT TP2 FOR SHORT CIRCUIT TO POWER

1. Measure the resistance between:

TP sensor connector PI26, harness side	Battery
Pin 04	Positive terminal

Is the resistance less than 10,000 ohms?

-> Yes
REPAIR the short circuit. For additional information, refer to the wiring diagrams. CLEAR the DTC and test the system for normal operation.

-> No

GO to Pinpoint Test G531330t16.

G531330t16 : CHECK THE TP SENSOR SENSING CIRCUIT TP2 FOR HIGH RESISTANCE

1. Disconnect the ECM electrical connector, PI300. 2. Measure the resistance between:

TP sensor connector PI26, harness side	ECM connector PI300, harness side
Pin 04	Pin 67

Is the resistance greater than 5 ohms?

-> Yes
REPAIR the high resistance circuit. For additional information, refer to the wiring diagrams. CLEAR the DTC and test the system for normal operation.

-> No
GO to Pinpoint Test G531330t180.

G531330t180 : CHECK THE TP SENSOR GROUND CIRCUIT FOR HIGH RESISTANCE

1. Measure the resistance between:

TP sensor connector PI26, harness side	ECM connector PI300, harness side
Pin 03	Pin 11

Is the resistance greater than 5 ohms?

-> Yes
REPAIR the high resistance circuit. For additional information, refer to the wiring diagrams. CLEAR the DTC and test the system for normal operation.

-> No
INSTALL a new TP sensor.
Throttle Body - VIN Range: G45704->G99999 (19.70.04) CLEAR the DTC and test the system for normal operation.

www.JagDocs.com

PINPOINT TEST G531330p6 : RIGHT-HAND H02S VARIABLE AND CONSTANT CIRCUITS

G531330t19 : CHECK THE H02S VARIABLE CIRCUIT FOR SHORT CIRCUIT TO GROUND

1. Disconnect the H02S electrical connector, PI10. 2. Measure the resistance between:

H02S connector PI10, harness side	Battery
Pin 04	Negative terminal

Is the resistance less than 10,000 ohms?

-> Yes
REPAIR the short circuit. For additional information, refer to the wiring diagrams. CLEAR the DTC and test the system for normal operation.

-> No
GO to Pinpoint Test G531330t18.

G531330t18 : CHECK THE H02S VARIABLE CIRCUIT FOR SHORT CIRCUIT TO POWER

1. Measure the resistance between:

H02S connector PI10, harness side	Battery
Pin 04	Positive terminal

Is the resistance less than 10,000 ohms?

-> Yes
REPAIR the short circuit. For additional information, refer to the wiring diagrams. CLEAR the DTC and test the system for normal operation.

-> No
GO to Pinpoint Test G531330t22.

G531330t22 : CHECK THE H02S CONSTANT CIRCUIT FOR SHORT CIRCUIT TO GROUND

1. Measure the resistance between:

H02S connector PI10, harness side	Battery
Pin 03	Negative terminal

Is the resistance less than 10,000 ohms?

-> Yes

REPAIR the short circuit. For additional information, refer to the wiring diagrams. CLEAR the DTC and test the system for normal operation.

-> No

GO to Pinpoint Test G531330t21.

G531330t21 : CHECK THE H02S CONSTANT CIRCUIT FOR SHORT CIRCUIT TO POWER

1. Measure the resistance between:

H02S connector PI10, harness side	Battery
Pin 03	Positive terminal

Is the resistance less than 10,000 ohms?

-> Yes

REPAIR the short circuit. For additional information, refer to the wiring diagrams. CLEAR the DTC and test the system for normal operation.

-> No

GO to Pinpoint Test G531330t17.

G531330t17 : CHECK THE H02S VARIABLE CIRCUIT FOR HIGH RESISTANCE

1. Disconnect the ECM electrical connector, PI300. 2. Measure the resistance between:

H02S connector PI10, harness side	ECM connector PI300, harness side

www.JagDocs.com

Pin 04	Pin 28

Is the resistance greater than 5 ohms?

-> Yes
REPAIR the high resistance circuit. For additional information, refer to the wiring diagrams. CLEAR the DTC and test the system for normal operation.

-> No
GO to Pinpoint Test G531330t20.

G531330t20 : CHECK THE H02S CONSTANT CIRCUIT FOR HIGH RESISTANCE

1. Measure the resistance between:

H02S connector PI10, harness side	ECM connector PI300, harness side
Pin 03	Pin 29

Is the resistance greater than 5 ohms?

-> Yes
REPAIR the high resistance circuit. For additional information, refer to the wiring diagrams. CLEAR the DTC and test the system for normal operation.

-> No
INSTALL a new H02S.
Heated Oxygen Sensor (HO2S) CLEAR the DTC and test the system for normal operation.

PINPOINT TEST G531330p7 : RIGHT-HAND H02S HEATER SUPPLY AND CONTROL CIRCUITS

G531330t23 : CHECK H02S HEATER POWER SUPPLY CIRCUIT

1. Disconnect the H02S electrical connector, PI10. 2. Key on, engine off. 3. Make sure the O2S heater relay is engaged. 4. Measure the voltage between:

H02S connector PI10, harness side	Battery

Pin 01	Negative terminal

Is the voltage greater than 10 volts?

-> Yes
GO to Pinpoint Test G531330t26.

-> No
REPAIR the power supply circuit to the H02S heater. This circuit includes the O2S heater relay and fuse 33 of the front power distribution box. For additional information, refer to the wiring diagrams. CLEAR the DTC and test the system for normal operation.

G531330t26 : CHECK H02S HEATER CONTROL CIRCUIT FROM ECM FOR SHORT CIRCUIT TO GROUND

1. Key off. 2. Measure the resistance between:

H02S connector PI10, harness side	Battery
Pin 02	Negative terminal

Is the resistance less than 10,000 ohms?

-> Yes
REPAIR the short circuit. For additional information, refer to the wiring diagrams. CLEAR the DTC and test the system for normal operation.

-> No
GO to Pinpoint Test G531330t25.

G531330t25 : CHECK H02S HEATER CONTROL CIRCUIT FROM ECM FOR SHORT CIRCUIT TO POWER

1. Measure the resistance between:

H02S connector PI10, harness side	Battery
Pin 02	Positive terminal

Is the resistance less than 10,000 ohms?

www.JagDocs.com

-> Yes
REPAIR the short circuit. For additional information, refer to the wiring diagrams. CLEAR the DTC and test the system for normal operation.

-> No
GO to Pinpoint Test G531330t24.

G531330t24 : CHECK H02S HEATER CONTROL CIRCUIT FROM ECM FOR HIGH RESISTANCE

1. Disconnect the ECM electrical connector, PI300. 2. Measure the resistance between:

H02S connector PI10, harness side	ECM connector PI300, harness side
Pin 02	Pin 76

Is the resistance greater than 5 ohms?

-> Yes
REPAIR the high resistance circuit. For additional information, refer to the wiring diagrams. CLEAR the DTC and test the system for normal operation.

-> No
INSTALL a new H02S.
Heated Oxygen Sensor (HO2S) CLEAR the DTC and test the system for normal operation.

PINPOINT TEST G531330p8 : RIGHT-HAND CATALYST MONITOR SENSOR SENSING AND GROUND CIRCUITS

G531330t29 : CHECK THE CATALYST MONITOR SENSOR SENSING CIRCUIT FOR SHORT CIRCUIT TO GROUND

1. Disconnect the catalyst monitor electrical connector, PI11. 2. Measure the resistance between:

Catalyst monitor connector PI11, harness side	Battery
Pin 04	Negative terminal

Is the resistance less than 10,000 ohms?

-> Yes
REPAIR the short circuit. For additional information, refer to the wiring diagrams. CLEAR the DTC and test the system for normal operation.

-> No
GO to Pinpoint Test G531330t28.

G531330t28 : CHECK THE CATALYST MONITOR SENSOR SENSING CIRCUIT FOR SHORT CIRCUIT TO POWER

1. Measure the resistance between:

Catalyst monitor connector PI11, harness side	Battery
Pin 04	Positive terminal

Is the resistance less than 10,000 ohms?

-> Yes
REPAIR the short circuit. For additional information, refer to the wiring diagrams. CLEAR the DTC and test the system for normal operation.

-> No
GO to Pinpoint Test G531330t27.

G531330t27 : CHECK THE CATALYST MONITOR SENSOR SENSING CIRCUIT FOR HIGH RESISTANCE

1. Disconnect the ECM electrical connector, PI300. 2. Measure the resistance between:

Catalyst monitor connector PI11, harness side	ECM connector PI300, harness side
Pin 04	Pin 40

Is the resistance greater than 5 ohms?

-> Yes
REPAIR the high resistance circuit. For additional information, refer to the wiring diagrams. CLEAR the DTC and test the system for normal operation.

-> No

www.JagDocs.com

GO to Pinpoint Test G531330t30.

G531330t30 : CHECK THE CATALYST MONITOR SENSOR GROUND CIRCUIT FOR HIGH RESISTANCE

1. Measure the resistance between:

Catalyst monitor connector PI11, harness side	ECM connector PI300, harness side
Pin 03	Pin 22

Is the resistance greater than 5 ohms?

-> Yes
REPAIR the high resistance circuit. For additional information, refer to the wiring diagrams. CLEAR the DTC and test the system for normal operation.

-> No
INSTALL a new catalyst monitor sensor.
Catalyst Monitor Sensor (18.30.66) CLEAR the DTC and test the system for normal operation.

PINPOINT TEST G531330p9 : RIGHT-HAND CATALYST MONITOR SENSOR SUPPLY AND HEATER CONTROL CIRCUITS

G531330t31 : CHECK THE CATALYST MONITOR HEATER POWER SUPPLY CIRCUIT

1. Disconnect the catalyst monitor sensor electrical connector, PI11. 2. Key on, engine off. 3. Make sure the O2S heater relay is energized. 4. Measure the voltage between:

Catalyst monitor connector PI11, harness side	Battery
Pin 01	Negative terminal

Is the voltage greater than 10 volts?

-> Yes
GO to Pinpoint Test G531330t170.

-> No
REPAIR the power supply circuit to the catalyst monitor heater. This circuit includes the O2S heater relay and fuse 33 of the front power distribution box. For additional information, refer to the wiring diagrams. CLEAR the DTC and test the system for normal operation.

G531330t170 : CHECK THE CATALYST MONITOR HEATER CONTROL CIRCUIT FOR SHORT CIRCUIT TO GROUND

1. Key off. 2. Measure the resistance between:

Catalyst monitor connector PI11, harness side	Battery
Pin 02	Negative terminal

Is the resistance less than 10,000 ohms?

-> Yes
REPAIR the short circuit. For additional information, refer to the wiring diagrams. CLEAR the DTC and test the system for normal operation.

-> No
GO to Pinpoint Test G531330t171.

G531330t171 : CHECK THE CATALYST MONITOR HEATER CONTROL CIRCUIT FOR SHORT CIRCUIT TO POWER

1. Measure the resistance between:

Catalyst monitor connector PI11, harness side	Battery
Pin 02	Positive terminal

Is the resistance less than 10,000 ohms?

-> Yes
REPAIR the short circuit. For additional information, refer to the wiring diagrams. CLEAR the DTC and test the system for normal operation.

-> No
GO to Pinpoint Test G531330t32.

www.JagDocs.com

G531330t32 : CHECK THE CATALYST MONITOR HEATER CONTROL CIRCUIT FOR HIGH RESISTANCE

1. Disconnect the ECM electrical connector, PI300. 2. Measure the resistance between:

Catalyst monitor connector PI11, harness side	ECM connector PI300, harness side
Pin 02	Pin 88

Is the resistance greater than 5 ohms?

-> Yes
REPAIR the high resistance circuit. For additional information, refer to the wiring diagrams. CLEAR the DTC and test the system for normal operation.

-> No
INSTALL a new catalyst monitor sensor.
Catalyst Monitor Sensor (18.30.66) CLEAR the DTC and test the system for normal operation. If the DTC is repeated, refer to the warranty policy and procedures manual if an ECM is suspect.

PINPOINT TEST G531330p10 : LEFT-HAND H02S VARIABLE AND CONSTANT CIRCUITS

G531330t35 : CHECK THE H02S VARIABLE CIRCUIT FOR SHORT CIRCUIT TO GROUND

1. Disconnect the H02S electrical connector, PI12. 2. Measure the resistance between:

H02S connector PI12, harness side	Battery
Pin 04	Negative terminal

Is the resistance less than 10,000 ohms?

-> Yes
REPAIR the short circuit. For additional information, refer to the wiring diagrams. CLEAR the DTC and test the system for normal operation.

-> No

GO to Pinpoint Test G531330t34.

G531330t34 : CHECK THE H02S VARIABLE CIRCUIT FOR SHORT TO CIRCUIT TO POWER

1. Measure the resistance between:

H02S connector PI12, harness side	Battery
Pin 04	Positive terminal

Is the resistance less than 10,000 ohms?

-> Yes
REPAIR the short circuit. For additional information, refer to the wiring diagrams. CLEAR the DTC and test the system for normal operation.

-> No
GO to Pinpoint Test G531330t38.

G531330t38 : CHECK THE H02S CONSTANT CIRCUIT FOR SHORT CIRCUIT TO GROUND

1. Measure the resistance between:

H02S connector PI12, harness side	Battery
Pin 03	Negative terminal

Is the resistance less than 10,000 ohms?

-> Yes
REPAIR the short circuit. For additional information, refer to the wiring diagrams. CLEAR the DTC and test the system for normal operation.

-> No
GO to Pinpoint Test G531330t37.

G531330t37 : CHECK THE H02S CONSTANT CIRCUIT FOR SHORT TO CIRCUIT TO POWER

1. Measure the resistance between:

www.JagDocs.com

H02S connector PI12, harness side	Battery
Pin 03	Positive terminal

Is the resistance less than 10,000 ohms?

-> Yes
REPAIR the short circuit. For additional information, refer to the wiring diagrams. CLEAR the DTC and test the system for normal operation.

-> No
GO to Pinpoint Test G531330t33.

G531330t33 : CHECK THE H02S VARIABLE CIRCUIT FOR HIGH RESISTANCE

1. Disconnect the ECM electrical connector, PI300. 2. Measure the resistance between:

H02S connector PI12, harness side	ECM connector PI300, harness side
Pin 04	Pin 26

Is the resistance greater than 5 ohms?

-> Yes
REPAIR the high resistance circuit. For additional information, refer to the wiring diagrams. CLEAR the DTC and test the system for normal operation.

-> No
GO to Pinpoint Test G531330t36.

G531330t36 : CHECK THE H02S CONSTANT CIRCUIT FOR HIGH RESISTANCE

1. Measure the resistance between:

H02S connector PI12, harness side	ECM connector PI300, harness side
Pin 03	Pin 27

Is the resistance greater than 5 ohms?

-> Yes
REPAIR the high resistance circuit. For additional information, refer to the wiring diagrams. CLEAR the DTC and test the system for normal operation.

-> No
INSTALL a new H02S.
Heated Oxygen Sensor (HO2S) CLEAR the DTC and test the system for normal operation. If the DTC is repeated, refer to the warranty policy and procedures manual if an ECM is suspect.

PINPOINT TEST G531330p11 : LEFT-HAND H02S HEATER SUPPLY AND CONTROL CIRCUITS

G531330t39 : CHECK H02S HEATER POWER SUPPLY CIRCUIT

1. Disconnect the H02S electrical connector, PI12. 2. Key on, engine off. 3. Measure the voltage between:

H02S connector PI12, harness side	Battery
Pin 01	Negative terminal

Is the voltage greater than 10 volts?

-> Yes
GO to Pinpoint Test G531330t42.

-> No
REPAIR the power supply circuit to the H02S heater. This circuit includes the O2S heater relay and fuse 34 of the front power distribution box. For additional information, refer to the wiring diagrams. CLEAR the DTC and test the system for normal operation.

G531330t42 : CHECK H02S HEATER CONTROL CIRCUIT FROM ECM FOR SHORT CIRCUIT TO GROUND

1. Key off. 2. Measure the resistance between:

H02S connector PI12, harness side	Battery
Pin 02	Negative terminal

www.JagDocs.com

Is the resistance less than 10,000 ohms?

-> Yes
REPAIR the short circuit. For additional information, refer to the wiring diagrams. CLEAR the DTC and test the system for normal operation.

-> No
GO to Pinpoint Test G531330t41.

G531330t41 : CHECK H02S HEATER CONTROL CIRCUIT FROM ECM FOR SHORT CIRCUIT TO POWER

1. Measure the resistance between:

H02S connector PI12, harness side	Battery
Pin 02	Positive terminal

Is the resistance less than 10,000 ohms?

-> Yes
REPAIR the short circuit. For additional information, refer to the wiring diagrams. CLEAR the DTC and test the system for normal operation.

-> No
GO to Pinpoint Test G531330t40.

G531330t40 : CHECK H02S HEATER CONTROL CIRCUIT FROM ECM FOR HIGH RESISTANCE

1. Disconnect the ECM electrical connector, PI300. 2. Measure the resistance between:

H02S connector PI12, harness side	ECM connector PI300, harness side
Pin 02	Pin 77

Is the resistance greater than 5 ohms?

-> Yes
REPAIR the high resistance circuit. For additional information, refer to the wiring diagrams. CLEAR the DTC and test the system for normal operation.

-> No
INSTALL a new H02S.
Heated Oxygen Sensor (HO2S) CLEAR the DTC and test the system for normal operation. If the DTC is repeated, refer to the warranty policy and procedures manual if an ECM is suspect.

PINPOINT TEST G531330p14 : LEFT-HAND CATALYST MONITOR SENSOR SENSING AND GROUND CIRCUITS

G531330t51 : CHECK THE CATALYST MONITOR SENSOR SENSING CIRCUIT FOR SHORT CIRCUIT TO GROUND

1. Disconnect the catalyst monitor electrical connector, PI13. 2. Measure the resistance between:

Catalyst monitor connector PI13, harness side	Battery
Pin 04	Negative terminal

Is the resistance less than 10,000 ohms?

-> Yes
REPAIR the short circuit. For additional information, refer to the wiring diagrams. CLEAR the DTC and test the system for normal operation.

-> No
GO to Pinpoint Test G531330t50.

G531330t50 : CHECK THE CATALYST MONITOR SENSOR SENSING CIRCUIT FOR SHORT CIRCUIT TO POWER

1. Measure the resistance between:

Catalyst monitor connector PI13, harness side	Battery
Pin 04	Positive terminal

Is the resistance less than 10,000 ohms?

-> Yes
REPAIR the short circuit. For additional information, refer to the wiring diagrams. CLEAR the DTC and test the system for normal operation.

www.JagDocs.com

-> No
GO to Pinpoint Test G531330t49.

G531330t49 : CHECK THE CATALYST MONITOR SENSOR SENSING CIRCUIT FOR HIGH RESISTANCE

1. Disconnect the ECM electrical connector, PI300. 2. Measure the resistance between:

Catalyst monitor connector PI13, harness side	ECM connector PI300, harness side
Pin 04	Pin 41

Is the resistance greater than 5 ohms?

-> Yes
REPAIR the high resistance circuit. For additional information, refer to the wiring diagrams. CLEAR the DTC and test the system for normal operation.

-> No
GO to Pinpoint Test G531330t52.

G531330t52 : CHECK THE CATALYST MONITOR SENSOR GROUND CIRCUIT FOR HIGH RESISTANCE

1. Measure the resistance between:

Catalyst monitor connector PI13, harness side	ECM connector PI300, harness side
Pin 03	Pin 45

Is the resistance greater than 5 ohms?

-> Yes
REPAIR the high resistance circuit. For additional information, refer to the wiring diagrams. CLEAR the DTC and test the system for normal operation.

-> No
INSTALL a new catalyst monitor sensor.
Catalyst Monitor Sensor (18.30.66) CLEAR the DTC and test the system for normal operation.

PINPOINT TEST G531330p12 : LEFT-HAND CATALYST MONITOR SENSOR SUPPLY AND HEATER CONTROL CIRCUITS

G531330t43 : CHECK THE CATALYST MONITOR HEATER POWER SUPPLY CIRCUIT

1. Disconnect the catalyst monitor sensor electrical connector, PI13. 2. Key on, engine off. 3. Make sure the O2S heater relay is engaged. 4. Measure the voltage between:

Catalyst monitor connector PI13, harness side	Battery
Pin 01	Negative terminal

Is the voltage greater than 10 volts?

-> Yes
GO to Pinpoint Test G531330t172.

-> No
REPAIR the power supply circuit to the catalyst monitor heater. This circuit includes the O2S heater relay and fuse 34 of the front power distribution box. For additional information, refer to the wiring diagrams. CLEAR the DTC and test the system for normal operation.

G531330t172 : CHECK THE CATALYST MONITOR HEATER CONTROL CIRCUIT FOR SHORT CIRCUIT TO GROUND

1. Key off. 2. Measure the resistance between:

Catalyst monitor connector PI13, harness side	Battery
Pin 02	Negative terminal

Is the resistance less than 10,000 ohms?

-> Yes
REPAIR the short circuit. For additional information, refer to the wiring diagrams. CLEAR the DTC and test the system for normal operation.

www.JagDocs.com

-> No
GO to Pinpoint Test G531330t173.

G531330t173 : CHECK THE CATALYST MONITOR HEATER CONTROL CIRCUIT FOR SHORT CIRCUIT TO POWER

1. Measure the resistance between:

Catalyst monitor connector PI13, harness side	Battery
Pin 02	Positive terminal

Is the resistance less than 10,000 ohms?

-> Yes
REPAIR the short circuit. For additional information, refer to the wiring diagrams. CLEAR the DTC and test the system for normal operation.

-> No
GO to Pinpoint Test G531330t44.

G531330t44 : CHECK THE CATALYST MONITOR SENSOR HEATER CONTROL CIRCUIT FOR HIGH RESISTANCE

1. Disconnect the ECM electrical connector, PI300. 2. Measure the resistance between:

Catalyst monitor connector PI13, harness side	ECM connector PI300, harness side
Pin 02	Pin 89

Is the resistance greater than 5 ohms?

-> Yes
REPAIR the high resistance circuit. For additional information, refer to the wiring diagrams. CLEAR the DTC and test the system for normal operation.

-> No
INSTALL a new catalyst monitor sensor.
Catalyst Monitor Sensor (18.30.66) CLEAR the DTC and test the system for normal operation.

PINPOINT TEST G531330p13 : ENGINE OIL TEMPERATURE (EOT) SENSOR CIRCUIT

G531330t47 : CHECK THE EOT SENSOR SENSING CIRCUIT FOR SHORT CIRCUIT TO GROUND

1. Disconnect the EOT sensor electrical connector, PI24. 2. Measure the resistance between:

EOT sensor connector PI24, harness side	Battery
Pin 02	Negative terminal

Is the resistance less than 10,000 ohms?

-> Yes
REPAIR the short circuit. For additional information, refer to the wiring diagrams. CLEAR the DTC and test the system for normal operation.

-> No
GO to Pinpoint Test G531330t46.

G531330t46 : CHECK THE EOT SENSOR SENSING CIRCUIT FOR SHORT CIRCUIT TO POWER

1. Measure the resistance between:

EOT sensor connector PI24, harness side	Battery
Pin 02	Positive terminal

Is the resistance less than 10,000 ohms?

-> Yes
REPAIR the short circuit. For additional information, refer to the wiring diagrams. CLEAR the DTC and test the system for normal operation.

-> No
GO to Pinpoint Test G531330t45.

www.JagDocs.com

G531330t45 : CHECK THE EOT SENSOR SENSING CIRCUIT FOR HIGH RESISTANCE

1. Disconnect the ECM electrical connector, PI300. 2. Measure the resistance between:

EOT sensor connector PI24, harness side	ECM connector PI300, harness side
Pin 02	Pin 23

Is the resistance greater than 5 ohms?

-> Yes
REPAIR the high resistance circuit. For additional information, refer to the wiring diagrams. CLEAR the DTC and test the system for normal operation.

-> No
GO to Pinpoint Test G531330t48.

G531330t48 : CHECK THE EOT SENSOR GROUND CIRCUIT FOR HIGH RESISTANCE

1. Measure the resistance between:

EOT sensor connector PI24, harness side	ECM connector PI300, harness side
Pin 01	Pin 10

Is the resistance greater than 5 ohms?

-> Yes
REPAIR the high resistance circuit. This circuit includes harness splice, PIS49. For additional information, refer to the wiring diagrams. CLEAR the DTC and test the system for normal operation.

-> No
INSTALL a new EOT sensor.
Oil Temperature Sensor (18.31.01) CLEAR the DTC and test the system for normal operation. If the DTC is repeated, refer to the warranty policy and procedures manual if an ECM is suspect.

PINPOINT TEST G531330p15 : RIGHT-HAND KNOCK SENSOR (KS) CIRCUIT

G531330t55 : CHECK KS SENSING CIRCUIT FOR SHORT CIRCUIT TO GROUND

1. Disconnect the KS electrical connector, PI60. 2. Measure the resistance between:

KS connector PI60, harness side	Battery
Pin 01	Negative terminal

Is the resistance less than 10,000 ohms?

-> Yes

REPAIR the short circuit. For additional information, refer to the wiring diagrams. CLEAR the DTC and test the system for normal operation.

-> No

GO to Pinpoint Test G531330t54.

G531330t54 : CHECK KS SENSING CIRCUIT FOR SHORT TO CIRCUIT TO POWER

1. Measure the resistance between:

KS connector PI60, harness side	Battery
Pin 01	Positive terminal

Is the resistance less than 10,000 ohms?

-> Yes

REPAIR the short circuit. For additional information, refer to the wiring diagrams. CLEAR the DTC and test the system for normal operation.

-> No

GO to Pinpoint Test G531330t53.

G531330t53 : CHECK KS SENSING CIRCUIT FOR HIGH RESISTANCE

1. Disconnect the ECM electrical connector, PI300. 2. Measure the resistance between:

KS connector PI60, harness side	ECM connector PI300, harness side
Pin 01	Pin 42

www.JagDocs.com

Is the resistance greater than 5 ohms?

-> Yes
REPAIR the high resistance circuit. For additional information, refer to the wiring diagrams. CLEAR the DTC and test the system for normal operation.

-> No
GO to Pinpoint Test G531330t56.

G531330t56 : CHECK KS GROUND CIRCUIT FOR HIGH RESISTANCE

1. Measure the resistance between:

KS connector PI60, harness side	ECM connector PI300, harness side
Pin 02	Pin 19

Is the resistance greater than 5 ohms?

-> Yes
REPAIR the high resistance circuit. For additional information, refer to the wiring diagrams. CLEAR the DTC and test the system for normal operation.

-> No
INSTALL a new KS.
Knock Sensor (KS) RH (18.30.93) CLEAR the DTC and test the system for normal operation.

PINPOINT TEST G531330p16 : LEFT-HAND KNOCK SENSOR (KS) CIRCUIT

G531330t59 : CHECK KS SENSING CIRCUIT FOR SHORT CIRCUIT TO GROUND

1. Disconnect the KS electrical connector, PI61. 2. Measure the resistance between:

KS connector PI61, harness side	Battery
Pin 01	Negative terminal

Is the resistance less than 10,000 ohms?

-> Yes
REPAIR the short circuit. For additional information, refer to the wiring diagrams. CLEAR the DTC and test the system for normal operation.

-> No
GO to Pinpoint Test G531330t58.

G531330t58 : CHECK KS SENSING CIRCUIT FOR SHORT CIRCUIT TO POWER

1. Measure the resistance between:

KS connector PI61, harness side	Battery
Pin 01	Positive terminal

Is the resistance less than 10,000 ohms?

-> Yes
REPAIR the short circuit. For additional information, refer to the wiring diagrams. CLEAR the DTC and test the system for normal operation.

-> No
GO to Pinpoint Test G531330t57.

G531330t57 : CHECK KS SENSING CIRCUIT FOR HIGH RESISTANCE

1. Disconnect the ECM electrical connector, PI300. 2. Measure the resistance between:

KS connector PI61, harness side	ECM connector PI300, harness side
Pin 01	Pin 43

Is the resistance greater than 5 ohms?

-> Yes
REPAIR the high resistance circuit. For additional information, refer to the wiring diagrams. CLEAR the DTC and test the system for normal operation.

-> No
GO to Pinpoint Test G531330t60.

www.JagDocs.com

G531330t60 : CHECK KS GROUND CIRCUIT FOR HIGH RESISTANCE

1. Measure the resistance between:

KS connector PI61, harness side	ECM connector PI300, harness side
Pin 02	Pin 20

Is the resistance greater than 5 ohms?

-> Yes
REPAIR the high resistance circuit. For additional information, refer to the wiring diagrams. CLEAR the DTC and test the system for normal operation.

-> No
INSTALL a new KS.
Knock Sensor (KS) LH (18.30.92) CLEAR the DTC and test the system for normal operation.

PINPOINT TEST G531330p17 : CRANKSHAFT POSITION (CKP) SENSOR CIRCUIT

G531330t61 : CHECK THE CKP SENSOR FOR CORRECT INSTALLATION

1. Check the CKP sensor for correct installation.

Is the CKP sensor correctly installed?

-> Yes
GO to Pinpoint Test G531330t62.

-> No
INSTALL the CKP sensor correctly.
Crankshaft Position (CKP) Sensor (18.30.12) Reconnect the sensor. CLEAR the DTCs and test the system for normal operation.

G531330t62 : CHECK THE CKP SENSOR FOR DEBRIS

1. Remove the CKP sensor and inspect for debris.

Is the CKP sensor free of debris?

-> Yes
GO to Pinpoint Test G531330t65.

-> No
CLEAN the sensor and wheel. INSTALL the sensor.
Crankshaft Position (CKP) Sensor (18.30.12) Reconnect the sensor. CLEAR the DTCs and test the system for normal operation.

G531330t65 : CHECK THE CKP SENSOR SENSING CIRCUIT FOR SHORT CIRCUIT TO GROUND

1. Disconnect the CKP sensor electrical connector, PI21. 2. Measure the resistance between:

CKP sensor connector PI21, harness side	Battery
Pin 02	Negative terminal

Is the resistance less than 10,000 ohms?

-> Yes
REPAIR the short circuit. For additional information, refer to the wiring diagrams. CLEAR the DTC and test the system for normal operation.

-> No
GO to Pinpoint Test G531330t64.

G531330t64 : CHECK THE CKP SENSOR SENSING CIRCUIT FOR SHORT CIRCUIT TO POWER

1. Measure the resistance between:

CKP sensor connector PI21, harness side	Battery
Pin 02	Positive terminal

Is the resistance less than 10,000 ohms?

-> Yes
REPAIR the short circuit. For additional information, refer to the wiring diagrams. CLEAR the DTC and test the system for normal operation.

-> No
GO to Pinpoint Test G531330t63.

www.JagDocs.com

G531330t63 : CHECK THE CKP SENSOR SENSING CIRCUIT FOR HIGH RESISTANCE

1. Disconnect the ECM electrical connector, PI300. 2. Measure the resistance between:

CKP sensor connector PI21, harness side	ECM connector PI300, harness side
Pin 02	Pin 30

Is the resistance greater than 5 ohms?

-> Yes
REPAIR the high resistance circuit. For additional information, refer to the wiring diagrams. CLEAR the DTC and test the system for normal operation.

-> No
GO to Pinpoint Test G531330t66.

G531330t66 : CHECK THE CKP SENSOR GROUND CIRCUIT FOR HIGH RESISTANCE

1. Measure the resistance between:

CKP sensor connector PI21, harness side	ECM connector PI300, harness side
Pin 01	Pin 06

Is the resistance greater than 5 ohms?

-> Yes
REPAIR the high resistance circuit. For additional information, refer to the wiring diagrams. CLEAR the DTC and test the system for normal operation.

-> No
INSTALL a new CKP sensor.
Crankshaft Position (CKP) Sensor (18.30.12) CLEAR the DTC and test the system for normal operation.

PINPOINT TEST G531330p18 : RIGHT-HAND CAMSHAFT POSITION (CMP) SENSOR CIRCUIT

G531330t67 : CHECK THE CMP SENSOR FOR CORRECT INSTALLATION

1. Check the CMP sensor for correct installation.

Is the CMP sensor correctly installed?

-> Yes
GO to Pinpoint Test G531330t68.

-> No
INSTALL the CMP sensor correctly.
Camshaft Position (CMP) Sensor RH (18.31.11) CLEAR the DTCs and test the system for normal operation.

G531330t68 : CHECK THE CMP SENSOR FOR FOREIGN DEBRIS

1. Remove the CMP sensor and inspect for foreign debris.

Is the CMP sensor free of foreign debris?

-> Yes
GO to Pinpoint Test G531330t71.

-> No
CLEAN the sensor and wheel. INSTALL the sensor.
Camshaft Position (CMP) Sensor RH (18.31.11) CLEAR the DTCs and test the system for normal operation.

G531330t71 : CHECK THE CMP SENSOR SENSING CIRCUIT FOR SHORT CIRCUIT TO GROUND

1. Disconnect the CMP sensor electrical connector, PI23. 2. Measure the resistance between:

CMP sensor connector PI23, harness side	Battery
Pin 02	Negative terminal

Is the resistance less than 10,000 ohms?

www.JagDocs.com

-> Yes
REPAIR the short circuit. For additional information, refer to the wiring diagrams. CLEAR the DTC and test the system for normal operation.

-> No
GO to Pinpoint Test G531330t70.

G531330t70 : CHECK THE CMP SENSOR SENSING CIRCUIT FOR SHORT CIRCUIT TO POWER

1. Measure the resistance between:

CMP sensor connector PI23, harness side	Battery
Pin 02	Positive terminal

Is the resistance less than 10,000 ohms?

-> Yes
REPAIR the short circuit. For additional information, refer to the wiring diagrams. CLEAR the DTC and test the system for normal operation.

-> No
GO to Pinpoint Test G531330t69.

G531330t69 : CHECK THE CMP SENSOR SENSING CIRCUIT FOR HIGH RESISTANCE

1. Disconnect the ECM electrical connector, PI300. 2. Measure the resistance between:

CMP sensor connector PI23, harness side	ECM connector PI300, harness side
Pin 02	Pin 34

Is the resistance greater than 5 ohms?

-> Yes
REPAIR the high resistance circuit. For additional information, refer to the wiring diagrams. CLEAR the DTC and test the system for normal operation.

-> No

GO to Pinpoint Test G531330t72.

G531330t72 : CHECK THE CMP SENSOR GROUND CIRCUIT FOR HIGH RESISTANCE

1. Measure the resistance between:

CMP sensor connector PI23, harness side	ECM connector PI300, harness side
Pin 01	Pin 07

Is the resistance greater than 5 ohms?

-> Yes
REPAIR the high resistance circuit. For additional information, refer to the wiring diagrams. CLEAR the DTC and test the system for normal operation.

-> No
INSTALL a new CMP sensor.
Camshaft Position (CMP) Sensor RH (18.31.11) CLEAR the DTC and test the system for normal operation.

PINPOINT TEST G531330p28 : LEFT-HAND CAMSHAFT POSITION (CMP) SENSOR CIRCUIT

G531330t135 : CHECK THE CMP SENSOR FOR CORRECT INSTALLATION

1. Check the CMP sensor for correct installation.

Is the CMP sensor correctly installed?

-> Yes
GO to Pinpoint Test G531330t136.

-> No
INSTALL the CMP sensor correctly.
Camshaft Position (CMP) Sensor LH (18.31.12) CLEAR the DTCs and test the system for normal operation.

G531330t136 : CHECK THE CMP SENSOR FOR FOREIGN DEBRIS

1. Remove the CMP sensor and inspect for foreign debris.

www.JagDocs.com

Is the CMP sensor free of foreign debris?

-> Yes
GO to Pinpoint Test G531330t139.

-> No
CLEAN the sensor and wheel. INSTALL the sensor.
Camshaft Position (CMP) Sensor LH (18.31.12) CLEAR the DTCs and test the system for normal operation.

G531330t139 : CHECK THE CMP SENSOR SENSING CIRCUIT FOR SHORT CIRCUIT TO GROUND

1. Disconnect the CMP sensor electrical connector, PI22. 2. Measure the resistance between:

CMP sensor connector PI22, harness side	Battery
Pin 01	Negative terminal

Is the resistance less than 10,000 ohms?

-> Yes
REPAIR the short circuit. For additional information, refer to the wiring diagrams. CLEAR the DTC and test the system for normal operation.

-> No
GO to Pinpoint Test G531330t138.

G531330t138 : CHECK THE CMP SENSOR SENSING CIRCUIT FOR SHORT CIRCUIT TO POWER

1. Measure the resistance between:

CMP sensor connector PI22, harness side	Battery
Pin 01	Positive terminal

Is the resistance less than 10,000 ohms?

-> Yes
REPAIR the short circuit. For additional information, refer to the wiring diagrams. CLEAR the DTC and test the system for normal operation.

-> No
GO to Pinpoint Test G531330t137.

G531330t137 : CHECK THE CMP SENSOR SENSING CIRCUIT FOR HIGH RESISTANCE

1. Disconnect the ECM electrical connector, PI300. 2. Measure the resistance between:

CMP sensor connector PI22, harness side	ECM connector PI300, harness side
Pin 01	Pin 33

Is the resistance greater than 5 ohms?

-> Yes
REPAIR the high resistance circuit. For additional information, refer to the wiring diagrams. CLEAR the DTC and test the system for normal operation.

-> No
GO to Pinpoint Test G531330t174.

G531330t174 : CHECK THE CMP SENSOR GROUND CIRCUIT FOR HIGH RESISTANCE

1. Measure the resistance between:

CMP sensor connector PI22, harness side	ECM connector PI300, harness side
Pin 02	Pin 08

Is the resistance greater than 5 ohms?

-> Yes
REPAIR the high resistance circuit. For additional information, refer to the wiring diagrams. CLEAR the DTC and test the system for normal operation.

-> No
INSTALL a new CMP sensor.
Camshaft Position (CMP) Sensor LH (18.31.12) CLEAR the DTC and test the system for normal operation.

www.JagDocs.com

PINPOINT TEST G531330p19 : RADIATOR COOLING FAN MODULE DRIVE CIRCUIT

G531330t73 : CHECK THE RADIATOR FAN MODULE PERMANENT SUPPLY

1. Disconnect the fan module electrical connector, EC20. 2. Measure the voltage between:

Fan module connector EC20, harness side	Battery
Pin 01	Negative terminal

Is the voltage less than 10 volts?

-> Yes
REPAIR the circuit between the cooling fan module and battery. This circuit includes fuse 35 of the front power distribution box. For additional information, refer to the wiring diagrams. CLEAR the DTC and test the system for normal operation.

-> No
GO to Pinpoint Test G531330t75.

G531330t75 : CHECK THE RADIATOR FAN MODULE EMS SWITCHED SUPPLY

1. Disconnect the fan module electrical connector, GC01. 2. Key on, engine off. 3. Make sure the EMS relay is engaged. 4. Measure the voltage between:

Fan module connector GC01, harness side	Battery
Pin 02	Negative terminal

Is the voltage less than 10 volts?

-> Yes
REPAIR the circuit between the cooling fan module and battery. This circuit includes fuse 14 of the front power distribution box and the EMS control relay. For additional information, refer to the wiring diagrams. CLEAR the DTC and test the system for normal operation.

-> No
GO to Pinpoint Test G531330t78.

G531330t78 : CHECK THE RADIATOR FAN MODULE CONTROL CIRCUIT FOR SHORT CIRCUIT TO GROUND

1. Key off. 2. Measure the resistance between:

Fan module connector GC01, harness side	Battery
Pin 01	Negative terminal

Is the resistance less than 10,000 ohms?

-> Yes

REPAIR the short circuit. For additional information, refer to the wiring diagrams. CLEAR the DTC and test the system for normal operation.

-> No

GO to Pinpoint Test G531330t77.

G531330t77 : CHECK THE RADIATOR FAN MODULE CONTROL CIRCUIT FOR SHORT CIRCUIT TO POWER

1. Measure the resistance between:

Fan module connector GC01, harness side	Battery
Pin 01	Positive terminal

Is the resistance less than 10,000 ohms?

-> Yes

REPAIR the short circuit. For additional information, refer to the wiring diagrams. CLEAR the DTC and test the system for normal operation.

-> No

GO to Pinpoint Test G531330t76.

G531330t76 : CHECK THE RADIATOR FAN MODULE CONTROL CIRCUIT FOR HIGH RESISTANCE

1. Disconnect the ECM electrical connector, EC300. 2. Measure the resistance between:

Fan module connector GC01, harness side	ECM connector EC300, harness side

www.JagDocs.com

Pin 01	Pin 49

Is the resistance greater than 5 ohms?

-> Yes
REPAIR the high resistance circuit. For additional information, refer to the wiring diagrams. CLEAR the DTC and test the system for normal operation.

-> No
GO to Pinpoint Test G531330t74.

G531330t74 : CHECK THE RADIATOR FAN MODULE GROUND FOR HIGH RESISTANCE

1. Measure the resistance between:

Fan module connector EC20, harness side	Battery
Pin 02	Negative terminal

Is the resistance greater than 5 ohms?

-> Yes
REPAIR the high resistance circuit. For additional information, refer to the wiring diagrams. CLEAR the DTC and test the system for normal operation.

-> No
INSTALL a new radiator cooling fan module. CLEAR the DTC and test the system for normal operation.

PINPOINT TEST G531330p20 : BATTERY POWER SUPPLY VOLTAGE

G531330t79 : CHECK THE BATTERY POWER SUPPLY TO THE ECM

1. Disconnect the ECM electrical connector, EC300. 2. Measure the voltage between:

ECM connector EC300, harness side	Battery
Pin 54	Negative terminal

Is the voltage greater than 10 volts?

-> Yes
Recheck the DTCs.

-> No
REPAIR the battery power supply circuit. This circuit includes fuse 17 of the front power distribution box. For additional information, refer to the wiring diagrams. CLEAR the DTC and test the system for normal operation.

PINPOINT TEST G531330p22 : ACCELERATOR PEDAL POSITION (APP) SENSOR CIRCUIT 1

G531330t86 : CHECK THE APP SENSOR SUPPLY VOLTAGE AT THE SENSOR

1. Disconnect the APP sensor electrical connector, CR14. 2. Key on, engine off. 3. Measure the voltage between:

APP sensor connector CR14, harness side	Battery
Pin 02	Negative terminal

Is the voltage less than 4 volts?

-> Yes
REPAIR the 5 volt supply circuit between the APP sensor and the ECM. For additional information, refer to the wiring diagrams. CLEAR the DTC and test the system for normal operation.

-> No
GO to Pinpoint Test G531330t163.

G531330t163 : CHECK THE APP SENSOR SUPPLY CIRCUIT FOR SHORT CIRCUIT TO POWER

1. Key off. 2. Measure the resistance between:

APP sensor connector CR14, harness side	Battery
Pin 02	Positive terminal

www.JagDocs.com

Is the resistance less than 10,000 ohms?

-> Yes
REPAIR the short circuit. For additional information, refer to the wiring diagrams. CLEAR the DTC and test the system for normal operation.

-> No
GO to Pinpoint Test G531330t85.

G531330t85 : CHECK THE APP SENSOR SENSING CIRCUIT 1 FOR SHORT CIRCUIT TO GROUND

1. Measure the resistance between:

APP sensor connector CR14, harness side	Battery
Pin 01	Negative terminal

Is the resistance less than 10,000 ohms?

-> Yes
REPAIR the short circuit. For additional information, refer to the wiring diagrams. CLEAR the DTC and test the system for normal operation.

-> No
GO to Pinpoint Test G531330t84.

G531330t84 : CHECK THE APP SENSOR SENSING CIRCUIT 1 FOR SHORT CIRCUIT TO POWER

1. Measure the resistance between:

APP sensor connector CR14, harness side	Battery
Pin 01	Positive terminal

Is the resistance less than 10,000 ohms?

-> Yes
REPAIR the short circuit. For additional information, refer to the wiring diagrams. CLEAR the DTC and test the system for normal operation.

-> No
GO to Pinpoint Test G531330t83.

G531330t83 : CHECK THE APP SENSOR SENSING CIRCUIT 1 FOR HIGH RESISTANCE

1. Disconnect the ECM electrical connector, EC300. 2. Measure the resistance between:

APP sensor connector CR14, harness side	ECM connector EC300, harness side
Pin 01	Pin 24

Is the resistance greater than 5 ohms?

-> Yes
REPAIR the high resistance circuit. For additional information, refer to the wiring diagrams. CLEAR the DTC and test the system for normal operation.

-> No
GO to Pinpoint Test G531330t164.

G531330t164 : CHECK THE APP SENSOR GROUND CIRCUIT FOR HIGH RESISTANCE

1. Measure the resistance between:

APP sensor connector CR14, harness side	ECM connector EC300, harness side
Pin 06	Pin 08

Is the resistance greater than 5 ohms?

-> Yes
REPAIR the high resistance circuit. For additional information, refer to the wiring diagrams. CLEAR the DTC and test the system for normal operation.

-> No
INSTALL a new APP sensor.
Accelerator Pedal (19.20.01) CLEAR the DTC and test the system for normal operation.

www.JagDocs.com

PINPOINT TEST G531330p23 : ACCELERATOR PEDAL POSITION (APP) SENSOR CIRCUIT 2

G531330t91 : CHECK THE APP SENSOR SUPPLY VOLTAGE AT THE SENSOR

1. Disconnect the APP sensor electrical connector, CR14. 2. Key on, engine off. 3. Measure the voltage between:

APP sensor connector CR14, harness side	Battery
Pin 05	Negative terminal

Is the voltage less than 4 volts?

-> Yes
REPAIR the 5 volt supply circuit between the APP sensor and the ECM. For additional information, refer to the wiring diagrams. CLEAR the DTC and test the system for normal operation.

-> No
GO to Pinpoint Test G531330t165.

G531330t165 : CHECK THE APP SENSOR SUPPLY CIRCUIT FOR SHORT CIRCUIT TO POWER

1. Key off. 2. Measure the resistance between:

APP sensor connector CR14, harness side	Battery
Pin 05	Positive terminal

Is the resistance less than 10,000 ohms?

-> Yes
REPAIR the short circuit. For additional information, refer to the wiring diagrams. CLEAR the DTC and test the system for normal operation.

-> No
GO to Pinpoint Test G531330t90.

G531330t90 : CHECK THE APP SENSOR SENSING CIRCUIT 2 FOR SHORT CIRCUIT TO GROUND

1. Measure the resistance between:

APP sensor connector CR14, harness side	Battery
Pin 04	Negative terminal

Is the resistance less than 10,000 ohms?

-> Yes

REPAIR the short circuit. For additional information, refer to the wiring diagrams. CLEAR the DTC and test the system for normal operation.

-> No

GO to Pinpoint Test G531330t89.

G531330t89 : CHECK THE APP SENSOR SENSING CIRCUIT 2 FOR SHORT CIRCUIT TO POWER

1. Measure the resistance between:

APP sensor connector CR14, harness side	Battery
Pin 04	Positive terminal

Is the resistance less than 10,000 ohms?

-> Yes

REPAIR the short circuit. For additional information, refer to the wiring diagrams. CLEAR the DTC and test the system for normal operation.

-> No

GO to Pinpoint Test G531330t88.

G531330t88 : CHECK THE APP SENSOR SENSING CIRCUIT 2 FOR HIGH RESISTANCE

1. Disconnect the ECM electrical connector, EC300. 2. Measure the resistance between:

APP sensor connector CR14, harness side	ECM connector EC300, harness side

www.JagDocs.com

Pin 04	Pin 38

Is the resistance greater than 5 ohms?

-> Yes
REPAIR the high resistance circuit. For additional information, refer to the wiring diagrams. CLEAR the DTC and test the system for normal operation.

-> No
GO to Pinpoint Test G531330t166.

G531330t166 : CHECK THE APP SENSOR GROUND CIRCUIT FOR HIGH RESISTANCE

1. Measure the resistance between:

APP sensor connector CR14, harness side	ECM connector EC300, harness side
Pin 03	Pin 07

Is the resistance greater than 5 ohms?

-> Yes
REPAIR the high resistance circuit. For additional information, refer to the wiring diagrams. CLEAR the DTC and test the system for normal operation.

-> No
INSTALL a new APP sensor.
Accelerator Pedal (19.20.01) CLEAR the DTC and test the system for normal operation.

PINPOINT TEST G531330p24 : THROTTLE MOTOR CONTROL CIRCUIT

G531330t93 : CHECK THE THROTTLE MOTOR TO ECM NEGATIVE CIRCUIT FOR HIGH RESISTANCE

1. Disconnect the throttle motor electrical connector, PI26. 2. Disconnect the ECM electrical connector, PI300. 3. Measure the resistance between:

Throttle motor connector PI26, harness side	ECM connector PI300, harness side
Pin 01	Pin 74

Is the resistance greater than 5 ohms?

-> Yes
REPAIR the high resistance circuit. For additional information, refer to the wiring diagrams. CLEAR the DTC and test the system for normal operation.

-> No
GO to Pinpoint Test G531330t94.

G531330t94 : CHECK THE THROTTLE MOTOR TO ECM POSITIVE CIRCUIT FOR HIGH RESISTANCE

1. Measure the resistance between:

Throttle motor connector PI26, harness side	ECM connector PI300, harness side
Pin 02	Pin 75

Is the resistance greater than 5 ohms?

-> Yes
REPAIR the high resistance circuit. For additional information, refer to the wiring diagrams. CLEAR the DTC and test the system for normal operation.

-> No
INSTALL a new throttle body.
Throttle Body - VIN Range: G45704->G99999 (19.70.04) CLEAR the DTC and test the system for normal operation.

PINPOINT TEST G531330p21 : FUEL RAIL PRESSURE (FRP) SENSOR CIRCUIT

www.JagDocs.com

G531330t100 : CHECK THE FRP SENSOR SUPPLY CIRCUIT VOLTAGE

1. Disconnect the FRP sensor electrical connector, IL12. 2. Key on, engine off. 3. Measure the voltage between:

FRP sensor connector IL12, harness side	Battery
Pin 01	Negative terminal

Is the voltage less than 4 volts?

-> Yes
REPAIR the 5 volt supply circuit between the FRP sensor and the ECM. For additional information, refer to the wiring diagrams. CLEAR the DTC and test the system for normal operation.

-> No
GO to Pinpoint Test G531330t101.

G531330t101 : CHECK THE FRP SENSOR SUPPLY CIRCUIT FOR SHORT CIRCUIT TO POWER

1. Key off. 2. Measure the resistance between:

FRP sensor connector IL12, harness side	Battery
Pin 01	Positive terminal

Is the resistance less than 10,000 ohms?

-> Yes
REPAIR the short circuit. For additional information, refer to the wiring diagrams. CLEAR the DTC and test the system for normal operation.

-> No
GO to Pinpoint Test G531330t102.

G531330t102 : CHECK THE FRP SENSOR SIGNAL CIRCUIT FOR SHORT CIRCUIT TO GROUND

1. Measure the resistance between:

FRP sensor connector IL12, harness side	Battery

Pin 03	Negative terminal

Is the resistance less than 10,000 ohms?

-> Yes
REPAIR the short circuit. For additional information, refer to the wiring diagrams. CLEAR the DTC and test the system for normal operation.

-> No
GO to Pinpoint Test G531330t107.

G531330t107 : CHECK THE FRP SENSOR SIGNAL CIRCUIT FOR SHORT CIRCUIT TO POWER

1. Measure the resistance between:

FRP sensor connector IL12, harness side	Battery
Pin 03	Positive terminal

Is the resistance less than 10,000 ohms?

-> Yes
REPAIR the short circuit. For additional information, refer to the wiring diagrams. CLEAR the DTC and test the system for normal operation.

-> No
GO to Pinpoint Test G531330t108.

G531330t108 : CHECK THE FRP SENSOR SIGNAL CIRCUIT FOR HIGH RESISTANCE

1. Disconnect the ECM sensor electrical connector, PI300. 2. Measure the resistance between:

FRP sensor connector IL12, harness side	ECM connector PI300, harness side
Pin 03	Pin 71

Is the resistance greater than 5 ohms?

www.JagDocs.com

-> Yes
REPAIR the high resistance circuit. For additional information, refer to the wiring diagrams. CLEAR the DTC and test the system for normal operation.

-> No
GO to Pinpoint Test G531330t110.

G531330t110 : CHECK THE FRP SENSOR GROUND CIRCUIT FOR HIGH RESISTANCE

1. Measure the resistance between:

FRP sensor connector IL12, harness side	ECM connector PI300, harness side
Pin 02	Pin 10

Is the resistance greater than 5 ohms?

-> Yes
REPAIR the high resistance circuit. For additional information, refer to the wiring diagrams. CLEAR the DTC and test the system for normal operation.

-> No
INSTALL a new FRP sensor.
Fuel Rail Pressure (FRP) Sensor (18.30.98) CLEAR the DTC and test the system for normal operation.

PINPOINT TEST G531330p27 : STARTER RELAY SIGNAL

G531330t87 : CHECK THE STARTER RELAY TO ECM CIRCUIT FOR SHORT CIRCUIT TO GROUND

1. Key off. 2. Remove the starter relay. 3. Measure the resistance between:

Starter relay base	Battery
Pin 02	Negative terminal

Is the resistance less than 10,000 ohms?

-> Yes
REPAIR the short circuit. For additional information, refer to the wiring diagrams. CLEAR the DTC and test the system for normal operation.

-> No
GO to Pinpoint Test G531330t134.

G531330t134 : CHECK THE STARTER RELAY TO ECM CIRCUIT FOR SHORT CIRCUIT TO POWER

1. Measure the resistance between:

Starter relay base	Battery
Pin 02	Positive terminal

Is the resistance less than 10,000 ohms?

-> Yes
REPAIR the short circuit. For additional information, refer to the wiring diagrams. CLEAR the DTC and test the system for normal operation.

-> No
GO to Pinpoint Test G531330t133.

G531330t133 : CHECK THE STARTER RELAY TO ECM CIRCUIT FOR HIGH RESISTANCE

1. Disconnect the ECM electrical connector, EC300. 2. Measure the resistance between:

Starter relay base	ECM connector EC300, harness side
Pin 02	Pin 51

Is the resistance greater than 5 ohms?

-> Yes
REPAIR the high resistance circuit. For additional information, refer to the wiring diagrams. CLEAR the DTC and test the system for normal operation.

-> No

www.JagDocs.com

INSTALL a new starter relay. Clear the DTC and test the system for normal operation. If the DTC resets, refer to the warranty policy and procedures manual if an ECM is suspect.

PINPOINT TEST G531330p29 : RIGHT-HAND VARIABLE CAMSHAFT TIMING (VCT) OIL CONTROL SOLENOID CIRCUIT

G531330t140 : CHECK ECM TO VCT SOLENOID SUPPLY CIRCUIT VOLTAGE

1. Disconnect the VCT solenoid electrical connector, PI16. 2. Key on, engine off. 3. Measure the voltage between:

VCT solenoid connector PI16, harness side	Battery
Pin 02	Negative terminal

Is the voltage greater than 10 volts?

-> Yes
GO to Pinpoint Test G531330t143.

-> No
REPAIR the circuit between the VCT solenoid electrical connector and battery. This circuit includes fuse 12 of the front power distribution box and the EMS control relay. For additional information, refer to the wiring diagrams. CLEAR the DTC and test the system for normal operation.

G531330t143 : CHECK VCT SOLENOID CONTROL CIRCUIT FOR HIGH RESISTANCE

1. Key off. 2. Disconnect the ECM electrical connector, PI300. 3. Measure the resistance between:

VCT solenoid connector PI16, harness side	ECM connector PI300, harness side
Pin 01	Pin 86

Is the resistance greater than 5 ohms?

-> Yes
REPAIR the high resistance circuit. For additional information, refer to the wiring diagrams. CLEAR the

DTC and test the system for normal operation.

-> No
INSTALL a new VCT oil control solenoid.
Variable Camshaft Timing (VCT) Oil Control Solenoid (18.30.90) CLEAR the DTC and test the system for normal operation.

PINPOINT TEST G531330p30 : LEFT-HAND VARIABLE CAMSHAFT TIMING (VCT) OIL CONTROL SOLENOID CIRCUIT

G531330t142 : CHECK ECM TO VCT SOLENOID SUPPLY CIRCUIT VOLTAGE

1. Disconnect the VCT solenoid electrical connector, PI17. 2. Key on, engine off. 3. Measure the voltage between:

VCT solenoid connector PI17, harness side	Battery
Pin 02	Negative terminal

Is the voltage greater than 10 volts?

-> Yes
GO to Pinpoint Test G531330t147.

-> No
REPAIR the circuit between the VCT solenoid electrical connector and battery. This circuit includes fuse 12 of the front power distribution box and the EMS control relay. For additional information, refer to the wiring diagrams. CLEAR the DTC and test the system for normal operation.

G531330t147 : CHECK VCT SOLENOID CONTROL CIRCUIT FOR HIGH RESISTANCE

1. Key off. 2. Disconnect the ECM electrical connector, PI300. 3. Measure the resistance between:

VCT solenoid connector PI17, harness side	ECM connector PI300, harness side
Pin 01	Pin 87

www.JagDocs.com

Is the resistance greater than 5 ohms?

-> Yes
REPAIR the high resistance circuit. For additional information, refer to the wiring diagrams. CLEAR the DTC and test the system for normal operation.

-> No
INSTALL a new VCT oil control solenoid.
Variable Camshaft Timing (VCT) Oil Control Solenoid (18.30.90) CLEAR the DTC and test the system for normal operation.

PINPOINT TEST G531330p32 : EMS CONTROL RELAY CIRCUITS

G531330t149 : CHECK THE EMS RELAY PERMANENT SUPPLY VOLTAGES

1. Remove the EMS relay. 2. Measure the voltage between:

EMS relay base, harness side	Battery
Pin 01	Negative terminal
Pin 03	Negative terminal

Are both voltages greater than 10 volts?

-> Yes
GO to Pinpoint Test G531330t92.

-> No
REPAIR the circuit between the relay base and battery. For additional information, refer to the wiring diagrams. CLEAR the DTC and test the system for normal operation.

G531330t92 : CHECK THE ECM TO EMS RELAY CONTROL CIRCUIT FOR SHORT CIRCUIT TO GROUND

1. Measure the resistance between:

EMS relay base, harness side	Battery
Pin 02	Negative terminal

Is the resistance less than 10,000 ohms?

-> Yes
REPAIR the short circuit. For additional information, refer to the wiring diagrams. CLEAR the DTC and test the system for normal operation.

-> No
GO to Pinpoint Test G531330t111.

G531330t111 : CHECK THE ECM TO EMS RELAY CONTROL CIRCUIT FOR SHORT CIRCUIT TO POWER

1. Measure the resistance between:

EMS relay base, harness side	Battery
Pin 02	Positive terminal

Is the resistance less than 10,000 ohms?

-> Yes
REPAIR the short circuit. For additional information, refer to the wiring diagrams. CLEAR the DTC and test the system for normal operation.

-> No
GO to Pinpoint Test G531330t151.

G531330t151 : CHECK THE ECM TO EMS RELAY CONTROL CIRCUIT FOR HIGH RESISTANCE

1. Disconnect the ECM electrical connector, EC300. 2. Measure the resistance between:

EMS relay base, harness side	ECM connector EC300, harness side
Pin 02	Pin 16

Is the resistance greater than 5 ohms?

-> Yes
REPAIR the high resistance circuit. For additional information, refer to the wiring diagrams. CLEAR the DTC and test the system for normal operation.

www.JagDocs.com

-> No
GO to Pinpoint Test G531330t150.

G531330t150 : CHECK THE EMS RELAY TO ECM IGNITION CIRCUITS FOR HIGH RESISTANCE

1. Measure the resistance between:

EMS relay base, harness side	ECM connector EC300, harness side
Pin 05	Pin 04
Pin 05	Pin 06

Is either resistance greater than 5 ohms?

-> Yes
REPAIR the high resistance circuit. These circuits include fuses 2 and 12 of the front power distribution box. For additional information, refer to the wiring diagrams. CLEAR the DTC and test the system for normal operation.

-> No
INSTALL a new EMS control relay. CLEAR the DTC and test the system for normal operation.

PINPOINT TEST G531330p33 : MANIFOLD ABSOLUTE PRESSURE (MAP) SENSOR CIRCUIT

G531330t80 : CHECK THE MAP SENSOR SUPPLY CIRCUIT VOLTAGE

1. Disconnect the MAP sensor electrical connector, PI29. 2. Key on, engine off. 3. Measure the voltage between:

MAP sensor connector PI29, harness side	Battery
Pin 02	Negative terminal

Is the voltage less than 4 volts?

-> Yes
REPAIR the 5 volt supply circuit between the MAP sensor and the ECM. For additional information,

refer to the wiring diagrams. CLEAR the DTC and test the system for normal operation.

-> No
GO to Pinpoint Test G531330t109.

G531330t109 : CHECK THE MAP SENSOR SUPPLY CIRCUIT FOR SHORT CIRCUIT TO POWER

1. Key off. 2. Measure the resistance between:

MAP sensor connector PI29, harness side	Battery
Pin 02	Positive terminal

Is the resistance less than 10,000 ohms?

-> Yes
REPAIR the short circuit. For additional information, refer to the wiring diagrams. CLEAR the DTC and test the system for normal operation.

-> No
GO to Pinpoint Test G531330t154.

G531330t154 : CHECK THE MAP SENSOR SENSING CIRCUIT FOR SHORT CIRCUIT TO GROUND

1. Measure the resistance between:

MAP sensor connector PI29, harness side	Battery
Pin 01	Negative terminal

Is the resistance less than 10,000 ohms?

-> Yes
REPAIR the short circuit. For additional information, refer to the wiring diagrams. CLEAR the DTC and test the system for normal operation.

-> No
GO to Pinpoint Test G531330t153.

www.JagDocs.com

G531330t153 : CHECK THE MAP SENSOR SENSING CIRCUIT FOR SHORT CIRCUIT TO POWER

1. Measure the resistance between:

MAP sensor connector PI29, harness side	Battery
Pin 01	Positive terminal

Is the resistance less than 10,000 ohms?

-> Yes
REPAIR the short circuit. For additional information, refer to the wiring diagrams. CLEAR the DTC and test the system for normal operation.

-> No
GO to Pinpoint Test G531330t152.

G531330t152 : CHECK THE MAP SENSOR SENSING CIRCUIT FOR HIGH RESISTANCE

1. Disconnect the ECM electrical connector, PI300. 2. Measure the resistance between:

MAP sensor connector PI29, harness side	ECM connector PI300, harness side
Pin 01	Pin 69

Is the resistance greater than 5 ohms?

-> Yes
REPAIR the high resistance circuit. For additional information, refer to the wiring diagrams. CLEAR the DTC and test the system for normal operation.

-> No
GO to Pinpoint Test G531330t124.

G531330t124 : CHECK THE MAP SENSOR GROUND CIRCUIT FOR HIGH RESISTANCE

1. Measure the resistance between:

MAP sensor connector PI29, harness side	ECM connector PI300, harness side

Pin 04	Pin 10

Is the resistance greater than 5 ohms?

-> Yes
REPAIR the high resistance circuit. For additional information, refer to the wiring diagrams. CLEAR the DTC and test the system for normal operation.

-> No
INSTALL a new MAP sensor.
Manifold Absolute Pressure (MAP) Sensor (18.30.86) CLEAR the DTC and test the system for normal operation.

PINPOINT TEST G531330p34 : ENGINE FUEL TEMPERATURE (EFT) SENSOR CIRCUIT

G531330t157 : CHECK THE EFT SENSOR SENSING CIRCUIT FOR SHORT CIRCUIT TO GROUND

1. Disconnect the EFT sensor electrical connector, IL09. 2. Measure the resistance between:

EFT sensor connector IL09, harness side	Battery
Pin 02	Negative terminal

Is the resistance less than 10,000 ohms?

-> Yes
REPAIR the short circuit. For additional information, refer to the wiring diagrams. CLEAR the DTC and test the system for normal operation.

-> No
GO to Pinpoint Test G531330t156.

G531330t156 : CHECK THE EFT SENSOR SENSING CIRCUIT FOR SHORT CIRCUIT TO POWER

1. Measure the resistance between:

www.JagDocs.com

EFT sensor connector IL09, harness side	Battery
Pin 02	Positive terminal

Is the resistance less than 10,000 ohms?

-> Yes
REPAIR the short circuit. For additional information, refer to the wiring diagrams. CLEAR the DTC and test the system for normal operation.

-> No
GO to Pinpoint Test G531330t155.

G531330t155 : CHECK THE EFT SENSOR SENSING CIRCUIT FOR HIGH RESISTANCE

1. Disconnect the ECM electrical connector, PI300. 2. Measure the resistance between:

EFT sensor connector IL09, harness side	ECM connector PI300, harness side
Pin 02	Pin 46

Is the resistance greater than 5 ohms?

-> Yes
REPAIR the high resistance circuit. For additional information, refer to the wiring diagrams. CLEAR the DTC and test the system for normal operation.

-> No
GO to Pinpoint Test G531330t126.

G531330t126 : CHECK THE EFT SENSOR GROUND CIRCUIT FOR HIGH RESISTANCE

1. Measure the resistance between:

EFT sensor connector IL09, harness side	ECM connector PI300, harness side
Pin 01	Pin 15

Is the resistance greater than 5 ohms?

-> Yes
REPAIR the high resistance circuit. For additional information, refer to the wiring diagrams. CLEAR the DTC and test the system for normal operation.

-> No
INSTALL a new EFT sensor.
Fuel Temperature Sensor (18.30.99) CLEAR the DTC and test the system for normal operation.

PINPOINT TEST G531330p35 : AIR CONDITIONING (A/C) PRESSURE SENSOR CIRCUIT

G531330t146 : CHECK THE A/C PRESSURE SENSOR POWER SUPPLY CIRCUIT VOLTAGE

1. Disconnect the A/C pressure sensor electrical connector, EC11. 2. Key on, engine off. 3. Measure the voltage between:

A/C pressure sensor connector EC11, harness side	Battery
Pin 03	Negative terminal

Is the voltage less than 4 volts?

-> Yes
REPAIR the 5 volt supply circuit between the A/C pressure sensor and the ECM. For additional information, refer to the wiring diagrams. CLEAR the DTC and test the system for normal operation.

-> No
GO to Pinpoint Test G531330t161.

G531330t161 : CHECK THE A/C PRESSURE SENSOR POWER SUPPLY CIRCUIT FOR SHORT CIRCUIT TO POWER

1. Key off. 2. Measure the resistance between:

A/C pressure sensor connector EC11, harness side	Battery
Pin 03	Positive terminal

www.JagDocs.com

Is the resistance less than 10,000 ohms?

-> Yes
REPAIR the short circuit. For additional information, refer to the wiring diagrams. CLEAR the DTC and test the system for normal operation.

-> No
GO to Pinpoint Test G531330t160.

G531330t160 : CHECK THE A/C PRESSURE SENSOR SENSING CIRCUIT FOR SHORT CIRCUIT TO GROUND

1. Measure the resistance between:

A/C pressure sensor connector EC11, harness side	Battery
Pin 02	Negative terminal

Is the resistance less than 10,000 ohms?

-> Yes
REPAIR the short circuit. For additional information, refer to the wiring diagrams. CLEAR the DTC and test the system for normal operation.

-> No
GO to Pinpoint Test G531330t159.

G531330t159 : CHECK THE A/C PRESSURE SENSOR SENSING CIRCUIT FOR SHORT CIRCUIT TO POWER

1. Measure the resistance between:

A/C pressure sensor connector EC11, harness side	Battery
Pin 02	Positive terminal

Is the resistance less than 10,000 ohms?

-> Yes
REPAIR the short circuit. For additional information, refer to the wiring diagrams. CLEAR the DTC and test the system for normal operation.

-> No
GO to Pinpoint Test G531330t158.

G531330t158 : CHECK THE A/C PRESSURE SENSOR SENSING CIRCUIT FOR HIGH RESISTANCE

1. Disconnect the ECM electrical connector, EC300. 2. Measure the resistance between:

A/C pressure sensor connector EC11, harness side	ECM connector EC300, harness side
Pin 02	Pin 12

Is the resistance greater than 5 ohms?

-> Yes
REPAIR the high resistance circuit. For additional information, refer to the wiring diagrams. CLEAR the DTC and test the system for normal operation.

-> No
GO to Pinpoint Test G531330t162.

G531330t162 : CHECK THE A/C PRESSURE SENSOR GROUND CIRCUIT FOR HIGH RESISTANCE

1. Measure the resistance between:

A/C pressure sensor connector EC11, harness side	ECM connector EC300, harness side
Pin 01	Pin 08

Is the resistance greater than 5 ohms?

-> Yes
REPAIR the high resistance circuit. For additional information, refer to the wiring diagrams. CLEAR the DTC and test the system for normal operation.

-> No
INSTALL a new A/C pressure sensor.
Pressure Cutoff Switch - 4.2L NA V8 - AJV8/4.2L SC V8 - AJV8/3.0L NA V6 - AJ27/3.5L NA V8 - AJV8 (82.10.32) CLEAR the DTC and test the system for normal operation.

www.JagDocs.com

PINPOINT TEST G531330p38 : INTAKE MANIFOLD TUNING (IMT) VALVE 1 (TOP) CIRCUIT

G531330t168 : CHECK THE IMT VALVE POWER SUPPLY CIRCUIT VOLTAGE

1. Disconnect the IMT valve electrical connector, PI30. 2. Key on, engine off. 3. Measure the voltage between:

IMT valve connector PI30, harness side	Battery
Pin 01	Negative terminal

Is the voltage greater than 10 volts?

-> Yes
GO to Pinpoint Test G531330t148.

-> No
REPAIR the circuit between the IMT valve electrical connector and battery. This circuit includes fuse 14 of the front power distribution box and the EMS control relay. For additional information, refer to the wiring diagrams. CLEAR the DTC and test the system for normal operation.

G531330t148 : CHECK THE IMT VALVE DRIVE CIRCUIT FOR SHORT CIRCUIT TO GROUND

1. Key off. 2. Measure the resistance between:

IMT valve connector PI30, harness side	Battery
Pin 02	Negative terminal

Is the resistance less than 10,000 ohms?

-> Yes
REPAIR the short circuit. For additional information, refer to the wiring diagrams. CLEAR the DTC and test the system for normal operation.

-> No
GO to Pinpoint Test G531330t175.

G531330t175 : CHECK THE IMT VALVE DRIVE CIRCUIT FOR SHORT CIRCUIT TO POWER

1. Measure the resistance between:

IMT valve connector PI30, harness side	Battery
Pin 02	Positive terminal

Is the resistance less than 10,000 ohms?

-> Yes
REPAIR the short circuit. For additional information, refer to the wiring diagrams. CLEAR the DTC and test the system for normal operation.

-> No
GO to Pinpoint Test G531330t169.

G531330t169 : CHECK THE IMT VALVE DRIVE CIRCUIT FOR HIGH RESISTANCE

1. Disconnect the ECM electrical connector, PI300. 2. Measure the resistance between:

IMT valve connector PI30, harness side	ECM connector PI300, harness side
Pin 02	Pin 84

Is the resistance greater than 5 ohms?

-> Yes
REPAIR the high resistance circuit. For additional information, refer to the wiring diagrams. CLEAR the DTC and test the system for normal operation.

-> No
INSTALL a new IMT valve,
Intake Manifold Tuning (IMT) Valve LH (19.70.30) CLEAR the DTC and test the system for normal operation.

www.JagDocs.com

PINPOINT TEST G531330p37 : INTAKE MANIFOLD TUNING (IMT) VALVE 2 (BOTTOM) CIRCUIT

G531330t176 : CHECK THE IMT VALVE POWER SUPPLY CIRCUIT VOLTAGE

1. Disconnect the IMT valve electrical connector, PI31. 2. Key on, engine off. 3. Measure the voltage between:

IMT valve connector PI31, harness side	Battery
Pin 01	Negative terminal

Is the voltage greater than 10 volts?

-> Yes
GO to Pinpoint Test G531330t178.

-> No
REPAIR the circuit between the IMT valve electrical connector and battery. This circuit includes fuse 14 of the front power distribution box and the EMS control relay. For additional information, refer to the wiring diagrams. CLEAR the DTC and test the system for normal operation.

G531330t178 : CHECK THE IMT VALVE DRIVE CIRCUIT FOR SHORT CIRCUIT TO GROUND

1. Key off. 2. Measure the resistance between:

IMT valve connector PI31, harness side	Battery
Pin 02	Negative terminal

Is the resistance less than 10,000 ohms?

-> Yes
REPAIR the short circuit. For additional information, refer to the wiring diagrams. CLEAR the DTC and test the system for normal operation.

-> No
GO to Pinpoint Test G531330t179.

G531330t179 : CHECK THE IMT VALVE DRIVE CIRCUIT FOR SHORT CIRCUIT TO POWER

1. Measure the resistance between:

IMT valve connector PI31, harness side	Battery
Pin 02	Positive terminal

Is the resistance less than 10,000 ohms?

-> Yes
REPAIR the short circuit. For additional information, refer to the wiring diagrams. CLEAR the DTC and test the system for normal operation.

-> No
GO to Pinpoint Test G531330t167.

G531330t167 : CHECK THE IMT VALVE DRIVE CIRCUIT FOR HIGH RESISTANCE

1. Disconnect the ECM electrical connector, PI300. 2. Measure the resistance between:

IMT valve connector PI31, harness side	ECM connector PI300, harness side
Pin 02	Pin 90

Is the resistance greater than 5 ohms?

-> Yes
REPAIR the high resistance circuit. For additional information, refer to the wiring diagrams. CLEAR the DTC and test the system for normal operation.

-> No
INSTALL a new IMT valve,
Intake Manifold Tuning (IMT) Valve LH (19.70.30) CLEAR the DTC and test the system for normal operation.

PINPOINT TEST G531330p25 : BRAKE SWITCH

www.JagDocs.com

G531330t103 : CHECK THE OPERATION OF THE BRAKE SWITCH (PEDAL RELEASED)

1. Key off. 2. Disconnect the brake switch electrical connector, CR78. 3. Make sure the brake pedal is not pressed. 4. Measure the resistance between:

Brake switch connector CR78, component side	Brake switch connector CR78, component side
Pin 01	Pin 02

Is the resistance greater than 10 ohms?

-> Yes
GO to Pinpoint Test G531330t104.

-> No
INSTALL a new brake switch. CLEAR the DTC, test the system for normal operation.

G531330t104 : CHECK THE OPERATION OF THE BRAKE SWITCH (PEDAL PRESSED)

1. Press the brake pedal. 2. Measure the resistance between:

Brake switch connector CR78, component side	Brake switch connector CR78, component side
Pin 01	Pin 02

Is the resistance greater than 10 ohms?

-> Yes
INSTALL a new brake switch. CLEAR the DTC, test the system for normal operation.

-> No
GO to Pinpoint Test G531330t105.

G531330t105 : CHECK THE POWER SUPPLY TO THE BRAKE PEDAL SWITCH

1. Key on, engine off. 2. Measure the voltage between:

Brake switch connector CR78, harness side	Battery
Pin 01	Negative terminal

Is the voltage less than 10 volts?

-> Yes
REPAIR the circuit between the brake switch and battery. This circuit includes fuse 44 of the primary junction box. For additional information, refer to the wiring diagrams. CLEAR the DTC, test the system for normal operation.

-> No
GO to Pinpoint Test G531330t106.

G531330t106 : CHECK THE BRAKE SWITCH SIGNAL CIRCUIT FOR SHORT CIRCUIT TO GROUND

1. Key off. 2. Measure the resistance between:

Brake switch connector CR78, harness side	Battery
Pin 02	Negative terminal

Is the resistance less than 10,000 ohms?

-> Yes
REPAIR the short circuit. For additional information, refer to the wiring diagrams. CLEAR the DTC, test the system for normal operation.

-> No
GO to Pinpoint Test G531330t112.

G531330t112 : CHECK THE BRAKE SWITCH SIGNAL CIRCUIT FOR SHORT CIRCUIT TO POWER

1. Measure the resistance between:

Brake switch connector CR78, harness side	Battery
Pin 02	Positive terminal

Is the resistance less than 10,000 ohms?

www.JagDocs.com

-> Yes
REPAIR the short circuit. For additional information, refer to the wiring diagrams. CLEAR the DTC, test the system for normal operation.

-> No
GO to Pinpoint Test G531330t113.

G531330t113 : CHECK THE BRAKE SWITCH SIGNAL CIRCUIT FOR HIGH RESISTANCE

1. Disconnect the ECM electrical connector, EC300. 2. Measure the resistance between:

Brake switch connector CR78, harness side	ECM connector EC300, harness side
Pin 02	Pin 41

Is the resistance greater than 5 ohms?

-> Yes
REPAIR the high resistance circuit. For additional information, refer to the wiring diagrams. CLEAR the DTC, test the system for normal operation.

-> No
REFER to the warranty policy and procedures manual if an ECM is suspect.

Brake Pedal Position (BPP) Switch

Removal

1 . Switch the ignition on.

2 . Position the front seat fully rearwards.

3 . Switch the ignition off.

4 . Remove the driver's side footwell trim panel.

- Release the 3 clips.

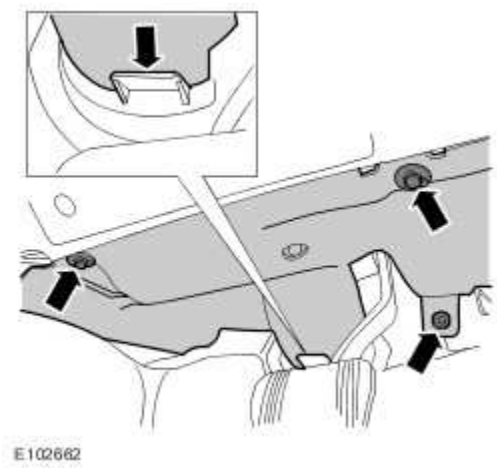

5 . Release the brake pedal position (BPP) switch.

- Rotate the BPP switch 45 degrees counter-clockwise.

www.JagDocs.com

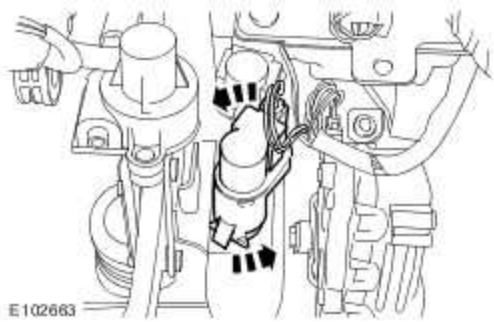

6 . Remove the BPP switch.

Disconnect the electrical connector.

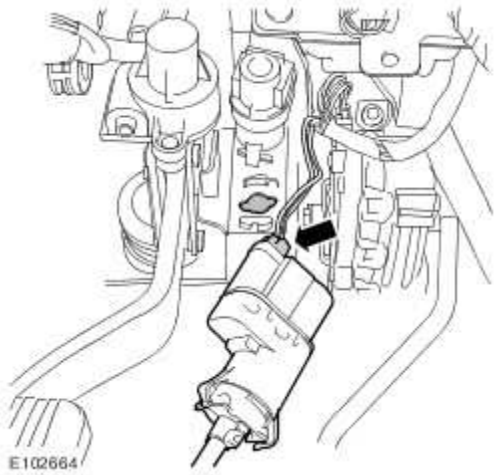

Installation

1 . **CAUTION: Make sure that the brake pedal remains in the rest position during this procedure.**

CAUTION: The bracket is keyed to avoid incorrect orientation. Failure to correctly align the switch may result in damage to the vehicle.

CAUTION: Make sure that the pedal box, booster-to-brake pedal assembly and switch bracket are all installed correctly before installing the switch.

Install the BPP switch.

- Locate the BPP switch in the bracket.
- Rotate the BPP switch 45 degrees clockwise.

2 . Connect the electrical connector.

3 . Install the driver's side footwell trim panel.

- Align the trim panel with the guide.
- Install the 3 clips.

www.JagDocs.com

Camshaft Position (CMP) Sensor LH (18.31.12)

Removal

1 . Disconnect the battery ground cable. <<414-01>>

2 . Remove the air cleaner outlet pipe. <<303-12A>>

3 . Detach the fuel injection supply manifold.

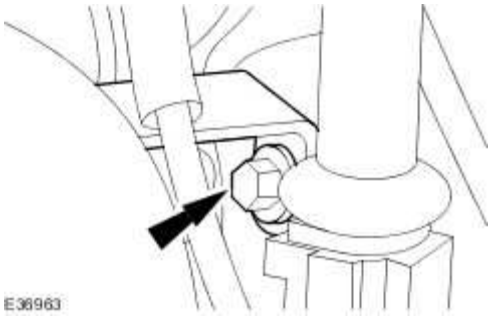

4 . Disconnect the camshaft position (CMP) sensor electrical connector.

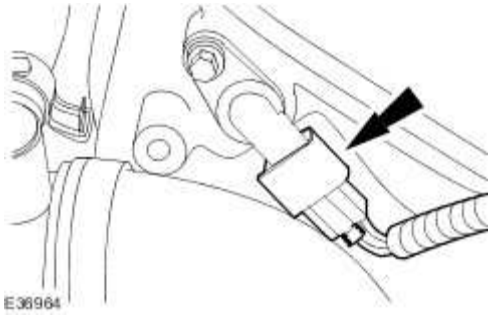

5 . Remove the CMP sensor.

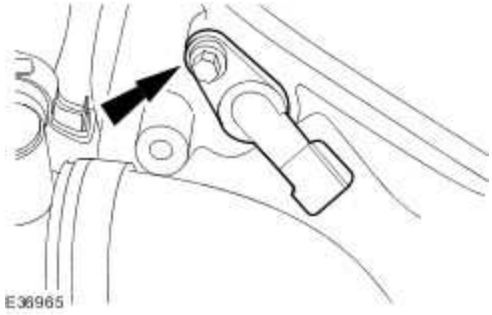

Installation

1 . To install, reverse the removal procedure.

Tighten to 7 Nm.

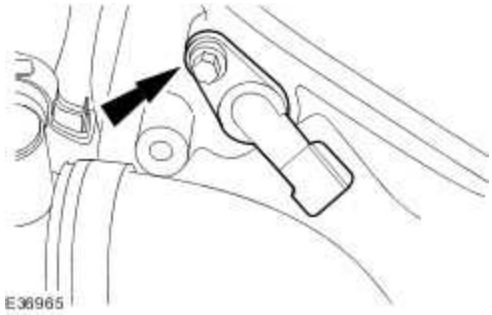

www.JagDocs.com

Camshaft Position (CMP) Sensor RH (18.31.11)

Installation

1 . To install, reverse the removal procedure.

Tighten to 7 Nm.

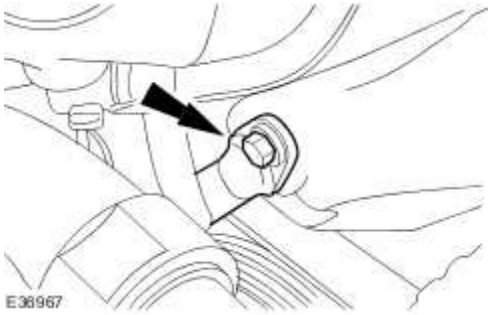

Catalyst Monitor Sensor (18.30.66)

Removal

1 . Raise and support the vehicle.
For additional information, refer to

2 . Detach the catalyst monitor sensor electrical connector.

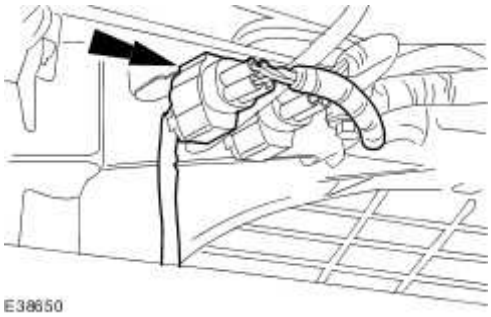

3 . Disconnect the catalyst monitor sensor electrical connector.

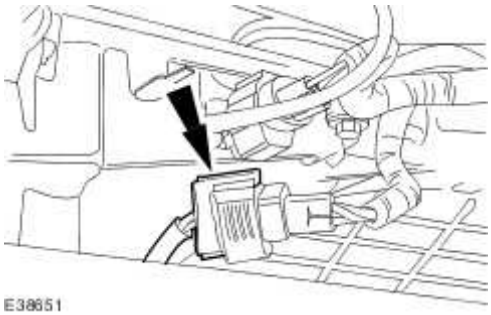

4 . Detach the catalyst monitor sensor wiring harness from the retaining clip on the automatic transmission.

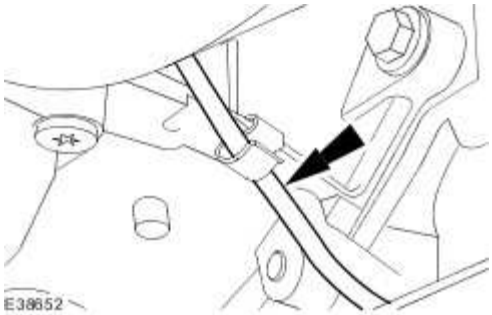

www.JagDocs.com

5. **CAUTION: Do not twist the catalyst monitor sensor wiring harness on removal. Failure to follow this instruction may result in damage to the component.**

Remove the catalyst monitor sensor.

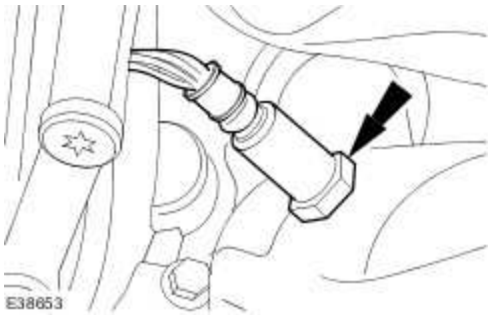

Installation

1. **CAUTION: Do not twist the catalyst monitor sensor wiring harness on installation. Failure to follow this instruction may result in damage to the component.**

To install, reverse the removal procedure.

Tighten to 40 Nm.

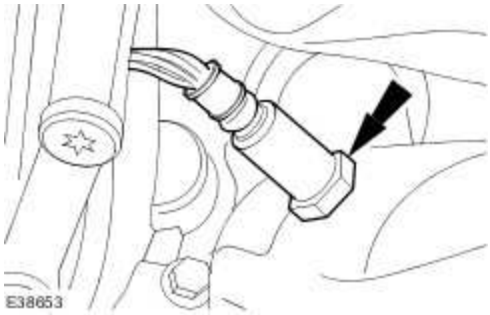

2. **NOTE:**

For NAS vehicles only.

If required, carry out a long drive cycle.

For additional information, refer to Powertrain Control Module (PCM) Long Drive Cycle Self-Test

Crankshaft Position (CKP) Sensor (18.30.12)

Removal

1 . Disconnect the battery ground cable. <<414-01>>

2 . Remove the air deflector. <<501-02>>

3 . Disconnect the crankshaft position (CKP) sensor electrical connector.

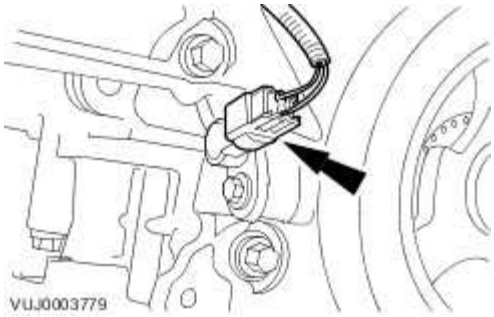

4 . Remove the CKP sensor.

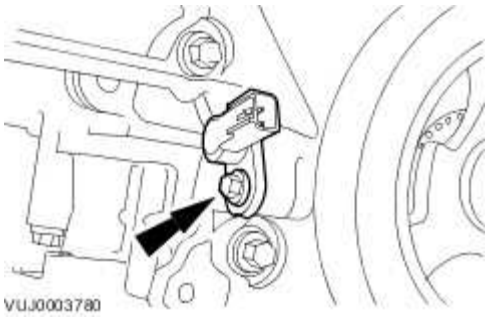

Installation

1 . To install, reverse the removal procedure.

Tighten to 7 Nm.

www.JagDocs.com

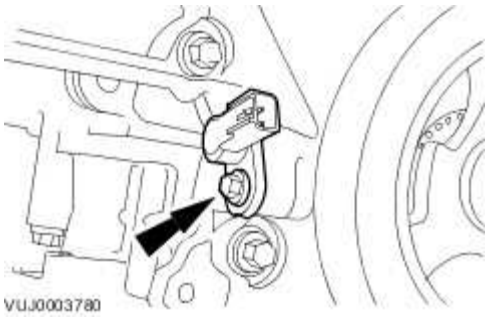
VUJ0003780

Engine Control Module (ECM) (18.30.01)

Special Service Tools

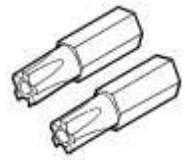

5 Point Security Torx Bit
418-535

Removal

1 . Disconnect the battery ground cable. <<414-01>>

2 . Remove the cowl vent screen. <<501-02>>

3 . Remove the cabin air filter.

1) Detach the cabin air filter.

2) Remove the cabin air filter.

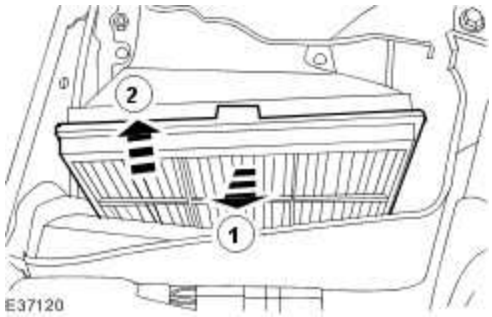

4 . Remove the cabin air filter housing.

www.JagDocs.com

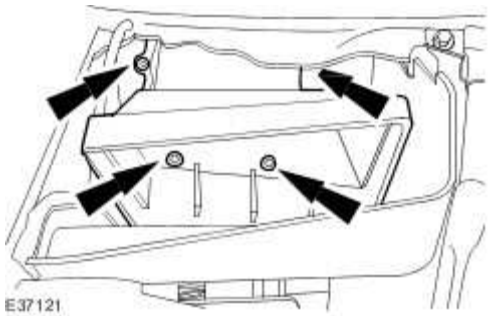

5 . Remove the engine compartment panel.

1) Remove the engine compartment panel retaining bolt.

2) Remove the engine compartment panel.

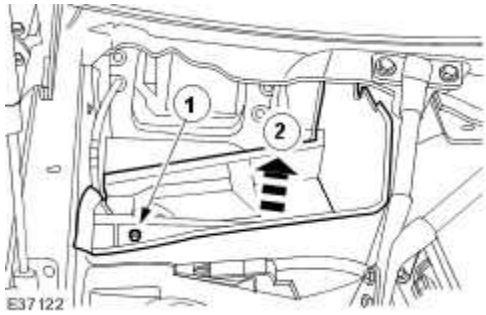

6 **NOTE:**

.

The engine control module (ECM) electrical connector retaining bolt remains captive in the electrical connector.

Using the special tool, loosen the ECM electrical connector retaining bolt.

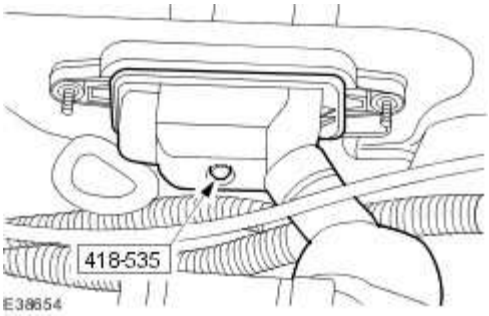

7 . Disconnect the ECM electrical connector.

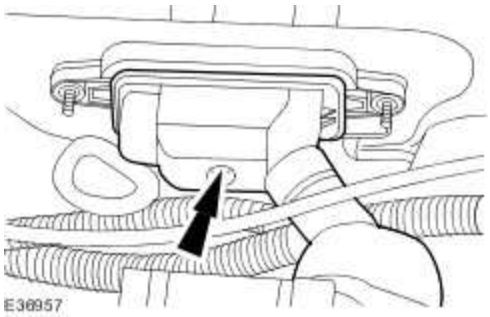

8 . Remove the instrument panel lower trim panel.

1) Remove the retaining clips.

2) Remove the instrument panel lower trim panel.

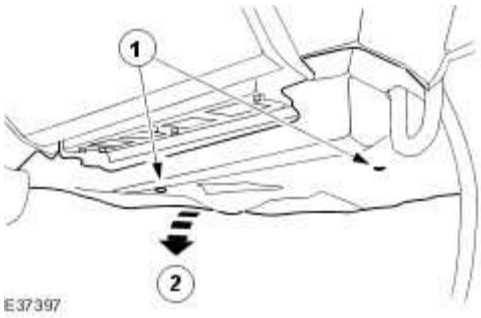

9 . Remove the ECM retaining bracket.

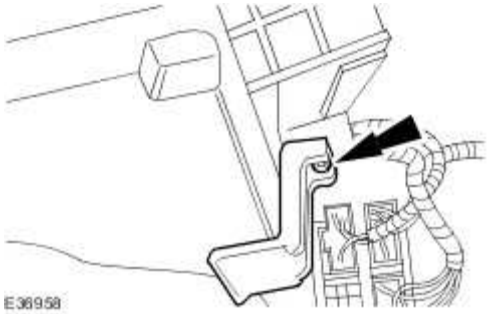

10 . Remove the ECM.

1) Detach the retaining clips.

www.JagDocs.com

2) Remove the ECM.

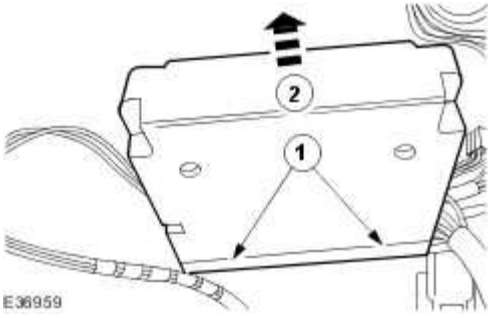

Installation

1. **CAUTION: Make sure that the electrical connector is located correctly in the ECM. Do not force or overtighten the electrical connector. Failure to follow this instruction may result in damage to the component.**

CAUTION: Make sure the ECM support bracket is located correctly.

To install, reverse the removal procedure.

Tighten to 5 Nm.

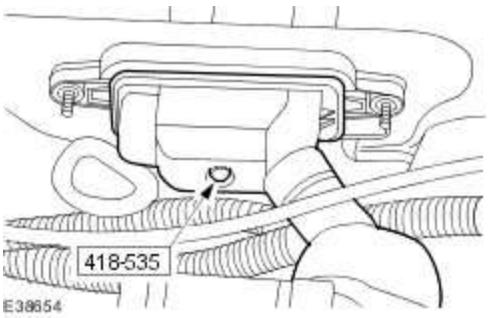

Engine Coolant Temperature (ECT) Sensor - VIN Range: G00442->G45703 (18.30.10)

Removal

1. **WARNING: Never remove the coolant expansion tank pressure cap under any circumstances while the engine is operating. Failure to follow this instruction may result in personal injury.**

WARNING: To avoid hot coolant or steam blowing out of the cooling system, use extreme care when removing the coolant expansion tank pressure cap. Wait until the engine has cooled down, then insulate the coolant pressure cap with a suitable cloth and slowly loosen the coolant expansion tank pressure cap until the cooling system pressure is released. Do not remove the coolant expansion tank pressure cap. Step back while the pressure is released from the system. When all of the pressure has been released slowly remove the coolant expansion tank pressure cap (still with the suitable cloth in position) from the coolant expansion tank. Failure to follow this instruction may result in personal injury.

Release the cooling system pressure.

- Remove the coolant expansion tank pressure cap.

2 . Remove the engine coolant temperature (ECT) sensor.

1) Disconnect the ECT electrical connector.

2) Remove the ECT sensor.

- Remove and discard the ECT sensor sealing washer.

www.JagDocs.com

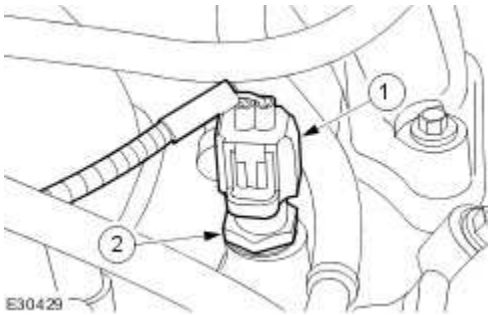

Installation

1 . To install, reverse the removal procedure.

- Install a new ECT sensor sealing washer.
- Tighten the ECT sensor to 17 Nm.
- Fill the cooling system up to the MAX mark on the coolant expansion tank.

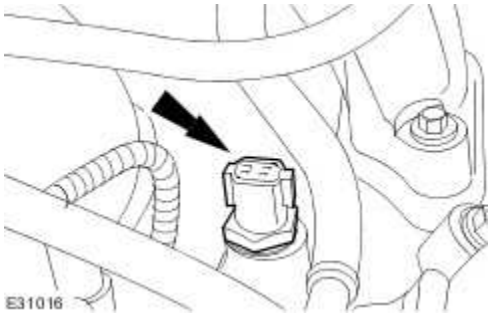

Engine Coolant Temperature (ECT) Sensor - VIN Range: G45704->G99999 (18.30.10)

Removal

1. **WARNING: Never remove the coolant expansion tank pressure cap under any circumstances while the engine is operating. Failure to follow this instruction may result in personal injury.**

WARNING: To avoid hot coolant or steam blowing out of the cooling system, use extreme care when removing the coolant expansion tank pressure cap. Wait until the engine has cooled down, then insulate the coolant pressure cap with a suitable cloth and slowly loosen the coolant expansion tank pressure cap until the cooling system pressure is released. Do not remove the coolant expansion tank pressure cap. Step back while the pressure is released from the system. When all of the pressure has been released slowly remove the coolant expansion tank pressure cap (still with the suitable cloth in position) from the coolant expansion tank. Failure to follow this instruction may result in personal injury.

Release the cooling system pressure.

- Remove the coolant expansion tank pressure cap.

2. Remove the air cleaner outlet pipe.
   For additional information, refer to

3. Disconnect the engine coolant temperature (ECT) sensor electrical connector.

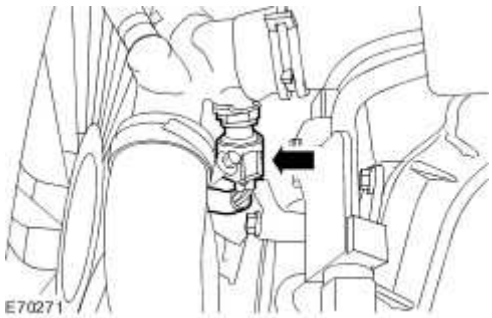

www.JagDocs.com

4 . Remove the ECT sensor.

- Remove the ECT sensor retaining clip.
- Remove and discard the ECT sensor sealing washer.

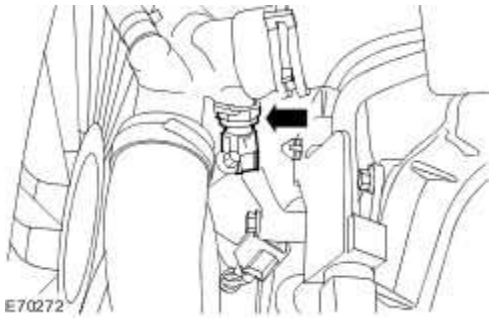

Installation

1 . To install, reverse the removal procedure.

- Install a new ECT sensor sealing washer.

2 . Fill the cooling system up to the MAX mark on the coolant expansion tank.

Fuel Rail Pressure (FRP) Sensor (18.30.98)

Removal

1 . Depressurize the fuel system. <<310-00>>

2 . Remove the fuel rail pressure (FRP) sensor bracket retaining bolt.

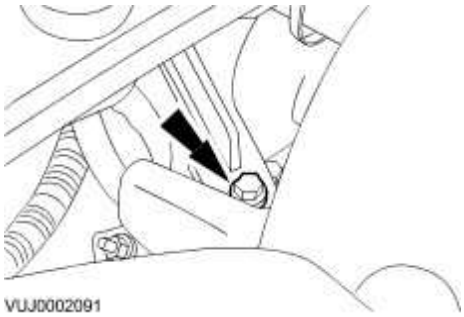

3 . Remove the FRP sensor bracket.

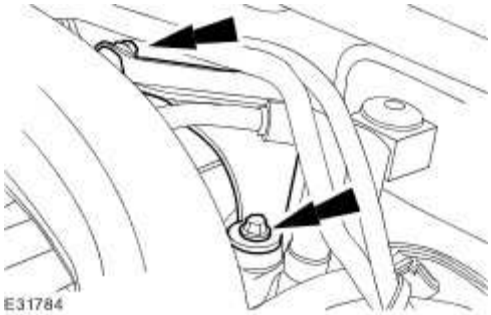

4 . **NOTE:**

Intake manifold shown removed for clarity.

Disconnect the FRP sensor electrical connector and vacuum hose.

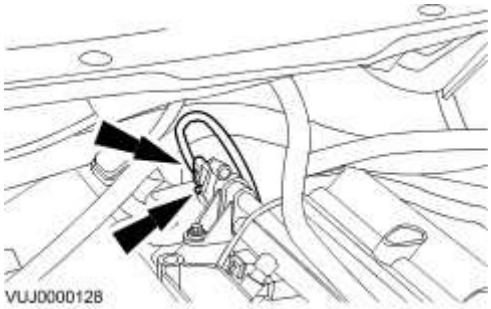

www.JagDocs.com

5 . **NOTE:**

Intake manifold shown removed for clarity.

Remove the FRP sensor.

- Remove and discard the O-ring seals.

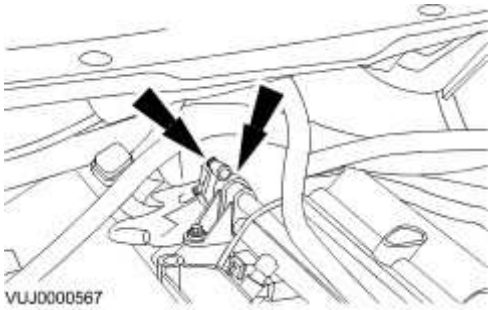

Installation

1 . **NOTE:**

Intake manifold shown removed for clarity.

To install, reverse the removal procedure.

- Install a new O-ring seals.
- Tighten to 10 Nm.

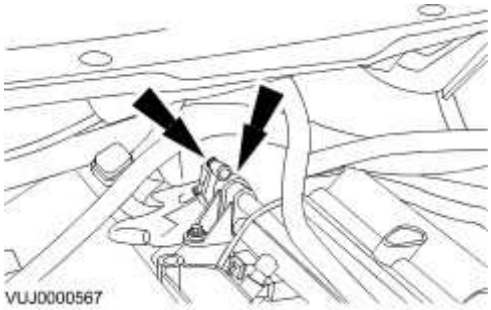

2 . Tighten to 6 Nm.

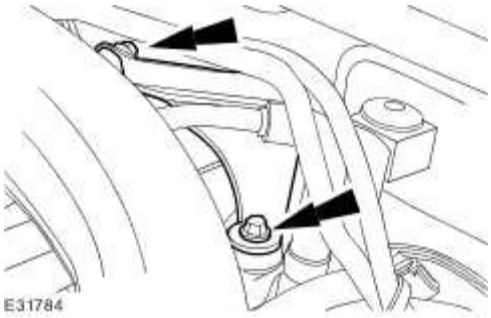

3 . Tighten to 10 Nm.

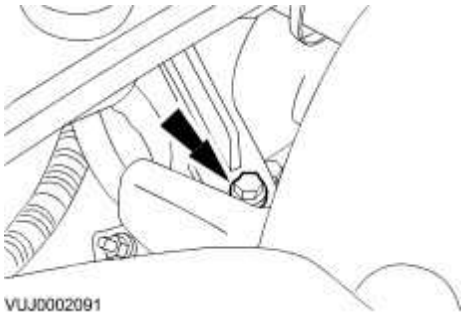

www.JagDocs.com

Fuel Temperature Sensor (18.30.99)

Removal

1 . Disconnect the battery ground cable. <<414-01>>

2 . Remove the air outlet tube. <<303-12A>>

3 . Disconnect the fuel temperature sensor electrical connector.

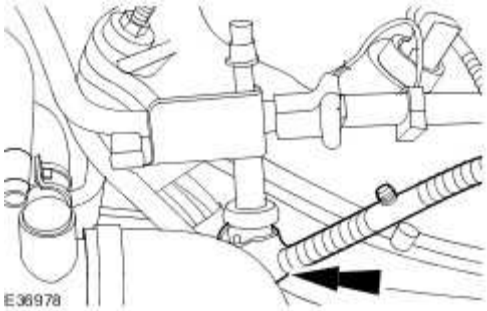

4 . Remove the fuel temperature sensor. <<310-00>>

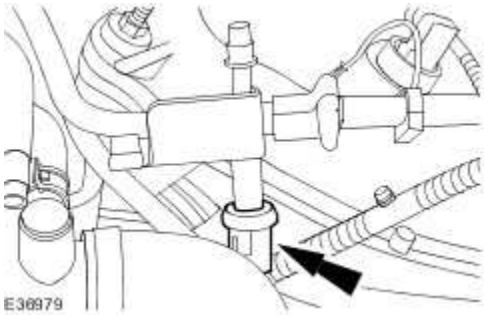

Installation

1 . To install, reverse removal procedure.

Heated Oxygen Sensor (HO2S)

Removal

1 . Raise and support the vehicle. <<100-02>>

2 . Detach the heated oxygen sensor (HO2S) electrical connector.

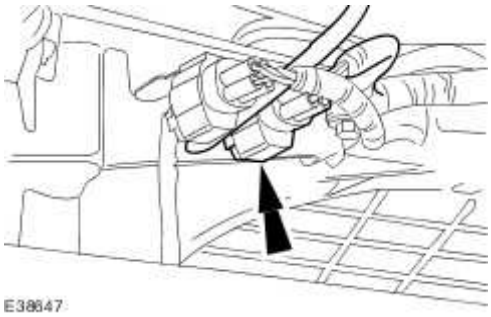

3 . Disconnect the HO2S electrical connector.

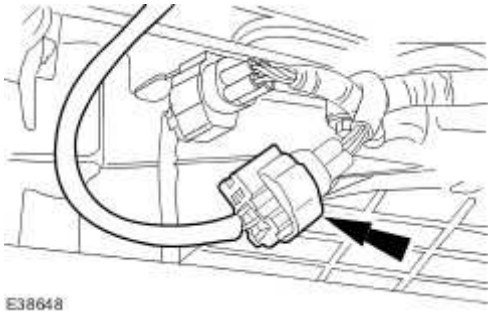

4 . **CAUTION: Do not twist the H02S wiring harness on removal. Failure to follow this instruction may result in damage to the component.**

Remove the HO2S.

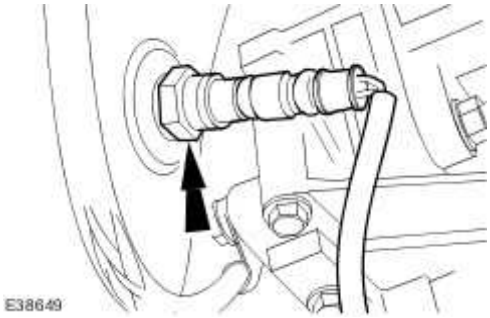

www.JagDocs.com

Installation

1. **CAUTION: Do not twist the H02S wiring harness on installation. Failure to follow this instruction may result in damage to the component.**

To install, reverse the removal procedure.

Tighten to 40 Nm.

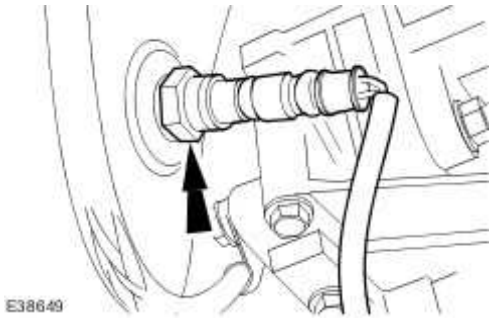

Intake Manifold Tuning (IMT) Valve LH (19.70.30)

Removal

1 . Remove the intake manifold. <<303-01A>>

2 . Remove the intake manifold tuning (IMT) valve.

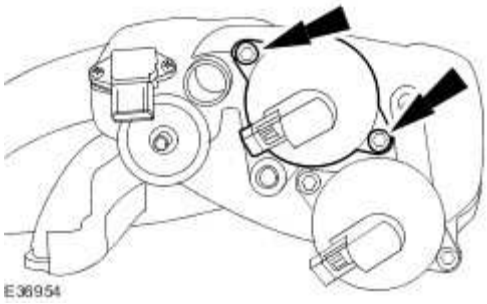

Installation

1 . To install, reverse the removal procedure.

Tighten to 10 Nm.

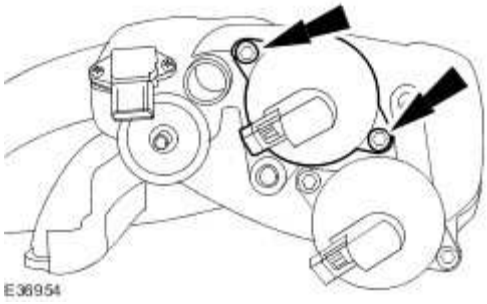

www.JagDocs.com

Knock Sensor (KS) LH (18.30.92)

Removal

1 . Remove the fuel supply manifold. <<303-04A>>

2 . Disconnect the knock sensor electrical connector.

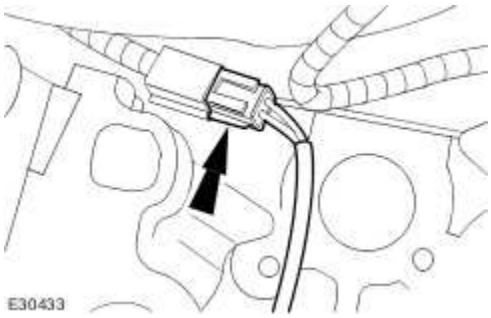

3 . Remove the knock sensor.

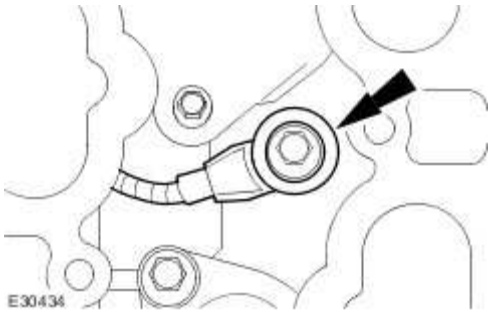

Installation

1 . To install, reverse the removal procedure.

Tighten to 25 Nm.

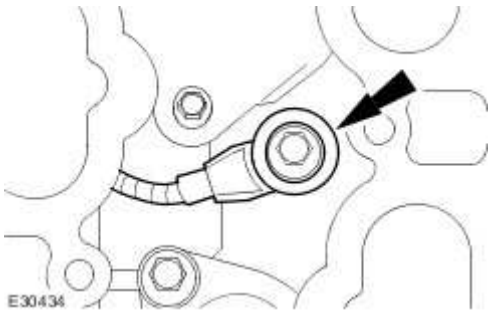

Knock Sensor (KS) RH (18.30.93)

Removal

1 . Remove the air deflector. <<501-02>>

2 . Disconnect the knock sensor electrical connector.

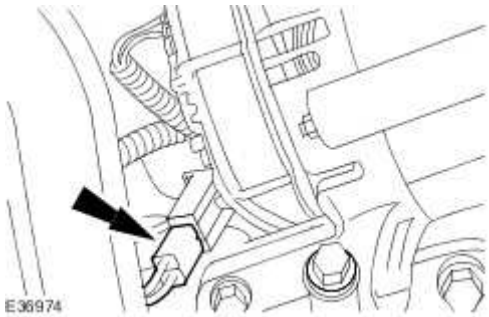

3 . Remove the knock sensor.

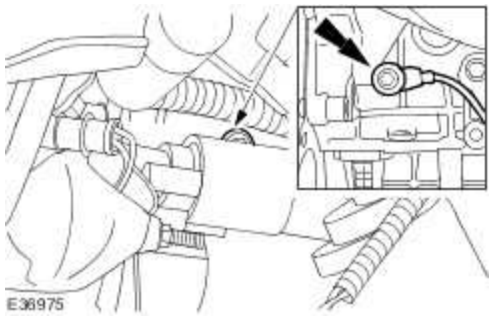

Installation

1 . To install, reverse the removal procedure.

Tighten to 25 Nm.

www.JagDocs.com

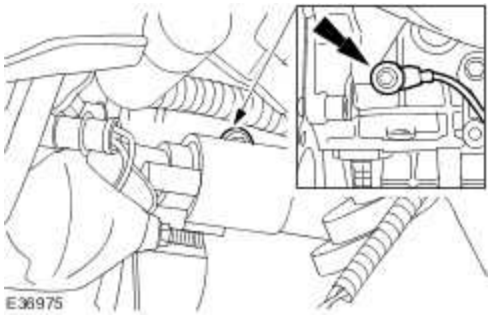
E36975

Manifold Absolute Pressure (MAP) Sensor (18.30.86)

Removal

1 . Disconnect the manifold absolute pressure (MAP) sensor electrical connector.

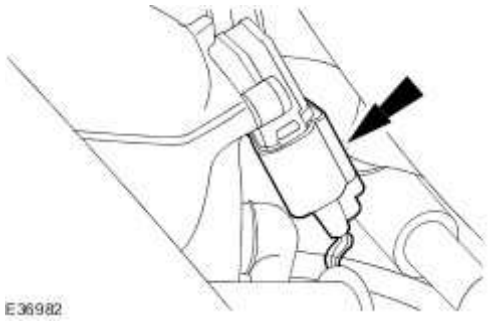

2 . Remove the MAP sensor.

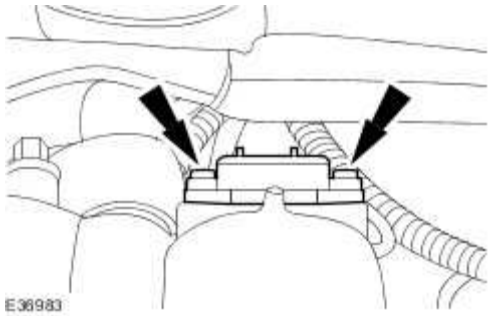

Installation

1 . To install, reverse the removal procedure.

Tighten to 10 Nm.

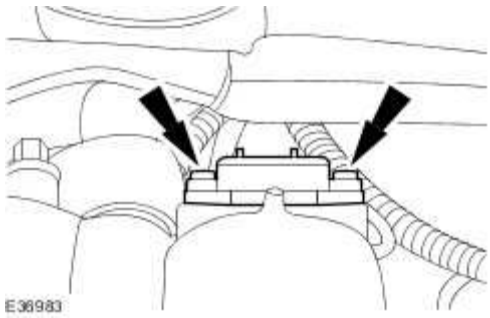

www.JagDocs.com

Mass Air Flow (MAF) Sensor (18.30.15)

Removal

1 . Remove the mass airflow (MAF) sensor.

1) Disconnect the MAF sensor electrical connector.

2) Remove the mass airflow MAF sensor.

Remove and discard the MAF sensor O-ring seal.

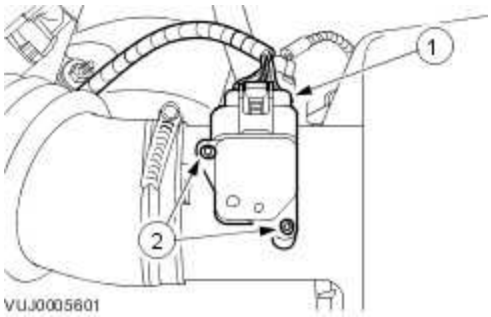

Installation

1 . To install, reverse the removal procedure.

Install a new MAF sensor O-ring seal.

2 **NOTE:**

.

For NAS vehicles only.

If required, carry out a short drive cycle.
For additional information, refer to Powertrain Control Module (PCM) Short Drive Cycle Self-Test

Oil Temperature Sensor (18.31.01)

Removal

1 . Remove the air conditioning compressor. <<412-03>>

2 . Disconnect the oil temperature sensor electrical connector.

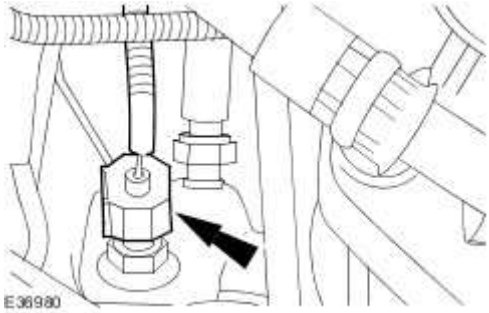

3 . Remove the oil temperature sensor.

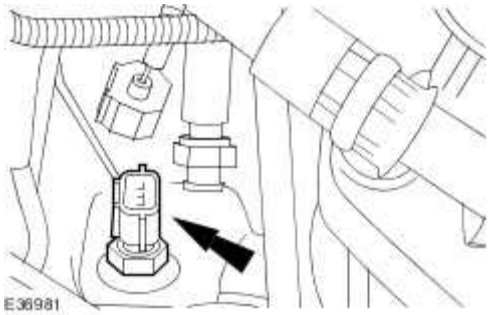

Installation

1 **NOTE:**

.

If the oil temperature sensor is to be re-used apply a small bead of sealant meeting Jaguar specification on the first three threads of the oil temperature sensor.

To install, reverse the removal procedure

- Tighten to 15 Nm.

www.JagDocs.com

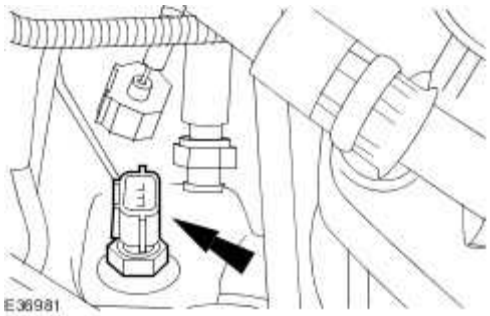
E36981

Variable Camshaft Timing (VCT) Oil Control Solenoid (18.30.90)

Removal

1 . Remove the valve cover.
For additional information, refer to
For additional information, refer to

2 . Remove the variable camshaft timing oil control solenoid.

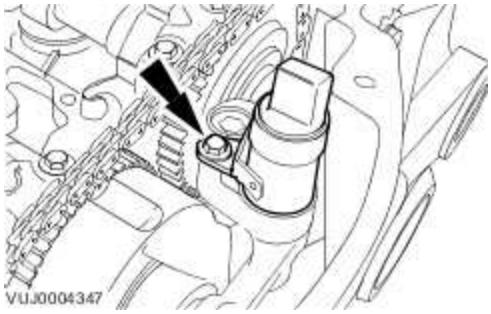

Installation

1 . To install, reverse the removal procedure.

Tighten to 10 Nm.

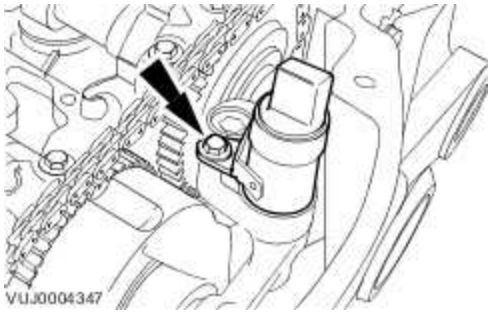

2 **NOTE:**
.

For NAS vehicles only.

If required, carry out a short drive cycle.

For additional information, refer to Powertrain Control Module (PCM) Short Drive Cycle Self-Test

www.JagDocs.com

Specifications

Torque Specifications

Description	Nm	lb-ft	lb-in
Camshaft position (CMP) sensor retaining bolt	7	-	62
Heated oxygen sensor (H02S)	40	30	-
Catalyst monitor sensor	40	30	
Crankshaft position (CKP) sensor retaining bolt	7	-	62
Knock sensor retaining nut	25	18	-
Fuel temperature sensor	7	-	62
Fuel rail pressure (FRP) sensor retaining bolts	5	-	44
Intake air temperature (IAT) sensor	35	26	-
Engine coolant temperature (ECT) sensor	17	13	-
Manifold absolute pressure (MAP) sensor	10	-	89
Oil temperature sensor	15	11	-
Mass air flow (MAF) sensor retaining screws	2	-	18
Engine compartment support retaining bolts	25	18	-
Engine control module (ECM) electrical connector retaining bolt	5	-	44
Variable camshaft timing oil control solenoid retaining bolt	10	-	89

Lubricants, fluids, sealers and adhesives

Description	Specification
Sealant	WSK-M4G-328-A3

Brake Pedal Position (BPP) Switch Adjustment

No Data Available

www.JagDocs.com

Powertrain Control Module (PCM) Long Drive Cycle Self-Test

WARNING: Where possible, all road tests should be on well surfaced and dry roads. Always comply with speed limits and local traffic regulations.

NOTE:

This procedure is an overcheck only. If fault codes are found, interrogation of the relevant system must be carried out and claimed against.

NOTE:

The vehicle must exceed 50mph (80 km/h) during the road test.

1. Connect the diagnostic equipment to the vehicle.

2. Follow on screen prompts and check for engine management fault codes.

3. Clear the fault codes following the on screen procedure.

4. Disconnect the diagnostic equipment from the vehicle.

5. **NOTE:**

   Make sure cruise control is not engaged.

Carry out a road test and perform the following operations.

- Accelerate to 55 mph (88 km/h) in 5th gear and cruise for 2 minutes with the engine speed at or above 1800rpm.
- Lift off the throttle and allow the vehicle to decelerate until the engine speed is less than 1000 rpm.
- Stop the vehicle.
- Release brake, allow the vehicle to move with no throttle for 1 minute.
- Road test is now complete.

6. Connect the diagnostic equipment to the vehicle.

7. **NOTE:**

   If fault codes are found, interrogation of the relevant system must be carried out and claimed against.

Follow on screen prompts and check for engine management fault codes.

8. Disconnect the diagnostic equipment from the vehicle.

www.JagDocs.com

Powertrain Control Module (PCM) Short Drive Cycle Self-Test

NOTE:

This procedure is an overcheck only. If fault codes are found, interrogation of the relevant system must be carried out and claimed against.

1. Connect the diagnostic equipment to the vehicle.

2. Follow on screen prompts and check for engine management fault codes.

3. Clear the fault codes following the on screen procedure.

4. Start the engine.
   - Allow the engine to idle for 30 seconds.
   - Raise the engine speed to 1500 rpm and hold for 3 minutes until a temperature of 70ºC (158 ºF) is achieved.
   - Allow the engine to idle for 30 seconds.
   - Switch off the engine.

5. **NOTE:**

   If fault codes are found, interrogation of the relevant system must be carried out and claimed against.

Follow on screen prompts and check for engine management fault codes.

6. Disconnect the diagnostic equipment from the vehicle.

Electronic Engine Controls

Vehicles with supercharger

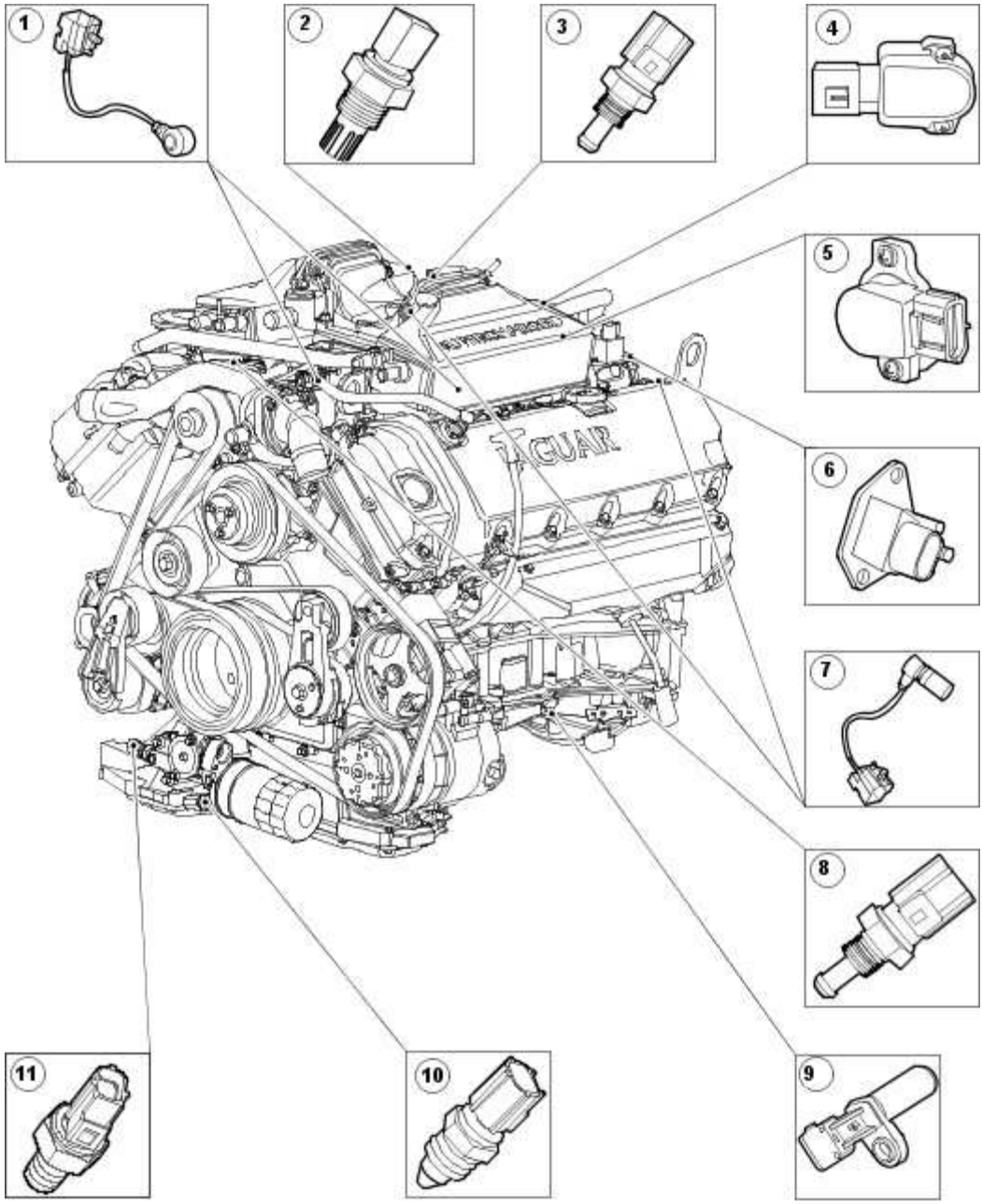

Item	Part Number	Description
1	—	Knock sensor (KS)

www.JagDocs.com

2	—	Intake air temperature (IAT) sensor
3	—	Fuel temperature sensor
4	—	Throttle position sensor
5	—	Manifold absolute pressure (MAP) sensor
6	—	Fuel rail pressure (FRP) sensor
7	—	Camshaft position (CMP) sensor
8	—	Engine coolant temperature (ECT) sensor
9	—	Crankshaft position (CPK) sensor
10	—	Oil temperature sensor
11	—	Oil pressure sensor

Vehicles without supercharger

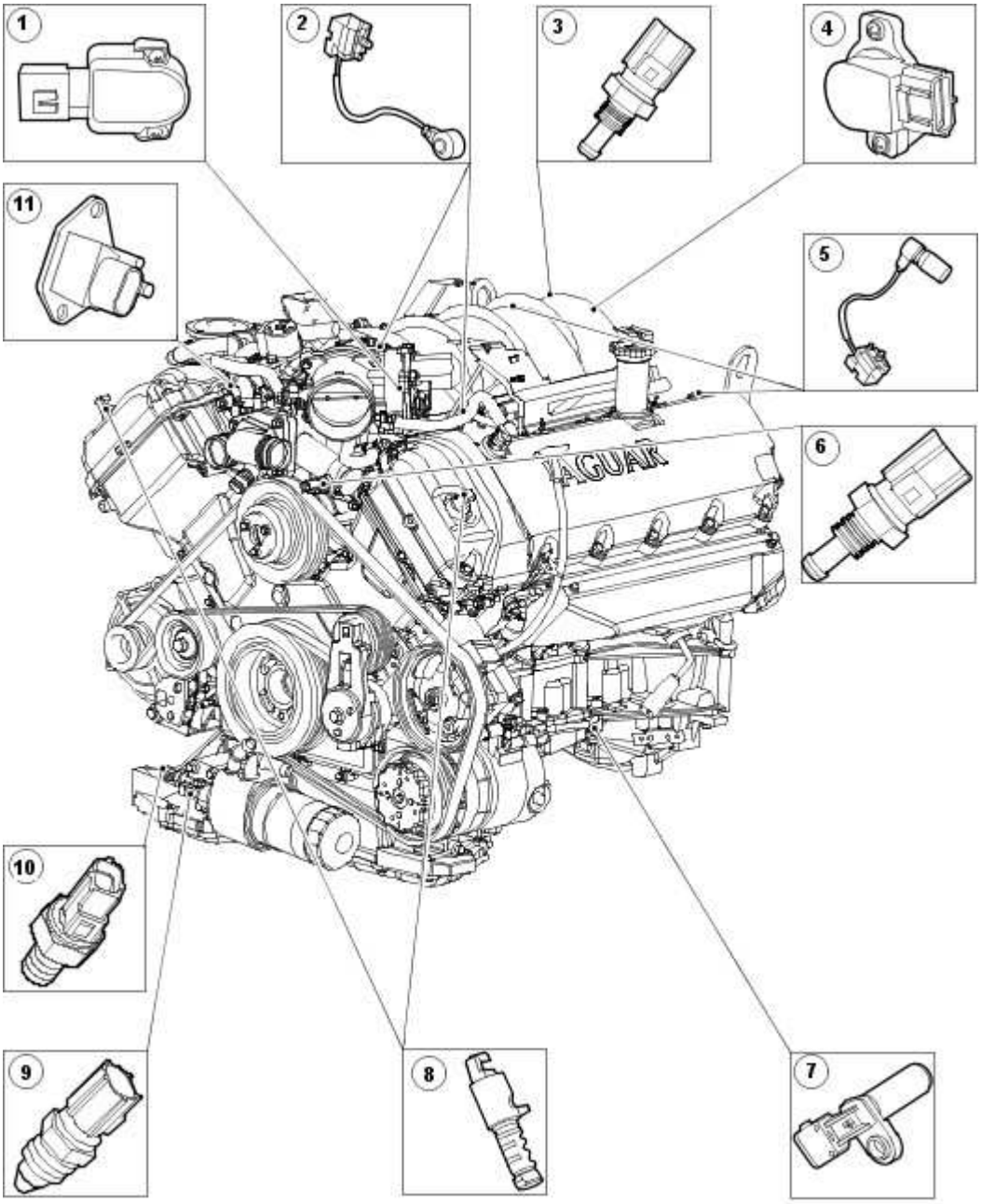

E38670

Item	Part Number	Description
1	—	Throttle position sensor
2	—	Knock sensor (KS)
3	—	Fuel temperature sensor
4	—	Manifold absolute pressure (MAP) sensor

www.JagDocs.com

5	—	Camshaft position (CMP) sensor
6	—	Engine coolant temperature (ECT) sensor
7	—	Crankshaft position (CPK) sensor
8	—	Variable camshaft timing oil control solenoid
9	—	Oil temperature sensor
10	—	Oil pressure sensor
11	—	Fuel rail pressure (FRP) sensor

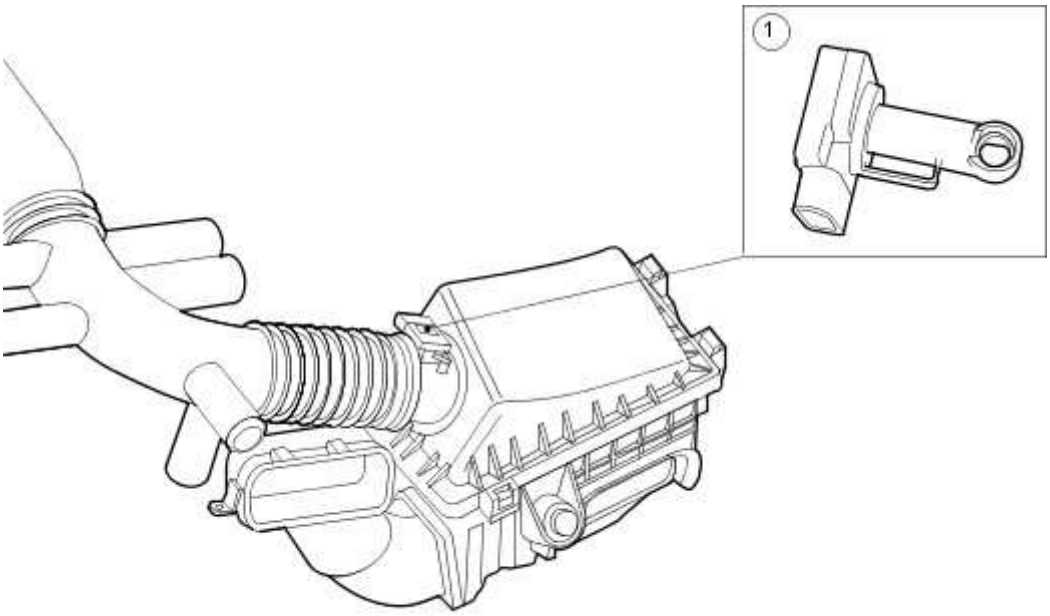

E30344

Item	Part Number	Description
1	—	Mass air flow (MAF) sensor

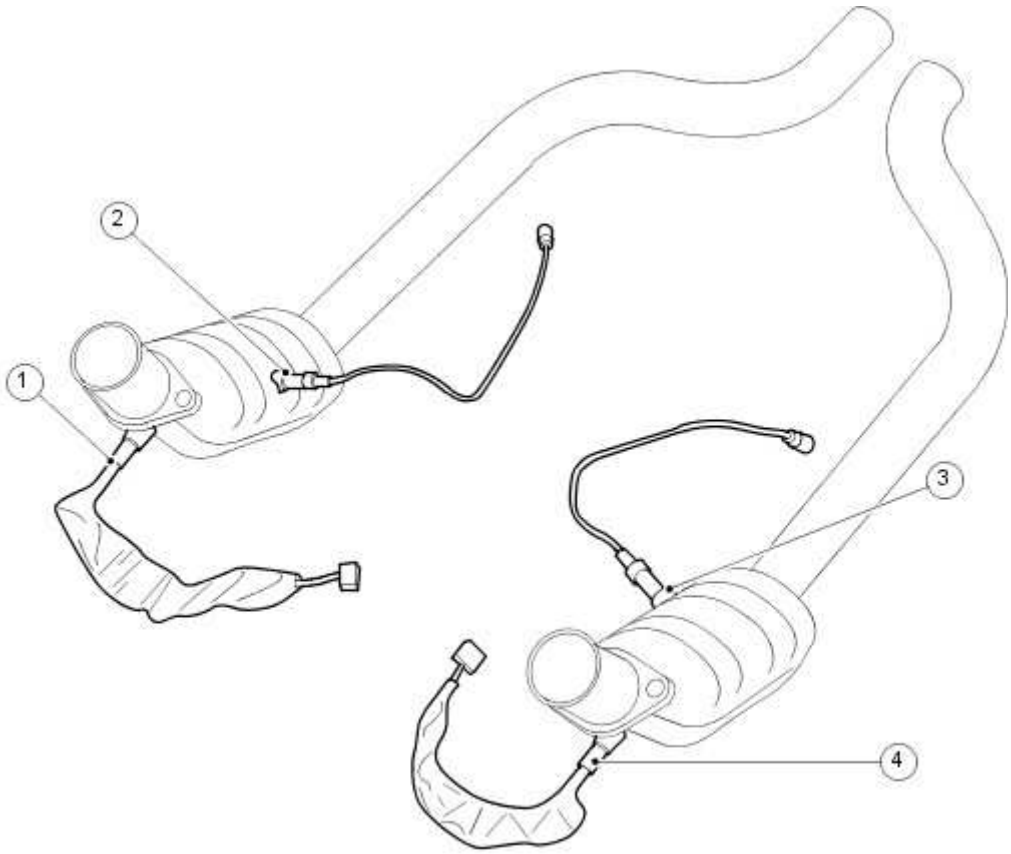

E30438

Item	Part Number	Description
1	—	Heated oxygen sensor - RH
2	—	Catalyst monitor sensor - RH
3	—	Catalyst monitor sensor - LH
4	—	Heated oxygen sensor (HO2S) - LH

Engine Control Module (ECM)

The electronic engine control system consists of a engine control module (ECM), located behind the glove compartment, and a number of sensing and actuating devices. The sensors supply the ECM with input signals which relate to the engine operating conditions and driver requirements. The sensor information is evaluated by the ECM using the results to activate the appropriate response from the actuating devices. The system provides the necessary engine control accuracy and adaptability to:

minimize exhaust emissions and fuel consumption.

www.JagDocs.com

provide optimum driver control under all conditions.

minimize evaporative emissions.

provide system diagnostics.

In addition to these functions the ECM also interfaces with other vehicle systems through the controller area network (CAN).

Camshaft Position (CMP) Sensor

The camshaft position (CMP) sensors monitor the position of both camshafts to allow the ECM to control the phase of the inlet camshafts relative to the position of the crankshaft.

Variable Camshaft Timing Oil Control Solenoid

The variable camshaft timing oil control solenoid is a hydraulic actuator, which advances and retards the inlet camshaft timing, thereby altering the camshaft to crankshaft phasing for optimum engine performance.

Knock Sensors (KS)

The knock sensors (KS) detect combustion knock within the engine cylinders and sends a signal to the ECM. The ECM uses this information to gradually adjust the ignition timing until the combustion knock is eliminated.

Mass Air flow (MAF) Sensor

The mass air flow (MAF) sensor informs the ECM of the rate of air flow entering the engine by producing a voltage which is proportional to the rate of air flow into the engine. The voltage produced by the MAF sensor increases as the rate of air flow increases. The ECM takes into account the density of the air entering the air intake system so that it is possible to maintain the required air to fuel ratio, and to compensate for variations in atmospheric pressure.

Integral to the MAF sensor is the intake air temperature sensor (IAT) which measures the temperature of the air entering the air intake system. The ECM uses this information to compensate for higher than normal air intake temperatures.

Throttle Position (TP) Sensor

The ECM monitors the angle of the throttle blade within the throttle housing through the throttle position (TP) sensor. The TP sends a voltage to the ECM which is proportional to the angle of the throttle plate. The voltage from the TP increases with the angle of the throttle plate. There are two sensor tracks within the TP sensor.

Crankshaft Position (CKP) Sensor

The crankshaft position (CKP) sensor is an inductive pulse generator, which scans protrusions on a pulse ring fitted to the flywheel to inform the ECM of the crankshaft's position and speed. The CKP sensor produces an alternating voltage. The frequency of this voltage increases proportional to engine speed.

Fuel Rail Pressure (FRP) Sensor

The fuel rail pressure (FRP) sensor is a pressure transducer device. A vacuum pipe connects to the intake manifold for manifold pressure. The ECM receives a voltage from the FRP sensor which is proportional to the fuel pressure in the fuel injection supply manifold.

Engine Coolant Temperature (ECT) Sensor

The engine coolant temperature (ECT) sensor is a thermistor type sensor that provides an input signal to the ECM which is proportional to the engine coolant temperature. The ECT sensor is a negative temperature coefficient (NTC) sensor and its resistance decreases with a proportional increase in engine coolant temperature.

Oil Temperature Sensor

The oil temperature sensor is a thermistor type sensor that provides an input signal to the ECM which is proportional to the engine oil temperature.

Oil Pressure Switch

The oil pressure switch is connected to the instrument cluster and is not directly part of the electronic engine control system.

Heated Oxygen Sensor (HO2S)

The heated oxygen sensor (HO2S) is a linear characteristic type sensor, fitted forward of the exhaust system's catalytic converter. The ECM uses this as it's primary sensor to measure the oxygen content of the exhaust gasses within the exhaust system to provide closed-loop fuelling control.

Catalyst Monitor Sensor

The catalyst monitor sensor is a non-linear characteristic type sensor fitted to the exhaust system's catalytic converter. The ECM uses this as it's secondary sensor to measure the oxygen content of the exhaust gasses within the exhaust after they have passed through the catalytic converter. As well as providing additional closed-loop fuelling control the ECM uses this information to determine the efficiency of the catalytic converter.

Intake Air Temperature (IAT) Sensor. Vehicles with supercharger.

Vehicles with supercharger have an additional intake air temperature sensor located on the right-hand charge air cooler. The IAT measures the temperature of the air entering the charge air cooler. The ECM uses this information to compensate for higher than normal air intake temperatures.

www.JagDocs.com

Published: Mar 12, 2014

Electronic Engine Controls – Armoured Vehicles

CAUTION: It is imperative that the correct calibration is installed into this engine control module (ECM). In the event of any doubt, advise should be taken from the Jaguar technical help-line.

Maximum Speed Limit

Modifications have been made to the engine control module (ECM) calibration to improve drivability due to the extra weight of the glass and armour fitted to the vehicle. If a new ECM is installed, the revised software must be loaded using the approved Jaguar diagnostic tool. The maximum speed of the vehicle has been limited to 195 kph (121 mile/h) due to the extra weight of the glass, armour and tire load and speed rating of the vehicle.

Inertia Fuel Shutoff (IFS) Switch

The fuel pump relay earths through the ECM, via the inertia fuel shutoff (IFS) switch. If, the IFS is activated, it breaks the path to earth of the fuel pump relay, turning off the fuel pump. The IFS override switch bypasses the IFS and provides an earth for the fuel pump relay, allowing the vehicle to be driven in an emergency situation.

Electronic Engine Controls - VIN Range: G00442->G45703

Inspection and Verification

1 . Verify the customer concern.

2 . Confirm which, if any, warning lights and/or messages were displayed on the instrument cluster.

NOTE:

If any warning lights and/or messages were displayed when the fault occurred, refer to the driver information table for diagnostic trouble codes (DTCs) associated with the display, then to the DTC index table for possible sources and actions. Some warnings will appear to clear when the ignition is cycled. This is often because the warning has flagged as a result of one of the vehicle's on-board diagnostic routines having run to detect the fault. If the same routine is not run when the ignition is switched **ON**, the warning will not reflag until the routine does run. See the DTC summaries for drive cycle routines.

3 . Visually inspect for obvious signs of mechanical or electrical damage.

Visual Inspection Chart

Mechanical	Electrical
Engine oil level	Fuses
Cooling system coolant level	Wiring harness
Fuel level	Electrical connector(s)
Fuel contamination/grade/quality	Sensor(s)
Throttle body	Engine control module (ECM)
Poly-vee belt	Transmission control module

1 . Verify the following systems are working correctly:

Air intake system

Cooling system

www.JagDocs.com

Charging system

Fuel charging system

Ignition system

2 . If an obvious cause for an observed or reported concern is found, correct the cause (if possible) before proceeding to the next step

3 . Where the Jaguar approved diagnostic system is available, complete the S93 report before clearing any or all fault codes from the vehicle.

NOTE:

If a DTC cannot be cleared, then there is a permanent fault present that flags again as soon as it is cleared. (The exception to this is P1260, which will only clear following an ignition OFF/ON cycle after rectification).

4 . If the cause is not visually evident and the Jaguar approved diagnostic system is not available, use a fault code reader to retrieve the fault codes before proceeding to the DTC index, or the symptom chart if no DTCs are set.

5 . Using the Jaguar approved diagnostic system where available, and a scan tool where not, check the freeze frame data for information on the conditions applicable when the fault was flagged. The format of this will vary, depending on the tool used, but can provide information useful to the technician in diagnosing the fault.

CAUTION: When probing connectors to take measurements in the course of the pinpoint tests, use the adaptor kit, part number 3548-1358-00.

NOTE:

When performing electrical voltage or resistance tests, always use a digital multimeter (DMM) accurate to 3 decimal places, and with an up-to-date calibration certificate. When testing resistance, always take the resistance of the DMM leads into account.

NOTE:

Check and rectify basic faults before beginning diagnostic routines involving pinpoint tests.

Symptom	Symptom (specific)	Possible source	Action

(general)			
Non-Start	Engine does not crank	Security system /Immobilizer engaged Engine in shut-down mode ECM relay Battery Park/Neutral switch Starting system Harness Engine seized	Check for DTCS. Contact dealer technical support for information on security system. For starting system, For ECM relay tests, GO to Pinpoint Test G258127p32. For battery information, Battery For Park/Neutral tests, External Controls For engine information, Engine
	Engine cranks, but does not fire	Engine breather system disconnected/restricted Ignition system Fuel system Harness CKP sensor ECM fault	Check engine breather system, Engine Emission Control - VIN Range: G00442->G45703 For ignition system, Engine Ignition - VIN Range: G00442->G45703 For fuel system, Fuel Charging and Controls - VIN Range: G00442->G45703 For CKP tests, GO to Pinpoint Test G258127p17. Contact dealer technical support for advice on possible ECM failure.
	Engine cranks and fires, but will not start	Purge valve Fuel pump Coolant temperature sensor Spark plugs Check for water ingress into spark plug wells HT short to ground (tracking) check rubber boots for	For evaporative emissions components, Evaporative Emissions - VIN Range: G00442->G45703 For fuel system, Fuel Charging and Controls - VIN Range: G45704->G99999 For ECT sensor tests, GO to Pinpoint Test G258127p3. For ignition system, Engine Ignition - VIN Range: G00442->G45703

www.JagDocs.com

		cracks/damage Ignition coil failure(s) Harness	
Difficult to start	Difficult to start cold	Check coolant anti-freeze content Battery CKP sensor EGR valve stuck open Fuel pump Coolant temperature sensor Purge valve	For battery information, Battery For CKP sensor tests, GO to Pinpoint Test G258127p17. For EGR system information, Engine Emission Control - VIN Range: G00442->G45703 For fuel system, Fuel Charging and Controls - VIN Range: G00442->G45703 For ECT sensor tests, GO to Pinpoint Test G258127p3. For evaporative emissions components, Evaporative Emissions - VIN Range: G00442->G45703
	Difficult to start hot	Injector leak Fuel temperature sensor IAT sensor MAF sensor Purge valve Fuel pump Ignition system Coolant temperature sensor	For fuel system, Fuel Charging and Controls - VIN Range: G00442->G45703 For fuel temperature sensor tests, GO to Pinpoint Test G258127p34. For IAT sensor tests, GO to Pinpoint Test G258127p2. For MAF sensor tests, GO to Pinpoint Test G258127p1. For evaporative emissions components, Evaporative Emissions - VIN Range: G00442->G45703 For ECT sensor tests, GO to Pinpoint Test G258127p3.
	Difficult to start after hot soak (vehicle standing after engine has reached operating temperature)	Injector leak Fuel temperature sensor IAT sensor	For fuel system, Fuel Charging and Controls - VIN Range: G00442->G45703 Fuel Charging and Controls - VIN Range: G45704->G99999 For fuel temperature sensor

		MAF sensor Purge valve Fuel pump Ignition system Coolant temperature sensor	tests, GO to Pinpoint Test G258127p34. For IAT sensor tests, GO to Pinpoint Test G258127p2. For MAF sensor tests, GO to Pinpoint Test G258127p1. For evaporative emissions components, Evaporative Emissions - VIN Range: G00442->G45703 For ECT sensor tests, GO to Pinpoint Test G258127p3.
	Engine cranks too fast/slow	Compressions high/low Battery Starting system	Check compressions, Engine For battery information, Battery For starting system,
Engine stalls	Engine stalls soon after start	Breather system disconnected/restricted ECM relay Harness MAF sensor Coolant temperature sensor Ignition system Air filter restricted Fuel lines Fuel pressure sensor Air leakage	For breather system, Engine Emission Control - VIN Range: G00442->G45703 For ECM relay tests, GO to Pinpoint Test G258127p32. For MAF sensor tests, GO to Pinpoint Test G258127p1. For ECT sensor tests, GO to Pinpoint Test G258127p3. For ignition system, Engine Ignition - VIN Range: G00442->G45703 For air filter information, Intake Air Distribution and Filtering - VIN Range: G00442->G45703 For fuel system, fuel pressure sensor tests, Fuel Charging and Controls - VIN Range: G00442->G45703 Fuel Charging and Controls - VIN Range: G45704->G99999 For intake system information, Intake Air Distribution and Filtering - VIN Range: G00442->G45703

www.JagDocs.com

	Engine stalls on overrun	ECM relay Throttle sensors	For ECM relay tests, GO to Pinpoint Test G258127p32. For throttle sensor tests, GO to Pinpoint Test G258127p4. For fuel system, Fuel Charging and Controls - VIN Range: G00442->G45703 Fuel Charging and Controls - VIN Range: G45704->G99999
	Engine stalls at steady speed	ECM relay CKP sensor Throttle sensors Harness	For ECM relay tests, GO to Pinpoint Test G258127p32. For fuel system, Fuel Charging and Controls - VIN Range: G00442->G45703 Fuel Charging and Controls - VIN Range: G45704->G99999 For CKP sensor tests, GO to Pinpoint Test G258127p17. For throttle sensor tests, GO to Pinpoint Test G258127p4.
	Engine stalls with speed control enabled	ECM relay Harness	For ECM relay tests, GO to Pinpoint Test G258127p32.
	Engine stalls when maneuvering	ECM relay Throttle sensors Additional engine loads (PAS, air conditioning, etc) Transmission malfunction CAN network malfunction	For ECM relay tests, GO to Pinpoint Test G258127p32. For throttle position sensor tests, GO to Pinpoint Test G258127p4. For accessory drive information, For transmission information, For CAN network tests, Communications Network
Poor driveability	Engine hesitates/poor acceleration	Fuel pump Injector leak Fuel pressure Fuel lines Air leakage	For fuel pump, fuel pressure sensor, fuel line and injector tests, Fuel Charging and Controls - VIN Range: G00442->G45703 Fuel Charging and Controls - VIN Range: G45704->G99999 For intake system, Intake Air Distribution and

		Throttle sensors Throttle motor Ignition system Exhaust gas recirculation HO2 sensors Transmission malfunction Restricted pedal travel (carpet, etc) APP sensor	Filtering - VIN Range: G00442->G45703 For throttle position sensor tests, GO to Pinpoint Test G258127p4. For throttle motor tests, GO to Pinpoint Test G258127p24. For ignition system, Engine Ignition - VIN Range: G00442->G45703 For exhaust gas recirculation, Engine Emission Control - VIN Range: G00442->G45703 Check for DTCs relating to HO2 sensors. Refer to the DTC index for pinpoint tests for DTC set. For transmission information, Check accelerator pedal travel. For APP sensor tests, GO to Pinpoint Test G258127p22. and GO to Pinpoint Test G258127p23.
	Engine backfires	Fuel pump Fuel lines Air leakage MAF sensor HO2 sensors Ignition system Sticking VCT hub APP sensor	For fuel pump and lines tests, Fuel Tank and Lines - 4.2L NA V8 - AJV8/4.2L SC V8 - AJV8/3.0L NA V6 - AJ27/3.5L NA V8 - AJV8, VIN Range: G00442->G45703 For intake system, Intake Air Distribution and Filtering - VIN Range: G00442->G45703 For MAF sensor tests, GO to Pinpoint Test G258127p1. Check for DTCs relating to HO2 sensors. Refer to the DTC index for pinpoint tests for DTC set. For ignition system, Engine Ignition - VIN Range: G00442->G45703 For VCT information, Engine For APP sensor tests, GO to Pinpoint Test G258127p22. and GO to Pinpoint Test

www.JagDocs.com

			G258127p23.
	Engine surges	Fuel pump Fuel lines MAF sensor Harness Throttle sensors Throttle motor Ignition system	Check fuel pressure. For fuel line information, Fuel Tank and Lines - 4.2L NA V8 - AJV8/4.2L SC V8 - AJV8/3.0L NA V6 - AJ27/3.5L NA V8 - AJV8, VIN Range: G00442->G45703 For MAF sensor, throttle sensor, and throttle motor relay tests, Electronic Engine Controls - VIN Range: G00442->G45703 For ignition system, Engine Ignition - VIN Range: G00442->G45703
	Engine detonates/knocks	KS/circuit malfunction Fuel pump Fuel lines Fuel pressure sensor MAF sensor HO2 sensors Air leakage Sticking VCT hub BARO sensor malfunction	For KS circuit tests, GO to Pinpoint Test G258127p15. and GO to Pinpoint Test G258127p16. Check fuel pressure. For fuel line information, Fuel Tank and Lines - 4.2L NA V8 - AJV8/4.2L SC V8 - AJV8/3.0L NA V6 - AJ27/3.5L NA V8 - AJV8, VIN Range: G00442->G45703 For fuel pressure sensor, Fuel Charging and Controls - VIN Range: G00442->G45703 Fuel Charging and Controls - VIN Range: G45704->G99999 For MAF sensor tests, GO to Pinpoint Test G258127p1. Check for DTCs relating to HO2 sensors. Refer to the DTC index for pinpoint tests for DTC set. For intake system, Intake Air Distribution and Filtering - VIN Range: G00442->G45703 Check DTCs for VCT range/performance fault. For VCT information, Engine For BARO sensor,

			contact dealer technical support for advice on possible ECM failure
	No throttle response	APP sensor malfunction Throttle sensors Throttle motor	For APP sensor tests, GO to Pinpoint Test G258127p22. and GO to Pinpoint Test G258127p23. For throttle position sensor tests, GO to Pinpoint Test G258127p4. For throttle motor tests, GO to Pinpoint Test G258127p24.
	Speed control inhibited or disabled	Default mode enabled Speed control switch Throttle sensors Stop light switch	Check message center for default message. For speed control switches, Speed Control - VIN Range: G00442->G45703 For throttle position sensor tests, GO to Pinpoint Test G258127p4. Check electrical guides for stop light switch information.
	Poor throttle response	APP sensor malfunction Throttle sensors Coolant temperature sensor MAF sensor Transmission malfunction Traction control event Air leakage Breather system disconnected/restricted	For APP sensor tests, GO to Pinpoint Test G258127p22. and GO to Pinpoint Test G258127p23. For throttle position sensor tests, GO to Pinpoint Test G258127p4. For ECT sensor tests, GO to Pinpoint Test G258127p3. For MAF sensor tests, GO to Pinpoint Test G258127p1. For transmission information, For intake system, Intake Air Distribution and Filtering - VIN Range: G00442->G45703 For breather system information, Engine Emission Control - VIN Range: G00442->G45703

www.JagDocs.com

	Engine defaults, warning light and messages. Refer to the driver information table	Park/Neutral switch Throttle sensors MAF sensor Coolant temperature sensor Harness	For Park/Neutral tests, External Controls For throttle position sensor tests, GO to Pinpoint Test G258127p4. For MAF sensor tests, GO to Pinpoint Test G258127p1. For ECT sensor tests, GO to Pinpoint Test G258127p3.

Driver Information Chart

Warning light	Message	Default Mode	DTC
Red	Engine systems fault	Engine shut-down (all cylinders fuel cut)	P1224
Red	Engine systems fault	Limp-Home	P1229
Red	Engine systems fault	Limp-Home	P0121, P0122, P0123, P0222, P0223
Red	Engine systems fault	Limp-Home	P1251, P1631
Red	Engine systems fault	Limp-Home	P1611
Red	Engine systems fault	Limp-Home	P1633
Red	Engine systems fault	High idle	P1344, P1122, P1123, P1215, P1216
Red	Restricted Performance	Limp-Home unavailable	P1254
Red	Restricted Performance	Limp-Home unavailable	P1250
Red	Restricted Performance	Safety redundancy	P1657, P1658
Red	Restricted Performance	Safety redundancy	P1634
Amber	Restricted Performance	Engine speed limited	P0116, P0117, P0118, P0125
Amber	Restricted Performance	Engine speed limited	P0101, P0102, P0103, P0104
Amber	Restricted Performance	Engine speed limited	P0300, P0301, P0302, P0303,

			P0304, P0305, P0306, P0307, P0308, P1313, P1314
Amber	Restricted Performance	Engine speed limited	P0327, P0328, P0332, P0333, P1648
Amber	Restricted Performance	Engine speed limited	P0351, P0352, P0353, P0354, P0355, P0356, P0357, P0358, P1367, P1368
Amber	Restricted Performance	Engine speed limited	P0171, P0172, P0174, P0175
Amber	Restricted Performance	Engine speed limited	P0201, P0202, P0203, P0204, P0205, P0206, P0207, P0208
Amber	Restricted Performance	Engine speed limited	P0335, P0336
Amber	Restricted Performance	Engine speed limited, Reverse throttle progression enabled	P1642
Amber	Restricted Performance	Engine speed limited, Reverse throttle progression enabled	P1643
Amber	Restricted Performance	Engine speed limited, Reverse throttle progression enabled	P0096, P0097, P0098
Amber	Restricted Performance	Engine speed limited, Reverse throttle progression enabled	P1474
Amber	Restricted Performance	Engine speed limited	P1234, P1236, P1338
Amber	None	None	P0506, P0507
Amber	None	None	P1656
Amber	Gearbox fault/Restricted performance	Gearbox default to set gear	P0725
Amber	Gearbox fault/Restricted	Gearbox default to set gear	P1796

www.JagDocs.com

	performance		
Amber	Gearbox fault/Restricted performance	Gearbox default to set gear	P0701
Amber	Gearbox fault/Restricted performance	Gearbox default to set gear	P1603
Amber	Gearbox fault/Restricted performance	Gearbox default to set gear	P0605
Amber	Gearbox fault/Restricted performance	Gearbox default to set gear	P1719
Amber	Gearbox fault/Restricted performance	Gearbox default to set gear	P0720
Amber	Gearbox fault/Restricted performance	Gearbox default to set gear	P0715
Amber	Gearbox fault/Restricted performance	Gearbox default to set gear	P0705
Amber	Gearbox fault/Restricted performance	Gearbox default to set gear	P0610
Amber	Gearbox fault/Restricted performance	Gearbox default to set gear	P0606
Amber	Gearbox fault/Restricted performance	Gearbox default to set gear	P0750
Amber	Gearbox fault/Restricted	Gearbox default to set gear	P0753

	performance		
Amber	Gearbox fault/Restricted performance	Gearbox default to set gear	P0755
Amber	Gearbox fault/Restricted performance	Gearbox default to set gear	P0758
Amber	Gearbox fault/Restricted performance	Gearbox default to set gear	P0760
Amber	Gearbox fault/Restricted performance	Gearbox default to set gear	P0763
Amber	Gearbox fault/Restricted performance	Gearbox default to set gear	P0765
Amber	Gearbox fault/Restricted performance	Gearbox default to set gear	P0768
Amber	Gearbox fault/Restricted performance	Gearbox default to set gear	P0770
Amber	Gearbox fault/Restricted performance	Gearbox default to set gear	P0773
Amber	Gearbox fault/Restricted performance	Gearbox default to set gear	P0740
Amber	Gearbox fault/Restricted performance	Gearbox default to set gear	P0743
Amber	Gearbox fault/Restricted	Gearbox default to set gear	P0787

www.JagDocs.com

	performance		
Amber	Gearbox fault/Restricted performance	Gearbox default to set gear	P0788
Amber	Gearbox fault/Restricted performance	Gearbox default to set gear	P0730
Amber	Gearbox fault/Restricted performance	Gearbox default to set gear	P0731
Amber	Gearbox fault/Restricted performance	Gearbox default to set gear	P0732
Amber	Gearbox fault/Restricted performance	Gearbox default to set gear	P0733
Amber	Gearbox fault/Restricted performance	Gearbox default to set gear	P0734
Amber	Gearbox fault/Restricted performance	Gearbox default to set gear	P0735
Amber	Gearbox fault/Restricted performance	Gearbox default to set gear	P0729
Amber	Gearbox fault/Restricted performance	Gearbox default to set gear	P0781
Amber	Gearbox fault/Restricted performance	Gearbox default to set gear	P0782
Amber	Gearbox fault/Restricted	Gearbox default to set gear	P0783

	performance		
Amber	Gearbox fault/Restricted performance	Gearbox default to set gear	P0784
Amber	Gearbox fault/Restricted performance	Gearbox default to set gear	P0829
Amber	Gearbox fault/Restricted performance	Engine speed limited, reverse throttle progression enabled	P1797
Amber	Gearbox fault/Restricted performance	Gearbox default to set gear	P0641
Amber	Gearbox fault/Restricted performance	Gearbox default to set gear	P0651
Amber	Gearbox fault/Restricted performance	Gearbox default to set gear	P0860
Amber	Gearbox fault/Restricted performance	Limp-home	P1783

www.JagDocs.com

Default mode Definitions

LIMP-HOME MODE

Throttle motor off

Throttle motor relay off

Throttle motor circuit off

Fuel intervention

Speed control inhibited

LIMP-HOME UNAVAILABLE

Power limitation

Vehicle speed limited to 120 kph

Reverse throttle progression enabled

Speed control inhibited

REVERSE THROTTLE PROGRESSION

Throttle opening limited to maximum 30%

NOTE:

The throttle operation uses the same map as for reverse gear.

ENGINE SPEED LIMITED

Engine runs normally, up to 3000 rpm

Engine speed restricted to 3000 rpm maximum, by fuel cut-off

HIGH IDLE

Throttle valve kept in fixed position by motor

Speed control inhibited

SAFETY REDUNDANCY

Power limitation

Vehicle speed limited to 120 kph

Reverse throttle progression enabled

Speed control inhibited

DTC index

DTC	Description	Possible Source	Action
P0010	Right-hand variable camshaft timing (VCT) circuit malfunction	VCT solenoid control valve disconnected VCT solenoid valve to ECM PWM drive circuit; open circuit, short circuit, high resistance	For right-hand VCT tests, GO to Pinpoint Test G258127p29.

		VCT solenoid failure	
P0020	Left-hand variable camshaft timing (VCT) circuit malfunction	VCT solenoid control valve disconnected VCT solenoid valve to ECM PWM drive circuit; open circuit, short circuit, high resistance VCT solenoid failure	For left-hand VCT tests, GO to Pinpoint Test G258127p30.
P0031	Right-hand HO2S heater control circuit, low current	HO2S heater power supply circuit open circuit HO2S heater control circuit open circuit, high resistance HO2S heater ground circuit fault (EM80, pin 29; EM80, pin 30) HO2S heater failure HO2S connections	For HO2S tests, GO to Pinpoint Test G258127p7.
P0032	Right-hand HO2S heater control circuit, high current	HO2S heater control circuit short circuit to ground HO2S heater ground circuit fault (EM80, pin 29; EM80, pin 30) HO2S heater failure HO2S connections	For HO2S tests, GO to Pinpoint Test G258127p7.
P0037	Right-hand catalyst monitor sensor heater control circuit, low resistance	Catalyst monitor sensor heater control circuit short circuit to ground Catalyst monitor sensor heater failure Catalyst monitor sensor connections	For catalyst monitor sensor tests, GO to Pinpoint Test G258127p9.
P0038	Right-hand catalyst monitor sensor heater control circuit, high resistance	Catalyst monitor sensor heater control circuit open circuit, high resistance Catalyst monitor sensor	For catalyst monitor sensor tests, GO to Pinpoint Test G258127p9.

www.JagDocs.com

		heater failure Catalyst monitor sensor connections	
P0051	Left-hand HO2S heater control circuit low current	HO2S heater power supply circuit open circuit HO2S heater control circuit open circuit, high resistance HO2S heater ground circuit fault (EM80, pin 81; EM80, pin 82) HO2S connections HO2S heater failure	For heater control tests, GO to Pinpoint Test G258127p11.
P0052	Left-hand HO2S heater control circuit, high current	HO2S heater control circuit short circuit to ground HO2S heater ground circuit fault (EM80, pin 81; EM80, pin 82) HO2S heater failure	For heater control tests, GO to Pinpoint Test G258127p11.
P0057	Left-hand catalyst monitor sensor heater control circuit, low resistance	Catalyst monitor sensor heater control circuit short circuit to ground Catalyst monitor sensor heater failure	For heater control circuit tests, GO to Pinpoint Test G258127p12.
P0058	Left-hand catalyst monitor sensor heater control circuit, high resistance	Catalyst monitor sensor heater control circuit open circuit, high resistance Catalyst monitor sensor heater failure	For heater control circuit tests, GO to Pinpoint Test G258127p12.
P0096	Intake Air Temperature 2 (IAT2) sensor circuit range/performance	IAT2 sensor disconnected IAT2 sensor to ECM sensing circuit; open circuit IAT2 sensor failure	For IAT2 sensor circuit tests, GO to Pinpoint Test G258127p37.
P0097	Intake Air Temperature 2 (IAT2) sensor circuit high voltage (low air	IAT2 sensor disconnected IAT2 sensor to ECM wiring; open circuit, high	For IAT2 sensor circuit tests, GO to Pinpoint Test G258127p37.

	temperature)	resistance IAT2 sensor to ECM sensing circuit; short circuit to B+ IAT2 sensor failure	
P0098	Intake Air Temperature 2 (IAT2) sensor circuit low voltage (high air temperature)	IAT2 sensor to ECM wiring; short circuit to ground IAT2 sensor failure	For IAT2 sensor circuit tests, GO to Pinpoint Test G258127p37.
P0101	Mass air flow (MAF) sensor circuit range/performance	Blocked air filter Air intake leak Engine breather leak Throttle control malfunction MAF sensor to ECM sensing circuit; high resistance, intermittent short circuit to ground MAF sensor supply circuit; high resistance MAF sensor failure Throttle adaptation fault (check throttle position voltage at ignition ON)	Check air filter element, air intake system for leaks. For further information, Intake Air Distribution and Filtering - VIN Range: G00442->G45703 Check engine breather system. For further information, Engine Emission Control - VIN Range: G00442->G45703 Check for associated codes related to throttle control. For MAF sensor tests, GO to Pinpoint Test G258127p1. Throttle adaptation is automatic at key on.
P0102	Mass air flow (MAF) sensor circuit low voltage	Blocked air filter Air intake leak between MAF sensor and throttle MAF sensor to ECM sensing circuit; high resistance, open circuit, intermittent short circuit to ground MAF sensor supply circuit; open circuit, short circuit to ground MAF sensor failure	Check air filter element, air intake system for leaks. For further information, Intake Air Distribution and Filtering - VIN Range: G00442->G45703 For MAF sensor tests, GO to Pinpoint Test G258127p1.

www.JagDocs.com

P0103	Mass air flow (MAF) sensor sensing circuit high voltage	MAF sensor to ECM sensing circuit; short circuit to B+ voltage MAF sensor to ECM ground circuit; open circuit MAF sensor failure	For MAF sensor tests, GO to Pinpoint Test G258127p1.
P0105	Manifold absolute pressure (MAP) sensor range/performance	Intake manifold air leak (loose or missing component) MAP sensor to ECM circuit(s) fault MAP sensor failure Throttle adaptation fault (check throttle position voltage at ignition ON)	Check air intake system. For further information, Intake Air Distribution and Filtering - VIN Range: G00442->G45703 For MAP sensor circuit tests, GO to Pinpoint Test G258127p33. Throttle adaptation is automatic at key on.
P0106	BARO sensor circuit range/performance	BARO failure (internal ECM fault)	Contact dealer technical support for advice on possible ECM failure.
P0107	BARO sensor circuit, low voltage	BARO failure (internal ECM fault)	Contact dealer technical support for advice on possible ECM failure.
P0108	BARO circuit, high voltage	BARO failure (internal ECM fault)	Contact dealer technical support for advice on possible ECM failure.
P0111	Intake air temperature (IAT) sensor range/performance	Blocked air filter Air intake leak Engine breather leak IAT sensor to ECM wiring; open circuit or high resistance IAT sensor to ECM sensing circuit; short circuit to high voltage IAT sensor failure	Check air filter element, air intake system for leaks. For further information, Intake Air Distribution and Filtering - VIN Range: G00442->G45703 Check engine breather system. For further information, Engine Emission Control - VIN Range: G00442->G45703 For IAT sensor tests, GO to Pinpoint Test G258127p2.

P0112	Intake air temperature (IAT) sensor circuit high voltage (low air temperature)	IAT sensor disconnected IAT sensor to ECM wiring; open circuit or high resistance IAT sensor to ECM sensing circuit short circuit to B+ voltage IAT sensor failure	For IAT sensor tests, GO to Pinpoint Test G258127p2.
P0113	Intake air temperature (IAT) sensor circuit low voltage (high air temperature)	IAT sensor to ECM wiring short circuit to ground IAT sensor failure	For IAT sensor tests, GO to Pinpoint Test G258127p2.
P0116	Engine coolant temperature (ECT) sensor circuit range/performance	ECT sensor disconnected Low coolant level Contaminated coolant Thermostat failure ECT sensor to ECM sensing circuit; open circuit, high resistance when hot, intermittent high resistance ECT sensor failure Engine cooling fan stuck on high speed Above normal air flow through engine compartment, due to accident damage and/or missing panels	Refer to visual inspection table in this section, check sensor connections, coolant level and condition, thermostat operation. For ECT sensor tests, GO to Pinpoint Test G258127p3.
P0117	Engine coolant temperature (ECT) sensor sensing circuit high voltage (low coolant temperature)	ECT sensor disconnected ECT sensor to ECM sensing circuit; high resistance, open circuit, short circuit to B+ voltage ECT sensor failure	For ECT sensor tests, GO to Pinpoint Test G258127p3.

www.JagDocs.com

P0118	Engine coolant temperature (ECT) sensor sensing circuit low voltage (high coolant temperature)	Engine overheat condition ECT sensor to ECM wiring short circuit to ground ECT sensor failure	Check for overheating, for further information, Engine Cooling For ECT sensor tests, GO to Pinpoint Test G258127p3.
P0121	Throttle position (TP) sensor circuit range/performance (TP1 compared to TP2)	TP sensor to ECM wiring; open circuit, high resistance TP sensor to ECM sensing circuits; (TP 1 or TP 2) short circuit to B+ voltage TP sensor failure	For TP sensor tests, GO to Pinpoint Test G258127p4.
P0122	Throttle position (TP) sensor circuit 1 low voltage	TP sensor to ECM sensing circuit (TP1); open circuit, short circuit to ground, high resistance TP sensor failure	For TP sensor tests, GO to Pinpoint Test G258127p4.
P0123	Throttle position (TP) sensor circuit 1 high voltage	TP sensor to ECM sensing circuit (TP1); short circuit to high voltage TP sensor failure	For TP sensor tests, GO to Pinpoint Test G258127p4.
P0125	Engine coolant temperature (ECT) sensor response (for closed loop fuel control) (coolant thermostat monitor)	ECT sensor disconnected Low coolant level Contaminated coolant Thermostat failure ECT sensor to ECM sensing circuit; high resistance, open circuit or short circuit to high voltage Engine cooling fan stuck on high speed Above normal air flow through engine compartment, due to accident damage and/or missing panels	Refer to visual inspection table in this section, check sensor connections, coolant level and condition, thermostat operation. For ECT sensor tests, GO to Pinpoint Test G258127p3. Check for associated codes related to cooling fan. Check the vehicle for panel damage.

P0128	Coolant thermostat range/performance	Contaminated coolant Engine coolant thermostat failure ECT sensor failure ECT sensor DTC may also be flagged	Check coolant level and condition, check thermostat operation, Engine Cooling Check for associated codes related to ECT sensor.
P0131	Right-hand H02S sensing circuit low current (universal oxygen sensor; lean condition at ECM - high current at sensor)	H02S disconnected H02S to ECM variable current circuit fault (HO2S pin 3) ECM to HO2S constant current circuit fault (HO2S pin 4) H02S failure	For HO2S tests, GO to Pinpoint Test G258127p6.
P0132	Right-hand H02S sensing circuit high current (universal oxygen sensor; rich condition at ECM - low current at sensor)	H02S disconnected H02S to ECM variable current circuit fault (HO2S pin 3) ECM to HO2S constant current circuit fault (HO2S pin 4) H02S failure	For HO2S tests, GO to Pinpoint Test G258127p6.
P0133	Right-hand H02S sensing circuit slow response	Engine misfire H02S disconnected H02S mechanical damage H02S to ECM wiring fault H02S short circuit to ground H02S to ECM wiring shield open circuit HO2S heater circuit fault H02S failure	Check for associated codes related to misfire, (P0300 to P0308) inspect the HO2S for connection/damage. For HO2S diagnosis, GO to Pinpoint Test G258127p6. For HO2S heater diagnosis, GO to Pinpoint Test G258127p9. Check for exhaust leak, for further information, Exhaust temperature will be low if misfire/poor fuel supply condition exists. Catalytic converter efficiency will be poor until it reaches "light-off".

www.JagDocs.com

		Exhaust leak Catalyst efficiency decrease Low exhaust temperature Injector flow partially blocked	
P0137	Right-hand catalyst monitor sensor sensing circuit low voltage	Catalyst monitor sensor disconnected Catalyst monitor sensor to ECM wiring open circuit Catalyst monitor sensor short circuit to ground Catalyst monitor sensor failure	For catalyst monitor sensor tests, GO to Pinpoint Test G258127p8.
P0138	Right-hand catalyst monitor sensor sensing circuit high voltage	Catalyst monitor sensor sensing circuit short circuit to high voltage Catalyst monitor sensor ground braided shield open circuit Catalyst monitor sensor failure	For catalyst monitor sensor tests, GO to Pinpoint Test G258127p8.
P0140	Right-hand catalyst monitor sensor sensing circuit no activity	Catalyst monitor sensor disconnected Catalyst monitor sensor mechanical damage Catalyst monitor sensor to ECM wiring open circuit Catalyst monitor sensor sensing circuit short circuit to high voltage Catalyst monitor sensor RH short circuit to ground Catalyst monitor sensor ground braided shield open circuit	Inspect the HO2S for connection/damage. For HO2S sensor diagnosis, GO to Pinpoint Test G258127p8. Check for exhaust leak, for further information, Exhaust temperature will be low if misfire/poor fuel supply condition exists. Catalytic converter efficiency will be poor until it reaches "light-off".

		Exhaust leak Low exhaust temperature Catalyst monitor sensor failure	
P0151	Left-hand H02S sensing circuit low current (universal oxygen sensor; lean condition at ECM - high current at sensor)	H02S disconnected H02S to ECM variable current circuit fault (HO2S pin 3) ECM to HO2S constant current circuit fault (HO2S pin 4) H02S failure	For HO2S tests, GO to Pinpoint Test G258127p10.
P0152	Left-hand H02S sensing circuit high current (universal oxygen sensor; rich condition at ECM - low current at sensor)	H02S disconnected H02S to ECM variable current circuit fault (HO2S pin 3) ECM to HO2S constant current circuit fault (HO2S pin 4) H02S failure	For HO2S tests, GO to Pinpoint Test G258127p10.
P0153	Left-hand H02S sensing circuit slow response	Engine misfire H02S disconnected H02S mechanical damage H02S to ECM wiring fault H02S short circuit to ground H02S to ECM wiring shield open circuit HO2S heater circuit fault H02S failure Exhaust leak Catalyst efficiency decrease	Check for associated codes related to misfire, (P0300 to P0308) inspect the HO2S for connection/damage. For HO2S sensor tests, GO to Pinpoint Test G258127p10. Check for exhaust leak, for further information, Exhaust temperature will be low if misfire/poor fuel supply condition exists. Catalytic converter efficiency will be poor until it reaches "light-off".

www.JagDocs.com

		Low exhaust temperature Injector flow partially blocked	
P0157	Left-hand catalyst monitor sensor sensing circuit low voltage	Catalyst monitor sensor disconnected Catalyst monitor sensor to ECM wiring open circuit Catalyst monitor sensor short circuit to ground Catalyst monitor sensor failure	For catalyst monitor sensor tests, GO to Pinpoint Test G258127p14.
P0158	Left-hand catalyst monitor sensor sensing circuit high voltage	Catalyst monitor sensor sensing circuit; short circuit to high voltage Catalyst monitor sensor ground braided shield open circuit Catalyst monitor sensor failure	For catalyst monitor sensor tests, GO to Pinpoint Test G258127p14.
P0160	Left-hand catalyst monitor sensor sensing circuit no activity	Catalyst monitor sensor disconnected Catalyst monitor sensor mechanical damage Catalyst monitor sensor to ECM wiring open circuit Catalyst monitor sensor sensing circuit short circuit to high voltage Catalyst monitor sensor LH short circuit to ground Catalyst monitor sensor ground braided shield open circuit Exhaust leak Low exhaust temperature Catalyst monitor sensor	Inspect the HO2S for connection/damage. For HO2S sensor diagnosis, GO to Pinpoint Test G258127p14. Check for exhaust leak, for further information, Exhaust temperature will be low if misfire/poor fuel supply condition exists. Catalytic converter efficiency will be poor until it reaches "light-off".

		failure	
P0171	Right-hand cylinders combustion too lean	Air intake leak between mass air flow (MAF) sensor and cylinder head Fuel injector restriction Fuel filter/system restriction Low fuel pump output Fuel pressure (IP) sensor failure (low fuel pressure) HO2S/Catalyst monitor sensor harness wiring condition fault Fuel temperature (EFT) sensor fault (low fuel temperature) MAF sensor fault (low intake air flow) Exhaust leak (before catalyst) ECM receiving incorrect signal from one or more of the following sensors; ECT, MAF*, IAT, IP, EFT, TP	For intake system, Intake Air Distribution and Filtering - VIN Range: G00442->G45703 For fuel injector, Fuel Charging and Controls - VIN Range: G00442->G45703 Fuel Charging and Controls - VIN Range: G00442->G45703 For fuel filter and pump, Fuel Tank and Lines - 4.2L NA V8 - AJV8/4.2L SC V8 - AJV8/3.0L NA V6 - AJ27/3.5L NA V8 - AJV8, VIN Range: G00442->G45703 For fuel pressure sensor, Fuel Charging and Controls - VIN Range: G00442->G45703 Fuel Charging and Controls - VIN Range: G00442->G45703 For HO2S/Catalyst monitor sensor tests, GO to Pinpoint Test G258127p6. GO to Pinpoint Test G258127p9. GO to Pinpoint Test G258127p8. For exhaust system, Refer to individual pinpoint tests for sensors listed. * If this DTC is flagged, pay particular attention to the MAF sensor.
P0172	Right-hand cylinders combustion too rich	Engine misfire Restricted air filter Leaking fuel injector(s) Fuel pressure (IP) sensor failure (high fuel pressure) Fuel temperature (EFT) sensor fault (high fuel temperature) MAF sensor fault (high	Check for "misfire detected" DTCs (P0300 to P0308) in this section. For intake system, Intake Air Distribution and Filtering - VIN Range: G00442->G45703 For fuel injectors, fuel pressure sensor, Fuel Charging and Controls - VIN Range: G00442->G45703 Fuel Charging and Controls - VIN Range: G00442->G45703 Refer to individual pinpoint tests for

www.JagDocs.com

		intake air flow) HO2S/Catalyst monitor sensor harness wiring condition fault ECM receiving incorrect signal from one or more of the following sensors; ECT, MAF, IAT, IP, EFT, TP	sensors and circuits listed.
P0174	Left-hand cylinders combustion too lean	Air intake leak between MAF sensor and cylinder head Fuel filter/system restriction Fuel injector restriction Fuel pressure (IP) sensor failure (low fuel pressure) Low fuel pump output HO2S/Catalyst monitor sensor harness wiring condition fault Fuel temperature (EFT) sensor fault (low fuel temperature) MAF sensor fault (low intake air flow) Exhaust leak (before catalyst) ECM receiving incorrect signal from one or more of the following sensors - ECT, MAF*, IAT, IP, EFT, TP.	For intake system, Intake Air Distribution and Filtering - VIN Range: G00442->G45703 For fuel injector, Fuel Charging and Controls - VIN Range: G00442->G45703 Fuel Charging and Controls - VIN Range: G00442->G45703 For fuel filter and pump, Fuel Tank and Lines - 4.2L NA V8 - AJV8/4.2L SC V8 - AJV8/3.0L NA V6 - AJ27/3.5L NA V8 - AJV8, VIN Range: G00442->G45703 For fuel pressure sensor, Fuel Charging and Controls - VIN Range: G00442->G45703 Fuel Charging and Controls - VIN Range: G00442->G45703 For HO2S/Catalyst monitor sensor tests, GO to Pinpoint Test G258127p10. GO to Pinpoint Test G258127p11. GO to Pinpoint Test G258127p12. For exhaust system, Refer to individual pinpoint tests for sensors listed. * If this DTC is flagged, pay particular attention to the MAF sensor.
P0175	Left-hand cylinders combustion too rich	Engine misfire Restricted air filter	Check for "misfire detected" DTCs (P0300 to P0308) in this section. For intake system, Intake Air Distribution and

		Leaking fuel injector(s) Fuel pressure (IP) sensor failure (high fuel pressure) Fuel temperature (EFT) sensor fault (high fuel temperature) MAF sensor fault (high intake air flow) HO2S/Catalyst monitor sensor harness wiring condition fault ECM receiving incorrect signal from one or more of the following sensors; ECT, MAF, IAT, IP, EFT, TP	Filtering - VIN Range: G00442->G45703 For fuel injectors, fuel pressure sensor, Fuel Charging and Controls - VIN Range: G00442->G45703 Fuel Charging and Controls - VIN Range: G00442->G45703 Refer to individual pinpoint tests for sensors and circuits listed.
P0181	Engine fuel temperature (EFT) sensor range/performance	EFT sensor disconnected EFT sensor to ECM sensing circuit; high resistance, open circuit, short circuit to ground, short circuit to high voltage EFT sensor to splice sensor ground circuit; high resistance, open circuit Above normal air flow through engine compartment, due to accident damage and/or missing panels EFT sensor failure	For EFT sensor sensing circuit tests, GO to Pinpoint Test G258127p34. For sensor ground tests, GO to Pinpoint Test G258127p26. Check the vehicle for panel damage.
P0182	Engine fuel temperature (EFT) sensor circuit low voltage (high temperature)	EFT sensor to ECM sensing circuit; short circuit to ground EFT sensor to splice sensor ground circuit; short circuit EFT sensor failure	For EFT sensor sensing circuit tests, GO to Pinpoint Test G258127p34. For sensor ground tests, GO to Pinpoint Test G258127p26.

www.JagDocs.com

P0183	Engine fuel temperature (EFT) sensor circuit high voltage (low temperature)	EFT sensor disconnected EFT sensor to ECM sensing circuit; high resistance, open circuit, short circuit to high voltage EFT sensor to splice sensor ground circuit; high resistance, open circuit EFT sensor failure	For EFT sensor sensing circuit tests, GO to Pinpoint Test G258127p34. For sensor ground tests, GO to Pinpoint Test G258127p26.
P0191	Fuel rail pressure (FRP) sensor circuit range/performance	Fuel filter/system restriction Fuel system leak Incorrect fuel pump output FRP sensor to ECM sensing circuit; high resistance, open circuit, short circuit to ground, short circuit to high voltage FRP sensor to splice in sensor supply circuit; high resistance, open circuit FRP sensor to splice in sensor ground circuit; high resistance, open circuit, short circuit to ground, short circuit to high voltage FRP sensor failure	For fuel filter, pump and lines, Fuel Tank and Lines - 4.2L NA V8 - AJV8/4.2L SC V8 - AJV8/3.0L NA V6 - AJ27/3.5L NA V8 - AJV8, VIN Range: G00442->G45703 For FRP sensor tests, Fuel Charging and Controls - VIN Range: G00442->G45703 Fuel Charging and Controls - VIN Range: G00442->G45703
P0192	Fuel rail pressure (FRP) sensor circuit low input	FRP sensor disconnected FRP sensor to ECM sensing circuit; open circuit or short circuit to ground FRP sensor to splice in sensor supply circuit; high resistance, open circuit FRP sensor failure	For FRP sensor tests, Fuel Charging and Controls - VIN Range: G00442->G45703 Fuel Charging and Controls - VIN Range: G00442->G45703

P0193	Fuel rail pressure (FRP) sensor circuit high input	FRP sensor to ECM wiring (supply/sense) short circuit to each other FRP sensor to ECM sensing circuit; short circuit to high voltage FRP sensor to splice in sensor ground circuit; open circuit FRP sensor failure	For FRP sensor tests, Fuel Charging and Controls - VIN Range: G00442->G45703 Fuel Charging and Controls - VIN Range: G00442->G45703
P0196	Engine oil temperature (EOT) sensor range/performance	EOT sensor to ECM sensing circuit; high resistance when hot, intermittent high resistance EOT sensor failure ECT sensor malfunction	For EOT sensor tests, GO to Pinpoint Test G258127p13. Check for ECT sensor DTCs.
P0197	Engine oil temperature (EOT) sensor low voltage (high oil temperature)	EOT sensor to ECM sensing circuit; short circuit to ground EOT sensor failure	For EOT sensor tests, GO to Pinpoint Test G258127p13. Check for ECT sensor DTCs.
P0198	Engine oil temperature (EOT) sensor high voltage (low oil temperature)	EOT sensor disconnected EOT sensor to ECM sensing circuit; high resistance, open circuit or short circuit to B+ voltage EOT sensor failure	For EOT sensor tests, GO to Pinpoint Test G258127p13. Check for ECT sensor DTCs.
P0201	Fuel injector circuit malfunction, Cyl 1	Injector disconnected Injector wiring open or short circuit Injector failure	Check injector connections. For injector circuit tests, Fuel Charging and Controls - VIN Range: G00442->G45703 Fuel Charging and Controls - VIN Range: G00442->G45703
P0202	Fuel injector circuit malfunction, Cyl 2	Injector disconnected Injector wiring open or short circuit Injector failure	Check injector connections. For injector circuit tests, Fuel Charging and Controls - VIN Range: G00442->G45703 Fuel Charging and Controls - VIN Range: G00442->G45703

www.JagDocs.com

P0203	Fuel injector circuit malfunction, Cyl 3	Injector disconnected Injector wiring open or short circuit Injector failure	Check injector connections. For injector circuit tests, Fuel Charging and Controls - VIN Range: G00442->G45703 Fuel Charging and Controls - VIN Range: G00442->G45703
P0204	Fuel injector circuit malfunction, Cyl 4	Injector disconnected Injector wiring open or short circuit Injector failure	Check injector connections. For injector circuit tests, Fuel Charging and Controls - VIN Range: G00442->G45703 Fuel Charging and Controls - VIN Range: G00442->G45703
P0205	Fuel injector circuit malfunction, Cyl 5	Injector disconnected Injector wiring open or short circuit Injector failure	Check injector connections. For injector circuit tests, Fuel Charging and Controls - VIN Range: G00442->G45703 Fuel Charging and Controls - VIN Range: G00442->G45703
P0206	Fuel injector circuit malfunction, Cyl 6	Injector disconnected Injector wiring open or short circuit Injector failure	Check injector connections. For injector circuit tests, Fuel Charging and Controls - VIN Range: G00442->G45703 Fuel Charging and Controls - VIN Range: G00442->G45703
P0207	Fuel injector circuit malfunction, Cyl 7	Injector disconnected Injector wiring open or short circuit Injector failure	Check injector connections. For injector circuit tests, Fuel Charging and Controls - VIN Range: G00442->G45703 Fuel Charging and Controls - VIN Range: G00442->G45703
P0208	Fuel injector circuit malfunction, Cyl 8	Injector disconnected Injector wiring open or short circuit Injector failure	Check injector connections. For injector circuit tests, Fuel Charging and Controls - VIN Range: G00442->G45703 Fuel Charging and Controls - VIN Range: G00442->G45703
P0222	Throttle position (TP) sensor circuit 2 (TP2) low	TP sensor to ECM sensing circuit (TP2); open circuit, short circuit to	For TP sensor tests, GO to Pinpoint Test G258127p5.

	voltage	ground or high resistance TP sensor failure	
P0223	Throttle position (TP) sensor circuit 2 (TP2) high voltage	TP sensor to ECM sensing circuit (TP2); short circuit to high voltage TP sensor failure	For TP sensor tests, GO to Pinpoint Test G258127p5.
P0300	Random misfire detected	ECM to ignition coil primary circuit faults (cylinder misfire detected DTCs also logged) Fuel injector circuit fault(s) (injector DTCs also logged) Ignition coil failure Spark plug failure/fouled/incorrect gap Cylinder compression low Fuel delivery pressure (low/high) Fuel injectors restricted/leaking Fuel injectors continuously open Fuel contamination Worn camshaft/broken valve springs Valve clearance adjustment Ignition coil failure	For engine information, Engine For fuel system, Fuel Charging and Controls - VIN Range: G00442->G45703 Fuel Charging and Controls - VIN Range: G00442->G45703 For ignition system, Engine Ignition - VIN Range: G00442->G45703
P0301	Misfire detected, Cyl 1	Refer to P0300 possible sources	Refer to P0300 Actions
P0302	Misfire detected, Cyl 2	Refer to P0300 possible sources	Refer to P0300 Actions
P0303	Misfire detected, Cyl 3	Refer to P0300 possible sources	Refer to P0300 Actions

www.JagDocs.com

P0304	Misfire detected, Cyl 4	Refer to P0300 possible sources	Refer to P0300 Actions
P0305	Misfire detected, Cyl 5	Refer to P0300 possible sources	Refer to P0300 Actions
P0306	Misfire detected, Cyl 6	Refer to P0300 possible sources	Refer to P0300 Actions
P0307	Misfire detected, Cyl 7	Refer to P0300 possible sources	Refer to P0300 Actions
P0308	Misfire detected, Cyl 8	Refer to P0300 possible sources	Refer to P0300 Actions
P0327	Right-hand knock sensor (KS) sensing circuit out of range (low voltage)	Poor sensor contact with cylinder block KS to ECM sensing circuit; short circuit to ground KS failure	Check KS for correct fitment, REFER to Knock sensor (KS) in this section. For KS tests, GO to Pinpoint Test G258127p15.
P0328	Right-hand knock sensor (KS) sensing circuit out of range (high voltage)	Poor sensor contact with cylinder block KS to ECM sensing circuit; high resistance, open circuit, short circuit to high voltage KS failure	Check KS for correct fitment, For KS tests, GO to Pinpoint Test G258127p15.
P0332	Left-hand knock sensor (KS) sensing circuit out of range (low voltage)	Poor sensor contact with cylinder block KS to ECM sensing circuit; short circuit to ground KS failure	Check KS for correct fitment, For KS tests, GO to Pinpoint Test G258127p16.
P0333	Left-hand knock sensor (KS) sensing circuit out of range (high voltage)	Poor sensor contact with cylinder block KS to ECM sensing circuit; high resistance, open circuit, short circuit to high voltage KS failure	Check KS for correct fitment, REFER to Knock sensor (KS) in this section. For KS tests, GO to Pinpoint Test G258127p16.
P0335	Crankshaft position (CKP) sensor circuit malfunction	CKP sensor disconnected CKP sensor gap incorrect/foreign matter on sensor face	For CKP sensor tests, GO to Pinpoint Test G258127p17.

		CKP sensor sensing circuit; open circuit, short circuit to ground, short circuit to high voltage CKP sensor failure	
P0336	Crankshaft position (CKP) sensor range/performance	CKP sensor reluctor; foreign matter/damaged teeth CKP sensor sensing circuit; intermittent open circuit, short circuit to ground, short circuit to high voltage CKP sensor failure	For CKP sensor tests, GO to Pinpoint Test G258127p17.
P0340	Right-hand camshaft position (CMP) sensor circuit malfunction	CMP sensor disconnected CMP sensor gap incorrect/foreign matter on sensor face CMP sensor sensing circuit; open circuit, short circuit to ground, short circuit to high voltage CMP sensor failure	For CMP sensor tests, GO to Pinpoint Test G258127p18.
P0341	Right-hand camshaft position (CMP) sensor range/performance	CMP sensor disconnected CMP sensor gap incorrect/foreign matter on face CMP sensor sensing circuit open circuit, short circuit to ground, short circuit to high voltage CMP sensor failure	For CMP sensor tests, GO to Pinpoint Test G258127p18.
P0351	Ignition coil primary circuit malfunction, Cyl 1	ECM to ignition coil primary circuit; open circuit, short circuit to ground, high resistance Ignition coil ground circuit; open circuit, high resistance	For ignition system tests, Engine Ignition - VIN Range: G00442->G45703

www.JagDocs.com

		Ignition coil failure	
P0352	Ignition coil primary circuit malfunction, Cyl 2	ECM to ignition coil primary circuit; open circuit, short circuit to ground, high resistance Ignition coil ground circuit; open circuit, high resistance Ignition coil failure	For ignition system tests, Engine Ignition - VIN Range: G00442->G45703
P0353	Ignition coil primary circuit malfunction, Cyl 3	ECM to ignition coil primary circuit; open circuit, short circuit to ground, high resistance Ignition coil ground circuit; open circuit, high resistance Ignition coil failure	For ignition system tests, Engine Ignition - VIN Range: G00442->G45703
P0354	Ignition coil primary circuit malfunction, Cyl 4	ECM to ignition coil primary circuit; open circuit, short circuit to ground, high resistance Ignition coil ground circuit; open circuit, high resistance Ignition coil failure	For ignition system tests, Engine Ignition - VIN Range: G00442->G45703
P0355	Ignition coil primary circuit malfunction, Cyl 5	ECM to ignition coil primary circuit; open circuit, short circuit to ground, high resistance Ignition coil ground circuit; open circuit, high resistance Ignition coil failure	For ignition system tests, Engine Ignition - VIN Range: G00442->G45703
P0356	Ignition coil primary circuit malfunction, Cyl 6	ECM to ignition coil primary circuit; open circuit, short circuit to ground, high resistance Ignition coil ground circuit; open circuit, high	For ignition system tests, Engine Ignition - VIN Range: G00442->G45703

		resistance Ignition coil failure	
P0357	Ignition coil primary circuit malfunction, Cyl 7	ECM to ignition coil primary circuit; open circuit, short circuit to ground, high resistance Ignition coil ground circuit; open circuit, high resistance Ignition coil failure	For ignition system tests, Engine Ignition - VIN Range: G00442->G45703
P0358	Ignition coil primary circuit malfunction, Cyl 8	ECM to ignition coil primary circuit; open circuit, short circuit to ground, high resistance Ignition coil ground circuit; open circuit, high resistance Ignition coil failure	For ignition system tests, Engine Ignition - VIN Range: G00442->G45703
P0400	Exhaust gas recirculation (EGR) flow malfunction	EGR valve incorrectly fitted or loose EGR pipe blocked EGR valve stuck open/closed, blocked EGR valve failure	For EGR system information, Engine Emission Control - VIN Range: G00442->G45703
P0405	Exhaust gas recirculation (EGR) valve drive circuits low voltage	EGR valve power supply circuit; open circuit EGR valve to ECM drive circuit pair (EGR valve pins 1/4, 6/3); open circuit, high resistance EGR valve failure (stepper motor open circuit)	For EGR system information, Engine Emission Control - VIN Range: G00442->G45703
P0406	Exhaust gas recirculation (EGR) valve drive circuits high voltage	EGR valve to ECM drive circuit pair (EGR valve pins 1/4, 6/3); short circuit to ground or high voltage EGR valve failure (stepper	For EGR system information, Engine Emission Control - VIN Range: G00442->G45703

www.JagDocs.com

		motor short circuit)	
P0420	Right-hand catalytic converter efficiency below threshold	Catalytic converter failure (melted, fractured) Catalytic converter contaminated (sulphur)	**Monitoring conditions** Start engine and bring to normal operating temperature Allow to idle for 2 minutes Rev engine to between 2500 and 2700 rpm for 5 minutes Drive vehicle for at least 1 minute (general conditions) Check for DTCs Stop the engine Examine the catalytic converters for damage/contamination. Follow the DTC index for any other codes indicated.
P0430	Left-hand catalytic converter efficiency below threshold	Catalytic converter failure (melted, fractured) Catalytic converter contaminated (sulphur)	**Monitoring conditions** Start engine and bring to normal operating temperature Allow to idle for 2 minutes Rev engine to between 2500 and 2700 rpm for 5 minutes Drive vehicle for at least 1 minute (general conditions) Check for DTCs Stop the engine Examine the catalytic converters for damage/contamination. Follow the DTC index for any

			other codes indicated.
P0441	Evaporative emissions system (EVAP) incorrect purge flow	EVAP canister purge pipe restricted, leaking, disconnected EVAP canister vent restricted EVAP canister purge valve to engine pipe(s) restricted, leaking, disconnected EVAP canister purge valve failure	For EVAP system components, Evaporative Emissions - VIN Range: G00442->G45703
P0442	Evaporative emissions system (EVAP) leak detected - small (0.040 in)	Fuel cap seal defective EVAP system leak (canister damage, pipework damage) EVAP canister purge valve to ECM drive circuit; open circuit, short circuit, high resistance EVAP canister purge valve power supply circuit; open circuit, short circuit EVAP canister purge valve to engine purge pipe; restricted, leaking, disconnected EVAP canister purge valve operating vacuum hose leak/restriction EVAP canister purge valve failure Fuel tank leak	For EVAP system components, Evaporative Emissions - VIN Range: G00442->G45703
P0443	Evaporative emissions system (EVAP) canister purge valve circuit malfunction	EVAP canister purge valve to ECM drive circuit; open circuit, short circuit, high resistance	For EVAP system components, Evaporative Emissions - VIN Range: G00442->G45703

www.JagDocs.com

		EVAP canister purge valve power supply circuit; open circuit, short circuit EVAP canister purge valve operating vacuum hose leak/restriction EVAP canister purge valve failure	
P0444	Evaporative emissions system (EVAP) canister purge valve circuit open circuit	EVAP canister purge valve disconnected EVAP canister purge valve to ECM drive circuit; open circuit, high resistance EVAP canister purge valve failure	For EVAP system components, Evaporative Emissions - VIN Range: G00442->G45703
P0445	Evaporative emissions system (EVAP) canister purge valve circuit short circuit	EVAP canister purge valve to ECM drive circuit; short circuit to ground EVAP canister purge valve failure	For EVAP system components, Evaporative Emissions - VIN Range: G00442->G45703
P0446	Evaporative emissions system (EVAP) canister close valve (CCV) malfunction	CCV power supply circuit; open circuit, short circuit CCV to ECM drive circuit; open circuit, high resistance, short circuit to B+ voltage CCV failure	For EVAP system components, Evaporative Emissions - VIN Range: G00442->G45703
P0447	Evaporative emissions system (EVAP) canister close valve (CCV) circuit open circuit	CCV power supply circuit; open circuit, short circuit CCV to ECM drive circuit open circuit, high resistance, short circuit to B+ voltage CCV failure	For EVAP system components, Evaporative Emissions - VIN Range: G00442->G45703
P0448	Evaporative emissions system (EVAP) canister close valve (CCV) circuit	CCV to ECM drive circuit; short circuit to ground	For EVAP system components, Evaporative Emissions - VIN

	short circuit	CCV failure	Range: G00442->G45703
P0450	Fuel tank pressure (FTP) sensor circuit malfunction	FTP sensor disconnected FTP sensor to ECM sensing circuit; open circuit, short circuit to ground, short circuit to B+ voltage FTP sensor to splice sensor supply circuit; open circuit, high resistance FTP sensor to splice ground circuit; open circuit, high resistance FTP sensor failure	For EVAP system components, Evaporative Emissions - VIN Range: G00442->G45703
P0452	Fuel tank pressure (FTP) sensor circuit low voltage (low pressure)	FTP sensor disconnected FTP sensor to ECM sensing circuit; open circuit, short circuit to ground FTP sensor to splice sensor supply circuit; open circuit, high resistance FTP sensor failure	For EVAP system components, Evaporative Emissions - VIN Range: G00442->G45703
P0453	Fuel tank pressure (FTP) sensor circuit high voltage (high pressure)	FTP sensor to splice sensor ground circuit; open circuit, high resistance FTP sensor to ECM sensing circuit; short circuit to high voltage FTP sensor failure	For EVAP system components, Evaporative Emissions - VIN Range: G00442->G45703
P0455	EVAP system leak detected - large	Fuel filler cap missing Fuel filler cap seal defective EVAP system leak (canister damage, pipework damage) EVAP canister purge valve to ECM drive circuit; open	For EVAP system components, Evaporative Emissions - VIN Range: G00442->G45703

www.JagDocs.com

		circuit, short circuit, high resistance EVAP canister purge valve power supply circuit; open circuit, short circuit EVAP canister purge valve to engine purge pipe restricted, leaking, disconnected EVAP canister purge valve operating vacuum hose leak/restriction EVAP canister purge valve failure Fuel tank leak	
P0456	EVAP system leak detected - very small (0.020)	Fuel cap seal defective EVAP system leak (canister damage, pipework damage) EVAP purge valve to ECM drive circuit; open circuit, short circuit, high resistance EVAP purge valve power supply circuit; open circuit, short circuit EVAP purge valve to engine purge pipe; restricted/leaking EVAP purge valve operating vacuum hose leak/blockage EVAP purge valve failure Fuel tank leak	For EVAP system components, Evaporative Emissions - VIN Range: G00442->G45703
P0460	Fuel level sensor circuit range/performance	Fuel level sensor to instrument cluster circuits intermittent	For fuel level sensor circuit tests, Fuel Tank and Lines - 4.2L NA V8 - AJV8/4.2L SC V8 - AJV8/3.0L NA

		short or open circuit, high resistance Fuel level sensor failure Instrument cluster fault (incorrect fuel level data)	V6 - AJ27/3.5L NA V8 - AJV8, VIN Range: G00442->G45703
P0480	Radiator cooling fan module drive circuit malfunction	ECM to radiator cooling fan module drive circuit; short circuit, open circuit, high resistance Radiator cooling fan fault Radiator cooling fan module fault	For radiator cooling fan module tests, GO to Pinpoint Test G258127p19.
P0506	Idle rpm lower than expected	Air intake restriction Accessory drive overload (defective/siezed component) Throttle valve stuck closed Throttle body failure	Check air intake system for restriction, Intake Air Distribution and Filtering - VIN Range: G00442->G45703 Check accessory drive components, Check throttle body operation, Fuel Charging and Controls - VIN Range: G00442->G45703 Fuel Charging and Controls - VIN Range: G00442->G45703
P0507	Idle rpm higher than expected	Air intake leak between MAF sensor and throttle Air intake leak between throttle and engine Engine breather leak Throttle valve stuck open Throttle assembly failure	Inspect air intake system. Intake Air Distribution and Filtering - VIN Range: G00442->G45703 For breather system, Engine Emission Control - VIN Range: G00442->G45703 For throttle body, Fuel Charging and Controls - VIN Range: G00442->G45703 Fuel Charging and Controls - VIN Range: G00442->G45703
P0532	Air conditioning pressure sensor circuit low voltage (high pressure)	Air conditioning pressure sensor disconnected Air conditioning pressure sensor to ECM sensing circuit; open circuit,	For A/C pressure sensor tests, GO to Pinpoint Test G258127p35. For sensor supply circuit tests, GO to Pinpoint Test

www.JagDocs.com

		short circuit to ground Air conditioning pressure sensor to splice sensor supply circuit; open circuit, high resistance Air conditioning pressure sensor failure	G258127p25. For air conditioning system information, Air Conditioning
P0533	Air conditioning pressure sensor circuit high voltage (low pressure)	Air conditioning pressure sensor to splice sensor ground circuit; open circuit, high resistance Air conditioning pressure sensor to ECM sensing circuit; short circuit to high voltage Air conditioning pressure sensor failure	For A/C pressure sensor tests, GO to Pinpoint Test G258127p35. For sensor ground circuit tests, GO to Pinpoint Test G258127p26. For air conditioning system information, Air Conditioning
P0560	Battery power supply voltage malfunction	ECM battery power supply open circuit, high resistance	For ECM power supply tests, GO to Pinpoint Test G258127p20.
P0566	Speed control CANCEL switch ON fault	Speed control switches internal steering wheel circuit; short circuit to ground Steering wheel cassette reel; short circuit to ground Cassette reel to ECM circuit; short circuit to ground CANCEL switch failure (stuck ON)	For speed control tests, Speed Control - VIN Range: G00442->G45703
P0567	Speed control RESUME switch ON fault	Speed control switches internal steering wheel circuit; short circuit to ground Steering wheel cassette reel; short circuit to ground Cassette reel to ECM circuit;	For speed control tests, Speed Control - VIN Range: G00442->G45703

		short circuit to ground RESUME switch failure (stuck ON)	
P0568	Speed control input signal low/high resistance	Speed control switches internal steering wheel circuit; open circuit, high resistance Steering wheel cassette reel; open circuit, high resistance Cassette reel to ECM circuit; open circuit, high resistance	For speed control tests, Speed Control - VIN Range: G00442->G45703
P0569	Speed control SET/- switch ON fault	Speed control switches internal steering wheel circuit; short circuit to ground Steering wheel cassette reel; short circuit to ground Cassette reel to ECM circuit; short circuit to ground SET/- switch failure	For speed control tests, Speed Control - VIN Range: G00442->G45703
P0570	Speed control SET/+ switch ON fault	Speed control switches internal steering wheel circuit; short circuit to ground Steering wheel cassette reel; short circuit to ground Cassette reel to ECM circuit; short circuit to ground SET/+ switch failure (stuck ON)	For speed control tests, Speed Control - VIN Range: G00442->G45703
P0603	Engine control module (ECM) keep alive memory error	ECM failure	Contact dealer technical support for advice on possible ECM failure.
P0605	Transmission control module (TCM) self-test	TCM/Control valve failure	For transmission tests,

www.JagDocs.com

	error		
P0606	Transmission control module (TCM) "watch-dog" circuit malfunction	TCM/Control valve failure	For transmission tests,
P0610	Transmission control module (TCM) configuration error	Reconfigure TCM	For transmission tests,
P0617	Starter relay drive circuit high voltage/starter relay request on (ignition switch position III, START)	Starter relay drive circuit; short circuit to high voltage Starter relay failure	For starter system tests,
P0641	Sensor supply voltage circuit malfunction	TCM/Control valve failure	For transmission tests,
P0651	Pressure regulator and shift solenoid supply circuit malfunction	TCM/Control valve failure	For transmission tests,
P0666	Substrate temperature sensor circuit malfunction	TCM/Control valve failure ABS system failure	For transmission tests,
P0701	TCM control errors	TCM/Control valve failure ABS system failure	For transmission tests, For ABS system tests, Anti-Lock Control - Stability Assist - VIN Range: G00442->G45703
P0702	TCM battery power supply low voltage (short time)	Battery power supply fuse failure Battery power supply; intermittent open circuit	For transmission tests,
P0705	Gear position switch circuit malfunction	TCM/Control valve failure	For transmission tests,
P0706	Gear selector position plausibility fault	TCM/J-Gate module CAN fault J-Gate module failure	For CAN tests, Communications Network For J-Gate module tests, External Controls

P0709	Gear selector intermediate position fault	J-Gate module failure	For J-Gate module tests, External Controls
P0710	Transmission fluid temperature sensor circuit malfunction	TCM/Control valve failure	For transmission tests,
P0711	Transmission fluid temperature range fault	Transmission fluid burnt (requires replacement)	For transmission fluid renewal and level checking,
P0715	Turbine speed sensor circuit failure	TCM/Control valve failure	For transmission tests,
P0720	Output speed sensor circuit failure	TCM/Control valve failure	For transmission tests,
P0721	Output speed sensor signal gradient fault	Transmission mechanical failure TCM/Control valve failure	For transmission tests,
P0725	Engine over-speed range fault	TCM/ECM CAN fault	For CAN tests, Communications Network
P0729	Sixth gear ratio fault	Transmission mechanical failure	For transmission tests,
P0730	Gear ratio fault	Transmission mechanical failure	For transmission tests,
P0731	First gear ratio fault	Transmission mechanical failure	For transmission tests,
P0732	Second gear ratio fault	Transmission mechanical failure	For transmission tests,
P0733	Third gear ratio fault	Transmission mechanical failure	For transmission tests,
P0734	Fourth gear ratio fault	Transmission mechanical failure TCM/Control valve failure	For transmission tests,

www.JagDocs.com

P0735	Fifth gear ratio fault	Transmission mechanical failure TCM/Control valve failure	For transmission tests,
P0736	Reverse gear ratio fault	Transmission mechanical failure	For transmission tests,
P0740	Torque converter clutch pressure regulator solenoid circuit malfunction	TCM/Control valve failure	For transmission tests,
P0741	Torque converter clutch pressure regulator solenoid stuck open	TCM/Control valve failure Transmission mechanical failure	For transmission tests,
P0743	Torque converter clutch pressure regulator solenoid circuit plausibility error	TCM/Control valve failure	For transmission tests,
P0750	Pressure regulator solenoid 1 circuit malfunction	TCM/Control valve failure	For transmission tests,
P0753	Pressure regulator solenoid 1 circuit plausibility error	TCM/Control valve failure	For transmission tests,
P0755	Pressure regulator solenoid 2 circuit malfunction	TCM/Control valve failure	For transmission tests,
P0758	Pressure regulator solenoid 2 circuit plausibility error	TCM/Control valve failure	For transmission tests,
P0760	Pressure regulator solenoid 3 circuit malfunction	TCM/Control valve failure	For transmission tests,
P0763	Pressure regulator solenoid 3 circuit plausibility error	TCM/Control valve failure	For transmission tests,

P0765	Pressure regulator solenoid 4 circuit malfunction	TCM/Control valve failure	For transmission tests,
P0768	Pressure regulator solenoid 4 circuit plausibility error	TCM/Control valve failure	For transmission tests,
P0770	Pressure regulator solenoid 5 circuit malfunction	TCM/Control valve failure	For transmission tests,
P0773	Pressure regulator solenoid 5 circuit plausibility error	TCM/Control valve failure	For transmission tests,
P0780	Gear load fault	Transmission mechanical failure	For transmission tests,
P0781	1-2/2-1 Gear load fault	Transmission mechanical failure	For transmission tests,
P0782	2-3/3-2 Gear load fault	Transmission mechanical failure	For transmission tests,
P0783	3-4/4-3 Gear load fault	Transmission mechanical failure	For transmission tests,
P0784	4-5/5-4 Gear load fault	Transmission mechanical failure	For transmission tests,
P0787	Shift solenoid circuit malfunction	TCM/Control valve failure	For transmission tests,
P0788	Shift solenoid circuit plausibility error	TCM/Control valve failure	For transmission tests,
P0825	Gear positions R, D plausibility error	J-Gate incorrectly adjusted J-Gate module failure	For J-Gate module adjustment/replacement, External Controls
P0829	5-6 Gear load fault	Transmission mechanical failure	For transmission tests,

www.JagDocs.com

P0860	J-Gate module CAN network malfunction. (J-Gate module/CAN monitored by the ECM)	CAN open circuit fault CAN short circuit fault J-Gate module failure	For CAN tests, Communications Network For J-Gate module, External Controls
P1000	System checks not complete since last memory clear	OBD monitors have not completed	Carry out comprehensive component monitor drive cycle. Refer to the DTC section of JTIS, accessed by the icon on the opening page.
P1104	Mass air flow (MAF) sensor ground malfunction	MAF sensor to ECM sensor ground circuit; open circuit, short circuit to high voltage, high resistance MAF sensor to ECM sensing circuit open circuit MAF sensor failure	For MAF ground tests, GO to Pinpoint Test G258127p21.
P1107	Manifold absolute pressure (MAP) sensor sensing circuit low voltage	MAP sensor to ECM sensing circuit; open circuit or short circuit to ground MAP sensor supply circuit (to splice) open circuit MAP sensor failure	For MAP sensor tests, GO to Pinpoint Test G258127p33.
P1108	Manifold absolute pressure (MAP) sensor sensing circuit high voltage	MAP sensor ground circuit (to splice) open circuit MAP sensor to ECM sensing circuit; short circuit to high voltage MAP sensor failure	For MAP sensor tests, GO to Pinpoint Test G258127p33.
P1111	System checks complete since last memory clear	OBD monitors have completed	No action necessary.
P1122	Accelerator pedal position (APP) sensor circuit low voltage - APP1	APP sensor to ECM sensing circuit "1"; open circuit, short circuit to ground or high resistance APP sensor power supply circuit; open circuit,	For APP 1 sensor tests, GO to Pinpoint Test G258127p22.

		high resistance APP sensor failure	
P1123	Accelerator pedal position (APP) sensor circuit high voltage - APP1. Note: This DTC could be flagged by both sensor element circuits having faults	APP sensor to ECM sensing circuit(s) short circuit to high voltage APP sensor ground circuit(s) open circuit APP sensor failure	For APP 1 sensor tests, GO to Pinpoint Test G258127p22.
P1215	Accelerator pedal position (APP) sensor sensing circuit low voltage - APP2	APP sensor to ECM sensing circuit (APP2); open circuit, short circuit to ground, high resistance APP sensor supply circuit (to splice) open circuit, high resistance APP sensor failure	For APP 2 sensor tests, GO to Pinpoint Test G258127p23.
P1216	Accelerator pedal position (APP) sensor sensing circuit high voltage - APP2. Note: This DTC could be flagged by both sensor element circuits having faults	APP sensor to ECM sensing circuit(s) short circuit to high voltage APP sensor ground circuit(s) (to splice) open circuit APP sensor failure	For APP 2 sensor tests, GO to Pinpoint Test G258127p23.
P1224	Throttle control position error	Throttle motor failure Throttle body failure	For throttle body, Fuel Charging and Controls - VIN Range: G00442->G45703 Fuel Charging and Controls - VIN Range: G00442->G45703
P1229	Throttle motor control circuit malfunction	Throttle motor disconnected Throttle motor to ECM drive circuits; short circuit or open circuit ECM ground circuit fault(s) (PI01-04, 05, 54) Throttle motor failure Throttle body failure	For throttle motor to ECM circuit tests, GO to Pinpoint Test G258127p24. For throttle body, Fuel Charging and Controls - VIN Range: G00442->G45703 Fuel Charging and Controls - VIN Range: G00442->G45703

www.JagDocs.com

P1233	Fuel pump 2 drive circuit fault	ECM to fuel pump 2 module control drive circuit; open circuit, short circuit, high resistance Fuel pump 2 module failure	For fuel pump 2 module tests, Fuel Tank and Lines - 4.2L NA V8 - AJV8/4.2L SC V8 - AJV8/3.0L NA V6 - AJ27/3.5L NA V8 - AJV8, VIN Range: G00442->G45703
P1234	No fuel pump commands received by ECM	ECM to rear electronic module (REM) drive circuit; open circuit, short circuit, high resistance REM failure	For fuel pump module tests, Fuel Tank and Lines - 4.2L NA V8 - AJV8/4.2L SC V8 - AJV8/3.0L NA V6 - AJ27/3.5L NA V8 - AJV8, VIN Range: G00442->G45703
P1236	Fuel pump not activated when requested by ECM	ECM to rear electronic module (REM) drive circuit; open circuit, short circuit, high resistance REM failure	For fuel pump module tests, Fuel Tank and Lines - 4.2L NA V8 - AJV8/4.2L SC V8 - AJV8/3.0L NA V6 - AJ27/3.5L NA V8 - AJV8, VIN Range: G00442->G45703
P1240	Sensor power supply circuit malfunction	ECM to sensors supply voltage circuit(s); short circuit to ground, short circuit to high voltage, open circuit, high resistance	For sensor supply tests, GO to Pinpoint Test G258127p25.
P1241	Sensor power supply circuit low voltage	ECM to sensors supply voltage circuit(s); short circuit to ground	For sensor supply tests, GO to Pinpoint Test G258127p25.
P1242	Sensor power supply circuit high voltage	ECM to sensors supply voltage circuit(s); open circuit, high resistance, short circuit to high voltage	For sensor supply tests, GO to Pinpoint Test G258127p25.
P1243	Sensor ground circuits open circuit	ECM to sensors ground circuit; open circuit, high resistance	For sensor ground tests, GO to Pinpoint Test G258127p26.
P1245	Engine crank signal low voltage	Ignition switch to ECM circuit; open circuit Ignition switch failure	For crank signal tests, GO to Pinpoint Test G258127p27.
P1246	Engine crank signal high voltage	Ignition switch to ECM circuit; short circuit to high voltage Ignition switch failure	For crank signal tests, GO to Pinpoint Test G258127p27.
P1250	Throttle valve return	Throttle return spring	INSTALL a new throttle body.

	spring malfunction	failure (throttle body failure)	Fuel Charging and Controls - VIN Range: G00442->G45703 Fuel Charging and Controls - VIN Range: G00442->G45703
P1251	Throttle motor relay OFF failure	Throttle motor relay coil power supply circuit; open circuit Throttle motor relay failure Throttle motor relay coil to ECM circuit; open circuit ECM ground circuit fault (relay coil drive)	For throttle motor relay tests, GO to Pinpoint Test G258127p36.
P1254	Throttle "limp-home" spring malfunction	Throttle limp-home spring failure (throttle body failure)	INSTALL a new throttle body, Throttle Body - 4.2L NA V8 - AJV8/3.5L NA V8 - AJV8, VIN Range: G00442->G45703 (19.70.04)
P1260	Security input malfunction. Note: This DTC can only be cleared following rectification after an ignition OFF/ON cycle	Invalid ignition key code PATS signal to instrument cluster missing or corrupted Security message (PATS) CAN failure	Contact dealer technical support for information on security system.
P1313	Misfire rate catalyst damage, Right-hand (Note; This DTC will flag only when accompanied by a random or individual cylinder misfire DTC; P0300, P0301 to P0308)	Refer to P0300 possible sources	Refer to P0300 Actions.
P1314	Misfire rate catalyst damage, Left-hand (Note; This DTC will flag only when accompanied by a random or individual cylinder misfire DTC; P0300 to P0308)	Refer to P0300 possible sources	Refer to P0300 Actions.

www.JagDocs.com

P1316	Misfire excess emission (Note; This DTC will flag only when accompanied by an individual cylinder misfire DTC; P0300 to P0308)	Refer to P0300 possible sources	Refer to P0300 Actions.
P1338	Fuel pump drive circuit low/high voltage	REM to fuel pump drive circuit; open circuit, short circuit, high resistance REM failure Fuel pump failure	For fuel pump module tests, Fuel Tank and Lines - 4.2L NA V8 - AJV8/4.2L SC V8 - AJV8/3.0L NA V6 - AJ27/3.5L NA V8 - AJV8, VIN Range: G00442->G45703
P1339	Fuel pump 2 drive circuit low/high voltage	Fuel pump 2 module to fuel pump drive circuit; open circuit, short circuit, high resistance Fuel pump 2 module to ECM monitor circuit; open circuit, short circuit, high resistance Fuel pump 2 module failure Fuel pump 2 failure	For fuel pump 2 module tests, Fuel Tank and Lines - 4.2L NA V8 - AJV8/4.2L SC V8 - AJV8/3.0L NA V6 - AJ27/3.5L NA V8 - AJV8, VIN Range: G00442->G45703
P1340	Left-hand camshaft position sensor (CMP) sensor circuit malfunction	CMP sensor disconnected CMP sensor gap incorrect/foreign matter on sensor face CMP sensor sensing circuit; open circuit, short circuit to ground, short circuit to high voltage CMP sensor failure	For CMP sensor tests, GO to Pinpoint Test G258127p28.
P1341	Left-hand camshaft position (CMP) sensor range/performance	CMP sensor disconnected CMP sensor gap incorrect/foreign matter on sensor face CMP sensor sensing circuit open circuit, short circuit to ground, short	For CMP sensor tests, GO to Pinpoint Test G258127p28.

		circuit to high voltage CMP sensor failure	
P1344	Accelerator pedal position (APP) sensor sensing circuits range/performance	APP sensor to ECM sensing circuits; short circuit, open circuit, high resistance APP sensor supply circuits; short circuit, open circuit, high resistance APP sensor ground circuits; open circuit APP sensor failure	For APP sensor sensing circuit tests, GO to Pinpoint Test G258127p22. and GO to Pinpoint Test G258127p23. For sensor ground tests, GO to Pinpoint Test G258127p26. For sensor supply tests, GO to Pinpoint Test G258127p25.
P1367	Right-hand cylinders ignition monitor fault	Ignition monitoring circuit between splice and ECM; open circuit, short circuit to ground or short circuit to B+ voltage Ignition coil ground circuit fault	For ignition system, Engine Ignition - VIN Range: G00442->G45703
P1368	Left-hand cylinders ignition monitor fault	Ignition monitoring circuit between splice and ECM; open circuit, short circuit to ground or short circuit to B+ voltage Ignition coil ground circuit fault	For ignition system, Engine Ignition - VIN Range: G00442->G45703
P1384	Right-hand variable camshaft timing (VCT) oil control solenoid malfunction	VCT solenoid to ECM PWM drive circuit fault VCT solenoid ground circuit fault VCT solenoid failure Oil contamination VCT oil flow fault VCT/camshaft mechanical failure	Check oil condition; For VCT solenoid tests, GO to Pinpoint Test G258127p29. For engine information, Engine

www.JagDocs.com

P1396	Left-hand variable camshaft timing (VCT) oil control solenoid malfunction	VCT solenoid to ECM PWM drive circuit fault VCT solenoid ground circuit fault VCT solenoid failure Oil contamination VCT oil flow fault VCT/camshaft mechanical failure	Check oil condition; For VCT solenoid tests, GO to Pinpoint Test G258127p30. For engine information, Engine
P1410	Air cleaner solenoid valve drive circuit malfunction	ECM to air cleaner solenoid circuit; open circuit, short circuit, high resistance Air cleaner solenoid failure	For air cleaner solenoid circuit tests, GO to Pinpoint Test G258127p38.
P1474	Intercooler coolant pump malfunction	Intercooler coolant pump failure	For Intercooler coolant pump circuit tests, GO to Pinpoint Test G258127p39.
P1516	Gear change PARK/NEUTRAL driving malfunction	ECM P/N circuit; short circuit to high voltage, high resistance Gear selector cable adjustment incorrect J-Gate module adjustment incorrect J-Gate module/ECM CAN fault	For P/N circuit tests and gear selector cable/J-Gate module adjustment, External Controls For CAN tests, Communications Network
P1517	Gear change PARK/NEUTRAL starting malfunction	ECM P/N circuit; short circuit to ground, high resistance Gear selector cable adjustment incorrect J-Gate module adjustment incorrect J-Gate module/ECM CAN fault	For P/N circuit tests and gear selector cable/J-Gate module adjustment, External Controls For CAN tests, Communications Network

P1571	Brake ON/OFF switch; brake CANCEL switch malfunction. (Note: Brake ON/OFF switch - normally open; brake CANCEL switch - normally closed)	Brake ON/OFF switch to ECM circuit; open circuit, short circuit to ground, high resistance Brake ON/OFF switch power supply circuit; open circuit Brake ON/OFF switch failure Brake CANCEL switch to ECM circuit; open circuit, short circuit to ground, high resistance Brake CANCEL switch power supply circuit; open circuit Brake CANCEL switch failure	For speed control tests, Speed Control - VIN Range: G00442->G45703
P1582	"Flight recorder" data is stored if any one of five conditions occur Inertia switch activated Throttle limp-home mode activated Engine starts and stumbles Engine fails to start Engine stall	If none of the five conditions occur, check: Inertia switch to ECM circuit; short circuit to B+ voltage Inertia switch failure	Check the five conditions, for inertia switch circuit tests, GO to Pinpoint Test G258127p31.
P1603	TCM internal communications error	TCM/Control valve failure	For transmission tests,
P1605	TCM RAM error	Battery power supply circuit; open circuit, short circuit to ground TCM/Control valve failure	For transmission tests,
P1606	Engine management system (EMS) control relay malfunction	ECM control relay failure ECM control relay to ECM	For EMS control relay tests, GO to Pinpoint Test G258127p32.

www.JagDocs.com

		circuit fault ECM control relay coil power supply open circuit ECM ground circuit fault (relay coil drive)	
P1609	ECM microprocessor-to-microprocessor communication failure	ECM failure	Contact dealer technical support for advice on possible ECM failure.
P1611	ECM sub CPU failure	ECM failure	Contact dealer technical support for advice on possible ECM failure.
P1631	Throttle motor relay coil drive circuit OFF failure	Throttle motor relay coil power supply circuit; open circuit Throttle motor relay failure Throttle motor relay coil to ECM drive circuit open circuit, short circuit to ground	For throttle motor relay tests, GO to Pinpoint Test G258127p36.
P1632	Generator charge system failure/generator CHARGE/FAULT circuit failure	ECM to generator CHARGE/FAULT circuit; short circuit, open circuit, high resistance Generator regulator failure Generator failure	For charging system tests, Generator
P1633	ECM main CPU failure	ECM failure	Contact dealer technical support for advice on possible ECM failure.
P1634	Throttle "watchdog" circuit malfunction	ECM failure	Contact dealer technical support for advice on possible ECM failure.
P1637	CAN ECM to DSCCM network malfunction	CAN open circuit fault - DSCCM to ECM CAN short circuit fault	For CAN tests, Communications Network Contact dealer technical support for advice on possible ECM

		DSCCM failure ECM failure	failure.
P1638	CAN ECM/IC network malfunction	CAN open circuit fault - IC to ECM CAN short circuit fault IC failure ECM failure	For CAN tests, Communications Network Contact dealer technical support for advice on possible ECM failure.
P1642	CAN circuit malfunction	CAN short circuit fault Control module failure - check for additional logged DTCs to locate control module source	For CAN tests, Communications Network
P1643	CAN ECM/TCM network malfunction	CAN open circuit fault - TCM to ECM CAN short circuit fault TCM failure ECM failure	For CAN tests, Communications Network For transmission tests, Contact dealer technical support for advice on possible ECM failure.
P1646	Right-hand ECM HO2S control malfunction	HO2S heater failure HO2S sensing circuit; short circuit to ground, short circuit to high voltage, open circuit, high resistance ECM failure	For HO2S tests, GO to Pinpoint Test G258127p6. and GO to Pinpoint Test G258127p7. Contact dealer technical support for advice on possible ECM failure.
P1647	Left-hand ECM HO2S control malfunction	HO2S heater failure HO2S sensing circuit; short circuit to ground, short circuit to high voltage, open circuit, high resistance ECM failure	For HO2S tests, and GO to Pinpoint Test G258127p11. Contact dealer technical support for advice on possible ECM failure.
P1648	ECM internal KS CPU self-test failure	ECM failure	Contact dealer technical support for advice on possible ECM failure.

www.JagDocs.com

P1656	TP sensor amplifier circuit malfunction	ECM failure	Contact dealer technical support for advice on possible ECM failure.
P1657	Throttle motor relay coil drive circuit ON failure	Throttle motor relay failure Throttle motor relay coil to ECM drive circuit; short circuit to B+ voltage	For throttle motor relay tests, GO to Pinpoint Test G258127p36.
P1658	Throttle motor relay ON failure	Throttle motor relay failure Throttle motor relay coil to ECM drive circuit; short circuit to B+ voltage	For throttle motor relay tests, GO to Pinpoint Test G258127p36.
P1696	CAN ECM/ASCCM network malfunction	CAN open circuit fault - ASCCM to ECM CAN short circuit fault ASCCM failure ECM failure	For CAN tests, Communications Network Contact dealer technical support for advice on possible ECM failure.
P1697	Adaptive speed control HEADWAY switch(es) circuit malfunction	Speed control switches internal steering wheel circuit; short circuit to ground Steering wheel cassette reel; short circuit to ground Cassette reel to ECM circuit; short circuit to ground HEADWAY +/ - switch(es) failure (stuck ON)	For speed control system, Speed Control - VIN Range: G00442->G45703
P1699	CAN ECM/A/CCM network malfunction	CAN open circuit fault - A/CCM to ECM CAN short circuit fault A/CCM failure ECM failure	For CAN tests, Communications Network Contact dealer technical support for advice on possible ECM failure.
P1774	CAN TCM/J-Gate module network malfunction	CAN open circuit fault - TCM to J-Gate module	For CAN tests, Communications Network For J-Gate module,

		CAN short circuit fault J-Gate module failure	External Controls
P1783	Transmission over-temperature shut-down	Transmission fluid level low Transmission fluid cooler circuit; obstructed/leaking Transmission fluid cooler fins blocked by debris Transmission mechanical failure	For transmission information,
P1794	TCM ignition switched power supply circuit malfunction	Ignition switched power supply fuse failure Ignition switched power supply circuit; short circuit to ground, open circuit	For transmission tests,
P1796	CAN network fault	CAN open circuit or short circuit fault TCM/Control valve failure	For CAN tests, Communications Network For transmission tests,
P1797	CAN TCM/ECM network malfunction	CAN open circuit fault - TCM to ECM CAN short circuit fault ECM failure TCM/Control valve failure	For CAN tests, Communications Network For transmission tests, Contact dealer technical support for advice on possible ECM failure
P1798	CAN TCM/IC network malfunction	CAN open circuit fault - TCM to IC CAN short circuit fault IC failure TCM/Control valve failure	For CAN tests, Communications Network For transmission tests, Contact dealer technical support for advice on possible ECM failure
P1799	CAN TCM/DSCCM network malfunction	CAN open circuit fault - TCM to DSCCM CAN short circuit fault	For CAN tests, Communications Network For transmission tests,

www.JagDocs.com

		DSCCM failure TCM/Control valve failure	

Pinpoint Tests

PINPOINT TEST G258127p1 : DTC P0101, P0102, P0103; MASS AIR FLOW (MAF) SENSOR CIRCUIT RANGE/PERFORMANCE, HIGH/LOW VOLTAGE

G258127t1 : CHECK THE MAF SENSOR SENSING CIRCUIT FOR HIGH RESISTANCE

1. Disconnect the battery negative terminal. 2. Disconnect the ECM electrical connector, PI01. 3. Disconnect the MAF sensor electrical connector, PI14. 4. Measure the resistance between PI01, pin 44 (GW) and PI14, pin 03 (GW).

Is the resistance greater than 5 ohms?

-> Yes
REPAIR the high resistance circuit. For additional information, refer to the wiring diagrams. CLEAR the DTC. TEST the system for normal operation.

-> No
GO to Pinpoint Test G258127t2.

G258127t2 : CHECK THE MAF SENSOR SENSING CIRCUIT FOR SHORT TO HIGH VOLTAGE

1. Reconnect the battery negative terminal. 2. Turn the ignition switch to the ON position. 3. Measure the voltage between the MAF sensor electrical connector, PI14, pin 03 (GW) and GROUND.

Is the voltage greater than 3 volts?

-> Yes
REPAIR the short circuit to high voltage. For additional information, refer to the wiring diagrams. CLEAR the DTC. TEST the system for normal operation.

-> No

GO to Pinpoint Test G258127t3.

G258127t3 : CHECK THE MAF SENSOR SENSING CIRCUIT FOR SHORT TO GROUND

1. Turn the ignition switch to the OFF position. 2. Measure the resistance between PI14, pin 03 (GW) and GROUND.

Is the resistance less than 10,000 ohms?

-> Yes
REPAIR the short to GROUND. For additional information, refer to the wiring diagrams. CLEAR the DTC. TEST the system for normal operation

-> No
GO to Pinpoint Test G258127t4.

G258127t4 : CHECK THE MAF SENSOR SUPPLY CIRCUIT VOLTAGE

1. Reconnect the ECM electrical connector, PI01. 2. Turn the ignition switch to the ON position. 3. Measure the voltage between the MAF sensor electrical connector, PI14, pin 01 (GU) and GROUND.

Is the voltage greater than 10 volts?

-> Yes
INSTALL a new MAF sensor.
Mass Air Flow (MAF) Sensor (18.30.15) CLEAR the DTC. TEST the system for normal operation.

-> No
REPAIR the circuit between the MAF sensor electrical connector, PI14, pin 01 (GU) and BATTERY. This circuit includes the EMS control relay, fuse 14 of the front power distribution box, and the high power protection module. For additional information, refer to the wiring diagrams. CLEAR the DTC. TEST the system for normal operation.

PINPOINT TEST G258127p2 : DTC P0111, P0112, P0113; INTAKE AIR TEMPERATURE (IAT) SENSOR CIRCUIT RANGE/PERFORMANCE, HIGH/LOW VOLTAGE

www.JagDocs.com

G258127t5 : CHECK THE IAT SENSOR SENSING CIRCUIT FOR HIGH RESISTANCE

1. Disconnect the battery negative terminal. 2. Disconnect the ECM electrical connector, PI01. 3. Disconnect the MAF sensor electrical connector, PI14. 4. Measure the resistance between PI01, pin 71 (U) and PI14, pin 04 (U).

Is the resistance greater than 5 ohms?

-> Yes
REPAIR the high resistance circuit. For additional information, refer to the wiring diagrams. CLEAR the DTC. TEST the system for normal operation.

-> No
GO to Pinpoint Test G258127t6.

G258127t6 : CHECK THE IAT SENSOR SENSING CIRCUIT FOR SHORT TO HIGH VOLTAGE

1. Reconnect the battery negative terminal. 2. Turn the ignition switch to the **ON** position. 3. Measure the voltage between PI14, pin 04 (U) and GROUND.

Is the voltage greater than 3 volts?

-> Yes
REPAIR the short circuit to high voltage. For additional information, refer to the wiring diagrams. CLEAR the DTC. TEST the system for normal operation.

-> No
GO to Pinpoint Test G258127t7.

G258127t7 : CHECK THE IAT SENSOR SENSING CIRCUIT FOR SHORT TO GROUND

1. Turn the ignition switch to the OFF position. 2. Measure the resistance between PI14, pin 04 (U) and GROUND.

Is the resistance less than 10,000 ohms?

-> Yes
REPAIR the short circuit to GROUND. For additional information, refer to the wiring diagrams. CLEAR the DTC. TEST the system for normal operation.

-> No
INSTALL a new MAF sensor.
Mass Air Flow (MAF) Sensor (18.30.15) CLEAR the DTC. TEST the system for normal operation.

PINPOINT TEST G258127p3 : DTC P0116*, P0117, P0118, P0125; ENGINE COOLANT TEMPERATURE (ECT) SENSOR CIRCUIT RANGE/PERFORMANCE, HIGH/LOW VOLTAGE

G258127t8 : CHECK THE ECT SENSOR SENSING CIRCUIT FOR HIGH RESISTANCE

1. Disconnect the battery negative terminal. 2. Disconnect the ECM electrical connector, PI01. 3. Disconnect the ECT sensor electrical connector, PI25. 4. Measure the resistance between PI01, pin 70 (UY) and PI25, pin 02 (UY).

Is the resistance greater than 5 ohms?

-> Yes
REPAIR the high resistance circuit. For additional information, refer to the wiring diagrams. CLEAR the DTC. TEST the system for normal operation.

-> No
GO to Pinpoint Test G258127t9.

G258127t9 : CHECK THE ECT SENSOR SENSING CIRCUIT FOR SHORT TO HIGH VOLTAGE

1. Reconnect the battery negative terminal. 2. Turn the ignition switch to the ON position. 3. Measure the voltage between PI25, pin 02 (UY) and GROUND.

Is the voltage greater than 3 volts?

-> Yes
REPAIR the short circuit to high voltage. For additional information, refer to the wiring diagrams. CLEAR the DTC. TEST the system for normal operation.

-> No
GO to Pinpoint Test G258127t10.

www.JagDocs.com

G258127t10 : CHECK THE ECT SENSOR SENSING CIRCUIT FOR SHORT TO GROUND

1. Turn the ignition switch to the OFF position. 2. Measure the resistance between PI25, pin 02 (UY) and GROUND.

Is the resistance less than 10,000 ohms?

-> Yes
REPAIR the short circuit to GROUND. For additional information, refer to the wiring diagrams. CLEAR the DTC. TEST the system for normal operation.

-> No
INSTALL a new ECT sensor.
Engine Coolant Temperature (ECT) Sensor - 4.2L NA V8 - AJV8 (18.30.10) CLEAR the DTC. TEST the system for normal operation.

PINPOINT TEST G258127p4 : DTC P0121, P0122, P0123; THROTTLE POSITION (TP) SENSOR RANGE/PERFORMANCE, HIGH/LOW VOLTAGE

G258127t11 : CHECK THE TP SENSOR SENSING CIRCUIT TP1 FOR HIGH RESISTANCE

1. Disconnect the battery negative terminal. 2. Disconnect the ECM electrical connector, PI01. 3. Disconnect the TP sensor electrical connector, PI26. 4. Measure the resistance between PI01, pin 75 (R) and PI26, pin 03 (R).

Is the resistance greater than 5 ohms?

-> Yes
REPAIR the high resistance circuit. For additional information, refer to the wiring diagrams. CLEAR the DTC. TEST the system for normal operation.

-> No
GO to Pinpoint Test G258127t12.

G258127t12 : CHECK THE TP SENSOR SENSING CIRCUIT TP1 FOR SHORT TO HIGH VOLTAGE

1. Reconnect the battery negative terminal. 2. Turn the ignition switch to the ON position. 3. Measure the voltage between PI26, pin 03 (R) and GROUND.

Is the voltage greater than 5 volts?

-> Yes
REPAIR the short circuit to high voltage. For additional information, refer to the wiring diagrams. CLEAR the DTC. TEST the system for normal operation.

-> No
GO to Pinpoint Test G258127t13.

G258127t13 : CHECK THE TP SENSOR SENSING CIRCUIT TP1 FOR SHORT TO GROUND

1. Turn the ignition switch to the OFF position. 2. Measure the resistance between PI26, pin 03 (R) and GROUND.

Is the resistance less than 10,000 ohms?

-> Yes
REPAIR the short circuit to GROUND. For additional information, refer to the wiring diagrams. CLEAR the DTC. TEST the system for normal operation.

-> No
INSTALL a new TP sensor.
Throttle Body - 4.2L NA V8 - AJV8/3.5L NA V8 - AJV8, VIN Range: G00442->G45703 (19.70.04) CLEAR the DTC. TEST the system for normal operation.

PINPOINT TEST G258127p5 : DTC P0222, P0223; THROTTLE POSITION (TP) SENSOR CIRCUIT TP2 HIGH/LOW VOLTAGE

G258127t14 : CHECK TP SENSOR SENSING CIRCUIT TP2 FOR HIGH RESISTANCE

1. Disconnect the battery negative terminal. 2. Disconnect the TP sensor electrical connector, PI26. 3. Disconnect the ECM electrical connector, PI01. 4. Measure the resistance between PI01, pin 76 (Y) and PI26, pin 02 (Y).

www.JagDocs.com

Is the resistance greater than 5 ohms?

-> Yes
REPAIR the high resistance circuit. For additional information, refer to the wiring diagrams. CLEAR the DTC. TEST the system for normal operation.

-> No
GO to Pinpoint Test G258127t15.

G258127t15 : CHECK TP SENSOR SENSING CIRCUIT TP2 FOR SHORT TO HIGH VOLTAGE

1. Reconnect the battery negative terminal. 2. Turn the ignition switch to the ON position. 3. Measure the voltage between PI26, pin 02 (Y) and GROUND.

Is the voltage greater than 5 volts?

-> Yes
REPAIR the short circuit to high voltage. For additional information, refer to the wiring diagrams. CLEAR the DTC. TEST the system for normal operation.

-> No
GO to Pinpoint Test G258127t16.

G258127t16 : CHECK TP SENSOR SENSING CIRCUIT TP2 FOR SHORT TO GROUND

1. Measure the resistance between PI26, pin 02 (Y) and GROUND.

Is the resistance less than 10,000 ohms?

-> Yes
REPAIR the short circuit to GROUND. For additional information, refer to the wiring diagrams. CLEAR the DTC. TEST the system for normal operation.

-> No
INSTALL a new TP sensor.
Throttle Body - 4.2L NA V8 - AJV8/3.5L NA V8 - AJV8, VIN Range: G00442->G45703 (19.70.04) CLEAR the DTC. TEST the system for normal operation.

PINPOINT TEST G258127p6 : DTC P0131, P0132, P0133, P1646; RIGHT-HAND H02S SENSING CIRCUIT

LOW/HIGH CURRENT, SLOW RESPONSE, ECM CONTROL MALFUNCTION

G258127t17 : CHECK THE H02S VARIABLE CIRCUIT FOR HIGH RESISTANCE

1. Disconnect the battery negative terminal. 2. Disconnect the H02S electrical connector, PI10. 3. Disconnect the ECM electrical connector, PI01. 4. Measure the resistance between PI10, pin 03 (R) and PI01, pin 83 (R).

Is the resistance greater than 5 ohms?

-> Yes
REPAIR the high resistance circuit. For additional information, refer to the wiring diagrams. CLEAR the DTC. TEST the system for normal operation.

-> No
GO to Pinpoint Test G258127t18.

G258127t18 : CHECK THE H02S VARIABLE CIRCUIT FOR SHORT TO HIGH VOLTAGE

1. Reconnect the battery negative terminal. 2. Turn the ignition switch to the ON position. 3. Measure the voltage between PI01, pin 83 (R) and GROUND.

Is the voltage greater than 3 volts?

-> Yes
REPAIR the short circuit to high voltage. For additional information, refer to the wiring diagrams. CLEAR the DTC. TEST the system for normal operation.

-> No
GO to Pinpoint Test G258127t19.

G258127t19 : CHECK THE H02S VARIABLE CIRCUIT FOR SHORT TO GROUND

1. Turn the ignition switch to the OFF position. 2. Measure the resistance between PI01, pin 83 (R) and GROUND.

Is the resistance less than 10,000 ohms?

-> Yes
REPAIR the short circuit to GROUND. For additional information, refer to the wiring diagrams. CLEAR the DTC. TEST the system for normal operation.

www.JagDocs.com

-> No
GO to Pinpoint Test G258127t20.

G258127t20 : CHECK THE H02S CONSTANT CIRCUIT FOR HIGH RESISTANCE

1. Measure the resistance between PI10, pin 04 (Y) and PI01, pin 84 (Y).

Is the resistance greater than 5 ohms?

-> Yes
REPAIR the high resistance circuit. For additional information, refer to the wiring diagrams. CLEAR the DTC. TEST the system for normal operation.

-> No
GO to Pinpoint Test G258127t21.

G258127t21 : CHECK THE H02S CONSTANT CIRCUIT FOR SHORT TO HIGH VOLTAGE

1. Measure the voltage between PI10, pin 04 (Y) and GROUND.

Is the voltage greater than 3 volts?

-> Yes
REPAIR the short circuit to high voltage. For additional information, refer to the wiring diagrams. CLEAR the DTC. TEST the system for normal operation.

-> No
GO to Pinpoint Test G258127t22.

G258127t22 : CHECK THE H02S CONSTANT CIRCUIT FOR SHORT TO GROUND

1. Measure the resistance between PI10, pin 04 (Y) and GROUND.

Is the resistance less than 10,000 ohms?

-> Yes
REPAIR the short circuit to GROUND. For additional information, refer to the wiring diagrams. CLEAR the DTC. TEST the system for normal operation.

-> No
INSTALL a new H02S.
CLEAR the DTC. TEST the system for normal operation. If the DTC is repeated, contact dealer technical support for advice on possible ECM failure.

PINPOINT TEST G258127p7 : DTC P0031, P0032; RIGHT-HAND H02S HEATER CONTROL CIRCUIT HIGH/LOW CURRENT

G258127t23 : CHECK H02S HEATER POWER SUPPLY CIRCUIT

1. Disconnect the H02S electrical connector, PI10. 2. Turn the ignition switch to the ON position. 3. Make sure the O2S heater relay is engaged. 4. Measure the voltage between PI10, pin 01 (WG) and GROUND.

Is the voltage greater than 10 volts?

-> Yes
GO to Pinpoint Test G258127t24.

-> No
REPAIR the power supply circuit to the H02S heater. This circuit includes the HO2S heater relay, fuse 34 of the front power distribution box, and the high power protection module. For additional information, refer to the wiring diagrams. CLEAR the DTC. TEST the system for normal operation.

G258127t24 : CHECK H02S HEATER CONTROL CIRCUIT FROM ECM FOR HIGH RESISTANCE

1. Disconnect the battery negative terminal. 2. Disconnect the ECM electrical connector, PI01. 3. Measure the resistance between PI01, pin 01 (RU) and PI10, pin 02 (RU). 4. Measure the resistance between PI01, pin 02 (RU) and EM21, pin 02 (RU).

Is either resistance greater than 5 ohms?

-> Yes
REPAIR the high resistance circuit. For additional information, refer to the wiring diagrams. CLEAR the DTC. TEST the system for normal operation.

-> No
GO to Pinpoint Test G258127t25.

G258127t25 : CHECK H02S HEATER CONTROL CIRCUIT FROM ECM FOR SHORT TO HIGH VOLTAGE

1. Reconnect the battery negative terminal. 2. Turn the ignition switch to the ON position. 3. Measure the voltage between PI10, pin 02 (RU) and GROUND.

www.JagDocs.com

Is the voltage greater than 3 volts?

-> Yes
REPAIR the short circuit to high voltage. For additional information, refer to the wiring diagrams. CLEAR the DTC. TEST the system for normal operation.

-> No
GO to Pinpoint Test G258127t26.

G258127t26 : CHECK H02S HEATER CONTROL CIRCUIT FROM ECM FOR SHORT TO GROUND

1. Turn the ignition switch to the OFF position. 2. Measure the resistance between PI10, pin 02 (RU) and GROUND.

Is the resistance less than 10,000 ohms?

-> Yes
REPAIR the short circuit to GROUND. For additional information, refer to the wiring diagrams. CLEAR the DTC. TEST the system for normal operation.

-> No
INSTALL a new H02S.
CLEAR the DTC. TEST the system for normal operation. If the DTC is repeated, contact dealer technical support for advice on possible ECM failure.

PINPOINT TEST G258127p8 : DTC P0137, P0138, P0140; RIGHT-HAND CATALYST MONITOR SENSOR SENSING CIRCUIT LOW/HIGH VOLTAGE, NO ACTIVITY

G258127t27 : CHECK THE CATALYST MONITOR SENSOR SENSING CIRCUIT FOR HIGH RESISTANCE

1. Disconnect the battery negative terminal. 2. Disconnect the H02S electrical connector, PI11. 3. Disconnect the ECM electrical connector, PI01. 4. Measure the resistance between PI11, pin 04 (N) and PI01, pin 128 (N).

Is the resistance greater than 5 ohms?

-> Yes
REPAIR the high resistance circuit. For additional information, refer to the wiring diagrams. CLEAR the

DTC. TEST the system for normal operation.

-> No
GO to Pinpoint Test G258127t28.

G258127t28 : CHECK THE CATALYST MONITOR SENSOR SENSING CIRCUIT FOR SHORT TO HIGH VOLTAGE

1. Reconnect the battery negative terminal. 2. Turn the ignition switch to the ON position. 3. Measure the voltage between PI11, pin 04 (N) and GROUND.

Is the voltage greater than 5 volts?

-> Yes
REPAIR the short circuit to high voltage. For additional information, refer to the wiring diagrams. CLEAR the DTC. TEST the system for normal operation.

-> No
GO to Pinpoint Test G258127t29.

G258127t29 : CHECK THE CATALYST MONITOR SENSOR SENSING CIRCUIT FOR SHORT TO GROUND

1. Turn the ignition switch to the OFF position. 2. Measure the resistance between PI11, pin 04 (N) and GROUND.

Is the resistance less than 10,000 ohms?

-> Yes
REPAIR the short circuit to GROUND. For additional information, refer to the wiring diagrams. CLEAR the DTC. TEST the system for normal operation.

-> No
GO to Pinpoint Test G258127t30.

G258127t30 : CHECK THE CATALYST MONITOR SENSOR GROUND CIRCUIT FOR HIGH RESISTANCE

1. Measure the resistance between PI11, pin 03 (B) and PI01, pin 130 (BW).

Is the resistance greater than 5 ohms?

-> Yes
REPAIR the high resistance circuit. For additional information, refer to the wiring diagrams. CLEAR the DTC. TEST the system for normal operation.

www.JagDocs.com

-> No
INSTALL a new catalyst monitor sensor.
CLEAR the DTC. TEST the system for normal operation.

PINPOINT TEST G258127p9 : DTC P0037, P0038; RIGHT-HAND CATALYST MONITOR SENSOR HEATER CONTROL CIRCUIT LOW/HIGH RESISTANCE

G258127t31 : CHECK THE POWER SUPPLY TO THE CATALYST MONITOR HEATER

1. Disconnect the catalyst monitor sensor electrical connector, PI11. 2. Turn the ignition switch to the ON position. 3. Make sure the O2S heater relay is engaged. 4. Measure the voltage between PI11, pin 01 (WG) and GROUND.

Is the voltage greater than 10 volts?

-> Yes
GO to Pinpoint Test G258127t32.

-> No
REPAIR the power supply circuit to the catalyst monitor sensor heater. This circuit includes the heater relay, fuse 34 of the front power distribution box, and the high power protection module. For additional information, refer to the wiring diagrams. CLEAR the DTC. TEST the system for normal operation.

G258127t32 : CHECK THE CATALYST MONITOR HEATER CONTROL CIRCUIT FOR HIGH RESISTANCE

1. Disconnect the battery negative terminal. 2. Disconnect the ECM electrical connector, PI01. 3. Measure the resistance between PI11, pin 02 (UY) and PI01, pin 92 (UY).

Is the resistance greater than 5 ohms?

-> Yes
REPAIR the high resistance circuit. For additional information, refer to the wiring diagrams. CLEAR the DTC. TEST the system for normal operation.

-> No
INSTALL a new catalyst monitor sensor.
CLEAR the DTC. TEST the system for normal operation. If the DTC is repeated, contact dealer technical support for advice on possible ECM failure.

PINPOINT TEST G258127p10 : DTC P0151, P0152, P0153; LEFT-HAND H02S SENSING CIRCUIT LOW/HIGH CURRENT, SLOW RESPONSE, ECM CONTROL MALFUNCTION

G258127t33 : CHECK THE H02S VARIABLE CIRCUIT FOR HIGH RESISTANCE

1. Disconnect the battery negative terminal. 2. Disconnect the H02S electrical connector, PI12. 3. Disconnect the ECM electrical connector, PI01. 4. Measure the resistance between PI12, pin 03 (G) and PI01, pin 107 (G).

Is the resistance greater than 5 ohms?

-> Yes
REPAIR the high resistance circuit. For additional information, refer to the wiring diagrams. CLEAR the DTC. TEST the system for normal operation.

-> No
GO to Pinpoint Test G258127t34.

G258127t34 : CHECK THE H02S VARIABLE CIRCUIT FOR SHORT TO HIGH VOLTAGE

1. Reconnect the battery negative terminal. 2. Turn the ignition switch to the ON position. 3. Measure the voltage between PI12, pin 03 (G) and GROUND.

Is the voltage greater than 3 volts?

-> Yes
REPAIR the short circuit to high voltage. For additional information, refer to the wiring diagrams. CLEAR the DTC. TEST the system for normal operation.

-> No
GO to Pinpoint Test G258127t35.

G258127t35 : CHECK THE H02S VARIABLE CIRCUIT FOR SHORT TO GROUND

1. Turn the ignition switch to the OFF position. 2. Measure the resistance between PI12, pin 03 (G) and GROUND.

Is the resistance less than 10,000 ohms?

www.JagDocs.com

-> Yes
REPAIR the short circuit to GROUND. For additional information, refer to the wiring diagrams. CLEAR the DTC. TEST the system for normal operation.

-> No
GO to Pinpoint Test G258127t36.

G258127t36 : CHECK THE H02S CONSTANT CIRCUIT FOR HIGH RESISTANCE

1. Measure the resistance between PI12, pin 04 (N) and PI01, pin 108 (N).

Is the resistance greater than 5 ohms?

-> Yes
REPAIR the high resistance circuit. For additional information, refer to the wiring diagrams. CLEAR the DTC. TEST the system for normal operation.

-> No
GO to Pinpoint Test G258127t37.

G258127t37 : CHECK THE H02S CONSTANT CIRCUIT FOR SHORT TO HIGH VOLTAGE

1. Measure the voltage between PI12, pin 04 (N) and GROUND.

Is the voltage greater than 3 volts?

-> Yes
REPAIR the short circuit to high voltage. For additional information, refer to the wiring diagrams. CLEAR the DTC. TEST the system for normal operation.

-> No
GO to Pinpoint Test G258127t38.

G258127t38 : CHECK THE H02S CONSTANT CIRCUIT FOR SHORT TO GROUND

1. Measure the resistance between PI12, pin 04 (N) and GROUND.

Is the resistance less than 10,000 ohms?

-> Yes
REPAIR the short circuit to GROUND. For additional information, refer to the wiring diagrams. CLEAR the DTC. TEST the system for normal operation.

-> No

INSTALL a new H02S.
CLEAR the DTC. TEST the system for normal operation. If the DTC is repeated, contact dealer technical support for advice on possible ECM failure.

PINPOINT TEST G258127p11 : DTC P0051, P0052; LEFT-HAND H02S HEATER CONTROL CIRCUIT HIGH/LOW CURRENT

G258127t39 : CHECK H02S HEATER POWER SUPPLY CIRCUIT

1. Disconnect the H02S electrical connector, PI12. 2. Turn the ignition switch to the ON position. 3. Measure the voltage between PI12, pin 01 (WR) and GROUND.

Is the voltage greater than 10 volts?

-> Yes
GO to Pinpoint Test G258127t40.

-> No
REPAIR the power supply circuit to the H02S heater. This circuit includes the heater relay, fuse 33 of the front power distribution box, and the high power protection module. For additional information, refer to the wiring diagrams. CLEAR the DTC. TEST the system for normal operation.

G258127t40 : CHECK H02S HEATER CONTROL CIRCUIT FROM ECM FOR HIGH RESISTANCE

1. Disconnect the battery negative terminal. 2. Disconnect the ECM electrical connector, PI01. 3. Measure the resistance between PI12, pin 02 (RW) and PI01, pin 55 (RW). 4. Measure the resistance between PI12, pin 02 (RW) and PI01, pin 56 (RW).

Is either resistance greater than 5 ohms?

-> Yes
REPAIR the high resistance circuit. For additional information, refer to the wiring diagrams. CLEAR the DTC. TEST the system for normal operation.

-> No
GO to Pinpoint Test G258127t41.

www.JagDocs.com

G258127t41 : CHECK H02S HEATER CONTROL CIRCUIT FROM ECM FOR SHORT TO HIGH VOLTAGE

1. Reconnect the battery negative terminal. 2. Turn the ignition switch to the ON position. 3. Measure the voltage between PI12, pin 02 (RW) and GROUND.

Is the voltage greater than 3 volts?

-> Yes
REPAIR the short circuit to high voltage. For additional information, refer to the wiring diagrams. CLEAR the DTC. TEST the system for normal operation.

-> No
GO to Pinpoint Test G258127t42.

G258127t42 : CHECK H02S HEATER CONTROL CIRCUIT FROM ECM FOR SHORT TO GROUND

1. Turn the ignition switch to the OFF position. 2. Measure the resistance between PI12, pin 02 (RW) and GROUND.

Is the resistance less than 10,000 ohms?

-> Yes
REPAIR the short circuit to GROUND. For additional information, refer to the wiring diagrams. CLEAR the DTC. TEST the system for normal operation.

-> No
INSTALL a new H02S.
CLEAR the DTC. TEST the system for normal operation. If the DTC is repeated, contact dealer technical support for advice on possible ECM failure.

PINPOINT TEST G258127p12 : DTC P0057, P0058; LEFT-HAND CATALYST MONITOR SENSOR HEATER CONTROL CIRCUIT LOW/HIGH RESISTANCE

G258127t43 : CHECK THE POWER SUPPLY TO THE CATALYST MONITOR SENSOR HEATER

1. Disconnect the catalyst monitor sensor electrical connector, PI13. 2. Turn the ignition switch to the ON position. 3. Make sure the O2S heater relay is engaged. 4. Measure the voltage between PI13, pin 01 (WR) and GROUND.

Is the voltage greater than 10 volts?

-> Yes
GO to Pinpoint Test G258127t44.

-> No
REPAIR the power supply circuit to the H02S heater. This circuit includes the heater relay, fuse 33 of the front power distribution box, and the high power protection module. For additional information, refer to the wiring diagrams. CLEAR the DTC. TEST the system for normal operation.

G258127t44 : CHECK THE CATALYST MONITOR SENSOR HEATER CONTROL CIRCUIT FOR HIGH RESISTANCE

1. Disconnect the battery negative terminal. 2. Disconnect the ECM electrical connector, PI01. 3. Measure the resistance between PI13, pin 02 (RW) and PI01, pin 93 (RW).

Is the resistance greater than 5 ohms?

-> Yes
REPAIR the high resistance circuit. For additional information, refer to the wiring diagrams. CLEAR the DTC. TEST the system for normal operation.

-> No
INSTALL a new catalyst monitor sensor.
CLEAR the DTC. TEST the system for normal operation. If the DTC is repeated, contact dealer technical support for advice on possible ECM failure.

PINPOINT TEST G258127p13 : DTC P0196, P0197, P0198; ENGINE OIL TEMPERATURE (EOT) SENSOR RANGE/PERFORMANCE, HIGH/LOW VOLTAGE

G258127t45 : CHECK THE EOT SENSOR SENSING CIRCUIT FOR HIGH RESISTANCE

1. Disconnect the battery negative terminal. 2. Disconnect the EOT sensor electrical connector, PI24. 3. Disconnect the ECM electrical connector, PI01. 4. Measure the resistance between PI24, pin 01 (Y) and PI01, pin 78 (Y).

Is the resistance greater than 5 ohms?

www.JagDocs.com

-> Yes
REPAIR the high resistance circuit. For additional information, refer to the wiring diagrams. CLEAR the DTC. TEST the system for normal operation.

-> No
GO to Pinpoint Test G258127t46.

G258127t46 : CHECK THE EOT SENSOR SENSING CIRCUIT FOR SHORT TO HIGH VOLTAGE

1. Reconnect the battery negative terminal. 2. Turn the ignition switch to the ON position. 3. Measure the voltage between PI24, pin 01 (Y) and GROUND.

Is the voltage greater than 3 volts?

-> Yes
REPAIR the short circuit to high voltage. For additional information, refer to the wiring diagrams. CLEAR the DTC. TEST the system for normal operation.

-> No
GO to Pinpoint Test G258127t47.

G258127t47 : CHECK THE EOT SENSOR SENSING CIRCUIT FOR SHORT TO GROUND

1. Turn the ignition switch to the OFF position. 2. Measure the resistance between PI24, pin 01 (Y) and GROUND.

Is the resistance less than 10,000 ohms?

-> Yes
REPAIR the short circuit to GROUND. For additional information, refer to the wiring diagrams. CLEAR the DTC. TEST the system for normal operation.

-> No
GO to Pinpoint Test G258127t48.

G258127t48 : CHECK THE EOT SENSOR GROUND CIRCUIT FOR HIGH RESISTANCE

1. Measure the resistance between PI24, pin 02 (BG) and PI01, pin 19 (BG).

Is the resistance greater than 5 ohms?

-> Yes
REPAIR the high resistance circuit. This circuit includes harness splices, PIS1 and EMS2. For additional

information, refer to the wiring diagrams. CLEAR the DTC. TEST the system for normal operation.

-> No
INSTALL a new EOT sensor.
CLEAR the DTC. TEST the system for normal operation. If the DTC is repeated, contact dealer technical support for advice on possible ECM failure.

PINPOINT TEST G258127p14 : DTC P0157, P0158, P0160; LEFT-HAND CATALYST MONITOR SENSOR SENSING CIRCUIT LOW/HIGH VOLTAGE, NO ACTIVITY

G258127t49 : CHECK THE CATALYST MONITOR SENSOR SENSING CIRCUIT FOR HIGH RESISTANCE

1. Disconnect the battery negative terminal. 2. Disconnect the catalyst monitor sensor electrical connector, PI13. 3. Disconnect the ECM electrical connector, PI01. 4. Measure the resistance between PI13, pin 04 (N) and PI01, pin 129 (N).

Is the resistance greater than 5 ohms?

-> Yes
REPAIR the high resistance circuit. For additional information, refer to the wiring diagrams. CLEAR the DTC. TEST the system for normal operation.

-> No
GO to Pinpoint Test G258127t50.

G258127t50 : CHECK THE CATALYST MONITOR SENSOR SENSING CIRCUIT FOR SHORT TO HIGH VOLTAGE

1. Reconnect the battery negative terminal. 2. Turn the ignition switch to the ON position. 3. Measure the voltage between PI13, pin 04 (N) and GROUND.

Is the voltage greater than 3 volts?

-> Yes
REPAIR the short circuit to high voltage. For additional information, refer to the wiring diagrams. CLEAR the DTC. TEST the system for normal operation.

-> No

www.JagDocs.com

GO to Pinpoint Test G258127t51.

G258127t51 : CHECK THE CATALYST MONITOR SENSOR SENSING CIRCUIT FOR SHORT TO GROUND

1. Turn the ignition switch to the OFF position. 2. Measure the resistance between PI13, pin 04 (N) and GROUND.

Is the resistance less than 10,000 ohms?

-> Yes
REPAIR the short circuit to GROUND. For additional information, refer to the wiring diagrams. CLEAR the DTC. TEST the system for normal operation.

-> No
GO to Pinpoint Test G258127t52.

G258127t52 : CHECK THE CATALYST MONITOR SENSOR GROUND CIRCUIT FOR OPEN CIRCUIT

1. Measure the resistance between PI13, pin 03 (B) and PI01, pin 130 (BW).

Is the resistance greater than 5 ohms?

-> Yes
REPAIR the circuit. For additional information, refer to the wiring diagrams. CLEAR the DTC. TEST the system for normal operation.

-> No
INSTALL a new catalyst monitor sensor.
CLEAR the DTC. TEST the system for normal operation.

PINPOINT TEST G258127p15 : DTC P0327, P0328; RIGHT-HAND KNOCK SENSOR (KS) HIGH/LOW VOLTAGE

G258127t53 : CHECK KS SENSING CIRCUIT FOR HIGH RESISTANCE

1. Disconnect the battery negative terminal. 2. Disconnect the KS electrical connector, PI20. 3. Disconnect the ECM electrical connector, PI01. 4. Measure the resistance between PI20, pin 02 (N) and PI01, pin 98 (N).

Is the resistance greater than 5 ohms?

-> Yes
REPAIR the high resistance circuit. For additional information, refer to the wiring diagrams. CLEAR the DTC. TEST the system for normal operation.

-> No
GO to Pinpoint Test G258127t54.

G258127t54 : CHECK KS SENSING CIRCUIT FOR SHORT TO HIGH VOLTAGE

1. Turn the ignition switch to the ON position. 2. Reconnect the battery negative terminal. 3. Measure the voltage between PI20, pin 02 (N) and GROUND.

Is the voltage greater than 5 volts?

-> Yes
REPAIR the short circuit to high voltage. For additional information, refer to the wiring diagrams. CLEAR the DTC. TEST the system for normal operation.

-> No
GO to Pinpoint Test G258127t55.

G258127t55 : CHECK KS SENSING CIRCUIT FOR SHORT TO GROUND

1. Turn the ignition switch to the OFF position. 2. Measure the resistance between PI20, pin 02 (N) and GROUND.

Is the resistance less than 10,000 ohms?

-> Yes
REPAIR the short circuit to GROUND. For additional information, refer to the wiring diagrams. CLEAR the DTC. TEST the system for normal operation.

-> No
GO to Pinpoint Test G258127t56.

G258127t56 : CHECK KS GROUND CIRCUIT FOR HIGH RESISTANCE

1. Measure the resistance between PI20, pin 01 (B) and PI01, pin 100 (BG).

Is the resistance greater than 5 ohms?

-> Yes
REPAIR the high resistance circuit. For additional information, refer to the wiring diagrams. CLEAR the DTC. TEST the system for normal operation.

-> No

www.JagDocs.com

INSTALL a new KS.
CLEAR the DTC. TEST the system for normal operation.

PINPOINT TEST G258127p16 : DTC P0332, P0333; LEFT-HAND KNOCK SENSOR (KS) HIGH/LOW VOLTAGE

G258127t57 : CHECK KS SENSING CIRCUIT FOR HIGH RESISTANCE

1. Disconnect the battery negative terminal. 2. Disconnect the KS electrical connector, PI19. 3. Disconnect the ECM electrical connector, PI01. 4. Measure the resistance between PI19, pin 01 (N) and PI01, pin 99 (N).

Is the resistance greater than 5 ohms?

-> Yes
REPAIR the high resistance circuit. For additional information, refer to the wiring diagrams. CLEAR the DTC. TEST the system for normal operation.

-> No
GO to Pinpoint Test G258127t58.

G258127t58 : CHECK KS SENSING CIRCUIT FOR SHORT TO HIGH VOLTAGE

1. Turn the ignition switch to the ON position. 2. Reconnect the battery negative terminal. 3. Measure the voltage between PI19, pin 01 (N) and GROUND.

Is the voltage greater than 3 volts?

-> Yes
REPAIR the short circuit to high voltage. For additional information, refer to the wiring diagrams. CLEAR the DTC. TEST the system for normal operation.

-> No
GO to Pinpoint Test G258127t59.

G258127t59 : CHECK KS SENSING CIRCUIT FOR SHORT TO GROUND

1. Turn the ignition switch to the OFF position. 2. Measure the resistance between PI19, pin 01 (N) and GROUND.

Is the resistance less than 10,000 ohms?

-> Yes
REPAIR the short circuit to GROUND. For additional information, refer to the wiring diagrams. CLEAR

the DTC. TEST the system for normal operation.

-> No
GO to Pinpoint Test G258127t60.

G258127t60 : CHECK KS GROUND CIRCUIT FOR HIGH RESISTANCE

1. Measure the resistance between PI19, pin 02 (B) and PI01, pin 100 (BG).

Is the resistance greater than 5 ohms?

-> Yes
REPAIR the high resistance circuit. For additional information, refer to the wiring diagrams. CLEAR the DTC. TEST the system for normal operation.

-> No
INSTALL a new KS.
CLEAR the DTC. TEST the system for normal operation.

PINPOINT TEST G258127p17 : DTC P0335, P0336; CRANKSHAFT POSITION (CKP) SENSOR CIRCUIT RANGE/PERFORMANCE, CIRCUIT MALFUNCTION

G258127t61 : CHECK THE CKP SENSOR FOR CORRECT INSTALLATION

1. Turn the ignition switch to the OFF position. 2. Check the CKP sensor for correct installation.

Is the CKP sensor correctly installed?

-> Yes
GO to Pinpoint Test G258127t62.

-> No
INSTALL the CKP sensor correctly.
Reconnect the sensor. CLEAR the DTCs. TEST the system for normal operation.

G258127t62 : CHECK THE CKP SENSOR FOR DEBRIS

1. Remove the CKP sensor and inspect for debris.

Is the CKP sensor free of debris?

www.JagDocs.com

-> Yes
GO to Pinpoint Test G258127t63.

-> No
CLEAN the sensor and wheel. INSTALL the sensor.
Reconnect the sensor. CLEAR the DTCs. TEST the system for normal operation.

G258127t63 : CHECK THE CKP SENSOR SENSING CIRCUIT FOR HIGH RESISTANCE

1. Disconnect the battery negative terminal. 2. Disconnect the ECM electrical connector, PI01. 3. Disconnect the CKP sensor electrical connector, PI21. 4. Measure the resistance between PI21, pin 02 (O) and PI01, pin 36 (O).

Is the resistance greater than 5 ohms?

-> Yes
REPAIR the high resistance circuit. For additional information, refer to the wiring diagrams. CLEAR the DTC. TEST the system for normal operation.

-> No
GO to Pinpoint Test G258127t64.

G258127t64 : CHECK THE CKP SENSOR SENSING CIRCUIT FOR SHORT TO HIGH VOLTAGE

1. Reconnect the battery negative terminal. 2. Turn the ignition switch to the **ON** position. 3. Measure the voltage between PI21, pin 02 (O) and GROUND.

Is the voltage greater than 3 volts?

-> Yes
REPAIR the short circuit to high voltage. For additional information, refer to the wiring diagrams. CLEAR the DTC. TEST the system for normal operation.

-> No
GO to Pinpoint Test G258127t65.

G258127t65 : CHECK THE CKP SENSOR SENSING CIRCUIT FOR SHORT TO GROUND

1. Turn the ignition switch to the OFF position. 2. Measure the resistance between PI21, pin 02 (O) and GROUND.

Is the resistance less than 10,000 ohms?

-> Yes
REPAIR the short circuit to GROUND. For additional information, refer to the wiring diagrams. CLEAR the DTC. TEST the system for normal operation.

-> No
GO to Pinpoint Test G258127t66.

G258127t66 : CHECK THE CKP SENSOR GROUND CIRCUIT FOR HIGH RESISTANCE

1. Measure the resistance between PI21, pin 01 (B) and PI01, pin 37 (B).

Is the resistance greater than 5 ohms?

-> Yes
REPAIR the high resistance circuit. For additional information, refer to the wiring diagrams. CLEAR the DTC. TEST the system for normal operation.

-> No
INSTALL a new CKP sensor.
CLEAR the DTC. TEST the system for normal operation.

PINPOINT TEST G258127p18 : DTC P0340, P0341; RIGHT-HAND CAMSHAFT POSITION (CMP) SENSOR CIRCUIT RANGE/PERFORMANCE, CIRCUIT MALFUNCTION

G258127t67 : CHECK THE CMP SENSOR FOR CORRECT INSTALLATION

1. Turn the ignition switch to the OFF position. 2. Check the CMP sensor for correct installation.

Is the CMP sensor correctly installed?

-> Yes
GO to Pinpoint Test G258127t68.

-> No
INSTALL the CMP sensor correctly.
CLEAR the DTCs. TEST the system for normal operation.

www.JagDocs.com

G258127t68 : CHECK THE CMP SENSOR FOR FOREIGN DEBRIS

1. Remove the CMP sensor and inspect for foreign debris.

Is the CMP sensor free of foreign debris?

-> Yes
GO to Pinpoint Test G258127t69.

-> No
CLEAN the sensor and wheel. INSTALL the sensor.
CLEAR the DTCs. TEST the system for normal operation.

G258127t69 : CHECK THE CMP SENSOR SENSING CIRCUIT FOR HIGH RESISTANCE

1. Disconnect the battery negative terminal. 2. Disconnect the CMP sensor electrical connector, PI23. 3. Disconnect the ECM electrical connector, PI01. 4. Measure the resistance between PI23, pin 02 (Y) and PI01, pin 94 (Y).

Is the resistance greater than 5 ohms?

-> Yes
REPAIR the high resistance circuit. For additional information, refer to the wiring diagrams. CLEAR the DTC. TEST the system for normal operation.

-> No
GO to Pinpoint Test G258127t69.

G258127t70 : CHECK THE CMP SENSOR SENSING CIRCUIT FOR SHORT TO HIGH VOLTAGE

1. Reconnect the battery negative terminal. 2. Turn the ignition switch to the ON position. 3. Measure the voltage between PI23, pin 02 (Y) and GROUND.

Is the voltage greater than 3 volts?

-> Yes
REPAIR the short circuit to high voltage. For additional information, refer to the wiring diagrams. CLEAR the DTC. TEST the system for normal operation.

-> No
GO to Pinpoint Test G258127t71.

G258127t71 : CHECK THE CMP SENSOR SENSING CIRCUIT FOR SHORT TO GROUND

1. Turn the ignition switch to the OFF position. 2. Measure the resistance between PI23, pin 02 (Y) and GROUND.

Is the resistance less than 10,000 ohms?

-> Yes
REPAIR the short circuit to GROUND. For additional information, refer to the wiring diagrams. CLEAR the DTC. TEST the system for normal operation.

-> No
GO to Pinpoint Test G258127t72.

G258127t72 : CHECK THE CMP SENSOR GROUND CIRCUIT FOR HIGH RESISTANCE

1. Measure the resistance between PI23, pin 01 (R) and PI01, pin 95 (R).

Is the resistance greater than 5 ohms?

-> Yes
REPAIR the high resistance circuit. For additional information, refer to the wiring diagrams. CLEAR the DTC. TEST the system for normal operation.

-> No
INSTALL a new CMP sensor.
CLEAR the DTC. TEST the system for normal operation.

PINPOINT TEST G258127p19 : DTC P0480; RADIATOR COOLING FAN MODULE DRIVE CIRCUIT MALFUNCTION

G258127t73 : CHECK THE RADIATOR FAN MODULE PERMANENT SUPPLY

1. Disconnect the fan module electrical connector, GC04. 2. Measure the voltage between GC04 (NG) and GROUND.

Is the voltage less than 10 volts?

-> Yes
REPAIR the circuit between the cooling fan module and battery. This circuit includes fuse 35 of the front power distribution box (80A), and the high power protection module. For additional

www.JagDocs.com

information, refer to the wiring diagrams. CLEAR the DTC. TEST the system for normal operation.

-> No
Reconnect electrical connector, GC04. GO to Pinpoint Test G258127t74.

G258127t74 : CHECK THE RADIATOR FAN MODULE GROUND

1. Disconnect the fan module electrical connector, GCU03. 2. Measure the resistance between GCU03 (B) and GROUND.

Is the resistance greater than 5 ohms?

-> Yes
REPAIR the high resistance circuit. For additional information, refer to the wiring diagrams. CLEAR the DTC. TEST the system for normal operation.

-> No
Reconnect electrical connector, GCU03. GO to Pinpoint Test G258127t75.

G258127t75 : CHECK THE RADIATOR FAN MODULE EMS SWITCHED SUPPLY

1. Disconnect the fan module electrical connector, GC01. 2. Turn the ignition switch to the ON position. 3. Make sure the EMS relay is engaged. 4. Measure the voltage between GC01, pin 02 (GU) and GROUND.

Is the voltage less than 10 volts?

-> Yes
REPAIR the circuit between the cooling fan module and battery. This circuit includes the front power distribution box, (fuse 14) the EMS control relay, and the high power protection module. For additional information, refer to the wiring diagrams. CLEAR the DTC. TEST the system for normal operation.

-> No
GO to Pinpoint Test G258127t76.

G258127t76 : CHECK THE ECM TO RADIATOR FAN MODULE CIRCUIT FOR HIGH RESISTANCE

1. Turn the ignition switch to the OFF position. 2. Disconnect the battery negative terminal. 3. Disconnect the ECM electrical connector, PI01. 4. Measure the resistance between GC01, pin 01 (WU) and PI01, pin 51 (W).

Is the resistance greater than 5 ohms?

-> Yes
REPAIR the high resistance circuit. For additional information, refer to the wiring diagrams. CLEAR the DTC. TEST the system for normal operation.

-> No
GO to Pinpoint Test G258127t77.

G258127t77 : CHECK THE ECM TO RADIATOR FAN MODULE CIRCUIT FOR SHORT TO HIGH VOLTAGE

1. Reconnect the battery negative terminal. 2. Turn the ignition switch to the ON position. 3. Measure the voltage between GC01, pin 01 (WU) and GROUND.

Is the voltage greater than 3 volts?

-> Yes
REPAIR the short circuit. For additional information, refer to the wiring diagrams. CLEAR the DTC. TEST the system for normal operation.

-> No
GO to Pinpoint Test G258127t78.

G258127t78 : CHECK THE ECM TO RADIATOR FAN MODULE CIRCUIT FOR SHORT TO GROUND

1. Turn the ignition switch to the OFF position. 2. Measure the resistance between GC01, pin 01 (WU) and GROUND.

Is the resistance less than 10,000 ohms?

-> Yes
REPAIR the short circuit. For additional information, refer to the wiring diagrams. CLEAR the DTC. TEST the system for normal operation.

-> No
INSTALL a new radiator cooling fan module. CLEAR the DTC. TEST the system for normal operation.

PINPOINT TEST G258127p20 : DTC P0560; BATTERY POWER SUPPLY VOLTAGE MALFUNCTION

www.JagDocs.com

G258127t79 : CHECK THE BATTERY POWER SUPPLY TO THE ECM

1. Disconnect the ECM electrical connector, PI01. 2. Measure the voltage between PI01, pin 22 (NR) and GROUND.

Is the voltage greater than 10 volts?

-> Yes
Recheck the DTCs.

-> No
REPAIR the battery power supply circuit. This circuit includes fuse 17 of the front power distribution box, and the high power protection module. For additional information, refer to the wiring diagrams. CLEAR the DTC. TEST the system for normal operation.

PINPOINT TEST G258127p21 : DTC P1104; MASS AIR FLOW (MAF) SENSOR GROUND MALFUNCTION

G258127t80 : CHECK THE MAF SENSOR GROUND

1. Disconnect the MAF sensor electrical connector, PI14. 2. Turn the ignition switch to the ON position. 3. Measure the resistance between PI14, pin 02 (BK) and GROUND.

Is the resistance greater than 5 ohms?

-> Yes
GO to Pinpoint Test G258127t81.

-> No
INSTALL a new MAF sensor.
CLEAR the DTC. TEST the system for normal operation.

G258127t81 : CHECK THE MAF SENSOR GROUND CIRCUIT FOR HIGH RESISTANCE

1. Disconnect the battery negative terminal. 2. Disconnect the ECM electrical connector, PI01. 3. Measure the resistance between PI14, pin 02 (BK) and PI01, pins 45 and 46 (BK).

Is either resistance greater than 5 ohms?

-> Yes
REPAIR the high resistance circuit. For additional information, refer to the wiring diagrams. CLEAR the DTC. TEST the system for normal operation.

-> No
GO to Pinpoint Test G258127t82.

G258127t82 : CHECK THE MAF SENSOR GROUND CIRCUIT FOR SHORT TO HIGH VOLTAGE

1. Reconnect the battery negative terminal. 2. Turn the ignition switch to the ON position. 3. Measure the voltage between PI14, pin 02 (BK) and GROUND.

Is the voltage greater than 3 volts?

-> Yes
REPAIR the short circuit. For additional information, refer to the wiring diagrams. CLEAR the DTC. TEST the system for normal operation.

-> No
Contact dealer technical support for advice on possible ECM failure.

PINPOINT TEST G258127p22 : DTC P1122, P1123*; ACCELERATOR PEDAL POSITION (APP) SENSOR SENSING CIRCUIT 1 HIGH/LOW VOLTAGE

G258127t83 : CHECK THE APP SENSOR SENSING CIRCUIT 1 FOR HIGH RESISTANCE

1. Disconnect the battery negative terminal. 2. Disconnect the ECM electrical connector, PI01. 3. Disconnect the APP sensor electrical connector, CR14. 4. Measure the resistance between CR14, pin 01 (Y) and PI01, pin 103 (Y).

Is the resistance greater than 5 ohms?

-> Yes
REPAIR the high resistance circuit. For additional information, refer to the wiring diagrams. CLEAR the DTC. TEST the system for normal operation.

-> No
GO to Pinpoint Test G258127t84.

www.JagDocs.com

G258127t84 : CHECK THE APP SENSOR SENSING CIRCUIT FOR SHORT TO HIGH VOLTAGE

1. Reconnect the battery negative terminal. 2. Turn the ignition switch to the ON position. 3. Measure the voltage between CR14, pin 01 (Y) and GROUND.

Is the voltage greater than 3 volts?

-> Yes
REPAIR the short circuit. For additional information, refer to the wiring diagrams. CLEAR the DTC. TEST the system for normal operation.

-> No
GO to Pinpoint Test G258127t85.

G258127t85 : CHECK THE APP SENSOR SENSING CIRCUIT FOR SHORT TO GROUND

1. Turn the ignition switch to the OFF position. 2. Measure the resistance between CR14, pin 01 (Y) and GROUND.

Is the resistance less than 10,000 ohms?

-> Yes
REPAIR the short circuit. For additional information, refer to the wiring diagrams. CLEAR the DTC. TEST the system for normal operation.

-> No
GO to Pinpoint Test G258127t86.

G258127t86 : CHECK THE APP SENSOR SUPPLY VOLTAGE AT THE SENSOR

1. Reconnect the ECM electrical connector, PI01. 2. Turn the ignition switch to the ON position. 3. Measure the voltage between CR14, pin 02 (OY) and GROUND.

Is the voltage less than 4 volts?

-> Yes
GO to Pinpoint Test G258127t87.

-> No
INSTALL a new APP sensor.
Accelerator Pedal (19.20.01) CLEAR the DTC. TEST the system for normal operation.

G258127t87 : CHECK THE APP SENSOR SUPPLY VOLTAGE CIRCUIT FOR HIGH RESISTANCE

1. Turn the ignition switch to the OFF position. 2. Disconnect the ECM electrical connector, PI01. 3. Measure the resistance between PI01, pin 12 (OY) and CR14, pin 02 (OY).

Is the resistance greater than 5 ohms?

-> Yes

REPAIR the high resistance circuit. For additional information, refer to the wiring diagrams. CLEAR the DTC. TEST the system for normal operation.

-> No

Check the ECM power supplies (recheck DTCs. P1104 may be flagged).

PINPOINT TEST G258127p23 : DTC P1215, P1216*; ACCELERATOR PEDAL POSITION (APP) SENSOR SENSING CIRCUIT 2 HIGH/LOW VOLTAGE

G258127t88 : CHECK THE APP SENSOR SENSING CIRCUIT FOR HIGH RESISTANCE

1. Disconnect the battery negative terminal. 2. Disconnect the ECM electrical connector, PI01. 3. Disconnect the APP sensor electrical connector, CR14. 4. Measure the resistance between CR14, pin 04 (R) and PI01, pin 102 (R).

Is the resistance greater than 5 ohms?

-> Yes

REPAIR the high resistance circuit. For additional information, refer to the wiring diagrams. CLEAR the DTC. TEST the system for normal operation.

-> No

GO to Pinpoint Test G258127t89.

G258127t89 : CHECK THE APP SENSOR SENSING CIRCUIT FOR SHORT TO HIGH VOLTAGE

1. Reconnect the battery negative terminal. 2. Turn the ignition switch to the ON position. 3. Measure the voltage between CR14, pin 04 (R) and GROUND.

Is the voltage greater than 3 volts?

www.JagDocs.com

-> Yes
REPAIR the short circuit. For additional information, refer to the wiring diagrams. CLEAR the DTC. TEST the system for normal operation.

-> No
GO to Pinpoint Test G258127t90.

G258127t90 : CHECK THE APP SENSOR SENSING CIRCUIT FOR SHORT TO GROUND

1. Turn the ignition switch to the OFF position. 2. Measure the resistance between CR14, pin 04 (R) and GROUND.

Is the resistance less than 10,000 ohms?

-> Yes
REPAIR the short circuit. For additional information, refer to the wiring diagrams. CLEAR the DTC. TEST the system for normal operation.

-> No
GO to Pinpoint Test G258127t91.

G258127t91 : CHECK THE APP SENSOR SUPPLY VOLTAGE AT THE SENSOR

1. Reconnect the ECM electrical connector, PI01. 2. Turn the ignition switch to the ON position. 3. Measure the voltage between CR14, pin 05 (Y) and GROUND.

Is the voltage less than 4 volts?

-> Yes
GO to Pinpoint Test G258127t92.

-> No
INSTALL a new APP sensor.
Accelerator Pedal (19.20.01) CLEAR the DTC. TEST the system for normal operation.

G258127t92 : CHECK THE APP SENSOR SUPPLY VOLTAGE CIRCUIT FOR HIGH RESISTANCE

1. Turn the ignition switch to the OFF position. 2. Disconnect the ECM electrical connector, PI01. 3. Measure the resistance between CR14, pin 05 (Y) and PI01, pin 13 (Y).

Is the resistance greater than 5 ohms?

-> Yes
REPAIR the high resistance circuit. For additional information, refer to the wiring diagrams. CLEAR the

DTC. TEST the system for normal operation.

-> No
Check the ECM power supplies (recheck DTCs. P1104 may be flagged).

PINPOINT TEST G258127p24 : DTC P1229; THROTTLE MOTOR CONTROL CIRCUIT MALFUNCTION

G258127t93 : CHECK THE THROTTLE MOTOR - TO ECM CIRCUIT FOR HIGH RESISTANCE

1. Disconnect the battery negative terminal. 2. Disconnect the throttle motor electrical connector, PI18. 3. Disconnect the ECM electrical connector, PI01. 4. Measure the resistance between PI18, pin 01 (GW) and PI01, pin 80 (GW).

Is the resistance greater than 5 ohms?

-> Yes
REPAIR the high resistance circuit. For additional information, refer to the wiring diagrams. CLEAR the DTC. TEST the system for normal operation.

-> No
GO to Pinpoint Test G258127t94.

G258127t94 : CHECK THE THROTTLE MOTOR + TO ECM CIRCUIT FOR HIGH RESISTANCE

1. Measure the resistance between PI18, pin 02 (RW) and PI01, pin 106 (RW).

Is the resistance greater than 5 ohms?

-> Yes
REPAIR the high resistance circuit. For additional information, refer to the wiring diagrams. CLEAR the DTC. TEST the system for normal operation.

-> No
INSTALL a new throttle body.
Throttle Body - 4.2L NA V8 - AJV8/3.5L NA V8 - AJV8, VIN Range: G00442->G45703 (19.70.04) CLEAR the DTC. TEST the system for normal operation.

PINPOINT TEST G258127p25 : DTC P1240, P1241, P1242; SENSOR SUPPLY

www.JagDocs.com

VOLTAGE MALFUNCTION, HIGH/LOW VOLTAGE

G258127t95 : CHECK THE SUPPLY VOLTAGE AT THE APP SENSOR

1. Disconnect the APP sensor electrical connector, CR14. 2. Turn the ignition switch to the ON position. 3. Measure the voltage between CR14, pin 02 (OY) and GROUND.

Is the voltage less than 5 volts?

-> Yes
GO to Pinpoint Test G258127t96.

-> No
GO to Pinpoint Test G258127t97.

G258127t96 : CHECK THE APP SENSOR SUPPLY VOLTAGE CIRCUIT FOR HIGH RESISTANCE

1. Disconnect the ECM electrical connector, PI01. 2. Measure the resistance between CR14, pin 02 (OY) and PI01, pin 12 (OY).

Is the resistance greater than 5 ohms?

-> Yes
REPAIR the high resistance circuit. For additional information, refer to the wiring diagrams. CLEAR the DTC. TEST the system for normal operation.

-> No
GO to Pinpoint Test G258127t97.

G258127t97 : CHECK THE APP SENSOR SUPPLY VOLTAGE CIRCUIT FOR SHORT TO HIGH VOLTAGE

1. Turn the ignition switch to the ON position. 2. Measure the voltage between CR14, pin 02 (OY) and GROUND.

Is the voltage greater than 6 volts?

-> Yes
REPAIR the short circuit to high voltage. For additional information, refer to the wiring diagrams. CLEAR the DTC. TEST the system for normal operation.

-> No

GO to Pinpoint Test G258127t98.

G258127t98 : CHECK THE APP SENSOR SUPPLY VOLTAGE CIRCUIT FOR SHORT TO GROUND

1. Turn the ignition switch to the OFF position. 2. Measure the resistance between CR14, pin 02 (OY) and GROUND.

Is the resistance less than 10,000 ohms?

-> Yes
REPAIR the short circuit to GROUND. For additional information, refer to the wiring diagrams. CLEAR the DTC. TEST the system for normal operation.

-> No
GO to Pinpoint Test G258127t99.

G258127t99 : CHECK THE SUPPLY VOLTAGE AT THE TP SENSOR

1. Disconnect the throttle position sensor electrical connector, PI26. 2. Turn the ignition switch to the ON position. 3. Measure the voltage between PI26, pin 04 (OY) and GROUND.

Is the voltage less than 5 volts?

-> Yes
GO to Pinpoint Test G258127t100.

-> No
GO to Pinpoint Test G258127t101.

G258127t100 : CHECK THE TP SENSOR SUPPLY VOLTAGE CIRCUIT FOR HIGH RESISTANCE

1. Turn the ignition switch to the OFF position. 2. Disconnect the ECM electrical connector, PI01. 3. Measure the resistance between PI26, pin 04 (OY) and PI01, pin 12 (OY).

Is the resistance greater than 5 ohms?

-> Yes
REPAIR the high resistance circuit. For additional information, refer to the wiring diagrams. CLEAR the DTC. TEST the system for normal operation.

-> No
GO to Pinpoint Test G258127t101.

www.JagDocs.com

G258127t101 : CHECK THE TP SENSOR SUPPLY VOLTAGE CIRCUIT FOR SHORT TO HIGH VOLTAGE

1. Turn the ignition switch to the ON position. 2. Measure the voltage between PI26, pin 04 (OY) and GROUND.

Is the voltage greater than 6 volts?

-> Yes
REPAIR the short circuit to high voltage. For additional information, refer to the wiring diagrams. CLEAR the DTC. TEST the system for normal operation.

-> No
GO to Pinpoint Test G258127t102.

G258127t102 : CHECK THE TP SENSOR SUPPLY VOLTAGE CIRCUIT FOR SHORT TO GROUND

1. Turn the ignition switch to the OFF position. 2. Measure the resistance between PI26, pin 04 (OY) and GROUND.

Is the resistance less than 10,000 ohms?

-> Yes
REPAIR the short circuit to GROUND. For additional information, refer to the wiring diagrams. CLEAR the DTC. TEST the system for normal operation.

-> No
GO to Pinpoint Test G258127t103.

G258127t103 : CHECK THE SUPPLY VOLTAGE AT THE FUEL TANK PRESSURE SENSOR

1. Disconnect the fuel tank pressure sensor electrical connector, FP01. 2. Reconnect the ECM electrical connector, PI01. 3. Turn the ignition switch to the ON position. 4. Measure the voltage between FO01, pin 03 (OY) and GROUND.

Is the voltage less than 5 volts?

-> Yes
GO to Pinpoint Test G258127t104.

-> No
GO to Pinpoint Test G258127t105.

G258127t104 : CHECK THE FUEL TANK PRESSURE SENSOR SUPPLY VOLTAGE CIRCUIT FOR HIGH RESISTANCE

1. Disconnect the ECM electrical connector, PI01. 2. Measure the resistance between FP01, pin 03 (OY) and PI01, pin 12 (OY).

Is the resistance greater than 5 ohms?

-> Yes

REPAIR the high resistance circuit. For additional information, refer to the wiring diagrams. CLEAR the DTC. TEST the system for normal operation.

-> No

GO to Pinpoint Test G258127t105.

G258127t105 : CHECK THE FUEL TANK PRESSURE SENSOR SUPPLY VOLTAGE CIRCUIT FOR SHORT TO HIGH VOLTAGE

1. Turn the ignition switch to the ON position. 2. Measure the voltage between FP01, pin 03 (OY) and GROUND.

Is the voltage greater than 6 volts?

-> Yes

REPAIR the short circuit to high voltage. For additional information, refer to the wiring diagrams. CLEAR the DTC. TEST the system for normal operation.

-> No

GO to Pinpoint Test G258127t106.

G258127t106 : CHECK THE FUEL TANK PRESSURE SENSOR SUPPLY VOLTAGE CIRCUIT FOR SHORT TO GROUND

1. Turn the ignition switch to the OFF position. 2. Measure the resistance between FP01, pin 03 (OY) and GROUND.

Is the resistance less than 10,000 ohms?

-> Yes

REPAIR the short circuit to GROUND. For additional information, refer to the wiring diagrams. CLEAR the DTC. TEST the system for normal operation.

-> No

GO to Pinpoint Test G258127t107.

www.JagDocs.com

G258127t107 : CHECK THE SUPPLY VOLTAGE AT THE MANIFOLD ABSOLUTE PRESSURE SENSOR

1. Disconnect the MAP sensor electrical connector, PI29. 2. Reconnect the ECM electrical connector, PI01. 3. Turn the ignition switch to the ON position. 4. Measure the voltage between PI29, pin 02 (OY) and GROUND.

Is the voltage less than 5 volts?

-> Yes
GO to Pinpoint Test G258127t108.

-> No
GO to Pinpoint Test G258127t109.

G258127t108 : CHECK THE MANIFOLD ABSOLUTE PRESSURE SENSOR SUPPLY VOLTAGE CIRCUIT FOR HIGH RESISTANCE

1. Disconnect the ECM electrical connector, PI01. 2. Measure the resistance between PI29, pin 02 (OY) and PI01, pin 12 (OY).

Is the resistance greater than 5 ohms?

-> Yes
REPAIR the high resistance circuit. For additional information, refer to the wiring diagrams. CLEAR the DTC. TEST the system for normal operation.

-> No
GO to Pinpoint Test G258127t109.

G258127t109 : CHECK THE MANIFOLD ABSOLUTE PRESSURE SENSOR SUPPLY VOLTAGE CIRCUIT FOR SHORT TO HIGH VOLTAGE

1. Turn the ignition switch to the ON position. 2. Measure the voltage between PI29, pin 02 (OY) and GROUND.

Is the voltage greater than 6 volts?

-> Yes
REPAIR the short circuit to high voltage. For additional information, refer to the wiring diagrams. CLEAR the DTC. TEST the system for normal operation.

-> No
GO to Pinpoint Test G258127t110.

G258127t110 : CHECK THE MANIFOLD ABSOLUTE PRESSURE SENSOR SUPPLY VOLTAGE CIRCUIT FOR SHORT TO GROUND

1. Turn the ignition switch to the OFF position. 2. Measure the resistance between PI29, pin 02 (OY) and GROUND.

Is the resistance less than 10,000 ohms?

-> Yes
REPAIR the short circuit to GROUND. For additional information, refer to the wiring diagrams. CLEAR the DTC. TEST the system for normal operation.

-> No
GO to Pinpoint Test G258127t111.

G258127t111 : CHECK THE SUPPLY VOLTAGE AT THE FUEL RAIL PRESSURE (FRP) SENSOR

1. Disconnect the FRP sensor electrical connector, PI28. 2. Reconnect the ECM electrical connector, PI01. 3. Turn the ignition switch to the ON position. 4. Measure the voltage between PI28, pin 01 (OY) and GROUND.

Is the voltage less than 5 volts?

-> Yes
GO to Pinpoint Test G258127t112.

-> No
GO to Pinpoint Test G258127t113.

G258127t112 : CHECK THE FUEL RAIL PRESSURE (FRP) SENSOR SUPPLY VOLTAGE CIRCUIT FOR HIGH RESISTANCE

1. Disconnect the ECM electrical connector, PI01. 2. Measure the resistance between PI28, pin 01 (OY) and PI01, pin 12 (OY).

Is the resistance greater than 5 ohms?

-> Yes
REPAIR the high resistance circuit. For additional information, refer to the wiring diagrams. CLEAR the DTC. TEST the system for normal operation.

-> No
GO to Pinpoint Test G258127t113.

www.JagDocs.com

G258127t113 : CHECK THE FUEL RAIL PRESSURE (FRP) SENSOR SUPPLY VOLTAGE CIRCUIT FOR SHORT TO HIGH VOLTAGE

1. Turn the ignition switch to the ON position. 2. Measure the voltage between PI28, pin 02 (OY) and GROUND.

Is the voltage greater than 6 volts?

-> Yes
REPAIR the short circuit to high voltage. For additional information, refer to the wiring diagrams. CLEAR the DTC. TEST the system for normal operation.

-> No
GO to Pinpoint Test G258127t114.

G258127t114 : CHECK THE FUEL RAIL PRESSURE (FRP) SENSOR SUPPLY VOLTAGE CIRCUIT FOR SHORT TO GROUND

1. Turn the ignition switch to the OFF position. 2. Measure the resistance between PI28, pin 02 (OY) and GROUND.

Is the resistance less than 10,000 ohms?

-> Yes
REPAIR the short circuit to GROUND. For additional information, refer to the wiring diagrams. CLEAR the DTC. TEST the system for normal operation.

-> No
Check for DTCs relating to individual sensors, and/or sensor GROUND. Carry out pinpoint tests for sensors indicated.

PINPOINT TEST G258127p26 : DTC P1243; SENSOR GROUND CIRCUITS OPEN CIRCUIT

G258127t115 : CHECK THE SENSOR GROUND AT THE THROTTLE POSITION (TP) SENSORS

1. Disconnect the throttle sensor electrical connector, PI26. 2. Measure the resistance between PI26, pin 01 (BG) and GROUND.

Is the resistance greater than 5 ohms?

-> Yes
GO to Pinpoint Test G258127t116.

-> No
GO to Pinpoint Test G258127t117.

G258127t116 : CHECK THE THROTTLE POSITION (TP) SENSOR GROUND CIRCUIT FOR HIGH RESISTANCE

1. Disconnect the ECM electrical connector, PI01. 2. Measure the resistance between PI26, pin 01 (BG) and PI01, pin 19 (BG).

Is the resistance greater than 5 ohms?

-> Yes
REPAIR the high resistance circuit. For additional information, refer to the wiring diagrams. CLEAR the DTC. TEST the system for normal operation.

-> No
GO to Pinpoint Test G258127t117.

G258127t117 : CHECK THE SENSOR GROUND AT THE ACCELERATOR PEDAL POSITION (APP) SENSOR

1. Disconnect the APP sensor electrical connector, CR14. 2. Reconnect the ECM electrical connector, PI01. 3. Measure the resistance between CR14, pin 06 (BG) and GROUND.

Is the resistance greater than 5 ohms?

-> Yes
GO to Pinpoint Test G258127t118.

-> No
GO to Pinpoint Test G258127t119.

G258127t118 : CHECK THE ACCELERATOR PEDAL POSITION (APP) SENSOR GROUND CIRCUIT FOR HIGH RESISTANCE

1. Disconnect the ECM electrical connector, PI01. 2. Measure the resistance between CR14, pin 06 (BG) and PI01, pin 19 (BG).

Is the resistance greater than 5 ohms?

-> Yes
REPAIR the high resistance circuit. For additional information, refer to the wiring diagrams. CLEAR the DTC. TEST the system for normal operation.

www.JagDocs.com

-> No
GO to Pinpoint Test G258127t119.

G258127t119 : CHECK THE SENSOR GROUND AT THE FUEL TANK PRESSURE (FTP) SENSOR

1. Disconnect the FTP sensor electrical connector, FP01. 2. Reconnect the ECM electrical connector, PI01. 3. Measure the resistance between FP01, pin 01 (BG) and GROUND.

Is the resistance greater than 5 ohms?

-> Yes
GO to Pinpoint Test G258127t120.

-> No
GO to Pinpoint Test G258127t121.

G258127t120 : CHECK THE FUEL TANK PRESSURE (FTP) SENSOR GROUND CIRCUIT FOR HIGH RESISTANCE

1. Disconnect the ECM electrical connector, PI01. 2. Measure the resistance between FP01, pin 01 (BG) and PI01, pin 19 (BG).

Is the resistance greater than 5 ohms?

-> Yes
REPAIR the high resistance circuit. For additional information, refer to the wiring diagrams. CLEAR the DTC. TEST the system for normal operation.

-> No
GO to Pinpoint Test G258127t121.

G258127t121 : CHECK THE SENSOR GROUND AT THE ENGINE COOLANT TEMPERATURE (ECT) SENSOR

1. Reconnect the ECM electrical connector, PI01. 2. Disconnect the ECT sensor electrical connector, PI25. 3. Measure the resistance between PI25, pin 01 (BG) and GROUND.

Is the resistance greater than 5 ohms?

-> Yes
GO to Pinpoint Test G258127t122.

-> No
GO to Pinpoint Test G258127t123.

G258127t122 : CHECK THE ENGINE COOLANT TEMPERATURE (ECT) SENSOR GROUND CIRCUIT FOR HIGH RESISTANCE

1. Disconnect the ECM electrical connector, PI01. 2. Measure the resistance between PI25, pin 01 (BG) and PI01, pin 19 (BG).

Is the resistance greater than 5 ohms?

-> Yes
REPAIR the high resistance circuit. For additional information, refer to the wiring diagrams. CLEAR the DTC. TEST the system for normal operation.

-> No
GO to Pinpoint Test G258127t123.

G258127t123 : CHECK THE SENSOR GROUND AT THE MANIFOLD ABSOLUTE PRESSURE (MAP) SENSOR

1. Disconnect the MAP sensor electrical connector, PI29. 2. Reconnect the ECM electrical connector, PI01. 3. Measure the resistance between PI29, pin 04 (BG) and GROUND.

Is the resistance greater than 5 ohms?

-> Yes
GO to Pinpoint Test G258127t124.

-> No
GO to Pinpoint Test G258127t125.

G258127t124 : CHECK THE MANIFOLD ABSOLUTE PRESSURE (MAP) SENSOR GROUND CIRCUIT FOR HIGH RESISTANCE

1. Disconnect the ECM electrical connector, PI01. 2. Measure the resistance between PI29, pin 04 (BG) and PI01, pin 19 (BG).

Is the resistance greater than 5 ohms?

-> Yes
REPAIR the high resistance circuit. For additional information, refer to the wiring diagrams. CLEAR the DTC. TEST the system for normal operation.

-> No

www.JagDocs.com

GO to Pinpoint Test G258127t125.

G258127t125 : CHECK THE SENSOR GROUND AT THE FUEL TEMPERATURE (FT) SENSOR

1. Disconnect the FT sensor electrical connector, IL09. 2. Reconnect the ECM electrical connector, PI01. 3. Measure the resistance between IL09, pin 02 (BG) and GROUND.

Is the resistance greater than 5 ohms?

-> Yes
GO to Pinpoint Test G258127t126.

-> No
GO to Pinpoint Test G258127t127.

G258127t126 : CHECK THE FUEL TEMPERATURE (FT) SENSOR GROUND CIRCUIT FOR HIGH RESISTANCE

1. Disconnect the ECM electrical connector, PI01. 2. Measure the resistance between IL09, pin 02 (BG) and PI01, pin 19 (BG).

Is the resistance greater than 5 ohms?

-> Yes
REPAIR the high resistance circuit. For additional information, refer to the wiring diagrams. CLEAR the DTC. TEST the system for normal operation.

-> No
GO to Pinpoint Test G258127t127.

G258127t127 : CHECK THE SENSOR GROUND AT THE FUEL RAIL PRESSURE (FRP) SENSOR

1. Disconnect the FRP sensor electrical connector, IL12. 2. Reconnect the ECM electrical connector, PI01. 3. Measure the resistance between IL12, pin 02 (BG) and GROUND.

Is the resistance greater than 5 ohms?

-> Yes
GO to Pinpoint Test G258127t128.

-> No

GO to Pinpoint Test G258127t129.

G258127t128 : CHECK THE FUEL RAIL PRESSURE (FRP) SENSOR GROUND CIRCUIT FOR HIGH RESISTANCE

1. Disconnect the ECM electrical connector, PI01. 2. Measure the resistance between IL12, pin 02 (BG) and PI01, pin 19 (BG).

Is the resistance greater than 5 ohms?

-> Yes
REPAIR the high resistance circuit. For additional information, refer to the wiring diagrams. CLEAR the DTC. TEST the system for normal operation.

-> No
GO to Pinpoint Test G258127t129.

G258127t129 : CHECK THE SENSOR GROUND AT THE ENGINE OIL TEMPERATURE (EOT) SENSOR

1. Disconnect the EOT sensor electrical connector, PI38. 2. Reconnect the ECM electrical connector, PI01. 3. Measure the resistance between PI24, pin 02 (BG) and GROUND.

Is the resistance greater than 5 ohms?

-> Yes
GO to Pinpoint Test G258127t130.

-> No
GO to Pinpoint Test G258127t131.

G258127t130 : CHECK THE ENGINE OIL TEMPERATURE (EOT) SENSOR GROUND CIRCUIT FOR HIGH RESISTANCE

1. Disconnect the ECM electrical connector, PI01. 2. Measure the resistance between PI24, pin 02 (BG) and PI01, pin 19 (BG).

Is the resistance greater than 5 ohms?

-> Yes
REPAIR the high resistance circuit. For additional information, refer to the wiring diagrams. CLEAR the DTC. TEST the system for normal operation.

-> No

www.JagDocs.com

GO to Pinpoint Test G258127t131.

G258127t131 : CHECK THE SENSOR GROUND AT THE A/C PRESSURE SENSOR

1. Disconnect the A/C pressure sensor electrical connector, EC11. 2. Reconnect the ECM electrical connector, PI01. 3. Measure the resistance between EC11, pin 01 (BG) and GROUND.

Is the resistance greater than 5 ohms?

-> Yes
GO to Pinpoint Test G258127t132.

-> No
Check for DTCs relating to individual sensors. Carry out pinpoint tests for sensors indicated.

G258127t132 : CHECK THE A/C PRESSURE SENSOR GROUND CIRCUIT FOR HIGH RESISTANCE

1. Disconnect the ECM electrical connector, PI01. 2. Measure the resistance between EC11, pin 02 (BG) and PI01, pin 19 (BG).

Is the resistance greater than 5 ohms?

-> Yes
REPAIR the high resistance circuit. For additional information, refer to the wiring diagrams. CLEAR the DTC. TEST the system for normal operation.

-> No
Check for DTCs relating to individual sensors. Carry out pinpoint tests for sensors indicated.

PINPOINT TEST G258127p27 : DTC P1245, P1246; ENGINE CRANK SIGNAL LOW/HIGH VOLTAGE

G258127t133 : CHECK THE IGNITION SWITCH TO ECM CIRCUIT FOR HIGH RESISTANCE

1. Disconnect the battery negative terminal. 2. Disconnect the ignition switch electrical connector, IP34. 3. Disconnect the ECM electrical connector, PI01. 4. Measure the resistance between IP34, pin 01 (Y) and PI01, pin 06 (Y).

Is the resistance greater than 5 ohms?

-> Yes
REPAIR the high resistance circuit. For additional information, refer to the wiring diagrams. CLEAR the DTC. TEST the system for normal operation.

-> No
GO to Pinpoint Test G258127t134.

G258127t134 : CHECK THE IGNITION SWITCH TO ECM CIRCUIT FOR SHORT TO HIGH VOLTAGE

1. Reconnect the battery negative terminal. 2. Turn the ignition switch to the ON position. 3. Measure the voltage between IP34, pin 01 (Y) and GROUND.

Is the voltage greater than 3 volts?

-> Yes
REPAIR the short circuit. For additional information, refer to the wiring diagrams. CLEAR the DTC. TEST the system for normal operation.

-> No
INSTALL a new ignition switch. CLEAR the DTC. TEST the system for normal operation.

PINPOINT TEST G258127p28 : DTC P1340, P1341; LEFT-HAND CAMSHAFT POSITION (CMP) SENSOR CIRCUIT MALFUNCTION RANGE/PERFORMANCE

G258127t135 : CHECK THE CMP SENSOR FOR CORRECT INSTALLATION

1. Check the CMP sensor for correct installation.

Is the CMP sensor correctly installed?

-> Yes
GO to Pinpoint Test G258127t136.

-> No
INSTALL the CMP sensor correctly.
CLEAR the DTCs. TEST the system for normal operation.

www.JagDocs.com

G258127t136 : CHECK THE CMP SENSOR FOR FOREIGN DEBRIS

1. Remove the CMP sensor and inspect for foreign debris.

Is the CMP sensor free of foreign debris?

-> Yes
GO to Pinpoint Test G258127t137.

-> No
CLEAN the sensor and wheel. INSTALL the sensor.
CLEAR the DTCs. TEST the system for normal operation.

G258127t137 : CHECK THE CMP SENSOR SENSING CIRCUIT FOR HIGH RESISTANCE

1. Disconnect the battery negative terminal. 2. Disconnect the CMP sensor electrical connector, PI56. 3. Disconnect the ECM electrical connector, PI01. 4. Measure the resistance between PI01, pin 68 (N) and PI56, pin 01 (N).

Is the resistance greater than 5 ohms?

-> Yes
REPAIR the high resistance circuit. For additional information, refer to the wiring diagrams. CLEAR the DTC. TEST the system for normal operation.

-> No
GO to Pinpoint Test G258127t138.

G258127t138 : CHECK THE CMP SENSOR SENSING CIRCUIT FOR SHORT TO HIGH VOLTAGE

1. Reconnect the battery negative terminal. 2. Turn the ignition switch to the ON position. 3. Measure the voltage between PI01, pin 68 (N) and GROUND.

Is the voltage greater than 3 volts?

-> Yes
REPAIR the short circuit to high voltage. For additional information, refer to the wiring diagrams. CLEAR the DTC. TEST the system for normal operation.

-> No
GO to Pinpoint Test G258127t139.

G258127t139 : CHECK THE CMP SENSOR SENSING CIRCUIT FOR SHORT TO GROUND

1. Turn the ignition switch to the OFF position. 2. Measure the resistance between PI56, pin 01 (N) and GROUND.

Is the resistance less than 10,000 ohms?

-> Yes
REPAIR the short circuit to GROUND. For additional information, refer to the wiring diagrams. CLEAR the DTC. TEST the system for normal operation.

-> No
INSTALL a new CMP sensor.
CLEAR the DTC. TEST the system for normal operation.

PINPOINT TEST G258127p29 : DTC P0010, P1384; RIGHT-HAND VARIABLE CAMSHAFT TIMING (VCT) OIL CONTROL SOLENOID MALFUNCTION, CIRCUIT MALFUNCTION

G258127t140 : CHECK ECM TO VCT SOLENOID + CIRCUIT FOR HIGH RESISTANCE

1. Disconnect the battery negative terminal. 2. Disconnect the VCT electrical connector, PI16. 3. Disconnect the ECM electrical connector, PI01. 4. Measure the resistance between PI16, pin 01 (Y) and PI01, pin 109 (Y).

Is the resistance greater than 5 ohms?

-> Yes
REPAIR the high resistance circuit. For additional information, refer to the wiring diagrams. CLEAR the DTC. TEST the system for normal operation.

-> No
GO to Pinpoint Test G258127t141.

G258127t141 : CHECK ECM TO VCT SOLENOID + CIRCUIT FOR SHORT TO HIGH VOLTAGE

1. Reconnect the battery negative terminal. 2. Turn the ignition switch to the ON position. 3. Measure the voltage between PI16, pin 01 (Y) and GROUND.

www.JagDocs.com

Is the voltage greater than 3 volts?

-> Yes
REPAIR the short circuit to high voltage. For additional information, refer to the wiring diagrams.
CLEAR the DTC. TEST the system for normal operation.

-> No
GO to Pinpoint Test G258127t141.

G258127t142 : CHECK ECM TO VCT SOLENOID + CIRCUIT FOR SHORT TO GROUND

1. Turn the ignition switch to the OFF position. 2. Measure the resistance between PI16, pin 01 (Y) and GROUND.

Is the resistance less than 10,000 ohms?

-> Yes
REPAIR the short circuit to GROUND. For additional information, refer to the wiring diagrams. CLEAR the DTC. TEST the system for normal operation.

-> No
GO to Pinpoint Test G258127t143.

G258127t143 : CHECK VCT SOLENOID GROUND

1. Measure the resistance between PI16, pin 02 (B) and GROUND.

Is the resistance greater than 5 ohms?

-> Yes
REPAIR the high resistance circuit. For additional information, refer to the wiring diagrams. CLEAR the DTC. TEST the system for normal operation.

-> No
INSTALL a new VCT solenoid.
CLEAR the DTC. TEST the system for normal operation.

PINPOINT TEST G258127p30 : DTC P1396; LEFT-HAND VARIABLE CAMSHAFT TIMING (VCT) OIL

CONTROL SOLENOID MALFUNCTION, CIRCUIT MALFUNCTION

G258127t144 : CHECK ECM TO VCT SOLENOID + CIRCUIT FOR HIGH RESISTANCE

1. Disconnect the battery negative terminal. 2. Disconnect the VCT electrical connector, PI17. 3. Disconnect the ECM electrical connector, PI01. 4. Measure the resistance between PI17, pin 01 (YU) and PI01, pin 110 (YU).

Is the resistance greater than 5 ohms?

-> Yes
REPAIR the high resistance circuit. For additional information, refer to the wiring diagrams. CLEAR the DTC. TEST the system for normal operation.

-> No
GO to Pinpoint Test G258127t145.

G258127t145 : CHECK ECM TO VCT SOLENOID + CIRCUIT FOR SHORT TO HIGH VOLTAGE

1. Reconnect the battery negative terminal. 2. Turn the ignition switch to the ON position. 3. Measure the voltage between PI17, pin 01 (YU) and GROUND.

Is the voltage greater than 3 volts?

-> Yes
REPAIR the short circuit to high voltage. For additional information, refer to the wiring diagrams. CLEAR the DTC. TEST the system for normal operation.

-> No
GO to Pinpoint Test G258127t146.

G258127t146 : CHECK ECM TO VCT SOLENOID + CIRCUIT FOR SHORT TO GROUND

1. Turn the ignition switch to the OFF position. 2. Measure the resistance between PI17, pin 01 (YU) and GROUND.

Is the resistance less than 10,000 ohms?

-> Yes
REPAIR the short circuit to GROUND. For additional information, refer to the wiring diagrams. CLEAR the DTC. TEST the system for normal operation.

www.JagDocs.com

-> No
GO to Pinpoint Test G258127t147.

G258127t147 : CHECK VCT SOLENOID GROUND

1. Disconnect the battery negative terminal. 2. Measure the resistance between PI17, pin 02 (B) and GROUND.

Is the resistance greater than 5 ohms?

-> Yes
REPAIR the high resistance circuit. For additional information, refer to the wiring diagrams. CLEAR the DTC. TEST the system for normal operation.

-> No
INSTALL a new VCT solenoid.
CLEAR the DTC. TEST the system for normal operation.

PINPOINT TEST G258127p31 : DTC P1582; "FLIGHT RECORDER" DATA IS STORED IF ANY ONE OF FIVE CONDITIONS OCCUR

G258127t148 : CHECK THE INERTIA SWITCH TO ECM CIRCUIT FOR SHORT CIRCUIT TO B+ VOLTAGE

1. Make sure the inertia switch is not tripped. 2. Disconnect the inertia switch electrical connector, CR02. 3. Disconnect the ECM electrical connector, PI01. 4. Measure the voltage between PI01, pin 10 (GU) and GROUND.

Is the voltage greater than 3 volts?

-> Yes
REPAIR the short circuit to B+. For additional information, refer to the wiring diagrams. CLEAR the DTC. TEST the system for normal operation.

-> No
INSTALL a new inertia switch. CLEAR the DTC. CLEAR the flight recorder information. TEST the system for normal operation.

PINPOINT TEST G258127p32 : DTC P1606; EMS CONTROL RELAY MALFUNCTION

G258127t149 : CHECK THE EMS RELAY PERMANENT B+ SUPPLY

1. Remove the EMS relay. 2. Measure the voltage between the relay base, pins 02 and 03 and GROUND.

Are both voltages greater than 10 volts?

-> Yes
GO to Pinpoint Test G258127t151.

-> No
REPAIR the circuit between the relay base and battery. This circuit includes the high power protection module. For additional information, refer to the wiring diagrams. CLEAR the DTC. TEST the system for normal operation.

G258127t150 : CHECK THE EMS RELAY TO ECM CIRCUIT FOR HIGH RESISTANCE

1. Disconnect the battery negative terminal. 2. Disconnect the ECM electrical connector, PI01. 3. Measure the resistance between the relay base, pin 05 and PI01, pins 23 (WR) and 24 (WR).

Is either resistance greater than 5 ohms?

-> Yes
REPAIR the high resistance circuit. For additional information, refer to the wiring diagrams. CLEAR the DTC. TEST the system for normal operation.

-> No
GO to Pinpoint Test G258127t151.

G258127t151 : CHECK THE ECM TO EMS RELAY CONTROL CIRCUIT FOR HIGH RESISTANCE

1. Disconnect the battery negative terminal. 2. Disconnect the ECM electrical connector, PI01. 3. Measure the resistance between the relay base, pin 01 and PI01, pin 40 (U).

Is the resistance greater than 5 ohms?

-> Yes
REPAIR the high resistance circuit. For additional information, refer to the wiring diagrams. CLEAR the

www.JagDocs.com

DTC. TEST the system for normal operation.

-> No
INSTALL a new EMS relay. CLEAR the DTC. TEST the system for normal operation.

PINPOINT TEST G258127p33 : P0105, P1107, P1108; MANIFOLD ABSOLUTE PRESSURE (MAP) SENSOR SENSING CIRCUIT MALFUNCTION, HIGH/LOW VOLTAGE

G258127t152 : CHECK THE MAP SENSOR SENSING CIRCUIT FOR HIGH RESISTANCE

1. Disconnect the battery negative terminal. 2. Disconnect the MAP sensor electrical connector, PI29. 3. Disconnect the ECM electrical connector, PI01. 4. Measure the resistance between PI29, pin 01 (BK) and PI01, pin 127 (BK).

Is the resistance greater than 5 ohms?

-> Yes
REPAIR the high resistance circuit. For additional information, refer to the wiring diagrams. CLEAR the DTC. TEST the system for normal operation.

-> No
GO to Pinpoint Test G258127t153.

G258127t153 : CHECK THE MAP SENSOR SENSING CIRCUIT FOR SHORT TO HIGH VOLTAGE

1. Reconnect the battery negative terminal. 2. Measure the voltage between PI29, pin 01 (BK) and GROUND.

Is the voltage greater than 3 volts?

-> Yes
REPAIR the short to high voltage. For additional information, refer to the wiring diagrams. CLEAR the DTC. TEST the system for normal operation.

-> No
GO to Pinpoint Test G258127t154.

G258127t154 : CHECK THE MAP SENSOR SENSING CIRCUIT FOR SHORT TO GROUND

1. Measure the resistance between PI29, pin 01 (BK) and GROUND.

Is the resistance less than 10,000 ohms?

-> Yes

REPAIR the short to GROUND. For additional information, refer to the wiring diagrams. CLEAR the DTC. TEST the system for normal operation.

-> No

INSTALL a new MAP sensor.
CLEAR the DTC. TEST the system for normal operation. If the DTC is repeated, contact dealer technical support for advice on possible ECM failure.

PINPOINT TEST G258127p34 : DTC P0181, P0182, P0183; ENGINE FUEL TEMPERATURE (EFT) SENSOR RANGE/PERFORMANCE, LOW/HIGH VOLTAGE

G258127t155 : CHECK THE EFT SENSOR SENSING CIRCUIT FOR HIGH RESISTANCE

1. Disconnect the battery negative terminal. 2. Disconnect the EFT sensor electrical connector, IL09. 3. Disconnect the ECM electrical connector, PI01. 4. Measure the resistance between IL09, pin 01 (WU) and PI01, pin 50 (WU).

Is the resistance greater than 5 ohms?

-> Yes

REPAIR the high resistance circuit. For additional information, refer to the wiring diagrams. CLEAR the DTC. TEST the system for normal operation.

-> No

GO to Pinpoint Test G258127t156.

G258127t156 : CHECK THE EFT SENSOR SENSING CIRCUIT FOR SHORT TO HIGH VOLTAGE

1. Reconnect the battery negative terminal. 2. Turn the ignition switch to the ON position. 3. Measure the voltage between IL09, pin 01 (WU) and GROUND.

www.JagDocs.com

Is the voltage greater than 3 volts?

-> Yes
REPAIR the short circuit to high voltage. For additional information, refer to the wiring diagrams. CLEAR the DTC. TEST the system for normal operation.

-> No
GO to Pinpoint Test G258127t157.

G258127t157 : CHECK THE EFT SENSOR SENSING CIRCUIT FOR SHORT TO GROUND

1. Turn the ignition switch to the OFF position. 2. Measure the resistance between IL09, pin 01 (WU) and GROUND.

Is the resistance less than 10,000 ohms?

-> Yes
REPAIR the short circuit to GROUND. For additional information, refer to the wiring diagrams. CLEAR the DTC. TEST the system for normal operation.

-> No
INSTALL a new EFT sensor.
CLEAR the DTC. TEST the system for normal operation.

PINPOINT TEST G258127p35 : DTC P0532, P0533; AIR CONDITIONING PRESSURE SENSOR CIRCUIT LOW/HIGH VOLTAGE

G258127t158 : CHECK THE A/C PRESSURE SENSOR SENSING CIRCUIT FOR HIGH RESISTANCE

1. Disconnect the battery negative terminal. 2. Disconnect the A/C pressure sensor electrical connector, EC11. 3. Disconnect the ECM electrical connector, PI01. 4. Measure the resistance between EC11, pin 02 (WU) and PI01, pin 121 (WU).

Is the resistance greater than 5 ohms?

-> Yes
REPAIR the high resistance circuit. For additional information, refer to the wiring diagrams. CLEAR the DTC. TEST the system for normal operation.

-> No

GO to Pinpoint Test G258127t159.

G258127t159 : CHECK THE A/C PRESSURE SENSOR SENSING CIRCUIT FOR SHORT TO HIGH VOLTAGE

1. Reconnect the ECM electrical connector, PI01. 2. Reconnect the battery negative terminal. 3. Turn the ignition switch to the ON position. 4. Measure the voltage between EC11, pin 02 (WU) and GROUND.

Is the voltage greater than 3 volts?

-> Yes
REPAIR the short circuit to high voltage. For additional information, refer to the wiring diagrams. CLEAR the DTC. TEST the system for normal operation.

-> No
GO to Pinpoint Test G258127t160.

G258127t160 : CHECK THE A/C PRESSURE SENSOR SENSING CIRCUIT FOR SHORT TO GROUND

1. Turn the ignition switch to the OFF position. 2. Measure the resistance between EC11, pin 02 (WU) and GROUND.

Is the resistance less than 10,000 ohms?

-> Yes
REPAIR the short circuit to GROUND. For additional information, refer to the wiring diagrams. CLEAR the DTC. TEST the system for normal operation.

-> No
INSTALL a new A/C pressure sensor.
Pressure Cutoff Switch - 4.2L NA V8 - AJV8/4.2L SC V8 - AJV8/3.0L NA V6 - AJ27/3.5L NA V8 - AJV8 (82.10.32)

PINPOINT TEST G258127p36 : P1251, P1631, P1657, P1658; THROTTLE MOTOR RELAY CONTROL CIRCUIT MALFUNCTION/OFF FAILURE/ON FAILURE

www.JagDocs.com

G258127t161 : CHECK THE THROTTLE MOTOR RELAY POWER SUPPLIES

1. Remove the throttle motor relay. 2. Turn the ignition switch to the ON position. 3. Measure the voltage between the relay base, pins 01 and 03 and GROUND.

Is either voltage less than 10 volts?

-> Yes
REPAIR the circuit between the relay base and battery. This circuit includes the front power distribution box (fuse 14). For additional information, refer to the wiring diagrams. CLEAR the DTC. TEST the system for normal operation.

-> No
GO to Pinpoint Test G258127t162.

G258127t162 : CHECK THE THROTTLE MOTOR RELAY COIL DRIVE CIRCUIT FROM THE ECM FOR HIGH RESISTANCE

1. Turn the ignition switch to the OFF position. 2. Disconnect the battery negative terminal. 3. Disconnect the ECM electrical connector, PI01. 4. Measure the resistance between the relay base, pin 02 and PI01, pin 52 (GR).

Is the resistance greater than 5 ohms?

-> Yes
REPAIR the high resistance circuit. For additional information, refer to the wiring diagrams. CLEAR the DTC. TEST the system for normal operation.

-> No
GO to Pinpoint Test G258127t163.

G258127t163 : CHECK THE THROTTLE MOTOR RELAY COIL DRIVE CIRCUIT FROM THE ECM FOR SHORT TO B +

1. Reconnect the battery negative terminal. 2. Measure the voltage between the relay base, pin 02 and GROUND.

Is the voltage greater than 3 volts?

-> Yes
REPAIR the short circuit. For additional information, refer to the wiring diagrams. CLEAR the DTC. TEST the system for normal operation.

-> No
GO to Pinpoint Test G258127t164.

G258127t164 : CHECK THE POWER SUPPLY CIRCUIT FROM THE RELAY BASE TO THE ECM FOR HIGH RESISTANCE

1. Measure the resistance between the relay base, pin 05 and PI01, pin 134 (GU).

Is the resistance greater than 5 ohms?

-> Yes

REPAIR the high resistance circuit. This circuit includes the front power distribution box (fuse 24). For additional information, refer to the wiring diagrams. CLEAR the DTC. TEST the system for normal operation.

-> No

GO to Pinpoint Test G258127t165.

G258127t165 : CHECK THE POWER SUPPLY CIRCUIT FROM THE RELAY BASE TO THE ECM FOR SHORT TO B +

1. Measure the voltage between the relay base, pin 05 and GROUND.

Is the voltage greater than 3 volts?

-> Yes

REPAIR the short circuit. For additional information, refer to the wiring diagrams. CLEAR the DTC. TEST the system for normal operation.

-> No

INSTALL a new throttle motor relay. CLEAR the DTC. TEST the system for normal operation.

PINPOINT TEST G258127p37 : P0096, P0097, P0098; INTAKE AIR TEMPERATURE (IAT) SENSOR 2 SENSING CIRCUIT RANGE/PERFORMANCE, HIGH/LOW VOLTAGE

G258127t166 : CHECK IAT SENSOR 2 SENSING CIRCUIT FOR HIGH RESISTANCE

1. Disconnect the battery negative terminal. 2. Disconnect the IAT sensor 2 electrical connector, PI43. 3. Disconnect the ECM electrical connector, PI01. 4. Measure the resistance between PI43, pin 01 (YU) and PI01, pin 72 (YU).

www.JagDocs.com

Is the resistance greater than 5 ohms?

-> Yes
REPAIR the high resistance circuit. For additional information, refer to the wiring diagrams. CLEAR the DTC. TEST the system for normal operation.

-> No
GO to Pinpoint Test G258127t167.

G258127t167 : CHECK IAT SENSOR 2 SENSING CIRCUIT FOR SHORT TO HIGH VOLTAGE

1. Reconnect the battery negative terminal. 2. Turn the ignition switch to the ON position. 3. Measure the voltage between PI43, pin 01 (YU) and GROUND.

Is the voltage greater than 3 volts?

-> Yes
REPAIR the short circuit to high voltage. For additional information, refer to the wiring diagrams. CLEAR the DTC. TEST the system for normal operation.

-> No
GO to Pinpoint Test G258127t168.

G258127t168 : CHECK IAT SENSOR 2 SENSING CIRCUIT FOR SHORT TO GROUND

1. Turn the ignition switch to the OFF position. 2. Measure the resistance between PI43, pin 01 (YU) and GROUND.

Is the resistance less than 10,000 ohms?

-> Yes
REPAIR the short circuit to GROUND. For additional information, refer to the wiring diagrams. CLEAR the DTC. TEST the system for normal operation.

-> No
INSTALL a new IATS 2.
CLEAR the DTC. TEST the system for normal operation.

PINPOINT TEST G258127p38 : P1410; AIR CLEANER SOLENOID VALVE DRIVE CIRCUIT MALFUNCTION

G258127t169 : CHECK THE POWER SUPPLY TO THE AIR CLEANER SOLENOID VALVE

1. Disconnect the air cleaner solenoid valve electrical connector, EC37. 2. Turn the ignition switch to the ON position. 3. Measure the voltage between EC37, pin 01 (GU) and GROUND.

Is the voltage greater than 10 volts?

-> Yes
GO to Pinpoint Test G258127t170.

-> No
REPAIR the circuit between the air cleaner solenoid valve and battery. This circuit includes the front power distribution box (fuse 14), the EMS relay, and the high power protection module. For additional information, refer to the wiring diagrams. CLEAR the DTC. TEST the system for normal operation.

G258127t170 : CHECK THE AIR CLEANER SOLENOID VALVE TO ECM CIRCUIT FOR HIGH RESISTANCE

1. Turn the ignition switch to the OFF position. 2. Disconnect the battery negative terminal. 3. Disconnect the ECM electrical connector, PI01. 4. Measure the resistance between EC37, pin 02 (U) and PI01, pin 14 (U).

Is the resistance greater than 5 ohms?

-> Yes
REPAIR the high resistance circuit. For additional information, refer to the wiring diagrams. CLEAR the DTC. TEST the system for normal operation.

-> No
GO to Pinpoint Test G258127t171.

G258127t171 : CHECK THE AIR CLEANER SOLENOID VALVE TO ECM CIRCUIT FOR SHORT TO HIGH VOLTAGE

1. Reconnect the battery negative terminal. 2. Turn the ignition switch to the ON position. 3. Measure the voltage between EC37, pin 02 (U) and GROUND.

Is the voltage greater than 3 volts?

-> Yes
REPAIR the short circuit to high voltage. For additional information, refer to the wiring diagrams. CLEAR the DTC. TEST the system for normal operation.

-> No

www.JagDocs.com

GO to Pinpoint Test G258127t172.

G258127t172 : CHECK THE AIR CLEANER SOLENOID VALVE TO ECM CIRCUIT FOR SHORT TO GROUND

1. Turn the ignition switch to the OFF position. 2. Measure the resistance between EC37, pin 02 (U) and GROUND.

Is the resistance less than 10,000 ohms?

-> Yes
REPAIR the short circuit to GROUND. For additional information, refer to the wiring diagrams. CLEAR the DTC. TEST the system for normal operation.

-> No
INSTALL a new air cleaner solenoid valve. CLEAR the DTC. TEST the system for normal operation.

PINPOINT TEST G258127p39 : DTC P1474; CHECK INTERCOOLER COOLANT PUMP FUNCTION

G258127t173 : CHECK POWER SUPPLY TO INTERCOOLER COOLANT PUMP

1. Disconnect the intercooler coolant pump electrical connector, CP02. 2. Turn the ignition switch to the ON position. 3. Make sure the EMS relay is energized. 4. Measure the voltage between CP02, pin 02 (NG) and GROUND.

Is the voltage less than 10 volts?

-> Yes
REPAIR the circuit between CP02, pin 02 and battery. This circuit includes the front power distribution box (fuse 31), the ignition relay, and the high power protection module. For additional information, refer to the wiring diagrams. CLEAR the DTC. TEST the system for normal operation.

-> No
GO to Pinpoint Test G258127t174.

G258127t174 : CHECK THE INTERCOOLER COOLANT PUMP GROUND

1. Measure the resistance between CP02, pin 01 (B) and GROUND.

Is the resistance greater than 5 ohms?

-> Yes
REPAIR the high resistance circuit. For additional information, refer to the wiring diagrams. TEST the

system for normal operation.

-> No
INSTALL a new intercooler coolant pump.
Water Pump CLEAR the DTC. TEST the system for normal operation.

www.JagDocs.com

Electronic Engine Controls - VIN Range: G45704->G99999

Overview

There are changes to the engine management system (EMS) for 2006 my, the most obvious of which will be the change to 7-digit diagnostic trouble codes (DTCs) from the familiar 5-digit, plus the addition of secondary air injection and changes to evaporative emissions and exhaust gas recirculation to comply with stage four emissions requirements.

For more information on these systems,
Electronic Engine Controls
Engine Emission Control - VIN Range: G45704->G99999
Evaporative Emissions - VIN Range: G45704->G99999

Inspection and Verification

1 . Verify the customer concern.

2 . Visually inspect for obvious signs of mechanical or electrical damage.

Visual Inspection Chart

Mechanical	Electrical
Engine oil level	Fuses
Cooling system coolant level	Wiring harness
Fuel level	Electrical connector(s)
Fuel contamination/grade/quality	Sensor(s)
Throttle body	Engine control module (ECM)
Poly-vee belt	Transmission control module

1 . If an obvious cause for an observed or reported concern is found, correct the cause (if possible) before proceeding to the next step

2 . If the cause is not visually evident, use the Jaguar approved diagnostic system or a scan tool to retrieve the fault codes before proceeding to the DTC Index, or the symptom chart if no DTCs are set.

Symptom Chart

Symptom (general)	Symptom (specific)	Possible source	Action

Non-Start	Engine does not crank	Security system /Immobilizer engaged Engine in shut-down mode ECM relay Battery Park/Neutral switch Starting system Harness Engine seized	Check that the security system is disarmed. Check for DTCS. For starting system, For ECM relay tests, GO to Pinpoint Test G531332p32. For battery information, Battery For Park/Neutral tests, External Controls For engine information, Engine
	Engine cranks, but does not fire	Engine breather system disconnected/restricted Ignition system Fuel system Harness Crankshaft position (CKP) sensor ECM fault	Check the engine breather system, Engine Emission Control - VIN Range: G45704->G99999 For ignition system tests, Engine Ignition - VIN Range: G45704->G99999 For fuel system tests, Fuel Charging and Controls - VIN Range: G45704->G99999 For CKP tests, GO to Pinpoint Test G531332p17. Refer to the warranty policy and procedures manual if an ECM is suspect.
	Engine cranks and fires, but will not start	Evaporative emissions purge valve Fuel pump Spark plugs Ignition coil failure(s) Harness	For purge valve tests, Evaporative Emissions - VIN Range: G45704->G99999 For fuel system tests, Fuel Charging and Controls - VIN Range: G45704->G99999 For ignition system tests, Engine Ignition - VIN Range: G45704->G99999
Difficult to start	Difficult to start cold	Check coolant anti-freeze content	For battery information, Battery For CKP sensor tests, GO to Pinpoint Test

www.JagDocs.com

		Battery CKP sensor Exhaust gas recirculation (EGR) valve stuck open Fuel pump Evaporative emissions purge valve	G531332p17. For EGR system tests, Engine Emission Control - VIN Range: G45704->G99999 For fuel system tests, Fuel Charging and Controls - VIN Range: G45704->G99999 For purge valve tests, Evaporative Emissions - VIN Range: G45704->G99999
	Difficult to start hot	Injector leak Engine fuel temperature (EFT) sensor Intake air temperature (IAT) sensor Mass air flow (MAF) sensor Evaporative emissions purge valve Fuel pump Ignition system	For fuel system tests, Fuel Charging and Controls - VIN Range: G45704->G99999 For EFT sensor tests, GO to Pinpoint Test G531332p34. For IAT sensor tests, GO to Pinpoint Test G531332p2. For MAF sensor tests, GO to Pinpoint Test G531332p1. For purge valve tests, Evaporative Emissions - VIN Range: G45704->G99999
	Difficult to start after hot soak (vehicle standing after engine has reached operating temperature)	Injector leak EFT sensor IAT sensor MAF sensor Evaporative emissions purge valve Fuel pump Ignition system	For fuel system tests, Fuel Charging and Controls - VIN Range: G45704->G99999 For EFT sensor tests, GO to Pinpoint Test G531332p34. For IAT sensor tests, GO to Pinpoint Test G531332p2. For MAF sensor tests, GO to Pinpoint Test G531332p1. For purge valve tests, Evaporative Emissions - VIN Range: G45704->G99999
	Engine cranks too fast/slow	Compressions high/low Battery Starting system	Check compressions, Engine For battery information, Battery For starting system tests,

Engine stalls	Engine stalls soon after start	Breather system disconnected/restricted ECM relay MAF sensor Ignition system Air filter restricted Fuel lines Fuel rail pressure (FRP) sensor Air leakage	Check the engine breather system, Engine Emission Control - VIN Range: G45704->G99999 For ECM relay tests, GO to Pinpoint Test G531332p32. For MAF sensor tests, GO to Pinpoint Test G531332p1. For ignition system tests, Engine Ignition - VIN Range: G45704->G99999 For air filter information, Intake Air Distribution and Filtering - VIN Range: G45704->G99999 For fuel system, Fuel Charging and Controls - VIN Range: G45704->G99999 For FRP sensor tests, GO to Pinpoint Test G531332p40. For intake system information, Intake Air Distribution and Filtering - VIN Range: G45704->G99999
	Engine stalls on overrun	ECM relay Throttle position (TP) sensors	For ECM relay tests, GO to Pinpoint Test G531332p32. For TP sensor tests, GO to Pinpoint Test G531332p4. and GO to Pinpoint Test G531332p5. For fuel system tests, Fuel Charging and Controls - VIN Range: G45704->G99999
	Engine stalls at steady speed	ECM relay CKP sensor TP sensors	For ECM relay tests, GO to Pinpoint Test G531332p32. For fuel system, Fuel Charging and Controls - VIN Range: G45704->G99999 For CKP sensor tests, GO to Pinpoint Test G531332p17. For TP sensor tests, GO to Pinpoint Test G531332p4. and GO to Pinpoint Test

www.JagDocs.com

			G531332p5.
	Engine stalls with speed control enabled	ECM relay	For ECM relay tests, GO to Pinpoint Test G531332p32.
	Engine stalls when maneuvering	ECM relay TP sensors Additional engine loads (PAS, air conditioning, etc) Transmission malfunction CAN malfunction	For ECM relay tests, GO to Pinpoint Test G531332p32. For TP sensor tests, GO to Pinpoint Test G531332p4. and GO to Pinpoint Test G531332p5. For accessory drive information, Accessory Drive Belt - 4.2L NA V8 - AJV8/4.2L SC V8 - AJV8/3.5L NA V8 - AJV8 (12.10.40) For transmission information, For CAN network tests,
Poor driveability	Engine hesitates/poor acceleration	Fuel pump Fuel lines Injector leak Fuel pressure Air leakage TP sensors Throttle motor Ignition system EGR valve stuck HO2 sensors Transmission malfunction Restricted pedal travel (carpet, etc) Accelerator pedal position (APP) sensor	For fuel pump and fuel line tests, Fuel Tank and Lines - 4.2L NA V8 - AJV8/4.2L SC V8 - AJV8/3.0L NA V6 - AJ27/3.5L NA V8 - AJV8, VIN Range: G45704->G99999 For injector tests, Fuel Charging and Controls - VIN Range: G45704->G99999 For intake system, Intake Air Distribution and Filtering - VIN Range: G45704->G99999 For TP sensor tests, GO to Pinpoint Test G531332p4. and GO to Pinpoint Test G531332p5. For throttle motor tests, GO to Pinpoint Test G531332p24. For ignition system tests, Engine Ignition - VIN Range: G45704->G99999 For EGR tests, Engine Emission Control - VIN Range: G45704->G99999 Check

			for DTCs relating to HO2 sensors, refer to the DTC index. For transmission information, Check the accelerator pedal travel. For APP sensor tests, GO to Pinpoint Test G531332p22. and GO to Pinpoint Test G531332p23.
	Engine backfires	Fuel pump Fuel lines Air leakage MAF sensor HO2 sensors Ignition system Sticking variable camshaft timing (VCT) hub APP sensor	For fuel pump and lines tests, Fuel Tank and Lines - 4.2L NA V8 - AJV8/4.2L SC V8 - AJV8/3.0L NA V6 - AJ27/3.5L NA V8 - AJV8, VIN Range: G45704->G99999 For intake system, Intake Air Distribution and Filtering - VIN Range: G45704->G99999 For MAF sensor tests, GO to Pinpoint Test G531332p1. Check for DTCs relating to HO2 sensors, refer to the DTC index. For ignition system, Engine Ignition - VIN Range: G45704->G99999 For VCT information, Engine For APP sensor tests, GO to Pinpoint Test G531332p22. and GO to Pinpoint Test G531332p23.
	Engine surges	Fuel pump Fuel lines MAF sensor Harness TP sensors Throttle motor Ignition system	Check the fuel pressure and fuel lines. Fuel Tank and Lines - 4.2L NA V8 - AJV8/4.2L SC V8 - AJV8/3.0L NA V6 - AJ27/3.5L NA V8 - AJV8, VIN Range: G45704->G99999 For MAF sensor tests, GO to Pinpoint Test G531332p1. For TP sensor tests, GO to Pinpoint Test G531332p4. and GO to Pinpoint Test G531332p5. For throttle motor tests, GO to

www.JagDocs.com

			Pinpoint Test G531332p24. For ignition system, Engine Ignition - VIN Range: G45704->G99999
	Engine detonates/knocks	Knock sensor (KS)/circuit malfunction Fuel pump Fuel lines Fuel quality FRP sensor MAF sensor HO2 sensors Air leakage Sticking VCT hub BARO sensor malfunction (internal ECM fault)	For KS circuit tests, GO to Pinpoint Test G531332p15. and GO to Pinpoint Test G531332p16. Check the fuel pressure and fuel lines. Fuel Tank and Lines - 4.2L NA V8 - AJV8/4.2L SC V8 - AJV8/3.0L NA V6 - AJ27/3.5L NA V8 - AJV8, VIN Range: G45704->G99999 For FRP sensor tests, GO to Pinpoint Test G531332p40. For MAF sensor tests, GO to Pinpoint Test G531332p1. Check for DTCs relating to HO2 sensors, refer to the DTC index. For intake system, Intake Air Distribution and Filtering - VIN Range: G45704->G99999 Check DTCs for VCT range/performance fault. For VCT information, Engine Refer to the warranty policy and procedures manual if an ECM is suspect.
	No throttle response	APP sensor malfunction TP sensors Throttle motor	GO to Pinpoint Test G531332p4. and GO to Pinpoint Test G531332p5. For TP sensor tests, GO to Pinpoint Test G531332p4. and GO to Pinpoint Test G531332p5. For throttle motor tests, GO to Pinpoint Test G531332p24.
	Speed control inhibited or disabled	Default mode enabled	Check message center for default message. For speed control switches,

		Speed control switch TP sensors Brake pedal switch switch CAN fault	Speed Control - VIN Range: G45704->G99999 For TP sensor tests, GO to Pinpoint Test G531332p4. and GO to Pinpoint Test G531332p5. For brake pedal switch tests, GO to Pinpoint Test G531332p42. For CAN tests,
	Poor throttle response	APP sensor malfunction TP sensors ECT sensor MAF sensor Transmission malfunction Traction control event Air leakage Breather system disconnected/restricted	For APP sensor tests, GO to Pinpoint Test G531332p22. and GO to Pinpoint Test G531332p23. For TP sensor tests, GO to Pinpoint Test G531332p4. and GO to Pinpoint Test G531332p5. For ECT sensor tests, GO to Pinpoint Test G531332p3. For MAF sensor tests, GO to Pinpoint Test G531332p1. For transmission information. For intake system, Intake Air Distribution and Filtering - VIN Range: G45704->G99999 For breather system information,
	Engine defaults, warning light and messages. Refer to the owner handbook	Park/Neutral switch TP sensors MAF sensor ECT sensor Harness	For Park/Neutral tests, External Controls For TP sensor tests, GO to Pinpoint Test G531332p4. and GO to Pinpoint Test G531332p5. For MAF sensor tests, GO to Pinpoint Test G531332p1. For ECT sensor tests, GO to Pinpoint Test G531332p3.

www.JagDocs.com

DTC index

NOTE:

Generic scan tools may not read the codes listed, or may read only 5-digit codes. Match the 5 digits from the scan tool to the first 5 digits of the 7-digit code listed to identify the fault (the last 2 digits give extra information read by the manufacturer-approved diagnostic system).

DTC	Description	Possible causes	Action
C003100	Left front wheel speed sensor	Invalid data received from ABS: left front wheel speed signal	Anti-Lock Control - Stability Assist - VIN Range: G45704->G99999
C003400	Right front wheel speed sensor	Invalid data received from ABS: right front wheel speed signal	Anti-Lock Control - Stability Assist - VIN Range: G45704->G99999
C003700	Left rear wheel speed sensor	Invalid data received from ABS: left rear wheel speed signal	Anti-Lock Control - Stability Assist - VIN Range: G45704->G99999
C003A00	Right rear wheel speed sensor	Invalid data received from ABS: right rear wheel speed signal	Anti-Lock Control - Stability Assist - VIN Range: G45704->G99999
P001100	Intake (A) camshaft position timing - over-advanced (right hand bank)	Cam timing has not been set up correctly Timing chain has slipped	Check the engine timing. Timing Drive Components - VIN Range: G45704->G99999 (12.65.13)
P001200	Intake (A) camshaft position timing - over-retarded (right hand bank)	Cam timing has not been set up correctly Timing chain has slipped	Check the engine timing. Timing Drive Components - VIN Range: G45704->G99999 (12.65.13)
P001600	Crankshaft position (CKP)/Camshaft position	The relative positions of the CKP and CMP teeth are not correct Sensors	Reset the sensor positions.

	(CMP) sensor correlation, right hand bank	incorrectly aligned on rebuild	Camshaft Position (CMP) Sensor LH (18.31.12) Camshaft Position (CMP) Sensor RH (18.31.11) Crankshaft Position (CKP) Sensor (18.30.12)
P001800	Crankshaft position (CKP)/Camshaft position (CMP) sensor correlation, left hand bank	The relative positions of the CKP and CMP teeth are not correct Sensors incorrectly aligned on rebuild	Reset the sensor positions. Camshaft Position (CMP) Sensor LH (18.31.12) Camshaft Position (CMP) Sensor RH (18.31.11) Crankshaft Position (CKP) Sensor (18.30.12)
P002100	Intake camshaft position timing - over-advanced (left hand bank)	Cam timing has not been set up correctly Timing chain has slipped	Check the engine timing. Timing Drive Components - VIN Range: G45704->G99999 (12.65.13)
P002200	Intake camshaft position timing - over-retarded (left hand bank)	Cam timing has not been set up correctly Timing chain has slipped	Check the engine timing. Timing Drive Components - VIN Range: G45704->G99999 (12.65.13)
P002672	Variable camshaft timing (VCT) control solenoid circuit range/performance (right hand bank) - actuator stuck open	Oil contamination VCT oil flow fault VCT solenoid fault VCT/Camshaft mechanical failure	Check the oil condition and flow. For right hand bank VCT solenoid circuit tests, GO to Pinpoint Test G531332p29.
P002677	Variable camshaft timing (VCT) control solenoid circuit range/performance (right hand bank) - commanded position not reachable	Oil contamination VCT oil flow fault VCT solenoid fault VCT/Camshaft mechanical failure	Check the oil condition and flow. For right hand bank VCT solenoid circuit tests, GO to Pinpoint Test G531332p29.
P002872	Variable camshaft timing (VCT) control solenoid circuit	Oil contamination	Check the oil condition and flow. For left hand

www.JagDocs.com

	range/performance (left hand bank) - actuator stuck open	VCT oil flow fault VCT solenoid fault VCT/Camshaft mechanical failure	bank VCT solenoid circuit tests, GO to Pinpoint Test G531332p30.
P002877	Variable camshaft timing (VCT) control solenoid circuit range/performance (left hand bank) - commanded position not reachable	Oil contamination VCT oil flow fault VCT solenoid fault VCT/Camshaft mechanical failure	Check the oil condition and flow. For left hand bank VCT solenoid circuit tests, GO to Pinpoint Test G531332p30.
P003100	HO2S heater control circuit low (right hand bank)	HO2S heater power supply circuit: open circuit HO2S heater control circuit: high resistance HO2S heater ground circuit(s) fault HO2S heater failure	For right hand bank HO2S heater circuit tests, GO to Pinpoint Test G531332p7.
P003200	HO2S heater control circuit high (right hand bank)	HO2S heater power supply circuit: open circuit HO2S heater control circuit: high resistance HO2S heater ground circuit(s) fault HO2S heater failure	For right hand bank HO2S heater circuit tests, GO to Pinpoint Test G531332p7.
P003600	Catalyst monitor heater control circuit (right hand bank)	Catalyst monitor sensor heater control circuit: short circuit to ground Catalyst monitor sensor heater control circuit: high resistance Catalyst monitor sensor heater failure	For right hand bank catalyst monitor heater circuit tests, GO to Pinpoint Test G531332p9.
P005100	HO2S heater control circuit low (left hand bank)	HO2S heater power supply circuit: open circuit HO2S heater control circuit:	For left hand bank HO2S heater circuit tests, GO to Pinpoint Test G531332p11.

		high resistance HO2S heater ground circuit(s) fault HO2S heater failure	
P005200	HO2S heater control circuit high (left hand bank)	HO2S heater power supply circuit: open circuit HO2S heater control circuit: high resistance HO2S heater ground circuit(s) fault HO2S heater failure	For left hand bank HO2S heater circuit tests, GO to Pinpoint Test G531332p11.
P005600	Catalyst monitor heater control circuit (left hand bank)	Catalyst monitor sensor heater control circuit: short circuit to ground Catalyst monitor sensor heater control circuit: high resistance Catalyst monitor sensor heater failure	For left hand bank catalyst monitor heater circuit tests, GO to Pinpoint Test G531332p12.
P006900	Manifold absolute pressure (MAP) - Barometric pressure correlation	MAP sensor failure BARO sensor failure (internal ECM fault)	For MAP sensor circuit tests, vehicles without supercharger, GO to Pinpoint Test G531332p33. For MAP sensor circuit tests, vehicles with supercharger, GO to Pinpoint Test G531332p36. Refer to the warranty policy and procedure manual if an ECM is suspect.
P007100	Ambient air temperature sensor range/performance	Ambient temperature value missing from CAN bus	Control Components
P007200	Ambient air temperature sensor circuit low	Ambient air temperature sensor circuit: high	Control Components

www.JagDocs.com

		resistance Ambient air temperature sensor circuit: short circuit to ground	
P007300	Ambient air temperature sensor circuit high	Ambient air temperature sensor circuit: short circuit to power	Control Components
P007500	Variable camshaft timing (VCT) control circuit (right hand bank)	VCT solenoid valve disconnected VCT solenoid valve to ECM PWM drive circuit: high resistance VCT solenoid failure	For right hand bank VCT solenoid circuit tests, GO to Pinpoint Test G531332p29.
P007600	Variable camshaft timing (VCT) control circuit low (right hand bank)	VCT solenoid valve disconnected VCT solenoid valve to ECM PWM drive circuit: short circuit to ground VCT solenoid failure	For right hand bank VCT solenoid circuit tests, GO to Pinpoint Test G531332p29.
P007700	Variable camshaft timing (VCT) control circuit high (right hand bank)	VCT solenoid valve disconnected VCT solenoid valve to ECM PWM drive circuit: short circuit to power VCT solenoid failure	For right hand bank VCT solenoid circuit tests, GO to Pinpoint Test G531332p29.
P008100	Variable camshaft timing (VCT) control circuit (left hand bank)	VCT solenoid valve disconnected VCT solenoid valve to ECM PWM drive circuit: high resistance VCT solenoid failure	For left hand bank VCT solenoid circuit tests, GO to Pinpoint Test G531332p30.
P008200	Variable camshaft timing (VCT) control circuit low (left hand bank)	VCT solenoid valve disconnected VCT solenoid valve to ECM PWM drive circuit: short circuit to ground VCT solenoid failure	For left hand bank VCT solenoid circuit tests, GO to Pinpoint Test G531332p30.

P008300	Variable camshaft timing (VCT) control circuit high (left hand bank)	VCT solenoid valve disconnected VCT solenoid valve to ECM PWM drive circuit: short circuit to power VCT solenoid failure	For left hand bank VCT solenoid circuit tests, GO to Pinpoint Test G531332p30.
P008700	Fuel rail/system pressure - too low	Fuel rail pressure (FRP) sensor disconnected Fuel rail pressure (FRP) sensor to ECM sensing circuit: open circuit or short circuit to ground Fuel rail pressure (FRP) sensor supply circuit: high resistance Fuel rail pressure (FRP) sensor failure Fuel pump failure Fuel line leak Restricted fuel line	For FRP sensor circuit tests, GO to Pinpoint Test G531332p40. For fuel pump circuit and fuel line tests, Fuel Tank and Lines - 4.2L NA V8 - AJV8/4.2L SC V8 - AJV8/3.0L NA V6 - AJ27/3.5L NA V8 - AJV8, VIN Range: G45704->G99999
P008800	Fuel rail/system pressure - too high	FRP sensor to ECM wiring (supply/sense): short circuit to each other FRP sensor to ECM sense circuit: short circuit to high voltage FRP sensor ground circuit: high resistance FRP sensor failure Restricted fuel line Fuel pump short circuit to battery	For FRP sensor circuit tests, GO to Pinpoint Test G531332p40. and GO to Pinpoint Test G531332p25. For fuel pump circuit and fuel line tests, Fuel Tank and Lines - 4.2L NA V8 - AJV8/4.2L SC V8 - AJV8/3.0L NA V6 - AJ27/3.5L NA V8 - AJV8, VIN Range: G45704->G99999
P009700	Manifold absolute pressure/temperature (MAPT) sensor intake air	MAPT intake air temperature sensor circuit: short circuit to ground MAPT intake air temperature	For MAPT intake air temperature sensor tests, GO to Pinpoint

www.JagDocs.com

	temperature low input	sensor circuit: high resistance	Test G531332p37.
P009800	Manifold absolute pressure/temperature (MAPT) sensor intake air temperature high input	MAPT intake air temperature sensor circuit: short circuit to power	For MAPT intake air temperature sensor tests, GO to Pinpoint Test G531332p37.
P010100	Mass or volume air flow A circuit range/performance	Blocked air cleaner Air intake leak Engine breather leak Mass air flow (MAF) sensor to ECM sensing circuit: high resistance, intermittent short circuit to ground MAF sensor supply circuit: high resistance Throttle adaption fault (check throttle position voltage at Ignition ON)	For intake system information, Intake Air Distribution and Filtering - VIN Range: G45704->G99999 Check the engine breather system, Engine Emission Control - VIN Range: G45704->G99999 For MAF sensor circuit tests, GO to Pinpoint Test G531332p1.
P010200	Mass or volume air flow A circuit low input	MAF sensor supply circuit: high resistance, short circuit to ground MAF sensor ground circuit: high resistance MAF sensor failure	For MAF sensor circuit tests, GO to Pinpoint Test G531332p1. and GO to Pinpoint Test G531332p26.
P010300	Mass or volume air flow A circuit high input	MAF sensor to ECM sensing circuit: short circuit to battery MAF sensor to ECM sensor ground circuit: high resistance MAF sensor failure	For MAF sensor circuit tests, GO to Pinpoint Test G531332p1. and GO to Pinpoint Test G531332p26.
P010600	Manifold absolute pressure (MAP)/BARO sensor range/performance	Intake manifold air leak (loose or missing component) MAP sensor to ECM circuit(s) fault Throttle adaption fault (check	For intake system information, Intake Air Distribution and Filtering - VIN Range: G45704->G99999 For MAP sensor circuit tests, vehicles without

		throttle position voltage at Ignition ON) MAP sensor failure	supercharger, GO to Pinpoint Test G531332p33. For MAP sensor circuit tests, vehicles with supercharger, GO to Pinpoint Test G531332p36.
P010700	Manifold absolute pressure (MAP)/BARO sensor low input	MAP sensor to ECM circuit: high resistance, short circuit to ground MAP sensor sensor supply circuit: open circuit MAP sensor failure	For MAP sensor circuit tests, vehicles without supercharger, GO to Pinpoint Test G531332p33. For MAP sensor circuit tests, vehicles with supercharger, GO to Pinpoint Test G531332p36.
P010800	Manifold absolute pressure (MAP)/BARO sensor high input	MAP sensor sensor ground circuit: high resistance MAP sensor to ECM sense circuit: short circuit to high voltage MAP sensor failure	For MAP sensor circuit tests, vehicles without supercharger, GO to Pinpoint Test G531332p33. For MAP sensor circuit tests, vehicles with supercharger, GO to Pinpoint Test G531332p36.
P011123	Intake air temperature (IAT) sensor circuit range/performance - signal stuck low	IAT sensor to ECM wiring: high resistance IAT sensor failure	For IAT sensor circuit tests, GO to Pinpoint Test G531332p2.
P011124	Intake air temperature (IAT) sensor circuit range/performance - signal stuck high	IAT sensor to ECM wiring: high resistance IAT sensor failure	For IAT sensor circuit tests, GO to Pinpoint Test G531332p2.
P011129	Intake air temperature (IAT) sensor circuit range/performance - signal	IAT sensor to ECM wiring: high resistance IAT sensor failure	For IAT sensor circuit tests, GO to Pinpoint Test G531332p2.

www.JagDocs.com

	invalid		
P011200	Intake air temperature (IAT) sensor circuit low input	IAT sensor disconnected IAT sensor to ECM wiring: high resistance IAT sensor failure	For IAT sensor circuit tests, GO to Pinpoint Test G531332p2.
P011300	Intake air temperature (IAT) sensor circuit high input	IAT sensor to ECM wiring: short circuit to ground IAT sensor to ECM sensing circuit: short circuit to battery IAT sensor failure	For IAT sensor circuit tests, GO to Pinpoint Test G531332p2.
P011623	Engine coolant temperature (ECT) sensor circuit range/performance - signal stuck low	Low coolant level ECT sensor to ECM sensing circuit: intermittent high resistance Engine thermostat failure ECT sensor failure	Check the coolant level, etc. For ECT sensor circuit tests, GO to Pinpoint Test G531332p3.
P011624	Engine coolant temperature (ECT) sensor circuit range/performance - signal stuck high	Low coolant level ECT sensor to ECM sensing circuit: intermittent high resistance Engine coolant thermostat failure ECT sensor failure	Check the coolant level, etc. For ECT sensor circuit tests, GO to Pinpoint Test G531332p3.
P011629	Engine coolant temperature (ECT) sensor circuit range/performance - signal invalid	Low coolant level ECT sensor to ECM sensing circuit: intermittent high resistance Engine coolant thermostat failure ECT sensor failure	Check the coolant level, etc. For ECT sensor circuit tests, GO to Pinpoint Test G531332p3.
P011700	Engine coolant temperature (ECT) sensor circuit low input	ECT sensor disconnected ECT sensor to ECM sensing circuit: high resistance,	For ECT sensor circuit tests, GO to Pinpoint Test G531332p3.

		open circuit, short circuit to battery ECT sensor failure	
P011800	Engine coolant temperature (ECT) sensor 1 circuit high input	Engine overheat condition/cooling fan failure ECT sensor to ECM wiring: short circuit to ground ECT sensor failure	For cooling fan circuit tests, GO to Pinpoint Test G531332p19. For ECT sensor circuit tests, GO to Pinpoint Test G531332p3.
P012100	Throttle position (TP) sensor circuit range/performance, circuit 1 and 2	TP sensor to ECM wiring: high resistance TP sensor to ECM sensing circuits: (TP 1 or TP 2) short circuit to battery TP sensor failure	For throttle position sensor circuit 1 tests, GO to Pinpoint Test G531332p4. For throttle position sensor circuit 2 tests, GO to Pinpoint Test G531332p5.
P012200	Throttle position (TP) sensor circuit 1 low input	TP sensor to ECM sensing circuit 1: short circuit to ground, high resistance TP sensor failure	For throttle position sensor circuit 1 tests, GO to Pinpoint Test G531332p4.
P012300	Throttle position (TP) sensor circuit 1 low input	TP sensor to ECM sensing circuit (TP1): short circuit to high voltage TP sensor failure	For throttle position sensor circuit 1 tests, GO to Pinpoint Test G531332p4.
P012500	Insufficient coolant temp for closed loop fuel control	Low coolant level ECT sensor to ECM sensing circuit: intermittent high resistance Engine thermostat failure ECT sensor failure	Check the coolant level, etc. For ECT sensor circuit tests, GO to Pinpoint Test G531332p3.
P012800	Coolant thermostat (coolant temp below thermostat regulating temperature)	Contaminated coolant Engine coolant thermostat failure ECT sensor failure ECT sensor DTC may also be flagged	Check the coolant level, etc. Check the thermostat condition and function. Check for ECT sensor DTCs.

www.JagDocs.com

P01311A	H02 sensor circuit low voltage (right hand bank)	H02S disconnected H02S to ECM variable current circuit fault ECM to HO2S constant current circuit fault H02S failure	For right hand bank HO2 sensor circuit tests, GO to Pinpoint Test G531332p6.
P01321B	H02 sensor circuit high voltage (right hand bank)	H02S disconnected H02S to ECM variable current circuit fault ECM to HO2S constant current circuit fault H02S failure	For right hand bank HO2 sensor circuit tests, GO to Pinpoint Test G531332p6.
P013300	HO2 sensor circuit slow response (right hand bank)	HO2S to ECM wiring shield high resistance Exhaust leak Fuel control system fault HO2 sensor failure	For right hand bank HO2 sensor circuit tests, GO to Pinpoint Test G531332p6.
P013400	HO2 sensor circuit no activity detected (right hand bank)	HO2S slow activation	For right hand bank HO2 sensor circuit tests, GO to Pinpoint Test G531332p6.
P013700	Catalyst monitor circuit low voltage (right hand bank)	Catalyst monitor sensor disconnected Catalyst monitor sensor to ECM wiring: high resistance Catalyst monitor sensor: short circuit to ground Catalyst monitor sensor failure	For right hand bank catalyst monitor circuit tests, GO to Pinpoint Test G531332p8.
P013800	Catalyst monitor circuit high voltage (right hand bank)	Catalyst monitor sensor sensing circuit: short circuit to power Catalyst monitor sensor ground braided shield:	For right hand bank catalyst monitor circuit tests, GO to Pinpoint Test G531332p8.

		high resistance Catalyst monitor sensor failure	
P013900	Catalyst monitor sensor circuit slow response (right hand bank)	Catalyst monitor sensor slow response	For right hand bank catalyst monitor circuit tests, GO to Pinpoint Test G531332p8.
P014000	Catalyst monitor circuit no activity detected (right hand bank)	Catalyst monitor disconnected Catalyst monitor mechanical damage Catalyst monitor to ECM wiring: high resistance Catalyst monitor sensing circuit: short circuit to power Catalyst monitor: short circuit to ground Catalyst monitor ground (BRD braided shield) high resistance	For right hand bank catalyst monitor circuit tests, GO to Pinpoint Test G531332p8.
P014100	Catalyst monitor heater circuit (right hand bank)	Catalyst monitor sensor heater control circuit: high resistance Catalyst monitor sensor heater failure	For right hand bank catalyst monitor circuit tests, GO to Pinpoint Test G531332p8.
P01511A	H02 sensor circuit low voltage (left hand bank) - circuit resistance below threshold	HO2 sensing circuit: short circuit to ground, short circuit to high voltage, high resistance HO2S failure	For left hand bank HO2S circuit tests, GO to Pinpoint Test G531332p10.
P01521B	H02 sensor circuit low voltage (left hand bank) - circuit resistance above threshold	H02S sensing circuit: short circuit to ground, short circuit to high voltage, high resistance H02S failure	For left hand bank HO2S circuit tests, GO to Pinpoint Test G531332p10.
P015300	H02S circuit slow response	H02S to ECM wiring shield	For left hand bank HO2S circuit tests, GO to

www.JagDocs.com

	(left hand bank)	high resistance Exhaust leak Fuel control system fault H02S failure	Pinpoint Test G531332p10.
P015400	H02S circuit no activity detected (left hand bank)	H02S slow activation	For left hand bank HO2S circuit tests, GO to Pinpoint Test G531332p10.
P015700	Catalyst monitor sensor circuit low voltage (left hand bank)	Catalyst monitor sensor disconnected Catalyst monitor sensor to ECM wiring high resistance Catalyst monitor sensor short circuit to ground Fuel control system lean fault Catalyst monitor sensor failure	For left hand bank catalyst monitor circuit tests, GO to Pinpoint Test G531332p14.
P015800	Catalyst monitor sensor circuit high voltage (left hand bank)	Catalyst monitor sensor sensing circuit: short circuit to high voltage Catalyst monitor sensor ground (BRD braided shield) high resistance Catalyst monitor sensor failure	For left hand bank catalyst monitor circuit tests, GO to Pinpoint Test G531332p14.
P015900	Catalyst monitor sensor circuit slow response (left hand bank)	Catalyst monitor sensor slow response	For left hand bank catalyst monitor circuit tests, GO to Pinpoint Test G531332p14.
P016000	Catalyst monitor sensor circuit no activity detected (left hand bank)	Catalyst monitor sensor disconnected Catalyst monitor sensor mechanical damage Catalyst monitor sensor to	For left hand bank catalyst monitor circuit tests, GO to Pinpoint Test G531332p14.

		ECM wiring high resistance Catalyst monitor sensor sensing circuit: short circuit to high voltage Catalyst monitor sensor short circuit to ground Catalyst monitor sensor ground (BRD braided shield) high resistance	
P016100	Catalyst monitor sensor heater circuit (left hand bank)	Catalyst monitor sensor heater control circuit malfunction	For left hand bank catalyst monitor circuit tests, GO to Pinpoint Test G531332p14.
P017100	System too lean (right hand bank)	Air intake leak between MAF sensor and cylinder head Fuel filter/system restriction Fuel injector restriction MAF sensor fault (low intake air flow) Exhaust leak (before catalyst)	For intake system information, Intake Air Distribution and Filtering - VIN Range: G45704->G99999 For fuel line and fuel pressure tests, Fuel Tank and Lines - 4.2L NA V8 - AJV8/4.2L SC V8 - AJV8/3.0L NA V6 - AJ27/3.5L NA V8 - AJV8, VIN Range: G45704->G99999 For fuel injector information, Fuel Injectors (18.10.02) For MAF sensor circuit tests, GO to Pinpoint Test G531332p1. Check the exhaust system (before catalyst) for condition and security,
P017200	System too rich (right hand bank)	Restricted air filter Leaking fuel injector(s)	For intake system information, Intake Air Distribution and Filtering - VIN Range:

www.JagDocs.com

		Oil contaminated with fuel (too many cold starts with vehicle subsequently not getting hot enough for long enough) MAF sensor fault (high intake air flow)	G45704->G99999 For fuel injector information, Fuel Injectors (18.10.02) Check oil condition, if contamination is present, renew engine oil and filter. For MAF sensor circuit tests, GO to Pinpoint Test G531332p1.
P017400	System too lean (left hand bank)	Air intake leak between MAF sensor and cylinder head Fuel filter/system restriction Fuel injector restriction MAF sensor fault (low intake air flow) Exhaust leak (before catalyst)	For intake system information, Intake Air Distribution and Filtering - VIN Range: G45704->G99999 For fuel line and pressure tests, Fuel Tank and Lines - 4.2L NA V8 - AJV8/4.2L SC V8 - AJV8/3.0L NA V6 - AJ27/3.5L NA V8 - AJV8, VIN Range: G45704->G99999 For fuel injector information, Fuel Injectors (18.10.02) For MAF sensor circuit tests, GO to Pinpoint Test G531332p1. Check the exhaust system (before catalyst) for condition and security,
P017500	System too rich (left hand bank)	Restricted air filter Leaking fuel injector(s) Oil contaminated with fuel (too many cold starts with vehicle subsequently not getting hot enough for long enough) MAF sensor fault (high intake	For intake system information, Intake Air Distribution and Filtering - VIN Range: G45704->G99999 For fuel injector information, Fuel Injectors (18.10.02) Check oil condition, if contamination is present,

		air flow)	renew engine oil and filter. For MAF sensor circuit tests, GO to Pinpoint Test G531332p1.
P018123	Engine fuel temperature (EFT) sensor A circuit range/performance - signal stuck low	EFT sensor to ECM sensing circuit: high resistance, short circuit to ground, short circuit to high voltage EFT sensor ground circuit: high resistance EFT sensor failure	For EFT sensor circuit tests, GO to Pinpoint Test G531332p34.
P018124	Engine fuel temperature (EFT) sensor circuit range/performance - signal stuck high	EFT sensor to ECM sensing circuit: high resistance, short circuit to ground, short circuit to high voltage EFT sensor ground circuit: high resistance EFT sensor failure	For EFT sensor circuit tests, GO to Pinpoint Test G531332p34.
P018129	Engine fuel temperature (EFT) sensor A circuit range/performance - signal invalid	EFT sensor to ECM sensing circuit: high resistance, short circuit to ground, short circuit to high voltage EFT sensor ground circuit: high resistance EFT sensor failure	For EFT sensor circuit tests, GO to Pinpoint Test G531332p34.
P018200	Engine fuel temperature (EFT) sensor circuit low input	EFT sensor to ECM sensing circuit: short circuit to ground EFT sensor to splice sensor ground circuit: short circuit EFT sensor failure	For EFT sensor circuit tests, GO to Pinpoint Test G531332p34.
P018300	Engine fuel temperature (EFT) sensor circuit high input	EFT sensor disconnected EFT sensor to ECM sensing circuit: high resistance,	For EFT sensor circuit tests, GO to Pinpoint

www.JagDocs.com

		short circuit to high voltage EFT sensor to splice sensor ground circuit: high resistance EFT sensor failure	Test G531332p34.
P019100	Fuel rail pressure (FRP) sensor circuit range/performance	FRP sensor range and performance	For FRP sensor circuit tests, GO to Pinpoint Test G531332p40.
P019200	Fuel rail pressure (FRP) sensor circuit low input	FRP sensor disconnected FRP sensor to ECM sensing circuit: high resistance or short circuit to ground FRP sensor to supply circuit: high resistance FRP sensor failure	For FRP sensor circuit tests, GO to Pinpoint Test G531332p40.
P019300	Fuel rail pressure (FRP) sensor circuit high input	FRP sensor to ECM wiring (supply, sense): short circuit to each other FRP sensor to ECM sense circuit: short circuit to high voltage FRP sensor ground circuit: high resistance FRP sensor failure	For FRP sensor circuit tests, GO to Pinpoint Test G531332p40.
P019623	Engine oil temperature (EOT) sensor circuit range/performance - signal stuck low	EOT sensor to ECM sensing circuit: intermittent high resistance EOT sensor failure	For EOT sensor circuit tests, GO to Pinpoint Test G531332p13.
P019624	Engine oil temperature (EOT) sensor circuit range/performance - signal stuck high	EOT sensor to ECM sensing circuit: intermittent high resistance EOT sensor failure	For EOT sensor circuit tests, GO to Pinpoint Test G531332p13.
P019629	Engine oil temperature (EOT) sensor circuit range/performance - signal	EOT sensor to ECM sensing circuit: intermittent high resistance	For EOT sensor circuit tests, GO to Pinpoint Test G531332p13.

	invalid	EOT sensor failure	
P019700	Engine oil temperature (EOT) sensor circuit low input	EOT sensor to ECM sensing circuit: short circuit to ground EOT sensor failure	For EOT sensor circuit tests, GO to Pinpoint Test G531332p13.
P019800	Engine oil temperature (EOT) sensor circuit high input	EOT sensor disconnected EOT sensor to ECM sensing circuit: high resistance, short circuit to battery EOT sensor failure	For EOT sensor circuit tests, GO to Pinpoint Test G531332p13.
P020100	Cylinder 1 injector circuit/open	Injector disconnected Injector harness wiring: high resistance, short circuit to ground Injector failure	For injector circuit tests, Fuel Charging and Controls - VIN Range: G45704->G99999
P020200	Cylinder 2 injector circuit/open	Injector disconnected Injector harness wiring: high resistance, short circuit to ground Injector failure	For injector circuit tests, Fuel Charging and Controls - VIN Range: G45704->G99999
P020300	Cylinder 3 injector circuit/open	Injector disconnected Injector harness wiring: high resistance, short circuit to ground Injector failure	For injector circuit tests, Fuel Charging and Controls - VIN Range: G45704->G99999
P020400	Cylinder 4 injector circuit/open	Injector disconnected Injector harness wiring: high resistance, short circuit to ground Injector failure	For injector circuit tests, Fuel Charging and Controls - VIN Range: G45704->G99999
P020500	Cylinder 5 injector circuit/open	Injector disconnected Injector harness wiring: high resistance, short circuit to ground	For injector circuit tests, Fuel Charging and Controls - VIN Range: G45704->G99999

www.JagDocs.com

		Injector failure	
P020600	Cylinder 6 injector circuit/open	Injector disconnected Injector harness wiring: high resistance, short circuit to ground Injector failure	For injector circuit tests, Fuel Charging and Controls - VIN Range: G45704->G99999
P020700	Cylinder 7 injector circuit/open	Injector disconnected Injector harness wiring: high resistance, short circuit to ground Injector failure	For injector circuit tests, Fuel Charging and Controls - VIN Range: G45704->G99999
P020800	Cylinder 8 injector circuit/open	Injector disconnected Injector harness wiring: high resistance, short circuit to ground Injector failure	For injector circuit tests, Fuel Charging and Controls - VIN Range: G45704->G99999
P022200	Throttle position (TP) sensor circuit 2 low input	TP sensor circuit 2 low input	For TP sensor circuit 2 tests, GO to Pinpoint Test G531332p5.
P022300	Throttle position (TP) sensor circuit 2 high input	TP sensor circuit 2 high input	For TP sensor circuit 2 tests, GO to Pinpoint Test G531332p5.
P022700	Accelerator pedal position (APP) sensor circuit 1 low input	Accelerator pedal position (APP) sensor circuit 1: short circuit to ground Accelerator pedal position (APP) sensor circuit 1: high resistance	For APP sensor circuit 1 tests, GO to Pinpoint Test G531332p22.
P022800	Accelerator pedal position (APP) sensor circuit 1 high input	Accelerator pedal position (APP) sensor circuit 1: short circuit to power	For APP sensor circuit 1 tests, GO to Pinpoint Test G531332p22.
P023700	Manifold absolute pressure/temperature (MAPT) sensor pressure low	MAPT pressure sensor to ECM circuit: short circuit to ground MAPT pressure sensor to ECM circuit: high resistance	For MAPT pressure sensor tests, GO to Pinpoint Test G531332p41.

P023800	Manifold absolute pressure/temperature (MAPT) sensor pressure high	MAPT pressure sensor to ECM circuit: short circuit to power	For MAPT pressure sensor tests, GO to Pinpoint Test G531332p41.
P023B13	Charge air cooler coolant pump control circuit low	Charge air cooler coolant pump circuit low (short circuit)	For auxiliary coolant pump tests, GO to Pinpoint Test G531332p39.
P023C12	Charge air cooler coolant pump control circuit high	Charge air cooler coolant pump circuit (open circuit)	For auxiliary coolant pump tests, GO to Pinpoint Test G531332p39.
P030000	Random/multiple cylinder misfire detected	ECM to ignition coil primary circuit faults (cylinder misfire detected DTCs also logged) Ignition coil failure Spark plug failure/fouled/incorrect gap Fuel delivery pressure (low/high) Fuel injector circuit fault(s) (injector DTCs also logged) Fuel injectors restricted/leaking Fuel injectors continuously open Fuel contamination Cylinder compression low Worn camshaft/broken valve springs Valve clearance adjustment	For ignition coil and spark plug tests, Engine Ignition - VIN Range: G45704->G99999 For fuel pressure test, Fuel Tank and Lines - 4.2L NA V8 - AJV8/4.2L SC V8 - AJV8/3.0L NA V6 - AJ27/3.5L NA V8 - AJV8, VIN Range: G45704->G99999 For fuel injector circuit tests, Fuel Charging and Controls - VIN Range: G45704->G99999 Check compressions, valve gear, etc, Engine - 4.2L NA V8 - AJV8/4.2L SC V8 - AJV8/3.0L NA V6 - AJ27/3.5L NA V8 - AJV8
P030100	Cylinder 1 misfire detected	Refer to P030000 possible	Refer to P030000 actions

www.JagDocs.com

		sources	
P030200	Cylinder 2 misfire detected	Refer to P030000 possible sources	Refer to P030000 actions
P030300	Cylinder 3 misfire detected	Refer to P030000 possible sources	Refer to P030000 actions
P030400	Cylinder 4 misfire detected	Refer to P030000 possible sources	Refer to P030000 actions
P030500	Cylinder 5 misfire detected	Refer to P030000 possible sources	Refer to P030000 actions
P030600	Cylinder 6 misfire detected	Refer to P030000 possible sources	Refer to P030000 actions
P030700	Cylinder 7 misfire detected	Refer to P030000 possible sources	Refer to P030000 actions
P030800	Cylinder 8 misfire detected	Refer to P030000 possible sources	Refer to P030000 actions
P031300	Misfire detected with low fuel	Misfire detected during low fuel level condition	Check for fuel level sensor codes, add fuel. Clear the DTC and test for normal operation.
P031600	Engine misfire detected on startup	Misfire detected on first 1000 revs Refer to P030000 possible sources	Carry out the tests indicated for a normal misfire code, but on a cold engine.
P032700	Knock sensor (KS) 1 circuit low input (right hand bank)	Poor sensor contact with the cylinder block KS to ECM sense circuit: short circuit to ground KS failure	For right hand bank KS circuit tests, GO to Pinpoint Test G531332p15.
P032800	Knock sensor (KS) 1 circuit high input (right hand bank)	Poor sensor contact with the cylinder block KS to ECM sense circuit: high resistance, short circuit to	For right hand bank KS circuit tests, GO to Pinpoint Test G531332p15.

		power KS failure	
P033200	Knock sensor (KS) 2 circuit low input (left hand bank)	Poor sensor contact with the cylinder block KS to ECM sense circuit: short circuit to ground KS failure	For left hand bank KS circuit tests, GO to Pinpoint Test G531332p16.
P033300	Knock sensor (KS) 2 circuit high input (left hand bank)	Poor sensor contact with the cylinder block KS to ECM sense circuit: high resistance, short circuit to power KS failure	For left hand bank KS circuit tests, GO to Pinpoint Test G531332p16.
P033592	Crankshaft position (CKP) sensor A circuit - performance or incorrect operation	CKP sensor disconnected CKP Sensor gap incorrect/ foreign matter on sensor face /damaged teeth on rotor CKP sensor sensing circuit: high resistance, short circuit to ground, short circuit to power CKP sensor failure	For CKP sensor circuit tests, GO to Pinpoint Test G531332p17.
P033594	Crankshaft position (CKP) sensor A circuit - unexpected operation	CKP sensor disconnected CKP sensor gap incorrect/ foreign matter on sensor face /damaged teeth on rotor CKP sensor sensing circuit: high resistance, short circuit to ground, short circuit to power CKP sensor failure	For CKP sensor circuit tests, GO to Pinpoint Test G531332p17.
P033600	Crankshaft position (CKP) sensor A circuit range/performance	CKP sensor gap incorrect/ foreign matter on sensor face /damaged teeth on rotor	For CKP sensor circuit tests, GO to Pinpoint Test G531332p17.

www.JagDocs.com

		CKP sensor sensing circuit: intermittent high resistance, short circuit to ground, short circuit to power CKP sensor failure	
P034092	Camshaft position (CMP) sensor A circuit (right hand bank or single sensor) - performance or incorrect operation	CMP sensor disconnected CMP sensor gap incorrect/ foreign matter on sensor face /damaged rotor CMP sensor sensing circuit: high resistance, short circuit to ground, short circuit to power CMP sensor 1 failure	For right hand bank CMP circuit tests, GO to Pinpoint Test G531332p18.
P034094	Camshaft position (CMP) sensor A circuit (right hand bank or single sensor) - unexpected operation	CMP sensor disconnected CMP sensor gap incorrect/ foreign matter on sensor face /damaged rotor CMP sensor sensing circuit: high resistance, short circuit to ground, short circuit to power CMP sensor 1 failure	For right hand bank CMP circuit tests, GO to Pinpoint Test G531332p18.
P034100	Camshaft position (CMP) sensor A circuit range/performance (right hand bank or single sensor)	CMP sensor disconnected CMP sensor gap incorrect/ foreign matter on sensor face /damaged rotor CMP sensor sensing circuit: high resistance, short circuit to ground, short circuit to power CMP sensor 1 failure	For right hand bank CMP circuit tests, GO to Pinpoint Test G531332p18.
P034592	Camshaft position (CMP) sensor A circuit (left hand bank) - performance or incorrect operation	CMP sensor disconnected CMP sensor gap incorrect/ foreign matter on sensor face /damaged rotor	For left hand bank CMP circuit tests, GO to Pinpoint Test G531332p28.

		CMP sensor sensing circuit: high resistance, short circuit to ground, short circuit to power CMP sensor 2 failure	
P034594	Camshaft position (CMP) sensor A circuit (left hand bank) - unexpected operation	CMP sensor disconnected CMP sensor gap incorrect/ foreign matter on sensor face /damaged rotor CMP sensor sensing circuit: high resistance short circuit to ground, short circuit to power CMP sensor 2 failure	For left hand bank CMP circuit tests, GO to Pinpoint Test G531332p28.
P034600	Camshaft position (CMP) sensor A circuit range/performance (left hand bank)	CMP sensor disconnected CMP sensor gap incorrect/ foreign matter on sensor face /damaged rotor CMP sensor sensing circuit: high resistance, short circuit to ground, short circuit to power CMP sensor 2 failure	For left hand bank CMP circuit tests, GO to Pinpoint Test G531332p28.
P035100	Ignition coil 1 primary/secondary circuit	ECM to ignition module/coil drive circuit: high resistance, short circuit to ground Ignition module/coil ground circuit: high resistance Ignition module/coil battery supply circuit: high resistance (including relay, if fitted)	For ignition coil tests, Engine Ignition - VIN Range: G45704->G99999
P035200	Ignition coil 2 primary/secondary circuit	ECM to ignition module/coil drive circuit: short circuit to ground, high resistance Ignition module/coil ground	For ignition coil tests, Engine Ignition - VIN Range: G45704->G99999

www.JagDocs.com

		circuit: open circuit Ignition module/coil battery supply circuit: high resistance (including relay, if fitted)	
P035300	Ignition coil 3 primary/secondary circuit	ECM to ignition module/coil drive circuit: short circuit to ground, high resistance Ignition module/coil ground circuit: high resistance Ignition module/coil battery supply circuit: high resistance (including relay, if fitted)	For ignition coil tests, Engine Ignition - VIN Range: G45704->G99999
P035400	Ignition coil 4 primary/secondary circuit	ECM to ignition module/coil drive circuit: short circuit to ground, high resistance Ignition module/coil ground circuit: high resistance Ignition module/coil battery supply circuit: high resistance (including relay, if fitted)	For ignition coil tests, Engine Ignition - VIN Range: G45704->G99999
P035500	Ignition coil 5 primary/secondary circuit	ECM to ignition module/coil drive circuit: short circuit to ground, high resistance Ignition module/coil ground circuit: high resistance Ignition module/coil battery supply circuit: high resistance (including relay, if fitted)	For ignition coil tests, Engine Ignition - VIN Range: G45704->G99999
P035600	Ignition coil 6 primary/secondary circuit	ECM to ignition module/coil drive circuit: short circuit to ground, high resistance Ignition module/coil ground	For ignition coil tests, Engine Ignition - VIN Range: G45704->G99999

		circuit: high resistance Ignition module/coil battery supply circuit: high resistance (including relay, if fitted)	
P035700	Ignition coil 7 primary/secondary circuit	ECM to ignition module/coil drive circuit: short circuit to ground, high resistance Ignition module/coil ground circuit: high resistance Ignition module/coil battery supply circuit: high resistance (including relay, if fitted)	For ignition coil tests, Engine Ignition - VIN Range: G45704->G99999
P035800	Ignition coil 8 primary/secondary circuit	ECM to ignition module/coil drive circuit: short circuit to ground, high resistance Ignition module/coil ground circuit: high resistance Ignition module/coil battery supply circuit: high resistance (including relay, if fitted)	For ignition coil tests, Engine Ignition - VIN Range: G45704->G99999
P040100	Exhaust gas recirculation (EGR) flow insufficient detected	EGR valve incorrectly fitted or loose EGR pipe blocked EGR valve stuck closed, blocked EGR valve failure	For EGR tests, Engine Emission Control - VIN Range: G45704->G99999
P041300	Secondary air injection switching valve A circuit open	Secondary air check valve control circuit high	For secondary air injection tests, Engine Emission Control - VIN Range: G45704->G99999
P041400	Secondary air injection switching valve A circuit	Secondary air check valve control circuit low	For secondary air injection tests, Engine Emission Control -

www.JagDocs.com

	shorted		VIN Range: G45704->G99999
P042000	Catalyst system efficiency below threshold (right hand bank)	Catalyst failure due to: overheating damage caused by misfire and/or lean combustion Catalyst failure due to: poisoning caused by excessive oil consumption and/or contaminated fuel	Check the oil and fuel condition/level. Check the catalysts for damage.
P043000	Catalyst system efficiency below threshold (left hand bank)	Catalyst failure due to: overheating damage caused by misfire and/or lean combustion Catalyst failure due to: poisoning caused by excessive oil consumption and/or contaminated fuel	Check the oil and fuel condition/level. Check the catalysts for damage.
P044100	Evaporative emission (EVAP) system incorrect purge flow	Purge valve range performance	For evaporative emissions tests, Evaporative Emissions - VIN Range: G45704->G99999
P044700	Evaporative emission (EVAP) system vent control circuit open	DMTL COV circuit ground short	For evaporative emissions tests, Evaporative Emissions - VIN Range: G45704->G99999
P044800	Evaporative emission (EVAP) system vent control circuit shorted	EVAP canister close valve power supply circuit: high resistance, short circuit EVAP canister close valve to ECM drive circuit: high resistance, short circuit to battery EVAP canister close valve failure	For evaporative emissions tests, Evaporative Emissions - VIN Range: G45704->G99999
P045600	Evaporative emission (EVAP) system leak detected (very	DMTL system has detected a leak	For evaporative emissions tests,

	small leak)		Evaporative Emissions - VIN Range: G45704->G99999
P045800	Evaporative emission (EVAP) system purge control valve circuit low	Purge valve control circuit: short circuit to ground Purge valve control circuit: high resistance EVAP canister purge valve failure	For evaporative emissions tests, Evaporative Emissions - VIN Range: G45704->G99999
P045900	Evaporative emission (EVAP) system purge control valve circuit high	Purge valve control circuit: short circuit to power	For evaporative emissions tests, Evaporative Emissions - VIN Range: G45704->G99999
P046129	Fuel level sensor A circuit range/performance - signal invalid	Fuel level sensor to rear electronic module (REM) circuits; intermittent short circuit or high resistance Fuel level sensor failure REM fault (incorrect fuel level data)	For fuel level sensor circuit tests, Fuel Tank and Lines - 4.2L NA V8 - AJV8/4.2L SC V8 - AJV8/3.0L NA V6 - AJ27/3.5L NA V8 - AJV8, VIN Range: G45704->G99999
P04612F	Fuel level sensor A circuit range/performance - signal erratic	Fuel level sensor to rear electronic module (REM) circuits; intermittent short circuit or high resistance Fuel level sensor failure REM fault (incorrect fuel level data)	For fuel level sensor circuit tests, Fuel Tank and Lines - 4.2L NA V8 - AJV8/4.2L SC V8 - AJV8/3.0L NA V6 - AJ27/3.5L NA V8 - AJV8, VIN Range: G45704->G99999
P046200	Fuel level sensor A circuit low input	Fuel level sensor to rear electronic module (REM) circuits; intermittent short circuit to ground or high resistance Fuel level sensor failure REM fault (incorrect fuel level data)	For fuel level sensor circuit tests, Fuel Tank and Lines - 4.2L NA V8 - AJV8/4.2L SC V8 - AJV8/3.0L NA V6 - AJ27/3.5L NA V8 - AJV8, VIN Range: G45704->G99999

www.JagDocs.com

P046300	Fuel level sensor A circuit high input	Fuel level sensor to rear electronic module (REM) circuits; intermittent short circuit to high voltage Fuel level sensor failure REM fault (incorrect fuel level data)	For fuel level sensor circuit tests, Fuel Tank and Lines - 4.2L NA V8 - AJV8/4.2L SC V8 - AJV8/3.0L NA V6 - AJ27/3.5L NA V8 - AJV8, VIN Range: G45704->G99999
P048023	Fan 1 control circuit low	Electric fan control circuit: short circuit to ground Electric fan control circuit: high resistance	For cooling fan circuit tests, GO to Pinpoint Test G531332p19.
P048024	Fan 1 control circuit high	Electric fan control circuit: short circuit to battery	For cooling fan circuit tests, GO to Pinpoint Test G531332p19.
P048309	Fan rationality check	Cooling fan difficult to turn Fan/Motor damaged	Clear any obstruction, replace the fan as necessary.
P048316	Fan rationality check	Fan control module reports battery voltage less than 9 volts	Check the battery condition. Check the charging system and fan circuits.
P048317	Fan rationality check	Fan control module reports battery voltage greater than 18 volts	Check the charging system and fan circuits.
P048397	Fan rationality check	Cooling fan jammed	Clear any obstruction, replace the fan as necessary.
P048900	Exhaust gas recirculation (EGR) control circuit low	EGR valve power supply circuit: high resistance EGR valve power supply circuit: short circuit to ground	For EGR tests, Engine Emission Control - VIN Range: G45704->G99999
P049000	Exhaust gas recirculation (EGR) control circuit high	EGR valve to ECM drive circuit: short circuit to battery	For EGR tests, Engine Emission Control - VIN Range: G45704->G99999

P050082	Vehicle speed sensor malfunction	Vehicle speed: invalid signal received over CAN	Check for TCM DTCs.
P050086	Vehicle speed sensor malfunction	Vehicle speed: invalid signal received over CAN	Check for TCM DTCs.
P050162	Vehicle speed sensor A range/performance - signal plausibility failure	Vehicle speed: range performance	Check for ABS/TCM DTCs.
P050400	Brake switch A/B correlation	The brake pressure reading does not agree with the brake light switch value	Check the brake switch function. GO to Pinpoint Test G531332p42. Anti-Lock Control - Stability Assist - VIN Range: G45704->G99999
P050401	Brake switch A/B correlation	Brake switch high fault: Brake lights stuck on Gearshift interlock inoperative Speed control inoperative Brake switch low fault: Brake lights inoperative Gearshift stuck in Park Reduced engine braking	For brake switch and circuit tests, GO to Pinpoint Test G531332p42.
P050464	Brake switch A/B correlation - signal plausibility failure	Brake switch malfunction	For brake switch and circuit tests, GO to Pinpoint Test G531332p42.
P050600	Idle air control system RPM lower than expected	Air intake restriction Accessory drive overload (defective/seized component)	Check the air intake system. Intake Air Distribution and Filtering - VIN Range: G45704->G99999 Check the accessory drive belt and components. Accessory Drive Belt - 4.2L NA V8 - AJV8/4.2L SC V8 - AJV8/3.5L NA V8 - AJV8 (12.10.40)
P050624	Idle air control system RPM	Air intake restriction	Check the air intake

www.JagDocs.com

	lower than expected	Accessory drive overload (defective/seized component)	system. Intake Air Distribution and Filtering - VIN Range: G45704->G99999 Check the accessory drive belt and components. Accessory Drive Belt - 4.2L NA V8 - AJV8/4.2L SC V8 - AJV8/3.5L NA V8 - AJV8 (12.10.40)
P050700	Idle air control system RPM higher than expected	Intake air leak between MAF sensor and throttle Intake air leak between throttle and engine Engine crankcase breather leak	Check the air intake system, Intake Air Distribution and Filtering - VIN Range: G45704->G99999 Inspect the engine breather system, Engine Emission Control - VIN Range: G45704->G99999
P050723	Idle air control system RPM higher than expected	Intake air leak between MAF sensor and throttle Intake air leak between throttle and engine Engine crankcase breather leak	Check the air intake system, Intake Air Distribution and Filtering - VIN Range: G45704->G99999 Inspect the engine breather system, Engine Emission Control - VIN Range: G45704->G99999
P050B84	Cold start ignition timing performance	Cold start emission reduction strategy engine spark timing too retarded	Check for engine ignition related codes. Engine Ignition - VIN Range: G45704->G99999
P050B85	Cold start ignition timing performance	Cold start emission reduction strategy engine spark timing too advanced	Check for engine ignition related codes. Engine Ignition - VIN Range: G45704->G99999
P05120C	Starter request circuit	Crank request circuit: high input	For starter request circuit tests, GO to Pinpoint

			Test G531332p27.
P05120E	Starter request circuit	Crank request circuit: low input	For starter request circuit tests, GO to Pinpoint Test G531332p27.
P051300	Incorrect immobilizer key	Security key invalid	Programme keys using the Jaguar approved diagnostic system.
P053200	Air conditioning (A/C) refrigerant pressure sensor A circuit low input	A/C refrigerant pressure sensor circuit low input	For A/C pressure sensor tests, GO to Pinpoint Test G531332p35.
P053300	A/C refrigerant pressure sensor A circuit high input	A/C Refrigerant pressure sensor circuit high input	For A/C pressure sensor tests, GO to Pinpoint Test G531332p35.
P056013	System voltage	Battery back-up malfunction	For battery back-up tests, GO to Pinpoint Test G531332p20.
P056100	System voltage unstable	System voltage comparison	For FRP sensor tests, GO to Pinpoint Test G531332p40. For MAP sensor tests, GO to Pinpoint Test G531332p33. For TP sensor tests, GO to Pinpoint Test G531332p4. and GO to Pinpoint Test G531332p5.
P056200	System voltage low	ECM to sensor supply voltage circuit(s): short circuit to ground	For FRP sensor tests, GO to Pinpoint Test G531332p40. For MAP sensor tests, GO to Pinpoint Test G531332p33. For TP sensor tests, GO to Pinpoint Test G531332p4. and GO to Pinpoint Test

www.JagDocs.com

			G531332p5.
P056300	System voltage high	ECM to sensors supply voltage circuit(s): high resistance, short circuit to power	For FRP sensor tests, GO to Pinpoint Test G531332p40. For MAP sensor tests, GO to Pinpoint Test G531332p33. For TP sensor tests, GO to Pinpoint Test G531332p4. and GO to Pinpoint Test G531332p5.
P057501	Speed control cancel button fault	Speed control cancel button fault	For speed control, Speed Control - VIN Range: G45704->G99999
P057616	Speed control input circuit low	Speed control low input	For speed control, Speed Control - VIN Range: G45704->G99999
P057717	Speed control input circuit high	Speed control high input	For speed control, Speed Control - VIN Range: G45704->G99999
P057800	Speed control multi-function input A circuit stuck	Speed switch stuck fault	For speed control, Speed Control - VIN Range: G45704->G99999
P05791C	Speed control multi-function input A circuit range/performance	Speed control switch deadband detection	For speed control, Speed Control - VIN Range: G45704->G99999
P059000	Speed control multi-function input B circuit stuck	Active speed limiter fault	For speed control, Speed Control - VIN Range: G45704->G99999
P060143	Internal control module memory check sum error - special memory failure	CPU communication. - sub	Refer to the warranty policy and procedures manual if an ECM is suspect.
P060145	Internal control module memory check sum error -	CPU communication	Refer to the warranty policy and procedures

	program memory failure		manual if an ECM is suspect.
P060442	Internal control module random access memory (RAM) error - general memory failure	Initial RAM test	Refer to the warranty policy and procedures manual if an ECM is suspect.
P060443	Internal control module random access memory (RAM) error - special memory failure	Shut off RAM test	Refer to the warranty policy and procedures manual if an ECM is suspect.
P060444	Internal control module random access memory (RAM) error - data memory failure	RAM check sum	Refer to the warranty policy and procedures manual if an ECM is suspect.
P060445	Internal control module random access memory (RAM) error - program memory failure	ECM failure	Refer to the warranty policy and procedures manual if an ECM is suspect.
P060500	Internal control module read only memory (ROM) error	EEPROM/flash checksum error	Configure the module using the Jaguar approved diagnostic system.
P060529	Internal control module read only memory (ROM) error	ROM error	Refer to the warranty policy and procedures manual if an ECM is suspect.
P060542	Internal control module read only memory (ROM) error - general memory failure	ROM check sum	Refer to the warranty policy and procedures manual if an ECM is suspect.
P060543	Internal control module read only memory (ROM) error - special memory failure	Shut off ROM test	Refer to the warranty policy and procedures manual if an ECM is suspect.
P060544	Internal control module read only memory (ROM) error -	Initial ROM test	Refer to the warranty policy and procedures

www.JagDocs.com

	data memory failure		manual if an ECM is suspect.
P060545	Internal control module read only memory (ROM) error - program memory failure	Continuous ROM test	Refer to the warranty policy and procedures manual if an ECM is suspect.
P060546	Internal control module read only memory (ROM) error	Continuous ROM test	Refer to the warranty policy and procedures manual if an ECM is suspect.
P060548	Internal control module read only memory (ROM) error - supervision software failure	Shut off ROM test	Refer to the warranty policy and procedures manual if an ECM is suspect.
P060564	Internal control module read only memory (ROM) error	ROM error - sub	Refer to the warranty policy and procedures manual if an ECM is suspect.
P060600	ECM/PCM processor fault	Watchdog error	Refer to the warranty policy and procedures manual if an ECM is suspect.
P060601	ECM/PCM processor - general electrical failure	Controller test - sub	Refer to the warranty policy and procedures manual if an ECM is suspect.
P060604	ECM/PCM processor	System internal failures	Refer to the warranty policy and procedures manual if an ECM is suspect.
P060605	ECM/PCM processor - system programming failures	Throttle return spring failure (throttle body failure)	Refer to the warranty policy and procedures manual if an ECM is suspect.
P060641	ECM/PCM processor -	Watch dog timer fault - sub	Refer to the warranty policy and procedures

	general checksum failure		manual if an ECM is suspect.
P060642	ECM/PCM processor - general memory failure	Error capturing instructions	Refer to the warranty policy and procedures manual if an ECM is suspect.
P060643	ECM/PCM processor - special memory failure	Duplication memory fault	Refer to the warranty policy and procedures manual if an ECM is suspect.
P060644	ECM/PCM processor - data memory failure	Duplication memory fault - sub	Refer to the warranty policy and procedures manual if an ECM is suspect.
P060645	ECM/PCM processor - program memory failure	Detection of write to internal ROM	Refer to the warranty policy and procedures manual if an ECM is suspect.
P060646	ECM/PCM processor - calibration/parameter memory failure	Detection of write to internal ROM - sub	Configure the module using the Jaguar approved diagnostic system.
P060647	ECM/PCM processor fault	Watch dog timer fault	Configure the module using the Jaguar approved diagnostic system.
P060648	ECM/PCM processor - supervision software failure	Scheduling sequence check	Configure the module using the Jaguar approved diagnostic system.
P060649	ECM/PCM processor - internal electronic failure	Controller test	Refer to the warranty policy and procedures manual if an ECM is suspect.
P060700	Control module performance	Sub - CPU watch dog	Refer to the warranty policy and procedures

www.JagDocs.com

			manual if an ECM is suspect.
P060D00	Internal control module accelerator pedal position performance	APS Communication	Refer to the warranty policy and procedures manual if an ECM is suspect.
P060E62	Internal control module throttle position performance - signal compare failure	Throttle motor amplifier failure for valve sensor malfunction	Refer to the warranty policy and procedures manual if an ECM is suspect.
P060E64	Internal control module throttle position performance - signal plausibility failure	TPS Communication	Refer to the warranty policy and procedures manual if an ECM is suspect.
P060A64	Internal control module monitoring processor performance	Internal control module monitoring processor performance	Clear the DTC and retest. If the DTC resets, refer to the warranty policy and procedure manual if an ECM is suspect.
P060A67	Internal control module monitoring processor performance	Internal control module monitoring processor performance	Clear the DTC and retest. If the DTC resets, refer to the warranty policy and procedure manual if an ECM is suspect.
P061043	Control module vehicle options error	VID block fault	Configure the module using the Jaguar approved diagnostic system.
P06160E	Starter relay circuit low	Starter relay drive circuit: short circuit to ground. Starter relay drive circuit: high resistance Starter relay failure	For starter relay tests, GO to Pinpoint Test G531332p27.
P06170C	Starter relay circuit high	Starter relay drive circuit: short circuit to battery Starter relay failure	For starter relay tests, GO to Pinpoint Test G531332p27.

P061A00	Internal control module torque performance	Pedal follower error	Refer to the warranty policy and procedures manual if an ECM is suspect.
P061A29	Internal control module torque performance - signal invalid	Absolute engine torque calculation failure - sub-processor	Refer to the warranty policy and procedures manual if an ECM is suspect.
P061A64	Internal control module torque performance - signal plausibility failure	Absolute engine torque calculation failure	Refer to the warranty policy and procedures manual if an ECM is suspect.
P061B29	Internal control module torque calculation performance - signal invalid	Absolute and dynamic engine torque calculation failure	Refer to the warranty policy and procedures manual if an ECM is suspect.
P061B64	Internal control module torque calculation performance - signal plausibility failure	Absolute and dynamic engine torque calculation failure	Refer to the warranty policy and procedures manual if an ECM is suspect.
P062700	Fuel pump A control circuit/open	Invalid fuel pump duty requested by the ECM	For fuel pump tests, Fuel Tank and Lines - 4.2L NA V8 - AJV8/4.2L SC V8 - AJV8/3.0L NA V6 - AJ27/3.5L NA V8 - AJV8, VIN Range: G45704->G99999
P062A00	Fuel pump A control circuit range/performance	Fuel pump circuit fault (FPDM to fuel pump)	For fuel pump tests, Fuel Tank and Lines - 4.2L NA V8 - AJV8/4.2L SC V8 - AJV8/3.0L NA V6 - AJ27/3.5L NA V8 - AJV8, VIN Range: G45704->G99999
P063000	VIN not programmed or incompatible - ECM/PCM	CCF to CAN VIN mismatch	Configure the module using the Jaguar approved diagnostic

www.JagDocs.com

			system.
P068773	ECM power relay control circuit high	EMS control relay malfunction	For EMS relay tests, GO to Pinpoint Test G531332p32.
P072186	Output speed sensor circuit range/performance	TCM Output shaft speed sensor error received	For transmission tests.
P08510E	Park/Neutral switch input circuit low	Park/Neutral switch input circuit low	For Park/Neutral switch tests, External Controls
P08520C	Park/Neutral switch input circuit high	Park/Neutral switch input circuit high	For Park/Neutral switch tests, External Controls
P114600	Generator load low	Generator - C line circuit low	For generator tests,
P114723	Manifold absolute pressure/temperature (MAPT) intake air temperature sensor circuit range/performance	MAPT intake air temperature stuck low at engine start	For MAPT tests, GO to Pinpoint Test G531332p37.
P114724	Manifold absolute pressure/temperature (MAPT) intake air temperature sensor circuit range/performance	MAPT intake air temperature stuck high at engine start	For MAPT tests, GO to Pinpoint Test G531332p37.
P114729	Manifold absolute pressure/temperature (MAPT) intake air temperature sensor circuit range/performance	MAPT intake air temperature stuck	For MAPT tests, GO to Pinpoint Test G531332p37.
P124400	Generator load high input (see P062600)	Generator - C line circuit high	For generator tests,
P125900	Immobilizer to PCM signal error	Incorrect ID received from instrument pack	Configure the system using the Jaguar approved diagnostic

			system.
P131500	Persistent misfire	ECM to ignition coil primary circuit fault (cylinder misfire detected DTC also flagged) Fuel delivery pressure low Fuel injector circuit fault(s) (injector DTCs also flagged) Ignition coil failure Spark plug failure/fouled/incorrect gap Cylinder compression low	For ignition coil circuit tests, Engine Ignition - VIN Range: G45704->G99999 Check the fuel pressure, Fuel Tank and Lines - 4.2L NA V8 - AJV8/4.2L SC V8 - AJV8/3.0L NA V6 - AJ27/3.5L NA V8 - AJV8, VIN Range: G45704->G99999 For injector circuit tests, Fuel Charging and Controls - VIN Range: G45704->G99999 For spark plug tests, Engine Ignition - VIN Range: G45704->G99999
P131600	Injector driver misfire - emissions damage	Injector driver module codes detected	Check for associated DTCs and refer to the DTC index.
P136700	Ignition amplifier group A	Ignition monitoring circuit to ECM: high resistance, short circuit to ground, short circuit to power Ignition module/coils ground circuit fault, right hand bank	For ignition system tests, Engine Ignition - VIN Range: G45704->G99999
P136800	Ignition amplifier group B	Ignition monitoring circuit to ECM: high resistance, short circuit to ground, short circuit to power Ignition module/coils ground circuit fault left hand bank	For ignition system tests, Engine Ignition - VIN Range: G45704->G99999
P160300	EEPROM error	ECM fault	Refer to the warranty policy and procedure manual if an ECM is suspect.

www.JagDocs.com

P162600	Dynamic torque monitoring error	ECM electronic throttle monitoring / self test - torque monitoring problem	Refer to the warranty policy and procedure manual if an ECM is suspect.
P162900	Internal voltage regulator	Generator - F line failure	For generator tests,
P163200	Smart alternator faults sensor/circuit	Generator - L line failure	For generator tests,
P209600	Fuel trim too lean, right hand bank	HO2S fuel adaption - lean	Check for HO2 sensor codes. Check for air intake faults
P209700	Fuel trim too rich, right hand bank	HO2S fuel adaption - rich	Check for HO2 sensor codes. Check for air intake faults
P209800	Fuel trim too lean, left hand bank	HO2S fuel adaption - lean	Check for HO2 sensor codes. Check for air intake faults
P209900	Fuel trim too rich, left hand bank	HO2S fuel adaption - rich	Check for HO2 sensor codes. Check for air intake faults
P210129	Throttle actuator control motor circuit range/performance	Jammed throttle blade, gearing or motor	Check for a message in the instrument cluster. Replace the throttle body. Throttle Body - 4.2L NA V8 - AJV8/3.5L NA V8 - AJV8, VIN Range: G45704->G99999 (19.70.04) or Throttle Body - 4.2L SC V8 - AJV8, VIN Range: G45704->G99999 (19.70.04)
P210162	Throttle actuator control motor circuit range/performance	Jammed throttle blade, gearing or motor	Check for a message in the instrument cluster. Replace the throttle body.

			Throttle Body - 4.2L NA V8 - AJV8/3.5L NA V8 - AJV8, VIN Range: G45704->G99999 (19.70.04) or Throttle Body - 4.2L SC V8 - AJV8, VIN Range: G45704->G99999 (19.70.04)
P210164	Throttle actuator control motor circuit range/performance	Jammed throttle blade, gearing or motor	Check for a message in the instrument cluster. Replace the throttle body. Throttle Body - 4.2L NA V8 - AJV8/3.5L NA V8 - AJV8, VIN Range: G45704->G99999 (19.70.04) or Throttle Body - 4.2L SC V8 - AJV8, VIN Range: G45704->G99999 (19.70.04)
P210177	Throttle actuator motor control circuit range/performance (commanded position not reachable)	Throttle blade stuck open Intake air system leak	Check for throttle related DTCs. Check the intake system for leaks. Intake Air Distribution and Filtering - VIN Range: G45704->G99999
P210329	Throttle actuator motor control circuit high	Control circuit: short circuit to power ECM fault	For throttle actuator motor circuit tests, Fuel Charging and Controls - VIN Range: G45704->G99999 Refer to the warranty policy and procedures manual if an ECM is suspect.
P210364	Throttle actuator motor control circuit high - signal plausibility failure	Control circuit: short circuit to power ECM fault	For throttle actuator motor circuit tests, Fuel Charging and Controls - VIN Range: G45704->G99999 Refer

www.JagDocs.com

			to the warranty policy and procedures manual if an ECM is suspect.
P210500	Throttle actuator control system - forced engine shutdown	Throttle MIL request due to fuel cut	Check for DTCs indicating the reason for the fuel cut. Follow the action indicated for those DTCs.
P210629	Throttle actuator control system - forced limited power	Signal invalid	Check for a message in the instrument cluster. Replace the throttle body. Throttle Body - 4.2L NA V8 - AJV8/3.5L NA V8 - AJV8, VIN Range: G45704->G99999 (19.70.04) or Throttle Body - 4.2L SC V8 - AJV8, VIN Range: G45704->G99999 (19.70.04)
P210664	Throttle actuator control system - forced limited power	Signal plausibility failure	Check for a message in the instrument cluster. Replace the throttle body. Throttle Body - 4.2L NA V8 - AJV8/3.5L NA V8 - AJV8, VIN Range: G45704->G99999 (19.70.04) or Throttle Body - 4.2L SC V8 - AJV8, VIN Range: G45704->G99999 (19.70.04)
P211800	Throttle actuator motor control current range/performance	Control circuit: short circuit to power, short circuit to ground, high resistance ECM fault	For throttle actuator motor circuit tests, Fuel Charging and Controls - VIN Range: G45704->G99999 Refer to the warranty policy and procedures manual if

			an ECM is suspect.
P211900	Throttle actuator control throttle body range/performance	Throttle spring faulty	Check for a message in the instrument cluster. Replace the throttle body. Throttle Body - 4.2L NA V8 - AJV8/3.5L NA V8 - AJV8, VIN Range: G45704->G99999 (19.70.04) or Throttle Body - 4.2L SC V8 - AJV8, VIN Range: G45704->G99999 (19.70.04)
P212200	Accelerator pedal position (APP) sensor D circuit low input	APP sensor circuit 2 low input	For APP sensor tests, GO to Pinpoint Test G531332p22. and GO to Pinpoint Test G531332p23.
P212300	Accelerator pedal position (APP) sensor D circuit high input	APP sensor: circuit 2 high input	For APP sensor tests, GO to Pinpoint Test G531332p22. and GO to Pinpoint Test G531332p23.
P213528	Accelerator pedal position (APP) sensor 1 and 2 voltage correlation	APP sensor: incorrect start value (not zero)	Check connections, etc, clear the DTCs and retest. If the code resets, replace the APP sensor.
P213529	Accelerator pedal position (APP) sensor 1 and 2 voltage correlation	APP sensor: excessive difference between raw values of circuit 1 and 2 - sub-processor	Check connections, etc, clear the DTCs and retest. If the code resets, replace the APP sensor.
P213562	Accelerator pedal position (APP) sensor 1 and 2 voltage correlation	APP sensor: incorrect start value (not zero) sub-processor	Check connections, etc, clear the DTCs and retest. If the code resets, replace the APP sensor.
P213564	Accelerator pedal position (APP) sensor 1 and 2 voltage	APP sensor: excessive difference between raw	Check connections, etc, clear the DTCs and

www.JagDocs.com

	correlation	values of circuit 1 and 2	retest. If the code resets, replace the APP sensor.
P222800	Barometric pressure circuit low input	BARO sensor failure (internal ECM fault)	Refer to the warranty policy and procedures manual if an ECM is suspect.
P222900	Barometric pressure circuit high input	BARO sensor failure (internal ECM fault)	Refer to the warranty policy and procedures manual if an ECM is suspect.
P240100	Evaporative emission (EVAP) system leak detection pump control circuit low	DMTL pump circuit(s): short circuit to ground	For evaporative emissions tests, Evaporative Emissions - VIN Range: G45704->G99999
P240200	Evaporative emission system diagnostic monitoring of tank leakage (DMTL) pump control circuit high	DMTL pump circuit(s): short circuit to power	For evaporative emissions tests, Evaporative Emissions - VIN Range: G45704->G99999
P240429	Evaporative emission system DMTL pump sense circuit range/performance - signal invalid	DMTL reference leak DMTL pump circuit: short circuit, high resistance DMTL pipework blocked/leaking	For evaporative emissions tests, Evaporative Emissions - VIN Range: G45704->G99999
P24042F	Evaporative emission system DMTL pump sense circuit range/performance - signal erratic	DMTL reference leak DMTL pump circuit: short circuit, high resistance DMTL pipework blocked/leaking	For evaporative emissions tests, Evaporative Emissions - VIN Range: G45704->G99999
P240500	Evaporative emission system DMTL pump sense circuit low	DMTL pump circuit: short circuit, high resistance	For evaporative emissions tests, Evaporative Emissions - VIN Range: G45704->G99999

P240600	Evaporative emission system DMTL pump sense circuit high	DMTL pump circuit: short circuit, high resistance	For evaporative emissions tests, Evaporative Emissions - VIN Range: G45704->G99999
P240B00	Evaporative emission system DMTL pump heater circuit low	DMTL heater control circuit low	For evaporative emissions tests, Evaporative Emissions - VIN Range: G45704->G99999
P240C00	Evaporative emission system DMTL pump heater circuit high	DMTL heater control circuit high	For evaporative emissions tests, Evaporative Emissions - VIN Range: G45704->G99999
P243100	Secondary air injection system air flow/pressure sensor circuit range/performance	Secondary air injection pump/valve/pipework leaks Secondary air injection pump Secondary air injection valve	For secondary air injection tests, Engine Emission Control - VIN Range: G45704->G99999
P243200	Secondary air injection system air flow/pressure sensor circuit low input, right hand bank	Secondary air injection system MAP sensor circuit low	For secondary air injection tests, Engine Emission Control - VIN Range: G45704->G99999
P243300	Secondary air injection system air flow/pressure sensor circuit high input, right hand bank	Secondary air injection system MAP sensor circuit high	For secondary air injection tests, Engine Emission Control - VIN Range: G45704->G99999
P244400	Secondary air injection system pump stuck **ON**, right hand bank	Secondary air injection system pump control circuit low	For secondary air injection tests, Engine Emission Control - VIN Range: G45704->G99999
P244500	Secondary air injection system pump stuck **OFF**, right	Secondary air pump control circuit high	For secondary air injection pump circuit

www.JagDocs.com

	hand bank		tests, Engine Emission Control - VIN Range: G45704->G99999
P245000	Evaporative emission (EVAP) system change-over valve (COV) performance/stuck open	DMTL pump circuit: short circuit, high resistance	For evaporative emissions tests, Evaporative Emissions - VIN Range: G45704->G99999
P245100	Evaporative emission control system COV valve stuck closed	DMTL pump circuit: short circuit, high resistance	For evaporative emissions tests, Evaporative Emissions - VIN Range: G45704->G99999
P250300	Charging system voltage low	Generator - range/performance - output voltage low when high requested	For charging system tests,
P250400	Charging system voltage high	Generator - range/performance - output voltage high when low requested	For charging system tests,
P260100	Coolant pump control circuit range/performance	Coolant pump control circuit range/performance	For auxiliary coolant pump tests, GO to Pinpoint Test G531332p39.
P261064	ECM/PCM Internal engine off timer performance	ECT sensor fault Ambient temperature sensor fault Body processor module fault (time) CAN error	Check for DTCs indicating a fault with any of the components listed. Follow the action listed for those DTCs.
P261087	ECM/PCM Internal engine off timer performance	ECT sensor fault Ambient temperature sensor fault Body processor module fault	Check for DTCs indicating a fault with any of the components listed. Follow the action listed for those DTCs.

		(time) CAN error	
P263500	Fuel pump A low flow/performance (fuel pump not activated when requested by ECM)	ECM to rear electronic module (REM) drive circuit; open circuit, short circuit, high resistance Fuel pump module failure REM failure	For REM drive circuit tests, Fuel Tank and Lines - 4.2L NA V8 - AJV8/4.2L SC V8 - AJV8/3.0L NA V6 - AJ27/3.5L NA V8 - AJV8, VIN Range: G45704->G99999
P267600	Air cleaner inlet control circuit low	Supercharger intake flap control circuit: short circuit to ground Supercharger intake flap control circuit: high resistance	For air cleaner solenoid valve tests, GO to Pinpoint Test G531332p38.
P267700	Air cleaner inlet control circuit high	Supercharger intake flap control circuit: short circuit to power	For air cleaner solenoid valve tests, GO to Pinpoint Test G531332p38.
U007300	Control module communication bus off	CAN Link circuit malfunction	For network tests,
U010100	Lost communication with TCM	CAN Link ECM/TCM network malfunction	For network tests,
U010300	Lost communication with gear shift control module	CAN Link ECM/gear shift network malfunction	For network tests,
U010400	Lost communication with speed control module	CAN Link ECM/ACC module network malfunction	For network tests,
U012100	Lost communication with anti-lock brake system (ABS) control module	CAN Link ECM/ABSCM network malfunction	For network tests,
U012800	Lost communication with park brake control module	CAN Link ECM/Electric park brake signal missing network malfunction	For network tests,
U013200	Lost communication with	CAN Link ECM/suspension control module network malfunction	For network tests,

www.JagDocs.com

	suspension control module		
U015100	Lost communication with restraints control module	Lost comms - CAN or hardwired	For network tests,
U015500	Lost communication with instrument panel cluster (IPC) control module	CAN Link ECM/INSTCM network malfunction	For network tests,
U016400	Lost communication with heating ventilation and air conditioning control module	CAN Link ECM/HEVAC network malfunction	For network tests,
U016700	Lost communication with vehicle immobilizer control module	Security challenge response timeout	Programme the keys using the Jaguar approved diagnostic system.
U040264	Invalid data received from transmission control module	Actual gear position status	For transmission tests.
U040267	Invalid data received from transmission control module	Gear shift position status	For transmission tests.
U040281	Invalid data received from transmission control module	Output shaft speed	For transmission tests.
U041564	Invalid data received from anti-lock brake system control module	MSR monitoring - plausibility	For network tests,
U041567	Invalid data received from anti-lock brake system control module	MSR monitoring - rationality	For network tests,
U042381	Invalid data received from instrument panel control module - invalid serial data received	External ambient temperature	For network tests,
U042386	Invalid data received from instrument panel control module - signal invalid	Battery voltage level	For network tests,

U042600	Invalid data received from vehicle immobilizer control module	Security code mismatch	Configure the module using the Jaguar approved diagnostic system.
U206400	Warning indicator requested by another control module	Crash event has occurred	For network tests,

Pinpoint Tests

PINPOINT TEST G531332p1 : MASS AIR FLOW (MAF) SENSOR CIRCUIT RANGE/PERFORMANCE, HIGH/LOW VOLTAGE

G531332t1 : CHECK THE MAF SENSOR SENSING CIRCUIT FOR HIGH RESISTANCE

1. Key off. 2. Disconnect the ECM electrical connector, PI300. 3. Disconnect the MAF sensor electrical connector, PI14. 4. Measure the resistance between:

ECM connector PI300, harness side	MAF connector PI14, harness side
Pin 70	Pin 03

Is the resistance greater than 5 ohms?

-> Yes
REPAIR the high resistance circuit. For additional information, refer to the wiring diagrams. CLEAR the DTC. TEST the system for normal operation.

-> No
GO to Pinpoint Test G531332t2.

G531332t2 : CHECK THE MAF SENSOR SENSING CIRCUIT FOR SHORT CIRCUIT TO POWER

1. Key on, engine off. 2. Measure the voltage between:

www.JagDocs.com

MAF connector PI14, harness side	Battery
Pin 03	Negative terminal

Is the voltage greater than 3 volts?

-> Yes
REPAIR the short circuit. For additional information, refer to the wiring diagrams. CLEAR the DTC. TEST the system for normal operation.

-> No
GO to Pinpoint Test G531332t3.

G531332t3 : CHECK THE MAF SENSOR SENSING CIRCUIT FOR SHORT CIRCUIT TO GROUND

1. Key off. 2. Measure the resistance between:

MAF connector PI14, harness side	Battery
Pin 03	Negative terminal

Is the resistance less than 10,000 ohms?

-> Yes
REPAIR the short circuit. For additional information, refer to the wiring diagrams. CLEAR the DTC. TEST the system for normal operation

-> No
GO to Pinpoint Test G531332t4.

G531332t4 : CHECK THE MAF SENSOR SUPPLY CIRCUIT VOLTAGE

1. Reconnect the ECM electrical connector, PI300. 2. Key on, engine off. 3. Measure the voltage between:

MAF connector PI14, harness side	Battery
Pin 01	Negative terminal

Is the voltage greater than 10 volts?

-> Yes
INSTALL a new MAF sensor.
Mass Air Flow (MAF) Sensor (18.30.15) CLEAR the DTC. TEST the system for normal operation.

-> No
REPAIR the circuit between the MAF sensor electrical connector, PI14, pin 01 (GU) and BATTERY. This circuit includes the EMS control relay, fuse 14 of the front power distribution box, and the high power protection module. For additional information, refer to the wiring diagrams. CLEAR the DTC. TEST the system for normal operation.

PINPOINT TEST G531332p2 : INTAKE AIR TEMPERATURE (IAT) SENSOR CIRCUIT RANGE/PERFORMANCE, HIGH/LOW VOLTAGE

G531332t5 : CHECK THE IAT SENSOR SENSING CIRCUIT FOR HIGH RESISTANCE

1. Key off. 2. Disconnect the ECM electrical connector, PI300. 3. Disconnect the MAF sensor electrical connector, PI14. 4. Measure the resistance between:

ECM connector PI300, harness side	MAF connector PI14, harness side
Pin 66	Pin 04

Is the resistance greater than 5 ohms?

-> Yes
REPAIR the high resistance circuit. For additional information, refer to the wiring diagrams. CLEAR the DTC. TEST the system for normal operation.

-> No
GO to Pinpoint Test G531332t6.

G531332t6 : CHECK THE IAT SENSOR SENSING CIRCUIT FOR SHORT CIRCUIT TO POWER

1. Key on, engine off. 2. Measure the voltage between:

www.JagDocs.com

MAF connector PI14, harness side	Battery
Pin 04	Negative terminal

Is the voltage greater than 3 volts?

-> Yes
REPAIR the short circuit. For additional information, refer to the wiring diagrams. CLEAR the DTC. TEST the system for normal operation.

-> No
GO to Pinpoint Test G531332t7.

G531332t7 : CHECK THE IAT SENSOR SENSING CIRCUIT FOR SHORT CIRCUIT TO GROUND

1. Key off. 2. Measure the resistance between:

MAF connector PI14, harness side	Battery
Pin 04	Negative terminal

Is the resistance less than 10,000 ohms?

-> Yes
REPAIR the short circuit. For additional information, refer to the wiring diagrams. CLEAR the DTC. TEST the system for normal operation.

-> No
INSTALL a new MAF sensor.
Mass Air Flow (MAF) Sensor (18.30.15) CLEAR the DTC. TEST the system for normal operation.

PINPOINT TEST G531332p3 : ENGINE COOLANT TEMPERATURE (ECT) SENSOR CIRCUIT RANGE/PERFORMANCE, HIGH/LOW VOLTAGE

G531332t8 : CHECK THE ECT SENSOR SENSING CIRCUIT FOR HIGH RESISTANCE

1. Key off. 2. Disconnect the ECM electrical connector, PI300. 3. Disconnect the ECT sensor electrical connector, PI25. 4. Measure the resistance between:

ECM connector PI300, harness side	ECT sensor connector PI25, harness side
Pin 68	Pin 02

Is the resistance greater than 5 ohms?

-> Yes
REPAIR the high resistance circuit. For additional information, refer to the wiring diagrams. CLEAR the DTC. TEST the system for normal operation.

-> No
GO to Pinpoint Test G531332t9.

G531332t9 : CHECK THE ECT SENSOR SENSING CIRCUIT FOR SHORT CIRCUIT TO POWER

1. Key on, engine off. 2. Measure the voltage between:

ECT sensor connector PI25, harness side	Battery
Pin 02	Negative terminal

Is the voltage greater than 3 volts?

-> Yes
REPAIR the short circuit. For additional information, refer to the wiring diagrams. CLEAR the DTC. TEST the system for normal operation.

-> No
GO to Pinpoint Test G531332t10.

G531332t10 : CHECK THE ECT SENSOR SENSING CIRCUIT FOR SHORT CIRCUIT TO GROUND

1. Turn the ignition switch to the OFF position. 2. Measure the resistance between:

www.JagDocs.com

ECT sensor connector PI25, harness side	Battery
Pin 02	Negative terminal

Is the resistance less than 10,000 ohms?

-> Yes
REPAIR the short circuit. For additional information, refer to the wiring diagrams. CLEAR the DTC. TEST the system for normal operation.

-> No
INSTALL a new ECT sensor.
Engine Coolant Temperature (ECT) Sensor - 4.2L SC V8 - AJV8 (18.30.10)
Engine Coolant Temperature (ECT) Sensor - 4.2L NA V8 - AJV8 (18.30.10) CLEAR the DTC. TEST the system for normal operation.

PINPOINT TEST G531332p4 : THROTTLE POSITION (TP) SENSOR RANGE/PERFORMANCE, HIGH/LOW VOLTAGE

G531332t11 : CHECK THE TP SENSOR SENSING CIRCUIT TP1 FOR HIGH RESISTANCE

1. Key off. 2. Disconnect the ECM electrical connector, PI300. 3. Disconnect the TP sensor electrical connector, PI26. 4. Measure the resistance between:

ECM connector PI300, harness side	TP sensor connector PI26, harness side
Pin 65	Pin 06

Is the resistance greater than 5 ohms?

-> Yes
REPAIR the high resistance circuit. For additional information, refer to the wiring diagrams. CLEAR the DTC. TEST the system for normal operation.

-> No
GO to Pinpoint Test G531332t12.

G531332t12 : CHECK THE TP SENSOR SENSING CIRCUIT TP1 FOR SHORT CIRCUIT TO POWER

1. Key on, engine off. 2. Measure the voltage between:

TP sensor connector PI26, harness side	Battery
Pin 06	Negative terminal

Is the voltage greater than 5 volts?

-> Yes
REPAIR the short circuit to high voltage. For additional information, refer to the wiring diagrams. CLEAR the DTC. TEST the system for normal operation.

-> No
GO to Pinpoint Test G531332t13.

G531332t13 : CHECK THE TP SENSOR SENSING CIRCUIT TP1 FOR SHORT CIRCUIT TO GROUND

1. Key off. 2. Measure the resistance between:

TP sensor connector PI26, harness side	Battery
Pin 06	Negative terminal

Is the resistance less than 10,000 ohms?

-> Yes
REPAIR the short circuit. For additional information, refer to the wiring diagrams. CLEAR the DTC. TEST the system for normal operation.

-> No
INSTALL a new TP sensor.
Throttle Body - 4.2L SC V8 - AJV8, VIN Range: G45704->G99999 (19.70.04)
Throttle Body - 4.2L NA V8 - AJV8/3.5L NA V8 - AJV8, VIN Range: G45704->G99999 (19.70.04) CLEAR the DTC. TEST the system for normal operation.

www.JagDocs.com

PINPOINT TEST G531332p5 : THROTTLE POSITION (TP) SENSOR CIRCUIT TP2 HIGH/LOW VOLTAGE

G531332t14 : CHECK TP SENSOR SENSING CIRCUIT TP2 FOR HIGH RESISTANCE

1. Key off. 2. Disconnect the TP sensor electrical connector, PI26. 3. Disconnect the ECM electrical connector, PI300. 4. Measure the resistance between:

ECM connector PI300, harness side	TP sensor connector PI26, harness side
Pin 67	Pin 04

Is the resistance greater than 5 ohms?

-> Yes
REPAIR the high resistance circuit. For additional information, refer to the wiring diagrams. CLEAR the DTC. TEST the system for normal operation.

-> No
GO to Pinpoint Test G531332t15.

G531332t15 : CHECK TP SENSOR SENSING CIRCUIT TP2 FOR SHORT CIRCUIT TO POWER

1. Key on, engine off. 2. Measure the voltage between:

TP sensor connector PI26, harness side	Battery
Pin 04	Positive terminal

Is the voltage greater than 5 volts?

-> Yes
REPAIR the short circuit. For additional information, refer to the wiring diagrams. CLEAR the DTC. TEST the system for normal operation.

-> No
GO to Pinpoint Test G531332t16.

G531332t16 : CHECK TP SENSOR SENSING CIRCUIT TP2 FOR SHORT CIRCUIT TO GROUND

1. Measure the resistance between:

TP sensor connector PI26, harness side	Battery
Pin 04	Negative terminal

Is the resistance less than 10,000 ohms?

-> Yes

REPAIR the short circuit. For additional information, refer to the wiring diagrams. CLEAR the DTC. TEST the system for normal operation.

-> No

INSTALL a new TP sensor.
Throttle Body - 4.2L SC V8 - AJV8, VIN Range: G45704->G99999 (19.70.04)
Throttle Body - 4.2L NA V8 - AJV8/3.5L NA V8 - AJV8, VIN Range: G45704->G99999 (19.70.04) CLEAR the DTC. TEST the system for normal operation.

PINPOINT TEST G531332p6 : RIGHT-HAND H02S SENSING CIRCUIT LOW/HIGH CURRENT, SLOW RESPONSE, ECM CONTROL MALFUNCTION

G531332t17 : CHECK THE H02S VARIABLE CIRCUIT FOR HIGH RESISTANCE

1. Key off. 2. Disconnect the H02S electrical connector, PI10. 3. Disconnect the ECM electrical connector, PI300. 4. Measure the resistance between:

ECM connector PI300, harness side	HO2S connector PI10, harness side
Pin 28	Pin 04

Is the resistance greater than 5 ohms?

-> Yes

REPAIR the high resistance circuit. For additional information, refer to the wiring diagrams. CLEAR the

www.JagDocs.com

DTC. TEST the system for normal operation.

-> No
GO to Pinpoint Test G531332t18.

G531332t18 : CHECK THE H02S VARIABLE CIRCUIT FOR SHORT CIRCUIT TO POWER

1. Key on, engine off. 2. Measure the voltage between:

HO2S connector PI10, harness side	Battery
Pin 04	Negative terminal

Is the voltage greater than 3 volts?

-> Yes
REPAIR the short circuit to high voltage. For additional information, refer to the wiring diagrams. CLEAR the DTC. TEST the system for normal operation.

-> No
GO to Pinpoint Test G531332t19.

G531332t19 : CHECK THE H02S VARIABLE CIRCUIT FOR SHORT CIRCUIT TO GROUND

1. Key off. 2. Measure the resistance between:

HO2S connector PI10, harness side	Battery
Pin 04	Negative terminal

Is the resistance less than 10,000 ohms?

-> Yes
REPAIR the short circuit. For additional information, refer to the wiring diagrams. CLEAR the DTC. TEST the system for normal operation.

-> No
GO to Pinpoint Test G531332t20.

G531332t20 : CHECK THE H02S CONSTANT CIRCUIT FOR HIGH RESISTANCE

1. Measure the resistance between:

ECM connector PI300, harness side	HO2S connector PI10, harness side
Pin 29	Pin 03

Is the resistance greater than 5 ohms?

-> Yes

REPAIR the high resistance circuit. For additional information, refer to the wiring diagrams. CLEAR the DTC. TEST the system for normal operation.

-> No

GO to Pinpoint Test G531332t21.

G531332t21 : CHECK THE H02S CONSTANT CIRCUIT FOR SHORT CIRCUIT TO POWER

1. Measure the voltage between:

HO2S connector PI10, harness side	Battery
Pin 03	Negative terminal

Is the voltage greater than 3 volts?

-> Yes

REPAIR the short circuit For additional information, refer to the wiring diagrams. CLEAR the DTC. TEST the system for normal operation.

-> No

GO to Pinpoint Test G531332t22.

G531332t22 : CHECK THE H02S CONSTANT CIRCUIT FOR SHORT CIRCUIT TO GROUND

1. Measure the resistance between:

HO2S connector PI10, harness side	Battery

www.JagDocs.com

Pin 03	Negative terminal

Is the resistance less than 10,000 ohms?

-> Yes
REPAIR the short circuit. For additional information, refer to the wiring diagrams. CLEAR the DTC. TEST the system for normal operation.

-> No
INSTALL a new H02S.
Heated Oxygen Sensor (HO2S) CLEAR the DTC. TEST the system for normal operation. If the DTC is repeated, refer to the warranty policy and procedures manual if an ECM is suspect.

PINPOINT TEST G531332p7 : RIGHT-HAND H02S HEATER CONTROL CIRCUIT HIGH/LOW CURRENT

G531332t23 : CHECK H02S HEATER POWER SUPPLY CIRCUIT

1. Key off. 2. Disconnect the H02S electrical connector, PI10. 3. Key on, engine off. 4. Make sure the O2S heater relay is engaged. 5. Measure the voltage between:

HO2S connector PI10, harness side	Battery
Pin 01	Negative terminal

Is the voltage greater than 10 volts?

-> Yes
GO to Pinpoint Test G531332t24.

-> No
REPAIR the power supply circuit to the H02S heater. This circuit includes the HO2S heater relay, fuse 34 of the front power distribution box, and the high power protection module. For additional information, refer to the wiring diagrams. CLEAR the DTC. TEST the system for normal operation.

G531332t24 : CHECK H02S HEATER CONTROL CIRCUIT FROM ECM FOR HIGH RESISTANCE

1. Key off. 2. Disconnect the ECM electrical connector, PI300. 3. Measure the resistance between:

HO2S connector PI10, harness side	ECM connector PI300, harness side
Pin 02	Pin 76

Is the resistance greater than 5 ohms?

-> Yes
REPAIR the high resistance circuit. For additional information, refer to the wiring diagrams. CLEAR the DTC. TEST the system for normal operation.

-> No
GO to Pinpoint Test G531332t25.

G531332t25 : CHECK H02S HEATER CONTROL CIRCUIT FROM ECM FOR SHORT CIRCUIT TO POWER

1. Key on, engine off. 2. Measure the voltage between:

HO2S connector PI10, harness side	Battery
Pin 02	Negative terminal

Is the voltage greater than 3 volts?

-> Yes
REPAIR the short circuit. For additional information, refer to the wiring diagrams. CLEAR the DTC. TEST the system for normal operation.

-> No
GO to Pinpoint Test G531332t26.

G531332t26 : CHECK H02S HEATER CONTROL CIRCUIT FROM ECM FOR SHORT CIRCUIT TO GROUND

1. Key off. 2. Measure the resistance between:

HO2S connector PI10, harness side	Battery
Pin 02	Negative terminal

www.JagDocs.com

Is the resistance less than 10,000 ohms?

-> Yes
REPAIR the short circuit. For additional information, refer to the wiring diagrams. CLEAR the DTC. TEST the system for normal operation.

-> No
INSTALL a new H02S.
Heated Oxygen Sensor (HO2S) CLEAR the DTC. TEST the system for normal operation. If the DTC is repeated, refer to the warranty policy and procedures manual if an ECM is suspect.

PINPOINT TEST G531332p8 : RIGHT-HAND CATALYST MONITOR SENSOR SENSING CIRCUIT LOW/HIGH VOLTAGE, NO ACTIVITY

G531332t27 : CHECK THE CATALYST MONITOR SENSOR SENSING CIRCUIT FOR HIGH RESISTANCE

1. Key off. 2. Disconnect the catalyst monitor sensor electrical connector, PI11. 3. Disconnect the ECM electrical connector, PI300. 4. Measure the resistance between:

Catalyst monitor sensor connector PI11, harness side	ECM connector PI300, harness side
Pin 04	Pin 40

Is the resistance greater than 5 ohms?

-> Yes
REPAIR the high resistance circuit. For additional information, refer to the wiring diagrams. CLEAR the DTC. TEST the system for normal operation.

-> No
GO to Pinpoint Test G531332t28.

G531332t28 : CHECK THE CATALYST MONITOR SENSOR SENSING CIRCUIT FOR SHORT CIRCUIT TO POWER

1. Key on, engine off. 2. Measure the voltage between:

Catalyst monitor sensor connector PI11, harness side	Battery

Pin 04	Negative terminal

Is the voltage greater than 3 volts?

-> Yes
REPAIR the short circuit. For additional information, refer to the wiring diagrams. CLEAR the DTC. TEST the system for normal operation.

-> No
GO to Pinpoint Test G531332t29.

G531332t29 : CHECK THE CATALYST MONITOR SENSOR SENSING CIRCUIT FOR SHORT CIRCUIT TO GROUND

1. Key off. 2. Measure the resistance between:

Catalyst monitor sensor connector PI11, harness side	Battery
Pin 04	Negative terminal

Is the resistance less than 10,000 ohms?

-> Yes
REPAIR the short circuit. For additional information, refer to the wiring diagrams. CLEAR the DTC. TEST the system for normal operation.

-> No
GO to Pinpoint Test G531332t30.

G531332t30 : CHECK THE CATALYST MONITOR SENSOR GROUND CIRCUIT FOR HIGH RESISTANCE

1. Measure the resistance between:

Catalyst monitor sensor connector PI11, harness side	ECM connector PI300, harness side
Pin 03	Pin 22

Is the resistance greater than 5 ohms?

www.JagDocs.com

-> Yes
REPAIR the high resistance circuit. For additional information, refer to the wiring diagrams. CLEAR the DTC. TEST the system for normal operation.

-> No
INSTALL a new catalyst monitor sensor.
Catalyst Monitor Sensor (18.30.66) CLEAR the DTC. TEST the system for normal operation.

PINPOINT TEST G531332p9 : RIGHT-HAND CATALYST MONITOR SENSOR HEATER CONTROL CIRCUIT LOW/HIGH RESISTANCE

G531332t31 : CHECK THE POWER SUPPLY TO THE CATALYST MONITOR HEATER

1. Key off. 2. Disconnect the catalyst monitor sensor electrical connector, PI11. 3. Key on, engine off. 4. Make sure the O2S heater relay is engaged. 5. Measure the voltage between:

Catalyst monitor sensor connector PI11, harness side	Battery
Pin 02	Negative terminal

Is the voltage greater than 10 volts?

-> Yes
GO to Pinpoint Test G531332t32.

-> No
REPAIR the power supply circuit to the catalyst monitor sensor heater. This circuit includes the heater relay and fuse 33 of the front power distribution box. For additional information, refer to the wiring diagrams. CLEAR the DTC. TEST the system for normal operation.

G531332t32 : CHECK THE CATALYST MONITOR HEATER CONTROL CIRCUIT FOR HIGH RESISTANCE

1. Key off. 2. Disconnect the ECM electrical connector, PI300. 3. Measure the resistance between:

Catalyst monitor sensor connector PI11, harness side	ECM connector PI300, harness side

Pin 02	Pin 88

Is the resistance greater than 5 ohms?

-> Yes
REPAIR the high resistance circuit. For additional information, refer to the wiring diagrams. CLEAR the DTC. TEST the system for normal operation.

-> No
INSTALL a new catalyst monitor sensor.
Catalyst Monitor Sensor (18.30.66) CLEAR the DTC. TEST the system for normal operation. If the DTC is repeated, refer to the warranty policy and procedures manual if an ECM is suspect.

PINPOINT TEST G531332p10 : LEFT-HAND H02S SENSING CIRCUIT LOW/HIGH CURRENT, SLOW RESPONSE, ECM CONTROL MALFUNCTION

G531332t33 : CHECK THE H02S VARIABLE CIRCUIT FOR HIGH RESISTANCE

1. Key off. 2. Disconnect the H02S electrical connector, PI12. 3. Disconnect the ECM electrical connector, PI300. 4. Measure the resistance between:

HO2S connector PI12, harness side	ECM connector PI300, harness side
Pin 04	Pin 26

Is the resistance greater than 5 ohms?

-> Yes
REPAIR the high resistance circuit. For additional information, refer to the wiring diagrams. CLEAR the DTC. TEST the system for normal operation.

-> No
GO to Pinpoint Test G531332t34.

www.JagDocs.com

G531332t34 : CHECK THE H02S VARIABLE CIRCUIT FOR SHORT CIRCUIT TO POWER

1. Key on, engine off. 2. Measure the voltage between:

HO2S connector PI12, harness side	Battery
Pin 04	Negative terminal

Is the voltage greater than 3 volts?

-> Yes
REPAIR the short circuit. For additional information, refer to the wiring diagrams. CLEAR the DTC. TEST the system for normal operation.

-> No
GO to Pinpoint Test G531332t35.

G531332t35 : CHECK THE H02S VARIABLE CIRCUIT FOR SHORT CIRCUIT TO GROUND

1. Key off. 2. Measure the resistance between:

HO2S connector PI12, harness side	Battery
Pin 04	Negative terminal

Is the resistance less than 10,000 ohms?

-> Yes
REPAIR the short circuit. For additional information, refer to the wiring diagrams. CLEAR the DTC. TEST the system for normal operation.

-> No
GO to Pinpoint Test G531332t36.

G531332t36 : CHECK THE H02S CONSTANT CIRCUIT FOR HIGH RESISTANCE

1. Measure the resistance between:

HO2S connector PI12, harness side	ECM connector PI300, harness side

Pin 03	Pin 27

Is the resistance greater than 5 ohms?

-> Yes
REPAIR the high resistance circuit. For additional information, refer to the wiring diagrams. CLEAR the DTC. TEST the system for normal operation.

-> No
GO to Pinpoint Test G531332t37.

G531332t37 : CHECK THE H02S CONSTANT CIRCUIT FOR SHORT CIRCUIT TO POWER

1. Measure the voltage between:

HO2S connector PI12, harness side	Battery
Pin 03	Negative terminal

Is the voltage greater than 3 volts?

-> Yes
REPAIR the short circuit. For additional information, refer to the wiring diagrams. CLEAR the DTC. TEST the system for normal operation.

-> No
GO to Pinpoint Test G531332t38.

G531332t38 : CHECK THE H02S CONSTANT CIRCUIT FOR SHORT CIRCUIT TO GROUND

1. Measure the resistance between:

HO2S connector PI12, harness side	Battery
Pin 03	Negative terminal

Is the resistance less than 10,000 ohms?

www.JagDocs.com

-> Yes
REPAIR the short circuit. For additional information, refer to the wiring diagrams. CLEAR the DTC. TEST the system for normal operation.

-> No
INSTALL a new H02S.
Heated Oxygen Sensor (HO2S) CLEAR the DTC. TEST the system for normal operation. If the DTC is repeated, refer to the warranty policy and procedures manual if an ECM is suspect.

PINPOINT TEST G531332p11 : LEFT-HAND H02S HEATER CONTROL CIRCUIT HIGH/LOW CURRENT

G531332t39 : CHECK H02S HEATER POWER SUPPLY CIRCUIT

1. Key off. 2. Disconnect the H02S electrical connector, PI12. 3. Key on, engine off. 4. Measure the voltage between:

HO2S connector PI12, harness side	Battery
Pin 01	Negative terminal

Is the voltage greater than 10 volts?

-> Yes
GO to Pinpoint Test G531332t40.

-> No
REPAIR the power supply circuit to the H02S heater. This circuit includes the heater relay and fuse 34 of the front power distribution box. For additional information, refer to the wiring diagrams. CLEAR the DTC. TEST the system for normal operation.

G531332t40 : CHECK H02S HEATER CONTROL CIRCUIT FROM ECM FOR HIGH RESISTANCE

1. Key off. 2. Disconnect the ECM electrical connector, PI300. 3. Measure the resistance between:

HO2S connector PI12, harness side	ECM connector PI300, harness side
Pin 02	Pin 77

Is the resistance greater than 5 ohms?

-> Yes
REPAIR the high resistance circuit. For additional information, refer to the wiring diagrams. CLEAR the DTC. TEST the system for normal operation.

-> No
GO to Pinpoint Test G531332t41.

G531332t41 : CHECK H02S HEATER CONTROL CIRCUIT FROM ECM FOR SHORT CIRCUIT TO POWER

1. Key on, engine off. 2. Measure the voltage between:

HO2S connector PI12, harness side	Battery
Pin 02	Negative terminal

Is the voltage greater than 3 volts?

-> Yes
REPAIR the short circuit. For additional information, refer to the wiring diagrams. CLEAR the DTC. TEST the system for normal operation.

-> No
GO to Pinpoint Test G531332t42.

G531332t42 : CHECK H02S HEATER CONTROL CIRCUIT FROM ECM FOR SHORT CIRCUIT TO GROUND

1. Key off. 2. Measure the resistance between:

HO2S connector PI12, harness side	Battery
Pin 02	Negative terminal

Is the resistance less than 10,000 ohms?

-> Yes
REPAIR the short circuit. For additional information, refer to the wiring diagrams. CLEAR the DTC. TEST the system for normal operation.

www.JagDocs.com

-> No
INSTALL a new H02S.
Heated Oxygen Sensor (HO2S) CLEAR the DTC. TEST the system for normal operation. If the DTC is repeated, refer to the warranty policy and procedures manual if an ECM is suspect.

PINPOINT TEST G531332p12 : LEFT-HAND CATALYST MONITOR SENSOR HEATER CONTROL CIRCUIT LOW/HIGH RESISTANCE

G531332t43 : CHECK THE POWER SUPPLY TO THE CATALYST MONITOR SENSOR HEATER

1. Disconnect the catalyst monitor sensor electrical connector, PI13. 2. Key on, engine off. 3. Make sure the catalyst monitor sensor heater relay is engaged. 4. Measure the voltage between:

Catalyst monitor sensor connector PI13, harness side	Battery
Pin 01	Negative terminal

Is the voltage greater than 10 volts?

-> Yes
GO to Pinpoint Test G531332t44.

-> No
REPAIR the power supply circuit to the H02S heater. This circuit includes the heater relay and fuse 34 of the front power distribution box. For additional information, refer to the wiring diagrams. CLEAR the DTC. TEST the system for normal operation.

G531332t44 : CHECK THE CATALYST MONITOR SENSOR HEATER CONTROL CIRCUIT FOR HIGH RESISTANCE

1. Key off. 2. Disconnect the ECM electrical connector, PI300. 3. Measure the resistance between:

Catalyst monitor sensor connector PI13, harness side	ECM connector PI300, harness side
Pin 01	Pin 89

Is the resistance greater than 5 ohms?

-> Yes
REPAIR the high resistance circuit. For additional information, refer to the wiring diagrams. CLEAR the DTC. TEST the system for normal operation.

-> No
INSTALL a new catalyst monitor sensor.
Catalyst Monitor Sensor (18.30.66) CLEAR the DTC. TEST the system for normal operation. If the DTC is repeated, refer to the warranty policy and procedures manual if an ECM is suspect.

PINPOINT TEST G531332p13 : ENGINE OIL TEMPERATURE (EOT) SENSOR RANGE/PERFORMANCE, HIGH/LOW VOLTAGE

G531332t45 : CHECK THE EOT SENSOR SENSING CIRCUIT FOR HIGH RESISTANCE

1. Key off. 2. Disconnect the EOT sensor electrical connector, PI24. 3. Disconnect the ECM electrical connector, PI300. 4. Measure the resistance between:

EOT sensor connector PI24, harness side	ECM connector PI300, harness side
Pin 02	Pin 23

Is the resistance greater than 5 ohms?

-> Yes
REPAIR the high resistance circuit. For additional information, refer to the wiring diagrams. CLEAR the DTC. TEST the system for normal operation.

-> No
GO to Pinpoint Test G531332t46.

G531332t46 : CHECK THE EOT SENSOR SENSING CIRCUIT FOR SHORT CIRCUIT TO POWER

1. Key on, engine off. 2. Measure the voltage between:

EOT sensor connector PI24, harness side	Battery

www.JagDocs.com

Pin 02	Negative terminal

Is the voltage greater than 3 volts?

-> Yes
REPAIR the short circuit. For additional information, refer to the wiring diagrams. CLEAR the DTC. TEST the system for normal operation.

-> No
GO to Pinpoint Test G531332t47.

G531332t47 : CHECK THE EOT SENSOR SENSING CIRCUIT FOR SHORT CIRCUIT TO GROUND

1. Key off. 2. Measure the resistance between:

EOT sensor connector PI24, harness side	Battery
Pin 02	Negative terminal

Is the resistance less than 10,000 ohms?

-> Yes
REPAIR the short circuit. For additional information, refer to the wiring diagrams. CLEAR the DTC. TEST the system for normal operation.

-> No
GO to Pinpoint Test G531332t48.

G531332t48 : CHECK THE EOT SENSOR GROUND CIRCUIT FOR HIGH RESISTANCE

1. Measure the resistance between:

EOT sensor connector PI24, harness side	ECM connector PI300, harness side
Pin 01	Pin 10

Is the resistance greater than 5 ohms?

-> Yes
REPAIR the high resistance circuit. This circuit includes harness splice, PIS49. For additional information, refer to the wiring diagrams. CLEAR the DTC. TEST the system for normal operation.

-> No
INSTALL a new EOT sensor.
Oil Temperature Sensor (18.31.01) CLEAR the DTC. TEST the system for normal operation. If the DTC is repeated, refer to the warranty policy and procedures manual if an ECM is suspect.

PINPOINT TEST G531332p14 : LEFT-HAND CATALYST MONITOR SENSOR SENSING CIRCUIT LOW/HIGH VOLTAGE, NO ACTIVITY

G531332t49 : CHECK THE CATALYST MONITOR SENSOR SENSING CIRCUIT FOR HIGH RESISTANCE

1. Key off. 2. Disconnect the catalyst monitor sensor electrical connector, PI13. 3. Disconnect the ECM electrical connector, PI300. 4. Measure the resistance between:

Catalyst monitor sensor PI13, harness side	ECM connector PI300, harness side
Pin 04	Pin 41

Is the resistance greater than 5 ohms?

-> Yes
REPAIR the high resistance circuit. For additional information, refer to the wiring diagrams. CLEAR the DTC. TEST the system for normal operation.

-> No
GO to Pinpoint Test G531332t50.

G531332t50 : CHECK THE CATALYST MONITOR SENSOR SENSING CIRCUIT FOR SHORT CIRCUIT TO POWER

1. Key on, engine off. 2. Measure the voltage between:

Catalyst monitor sensor PI13, harness side	Battery

www.JagDocs.com

Pin 04	Negative terminal

Is the voltage greater than 3 volts?

-> Yes
REPAIR the short circuit. For additional information, refer to the wiring diagrams. CLEAR the DTC. TEST the system for normal operation.

-> No
GO to Pinpoint Test G531332t51.

G531332t51 : CHECK THE CATALYST MONITOR SENSOR SENSING CIRCUIT FOR SHORT CIRCUIT TO GROUND

1. Key off. 2. Measure the resistance between:

Catalyst monitor sensor PI13, harness side	Battery
Pin 04	Negative terminal

Is the resistance less than 10,000 ohms?

-> Yes
REPAIR the short circuit. For additional information, refer to the wiring diagrams. CLEAR the DTC. TEST the system for normal operation.

-> No
GO to Pinpoint Test G531332t52.

G531332t52 : CHECK THE CATALYST MONITOR SENSOR GROUND CIRCUIT FOR HIGH RESISTANCE

1. Measure the resistance between PI13, pin 03 (B) and PI300, pin 130 (BW).

Catalyst monitor sensor PI13, harness side	ECM connector PI300, harness side
Pin 03	Pin 45

Is the resistance greater than 5 ohms?

-> Yes
REPAIR the high resistance circuit. For additional information, refer to the wiring diagrams. CLEAR the DTC. TEST the system for normal operation.

-> No
INSTALL a new catalyst monitor sensor.
Catalyst Monitor Sensor (18.30.66) CLEAR the DTC. TEST the system for normal operation.

PINPOINT TEST G531332p15 : RIGHT-HAND KNOCK SENSOR (KS) HIGH/LOW VOLTAGE

G531332t53 : CHECK KS SENSING CIRCUIT FOR HIGH RESISTANCE

1. Key off. 2. Disconnect the KS electrical connector, PI19. 3. Disconnect the ECM electrical connector, PI300. 4. Measure the resistance between:

KS connector PI19, harness side	ECM connector PI300, harness side
Pin 04	Pin 42

Is the resistance greater than 5 ohms?

-> Yes
REPAIR the high resistance circuit. For additional information, refer to the wiring diagrams. CLEAR the DTC. TEST the system for normal operation.

-> No
GO to Pinpoint Test G531332t54.

G531332t54 : CHECK KS SENSING CIRCUIT FOR SHORT CIRCUIT TO POWER

1. Key on, engine off. 2. Measure the voltage between:

KS connector PI19, harness side	Battery
Pin 04	Negative terminal

Is the voltage greater than 3 volts?

www.JagDocs.com

-> Yes
REPAIR the short circuit. For additional information, refer to the wiring diagrams. CLEAR the DTC. TEST the system for normal operation.

-> No
GO to Pinpoint Test G531332t55.

G531332t55 : CHECK KS SENSING CIRCUIT FOR SHORT CIRCUIT TO GROUND

1. Key off. 2. Measure the resistance between:

KS connector PI19, harness side	Battery
Pin 04	Negative terminal

Is the resistance less than 10,000 ohms?

-> Yes
REPAIR the short circuit. For additional information, refer to the wiring diagrams. CLEAR the DTC. TEST the system for normal operation.

-> No
GO to Pinpoint Test G531332t56.

G531332t56 : CHECK KS GROUND CIRCUIT FOR HIGH RESISTANCE

1. Measure the resistance between:

KS connector PI19, harness side	ECM connector PI300, harness side
Pin 03	Pin 19

Is the resistance greater than 5 ohms?

-> Yes
REPAIR the high resistance circuit. For additional information, refer to the wiring diagrams. CLEAR the DTC. TEST the system for normal operation.

-> No
INSTALL a new KS.
Knock Sensor (KS) LH (18.30.92) CLEAR the DTC. TEST the system for normal operation.

PINPOINT TEST G531332p16 : LEFT-HAND KNOCK SENSOR (KS) HIGH/LOW VOLTAGE

G531332t57 : CHECK KS SENSING CIRCUIT FOR HIGH RESISTANCE

1. Key off. 2. Disconnect the KS electrical connector, PI19. 3. Disconnect the ECM electrical connector, PI300. 4. Measure the resistance between:

KS connector PI19, harness side	ECM connector PI300, harness side
Pin 02	Pin 43

Is the resistance greater than 5 ohms?

-> Yes
REPAIR the high resistance circuit. For additional information, refer to the wiring diagrams. CLEAR the DTC. TEST the system for normal operation.

-> No
GO to Pinpoint Test G531332t58.

G531332t58 : CHECK KS SENSING CIRCUIT FOR SHORT CIRCUIT TO POWER

1. Key on, engine off. 2. Measure the voltage between:

KS connector PI19, harness side	Battery
Pin 02	Negative terminal

Is the voltage greater than 3 volts?

-> Yes
REPAIR the short circuit. For additional information, refer to the wiring diagrams. CLEAR the DTC. TEST the system for normal operation.

-> No
GO to Pinpoint Test G531332t59.

www.JagDocs.com

G531332t59 : CHECK KS SENSING CIRCUIT FOR SHORT CIRCUIT TO GROUND

1. Key off. 2. Measure the resistance between:

KS connector PI19, harness side	Battery
Pin 02	Negative terminal

Is the resistance less than 10,000 ohms?

-> Yes
REPAIR the short circuit. For additional information, refer to the wiring diagrams. CLEAR the DTC. TEST the system for normal operation.

-> No
GO to Pinpoint Test G531332t60.

G531332t60 : CHECK KS GROUND CIRCUIT FOR HIGH RESISTANCE

1. Measure the resistance between:

KS connector PI19, harness side	ECM connector PI300, harness side
Pin 01	Pin 20

Is the resistance greater than 5 ohms?

-> Yes
REPAIR the high resistance circuit. For additional information, refer to the wiring diagrams. CLEAR the DTC. TEST the system for normal operation.

-> No
INSTALL a new KS.
Knock Sensor (KS) LH (18.30.92) CLEAR the DTC. TEST the system for normal operation.

PINPOINT TEST G531332p17 : CRANKSHAFT POSITION (CKP) SENSOR CIRCUIT

RANGE/PERFORMANCE, CIRCUIT MALFUNCTION

G531332t61 : CHECK THE CKP SENSOR FOR CORRECT INSTALLATION

1. Key off. 2. Check the CKP sensor for correct installation.

Is the CKP sensor correctly installed?

-> Yes
GO to Pinpoint Test G531332t62.

-> No
INSTALL the CKP sensor correctly.
Crankshaft Position (CKP) Sensor (18.30.12) Reconnect the sensor. CLEAR the DTCs. TEST the system for normal operation.

G531332t62 : CHECK THE CKP SENSOR FOR DEBRIS

1. Remove the CKP sensor and inspect for debris.

Is the CKP sensor free of debris?

-> Yes
GO to Pinpoint Test G531332t63.

-> No
CLEAN the sensor and wheel. INSTALL the sensor.
Crankshaft Position (CKP) Sensor (18.30.12) Reconnect the sensor. CLEAR the DTCs. TEST the system for normal operation.

G531332t63 : CHECK THE CKP SENSOR SENSING CIRCUIT FOR HIGH RESISTANCE

1. Disconnect the ECM electrical connector, PI300. 2. Disconnect the CKP sensor electrical connector, PI21. 3. Measure the resistance between:

CKP sensor connector PI21, harness side	ECM connector PI300, harness side
Pin 02	Pin 30

Is the resistance greater than 5 ohms?

www.JagDocs.com

-> Yes
REPAIR the high resistance circuit. For additional information, refer to the wiring diagrams. CLEAR the DTC. TEST the system for normal operation.

-> No
GO to Pinpoint Test G531332t64.

G531332t64 : CHECK THE CKP SENSOR SENSING CIRCUIT FOR SHORT CIRCUIT TO POWER

1. Key on, engine off. 2. Measure the voltage between:

CKP sensor connector PI21, harness side	Battery
Pin 02	Negative terminal

Is the voltage greater than 3 volts?

-> Yes
REPAIR the short circuit. For additional information, refer to the wiring diagrams. CLEAR the DTC. TEST the system for normal operation.

-> No
GO to Pinpoint Test G531332t65.

G531332t65 : CHECK THE CKP SENSOR SENSING CIRCUIT FOR SHORT CIRCUIT TO GROUND

1. Key off. 2. Measure the resistance between:

CKP sensor connector PI21, harness side	Battery
Pin 02	Negative terminal

Is the resistance less than 10,000 ohms?

-> Yes
REPAIR the short circuit. For additional information, refer to the wiring diagrams. CLEAR the DTC. TEST the system for normal operation.

-> No

GO to Pinpoint Test G531332t66.

G531332t66 : CHECK THE CKP SENSOR GROUND CIRCUIT FOR HIGH RESISTANCE

1. Measure the resistance between:

CKP sensor connector PI21, harness side	ECM connector PI300, harness side
Pin 01	Pin 06

Is the resistance greater than 5 ohms?

-> Yes
REPAIR the high resistance circuit. For additional information, refer to the wiring diagrams. CLEAR the DTC. TEST the system for normal operation.

-> No
INSTALL a new CKP sensor.
Crankshaft Position (CKP) Sensor (18.30.12) CLEAR the DTC. TEST the system for normal operation.

PINPOINT TEST G531332p18 : RIGHT-HAND CAMSHAFT POSITION (CMP) SENSOR CIRCUIT RANGE/PERFORMANCE, CIRCUIT MALFUNCTION

G531332t67 : CHECK THE CMP SENSOR FOR CORRECT INSTALLATION

1. Key off. 2. Check the CMP sensor for correct installation.

Is the CMP sensor correctly installed?

-> Yes
GO to Pinpoint Test G531332t68.

-> No
INSTALL the CMP sensor correctly.
Camshaft Position (CMP) Sensor RH (18.31.11) CLEAR the DTCs. TEST the system for normal operation.

www.JagDocs.com

G531332t68 : CHECK THE CMP SENSOR FOR FOREIGN DEBRIS

1. Remove the CMP sensor and inspect for foreign debris.

Is the CMP sensor free of foreign debris?

-> Yes
GO to Pinpoint Test G531332t69.

-> No
CLEAN the sensor and wheel. INSTALL the sensor.
Camshaft Position (CMP) Sensor RH (18.31.11) CLEAR the DTCs. TEST the system for normal operation.

G531332t69 : CHECK THE CMP SENSOR SENSING CIRCUIT FOR HIGH RESISTANCE

1. Disconnect the CMP sensor electrical connector, PI23. 2. Disconnect the ECM electrical connector, PI300. 3. Measure the resistance between:

CMP sensor connector PI23, harness side	ECM connector PI300, harness side
Pin 02	Pin 34

Is the resistance greater than 5 ohms?

-> Yes
REPAIR the high resistance circuit. For additional information, refer to the wiring diagrams. CLEAR the DTC. TEST the system for normal operation.

-> No
GO to Pinpoint Test G531332t69.

G531332t70 : CHECK THE CMP SENSOR SENSING CIRCUIT FOR SHORT CIRCUIT TO POWER

1. Key on, engine off. 2. Measure the voltage between:

CMP sensor connector PI23, harness side	Battery
Pin 02	Negative terminal

Is the voltage greater than 3 volts?

-> Yes
REPAIR the short circuit. For additional information, refer to the wiring diagrams. CLEAR the DTC. TEST the system for normal operation.

-> No
GO to Pinpoint Test G531332t71.

G531332t71 : CHECK THE CMP SENSOR SENSING CIRCUIT FOR SHORT CIRCUIT TO GROUND

1. Key off. 2. Measure the resistance between:

CMP sensor connector PI23, harness side	Battery
Pin 02	Negative terminal

Is the resistance less than 10,000 ohms?

-> Yes
REPAIR the short circuit. For additional information, refer to the wiring diagrams. CLEAR the DTC. TEST the system for normal operation.

-> No
GO to Pinpoint Test G531332t72.

G531332t72 : CHECK THE CMP SENSOR GROUND CIRCUIT FOR HIGH RESISTANCE

1. Measure the resistance between:

CMP sensor connector PI23, harness side	ECM connector PI300, harness side
Pin 01	Pin 07

Is the resistance greater than 5 ohms?

-> Yes
REPAIR the high resistance circuit. For additional information, refer to the wiring diagrams. CLEAR the DTC. TEST the system for normal operation.

-> No
INSTALL a new CMP sensor.

www.JagDocs.com

Camshaft Position (CMP) Sensor RH (18.31.11) CLEAR the DTC. TEST the system for normal operation.

PINPOINT TEST G531332p19 : RADIATOR COOLING FAN MODULE DRIVE CIRCUIT MALFUNCTION

G531332t73 : CHECK THE RADIATOR FAN MODULE PERMANENT SUPPLY

1. Disconnect the fan module electrical connector, GCU04. 2. Measure the voltage between:

Fan module connector GCU04, harness side	Battery
Single pin	Negative terminal

Is the voltage less than 10 volts?

-> Yes
REPAIR the circuit between the cooling fan module and battery. This circuit includes fuse 35 of the front power distribution box (80A). For additional information, refer to the wiring diagrams. CLEAR the DTC. TEST the system for normal operation.

-> No
Reconnect electrical connector, GCU04. GO to Pinpoint Test G531332t74.

G531332t74 : CHECK THE RADIATOR FAN MODULE GROUND

1. Disconnect the fan module electrical connector, GCU03. 2. Measure the resistance between:

Fan module connector GCU03, harness side	Battery
Single pin	Negative terminal

Is the resistance greater than 5 ohms?

-> Yes
REPAIR the high resistance circuit. For additional information, refer to the wiring diagrams. CLEAR the DTC. TEST the system for normal operation.

-> No

Reconnect electrical connector, GCU03. GO to Pinpoint Test G531332t75.

G531332t75 : CHECK THE RADIATOR FAN MODULE EMS SWITCHED SUPPLY

1. Disconnect the fan module electrical connector, GCU01. 2. Key on, engine off. 3. Make sure the EMS relay is engaged. 4. Measure the voltage between:

Fan module connector GCU01, harness side	Battery
Pin 02	Negative terminal

Is the voltage less than 10 volts?

-> Yes
REPAIR the circuit between the cooling fan module and battery. This circuit includes the front power distribution box, (fuse 14) and the EMS control relay. For additional information, refer to the wiring diagrams. CLEAR the DTC. TEST the system for normal operation.

-> No
GO to Pinpoint Test G531332t76.

G531332t76 : CHECK THE ECM TO RADIATOR FAN MODULE CIRCUIT FOR HIGH RESISTANCE

1. Key off. 2. Disconnect the ECM electrical connector, PI300. 3. Measure the resistance between:

Fan module connector GCU01, harness side	ECM connector PI300, harness side
Pin 01	Pin 49

Is the resistance greater than 5 ohms?

-> Yes
REPAIR the high resistance circuit. For additional information, refer to the wiring diagrams. CLEAR the DTC. TEST the system for normal operation.

-> No
GO to Pinpoint Test G531332t77.

www.JagDocs.com

G531332t77 : CHECK THE ECM TO RADIATOR FAN MODULE CIRCUIT FOR SHORT CIRCUIT TO POWER

1. Key on, engine off. 2. Measure the voltage between:

Fan module connector GCU01, harness side	Battery
Pin 01	Negative terminal

Is the voltage greater than 3 volts?

-> Yes
REPAIR the short circuit. For additional information, refer to the wiring diagrams. CLEAR the DTC. TEST the system for normal operation.

-> No
GO to Pinpoint Test G531332t78.

G531332t78 : CHECK THE ECM TO RADIATOR FAN MODULE CIRCUIT FOR SHORT CIRCUIT TO GROUND

1. Key off. 2. Measure the resistance between:

Fan module connector GCU01, harness side	Battery
Pin 01	Negative terminal

Is the resistance less than 10,000 ohms?

-> Yes
REPAIR the short circuit. For additional information, refer to the wiring diagrams. CLEAR the DTC. TEST the system for normal operation.

-> No
INSTALL a new radiator cooling fan module. CLEAR the DTC. TEST the system for normal operation.

PINPOINT TEST G531332p20 : BATTERY POWER SUPPLY VOLTAGE MALFUNCTION

G531332t79 : CHECK THE BATTERY POWER SUPPLY TO THE ECM

1. Disconnect the ECM electrical connector, PI300. 2. Measure the voltage between:

ECM connector PI300, harness side	Battery
Pin 54	Negative terminal

Is the voltage greater than 10 volts?

-> Yes
Recheck the DTCs.

-> No
REPAIR the battery power supply circuit. This circuit includes fuse 17 of the front power distribution box. For additional information, refer to the wiring diagrams. CLEAR the DTC. TEST the system for normal operation.

PINPOINT TEST G531332p21 : MASS AIR FLOW (MAF) SENSOR GROUND MALFUNCTION

G531332t80 : CHECK THE MAF SENSOR GROUND

1. Disconnect the MAF sensor electrical connector, PI14. 2. Key on, engine off. 3. Measure the resistance between:

MAF sensor connector PI14, harness side	Battery
Pin 02	Negative terminal

Is the resistance greater than 5 ohms?

-> Yes
GO to Pinpoint Test G531332t81.

-> No
INSTALL a new MAF sensor.
Mass Air Flow (MAF) Sensor (18.30.15) CLEAR the DTC. TEST the system for normal operation.

www.JagDocs.com

G531332t81 : CHECK THE MAF SENSOR GROUND CIRCUIT FOR HIGH RESISTANCE

1. Key off. 2. Disconnect the ECM electrical connector, PI300. 3. Measure the resistance between:

MAF sensor connector PI14, harness side	ECM connector PI300, harness side
Pin 02	Pin 18

Is the resistance greater than 5 ohms?

-> Yes
REPAIR the high resistance circuit. For additional information, refer to the wiring diagrams. CLEAR the DTC. TEST the system for normal operation.

-> No
GO to Pinpoint Test G531332t82.

G531332t82 : CHECK THE MAF SENSOR GROUND CIRCUIT FOR SHORT CIRCUIT TO POWER

1. Key on, engine off. 2. Measure the voltage between:

MAF sensor connector PI14, harness side	Battery
Pin 02	Negative terminal

Is the voltage greater than 3 volts?

-> Yes
REPAIR the short circuit. For additional information, refer to the wiring diagrams. CLEAR the DTC. TEST the system for normal operation.

-> No
Refer to the warranty policy and procedures manual if an ECM is suspect.

PINPOINT TEST G531332p22 : ACCELERATOR PEDAL POSITION (APP) SENSOR SENSING CIRCUIT 1 HIGH/LOW VOLTAGE

G531332t83 : CHECK THE APP SENSOR SENSING CIRCUIT 1 FOR HIGH RESISTANCE

1. Key off. 2. Disconnect the ECM electrical connector, PI300. 3. Disconnect the APP sensor electrical connector, CR14. 4. Measure the resistance between:

ECM connector PI300, harness side	APP sensor connector CR14, harness side
Pin 01	Pin 38

Is the resistance greater than 5 ohms?

-> Yes
REPAIR the high resistance circuit. For additional information, refer to the wiring diagrams. CLEAR the DTC. TEST the system for normal operation.

-> No
GO to Pinpoint Test G531332t84.

G531332t84 : CHECK THE APP SENSOR SENSING CIRCUIT FOR SHORT CIRCUIT TO POWER

1. Key on, ignition off. 2. Measure the voltage between:

APP sensor connector CR14, harness side	Battery
Pin 01	Negative terminal

Is the voltage greater than 3 volts?

-> Yes
REPAIR the short circuit. For additional information, refer to the wiring diagrams. CLEAR the DTC. TEST the system for normal operation.

-> No
GO to Pinpoint Test G531332t85.

G531332t85 : CHECK THE APP SENSOR SENSING CIRCUIT FOR SHORT CIRCUIT TO GROUND

1. Key off. 2. Measure the resistance between:

www.JagDocs.com

APP sensor connector CR14, harness side	Battery
Pin 01	Negative terminal

Is the resistance less than 10,000 ohms?

-> Yes
REPAIR the short circuit. For additional information, refer to the wiring diagrams. CLEAR the DTC. TEST the system for normal operation.

-> No
GO to Pinpoint Test G531332t86.

G531332t86 : CHECK THE APP SENSOR SUPPLY VOLTAGE AT THE SENSOR

1. Reconnect the ECM electrical connector, PI300. 2. Key on, ignition off. 3. Measure the voltage between:

APP sensor connector CR14, harness side	Battery
Pin 02	Negative terminal

Is the voltage less than 4 volts?

-> Yes
GO to Pinpoint Test G531332t87.

-> No
INSTALL a new APP sensor.
Accelerator Pedal (19.20.01) CLEAR the DTC. TEST the system for normal operation.

G531332t87 : CHECK THE APP SENSOR SUPPLY VOLTAGE CIRCUIT FOR HIGH RESISTANCE

1. Key off. 2. Disconnect the ECM electrical connector, PI300. 3. Measure the resistance between:

APP sensor connector CR14, harness side	ECM connector PI300, harness side
Pin 02	Pin 32

Is the resistance greater than 5 ohms?

-> Yes
REPAIR the high resistance circuit. For additional information, refer to the wiring diagrams. CLEAR the DTC. TEST the system for normal operation.

-> No
Check the ECM power supplies (recheck DTCs. P1104 may be flagged).

PINPOINT TEST G531332p23 : ACCELERATOR PEDAL POSITION (APP) SENSOR SENSING CIRCUIT 2 HIGH/LOW VOLTAGE

G531332t88 : CHECK THE APP SENSOR SENSING CIRCUIT FOR HIGH RESISTANCE

1. Key off. 2. Disconnect the APP sensor electrical connector, CR14. 3. Disconnect the ECM electrical connector, PI300. 4. Measure the resistance between:

APP sensor connector CR14, harness side	ECM connector PI300, harness side
Pin 04	Pin 24

Is the resistance greater than 5 ohms?

-> Yes
REPAIR the high resistance circuit. For additional information, refer to the wiring diagrams. CLEAR the DTC. TEST the system for normal operation.

-> No
GO to Pinpoint Test G531332t89.

G531332t89 : CHECK THE APP SENSOR SENSING CIRCUIT FOR SHORT CIRCUIT TO POWER

1. Key on, engine off. 2. Measure the voltage between:

APP sensor connector CR14, harness side	Battery
Pin 04	Negative terminal

www.JagDocs.com

Is the voltage greater than 3 volts?

-> Yes
REPAIR the short circuit. For additional information, refer to the wiring diagrams. CLEAR the DTC. TEST the system for normal operation.

-> No
GO to Pinpoint Test G531332t90.

G531332t90 : CHECK THE APP SENSOR SENSING CIRCUIT FOR SHORT CIRCUIT TO GROUND

1. Key off. 2. Measure the resistance between:

APP sensor connector CR14, harness side	Battery
Pin 04	Negative terminal

Is the resistance less than 10,000 ohms?

-> Yes
REPAIR the short circuit. For additional information, refer to the wiring diagrams. CLEAR the DTC. TEST the system for normal operation.

-> No
GO to Pinpoint Test G531332t91.

G531332t91 : CHECK THE APP SENSOR SUPPLY VOLTAGE AT THE SENSOR

1. Reconnect the ECM electrical connector, PI300. 2. Key on, engine off. 3. Measure the voltage between:

APP sensor connector CR14, harness side	Battery
Pin 05	Negative terminal

Is the voltage less than 4 volts?

-> Yes
GO to Pinpoint Test G531332t92.

-> No
INSTALL a new APP sensor.
Accelerator Pedal (19.20.01) CLEAR the DTC. TEST the system for normal operation.

G531332t92 : CHECK THE APP SENSOR SUPPLY VOLTAGE CIRCUIT FOR HIGH RESISTANCE

1. Key off. 2. Disconnect the ECM electrical connector, PI300. 3. Measure the resistance between:

APP sensor connector CR14, harness side	ECM connector PI300, harness side
Pin 05	Pin 19

Is the resistance greater than 5 ohms?

-> Yes
REPAIR the high resistance circuit. For additional information, refer to the wiring diagrams. CLEAR the DTC. TEST the system for normal operation.

-> No
Check the ECM power supplies (recheck DTCs. P1104 may be flagged).

PINPOINT TEST G531332p24 : THROTTLE MOTOR CONTROL CIRCUIT MALFUNCTION

G531332t93 : CHECK THE THROTTLE MOTOR - TO ECM CIRCUIT FOR HIGH RESISTANCE

1. Key off. 2. Disconnect the throttle motor electrical connector, PI26. 3. Disconnect the ECM electrical connector, PI300. 4. Measure the resistance between:

Throttle motor connector PI26, harness side	ECM connector PI300,harness side
Pin 02	Pin 74

Is the resistance greater than 5 ohms?

-> Yes
REPAIR the high resistance circuit. For additional information, refer to the wiring diagrams. CLEAR the DTC. TEST the system for normal operation.

www.JagDocs.com

-> No
GO to Pinpoint Test G531332t94.

G531332t94 : CHECK THE THROTTLE MOTOR + TO ECM CIRCUIT FOR HIGH RESISTANCE

1. Measure the resistance between:

Throttle motor connector PI26, harness side	ECM connector PI300,harness side
Pin 01	Pin 75

Is the resistance greater than 5 ohms?

-> Yes
REPAIR the high resistance circuit. For additional information, refer to the wiring diagrams. CLEAR the DTC. TEST the system for normal operation.

-> No
INSTALL a new throttle body.
Throttle Body - 4.2L NA V8 - AJV8/3.5L NA V8 - AJV8, VIN Range: G45704->G99999 (19.70.04)
Throttle Body - 4.2L SC V8 - AJV8, VIN Range: G45704->G99999 (19.70.04) CLEAR the DTC. TEST the system for normal operation.

PINPOINT TEST G531332p25 : SENSOR SUPPLY VOLTAGE MALFUNCTION, HIGH/LOW VOLTAGE

G531332t95 : CHECK THE SUPPLY VOLTAGE AT THE MANIFOLD ABSOLUTE PRESSURE (MAP) SENSOR

1. Disconnect the MAP sensor electrical connector, PI301. 2. Key on, engine off. 3. Measure the voltage between:

MAP sensor connector PI301, harness side	Battery
Pin 02	Negative terminal

Is the voltage less than 5 volts?

-> Yes
REPAIR the circuit between the MAP sensor and battery. This circuit includes splice PIS84. For additional information, refer to the wiring diagrams. CLEAR the DTC. TEST the system for normal operation.

-> No
GO to Pinpoint Test G531332t96.

G531332t96 : CHECK THE SUPPLY VOLTAGE AT THE FUEL RAIL PRESSURE (FRP) SENSOR

1. Disconnect the FRP sensor electrical connector, PI28. 2. Measure the resistance between:

FRP sensor connector PI28, harness side	Battery
Pin 01	Negative terminal

Is the voltage less than 5 volts?

-> Yes
REPAIR the circuit between the FRP sensor and battery. This circuit includes splice PIS84. For additional information, refer to the wiring diagrams. CLEAR the DTC. TEST the system for normal operation.

-> No
CHECK for DTCs indicating a sensor fault. Refer to the DTC index.

PINPOINT TEST G531332p26 : SENSOR GROUND CIRCUITS OPEN CIRCUIT

G531332t115 : CHECK THE SENSOR GROUND AT THE MANIFOLD ABSOLUTE PRESSURE (MAP) SENSOR (VEHICLES WITH SUPERCHARGER)

1. Key off. 2. Disconnect the ECM electrical connector, PI300. 3. Disconnect the MAP sensor electrical connector, PI301. 4. Measure the resistance between:

MAP sensor electrical connector PI301, harness side	ECM connector PI300, harness side
Pin 04	Pin 12

Is the resistance greater than 5 ohms?

www.JagDocs.com

-> Yes
REPAIR the high resistance circuit. For additional information, refer to the wiring diagrams. CLEAR the DTC. TEST the system for normal operation.

-> No
GO to Pinpoint Test G531332t116.

G531332t116 : CHECK THE SENSOR GROUND AT THE ENGINE COOLANT TEMPERATURE (ECT) SENSOR

1. Disconnect the ECT sensor electrical connector, PI25. 2. Measure the resistance between:

ECT sensor electrical connector PI25, harness side	ECM connector PI300, harness side
Pin 01	Pin 12

Is the resistance greater than 5 ohms?

-> Yes
REPAIR the high resistance circuit. For additional information, refer to the wiring diagrams. CLEAR the DTC. TEST the system for normal operation.

-> No
GO to Pinpoint Test G531332t117.

G531332t117 : CHECK THE SENSOR GROUND AT THE MASS AIR FLOW (MAF) SENSOR

1. Disconnect the MAF sensor electrical connector, PI14. 2. Measure the resistance between:

MAF sensor electrical connector PI14, harness side	ECM connector PI300, harness side
Pin 05	Pin 12

Is the resistance greater than 5 ohms?

-> Yes
REPAIR the high resistance circuit. For additional information, refer to the wiring diagrams. CLEAR the DTC. TEST the system for normal operation.

-> No

CHECK for DTCs indicating a sensor fault. Refer to the warranty policy and procedures manual if an ECM is suspect.

PINPOINT TEST G531332p27 : STARTER RELAY SIGNAL

G531332t111 : CHECK THE STARTER RELAY TO ECM CIRCUIT FOR SHORT CIRCUIT TO GROUND

1. Key off. 2. Remove the starter relay. 3. Measure the resistance between:

Starter relay base	Battery
Pin 02	Negative terminal

Is the resistance less than 10,000 ohms?

-> Yes
REPAIR the short circuit. For additional information, refer to the wiring diagrams. CLEAR the DTC and test the system for normal operation.

-> No
GO to Pinpoint Test G531332t112.

G531332t112 : CHECK THE STARTER RELAY TO ECM CIRCUIT FOR SHORT CIRCUIT TO POWER

1. Measure the resistance between:

Starter relay base	Battery
Pin 02	Positive terminal

Is the resistance less than 10,000 ohms?

-> Yes
REPAIR the short circuit. For additional information, refer to the wiring diagrams. CLEAR the DTC and test the system for normal operation.

-> No

www.JagDocs.com

GO to Pinpoint Test G531332t133.

G531332t133 : CHECK THE STARTER RELAY TO ECM CIRCUIT FOR HIGH RESISTANCE

1. Disconnect the ECM electrical connector, EC300. 2. Measure the resistance between:

Starter relay base	ECM connector EC300, harness side
Pin 02	Pin 51

Is the resistance greater than 5 ohms?

-> Yes
REPAIR the high resistance circuit. For additional information, refer to the wiring diagrams. CLEAR the DTC and test the system for normal operation.

-> No
INSTALL a new starter relay. Clear the DTC and test the system for normal operation. If the DTC resets, refer to the warranty policy and procedures manual if an ECM is suspect.

PINPOINT TEST G531332p28 : LEFT-HAND CAMSHAFT POSITION (CMP) SENSOR CIRCUIT MALFUNCTION RANGE/PERFORMANCE

G531332t135 : CHECK THE CMP SENSOR FOR CORRECT INSTALLATION

1. Check the CMP sensor for correct installation.

Is the CMP sensor correctly installed?

-> Yes
GO to Pinpoint Test G531332t136.

-> No
INSTALL the CMP sensor correctly.
Camshaft Position (CMP) Sensor LH (18.31.12) CLEAR the DTCs. TEST the system for normal operation.

G531332t136 : CHECK THE CMP SENSOR FOR FOREIGN DEBRIS

1. Remove the CMP sensor and inspect for foreign debris.

Is the CMP sensor free of foreign debris?

-> Yes
GO to Pinpoint Test G531332t137.

-> No
CLEAN the sensor and wheel. INSTALL the sensor.
Camshaft Position (CMP) Sensor LH (18.31.12) CLEAR the DTCs. TEST the system for normal operation.

G531332t137 : CHECK THE CMP SENSOR SENSING CIRCUIT FOR HIGH RESISTANCE

1. Key off. 2. Disconnect the CMP sensor electrical connector, PI22. 3. Disconnect the ECM electrical connector, PI300. 4. Measure the resistance between:

CMP sensor connector PI22, harness side	ECM connector PI300, harness side
Pin 01	Pin 33

Is the resistance greater than 5 ohms?

-> Yes
REPAIR the high resistance circuit. For additional information, refer to the wiring diagrams. CLEAR the DTC. TEST the system for normal operation.

-> No
GO to Pinpoint Test G531332t138.

G531332t138 : CHECK THE CMP SENSOR SENSING CIRCUIT FOR SHORT CIRCUIT TO POWER

1. Key on, engine off. 2. Measure the voltage between:

CMP sensor connector PI22, harness side	Battery
Pin 01	Negative terminal

Is the voltage greater than 3 volts?

www.JagDocs.com

-> Yes
REPAIR the short circuit. For additional information, refer to the wiring diagrams. CLEAR the DTC. TEST the system for normal operation.

-> No
GO to Pinpoint Test G531332t139.

G531332t139 : CHECK THE CMP SENSOR SENSING CIRCUIT FOR SHORT CIRCUIT TO GROUND

1. Key off. 2. Measure the resistance between:

CMP sensor connector PI22, harness side	Battery
Pin 01	Negative terminal

Is the resistance less than 10,000 ohms?

-> Yes
REPAIR the short circuit. For additional information, refer to the wiring diagrams. CLEAR the DTC. TEST the system for normal operation.

-> No
INSTALL a new CMP sensor.
Camshaft Position (CMP) Sensor LH (18.31.12) CLEAR the DTC. TEST the system for normal operation.

PINPOINT TEST G531332p29 : RIGHT-HAND VARIABLE CAMSHAFT TIMING (VCT) OIL CONTROL SOLENOID MALFUNCTION, CIRCUIT MALFUNCTION

G531332t140 : CHECK ECM TO VCT SOLENOID CIRCUIT FOR HIGH RESISTANCE

1. Key off. 2. Disconnect the VCT electrical connector, PI16. 3. Disconnect the ECM electrical connector, PI300. 4. Measure the resistance between:

VCT connector PI16, harness side	ECM connector PI300, harness side

Pin 01	Pin 86

Is the resistance greater than 5 ohms?

-> Yes
REPAIR the high resistance circuit. For additional information, refer to the wiring diagrams. CLEAR the DTC. TEST the system for normal operation.

-> No
GO to Pinpoint Test G531332t141.

G531332t141 : CHECK ECM TO VCT SOLENOID CIRCUIT FOR SHORT CIRCUIT TO POWER

1. Key on, engine off. 2. Measure the voltage between:

VCT connector PI16, harness side	Battery
Pin 01	Negative terminal

Is the voltage greater than 3 volts?

-> Yes
REPAIR the short circuit. For additional information, refer to the wiring diagrams. CLEAR the DTC. TEST the system for normal operation.

-> No
GO to Pinpoint Test G531332t141.

G531332t142 : CHECK ECM TO VCT SOLENOID CIRCUIT FOR SHORT CIRCUIT TO GROUND

1. Key off. 2. Measure the resistance between:

VCT connector PI16, harness side	Battery
Pin 01	Negative terminal

Is the resistance less than 10,000 ohms?

www.JagDocs.com

-> Yes
REPAIR the short circuit. For additional information, refer to the wiring diagrams. CLEAR the DTC. TEST the system for normal operation.

-> No
GO to Pinpoint Test G531332t143.

G531332t143 : CHECK VCT SOLENOID POWER

1. Measure the voltage between:

VCT connector PI16, harness side	Battery
Pin 02	Negative terminal

Is the voltage less than 10 volts?

-> Yes
REPAIR the circuit between the VCT solenoid and battery. This circuit includes splices PIS11 and ECS72, and fuse 12 of the front power distribution box. For additional information, refer to the wiring diagrams. CLEAR the DTC. TEST the system for normal operation.

-> No
INSTALL a new VCT solenoid.
Variable Camshaft Timing (VCT) Oil Control Solenoid (18.30.90) CLEAR the DTC. TEST the system for normal operation.

PINPOINT TEST G531332p30 : LEFT-HAND VARIABLE CAMSHAFT TIMING (VCT) OIL CONTROL SOLENOID MALFUNCTION, CIRCUIT MALFUNCTION

G531332t144 : CHECK ECM TO VCT SOLENOID CIRCUIT FOR HIGH RESISTANCE

1. Key off. 2. Disconnect the VCT electrical connector, PI17. 3. Disconnect the ECM electrical connector, PI300. 4. Measure the resistance between:

VCT connector PI17, harness side	ECM connector PI300, harness side

Pin 01	Pin 87

Is the resistance greater than 5 ohms?

-> Yes
REPAIR the high resistance circuit. For additional information, refer to the wiring diagrams. CLEAR the DTC. TEST the system for normal operation.

-> No
GO to Pinpoint Test G531332t145.

G531332t145 : CHECK ECM TO VCT SOLENOID CIRCUIT FOR SHORT CIRCUIT TO POWER

1. Key on, engine off. 2. Measure the voltage between:

VCT connector PI17, harness side	Battery
Pin 01	Negative terminal

Is the voltage greater than 3 volts?

-> Yes
REPAIR the short circuit. For additional information, refer to the wiring diagrams. CLEAR the DTC. TEST the system for normal operation.

-> No
GO to Pinpoint Test G531332t146.

G531332t146 : CHECK ECM TO VCT SOLENOID CIRCUIT FOR SHORT CIRCUIT TO GROUND

1. Key on, engine off. 2. Measure the resistance between:

VCT connector PI17, harness side	Battery
Pin 01	Negative terminal

Is the resistance less than 10,000 ohms?

www.JagDocs.com

-> Yes
REPAIR the short circuit. For additional information, refer to the wiring diagrams. CLEAR the DTC. TEST the system for normal operation.

-> No
GO to Pinpoint Test G531332t147.

G531332t147 : CHECK VCT SOLENOID POWER

1. Measure the voltage between:

VCT connector PI17, harness side	Battery
Pin 02	Negative terminal

Is the voltage less than 10 volts?

-> Yes
REPAIR the circuit between the VCT solenoid and battery. This circuit includes splices PIS11 and ECS72, and fuse 12 of the front power distribution box. For additional information, refer to the wiring diagrams. CLEAR the DTC. TEST the system for normal operation.

-> No
INSTALL a new VCT solenoid.
Variable Camshaft Timing (VCT) Oil Control Solenoid (18.30.90) CLEAR the DTC. TEST the system for normal operation.

PINPOINT TEST G531332p31 : "FLIGHT RECORDER" DATA IS STORED IF ANY ONE OF FIVE CONDITIONS OCCUR

G531332t148 : CHECK THE INERTIA SWITCH TO ECM CIRCUIT FOR SHORT CIRCUIT TO POWER VOLTAGE

1. Make sure the inertia switch is not tripped. 2. Disconnect the inertia switch electrical connector, CR02. 3. Disconnect the ECM electrical connector, EC300. 4. Measure the voltage between:

Inertia switch connector CR02, harness side	ECM connector EC300, harness side
Pin 03	Pin 42

Is the voltage greater than 3 volts?

-> Yes
REPAIR the short circuit. For additional information, refer to the wiring diagrams. CLEAR the DTC. TEST the system for normal operation.

-> No
INSTALL a new inertia switch. CLEAR the DTC. CLEAR the flight recorder information. TEST the system for normal operation.

PINPOINT TEST G531332p32 : EMS CONTROL RELAY MALFUNCTION

G531332t149 : CHECK THE EMS RELAY PERMANENT SUPPLY

1. Key off. 2. Remove the EMS relay. 3. Measure the voltage between:

Relay base	Battery
Pin 01	Negative terminal
Pin 05	

Are both voltages greater than 10 volts?

-> Yes
GO to Pinpoint Test G531332t150.

-> No
REPAIR the circuit between the relay base and battery. For additional information, refer to the wiring diagrams. CLEAR the DTC. TEST the system for normal operation.

G531332t150 : CHECK THE ECM TO EMS RELAY CONTROL CIRCUIT FOR HIGH RESISTANCE

1. Disconnect the ECM electrical connector, EC300. 2. Measure the resistance between:

Relay base	ECM connector EC300, harness side
Pin 02	Pin 16

Is the resistance greater than 5 ohms?

www.JagDocs.com

-> Yes
REPAIR the high resistance circuit. For additional information, refer to the wiring diagrams. CLEAR the DTC. TEST the system for normal operation.

-> No
GO to Pinpoint Test G531332t151.

G531332t151 : CHECK THE EMS RELAY TO ECM SUPPLY CIRCUIT FOR HIGH RESISTANCE

1. Measure the resistance between:

Relay base	ECM connector EC300, harness side
Pin 03	Pin 04
	Pin 06

Is either resistance greater than 5 ohms?

-> Yes
REPAIR the high resistance circuit. For additional information, refer to the wiring diagrams. CLEAR the DTC. TEST the system for normal operation.

-> No
INSTALL a new EMS relay. CLEAR the DTC. TEST the system for normal operation.

PINPOINT TEST G531332p33 : MANIFOLD ABSOLUTE PRESSURE (MAP) SENSOR SENSING CIRCUIT MALFUNCTION, HIGH/LOW VOLTAGE (VEHICLES WITHOUT SUPERCHARGER)

G531332t152 : CHECK THE MAP SENSOR SENSING CIRCUIT FOR HIGH RESISTANCE

1. Key off. 2. Disconnect the MAP sensor electrical connector, PI29. 3. Disconnect the ECM electrical connector, PI300. 4. Measure the resistance between:

MAP sensor connector PI29, harness side	ECM connector PI300, harness side
Pin 01	Pin 69

Is the resistance greater than 5 ohms?

-> Yes
REPAIR the high resistance circuit. For additional information, refer to the wiring diagrams. CLEAR the DTC. TEST the system for normal operation.

-> No
GO to Pinpoint Test G531332t153.

G531332t153 : CHECK THE MAP SENSOR SENSING CIRCUIT FOR SHORT CIRCUIT TO POWER

1. Measure the voltage between:

MAP sensor connector PI29, harness side	Battery
Pin 01	Negative terminal

Is the voltage greater than 3 volts?

-> Yes
REPAIR the short circuit. For additional information, refer to the wiring diagrams. CLEAR the DTC. TEST the system for normal operation.

-> No
GO to Pinpoint Test G531332t154.

G531332t154 : CHECK THE MAP SENSOR SENSING CIRCUIT FOR SHORT CIRCUIT TO GROUND

1. Measure the resistance between:

MAP sensor connector PI29, harness side	Battery
Pin 01	Negative terminal

www.JagDocs.com

Is the resistance less than 10,000 ohms?

-> Yes
REPAIR the short circuit. For additional information, refer to the wiring diagrams. CLEAR the DTC. TEST the system for normal operation.

-> No
INSTALL a new MAP sensor.
Manifold Absolute Pressure (MAP) Sensor - 4.2L NA V8 - AJV8 (18.30.86) CLEAR the DTC. TEST the system for normal operation. If the DTC is repeated, refer to the warranty policy and procedures manual if an ECM is suspect.

PINPOINT TEST G531332p34 : ENGINE FUEL TEMPERATURE (EFT) SENSOR RANGE/PERFORMANCE, LOW/HIGH VOLTAGE

G531332t155 : CHECK THE EFT SENSOR SENSING CIRCUIT FOR HIGH RESISTANCE

1. Key off. 2. Disconnect the EFT sensor electrical connector, PI27. 3. Disconnect the ECM electrical connector, PI300. 4. Measure the resistance between:

EFT sensor connector PI27, harness side	ECM connector PI300, harness side
Pin 02	Pin 46

Is the resistance greater than 5 ohms?

-> Yes
REPAIR the high resistance circuit. For additional information, refer to the wiring diagrams. CLEAR the DTC. TEST the system for normal operation.

-> No
GO to Pinpoint Test G531332t156.

G531332t156 : CHECK THE EFT SENSOR SENSING CIRCUIT FOR SHORT CIRCUIT TO POWER

1. Key on, engine off. 2. Measure the voltage between:

EFT sensor connector PI27, harness side	Battery
Pin 02	Negative terminal

Is the voltage greater than 3 volts?

-> Yes
REPAIR the short circuit. For additional information, refer to the wiring diagrams. CLEAR the DTC. TEST the system for normal operation.

-> No
GO to Pinpoint Test G531332t157.

G531332t157 : CHECK THE EFT SENSOR SENSING CIRCUIT FOR SHORT CIRCUIT TO GROUND

1. Key off. 2. Measure the resistance between:

EFT sensor connector PI27, harness side	Battery
Pin 02	Negative terminal

Is the resistance less than 10,000 ohms?

-> Yes
REPAIR the short circuit. For additional information, refer to the wiring diagrams. CLEAR the DTC. TEST the system for normal operation.

-> No
INSTALL a new EFT sensor.
Fuel Temperature Sensor (18.30.99) CLEAR the DTC. TEST the system for normal operation.

PINPOINT TEST G531332p35 : AIR CONDITIONING (A/C) PRESSURE SENSOR CIRCUIT LOW/HIGH VOLTAGE

www.JagDocs.com

G531332t158 : CHECK THE A/C PRESSURE SENSOR SENSING CIRCUIT FOR HIGH RESISTANCE

1. Key off. 2. Disconnect the A/C pressure sensor electrical connector, EC11. 3. Disconnect the ECM electrical connector, PI300. 4. Measure the resistance between:

A/C pressure sensor connector EC11, harness side	ECM connector PI300, harness side
Pin 02	Pin 12

Is the resistance greater than 5 ohms?

-> Yes
REPAIR the high resistance circuit. For additional information, refer to the wiring diagrams. CLEAR the DTC. TEST the system for normal operation.

-> No
GO to Pinpoint Test G531332t159.

G531332t159 : CHECK THE A/C PRESSURE SENSOR SENSING CIRCUIT FOR SHORT CIRCUIT TO POWER

1. Key on, engine off. 2. Measure the voltage between:

A/C pressure sensor connector EC11, harness side	Battery
Pin 02	Negative terminal

Is the voltage greater than 3 volts?

-> Yes
REPAIR the short circuit. For additional information, refer to the wiring diagrams. CLEAR the DTC. TEST the system for normal operation.

-> No
GO to Pinpoint Test G531332t160.

G531332t160 : CHECK THE A/C PRESSURE SENSOR SENSING CIRCUIT FOR SHORT CIRCUIT TO GROUND

1. Key off. 2. Measure the resistance between:

A/C pressure sensor connector EC11, harness side	Battery
Pin 02	Negative terminal

Is the resistance less than 10,000 ohms?

-> Yes
REPAIR the short circuit. For additional information, refer to the wiring diagrams. CLEAR the DTC. TEST the system for normal operation.

-> No
INSTALL a new A/C pressure sensor.
Pressure Cutoff Switch - 4.2L NA V8 - AJV8/4.2L SC V8 - AJV8/3.0L NA V6 - AJ27/3.5L NA V8 - AJV8 (82.10.32)

PINPOINT TEST G531332p37 : MANIFOLD ABSOLUTE PRESSURE SENSOR/TEMPERATURE (MAPT) SENSOR, INTAKE AIR TEMPERATURE (IAT2) SENSING CIRCUIT

G531332t166 : CHECK THE MAPT SENSOR IAT2 SENSING CIRCUIT FOR HIGH RESISTANCE

1. key off. 2. Disconnect the MAPT sensor electrical connector, PI301. 3. Disconnect the ECM electrical connector, PI300. 4. Measure the resistance between:

MAPT sensor connector PI301, harness side	ECM connector PI300, harness side
Pin 03	Pin 39

Is the resistance greater than 5 ohms?

-> Yes
REPAIR the high resistance circuit. For additional information, refer to the wiring diagrams. CLEAR the DTC. TEST the system for normal operation.

-> No

www.JagDocs.com

GO to Pinpoint Test G531332t167.

G531332t167 : CHECK THE MAPT SENSOR IAT2 SENSING CIRCUIT FOR SHORT CIRCUIT TO POWER

1. Key on, engine off. 2. Measure the voltage between:

MAPT sensor connector PI301, harness side	Battery
Pin 03	Negative terminal

Is the voltage greater than 3 volts?

-> Yes
REPAIR the short circuit. For additional information, refer to the wiring diagrams. CLEAR the DTC. TEST the system for normal operation.

-> No
GO to Pinpoint Test G531332t168.

G531332t168 : CHECK THE MAPT SENSOR IAT2 SENSING CIRCUIT FOR SHORT CIRCUIT TO GROUND

1. Key off. 2. Measure the resistance between:

MAPT sensor connector PI301, harness side	Battery
Pin 03	Negative terminal

Is the resistance less than 10,000 ohms?

-> Yes
REPAIR the short circuit. For additional information, refer to the wiring diagrams. CLEAR the DTC. TEST the system for normal operation.

-> No
INSTALL a new MAPT sensor. CLEAR the DTC. TEST the system for normal operation.

PINPOINT TEST G531332p38 : AIR CLEANER SOLENOID VALVE DRIVE CIRCUIT MALFUNCTION

G531332t169 : CHECK THE POWER SUPPLY TO THE AIR CLEANER SOLENOID VALVE

1. Key off. 2. Disconnect the air cleaner solenoid valve electrical connector, EC37. 3. Key on, engine off. 4. Make sure the EMS relay is engaged. 5. Measure the voltage between:

Air cleaner solenoid valve connector EC37, harness side	Battery
Pin 01	Negative terminal

Is the voltage greater than 10 volts?

-> Yes
GO to Pinpoint Test G531332t170.

-> No
REPAIR the circuit between the air cleaner solenoid valve and battery. This circuit includes splice ECS20, fuse 14 of the front power distribution box and the EMS relay. For additional information, refer to the wiring diagrams. CLEAR the DTC. TEST the system for normal operation.

G531332t170 : CHECK THE AIR CLEANER SOLENOID VALVE TO ECM CIRCUIT FOR HIGH RESISTANCE

1. Key off. 2. Disconnect the ECM electrical connector, PI300. 3. Measure the resistance between:

Air cleaner solenoid valve connector EC37, harness side	ECM connector PI300, harness side
Pin 02	Pin 49

Is the resistance greater than 5 ohms?

-> Yes
REPAIR the high resistance circuit. For additional information, refer to the wiring diagrams. CLEAR the DTC. TEST the system for normal operation.

-> No

www.JagDocs.com

GO to Pinpoint Test G531332t171.

G531332t171 : CHECK THE AIR CLEANER SOLENOID VALVE TO ECM CIRCUIT FOR SHORT CIRCUIT TO POWER

1. Key on, engine off. 2. Measure the voltage between:

Air cleaner solenoid valve connector EC37, harness side	Battery
Pin 02	Negative terminal

Is the voltage greater than 3 volts?

-> Yes
REPAIR the short circuit. For additional information, refer to the wiring diagrams. CLEAR the DTC. TEST the system for normal operation.

-> No
GO to Pinpoint Test G531332t172.

G531332t172 : CHECK THE AIR CLEANER SOLENOID VALVE TO ECM CIRCUIT FOR SHORT CIRCUIT TO GROUND

1. Key off. 2. Measure the resistance between:

Air cleaner solenoid valve connector EC37, harness side	Battery
Pin 02	Negative terminal

Is the resistance less than 10,000 ohms?

-> Yes
REPAIR the short circuit. For additional information, refer to the wiring diagrams. CLEAR the DTC. TEST the system for normal operation.

-> No
INSTALL a new air cleaner solenoid valve. CLEAR the DTC. TEST the system for normal operation.

PINPOINT TEST G531332p39 : CHECK THE AUXILIARY COOLANT PUMP FUNCTION

G531332t173 : CHECK THE POWER SUPPLY TO THE AUXILIARY COOLANT PUMP

1. Key off. 2. Disconnect the auxiliary coolant pump electrical connector, CP02. 3. Key on, engine off. 4. Make sure the EMS relay is engaged. 5. Make sure the auxiliary coolant pump relay is engaged. 6. Measure the voltage between:

Auxiliary coolant pump connector CP02, harness side	Battery
Pin 02	Negative terminal

Is the voltage less than 10 volts?

-> Yes
REPAIR the circuit between CP02, pin 02 and battery. This circuit includes fuse 17 of the front power distribution box, the auxiliary coolant pump relay and the EMS relay. For additional information, refer to the wiring diagrams. CLEAR the DTC. TEST the system for normal operation.

-> No
GO to Pinpoint Test G531332t174.

G531332t174 : CHECK THE AUXILIARY COOLANT PUMP GROUND

1. Measure the resistance between:

Auxiliary coolant pump connector CP02, harness side	Battery
Pin 01	Negative terminal

Is the resistance greater than 5 ohms?

-> Yes
REPAIR the high resistance circuit. For additional information, refer to the wiring diagrams. TEST the system for normal operation.

-> No

www.JagDocs.com

INSTALL a new auxiliary coolant pump.
Water Pump CLEAR the DTC. TEST the system for normal operation.

PINPOINT TEST G531332p40 : FUEL RAIL PRESSURE (FRP) SENSOR CIRCUIT

G531332t175 : CHECK THE FRP SENSOR SUPPLY CIRCUIT VOLTAGE

1. Key off. 2. Disconnect the FRP sensor electrical connector, PI28. 3. Key on, engine off. 4. Measure the voltage between:

FRP sensor connector PI28, harness side	Battery
Pin 01	Negative terminal

Is the voltage less than 4 volts?

-> Yes
REPAIR the 5 volt supply circuit between the FRP sensor and the ECM. For additional information, refer to the wiring diagrams. CLEAR the DTC and test the system for normal operation.

-> No
GO to Pinpoint Test G531332t177.

G531332t177 : CHECK THE FRP SENSOR SIGNAL CIRCUIT FOR SHORT CIRCUIT TO GROUND

1. Key off. 2. Measure the resistance between:

FRP sensor connector PI28, harness side	Battery
Pin 03	Negative terminal

Is the resistance less than 10,000 ohms?

-> Yes
REPAIR the short circuit. For additional information, refer to the wiring diagrams. CLEAR the DTC and test the system for normal operation.

-> No

GO to Pinpoint Test G531332t178.

G531332t178 : CHECK THE FRP SENSOR SIGNAL CIRCUIT FOR SHORT CIRCUIT TO POWER

1. Measure the resistance between:

FRP sensor connector PI28, harness side	Battery
Pin 03	Positive terminal

Is the resistance less than 10,000 ohms?

-> Yes
REPAIR the short circuit. For additional information, refer to the wiring diagrams. CLEAR the DTC and test the system for normal operation.

-> No
GO to Pinpoint Test G531332t179.

G531332t179 : CHECK THE FRP SENSOR SIGNAL CIRCUIT FOR HIGH RESISTANCE

1. Disconnect the ECM sensor electrical connector, PI300. 2. Measure the resistance between:

FRP sensor connector PI28, harness side	ECM connector PI300, harness side
Pin 03	Pin 71

Is the resistance greater than 5 ohms?

-> Yes
REPAIR the high resistance circuit. For additional information, refer to the wiring diagrams. CLEAR the DTC and test the system for normal operation.

-> No
GO to Pinpoint Test G531332t180.

G531332t180 : CHECK THE FRP SENSOR GROUND CIRCUIT FOR HIGH RESISTANCE

1. Measure the resistance between:

www.JagDocs.com

FRP sensor connector PI28, harness side	ECM connector PI300, harness side
Pin 02	Pin 10

Is the resistance greater than 5 ohms?

-> Yes
REPAIR the high resistance circuit. This circuit includes splice PIS49. For additional information, refer to the wiring diagrams. CLEAR the DTC and test the system for normal operation.

-> No
INSTALL a new FRP sensor.
Fuel Rail Pressure (FRP) Sensor (18.30.98) CLEAR the DTC and test the system for normal operation.

PINPOINT TEST G531332p36 : MANIFOLD ABSOLUTE PRESSURE (MAP) SENSOR SENSING CIRCUIT MALFUNCTION, HIGH/LOW VOLTAGE (VEHICLES WITH SUPERCHARGER)

G531332t97 : CHECK THE MAP SENSOR SENSING CIRCUIT FOR HIGH RESISTANCE

1. Key off. 2. Disconnect the MAP sensor electrical connector, PI301. 3. Disconnect the ECM electrical connector, PI300. 4. Measure the resistance between:

MAP sensor connector PI301, harness side	ECM connector PI300, harness side
Pin 01	Pin 38

Is the resistance greater than 5 ohms?

-> Yes
REPAIR the high resistance circuit. For additional information, refer to the wiring diagrams. CLEAR the DTC. TEST the system for normal operation.

-> No
GO to Pinpoint Test G531332t98.

G531332t98 : CHECK THE MAP SENSOR SENSING CIRCUIT FOR SHORT CIRCUIT TO POWER

1. Measure the voltage between:

MAP sensor connector PI301, harness side	Battery
Pin 01	Negative terminal

Is the voltage greater than 3 volts?

-> Yes
REPAIR the short circuit. For additional information, refer to the wiring diagrams. CLEAR the DTC. TEST the system for normal operation.

-> No
GO to Pinpoint Test G531332t99.

G531332t99 : CHECK THE MAP SENSOR SENSING CIRCUIT FOR SHORT CIRCUIT TO GROUND

1. Measure the resistance between:

MAP sensor connector PI301, harness side	Battery
Pin 01	Negative terminal

Is the resistance less than 10,000 ohms?

-> Yes
REPAIR the short circuit. For additional information, refer to the wiring diagrams. CLEAR the DTC. TEST the system for normal operation.

-> No
INSTALL a new MAP sensor.
Manifold Absolute Pressure (MAP) Sensor - 4.2L SC V8 - AJV8 (18.30.86) CLEAR the DTC. TEST the system for normal operation. If the DTC is repeated, refer to the warranty policy and procedures manual if an ECM is suspect.

PINPOINT TEST G531332p41 : MANIFOLD ABSOLUTE

www.JagDocs.com

PRESSURE/TEMPERATURE (MAPT) SENSOR PRESSURE SENSING CIRCUIT

G531332t101 : CHECK THE POWER SUPPLY TO THE MAPT SENSOR

1. Key off. 2. Disconnect the MAPT connector, PI310. 3. Key on, engine off. 4. Measure the voltage between:

MAPT sensor connnector PI310, harness side	Battery
Pin 02	Negative terminal

Is the voltage greater than 4 volts?

-> Yes
GO to Pinpoint Test G531332t102.

-> No
CHECK the circuit between the MAPT sensor, pin 02 and the ECM. Refer to the warranty policy and procedures manual if an ECM is suspect.

G531332t102 : CHECK THE GROUND TO THE MAPT SENSOR

1. Key off. 2. Measure the resistance between:

MAPT sensor connnector PI310, harness side	Battery
Pin 04	Negative terminal

Is the resistance greater than 5 ohms?

-> Yes
REPAIR the high resistance circuit. This circuit includes splice PIS49 and the ECM. For additional information, refer to the wiring diagrams. CLEAR the DTC. TEST the system for normal operation. Refer to the warranty policy and procedures manual if an ECM is suspect.

-> No
GO to Pinpoint Test G531332t100.

G531332t100 : CHECK THE MAPT PRESSURE SENSING CIRCUIT FOR SHORT CIRCUIT TO GROUND

1. Disconnect the ECM connector, PI300. 2. Measure the resistance between:

MAPT sensor connnector PI310, harness side	Battery
Pin 01	Negative terminal

Is the resistance less than 10,000 ohms?

-> Yes
REPAIR the short circuit. For additional information, refer to the wiring diagrams. CLEAR the DTC. TEST the system for normal operation.

-> No
GO to Pinpoint Test G531332t103.

G531332t103 : CHECK THE MAPT PRESSURE SENSING CIRCUIT FOR SHORT CIRCUIT TO POWER

1. Measure the resistance between:

MAPT sensor connnector PI310, harness side	Battery
Pin 01	Positive terminal

Is the resistance less than 10,000 ohms?

-> Yes
REPAIR the short circuit. For additional information, refer to the wiring diagrams. CLEAR the DTC. TEST the system for normal operation.

-> No
GO to Pinpoint Test G531332t104.

G531332t104 : CHECK THE MAPT PRESSURE SENSING CIRCUIT FOR HIGH RESISTANCE

1. Measure the resistance between:

MAPT sensor connnector PI310, harness side	ECM connector PI300, harness side

www.JagDocs.com

Pin 01	Pin 69

Is the resistance greater than 5 ohms?

-> Yes
REPAIR the high resistance circuit. For additional information, refer to the wiring diagrams. CLEAR the DTC. TEST the system for normal operation. Refer to the warranty policy and procedures manual if an ECM is suspect.

-> No
INSTALL a new MAPT sensor. CLEAR the DTC. TEST the system for normal operation.

PINPOINT TEST G531332p42 : BRAKE SWITCH

G531332t105 : CHECK THE OPERATION OF THE BRAKE SWITCH (PEDAL RELEASED)

1. Key off. 2. Disconnect the brake switch electrical connector, CR78. 3. Make sure the brake pedal is not pressed. 4. Measure the resistance between:

Brake switch connector CR78, component side	Brake switch connector CR78, component side
Pin 01	Pin 02

Is the resistance greater than 10 ohms?

-> Yes
GO to Pinpoint Test G531332t106.

-> No
INSTALL a new brake switch. CLEAR the DTC, test the system for normal operation.

G531332t106 : CHECK THE OPERATION OF THE BRAKE SWITCH (PEDAL PRESSED)

1. Press the brake pedal. 2. Measure the resistance between:

Brake switch connector CR78, component side	Brake switch connector CR78, component side

Pin 01	Pin 02

Is the resistance greater than 10 ohms?

-> Yes
INSTALL a new brake switch. CLEAR the DTC, test the system for normal operation.

-> No
GO to Pinpoint Test G531332t107.

G531332t107 : CHECK THE POWER SUPPLY TO THE BRAKE PEDAL SWITCH

1. Key on, engine off. 2. Measure the voltage between:

Brake switch connector CR78, harness side	Battery
Pin 01	Negative terminal

Is the voltage less than 10 volts?

-> Yes
REPAIR the circuit between the brake switch and battery. This circuit includes fuse 44 of the primary junction box. For additional information, refer to the wiring diagrams. CLEAR the DTC, test the system for normal operation.

-> No
GO to Pinpoint Test G531332t108.

G531332t108 : CHECK THE BRAKE SWITCH SIGNAL CIRCUIT FOR SHORT CIRCUIT TO GROUND

1. Key off. 2. Measure the resistance between:

Brake switch connector CR78, harness side	Battery
Pin 02	Negative terminal

Is the resistance less than 10,000 ohms?

www.JagDocs.com

-> Yes
REPAIR the short circuit. For additional information, refer to the wiring diagrams. CLEAR the DTC, test the system for normal operation.

-> No
GO to Pinpoint Test G531332t109.

G531332t109 : CHECK THE BRAKE SWITCH SIGNAL CIRCUIT FOR SHORT CIRCUIT TO POWER

1. Measure the resistance between:

Brake switch connector CR78, harness side	Battery
Pin 02	Positive terminal

Is the resistance less than 10,000 ohms?

-> Yes
REPAIR the short circuit. For additional information, refer to the wiring diagrams. CLEAR the DTC, test the system for normal operation.

-> No
GO to Pinpoint Test G531332t110.

G531332t110 : CHECK THE BRAKE SWITCH SIGNAL CIRCUIT FOR HIGH RESISTANCE

1. Disconnect the ECM electrical connector, EC300. 2. Measure the resistance between:

Brake switch connector CR78, harness side	ECM connector EC300, harness side
Pin 02	Pin 41

Is the resistance greater than 5 ohms?

-> Yes
REPAIR the high resistance circuit. For additional information, refer to the wiring diagrams. CLEAR the DTC, test the system for normal operation.

-> No
REFER to the warranty policy and procedures manual if an ECM is suspect.

Brake Pedal Position (BPP) Switch

Removal

1 . Switch the ignition on.

2 . Position the front seat fully rearwards.

3 . Switch the ignition off.

4 . Remove the driver's side footwell trim panel.

- Release the 3 clips.

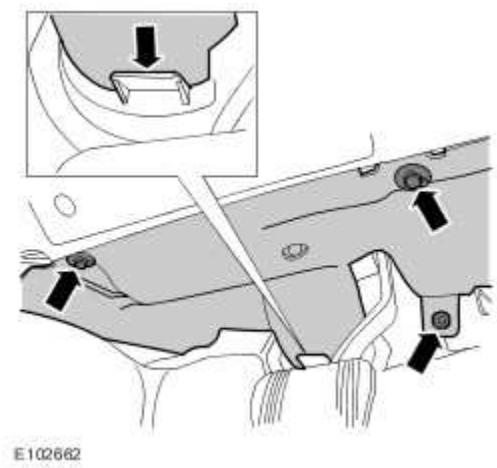

5 . Release the brake pedal position (BPP) switch.

- Rotate the BPP switch 45 degrees counter-clockwise.

www.JagDocs.com

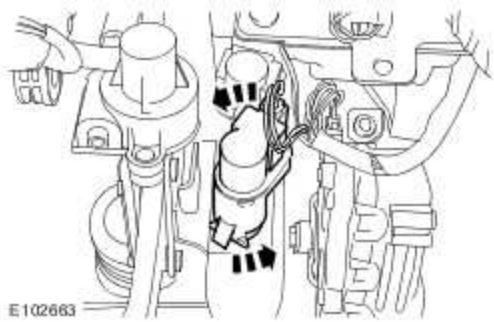

6 . Remove the BPP switch.

Disconnect the electrical connector.

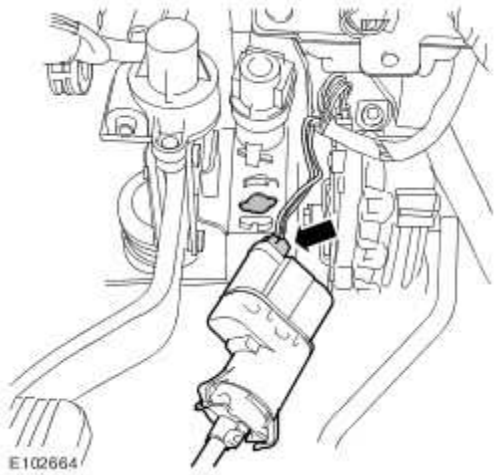

Installation

1 . **CAUTION: Make sure that the brake pedal remains in the rest position during this procedure.**

CAUTION: The bracket is keyed to avoid incorrect orientation. Failure to correctly align the switch may result in damage to the vehicle.

CAUTION: Make sure that the pedal box, booster-to-brake pedal assembly and switch bracket are all installed correctly before installing the switch.

Install the BPP switch.

- Locate the BPP switch in the bracket.
- Rotate the BPP switch 45 degrees clockwise.

2 . Connect the electrical connector.

3 . Install the driver's side footwell trim panel.

- Align the trim panel with the guide.
- Install the 3 clips.

www.JagDocs.com

Camshaft Position (CMP) Sensor LH (18.31.12)

Removal

Vehicles with 3.5L or 4.2L engine without supercharger

1 . Remove the oil filler cap.

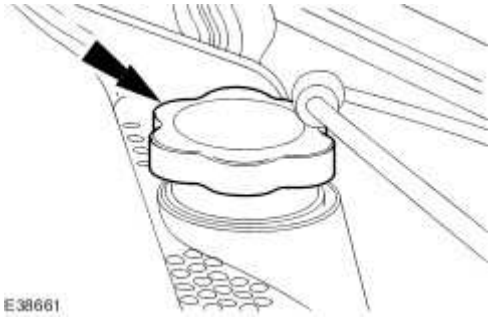

2 . Remove the engine cover.

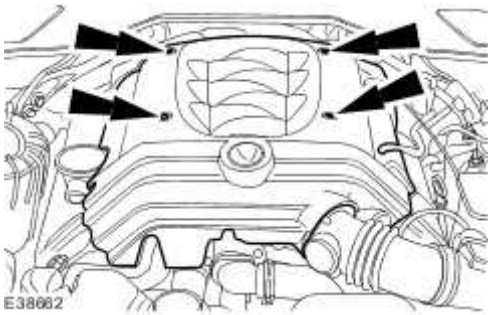

Vehicles with supercharger

3 . Remove the engine cover.

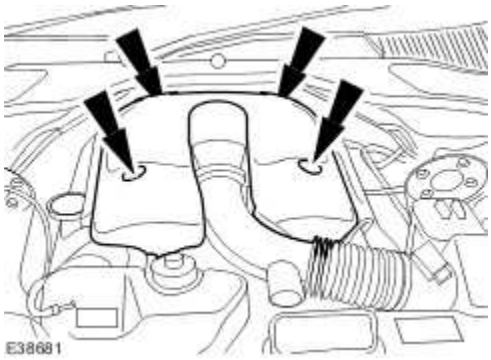

All vehicles

4 . Remove the cowl vent screen. <<501-02>>

5 **NOTE:**

.

Vehicles with supercharger shown, vehicles with 3.5L or 4.2L engine without supercharger similar.

NOTE:

Left-hand shown, right-hand similar.

Remove the engine compartment supports.

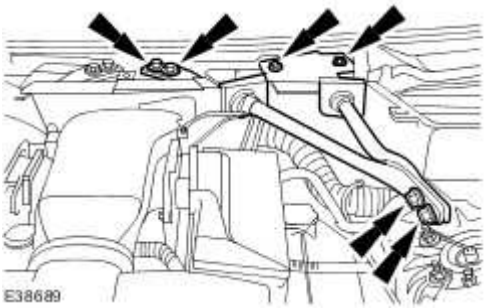

Vehicles with supercharger

6 . Loosen the throttle body intake pipe retaining clip.

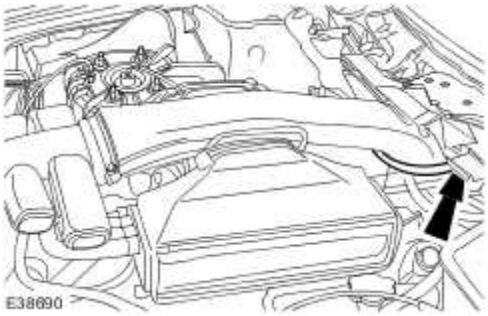

7 . Detach the air filter outlet pipe

www.JagDocs.com

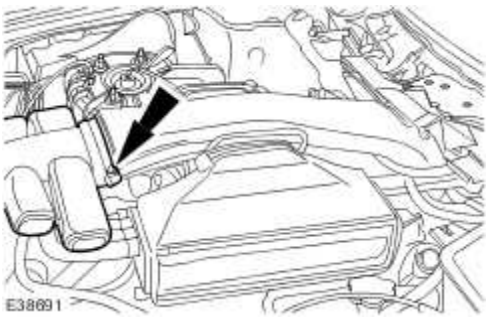

8 . Remove the throttle body intake pipe.

1) Detach the throttle body intake pipe.

2) Remove the throttle body intake pipe.

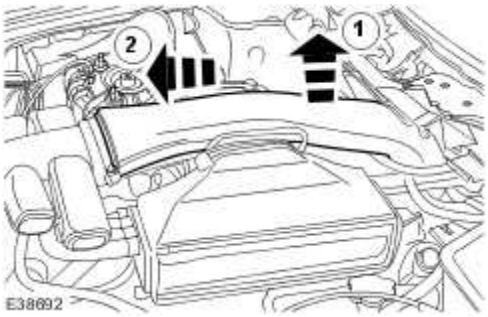

All vehicles

9 . **NOTE:**

Right-hand drive vehicles shown, left-hand drive vehicles similar.

Remove the engine compartment outer panel insulation.

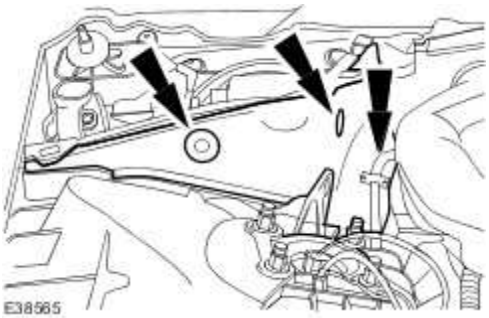

Right-hand drive vehicles

10 . Remove the engine compartment outer panel.

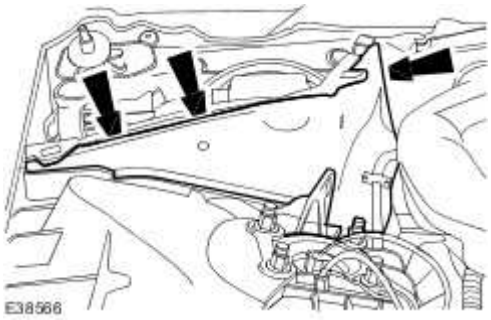

Left-hand drive vehicles

11 . Remove the engine compartment outer access panel.

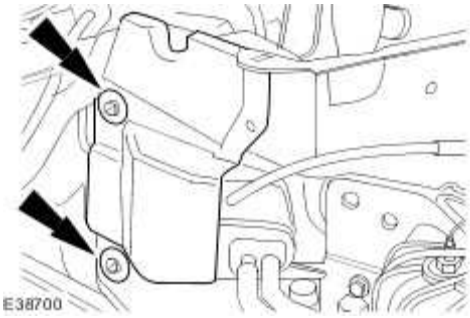

All vehicles

12 . **NOTE:**

Right-hand drive vehicles shown, left-hand drive vehicles similar.

Remove the cabin air filter.

1) Detach the cabin air filter.

2) Remove the cabin air filter.

www.JagDocs.com

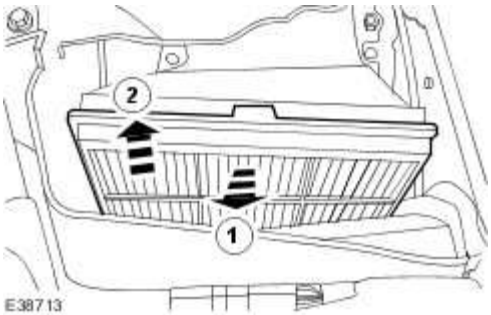

13 . **NOTE:**

Right-hand drive vehicles shown, left-hand drive vehicles similar.

Remove the cabin filter housing.

1) Remove the cabin filter housing retaining nuts.

2) Remove the cabin filter housing.

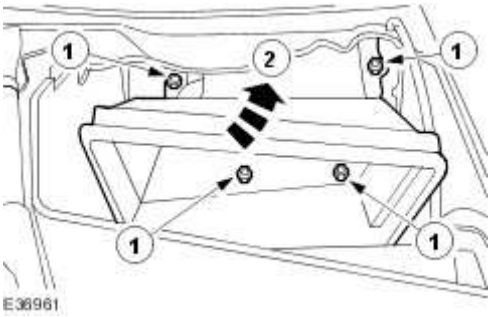

14 . **NOTE:**

Right-hand drive vehicles shown, left-hand drive vehicles similar.

Detach the engine compartment outer panel.

1) Remove the engine compartment outer panel retaining bolt.

2) Detach the engine compartment outer panel.

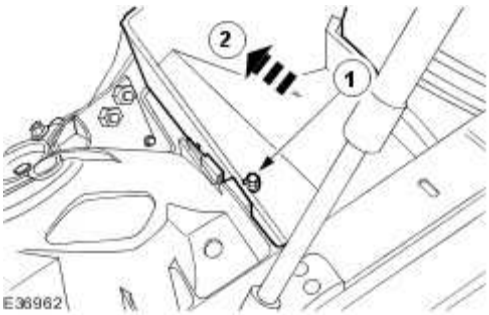

15 . Remove the engine compartment outer panel.

Detach the hood release cable.

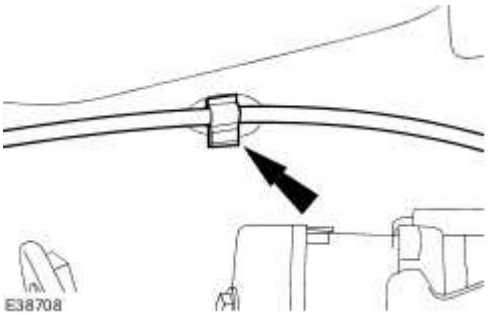

16 . Remove the engine compartment supports spacing plate.

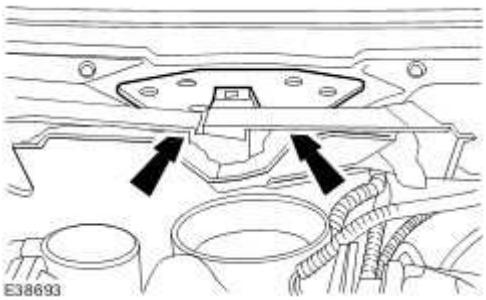

17 **NOTE:**

.

Vehicles with supercharger shown, vehicles with 3.5L or 4.2L engine without supercharger similar.

Detach the engine compartment inner panel insulation.

www.JagDocs.com

18 **NOTE:**
.

Vehicles with supercharger shown, vehicles with 3.5L or 4.2L engine without supercharger similar.

NOTE:

Right-hand drive vehicles shown, left-hand drive vehicles similar.

Remove the left-hand engine compartment inner panel.

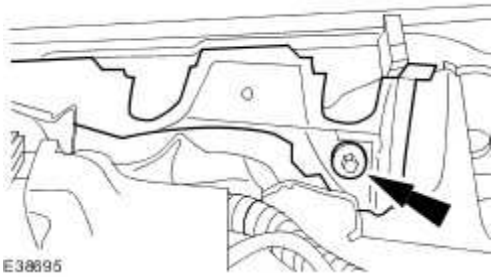

19 **NOTE:**
.

Vehicles with supercharger shown, vehicles with 3.5L or 4.2L engine without supercharger similar.

NOTE:

Left-hand drive vehicles shown, right-hand drive vehicles similar.

Remove the right-hand engine compartment inner panel.

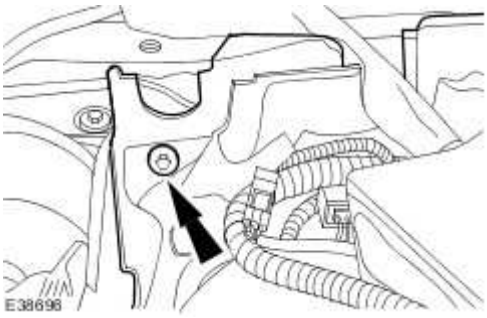

20 . Detach the camshaft position (CMP) sensor electrical connector.

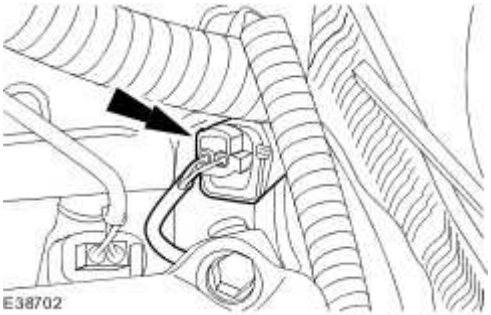

21 . Disconnect the CMP sensor electrical connector.

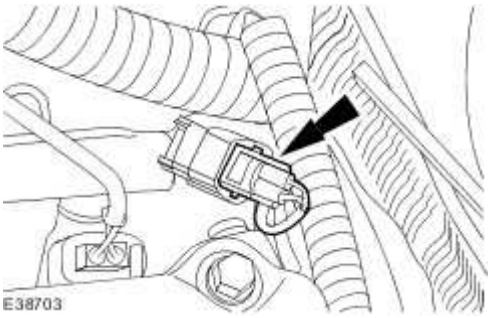

22 . Remove the CMP sensor.

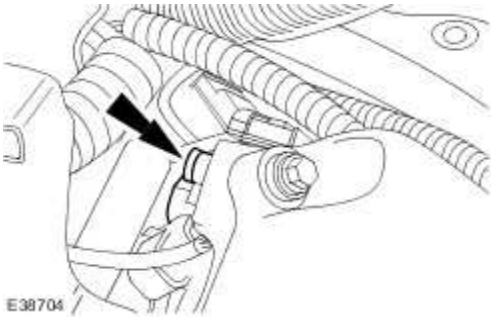

www.JagDocs.com

Installation

1 . To install, reverse the removal procedure.

Tighten to 7 Nm.

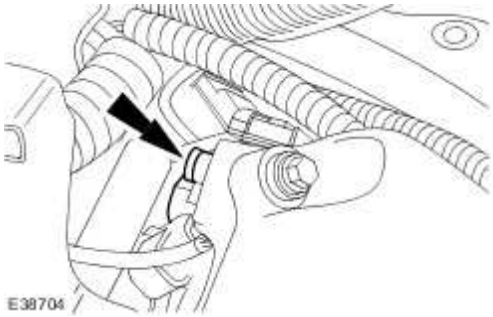

2 **NOTE:**
.

Vehicles with supercharger shown, vehicles with 3.5L or 4.2L engine without supercharger similar.

NOTE:

Left-hand shown, right-hand similar.

Tighten to 25 Nm.

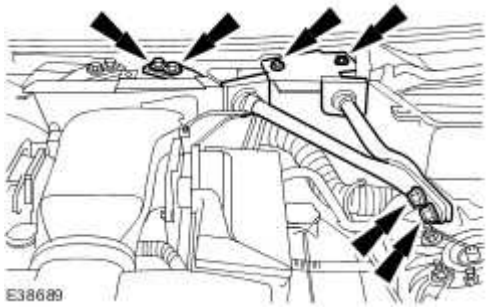

Camshaft Position (CMP) Sensor RH (18.31.11)

Removal

Vehicles with 3.5L or 4.2L engine without supercharger

1 . Remove the oil filler cap.

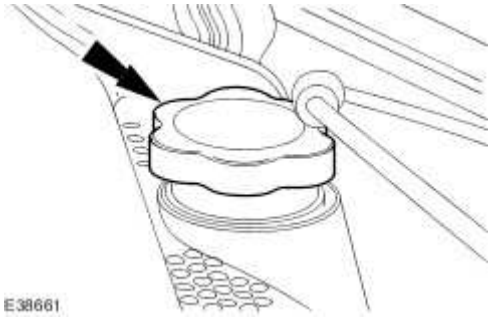

2 . Remove the engine cover.

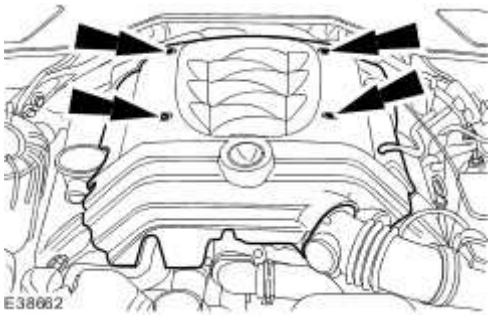

Vehicles with supercharger

3 . Remove the engine cover.

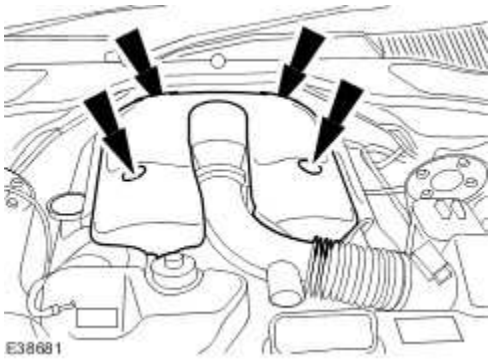

www.JagDocs.com

All vehicles

4 . Remove the cowl vent screen. <<501-02>>

5 **NOTE:**

.

Vehicles with supercharger shown, vehicles with 3.5L or 4.2L engine without supercharger similar.

NOTE:

Left-hand shown, right-hand similar.

Remove the engine compartment supports.

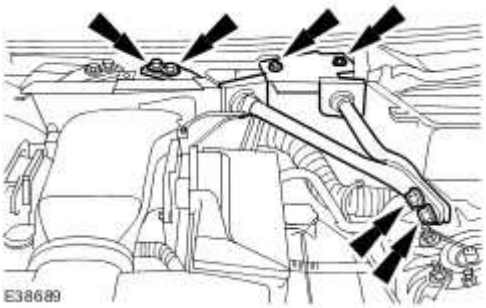

Vehicles with supercharger

6 . Loosen the throttle body intake pipe retaining clip.

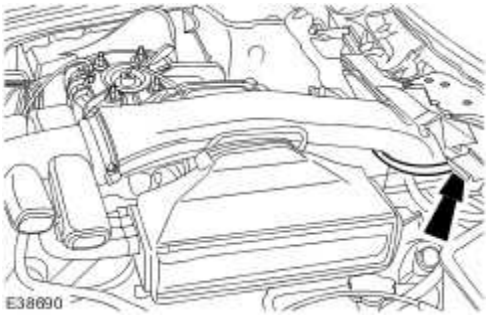

7 . Detach the air filter outlet pipe

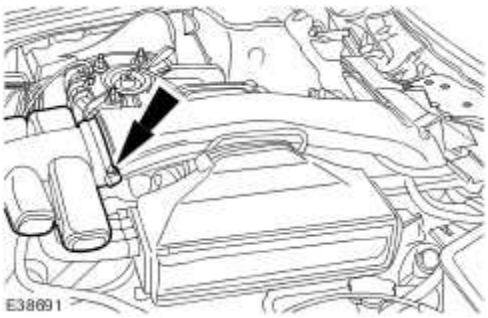

8 . Remove the throttle body intake pipe.

1) Detach the throttle body intake pipe.

2) Remove the throttle body intake pipe.

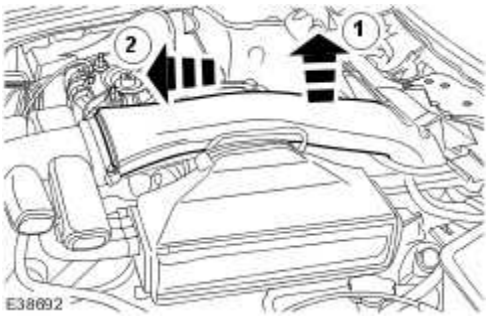

www.JagDocs.com

All vehicles

9 . **NOTE:**

Right-hand drive vehicles shown, left-hand drive vehicles similar.

Remove the engine compartment outer panel insulation.

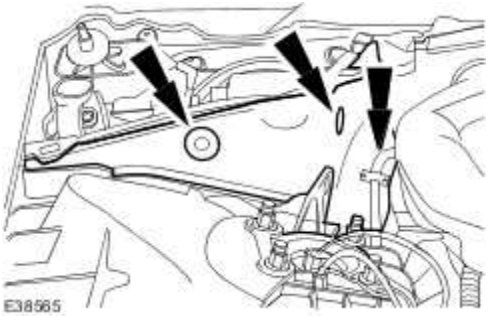

Right-hand drive vehicles

10 . Remove the engine compartment outer panel.

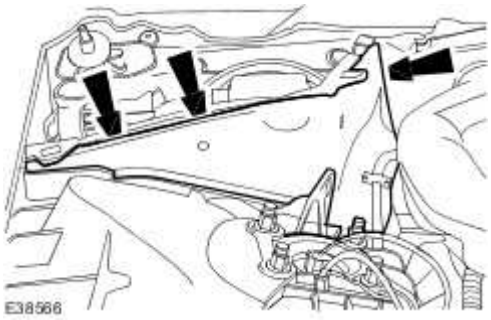

Left-hand drive vehicles

11 . Remove the engine compartment outer access panel.

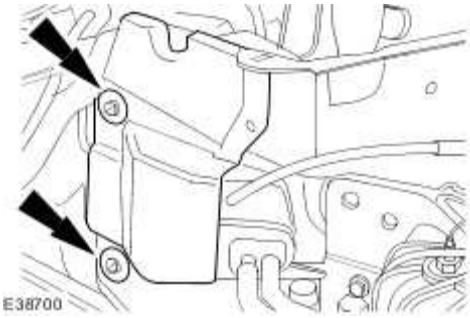

All vehicles

12 . **NOTE:**

Right-hand drive vehicles shown, left-hand drive vehicles similar.

Remove the cabin air filter.

1) Detach the cabin air filter.

2) Remove the cabin air filter.

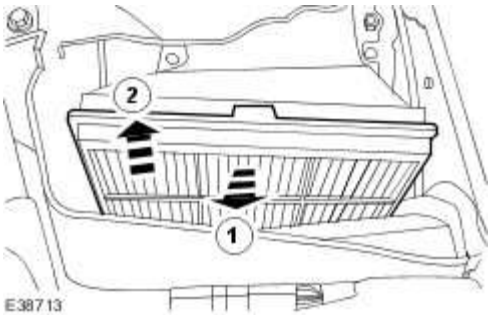

13 . **NOTE:**

Right-hand drive vehicles shown, left-hand drive vehicles similar.

Remove the cabin filter housing.

1) Remove the cabin filter housing retaining nuts.

2) Remove the cabin filter housing.

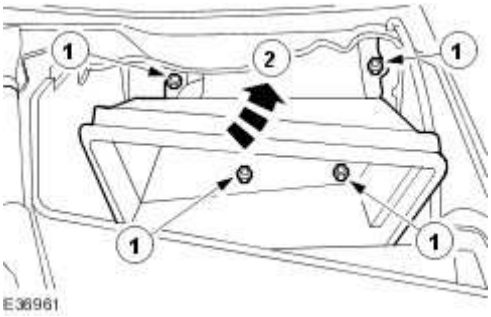

14 . **NOTE:**

Right-hand drive vehicles shown, left-hand drive vehicles similar.

Detach the engine compartment outer panel.

1) Remove the engine compartment outer panel retaining bolt.

2) Detach the engine compartment outer panel.

www.JagDocs.com

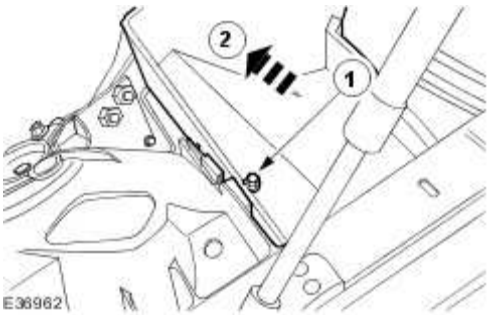

15 . Remove the engine compartment outer panel.

Detach the hood release cable.

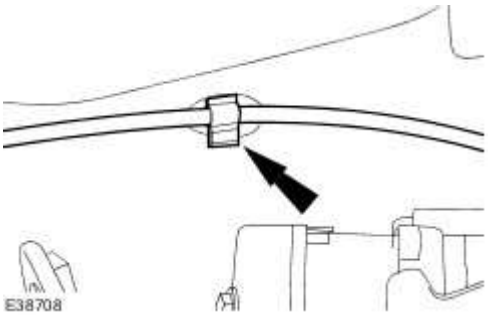

16 . Remove the engine compartment support spacing plate.

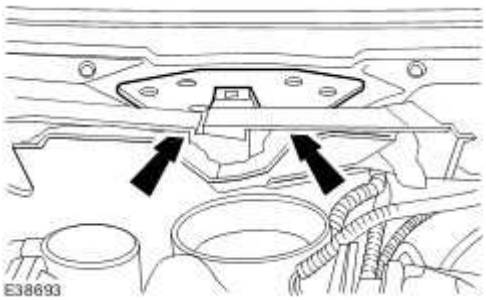

17 **NOTE:**

.

Vehicles with supercharger shown, vehicles with 3.5L or 4.2L engine without supercharger similar.

Detach the engine compartment inner panel insulation.

18 **NOTE:**

.

Vehicles with supercharger shown, vehicles with 3.5L or 4.2L engine without supercharger similar.

NOTE:

Right-hand drive vehicles shown, left-hand drive vehicles similar.

Remove the left-hand engine compartment inner panel.

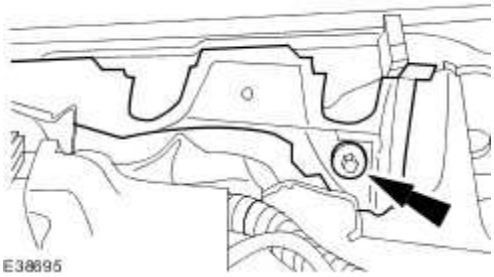

19 **NOTE:**

.

Vehicles with supercharger shown, vehicles with 3.5L or 4.2L engine without supercharger similar.

NOTE:

Left-hand drive vehicles shown, right-hand drive vehicles similar.

Remove the right-hand engine compartment inner panel.

www.JagDocs.com

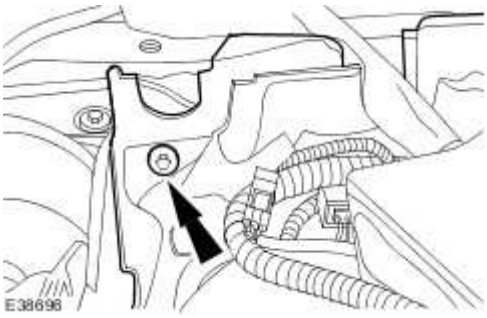

20 . Detach the camshaft position (CMP) sensor electrical connector.

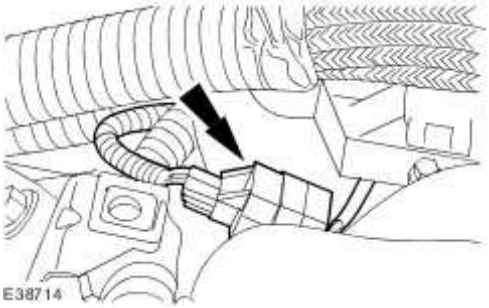

21 . Disconnect the CMP sensor electrical connector.

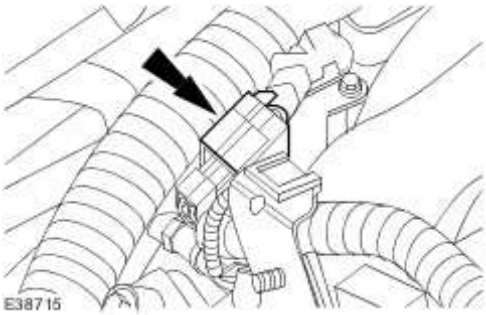

22 . Remove the CMP sensor.

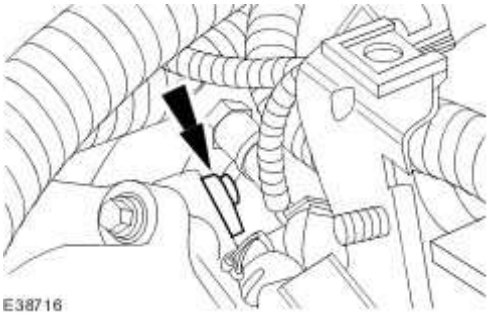

Installation

1 . To install, reverse the removal procedure.

Tighten to 7 Nm.

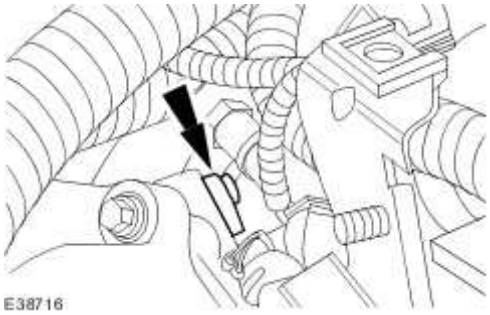

2 **NOTE:**
.

Vehicles with supercharger shown, vehicles with 3.5L or 4.2L engine without supercharger similar.

NOTE:

Left-hand shown, right-hand similar.

Tighten to 25 Nm.

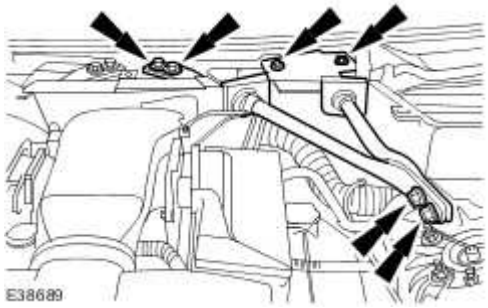

www.JagDocs.com

Catalyst Monitor Sensor (18.30.66)

Removal

1 . Raise and support the vehicle.
For additional information, refer to

2 . Detach the catalyst monitor sensor electrical connector.

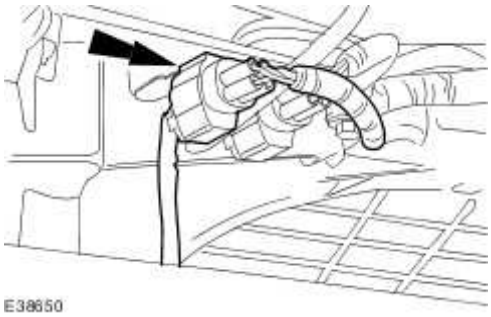

3 . Disconnect the catalyst monitor sensor electrical connector.

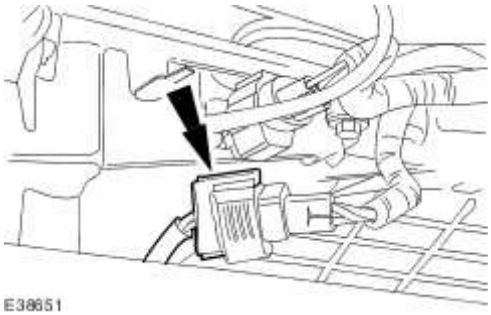

4 . Detach the catalyst monitor sensor wiring harness from the retaining clip on the automatic transmission.

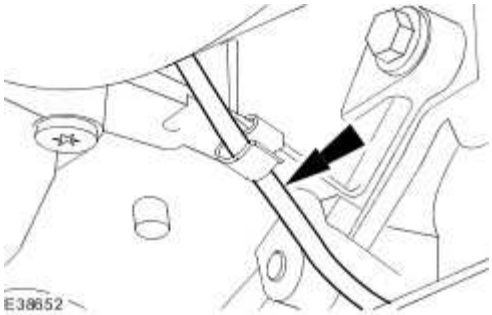

5. **CAUTION: Do not twist the catalyst monitor sensor wiring harness on removal. Failure to follow this instruction may result in damage to the component.**

Remove the catalyst monitor sensor.

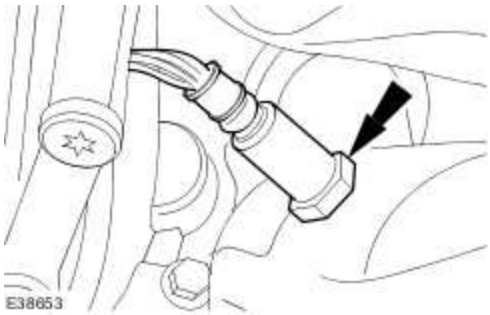

Installation

1. **CAUTION: Do not twist the catalyst monitor sensor wiring harness on installation. Failure to follow this instruction may result in damage to the component.**

To install, reverse the removal procedure.

Tighten to 40 Nm.

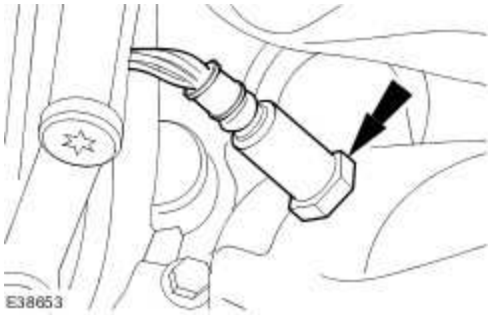

2. **NOTE:**

For NAS vehicles only.

If required, carry out a long drive cycle.

For additional information, refer to Powertrain Control Module (PCM) Long Drive Cycle Self-Test

www.JagDocs.com

Crankshaft Position (CKP) Sensor (18.30.12)

Removal

1 . Remove the air deflector. <<501-02>>

2 . Disconnect the crankshaft position (CKP) sensor electrical connector.

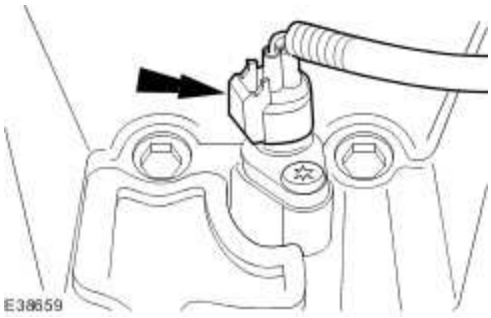

3 . Remove the CKP sensor.

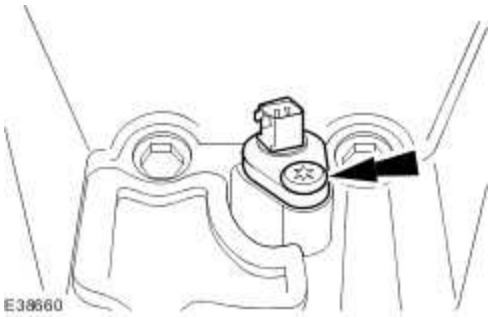

Installation

1 . To install, reverse removal procedure.

Tighten to 7 Nm.

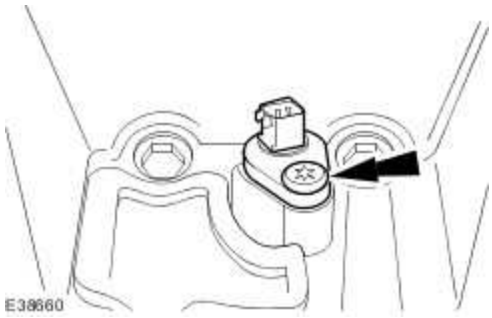

www.JagDocs.com

Engine Control Module (ECM) (18.30.01)

Special Service Tools

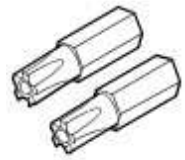

5 Point Security Torx Bit
418-535

Removal

1 . Disconnect the battery ground cable. <<414-01>>

2 . Remove the cowl vent screen. <<501-02>>

3 . Remove the cabin air filter.

1) Detach the cabin air filter.

2) Remove the cabin air filter.

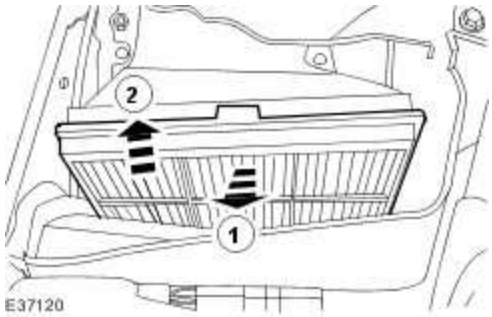

4 . Remove the cabin air filter housing.

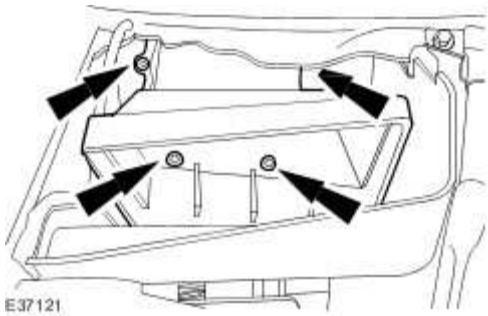

5 . Remove the engine compartment panel.

1) Remove the engine compartment panel retaining bolt.

2) Remove the engine compartment panel.

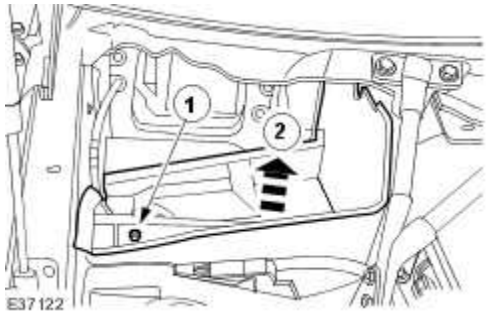

6 **NOTE:**

.

The engine control module (ECM) electrical connector retaining bolt remains captive in the electrical connector.

Using the special tool, loosen the ECM electrical connector retaining bolt.

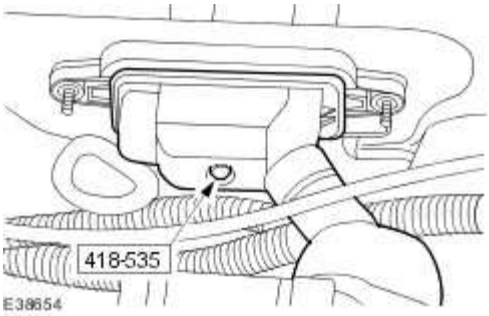

www.JagDocs.com

7 . Disconnect the ECM electrical connector.

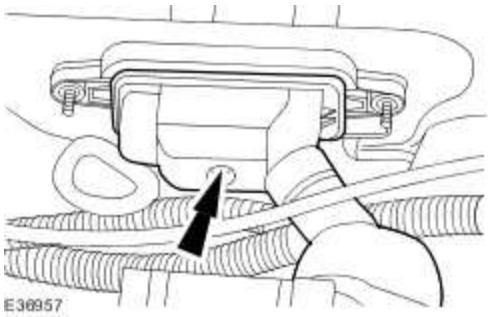

8 . Remove the instrument panel lower trim panel.

1) Remove the retaining clips.

2) Remove the instrument panel lower trim panel.

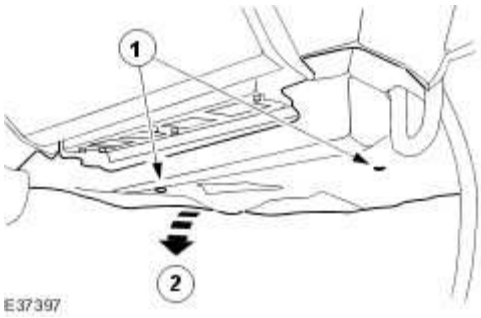

9 . Remove the ECM retaining bracket.

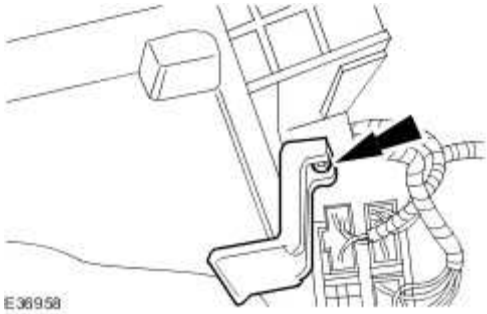

10 . Remove the ECM.

1) Detach the retaining clips.

2) Remove the ECM.

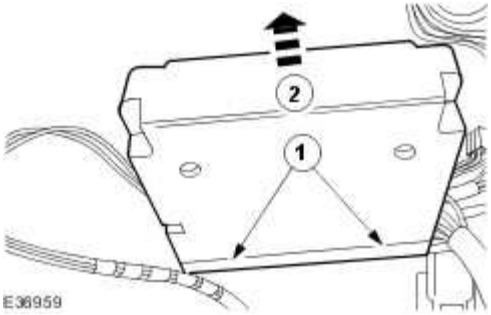

Installation

1. **CAUTION: Make sure that the electrical connector is located correctly in the ECM. Do not force or overtighten the electrical connector. Failure to follow this instruction may result in damage to the component.**

CAUTION: Make sure the ECM support bracket is located correctly.

To install, reverse the removal procedure.

Tighten to 5 Nm.

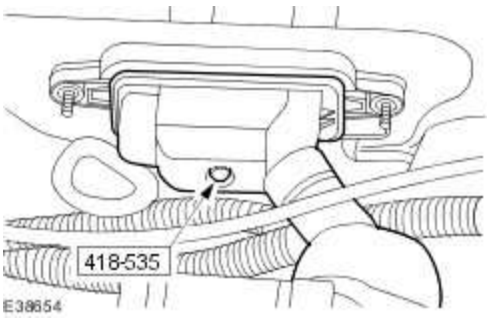

www.JagDocs.com

Engine Coolant Temperature (ECT) Sensor - 4.2L SC V8 - AJV8 (18.30.10)

Removal

1. **WARNING: Never remove the coolant expansion tank pressure cap under any circumstances while the engine is operating. Failure to follow this instruction may result in personal injury.**

WARNING: To avoid hot coolant or steam blowing out of the cooling system, use extreme care when removing the coolant expansion tank pressure cap. Wait until the engine has cooled down, then insulate the coolant pressure cap with a suitable cloth and slowly loosen the coolant expansion tank pressure cap until the cooling system pressure is released. Do not remove the coolant expansion tank pressure cap. Step back while the pressure is released from the system. When all of the pressure has been released slowly remove the coolant expansion tank pressure cap (still with the suitable cloth in position) from the coolant expansion tank. Failure to follow this instruction may result in personal injury.

Release the cooling system pressure.

- Remove the coolant expansion tank pressure cap.

2. Remove the air cleaner outlet pipe.
   For additional information, refer to Air Cleaner Outlet Pipe (19.10.31)

3. Disconnect the engine coolant temperature (ECT) sensor electrical connector.

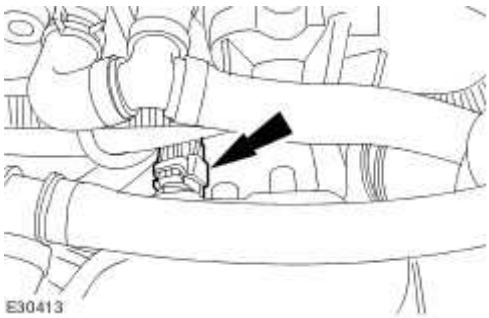

4 . Remove the ECT sensor.

- Remove and discard the ECT sensor O-ring seal.

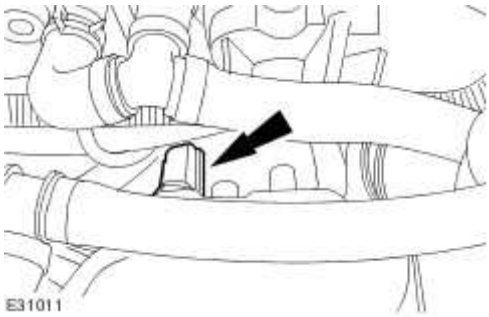

Installation

1 . To install, reverse the removal procedure.

- Install a new ECT sensor O-ring seal.
- Tighten to 17 Nm.

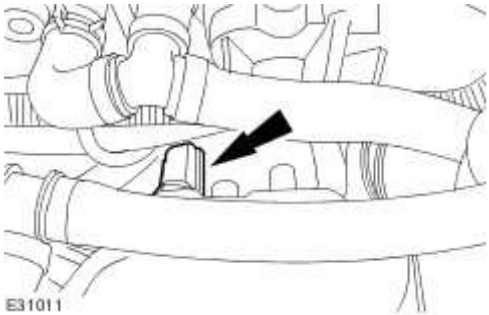

2 . Fill the cooling system up to the MAX mark on the coolant expansion tank.

www.JagDocs.com

Engine Coolant Temperature (ECT) Sensor - 4.2L NA V8 - AJV8 (18.30.10)

Removal

1. **WARNING: Never remove the coolant expansion tank pressure cap under any circumstances while the engine is operating. Failure to follow this instruction may result in personal injury.**

WARNING: To avoid hot coolant or steam blowing out of the cooling system, use extreme care when removing the coolant expansion tank pressure cap. Wait until the engine has cooled down, then insulate the coolant pressure cap with a suitable cloth and slowly loosen the coolant expansion tank pressure cap until the cooling system pressure is released. Do not remove the coolant expansion tank pressure cap. Step back while the pressure is released from the system. When all of the pressure has been released slowly remove the coolant expansion tank pressure cap (still with the suitable cloth in position) from the coolant expansion tank. Failure to follow this instruction may result in personal injury.

Release the cooling system pressure.

- Remove the coolant expansion tank pressure cap.

2 . Remove the air cleaner outlet pipe. <<303-12B>>

3 . Remove the engine coolant temperature (ECT) sensor electrical connector.

1) Disconnect the ECT sensor electrical connector.

2) Remove the ECT sensor.

- Remove and discard the ECT sensor sealing washer.

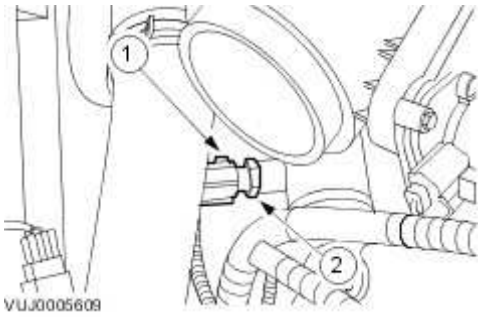

Installation

1 . To install, reverse the removal procedure.

- Install a new ECT sensor sealing washer.
- Tighten to 17 Nm.

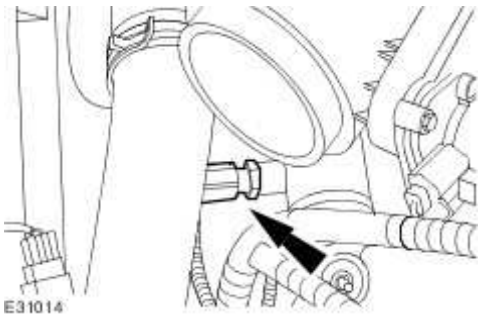

2 . Fill the cooling system up to the MAX mark on the coolant expansion tank.

www.JagDocs.com

Fuel Rail Pressure (FRP) Sensor (18.30.98)

Removal

All vehicles

1. **WARNING: Do not smoke, carry lighted tobacco or an open flame of any type when working on or near any fuel related components. Highly flammable vapors are always present and may ignite. Failure to follow these instructions may result in personal injury.**

WARNING: Do not carry or operate cellular phones when working on or near any fuel related components. Highly flammable vapors are always present and may ignite. Failure to follow these instructions may result in personal injury.

Depressurize the fuel system. <<310-00>>

Vehicles with 3.5L or 4.2L engine without supercharger

2 . Remove the oil filler cap.

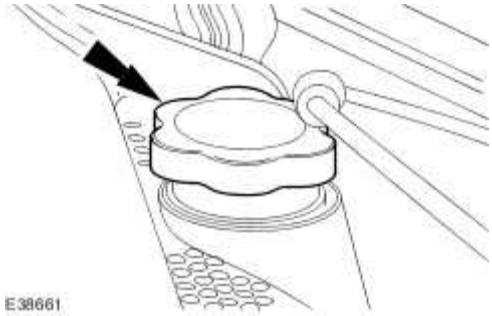

3 . Remove the engine cover.

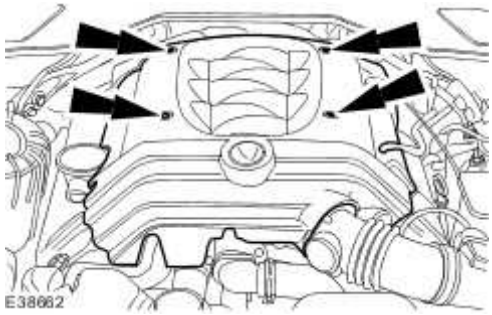

Vehicles with supercharger

4 . Remove the engine cover.

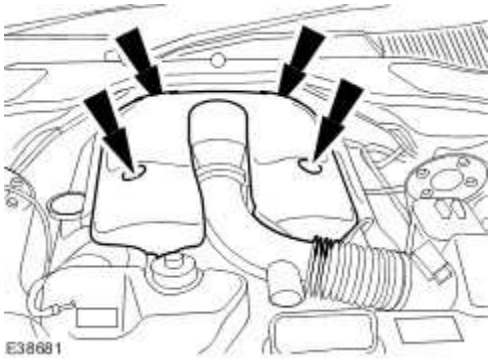

All vehicles

5 **NOTE:**

.

Vehicles with 3.5L or 4.2L engine without supercharger shown, vehicles with supercharger similar.

Disconnect the fuel rail pressure (FRP) sensor vacuum hose.

1) Disconnect the FRP sensor electrical connector.

2) Disconnect the FRP sensor vacuum hose.

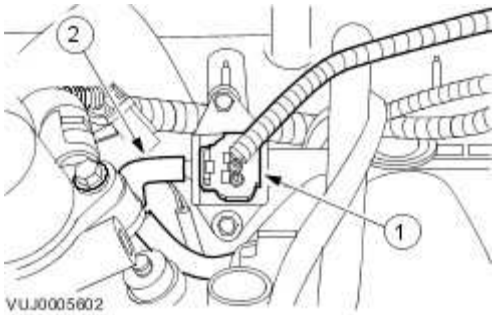

6 **NOTE:**

.

Vehicles with 3.5L or 4.2L engine without supercharger shown, vehicles with supercharger similar.

Remove the FRP sensor.

www.JagDocs.com

- Remove and discard the O-ring seals.

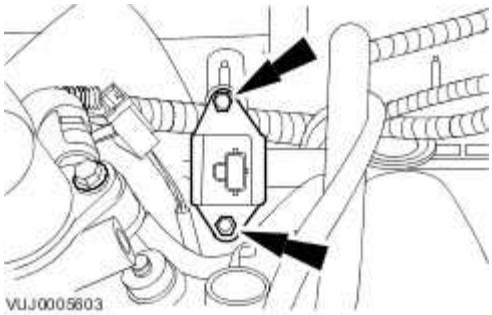

Installation

1. **WARNING: Do not smoke, carry lighted tobacco or an open flame of any type when working on or near any fuel related components. Highly flammable vapors are always present and may ignite. Failure to follow these instructions may result in personal injury.**

WARNING: Do not carry or operate cellular phones when working on or near any fuel related components. Highly flammable vapors are always present and may ignite. Failure to follow these instructions may result in personal injury.

To install, reverse the removal procedure.

- Install a new O-ring seals.
- Tighten to 5 Nm.

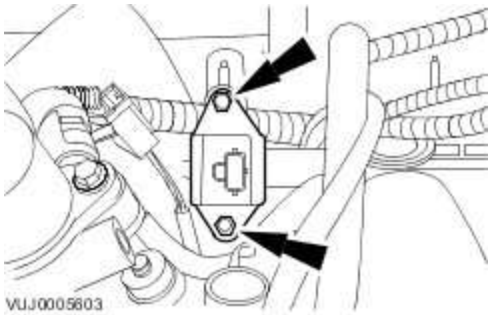

Fuel Temperature Sensor (18.30.99)

Removal

Vehicles with 3.5L or 4.2L engine without supercharger

1 . Remove the oil filler cap.

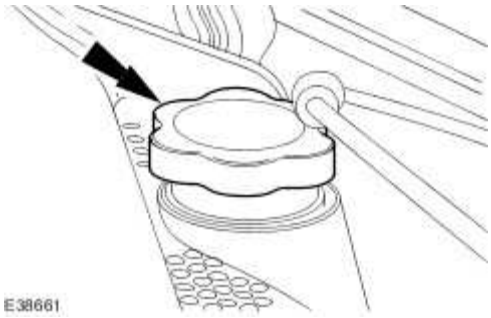

2 . Remove the engine cover.

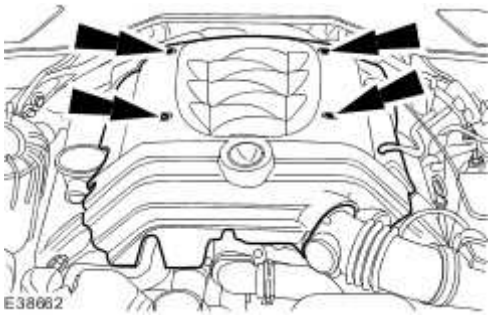

Vehicles with supercharger

3 . Remove the engine cover.

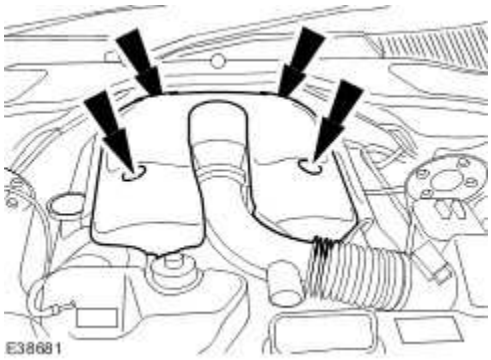

All vehicles

4 . Disconnect the fuel temperature sensor electrical connector.

www.JagDocs.com

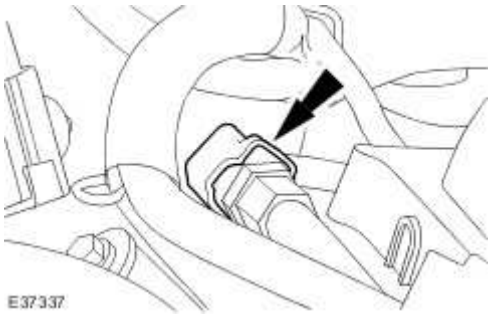

5 . Remove the fuel temperature sensor.

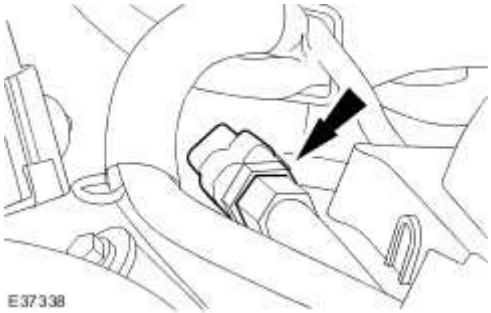

Installation

1 . To install, reverse the removal procedure.

Tighten to 7 Nm.

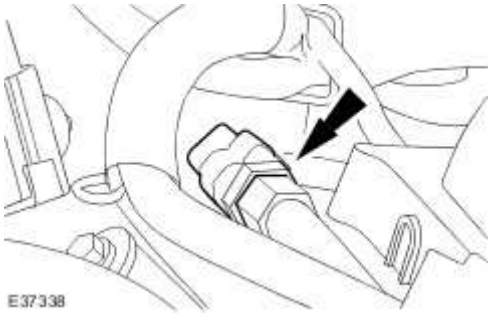

Heated Oxygen Sensor (HO2S)

Removal

1 . Raise and support the vehicle. <<100-02>>

2 . Detach the heated oxygen sensor (HO2S) electrical connector.

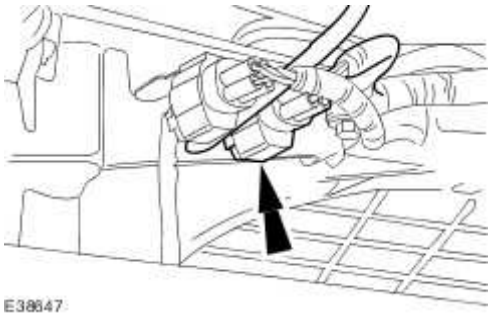

3 . Disconnect the HO2S electrical connector.

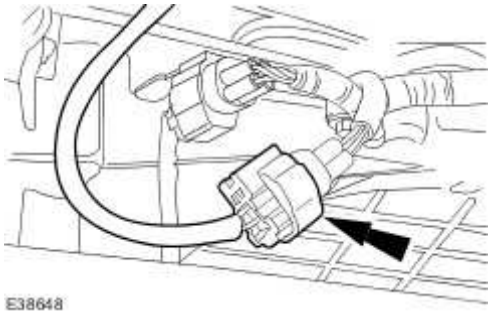

4 . **CAUTION: Do not twist the H02S wiring harness on removal. Failure to follow this instruction may result in damage to the component.**

Remove the HO2S.

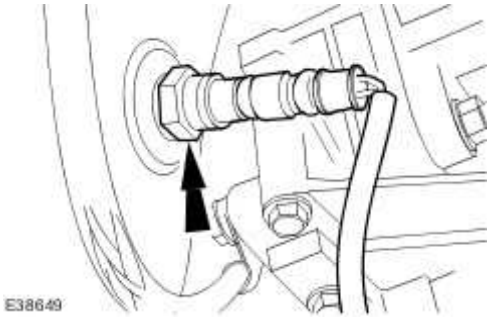

www.JagDocs.com

Installation

1. **CAUTION: Do not twist the H02S wiring harness on installation. Failure to follow this instruction may result in damage to the component.**

To install, reverse the removal procedure.

Tighten to 40 Nm.

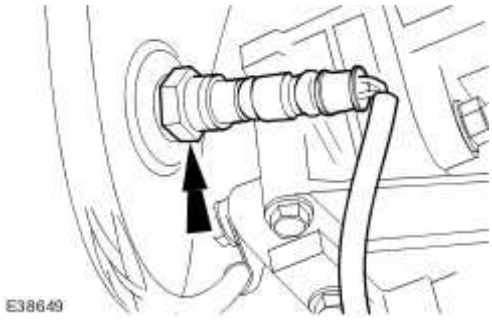

Intake Air Temperature (IAT) Sensor - 4.2L SC V8 - AJV8 (18.30.52)

Removal

1 . Remove the engine cover.

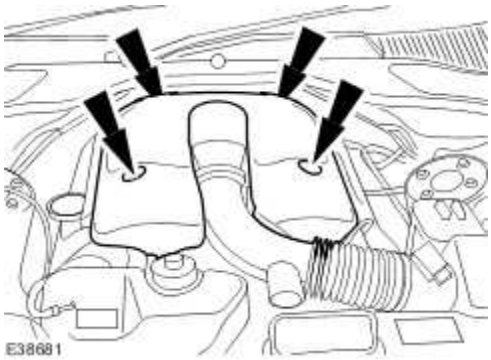

2 . Disconnect the intake air temperature (IAT) sensor electrical connector.

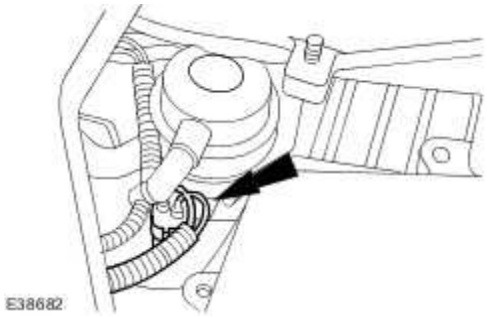

3 . Remove the IAT sensor.

- Remove and discard the IAT sensor sealing washer.

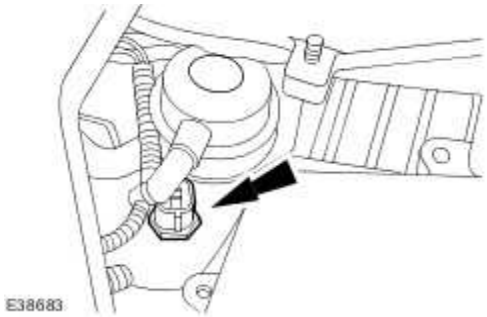

www.JagDocs.com

Installation

1 . To install, reverse the removal procedure.

- Install a new IAT sensor sealing washer.
- Tighten to 35 Nm.

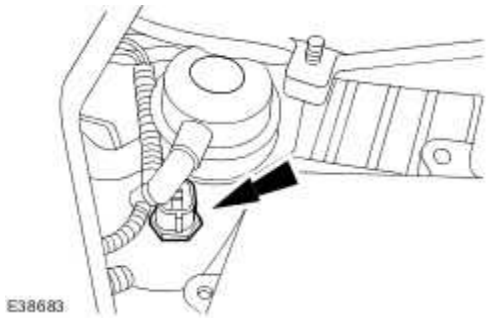

Knock Sensor (KS) LH (18.30.92)

Removal

Vehicles with supercharger

1 . Remove the supercharger.
For additional information, refer to
For additional information, refer to

2 . Remove the noise isolator.

Vehicles without supercharger

3 . Remove the intake manifold.
For additional information, refer to
For additional information, refer to

All vehicles

4 . Remove the knock sensor (KS).

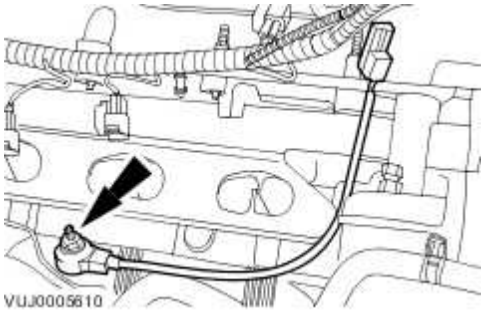

Installation

1 . To install, reverse the removal procedure.

Tighten to 25 Nm.

www.JagDocs.com

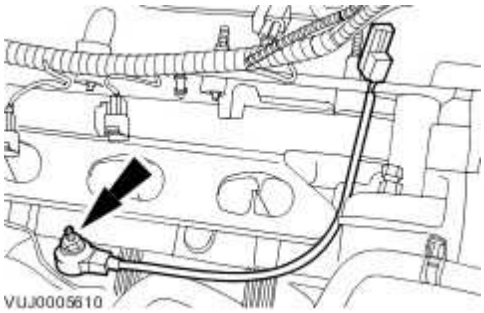
VUJ0005610

Manifold Absolute Pressure (MAP) Sensor - 4.2L SC V8 - AJV8 (18.30.86)

Removal

All vehicles

1 . Remove the engine cover.

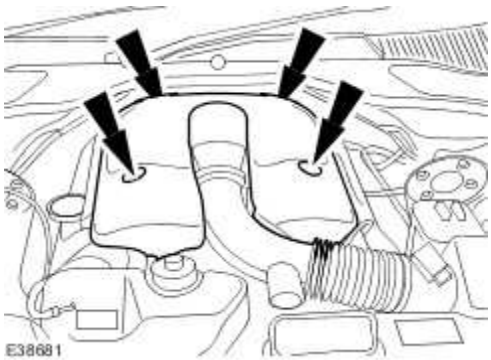

2 . Remove the cowl vent screen.
For additional information, refer to Cowl Vent Screen (76.10.01)

3 . **NOTE:**

Left-hand shown, right-hand similar.

Remove the engine compartment supports.

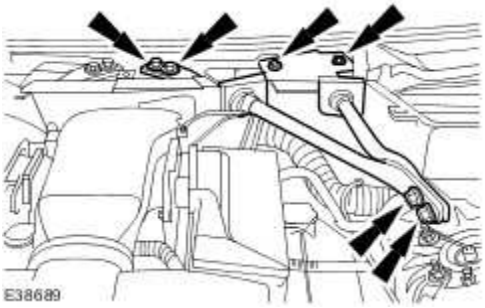

4 . Loosen the throttle body intake pipe retaining clip.

www.JagDocs.com

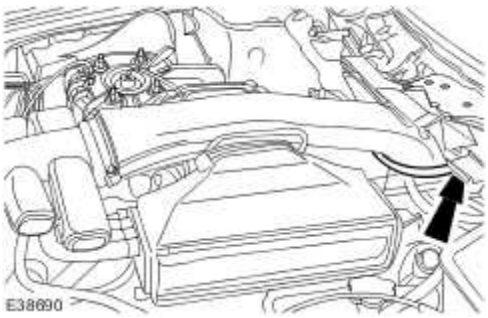

5 . Detach the air filter outlet pipe

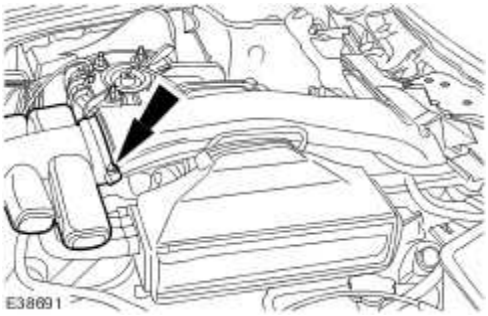

6 . Remove the throttle body intake pipe.

1) Detach the throttle body intake pipe.

2) Remove the throttle body intake pipe.

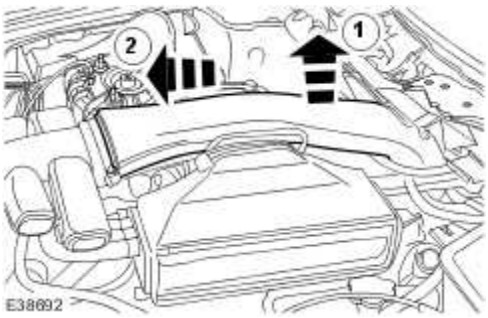

7 . **NOTE:**

Right-hand drive vehicles shown, left-hand drive vehicles similar.

Remove the engine compartment outer panel insulation.

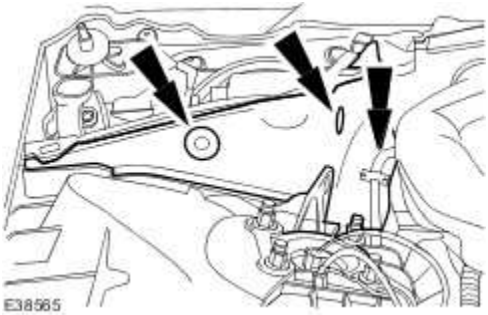

Right-hand drive vehicles

8 . Remove the engine compartment outer panel.

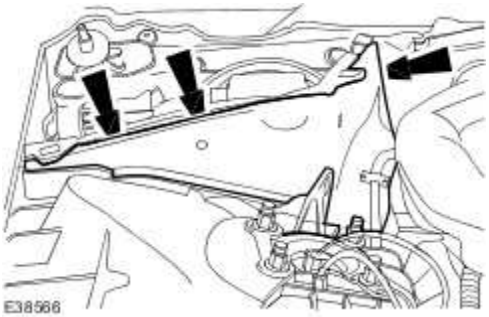

Left-hand drive vehicles

9 . Remove the engine compartment outer access panel.

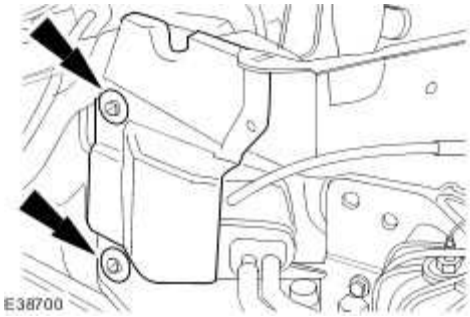

All vehicles

10 . **NOTE:**

Right-hand drive vehicles shown, left-hand drive vehicles similar.

Remove the cabin air filter.

1) Detach the cabin air filter.

www.JagDocs.com

2) Remove the cabin air filter.

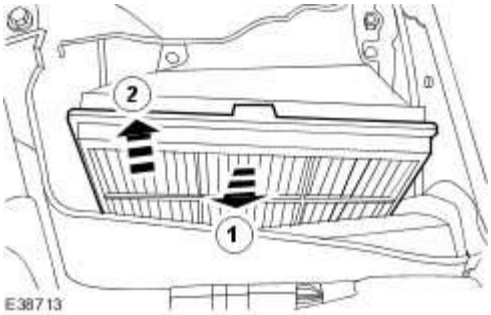

11 . **NOTE:**

Right-hand drive vehicles shown, left-hand drive vehicles similar.

Remove the cabin filter housing.

1) Remove the cabin filter housing retaining nuts.

2) Remove the cabin filter housing.

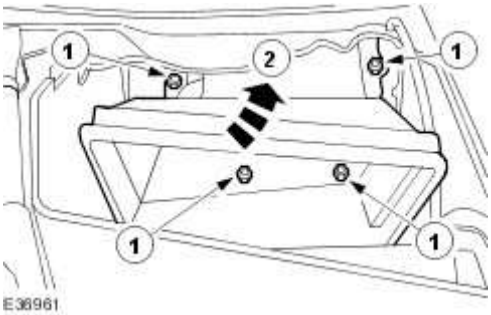

12 . **NOTE:**

Right-hand drive vehicles shown, left-hand drive vehicles similar.

Detach the engine compartment outer panel.

1) Remove the engine compartment outer panel retaining bolt.

2) Detach the engine compartment outer panel.

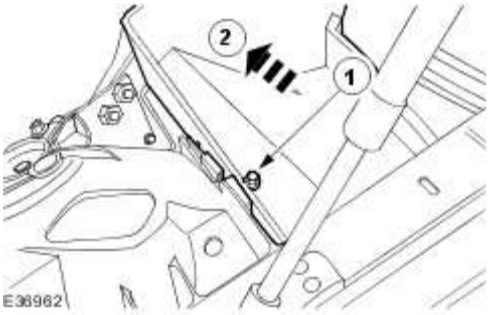

13 . Remove the engine compartment outer panel.

Detach the hood release cable.

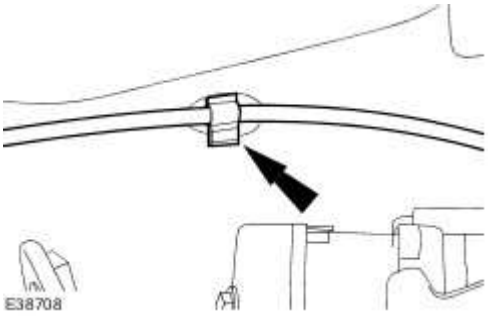

14 . Remove the engine compartment supports spacing plate.

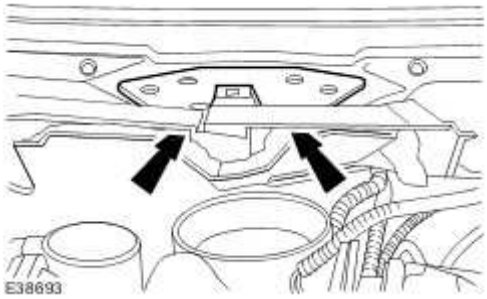

15 . Detach the engine compartment inner panel insulation.

www.JagDocs.com

16 . **NOTE:**

Right-hand drive vehicles shown, left-hand drive vehicles similar.

Remove the left-hand engine compartment inner panel.

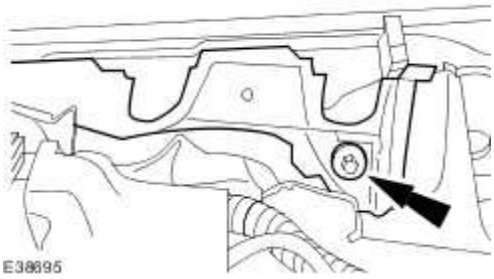

17 . **NOTE:**

Left-hand drive vehicles shown, right-hand drive vehicles similar.

Remove the right-hand engine compartment inner panel.

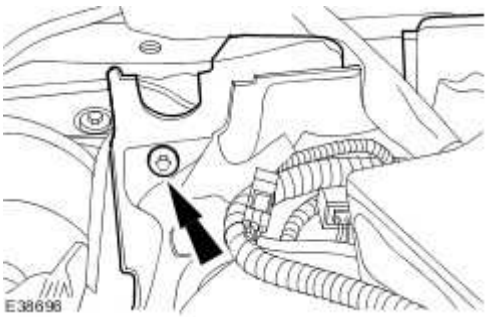

18 . Disconnect the manifold absolute pressure (MAP) sensor electrical connector.

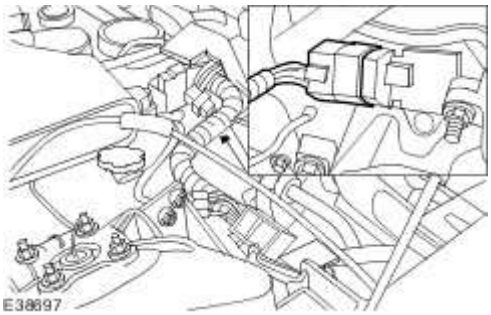

19 . Remove the MAP sensor.

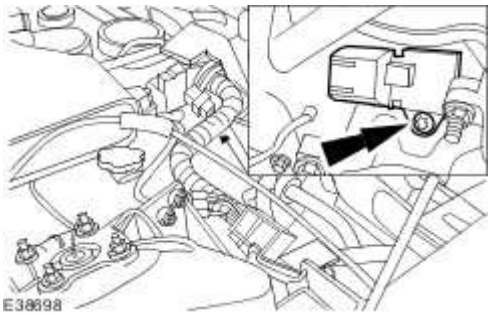

Installation

1 . To install, reverse the removal procedure.

Tighten to 10 Nm.

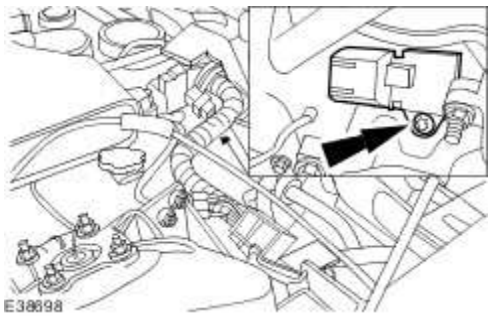

2 . **NOTE:**

Left-hand shown, right-hand similar.

Tighten to 25 Nm.

www.JagDocs.com

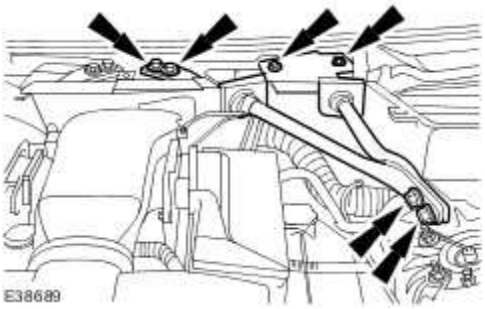

3 **NOTE:**

.

For NAS vehicles only.

If required, carry out a short drive cycle.
For additional information, refer to Powertrain Control Module (PCM) Short Drive Cycle Self-Test

Manifold Absolute Pressure (MAP) Sensor - 4.2L NA V8 - AJV8 (18.30.86)

Removal

1 . Remove the intake manifold.
For additional information, refer to Intake Manifold - VIN Range: G00442->G45703 (30.15.01)
For additional information, refer to Intake Manifold - VIN Range: G45704->G99999 (30.15.01)

2 . Remove the manifold absolute pressure (MAP) sensor.

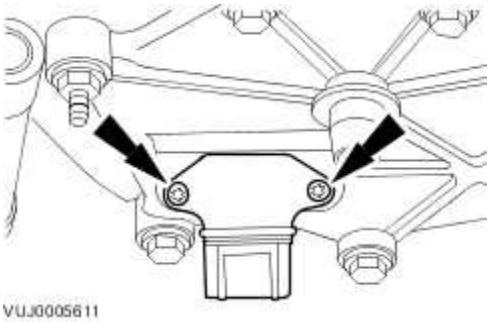

Installation

1 . To install, reverse the removal procedure.

Tighten to 10 Nm.

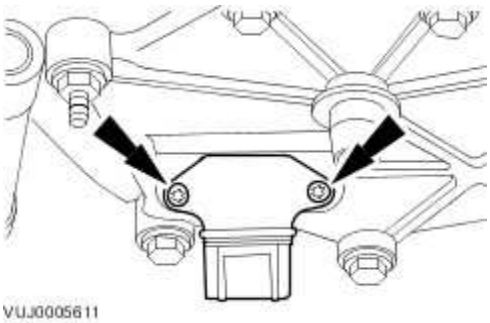

2 . **NOTE:**

For NAS vehicles only.

www.JagDocs.com

Mass Air Flow (MAF) Sensor (18.30.15)

Removal

1 . Remove the mass airflow (MAF) sensor.

1) Disconnect the MAF sensor electrical connector.

2) Remove the mass airflow MAF sensor.

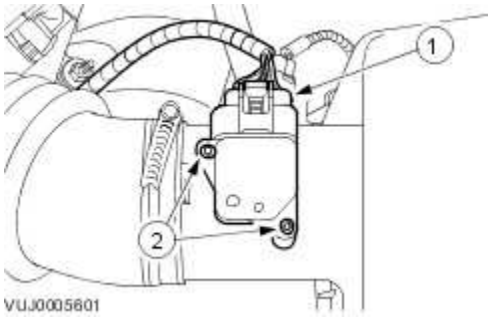

Installation

1 . To install, reverse the removal procedure.

Tighten to 2 Nm.

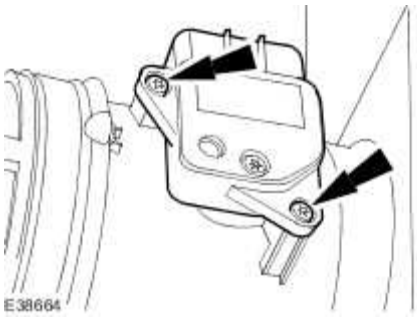

2 **NOTE:**

.

For NAS vehicles only.

If required, carry out a short drive cycle.

For additional information, refer to Powertrain Control Module (PCM) Short Drive Cycle Self-Test

Oil Temperature Sensor (18.31.01)

Removal

1 . Remove the air deflector.
For additional information, refer to

2 . Disconnect the oil temperature sensor electrical connector.

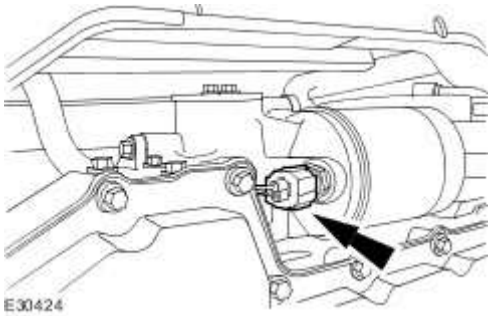

3 . Remove the oil temperature sensor.

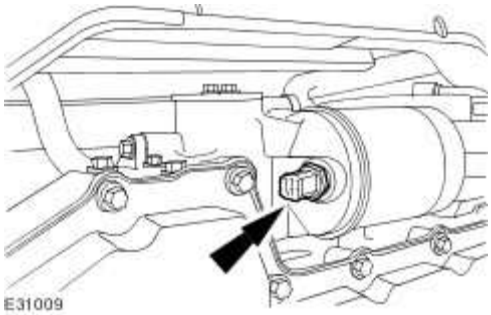

Installation

1 **NOTE:**

.

Apply a small bead of sealant meeting Jaguar specification on the first three threads of the oil temperature sensor.

To install, reverse the removal procedure

- Tighten to 15 Nm.

www.JagDocs.com

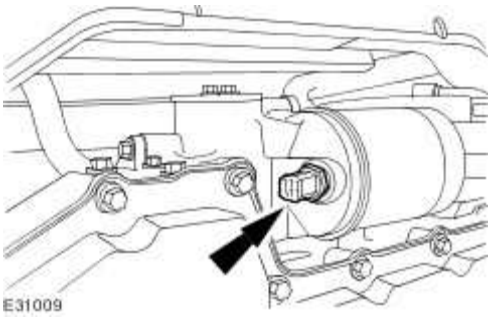
E31009

Variable Camshaft Timing (VCT) Oil Control Solenoid (18.30.90)

Removal

1 . Remove the valve cover.
For additional information, refer to
For additional information, refer to

2 . Remove the variable camshaft timing (VCT) oil control solenoid.

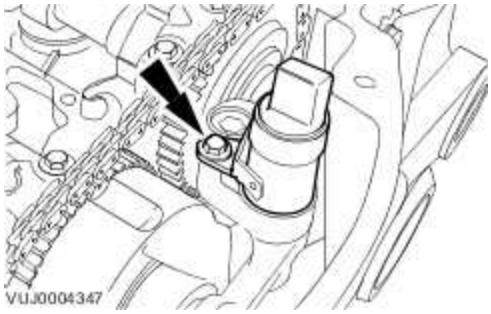

Installation

1 . To install, reverse the removal procedure.

Tighten to 10 Nm.

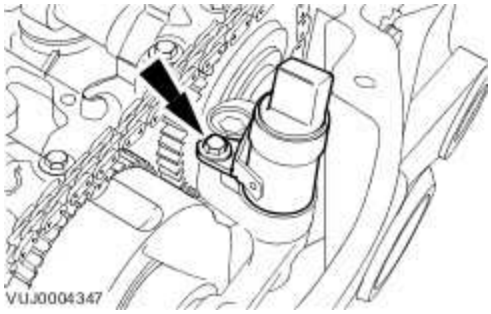

2 **NOTE:**
.

For NAS vehicles only.

If required, carry out a short drive cycle.

For additional information, refer to Powertrain Control Module (PCM) Short Drive Cycle Self-Test

www.JagDocs.com

Specifications

Torque Specifications

Description	Nm	lb-ft	lb-in
Camshaft position (CMP) sensor retaining bolt	10	-	89
Crankshaft position (CKP) sensor retaining bolt	5	-	44
Engine control module (ECM) retaining bolt	6	-	53
Engine control module (ECM) retaining nuts	3	-	26
Engine oil pressure (EOP) sensor	15	11	-
Knock sensor (KS) Left-Hand retaining bolt	20	15	-
Knock Sensor (KS) Right-Hand retaining bolt	20	15	-
Manifold absolute pressure (MAP) sensor	3	-	26
Mass air flow (MAF) sensor retaining screws	2	-	18

Brake Pedal Position (BPP) Switch Adjustment

No Data Available

www.JagDocs.com

Electronic Engine Controls

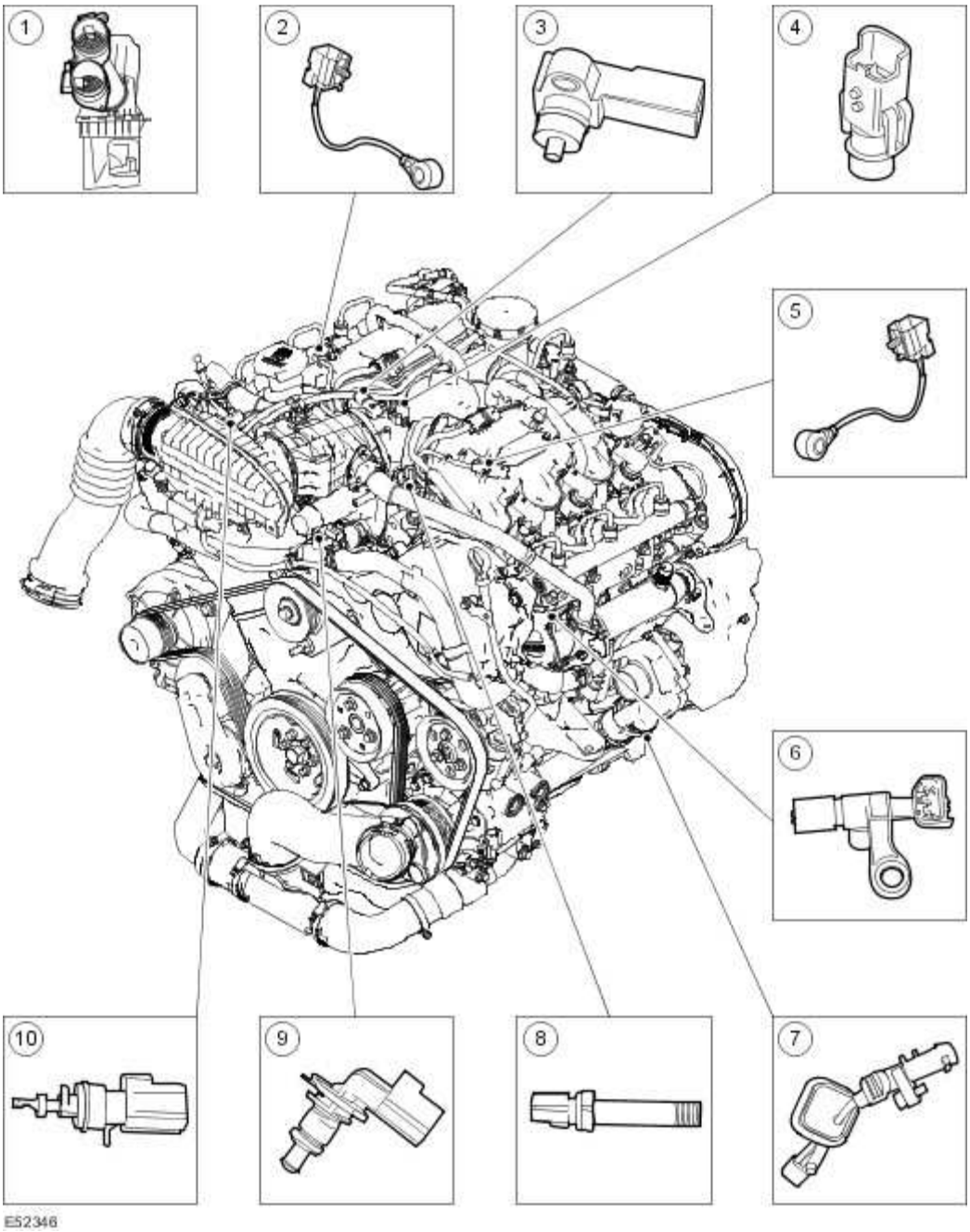

Item	Part Number	Description
1		Mass air flow (MAF) sensor(s)
2		Knock sensor (KS) Right-hand

3		Manifold absolute pressure (MAP) sensor
4		Fuel temperature sensor
5		Knock sensor (KS) Left-hand
6		Camshaft position (CMP) sensor
7		Crankshaft position (CKP) sensor
8		Engine oil pressure (EOP) sensor
9		Engine coolant temperature (ECT) sensor
10		Charge air temperature sensor

www.JagDocs.com

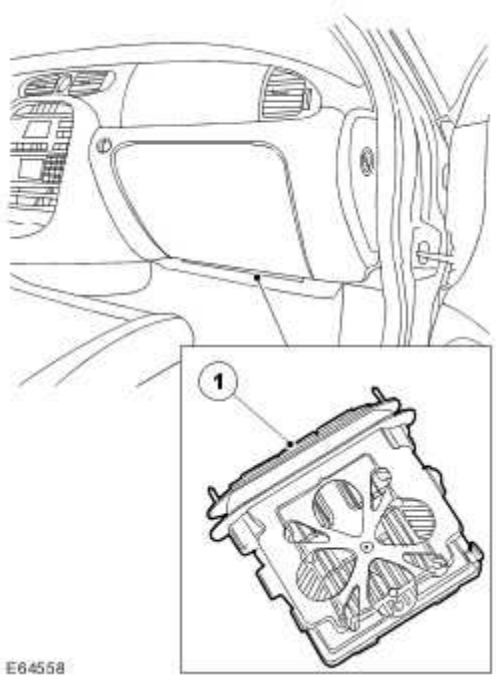

Item	Part Number	Description
1		Engine control module (ECM)

System Components

All engine functions are controlled by the Siemens common rail ECM.

ECM

The ECM is a high capacity processor which employs advanced software strategies that continuously control the engines operating parameters. It gathers information from a number of sensors and provides output to the actuators. The ECM also operates a port deactivation system, which closes or opens flaps in the inlet system to provide the optimum swirl and flow conditions throughout the operating range of the engine.

In addition, the ECM controls the actuation of the exhaust gas recirculation (EGR) system, the variable geometry turbochargers and the throttle, giving faster and more accurate response. A full torque-based strategy supports multiple injection control and integration with transmission and braking controllers. Transient torque and boost control enables vehicle performance to be optimised without compromising engine durability.

CKP Sensor

The CKP sensor signal is used to determine:

- the quantity of fuel to be injected
- the start of fuel delivery
- the quantity of exhaust gases to be recirculated

The CKP sensor is located at the rear of the crankshaft behind the flywheel.

The CKP sensor is a Hall effect sensor which scans a magnetic disc on the crankshaft. The air gap between the magnetic disc and the CKP is predetermined by the mounting of the sensor.

CMP Sensor

The CMP is located on the cylinder head behind the left-hand camshaft timing belt pulley.

The CMP sensor is Hall effect type and is required to identify cylinder number 1. (This is to synchronise engine to camshaft timing). The sensor scans a web incorporated into the left- hand camshaft timing belt pulley. The air gap between the magnetic ring and the CMP sensor is predetermined by the mounting of the sensor.

ECT Sensor

The ECT sensor is a NTC type sensor and is fitted into the top water outlet hose. The sensor has a bayonet type fitting.

KS

The KS registers increased vibrations which occur due to increased combustion noise. The ECM uses the signal as a correction factor for calculating the quantity and timing of the fuel to be injected during the injection phase.

There are two KS fitted to each bank of the cylinder block.

MAF Sensor

The MAF sensor is used to calculate the air mass. The MAF sensor is capable of detecting the mass air flow extremely precisely.

On engines with a variable turbocharger, the MAF sensor is used solely to control the EGR and not the fuel metering. The MAF sensor also incorporates the intake air temperature (IAT) sensor.

MAP Sensor

The MAP sensor is located in the top of the throttle valve.

The MAP sensor measures the charging pressure in the intake pipe and sends the ECM an analog voltage signal.

Charge Air Temperature Sensor

The charge air temperature sensor measures the intake air or the charge air temperature and supplies the ECM with an analog signal.

The charge air temperature sensor is located in the air intake plenum chamber.

Intake Air Temperature (IAT) Sensor

The IAT sensor measures the intake air temperature and supplies the ECM with an analog signal.

There are two IAT sensors incorporated into the MAF sensor, the Left-hand bank IAT sensor is not monitored by the ECM.

Fuel Rail Pressure (FRP) Sensor

The FRP sensor measures the instantaneous fuel pressure in the fuel rail very precisely within a very short time and supplies a voltage signal according to the pressure. The FRP is located on the the fuel diverter rail and must not be removed from the diverter rail. For additional information, refer to Fuel Charging and Controls (303-04C Fuel Charging and Controls - 2.7L Diesel)

Fuel Temperature Sensor

The fuel temperature sensor measures the temperature of the fuel in the low-pressure system. Air and excessive heat in the fuel system can have an adverse effect on the operation of the sensor.

The fuel temperature sensor is located in the low-pressure side return line behind the throttle body housing.

EOP Sensor

The engine oil pressure (EOP) sensor is located in the left-hand cylinder head. The EOP is connected to the instrument cluster and is not directly part of the electronic engine control system.

www.JagDocs.com

Electronic Engine Controls

Overview

2006MY sees the introduction of diesel to X350 and is accompanied by a diesel particulate filter (DPF) system to comply with strict stage four emissions requirements. Active engine mounts are also fitted and reduce transmitted vibration from the engine to the chassis when operating between 600 and 850rpm.

For more information on these systems,
Exhaust System and
Engine

The engine management system (EMS) on 2006MY diesel makes use of 7-digit diagnostic trouble codes (DTCs) rather than the familiar 5-digit.

Refer to the DTC index in this section for guidance on how to use these codes with the Jaguar approved diagnostic system or a scan tool.

Inspection and Verification

1 . Verify the customer concern.

2 . Visually inspect for obvious signs of mechanical or electrical damage.

Mechanical	Electrical
	Battery charge and condition
Engine oil level	Fuses
Cooling system coolant level	Wiring harness
Fuel level	Electrical connector(s)
Fuel contamination/grade/quality	5 volt sensor supply
Fuel leaks	Sensor(s)
Accessory drive belt	Engine control module (ECM)
	Transmission control module (TCM)

3 . If an obvious cause for an observed or reported concern is found, correct the cause (if possible)

before proceeding to the next step.

4 . If the cause is not visually evident use the Jaguar approved diagnostic system or a scan tool to retrieve the fault codes before proceeding to the DTC index, or the symptom chart if no DTCs are set.

Symptom Chart

Symptom	Possible source	Action
Engine cranks, but does not start	Inertia fuel shutoff (IFS) switch Low/contaminated fuel Air leakage Fuel system low pressure circuit fault Fuel pump module fault Blocked fuel filter Fuel volume control valve (FVCV) blocked/contaminated Fuel pressure control valve (FPCV) blocked/contaminated Fuel injection pump failure Crankshaft position (CKP) sensor ECM fault	Check that the inertia switch has not tripped. Check the fuel level/condition, Fuel Charging and Controls For air intake system, Intake Air Distribution and Filtering Check the fuel pump module operation, check the fuel system low pressure circuit for leaks/damage, Fuel Tank and Lines - 2.7L V6 - TdV6 Check the fuel filter, check the FVCV and FPCV, Fuel Charging and Controls Check the fuel injection pump, Fuel Injection Pump For CKP sensor cicuit tests, GO to Pinpoint Test G549822p14. Refer to the warranty policy and procedures manual if an ECM is suspect.
Difficult to start	Glow plug system fault (very cold conditions) Low/contaminated fuel Air leakage Fuel pump module fault Fuel system low pressure circuit fault Blocked fuel filter	Check the glow plug circuits, Glow Plug System Check the fuel level/condition, Fuel Charging and Controls For air intake system, Intake Air Distribution and Filtering Check the fuel pump module operation, check the fuel system low pressure circuit for leaks/damage, Fuel Tank and Lines - 2.7L V6 - TdV6 Check the fuel filter, check the FVCV and FPCV, Fuel Charging and Controls For EGR tests,

www.JagDocs.com

	Fuel volume control valve (FVCV) blocked/contaminated Fuel pressure control valve (FPCV) blocked/contaminated Exhaust gas recirculation (EGR) valve(s) fault	Engine Emission Control
Rough idle	Air ingress Low/contaminated fuel Fuel system low pressure circuit fault Blocked fuel filter Fuel volume control valve (FVCV) blocked/contaminated Fuel pressure control valve (FPCV) blocked/contaminated Exhaust gas recirculation (EGR) valve(s) fault	Check the air intake system, Intake Air Distribution and Filtering Check the fuel level/condition, Fuel Charging and Controls Check the fuel system low pressure circuit for leaks/damage, Fuel Tank and Lines - 2.7L V6 - TdV6 Check the fuel filter, check the FVCV and FPCV, Fuel Charging and Controls For EGR tests, Engine Emission Control
Lack of power when accelerating	Air intake system fault Diesel particulate fliter (DPF) blocked/restricted Restricted exhaust system Low fuel pressure Exhaust gas recirculation (EGR) valve(s) fault Variable geometry turbocharger (VGT) actuator fault	Check the air intake system, Intake Air Distribution and Filtering Check for a blocked DPF or catalytic converter, install new components as necessary. Diesel Particulate Filter (DPF) or Catalytic Converter - 2.7L V6 - TdV6 (17.50.05) Check the fuel pressure, Fuel Charging and Controls For EGR tests, Engine Emission Control For VGT actuator tests, Turbocharger
Engine stops/stalls	Low/contaminated fuel Air ingress Fuel system low pressure	Check the fuel level/condition, Fuel Charging and Controls Check the fuel system low pressure circuit for leaks/damage, Fuel Tank and Lines - 2.7L V6 - TdV6 Check for fuel system leaks, check the FVCV and

	circuit fault Fuel volume control valve (FVCV) blocked/contaminated Fuel pressure control valve (FPCV) blocked/contaminated High pressure fuel leak Exhaust gas recirculation (EGR) valve(s) fault	FPCV, Fuel Charging and Controls For EGR tests, Engine Emission Control
Engine judders	Low/contaminated fuel Air ingress Fuel system low pressure circuit fault Fuel metering valve blocked/contaminated Fuel volume control valve (FVCV) blocked/contaminated Fuel pressure control valve (FPCV) blocked/contaminated High pressure fuel leak Fuel injection pump fault	Check the fuel level/condition, Fuel Charging and Controls Check the fuel system low pressure circuit for leaks/damage, Fuel Tank and Lines - 2.7L V6 - TdV6 Check for fuel system leaks, check the FVCV and FPCV, Fuel Charging and Controls Check the fuel injection pump, Fuel Injection Pump
Excessive fuel consumption	Fuel system low pressure circuit fault Fuel volume control valve (FVCV) blocked/contaminated Fuel pressure control valve (FPCV) blocked/contaminated Fuel temperature sensor leak High pressure fuel leak	Check the fuel system low pressure circuit for leaks/damage, Fuel Tank and Lines - 2.7L V6 - TdV6 Check the FVCV and FPCV, Fuel Charging and Controls Check the fuel temperature sensor, fuel injection pump, etc for leaks, Fuel Charging and Controls Check for injector DTCs. For EGR tests, Engine Emission Control

www.JagDocs.com

	Injector(s) failure Exhaust gas recirculation (EGR) valve(s) fault	

DTC index

NOTE:

Generic scan tools may not read the codes listed, or may read only 5-digit codes. Match the 5 digits from the scan tool to the first 5 digits of the 7-digit code listed to identify the fault (the last 2 digits give extra information read by the manufacturer-approved diagnostic system).

DTC	Description	Possible causes	Action
P000100	Fuel volume control valve (FVCV) control circuit open	FVCV circuit: high resistance FVCV circuit: short circuit to ground FVCV failure ECM failure	For FVCV and circuit tests, Fuel Charging and Controls Refer to the warranty policy and procedures manual if an ECM is suspect.
P000200	Fuel volume control valve (FVCV) circuit range/performance	FVCV circuit: high resistance FVCV circuit: short circuit to ground FVCV circuit: short circuit to power FVCV failure ECM failure	For FVCV and circuit tests, Fuel Charging and Controls Refer to the warranty policy and procedures manual if an ECM is suspect.
P000300	Fuel volume control valve (FVCV) control circuit low	FVCV circuit: high resistance FVCV circuit: short circuit to ground FVCV failure ECM failure	For FVCV and circuit tests, Fuel Charging and Controls Refer to the warranty policy and procedures manual if an ECM is suspect.
P000400	Fuel volume control valve	FVCV circuit: short circuit	For FVCV and circuit tests,

	(FVCV) control circuit high	to power FVCV failure ECM failure	Fuel Charging and Controls Refer to the warranty policy and procedures manual if an ECM is suspect.
P004500	Variable geometry turbocharger (VGT) actuator open circuit (right hand bank)	VGT actuator circuit: high resistance VGT actuator circuit: short circuit to ground VGT actuator failure ECM failure	For right hand bank VGT actuator circuit tests, Turbocharger Refer to the warranty policy and procedures manual if an ECM is suspect.
P004700	Variable geometry turbocharger (VGT) actuator circuit low (right hand bank)	VGT actuator circuit: high resistance VGT actuator circuit: short circuit to ground VGT actuator failure ECM failure	For right hand bank VGT actuator circuit tests, Turbocharger Refer to the warranty policy and procedures manual if an ECM is suspect.
P004800	Variable geometry turbocharger (VGT) actuator circuit high (right hand bank)	VGT actuator circuit: short circuit to power VGT actuator failure ECM failure	For right hand bank VGT actuator circuit tests, Turbocharger Refer to the warranty policy and procedures manual if an ECM is suspect.
P004A00	Variable geometry turbocharger (VGT) actuator open circuit (left hand bank)	VGT actuator circuit: high resistance VGT actuator circuit: short circuit to ground VGT actuator failure ECM failure	For left hand bank VGT actuator circuit tests, Turbocharger Refer to the warranty policy and procedures manual if an ECM is suspect.
P004C00	Variable geometry turbocharger (VGT) actuator circuit low (left hand bank)	VGT actuator circuit: high resistance VGT actuator circuit: short circuit to	For left hand bank VGT actuator circuit tests, Turbocharger Refer to the warranty policy and procedures manual if an ECM is

www.JagDocs.com

		ground VGT actuator failure ECM failure	suspect.
P004D00	Variable geometry turbocharger (VGT) actuator circuit high (left hand bank)	VGT actuator circuit: short circuit to power VGT actuator failure ECM failure	For left hand bank VGT actuator circuit tests, Turbocharger Refer to the warranty policy and procedures manual if an ECM is suspect.
P006900	Manifold absolute pressure (MAP) sensor correlation	Air leakage in intake path between turbocharger and engine MAP sensor circuit: high resistance MAP sensor circuit: short circuit to ground MAP sensor circuit: short circuit to power MAP sensor failure ECM failure	For MAP sensor tests, GO to Pinpoint Test G549822p12. Refer to the warranty policy and procedures manual if an ECM is suspect.
P006A00	Manifold absolute pressure (MAP) - mass or volume air flow correlation	Air leakage in intake path between turbocharger and engine MAP sensor circuit: high resistance MAP sensor circuit: short circuit to ground MAP sensor circuit: short circuit to power MAP sensor failure ECM failure	For air intake system information, Intake Air Distribution and Filtering For MAP sensor tests, GO to Pinpoint Test G549822p12. Refer to the warranty policy and procedures manual if an ECM is suspect.
P008700	Fuel rail/system pressure too low	Fuel rail pressure (FRP) sensor disconnected	For FRP sensor circuit tests, Fuel Charging and Controls

		FRP sensor to ECM sensing circuit: short circuit to ground FRP sensor supply circuit: high resistance FRP sensor failure Fuel line leak Restricted fuel line Fuel pump module circuit: high resistance Fuel pump module circuit: short circuit to ground Fuel pump module failure	Check the fuel lines, check the fuel pressure and check the fuel pump module circuits, Fuel Tank and Lines - 2.7L V6 - TdV6
P008800	Fuel rail/system pressure too high	Fuel rail pressure (FRP) sensor to ECM wiring (supply/sense): short circuit to each other FRP sensor to ECM sense circuit: short circuit to power FRP sensor failure Fuel pressure control valve (FPCV) fault Fuel pump module circuit: short circuit to power Fuel pump module failure	For FRP sensor circuit tests and FPCV tests, Fuel Charging and Controls For fuel pump module circuit tests, Fuel Tank and Lines - 2.7L V6 - TdV6
P009000	Fuel pressure control valve (FPCV) control circuit open	FPCV circuit: high resistance FPCV circuit: short circuit to ground	For FPCV tests, Fuel Charging and Controls Refer to the warranty policy and procedures manual if an ECM is suspect.

www.JagDocs.com

		FPCV failure ECM failure	
P009100	Fuel pressure control valve (FPCV) control circuit low	FPCV circuit: high resistance FPCV circuit: short circuit to ground FPCV failure ECM failure	For FPCV tests, Fuel Charging and Controls Refer to the warranty policy and procedures manual if an ECM is suspect.
P009200	Fuel pressure control valve (FPCV) control circuit high	FPCV circuit: short circuit to power FPCV failure ECM failure	For FPCV tests, Fuel Charging and Controls Refer to the warranty policy and procedures manual if an ECM is suspect.
P009700	Air charge temperature (ACT) sensor circuit low input	ACT sensor circuit: high resistance ACT sensor circuit: short circuit to ground ACT sensor failure ECM failure	For ACT sensor circuit tests, GO to Pinpoint Test G549822p6. Refer to the warranty policy and procedures manual if an ECM is suspect.
P009800	Air charge temperature (ACT) sensor circuit high input	ACT sensor circuit: short circuit to power ACT sensor failure ECM failure	For ACT sensor circuit tests, GO to Pinpoint Test G549822p6. Refer to the warranty policy and procedures manual if an ECM is suspect.
P009900	Air charge temperature (ACT) sensor circuit intermittent/erratic	ACT sensor circuit: high resistance ACT sensor circuit: short circuit to ground ACT sensor circuit: short circuit to power ACT sensor failure ECM failure	For ACT sensor circuit tests, GO to Pinpoint Test G549822p6. Refer to the warranty policy and procedures manual if an ECM is suspect.
P010000	Mass air flow (MAF) sensor range/performance (right	MAF sensor circuit: high resistance	For right hand bank MAF sensor circuit tests, GO to

	hand bank)	MAF sensor circuit: short circuit to ground MAF sensor circuit: short circuit to power MAF sensor failure ECM failure	Pinpoint Test G549822p10. Refer to the warranty policy and procedures manual if an ECM is suspect.
P010200	Mass air flow (MAF) too low (right hand bank)	Air leakage MAF sensor circuit: high resistance MAF sensor circuit: short circuit to ground MAF sensor failure Exhaust gas recirculation (EGR) valve stuck open/closed VGT actuator fault ECM failure	For air intake system information, Intake Air Distribution and Filtering For right hand bank MAF sensor circuit tests, GO to Pinpoint Test G549822p10. For EGR valve tests, Engine Emission Control Check for DTCs indicating VGT actuator, EGR, cylinder balance or ECU piezo injector drive faults. Refer to the DTC index for pinpoint tests for DTC set. Refer to the warranty policy and procedures manual if an ECM is suspect.
P010300	Mass air flow (MAF) too high (right hand bank)	Air leakage MAF sensor circuit: short circuit to power MAF sensor failure VGT actuator fault ECM failure	For air intake system information, Intake Air Distribution and Filtering For right hand bank MAF sensor circuit tests, GO to Pinpoint Test G549822p10. Check for DTCs indicating VGT actuator, EGR, cylinder balance, fuel system or ECU piezo injector drive faults. Refer to the DTC index for pinpoint tests for DTC set. Refer to the warranty policy and procedures manual if an ECM is suspect.
P010400	Mass air flow (MAF) sensor circuit intermittent/erratic (right hand bank)	Air leakage MAF sensor circuit: high	For air intake system information, Intake Air Distribution and

www.JagDocs.com

		resistance MAF sensor circuit: short circuit to ground MAF sensor circuit: short circuit to power MAF sensor failure ECM failure	Filtering For right hand bank MAF sensor circuit tests, GO to Pinpoint Test G549822p10. Refer to the warranty policy and procedures manual if an ECM is suspect.
P010600	Manifold absolute pressure (MAP) sensor range/performance	MAP sensor circuit: high resistance MAP sensor circuit: short circuit to ground MAP sensor circuit: short circuit to power MAP sensor failure ECM failure	For MAP sensor tests, GO to Pinpoint Test G549822p12. Refer to the warranty policy and procedures manual if an ECM is suspect.
P010700	Manifold absolute pressure (MAP) sensor circuit low input	MAP sensor circuit: high resistance MAP sensor circuit: short circuit to ground MAP sensor failure ECM failure	For MAP sensor tests, GO to Pinpoint Test G549822p12. Refer to the warranty policy and procedures manual if an ECM is suspect.
P010800	Manifold absolute pressure (MAP) sensor circuit high input	MAP sensor circuit: short circuit to power MAP sensor failure ECM failure	For MAP sensor tests, GO to Pinpoint Test G549822p12. Refer to the warranty policy and procedures manual if an ECM is suspect.
P010900	Manifold absolute pressure (MAP) sensor circuit intermittent	MAP sensor circuit: high resistance MAP sensor circuit: short circuit to ground MAP sensor circuit: short circuit to power MAP sensor failure	For MAP sensor tests, GO to Pinpoint Test G549822p12. Refer to the warranty policy and procedures manual if an ECM is suspect.

		ECM failure	
P010A00	Mass air flow (MAF) sensor range/performance (left hand bank)	MAF sensor circuit: high resistance MAF sensor circuit: short circuit to ground MAF sensor circuit: short circuit to power MAF sensor failure ECM failure	For left hand bank MAF sensor circuit tests, GO to Pinpoint Test G549822p11. Refer to the warranty policy and procedures manual if an ECM is suspect.
P010C00	Mass air flow (MAF) too low (left hand bank)	Air leakage MAF sensor circuit: high resistance MAF sensor circuit: short circuit to ground MAF sensor failure Exhaust gas recirculation (EGR) valve stuck open/closed VGT actuator fault ECM failure	For air intake system information, Intake Air Distribution and Filtering For left hand bank MAF sensor circuit tests, GO to Pinpoint Test G549822p11. For EGR valve tests, Engine Emission Control Check for DTCs indicating VGT actuator, EGR, cylinder balance or ECU piezo injector drive faults. Refer to the DTC index for pinpoint tests for DTC set. Refer to the warranty policy and procedures manual if an ECM is suspect.
P010D00	Mass air flow (MAF) too high (left hand bank)	Air leakage MAF sensor circuit: short circuit to power MAF sensor failure VGT actuator fault ECM failure	For air intake system information, Intake Air Distribution and Filtering For left hand bank MAF sensor circuit tests, GO to Pinpoint Test G549822p11. Check for DTCs indicating VGT actuator, EGR, cylinder balance, fuel system or ECU piezo injector drive faults. Refer to the DTC index for pinpoint tests for DTC set. Refer to the warranty policy and procedures manual if an ECM is suspect.

www.JagDocs.com

P010E00	Mass air flow (MAF) sensor intermittent/erratic (left hand bank)	Air leakage MAF sensor circuit: high resistance MAF sensor circuit: short circuit to ground MAF sensor circuit: short circuit to power MAF sensor failure ECM failure	For air intake system information, Intake Air Distribution and Filtering For left hand bank MAF sensor circuit tests, GO to Pinpoint Test G549822p11. Refer to the warranty policy and procedures manual if an ECM is suspect.
P010F00	Mass air flow (MAF) sensor left and right hand bank correlation	Air leakage (post turbocharger) MAF sensor(s) circuit: high resistance MAF sensor(s) circuit: short circuit to ground MAF sensor(s) circuit: short circuit to power MAF sensor failure VGT actuator(s) circuit: high resistance VGT actuator(s) circuit: short circuit to ground VGT actuator(s) circuit: short circuit to power VGT actuator failure ECM failure	For air intake system information, Intake Air Distribution and Filtering For MAF sensor circuit tests, GO to Pinpoint Test G549822p10. and GO to Pinpoint Test G549822p11. For VGT actuator circuit tests, Turbocharger Refer to the warranty policy and procedures manual if an ECM is suspect.
P011200	Intake air temperature (IAT) sensor circuit low input	IAT sensor circuit: high resistance IAT sensor circuit: short circuit to ground	For IAT sensor circuit tests, GO to Pinpoint Test G549822p9. Refer to the warranty policy and procedures manual if an

		IAT sensor failure ECM failure	ECM is suspect.
P011300	Intake air temperature (IAT) sensor circuit high input	IAT sensor circuit: short circuit to power IAT sensor failure ECM failure	For IAT sensor circuit tests, GO to Pinpoint Test G549822p9. Refer to the warranty policy and procedures manual if an ECM is suspect.
P011400	Intake air temperature (IAT) sensor intermittent/erratic	IAT sensor circuit: high resistance IAT sensor circuit: short circuit to ground IAT sensor circuit: short circuit to power IAT sensor failure ECM failure	For IAT sensor circuit tests, GO to Pinpoint Test G549822p9. Refer to the warranty policy and procedures manual if an ECM is suspect.
P011600	Engine coolant temperature (ECT) sensor circuit range/performance	ECT sensor circuit: high resistance ECT sensor circuit: short circuit to ground ECT sensor circuit: short circuit to power ECT sensor failure ECM failure	For ECT sensor and circuit tests, GO to Pinpoint Test G549822p1. Refer to the warranty policy and procedures manual if an ECM is suspect.
P011700	Engine coolant temperature (ECT) sensor circuit low input	ECT sensor circuit: high resistance ECT sensor circuit: short circuit to ground ECT sensor failure ECM failure	For ECT sensor and circuit tests, GO to Pinpoint Test G549822p1. Refer to the warranty policy and procedures manual if an ECM is suspect.
P011800	Engine coolant temperature (ECT) sensor circuit high input	ECT sensor circuit: short circuit to power ECT sensor failure ECM failure	For ECT sensor and circuit tests, GO to Pinpoint Test G549822p1. Refer to the warranty policy and procedures manual if an

www.JagDocs.com

			ECM is suspect.
P011900	Engine coolant temperature (ECT) sensor circuit intermittent/erratic	ECT sensor circuit: high resistance ECT sensor circuit: short circuit to ground ECT sensor circuit: short circuit to power ECT sensor failure ECM failure	For ECT sensor and circuit tests, GO to Pinpoint Test G549822p1. Refer to the warranty policy and procedures manual if an ECM is suspect.
P018100	Fuel temperature sensor circuit range/performance	Fuel temperature sensor circuit: high resistance Fuel temperature sensor circuit: short circuit to ground Fuel temperature sensor circuit: short circuit to power Fuel temperature sensor failure ECM failure	For fuel temperature sensor and circuit tests, GO to Pinpoint Test G549822p2. Refer to the warranty policy and procedures manual if an ECM is suspect.
P018200	Fuel temperature sensor circuit low input	Fuel temperature sensor circuit: high resistance Fuel temperature sensor circuit: short circuit to ground Fuel temperature sensor failure ECM failure	For fuel temperature sensor and circuit tests, GO to Pinpoint Test G549822p2. Refer to the warranty policy and procedures manual if an ECM is suspect.
P018300	Fuel temperature sensor circuit high input	Fuel temperature sensor circuit: short circuit to power Fuel temperature sensor failure	For fuel temperature sensor and circuit tests, GO to Pinpoint Test G549822p2. Refer to the warranty policy and procedures manual if an ECM is suspect.

		ECM failure	
P018400	Fuel temperature sensor circuit intermittent	Fuel temperature sensor circuit: high resistance Fuel temperature sensor circuit: short circuit to ground Fuel temperature sensor circuit: short circuit to power Fuel temperature sensor failure ECM failure	For fuel temperature sensor and circuit tests, GO to Pinpoint Test G549822p2. Refer to the warranty policy and procedures manual if an ECM is suspect.
P019100	Fuel rail pressure (FRP) sensor circuit range/performance	FRP sensor circuit: high resistance FRP sensor circuit: short circuit to ground FRP sensor circuit: short circuit to power FRP sensor failure ECM failure	For FRP sensor and circuit tests, Fuel Charging and Controls Refer to the warranty policy and procedures manual if an ECM is suspect.
P019200	Fuel rail pressure (FRP) sensor circuit low input	FRP sensor circuit: high resistance FRP sensor circuit: short circuit to ground FRP sensor failure ECM failure	For FRP sensor and circuit tests, Fuel Charging and Controls Refer to the warranty policy and procedures manual if an ECM is suspect.
P019300	Fuel rail pressure (FRP) sensor circuit high input	FRP sensor circuit: short circuit to power FRP sensor failure ECM failure	For FRP sensor and circuit tests, Fuel Charging and Controls Refer to the warranty policy and procedures manual if an ECM is suspect.
P019400	Fuel rail pressure (FRP) sensor circuit	FRP sensor circuit: high resistance	For FRP sensor and circuit tests, Fuel Charging and Controls

www.JagDocs.com

	intermittent/erratic	FRP sensor circuit: short circuit to ground FRP sensor circuit: short circuit to power FRP sensor failure ECM failure	Refer to the warranty policy and procedures manual if an ECM is suspect.
P019500	Engine oil temperature (EOT) sensor circuit, no synchronization of PWM signal/PWM signal time out	EOT sensor circuit: high resistance EOT sensor circuit: short circuit to ground EOT sensor circuit: short circuit to power EOT sensor failure ECM failure	For EOT sensor circuit tests, GO to Pinpoint Test G549822p3. Refer to the warranty policy and procedures manual if an ECM is suspect.
P019600	Engine oil temperature (EOT) sensor circuit range/performance	EOT sensor circuit: high resistance EOT sensor circuit: short circuit to ground EOT sensor circuit: short circuit to power EOT sensor failure ECM failure	For EOT sensor circuit tests, GO to Pinpoint Test G549822p3. Refer to the warranty policy and procedures manual if an ECM is suspect.
P019700	Engine oil temperature (EOT) sensor circuit low input	EOT sensor circuit: high resistance EOT sensor circuit: short circuit to ground EOT sensor failure ECM failure	For EOT sensor circuit tests, GO to Pinpoint Test G549822p3. Refer to the warranty policy and procedures manual if an ECM is suspect.
P019800	Engine oil temperature (EOT) sensor circuit high input	EOT sensor circuit: short circuit to power EOT sensor failure ECM failure	For EOT sensor circuit tests, GO to Pinpoint Test G549822p3. Refer to the warranty policy and procedures manual if an ECM is suspect.

P019900	Engine oil temperature (EOT) sensor circuit intermittent	EOT sensor circuit: high resistance EOT sensor circuit: short circuit to ground EOT sensor circuit: short circuit to power EOT sensor failure ECM failure	For EOT sensor circuit tests, GO to Pinpoint Test G549822p3. Refer to the warranty policy and procedures manual if an ECM is suspect.
P020100	Fuel injector open circuit, cylinder 1	Fuel injector circuit: high resistance Fuel injector circuit: short circuit to ground Fuel injector failure ECM failure	For fuel injector circuit tests, Fuel Charging and Controls Refer to the warranty policy and procedures manual if an ECM is suspect.
P020200	Fuel injector open circuit, cylinder 2	Fuel injector circuit: high resistance Fuel injector circuit: short circuit to ground Fuel injector failure ECM failure	For fuel injector circuit tests, Fuel Charging and Controls Refer to the warranty policy and procedures manual if an ECM is suspect.
P020300	Fuel injector open circuit, cylinder 3	Fuel injector circuit: high resistance Fuel injector circuit: short circuit to ground Fuel injector failure ECM failure	For fuel injector circuit tests, Fuel Charging and Controls Refer to the warranty policy and procedures manual if an ECM is suspect.
P020400	Fuel injector open circuit, cylinder 4	Fuel injector circuit: high resistance Fuel injector circuit: short circuit to ground	For fuel injector circuit tests, Fuel Charging and Controls Refer to the warranty policy and procedures manual if an ECM is suspect.

www.JagDocs.com

		Fuel injector failure ECM failure	
P020500	Fuel injector open circuit, cylinder 5	Fuel injector circuit: high resistance Fuel injector circuit: short circuit to ground Fuel injector failure ECM failure	For fuel injector circuit tests, Fuel Charging and Controls Refer to the warranty policy and procedures manual if an ECM is suspect.
P020600	Fuel injector open circuit, cylinder 6	Fuel injector circuit: high resistance Fuel injector circuit: short circuit to ground Fuel injector failure ECM failure	For fuel injector circuit tests, Fuel Charging and Controls Refer to the warranty policy and procedures manual if an ECM is suspect.
P020A00	Fuel injection timing, cylinder 1	Fuel injector circuit: high resistance Fuel injector circuit: short circuit to ground Fuel injector circuit: short circuit to power Fuel injector failure ECM failure	For fuel injector circuit tests, Fuel Charging and Controls Refer to the warranty policy and procedures manual if an ECM is suspect.
P020B00	Fuel injection timing, cylinder 2	Fuel injector circuit: high resistance Fuel injector circuit: short circuit to ground Fuel injector circuit: short circuit to power	For fuel injector circuit tests, Fuel Charging and Controls Refer to the warranty policy and procedures manual if an ECM is suspect.

		Fuel injector failure ECM failure	
P020C00	Fuel injection timing, cylinder 3	Fuel injector circuit: high resistance Fuel injector circuit: short circuit to ground Fuel injector circuit: short circuit to power Fuel injector failure ECM failure	For fuel injector circuit tests, Fuel Charging and Controls Refer to the warranty policy and procedures manual if an ECM is suspect.
P020D00	Fuel injection timing, cylinder 4	Fuel injector circuit: high resistance Fuel injector circuit: short circuit to ground Fuel injector circuit: short circuit to power Fuel injector failure ECM failure	For fuel injector circuit tests, Fuel Charging and Controls Refer to the warranty policy and procedures manual if an ECM is suspect.
P020E00	Fuel injection timing, cylinder 5	Fuel injector circuit: high resistance Fuel injector circuit: short circuit to ground Fuel injector circuit: short circuit to power Fuel injector failure ECM failure	For fuel injector circuit tests, Fuel Charging and Controls Refer to the warranty policy and procedures manual if an ECM is suspect.
P020F00	Fuel injection timing, cylinder 6	Fuel injector circuit: high resistance Fuel injector circuit:	For fuel injector circuit tests, Fuel Charging and Controls Refer to the warranty policy and procedures manual if an

www.JagDocs.com

		short circuit to ground Fuel injector circuit: short circuit to power Fuel injector failure ECM failure	ECM is suspect.
P021900	Crankshaft/Camshaft position (CKP/CMP) sensor, engine overspeed	CKP sensor circuit: high resistance CKP sensor circuit: short circuit to ground CKP sensor circuit: short circuit to power CMP sensor circuit: high resistance CMP sensor circuit: short circuit to ground CMP sensor circuit: short circuit to power CKP sensor failure CMP sensor failure ECM failure	For CKP and CMP sensor circuit tests, GO to Pinpoint Test G549822p16. Refer to the warranty policy and procedures manual if an ECM is suspect.
P023400	Turbocharger overboost condition, manifold absolute pressure (MAP) sensor control deviation	Air leakage MAP sensor circuit: high resistance MAP sensor circuit: short circuit to ground MAP sensor circuit: short circuit to power MAP sensor failure Air leakage Exhaust gas recirculation	For air intake system information, Intake Air Distribution and Filtering For MAP sensor circuit tests, GO to Pinpoint Test G549822p12. For EGR valve tests, Engine Emission Control Check for DTCs indicating EGR or VGT actuator faults. Refer to the DTC index for pinpoint tests for DTC set. Refer to the warranty policy and procedures manual if an ECM is suspect.

		(EGR) fault VGT actuator fault ECM failure	
P023600	Variable geometry turbocharger (VGT) actuator circuit range/performance (right hand bank)	VGT actuator circuit: high resistance VGT actuator circuit: short circuit to ground VGT actuator circuit: short circuit to power VGT actuator failure ECM failure	For right hand bank VGT actuator circuit tests, Turbocharger Refer to the warranty policy and procedures manual if an ECM is suspect.
P023700	Variable geometry turbocharger (VGT) actuator reached minimum threshold (right hand bank)	VGT actuator circuit: high resistance VGT actuator circuit: short circuit to ground VGT actuator failure ECM failure	For right hand bank VGT actuator circuit tests, Turbocharger Refer to the warranty policy and procedures manual if an ECM is suspect.
P023800	Variable geometry turbocharger (VGT) actuator reached maximum threshold (right hand bank)	VGT actuator circuit: short circuit to power VGT actuator failure ECM failure	For right hand bank VGT actuator circuit tests, Turbocharger Refer to the warranty policy and procedures manual if an ECM is suspect.
P024000	Variable geometry turbocharger (VGT) actuator circuit range/performance (left hand bank)	VGT actuator circuit: high resistance VGT actuator circuit: short circuit to ground VGT actuator circuit: short circuit to power VGT actuator failure	For left hand bank VGT actuator circuit tests, Turbocharger Refer to the warranty policy and procedures manual if an ECM is suspect.

www.JagDocs.com

		ECM failure	
P024100	Variable geometry turbocharger (VGT) actuator reached minimum threshold (left hand bank)	VGT actuator circuit: high resistance VGT actuator circuit: short circuit to ground VGT actuator failure ECM failure	For left hand bank VGT actuator circuit tests, Turbocharger Refer to the warranty policy and procedures manual if an ECM is suspect.
P024200	Variable geometry turbocharger (VGT) actuator reached maximum threshold (left hand bank)	VGT actuator circuit: short circuit to power VGT actuator failure ECM failure	For left hand bank VGT actuator circuit tests, Turbocharger Refer to the warranty policy and procedures manual if an ECM is suspect.
P024B00	Diesel particulate filter (DPF) temperature sensor - catalyst downstream circuit range/performance (right hand bank)	Temperature sensor - catalyst downstream circuit: high resistance Temperature sensor - catalyst downstream circuit: short circuit to ground Temperature sensor - catalyst downstream circuit: short circuit to power Temperature sensor - catalyst downstream failure	For temperature sensor - catalyst downstream circuit tests, Exhaust System
P029900	Turbocharger underboost condition, manifold absolute pressure (MAP) sensor control deviation	Air leakage MAP sensor circuit: high resistance MAP sensor circuit: short circuit to ground MAP sensor circuit: short circuit to power MAP sensor failure	For air intake system information, Intake Air Distribution and Filtering For MAP sensor circuit tests, GO to Pinpoint Test G549822p12. For EGR valve tests, Engine Emission Control Check for DTCs indicating EGR or VGT actuator faults. Refer to the DTC index for pinpoint tests for

		Exhaust gas recirculation (EGR) fault VGT fault ECM failure	DTC set. Refer to the warranty policy and procedures manual if an ECM is suspect.
P029A00	Fuel trim maximum limit reached, cylinder 1	Fuel injector circuit: high resistance Fuel injector circuit: short circuit to ground Fuel injector circuit: short circuit to power Fuel injector leaking Fuel injector failure ECM failure	For fuel injector tests, Fuel Charging and Controls Refer to the warranty policy and procedures manual if an ECM is suspect.
P029B00	Fuel trim minimum limit reached, cylinder 1	Fuel injector circuit: high resistance Fuel injector circuit: short circuit to ground Fuel injector circuit: short circuit to power Fuel injector leaking Fuel injector failure ECM failure	For fuel injector tests, Fuel Charging and Controls Refer to the warranty policy and procedures manual if an ECM is suspect.
P029E00	Fuel trim maximum limit reached, cylinder 2	Fuel injector circuit: high resistance Fuel injector circuit: short circuit to ground Fuel injector circuit: short circuit to power	For fuel injector tests, Fuel Charging and Controls Refer to the warranty policy and procedures manual if an ECM is suspect.

www.JagDocs.com

		Fuel injector leaking Fuel injector failure ECM failure	
P029F00	Fuel trim minimum limit reached, cylinder 2	Fuel injector circuit: high resistance Fuel injector circuit: short circuit to ground Fuel injector circuit: short circuit to power Fuel injector leaking Fuel injector failure ECM failure	For fuel injector tests, Fuel Charging and Controls Refer to the warranty policy and procedures manual if an ECM is suspect.
P02A200	Fuel trim maximum limit reached, cylinder 3	Fuel injector circuit: high resistance Fuel injector circuit: short circuit to ground Fuel injector circuit: short circuit to power Fuel injector leaking Fuel injector failure ECM failure	For fuel injector tests, Fuel Charging and Controls Refer to the warranty policy and procedures manual if an ECM is suspect.
P02A300	Fuel trim minimum limit reached, cylinder 3	Fuel injector circuit: high resistance Fuel injector circuit: short circuit to ground Fuel injector circuit: short circuit to power Fuel injector leaking	For fuel injector tests, Fuel Charging and Controls Refer to the warranty policy and procedures manual if an ECM is suspect.

		Fuel injector failure ECM failure	
P02A600	Fuel trim maximum limit reached, cylinder 4	Fuel injector circuit: high resistance Fuel injector circuit: short circuit to ground Fuel injector circuit: short circuit to power Fuel injector leaking Fuel injector failure ECM failure	For fuel injector tests, Fuel Charging and Controls Refer to the warranty policy and procedures manual if an ECM is suspect.
P02A700	Fuel trim minimum limit reached, cylinder 4	Fuel injector circuit: high resistance Fuel injector circuit: short circuit to ground Fuel injector circuit: short circuit to power Fuel injector leaking Fuel injector failure ECM failure	For fuel injector tests, Fuel Charging and Controls Refer to the warranty policy and procedures manual if an ECM is suspect.
P02AA00	Fuel trim maximum limit reached, cylinder 5	Fuel injector circuit: high resistance Fuel injector circuit: short circuit to ground Fuel injector circuit: short circuit to power Fuel injector leaking Fuel injector failure	For fuel injector tests, Fuel Charging and Controls Refer to the warranty policy and procedures manual if an ECM is suspect.

www.JagDocs.com

		ECM failure	
P02AB00	Fuel trim minimum limit reached, cylinder 5	Fuel injector circuit: high resistance Fuel injector circuit: short circuit to ground Fuel injector circuit: short circuit to power Fuel injector leaking Fuel injector failure ECM failure	For fuel injector tests, Fuel Charging and Controls Refer to the warranty policy and procedures manual if an ECM is suspect.
P02AE00	Fuel trim maximum limit reached, cylinder 6	Fuel injector circuit: high resistance Fuel injector circuit: short circuit to ground Fuel injector circuit: short circuit to power Fuel injector leaking Fuel injector failure ECM failure	For fuel injector tests, Fuel Charging and Controls Refer to the warranty policy and procedures manual if an ECM is suspect.
P02AF00	Fuel trim minimum limit reached, cylinder 6	Fuel injector circuit: high resistance Fuel injector circuit: short circuit to ground Fuel injector circuit: short circuit to power Fuel injector leaking Fuel injector failure ECM failure	For fuel injector tests, Fuel Charging and Controls Refer to the warranty policy and procedures manual if an ECM is suspect.

P032600	Knock sensor (KS) circuit range/performance (right hand bank)	KS circuit: high resistance KS circuit: short circuit to ground KS circuit: short circuit to power KS failure ECM failure	For right hand bank KS circuit tests, GO to Pinpoint Test G549822p7. Refer to the warranty policy and procedures manual if an ECM is suspect.
P033100	Knock sensor (KS) circuit range/performance (left hand bank)	KS circuit: high resistance KS circuit: short circuit to ground KS circuit: short circuit to power KS failure ECM failure	For left hand bank KS circuit tests, GO to Pinpoint Test G549822p8. Refer to the warranty policy and procedures manual if an ECM is suspect.
P033500	Crankshaft position (CKP) sensor synchronisation failure	CKP sensor gap incorrect/ foreign matter on sensor face /damaged teeth on rotor CKP sensor circuit: high resistance CKP sensor circuit: short circuit to ground CKP sensor circuit: short circuit to power CKP sensor failure ECM failure	For CKP sensor tests, GO to Pinpoint Test G549822p14. Refer to the warranty policy and procedures manual if an ECM is suspect.
P033600	Crankshaft position (CKP) sensor circuit range/performance	CKP sensor gap incorrect/ foreign matter on sensor face /damaged teeth on rotor CKP sensor circuit: high resistance CKP sensor circuit: short	For CKP sensor tests, GO to Pinpoint Test G549822p14. Refer to the warranty policy and procedures manual if an ECM is suspect.

www.JagDocs.com

		circuit to ground CKP sensor circuit: short circuit to power CKP sensor failure ECM failure	
P033700	Crankshaft position (CKP) sensor circuit low input	CKP sensor gap incorrect/ foreign matter on sensor face /damaged teeth on rotor CKP sensor circuit: high resistance CKP sensor circuit: short circuit to ground CKP sensor failure ECM failure	For CKP sensor tests, GO to Pinpoint Test G549822p14. Refer to the warranty policy and procedures manual if an ECM is suspect.
P034100	Camshaft position (CMP) sensor circuit range/performance	CMP sensor gap incorrect/ foreign matter on sensor face /damaged rotor CMP sensor circuit: high resistance CMP sensor circuit: short circuit to ground CMP sensor circuit: short circuit to power CMP sensor failure ECM failure	For CMP sensor tests, GO to Pinpoint Test G549822p15. Refer to the warranty policy and procedures manual if an ECM is suspect.
P034200	Camshaft position (CMP) sensor circuit low input	CMP sensor gap incorrect/ foreign matter on sensor face /damaged rotor CMP sensor circuit: high resistance CMP sensor circuit: short	For CMP sensor tests, GO to Pinpoint Test G549822p15. Refer to the warranty policy and procedures manual if an ECM is suspect.

		circuit to ground CMP sensor failure ECM failure	
P038000	Glow plug control module on, glow plugs not powered	Glow plug control circuit: high resistance Glow plug control circuit: short circuit to ground Glow plug monitor circuit: high resistance Glow plug monitor circuit: short circuit to ground Glow plug failure Glow plug control module failure	For glow plug system circuit tests, Glow Plug System
P038200	Glow plug control module off, glow plugs powered	Glow plug control circuit: short circuit to power Glow plug monitor circuit: short circuit to power Glow plug failure Glow plug control module failure	For glow plug system circuit tests, Glow Plug System
P038300	Glow plug control module - control circuit low	Glow plug control module, control circuit: high resistance Glow plug control module, control circuit: short circuit to ground Glow plug control module failure	For glow plug system circuit tests, Glow Plug System

www.JagDocs.com

P038400	Glow plug control module - control circuit high	Glow plug control module, control circuit: short circuit to power Glow plug control module failure	For glow plug system circuit tests, Glow Plug System
P040100	Exhaust gas recirculation (EGR) insufficient flow detected	EGR valve incorrectly fitted or loose EGR pipe blocked EGR valve stuck closed, blocked EGR coolers blocked EGR valve failure MAF sensor fault	For EGR system, Engine Emission Control For MAF sensor circuit tests, GO to Pinpoint Test G549822p10. and GO to Pinpoint Test G549822p11.
P040200	Exhaust gas recirculation (EGR) excessive flow detected	EGR valve incorrectly fitted or loose EGR pipe blocked EGR valve stuck closed, blocked EGR coolers blocked EGR valve failure MAF sensor fault	For EGR system, Engine Emission Control For MAF sensor circuit tests, GO to Pinpoint Test G549822p10. and GO to Pinpoint Test G549822p11.
P040300	Exhaust gas recirculation (EGR) valve H-bridges (right hand bank)	EGR valve circuit(s): high resistance EGR valve circuit(s): short circuit to ground EGR valve circuit(s): short circuit to power EGR valve failure ECM failure	For right hand bank EGR valve and circuit tests, Engine Emission Control Refer to the warranty policy and procedure manual if an ECM is suspect.
P040400	Exhaust gas recirculation (EGR) control circuit	IAT sensor fault	For IAT sensor circuit tests, GO to Pinpoint Test G549822p9.

	range/performance (right hand bank)	MAP sensor fault MAF sensor fault EGR valve stuck closed, blocked EGR valve circuit(s): high resistance EGR valve circuit(s): short circuit to ground EGR valve circuit(s): short circuit to power EGR valve failure	For MAP sensor circuit tests, GO to Pinpoint Test G549822p12. For MAF sensor circuit tests, GO to Pinpoint Test G549822p10. and GO to Pinpoint Test G549822p11. For right hand bank EGR valve and circuit tests, Engine Emission Control
P040500	Exhaust gas recirculation (EGR) valve circuit low (right hand bank)	EGR valve circuit(s): high resistance EGR valve circuit(s): short circuit to ground EGR valve failure	For right hand bank EGR valve and circuit tests, Engine Emission Control
P040600	Exhaust gas recirculation (EGR) valve circuit high (right hand bank)	EGR valve circuit(s): short circuit to power EGR valve failure	For right hand bank EGR valve and circuit tests, Engine Emission Control
P040700	Exhaust gas recirculation (EGR) - intake air shut off throttle circuit low	Intake air shut off throttle circuit(s): high resistance Intake air shut off throttle circuit(s): short circuit to ground Intake air shut off throttle failure	For intake air shut off throttle and circuit tests, Engine Emission Control
P040800	Exhaust gas recirculation (EGR) - intake air shut off throttle circuit high	Intake air shut off throttle circuit(s): short circuit to power Intake air shut off	For intake air shut off throttle and circuit tests, Engine Emission Control

www.JagDocs.com

		throttle failure	
P042600	Diesel particulate filter (DPF) temperature sensor - catalyst upstream circuit range/performance (right hand bank)	Temperature sensor - catalyst upstream circuit: high resistance Temperature sensor - catalyst upstream circuit: short circuit to ground Temperature sensor - catalyst upstream circuit: short circuit to power Temperature sensor - catalyst upstream failure	For temperature sensor - catalyst upstream circuit tests, Exhaust System
P042700	Diesel particulate filter (DPF) temperature sensor - catalyst upstream circuit low (right hand bank)	Temperature sensor - catalyst upstream circuit: high resistance Temperature sensor - catalyst upstream circuit: short circuit to ground Temperature sensor - catalyst upstream failure	For temperature sensor - catalyst upstream circuit tests, Exhaust System
P042800	Diesel particulate filter (DPF) temperature sensor - catalyst upstream circuit high (right hand bank)	Temperature sensor - catalyst upstream circuit: short circuit to power Temperature sensor - catalyst upstream failure	For temperature sensor - catalyst upstream circuit tests, Exhaust System
P042C00	Diesel particulate filter (DPF) temperature sensor - catalyst downstream circuit low (right hand bank)	Temperature sensor - catalyst downstream circuit: high resistance Temperature sensor - catalyst downstream circuit: short circuit to ground	For temperature sensor - catalyst downstream circuit tests, Exhaust System

		Temperature sensor - catalyst downstream failure	
P042D00	Diesel particulate filter (DPF) temperature sensor - catalyst downstream circuit high (right hand bank)	Temperature sensor - catalyst downstream circuit: short circuit to power Temperature sensor - catalyst downstream failure	For temperature sensor - catalyst downstream circuit tests, Exhaust System
P043600	Diesel particulate filter (DPF) temperature sensor - catalyst upstream circuit range/performance (left hand bank)	Temperature sensor - catalyst upstream circuit: high resistance Temperature sensor - catalyst upstream circuit: short circuit to ground Temperature sensor - catalyst upstream circuit: short circuit to power Temperature sensor - catalyst upstream failure	For temperature sensor - catalyst upstream circuit tests, Exhaust System
P043700	Diesel particulate filter (DPF) temperature sensor - catalyst upstream circuit low (left hand bank)	Temperature sensor - catalyst upstream circuit: high resistance Temperature sensor - catalyst upstream circuit: short circuit to ground Temperature sensor - catalyst upstream failure	For temperature sensor - catalyst upstream circuit tests, Exhaust System
P043800	Diesel particulate filter (DPF) temperature sensor - catalyst upstream circuit high (left hand bank)	Temperature sensor - catalyst upstream circuit: short circuit to power Temperature sensor - catalyst upstream failure	For temperature sensor - catalyst upstream circuit tests, Exhaust System

www.JagDocs.com

P043B00	Diesel particulate filter (DPF) temperature sensor - catalyst downstream circuit range/performance (left hand bank)	Temperature sensor - catalyst downstream circuit: high resistance Temperature sensor - catalyst downstream circuit: short circuit to ground Temperature sensor - catalyst downstream circuit: short circuit to power Temperature sensor - catalyst downstream failure	For temperature sensor - catalyst downstream circuit tests, Exhaust System
P043C00	Diesel particulate filter (DPF) temperature sensor - catalyst downstream circuit low (left hand bank)	Temperature sensor - catalyst downstream circuit: high resistance Temperature sensor - catalyst downstream circuit: short circuit to ground Temperature sensor - catalyst downstream failure	For temperature sensor - catalyst downstream circuit tests, Exhaust System
P043D00	Diesel particulate filter (DPF) temperature sensor - catalyst downstream circuit high (left hand bank)	Temperature sensor - catalyst downstream circuit: short circuit to power Temperature sensor - catalyst downstream failure	For temperature sensor - catalyst downstream circuit tests, Exhaust System
P046000	Fuel level sensor, signal range high	Fuel level sensor signal circuit: high resistance Fuel level sensor signal circuit: short circuit to power Fuel level sensor failure ECM failure	For fuel level sensor and circuit tests, Fuel Tank and Lines - 2.7L V6 - TdV6 Refer to the warranty policy and procedures manual if an ECM is suspect.

P046100	Fuel level sensor, signal range low	Fuel level sensor signal circuit: high resistance Fuel level sensor signal circuit: short circuit to ground Fuel level sensor failure ECM failure	For fuel level sensor and circuit tests, Fuel Tank and Lines - 2.7L V6 - TdV6 Refer to the warranty policy and procedures manual if an ECM is suspect.
P048300	Cooling fan rationality	Cooling fan rotor jammed/blocked Cooling fan motor damage/fault	Clear any obstruction, replace the fan as necessary.
P048400	Cooling fan current over load	Cooling fan seizure Cooling fan rotor jammed/blocked Cooling fan motor damage/fault	Clear any obstruction, replace the fan as necessary.
P048700	Exhaust gas recirculation (EGR) valve H-bridges (left hand bank)	EGR valve circuit(s): high resistance EGR valve circuit(s): short circuit to ground EGR valve circuit(s): short circuit to power EGR valve failure ECM failure	For left hand bank EGR valve circuit tests, Engine Emission Control Refer to the warranty policy and procedure manual if an ECM is suspect.
P049300	Cooling fan overspeed (clutch locked)	Cooling fan signal circuit: high resistance Cooling fan motor fault	For cooling fan circuit tests, GO to Pinpoint Test G549822p21.
P049400	Cooling fan speed low	Cooling fan signal circuit: high resistance Cooling fan signal circuit: short circuit to ground Cooling fan motor fault	For cooling fan circuit tests, GO to Pinpoint Test G549822p21.

www.JagDocs.com

P049500	Cooling fan speed high	Cooling fan signal circuit: short circuit to power Cooling fan motor fault	For cooling fan circuit tests, GO to Pinpoint Test G549822p21.
P050100	Vehicle speed sensor A range/performance - signal plausibility failure	Vehicle speed: range performance	Check for ABS/TCM DTCs.
P050400	Brake switch A/B correlation	The brake pressure reading does not agree with the brake light switch value Brake switch failure ECM failure	Check the brake switch function, GO to Pinpoint Test G549822p18. Refer to the warranty policy and procedures manual if an ECM is suspect.
P051300	Incorrect immobilizer key	Security key invalid	Programme keys using the Jaguar approved diagnostic system.
P053100	Air conditioning (A/C) refrigerant pressure sensor A circuit range/performance	A/C refrigerant pressure sensor circuit: high resistance A/C refrigerant pressure sensor circuit: short circuit to ground A/C refrigerant pressure sensor circuit: short circuit to power A/C refrigerant pressure sensor failure	For A/C refrigerant pressure sensor tests, GO to Pinpoint Test G549822p19.
P053200	Air conditioning (A/C) refrigerant pressure sensor A circuit low input	A/C refrigerant pressure sensor circuit: short circuit to ground A/C refrigerant pressure sensor failure	For A/C refrigerant pressure sensor tests, GO to Pinpoint Test G549822p19.
P053300	Air conditioning (A/C) refrigerant pressure sensor A circuit high input	A/C refrigerant pressure sensor circuit: high resistance A/C refrigerant pressure sensor circuit: short	For A/C refrigerant pressure sensor tests, GO to Pinpoint Test G549822p19.

		circuit to power A/C refrigerant pressure sensor failure	
P056200	System voltage low	Battery voltage low Battery ground cable: high resistance Battery connections loose/corroded Battery current drain	For battery information, Battery
P056300	System voltage high	System boosted from high voltage Battery voltage high Generator over charge condition	For battery information, Battery For charging system information, Charging System - 2.7L V6 - TdV6
P056600	Speed control cancel switch stuck closed	Speed control cancel switch signal circuit: short circuit to power Speed control cancel switch stuck/jammed Speed control cancel switch failure	For speed control, Speed Control - VIN Range: G45704->G99999
P056700	Speed control resume switch stuck closed	Speed control resume switch signal circuit: short circuit to power Speed control resume switch stuck/jammed Speed control resume switch failure	For speed control, Speed Control - VIN Range: G45704->G99999
P056900	Speed control minus switch stuck closed	Speed control minus switch signal circuit: short circuit to power Speed control minus switch	For speed control, Speed Control - VIN Range: G45704->G99999

www.JagDocs.com

		stuck/jammed Speed control minus switch failure	
P056A00	Speed control headway plus switch stuck closed	Speed control headway plus switch signal circuit: short circuit to power Speed control headway plus switch stuck/jammed Speed control headway plus switch failure	For speed control, Speed Control - VIN Range: G45704->G99999
P056B00	Speed control headway minus switch stuck closed	Speed control headway minus switch signal circuit: short circuit to power Speed control headway minus switch stuck/jammed Speed control headway minus switch failure	For speed control, Speed Control - VIN Range: G45704->G99999
P057000	Speed control plus switch stuck closed	Speed control plus switch signal circuit: short circuit to power Speed control plus switch stuck/jammed Speed control plus switch failure	For speed control, Speed Control - VIN Range: G45704->G99999
P057100	Brake switch A circuit plausibility	The brake pressure reading does not agree with the brake light switch value Brake switch failure ECM failure	Check the brake switch function, GO to Pinpoint Test G549822p18. Refer to the warranty policy and procedures manual if an ECM is suspect.
P057800	Speed control multi-function input A circuit stuck	Speed control multi-function input A circuit: high	For speed control, Speed Control - VIN Range: G45704->G99999

		resistance Speed control multi-function input A circuit: short circuit to ground Speed control multi-function input A circuit: short circuit to power Speed control switch stuck	
P057900	Speed control multi-function input A circuit range/performance	Speed control multi-function input A circuit: high resistance Speed control multi-function input A circuit: short circuit to ground Speed control multi-function input A circuit: short circuit to power Speed control switch stuck	For speed control, Speed Control - VIN Range: G45704->G99999
P060600	ECM processor fault	Internal ECM monitoring ECM failure	Cycle the ignition and allow power latch. Clear the DTC and retest. If the DTC resets, refer to the warranty policy and procedure manual if an ECM is suspect.
P060A00	Internal control module monitoring processor performance	Internal control module monitoring processor performance	Cycle the ignition and allow power latch. Clear the DTC and retest. If the DTC resets, refer to the warranty policy and procedure manual if an ECM is suspect.
P060B00	Internal control module A/D processing performance	Internal control module A/D processing performance	Cycle the ignition and allow power latch. Clear the DTC and retest. If the DTC resets, refer

www.JagDocs.com

			to the warranty policy and procedure manual if an ECM is suspect.
P060D00	Internal control module accelerator pedal position performance	Pedal value not plausible	Cycle the ignition and allow power latch. Clear the DTC and retest. If the DTC resets, refer to the warranty policy and procedure manual if an ECM is suspect.
P061000	Control module vehicle options error	VID block fault	Configure the module using the Jaguar approved diagnostic system.
P061100	Fuel injection pump control module requesting engine stop	Internal control module monitoring performance	Cycle the ignition and allow power latch. Clear the DTC and retest. If the DTC resets, refer to the warranty policy and procedure manual if an ECM is suspect.
P061700	Starter relay circuit high	Starter relay drive circuit: short circuit to power Starter relay failure	For starter relay and circuit tests, GO to Pinpoint Test G549822p22.
P061A00	Internal control module torque performance - signal plausibility failure	Absolute engine torque calculation failure	Cycle the ignition and allow power latch. Clear the DTC and retest. If the DTC resets, refer to the warranty policy and procedure manual if an ECM is suspect.
P061C00	Internal control module engine RPM performance	Processor monitoring speed not plausable	Cycle the ignition and allow power latch. Clear the DTC and retest. If the DTC resets, refer to the warranty policy and procedure manual if an ECM is suspect.
P061E00	Internal control module brake signal performance	Cruise intervention not plausible	Cycle the ignition and allow power latch. Clear the DTC and retest. If the DTC resets, refer to the warranty policy and

			procedure manual if an ECM is suspect.
P062200	Generator monitor circuit plausibility	PWM signal failure	For generator monitor circuit tests, Charging System - 2.7L V6 - TdV6
P062500	Generator monitor circuit low	Generator monitor circuit: high resistance Generator monitor circuit: short circuit to ground	For generator monitor circuit tests, Charging System - 2.7L V6 - TdV6
P062600	Generator monitor circuit high	Generator monitor circuit: short circuit to power	For generator monitor circuit tests, Charging System - 2.7L V6 - TdV6
P062700	Fuel pump module relay control circuit high	Fuel pump module relay control circuit: short circuit to power Fuel pump module relay failure	For fuel pump module relay and circuit tests, Fuel Tank and Lines - 2.7L V6 - TdV6
P062800	Fuel pump module relay control circuit low	Fuel pump module relay control circuit: high resistance Fuel pump module relay control circuit: short circuit to ground Fuel pump module relay failure	For fuel pump module relay and circuit tests, Fuel Tank and Lines - 2.7L V6 - TdV6
P062900	Fuel pump module relay control circuit/open	Fuel pump module relay control circuit: high resistance Fuel pump module relay failure	For fuel pump module relay and circuit tests, Fuel Tank and Lines - 2.7L V6 - TdV6
P062B00	Internal control module - fuel injector control performance	Internal control module - fuel injector control performance	Cycle the ignition and allow power latch. Clear the DTC and retest. If the DTC resets, refer to the warranty policy and procedure manual if an ECM is

www.JagDocs.com

			suspect.
P062D00	Fuel injector driver circuit performance (right hand bank)	Injector(s) disconnected Injector circuit(s): high resistance, short circuit to ground, short circuit to power Injector failure ECM failure	For injector circuit tests, Fuel Charging and Controls Refer to the warranty policy and procedure manual if an ECM is suspect.
P062E00	Fuel injector driver circuit performance (left hand bank)	Injector(s) disconnected Injector circuit(s): high resistance, short circuit to ground, short circuit to power Injector failure ECM failure	For injector circuit tests, Fuel Charging and Controls Refer to the warranty policy and procedure manual if an ECM is suspect.
P063400	ECM internal temperature too high	ECM internal temperature too high	Cycle the ignition and allow power latch. Clear the DTC and retest. If the DTC resets, refer to the warranty policy and procedure manual if an ECM is suspect.
P064200	ECM internal 5 volt sensor supply circuit A low	ECM power supply circuit: high resistance ECM power supply circuit: short circuit to ground ECM ground circuit: high resistance 5 Volt supply ECM relay malfunction ECM failure	For ECM power supply tests, GO to Pinpoint Test G549822p23. and GO to Pinpoint Test G549822p20. For ECM relay tests, GO to Pinpoint Test G549822p26. Refer to the circuit diagrams for the 5 volt sensor supply. Cycle the ignition and allow power latch. Clear the DTC and retest. If the DTC resets, refer to the warranty policy and procedure manual if an ECM is suspect.

P064300	ECM internal 5 volt sensor supply circuit A high	ECM power supply circuit: short circuit to power ECM ground circuit: short circuit to power 5 Volt supply ECM relay malfunction ECM failure	For ECM power supply tests, GO to Pinpoint Test G549822p23. and GO to Pinpoint Test G549822p20. For ECM relay tests, GO to Pinpoint Test G549822p26. Refer to the circuit diagrams for the 5 volt sensor supply. Cycle the ignition and allow power latch. Clear the DTC and retest. If the DTC resets, refer to the warranty policy and procedure manual if an ECM is suspect.
P065200	ECM internal 5 volt sensor supply circuit B low	ECM power supply circuit: high resistance ECM power supply circuit: short circuit to ground ECM ground circuit: high resistance 5 Volt supply ECM relay malfunction ECM failure	For ECM power supply tests, GO to Pinpoint Test G549822p23. and GO to Pinpoint Test G549822p20. For ECM relay tests, GO to Pinpoint Test G549822p26. Refer to the circuit diagrams for the 5 volt sensor supply. Cycle the ignition and allow power latch. Clear the DTC and retest. If the DTC resets, refer to the warranty policy and procedure manual if an ECM is suspect.
P065300	ECM internal 5 volt sensor supply circuit B high	ECM power supply circuit: short circuit to power ECM ground circuit: short circuit to power 5 Volt supply ECM relay malfunction ECM failure	For ECM power supply tests, GO to Pinpoint Test G549822p23. and GO to Pinpoint Test G549822p20. For ECM relay tests, GO to Pinpoint Test G549822p26. Refer to the circuit diagrams for the 5 volt sensor supply. Cycle the ignition and allow power latch. Clear the DTC and retest. If the DTC resets, refer to the warranty policy and

www.JagDocs.com

			procedure manual if an ECM is suspect.
P066700	ECM internal temperature sensor range/performance	ECM internal temperature sensor range/performance	Cycle the ignition and allow power latch. Clear the DTC and retest. If the DTC resets, refer to the warranty policy and procedure manual if an ECM is suspect.
P066800	ECM internal temperature sensor circuit low	ECM internal temperature sensor circuit low	Cycle the ignition and allow power latch. Clear the DTC and retest. If the DTC resets, refer to the warranty policy and procedure manual if an ECM is suspect.
P066900	ECM internal temperature sensor circuit high	ECM internal temperature sensor circuit high	Cycle the ignition and allow power latch. Clear the DTC and retest. If the DTC resets, refer to the warranty policy and procedure manual if an ECM is suspect.
P067000	Glow plug control module - control circuit open	Glow plug control module, control circuit: high resistance Glow plug control module, control circuit: short circuit to ground Glow plug control module failure	For glow plug control module circuit tests, Glow Plug System
P069100	Cooling fan control circuit low	Cooling fan control circuit: short circuit to ground Cooling fan control circuit: high resistance	For cooling fan circuit tests, GO to Pinpoint Test G549822p21.
P069200	Cooling fan control circuit high	Cooling fan control circuit: short circuit to power	For cooling fan circuit tests, GO to Pinpoint Test G549822p21.

P085000	Park/Neutral switch input circuit plausibility	Park/Neutral switch input circuit: high resistance Park/Neutral switch input circuit: short circuit to ground Park/Neutral switch input circuit: short circuit to power Park/Neutral switch failure	For Park/Neutral switch tests, External Controls
P0A0900	DC/DC converter circuit low	DC/DC converter circuit low	Clear the DTC. Cycle the ignition, allow power latch and retest. If the DTC resets, refer to the warranty policy and procedure manual if an ECM is suspect.
P0A1000	DC/DC converter circuit high	DC/DC converter circuit high	Clear the DTC. Cycle the ignition, allow power latch and retest. If the DTC resets, refer to the warranty policy and procedure manual if an ECM is suspect.
P0A1400	Active engine mount control circuit open (right hand)	Active engine mount control circuit: high resistance Active engine mount control circuit: short circuit to ground Active engine mount actuator failure	For active engine mount circuit tests, Engine
P0A1500	Active engine mount control circuit low (right hand)	Active engine mount control circuit: high resistance Active engine mount control circuit: short circuit to ground Active engine mount actuator failure	For active engine mount circuit tests, Engine

www.JagDocs.com

P0A1600	Active engine mount control circuit high (right hand)	Active engine mount control circuit: short circuit to power Active engine mount actuator failure	For active engine mount circuit tests, Engine
P0AB600	Active engine mount control circuit open (left hand)	Active engine mount control circuit: high resistance Active engine mount control circuit: short circuit to ground Active engine mount actuator failure	For active engine mount circuit tests, Engine
P0AB700	Active engine mount control circuit low (left hand)	Active engine mount control circuit: high resistance Active engine mount control circuit: short circuit to ground Active engine mount actuator failure	For active engine mount circuit tests, Engine
P0AB800	Active engine mount control circuit high (left hand)	Active engine mount control circuit: short circuit to power Active engine mount actuator failure	For active engine mount circuit tests, Engine
P115A00	Low fuel level - forced limited power	Fuel reserve signal range Low level fuel condition Critical fuel level switch signal circuit: high resistance Critical fuel level switch signal circuit: short circuit to ground Critical fuel level switch failure Fuel level sensor signal circuit: high	Check the fuel level. If there is sufficient fuel check the critical fuel level switch and fuel level sensor circuits, Fuel Tank and Lines - 2.7L V6 - TdV6 Refer to the warranty policy and procedures manual if an ECM is suspect.

		resistance Fuel level sensor signal circuit: short circuit to ground Fuel level sensor signal circuit: short circuit to power Fuel level sensor failure ECM failure	
P115B00	Low fuel level - forced engine shutdown	Anti air suction intervention Low level fuel condition Critical fuel level switch signal circuit: high resistance Critical fuel level switch signal circuit: short circuit to ground Critical fuel level switch failure Fuel level sensor signal circuit: high resistance Fuel level sensor signal circuit: short circuit to ground Fuel level sensor signal circuit: short circuit to power Fuel level sensor failure ECM failure	Check the fuel level. If there is sufficient fuel check the critical fuel level switch and fuel level sensor circuits, Fuel Tank and Lines - 2.7L V6 - TdV6 Refer to the warranty policy and procedures manual if an ECM is suspect.
P120E00	Fuel rail pressure (FRP) sensor - excessive fuel pressure variation	FRP sensor circuit: high resistance FRP sensor circuit: short circuit to ground	For FRP sensor tests, Fuel Charging and Controls Refer to the warranty policy and procedure manual if an

www.JagDocs.com

		FRP sensor circuit: short circuit to power FRP sensor failure ECM failure	ECM is suspect.
P120F00	Fuel rail pressure (FRP) regulator - fuel pressure low at start	FRP sensor circuit: high resistance FRP sensor circuit: short circuit to ground FRP sensor circuit: short circuit to power FRP sensor failure Restricted fuel line Fuel pump module failure ECM failure	For FRP sensor tests, Fuel Charging and Controls For fuel pump module circuit and fuel line tests, Fuel Tank and Lines - 2.7L V6 - TdV6 Refer to the warranty policy and procedure manual if an ECM is suspect.
P125900	Immobilizer to PCM signal error	Incorrect ID received from instrument pack	Configure the system using the Jaguar approved diagnostic system.
P132A00	Variable geometry turbocharger (VGT) actuator H bridge fault (right hand bank)	VGT actuator circuit(s): high resistance, short circuit to ground, short circuit to power Turbocharger vanes stuck/sticking VGT actuator failure ECM failure	For right hand bank VGT actuator circuit tests, Turbocharger Refer to the warranty policy and procedure manual if an ECM is suspect.
P132B00	Variable geometry turbocharger (VGT) actuator performance (right hand bank)	VGT actuator circuit(s): high resistance, short circuit to ground, short circuit to power Turbocharger vanes stuck/sticking	For right hand bank VGT actuator circuit tests, Turbocharger Refer to the warranty policy and procedure manual if an ECM is suspect.

		VGT actuator failure ECM failure	
P132D00	Variable geometry turbocharger (VGT) actuator H bridge fault (left hand bank)	VGT actuator circuit(s): high resistance, short circuit to ground, short circuit to power Turbocharger vanes stuck/sticking VGT actuator failure ECM failure	For left hand bank VGT actuator circuit tests, Turbocharger Refer to the warranty policy and procedure manual if an ECM is suspect.
P132E00	Variable geometry turbocharger (VGT) actuator performance (left hand bank)	VGT actuator circuit(s): high resistance, short circuit to ground, short circuit to power Turbocharger vanes stuck/sticking VGT actuator failure ECM failure	For left hand bank VGT actuator circuit tests, Turbocharger Refer to the warranty policy and procedure manual if an ECM is suspect.
P132F00	Variable geometry turbocharger (VGT) actuator voltage plausibility (left hand bank)	VGT actuator circuit(s): high resistance, short circuit to ground, short circuit to power VGT actuator failure ECM failure	For left hand bank VGT actuator circuit tests, Turbocharger Refer to the warranty policy and procedure manual if an ECM is suspect.
P133400	Exhaust gas recirculation (EGR) - intake air shut off throttle minimum/maximum stop performance	EGR valve stuck/sticking EGR valve circuit(s): high resistance EGR valve circuit(s): short circuit to ground EGR valve circuit(s): short circuit to power	For EGR valve, intake air shut off throttle and circuit tests, Engine Emission Control Refer to the warranty policy and procedure manual if an ECM is suspect.

www.JagDocs.com

		Intake air shut off throttle stuck/sticking Intake air shut off throttle circuit(s): high resistance Intake air shut off throttle circuit(s): short circuit to ground Intake air shut off throttle circuit(s): short circuit to power Intake air shut off throttle failure ECM failure	
P133600	Crankshaft/Camshaft position (CKP/CMP) sensor range/performance	CKP sensor circuit: high resistance CKP sensor circuit: short circuit to ground CKP sensor circuit: short circuit to power CMP sensor circuit: high resistance CMP sensor circuit: short circuit to ground CMP sensor circuit: short circuit to power CKP sensor failure CMP sensor failure ECM failure	For CKP and CMP sensor tests, GO to Pinpoint Test G549822p16. Refer to the warranty policy and procedure manual if an ECM is suspect.
P138E00	Variable geometry turbocharger (VGT) actuator adaption (right hand bank)	VGT actuator circuit(s): high resistance, short circuit to ground, short circuit	For right hand bank VGT actuator circuit tests, Turbocharger

		to power VGT actuator failure	
P140A00	Exhaust gas recirculation (EGR) valve circuit low (left hand bank)	EGR valve circuit(s): high resistance EGR valve circuit(s): short circuit to ground EGR valve failure	For left hand bank EGR valve and circuit tests, Engine Emission Control
P140B00	Exhaust gas recirculation (EGR) valve circuit high (left hand bank)	EGR valve circuit(s): short circuit to power EGR valve failure	For left hand bank EGR valve and circuit tests, Engine Emission Control
P140C00	Exhaust gas recirculation (EGR) - intake air shut off throttle H bridges	Intake air shut off throttle circuit(s): high resistance Intake air shut off throttle circuit(s): short circuit to ground Intake air shut off throttle circuit(s): short circuit to power Intake air shut off throttle failure ECM failure	For intake air shut off throttle and circuit tests, Engine Emission Control Refer to the warranty policy and procedure manual if an ECM is suspect.
P140D00	Exhaust gas recirculation (EGR) control circuit range/performance (left hand bank)	IAT sensor fault MAP sensor fault MAF sensor fault EGR valve stuck closed, blocked EGR valve circuit(s): high resistance EGR valve circuit(s): short circuit to	For IAT sensor circuit tests, GO to Pinpoint Test G549822p9. For MAP sensor circuit tests, GO to Pinpoint Test G549822p12. For MAF sensor circuit tests, GO to Pinpoint Test G549822p10. and GO to Pinpoint Test G549822p11. For left hand bank EGR valve and circuit tests, Engine Emission Control

www.JagDocs.com

		ground EGR valve circuit(s): short circuit to power EGR valve failure	
P140E00	Exhaust gas recirculation (EGR) valve circuit adaption (left hand bank)	EGR valve circuit(s): high resistance EGR valve circuit(s): short circuit to ground EGR valve circuit(s): short circuit to power EGR valve failure ECM failure	For left hand bank EGR valve and circuit tests, Engine Emission Control Refer to the warranty policy and procedure manual if an ECM is suspect.
P141A00	Exhaust gas recirculation (EGR) valve circuit intermittent/erratic (right hand bank)	EGR valve circuit(s): high resistance EGR valve circuit(s): short circuit to ground EGR valve circuit(s): short circuit to power EGR valve failure ECM failure	For right hand bank EGR valve and circuit tests, Engine Emission Control Refer to the warranty policy and procedure manual if an ECM is suspect.
P141B00	Exhaust gas recirculation (EGR) - intake air shut off throttle circuit intermittent/erratic	Intake air shut off throttle circuit(s): high resistance Intake air shut off throttle circuit(s): short circuit to ground Intake air shut off throttle circuit(s): short circuit to power Intake air shut off	For intake air shut off throttle and circuit tests, Engine Emission Control Refer to the warranty policy and procedure manual if an ECM is suspect.

		throttle failure ECM failure	
P141C00	Exhaust gas recirculation (EGR) valve circuit intermittent/erratic (left hand bank)	EGR valve circuit(s): high resistance EGR valve circuit(s): short circuit to ground EGR valve circuit(s): short circuit to power EGR valve failure ECM failure	For left hand bank EGR valve and circuit tests, Engine Emission Control Refer to the warranty policy and procedure manual if an ECM is suspect.
P141D00	Exhaust gas recirculation (EGR) valve circuit adaption (right hand bank)	EGR valve circuit(s): high resistance EGR valve circuit(s): short circuit to ground EGR valve circuit(s): short circuit to power EGR valve failure ECM failure	For right hand bank EGR valve and circuit tests, Engine Emission Control Refer to the warranty policy and procedure manual if an ECM is suspect.
P150A00	Injector circuit range/performance cylinder 1	Injector disconnected Injector circuit(s): high resistance, short circuit to ground, short circuit to power Injector failure ECM failure	For injector circuit tests, Fuel Charging and Controls Refer to the warranty policy and procedure manual if an ECM is suspect.
P150B00	Injector circuit range/performance cylinder 2	Injector disconnected Injector circuit(s): high resistance, short circuit to ground, short circuit to	For injector circuit tests, Fuel Charging and Controls Refer to the warranty policy and procedure manual if an ECM is suspect.

www.JagDocs.com

		power Injector failure ECM failure	
P150C00	Injector circuit range/performance cylinder 3	Injector disconnected Injector circuit(s): high resistance, short circuit to ground, short circuit to power Injector failure ECM failure	For injector circuit tests, Fuel Charging and Controls Refer to the warranty policy and procedure manual if an ECM is suspect.
P151B00	Idle air control system RPM lower than expected	Air intake restriction Accessory drive overload (defective/seized component)	Check the air intake system, Intake Air Distribution and Filtering Check the accessory drive belt and components, Accessory Drive - 2.7L Diesel
P151C00	Idle air control system RPM higher than expected	Intake air leak between MAF sensor and throttle Intake air leak between throttle and engine Engine crankcase breather leak	Check the air intake system, Intake Air Distribution and Filtering Inspect the engine breather system, Engine Emission Control
P155400	Injector circuit range/performance cylinder 4	Injector disconnected Injector circuit(s): high resistance, short circuit to ground, short circuit to power Injector failure ECM failure	For injector circuit tests, Fuel Charging and Controls Refer to the warranty policy and procedure manual if an ECM is suspect.
P155500	Injector circuit range/performance cylinder 5	Injector disconnected Injector circuit(s): high resistance, short circuit to ground, short circuit to	For injector circuit tests, Fuel Charging and Controls Refer to the warranty policy and procedure manual if an ECM is suspect.

		power Injector failure ECM failure	
P155600	Injector circuit range/performance cylinder 6	Injector disconnected Injector circuit(s): high resistance, short circuit to ground, short circuit to power Injector failure ECM failure	For injector circuit tests, Fuel Charging and Controls Refer to the warranty policy and procedure manual if an ECM is suspect.
P157200	Brake switch A circuit plausibility	The brake pressure reading does not agree with the brake light switch value Brake switch circuit(s): high resistance, short circuit to ground, short circuit to power Brake switch failure ECM failure	Check the brake switch function, GO to Pinpoint Test G549822p18. Refer to the warranty policy and procedures manual if an ECM is suspect.
P169600	ECM/speed control module circuit/network - vehicle speed set point CAN invalid	Speed control module off CAN Speed control module misaligned	For speed control, Speed Control - VIN Range: G45704->G99999
P193300	Fuel level sensor CAN signal	Fuel level sensor signal circuit: high resistance Fuel level sensor signal circuit: short circuit to ground Fuel level sensor signal circuit: short circuit to power Fuel level sensor signal circuit: short circuit	For fuel level sensor and circuit tests, Fuel Tank and Lines - 2.7L V6 - TdV6 Refer to the warranty policy and procedures manual if an ECM is suspect.

www.JagDocs.com

		to other resistive sensors Fuel level sensor failure ECM failure	
P193400	Vehicle speed sensor malfunction	Vehicle speed: invalid signal received over CAN	Check for TCM DTCs.
P193500	Brake switch/sensor signal	Error on brake switch sensor coming on CAN	Check the brake switch function, GO to Pinpoint Test G549822p18. Refer to the warranty policy and procedures manual if an ECM is suspect.
P193700	Fuel fired heater control circuit open (where fitted)	Fuel fired heater control circuit: high resistance Fuel fired heater control circuit: short circuit to ground Fuel fired heater failure	No information available.
P193800	Fuel fired heater control circuit range/performance (where fitted)	Fuel fired heater control circuit: high resistance Fuel fired heater control circuit: short circuit to ground Fuel fired heater control circuit: short circuit to power Fuel fired heater failure	No information available.
P193A00	Invalid service test tool communication - request invalid	Invailid command during engine operation.	Not a fault
P200800	Port de-activation solenoid circuit open	Port de-activation solenoid circuit: high resistance Port de-activation solenoid circuit:	Port de-activation solenoid circuit tests, Intake Air Distribution and Filtering

		short circuit to ground Port de-activation solenoid failure	
P200900	Port de-activation solenoid circuit low	Port de-activation solenoid circuit: high resistance Port de-activation solenoid circuit: short circuit to ground Port de-activation solenoid failure	Port de-activation solenoid circuit tests, Intake Air Distribution and Filtering
P201000	Port de-activation solenoid circuit high	Port de-activation solenoid circuit: short circuit to power Port de-activation solenoid failure	Port de-activation solenoid circuit tests, Intake Air Distribution and Filtering
P202900	Fuel fired heater disabled (where fitted)	Fuel fired heater control circuit: high resistance Fuel fired heater control circuit: short circuit to ground Fuel fired heater failure	No information available.
P203000	Fuel fired heater performance (where fitted)	Fuel fired heater control circuit: high resistance Fuel fired heater control circuit: short circuit to ground Fuel fired heater control circuit: short circuit to power Fuel fired heater failure	No information available.
P212200	Accelerator pedal position (APP) sensor circuit 1 low	Accelerator pedal position (APP) sensor circuit 1: high	For APP sensor circuit 1 tests, GO to Pinpoint Test G549822p4.

www.JagDocs.com

		resistance Accelerator pedal position (APP) sensor circuit 1: short circuit to ground Accelerator pedal position (APP) sensor failure	
P212300	Accelerator pedal position (APP) sensor circuit 1 high	Accelerator pedal position (APP) sensor circuit 1: short circuit to power Accelerator pedal position (APP) sensor failure	For APP sensor circuit 1 tests, GO to Pinpoint Test G549822p4.
P212700	Accelerator pedal position (APP) sensor circuit 2 low	Accelerator pedal position (APP) sensor circuit 2: high resistance Accelerator pedal position (APP) sensor circuit 2: short circuit to ground Accelerator pedal position (APP) sensor failure	For APP sensor circuit 2 tests, GO to Pinpoint Test G549822p5.
P212800	Accelerator pedal position (APP) sensor circuit 2 high	Accelerator pedal position (APP) sensor circuit 2: short circuit to power Accelerator pedal position (APP) sensor failure	For APP sensor circuit 2 tests, GO to Pinpoint Test G549822p5.
P213800	Accelerator pedal position (APP) sensor 1 and 2 voltage correlation	Accelerator pedal position (APP) sensor circuit 2: short circuit to power Accelerator pedal position (APP) sensor circuit 2: short circuit to ground Accelerator pedal	For APP sensor circuit tests, GO to Pinpoint Test G549822p17.

		position (APP) sensor failure	
P214100	Exhaust gas recirculation (EGR) - intake air shut off throttle control deviation below minimum threshold	EGR valve stuck/sticking EGR valve circuit(s): high resistance EGR valve circuit(s): short circuit to ground EGR valve circuit(s): short circuit to power Intake air shut off throttle stuck/sticking Intake air shut off throttle circuit(s): high resistance Intake air shut off throttle circuit(s): short circuit to ground Intake air shut off throttle circuit(s): short circuit to power Intake air shut off throttle failure ECM failure	For EGR valve, intake air shut off throttle and circuit tests, Engine Emission Control Refer to the warranty policy and procedure manual if an ECM is suspect.
P214200	Exhaust gas recirculation (EGR) - intake air shut off throttle control deviation above maximum threshold	EGR valve stuck/sticking EGR valve circuit(s): high resistance EGR valve circuit(s): short circuit to ground EGR valve circuit(s): short circuit to power	For EGR valve, intake air shut off throttle and circuit tests, Engine Emission Control Refer to the warranty policy and procedure manual if an ECM is suspect.

www.JagDocs.com

		Intake air shut off throttle stuck/sticking Intake air shut off throttle circuit(s): high resistance Intake air shut off throttle circuit(s): short circuit to ground Intake air shut off throttle circuit(s): short circuit to power Intake air shut off throttle failure ECM failure	
P219900	Intake air temperature (IAT) and air charge temperature (ACT) sensor correlation after cold start	IAT sensor circuit: high resistance, short circuit to ground, short circuit to power ACT sensor circuit: high resistance, short circuit to ground, short circuit to power IAT sensor failure ACT sensor failure ECM failure	For IAT sensor circuit tests, GO to Pinpoint Test G549822p9. For ACT sensor circuit tests, GO to Pinpoint Test G549822p6. Intake Air Distribution and Filtering Refer to the warranty policy and procedures manual if an ECM is suspect.
P222800	Barometric pressure (BARO) sensor circuit low input	BARO sensor failure (internal ECM fault)	Refer to the warranty policy and procedures manual if an ECM is suspect.
P222900	Barometric pressure (BARO) sensor circuit high input	BARO sensor failure (internal ECM fault)	Refer to the warranty policy and procedures manual if an ECM is suspect.
P223000	Barometric pressure (BARO)	BARO sensor failure (internal ECM fault)	Refer to the warranty policy and procedures manual if an

	sensor circuit intermittent		ECM is suspect.
P226300	Turbocharger boost system performance, manifold absolute pressure (MAP) sensor control deviation	IAT sensor circuit(s): high resistance, short circuit to ground, short circuit to power MAP sensor circuit(s): high resistance, short circuit to ground, short circuit to power MAF sensor circuit(s): high resistance, short circuit to ground, short circuit to power EGR circuit(s): high resistance, short circuit to ground, short circuit to power VGT actuator failure Turbocharger vanes stuck/sticking ECM failure	For IAT sensor circuit tests, GO to Pinpoint Test G549822p9. For MAP sensor circuit tests, GO to Pinpoint Test G549822p12. For EGR circuit tests, For turbo charger and circuit tests, Turbocharger Refer to the warranty policy and procedures manual if an ECM is suspect.
P228800	Injector control pressure too high - fuel pressure control valve (FPCV) minimum limit reached	Fuel injector control pressure: too high FPCV circuit fault FPCV failure Fuel pump module circuit: short circuit to power Fuel pump module failure Fuel injection pump failure	For fuel pressure and fuel pump module circuit tests, Fuel Tank and Lines - 2.7L V6 - TdV6 For FPCV and circuit tests, Fuel Charging and Controls For fuel injection pump, Fuel Injection Pump
P229000	Injector control pressure too low - fuel pressure	Fuel injector control	For fuel lines, fuel pressure and fuel pump module circuit tests,

www.JagDocs.com

	control valve (FPCV) maximum limit reached	pressure: too low Fuel line leak Fuel filter/system restriction FPCV circuit fault FPCV failure Fuel pump module circuit: short circuit to ground Fuel pump module failure Fuel injection pump failure	Fuel Tank and Lines - 2.7L V6 - TdV6 For FPCV and circuit tests, Fuel Charging and Controls For fuel injection pump, Fuel Injection Pump
P229200	Injector control pressure erratic - fuel pressure control valve (FPCV) dynamic	Fuel injector control pressure: erratic FPCV circuit fault FPCV failure Fuel pump module circuit(s): high resistance, short circuit to ground, short circuit to power Fuel pump module failure Fuel injection pump failure	For fuel lines, fuel pressure and fuel pump module circuit tests, Fuel Tank and Lines - 2.7L V6 - TdV6 For FPCV and circuit tests, Fuel Charging and Controls For fuel injection pump, Fuel Injection Pump
P229900	Brake pedal position/accelerator pedal position incompatible plausibility	Brake switch failure	Check the brake switch function, GO to Pinpoint Test G549822p18.
P242B00	Diesel particulate filter (DPF) temperature sensor circuit range/performance	DPF temperature sensor circuit: high resistance DPF temperature sensor	For DPF temperature sensor circuit tests, Exhaust System

		circuit: short circuit to ground DPF temperature sensor circuit: short circuit to power DPF temperature sensor failure	
P242C00	Diesel particulate filter (DPF) temperature sensor circuit low	DPF temperature sensor circuit: high resistance DPF temperature sensor circuit: short circuit to ground DPF temperature sensor failure	For DPF temperature sensor circuit tests, Exhaust System
P242D00	Diesel particulate filter (DPF) temperature sensor circuit high	DPF temperature sensor circuit: short circuit to power DPF temperature sensor failure	For DPF temperature sensor circuit tests, Exhaust System
P242E00	Diesel particulate filter (DPF) temperature sensor circuit intermittent/erratic	DPF temperature sensor circuit: high resistance DPF temperature sensor circuit: short circuit to ground DPF temperature sensor circuit: short circuit to power DPF temperature sensor failure	For DPF temperature sensor circuit tests, Exhaust System
P244A00	Diesel particulate filter (DPF) exhaust back pressure too low	Differential pressure tubes/hoses split/leaking DPF split/leaking	For DPF, Exhaust System
P244B00	Diesel particulate filter (DPF) exhaust back pressure too high	Differential pressure tubes/hoses blockage/restriction DPF blockage/restriction	For DPF, Exhaust System

www.JagDocs.com

P245300	Diesel particulate filter (DPF) differential pressure sensor value too high before engine start	Exhaust blockage/restriction DPF blockage/restriction Differential pressure sensor circuit: high resistance Differential pressure sensor circuit: short circuit to ground Differential pressure sensor circuit: short circuit to power Differential pressure sensor failure	For DPF differential pressure sensor circuit tests, Exhaust System
P245400	Diesel particulate filter (DPF) differential pressure sensor circuit low	Differential pressure sensor circuit: high resistance Differential pressure sensor circuit: short circuit to ground Differential pressure sensor failure	For DPF differential pressure sensor circuit tests, Exhaust System
P245500	Diesel particulate filter (DPF) differential pressure sensor circuit high	Differential pressure sensor circuit: short circuit to power Differential pressure sensor failure	For DPF differential pressure sensor circuit tests, Exhaust System
P245600	Diesel particulate filter (DPF) differential pressure sensor circuit intermittent/erratic	Differential pressure tubes/hoses split/leaking Differential pressure sensor circuit: high resistance Differential pressure sensor circuit: short circuit to ground Differential pressure sensor circuit: short	For DPF differential pressure sensor circuit tests, Exhaust System

		circuit to power Differential pressure sensor failure	
P245900	Diesel particulate filter (DPF) regeneration frequency	Driving conditions not appropriate for DPF regeneration	Carry out DPF service remedy, Exhaust System
P250500	ECM relay circuit open	ECM relay circuit: high resistance ECM relay circuit: short circuit to ground ECM relay failure	For ECM relay and circuit tests, GO to Pinpoint Test G549822p26.
P250700	ECM relay circuit low	ECM relay circuit: high resistance ECM relay circuit: short circuit to ground ECM relay failure	For ECM relay and circuit tests, GO to Pinpoint Test G549822p26.
P250800	ECM relay circuit high	ECM relay circuit: short circuit to power ECM relay failure	For ECM relay and circuit tests, GO to Pinpoint Test G549822p26.
P250C00	Engine oil temperature (EOT) sensor circuit low	EOT sensor circuit: high resistance EOT sensor circuit: short circuit to ground EOT sensor failure ECM failure	For EOT sensor circuit tests, GO to Pinpoint Test G549822p3.
P250D00	Engine oil temperature (EOT) sensor circuit high	EOT sensor circuit: short circuit to power EOT sensor failure ECM failure	For EOT sensor circuit tests, GO to Pinpoint Test G549822p3.
P250E00	Engine oil temperature (EOT) sensor circuit intermittent/erratic	EOT sensor circuit: high resistance EOT sensor circuit: short circuit to ground EOT sensor circuit: short	For EOT sensor circuit tests, GO to Pinpoint Test G549822p3.

www.JagDocs.com

		circuit to power EOT sensor failure ECM failure	
P251D00	Engine shutdown circuit open	Inertia switch circuit: high resistance Inertia switch circuit: short circuit to ground Inertia switch circuit: short circuit to power Inertia switch failure	For inertia switch circuit tests, GO to Pinpoint Test G549822p25.
P251E00	Engine shutdown circuit low	Inertia switch circuit: high resistance Inertia switch circuit: short circuit to ground Inertia switch failure	For inertia switch circuit tests, GO to Pinpoint Test G549822p25.
P251F00	Engine shutdown circuit high	Inertia switch circuit: short circuit to power Inertia switch failure	For inertia switch circuit tests, GO to Pinpoint Test G549822p25.
P252E00	Engine oil temperature (EOT) sensor circuit intermittent/erratic	EOT sensor circuit: high resistance EOT sensor circuit: short circuit to ground EOT sensor circuit: short circuit to power EOT sensor failure ECM failure	For EOT sensor circuit tests, GO to Pinpoint Test G549822p3.
U000100	High speed CAN communication bus	CAN Mute	For network tests,
U007300	Control module communication bus off -	CAN Link circuit malfunction	For network tests,

	CAN bus off		
U010100	Lost communication with TCM - CAN timeout	CAN Link ECM/TCM CAN timeout	For network tests,
U010300	Lost communication with gear shift control module	CAN Link ECM/gear shift network malfunction	For network tests,
U010400	Lost communication with speed control module - CAN timeout	CAN Link ECM/Speed control module CAN timeout	For network tests,
U011700	Lost communication with inertia switch	CAN Link ECM/restraints control module (RCM) network malfunction	For network tests,
U012100	Lost communication with anti-lock brake system (ABS) control module	CAN Link ECM/ABS module network malfunction	For network tests,
U012200	Lost communication with stability assist module - CAN timeout	ECM/ASU compressor CAN timeout	For network tests,
U015500	Lost communication with instrument panel cluster (IPC) control module	CAN Link ECM/INSTCM network malfunction	For network tests,
U016400	Lost communication with heating ventilation and air conditioning (HVAC) control module	CAN Link ECM/HEVAC network malfunction	For network tests,
U016600	Lost communication with auxiliary heater control module (where fitted)	Fuel fired heater fitted/not configured	Configure the system using the Jaguar approved diagnostic system.
U016700	Lost communication with vehicle immobilizer control module	CAN timeout	For network tests,
U032600	Software incompatibility with vehicle immobilizer control module	Challenge does not match	For network tests,

www.JagDocs.com

U040500	Invalid data received from speed control module	ECM/Speed control module invalid data received	For network tests,
U041600	Invalid data received from stability assist module	ECM/ABS module invalid torque drag request	For network tests,

Pinpoint tests

CAUTION: When probing connectors to take measurements in the course of the pinpoint tests, use the adaptor kit, part number 3548-1358-00. Failure to follow this instruction may result in damage to the vehicle.

NOTE:

When performing voltage or resistance tests, always use a digital multimeter (DMM) accurate to 3 decimal places, and with an up-to-date calibration certificate. When testing resistance, always take the resistance of the DMM leads into account.

NOTE:

Check and rectify basic faults before beginning diagnostic routines involving pinpoint tests.

NOTE:

If DTCs are recorded and a fault is not present when performing the pinpoint tests, an intermittent concern may be the cause. Always check for loose connections and corroded terminals.

PINPOINT TEST G549822p1 : ENGINE COOLANT TEMPERATURE (ECT) SENSOR

G549822t1 : CHECK THE ECT PID VALUE

1.

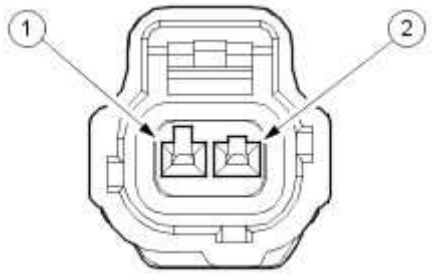

E54259

Circuit	Pin
Engine coolant temperature sensor - signal	01
Engine coolant temperature sensor - return	02

2.

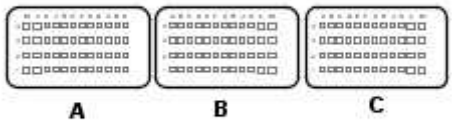

E54251

Circuit	Pin
Engine coolant temperature sensor - signal	C2
Engine coolant temperature sensor - return	E2

Resistance (ohms)	Temperature (degrees C)	Temperature (degrees F)	Volts
925021	-40	-40	4.8942
496051	-30	-22	4.8062
276959	-20	-04	4.6633
160313	-10	14	4.4454

www.JagDocs.com

123485	-5	23	4.3031
95851	0	32	4.1368
74914	5	41	3.9464
58987	10	50	3.7340
37340	20	68	3.2560
24253	30	86	2.7403
16113	40	104	2.2309
10926	50	122	1.7665
7548	60	140	1.3700
5335	70	158	1.0529
3837	80	176	0.8048
2804	90	194	0.6148
2080	100	212	0.4710
1564	110	230	0.3636
1191	120	248	0.2810
918	130	266	0.2194

3. Make sure that the engine is cold. 4. Key on, engine off. 5. Access the OBDII-engine coolant temperature PID using the Jaguar approved diagnostic system or a scan tool.

Is the ECT reading as expected for the current environmental and engine conditions?

-> Yes
GO to Pinpoint Test G549822t2.

-> No
GO to Pinpoint Test G549822t7.

G549822t2 : CHECK THE ECT PID VALUE DURING WARM UP

1. Key on, engine running. 2. Access the OBDII-engine coolant temperature PID using the Jaguar approved diagnostic system or a scan tool. 3. Increase the engine speed to 2,000 rpm and monitor the ECT reading until the engine is at full operating temperature.

Did the ECT reading rise smoothly to a value of between 80 and 95 degrees C (176 and 203 degreees F)?

-> Yes

An intermittent fault may be present in the wiring harness. Visually check for chaffed wires or other physical damage to the harness.

-> No

GO to Pinpoint Test G549822t3.

G549822t6 : CHECK FOR AN INTERMITTENT FAULT CONDITION

1.

Were there any sudden or unexpected changes in the PID readings?

-> Yes

Key off. GO to Pinpoint Test G549822t3.

-> No

GO to Pinpoint Test G549822t7.

G549822t3 : CHECK THE ECT PID VALUE

1. Key on, engine off. 2. Access the OBDII-engine coolant temperature PID using the Jaguar approved diagnostic system or a scan tool. 3. Check the ECT harness wiring and connectors for loose connections and water ingress. Monitoring the temperature readings for sudden changes while handling the harness and connectors may help in isolation of these types of fault.

Did you identify any loose connections or water ingress in the ECT harness wiring or connectors?

-> Yes

REPAIR the fault as necessary. For additional information, refer to the wiring diagrams. Clear any DTCs, test the system for normal operation.

-> No

GO to Pinpoint Test G549822t7.

www.JagDocs.com

G549822t7 : CHECK THE ECT SENSOR RETURN CIRCUIT FOR HIGH RESISTANCE

1. Key off. 2. Disconnect the ECT sensor connector, C34. 3. Key on, engine off. 4. Measure the resistance between:

C34, harness side	Battery
Pin 02	Negative terminal

Is the resistance less than 10 ohms?

-> Yes
GO to Pinpoint Test G549822t8.

-> No
GO to Pinpoint Test G549822t4.

G549822t4 : CHECK THE ECT SENSOR RETURN CIRCUIT FOR SHORT CIRCUIT TO POWER

1. Measure the resistance between:

C34, harness side	Battery
Pin 02	Positive terminal

Is the resistance geater than 100 Kohms?

-> Yes
GO to Pinpoint Test G549822t5.

-> No
GO to Pinpoint Test G549822t14.

G549822t5 : CHECK THE ECT SENSOR TO ECM RETURN CIRCUIT FOR HIGH RESISTANCE

1. Key off. 2. Disconnect the ECM connector, C101. 3. Measure the resistance between:

C34, harness side	C101, harness side
Pin 02	Pin E2

Is the resistance less than 10 ohms?

-> Yes
An intermittent fault may be present in the wiring harness. Visually check for chaffed wires or other physical damage to the harness. If no fault is found in the circuit, suspect the following component(s): **-** ECM connector **-** ECM

-> No
REPAIR the high resistance circuit. For additional information, refer to the wiring diagrams. Clear any DTCs, test the system for normal operation.

G549822t8 : CHECK THE ECT SIGNAL CIRCUIT FOR SHORT CIRCUIT TO GROUND

1. Measure the resistance between:

C34, harness side	Battery
Pin 01	Negative terminal

Is the resistance greater than 100 Kohms?

-> Yes
GO to Pinpoint Test G549822t9.

-> No
GO to Pinpoint Test G549822t12.

G549822t9 : CHECK THE ECT SIGNAL CIRCUIT FOR SHORT CIRCUIT TO POWER

1. Measure the resistance between:

C34, harness side	Battery
Pin 01	Positive terminal

www.JagDocs.com

Is the resistance greater than 100 Kohms?

-> Yes
GO to Pinpoint Test G549822t10.

-> No
GO to Pinpoint Test G549822t15.

G549822t10 : CHECK THE ECT SIGNAL CIRCUIT FOR HIGH RESISTANCE

1. Key off. 2. Disconnect the ECM connector, C101. 3. Measure the resistance between:

C34, harness side	C101, harness side
Pin 01	Pin C2

Is the resistance less than 10 ohms?

-> Yes
GO to Pinpoint Test G549822t11.

-> No
REPAIR the high resistance circuit. For additional information, refer to the wiring diagrams. Clear any DTCs, test the system for normal operation.

G549822t11 : CHECK THE COMPONENT RESISTANCE

1. Measure the resistance between:

C34, component side	C34, component side
Pin 01	Pin 02

Is the resistance between 1 - 500 Kohms?

-> Yes
An intermittent fault may be present in the wiring harness. Visually check for chaffed wires or other physical damage to the harness. If no fault is found in the circuit, suspect the following component(s): - ECT connector - ECT sensor - ECM connector - ECM

-> No
INSTALL a new ECT sensor.

Engine Coolant Temperature (ECT) Sensor (18.30.10) Clear any DTCs, test the system for normal operation.

G549822t12 : CHECK THE ECT SIGNAL AND RETURN CIRCUITS FOR SHORT CIRCUIT TO EACH OTHER

1. Key off. 2. Disconnect the ECM connector, C101. 3. Key on, engine off. 4. Measure the resistance between:

C34, harness side	C34, harness side
Pin 01	Pin 02

Is the resistance greater than 100 Kohms?

-> Yes
GO to Pinpoint Test G549822t13.

-> No
REPAIR the short circuit. For additional information, refer to the wiring diagrams. Clear any DTCs, test the system for normal operation.

G549822t13 : CHECK WHETHER THE SHORT CIRCUIT TO GROUND IS IN THE HARNESS OR THE MODULE

1. Measure the resistance between:

C34, harness side	Battery
Pin 01	Negative terminal

Is the resistance greater than 100 Kohms?

-> Yes
Suspect: **-** ECM

-> No
REPAIR the short circuit. For additional information, refer to the wiring diagrams. Clear any DTCs, test the system for normal operation.

www.JagDocs.com

G549822t14 : CHECK WHETHER THE SHORT CIRCUIT TO POWER IS IN THE HARNESS OR THE MODULE

1. Key off. 2. Disconnect the ECM connector, C101. 3. Key on, engine off. 4. Measure the resistance between:

C34, harness side	Battery
Pin 02	Positive terminal

Is the resistance greater than 100 Kohms?

-> Yes
Suspect: **-** ECM

-> No
REPAIR the short circuit. For additional information, refer to the wiring diagrams. Clear any DTCs, test the system for normal operation.

G549822t15 : CHECK WHETHER THE SHORT CIRCUIT TO POWER IS IN THE HARNESS OR THE MODULE

1. Key off. 2. Disconnect the ECM connector, C101. 3. Key on, engine off. 4. Measure the resistance between:

C34, harness side	Battery
Pin 01	Positive terminal

Is the resistance greater than 100 Kohms?

-> Yes
Suspect: **-** ECM

-> No
REPAIR the short circuit. For additional information, refer to the wiring diagrams. Clear any DTCs, test the system for normal operation.

PINPOINT TEST G549822p2 : FUEL TEMPERATURE SENSOR

G549822t16 : CHECK THE FUEL TEMPERATURE PID VALUE

1.

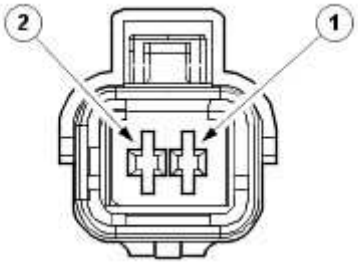

E54260

Circuit	Pin
Fuel temperature sensor - signal	01
Fuel temperature sensor - return	02

2.

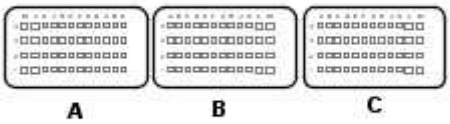

E54251

Circuit	Pin
Fuel temperature sensor - signal	B2
Fuel temperature sensor - return	G3

Temperature (degrees C)	Temperature (degrees F)	Volts
-40	-40	4.9701
-30	-22	4.9436
-20	-04	4.8983
0	32	4.7104

www.JagDocs.com

20	68	4.3092
40	104	3.6210
60	140	2.7528
80	176	1.8951
100	212	1.2389
120	248	0.7947
130	266	0.6362
150	302	0.4115

3. Make sure that the engine is cold. 4. Key on, engine off. 5. Access the ECM-fuel temperature PID using the Jaguar approved diagnostic system or a scan tool.

There are two PIDs accessible for the fuel temperature sensor, the actual reading PID, and another for limp-home. The limp-home PID is a default value, so is fixed. Make sure the actual reading PID is used.

Is the PID reading as expected for the current environmental and engine conditions?

-> Yes
GO to Pinpoint Test G549822t17.

-> No
GO to Pinpoint Test G549822t20.

G549822t17 : CHECK THE FUEL TEMPERATURE PID VALUE DURING WARM UP

1. Key on, engine running. 2. Access the ECM-fuel temperature and OBDII-engine coolant temperature PIDs using the Jaguar approved diagnostic system or a scan tool.

There are two PIDs accessible for the fuel temperature sensor, the actual reading PID, and another for limp-home. The limp-home PID is a default value, so is fixed. Make sure the actual reading PID is used. 3. Increase the engine speed to 2,000 rpm and monitor the fuel temperature reading, until the engine is at full operating temperature.

Did the fuel temperature reading rise smoothly and by more than 10 degrees C (50 degrees F)?

-> Yes
An intermittent fault may be present in the wiring harness. Visually check for chaffed wires or other physical damage to the harness.

-> No
GO to Pinpoint Test G549822t18.

G549822t18 : CHECK THE FUEL TEMPERATURE PID VALUE

1.

There are two PIDs accessible for the fuel temperature sensor, the actual reading PID, and another for limp-home. The limp-home PID is a default value, so is fixed. Make sure the actual reading PID is used.

Were there any sudden or unexpected changes in the fuel temperature readings?

-> Yes
Key off. GO to Pinpoint Test G549822t19.

-> No
GO to Pinpoint Test G549822t20.

G549822t19 : CHECK FOR AN INTERMITTENT FAULT CONDITION

1. Key on, engine off. 2. Access the ECM-fuel temperature PID using the Jaguar approved diagnostic system or a scan tool. 3. Check the fuel temperature harness wiring and connectors for loose connections and water ingress. Monitoring the temperature readings for sudden changes while handling the harness and connectors may help in isolation of these types of fault.

Did you identify any loose connections or water ingress in the fuel temperature harness wiring or connectors?

-> Yes
REPAIR the fault as necessary. For additional information, refer to the wiring diagrams. Clear any DTCs, test the system for normal operation.

-> No
GO to Pinpoint Test G549822t20.

G549822t20 : CHECK THE FUEL TEMPERATURE SENSOR RETURN CIRCUIT FOR HIGH RESISTANCE

1. Key off. 2. Disconnect the fuel temperature sensor connector, C35. 3. Key on, engine off. 4. Measure the resistance between:

www.JagDocs.com

C35, harness side	Battery
Pin 02	Negative terminal

Is the resistance less than 10 ohms?

-> Yes
GO to Pinpoint Test G549822t23.

-> No
GO to Pinpoint Test G549822t21.

G549822t21 : CHECK THE FUEL TEMPERATURE SENSOR RETURN CIRCUIT FOR SHORT CIRCUIT TO POWER

1. Measure the resistance between:

C35, harness side	Battery
Pin 02	Positive terminal

Is the resistance greater than 100 Kohms?

-> Yes
GO to Pinpoint Test G549822t22.

-> No
GO to Pinpoint Test G549822t30.

G549822t22 : CHECK THE FUEL TEMPERATURE SENSOR TO ECM RETURN CIRCUIT FOR HIGH RESISTANCE

1. Key off. 2. Disconnect the ECM connector, C101. 3. Measure the resistance between:

C35, harness side	C101, harness side
Pin 02	Pin G3

Is the resistance less than 10 ohms?

-> Yes
Suspect: **-** ECM connector **-** ECM

-> No
REPAIR the high resistance circuit. For additional information, refer to the wiring diagrams. Clear any DTCs, test the system for normal operation.

G549822t23 : CHECK THE VOLTAGE DIFFERENTIAL BETWEEN THE SIGNAL AND RETURN CIRCUITS

1. Measure the voltage between:

C35, harness side	C35, harness side
Pin 01	Pin 02

Is the voltage between 4.8 - 5.2 volts?

-> Yes
GO to Pinpoint Test G549822t27.

-> No
GO to Pinpoint Test G549822t24.

G549822t24 : CHECK THE FUEL TEMPERATURE SIGNAL CIRCUIT FOR SHORT CIRCUIT TO GROUND

1. Measure the resistance between:

C35, harness side	Battery
Pin 01	Negative terminal

Is the resistance greater than 100 Kohms?

-> Yes
GO to Pinpoint Test G549822t25.

-> No

www.JagDocs.com

GO to Pinpoint Test G549822t28.

G549822t25 : CHECK THE FUEL TEMPERATURE SIGNAL CIRCUIT FOR SHORT CIRCUIT TO POWER

1. Measure the resistance between:

C35, harness side	Battery
Pin 01	Positive terminal

Is the resistance greater than 100 Kohms?

-> Yes
GO to Pinpoint Test G549822t26.

-> No
GO to Pinpoint Test G549822t31.

G549822t26 : CHECK THE FUEL TEMPERATURE SIGNAL CIRCUIT FOR HIGH RESISTANCE

1. Key off. 2. Disconnect the ECM connector, C101. 3. Measure the resistance between:

C35, harness side	C101, harness side
Pin 01	Pin B2

Is the resistance less than 10 ohms?

-> Yes
Suspect: **-** ECM connector **-** ECM

-> No
REPAIR the high resistance circuit. For additional information, refer to the wiring diagrams. Clear any DTCs, test the system for normal operation.

G549822t27 : CHECK THE COMPONENT RESISTANCE

1. Measure the resistance between:

C35, component side	C35, component side
Pin 01	Pin 02

Is the resistance between 1 - 500 Kohms?

-> Yes
An intermittent fault may be present in the wiring harness. Visually check for chaffed wires or other physical damage to the harness. If no fault is found in the circuit, suspect the following component(s): **-** Fuel temperature connector **-** Fuel temperature sensor **-** ECM connector **-** ECM

-> No
INSTALL a new fuel temperature sensor.
Fuel Temperature Sensor (18.30.99)

G549822t28 : CHECK THE FUEL TEMPERATURE SIGNAL AND RETURN CIRCUITS FOR SHORT CIRCUIT TO EACH OTHER

1. Key off. 2. Disconnect the ECM connector, C101. 3. Key on, engine off. 4. Measure the resistance between:

C35, harness side	C35, harness side
Pin 01	Pin 02

Is the resistance greater than 100 Kohms?

-> Yes
GO to Pinpoint Test G549822t29.

-> No
REPAIR the short circuit. For additional information, refer to the wiring diagrams. Clear any DTCs, test the system for normal operation.

G549822t29 : CHECK WHETHER THE SHORT CIRCUIT TO GROUND IS IN THE HARNESS OR THE MODULE

1. Measure the resistance between:

C35, harness side	Battery
Pin 01	Negative terminal

www.JagDocs.com

Is the resistance greater than 100 Kohms?

-> Yes
Suspect: **-** ECM

-> No
REPAIR the short circuit. For additional information, refer to the wiring diagrams. Clear any DTCs, test the system for normal operation.

G549822t30 : CHECK WHETHER THE SHORT CIRCUIT TO POWER IS IN THE HARNESS OR THE MODULE

1. Key off. 2. Disconnect the ECM connector, C101. 3. Key on, engine off. 4. Measure the resistance between:

C35, harness side	Battery
Pin 02	Positive terminal

Is the resistance greater than 100 Kohms?

-> Yes
Suspect: **-** ECM

-> No
REPAIR the short circuit. For additional information, refer to the wiring diagrams. Clear any DTCs, test the system for normal operation.

G549822t31 : CHECK WHETHER THE SHORT CIRCUIT TO POWER IS IN THE HARNESS OR THE MODULE

1. Key off. 2. Disconnect the ECM connector, C101. 3. Key on, engine off. 4. Measure the resistance between:

C35, harness side	Battery
Pin 01	Positive terminal

Is the resistance greater than 100 Kohms?

-> Yes
Suspect: **-** ECM

-> No
REPAIR the short circuit. For additional information, refer to the wiring diagrams. Clear any DTCs, test the system for normal operation.

PINPOINT TEST G549822p3 : ENGINE OIL TEMPERATURE (EOT) SENSOR

G549822t32 : CHECK THE EOT PID VALUE

1. **Engine oil temperature (EOT) sensor connector, C28**

Circuit	Pin
Engine oil temperature sensor - signal	01
Engine oil temperature sensor - return	02

2. **Engine control module (ECM) connector, C100**

Circuit	Pin
Engine oil temperature sensor - signal	A1
Engine oil temperature sensor - return	K1

3. Make sure that the engine is cold. 4. Key on, engine off. 5. Access the ECM-Engine oil temperature PID using the Jaguar approved diagnostic system or a scan tool.

Is the EOT reading as expected for the current enviromental and engine conditions?

-> Yes
GO to Pinpoint Test G549822t33.

-> No
GO to Pinpoint Test G549822t36.

G549822t33 : CHECK THE EOT PID VALUE DURING WARM UP

1. Key on, engine running. 2. Access the ECM-Engine oil temperature and OBDII-Engine coolant temperature PIDs using the Jaguar approved diagnostic system or a scan tool. 3. Increase the engine speed to 2,000 rpm and monitor the EOT reading, until the engine is at full operating temperature.

www.JagDocs.com

Did the EOT reading rise smoothly and by more than 20 degrees C (68 degrees F)?

-> Yes
An intermittent fault may be present in the wiring harness. Visually check for chaffed wires or other physical damage to the harness.

-> No
GO to Pinpoint Test G549822t35.

G549822t34 : CHECK FOR AN INTERMITTENT FAULT CONDITION

1.

Were there any sudden or unexpected changes in the EOT readings?

-> Yes
Key off. GO to Pinpoint Test G549822t35.

-> No
GO to Pinpoint Test G549822t36.

G549822t35 : CHECK THE EOT PID VALUE

1. Key on, engine off. 2. Access the ECM-Engine oil temperature PID using the Jaguar approved diagnostic system or a scan tool. 3. Check the EOT harness wiring and connectors for loose connections and water ingress. Monitoring the temperature readings for sudden changes while handling the harness and connectors may help in isolation of these types of fault.

Did you identify any loose connections or water ingress in the EOT harness wiring or connectors?

-> Yes
REPAIR the fault as necessary. For additional information, refer to the wiring diagrams. Clear any DTCs, test the system for normal operation.

-> No
GO to Pinpoint Test G549822t36.

G549822t36 : CHECK THE EOT SENSOR RETURN CIRCUIT FOR HIGH RESISTANCE

1. Key off. 2. Disconnect the EOT sensor connector, C28. 3. Key on, engine off. 4. Measure the resistance between:

C28, harness side	Battery
Pin 02	Negative terminal

Is the resistance less than 10 ohms?

-> Yes
GO to Pinpoint Test G549822t39.

-> No
GO to Pinpoint Test G549822t37.

G549822t37 : CHECK THE EOT SENSOR RETURN CIRCUIT FOR SHORT CIRCUIT TO POWER

1. Measure the resistance between:

C28, harness side	Battery
Pin 02	Positive terminal

Is the resistance greater than 100 Kohms?

-> Yes
GO to Pinpoint Test G549822t38.

-> No
GO to Pinpoint Test G549822t45.

G549822t38 : CHECK THE EOT SENSOR TO ECM RETURN CIRCUIT FOR HIGH RESISTANCE

1. Key off. 2. Disconnect the ECM connector, C100. 3. Measure the resistance between:

C28, harness side	C100, harness side
Pin 02	Pin K1

www.JagDocs.com

Is the resistance less than 10 ohms?

-> Yes
Suspect: **-** ECM connector **-** ECM

-> No
REPAIR the high resistance circuit. For additional information, refer to the wiring diagrams. Clear any DTCs, test the system for normal operation.

G549822t39 : CHECK THE EOT SIGNAL CIRCUIT FOR SHORT CIRCUIT TO GROUND

1. Measure the resistance between:

C28, harness side	Battery
Pin 01	Negative terminal

Is the resistance greater than 100 Kohms?

-> Yes
GO to Pinpoint Test G549822t40.

-> No
GO to Pinpoint Test G549822t43.

G549822t40 : CHECK THE EOT SIGNAL CIRCUIT FOR SHORT CIRCUIT TO POWER

1. Measure the resistance between:

C28, harness side	Battery
Pin 01	Positive terminal

Is the resistance greater than 100 Kohms?

-> Yes
GO to Pinpoint Test G549822t41.

-> No

GO to Pinpoint Test G549822t46.

G549822t41 : CHECK THE EOT SIGNAL CIRCUIT FOR HIGH RESISTANCE

1. Key off. 2. Disconnect the ECM connector, C100. 3. Measure the resistance between:

C28, harness side	C100, harness side
Pin 01	Pin A1

Is the resistance less than 10 ohms?

-> Yes
GO to Pinpoint Test G549822t42.

-> No
REPAIR the high resistance circuit. For additional information, refer to the wiring diagrams. Clear any DTCs, test the system for normal operation.

G549822t42 : CHECK THE COMPONENT RESISTANCE

1. Measure the resistance between:

C28, component side	C28, component side
Pin 01	Pin 02

Is the resistance between 1 - 500 Kohms?

-> Yes
An intermittent fault may be present in the wiring harness. Visually check for chaffed wires or other physical damage to the harness. If no fault is found in the circuit, suspect the following component(s): - EOT connector - EOT sensor - ECM connector - ECM

-> No
INSTALL a new EOT sensor. Clear any DTCs, test the system for normal operation.

G549822t43 : CHECK THE EOT SIGNAL AND RETURN CIRCUITS FOR SHORT CIRCUIT TO EACH OTHER

1. Key off. 2. Disconnect the ECM connector, C100. 3. Key on, engine off. 4. Measure the resistance between:

www.JagDocs.com

C28, harness side	C28, harness side
Pin 01	Pin 02

Is the resistance greater than 100 Kohms?

-> Yes
GO to Pinpoint Test G549822t44.

-> No
REPAIR the short circuit. For additional information, refer to the wiring diagrams. Clear any DTCs, test the system for normal operation.

G549822t44 : CHECK WHETHER THE SHORT CIRCUIT TO GROUND IS IN THE HARNESS OR THE MODULE

1. Measure the resistance between:

C28, harness side	Battery
Pin 01	Negative terminal

Is the resistance greater than 100 Kohms?

-> Yes
Suspect: **-** ECM

-> No
REPAIR the short circuit. For additional information, refer to the wiring diagrams. Clear any DTCs, test the system for normal operation.

G549822t45 : CHECK WHETHER THE SHORT CIRCUIT TO POWER IS IN THE HARNESS OR THE MODULE

1. Key off. 2. Disconnect the ECM connector, C100. 3. Key on, engine off. 4. Measure the resistance between:

C28, harness side	Battery
Pin 02	Positive terminal

Is the resistance greater than 100 Kohms?

-> Yes
Suspect: **-** ECM

-> No
REPAIR the short circuit. For additional information, refer to the wiring diagrams. Clear any DTCs, test the system for normal operation.

G549822t46 : CHECK WHETHER THE SHORT CIRCUIT TO POWER IS IN THE HARNESS OR THE MODULE

1. Key off. 2. Disconnect the ECM connector, C100. 3. Key on, engine off. 4. Measure the resistance between:

C28, harness side	Battery
Pin 01	Positive terminal

Is the resistance greater than 100 Kohms?

-> Yes
Suspect: **-** ECM

-> No
REPAIR the short circuit. For additional information, refer to the wiring diagrams. Clear any DTCs, test the system for normal operation.

PINPOINT TEST G549822p4 : ACCELERATOR PEDAL POSITION (APP) SENSOR 1

G549822t47 : CHECK THE APP1 VALUE, WITH THE ACCELERATOR PEDAL RELEASED

1.

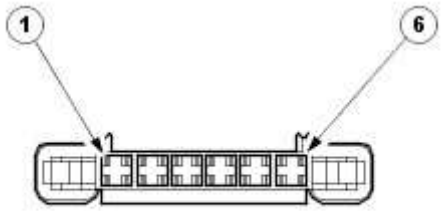

E54270

www.JagDocs.com

Circuit	Pin
Accelerator pedal position sensor 1 - signal	04
Accelerator pedal position sensor 1 - power	05
Accelerator pedal position sensor 1 - return	03

2.

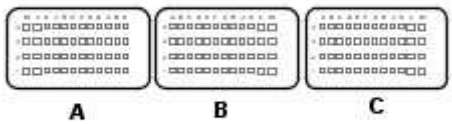

E54251

Circuit	Pin
Accelerator pedal position sensor 1 - signal	D1
Accelerator pedal position sensor 1 - power	E1
Accelerator pedal position sensor 1 - return	C1

3. Key on, engine off. 4. Make sure the accelerator pedal is released. 5. Access the ECM-Pedal position sensor 1 (voltage) PID using the Jaguar approved diagnostic system or a scan tool.

Is the voltage between 0 - 1 volts?

-> Yes
GO to Pinpoint Test G549822t85.

-> No
GO to Pinpoint Test G549822t86.

G549822t85 : CHECK THE APP1 VALUE, WITH THE ACCELERATOR FULLY DEPRESSED

1. Make sure the accelerator pedal is fully depressed. 2. Access the ECM-Pedal position sensor 1 (voltage) PID using the Jaguar approved diagnostic system or a scan tool.

Is the voltage between 2.2 - 2.7 volts?

-> Yes
An intermittent fault may be present in the wiring harness. Visually check for chaffed wires or other physical damage to the harness.

-> No
GO to Pinpoint Test G549822t86.

G549822t86 : CHECK THE APP1 SENSOR RETURN CIRCUIT FOR HIGH RESISTANCE

1. Key off. 2. Disconnect the APP sensor connector, CR14. 3. Key on, engine off. 4. Measure the resistance between:

CR14, harness side	Battery
Pin 03	Negative terminal

Is the resistance less than 10 ohms?

-> Yes
GO to Pinpoint Test G549822t87.

-> No
GO to Pinpoint Test G549822t104.

G549822t87 : CHECK FOR POWER TO THE APP1 SENSOR

1. Measure the voltage between:

CR14, harness side	Battery
Pin 05	Negative terminal

Is the voltage between 4.8 - 5.2 volts?

-> Yes
GO to Pinpoint Test G549822t88.

www.JagDocs.com

-> No
GO to Pinpoint Test G549822t96.

G549822t88 : CHECK THE APP1 SIGNAL CIRCUIT FOR SHORT CIRCUIT TO GROUND

1. Measure the resistance between:

CR14, harness side	Battery
Pin 04	Negative terminal

Is the resistance greater than 100 Kohms?

-> Yes
GO to Pinpoint Test G549822t89.

-> No
GO to Pinpoint Test G549822t92.

G549822t89 : CHECK THE APP1 SIGNAL CIRCUIT FOR SHORT CIRCUIT TO POWER

1. Measure the resistance between:

CR14, harness side	Battery
Pin 04	Positive terminal

Is the resistance greater than 100 Kohms?

-> Yes
GO to Pinpoint Test G549822t90.

-> No
GO to Pinpoint Test G549822t94.

G549822t90 : CHECK THE APP1 SIGNAL AND POWER CIRCUITS FOR SHORT CIRCUIT TO EACH OTHER

1. Measure the resistance between:

CR14, harness side	CR14, harness side
Pin 04	Pin 05

Is the resistance greater than 100 Kohms?

-> Yes
GO to Pinpoint Test G549822t91.

-> No
GO to Pinpoint Test G549822t95.

G549822t91 : CHECK THE APP1 SIGNAL CIRCUIT FOR HIGH RESISTANCE

1. Key off. 2. Disconnect the ECM connector, EC66. 3. Measure the resistance between:

CR14, harness side	EC66, harness side
Pin 04	Pin D1

Is the resistance less than 10 ohms?

-> Yes
An intermittent fault may be present in the wiring harness. Visually check for chaffed wires or other physical damage to the harness. If no fault is found in the circuit, suspect the following component(s): - APP connector - APP sensor - ECM connector - ECM

-> No
REPAIR the high resistance circuit. For additional information, refer to the wiring diagrams. Clear any DTCs, test the system for normal operation.

G549822t92 : CHECK THE APP1 SIGNAL AND RETURN CIRCUITS FOR SHORT CIRCUIT TO EACH OTHER

1. Key off. 2. Disconnect the ECM connector, EC66. 3. Key on, engine off. 4. Measure the resistance between:

www.JagDocs.com

CR14, harness side	CR14, harness side
Pin 04	Pin 03

Is the resistance greater than 100 Kohms?

-> Yes
GO to Pinpoint Test G549822t93.

-> No
REPAIR the short circuit. For additional information, refer to the wiring diagrams. Clear any DTCs, test the system for normal operation.

G549822t93 : CHECK WHETHER THE SHORT CIRCUIT TO GROUND IS IN THE HARNESS OR THE MODULE

1. Measure the resistance between:

CR14, harness side	Battery
Pin 04	Negative terminal

Is the resistance greater than 100 Kohms?

-> Yes
Suspect: **-** ECM

-> No
REPAIR the short circuit. For additional information, refer to the wiring diagrams. Clear any DTCs, test the system for normal operation.

G549822t94 : CHECK WHETHER THE SHORT CIRCUIT TO POWER IS IN THE HARNESS OR THE MODULE

1. Key off. 2. Disconnect the ECM connector, EC66. 3. Key on, engine off. 4. Measure the resistance between:

CR14, harness side	Battery
Pin 04	Positive terminal

Is the resistance greater than 100 Kohms?

-> Yes
Suspect: **-** ECM

-> No
REPAIR the short circuit. For additional information, refer to the wiring diagrams. Clear any DTCs, test the system for normal operation.

G549822t95 : CHECK WHETHER THE SHORT CIRCUIT IS IN THE HARNESS OR THE MODULE

1. Key off. 2. Disconnect the ECM connector, EC66. 3. Key on, engine off. 4. Measure the resistance between:

CR14, harness side	CR14, harness side
Pin 04	Pin 05
Pin 04	Pin 03

Are the resistances greater than 100 Kohms?

-> Yes
Suspect: **-**ECM

-> No
REPAIR the short circuit. For additional information, refer to the wiring diagrams. Clear any DTCs, test the system for normal operation.

G549822t96 : CHECK THE 5 VOLT SUPPLY CIRCUIT FOR SHORT CIRCUIT TO GROUND

1. Measure the resistance between:

CR14, harness side	Battery
Pin 05	Negative terminal

Is the resistance greater than 100 Kohms?

-> Yes
GO to Pinpoint Test G549822t97.

www.JagDocs.com

-> No
GO to Pinpoint Test G549822t101.

G549822t97 : CHECK THE 5 VOLT SUPPLY CIRCUIT FOR SHORT CIRCUIT TO POWER

1. Measure the resistance between:

CR14, harness side	Battery
Pin 05	Positive terminal

Is the resistance greater than 100 Kohms?

-> Yes
GO to Pinpoint Test G549822t98.

-> No
GO to Pinpoint Test G549822t103.

G549822t98 : CHECK THE 5 VOLT SUPPLY CIRCUIT FOR HIGH RESISTANCE

1. Key off. 2. Disconnect the ECM connector, EC66. 3. Measure the resistance between:

CR14, harness side	EC66, harness side
Pin 05	Pin E1

Is the resistance less than 10 ohms?

-> Yes
Suspect : **-** ECM connector **-** ECM

-> No
REPAIR the high resistance circuit. For additional information, refer to the wiring diagrams. Clear any DTCs, test the system for normal operation.

G549822t99 : CHECK THE APP1 SUPPLY AND RETURN CIRCUITS FOR SHORT CIRCUIT TO EACH OTHER

1. Key off. 2. Disconnect the ECM connector, EC66. 3. Key on, engine off. 4. Measure the resistance between:

CR14, harness side	CR14, harness side
Pin 05	Pin 03

Is the resistance greater than 100 Kohms?

-> Yes
GO to Pinpoint Test G549822t100.

-> No
REPAIR the short circuit. For additional information, refer to the wiring diagrams. Clear any DTCs, test the system for normal operation.

G549822t100 : CHECK THE APP1 SENSOR TO ECM RETURN CIRCUIT FOR HIGH RESISTANCE

1. Measure the resistance between:

CR14, harness side	EC66, harness side
Pin 03	Pin C1

Is the resistance less than 10 ohms?

-> Yes
Suspect : **-** ECM connector **-** ECM

-> No
REPAIR the high resistance circuit. For additional information, refer to the wiring diagrams. Clear any DTCs, test the system for normal operation.

G549822t101 : CHECK THE APP1 SUPPLY AND RETURN CIRCUITS FOR SHORT CIRCUIT TO EACH OTHER

1. Key off. 2. Disconnect the ECM connector, EC66. 3. Key on, engine off. 4. Measure the resistance between:

www.JagDocs.com

CR14, harness side	CR14, harness side
Pin 05	Pin 03

Is the resistance greater than 100 Kohms?

-> Yes
GO to Pinpoint Test G549822t102.

-> No
REPAIR the short circuit. For additional information, refer to the wiring diagrams. Clear any DTCs, test the system for normal operation.

G549822t102 : CHECK WHETHER THE SHORT CIRCUIT TO GROUND IS IN THE HARNESS OR THE MODULE

1. Measure the resistance between:

CR14, harness side	Battery
Pin 05	Negative terminal

Is the resistance greater than 100 Kohms?

-> Yes
Suspect: **-** ECM

-> No
REPAIR the short circuit. For additional information, refer to the wiring diagrams. Clear any DTCs, test the system for normal operation.

G549822t103 : CHECK WHETHER THE SHORT CIRCUIT TO POWER IS IN THE HARNESS OR THE MODULE

1. Key off. 2. Disconnect the ECM connector, EC66. 3. Key on, engine off. 4. Measure the resistance between:

CR14, harness side	Battery
Pin 05	Positive terminal

Is the resistance greater than 100 Kohms?

-> Yes
Suspect: **-** ECM

-> No
REPAIR the short circuit. For additional information, refer to the wiring diagrams. Clear any DTCs, test the system for normal operation.

G549822t104 : CHECK THE APP1 SENSOR RETURN CIRCUIT FOR SHORT CIRCUIT TO POWER

1. Measure the resistance between:

CR14, harness side	Battery
Pin 03	Positive terminal

Is the resistance greater than 100 Kohms?

-> Yes
GO to Pinpoint Test G549822t99.

-> No
GO to Pinpoint Test G549822t105.

G549822t105 : CHECK WHETHER THE SHORT CIRCUIT TO POWER IS IN THE HARNESS OR THE MODULE

1. Key off. 2. Disconnect the ECM connector, EC66. 3. Key on, engine off. 4. Measure the resistance between:

CR14, harness side	Battery
Pin 03	Positive terminal

Is the resistance greater than 100 Kohms?

-> Yes
Suspect: **-** ECM

-> No

www.JagDocs.com

REPAIR the short circuit. For additional information, refer to the wiring diagrams. Clear any DTCs, test the system for normal operation.

PINPOINT TEST G549822p5 : ACCELERATOR PEDAL POSITION (APP) SENSOR 2

G549822t48 : CHECK THE APP2 VALUE, WITH THE ACCELERATOR PEDAL RELEASED

1.

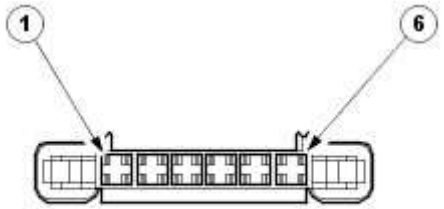

E54270

Circuit	Pin
Accelerator pedal position sensor 2 - signal	01
Accelerator pedal position sensor 2 - power	02
Accelerator pedal position sensor 2 - return	06

2.

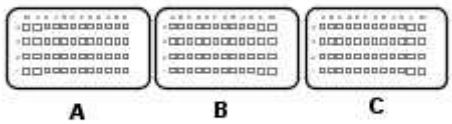

E54251

Circuit	Pin
Accelerator pedal position sensor 2 - signal	C2
Accelerator pedal position sensor 2 - power	D2

Accelerator pedal position sensor 2 - return	B2

3. Key on, engine off. 4. Make sure the accelerator pedal is released. 5. Access the ECM-Pedal position sensor 2 (voltage) PID using the Jaguar approved diagnostic system or a scan tool.

Is the voltage between 3 - 5 volts?

-> Yes
GO to Pinpoint Test G549822t106.

-> No
GO to Pinpoint Test G549822t107.

G549822t106 : CHECK THE APP2 VALUE, WITH THE ACCELERATOR FULLY DEPRESSED

1. Make sure the accelerator pedal is fully depressed. 2. Access the ECM-Pedal position sensor 2 (voltage) PID using the Jaguar approved diagnostic system or a scan tool.

Is the voltage between 2.2 - 2.7 volts?

-> Yes
An intermittent fault may be present in the wiring harness. Visually check for chaffed wires or other physical damage to the harness.

-> No
GO to Pinpoint Test G549822t107.

G549822t107 : CHECK THE APP2 SENSOR RETURN CIRCUIT FOR HIGH RESISTANCE

1. Key off. 2. Disconnect the APP sensor connector, CR14. 3. Key on, engine off. 4. Measure the resistance between:

CR14, harness side	Battery
Pin 06	Negative terminal

Is the resistance less than 10 ohms?

-> Yes
GO to Pinpoint Test G549822t108.

www.JagDocs.com

-> No
GO to Pinpoint Test G549822t120.

G549822t108 : CHECK THE SUPPLY TO THE APP2 SENSOR

1. Measure the voltage between:

CR14, harness side	Battery
Pin 02	Negative terminal

Is the voltage between 4.8 - 5.2 volts?

-> Yes
GO to Pinpoint Test G549822t109.

-> No
GO to Pinpoint Test G549822t117.

G549822t109 : CHECK THE APP2 SIGNAL CIRCUIT FOR SHORT CIRCUIT TO GROUND

1. Measure the resistance between:

CR14, harness side	Battery
Pin 01	Negative terminal

Is the resistance greater than 100 Kohms?

-> Yes
GO to Pinpoint Test G549822t110.

-> No
GO to Pinpoint Test G549822t113.

G549822t110 : CHECK THE APP2 SIGNAL CIRCUIT FOR SHORT CIRCUIT TO POWER

1. Measure the resistance between:

CR14, harness side	Battery
Pin 01	Positive terminal

Is the resistance greater than 100 Kohms?

-> Yes

GO to Pinpoint Test G549822t111.

-> No

GO to Pinpoint Test G549822t115.

G549822t111 : CHECK THE APP2 SIGNAL AND POWER CIRCUITS FOR SHORT CIRCUIT TO EACH OTHER

1. Measure the resistance between:

CR14, harness side	CR14, harness side
Pin 01	Pin 02

Is the resistance greater than 100 Kohms?

-> Yes

GO to Pinpoint Test G549822t112.

-> No

GO to Pinpoint Test G549822t116.

G549822t112 : CHECK THE APP2 SIGNAL CIRCUIT FOR HIGH RESISTANCE

1. Key off. 2. Disconnect the ECM connector, EC66. 3. Measure the resistance between:

CR14, harness side	EC66, harness side

www.JagDocs.com

Pin 01	Pin C2

Is the resistance less than 10 ohms?

-> Yes
An intermittent fault may be present in the wiring harness. Visually check for chaffed wires or other physical damage to the harness. If no fault is found in the circuit, suspect the following component(s): **-** APP connector **-** APP sensor **-** ECM connector **-** ECM

-> No
REPAIR the high resistance circuit. For additional information, refer to the wiring diagrams. Clear any DTCs, test the system for normal operation.

G549822t113 : CHECK THE APP2 SIGNAL AND RETURN CIRCUITS FOR SHORT CIRCUIT TO EACH OTHER

1. Key off. 2. Disconnect the ECM connector, EC66. 3. Key on, engine off. 4. Measure the resistance between:

CR14, harness side	**CR14, harness side**
Pin 01	Pin 06

Is the resistance greater than 100 Kohms?

-> Yes
GO to Pinpoint Test G549822t114.

-> No
REPAIR the short circuit. For additional information, refer to the wiring diagrams. Clear any DTCs, test the system for normal operation.

G549822t114 : CHECK WHETHER THE SHORT CIRCUIT TO GROUND IS IN THE HARNESS OR THE MODULE

1. Measure the resistance between:

CR14, harness side	**Battery**
Pin 01	Negative terminal

Is the resistance greater than 100 Kohms?

-> Yes
Suspect: **-** ECM

-> No
REPAIR the short circuit. For additional information, refer to the wiring diagrams. Clear any DTCs, test the system for normal operation.

G549822t115 : CHECK WHETHER THE SHORT CIRCUIT TO POWER IS IN THE HARNESS OR THE MODULE

1. Key off. 2. Disconnect the ECM connector, EC66. 3. Key on, engine off. 4. Measure the resistance between:

CR14, harness side	Battery
Pin 01	Positive terminal

Is the resistance greater than 100 Kohms?

-> Yes
Suspect: **-** ECM

-> No
REPAIR the short circuit. For additional information, refer to the wiring diagrams. Clear any DTCs, test the system for normal operation.

G549822t116 : CHECK WHETHER SHORT CIRCUIT IS IN THE HARNESS OR THE MODULE

1. Key off. 2. Disconnect the ECM connector, EC66. 3. Measure the resistance between:

CR14, harness side	CR14, harness side
Pin 01	Pin 02

Is the resistance greater than 100 Kohms?

-> Yes
Suspect: **-**ECM

-> No

www.JagDocs.com

REPAIR the short circuit. For additional information, refer to the wiring diagrams. Clear any DTCs, test the system for normal operation.

G549822t117 : CHECK THE 5 VOLT SUPPLY CIRCUIT FOR SHORT CIRCUIT TO GROUND

1. Measure the resistance between:

CR14, harness side	Battery
Pin 02	Negative terminal

Is the resistance greater than 100 Kohms?

-> Yes
GO to Pinpoint Test G549822t118.

-> No
GO to Pinpoint Test G549822t123.

G549822t118 : CHECK THE 5 VOLT SUPPLY CIRCUIT FOR SHORT CIRCUIT TO POWER

1. Measure the resistance between:

CR14, harness side	Battery
Pin 02	Positive terminal

Is the resistance greater than 100 Kohms?

-> Yes
GO to Pinpoint Test G549822t119.

-> No
GO to Pinpoint Test G549822t125.

G549822t119 : CHECK THE 5 VOLT SUPPLY CIRCUIT FOR HIGH RESISTANCE

1. Key off. 2. Disconnect the ECM connector, EC66. 3. Measure the resistance between:

CR14, harness side	EC66, harness side
Pin 02	Pin D2

Is the resistance less than 10 ohms?

-> Yes
Suspect : **-** ECM connector **-** ECM

-> No
REPAIR the high resistance circuit. For additional information, refer to the wiring diagrams. Clear any DTCs, test the system for normal operation.

G549822t120 : CHECK THE APP2 SENSOR RETURN CIRCUIT FOR SHORT CIRCUIT TO POWER

1. Measure the resistance between:

CR14, harness side	Battery
Pin 06	Positive terminal

Is the resistance greater than 100 Kohms?

-> Yes
GO to Pinpoint Test G549822t121.

-> No
GO to Pinpoint Test G549822t126.

G549822t121 : CHECK THE APP2 SUPPLY AND RETURN CIRCUITS FOR SHORT CIRCUIT TO EACH OTHER

1. Key off. 2. Disconnect the ECM connector, EC66. 3. Key on, engine off. 4. Measure the resistance between:

CR14, harness side	CR14, harness side
Pin 02	Pin 06

www.JagDocs.com

Is the resistance greater than 100 Kohms?

-> Yes
GO to Pinpoint Test G549822t122.

-> No
REPAIR the short circuit. For additional information, refer to the wiring diagrams. Clear any DTCs, test the system for normal operation.

G549822t122 : CHECK THE APP2 SENSOR TO ECM RETURN CIRCUIT FOR HIGH RESISTANCE

1. Measure the resistance between:

CR14, harness side	EC66, harness side
Pin 06	Pin B2

Is the resistance less than 10 ohms?

-> Yes
Suspect : **-** ECM connector **-** ECM

-> No
REPAIR the high resistance circuit. For additional information, refer to the wiring diagrams. Clear any DTCs, test the system for normal operation.

G549822t123 : CHECK THE APP2 SUPPLY AND RETURN CIRCUITS FOR SHORT CIRCUIT TO EACH OTHER

1. Key off. 2. Disconnect the ECM connector, EC66. 3. Measure the resistance between:

CR14, harness side	CR14, harness side
Pin 02	Pin 06

Is the resistance greater than 100 Kohms?

-> Yes
GO to Pinpoint Test G549822t124.

-> No

REPAIR the short circuit. For additional information, refer to the wiring diagrams. Clear any DTCs, test the system for normal operation.

G549822t124 : CHECK WHETHER THE SHORT CIRCUIT TO GROUND IS IN THE HARNESS OR THE MODULE

1. Measure the resistance between:

CR14, harness side	Battery
Pin 02	Negative terminal

Is the resistance greater than 100 Kohms?

-> Yes
Suspect: **-** ECM

-> No
REPAIR the short circuit. For additional information, refer to the wiring diagrams. Clear any DTCs, test the system for normal operation.

G549822t125 : CHECK WHETHER THE SHORT CIRCUIT TO POWER IS IN THE HARNESS OR THE MODULE

1. Key off. 2. Disconnect the ECM connector, EC66. 3. Key on, engine off. 4. Measure the resistance between:

CR14, harness side	Battery
Pin 02	Positive terminal

Is the resistance greater than 100 Kohms?

-> Yes
Suspect: **-** ECM

-> No
REPAIR the short circuit. For additional information, refer to the wiring diagrams. Clear any DTCs, test the system for normal operation.

G549822t126 : CHECK WHETHER THE SHORT CIRCUIT TO POWER IS IN THE HARNESS OR THE MODULE

1. Key off. 2. Disconnect the ECM connector, EC66. 3. Key on, engine off. 4. Measure the resistance between:

www.JagDocs.com

CR14, harness side	Battery
Pin 06	Positive terminal

Is the resistance greater than 100 Kohms?

-> Yes
Suspect: **-** ECM

-> No
REPAIR the short circuit. For additional information, refer to the wiring diagrams. Clear any DTCs, test the system for normal operation.

PINPOINT TEST G549822p6 : AIR CHARGE TEMPERATURE (ACT) SENSOR

G549822t49 : CHECK THE ACT SENSOR RETURN CIRCUIT FOR HIGH RESISTANCE

1.

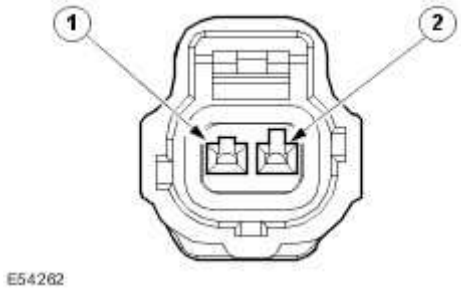

Circuit	Pin
Air charge temperature sensor - signal	01
Air charge temperature sensor - return	02

2.

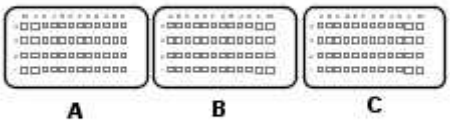

E54251

Circuit	Pin
Air charge temperature sensor - signal	B1
Air charge temperature sensor - return	G3

Resistance (ohms)	Temperature (degrees C)	Temperature (degrees F)	Volts
209603	-40	-40	4.9179
120372	-30	-22	4.8587
71668	-20	-04	4.7672
44087	-10	14	4.6323
27936	0	32	4.4433
18187	10	50	4.1931
12136	20	68	3.8808
8284	30	86	3.5149
5774	40	104	3.1130
4103	50	122	2.6983
2967	60	140	2.2940
2182	70	158	1.9201
1628	80	176	1.5874

www.JagDocs.com

1233	90	194	1.3026
949	100	212	1.0639
735	110	230	0.8678
578	120	248	0.7087
459	130	266	0.5797

3. Key off. 4. Disconnect the ACT sensor connector, C69. 5. Key on, engine off. 6. Measure the resistance between:

C69, harness side	Battery
Pin 02	Negative terminal

Is the resistance less than 10 ohms?

-> Yes
GO to Pinpoint Test G549822t52.

-> No
GO to Pinpoint Test G549822t50.

G549822t50 : CHECK THE ACT SENSOR RETURN CIRCUIT FOR SHORT CIRCUIT TO POWER

1. Measure the resistance between:

C69, harness side	Battery
Pin 02	Positive terminal

Is the resistance greater than 100 Kohms?

-> Yes
GO to Pinpoint Test G549822t51.

-> No
GO to Pinpoint Test G549822t59.

G549822t51 : CHECK THE ACT SENSOR TO ECM RETURN CIRCUIT FOR HIGH RESISTANCE

1. Key off. 2. Disconnect the ECM connector, C101. 3. Measure the resistance between:

C69, harness side	C101, harness side
Pin 02	Pin G3

Is the resistance less than 10 ohms?

-> Yes
Suspect: **-** ECM connector **-** ECM

-> No
REPAIR the high resistance circuit. For additional information, refer to the wiring diagrams. Clear any DTCs, test the system for normal operation.

G549822t52 : CHECK FOR POWER TO THE ACT SENSOR

1. Measure the voltage between:

C69, harness side	Battery
Pin 01	Negative terminal

Is the voltage between 4.8 - 5.2 volts?

-> Yes
GO to Pinpoint Test G549822t56.

-> No
GO to Pinpoint Test G549822t53.

G549822t53 : CHECK THE ACT SIGNAL CIRCUIT FOR SHORT CIRCUIT TO GROUND

1. Measure the resistance between:

www.JagDocs.com

C69, harness side	Battery
Pin 01	Negative terminal

Is the resistance greater than 100 Kohms?

-> Yes
GO to Pinpoint Test G549822t54.

-> No
GO to Pinpoint Test G549822t57.

G549822t54 : CHECK THE ACT SIGNAL CIRCUIT FOR SHORT CIRCUIT TO POWER

1. Measure the resistance between:

C69, harness side	Battery
Pin 01	Positive terminal

Is the resistance greater than 100 Kohms?

-> Yes
GO to Pinpoint Test G549822t55.

-> No
GO to Pinpoint Test G549822t60.

G549822t55 : CHECK THE ACT SIGNAL CIRCUIT FOR HIGH RESISTANCE

1. Key off. 2. Disconnect the ECM connector, C101. 3. Measure the resistance between:

C69, harness side	C101, harness side
Pin 01	Pin B1

Is the resistance less than 10 ohms?

-> Yes
Suspect: **-** ECM connector **-** ECM

-> No
REPAIR the high resistance circuit. For additional information, refer to the wiring diagrams. Clear any DTCs, test the system for normal operation.

G549822t56 : CHECK THE COMPONENT RESISTANCE

1. Measure the resistance between:

C69, component side	C69, component side
Pin 01	Pin 02

Is the resistance between 578 ohms - 71 Kohms?

-> Yes
An intermittent fault may be present in the wiring harness. Visually check for chaffed wires or other physical damage to the harness. If no fault is found in the circuit, suspect the following component(s): **-** ACT connector. **-** ACT sensor. **-** ECM connector. **-** ECM

-> No
INSTALL a new ACT sensor.

G549822t57 : CHECK THE ACT SIGNAL AND RETURN CIRCUITS FOR SHORT CIRCUIT TO EACH OTHER

1. Key off. 2. Disconnect the ECM connector, C101. 3. Measure the resistance between:

C69, harness side	C69, harness side
Pin 01	Pin 02

Is the resistance greater than 100 Kohms?

-> Yes
GO to Pinpoint Test G549822t58.

-> No
REPAIR the short circuit. For additional information, refer to the wiring diagrams. Clear any DTCs, test the system for normal operation.

www.JagDocs.com

G549822t58 : CHECK WHETHER THE SHORT CIRCUIT TO GROUND IS IN THE HARNESS OR THE MODULE

1. Key on, engine off. 2. Measure the resistance between:

C69, harness side	Battery
Pin 01	Negative terminal

Is the resistance greater than 100 Kohms?

-> Yes
Suspect: **-** ECM

-> No
REPAIR the short circuit. For additional information, refer to the wiring diagrams. Clear any DTCs, test the system for normal operation.

G549822t59 : CHECK WHETHER THE SHORT CIRCUIT TO POWER IS IN THE HARNESS OR THE MODULE

1. Key off. 2. Disconnect the ECM connector, C101. 3. Key on, engine off. 4. Measure the resistance between:

C69, harness side	Battery
Pin 02	Positive terminal

Is the resistance greater than 100 Kohms?

-> Yes
Suspect: **-** ECM

-> No
REPAIR the short circuit. For additional information, refer to the wiring diagrams. Clear any DTCs, test the system for normal operation.

G549822t60 : CHECK WHETHER THE SHORT CIRCUIT TO POWER IS IN THE HARNESS OR THE MODULE

1. Key off. 2. Disconnect the ECM connector, C101. 3. Key on, engine off. 4. Measure the resistance between:

C69, harness side	Battery

Pin 01	Positive terminal

Is the resistance greater than 100 Kohms?

-> Yes
Suspect: **-** ECM

-> No
REPAIR the short circuit. For additional information, refer to the wiring diagrams. Clear any DTCs, test the system for normal operation.

PINPOINT TEST G549822p7 : KNOCK SENSOR (KS) (RIGHT HAND BANK)

G549822t61 : CHECK THE KS CIRCUIT(S) FOR SHORT CIRCUIT TO GROUND

1.

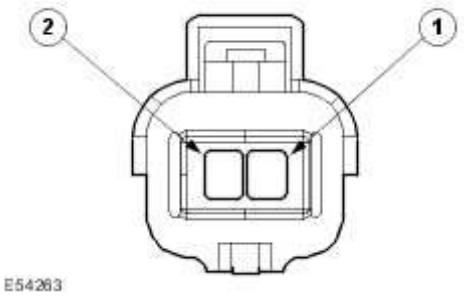

Circuit	Pin
Knock sensor - positive	01
Knock sensor - negative	02

2.

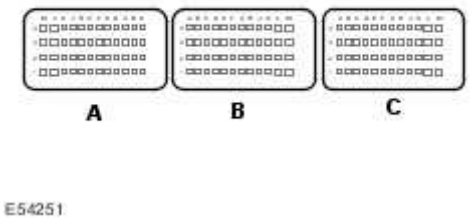

www.JagDocs.com

Circuit	Pin
Knock sensor - positive	E4
Knock sensor - negative	D4

3. Key off. 4. Disconnect the right hand bank KS connector, C87. 5. Disconnect the ECM connector, C100. 6. Measure the resistance between:

C87, harness side	Battery
Pin 01	Negative terminal
Pin 02	Negative terminal

Are the resistances greater than 100 Kohms?

-> Yes
GO to Pinpoint Test G549822t62.

-> No
REPAIR the short circuit. For additional information, refer to the wiring diagrams. Clear any DTCs, test the system for normal operation.

G549822t62 : CHECK THE KS CIRCUIT(S) FOR SHORT CIRCUIT TO POWER

1. Key on, engine off. 2. Measure the resistance between:

C87, harness side	Battery
Pin 01	Positive terminal
Pin 02	Positive terminal

Are the resistances greater than 100 Kohms?

-> Yes
GO to Pinpoint Test G549822t63.

-> No

REPAIR the short circuit. For additional information, refer to the wiring diagrams. Clear any DTCs, test the system for normal operation.

G549822t63 : CHECK THE KS SIGNAL AND RETURN CIRCUITS FOR SHORT CIRCUIT TO EACH OTHER

1. Measure the resistance between:

C87, harness side	C87, harness side
Pin 01	Pin 02

Is the resistance greater than 100 Kohms?

-> Yes
GO to Pinpoint Test G549822t64.

-> No
REPAIR the short circuit. For additional information, refer to the wiring diagrams. Clear any DTCs, test the system for normal operation.

G549822t64 : CHECK THE KS CIRCUIT(S) FOR HIGH RESISTANCE

1. Measure the resistance between:

C87, harness side	C100, harness side
Pin 01	Pin E4
Pin 02	Pin D4

Are the resistances less than 10 ohms?

-> Yes
An intermittent fault may be present in the wiring harness. Visually check for chaffed wires or other physical damage to the harness. If no fault is found in the circuit, suspect the following component(s): - KS connector - KS sensor - ECM connector - ECM

-> No
REPAIR the high resistance circuit. For additional information, refer to the wiring diagrams. Clear any DTCs, test the system for normal operation.

www.JagDocs.com

PINPOINT TEST G549822p8 : KNOCK SENSOR (KS) (LEFT HAND BANK)

G549822t65 : CHECK THE KS CIRCUIT(S) FOR SHORT CIRCUIT TO GROUND

1.

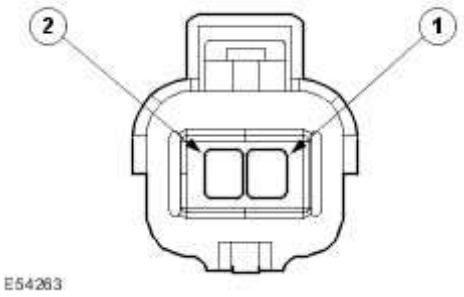

Circuit	Pin
Knock sensor - positive	01
Knock sensor - negative	02

2.

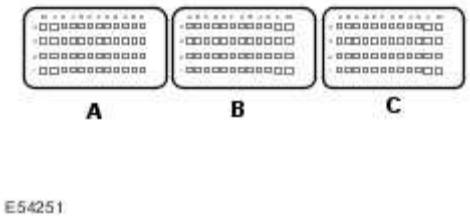

Circuit	Pin
Knock sensor - positive	D3
Knock sensor - negative	C4

3. Key off. 4. Disconnect the left hand bank KS connector, C88. 5. Disconnect the ECM connector, C100. 6. Measure the resistance between:

C88, harness side	Battery
Pin 01	Negative terminal

Pin 02	Negative terminal

Are the resistances greater than 100 Kohms?

-> Yes
GO to Pinpoint Test G549822t66.

-> No
REPAIR the short circuit. For additional information, refer to the wiring diagrams. Clear any DTCs, test the system for normal operation.

G549822t66 : CHECK THE KS CIRCUIT(S) FOR SHORT CIRCUIT TO POWER

1. Key on, engine off. 2. Measure the resistance between:

C88, harness side	Battery
Pin 01	Positive terminal
Pin 02	Positive terminal

Are the resistances greater than 100 Kohms?

-> Yes
GO to Pinpoint Test G549822t67.

-> No
REPAIR the short circuit. For additional information, refer to the wiring diagrams. Clear any DTCs, test the system for normal operation.

G549822t67 : CHECK THE KS SIGNAL AND RETURN CIRCUITS FOR SHORT CIRCUIT TO EACH OTHER

1. Measure the resistance between:

C88, harness side	C88, harness side
Pin 01	Pin 02

Is the resistance greater than 100 Kohms?

www.JagDocs.com

-> Yes
GO to Pinpoint Test G549822t68.

-> No
REPAIR the short circuit. For additional information, refer to the wiring diagrams. Clear any DTCs, test the system for normal operation.

G549822t68 : CHECK THE KS CIRCUIT(S) FOR HIGH RESISTANCE

1. Measure the resistance between:

C88, harness side	C100, harness side
Pin 01	Pin D3
Pin 02	Pin C4

Are the resistances less than 10 ohms?

-> Yes
An intermittent fault may be present in the wiring harness. Visually check for chaffed wires or other physical damage to the harness. If no fault is found in the circuit, suspect the following component(s): **-** KS connector **-** KS sensor **-** ECM connector **-** ECM

-> No
REPAIR the high resistance circuit. For additional information, refer to the wiring diagrams. Clear any DTCs, test the system for normal operation.

PINPOINT TEST G549822p9 : INTAKE AIR TEMPERATURE (IAT) SENSOR

G549822t69 : CHECK THE IAT PID VALUE

1.

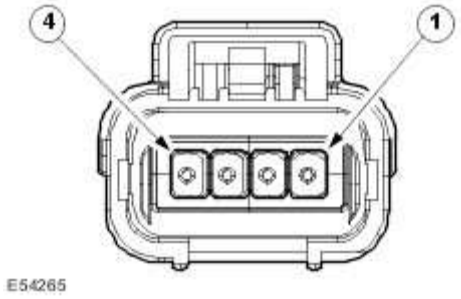

Circuit	Pin
Intake air temperature sensor - signal	02
Intake air temperature sensor - return	03

2.

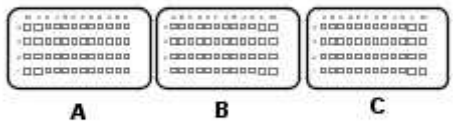

E54251

Circuit	Pin
Intake air temperature - return	L4
Intake air temperature - signal	F1
Mass air flow sensor - return	L4

Resistance (ohms)	Temperature (degreees C)	Temperature (degrees F)	Volts
44373	-40	-40	4.7844
25572	-30	-22	4.6373
15141	-20	-04	4.4166
9202	-10	14	4.1073
5774	0	32	3.7137
3714	10	50	3.2499
2448	20	68	2.7518
1671	30	86	2.2759

www.JagDocs.com

1150	40	104	1.8254
816.5	50	122	1.4497
583.1	60	140	1.1287
426.1	70	158	0.8792
315.8	80	176	0.6818
238.1	90	194	0.5319
182.8	100	212	0.4187
141.2	110	230	0.3297
110.3	120	248	0.2613
87.45	130	266	0.2095

3. Make sure that the engine is cold. 4. Key on, engine off. 5. Access the ECM-Intake air temperature PID using the Jaguar approved diagnostic system or a scan tool.

Is the IAT reading as expected for the current environmental and engine conditions?

-> Yes
GO to Pinpoint Test G549822t70.

-> No
GO to Pinpoint Test G549822t73.

G549822t70 : CHECK THE IAT PID VALUE AT INCREASED RPM

1. Key on, engine running. 2. Access the ECM-Intake air temperature PID using the Jaguar approved diagnostic system or a scan tool. 3. Slowly increase the engine speed to 4,000 rpm while monitoring the IAT reading.

Did the IAT reading rise smoothly?

-> Yes
An intermittent fault may be present in the wiring harness. Visually check for chaffed wires or other physical damage to the harness.

-> No

GO to Pinpoint Test G549822t71.

G549822t71 : CHECK FOR AN INTERMITTENT FAULT CONDITION

1.

Were there any sudden or unexpected changes in the IAT readings?

-> Yes
Key off. GO to Pinpoint Test G549822t72.

-> No
GO to Pinpoint Test G549822t73.

G549822t72 : CHECK THE IAT PID VALUE

1. Key on, engine off. 2. Access the ECM-Intake air temperature PID using the Jaguar approved diagnostic system or a scan tool. 3. Check the IAT harness wiring and connectors for loose connections and water ingress. Monitoring the temperature readings for sudden changes, while handling the harness and connectors, may help in isolation of these types of fault.

Did you identify any loose connections or water ingress in the IAT harness wiring or connectors?

-> Yes
REPAIR the fault as necessary. For additional information, refer to the wiring diagrams. Clear any DTCs, test the system for normal operation.

-> No
GO to Pinpoint Test G549822t73.

G549822t73 : CHECK THE IAT SENSOR RETURN CIRCUIT FOR HIGH RESISTANCE

1. Key off. 2. Disconnect the MAF1 sensor connector, EC67. 3. Key on, engine off. 4. Measure the resistance between:

EC67, harness side	Battery
Pin 03	Negative terminal

Is the resistance less than 10 ohms?

www.JagDocs.com

-> Yes
GO to Pinpoint Test G549822t76.

-> No
GO to Pinpoint Test G549822t74.

G549822t74 : CHECK THE IAT SENSOR RETURN CIRCUIT FOR SHORT CIRCUIT TO POWER

1. Measure the resistance between:

EC67, harness side	Battery
Pin 03	Positive terminal

Is the resistance greater than 100 Kohms?

-> Yes
GO to Pinpoint Test G549822t75.

-> No
GO to Pinpoint Test G549822t83.

G549822t75 : CHECK THE IAT SENSOR TO ECM RETURN CIRCUIT FOR HIGH RESISTANCE

1. Key off. 2. Disconnect the ECM connector, EC66. 3. Measure the resistance between:

EC67, harness side	EC66, harness side
Pin 03	Pin L4

Is the resistance less than 10 ohms?

-> Yes
Suspect: **-** ECM connector **-** ECM

-> No
REPAIR the high resistance circuit. For additional information, refer to the wiring diagrams. Clear any DTCs, test the system for normal operation.

G549822t76 : CHECK FOR POWER TO THE IAT SENSOR

1. Key on, engine off. 2. Measure the voltage between:

EC67, harness side	Battery
Pin 02	Negative terminal

Is the voltage between 4.8 volts - 5.2 volts?

-> Yes

GO to Pinpoint Test G549822t80.

-> No

GO to Pinpoint Test G549822t77.

G549822t77 : CHECK THE IAT SIGNAL CIRCUIT FOR SHORT CIRCUIT TO GROUND

1. Measure the resistance between:

EC67, harness side	Battery
Pin 02	Negative terminal

Is the resistance greater than 100 Kohms?

-> Yes

GO to Pinpoint Test G549822t78.

-> No

GO to Pinpoint Test G549822t81.

G549822t78 : CHECK THE IAT SIGNAL CIRCUIT FOR SHORT CIRCUIT TO POWER

1. Key on, engine off. 2. Measure the resistance between:

EC67, harness side	Battery

www.JagDocs.com

Pin 02	Positive terminal

Is the resistance greater than 100 Kohms?

-> Yes
GO to Pinpoint Test G549822t79.

-> No
GO to Pinpoint Test G549822t84.

G549822t79 : CHECK THE IAT SIGNAL CIRCUIT FOR HIGH RESISTANCE

1. Measure the resistance between:

EC67, harness side	EC66, harness side
Pin 02	Pin F1

Is the resistance less than 10 ohms?

-> Yes
Suspect: **-** ECM connector **-** ECM

-> No
REPAIR the high resistance circuit. For additional information, refer to the wiring diagrams. Clear any DTCs, test the system for normal operation.

G549822t80 : CHECK THE COMPONENT RESISTANCE

1. Measure the resistance between:

EC67, component side	EC67, component side
Pin 02	Pin 03

Is the resistance between 150 ohms - 15 Kohms?

-> Yes
An intermittent fault may be present in the wiring harness. Visually check for chaffed wires or other physical damage to the harness. If no fault is found in the circuit, suspect the following component(s): **-** MAF1 connector **-** MAF1 sensor **-** ECM connector **-** ECM

-> No
INSTALL a new MAF1 sensor.
Mass Air Flow (MAF) Sensor (18.30.15)

G549822t81 : CHECK THE IAT SIGNAL AND RETURN CIRCUITS FOR SHORT CIRCUIT TO EACH OTHER

1. Key off. 2. Disconnect the ECM connector, EC66. 3. Key on, engine off. 4. Measure the resistance between:

EC67, harness side	EC67, harness side
Pin 02	Pin 03

Is the resistance greater than 100 Kohms?

-> Yes
GO to Pinpoint Test G549822t82.

-> No
REPAIR the short circuit. For additional information, refer to the wiring diagrams. Clear any DTCs, test the system for normal operation.

G549822t82 : CHECK WHETHER THE SHORT CIRCUIT TO GROUND IS IN THE HARNESS OR THE MODULE

1. Measure the resistance between:

EC67, harness side	Battery
Pin 02	Negative terminal

Is the resistance greater than 100 Kohms?

-> Yes
Suspect: **-** ECM

-> No
REPAIR the short circuit. For additional information, refer to the wiring diagrams. Clear any DTCs, test the system for normal operation.

www.JagDocs.com

G549822t83 : CHECK WHETHER THE SHORT CIRCUIT TO POWER IS IN THE HARNESS OR THE MODULE

1. Key off. 2. Disconnect the ECM connector, EC66. 3. Key on, engine off. 4. Measure the resistance between:

EC67, harness side	Battery
Pin 03	Positive terminal

Is the resistance greater than 100 Kohms?

-> Yes
Suspect: **-** ECM

-> No
REPAIR the short circuit. For additional information, refer to the wiring diagrams. Clear any DTCs, test the system for normal operation.

G549822t84 : CHECK WHETHER THE SHORT CIRCUIT TO POWER IS IN THE HARNESS OR THE MODULE

1. Key off. 2. Disconnect the ECM connector, EC66. 3. Key on, engine off. 4. Measure the resistance between:

EC67, harness side	Battery
Pin 02	Positive terminal

Is the resistance greater than 100 Kohms?

-> Yes
Suspect: **-** ECM

-> No
REPAIR the short circuit. For additional information, refer to the wiring diagrams. Clear any DTCs, test the system for normal operation.

PINPOINT TEST G549822p10 : MASS AIR FLOW (MAF) SENSOR (RIGHT HAND BANK)

G549822t127 : CHECK THE MAF PID VALUE

1.

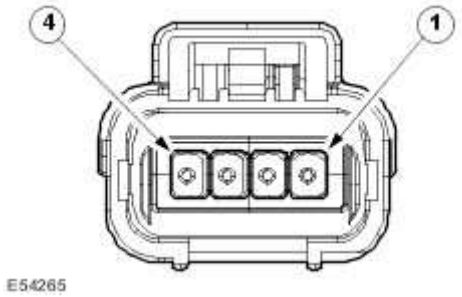

Circuit	Pin
Mass air flow sensor - signal	01
Mass air flow sensor - return	03
ECM relay controlled 12 volt supply	04

2.

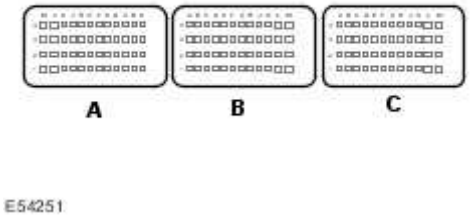

Circuit	Pin
Mass air flow sensor - signal	F4
Mass air flow sensor - return	L4

3. Key on, engine running. 4. Access the ECM-Right hand bank mass air flow sensor signal frequency PID using the Jaguar approved diagnostic system or a scan tool.

Is the Hot$MAF between 4 g/sec - 18 g/sec?

-> Yes

An intermittent fault may be present in the wiring harness. Visually check for chaffed wires or other physical damage to the harness.

-> No

www.JagDocs.com

GO to Pinpoint Test G549822t128.

G549822t128 : CHECK THE MAF PID VALUE

1. Access the ECM-Right hand bank mass air flow sensor signal frequency PID using the Jaguar approved diagnostic system or a scan tool.

Is the Hot$MAF less than 4 g/sec?

-> Yes
GO to Pinpoint Test G549822t130.

-> No
GO to Pinpoint Test G549822t129.

G549822t129 : CHECK FOR AIR LEAKAGE BETWEEN THE TURBOCHARGER AND THE RIGHT HAND BANK MAF SENSOR

1. Key off. 2. Check for air leakage between the turbocharger and the right hand bank MAF sensor. Intake Air Distribution and Filtering

Are there any air leaks?

-> Yes
REPAIR the fault as necessary. Clear any DTCs, test the system for normal operation.

-> No
GO to Pinpoint Test G549822t131.

G549822t130 : CHECK FOR OIL INGESTION

1. Key off. 2. Check for oil ingestion via the engine manifold.

Is there any oil ingestion?

-> Yes
REPAIR/INSTALL a new right hand bank MAF sensor.
Mass Air Flow (MAF) Sensor (18.30.15) Check/rectify any external oil leaks.

-> No
GO to Pinpoint Test G549822t131.

G549822t131 : CHECK THE COMPONENT RESISTANCE

1. Disconnect the right hand bank MAF sensor connector, EC67. 2. Measure the resistance between:

EC67, component side	EC67, component side
Pin 04	Pin 03

Is the resistance between 120 - 130 Kohms?

-> Yes
GO to Pinpoint Test G549822t132.

-> No
INSTALL a new right hand bank MAF sensor.
Mass Air Flow (MAF) Sensor (18.30.15)

G549822t132 : CHECK THE SUPPLY TO THE MAF SENSOR

1. Key on, engine off. 2. Measure the voltage between:

EC67, harness side	Battery
Pin 04	Negative terminal

Is the voltage between 9 - 15 volts?

-> Yes
GO to Pinpoint Test G549822t133.

-> No
REPAIR the ECM to right hand bank MAF sensor supply circuit as necessary. For additional information, refer to the wiring diagrams. Clear any DTCs, test the system for normal operation.

G549822t133 : CHECK THE MAF SENSOR CIRCUIT(S) FOR SHORT CIRCUIT TO GROUND

1. Key off. 2. Disconnect the ECM connector, EC66. 3. Key on, engine off. 4. Measure the resistance between:

EC67, harness side	Battery
Pin 03	Negative terminal
Pin 01	Negative terminal

www.JagDocs.com

Are the resistances greater than 100 Kohms?

-> Yes
GO to Pinpoint Test G549822t134.

-> No
REPAIR the short circuit. For additional information, refer to the wiring diagrams. Clear any DTCs, test the system for normal operation.

G549822t134 : CHECK THE MAF SENSOR CIRCUIT(S) FOR SHORT CIRCUIT TO POWER

1. Measure the resistance between:

EC67, harness side	Battery
Pin 03	Positive terminal
Pin 01	Positive terminal

Are the resistances greater than 100 Kohms?

-> Yes
GO to Pinpoint Test G549822t135.

-> No
REPAIR the short circuit. For additional information, refer to the wiring diagrams. Clear any DTCs, test the system for normal operation.

G549822t135 : CHECK THE MAF SIGNAL AND RETURN CIRCUITS FOR SHORT CIRCUIT TO EACH OTHER

1. Measure the resistance between:

EC67, harness side	EC67, harness side
Pin 01	Pin 03

Is the resistance greater than 100 Kohms?

-> Yes
GO to Pinpoint Test G549822t136.

-> No
REPAIR the short circuit. For additional information, refer to the wiring diagrams. Clear any DTCs, test the system for normal operation.

G549822t136 : CHECK THE MAF SENSOR CIRCUIT(S) FOR HIGH RESISTANCE

1. Key off. 2. Disconnect the ECM connector, EC66. 3. Measure the resistance between:

EC67, harness side	EC66, harness side
Pin 03	Pin L4
Pin 01	Pin F4

Are the resistances less than 10 ohms?

-> Yes
An intermittent fault may be present in the wiring harness. Visually check for chaffed wires or other physical damage to the harness. If no fault is found in the circuit, suspect the following component(s): **-** MAF connector **-** MAF sensor **-** ECM connector **-** ECM

-> No
REPAIR the high resistance circuit. For additional information, refer to the wiring diagrams. Clear any DTCs, test the system for normal operation.

PINPOINT TEST G549822p11 : MASS AIR FLOW (MAF) SENSOR (LEFT HAND BANK)

G549822t137 : CHECK THE MAF PID VALUE

1.

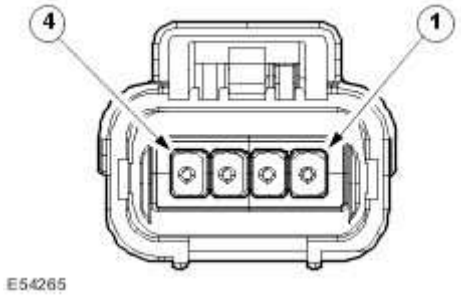

www.JagDocs.com

Circuit	Pin
Mass air flow sensor - signal	02
Mass air flow sensor - return	03
ECM relay controlled 12 volt supply	04

2.

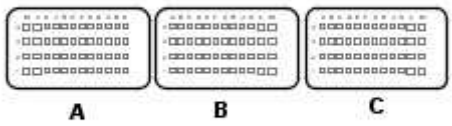

E54251

Circuit	Pin
Mass air flow sensor - signal	G4
Mass air flow sensor - return	L4

3. Key on, engine running. 4. Access the ECM-Left hand bank mass air flow sensor signal frequency PID using the Jaguar approved diagnostic system or a scan tool.

Is the Hot$MAF between 4 g/sec - 18 g/sec?

-> Yes
An intermittent fault may be present in the wiring harness. Visually check for chaffed wires or other physical damage to the harness.

-> No
GO to Pinpoint Test G549822t138.

G549822t138 : CHECK THE MAF PID VALUE

1. Access the ECM-Left hand bank mass air flow sensor signal frequency PID using the Jaguar approved diagnostic system or a scan tool.

Is the Hot$MAF less than 4 g/sec?

-> Yes
GO to Pinpoint Test G549822t140.

-> No
GO to Pinpoint Test G549822t139.

G549822t139 : CHECK FOR AIR LEAKAGE BETWEEN THE TURBOCHARGER AND THE LEFT HAND BANK MAF SENSOR

1. Key off. 2. Check for air leakage between the turbocharger and the left hand bank MAF sensor.
Intake Air Distribution and Filtering

Are there any air leaks?

-> Yes
REPAIR the fault as necessary. Clear any DTCs, test the system for normal operation.

-> No
GO to Pinpoint Test G549822t141.

G549822t140 : CHECK FOR OIL INGESTION

1. Key off. 2. Check for oil ingestion via the engine manifold.

Is there any oil ingestion?

-> Yes
REPAIR/INSTALL a new left hand bank MAF sensor.
Mass Air Flow (MAF) Sensor (18.30.15) Check/rectify any external oil leaks.

-> No
GO to Pinpoint Test G549822t141.

G549822t141 : CHECK THE COMPONENT RESISTANCE

1. Disconnect the left hand bank MAF sensor connector, EC68. 2. Measure the resistance between:

EC68, component side	EC68, component side
Pin 04	Pin 03

Is the resistance between 120 - 130 Kohms?

www.JagDocs.com

-> Yes
GO to Pinpoint Test G549822t142.

-> No
INSTALL a new left hand bank MAF sensor.
Mass Air Flow (MAF) Sensor (18.30.15)

G549822t142 : CHECK THE SUPPLY TO THE MAF SENSOR

1. Key on, engine off. 2. Measure the voltage between:

EC68, harness side	Battery
Pin 04	Negative terminal

Is the voltage between 9 - 15 volts?

-> Yes
GO to Pinpoint Test G549822t143.

-> No
REPAIR the ECM to left hand bank MAF sensor supply circuit as necessary. For additional information, refer to the wiring diagrams. Clear any DTCs, test the system for normal operation.

G549822t143 : CHECK THE MAF SENSOR CIRCUIT(S) FOR SHORT CIRCUIT TO GROUND

1. Key off. 2. Disconnect the ECM connector, EC66. 3. Key on, engine off. 4. Measure the resistance between:

EC68, harness side	Battery
Pin 03	Negative terminal
Pin 01	Negative terminal

Are the resistances greater than 100 Kohms?

-> Yes
GO to Pinpoint Test G549822t144.

-> No
REPAIR the short circuit. For additional information, refer to the wiring diagrams. Clear any DTCs, test the system for normal operation.

G549822t144 : CHECK THE MAF SENSOR CIRCUIT(S) FOR SHORT CIRCUIT TO POWER

1. Measure the resistance between:

EC68, harness side	Battery
Pin 03	Positive terminal
Pin 01	Positive terminal

Are the resistances greater than 100 Kohms?

-> Yes
GO to Pinpoint Test G549822t145.

-> No
REPAIR the short circuit. For additional information, refer to the wiring diagrams. Clear any DTCs, test the system for normal operation.

G549822t145 : CHECK THE MAF SIGNAL AND RETURN CIRCUITS FOR SHORT CIRCUIT TO EACH OTHER

1. Measure the resistance between:

EC68, harness side	EC68, harness side
Pin 01	Pin 03

Is the resistance greater than 100 Kohms?

-> Yes
GO to Pinpoint Test G549822t146.

-> No
REPAIR the short circuit. For additional information, refer to the wiring diagrams. Clear any DTCs, test the system for normal operation.

www.JagDocs.com

G549822t146 : CHECK THE MAF SENSOR CIRCUIT(S) FOR HIGH RESISTANCE

1. Key off. 2. Disconnect the ECM connector, EC66. 3. Measure the resistance between:

EC68, harness side	EC66, harness side
Pin 03	Pin L4
Pin 01	Pin G4

Are the resistances less than 10 ohms?

-> Yes

An intermittent fault may be present in the wiring harness. Visually check for chaffed wires or other physical damage to the harness. If no fault is found in the circuit, suspect the following component(s): - MAF connector - MAF sensor - ECM connector - ECM

-> No

REPAIR the high resistance circuit. For additional information, refer to the wiring diagrams. Clear any DTCs, test the system for normal operation.

PINPOINT TEST G549822p12 : MANIFOLD ABSOLUTE PRESSURE (MAP) SENSOR

G549822t244 : CHECK THE MAP SENSOR CONNECTOR FOR PHYSICAL DAMAGE OR CORROSION

1.

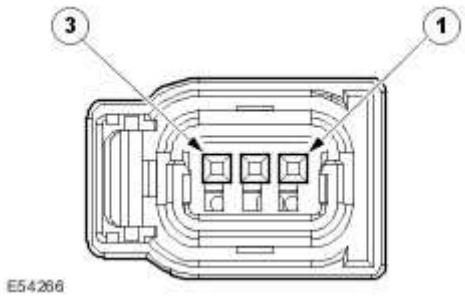

Circuit	Pin
Manifold absolute pressure sensor - signal	02
Manifold absolute pressure sensor - power	01

Manifold absolute pressure sensor - return	03

2.

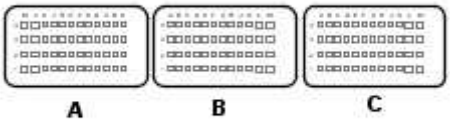

E54251

Circuit	Pin
Manifold absolute pressure sensor - signal	C1
Manifold absolute pressure sensor - power	D1
Manifold absolute pressure sensor - return	E2

3. Inspect the sensor for damage, correct fitment, connection, etc.

Is the sensor correctly installed and in good condition?

-> Yes
GO to Pinpoint Test G549822t243.

-> No
CHECK and rectify as necessary.
Manifold Absolute Pressure (MAP) Sensor (18.30.86)

G549822t243 : CHECK THE MAP PID VALUE

1. Key on, engine running. 2. Access the OBDII-Intake manifold absolute pressure PID using the Jaguar approved diagnostic system or a scan tool. 3. Slowly increase the engine speed to 1,500 rpm while monitoring the MAP reading.

Did the pressure increase smoothly as the engine speed was increased?

-> Yes
An intermittent fault may be present in the wiring harness. Visually check for chaffed wires or other physical damage to the harness.

-> No

www.JagDocs.com

GO to Pinpoint Test G549822t147.

G549822t147 : CHECK THE MAP SENSOR RETURN CIRCUIT FOR HIGH RESISTANCE

1. Key off. 2. Disconnect the MAP sensor connector, C31. 3. Measure the resistance between:

C31, harness side	Battery
Pin 03	Negative terminal

Is the resistance less than 10 ohms?

-> Yes
GO to Pinpoint Test G549822t148.

-> No
GO to Pinpoint Test G549822t159.

G549822t148 : CHECK THE SUPPLY TO THE MAP SENSOR

1. Key on, engine off. 2. Measure the voltage between:

C31, harness side	Battery
Pin 01	Negative terminal

Is the voltage between 4.8 - 5.2 volts?

-> Yes
GO to Pinpoint Test G549822t149.

-> No
GO to Pinpoint Test G549822t156.

G549822t149 : CHECK THE MAP SIGNAL CIRCUIT FOR SHORT CIRCUIT TO GROUND

1. Measure the resistance between:

C31, harness side	Battery
Pin 02	Negative terminal

Is the resistance greater than 100 Kohms?

-> Yes
GO to Pinpoint Test G549822t150.

-> No
GO to Pinpoint Test G549822t153.

G549822t150 : CHECK THE MAP SIGNAL CIRCUIT FOR SHORT CIRCUIT TO POWER

1. Key on, engine off. 2. Measure the resistance between:

C31, harness side	Battery
Pin 02	Positive terminal

Is the resistance greater than 100 Kohms?

-> Yes
GO to Pinpoint Test G549822t151.

-> No
GO to Pinpoint Test G549822t154.

G549822t151 : CHECK THE MAP SIGNAL CIRCUIT FOR SHORT CIRCUIT TO RETURN AND SUPPLY CIRCUITS

1. Measure the resistance between:

C31, harness side	C31, harness side
Pin 02	Pin 01
Pin 02	Pin 03

www.JagDocs.com

Are the resistances greater than 100 Kohms?

-> Yes
GO to Pinpoint Test G549822t152.

-> No
GO to Pinpoint Test G549822t155.

G549822t152 : CHECK THE MAP SIGNAL CIRCUIT FOR HIGH RESISTANCE

1. Key off. 2. Disconnect the ECM connector, C101. 3. Measure the resistance between:

C31, harness side	C101, harness side
Pin 02	Pin C1

Is the resistance less than 10 ohms?

-> Yes
An intermittent fault may be present in the wiring harness. Visually check for chaffed wires or other physical damage to the harness. If no fault is found in the circuit, suspect the following component(s): - MAP connector - MAP sensor - ECM connector - ECM

-> No
REPAIR the high resistance circuit. For additional information, refer to the wiring diagrams. Clear any DTCs, test the system for normal operation.

G549822t153 : CHECK WHETHER THE SHORT CIRCUIT TO GROUND IS IN THE HARNESS OR THE MODULE

1. Key off. 2. Disconnect the ECM connector, C101. 3. Key on, engine off. 4. Measure the resistance between:

C31, harness side	Battery
Pin 02	Negative terminal

Is the resistance greater than 100 Kohms?

-> Yes
Suspect: - ECM

-> No
REPAIR the short circuit. For additional information, refer to the wiring diagrams. Clear any DTCs, test the system for normal operation.

G549822t154 : CHECK WHETHER THE SHORT CIRCUIT TO POWER IS IN THE HARNESS OR THE MODULE

1. Key off. 2. Disconnect the ECM connector, C101. 3. Key on, engine off. 4. Measure the resistance between:

C31, harness side	Battery
Pin 02	Positive terminal

Is the resistance greater than 100 Kohms?

-> Yes
Suspect: **-** ECM

-> No
REPAIR the short circuit. For additional information, refer to the wiring diagrams. Clear any DTCs, test the system for normal operation.

G549822t155 : CHECK WHETHER THE SHORT CIRCUIT IS IN THE HARNESS OR THE MODULE

1. Key off. 2. Disconnect the ECM connector, C101. 3. Measure the resistance between:

C31, harness side	C31, harness side
Pin 02	Pin 01
Pin 02	Pin 03

Are the resistances greater than 100 Kohms?

-> Yes
Suspect: **-** ECM

-> No
REPAIR the short circuit. For additional information, refer to the wiring diagrams. Clear any DTCs, test the system for normal operation.

www.JagDocs.com

G549822t156 : CHECK THE 5 VOLT SUPPLY CIRCUIT FOR SHORT CIRCUIT TO GROUND

1. Measure the resistance between:

C31, harness side	Battery
Pin 01	Negative terminal

Is the resistance greater than 100 Kohms?

-> Yes

GO to Pinpoint Test G549822t157.

-> No

GO to Pinpoint Test G549822t162.

G549822t157 : CHECK THE 5 VOLT SUPPLY CIRCUIT FOR SHORT CIRCUIT TO POWER

1. Measure the resistance between:

C31, harness side	Battery
Pin 01	Positive terminal

Is the resistance greater than 100 Kohms?

-> Yes

GO to Pinpoint Test G549822t158.

-> No

GO to Pinpoint Test G549822t163.

G549822t158 : CHECK THE 5 VOLT SUPPLY CIRCUIT FOR HIGH RESISTANCE

1. Key off. 2. Disconnect the ECM connector, C101. 3. Measure the resistance between:

C31, harness side	C101, harness side

Pin 01	Pin D1

Is the resistance less than 10 ohms?

-> Yes
Suspect : **-** ECM connector. **-** ECM

-> No
REPAIR the high resistance circuit. For additional information, refer to the wiring diagrams. Clear any DTCs, test the system for normal operation.

G549822t159 : CHECK THE MAP SENSOR RETURN CIRCUIT FOR SHORT CIRCUIT TO POWER

1. Measure the resistance between:

C31, harness side	Battery
Pin 03	Positive terminal

Is the resistance greater than 100 Kohms?

-> Yes
GO to Pinpoint Test G549822t160.

-> No
GO to Pinpoint Test G549822t164.

G549822t160 : CHECK THE MAP SUPPLY AND RETURN CIRCUITS FOR SHORT CIRCUIT TO EACH OTHER

1. Measure the resistance between:

C31, harness side	C31, harness side
Pin 01	Pin 03

Is the resistance greater than 100 Kohms?

www.JagDocs.com

-> Yes
GO to Pinpoint Test G549822t161.

-> No
GO to Pinpoint Test G549822t165.

G549822t161 : CHECK THE MAP SENSOR RETURN CIRCUIT FOR HIGH RESISTANCE

1. Key off. 2. Disconnect the ECM connector, C101. 3. Key on, engine off. 4. Measure the resistance between:

C31, harness side	C101, harness side
Pin 03	Pin E2

Is the resistance less than 10 ohms?

-> Yes
Suspect : **-** MAP connector **-** MAP sensor **-** ECM connector **-** ECM

-> No
REPAIR the high resistance circuit. For additional information, refer to the wiring diagrams. Clear any DTCs, test the system for normal operation.

G549822t162 : CHECK WHETHER THE SHORT CIRCUIT TO GROUND IS IN THE HARNESS OR THE MODULE

1. Key off. 2. Disconnect the ECM connector, C101. 3. Key on, engine off. 4. Measure the resistance between:

C31, harness side	Battery
Pin 01	Negative terminal

Is the resistance greater than 100 Kohms?

-> Yes
Suspect: **-** ECM

-> No

REPAIR the short circuit. For additional information, refer to the wiring diagrams. Clear any DTCs, test the system for normal operation.

G549822t163 : CHECK WHETHER THE SHORT CIRCUIT TO POWER IS IN THE HARNESS OR THE MODULE

1. Key off. 2. Disconnect the ECM connector, C101. 3. Key on, engine off. 4. Measure the resistance between:

C31, harness side	Battery
Pin 01	Positive terminal

Is the resistance greater than 100 Kohms?

-> Yes
Suspect: **-** ECM

-> No
REPAIR the short circuit. For additional information, refer to the wiring diagrams. Clear any DTCs, test the system for normal operation.

G549822t164 : CHECK WHETHER THE SHORT CIRCUIT TO POWER IS IN THE HARNESS OR THE MODULE

1. Key off. 2. Disconnect the ECM connector, C101. 3. Key on, engine off. 4. Measure the resistance between:

C31, harness side	Battery
Pin 03	Positive terminal

Is the resistance greater than 100 Kohms?

-> Yes
Suspect: **-** ECM

-> No
REPAIR the short circuit. For additional information, refer to the wiring diagrams. Clear any DTCs, test the system for normal operation.

G549822t165 : CHECK WHETHER THE SHORT CIRCUIT IS IN THE HARNESS OR THE MODULE

1. Key off. 2. Disconnect the ECM connector, C101. 3. Measure the resistance between:

www.JagDocs.com

C31, harness side	C31, harness side
Pin 01	Pin 03

Is the resistance greater than 100 Kohms?

-> Yes
Suspect: **-** ECM

-> No
REPAIR the short circuit. For additional information, refer to the wiring diagrams. Clear any DTCs, test the system for normal operation.

PINPOINT TEST G549822p13 : INTAKE AIR TEMPERATURE (IAT) AND CHARGE AIR TEMPERATURE (ACT) SENSORS

G549822t166 : CHECK THE IAT PID VALUE

1.

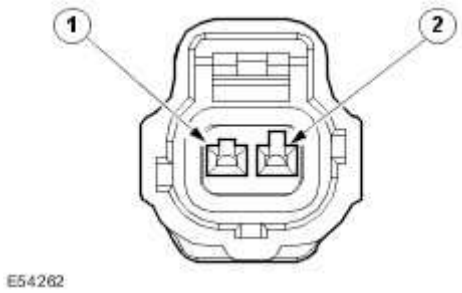

Circuit	Pin
Air charge temperature sensor - signal	01
Air charge temperature sensor - return	02

2.

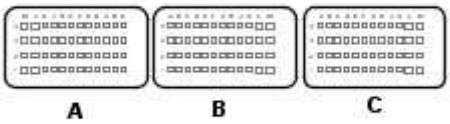

E54251

Circuit	Pin
Intake air temperature - return	L4
Intake air temperature - signal	F1
Mass air flow sensor - return	L4

Circuit	Pin
Air charge temperature sensor - signal	B1
Air charge temperature sensor - return	G3

3. Make sure that the engine is cold. 4. Key on, engine off. 5. Access the ECM-Boost air temperature PID using the Jaguar approved diagnostic system or a scan tool.

Is the IAT reading as expected for the current environmental and engine conditions?

-> Yes
GO to Pinpoint Test G549822t167.

-> No
GO to Pinpoint Test G549822t170.

G549822t167 : CHECK THE IAT PID VALUE

1. Key on, engine running. 2. Access the ECM-Boost air temperature PID using the Jaguar approved diagnostic system or a scan tool. 3. Slowly increase the engine speed to 4,000 rpm while monitoring the IAT reading.

Did the IAT reading rise smoothly?

www.JagDocs.com

-> Yes
An intermittent fault may be present in the wiring harness. Visually check for chaffed wires or other physical damage to the harness.

-> No
GO to Pinpoint Test G549822t168.

G549822t168 : CHECK FOR AN INTERMITTENT FAULT CONDITION

1.

Were there any sudden or unexpected changes in the IAT readings?

-> Yes
Key off. GO to Pinpoint Test G549822t169.

-> No
GO to Pinpoint Test G549822t170.

G549822t169 : CHECK THE IAT PID VALUE

1. Key on, engine off. 2. Access the ECM-Boost air temperature PID using the Jaguar approved diagnostic system or a scan tool. 3. Check the IAT harness wiring and connectors for loose connections and water ingress. Monitoring the temperature readings for sudden changes, while handling the harness and connectors, may help in isolation of these types of fault.

Did you identify any loose connections or water ingress in the IAT harness wiring or connectors?

-> Yes
REPAIR the fault as necessary. For additional information, refer to the wiring diagrams. Clear any DTCs, test the system for normal operation.

-> No
GO to Pinpoint Test G549822t170.

G549822t170 : CHECK THE ACT SENSOR RETURN CIRCUIT FOR HIGH RESISTANCE

1. Key off. 2. Disconnect the ACT sensor connector, C69. 3. Key on, engine off. 4. Measure the resistance between:

C69, harness side	Battery

Pin 02	Negative terminal

Is the resistance less than 10 ohms?

-> Yes
GO to Pinpoint Test G549822t173.

-> No
GO to Pinpoint Test G549822t171.

G549822t171 : CHECK THE ACT SENSOR RETURN CIRCUIT FOR SHORT CIRCUIT TO POWER

1. Measure the resistance between:

C69, harness side	Battery
Pin 02	Positive terminal

Is the resistance greater than 100 Kohms?

-> Yes
GO to Pinpoint Test G549822t172.

-> No
GO to Pinpoint Test G549822t180.

G549822t172 : CHECK THE ACT SENSOR TO ECM RETURN CIRCUIT FOR HIGH RESISTANCE

1. Key off. 2. Disconnect the ECM connector, C101. 3. Measure the resistance between:

C69, harness side	C101, harness side
Pin 02	Pin G3

Is the resistance less than 10 ohms?

www.JagDocs.com

-> Yes
Suspect: **-** ECM connector **-** ECM

-> No
REPAIR the high resistance circuit. For additional information, refer to the wiring diagrams. Clear any DTCs, test the system for normal operation.

G549822t173 : CHECK FOR POWER TO THE ACT SENSOR

1. Measure the voltage between:

C69, harness side	Battery
Pin 01	Negative terminal

Is the voltage between 4.8 - 5.2 volts?

-> Yes
GO to Pinpoint Test G549822t177.

-> No
GO to Pinpoint Test G549822t174.

G549822t174 : CHECK THE ACT SIGNAL CIRCUIT FOR SHORT CIRCUIT TO GROUND

1. Measure the resistance between:

C69, harness side	Battery
Pin 01	Negative terminal

Is the resistance greater than 100 Kohms?

-> Yes
GO to Pinpoint Test G549822t175.

-> No
GO to Pinpoint Test G549822t178.

G549822t175 : CHECK THE ACT SIGNAL CIRCUIT FOR SHORT CIRCUIT TO POWER

1. Key on, engine off. 2. Measure the resistance between:

C69, harness side	Battery
Pin 01	Positive terminal

Is the resistance greater than 100 Kohms?

-> Yes
GO to Pinpoint Test G549822t176.

-> No
GO to Pinpoint Test G549822t181.

G549822t176 : CHECK THE ACT SIGNAL CIRCUIT FOR HIGH RESISTANCE

1. Key off. 2. Disconnect the ECM connector, C101. 3. Measure the resistance between:

C69, harness side	C101, harness side
Pin 01	Pin B1

Is the resistance less than 10 ohms?

-> Yes
Suspect: - ECM connector - ECM

-> No
REPAIR the high resistance circuit. For additional information, refer to the wiring diagrams. Clear any DTCs, test the system for normal operation.

G549822t177 : CHECK THE COMPONENT RESISTANCE

1. Measure the resistance between:

C69, component side	C69, component side
Pin 01	Pin 02

www.JagDocs.com

Is the resistance between 1 - 100 Kohms?

-> Yes
An intermittent fault may be present in the wiring harness. Visually check for chaffed wires or other physical damage to the harness. If no fault is found in the circuit, suspect the following component(s): - ACT connector. - ACT sensor. - ECM connector. - ECM

-> No
INSTALL a new ACT sensor.

G549822t178 : CHECK THE ACT SIGNAL AND RETURN CIRCUITS FOR SHORT CIRCUIT TO EACH OTHER

1. Key off. 2. Disconnect the ECM connector, C101. 3. Key on, engine off. 4. Measure the resistance between:

C69, harness side	C69, harness side
Pin 01	Pin 02

Is the resistance greater than 100 Kohms?

-> Yes
GO to Pinpoint Test G549822t179.

-> No
REPAIR the short circuit. For additional information, refer to the wiring diagrams. Clear any DTCs, test the system for normal operation.

G549822t179 : CHECK WHETHER THE SHORT CIRCUIT TO GROUND IS IN THE HARNESS OR THE MODULE

1. Key on, engine off. 2. Measure the resistance between:

C69, harness side	Battery
Pin 01	Negative terminal

Is the resistance greater than 100 Kohms?

-> Yes
Suspect: - ECM

-> No
REPAIR the short circuit. For additional information, refer to the wiring diagrams. Clear any DTCs, test the system for normal operation.

G549822t180 : CHECK WHETHER THE SHORT CIRCUIT TO POWER IS IN THE HARNESS OR THE MODULE

1. Key off. 2. Disconnect the ECM connector, C101. 3. Key on, engine off. 4. Measure the resistance between:

C69, harness side	Battery
Pin 02	Positive terminal

Is the resistance greater than 100 Kohms?

-> Yes
Suspect: **-** ECM

-> No
REPAIR the short circuit. For additional information, refer to the wiring diagrams. Clear any DTCs, test the system for normal operation.

G549822t181 : CHECK WHETHER THE SHORT CIRCUIT TO POWER IS IN THE HARNESS OR THE MODULE

1. Key off. 2. Disconnect the ECM connector, C101. 3. Key on, engine off. 4. Measure the resistance between:

C69, harness side	Battery
Pin 01	Positive terminal

Is the resistance greater than 100 Kohms?

-> Yes
Suspect: **-** ECM

-> No
REPAIR the short circuit. For additional information, refer to the wiring diagrams. Clear any DTCs, test the system for normal operation.

www.JagDocs.com

PINPOINT TEST G549822p14 : CRANKSHAFT POSITION (CKP) SENSOR

G549822t182 : CHECK THE CKP CIRCUITS FOR SHORT CIRCUIT TO GROUND

1.

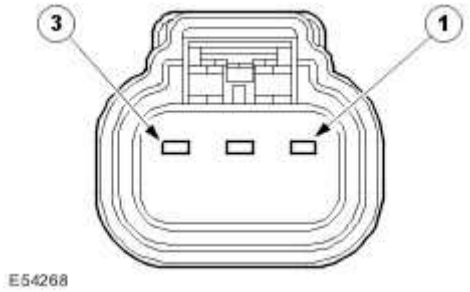

Circuit	Pin
Crankshaft position sensor - signal	02
Crankshaft position sensor - positive	01
Crankshaft position sensor - negative	03

2.

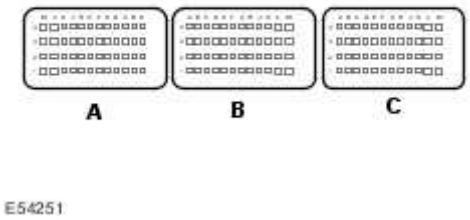

Circuit	Pin
Crankshaft position sensor - signal	F1
Crankshaft position sensor - positive	G1
Crankshaft position sensor - negative	G2

3. Key off. 4. Disconnect the ECM connector, C101. 5. Key on, engine off. 6. Measure the resistance between:

C101, harness side	Battery
Pin G2	Negative terminal
Pin G1	Negative terminal
Pin F1	Negative terminal

Are the resistances greater than 100 Kohms?

-> Yes
GO to Pinpoint Test G549822t183.

-> No
REPAIR the short circuit to ground in the CKP harness or component. For additional information, refer to the wiring diagrams. Clear any DTCs, test the system for normal operation.

G549822t183 : CHECK THE CKP CIRCUITS FOR SHORT CIRCUIT TO POWER

1. Measure the resistance between:

C101, harness side	Battery
Pin G2	Positive terminal
Pin G1	Positive terminal
Pin F1	Positive terminal

Are the resistances greater than 100 Kohms?

-> Yes
GO to Pinpoint Test G549822t184.

-> No
REPAIR the short circuit to ground in the CKP harness or component. For additional information, refer to the wiring diagrams. Clear any DTCs, test the system for normal operation.

www.JagDocs.com

G549822t184 : CHECK THE CKP CIRCUIT RESISTANCE

1. Measure the resistance between:

C101, harness side	C101, harness side
Pin G2	Pin F1

Is the resistance between 100 - 120 Kohms?

-> Yes

GO to Pinpoint Test G549822t185.

-> No

REPAIR the out of limits resistance in the CKP harness or component. This may be due to a short or open circuit, depending on the result of the last measurement. For additional information, refer to the wiring diagrams. Clear any DTCs, test the system for normal operation.

G549822t185 : CHECK THE CKP CIRCUIT RESISTANCE

1. Measure the resistance between:

C101, harness side	C101, harness side
Pin G1	Pin F1
Pin G1	Pin G2

Are the resistances greater than 100 Kohms?

-> Yes

An intermittent fault may be present in the wiring harness. Visually check for chaffed wires or other physical damage to the harness. If no fault is found in the circuit, suspect the following component(s): **-** Open circuit in sensor power line **-** CKP connector **-** CKP sensor **-** Crankshaft sensor target wheel **-** ECM connector **-** ECM

-> No

REPAIR the out of limits resistance in the CKP harness or component. This may be due to a short or open circuit, depending on the result of the last measurement. For additional information, refer to the wiring diagrams. Clear any DTCs, test the system for normal operation.

PINPOINT TEST G549822p15 : CAMSHAFT POSITION (CMP) SENSOR

G549822t186 : CHECK THE CMP CIRCUITS FOR SHORT CIRCUIT TO GROUND

1.

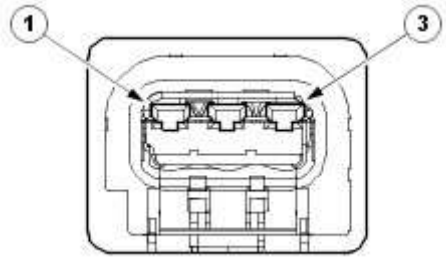

E54269

Circuit	Pin
Camshaft position sensor - signal	01
Camshaft position sensor - return	02
Camshaft position sensor - power	03

2.

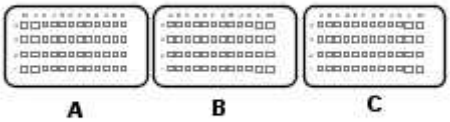

E54251

Circuit	Pin
Camshaft position sensor - signal	G4
Camshaft position sensor - return	H3
Camshaft position sensor - power	H4

3. Key off. 4. Disconnect the ECM connector, C101. 5. Key on, engine off. 6. Measure the resistance between:

www.JagDocs.com

C101, harness side	Battery
Pin G4	Negative terminal
Pin H3	Negative terminal
Pin H4	Negative terminal

Are the resistances greater than 100 Kohms?

-> Yes
GO to Pinpoint Test G549822t187.

-> No
REPAIR the short circuit to ground in the CMP harness or component. For additional information, refer to the wiring diagrams. Clear any DTCs, test the system for normal operation.

G549822t187 : CHECK THE CMP CIRCUITS FOR SHORT CIRCUIT TO POWER

1. Measure the resistance between:

C101, harness side	Battery
Pin G4	Positive terminal
Pin H3	Positive terminal
Pin H4	Positive terminal

Are the resistances greater than 100 Kohms?

-> Yes
GO to Pinpoint Test G549822t188.

-> No
REPAIR the short circuit to power in the CMP harness or component. For additional information, refer to the wiring diagrams. Clear any DTCs, test the system for normal operation.

G549822t188 : CHECK THE CMP CIRCUIT RESISTANCE

1. Measure the resistance between:

C101, harness side	C101, harness side
Pin G4	Pin H3

Is the resistance between 100 Kohms - 120 Kohms?

-> Yes
GO to Pinpoint Test G549822t189.

-> No
REPAIR the out of limits resistance in the CMP harness or component. This may be due to a short or open circuit, depending on the result of the last measurement. For additional information, refer to the wiring diagrams. Clear any DTCs, test the system for normal operation.

G549822t189 : CHECK THE CMP CIRCUIT RESISTANCE

1. Measure the resistance between:

C101, harness side	C101, harness side
Pin H4	Pin G4
Pin H4	Pin H3

Are the resistances greater than 100 Kohms?

-> Yes
An intermittent fault may be present in the wiring harness. Visually check for chaffed wires or other physical damage to the harness. If no fault is found in the circuit, suspect the following component(s): - Open circuit in sensor power line - CMP connector - CMP sensor - Camshaft sensor target wheel - ECM connector - ECM

-> No
REPAIR the out of limits resistance in the CMP harness or component. This may be due to a short or open circuit, depending on the result of the last measurement. For additional information, refer to the wiring diagrams. Clear any DTCs, test the system for normal operation.

PINPOINT TEST G549822p16 : CRANKSHAFT (CKP) AND CAMSHAFT (CMP) POSITION SENSORS

www.JagDocs.com

G549822t190 : CHECK THE CKP CIRCUITS FOR SHORT CIRUIT TO GROUND

1.

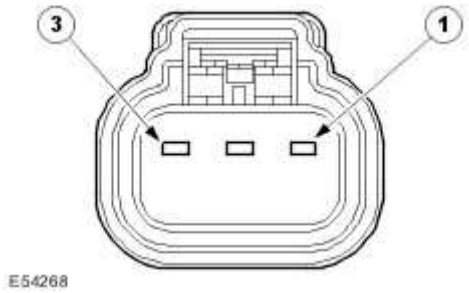

Circuit	Pin
Crankshaft position sensor - signal	02
Crankshaft position sensor - positive	01
Crankshaft position sensor - negative	03

2.

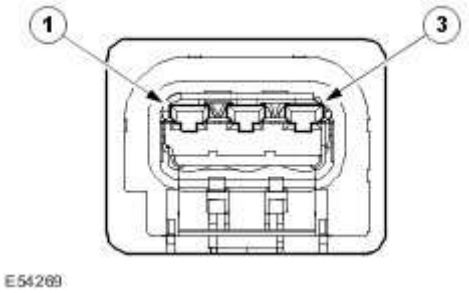

Circuit	Pin
Camshaft position sensor - signal	01
Camshaft position sensor - return	02
Camshaft position sensor - power	03

3.

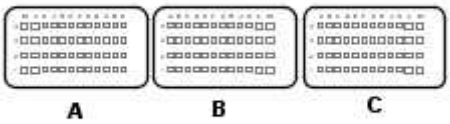

E54251

Circuit	Pin
Crankshaft position sensor - signal	F1
Crankshaft position sensor - positive	G1
Crankshaft position sensor - negative	G2
Camshaft position sensor - signal	G4
Camshaft position sensor - return	H3
Camshaft position sensor - power	H4

4. Key off. 5. Disconnect the ECM connector, C101. 6. Key on, engine off. 7. Measure the resistance between:

C101, harness side	Battery
Pin G2	Negative terminal
Pin G1	Negative terminal
Pin F1	Negative terminal

Are the resistances greater than 100 Kohms?

-> Yes
GO to Pinpoint Test G549822t191.

-> No

www.JagDocs.com

REPAIR the short circuit to ground in the CKP harness or component. For additional information, refer to the wiring diagrams. Clear any DTCs, test the system for normal operation.

G549822t191 : CHECK THE CKP CIRCUITS FOR SHORT CIRCUIT TO POWER

1. Measure the resistance between:

C101, harness side	Battery
Pin G2	Positive terminal
Pin G1	Positive terminal
Pin F1	Positive terminal

Are the resistances greater than 100 Kohms?

-> Yes
GO to Pinpoint Test G549822t192.

-> No
REPAIR the short circuit to ground in the CKP harness or component. For additional information, refer to the wiring diagrams. Clear any DTCs, test the system for normal operation.

G549822t192 : CHECK THE CKP CIRCUIT RESISTANCE

1. Measure the resistance between:

C101, harness side	C101, harness side
Pin G2	Pin F1

Is the resistance between 100 Kohms - 120 Kohms?

-> Yes
GO to Pinpoint Test G549822t193.

-> No
REPAIR the out of limits resistance in the CKP harness or component. This may be due to a short or open circuit, depending on the result of the last measurement. For additional information, refer to the wiring diagrams. Clear any DTCs, test the system for normal operation.

G549822t193 : CHECK THE CKP CIRCUIT RESISTANCE

1. Measure the resistance between:

C101, harness side	C101, harness side
Pin G1	Pin F1
Pin G1	Pin G2

Are the resistances greater than 100 Kohms?

-> Yes

GO to Pinpoint Test G549822t194.

-> No

REPAIR the out of limits resistance in the CKP harness or component. This may be due to a short or open circuit, depending on the result of the last measurement. For additional information, refer to the wiring diagrams. Clear any DTCs, test the system for normal operation.

G549822t194 : CHECK THE CMP CIRCUITS FOR SHORT CIRCUIT TO GROUND

1. Measure the resistance between:

C101, harness side	Battery
Pin G4	Negative terminal
Pin H3	Negative terminal
Pin H4	Negative terminal

Are the resistances greater than 100 Kohms?

-> Yes

GO to Pinpoint Test G549822t195.

-> No

REPAIR the short circuit to ground in the CMP harness or component. For additional information, refer to the wiring diagrams. Clear any DTCs, test the system for normal operation.

www.JagDocs.com

G549822t195 : CHECK THE CKP CIRCUITS FOR SHORT CIRCUIT TO POWER

1. Measure the resistance between:

C101, harness side	Battery
Pin G4	Positive terminal
Pin H3	Positive terminal
Pin H4	Positive terminal

Are the resistances greater than 100 Kohms?

-> Yes
GO to Pinpoint Test G549822t196.

-> No
REPAIR the short circuit to power in the CMP harness or component. For additional information, refer to the wiring diagrams. Clear any DTCs, test the system for normal operation.

G549822t196 : CHECK THE CMP CIRCUIT RESISTANCE

1. Measure the resistance between:

C101, harness side	C101, harness side
Pin G4	Pin H3

Is the resistance between 100 - 120 Kohms?

-> Yes
GO to Pinpoint Test G549822t197.

-> No
REPAIR the out of limits resistance in the CMP harness or component. This may be due to a short or open circuit, depending on the result of the last measurement. For additional information, refer to the wiring diagrams. Clear any DTCs, test the system for normal operation.

G549822t197 : CHECK THE CMP CIRCUIT RESISTANCE

1. Measure the resistance between:

C101, harness side	C101, harness side
Pin H4	Pin G4
Pin H4	Pin H3

Are the resistances greater than 100 Kohms?

-> Yes
An intermittent fault may be present in the wiring harness. Visually check for chaffed wires or other physical damage to the harness. If no fault is found in the circuit, suspect the following component(s): - Open circuit in sensor power line - CMP connector - CKP connector - CMP sensor - CKP sensor - Crankshaft sensor target wheel - Camshaft sensor target wheel - ECM connector - ECM

-> No
REPAIR the out of limits resistance in the CMP harness or component. This may be due to a short or open circuit, depending on the result of the last measurement. For additional information, refer to the wiring diagrams. Clear any DTCs, test the system for normal operation.

PINPOINT TEST G549822p17 : ACCELERATOR PEDAL POSITION (APP) SENSORS 1 AND 2

G549822t198 : CHECK THE APP1 VALUE, WITH THE ACCELERATOR PEDAL RELEASED

1.

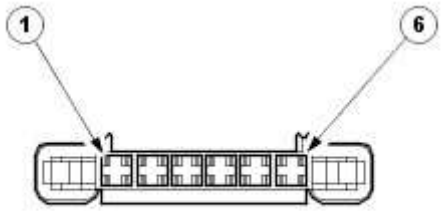

E54270

Circuit	Pin
Accelerator pedal position sensor 2 - signal	01
Accelerator pedal position sensor 2 - power	02

www.JagDocs.com

Accelerator pedal position sensor 2 - return	06
Accelerator pedal position sensor 1 - signal	04
Accelerator pedal position sensor 1 - power	05
Accelerator pedal position sensor 1 - return	03

2.

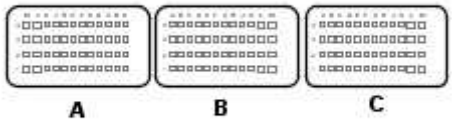

E54251

Circuit	Pin
Accelerator pedal position sensor 2 - signal	C2
Accelerator pedal position sensor 2 - power	D2
Accelerator pedal position sensor 2 - return	B2
Accelerator pedal position sensor 1 - signal	D1
Accelerator pedal position sensor 1 - power	E1
Accelerator pedal position sensor 1 - return	C1

3. Key on, engine off. 4. Make sure the accelerator pedal is released. 5. Access the ECM-Pedal position sensor 1 (voltage) PID using the Jaguar approved diagnostic system or a scan tool.

Is the voltage between 0 - 1 volts?

-> Yes
GO to Pinpoint Test G549822t199.

-> No
GO to Pinpoint Test G549822t202.

G549822t199 : CHECK THE APP2 VALUE, WITH THE ACCELERATOR PEDAL RELEASED

1. Make sure the accelerator pedal is released. 2. Access the ECM-Pedal position sensor 2 (voltage) PID using the Jaguar approved diagnostic system or a scan tool.

Is the voltage between 3 - 5 volts?

-> Yes
GO to Pinpoint Test G549822t200.

-> No
GO to Pinpoint Test G549822t222.

G549822t200 : CHECK THE APP1 VALUE, WITH THE ACCELERATOR FULLY DEPRESSED

1. Make sure the accelerator pedal is fully depressed. 2. Access the ECM-Pedal position sensor 1 (voltage) PID using the Jaguar approved diagnostic system or a scan tool.

Is the voltage between 2.2 - 2.7 volts?

-> Yes
GO to Pinpoint Test G549822t201.

-> No
GO to Pinpoint Test G549822t202.

G549822t201 : CHECK THE APP2 VALUE, WITH THE ACCELERATOR FULLY DEPRESSED

1. Make sure the accelerator pedal is fully depressed. 2. Access the ECM-Pedal position sensor 2 (voltage) PID using the Jaguar approved diagnostic system or a scan tool.

Is the voltage between 2.2 - 2.7 volts?

-> Yes
An intermittent fault may be present in the wiring harness. Visually check for chaffed wires or other physical damage to the harness.

-> No
GO to Pinpoint Test G549822t222.

www.JagDocs.com

G549822t202 : CHECK THE APP1 SENSOR RETURN CIRCUIT FOR HIGH RESISTANCE

1. Key off. 2. Disconnect the APP sensor connector, CR14. 3. Key on, engine off. 4. Measure the resistance between:

CR14, harness side	Battery
Pin 03	Negative terminal

Is the resistance less than 10 ohms?

-> Yes
GO to Pinpoint Test G549822t203.

-> No
GO to Pinpoint Test G549822t220.

G549822t203 : CHECK FOR POWER TO THE APP1 SENSOR

1. Measure the voltage between:

CR14, harness side	Battery
Pin 05	Negative terminal

Is the voltage between 4.8 - 5.2 volts?

-> Yes
GO to Pinpoint Test G549822t204.

-> No
GO to Pinpoint Test G549822t212.

G549822t204 : CHECK THE APP1 SIGNAL CIRCUIT FOR SHORT CIRCUIT TO GROUND

1. Measure the resistance between:

CR14, harness side	Battery

Pin 04	Negative terminal

Is the resistance greater than 100 Kohms?

-> Yes
GO to Pinpoint Test G549822t205.

-> No
GO to Pinpoint Test G549822t208.

G549822t205 : CHECK THE APP1 SIGNAL CIRCUIT FOR SHORT CIRCUIT TO POWER

1. Measure the resistance between:

CR14, harness side	Battery
Pin 04	Positive terminal

Is the resistance greater than 100 Kohms?

-> Yes
GO to Pinpoint Test G549822t206.

-> No
GO to Pinpoint Test G549822t210.

G549822t206 : CHECK THE APP1 SIGNAL AND POWER CIRCUITS FOR SHORT CIRCUIT TO EACH OTHER

1. Measure the resistance between:

CR14, harness side	CR14, harness side
Pin 04	Pin 05

Is the resistance greater than 100 Kohms?

www.JagDocs.com

-> Yes
GO to Pinpoint Test G549822t207.

-> No
GO to Pinpoint Test G549822t211.

G549822t207 : CHECK THE APP1 SIGNAL CIRCUIT FOR HIGH RESISTANCE

1. Key off. 2. Disconnect the ECM connector, EC66. 3. Measure the resistance between:

CR14, harness side	EC66, harness side
Pin 04	Pin D1

Is the resistance less than 10 ohms?

-> Yes
An intermittent fault may be present in the wiring harness. Visually check for chaffed wires or other physical damage to the harness. If no fault is found in the circuit, suspect the following component(s): - APP connector - APP sensor - ECM connector - ECM

-> No
REPAIR the high resistance circuit. For additional information, refer to the wiring diagrams. Clear any DTCs, test the system for normal operation.

G549822t208 : CHECK THE APP1 SIGNAL AND RETURN CIRCUITS FOR SHORT CIRCUIT TO EACH OTHER

1. Key off. 2. Disconnect the ECM connector, EC66. 3. Key on, engine off. 4. Measure the resistance between:

CR14, harness side	CR14, harness side
Pin 04	Pin 03

Is the resistance greater than 100 Kohms?

-> Yes
GO to Pinpoint Test G549822t209.

-> No

REPAIR the short circuit. For additional information, refer to the wiring diagrams. Clear any DTCs, test the system for normal operation.

G549822t209 : CHECK WHETHER THE SHORT CIRCUIT TO GROUND IS IN THE HARNESS OR THE MODULE

1. Measure the resistance between:

CR14, harness side	Battery
Pin 04	Negative terminal

Is the resistance greater than 100 Kohms?

-> Yes
Suspect: **-** ECM

-> No
REPAIR the short circuit. For additional information, refer to the wiring diagrams. Clear any DTCs, test the system for normal operation.

G549822t210 : CHECK WHETHER THE SHORT CIRCUIT TO POWER IS IN THE HARNESS OR THE MODULE

1. Key off. 2. Disconnect the ECM connector, EC66. 3. Key on, engine off. 4. Measure the resistance between:

CR14, harness side	Battery
Pin 04	Positive terminal

Is the resistance greater than 100 Kohms?

-> Yes
Suspect: **-** ECM

-> No
REPAIR the short circuit. For additional information, refer to the wiring diagrams. Clear any DTCs, test the system for normal operation.

G549822t211 : CHECK WHETHER SHORT CIRCUIT IS IN THE HARNESS OR THE MODULE

1. Key off. 2. Disconnect the ECM connector, EC66. 3. Key on, engine off. 4. Measure the resistance between:

www.JagDocs.com

CR14, harness side	CR14, harness side
Pin 04	Pin 05
Pin 04	Pin 03

Are the resistances greater than 100 Kohms?

-> Yes
Suspect: -ECM

-> No
REPAIR the short circuit. For additional information, refer to the wiring diagrams. Clear any DTCs, test the system for normal operation.

G549822t212 : CHECK THE 5 VOLT SUPPLY CIRCUIT FOR SHORT CIRCUIT TO GROUND

1. Measure the resistance between:

CR14, harness side	Battery
Pin 05	Negative terminal

Is the resistance greater than 100 Kohms?

-> Yes
GO to Pinpoint Test G549822t213.

-> No
GO to Pinpoint Test G549822t217.

G549822t213 : CHECK THE 5 VOLT SUPPLY CIRCUIT FOR SHORT CIRCUIT TO POWER

1. Measure the resistance between:

CR14, harness side	Battery
Pin 05	Positive terminal

Is the resistance greater than 100 Kohms?

-> Yes
GO to Pinpoint Test G549822t214.

-> No
GO to Pinpoint Test G549822t219.

G549822t214 : CHECK THE 5 VOLT SUPPLY CIRCUIT FOR HIGH RESISTANCE

1. Key off. 2. Disconnect the ECM connector, EC66. 3. Measure the resistance between:

CR14, harness side	EC66, harness side
Pin 05	Pin E1

Is the resistance less than 10 ohms?

-> Yes
Suspect : **-** ECM connector **-** ECM

-> No
REPAIR the high resistance circuit. For additional information, refer to the wiring diagrams. Clear any DTCs, test the system for normal operation.

G549822t215 : CHECK THE APP1 SUPPLY AND RETURN CIRCUITS FOR SHORT CIRCUIT TO EACH OTHER

1. Key off. 2. Disconnect the ECM connector, EC66. 3. Key on, engine off. 4. Measure the resistance between:

CR14, harness side	CR14, harness side
Pin 05	Pin 03

Is the resistance greater than 100 Kohms?

-> Yes
GO to Pinpoint Test G549822t216.

-> No

www.JagDocs.com

REPAIR the short circuit. For additional information, refer to the wiring diagrams. Clear any DTCs, test the system for normal operation.

G549822t216 : CHECK THE APP1 SENSOR TO ECM RETURN CIRCUIT FOR HIGH RESISTANCE

1. Measure the resistance between:

CR14, harness side	EC66, harness side
Pin 03	Pin C1

Is the resistance less than 10 ohms?

-> Yes
Suspect : **-** ECM connector **-** ECM

-> No
REPAIR the high resistance circuit. For additional information, refer to the wiring diagrams. Clear any DTCs, test the system for normal operation.

G549822t217 : CHECK THE APP1 SUPPLY AND RETURN CIRCUITS FOR SHORT CIRCUIT TO EACH OTHER

1. Key off. 2. Disconnect the ECM connector, EC66. 3. Key on, engine off. 4. Measure the resistance between:

CR14, harness side	CR14, harness side
Pin 05	Pin 03

Is the resistance greater than 100 Kohms?

-> Yes
GO to Pinpoint Test G549822t218.

-> No
REPAIR the short circuit. For additional information, refer to the wiring diagrams. Clear any DTCs, test the system for normal operation.

G549822t218 : CHECK WHETHER THE SHORT CIRCUIT TO GROUND IS IN THE HARNESS OR THE MODULE

1. Measure the resistance between:

CR14, harness side	Battery
Pin 05	Negative terminal

Is the resistance greater than 100 Kohms?

-> Yes
Suspect: **-** ECM

-> No
REPAIR the short circuit. For additional information, refer to the wiring diagrams. Clear any DTCs, test the system for normal operation.

G549822t219 : CHECK WHETHER THE SHORT CIRCUIT TO POWER IS IN THE HARNESS OR THE MODULE

1. Key off. 2. Disconnect the ECM connector, EC66. 3. Key on, engine off. 4. Measure the resistance between:

CR14, harness side	Battery
Pin 05	Positive terminal

Is the resistance greater than 100 Kohms?

-> Yes
Suspect: **-** ECM

-> No
REPAIR the short circuit. For additional information, refer to the wiring diagrams. Clear any DTCs, test the system for normal operation.

G549822t220 : CHECK THE APP1 SENSOR RETURN CIRCUIT FOR SHORT CIRCUIT TO POWER

1. Measure the resistance between:

CR14, harness side	Battery
Pin 03	Positive terminal

Is the resistance greater than 100 Kohms?

www.JagDocs.com

-> Yes
GO to Pinpoint Test G549822t215.

-> No
GO to Pinpoint Test G549822t221.

G549822t221 : CHECK WHETHER THE SHORT CIRCUIT TO POWER IS IN THE HARNESS OR THE MODULE

1. Key off. 2. Disconnect the ECM connector, EC66. 3. Key on, engine off. 4. Measure the resistance between:

CR14, harness side	Battery
Pin 03	Positive terminal

Is the resistance greater than 100 Kohms?

-> Yes
Suspect: **-** ECM

-> No
REPAIR the short circuit. For additional information, refer to the wiring diagrams. Clear any DTCs, test the system for normal operation.

G549822t222 : CHECK THE APP2 SENSOR RETURN CIRCUIT FOR HIGH RESISTANCE

1. Key off. 2. Disconnect the APP sensor connector, CR14. 3. Key on, engine off. 4. Measure the resistance between:

CR14, harness side	Battery
Pin 06	Negative terminal

Is the resistance less than 10 ohms?

-> Yes
GO to Pinpoint Test G549822t223.

-> No

GO to Pinpoint Test G549822t235.

G549822t223 : CHECK THE SUPPLY TO THE APP2 SENSOR

1. Measure the voltage between:

CR14, harness side	Battery
Pin 02	Negative terminal

Is the voltage between 4.8 - 5.2 volts?

-> Yes
GO to Pinpoint Test G549822t224.

-> No
GO to Pinpoint Test G549822t232.

G549822t224 : CHECK THE APP2 SIGNAL CIRCUIT FOR SHORT CIRCUIT TO GROUND

1. Measure the resistance between:

CR14, harness side	Battery
Pin 01	Negative terminal

Is the resistance greater than 100 Kohms?

-> Yes
GO to Pinpoint Test G549822t225.

-> No
GO to Pinpoint Test G549822t228.

G549822t225 : CHECK THE APP2 SIGNAL CIRCUIT FOR SHORT CIRCUIT TO POWER

1. Measure the resistance between:

www.JagDocs.com

CR14, harness side	Battery
Pin 01	Positive terminal

Is the resistance greater than 100 Kohms?

-> Yes
GO to Pinpoint Test G549822t226.

-> No
GO to Pinpoint Test G549822t230.

G549822t226 : CHECK THE APP2 SIGNAL AND POWER CIRCUITS FOR SHORT CIRCUIT TO EACH OTHER

1. Measure the resistance between:

CR14, harness side	CR14, harness side
Pin 01	Pin 02

Is the resistance greater than 100 Kohms?

-> Yes
GO to Pinpoint Test G549822t227.

-> No
GO to Pinpoint Test G549822t231.

G549822t227 : CHECK THE APP2 SIGNAL CIRCUIT FOR HIGH RESISTANCE

1. Key off. 2. Disconnect the ECM connector, EC66. 3. Measure the resistance between:

CR14, harness side	EC66, harness side
Pin 01	Pin C2

Is the resistance less than 10 ohms?

-> Yes
An intermittent fault may be present in the wiring harness. Visually check for chaffed wires or other physical damage to the harness. If no fault is found in the circuit, suspect the following component(s): - APP connector - APP sensor - ECM connector - ECM

-> No
REPAIR the high resistance circuit. For additional information, refer to the wiring diagrams. Clear any DTCs, test the system for normal operation.

G549822t228 : CHECK THE APP2 SIGNAL AND RETURN CIRCUITS FOR SHORT CIRCUIT TO EACH OTHER

1. Key off. 2. Disconnect the ECM connector, EC66. 3. Key on, engine off. 4. Measure the resistance between:

CR14, harness side	CR14, harness side
Pin 01	Pin 06

Is the resistance greater than 100 Kohms?

-> Yes
GO to Pinpoint Test G549822t229.

-> No
REPAIR the short circuit. For additional information, refer to the wiring diagrams. Clear any DTCs, test the system for normal operation.

G549822t229 : CHECK WHETHER THE SHORT CIRCUIT TO GROUND IS IN THE HARNESS OR THE MODULE

1. Measure the resistance between:

CR14, harness side	Battery
Pin 01	Negative terminal

Is the resistance greater than 100 Kohms?

-> Yes
Suspect: - ECM

-> No

www.JagDocs.com

REPAIR the short circuit. For additional information, refer to the wiring diagrams. Clear any DTCs, test the system for normal operation.

G549822t230 : CHECK WHETHER THE SHORT CIRCUIT TO POWER IS IN THE HARNESS OR THE MODULE

1. Key off. 2. Disconnect the ECM connector, EC66. 3. Key on, engine off. 4. Measure the resistance between:

CR14, harness side	Battery
Pin 01	Positive terminal

Is the resistance greater than 100 Kohms?

-> Yes
Suspect: **-** ECM

-> No
REPAIR the short circuit. For additional information, refer to the wiring diagrams. Clear any DTCs, test the system for normal operation.

G549822t231 : CHECK WHETHER SHORT CIRCUIT IS IN THE HARNESS OR THE MODULE

1. Key off. 2. Disconnect the ECM connector, EC66. 3. Measure the resistance between:

CR14, harness side	CR14, harness side
Pin 01	Pin 02

Is the resistance greater than 100 Kohms?

-> Yes
Suspect: **-**ECM

-> No
REPAIR the short circuit. For additional information, refer to the wiring diagrams. Clear any DTCs, test the system for normal operation.

G549822t232 : CHECK THE 5 VOLT SUPPLY CIRCUIT FOR SHORT CIRCUIT TO GROUND

1. Measure the resistance between:

CR14, harness side	Battery
Pin 02	Negative terminal

Is the resistance greater than 100 Kohms?

-> Yes
GO to Pinpoint Test G549822t233.

-> No
GO to Pinpoint Test G549822t238.

G549822t233 : CHECK THE 5 VOLT SUPPLY CIRCUIT FOR SHORT CIRCUIT TO POWER

1. Measure the resistance between:

CR14, harness side	Battery
Pin 02	Positive terminal

Is the resistance greater than 100 Kohms?

-> Yes
GO to Pinpoint Test G549822t234.

-> No
GO to Pinpoint Test G549822t240.

G549822t234 : CHECK THE 5 VOLT SUPPLY CIRCUIT FOR HIGH RESISTANCE

1. Key off. 2. Disconnect the ECM connector, EC66. 3. Measure the resistance between:

CR14, harness side	EC66, harness side
Pin 02	Pin D2

Is the resistance less than 10 ohms?

www.JagDocs.com

-> Yes
Suspect : - ECM connector - ECM

-> No
REPAIR the high resistance circuit. For additional information, refer to the wiring diagrams. Clear any DTCs, test the system for normal operation.

G549822t235 : CHECK THE APP2 SENSOR RETURN CIRCUIT FOR SHORT CIRCUIT TO POWER

1. Measure the resistance between:

CR14, harness side	Battery
Pin 06	Positive terminal

Is the resistance greater than 100 Kohms?

-> Yes
GO to Pinpoint Test G549822t236.

-> No
GO to Pinpoint Test G549822t241.

G549822t236 : CHECK THE APP2 SUPPLY AND RETURN CIRCUITS FOR SHORT CIRCUIT TO EACH OTHER

1. Key off. 2. Disconnect the ECM connector, EC66. 3. Key on, engine off. 4. Measure the resistance between:

CR14, harness side	CR14, harness side
Pin 02	Pin 06

Is the resistance greater than 100 Kohms?

-> Yes
GO to Pinpoint Test G549822t237.

-> No

REPAIR the short circuit. For additional information, refer to the wiring diagrams. Clear any DTCs, test the system for normal operation.

G549822t237 : CHECK THE APP2 SENSOR TO ECM RETURN CIRCUIT FOR HIGH RESISTANCE

1. Measure the resistance between:

CR14, harness side	EC66, harness side
Pin 06	Pin B2

Is the resistance less than 10 ohms?

-> Yes
Suspect : **-** ECM connector **-** ECM

-> No
REPAIR the high resistance circuit. For additional information, refer to the wiring diagrams. Clear any DTCs, test the system for normal operation.

G549822t238 : CHECK THE APP2 SUPPLY AND RETURN CIRCUITS FOR SHORT CIRCUIT TO EACH OTHER

1. Key off. 2. Disconnect the ECM connector, EC66. 3. Measure the resistance between:

CR14, harness side	CR14, harness side
Pin 02	Pin 06

Is the resistance greater than 100 Kohms?

-> Yes
GO to Pinpoint Test G549822t239.

-> No
REPAIR the short circuit. For additional information, refer to the wiring diagrams. Clear any DTCs, test the system for normal operation.

G549822t239 : CHECK WHETHER THE SHORT CIRCUIT TO GROUND IS IN THE HARNESS OR THE MODULE

1. Measure the resistance between:

www.JagDocs.com

CR14, harness side	Battery
Pin 02	Negative terminal

Is the resistance greater than 100 Kohms?

-> Yes
Suspect: **-** ECM

-> No
REPAIR the short circuit. For additional information, refer to the wiring diagrams. Clear any DTCs, test the system for normal operation.

G549822t240 : CHECK WHETHER THE SHORT CIRCUIT TO POWER IS IN THE HARNESS OR THE MODULE

1. Key off. 2. Disconnect the ECM connector, EC66. 3. Key on, engine off. 4. Measure the resistance between:

CR14, harness side	Battery
Pin 02	Positive terminal

Is the resistance greater than 100 Kohms?

-> Yes
Suspect: **-** ECM

-> No
REPAIR the short circuit. For additional information, refer to the wiring diagrams. Clear any DTCs, test the system for normal operation.

G549822t241 : CHECK WHETHER THE SHORT CIRCUIT TO POWER IS IN THE HARNESS OR THE MODULE

1. Key off. 2. Disconnect the ECM connector, EC66. 3. Key on, engine off. 4. Measure the resistance between:

CR14, harness side	Battery
Pin 06	Positive terminal

Is the resistance greater than 100 Kohms?

-> Yes
Suspect: **-** ECM

-> No
REPAIR the short circuit. For additional information, refer to the wiring diagrams. Clear any DTCs, test the system for normal operation.

PINPOINT TEST G549822p18 : BRAKE PEDAL SWITCH

G549822t242 : CHECK THE OPERATION OF THE BRAKE PEDAL SWITCH WITH THE BRAKE PEDAL RELEASED

1. **Brake pedal switch connector, CR78**

Circuit	Pin
Brake pedal switch - power	01
Brake pedal switch - signal	02

2. **Engine control module (ECM) connector, EC66**

Circuit	Pin
Brake pedal switch - signal	G2

3. Key off. 4. Disconnect the brake pedal switch connector, CR78. 5. Make sure the brake pedal is released. 6. Measure the resistance between:

CR78, component side	CR78, component side
Pin 01	Pin 02

Is the resistance less than 10 ohms?

-> Yes
GO to Pinpoint Test G549822t245.

www.JagDocs.com

-> No
INSTALL a new brake pedal switch. Clear any DTCs, test the system for normal operation.

G549822t245 : CHECK THE OPERATION OF THE BRAKE PEDAL SWITCH WITH THE BRAKE PEDAL DEPRESSED

1. Make sure the brake pedal is depressed. 2. Measure the resistance between:

CR78, component side	CR78, component side
Pin 01	Pin 02

Is the resistance less than 10 ohms?

-> Yes
GO to Pinpoint Test G549822t246.

-> No
INSTALL a new brake pedal switch. CLEAR the DTC, test the system for normal operation.

G549822t246 : CHECK FOR POWER TO THE BRAKE PEDAL SWITCH

1. Key on, engine off. 2. Measure the voltage between:

CR78, harness side	Battery
Pin 01	Negative terminal

Is the voltage greater than 10 volts?

-> Yes
GO to Pinpoint Test G549822t247.

-> No
REPAIR the power supply circuit as necessary. For additional information, refer to the wiring diagrams. Clear any DTCs, test the system for normal operation.

G549822t247 : CHECK THE BRAKE SWITCH SIGNAL CIRCUIT FOR SHORT CIRCUIT TO GROUND

1. Key off. 2. Measure the resistance between:

CR78, harness side	Battery
Pin 02	Negative terminal

Is the resistance greater than 100 Kohms?

-> Yes
GO to Pinpoint Test G549822t248.

-> No
REPAIR the short circuit. For additional information, refer to the wiring diagrams. Clear any DTCs, test the system for normal operation.

G549822t248 : CHECK THE BRAKE SWITCH SIGNAL CIRCUIT FOR SHORT CIRCUIT TO POWER

1. Measure the resistance between:

CR78, harness side	Battery
Pin 02	Positive terminal

Is the resistance greater than 100 Kohms?

-> Yes
GO to Pinpoint Test G549822t249.

-> No
REPAIR the short circuit. For additional information, refer to the wiring diagrams. Clear any DTCs, test the system for normal operation.

G549822t249 : CHECK THE BRAKE SWITCH SIGNAL CIRCUIT FOR HIGH RESISTANCE

1. Disconnect the ECM connector, EC66. 2. Measure the resistance between:

CR78, harness side	EC66, harness side
Pin 02	Pin G2

www.JagDocs.com

Is the resistance less than 10 ohms?

-> Yes
An intermittent fault may be present in the wiring harness. Visually check for chaffed wires or other physical damage to the harness. If no fault is found in the circuit, suspect the following component(s): - Brake pedal switch connector - Brake pedal switch - ECM connector - ECM

-> No
REPAIR the high resistance circuit. For additional information, refer to the wiring diagrams. Clear any DTCs, test the system for normal operation.

PINPOINT TEST G549822p19 : AIR CONDITIONING (A/C) PRESSURE SENSOR

G549822t253 : CHECK THE A/C PRESSURE SENSOR RETURN CIRCUIT FOR HIGH RESISTANCE

1. **Air conditioning (A/C) pressure sensor connector, EC101**

Circuit	Pin
Air conditioning pressure sensor - return	01
Air conditioning pressure sensor - signal	02
Air conditioning pressure sensor - power	03

2. **Engine control module (ECM) connector, EC66**

Circuit	Pin
Air conditioning pressure sensor - return	B3
Air conditioning pressure sensor - signal	F2
Air conditioning pressure sensor - power	D3

3. Key off. 4. Disconnect the A/C pressure sensor connector, EC101. 5. Key on, engine off. 6. Measure the resistance between:

EC101, harness side	Battery

Pin 01	Negative terminal

Is the resistance less than 10 ohms?

-> Yes
GO to Pinpoint Test G549822t256.

-> No
GO to Pinpoint Test G549822t254.

G549822t254 : CHECK THE A/C PRESSURE SENSOR RETURN CIRCUIT FOR SHORT CIRCUIT TO POWER

1. Measure the resistance between:

EC101, harness side	Battery
Pin 01	Positive terminal

Is the resistance greater than 100 Kohms?

-> Yes
GO to Pinpoint Test G549822t255.

-> No
REPAIR the short circuit. For additional information, refer to the wiring diagrams. Clear any DTCs, test the system for normal operation.

G549822t255 : CHECK THE A/C PRESSURE SENSOR TO ECM RETURN CIRCUIT FOR HIGH RESISTANCE

1. Key off. 2. Disconnect the ECM connector, EC66. 3. Measure the resistance between:

EC101, harness side	EC66, harness side
Pin 01	Pin B3

Is the resistance less than 10 ohms?

www.JagDocs.com

-> Yes
An intermittent fault may be present in the wiring harness. Visually check for chaffed wires or other physical damage to the harness. If no fault is found in the circuit, suspect the following component(s): **-** A/C pressure sensor connector **-** A/C pressure sensor **-** ECM connector **-** ECM

-> No
REPAIR the high resistance circuit. For additional information, refer to the wiring diagrams. Clear any DTCs, test the system for normal operation.

G549822t256 : CHECK FOR POWER TO THE A/C PRESSURE SENSOR

1. Key on, engine off. 2. Measure the voltage between:

EC101, harness side	Battery
Pin 03	Negative terminal

Is the voltage between 4.8 - 5.2 volts?

-> Yes
GO to Pinpoint Test G549822t252.

-> No
REPAIR the power supply circuit as necessary. For additional information, refer to the wiring diagrams. Clear any DTCs, test the system for normal operation.

G549822t252 : CHECK THE A/C PRESSURE SENSOR SIGNAL CIRCUIT FOR SHORT CIRCUIT TO GROUND

1. Measure the resistance between:

EC101, harness side	Battery
Pin 02	Negative terminal

Is the resistance greater than 100 Kohms?

-> Yes
GO to Pinpoint Test G549822t251.

-> No

REPAIR the short circuit. For additional information, refer to the wiring diagrams. Clear any DTCs, test the system for normal operation.

G549822t251 : CHECK THE A/C PRESSURE SENSOR SIGNAL CIRCUIT FOR SHORT CIRCUIT TO POWER

1. Measure the resistance between:

EC101, harness side	Battery
Pin 02	Positive terminal

Is the resistance greater than 100 Kohms?

-> Yes
GO to Pinpoint Test G549822t250.

-> No
REPAIR the short circuit. For additional information, refer to the wiring diagrams. Clear any DTCs, test the system for normal operation.

G549822t250 : CHECK THE A/C PRESSURE SENSOR SIGNAL CIRCUIT FOR HIGH RESISTANCE

1. Key off. 2. Disconnect the ECM connector, EC66. 3. Measure the resistance between:

A/C pressure sensor connector EC101, harness side	ECM connector EC66, harness side
Pin 02	Pin F2

Is the resistance less than 10 ohms?

-> Yes
An intermittent fault may be present in the wiring harness. Visually check for chaffed wires or other physical damage to the harness. If no fault is found in the circuit, suspect the following component(s): - A/C pressure sensor connector - A/C pressure sensor - ECM connector - ECM

-> No
REPAIR the high resistance circuit. For additional information, refer to the wiring diagrams. Clear any DTCs, test the system for normal operation.

www.JagDocs.com

PINPOINT TEST G549822p21 : RADIATOR COOLING FAN

G549822t263 : CHECK THE RADIATOR COOLING FAN MODULE GROUND CIRCUIT FOR HIGH RESISTANCE

1. **Radiator cooling fan connector, EC72**

Circuit	Pin
Radiator cooling fan - power	01
Radiator cooling fan - ground	02

2. **Radiator cooling fan connector, GC01**

Circuit	Pin
Radiator cooling fan - control	01
Radiator cooling fan - ignition	02

3. **Engine control module (ECM) connector, EC66**

Circuit	Pin
Radiator cooling fan - control	K2

4. Key off. 5. Disconnect the fan module electrical connector, EC72. 6. Measure the resistance between:

EC72, harness side	Battery
Pin 02	Negative terminal

Is the resistance less than 10 ohms?

-> Yes

GO to Pinpoint Test G549822t264.

-> No
REPAIR the high resistance circuit. For additional information, refer to the wiring diagrams. Clear any DTCs, test the system for normal operation.

G549822t264 : CHECK FOR POWER TO THE RADIATOR COOLING FAN MODULE

1. Measure the voltage between:

EC72, harness side	Battery
Pin 01	Negative terminal

Is the voltage greater than 10 volts?

-> Yes
GO to Pinpoint Test G549822t265.

-> No
REPAIR the power supply circuit as necessary. For additional information, refer to the wiring diagrams. Clear any DTCs, test the system for normal operation.

G549822t265 : CHECK THE IGNITION SUPPLY TO THE RADIATOR COOLING FAN MODULE

1. Key off. 2. Disconnect the fan module electrical connector, GC01. 3. Key on, engine off. 4. Measure the voltage between:

GC01, harness side	Battery
Pin 02	Negative terminal

Is the voltage greater than 10 volts?

-> Yes
GO to Pinpoint Test G549822t266.

-> No
REPAIR the EMS relay to radiator cooling fan supply circuit as necessary. For additional information, refer to the wiring diagrams. Clear any DTCs, test the system for normal operation.

www.JagDocs.com

G549822t266 : CHECK THE RADIATOR COOLING FAN MODULE CONTROL CIRCUIT FOR SHORT CIRCUIT TO GROUND

1. Measure the resistance between:

GC01, harness side	Battery
Pin 01	Negative terminal

Is the resistance greater than 100 Kohms?

-> Yes
GO to Pinpoint Test G549822t267.

-> No
REPAIR the short circuit. For additional information, refer to the wiring diagrams. Clear any DTCs, test the system for normal operation.

G549822t267 : CHECK THE RADIATOR COOLING FAN MODULE CONTROL CIRCUIT FOR SHORT CIRCUIT TO POWER

1. Measure the resistance between:

GC01, harness side	Battery
Pin 01	Positive terminal

Is the resistance greater than 100 Kohms?

-> Yes
GO to Pinpoint Test G549822t268.

-> No
REPAIR the short circuit. For additional information, refer to the wiring diagrams. Clear any DTCs, test the system for normal operation.

G549822t268 : CHECK THE RADIATOR COOLING FAN MODULE CONTROL CIRCUIT FOR HIGH RESISTANCE

1. Key off. 2. Disconnect the ECM connector, EC66. 3. Key on, engine off. 4. Measure the resistance between:

GC01, harness side	EC66, harness side
Pin 01	Pin K2

Is the resistance less than 10 ohms?

-> Yes
An intermittent fault may be present in the wiring harness. Visually check for chaffed wires or other physical damage to the harness. If no fault is found in the circuit, suspect the following component(s): **-** Radiator cooling fan module connector(s) **-** Radiator cooling fan module **-** ECM connector **-** ECM

-> No
REPAIR the high resistance circuit. For additional information, refer to the wiring diagrams. Clear any DTCs, test the system for normal operation.

PINPOINT TEST G549822p22 : STARTER RELAY AND CIRCUITS

G549822t261 : CHECK THE STARTER RELAY AND CIRCUITS

1.
Starting System

-> Yes

-> No

PINPOINT TEST G549822p23 : ECM POWER SUPPLY CIRCUIT

www.JagDocs.com

G549822t269 : CHECK FOR POWER TO THE ECM

1.

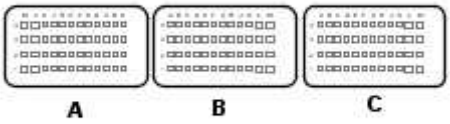

E54251

Circuit	Pin
ECM - power	K4

2. Key off. 3. Disconnect the ECM electrical connector, EC66. 4. Measure the voltage between:

EC66, harness side	Battery
Pin K4	Negative terminal

Is the voltage greater than 10 volts?

-> Yes

Recheck the DTCs. If no DTCs are set an intermittent fault may be present in the wiring harness. Visually check for chaffed wires or other physical damage to the harness. If no fault is found in the circuit, suspect the following component(s): **-** ECM connector **-** ECM

-> No

REPAIR the power supply circuit as necessary. For additional information, refer to the wiring diagrams. Clear any DTCs, test the system for normal operation.

PINPOINT TEST G549822p20 : ECM IGNITION SUPPLY CIRCUIT(S)

G549822t257 : CHECK THE IGNITION TO ECM SUPPLY CIRCUITS

1.

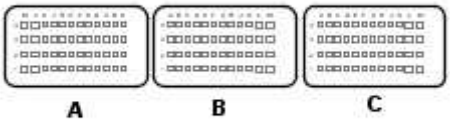

E54251

Circuit	Pin
ECM - ignition supply A	L2
ECM - ignition supply B	L3
ECM - ignition supply C	L1

2. Key off. 3. Disconnect the ECM electrical connector, EC66. 4. Measure the voltage between:

EC66, harness side	Battery
Pin L2	Negative terminal
Pin L3	Negative terminal
Pin L1	Negative terminal

Are the voltages greater than 10 volts?

-> Yes

Recheck the DTCs. If no DTCs are set an intermittent fault may be present in the wiring harness. Visually check for chaffed wires or other physical damage to the harness. If no fault is found in the circuit, suspect the following component(s): **-** ECM connector **-** ECM

-> No

REPAIR the ignition power supply circuit(s) as necessary. For additional information, refer to the wiring diagrams. Clear any DTCs, test the system for normal operation.

PINPOINT TEST G549822p26 : EMS CONTROL RELAY

www.JagDocs.com

G549822t258 : CHECK THE EMS RELAY CONTROL CIRCUIT FOR SHORT CIRCUIT TO GROUND

1.

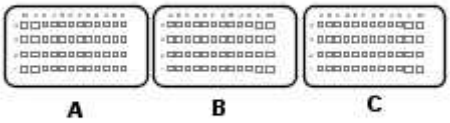

E54251

Circuit	Pin
EMS relay - control	J3

2. Remove the EMS relay. 3. Measure the resistance between:

EMS relay base	Battery
Pin 02	Negative terminal

Is the resistance greater than 100 Kohms?

-> Yes
GO to Pinpoint Test G549822t259.

-> No
REPAIR the short circuit. For additional information, refer to the wiring diagrams. Clear any DTCs, test the system for normal operation.

G549822t259 : CHECK THE EMS RELAY CONTROL CIRCUIT FOR SHORT CIRCUIT TO POWER

1. Measure the resistance between:

EMS relay base	Battery
Pin 02	Positive terminal

Is the resistance greater than 100 Kohms?

-> Yes
GO to Pinpoint Test G549822t277.

-> No
REPAIR the short circuit. For additional information, refer to the wiring diagrams. Clear any DTCs, test the system for normal operation.

G549822t277 : CHECK THE EMS RELAY CONTROL CIRCUIT FOR HIGH RESISTANCE

1. Key off. 2. Disconnect the ECM connector, EC66. 3. Measure the resistance between:

EMS relay base	EC66
Pin 02	Pin J3

Is the resistance less than 10 ohms?

-> Yes
GO to Pinpoint Test G549822t278.

-> No
REPAIR the high resistance circuit. For additional information, refer to the wiring diagrams. Clear any DTCs, test the system for normal operation.

G549822t278 : CHECK FOR POWER TO THE EMS RELAY BASE

1. Measure the voltage between:

EMS relay base	Battery
Pin 01	Negative terminal
Pin 03	Negative terminal

Are the voltages greater than 10 volts?

-> Yes
An intermittent fault may be present in the wiring harness. Visually check for chaffed wires or other physical damage to the harness. If no fault is found in the circuit, suspect the following component(s): - EMS relay - ECM connector - ECM

www.JagDocs.com

-> No
REPAIR the circuit between the battery and the EMS relay base as necessary. For additional information, refer to the wiring diagrams. Clear any DTCs, test the system for normal operation.

PINPOINT TEST G549822p25 : INERTIA SWITCH

G549822t270 : CHECK THE INERTIA SWITCH SUPPLY CIRCUIT FOR SHORT CIRCUIT TO GROUND

1. Make sure the inertia switch is not tripped. 2. Key off. 3. Disconnect the inertia switch connector, CR02. 4. Measure the resistance between:

CR02, harness side	Battery
Pin 02	Negative terminal

Is the resistance greater than 100 Kohms?

-> Yes
GO to Pinpoint Test G549822t271.

-> No
REPAIR the short circuit. For additional information, refer to the wiring diagrams. Clear any DTCs, test the system for normal operation.

G549822t271 : CHECK THE INERTIA SWITCH SUPPLY CIRCUIT FOR SHORT CIRCUIT TO POWER

1. Measure the resistance between:

CR02, harness side	Battery
Pin 02	Positive terminal

Is the resistance greater than 100 Kohms?

-> Yes
GO to Pinpoint Test G549822t272.

-> No
REPAIR the short circuit. For additional information, refer to the wiring diagrams. Clear any DTCs, test the system for normal operation.

G549822t272 : CHECK THE INERTIA SWITCH SUPPLY CIRCUIT FOR HIGH RESISTANCE

1. Disconnect the ignition switch connector, IP34. 2. Measure the resistance between:

CR02, harness side	IP34
Pin 02	Pin 07

Is the resistance less than 10 ohms?

-> Yes
GO to Pinpoint Test G549822t279.

-> No
REPAIR the high resistance circuit. For additional information, refer to the wiring diagrams. Clear any DTCs, test the system for normal operation.

G549822t279 : CHECK THE INERTIA SWITCH TO ECM CIRCUIT FOR SHORT CIRCUIT TO GROUND

1. Measure the resistance between:

CR02, harness side	Battery
Pin 03	Negative terminal

Is the resistance greater than 100 Kohms?

-> Yes
GO to Pinpoint Test G549822t273.

-> No
REPAIR the short circuit. For additional information, refer to the wiring diagrams. Clear any DTCs, test the system for normal operation.

www.JagDocs.com

G549822t273 : CHECK THE INERTIA SWITCH TO ECM CIRCUIT FOR SHORT CIRCUIT TO POWER

1. Measure the resistance between:

CR02, harness side	Battery
Pin 03	Positive terminal

Is the resistance greater than 100 Kohms?

-> Yes
GO to Pinpoint Test G549822t280.

-> No
REPAIR the short circuit. For additional information, refer to the wiring diagrams. Clear any DTCs, test the system for normal operation.

G549822t280 : CHECK THE INERTIA SWITCH TO ECM CIRCUIT FOR HIGH RESISTANCE

1. Disconnect electrical connector, PI41. 2. Measure the resistance between:

CR02, harness side	PI41
Pin 03	Pin 15

Is the resistance less than 10 ohms?

-> Yes
An intermittent fault may be present in the wiring harness. Visually check for chaffed wires or other physical damage to the harness. If no fault is found in the circuit, suspect the following component(s): **-**Inertia switch connector **-**Inertia switch **-** ECM connector **-** ECM

-> No
REPAIR the high resistance circuit. For additional information, refer to the wiring diagrams. Clear any DTCs, test the system for normal operation.

Brake Pedal Position (BPP) Switch

Removal

1 . Switch the ignition on.

2 . Position the front seat fully rearwards.

3 . Switch the ignition off.

4 . Remove the driver's side footwell trim panel.

- Release the 3 clips.

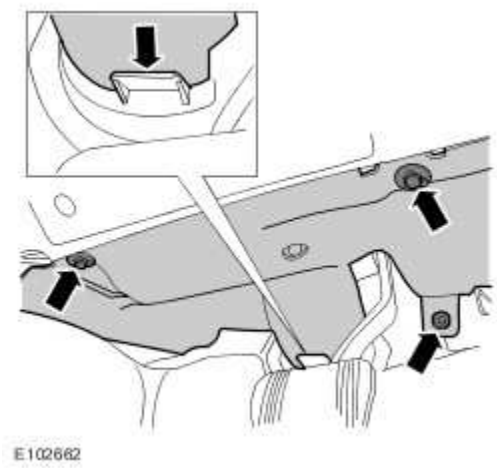

5 . Release the brake pedal position (BPP) switch.

- Rotate the BPP switch 45 degrees counter-clockwise.

www.JagDocs.com

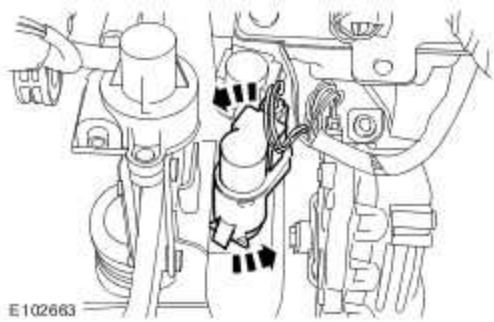

6 . Remove the BPP switch.

Disconnect the electrical connector.

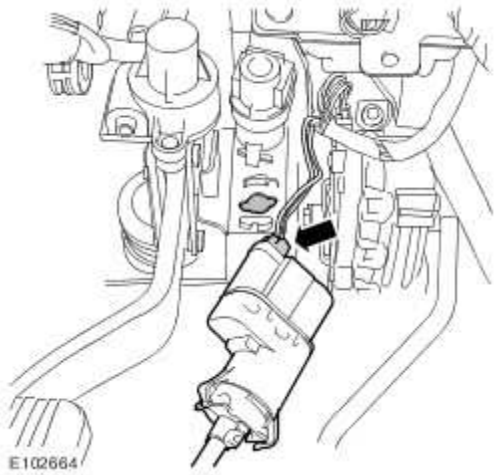

Installation

1 . **CAUTION: Make sure that the brake pedal remains in the rest position during this procedure.**

CAUTION: The bracket is keyed to avoid incorrect orientation. Failure to correctly align the switch may result in damage to the vehicle.

CAUTION: Make sure that the pedal box, booster-to-brake pedal assembly and switch bracket are all installed correctly before installing the switch.

Install the BPP switch.

- Locate the BPP switch in the bracket.
- Rotate the BPP switch 45 degrees clockwise.

2 . Connect the electrical connector.

3 . Install the driver's side footwell trim panel.

- Align the trim panel with the guide.
- Install the 3 clips.

www.JagDocs.com

Camshaft Position (CMP) Sensor (18.30.63)

Removal

1 . Remove the left-hand exhaust gas recirculation (EGR) valve.
For additional information, refer to Exhaust Gas Recirculation (EGR) Valve LH

2 . Disconnect the camshaft position (CMP) sensor electrical connector.

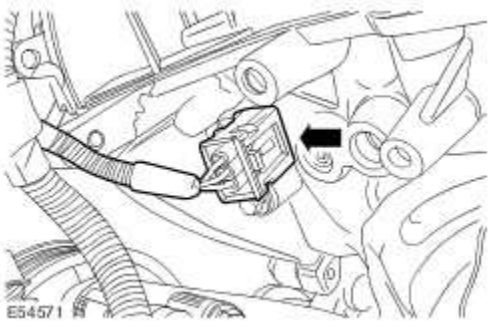

3 . Remove and discard the CMP sensor.

Remove the CMP sensor retaining bolt.

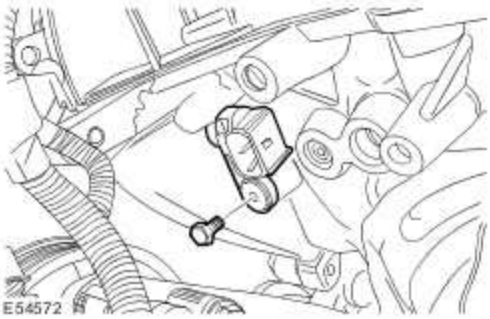

Installation

1 **NOTE:**
.

Only turn the engine in the normal direction of rotation.

Turn the engine until one of the three webs on the back of the camshaft pulley is visible through the CMP sensor housing (timing belt upper cover shown removed for clarity).

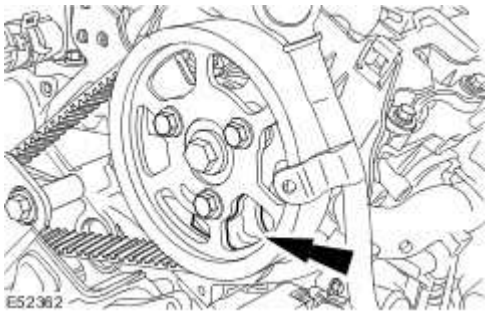

2 . **CAUTION: The CMP sensor tip must rest on one of the three webs on the back of the camshaft pulley. Incorrect installation may result in the CMP sensor being damaged.**

Install the CMP sensor until the tip of the sensor touches the back of the camshaft pulley (timing belt upper cover shown removed for clarity).

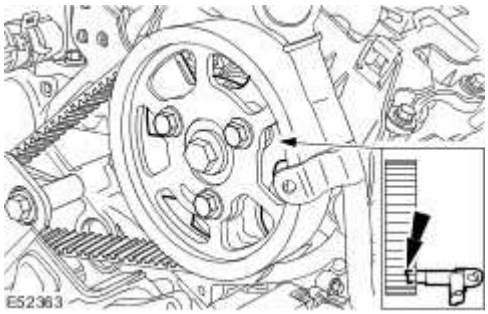

3 . Install the CMP sensor retaining bolt.

- Tighten to 10 Nm.

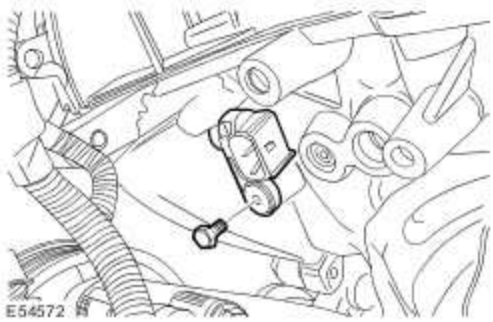

4 . Connect the CMP sensor electrical connector.

www.JagDocs.com

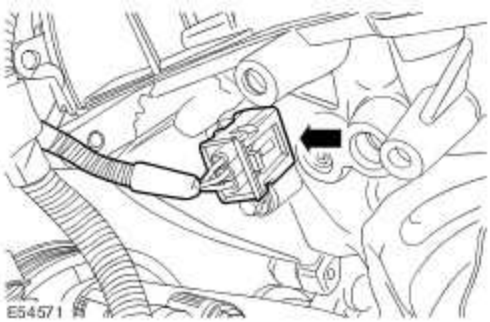

5 . Install the left-hand EGR valve.
For additional information, refer to Exhaust Gas Recirculation (EGR) Valve LH

Crankshaft Position (CKP) Sensor (18.30.12)

Removal

All vehicles

1 . Disconnect the battery ground cable.
For additional information, refer to Battery Disconnect and Connect

2 . Remove the air deflector.
For additional information, refer to Air Deflector (76.11.41)

Left-hand drive vehicles

3 . Lower the vehicle.

4 . Center the steering wheel.

- Lock in position, and remove the ignition key.

5 . Raise the vehicle.

6 . Detach the lower steering column.

- Remove the steering gear shaft pinch bolt.

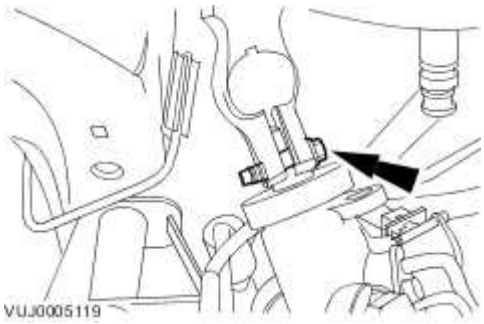

www.JagDocs.com

7 . Detach the steering gear.

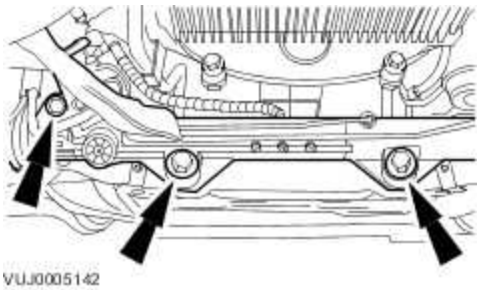

8 . Using suitable tie straps, secure the steering gear.

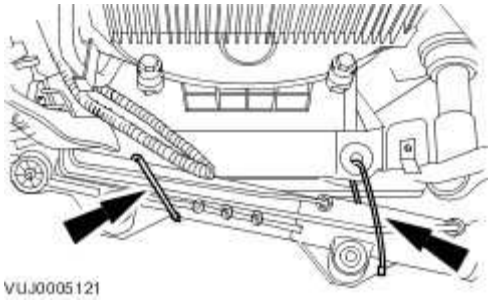

All vehicles

9 . Disconnect the crankshaft position (CKP) sensor electrical connector.

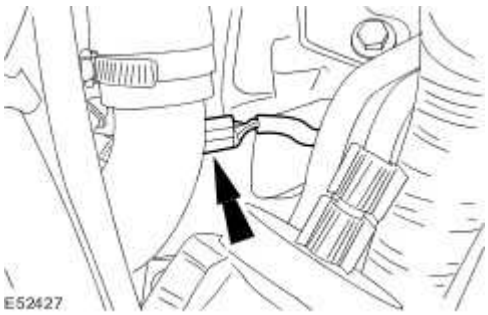

10 . Remove the CKP sensor blanking cover.

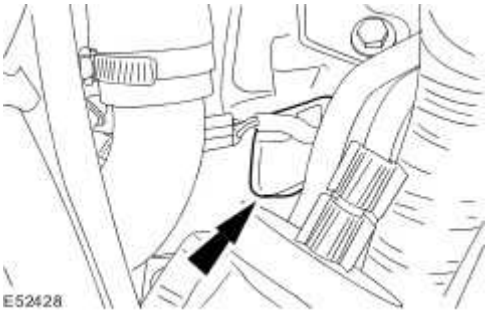

11 . **NOTE:**

The CKP sensor retaining bolt should not be removed from the CKP sensor.

Fully loosen the CKP sensor retaining bolt.

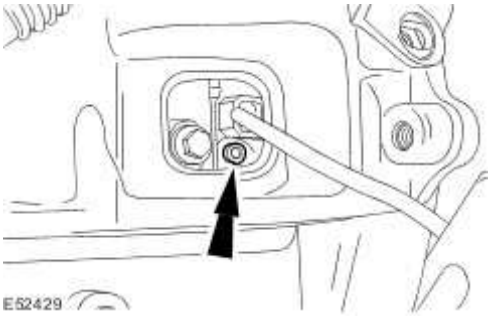

12 . Remove the CKP sensor.

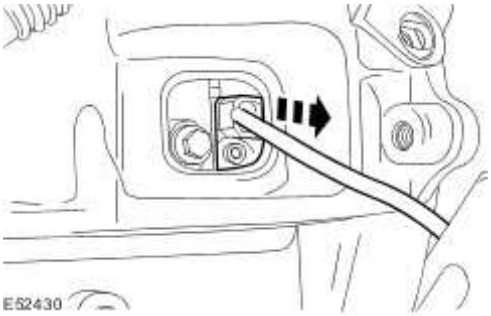

www.JagDocs.com

Installation

1 . **CAUTION: Install the CKP sensor correctly into the housing. Failure to follow this instruction may result in damage to the CKP sensor.**

To install, reverse the removal procedure.

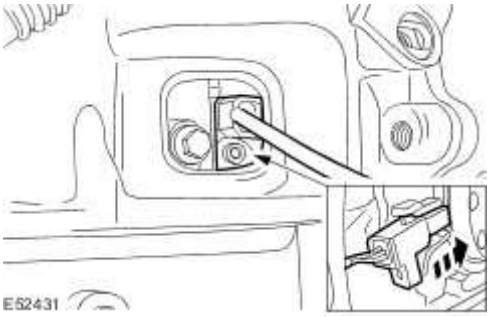

2 . Tighten to 5 Nm.

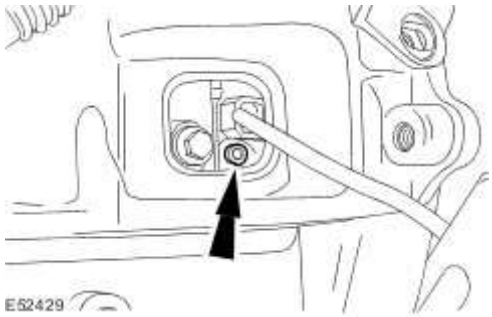

3 . Tighten to 100 Nm.

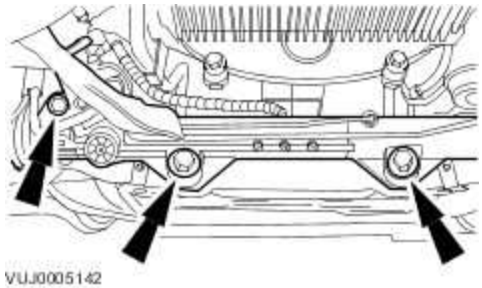

4 . Tighten to 35 Nm.

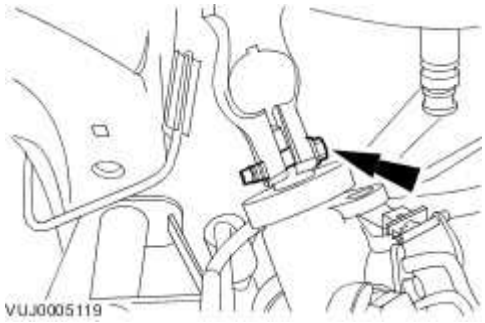

Crankshaft Position (CKP) Sensor Ring

Special Service Tools

E52723

Installer - Timing Trigger Wheel
303-1130

Removal

1 . Remove the flexplate.
For additional information, refer to Flexplate (12.53.13)

2 . Remove the crankshaft position (CKP) sensor.

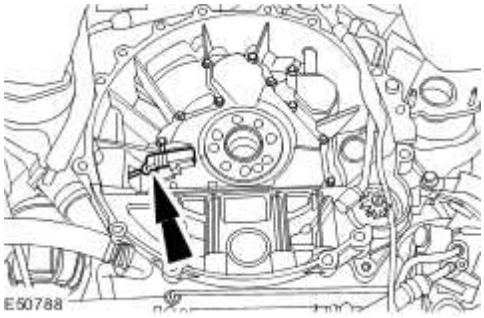

E50788

3 . Remove the CKP sensor ring.

Discard the CKP ring.

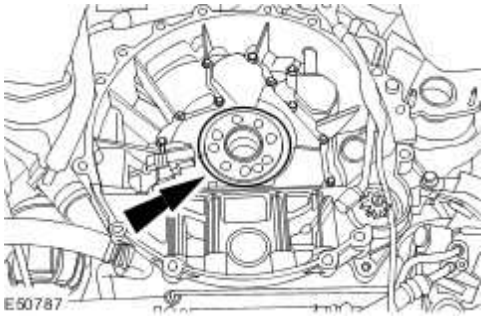

E50787

www.JagDocs.com

Installation

1 . Install the alignment special tool to the crankshaft.

Align the special tool alignment peg to the timing hole on the crankshaft.

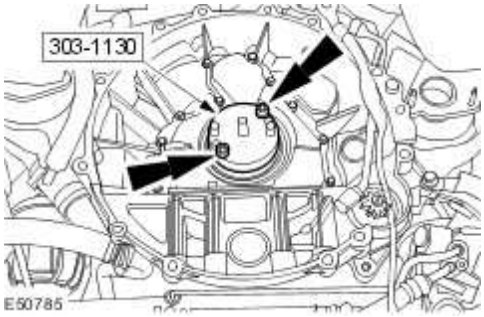

2 **NOTE:**

.

Install a new CKP ring.

NOTE:

Make sure that the CKP sensor ring is aligned correctly with the special tool pip and that both mating surfaces are fully seated.

Install the CKP sensor ring to the installation special tool.

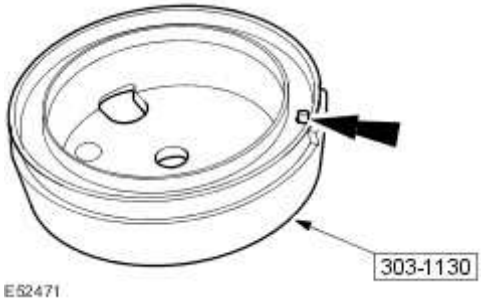

3 . **NOTE:**

Assemble the installation special tool to the alignment special tool.

Using the special tool, install the CKP sensor ring.

Tighten the special tool nut.

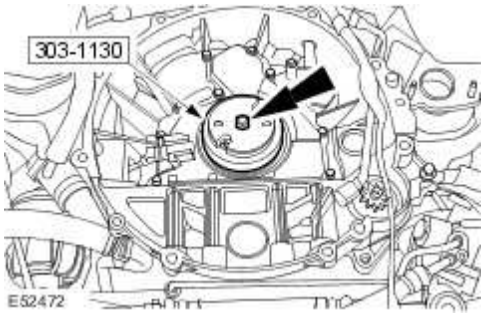

4 . Remove the installation special tool.

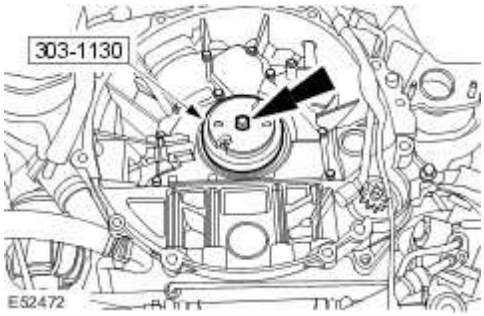

5 . Remove the special tool retaining bolts and reposition into the threaded holes on the special tool and tighten to remove the alignment special tool from the crankshaft.

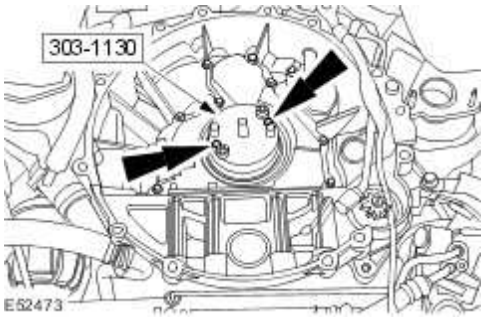

6 . **CAUTION: Install the CKP sensor correctly into the housing. Failure to follow this instruction may result in damage to the CKP sensor.**

Install the crankshaft position (CKP) sensor.

www.JagDocs.com

- Tighten to 5 Nm.

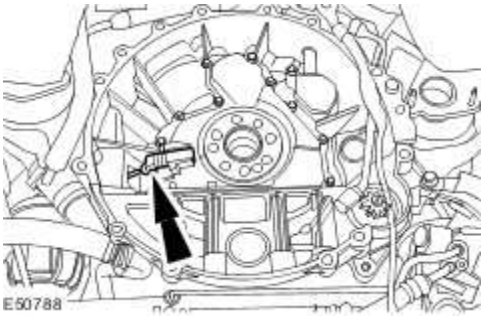

7 . Install the flexplate.
For additional information, refer to Flexplate (12.53.13)

Engine Control Module (ECM) (18.30.01)

Removal

1 . Disconnect the battery ground cable.
For additional information, refer to Battery Disconnect and Connect

2 . Remove the cowl vent screen.
For additional information, refer to Cowl Vent Screen (76.10.01)

3 . Remove the washer reservoir filler neck.

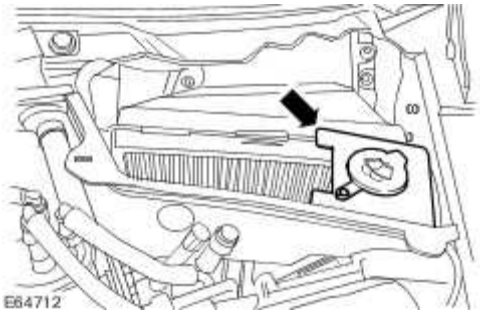

4 . Remove the cabin air filter.

1) Detach the cabin air filter.

2) Remove the cabin air filter.

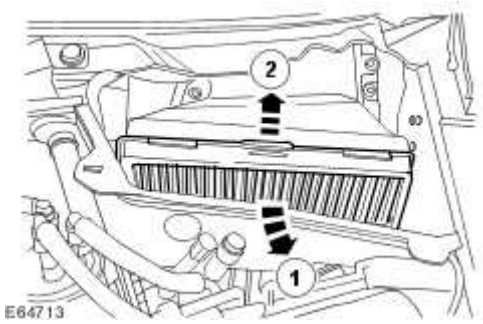

5 . Remove the cabin air filter housing.

www.JagDocs.com

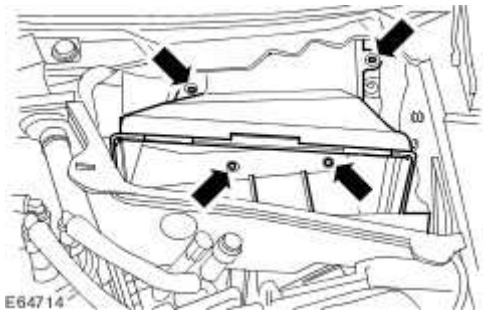

6 . Remove the engine compartment left-hand panel.

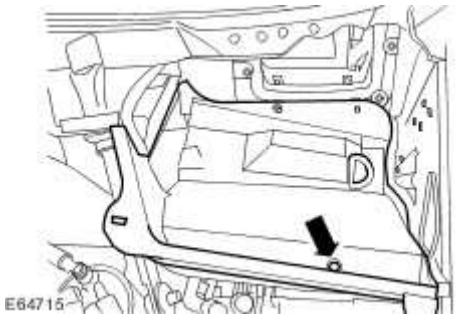

7 . Detach the engine control module (ECM) module wiring harness from the bulkhead.

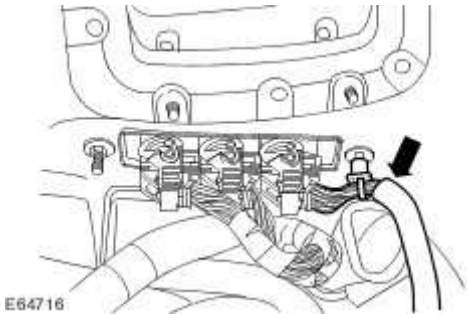

8 . Disconnect the ECM electrical connectors.

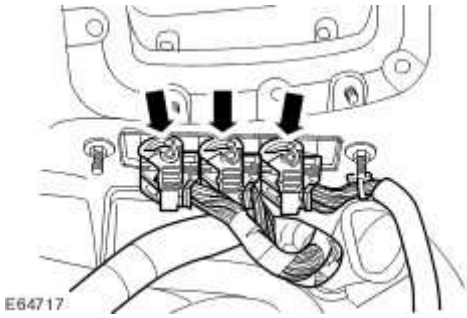

9 . Remove the ECM bracket retaining nuts.

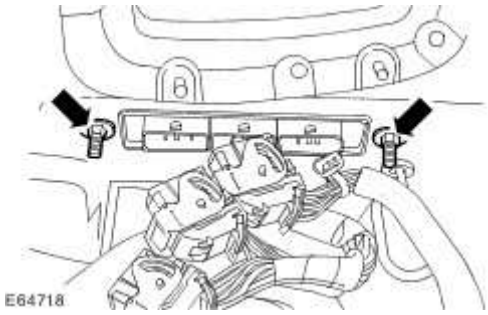

10 . Remove the instrument panel left-hand lower trim panel.

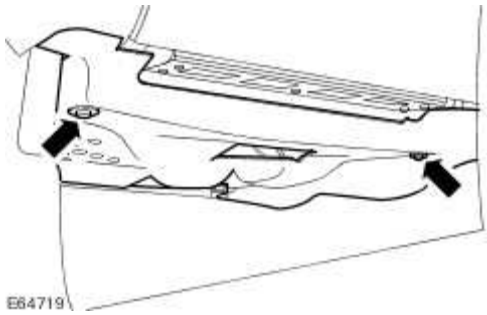

11 . Remove the ECM.

- Remove the ECM bracket bolt.

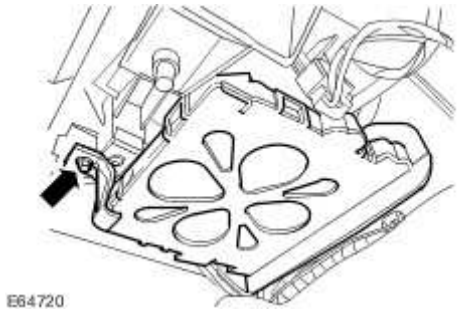

Installation

1 . To install, reverse the removal procedure.

- Tighten to 6 Nm.

www.JagDocs.com

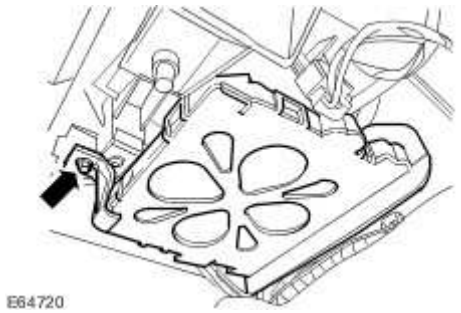

2 . Tighten to 3 Nm.

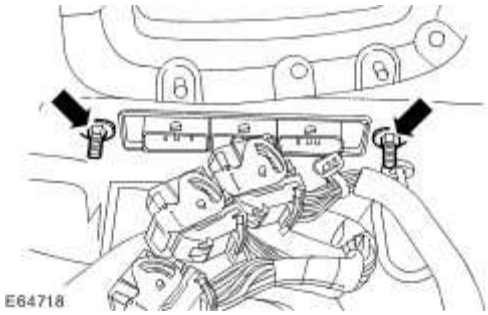

Engine Coolant Temperature (ECT) Sensor (18.30.10)

Removal

1 . **WARNING: Never remove the coolant expansion tank pressure cap under any circumstances while the engine is operating. Failure to follow this instruction may result in personal injury.**

WARNING: To avoid hot coolant or steam blowing out of the cooling system, use extreme care when removing the coolant expansion tank pressure cap. Wait until the engine has cooled down, then insulate the coolant pressure cap with a suitable cloth and slowly loosen the coolant expansion tank pressure cap until the cooling system pressure is released. Do not remove the coolant expansion tank pressure cap. Step back while the pressure is released from the system. When all of the pressure has been released slowly remove the coolant expansion tank pressure cap (still with the suitable cloth in position) from the coolant expansion tank. Failure to follow this instruction may result in personal injury.

Release the cooling system pressure.

- Remove the coolant expansion tank pressure cap.

2 . Remove the oil filler cap.

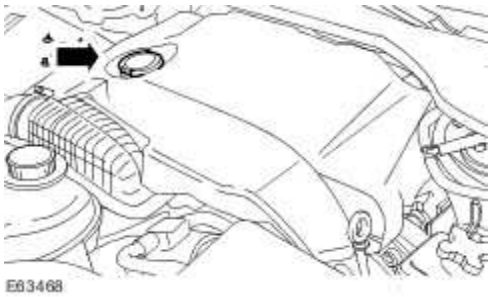

3 . Remove the engine cover.

www.JagDocs.com

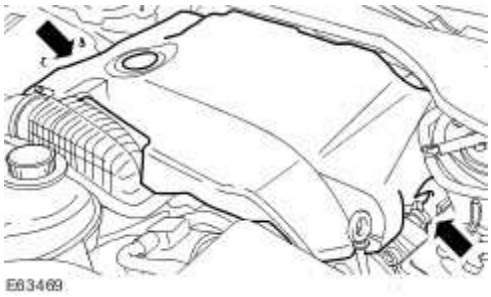

4 . Disconnect the engine coolant temperature (ECT) sensor electrical connector.

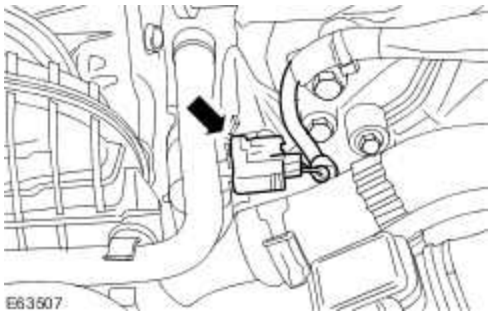

5 . Remove the ECT sensor.

1) Lift the locking tang.

2) Rotate the ECT sensor counterclockwise to remove.

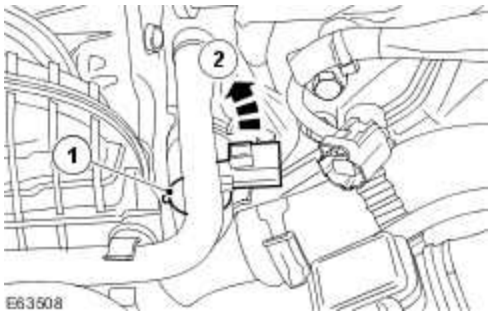

Installation

1 . To install, reverse the removal procedure.

- Fill the cooling system up to the MAX mark on the coolant expansion tank.

Exhaust Gas Temperature Sensor

Special Service Tools

303-1184

E67739

Exhaust gas temperature sensor wrench
303-1184

Removal

1 . Remove the air deflector.
For additional information, refer to Air Deflector (76.11.41)

2 . Disconnect the exhaust gas temperature sensor electrical connector.

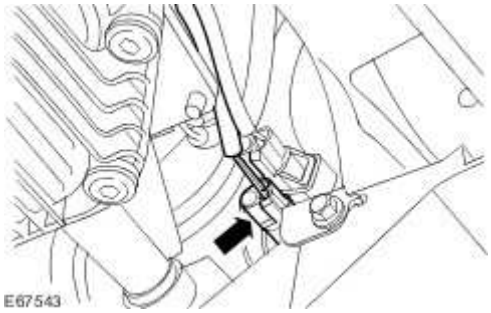

E67543

3 . Detach the exhaust gas temperature sensor wiring harness from the transmission.

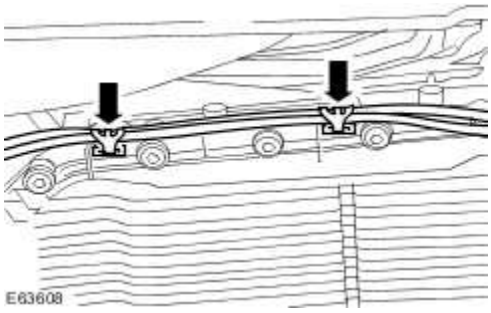

E63608

4 . Remove the exhaust gas temperature sensor.

www.JagDocs.com

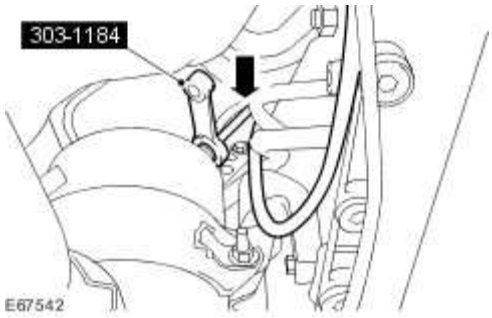

Installation

1. **CAUTION: Make sure the torque wrench setting procedure is followed correctly. Failure to follow this instruction may result in damage to the vehicle.**

Calculate the setting for the torque wrench.

- Stage 1: Multiply the required torque by the effective length of the torque wrench (1).
- Stage 2: Add the effective length of the special tool (2) to the effective length of the torque wrench.
- Stage 3: Divide the total of stage 1 by the total of stage 2.
- Stage 4: Set the torque wrench to the figure arrived at in stage 3.

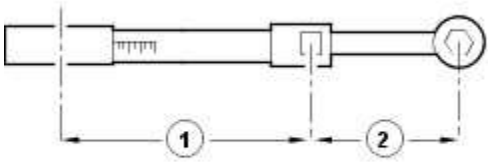

2. **CAUTION: Make sure the torque wrench setting procedure is followed correctly. Failure to follow this instruction may result in damage to the vehicle.**

Install the exhaust gas temperature sensor.

Tighten to 35 Nm.

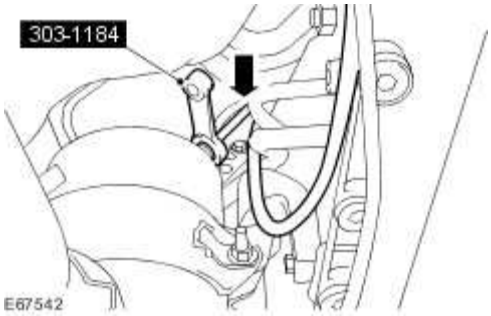

3 . Attach the exhaust gas temperature sensor wiring harness to the transmission.

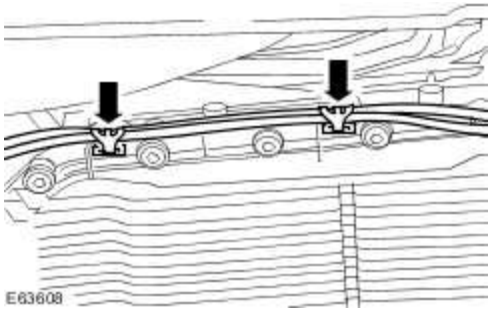

4 . Connect the exhaust gas temperature sensor electrical connector.

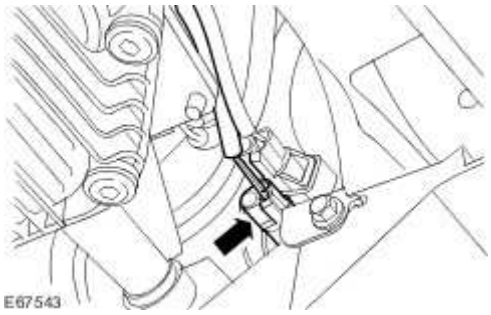

5 . Install the air deflector.
For additional information, refer to Air Deflector (76.11.41)

www.JagDocs.com

Engine Oil Pressure (EOP) Sensor

Removal

1 . Remove the oil filler cap.

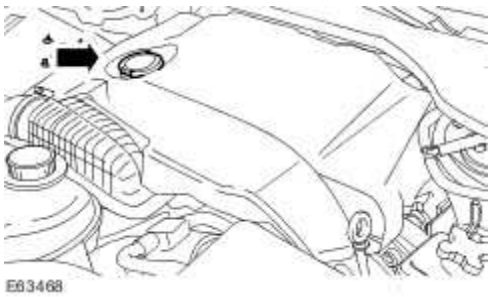

2 . Remove the engine cover.

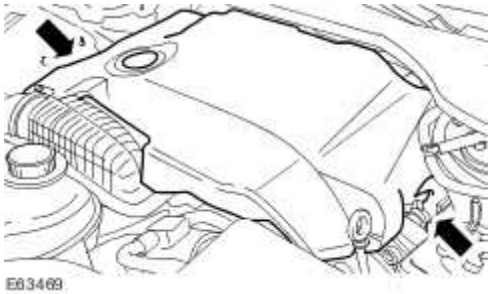

3 . Disconnect the engine oil pressure (EOP) sensor electrical connector.

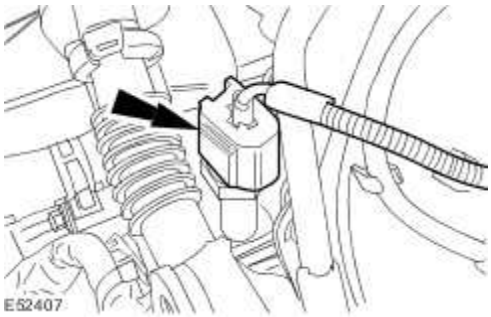

4 . Remove the EOP sensor.

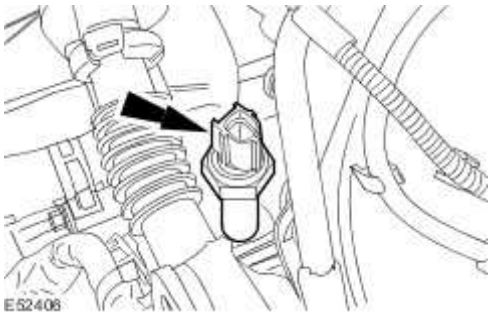

Installation

1 . To install, reverse the removal procedure.

Tighten to 15 Nm.

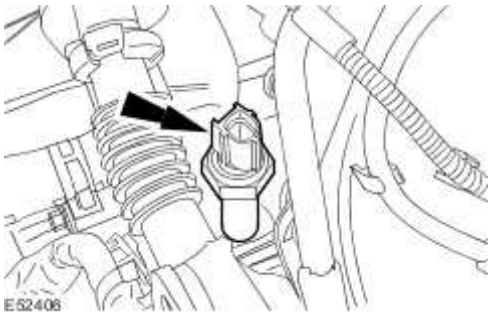

www.JagDocs.com

Fuel Rail Pressure (FRP) Sensor (18.30.98)

1. The fuel rail pressure sensor is removed as part of the fuel diverter rail and can not be serviced separately.
   For additional information, refer to Fuel Diverter Rail

Fuel Temperature Sensor (18.30.99)

Removal

WARNING: Do not smoke or carry lighted tobacco or open flame of any type when working on or near any fuel related components. Highly flammable mixtures are always present and may ignite. Failure to follow these instructions may result in personal injury. This procedure involves fuel handling. Be prepared for fuel spillage at all times and always observe fuel handling precautions. Failure to follow these instructions may result in personal injury. Do not carry out any repairs to the fuel injection system with the engine running. The fuel pressure within the system can be as high as 1600 bar. Failure to follow this instruction may result in personal injury. Do not carry out any repairs to the fuel injection system without checking that the fuel pressure has dropped to zero. Failure to follow this instruction may result in personal injury. Wait at least one minute after the engine stops before commencing any repair to the fuel injection system. Failure to follow this instruction may result in personal injury. CAUTIONS:

CAUTION: Make sure the workshop area in which the vehicle is being worked on is as clean and as dust free as possible. Foreign matter from work on clutches, brakes or from machining or welding operations can contaminate the fuel system and may result in later malfunction. Always carry out the cleaning process before carrying out any repairs to the fuel injection system components. Failure to follow this instruction may result in foreign matter ingress to the fuel injection system. Diesel fuel injection equipment is manufactured to very precise tolerances and fine clearances. It is therefore essential that absolute cleanliness is observed when working with these components. Always install blanking caps to any open orifices or lines.

1 . Remove the oil filler cap.

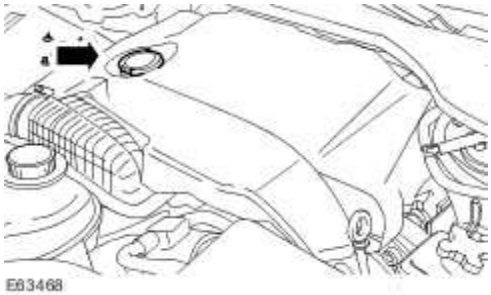

2 . Remove the engine cover.

www.JagDocs.com

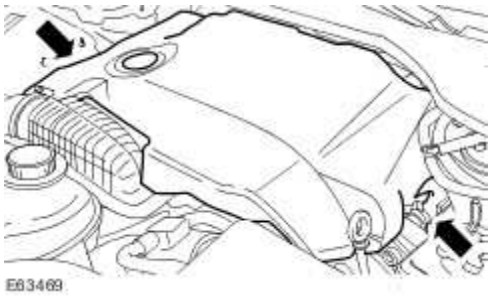

3 . Disconnect the fuel temperature sensor electrical connector.

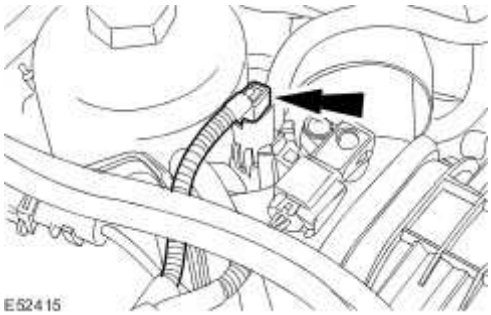

4 . **CAUTION: Do not use excessive force when detaching the fuel return line from the retaining bracket. Failure to follow this instruction may result in damage to the fuel return line.**

To gain access to the locking tangs, detach the fuel return line from the retaining bracket and position to it one side.

5 . **CAUTION: Do not use excessive force when releasing the fuel temperature sensor locking tangs. Failure to follow this instruction may result in damage to the fuel temperature sensor.**

Remove the fuel temperature sensor.

1) Release the locking tangs.

2) Remove the fuel temperature sensor from the fuel return line.

- Install a clean blanking caps to the fuel return line.
- Discard the O-ring seal.

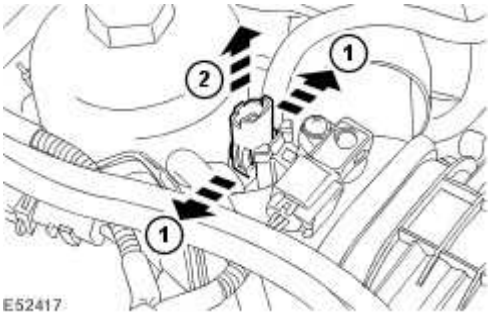

Installation

WARNING: Do not smoke or carry lighted tobacco or open flame of any type when working on or near any fuel related components. Highly flammable mixtures are always present and may ignite. Failure to follow these instructions may result in personal injury. This procedure involves fuel handling. Be prepared for fuel spillage at all times and always observe fuel handling precautions. Failure to follow these instructions may result in personal injury. Do not carry out any repairs to the fuel injection system with the engine running. The fuel pressure within the system can be as high as 1600 bar. Failure to follow this instruction may result in personal injury. Do not carry out any repairs to the fuel injection system without checking that the fuel pressure has dropped to zero. Failure to follow this instruction may result in personal injury. Wait at least one minute after the engine stops before commencing any repair to the fuel injection system. Failure to follow this instruction may result in personal injury. CAUTIONS:

CAUTION: Make sure the workshop area in which the vehicle is being worked on is as clean and as dust free as possible. Foreign matter from work on clutches, brakes or from machining or welding operations can contaminate the fuel system and may result in later malfunction. Always carry out the cleaning process before carrying out any repairs to the fuel injection system components. Failure to follow this instruction may result in foreign matter ingress to the fuel

www.JagDocs.com

injection system. Diesel fuel injection equipment is manufactured to very precise tolerances and fine clearances. It is therefore essential that absolute cleanliness is observed when working with these components. Always install blanking caps to any open orifices or lines.

NOTE:

Install a new O-ring seal and fuel temperature sensor.

1 . **NOTE:**

Remove and discard the blanking caps from the fuel return line.

To install, reverse the removal procedure.

Intake Air Temperature (IAT) Sensor (18.30.52)

Removal

1 . Remove the oil filler cap.

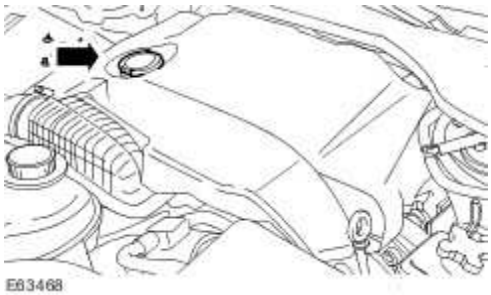

2 . Remove the engine cover.

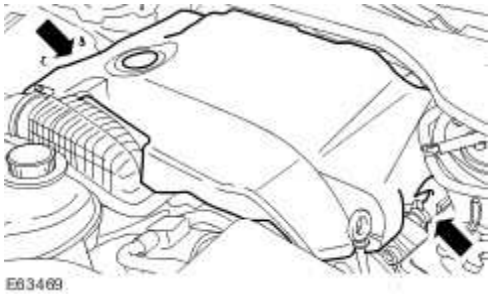

3 . Disconnect the intake air temperature (IAT) sensor electrical connector.

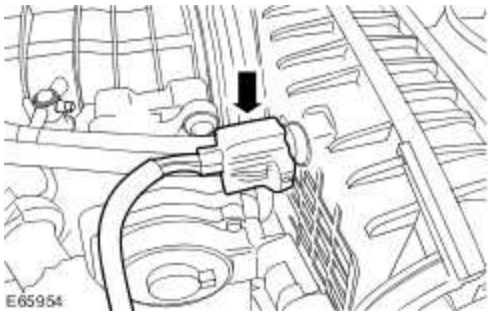

4 . Remove the IAT sensor.

www.JagDocs.com

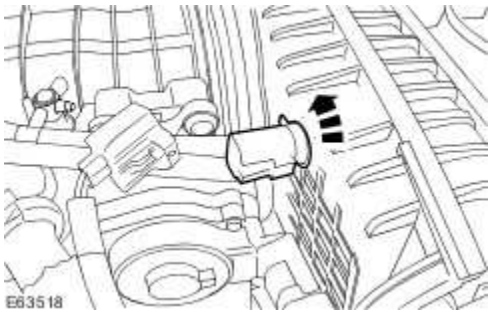

Installation

1 . To install, reverse the removal procedure.

Knock Sensor (KS) LH (18.30.92)

Removal

1 . Remove the crankcase vent oil separator.
For additional information, refer to Crankcase Vent Oil Separator

2 **NOTE:**
.
Remove and discard the O-ring seal.

Remove the oil filter element housing.

- Rotate the oil filter element housing five complete turns counter-clockwise.
- Allow the engine oil to drain from the oil filter element housing for two minutes.
- Remove the oil filter element housing.

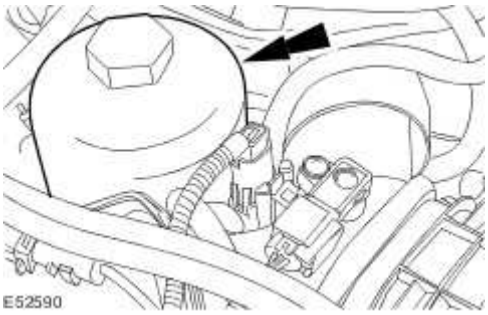

3 . Disconnect the knock sensor (KS) electrical connector.

- Detach the KS wiring harness.

www.JagDocs.com

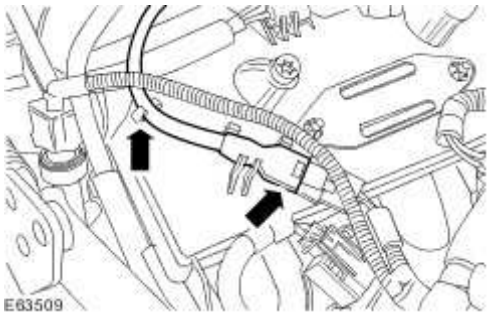

4 . Detach the left-hand glow plug rail.

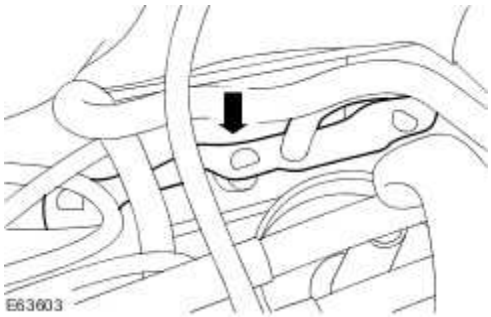

5 **NOTE:**

.

Make a note of the orientation of the KS and make sure it is positioned in the same position when installed.

Remove the KS.

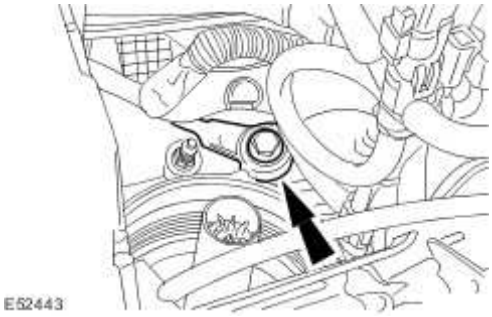

Installation

1 . **NOTE:**

Prior to installing the KS, clean the cylinder head and KS mating surfaces.

NOTE:

Make sure the KS is installed in the same position as removed.

To install, reverse the removal procedure.

Tighten to 20 Nm.

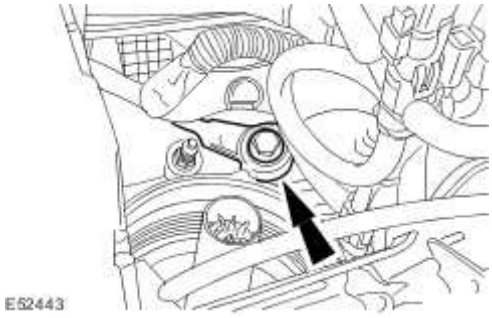

2 . **NOTE:**

Install a new O-ring seal.

Tighten to 25 Nm.

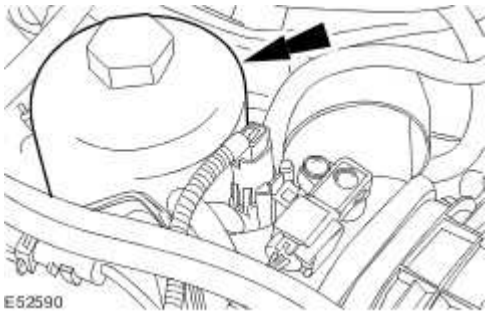

www.JagDocs.com

Knock Sensor (KS) RH (18.30.93)

Removal

1 . Remove the crankcase vent oil separator.
For additional information, refer to Crankcase Vent Oil Separator

2 **NOTE:**
.
Remove and discard the O-ring seal.

Remove the oil filter element housing.

- Rotate the oil filter element housing five complete turns counter-clockwise.
- Allow the engine oil to drain from the oil filter element housing for two minutes.
- Remove the oil filter element housing.

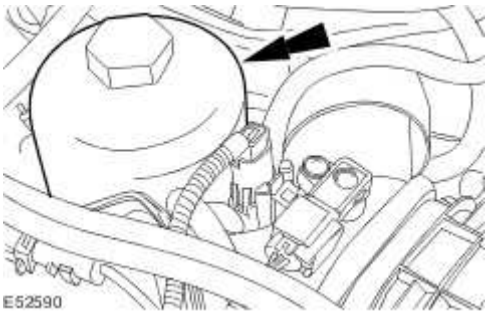

3 . Disconnect the knock sensor (KS) electrical connector.

- Detach the KS wiring harness.

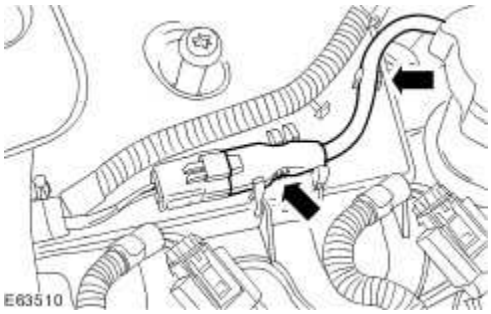

4 **NOTE:**

.

Make a note of the routing of the KS wiring harness and make sure it is routed in the same position when installed.

Reposition the KS wiring harness under the intake air shutoff throttle.

5 . Detach the right-hand glow plug rail.

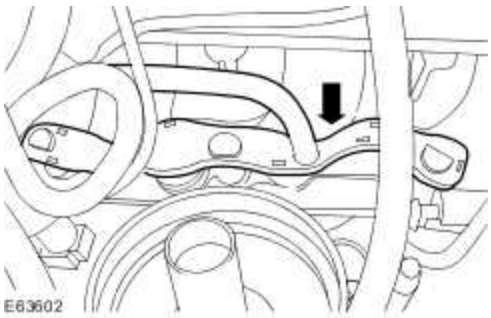

6 **NOTE:**

.

Make a note of the orientation of the KS and make sure it is positioned in the same position when installed.

Remove the KS.

www.JagDocs.com

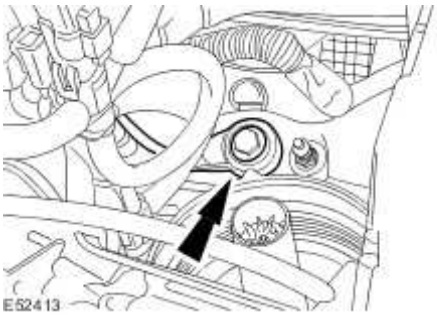

Installation

1 . **NOTE:**

Prior to installing the KS, clean the cylinder head and KS mating surfaces.

NOTE:

Make sure the KS is installed in the same position as removed.

To install, reverse the removal procedure.

Tighten to 20 Nm.

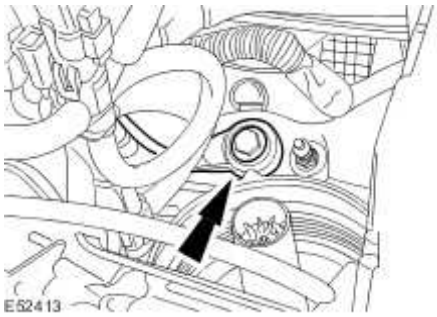

2 . **NOTE:**

Install a new O-ring seal.

Tighten to 25 Nm.

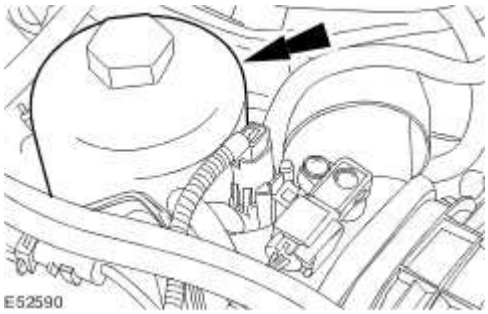

www.JagDocs.com

Manifold Absolute Pressure (MAP) Sensor (18.30.86)

Removal

1 . Remove the oil filler cap.

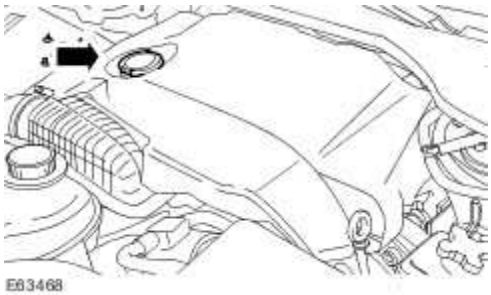

2 . Remove the engine cover.

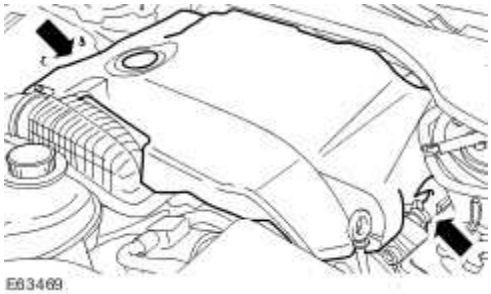

3 . Disconnect the manifold absolute pressure (MAP) sensor electrical connector.

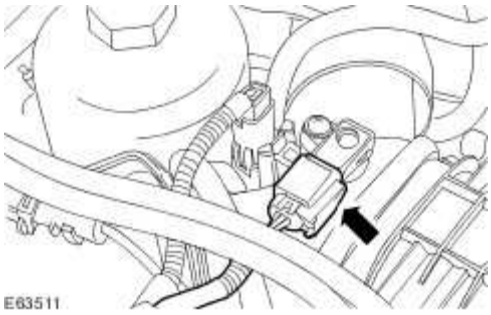

4 . Remove the MAP sensor.

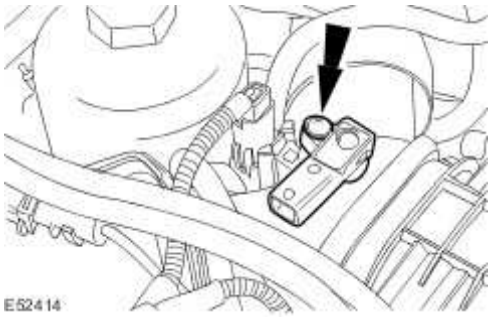

Installation

1 . To install, reverse the removal procedure.

Tighten to 3 Nm.

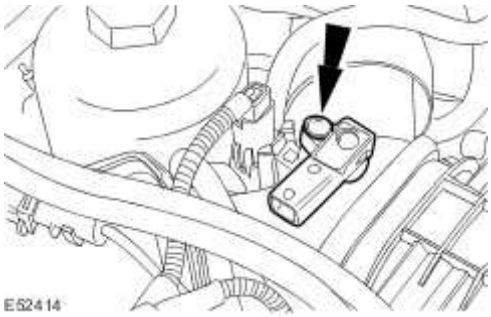

www.JagDocs.com

Mass Air Flow (MAF) Sensor (18.30.15)

Removal

NOTE:

This procedure is showing the lower mass air flow (MAF) sensor removal and installation. The upper MAF sensor removal and installation is similar.

1 . Remove the air cleaner.
For additional information, refer to

2 . Remove the mass air flow (MAF) sensor.

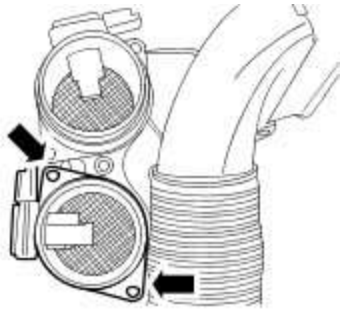

Installation

1 . To install, reverse the removal procedure.

Tighten MAF sensor retaining screws to 2 Nm.

Oil Temperature Sensor (18.31.01)

Removal

1 . Remove the air deflector.
For additional information, refer to Air Deflector (76.11.41)

2 . Drain the engine oil.

- Place suitable container under the vehicle.
- Remove the drain plug and drain the engine oil.
- Install the drain plug.
- Tighten to 25 Nm.

3 . Disconnect the oil temperature sensor electrical connector.

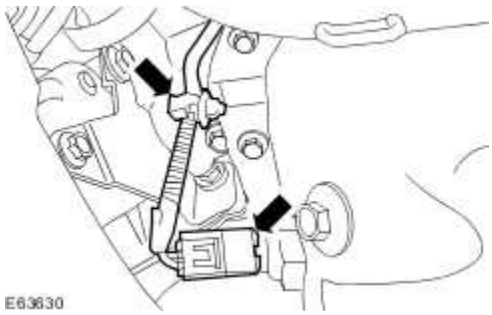

4 . Remove the oil temperature sensor.

- Remove and discard the O-ring seal.

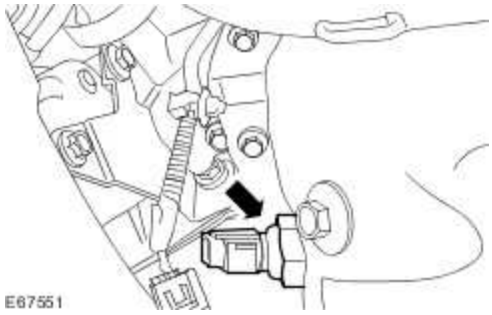

www.JagDocs.com

Installation

1 . Install the oil temperature sensor.

- Install a new O-ring seal.
- Tighten to 24 Nm.

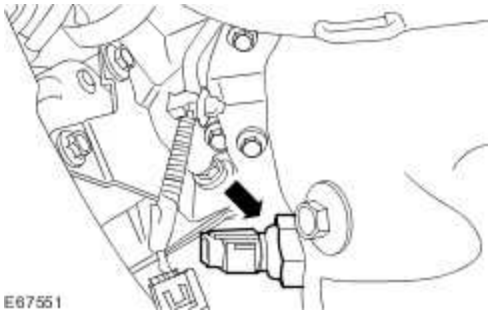

2 . Connect the electrical connector.

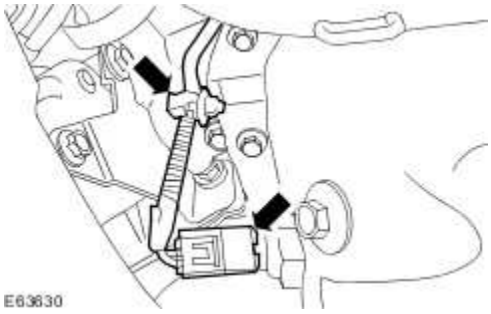

3 . Install the air deflector.
For additional information, refer to Air Deflector (76.11.41)

4 . Remove the filler cap.

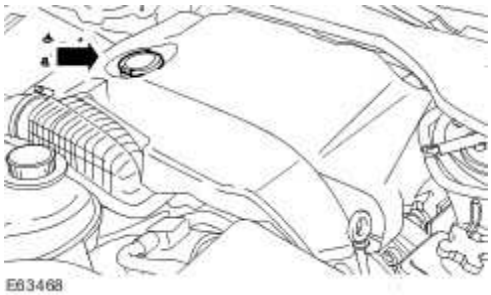

5 . Check and top-up the engine oil.

6 . Install the filler cap.

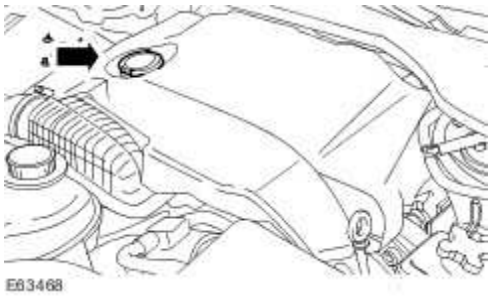

www.JagDocs.com

307 : Automatic Transmission/Transaxle

307-01 : Automatic Transmission/Transaxle

Specifications

Specifications

Fluid Maintenance

CAUTION: Use only Shell M1375.4 Automatic transmission fluid. Use of any other fluids may result in a transmission malfunction or failure.

Description	Intervals
Normal Maintenance	Not necessary. Filled for life.
Severe Duty Maintenance	Change the fluid at 48,000 km (30,000 mile) intervals.

Lubricants, Fluids, Sealers and Adhesives

Description	Specification
Transmission Fluid	Shell M1375.4
Sealant	WSS-M4G323-A6
Metal Surface Cleaner	WSW-M5B392-A
High Temperature Grease	Molecote FB180

General Specifications

Engine	Approximate Liters	Refill Capacity Approximate dry capacity, includes cooler and tubes. Check the level at normal operating temperature. DO NOT OVERFILL. If it is necessary to add or change fluid, use only fluid which has been certified by the supplier as meeting the Jaguar Cars Ltd specification shown. U.S. Quarts
3.0L	10.0	10.57
3.5L or 4.2L	10.0	10.57
2.7L	10.0	10.57
Diesel		

Torque Specifications

Description	Nm	lb-ft	lb-in
Converter housing to engine retaining bolts	48	35	-
Transmission mount retaining bolts	50	37	-
Transmission fluid fill plug	A	-	-
Transmission control module (TCM) and Main control valve body retaining screws	8	-	71
Output shaft flange retaining nut	60	44	-
Torque converter retaining bolts	55	41	-
Transmission fluid cooler pipes retaining bolt	23	17	-
Transmission selector cable retaining bolts	11	8	-
Transmission fluid cooler tube to oil pan retaining bolt	10	–	89
Transmission fluid drain plug	8	-	71
Transmission fluid pan, gasket and filter retaining screws	8	-	71
Exhaust manifold retaining nuts (3.0L only)	20	15	-
Dipstick tube retaining bolt (3.0L only)	10	–	89
A = refer to the procedure for correct torque sequence			

www.JagDocs.com

Transmission Fluid Drain and Refill (44.24.02)

Special Service Tools

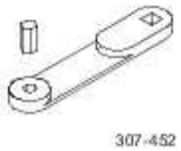

Adaptor
307-452

Drain

1. Raise and support the vehicle.
Lifting

2. Remove the air deflector (vehicles fitted with diesel engines only).
Air Deflector (76.11.41)

3. Place a suitable container under the transmission.

4. Using the special tool, remove the transmission fluid filler plug.

- Remove and discard the sealing washer.

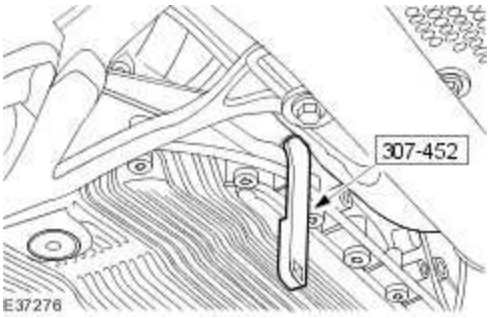

5.

CAUTION: If the automatic transmission fluid is very dirty or it contains metallic particles, then along with a new transmission, install a new automatic transmission fluid cooler and lines.

NOTE:

Discard the sealing washer.

Remove the transmission fluid drain plug.

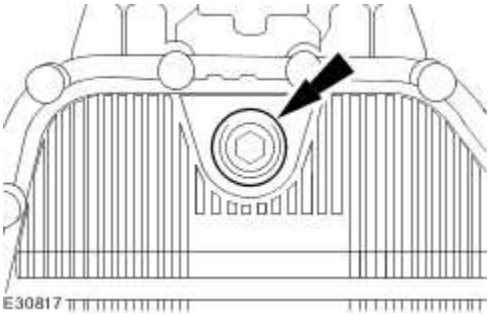

6. **NOTE:**

Install the new sealing washer.

Install the transmission fluid drain plug.

- Tighten to 8 Nm.

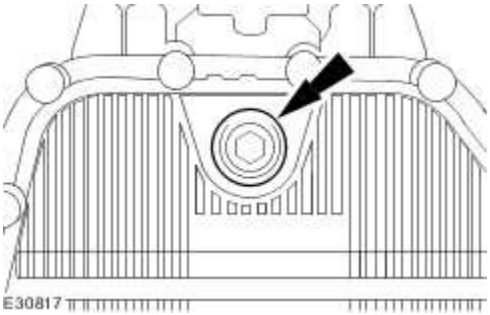

Refill

1. **NOTE:**

Use transmission fluid meeting Jaguar specification.

www.JagDocs.com

Fill the transmission with 8 liters of transmission fluid through the transmission fluid filler plug hole.

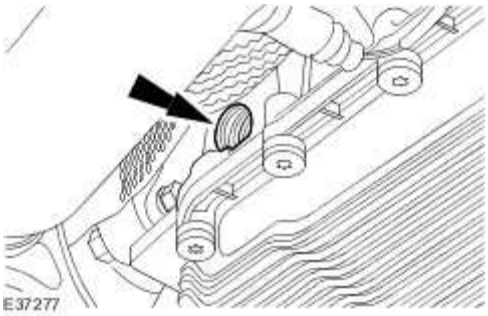

2. Carry out a transmission fluid level check.
Transmission Fluid Level Check

3. Install the air deflector (vehicles fitted with diesel engines only).
Air Deflector (76.11.41)

4. Lower the vehicle.
Lifting

Transmission Fluid Level Check

Special Service Tools

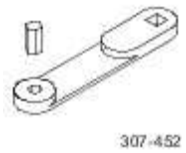

Adaptor
307-452

1. The following steps must be observed before starting the transmission fluid level check.

   - The vehicle must be on a horizontal ramp.
   - The parking brake must be applied.
   - The engine must be running for 2 minutes with the transmission selector lever in the ' P' position.

2. Connect the Jaguar approved diagnostic system.

3. Make sure the transmission selector lever is in the ' P' position.

4. **NOTE:**

   Make sure the transmission fluid temperature is below 30°C (86°F) on the Jaguar approved diagnostic system.

With the engine running and the foot brake applied, circulate the transmission fluid by:

- Moving the transmission selector lever to the ' R' position.
- Waiting for three seconds.
- Moving the transmission selector lever to the ' D' position.
- Waiting for three seconds.

www.JagDocs.com

- Moving the transmission selector lever to the ' P' position.

5. Raise and support the vehicle.
Lifting

6. Remove the air deflector (vehicles fitted with diesel engines only).
Air Deflector (76.11.41)

7. Place a suitable container under the transmission fluid filler plug.

8.

WARNING: Make sure that care is exercised near rotating parts. Failure to follow this instruction may result in personal injury.

With the engine running, remove the transmission fluid filler plug using the special tool.

- Remove and discard the sealing washer.

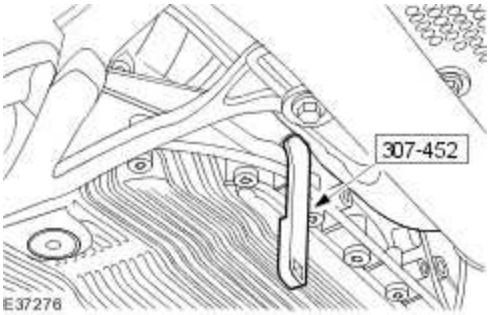

9. **NOTE:**

Use transmission fluid meeting Jaguar specification.

If the transmission fluid does not come out of the transmission fluid filler plug hole the transmission fluid level is insufficient. If this is the case add the transmission fluid in 0.5 liter units into the transmission fluid filler plug hole until fluid comes out.

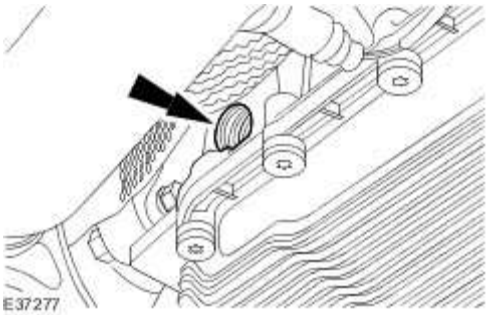

10. **NOTE:**

    Make sure the transmission fluid temperature does not exceed 50°C (122°F). If the transmission fluid temperature does exceed 50°C (122°F) stop the transmission fluid level check and allow the transmission fluid to cool until the temperature is below 30°C (86°F).

Allow the transmission fluid to drain from the transmission fluid filler plug hole until the flow almost stops.

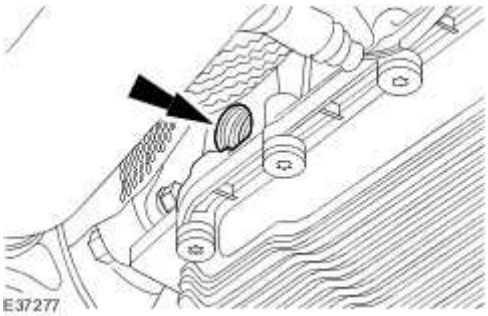

11. Using the special tool, install the transmission fluid filler plug.

- Install a new sealing washer.

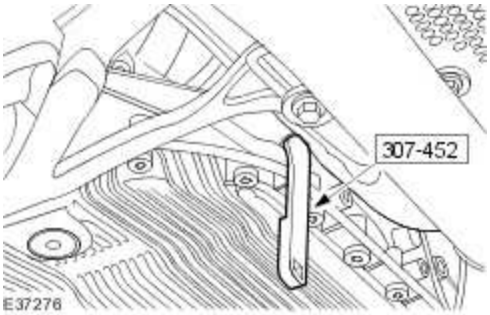

12.

CAUTION: Make sure the transmission fluid filler plug is tightened to the correct

www.JagDocs.com

specification. Failure to follow this instruction may result in damage to the vehicle.

Using the special tool and a torque wrench, tighten the transmission fluid filler plug.

- Tighten the transmission fluid filler plug to the torque given by the calculation.

- To make sure the transmission filler plug is torqued to the correct specification. Using the special tool and a torque wrench the following calculation steps must be followed.
  Step 1. Multiply 35 Nm by the effective length of the torque wrench (1).
  Step 2. Add the effective length of the special tool (2) to the effective length of the torque wrench (1).
  Step 3. Divide the total of step 1 by the total of step 2.
  Step 4. Set the torque wrench to the figure arrived at in step 3.

- Tighten the transmission fluid filler plug to the torque given by the calculation.

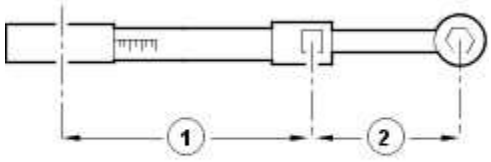

E37107

13. Remove the container.

14. Install the air deflector (vehicles fitted with diesel engines only).
Air Deflector (76.11.41)

15. Lower the vehicle.
Lifting

16. Disconnect the Jaguar approved diagnostic system.

Transmission Description

The ZF 6HP26 automatic transmission has been developed for vehicles with an engine torque of up to 600 Newton-metres (Nm). This transmission uses planetary gears with hydraulic-electronic control. The transmission control module (TCM) and the main control valve body units form a composite element that is installed as a single unit inside the automatic transmission.

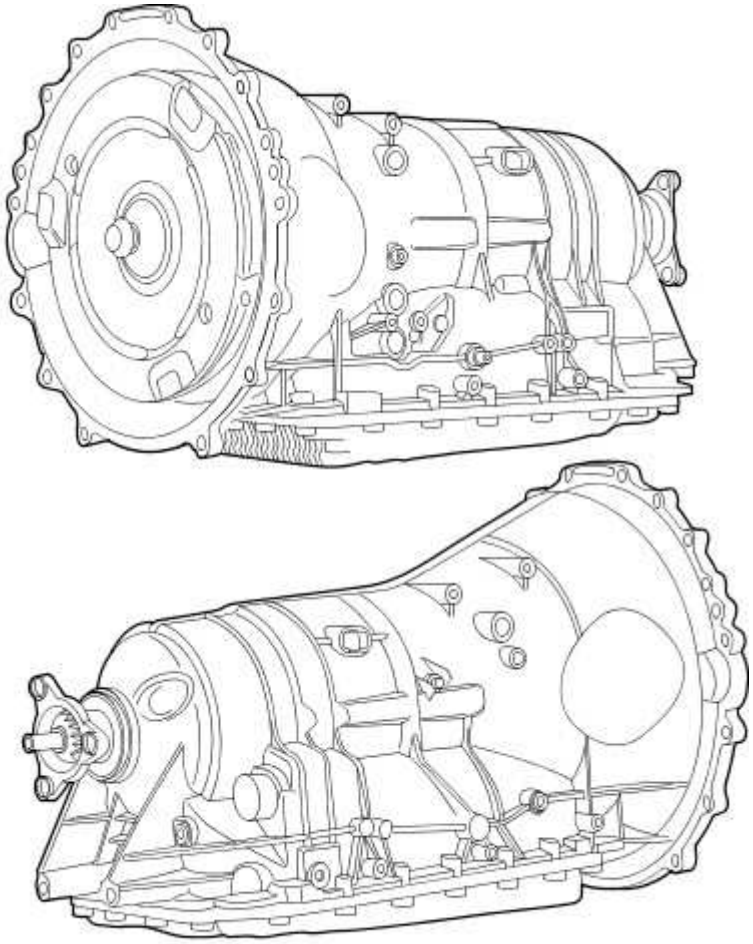

E30230

The 6HP26 has the following features:

six forward speeds.

a torque converter with an integral converter lock up clutch.

electronic shift and pressure controls.

a single planetary gear set.

www.JagDocs.com

a double planetary gear set.

two fixed multi-disc brakes.

three multi-plate clutches.

All hydraulic functions are directed by electronic solenoids to control:

engagement feel.

shift feel.

shift scheduling.

modulated torque converter clutch (TCC) applications.

engine braking utilizing the coast clutch.

Engine power reaches the transmission by a torque converter with integral converter lock up clutch. The 6 forward gears and 1 reverse gear are obtained from a single planetary set followed by a double planetary set also known as lepelletier-type gear sets, these gear sets make it possible to obtain 6 forward gears.

The 6HP26 Automatic Transmission is a six speed electronically controlled transmission comprising the basic elements of a TCM and main control valve body unit, a torque converter, one solenoid valve and six pressure regulators. Gear selection is achieved by the control of Automatic Transmission Fluid (ATF) flow to operate various internal clutches. The TCM operates the electrical components and provides for the control of gear selection shift pressure which increases refinement and torque converter slip control.

In the event of a system fault the TCM also provides for Failure Mode Effect Management (FMEM) to maintain maximum functional operation of the transmission with a minimum reduction in driver, passenger or vehicle safety. In the event of a total loss of control or electrical power the basic transmission functions Park, Reverse, Neutral and Drive are retained. Also 3rd or 5th gear is retained by the hydraulic system, the gear retained is dependant upon the gear selected at time of the failure.

The transmission also contains turbine and output shaft speed sensors, an internal P, R, N, D selector shaft position sensor, and a transmission fluid temperature sensor. The TCM also requires information from the J-Gate to determine when the driver has initiated manual gear selection. The TCM communicates with other electronic control modules by the controller area network (CAN).

The TCM also provides for legislated transmission diagnostics, which meet the requirements of CARB OBDII legislation, monitoring all components, which may effect vehicle emissions. Additional diagnostic functions are also supported to ensure fast repairs of all failures in the service environment.

Upshifts

Transmission upshifting is controlled by the TCM. The TCM receives inputs from various engine or vehicle sensors and driver demands to control shift scheduling, shift feel and torque converter clutch (TCC) operation.

The TCM has an adaptive learn strategy to electronically control the transmission which will automatically adjust the shift feel.

Downshifts

Under certain conditions the transmission will downshift automatically to a lower gear range (without moving the gearshift lever). There are three categories of automatic downshifts, coastdown, torque demand and forced or kickdown shifts.

Coastdown

The coastdown downshift occurs when the vehicle is coasting down to a stop.

Torque Demand

The torque demand downshift occurs (automatically) during part throttle acceleration when the demand for torque is greater than the engine can provide at that gear ratio. If applied, the transmission will disengage the TCC to provide added acceleration.

Kickdown

For maximum acceleration, the driver can force a downshift by pressing the accelerator pedal to the floor. A forced downshift into a lower gear is possible below calibrated speeds. Specifications for downshift speeds are subject to variations due to tire size and engine and transmission calibration requirements.

Range Selection

Depending on the vehicle options selected the transmission range selector may have different range positions.

The standard range selector has eight positions: P, R, N, D, 5, 4, 3 and 2.

J-Gate Range Selection

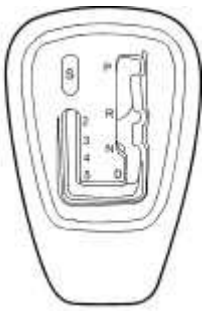

E30231

"P"

In the PARK position:

www.JagDocs.com

there is no power flow through the transmission.

the parking pawl locks the output shaft to the case.

the engine may be started.

the ignition key may be removed.

"R"

In the REVERSE position:

the vehicle may be operated in a rearward direction, at a reduced gear ratio.

backup lamps are illuminated.

"N"

In the NEUTRAL position:

there is no power flow through the transmission.

the output shaft is not held and is free to turn.

the engine may be started.

"D"

DRIVE is the normal position for most forward driving.

The D position provides:

automatic shift 1-6 and 6-1.

apply and release of the torque converter clutch.

maximum fuel economy during normal operation.

engine braking in 6th gear.

"5"

The 5 position provides:

automatic shift 1-5 and 5-1.

apply and release of the torque converter clutch.

engine braking in 5th gear.

"4"

The 4 position provides:

automatic shift 1-4 and 4-1.

apply and release of the torque converter clutch.

engine braking in 4th gear.

"3"

The 3 position provides:

automatic shift 1-3 and 3-1.

engine braking in 3rd gear.

"2"

The 2 position provides:

automatic shift 1-2 and 2-1.

engine braking in 2nd gear.

"S"

The sport mode switch:

allows the driver to select or de-select the automatic transmission sport mode.

allows the automatic transmission to operate normally when the sport mode is selected, but under acceleration the gear shift points are extended to make full use of the engine's power reserves.

allows the driver to drive the vehicle in the "D" position with the full automatic transmission shift or manually shift gears in the "second, third, fourth and fifth" positions.

is illuminated when Sport mode is selected.

communicates with the TCM through the CAN network to show the sport mode switch status.

Torque converter

The torque converter is a three element unit containing a single plate lock up clutch. The lock up clutch can be controlled and engaged in any gear 1 to 6. The clutch is applied by removing transmission fluid pressure from one side of the plate. The torque converter transmits and multiplies torque. The torque converter is a three-element device:

impeller assembly

turbine assembly

reactor assembly

The standard torque converter components operate as follows:

www.JagDocs.com

The impeller, which is driven by the engine, imparts a circular flow to the transmission fluid in the converter.

This transmission fluid strikes the turbine wheel, which causes the flow to change its direction.

The transmission fluid flows out of the turbine wheel close to the hub and strikes the stator, where its direction is changed again to a direction suitable for re-entering the impeller.

The change in direction at the stator generates a torque reaction that increases the torque reaching the turbine.

The ratio between turbine and impeller torque is referred to as torque multiplication or conversion.

The greater the difference in speeds of rotation at the impeller and turbine, the greater the increase in torque; The maximum increase is obtained when the turbine wheel is stationary. As turbine wheel speed increases, the amount of torque multiplication gradually drops.

When the turbine wheel is rotating at about 85 % of the impeller speed, torque conversion reverts to 1, that is to say torque at the turbine wheel is no higher than the torque at the impeller.

The stator, which is prevented from rotating backwards by a freewheel and the shaft in the transmission housing, runs freely in the transmission fluid flow and overruns the freewheel. From this point on, the converter acts only as a fluid coupling. During the torque conversion process, the stator ceases to rotate and bears against the housing by the freewheel.

Torque converter

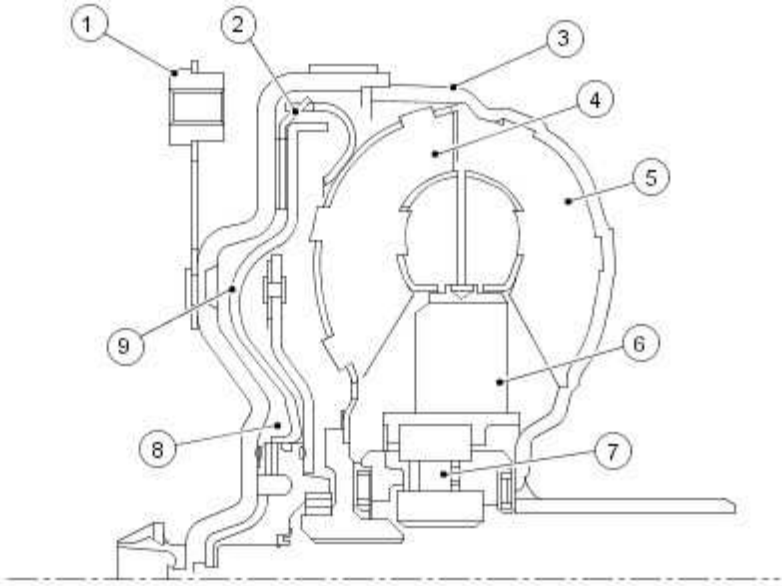

E31501

Item	Part Number	Description
1		Torque converter retaining plate
2		Lock-up clutch lined plate
3		Torque converter cover
4		Turbine
5		Impeller
6		Stator
7		Stator freewheel
8		Space behind lock-up clutch
9		Lock-up clutch piston

Torque Converter Lock-up Clutch

The torque converter lock-up clutch is a device that eliminates slip in the torque converter and therefore helps to keep fuel consumption to a minimum.

The torque converter lock-up clutch is engaged and released by the control system. During the actuating phase, a slight difference is selected between the impeller and turbine wheels.

Pressure at the torque converter lock-up clutch piston is determined by an electronic pressure control valve.

The torque converter lock-up clutch can be controlled and engaged in any gear from 1 to 6. When decoupling takes place the actuating clutch A in the transmission is dependent on load and output speed.

When the torque converter lock-up clutch is released, transmission fluid pressures behind the lock-up clutch piston turbine area are equalized. The direction of flow is through the turbine shaft and the area behind the piston into the turbine area.

To engage the torque converter lock-up clutch the direction of transmission fluid flow is changed and reversed by a valve in the hydraulic control unit. At the same time the space behind the torque converter lock-up clutch piston is vented.

Oil pressure extends from the turbine area to the torque converter lock-up clutch piston and presses it against the cover outer shell of the torque converter. This locks the turbine wheel by way of the lined disc between the piston and the cover and enables the drive to pass with limited slip to the planetary gear train in normal operating conditions.

www.JagDocs.com

Geartrain

Power is transmitted from the torque converter to the planetary gearsets through the input shaft. Clutches are used to hold and drive certain combinations of gearsets. This results in six forward ratios and one reverse ratio, which are transmitted to the output shaft and differential.

Gear Ratio

Gear	ratios
1st	4.17:1
2nd	2.34:1
3rd	1.52:1
4th	1.14:1
5th	0.87:1
6th	0.69:1
Rev	3.40:1

Single Planetary Gearset

The single planetary gear overdrive carrier is driven by the input shaft.

The single planetary gear set consists of:

1 sunwheel

4 planetary gears meshing with the sunwheel

1 planetary gear carrier

1 ring gear

Single Planetary Gearset

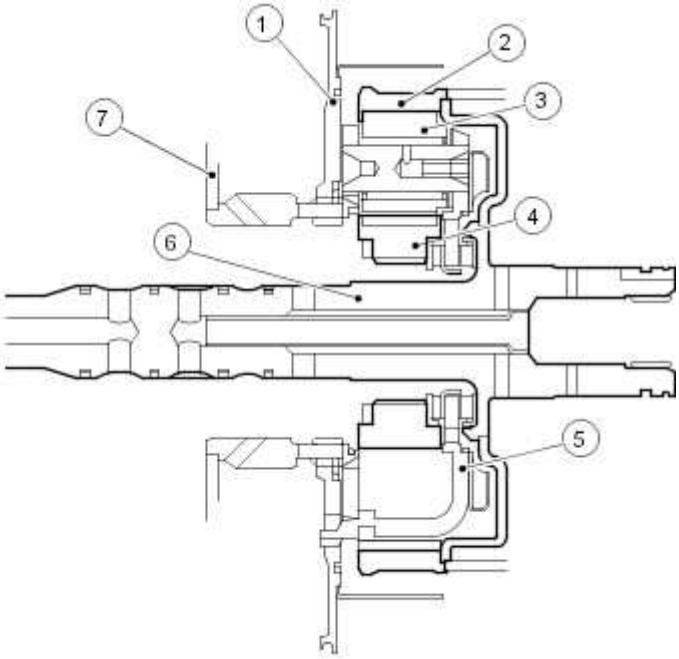

E31213

Item	Part Number	Description
1		Baffle plate A
2		Ring gear
3		Planetary gear 1
4		Sunwheel
5		Planetary gear spider
6		Turbine shaft
7		Cylinder A

Double Planetary Gearset

The double planetary gearset is splined to the output shaft.

The double planetary gear set consists of:

2 sunwheels of different sizes

3 short planetary gears meshing with the sunwheels

3 long planetary gears meshing with the sunwheels

www.JagDocs.com

1 planetary gear carrier

1 ring gear

Double Planetary Gearset

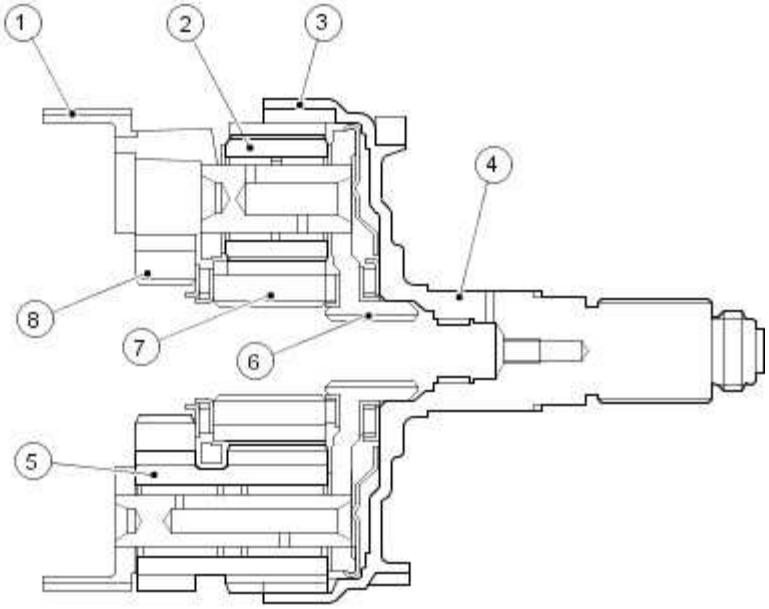

E31212

Item	Part Number	Description
1		Planetary gear spider brake D
2		Planetary gears (short)
3		Ring gear 2
4		Output
5		Double planetary gears (long)
6		Planetary gear spider clutch E
7		Sunwheel 3 clutch B
8		Sunwheel 2 clutch A

Apply Components

Shift Elements

The other shift elements in addition to the torque converter lock-up clutch are:

three rotating multi-plate clutches A, B and E.

two fixed multi-disc brakes C and D.

All gear shifts from 1st to 6th or from 6th to 1st are power-on overlapping shifts, that is to say during the shift one of the clutches must continue to transmit the drive at lower main pressure until the other clutch is able to accept the input torque.

The shift elements, clutches or brakes are engaged hydraulically. The transmission fluid pressure is built up between the cylinder and the piston, this presses the clutch plates together.

When the transmission fluid pressure drops, the cup spring pressing against the piston moves it back to its original position.

The purpose of these shift elements is to perform in-load shifts with no interruption to traction.

Multi-plate clutches A, B and E supply power from the engine to the planetary gear train; multi-disc brakes C and D bear against the transmission housing in order to achieve a torque reaction effect.

Shift Elements

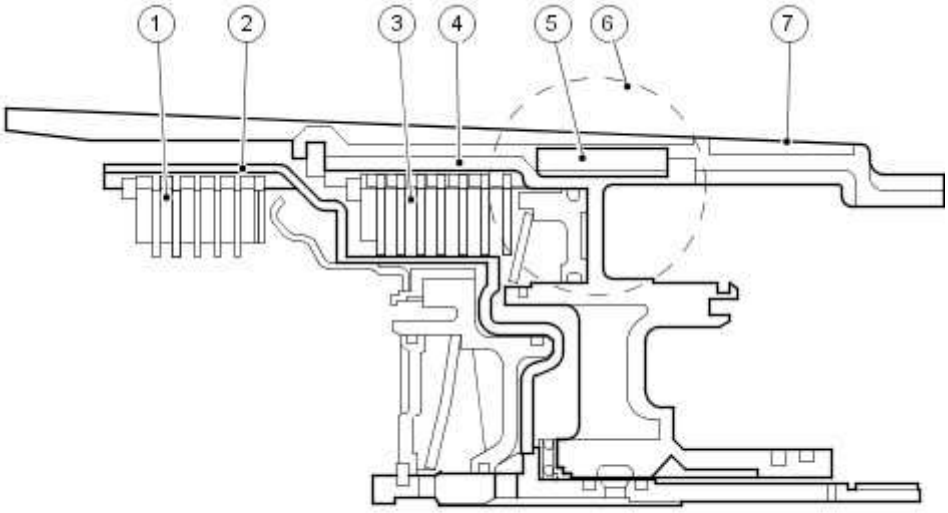

E31211

Item	Part Number	Description
1		Multi-plate clutch B
2		Clutch cylinder B, outer plate carrier
3		Multi-disc brake C
4		Brake cylinder C, outer plate carrier

www.JagDocs.com

5		Shaft key
6		Brake cylinder C, outer plate carrier
7		Transmission housing

Multi Plate Clutch

Clutch E is equalized in terms of dynamic pressure, that is to say its piston is exposed to the transmission fluid flow on both sides, in order to prevent pressure build up in the clutch as the speed increases. This equalization process is achieved by a baffle plate and pressure-free transmission fluid supply by a lubricating passage, through which the space between piston and baffle plate is filled with transmission fluid.

The advantages of this dynamic pressure equalization are:

reliable clutch engagement and release in all speed ranges.

improved shift refinement.

Multi Plate Clutch

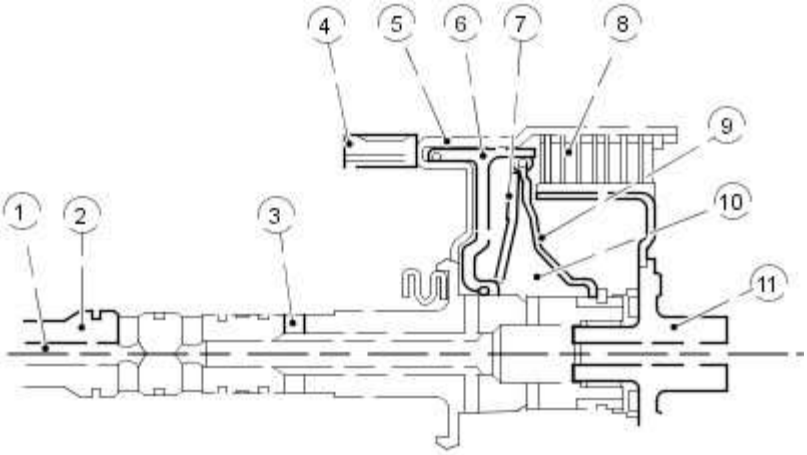

E31215

Item	Part Number	Description
1		Lubricating transmission fluid passage
2		Turbine shaft
3		Main pressure supply to clutch E

4		Ring gear
5		Cylinder E
6		Piston E
7		Cup spring
8		Clutch plate cluster
9		Baffle plate
10		Space for dynamic pressure equalization
11		Inner plate carrier E

www.JagDocs.com

Shift overlap control

When overlap gearshift takes place, freewheels (one-way clutches) are not used but are replaced by suitable actuation of the relevant clutches. This both enables weight and space to be saved.

The electronic-hydraulic shift action is obtained by means of various valves in the transmission control module (TCM) and main control valve body, actuated by pressure regulators. They engage or disengage the relevant clutches or brakes at the correct moments.

Output is always by the ring gear of the second, downstream planetary gear set.

Hydraulic System

Fluid Pump

The fluid pump is of a "half-moon" pattern and delivers approximately 16 square cm of transmission fluid per revolution.

It is located between the torque converter and the transmission housing.

The torque converter is supported in the fluid pump by a needle roller bearing. The fluid pump is driven directly from the engine by the torque converter shell and supplies transmission fluid to the transmission and the hydraulic control unit.

The fluid pump draws in transmission fluid through a filter and delivers it at high pressure to the main pressure valve in TCM and main control valve body unit. This valve adjusts the pressure and returns excess transmission fluid to the fluid pan.

Fluid Pump

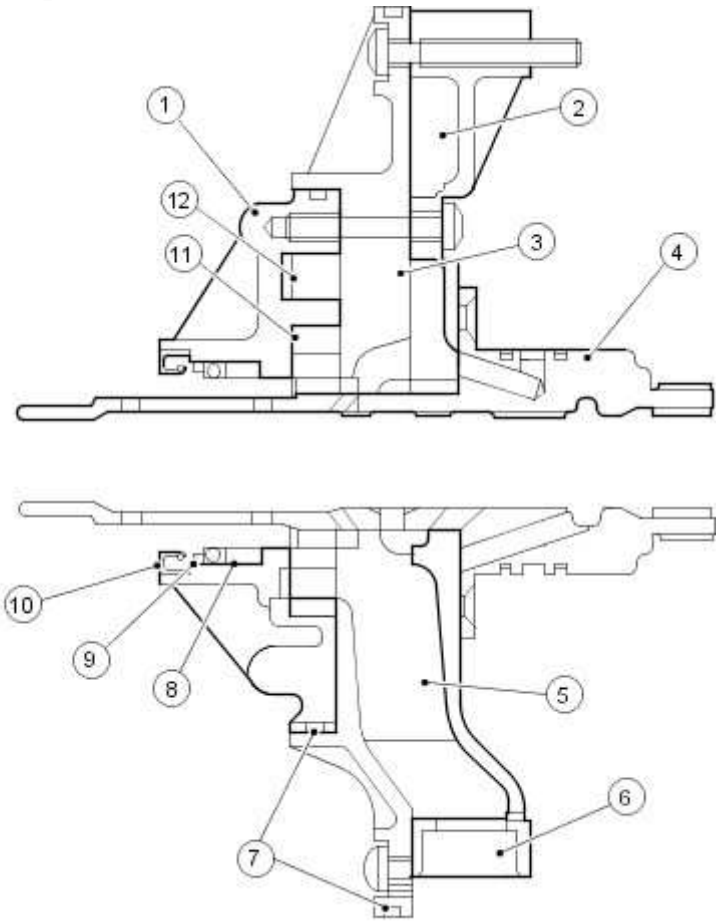

Item	Part Number	Description
1		Fluid pump housing
2		Intermediate plate
3		Centring plate
4		Stator shaft
5		Intake port
6		To mesh filter
7		Seal
8		Bearing
9		Retaining clip

10		Shaft seal
11		Impeller
12		Ring gear

Fluid Pan, Gasket and Filter

The transmission fluid pan, gasket and filter is a one piece assembly, all transmission fluid is drawn from the transmission fluid pan by the fluid pump and passes through the fluid filter.

Transmission Control Module (TCM) and Main Control Valve Body

Electrostatic Discharge (ESD)

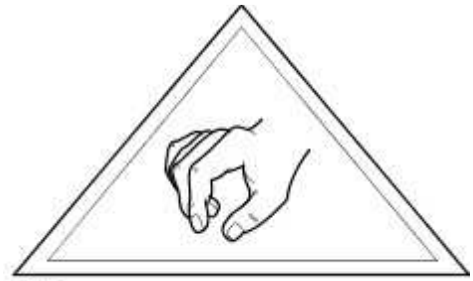

CAUTION: When working with the transmission control module (TCM) and main control valve body, all suitable safety precautions must be taken to protect the component against electrostatic discharge (ESD). Failure to follow these instructions may result in component damage.

Make sure all possible safety precautions are taken to protect the TCM and main control valve body unit against ESD.

Personal Wrist-Band Earthing

Earthing (grounding) by means of a wrist band or strap is the most reliable method of diverting electrostatic charges away from working personnel, and should therefore be used wherever possible, particularly if the person concerned is working while seated. The wrist band earthing (grounding) device consists of a bracelet closely attached to the wrist and a spiral earthing (grounding) cable connecting it to the earthing (grounding) contact point. This system must include a quick-release device so that the wrist can be released in the event of danger.

Shoes and Foot Earthing Straps

Electrically conductive shoes should be worn by persons who mainly work standing up or either standing or sitting in ESD protection zones, particularly if wrist band earthing (grounding) is impracticable. The standard calls for ESD shoes to record values between 0 and 35 Megga-ohms (MOhm) resistance. However, for antistatic working shoes resistance values between 0.1 and 1000

www.JagDocs.com

MOhm are called for, and a through-conducting resistance for protective shoes of 0.1 to 100 MOhm. A lower limit value of not less than 0.1 MOhm must be maintained on account of the contact voltage risk. For this reason the minimum value has been set contrary to the standard at the higher figure of 0.75 MOhm.

Transmission Control Module (TCM) and Main Control Valve Body

The transmission control module (TCM) and main control valve body is a combination of hydraulic and electronic control units. Both these modules are installed in the transmission, in the fluid pan.

This technical principle has the following advantages:

Minimum tolerances (TCM is mated to solenoids)

Better coordination of gear shifts

Increased refinement

Optimized shift quality

Good reliability, since the number of plug connections and interfaces is reduced.

Transmission Control Module (TCM) and Main Control Valve Body

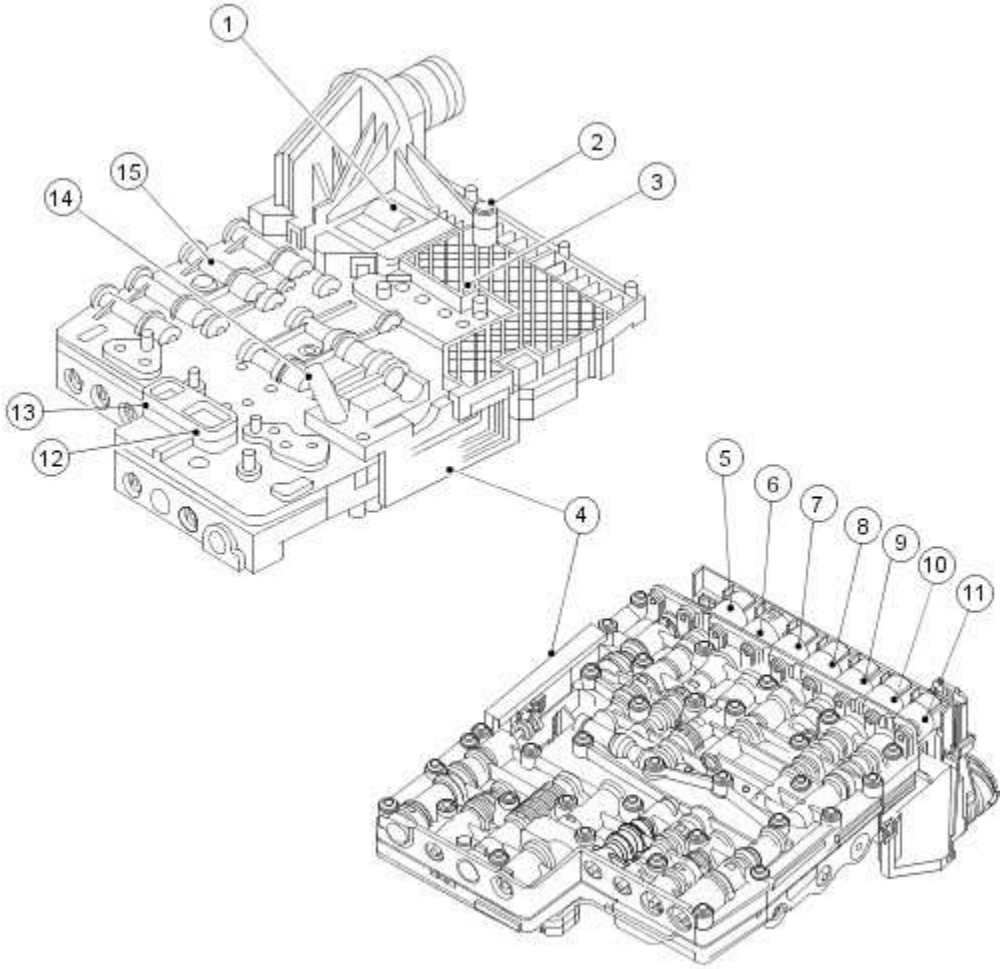

E31217

Item	Part Number	Description
1		TCM
2		Output speed sensor
3		Transmission fluid temperature sensor
4		Position switch
5		Pressure regulator 6
6		Solenoid valve
7		Pressure regulator 5
8		Pressure regulator 4

www.JagDocs.com

9		Pressure regulator 3
10		Pressure regulator 2
11		Pressure regulator 1
12		Discharge port
13		Suction port
14		Turbine speed sensor
15		Main control valve body

Transmission Electronic System

The transmission control module (TCM) and its input/output network control the following transmission operations:

shift timing.

line pressure (shift feel).

torque converter clutch.

In addition, the TCM receives input signals from certain transmission-related sensors and switches. The TCM also uses these signals when determining transmission operating strategy.

Using all of these input signals, the TCM can determine when the time and conditions are right for a shift, or when to apply or release the torque converter clutch. It will also determine the pressure needed to optimize shift feel. To accomplish this the TCM uses six pressure control solenoids and one shift solenoid to control transmission operation.

The following provides a brief description of each of the sensors and actuators used to control transmission operation.

TCM

The TCM for the transmission is mounted on top of the main control valve body. The control module for the transmission has been designed to operate correctly in the environment in which the TCM is located.

The transmission control module is activated and deactivated by the ignition supply and is connected to the transmission link harness by a 16-way connector.

The TCM controls the operation of the transmission. The TCM processes information received in both analogue and digital form such as:

Transmission input speed

Output speed

Throttle pedal position

Gear selector position

Engine torque

Engine speed

Transmission fluid temperature

Brake pedal status

Engine oil temperature

Coolant temperature

ABS wheel speed

This information is then used by the TCM to decide which shift pattern to select and for shift energy management. Electro-hydraulic solenoid valves and pressure regulators control the transmission gear changes.

Five pressure regulators and one solenoid valve are used to control direct transmission fluid flow to select internal clutches and control the fluid pressure at the clutch. A separate pressure regulator is used exclusively for torque converter clutch control.

The TCM monitors all TCM inputs and outputs to confirm correct system operation. If a fault occurs the TCM is able to perform default action and inform the driver of the problem, this is by the instrument cluster message centre.

Solenoids

The hydraulic module contains one solenoid valve. The solenoid valve is actuated by the TCM and has two positions of open or closed, it is used to switch the position valve.

There are six electronic pressure control valves, these convert an electric current into a proportional hydraulic pressure. They are energized by the TCM and actuate the valves belonging to the relevant switching elements.

Controller Area Network (CAN) Interface

For the TCM to be able to perform shift point and shift quality management a number of external signals are required. For shift point management alone the TCM requires output speed sensor,

www.JagDocs.com

throttle pedal position, brake pedal status and gear selector position. The controller area network (CAN) bus is used to share information between control modules. The TCM obtains most of its required data over the CAN bus from the electronic engine controls, J-Gate and ABS, Instruments pack and diagnostic tools.

Brake Pedal Position (BPP) Switch

The brake pedal position (BPP) switch tells the TCM when the brakes are applied, and disengages torque converter clutch. The BPP switch closes when the brakes are applied and opens when they are released. The BPP is also used to disengage the brake shift interlock and stops gradient calculations.

Engine Coolant Temperature (ECT) Sensor

The engine coolant temperature (ECT) sensor detects engine coolant temperature and supplies the information to the TCM. The ECT sensor is used to control the torque converter clutch (TCC) operation.

Accelerator Pedal Position (APP) Sensor

The accelerator pedal position (APP) sensor is a potentiometer mounted on the accelerator pedal. The APP sensor detects the position of the accelerator pedal and sends this information to the electronic control module (ECM). The APP sensor is used for shift scheduling and TCC lock-up.

Input Shaft Speed (ISS) Sensor

The input shaft speed (ISS) sensor is a Hall effect type sensor.

The ISS sensor is mounted internally on the transmission and is located on the TCM and main control valve body unit.

Output Shaft Speed (OSS) Sensor

The output shaft speed (OSS) sensor is a Hall effect type sensor.

The OSS sensor is mounted internally on the transmission and is located on the TCM and main control valve body unit and is used for shift scheduling.

Transmission Fluid Temperature (TFT) Sensor

The TCM utilizes one transmission fluid temperature sensor located on the main control valve body. The TCM uses the sensor input to activate various shift strategies. The sensor is in the form of a temperature dependent resistor.

The temperature sensor performs plausibility checks on each sensor reading. Obviously, the transmission oil temperature should not jump in value excessively between sensor readings. If the inputs from the temperature sensor are outside the working range it possible that the sensor is short or open circuit.

Position sensor

The TCM uses the position of this switch housed on the TCM and main control valve body, to determine the selected gear range on the Automatic side of the selector lever.

The selector lever is connected to the transmission by a cable, which operates the transmission selector shaft between positions Park, Reverse, Neutral and Drive. The TCM detects the driver's choice of manual range selection (5,4,3,2) by means of a 3-bit code generated by the J-gate. This 3-bit code is then transformed in to a CAN message by the J-Gate module and transmitted on to the CAN bus where it is detected by the TCM.

3-Bit Code

Position	3-Bit Code		
2nd Gear	0	1	0
3rd Gear	0	1	1
4th Gear	1	0	0
5th Gear	1	0	1
P, R, N, D	1	1	1

The TCM uses this information to generate the CAN message "Gear Position Selected", which must not be confused with the similar message "Gear Position Actual" indicating the current mechanical gear ratio activated by the TCM.

Movement of the lever between Park, Reverse, Neutral and Drive manually controls the flow of transmission fluid, the TCM having control of the forward gear selected in Drive. Additional movement of the lever to 5,4,3 and 2 positions does not manually modify the fluid flow, the TCM detects these positions, and controls the gear selected electronically.

Sport mode switch

The sport mode switch:

Allows the driver to select or de-select the automatic transmission sport mode.

Allows the automatic transmission to operate normally when the sport mode is selected, but under acceleration the gear shift points are extended to make full use of the engine's power reserves.

Allows the driver to drive the vehicle in the "D" position with the full automatic transmission shift or manually shift gears in the "second, third, fourth and fifth" positions.

Is illuminated when Sport mode is selected.

Communicates with the TCM through the CAN network to show the sport mode switch status.

www.JagDocs.com

TCM Monitoring Functions

As explained above the TCM monitors all input and outputs to identify possible failures. If a fault is detected the TCM takes the appropriate action to ensure the transmission enters a safe mode of operation, without sacrificing transmission durability or driver safety.

Supply Monitoring

If the battery voltage is either too great or too low, the TCM will detect a fault condition. For the TCM to be able to identify this fault, the engine must be running and the transmission fluid temperature sensor must be functioning correctly.

Solenoid Supply Monitoring

While the solenoid operating transistors are being activated, checks are run for open circuits, shorts circuits to ground and short circuits to supply. The monitoring function evaluates the voltage characteristics during the switch on process checking for the above faults.

All solenoid outputs are fully protected. The processor and the appropriate fail-safe action taken can quickly identify open and short circuit faults.

Sensor Supply Monitoring

The sensor supply voltage is a stabilized supply. This supply is monitored by the micro-processor by an Analogue to Digital Converter (ADC). If the voltage is out of the valid tolerance a raise a diagnostic trouble code (DTC) is set and the appropriate fail-safe action is performed.

Electronically Erasable Program Read Only Memory (EEPROM) Monitoring

To diagnose errors with the electronically erasable program read only memory (EEPROM) the TCM calculates 4 checksums continuously: If the processor identifies discrepancies in any of the four checksums the TCM will engage mechanical limp-home mode.

The TCM can diagnose errors within the EEPROM. Diagnosis is only performed during TCM initialization. There is no fail-safe mechanism associated with this function as the EEPROM is mainly used for the storage of fault codes and transmission calibration adaptions. If a fault occurs the TCM is able to perform default action and inform the driver of the problem, this is by the instrument cluster message centre.

Watchdog Monitoring

The watchdog monitoring function has two functions. Firstly it checks that it is possible to inhibit output control by the activation of the solenoid supply transistor. Secondly the watchdog checks that the safety circuit is functioning correctly.

During initialization the watchdog checks that it is possible to inhibit control of the pressure regulator and solenoid valves by switching the solenoid supply transistor. There is a fault if activation of the solenoids cannot be inhibited by the watchdog (NB. The supply to the solenoids can still be inhibited by the high side switch responsible for control of each solenoid i.e. One safety path is lost).

Monitoring the Substrate Temperature Sensor

The TCM is situated within the transmission on the valve body. As the TCM controls a number of high power solenoids and is surrounded by ATF, the TCM can obviously get very hot. If the temperature of the hardware rises above a pre-determined level the TCM will be shut down. Prior to the TCM shutting down the TCM will log a fault code, during shutdown the transmission will enter mechanical limp-home mode. Monitoring of the substrate temperature is performed by a temperature dependent resistor mounted on the processor.

Plausibility Checking

The TCM detects a fault if an excessive voltage jump is identified between any two consecutive measurements. Also, with the engine started from cold the transmission fluid temperature will start to rise. Therefore the substrate or fluid temperature will also start to rise because the TCM is surrounded by transmission fluid. If the engine and output shaft speed is higher than a set threshold for a predetermined length of time without the substrate temperature rising above a set threshold a fault will be detected.

Pressure Regulator/Solenoid Monitoring

Each pressure regulator and solenoid is monitored for open circuits and short circuits. The TCM also checks that the current being delivered to each solenoid valve or pressure regulator is within valid limits. When each solenoid is being driven with minimum current the TCM checks that the current is not above a threshold value. If a solenoid is being driven with maximum current, it checks that the current is not below a valid threshold. If either of these two errors occurs a plausibility error is logged and the appropriate fail-safe action is performed.

Output Speed Monitor

It is possible for the TCM to diagnose electrical errors associated with the output speed sensor while the vehicle is stationary as well as moving. Plausibility monitoring is performed on the sensor output when the vehicle is moving.

Input Speed Monitor

It is possible for the TCM to diagnose electrical errors associated with the input shaft speed sensor while the vehicle is stationary as well as moving. Plausibility monitoring is performed on the sensor output when the vehicle is moving.

Transmission Fluid Temperature Sensor Monitoring

The TCM monitors for faults associated with the transmission fluid temperature sensor in the following ways:

1 . Open and short circuit fault detection.

2 . The temperature cannot alter by more than a predefined differential between any two consecutive measurements.

3 . The transmission fluid temperature must rise after the engine has been started provided that the

www.JagDocs.com

fluid temperature was low enough to begin with (The vehicle must be driven and the diagnostic test condition met).

Position Sensor Monitoring

The TCM can identify errors with the position switch located within the transmission. If an unrecognized position code is read by the TCM a plausibility fault will be logged. (A code is checked between positions).

The position switch outputs a 4-bit code to the TCM, the bits being labelled L1-L4. For the transmission, the following codes are used to identify the selector position.

Only for the automatic side of the J-GATE P,R,N,D

Selector position switch code

Position	Code			
	L1	L2	L3	L4
Park	0	0	1	0
Reverse	0	0	0	1
Neutral	0	1	0	0
Drive	1	1	1	0

Gear Ratio Monitoring

The gear ratio diagnostic checks that each gear ratio is correctly engaged. Also, following a gear shift the diagnostic checks that the transmission has engaged the target gear within the allowed time.

Torque Converter Monitoring

The TCM checks that the torque converter can be locked correctly. If torque converter lock-up does not occur correctly the TCM performs the appropriate fail-safe action of opening the Torque converter clutch.

Torque Converter Lock-up Control

The TCM controls how the torque converter clutch is engaged as a function of the accelerator pedal position , output speed, transmission fluid temperature, gear selected and shift program. Lock-up is possible in all forward gears, but usually it is restricted to fourth, fifth and sixth gears. To make use of the comfort enhancing effect of the torque converter, the converter clutch can be disengaged prior to a downshift or up-shift. The torque converter lock up clutch is always modulated to allow for controlled slip, to further improve the shift quality.

Shift Energy Management

This function involves reducing or increasing the engine output torque during shifting. The aim when up-shifting is to reduce the energy that is dissipated in the friction elements of the transmission. This is done by reducing the engine torque during synchronization without interrupting the tractive drive. This function may be used for:

Increasing the transmission service life by shortening the slipping time.

Improving the shift comfort by reducing the step change in torque caused by the gearshift.

Transferring a higher engine power, this is allowed by the mechanical in-gear strength of the transmission.

Real-time control of engine torque is required to maintain maximum shift quality and transmission durability. The TCM has the ability to control the engine output torque during the gearshift to synchronize with the operation of the transmission clutches.

Pressure Modulation

To provide a high level of shift comfort and durability, the hydraulic pressure in the shift related friction elements of the transmission must be matched very accurately to the transmission input torque. This hydraulic pressure is composed of a hydraulically pre-set basic pressure and a controlling pressure that is set by one of the electro-hydraulic pressure regulators.

The transmission input torque can be directly calculated from the following operating parameters: engine torque signals, engine speed or any signals transmitted from the ECM by CAN, and converter slip. Separate pressure characteristics for each gear change make it possible to adapt precisely to the particular shift operation. A further improvement in shift comfort is achieved by individual treatment of special cases, such as manual shifts.

Shift Quality Adapts

The shift quality adapts are used to obtain a high quality and consistant shift feel. This is achieved through monitoring shift quality and then adapting the shift pressures and shift energy management to overcome hardware variability and "in service wear".

It will typically take a new transmission approximately 161 kilometers (100 miles) of use to fully adapt.

Shift Point Selection

The gearshift points are selected by the TCM, as a function of the output speed, accelerator pedal position, selector position and shift program selected. The driver has control over the shift points by the selector lever, accelerator pedal movement and mode switch.

www.JagDocs.com

Transmission Shift selection

Shift Map Selection

The transmission control system utilizes a number of driver selectable operating modes and also a number of adaptive/automatically selectable modes. Sport, Normal and Cruise Control mode are all driver selectable. Hot mode, traction control mode and trailer towing mode are all adaptive modes i.e. the transmission will automatically select this mode dependent upon the current driving conditions.

Normal Mode

Normal mode can be selected by activation of the transmission mode switch located on the J-Gate. Once activated this mode will remain engaged until the driver deselects the mode or engages the cruise control system. If the driver engages cruise control when Normal mode is active upon deactivation of the cruise system the transmission will automatically re-engage Normal mode. This mode can be over-ridden by a number of adaptive modes.

The mode switch is of the momentary type.

Cruise Mode

When the driver engages the cruise control system the TCM receives a CAN message transmitted by the Adaptive Cruise Control (ACC) or engine electronic controls which informs the TCM that cruise control is currently active. Upon receipt of this message the TCM selects a new transmission shift map. This map has been developed to reduce busy gearshift during cruise mode. It has also been developed to increase fuel economy.

Hot Mode

This is one of the adaptive modes the transmission can enter when conditions are correct. When the transmission fluid temperature, chip temp, engine oil temp or coolant temperature becomes hot enough to reach threshold values, the TCM will cause the transmission to enter Hot mode. This mode will automatically engage new shift and lock-up maps to reduce heat generated within the transmission. The shift map will enable the transmission to change to higher gears at lower vehicle speeds and the lock-up map will engage the lock-up clutch at lower vehicle speeds and in lower gears. The effect of this is that less heat will be generated within the transmission due to the effects of lock-up clutch slip and churning effects. There will be forced upshift strategy used in hot mode. To exit hot mode the selector lever must be moved or the brake pedal applied or the accelerator pedal applied 100%, during all of these methods of exiting from hot mode the fluid temperature must be lower than the threshold values.

Traction Control Mode

Traction Control Mode is an adaptive mode, which is automatically engaged when a traction event occurs. When driving on slippery surfaces (i.e.sand, ice) it is possible for the driven wheels to begin to spin. The TCM believes the vehicle speed is increasing and therefore it may begin to upshift. These upshifts reduce the torque at the wheel and so tend to reduce wheel slip. The downshift lines are forced downwards to prevent unwanted shifts. To reduce the effects of this, if a traction event occurs a signal is transmitted by the ABS module to the TCM over the CAN network, the TCM uses

this signal to change the currently selected shift map. The new shift map will have gearshift lines further apart, thus inhibiting the transmission shifting to a lower gear.

Hill/Trailer Towing Mode

This is an adaptive mode. When the TCM detects reduced vehicle acceleration for a certain percentage of throttle opening then this mode is automatically engaged by the TCM. When this mode is engaged a new shift map and torque converter lock-up map is selected. This new shift map is designed to reduce the number of gearshifts when towing a trailer or with the car climbing a steep hill. The shift map will cause the transmission to hold on to gears for longer this increases acceleration and reduces the number of gearshifts. This mode can also give an advantage when driving at high altitudes, where the torque produced by an engine is greatly reduced by the effects of reduced ambient pressure and airflow.

Driving Mode Priority

Each of the above modes has an associated priority i.e. Normal mode cannot over-ride cruise mode etc.

Adaptive Shift Strategies

The TCM of the six speed ZF automatic transmission incorporates adaptive strategies which improve the accessibility of the vehicle`s performance in driving conditions while maintaining a relaxed driving experience when cruising.

In "Sport" mode, accelerator pedal usage and cornering behaviour are monitored to assess driving style and road conditions. When an enthusiastic driving style or a demanding road is detected, 6th gear is inhibited and the lower gears are made slightly more accesssible in order to prevent unwanted "hunting" between gears. Conversely, when cruising conditions are detected, 6th gear is once again made available to maximise driving refinement and economy.

Under conditions of heavy braking, the transmission will perform one or more downshifts to improve response to a subsequent accelerator pedal application. Similarly if the accelerator pedal is released rapidly following hard acceleration, one or more upshifts are inhibited to increase engine braking and also improve subsequent response.

To complement these features, when a corner is detected transmission upshifts are inhibited. This inhibition is also maintained for a short distance after the corner allowing the driver to achieve a smooth balance through the bend without unwanted shifting mid-corner.

Safety features

The safety functions are designed to safeguard against mis-operation by the driver as well as against system malfunctions. The mis-operation system prevents reverse gear from being engaged at high forward speeds (Above 5 kph) and prevents manual downshifting at excessive engine speeds.

Great attention has been paid to safeguarding against, and detecting, malfunctions in the electronic control system. The design of the electrical and diagnostic system is such that system integrity is protected at all times.

www.JagDocs.com

The hydraulic system has "fail-safe" characteristics regarding its electrical energisation, i.e. as a result of the power supply being lost to the electro-hydraulic actuators the transmission engages a reliable emergency gear ratio to facilitate a basic limp-home mode.

Recognition of critical shift operation by monitoring the last element in the signal path, i.e. the solenoid valve, and checking by means of redundant measured variables, i.e. engine speed, input speed and output speed.

Measures are in place which guarantee a high degree of availability of safeguard functions, i.e. monitoring of safety circuits. For this purpose each time the vehicle is started there is a check on the entire safety hardware, this is during TCM initialization and the associated program parts and signal paths used during the TCM operation status. A malfunction in this part of the system, or triggering of the safety circuit, will be communicated to the driver by the instrument cluster message centre.

Diagnostic Strategy

No Data Available

www.JagDocs.com

Transmission - 3.0L NA V6 - AJ27 (44.20.01)

Special Service Tools

Powertrain Assembly Jack
HTJ1200-2

Removal

1 . Place the selector lever in the N position.

2 . Disconnect the battery ground cable.
For additional information, refer to

3 . Remove the exhaust system.
For additional information, refer to

4 . **CAUTION: Under no circumstances must the flexible coupling (or its fixings) be loosened or removed from the driveshaft.**

CAUTION: Make sure the front of the driveshaft does not put an excessive load on the center bearing. Failure to follow this instruction may result in damage to the vehicle.

Detach the driveshaft from the transmission flange.

- Mark the position of the driveshaft in relation to the transmission flange.
- Mark the position of each nut and bolt in relation to the transmission flexible joint.

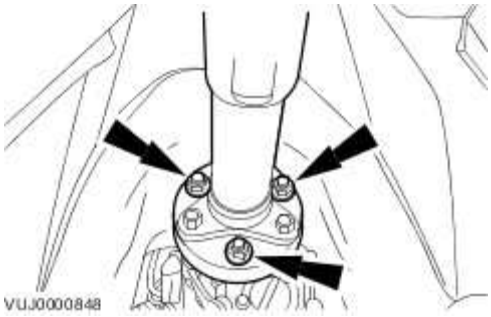

5 . **CAUTION: Make sure the front of the driveshaft does not put an excessive load on the center bearing. Failure to follow this instruction may result in damage to the vehicle.**

Using a suitable securing strap, reposition and support the driveshaft to the vehicle body.

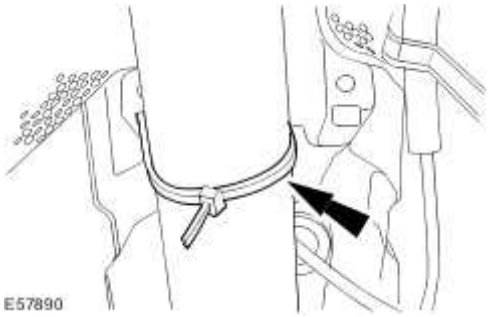

6 . Detach the engine ground cable.

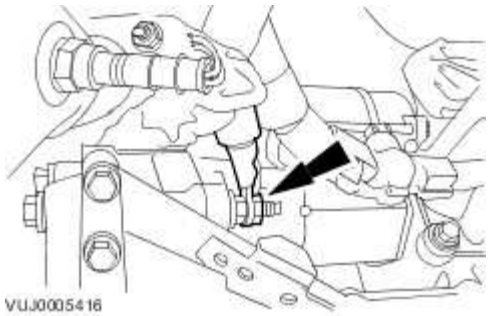

www.JagDocs.com

7 . **CAUTION: Make sure the starter motor is supported. Failure to follow this instruction may result in damage to the vehicle.**

Detach the starter motor.

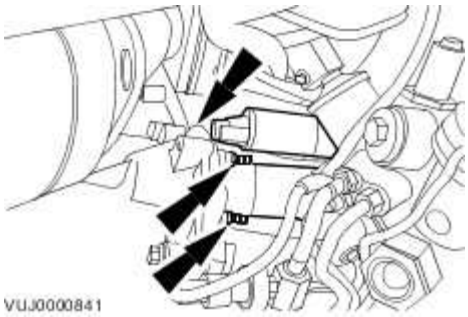

8 . Remove the rubber access cover.

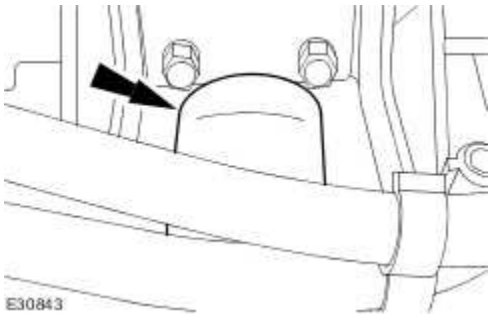

9 . Remove the torque converter retaining bolts.

Rotate the torque converter to gain access to the remaining bolts.

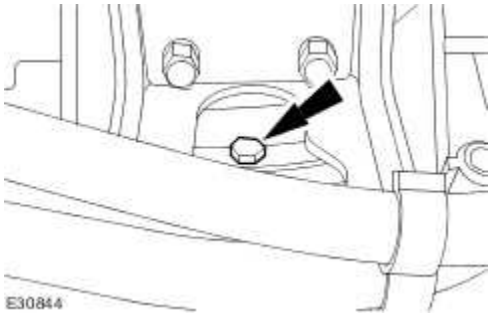

10 . Detach the transmission fluid cooler tubes from the oil pan.

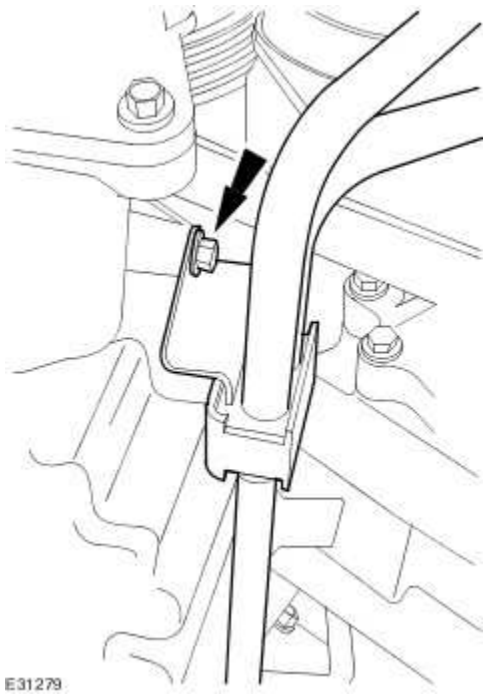

11 . Detach the transmission fluid cooler tubes.

1) Remove the retaining bolt.

2) Remove the retaining plate.

3) Detach the transmission fluid cooler tubes.

Allow the transmission fluid to drain into a suitable container.

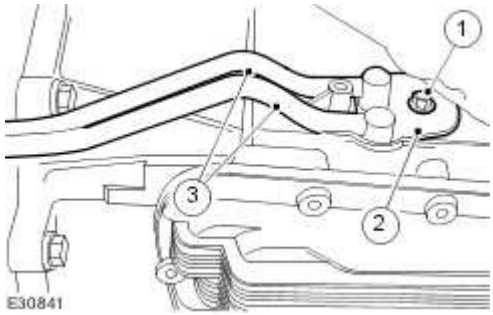

12 . Remove the torque converter rubber inspection cover.

www.JagDocs.com

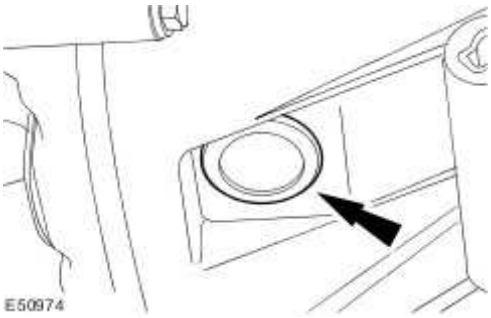

13. **CAUTION: Make sure the automatic transmission weight is evenly supported on the special tool. Failure to follow this instruction may result in damage to the vehicle.**

Install the special tool.

14. Install the rubber blocks supplied with special tool HTJ1200-2, between the front subframe and the oil pan.

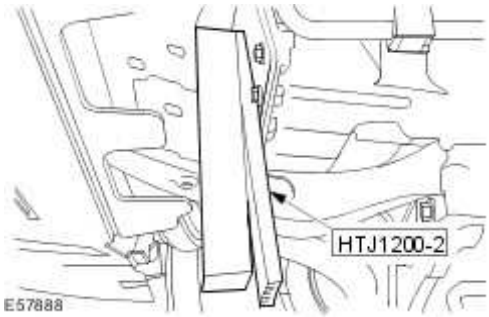

15. Lower the rear of the transmission.

- Remove the automatic transmission support retaining bolts.

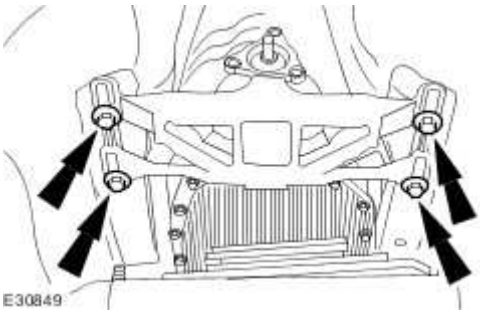

16 . **WARNING: Secure the automatic transmission to the special tool using the tie down straps. Failure to follow this instruction may result in personal injury.**

Install the tie down strap.

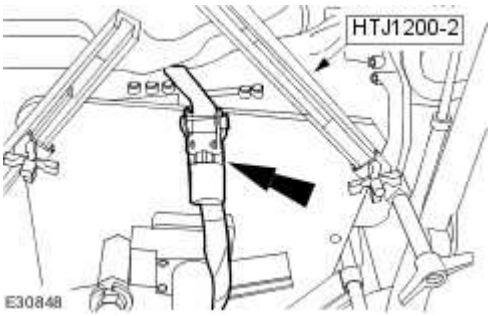

17 . Detach the selector lever cable.

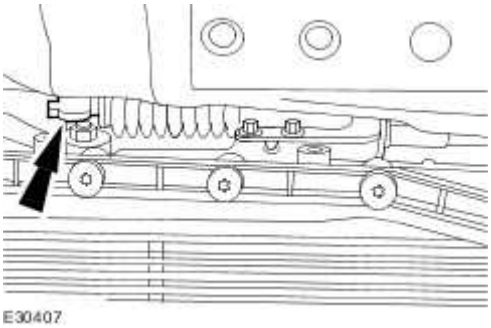

18 . Reposition the selector lever cable.

- Remove the retaining bolts.

www.JagDocs.com

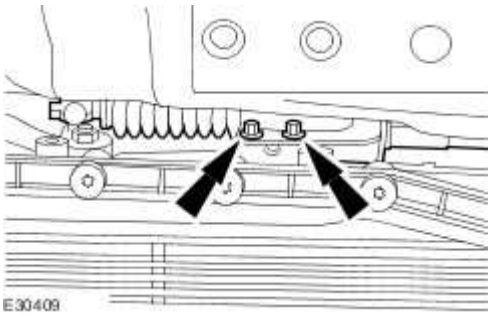

19 . **CAUTION: Make sure the transmission control module (TCM) and main control valve body is protected against electrostatic discharge. Failure to follow this instruction may result in component damage.**

Disconnect the automatic transmission electrical connector.

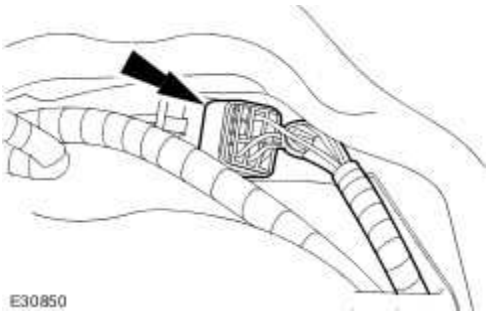

20 . Remove the automatic transmission retaining bolts.

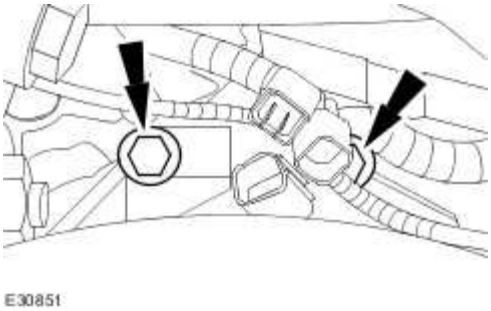

21 . Remove the automatic transmission retaining bolts.

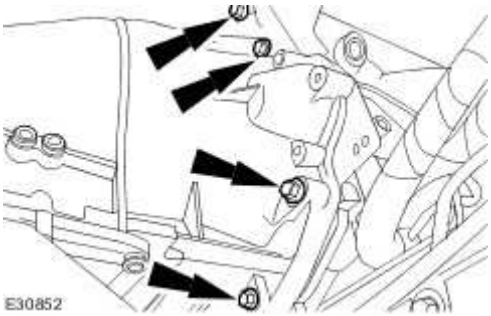

22. **WARNING: Do not let the torque converter drop out of the automatic transmission. Failure to follow this instruction may result in personal injury.**

NOTE:

Special tool shown removed for clarity.

Remove the automatic transmission from the vehicle.

- Remove the retaining bolts.
- Lower the automatic transmission from the vehicle.

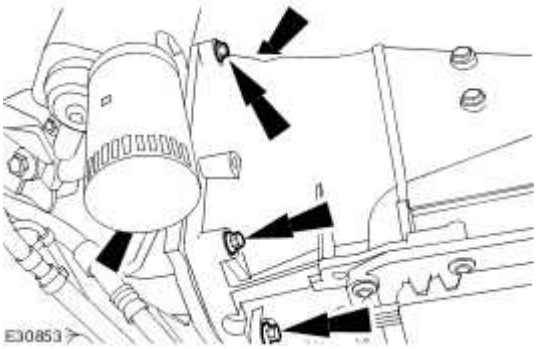

www.JagDocs.com

Transmission - 4.2L NA V8 - AJV8/4.2L SC V8 - AJV8/3.5L NA V8 - AJV8 (44.20.01)

Special Service Tools

Powertrain Assembly Jack
HTJ1200-2

Removal

1 . Place the selector lever in the N position.

2 . Disconnect the battery ground cable.
For additional information, refer to

3 . Remove the exhaust system.
For additional information, refer to

4 . **CAUTION: Under no circumstances must the flexible coupling (or its fixings) be loosened or removed from the driveshaft.**

CAUTION: Make sure the front of the driveshaft does not put an excessive load on the center bearing. Failure to follow this instruction may result in damage to the vehicle.

Detach the driveshaft from the transmission flange.

- Mark the position of the driveshaft in relation to the transmission flange.
- Mark the position of each nut and bolt in relation to the transmission flexible joint.

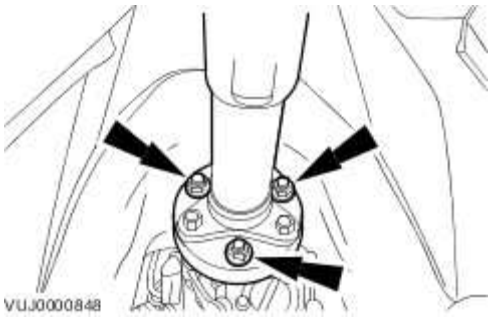

5 . **CAUTION: Make sure the front of the driveshaft does not put an excessive load on the center bearing. Failure to follow this instruction may result in damage to the vehicle.**

Using a suitable securing strap, reposition and support the driveshaft to the vehicle body.

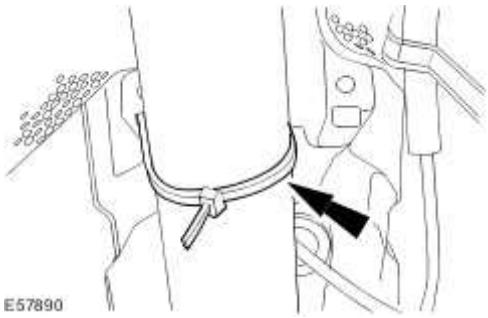

6 . Detach the transmission fluid cooler tubes from the oil pan.

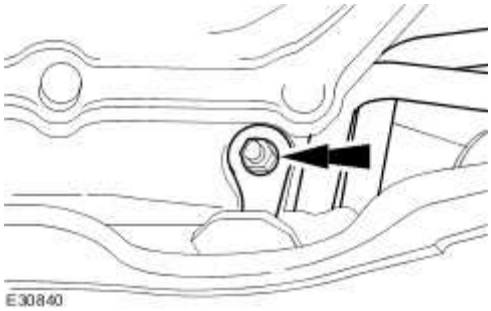

7 . Detach the transmission fluid cooler tubes.

1) Remove the retaining bolt.

2) Remove the retaining plate.

www.JagDocs.com

3) Detach the transmission fluid cooler tubes.

Allow the transmission fluid to drain into a suitable container.

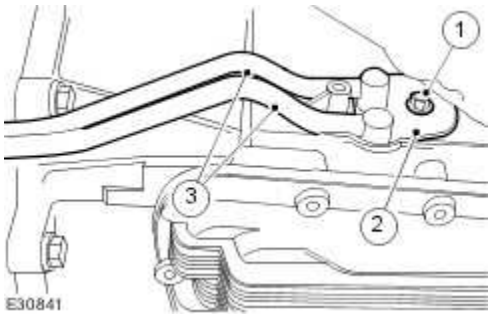

8 . Remove the torque converter rubber inspection cover.

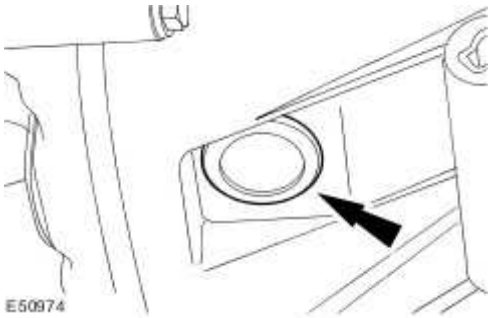

9 . **CAUTION: Make sure the automatic transmission weight is evenly supported on the special tool. Failure to follow this instruction may result in damage to the vehicle.**

Install the special tool.

10 Install the rubber blocks supplied with special tool HTJ1200-2, between the front subframe and the oil pan.

.

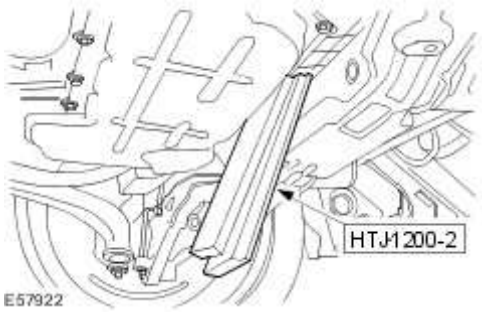

11 . Lower the rear of the transmission.

- Remove the automatic transmission support retaining bolts.

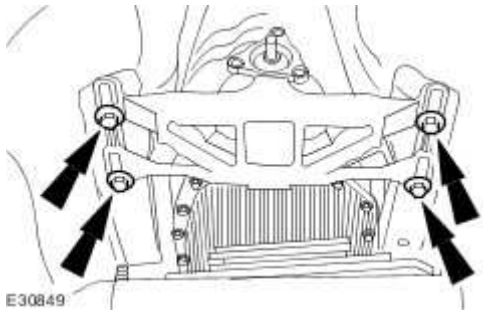

12
. **WARNING: Secure the automatic transmission to the special tool using the tie down straps. Failure to follow this instruction may result in personal injury.**

Install the tie down strap.

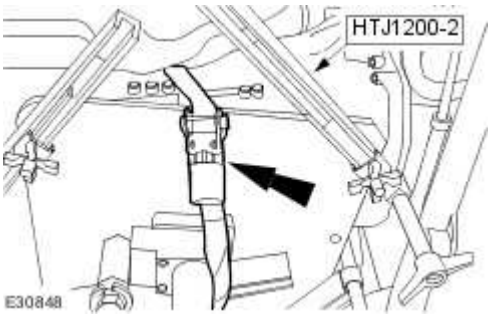

13 . Detach the selector lever cable.

www.JagDocs.com

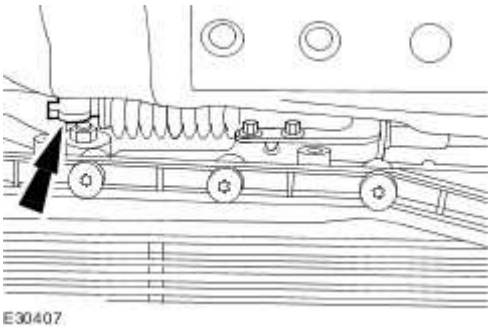

14 . Reposition the selector lever cable.

Remove the retaining bolts.

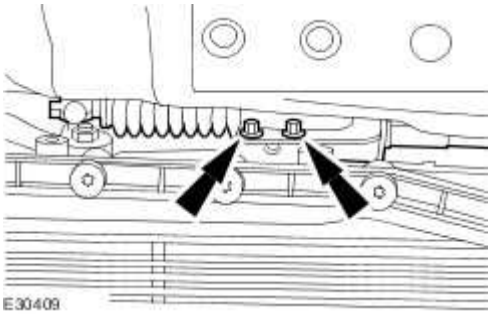

15 . **CAUTION: Make sure the transmission control module (TCM) and main control valve body is protected against electrostatic discharge. Failure to follow this instruction may result in component damage.**

Disconnect the automatic transmission electrical connector.

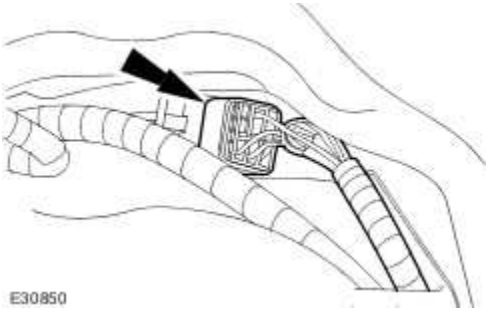

16 . Remove the rubber access cover.

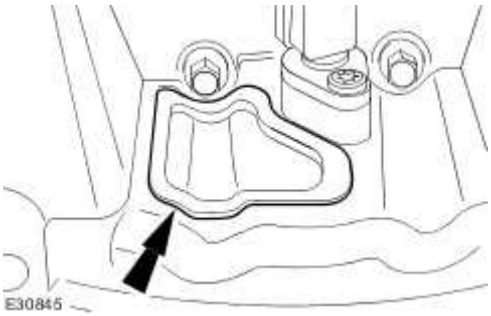

17 . Remove the torque converter retaining bolts.

Rotate the torque converter to gain access to the remaining bolts.

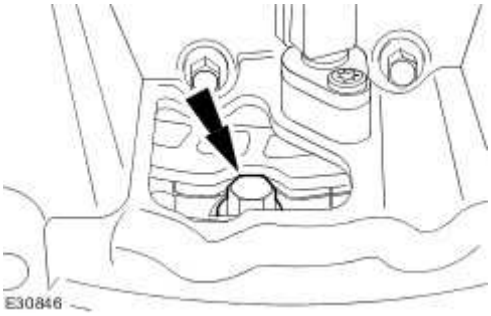

18 . Remove the automatic transmission retaining bolts.

19 . **WARNING: Do not let the torque converter drop out of the automatic transmission. Failure to follow this instruction may result in personal injury.**

NOTE:

Special tool shown removed for clarity.

www.JagDocs.com

Remove the automatic transmission from the vehicle.

- Remove the retaining bolts.
- Lower the automatic transmission from the vehicle.

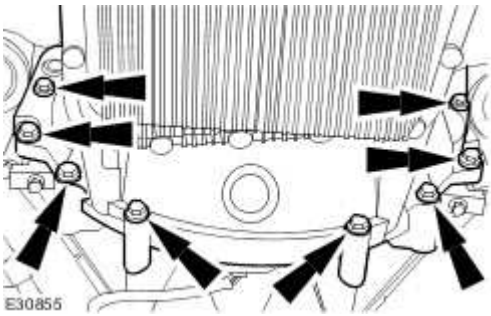

Transmission - 2.7L V6 - TdV6 (44.20.01)

Special Service Tools

Engine Lifting Brackets
303-1129

Engine Support Bracket
303-021

Powertrain Assembly Jack
HTJ1200-2

Removal

1 . Move the automatic transmission selector lever to the “N” position.

2 . Disconnect the battery ground cable.
For additional information, refer to Battery Disconnect and Connect

3 . Remove the filler cap.

www.JagDocs.com

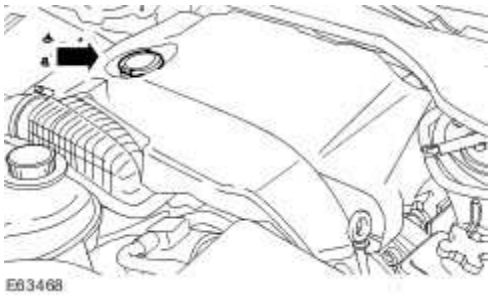

4 . Remove the engine cover.

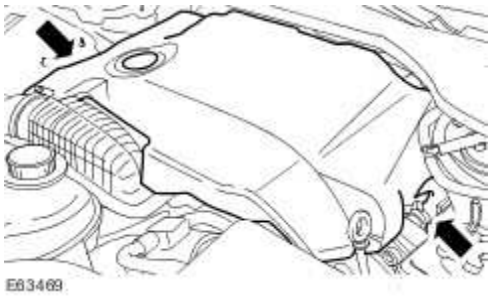

5 . Install the engine oil filler cap to prevent foreign material entering the valve cover.

6 . Install the special tool.

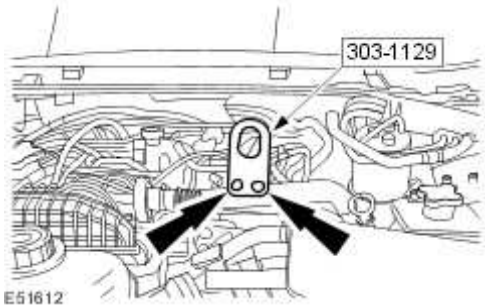

7 Install the special tool.

.

- Rotate the special tool adjustment bolt a suitable amount of turns to support the engine.

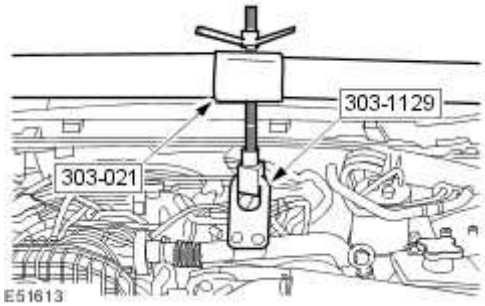

8 . Remove the air deflector.
For additional information, refer to Air Deflector (76.11.41)

9 . Remove the diesel particulate filter.
For additional information, refer to Diesel Particulate Filter (DPF)

10 . Remove both catalytic converters.
For additional information, refer to Catalytic Converter - 2.7L V6 - TdV6 (17.50.05)

11 . **CAUTION: Under no circumstances must the flexible coupling (or its fixings) be loosened or removed from the driveshaft. Failure to follow this instruction may result in damage to the vehicle.**

CAUTION: Make sure the front of the driveshaft does not put an excessive load on the center bearing. Failure to follow this instruction may result in damage to the vehicle.

Detach the driveshaft from the automatic transmission flange.

- Mark the position of the driveshaft in relation to the automatic transmission flange.
- Mark the position of each nut and bolt in relation to the automatic transmission flexible joint.

www.JagDocs.com

Detach the driveshaft from the automatic transmission flange.

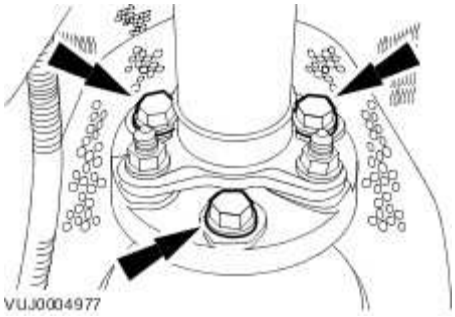

12 . Loosen the retaining nut.

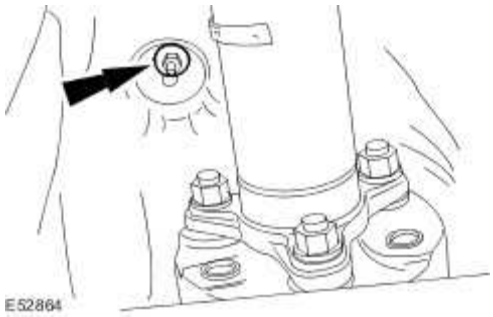

13 . Install suitable cord to the heat shield retaining nut stud.

Tighten the retaining nut.

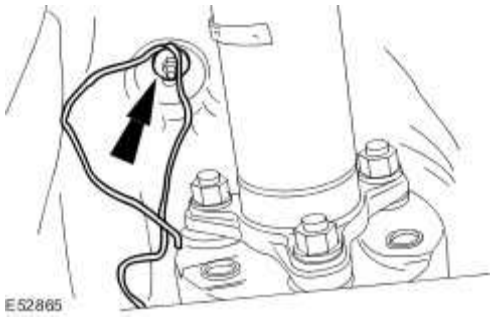

14 . **CAUTION: Make sure the front of the driveshaft does not put an excessive load on the center bearing. Failure to follow this instruction may result in damage to the vehicle.**

Reposition and support the driveshaft.

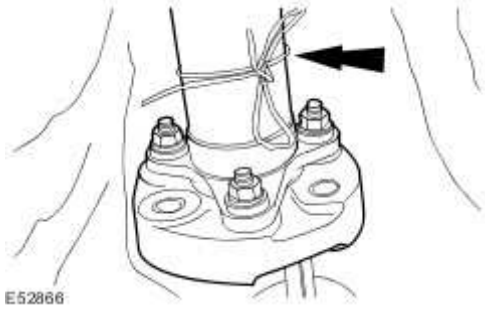

15 . Remove the rubber access cover.

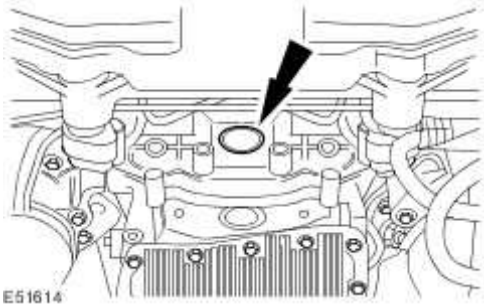

16 . Remove the retaining bolts.

- Rotate the torque converter to gain access to the remaining bolts.

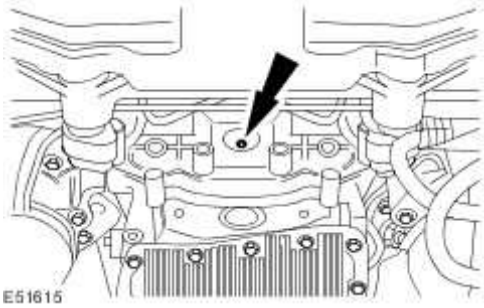

17 . Release the automatic transmission fluid cooler tube retaining bracket.

www.JagDocs.com

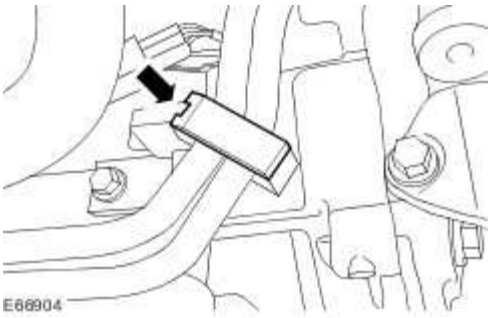

18 . **CAUTION: Make sure the transmission fluid cooler tubes are not removed from the automatic transmission by using a pry bar. Failure to follow this instruction may result in damage to the vehicle.**

NOTE:

Discard the O-ring seals.

Detach the transmission fluid cooler tubes from the automatic transmission.

- Allow the automatic transmission fluid to drain into a suitable container.

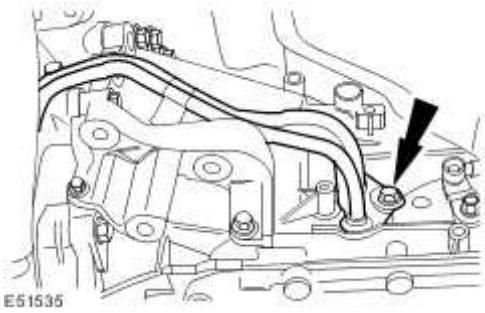

19 . Detach the selector lever cable.

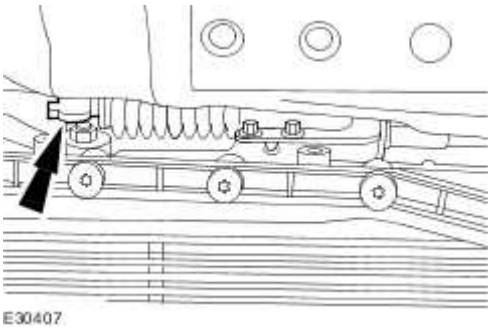

20 . Reposition the selector lever cable.

Remove the retaining bolts.

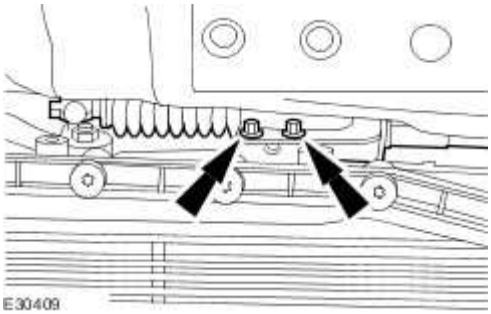

21 . **CAUTION: Make sure the automatic transmission control module (TCM) and main control valve body is protected against electrostatic discharge. Failure to follow this instruction may result in component damage.**

Disconnect the automatic transmission electrical connectors.

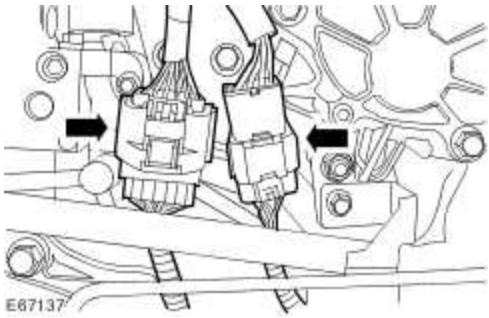

22 Detach the diesel particulate filter high-pressure and low-pressure pipes from the automatic

www.JagDocs.com

. transmission.

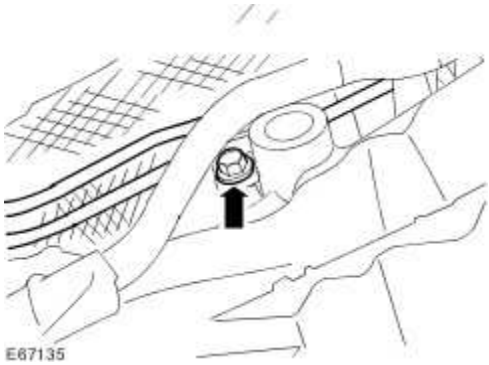

23 . **CAUTION: Make sure the automatic transmission weight is evenly supported on the special tool. Failure to follow this instruction may result in damage to the vehicle.**

Install the special tool.

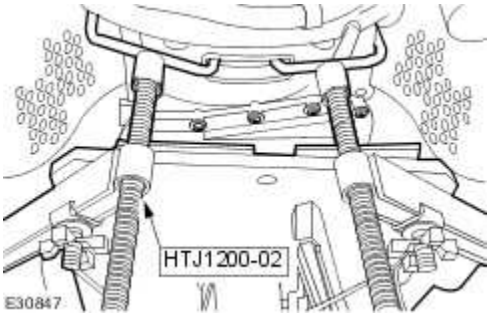

24 . Using the special tool, lower the rear of the automatic transmission.

Remove the retaining bolts.

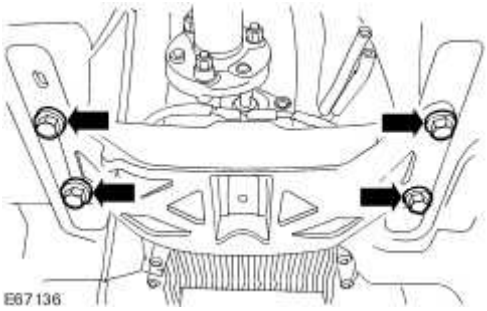

25 . **WARNING: Secure the automatic transmission to the special tool using the tie down straps. Failure to follow this instruction may result in personal injury.**

CAUTION: Make sure the tie down strap does not trap the automatic transmissions sensors or harness etc. Failure to follow this instruction may result in damage to the vehicle.

Install the tie down strap.

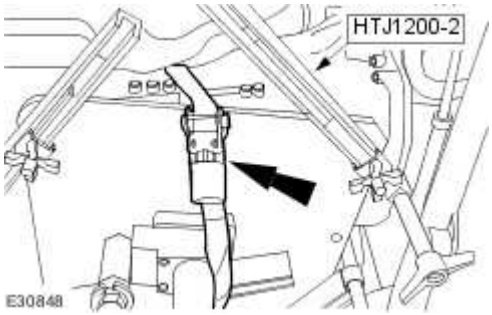

26 . Remove the retaining bolts.

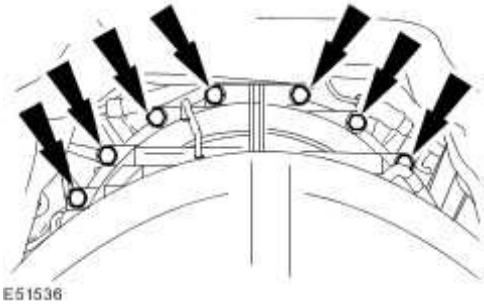

27 . Remove the retaining bolts.

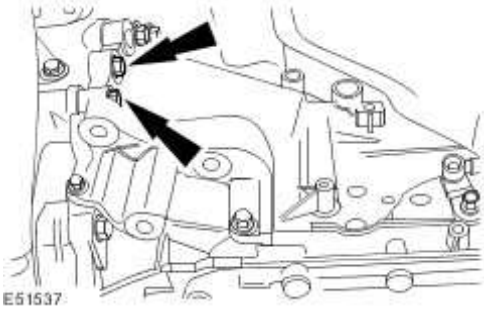

www.JagDocs.com

28 . Remove the retaining bolts.

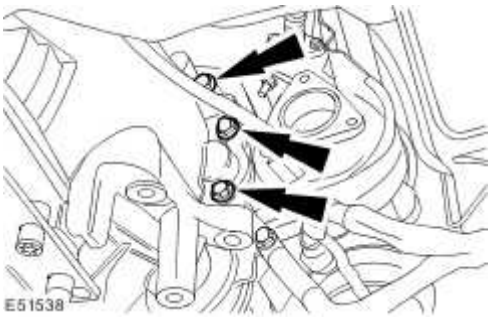

29 . **WARNING: Do not allow the torque converter to become disengaged from the automatic transmission. Failure to follow this instruction may result in personal injury.**

NOTE:

Shown with the powertrain assembly jack removed for clarity.

Remove the automatic transmission from the vehicle.

- Remove the retaining bolts.
- Lower the automatic transmission from the vehicle.

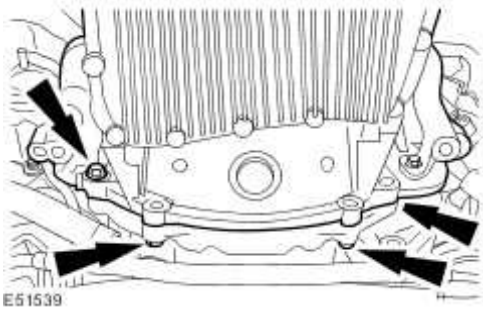

Transmission - 3.0L NA V6 - AJ27 (44.20.01)

Special Service Tools

Powertrain Assembly Jack
HTJ1200-2

Installation

1. **CAUTION: If the automatic transmission fluid is very dirty or it contains metallic particles, then along with a new transmission, install a new automatic transmission fluid cooler and lines.**

   Flush the transmission oil cooler and fluid tubes.

2. **NOTE:**

   Use high-temperature grease meeting Jaguar specification.

   Apply a thin layer of high-temperature grease to the centering spigot bore on the torque converter.

3. **WARNING: Do not let the torque converter drop out of the automatic transmission. Failure to follow this instruction may result in personal injury.**

   CAUTION: The torque converter hub must engage fully in the oil pump drive gear

www.JagDocs.com

throughout the whole installation procedure.

Install the automatic transmission to the vehicle.

- Raise the automatic transmission to the vehicle.
- Install the retaining bolts.
- Tighten to 48 Nm.

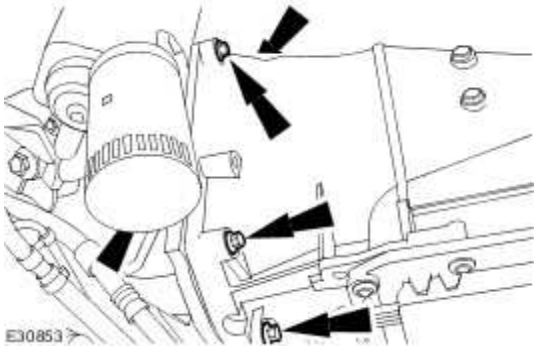

4 . Install the automatic transmission retaining bolts.

- Tighten to 48 Nm.

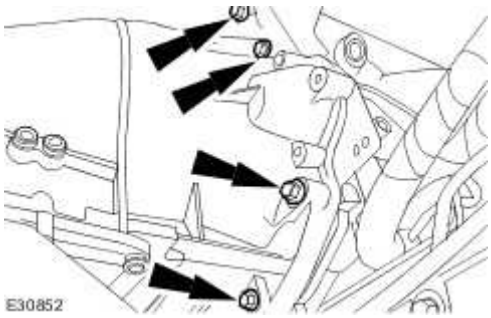

5 . Install the automatic transmission retaining bolts.

- Tighten to 48 Nm.

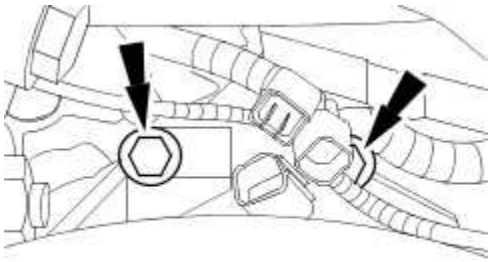

E30851

6 . **CAUTION: Make sure the transmission control module (TCM) and main control valve body is protected against electrostatic discharge. Failure to follow this instruction may result in component damage.**

Connect the automatic transmission electrical connector.

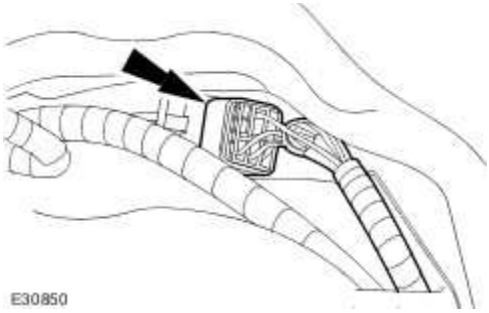

E30850

7 . Attach the selector lever cable.

- Install the retaining bolts.
- Tighten to 11 Nm.

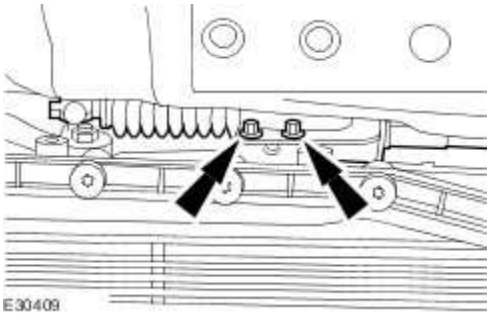

E30409

www.JagDocs.com

8 . Attach the selector lever cable.

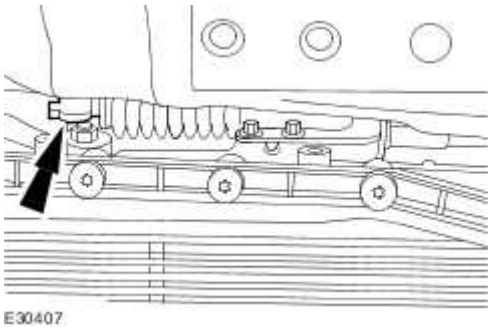

9 . Remove the tie down strap.

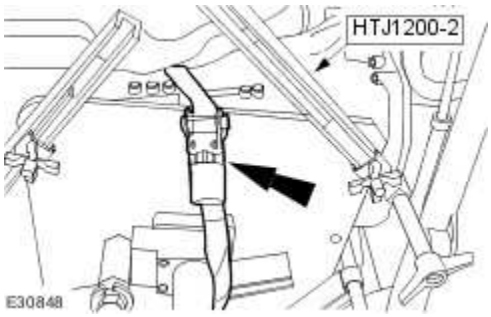

10 . Install the automatic transmission support retaining bolts.

- Raise the rear of the transmission.
- Tighten to 50 Nm.

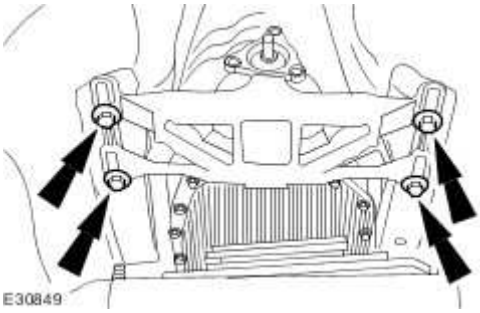

11 . Remove the rubber blocks supplied with special tool HTJ1200-2.

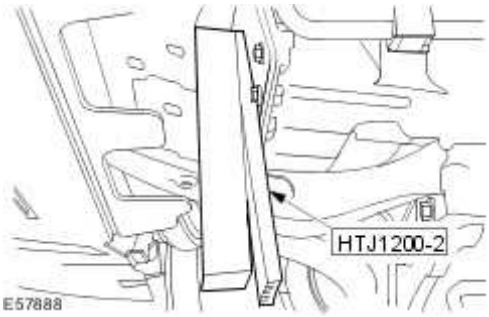

12 . Remove the special tool.

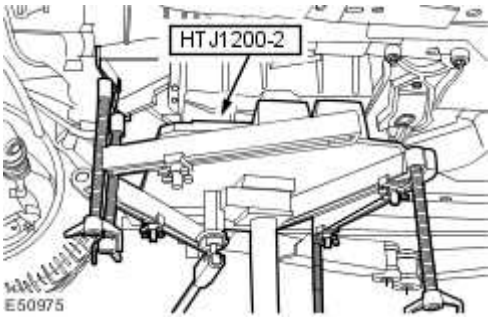

13 . Install the torque converter rubber inspection cover.

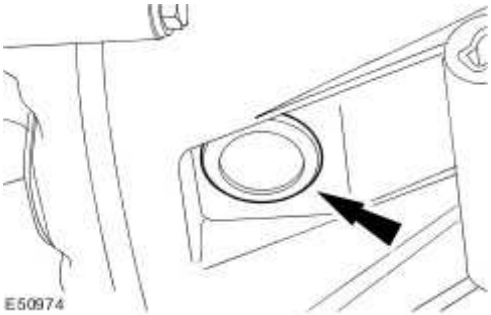

14 . Attach the transmission fluid cooler tubes.

1) Attach the transmission fluid cooler tubes.

- Install new O-ring seals.

2) Install the retaining plate.

3) Install the retaining bolt.

- Tighten to 23 Nm.

www.JagDocs.com

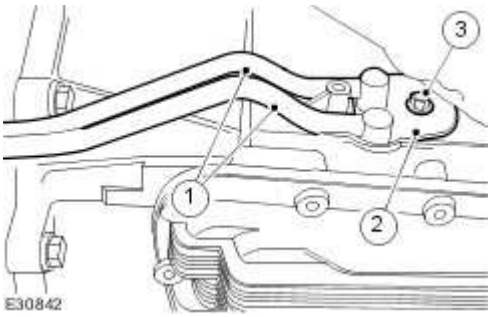

15 . Attach the transmission fluid cooler tubes to the oil pan.

- Tighten to 10 Nm.

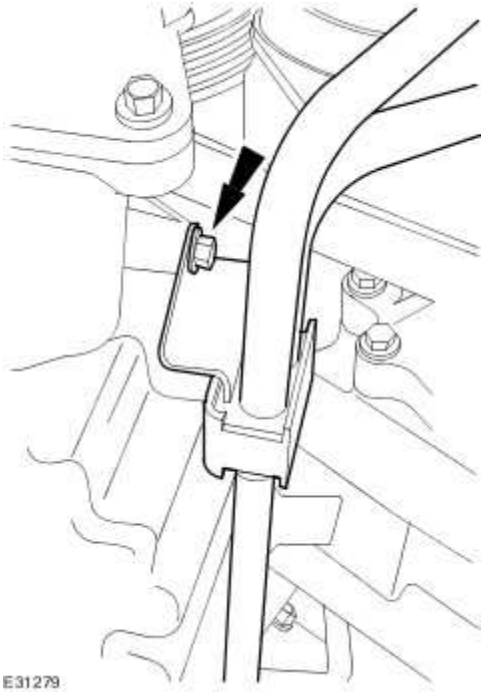

16 . Install the torque converter retaining bolts.

- Rotate the torque converter to gain access to the remaining bolts.
- Tighten to 55 Nm.

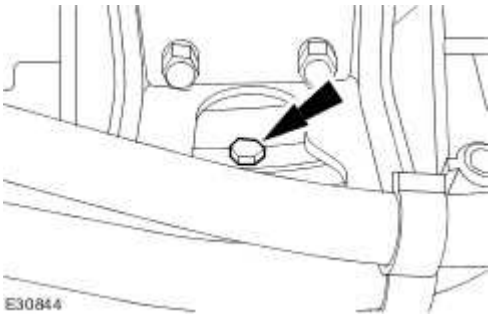

17 . Install the rubber access cover.

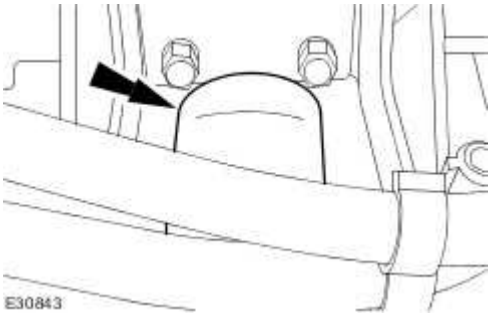

18 . Attach the starter motor.

Tighten to 25 Nm.

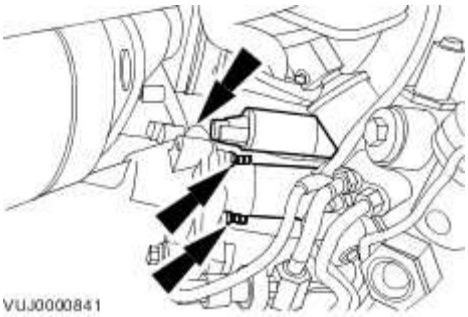

19 . Attach the engine ground cable.

www.JagDocs.com

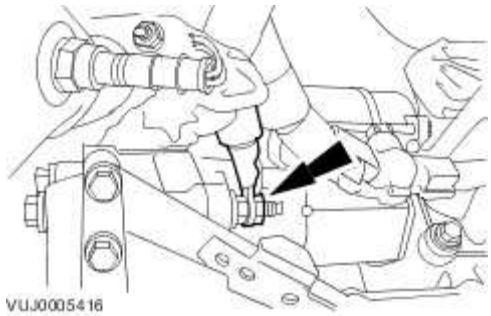

20. **CAUTION: Make sure the front of the driveshaft does not put an excessive load on the center bearing. Failure to follow this instruction may result in damage to the vehicle.**

Detach the driveshaft.

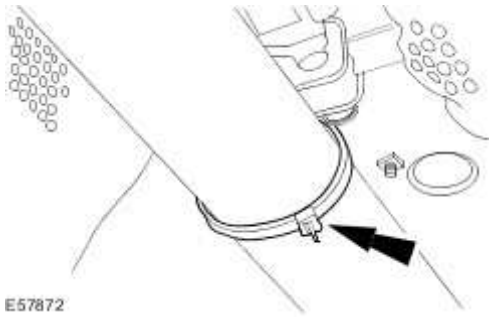

21. **CAUTION: Make sure the front of the driveshaft does not put an excessive load on the center bearing. Failure to follow this instruction may result in damage to the vehicle.**

CAUTION: Make sure all components are installed to the position they were removed from. Failure to follow this instruction may result in damage to the vehicle.

Attach the driveshaft to the transmission flange.

- Tighten to 108 Nm.

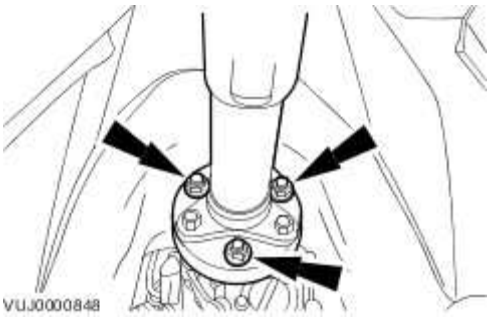

22 . Install the exhaust system.
For additional information, refer to

23 . Connect the battery ground cable.
For additional information, refer to

24 . Carry out a transmission fluid level check.
For additional information, refer to

25 **NOTE:**
.

For NAS vehicles only.

If required, carry out a long drive cycle.
For additional information, refer to Powertrain Control Module (PCM) Long Drive Cycle Self-Test

www.JagDocs.com

Transmission - 4.2L NA V8 - AJV8/4.2L SC V8 - AJV8/3.5L NA V8 - AJV8 (44.20.01)

Special Service Tools

Powertrain Assembly Jack
HTJ1200-2

Installation

1. **CAUTION: If the automatic transmission fluid is very dirty or it contains metallic particles, then along with a new transmission, install a new automatic transmission fluid cooler and lines.**

   Flush the transmission oil cooler and fluid tubes.

2. **NOTE:**

   Use high-temperature grease meeting Jaguar specification.

   Apply a thin layer of high-temperature grease to the centering spigot bore on the torque converter.

3. **WARNING: Do not let the torque converter drop out of the automatic transmission. Failure to follow this instruction may result in personal injury.**

   CAUTION: The torque converter hub must engage fully in the oil pump drive gear

throughout the whole installation procedure.

Install the automatic transmission to the vehicle.

- Raise the automatic transmission to the vehicle.
- Install the retaining bolts.
- Tighten to 48 Nm.

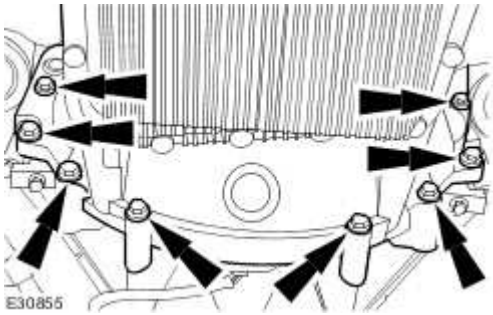

4 . Install the automatic transmission retaining bolts.

- Tighten to 48 Nm.

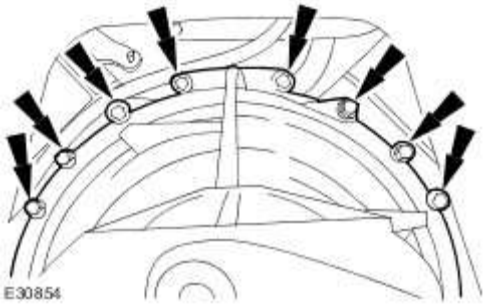

5 . Install the torque converter retaining bolts.

- Rotate the torque converter to gain access to the remaining bolts.
- Tighten to 55 Nm.

www.JagDocs.com

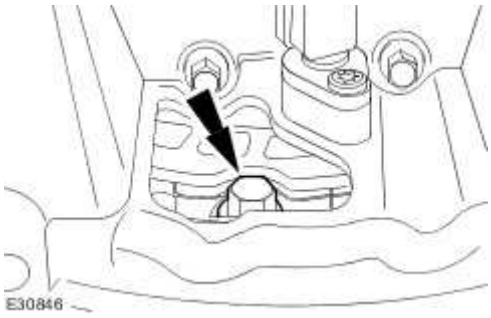

6 . Install the rubber access cover.

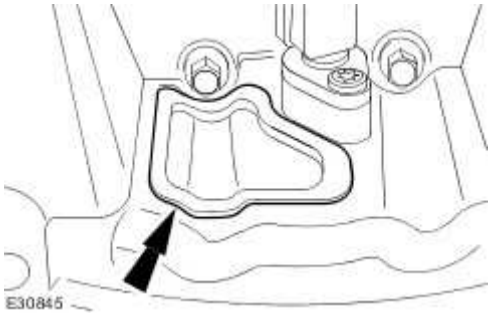

7 . **CAUTION: Make sure the transmission control module (TCM) and main control valve body is protected against electrostatic discharge. Failure to follow this instruction may result in component damage.**

Connect the automatic transmission electrical connector.

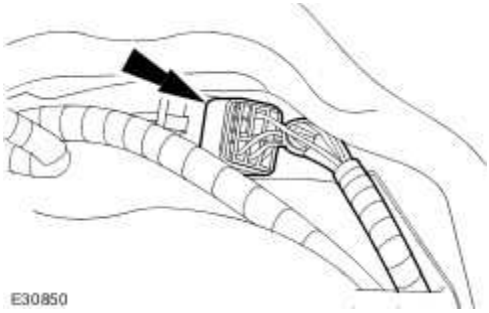

8 . Attach the selector lever cable.

- Install the retaining bolts.
- Tighten to 11 Nm.

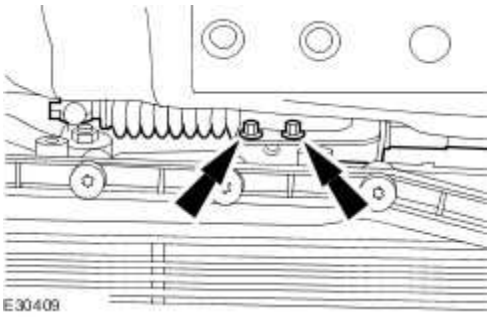

9 . Attach the selector lever cable.

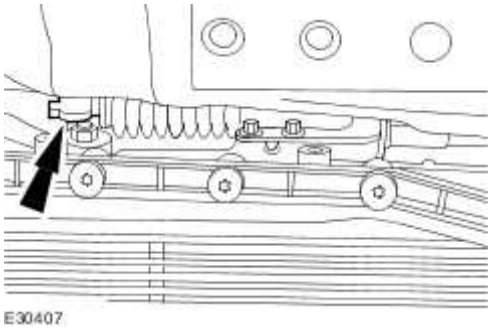

10 . Remove the tie down strap.

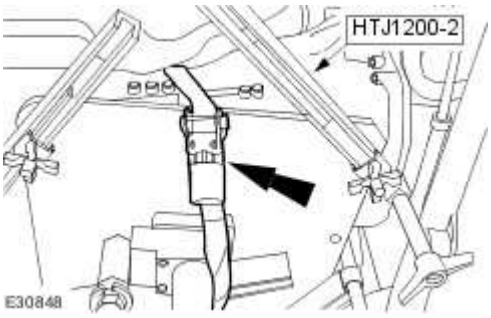

11 . Install the automatic transmission support retaining bolts.

- Raise the rear of the transmission.
- Tighten to 50 Nm.

www.JagDocs.com

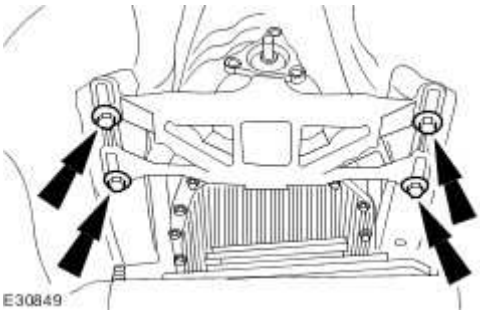

12 . Remove the rubber blocks supplied with special tool HTJ1200-2.

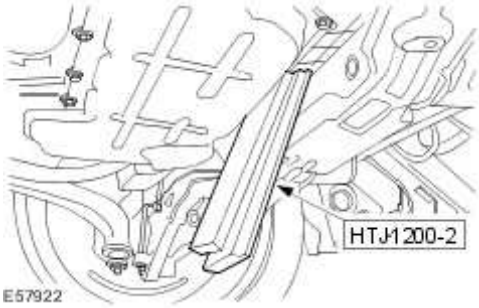

13 . Remove the special tool.

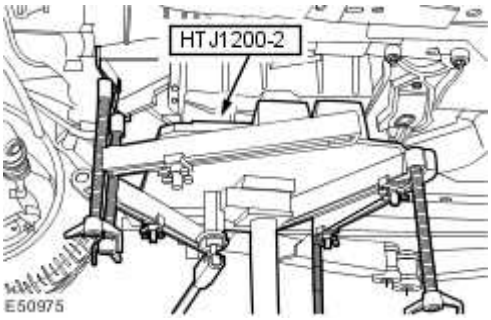

14 . Install the torque converter rubber inspection cover.

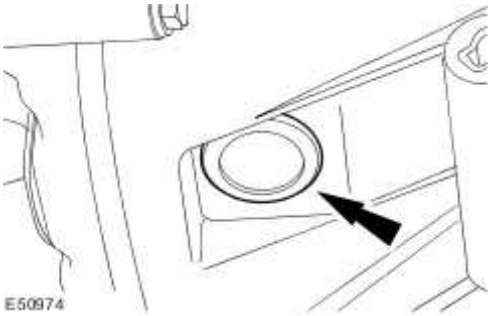

15 . Attach the transmission fluid cooler tubes.

1) Attach the transmission fluid cooler tubes.

- Install new O-ring seals.

2) Install the retaining plate.

3) Install the retaining bolt.

- Tighten to 23 Nm.

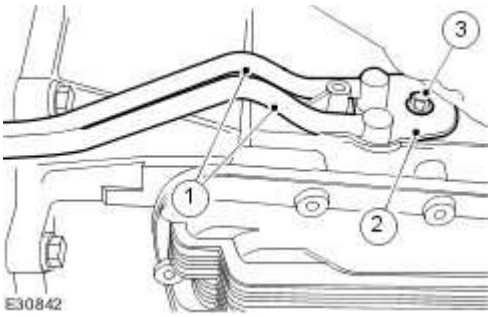

16 . Attach the transmission fluid cooler tubes to the oil pan.

- Tighten to 10 Nm.

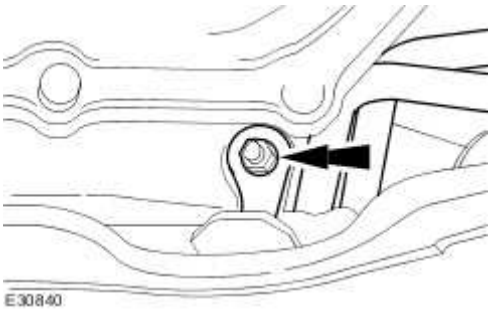

17 . **CAUTION: Make sure the front of the driveshaft does not put an excessive load on the center bearing. Failure to follow this instruction may result in damage to the vehicle.**

Detach the driveshaft.

www.JagDocs.com

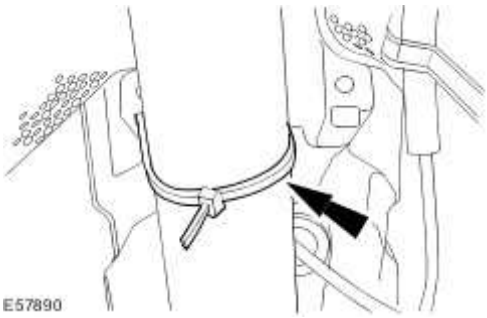

18 . **CAUTION: Make sure the front of the driveshaft does not put an excessive load on the center bearing. Failure to follow this instruction may result in damage to the vehicle.**

CAUTION: Make sure all components are installed to the position they were removed from. Failure to follow this instruction may result in damage to the vehicle.

Attach the driveshaft to the transmission flange.

- Tighten to 108 Nm.

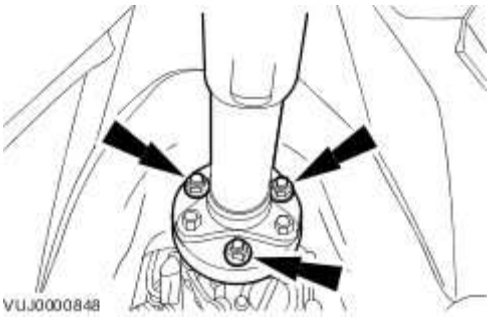

19 . Install the exhaust system.
For additional information, refer to

20 . Connect the battery ground cable.
For additional information, refer to

21 . Carry out a transmission fluid level check.
For additional information, refer to

22 **NOTE:**
.

For NAS vehicles only.

If required, carry out a long drive cycle.
For additional information, refer to Powertrain Control Module (PCM) Long Drive Cycle Self-Test

www.JagDocs.com

Transmission - 2.7L V6 - TdV6 (44.20.01)

Special Service Tools

Engine Lifting Brackets
303-1129

Engine Support Bracket
303-021

Powertrain Assembly Jack
HTJ1200-2

Installation

1. **CAUTION: If the automatic transmission fluid is very dirty or it contains metallic particles, then along with a new transmission, install a new automatic transmission fluid cooler and lines.**

   Flush the automatic transmission fluid oil cooler and fluid tubes.

2. **NOTE:**

   Use high-temperature grease meeting Jaguar specification.

Apply a thin layer of high-temperature grease to the centering spigot bore on the torque converter.

3. **WARNING: Do not allow the torque converter to become disengaged from the automatic transmission. Failure to follow this instruction may result in personal injury.**

CAUTION: The torque converter hub must engage fully into the pump drive gear throughout the whole installation procedure. Failure to follow this instruction may result in damage to the vehicle.

NOTE:

Shown with the powertrain assembly jack removed for clarity.

Install the automatic transmission to the vehicle.

- Raise the automatic transmission to the vehicle.
- Loosely install the retaining bolts.

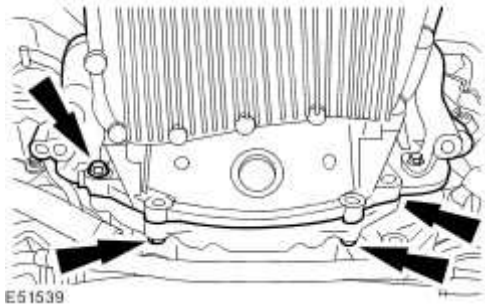

4 . Install the retaining bolts.

- Tighten to 48 Nm.

www.JagDocs.com

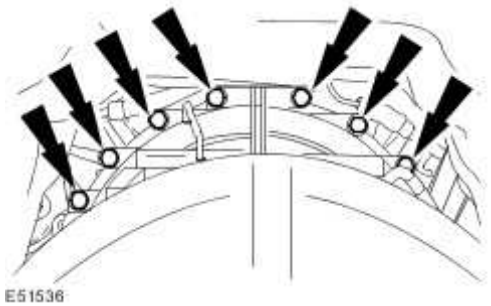

5 . Install the retaining bolts.

- Tighten to 48 Nm.

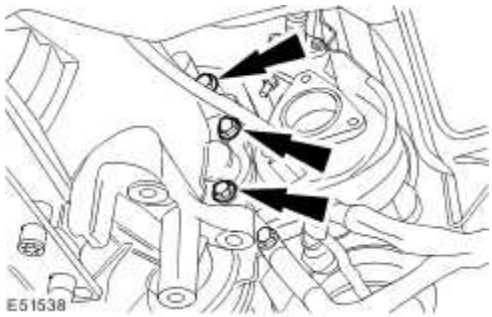

6 . Install the retaining bolts.

- Tighten to 48 Nm.

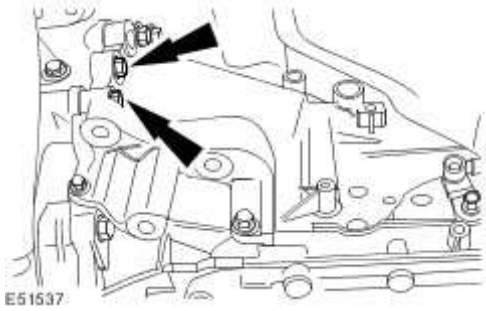

7 . Tighten to 48 Nm.

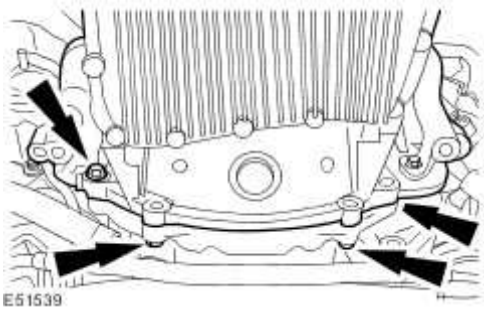

8 . Remove the tie down strap.

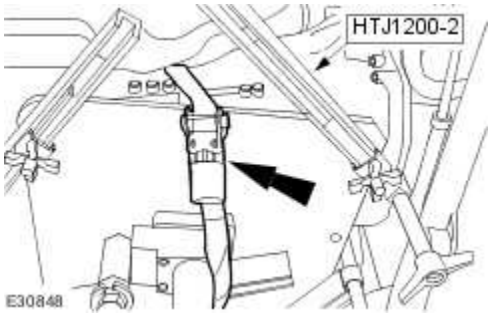

9 . Install the automatic transmission mount retaining bolts.

- Raise the rear of the automatic transmission.
- Tighten to 50 Nm.

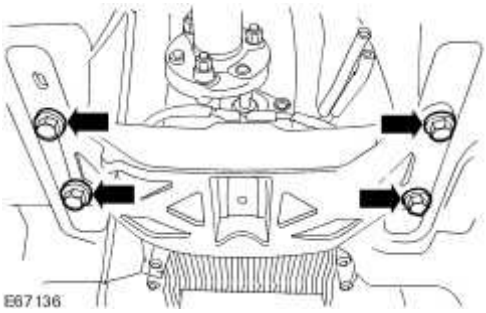

10 . Remove the special tool.

www.JagDocs.com

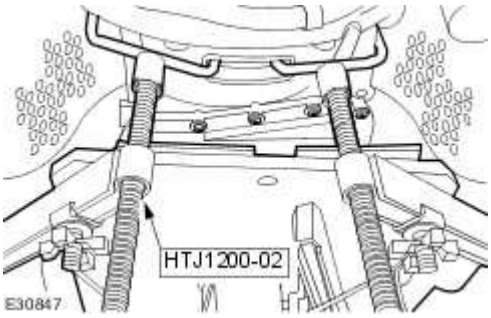

11 . Attach the diesel particulate filter high-pressure and low-pressure pipes to the automatic transmission.

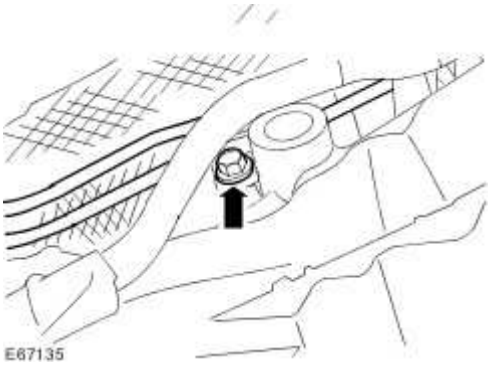

12 . **CAUTION: Make sure the automatic transmission control module (TCM) and main control valve body is protected against electrostatic discharge. Failure to follow this instruction may result in component damage.**

Connect the automatic transmission electrical connectors.

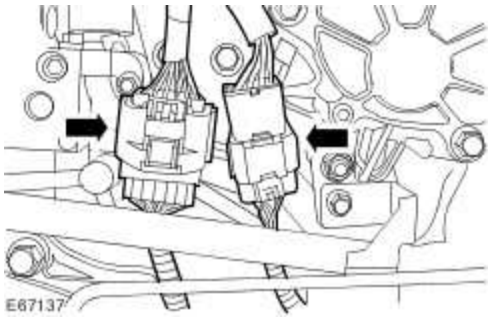

13 . Attach the selector lever cable.

- Install the retaining bolts.

- Tighten to 11 Nm.

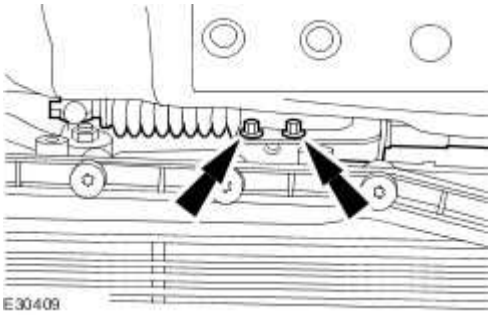

14 . Attach the selector lever cable.

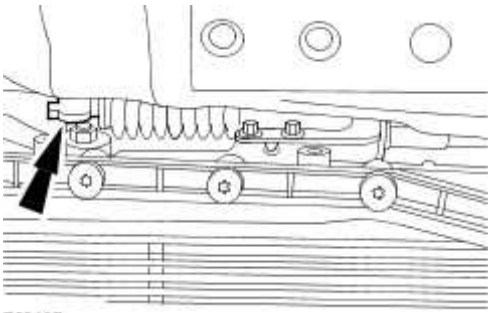

15 . Attach the automatic transmission fluid cooler tubes to the automatic transmission.

- Install new O-ring seals.
- Tighten to 23 Nm.

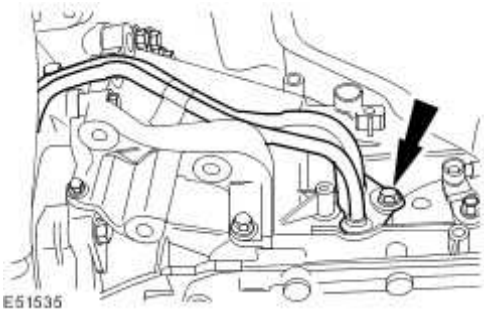

16 . Attach the automatic transmission fluid cooler tube retaining bracket.

www.JagDocs.com

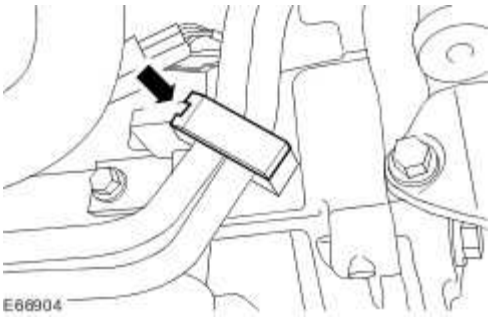

17 . Install the retaining bolts.

- Rotate the torque converter to gain access to the remaining bolts.
- Tighten to 55 Nm.

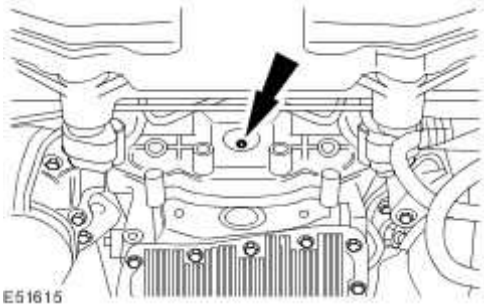

18 . Install the rubber access cover.

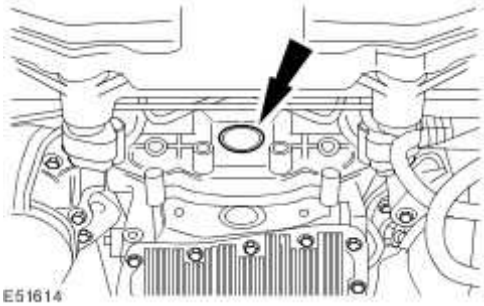

19 . **CAUTION: Make sure the front of the driveshaft does not put an excessive load on the center bearing. Failure to follow this instruction may result in damage to the vehicle.**

Reposition the driveshaft.

- Undo the cord.

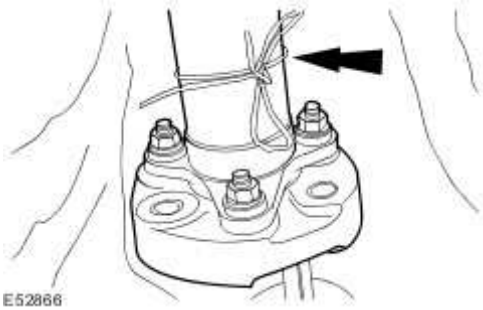

20 . Loosen the retaining nut.

- Remove the cord from the heat shield retaining nut stud.

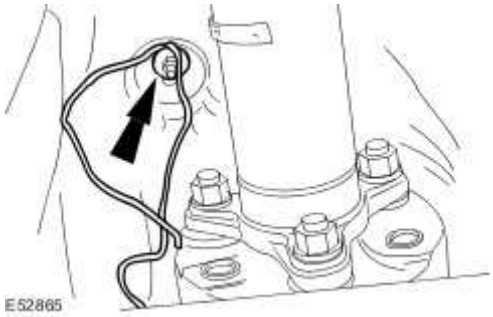

21 . Tighten the retaining nut.

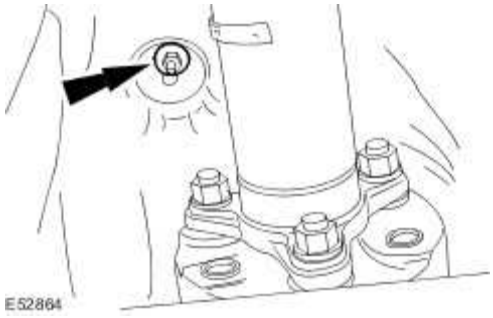

22 . **CAUTION: Make sure the front of the driveshaft does not put an excessive load on**

www.JagDocs.com

the center bearing. Failure to follow this instruction may result in damage to the vehicle.

CAUTION: Make sure all components are installed to the position they were removed from. Failure to follow this instruction may result in damage to the vehicle.

Attach the driveshaft to the automatic transmission flange.

- Tighten to 88 Nm.

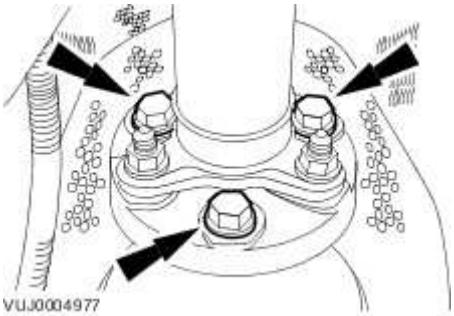

23 . Install both catalytic converters.
For additional information, refer to Catalytic Converter - 2.7L V6 - TdV6 (17.50.05)

24 . Install the diesel particulate filter.
For additional information, refer to Diesel Particulate Filter (DPF)

25 . Install the air deflector.
For additional information, refer to Air Deflector (76.11.41)

26 . Remove the special tool.

- Loosen the special tool adjustment bolt.

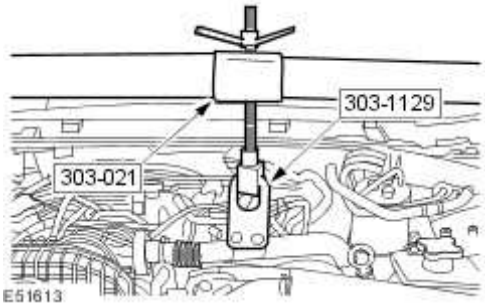

27 . Remove the special tool.

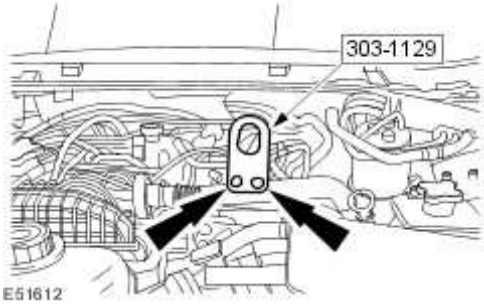

28 . Remove the oil filler cap.

29 . Install the engine cover.

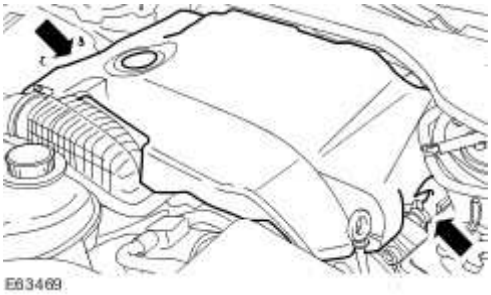

30 . Install the oil filler cap.

www.JagDocs.com

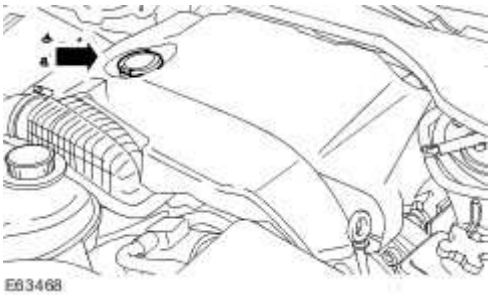

31 . Connect the battery ground cable.
For additional information, refer to Battery Connect (86.15.15)

32 . Carry out a transmission fluid level check.
For additional information, refer to Transmission Fluid Level Check

Extension Housing Seal (44.20.18)

Special Service Tools

Crankshaft Damper Remover
303-D121

Output Shaft Flange Holding Tool
205-053

Pinion Seal Replacer
204-264

Powertrain Assembly Jack
HTJ1200-2

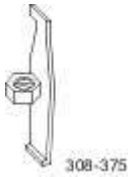

www.JagDocs.com

Seal Remover Input and Output
308-375

Slide Hammer
100-012

Slide Hammer Adaptor
100-012-01

Socket Output Flange Remover/Installer
205-789

Removal

Vehicles with diesel engine

1. Remove the air deflector.
   For additional information, refer to Air Deflector (76.11.41)

2. Remove the diesel particulate filter.
   For additional information, refer to Diesel Particulate Filter (DPF)

All vehicles

3. **CAUTION: Under no circumstances must the flexible coupling (or its fixings) be loosened or removed from the driveshaft. Failure to follow this instruction may result in**

damage to the vehicle.

CAUTION: Make sure the front of the driveshaft does not put an excessive load on the center bearing. Failure to follow this instruction may result in damage to the vehicle.

Detach the driveshaft from the transmission flange.

- Mark the position of the driveshaft in relation to the transmission flange.
- Mark the position of each nut and bolt in relation to the transmission flexible joint.

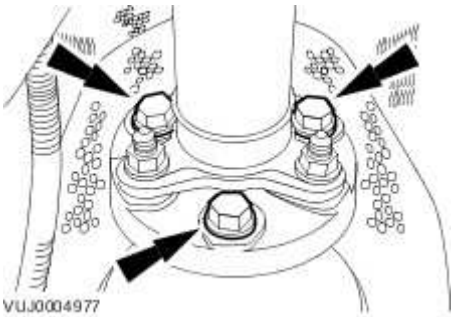

4 . Loosen the heat shield retaining nut.

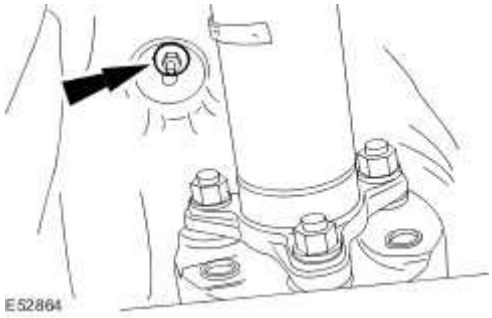

5 . Install suitable cord to the heat shield retaining nut stud.

- Tighten the retaining nut.

www.JagDocs.com

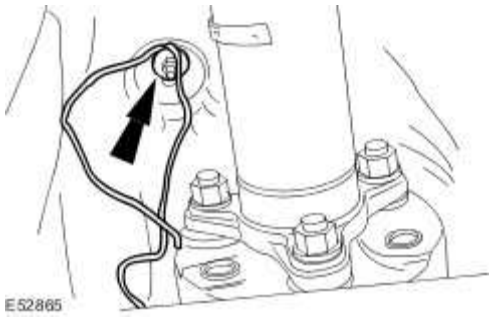

6 . Reposition the driveshaft.

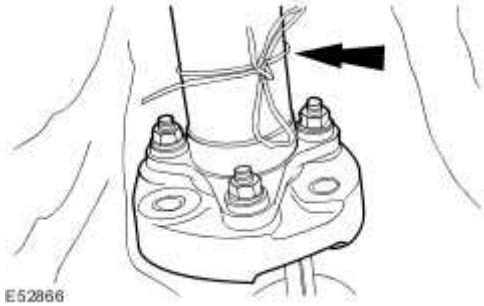

7 . Using the special tool, remove the transmission support.

- Lower the transmission to a suitable height.

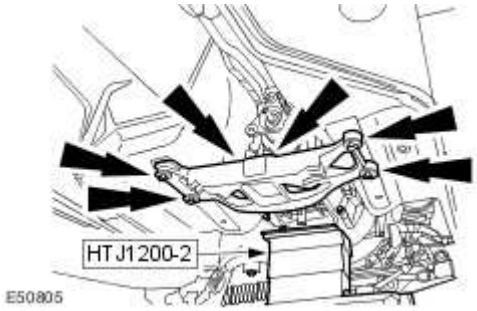

8 . Using the special tools, remove and discard the output shaft flange retaining nut.

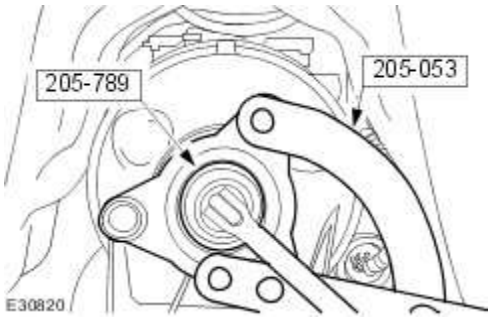

9 . Using the special tool, remove the output shaft flange.

- Remove the output shaft flange spacing shim.

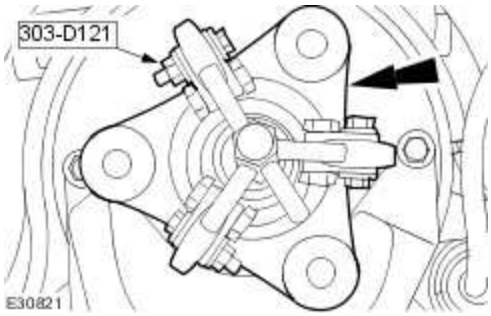

10 . **CAUTION: Make sure the transmission housing seal face is not damaged when removing the extension housing seal. Failure to follow this instruction may result in damage to the vehicle.**

Using the special tools, remove the extension housing seal.

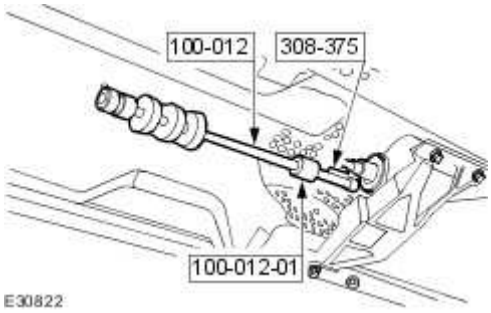

www.JagDocs.com

11 **NOTE:**

.

Using a suitable metal surface cleaner meeting Jaguar specification, clean the seal face on the housing before installing the new seal.

Clean and inspect the transmission housing seal face.

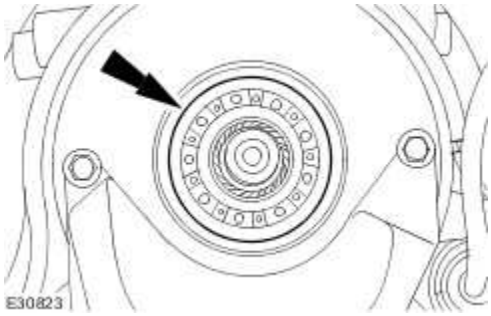

Installation

All vehicles

1 . Using the special tool, install the extension housing seal.

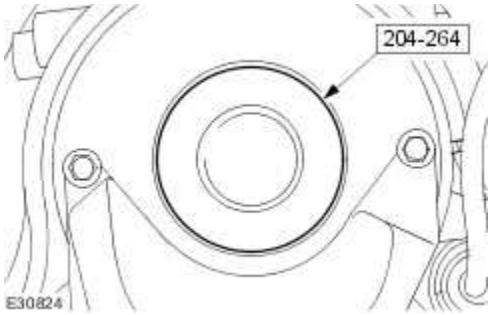

2 . Using the special tools install a new output shaft flange retaining nut.

- Install the output shaft flange spacing shim.
- Install the output shaft flange.
- Tighten to 60 Nm.

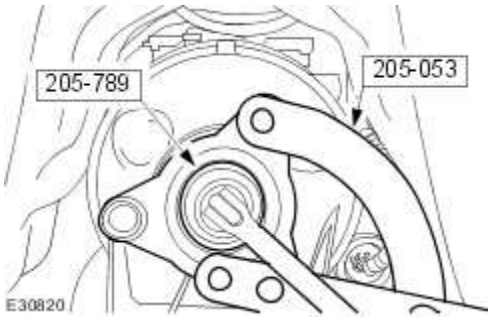

3 . Install the transmission support.

- Using the special tool, raise the transmission.
- Tighten to 55 Nm.

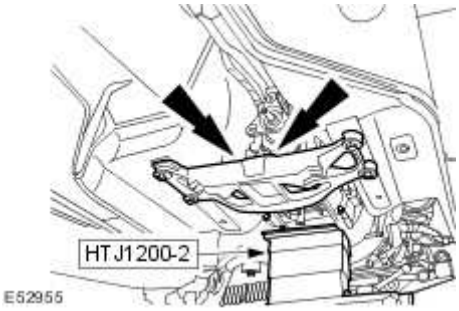

4 . Tighten to 48 Nm.

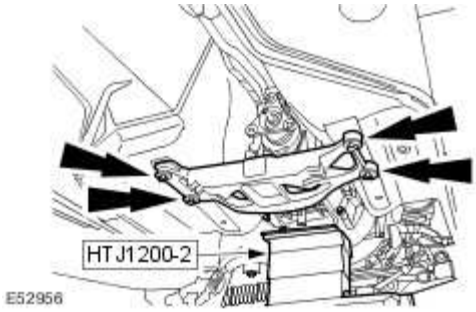

5 . **CAUTION: Make sure the front of the driveshaft does not put an excessive load on the center bearing. Failure to follow this instruction may result in damage to the vehicle.**

Reposition the driveshaft.

www.JagDocs.com

Undo the cord.

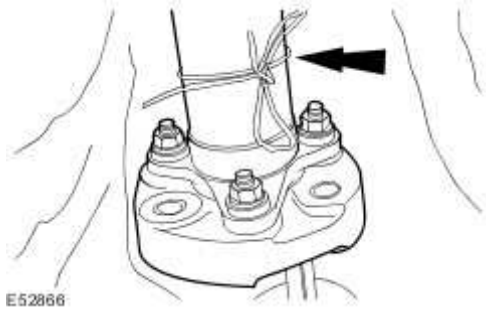

6 . Loosen the retaining nut.

Remove the cord from the heat shield retaining nut stud.

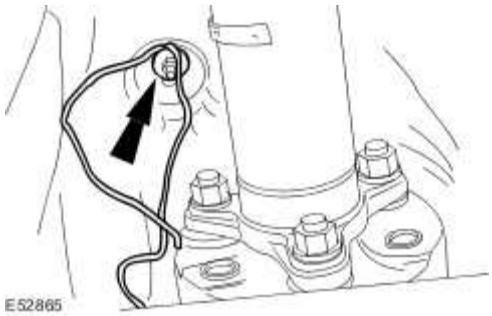

7 . Tighten the retaining nut.

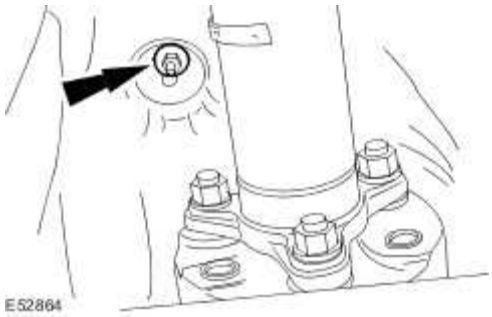

8 . **CAUTION: Make sure the front of the driveshaft does not put an excessive load on the center bearing. Failure to follow this instruction may result in damage to the vehicle.**

CAUTION: Make sure all components are installed to the position they were removed from. Failure to follow this instruction may result in damage to the vehicle.

Attach the driveshaft to the transmission flange.

- Tighten to 88 Nm.

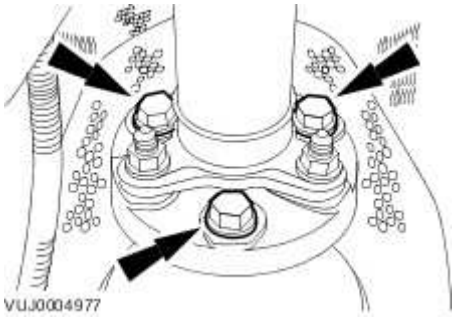

9 . Carry out a transmission fluid level check.
For additional information, refer to

Vehicles with diesel engine

10 . Install the diesel particulate filter.
For additional information, refer to Diesel Particulate Filter (DPF)

11 . Install the air deflector.
For additional information, refer to Air Deflector (76.11.41)

www.JagDocs.com

Transmission Fluid Pan, Gasket and Filter (44.24.07)

Removal

All vehicles

1 . Disconnect the battery ground cable.
For additional information, refer to Battery Disconnect and Connect

Vehicles with diesel engine

2 . Remove the air deflector.
For additional information, refer to Air Deflector (76.11.41)

All vehicles

3 . Drain the transmission.
For additional information, refer to Transmission Fluid Drain and Refill (44.24.02)

Vehicles with diesel engine

4 . Detach the catalytic converter temperature sensor wiring harness from the fluid pan.

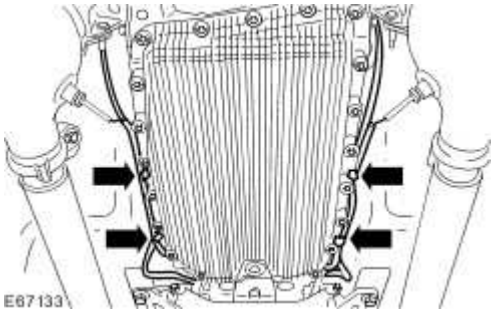

All vehicles

5 . **NOTE:**

Discard the fluid pan, gasket and filter.

Remove the fluid pan, gasket and filter.

- Remove the retaining bolts.

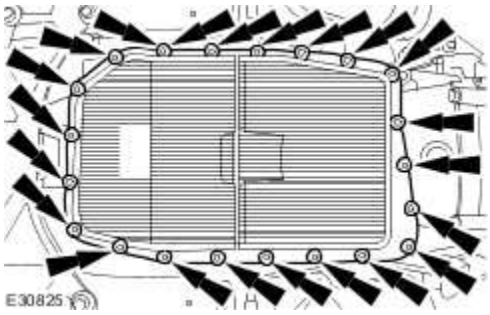

Installation

All vehicles

1 . Install the new fluid pan, gasket and filter.

Tighten to 8 Nm.

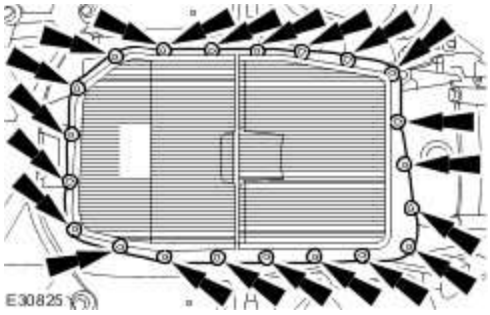

Vehicles with diesel engine

2 . Attach the catalytic converter temperature sensor wiring harness onto the fluid pan.

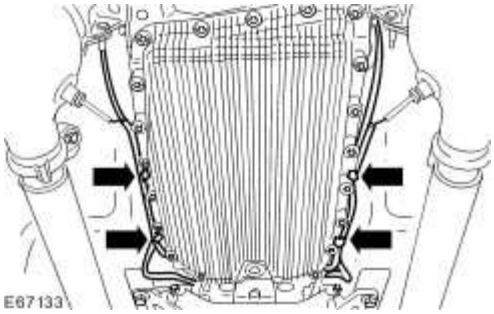

All vehicles

3 . Fill the transmission.

www.JagDocs.com

For additional information, refer to Transmission Fluid Drain and Refill (44.24.02)

Vehicles with diesel engine

4 . Install the air deflector.
For additional information, refer to Air Deflector (76.11.41)

All vehicles

5 . Lower the vehicle.

6 . Connect the battery ground cable.
For additional information, refer to Battery Connect (86.15.15)

Transmission Control Module (TCM) and Main Control Valve Body

Removal

1 . Remove the fluid pan, gasket and filter.
For additional information, refer to Transmission Fluid Pan, Gasket and Filter (44.24.07)

2 . **CAUTION: Make sure the transmission control module (TCM) and main control valve body are protected against electrostatic discharge. Failure to follow this instruction may result in component damage.**

Reposition the locking device.

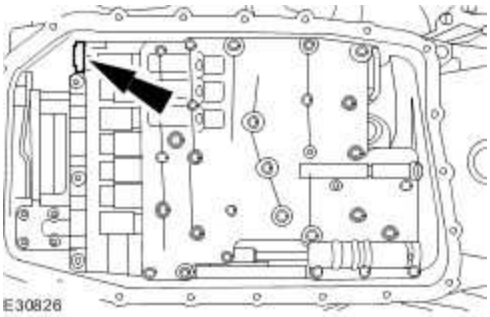

3 . Disconnect the TCM and main control valve body electrical connector.

1) Reposition the electrical connector retaining ring.

2) Disconnect the electrical connector.

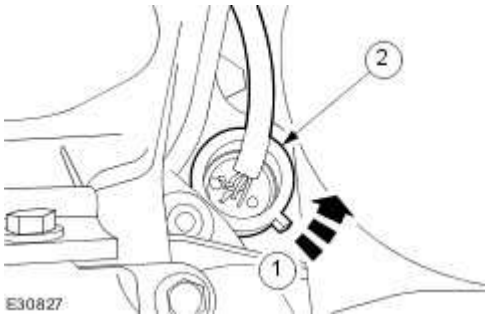

www.JagDocs.com

4 . **CAUTION: Make sure all suitable safety precautions are taken to protect the TCM and main control valve body electrical connector pins against electrostatic discharge.**

Remove the sealing tube.

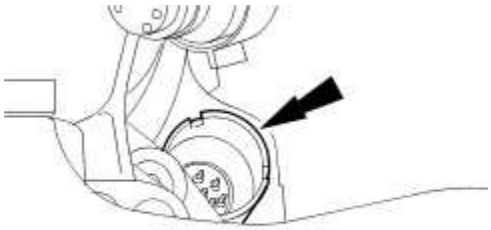

E30828

5 . Remove and discard the seals.

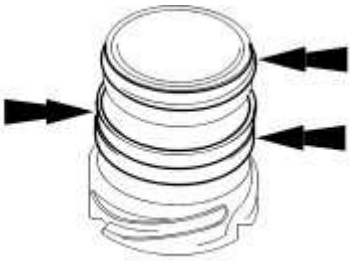

E30831

6 . Remove the TCM and main control valve body.

- Remove the retaining bolts.

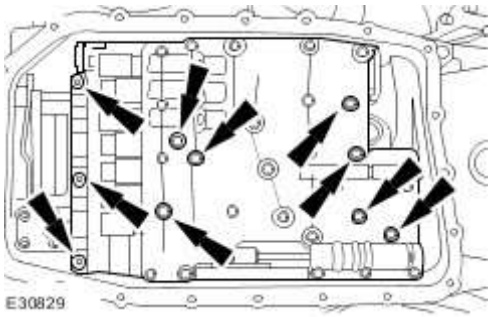

E30829

7 . Remove the TCM and main control valve body sealing block.

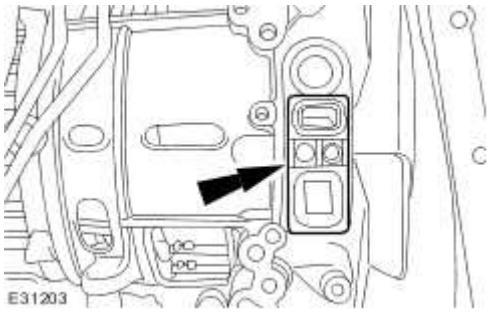

8 . Remove and discard the seals.

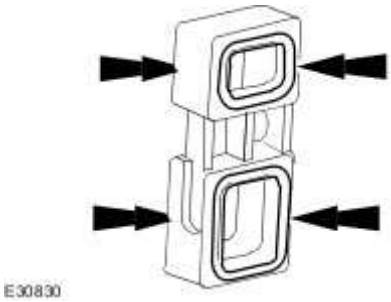

9 . Remove and discard the seals.

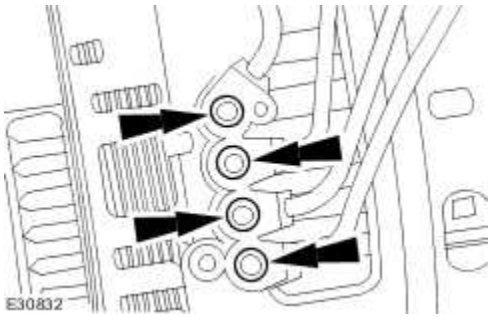

Installation

1 . Install the new seals.

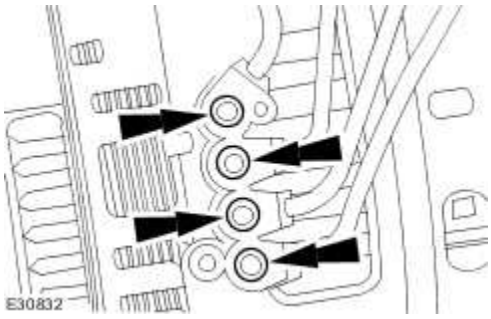

www.JagDocs.com

2 . Install the new seals.

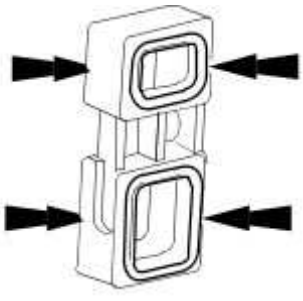

3 . Install the TCM and main control valve body sealing block.

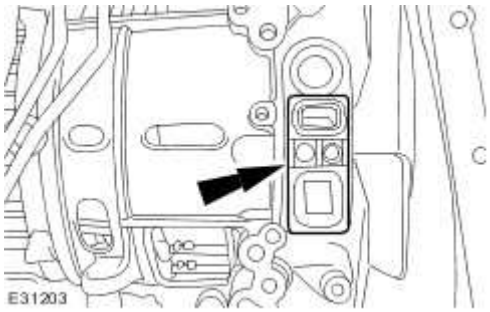

4 . **CAUTION: Make sure the TCM and main control valve body are protected against electrostatic discharge. Failure to follow this instruction may result in component damage.**

Align the transmission selector shaft to the TCM and main control valve body.

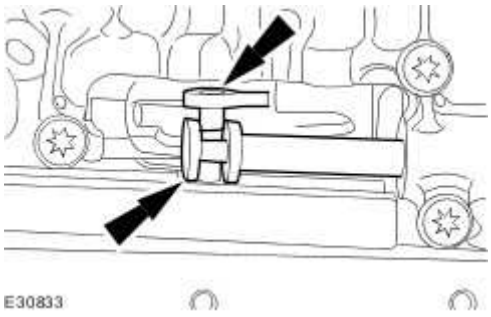

5 . Install the TCM and main control valve body retaining bolts.

Tighten to 8 Nm.

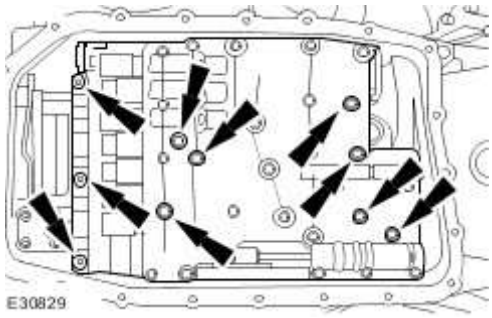

6 . Install the new seals.

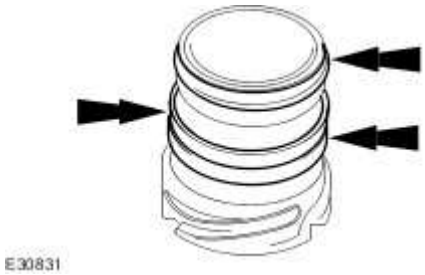

7 . **CAUTION: Make sure all suitable safety precautions are taken to protect the TCM and main control valve body electrical connector pins against electrostatic discharge.**

Install the sealing tube.

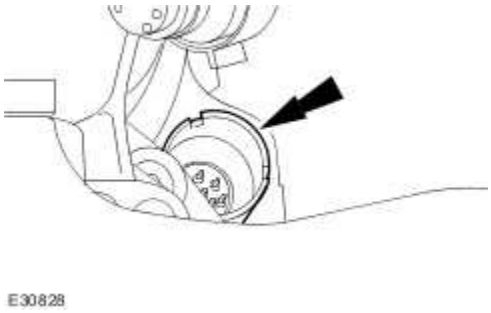

8 . Reposition the TCM and main control valve body electrical connector retaining ring.

1) Connect the electrical connector.

2) Reposition the electrical connector retaining ring.

www.JagDocs.com

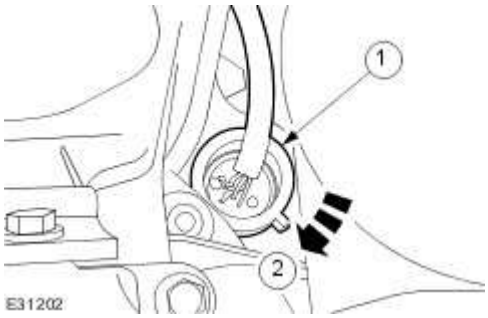

9 . Reposition the locking device.

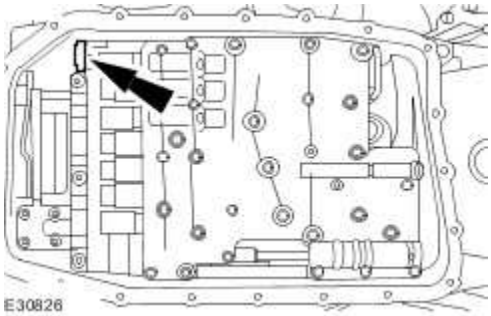

10 . Install the fluid pan, gasket and filter.
For additional information, refer to Transmission Fluid Pan, Gasket and Filter (44.24.07)

Input Shaft Seal (44.32.07)

Special Service Tools

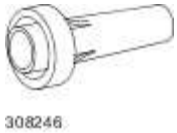

Front Seal Installer
308-246

Seal Remover Input and Output
308-375

Slide Hammer
100-012

Slide Hammer Adaptor
100-012-01

www.JagDocs.com

307-139

Torque Converter Handles
307-139

1. Remove the transmission assembly.
   For additional information, refer to Transmission - 3.0L NA V6 - AJ27 (44.20.01)
   For additional information, refer to Transmission - 4.2L NA V8 - AJV8/4.2L SC V8 - AJV8/3.5L NA V8 - AJV8 (44.20.01)
   For additional information, refer to Transmission - 2.7L V6 - TdV6 (44.20.01)

2. **WARNING: Do not let the torque converter drop out of the transmission. Failure to follow this instruction may result in personal injury.**

   Using the special tools, remove the torque converter.

   - Drain any remaining fluid into a suitable container.

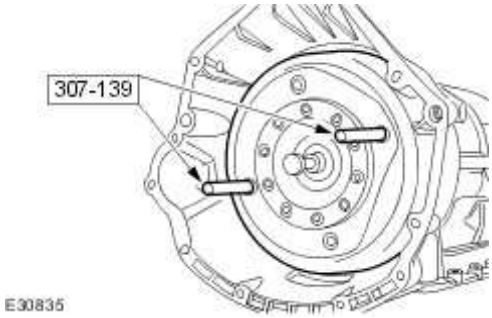

3. **CAUTION: Make sure the transmission housing seal face is not damaged when removing the torque converter seal. Failure to follow this instruction may result in damage to the vehicle.**

   Using the special tools, remove the input shaft seal.

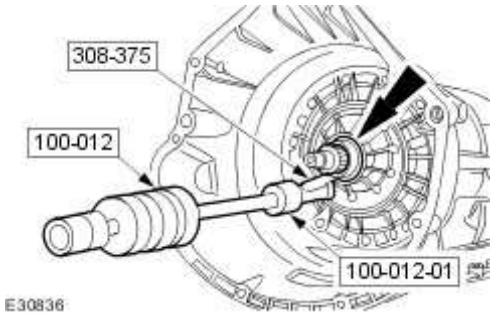

4 **NOTE:**

.

Using a suitable metal surface cleaner meeting Jaguar specification. clean the seal face on the housing before fitting the new seal.

Clean and inspect the transmission housing seal face.

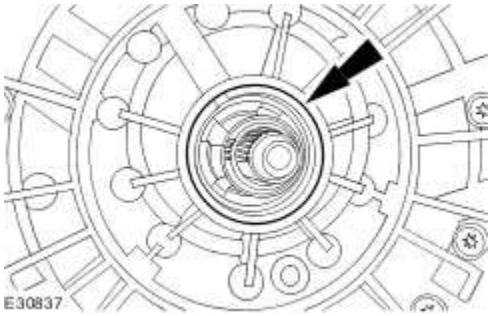

5 . Using the special tool, install a new input shaft seal.

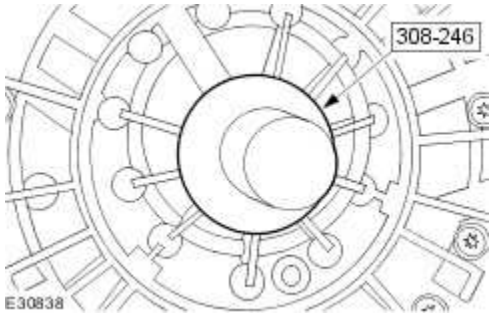

6

. **WARNING: Do not let the torque converter drop out of the transmission. Failure to follow this instruction may result in personal injury.**

www.JagDocs.com

NOTE:

The torque converter hub must engage fully in the oil pump drive gear.

Using the special tools, install the torque converter.

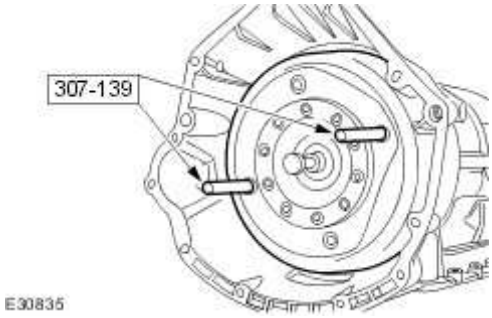

7 Install the transmission assembly.

. For additional information, refer to Transmission - 3.0L NA V6 - AJ27 (44.20.01)
For additional information, refer to Transmission - 4.2L NA V8 - AJV8/4.2L SC V8 - AJV8/3.5L NA V8 - AJV8 (44.20.01)
For additional information, refer to Transmission - 2.7L V6 - TdV6 (44.20.01)

Specifications

General Specifications

Item	Specification
Transmission fluid type	ATF Shell M1375.4

Torque Specifications

Description	Nm	lb-ft	lb-in
Transmission fluid cooler tube to transmission fluid cooler retaining bolt - Vehicles with diesel engines	10	-	89
Transmission fluid cooler tubes to transmission fluid cooler retaining bolt - Vehicles without diesel engines	20	15	-
Transmission fluid cooler tubes to transmission	22	16	-
Transmission fluid cooler tubes to engine oil pan	22	16	-

www.JagDocs.com

Transmission Cooling

All except vehicles with diesel engine

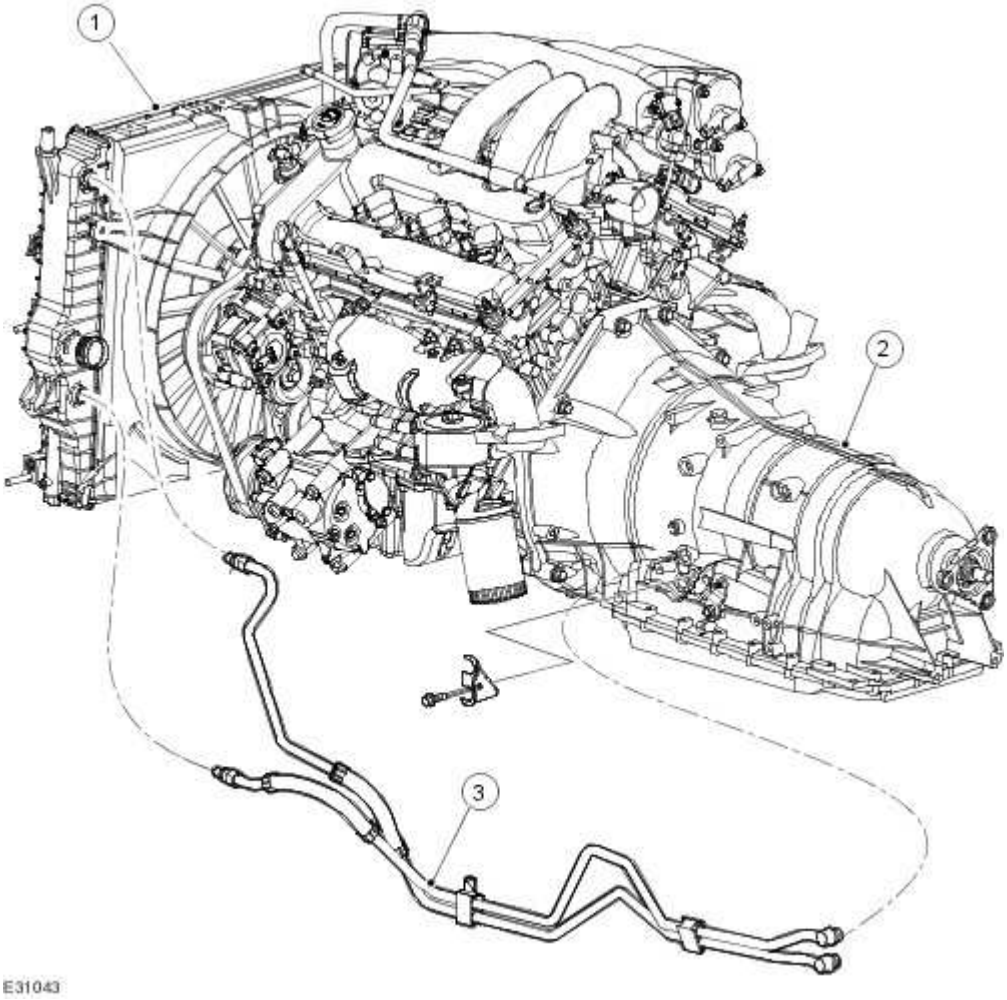

Item	Part Number	Description
1	—	Fluid cooler
2	—	Transmission
3	—	Fluid cooler tubes

Fluid Cooler

The fluid cooler is of an aluminium construction consisting of a tube and louvered fin core-type, the tubes are arranged horizontally for the crossflow of the fluid.

It is divided into two sections to provide cooling for both the transmission and the engine, each section is separate within the same unit.

When carrying out any transmission procedures the drained fluid should be checked thoroughly for any metal filings or particles, in the event of this the transmission fault should be located followed by a thorough flushing of the fluid cooler and fluid cooler tubes.

Vehicles with diesel engine

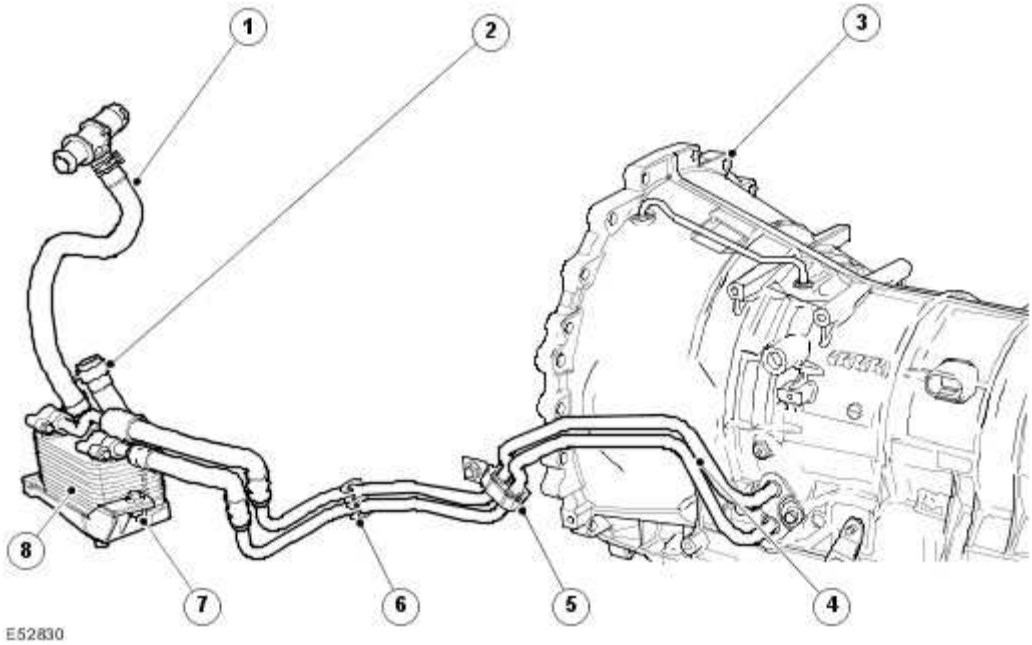

Item	Part Number	Description
1	—	Fluid cooler inlet hose
2	—	Fluid cooler outlet hose
3	—	Transmission
4		Fluid cooler tubes
5		Fluid cooler tube retaining bracket
6		Fluid cooler tube retaining bracket
7		Fluid cooler retaining bracket
8		Fluid cooler

www.JagDocs.com

Fluid Cooler

The fluid cooler is mounted to the left-hand side of the front subframe via a retaining bracket. The fluid cooler is cooled by the engine coolant system.

When carrying out any transmission procedures the drained fluid should be checked thoroughly for any metal filings or particles, in the event of this the transmission fault should be located followed by a thorough flushing of the fluid cooler and fluid cooler tubes.

Transmission Cooling

Inspection and Verification

1 . Verify the customer concern by operating the system.

2 . Visually inspect for obvious signs of mechanical or electrical damage.

Visual Inspection Chart

Mechanical
Feed and return tubes Connections to the automatic transmission and the automatic transmission fluid cooler Automatic transmission fluid level

1 . If an obvious cause for an observed or reported concern is found, correct the cause (if possible) before proceeding to the next step.

2 . If the concern is not visually evident, verify the sympton and refer to the Sympton chart.

Symptom chart

Condition	Possible sources	Action
Over heating of the automatic transmission.	Obstruction in the automatic transmission fluid cooler.	Flush out the automatic transmission fluid cooler with new automatic transmission fluid. If the flushing is unsucessful install a new automatic transmission fluid cooler.
Over heating of the automatic transmission.	Obstruction in the automatic transmission fluid tubes.	Flush out the automatic transmission fluid cooler tubes with new automatic transmission fluid. If the flushing is unsucessful install new automatic transmission fluid cooler tubes.
Loss of automatic transmission fluid	Connections to the automatic transmission and the automatic transmission fluid cooler.	Check the torque of the tubes. Check the tubes, connections and seals.

www.JagDocs.com

Loss of automatic transmission fluid	Leak at oil cooler.	Check the torque of the tubes. Check the tubes, connections and seals. INSTALL new oil cooler.

Transmission Fluid Cooler - 2.7L V6 - TdV6 (44.24.10)

Special Service Tools

Remover/Installer, Cooling Hose Clamp
303-397 (24-003)

Removal

1 . Remove the air deflector.
For additional information, refer to Air Deflector (76.11.41)

2 . Reposition the left-hand splash shield.

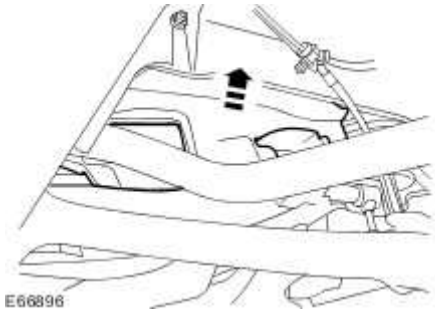

3 . **NOTE:**

Discard the O-ring seals.

Detach the transmission fluid cooler tubes.

Allow the transmission fluid to drain into a suitable container.

www.JagDocs.com

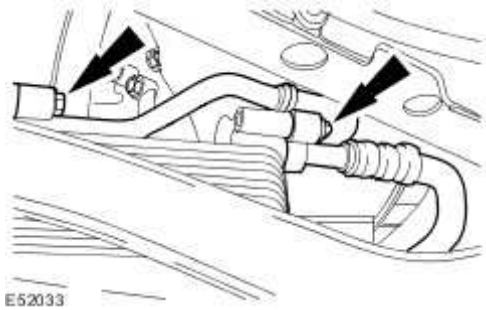

4 . **NOTE:**

Install a suitable pipe clamp to minimize coolant loss.

Using the special tool, detach the transmission fluid cooler coolant hose.

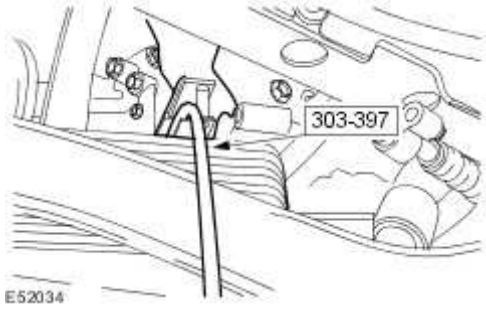

5 . **NOTE:**

Install a suitable pipe clamp to minimize coolant loss.

Using the special tool, detach the transmission fluid cooler coolant hose.

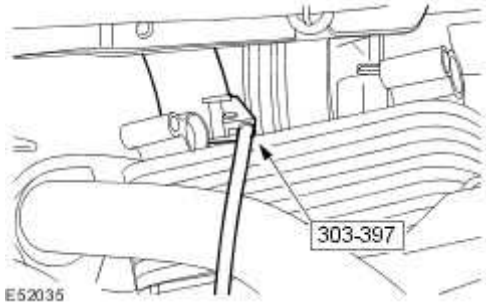

6 . Detach the transmission fluid cooler.

7 . Remove the transmission fluid cooler.

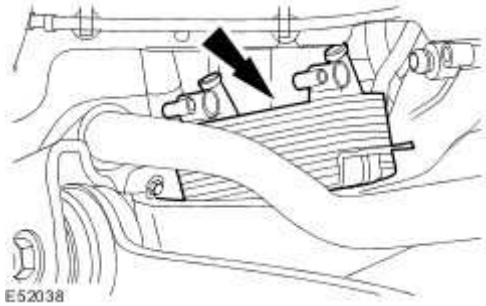

Installation

1 . Install the transmission fluid cooler.

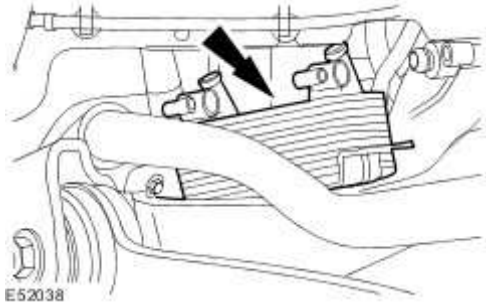

2 . Attach the transmission fluid cooler.

Tighten to 5 Nm.

www.JagDocs.com

3 . **NOTE:**

Remove the pipe clamp.

Using the special tool, attach the transmission fluid cooler coolant hose.

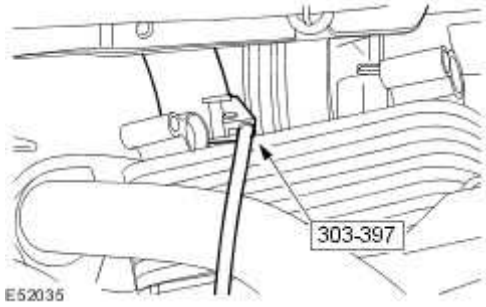

4 . **NOTE:**

Remove the pipe clamp.

Using the special tool, attach the transmission fluid cooler coolant hose.

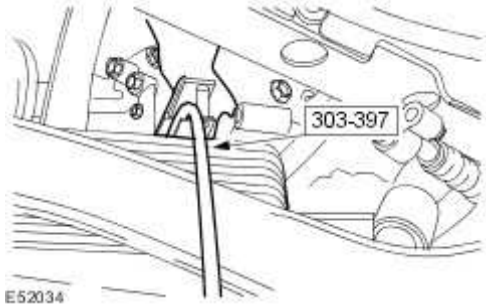

5 . **NOTE:**

Install new O-ring seals.

Attach the transmission fluid cooler tubes.

Tighten to 10 Nm.

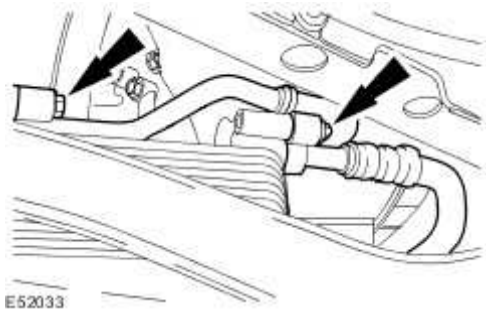

6 . Reposition the left-hand splash shield.

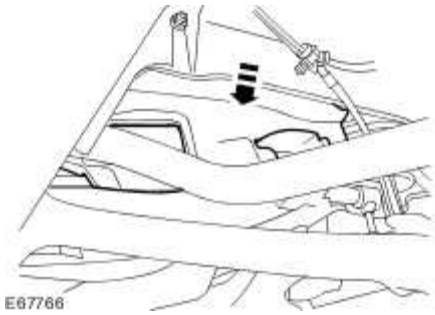

7 . Install the air deflector.
For additional information, refer to Air Deflector (76.11.41)

8 . Carry out a transmission fluid level check.
For additional information, refer to Transmission Fluid Level Check

9 . Check and top up the cooling system.
For additional information, refer to Cooling System Draining, Filling and Bleeding

www.JagDocs.com

Transmission Fluid Cooler Tubes - 4.2L NA V8 - AJV8/4.2L SC V8 - AJV8/3.0L NA V6 - AJ27/3.5L NA V8 - AJV8 (44.24.19)

Removal

Vehicles with 3.0L engine

1 . Remove the air cleaner. <<303-12A>>

Vehicles with 3.5L or 4.2L engine

2 . Remove the air cleaner. <<303-12B>>

All vehicles

3 . Remove the radiator splash shield. <<501-02>>

4 . Lower the vehicle.

5 . Disconnect the transmission fluid cooler tubes.

- Drain fluid into a suitable container.
- Remove and discard transmission fluid cooler tube O-ring seals.

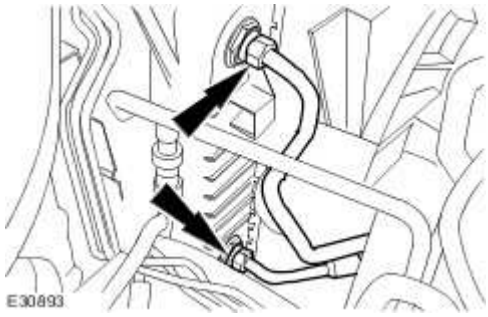

6 . Raise the vehicle.

7 . Remove the air deflector.

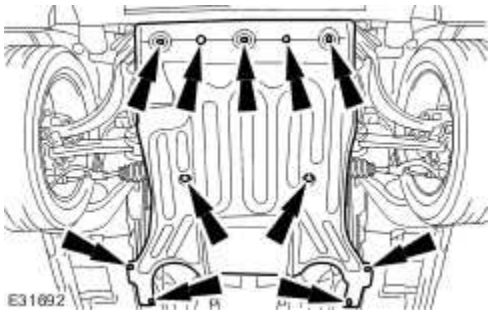

Vehicles with 3.0L engine

8 . Release the transmission fluid cooler tube retaining bracket.

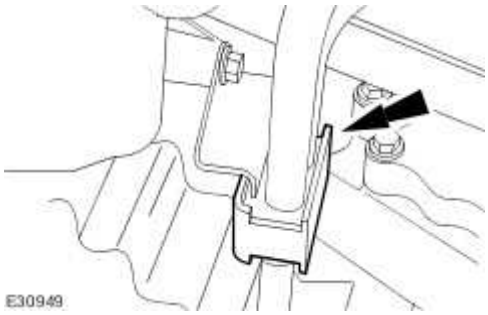

9 . Remove the transmission fluid cooler tube retaining bracket.

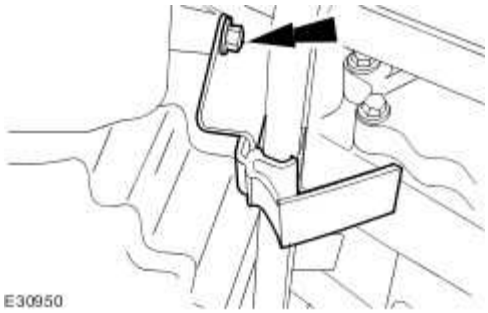

10 . Remove the power steering pump to steering gear pressure line retaining nut.

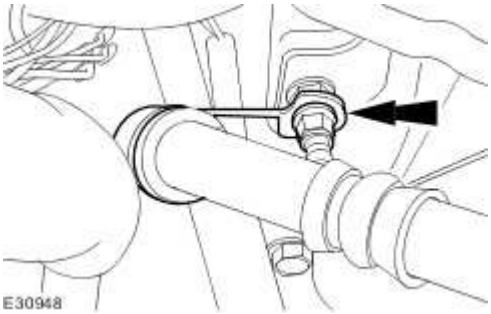

www.JagDocs.com

Vehicles with 3.5L or 4.2L engine

11 . Remove the transmission fluid cooler tube retaining bracket.

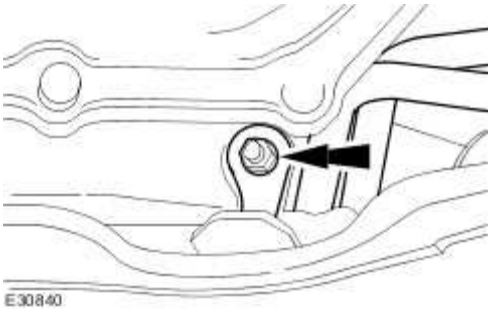

All vehicles

12 . Remove the transmission fluid cooler tube retaining bracket.

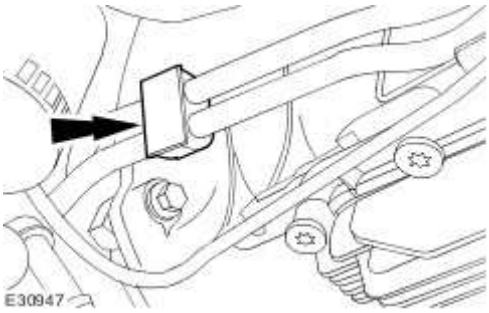

13 . Remove the transmission fluid cooler pipes.

1) Remove the retaining bolt.

2) Remove the retaining plate.

3) Remove the transmission fluid cooler pipes.

Allow the transmission fluid to drain into a suitable container.

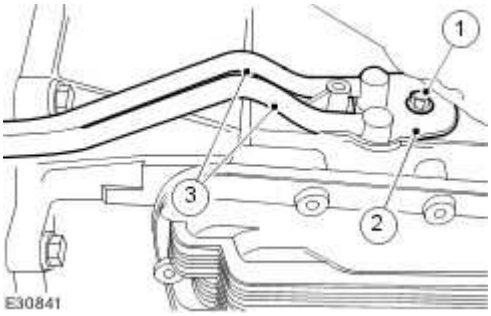

Installation

All vehicles

1 . Install the transmission fluid cooler tubes.

1) Install the transmission fluid cooler tubes.

2) Install the retaining plate.

3) Install the retaining bolt .

- Install new O-ring seals.
- Tighten to 23 Nm.

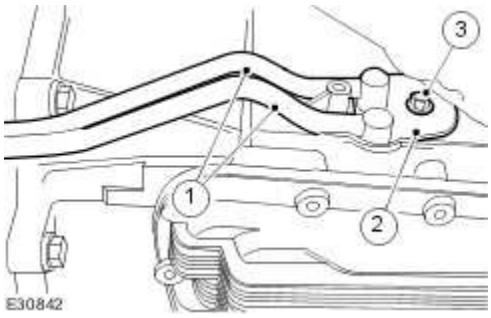

2 . Install the transmission fluid cooler tube retaining bracket.

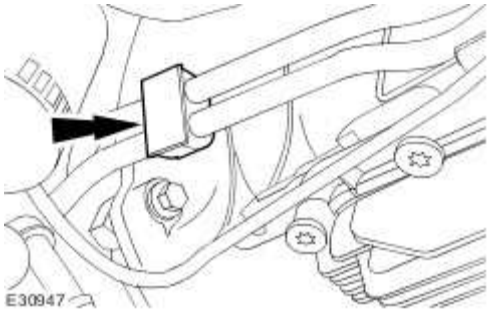

Vehicles with 3.5L or 4.2L engine

3 . Install the transmission fluid cooler tube retaining bracket.

1) Tighten to 10 Nm.

www.JagDocs.com

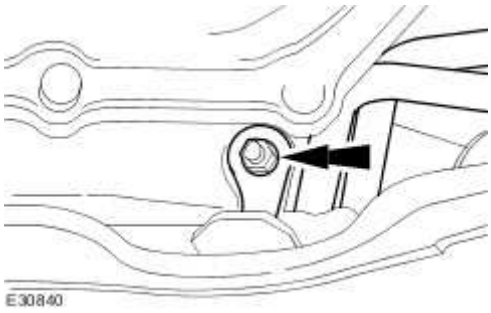

Vehicles with 3.0L engine

4 . Install the power steering pump to steering gear pressure line retaining nut.

- Tighten to 10 Nm.

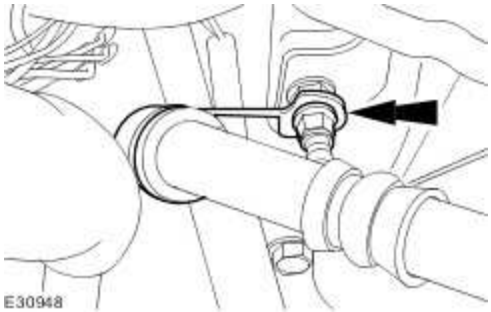

5 . Install the transmission fluid cooler tube retaining bracket.

- Tighten to 10 Nm

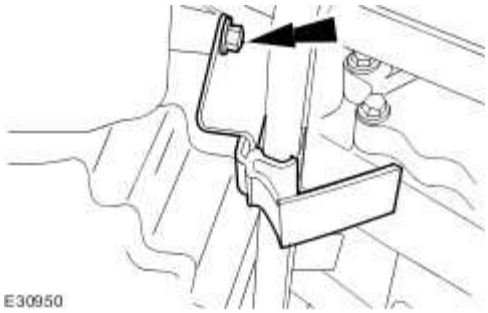

6 . Attach the transmission fluid cooler tube retaining bracket.

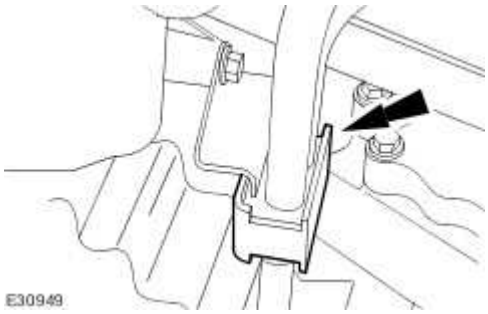

All vehicles

7 . Install the air deflector.

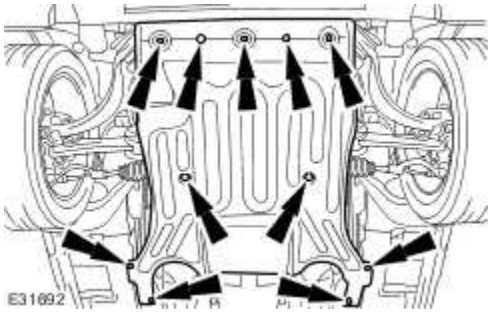

8 . Install the radiator splash shield. <<501-02>>

9 . Lower the vehicle.

10 . Connect the transmission fluid cooler tubes.

- Install new O-ring seals.
- Tighten to 20 Nm.

www.JagDocs.com

Vehicles with 3.5L or 4.2L engine

11 . Install the air cleaner. <<303-12B>>

Vehicles with 3.0L engine

12 . Install the air cleaner. <<303-12A>>

All vehicles

13 . Carry out transmission fluid level check. <<307-01>>

Transmission Fluid Cooler Tubes - 2.7L V6 - TdV6 (44.24.19)

Removal

1 . Center the steering wheel.

- Lock in position, remove the ignition key.

2 . Remove the catalytic converter.
For additional information, refer to Catalytic Converter - 2.7L V6 - TdV6 (17.50.05)

3 . Reposition the left-hand splash shield.

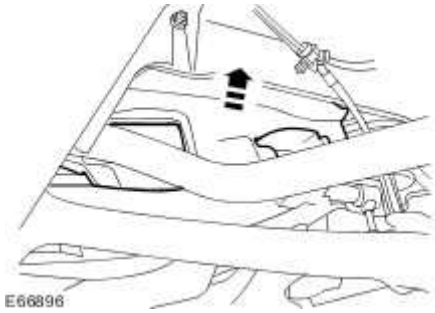

4 . **NOTE:**

Discard the O-ring seals.

Detach the transmission fluid cooler tubes.

- Allow the transmission fluid to drain into a suitable container.

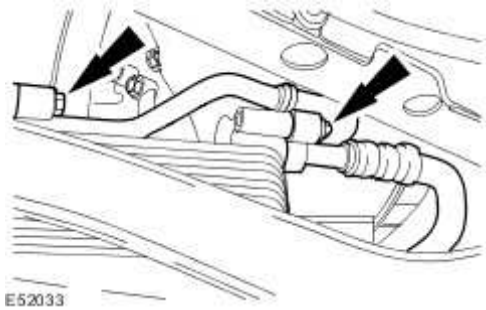

www.JagDocs.com

5 . Make sure the alignment mark on the steering gear pinion seal protection cover is central to the steering gear pinion casting.

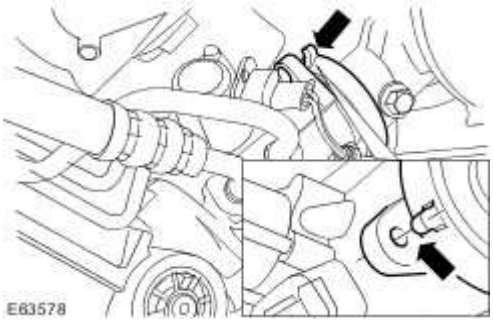

6 . Disconnect the power steering control valve actuator electrical connector.

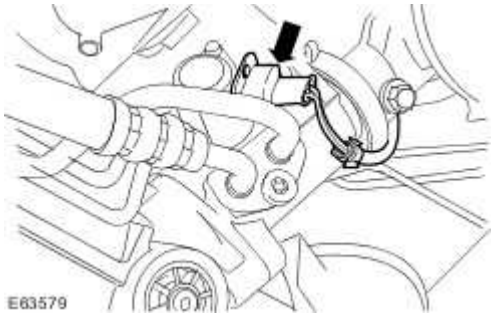

7 . Detach the lower steering column.

- Remove the steering gear shaft pinch bolt.

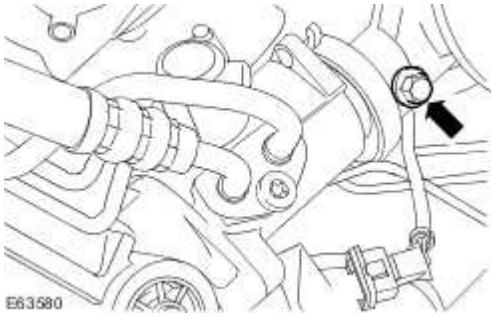

8 . Detach the steering gear.

- Remove the steering gear retaining bolts.

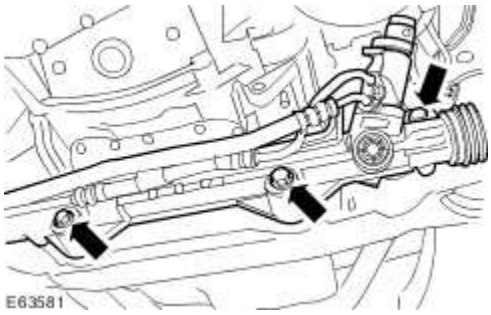

9 . Using a suitable piece of string, secure the steering gear.

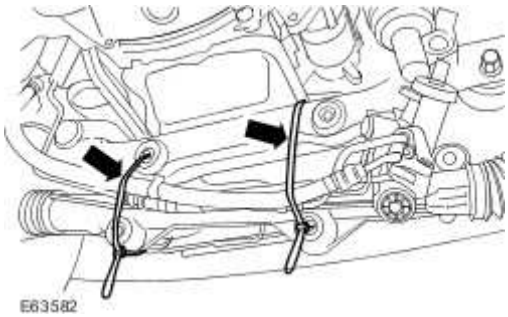

10 . Release the transmission fluid cooler tube retaining bracket.

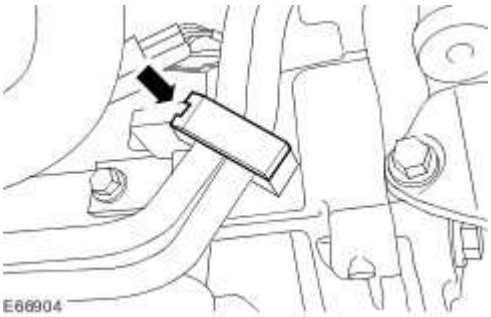

11 . **CAUTION: Make sure that the transmission fluid cooler tubes are not removed from the automatic transmission by using a pry bar. Failure to follow this instruction may result in damage to the vehicle.**

NOTE:

Discard the O-ring seals.

www.JagDocs.com

Remove the transmission fluid cooler tubes.

- Allow the transmission fluid to drain into a suitable container.

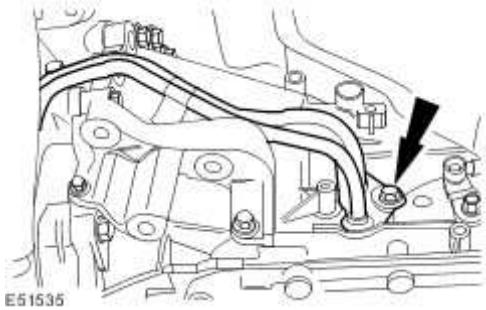

Installation

1 . **NOTE:**

Install new O-ring seals.

Install the transmission fluid cooler tubes.

- Tighten to 23 Nm.

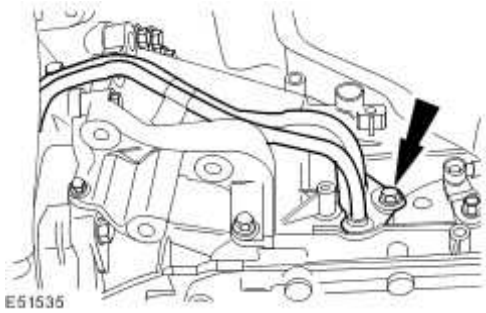

2 . Attach the transmission fluid cooler tube retaining bracket.

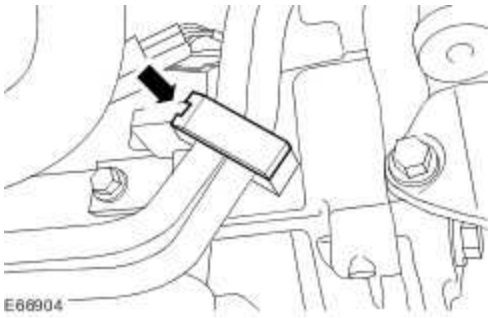

3 . Detach the steering gear.

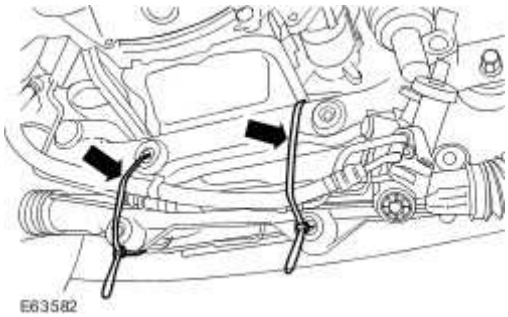

4 . Attach the steering gear.

Tighten to 100 Nm.

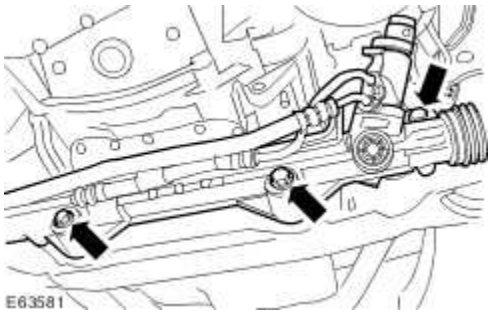

5 . Attach the lower steering column.

Tighten to 35 Nm.

www.JagDocs.com

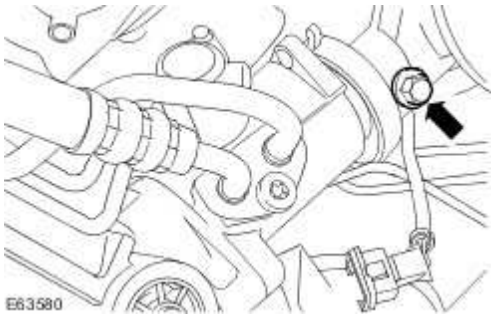

6 . Connect the power steering control valve actuator electrical connector.

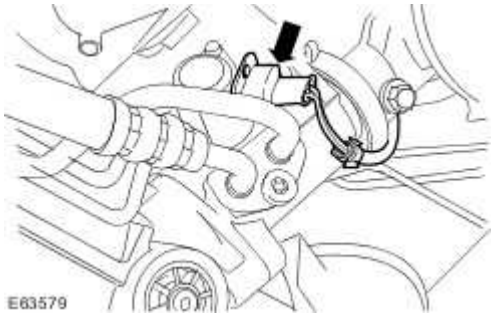

7 . Make sure that the alignment mark on the steering gear pinion seal protection cover is central to the steering gear pinion casting.

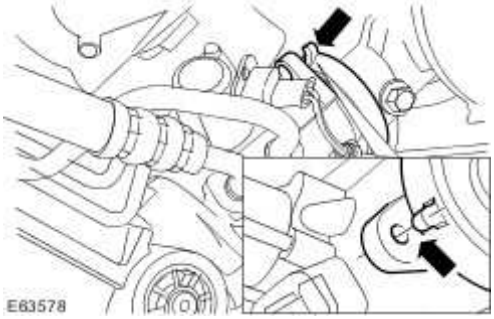

8 . **NOTE:**

Install new O-ring seals.

Attach the transmission fluid cooler tubes.

Tighten to 10 Nm.

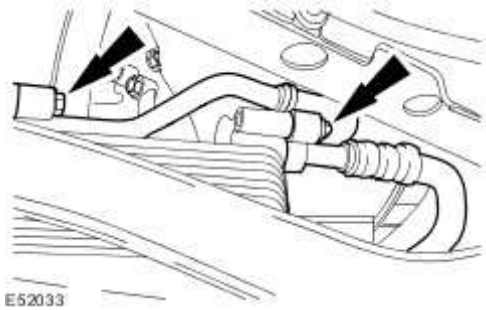

9 . Install the left-hand splash shield.

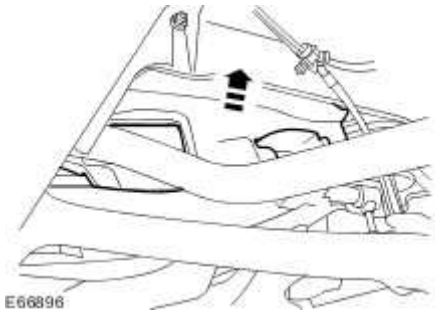

10 . Install the catalytic convertor.
For additional information, refer to Catalytic Converter - 2.7L V6 - TdV6 (17.50.05)

11 . Carry out a transmission fluid level check.
For additional information, refer to Transmission Fluid Level Check

www.JagDocs.com

Specifications

Torque Specifications

Description	Nm	lb-ft	lb-in
Transmission selector lever retaining bolts	11	8	-
Selector lever cable bracket retaining bolts	11	8	-
Selector lever cable retaining nuts	20	15	-

Selector Lever Cable Adjustment (44.15.07)

1. Remove the floor console. <<501-12>>

2. Move the transmission selector lever to the ' R' position.

3. Detach the wiring harness bracket.
   - Reposition the wiring harness.
   - Detach the wiring harness bracket.

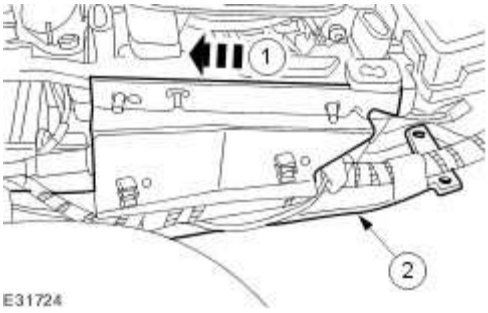

4. Loosen the selector lever cable retaining nuts.

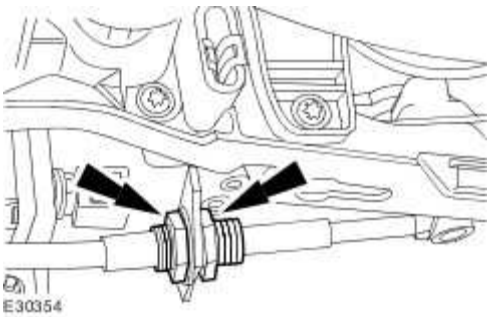

5. Detach the selector lever cable.

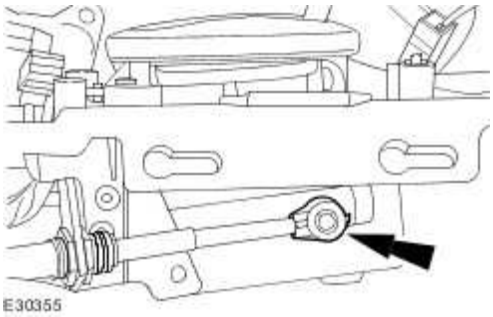

www.JagDocs.com

6. **NOTE:**

Fully extend the selector cable, then retract the selector cable one detent.

Make sure the selector lever cable is in the ' R' position.

7. Make sure the transmission selector lever is in the ' R' position.

8. Connect the selector lever cable.

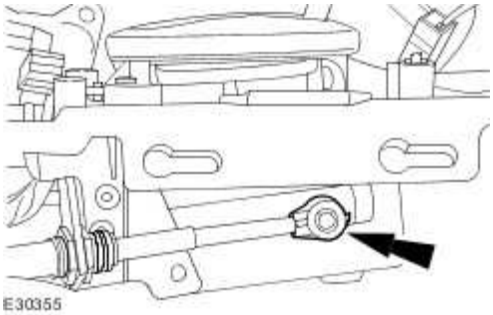

9. Adjust the selector lever cable retaining nuts to lock against the retaining bracket without moving the set position of either the shift lever or the selector lever cable.

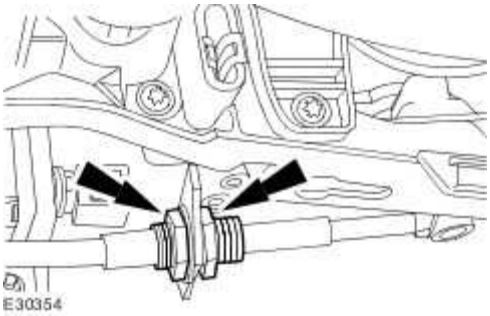

10. **NOTE:**
Make sure all transmission selector lever positions select the relevant automatic transmission states.

Move the transmission selector lever to all positions.

11. **NOTE:**
When tightening the selector lever cable retaining nuts, make sure both retaining nuts are tightened to the specified torque simultaneously.

Tighten the selector lever cable retaining nuts.

- Tighten to 20 Nm.

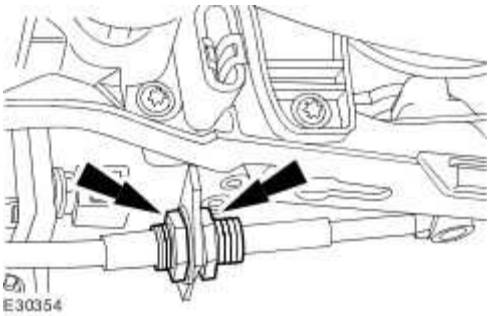

12. Attach the wiring harness bracket.

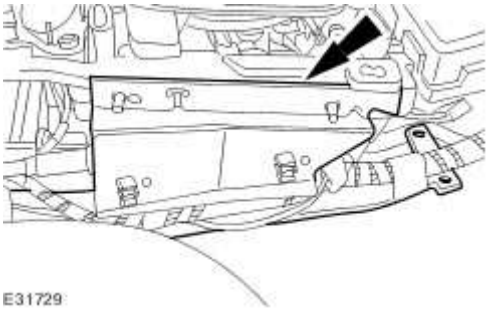

13. Install the floor console. <<501-12>>

www.JagDocs.com

External Controls

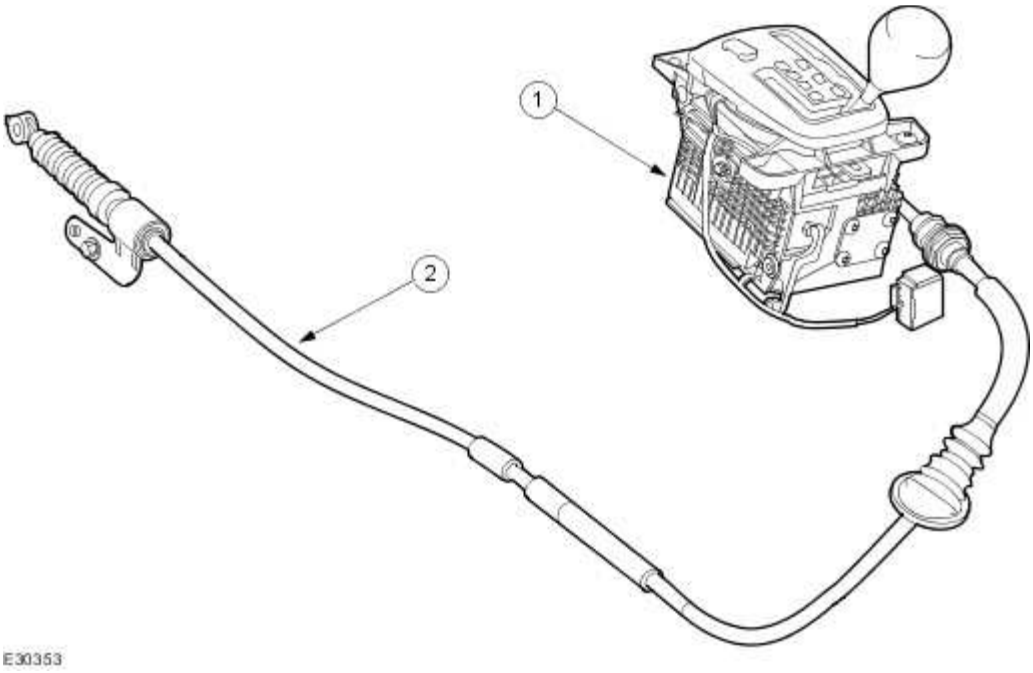

Item	Part Number	Description
1	—	Transmission selector lever
2	—	Selector cable and bracket

Transmission selector lever

The transmission selector lever:

has eight positions: Park, Reverse, Neutral, Drive, Fifth, Fourth, Third and Second.

operates the transmission selector shaft in the Park, Reverse, Neutral, Drive positions by means of a cable.

communicates the transmission selector lever position to the transmission control module (TCM) using electronic code through the Controlled Area Network (CAN) bus.

uses "Hall Effect" switches and a micro controller inside the transmission selector lever to generate the electronic code.

when moved to the left-hand side of the transmission selector lever, allows manual electronic selection of Fifth, Fourth, Third and Second gears.

The transmission selector illumination:

is provided by the TCM by using electronic code.

is possible by decoding the electronic code received by the transmission selector lever from the TCM and illuminating the relevant transmission selector lever position.

provides a red transmission lever position illumination to indicate the selected gear.

provides a green background for the transmission selector lever module and is hard-wired to the front electronics module (FEM).

The eight transmission selector positions are:

P: The transmission is mechanically locked (starting available).

R: Reverse gear.

N: No power to the rear wheels (starting available).

D: All six forward gears available.

5: Upshift to fifth gear only.

4: Upshift to fourth gear only.

3: Upshift to third gear only.

2: Upshift to second gear only.

Sport mode switch

The sport mode switch:

allows the driver to select or de-select the automatic transmission sport mode.

allows the automatic transmission to operate normally when the sport mode is selected, but under acceleration the gear shift points are extended to make full use of the engine's power reserves.

allows the driver to drive the vehicle in the "D" position with the full automatic transmission shift or manually shift gears in the "second, third, fourth and fifth" positions.

is illuminated when Sport mode is selected.

communicates with the TCM through the CAN network to show the sport mode switch status.

Transmission unit gear selector

The gear selector at the transmission unit:

www.JagDocs.com

is connected to the transmission selector lever module by a selector cable.

operates the manual selector valve, which is part of the electro-hydraulic control unit.

Transmission selector lever interlock solenoid

Transmission selector lever interlock solenoid:

prevents the transmission selector lever from being moved from the Park position, unless the ignition switch is in the "ON" position and the brake pedal is applied.

is controlled by an input from the brake pedal switch through the CAN bus.

Transmission selector lever interlock solenoid operation

When the driver first enters the vehicle and turns the ignition switch to the "ON" position, the transmission selector lever position indicator "P" will flash. If the driver then applies the brake pedal while the transmission selector lever position indicator "P" is flashing, the driver will then be able to move the transmission selector lever out of the "P" position.

Once the transmission selector lever has been moved out of the "P" position, the transmission selector lever interlock solenoid will de-energise after 5 seconds. If the transmission selector lever is moved back into the "P" position before the 5 seconds have elapsed, the transmission selector lever interlock solenoid will de-energise as soon as the transmission selector lever detects it is in the "P" position.

If the transmission selector lever is moved into a gear selection position for longer than 5 seconds and then returned to the "P" position whilst the brake pedal is applied. The transmission selector lever interlock solenoid will remain de-energised and the transmission selector lever position indicator "P" will flash. The driver must release and re-apply the brake pedal to allow the transmission selector lever to be moved from the "P" position.

If the driver runs the vehicle for a short period of time, with the brake pedal applied and then turns the vehicle off without moving the transmission selector lever out of the "P" position. The driver will not be able to remove the key from the ignition switch, until the brake pedal has been released.

External Controls

1 . Verify the customer concern.

2 . Visually inspect for obvious signs of mechanical or electrical damage.

WARNING: Danger of accident. Apply the parking brake. Shift the gear selector lever to "P". Failure to follow these instructions may result in personal injury.

Visual Inspection Chart

Mechanical	Electrical
Visibly damaged or worn parts. Loose or missing nuts or bolts.	Fuse(s). Loose or corroded electrical connector(s).

1 . If an obvious cause for an observed or reported concern is found, correct the cause (if possible) before proceeding to the next step.

2 . If the cause is not visually evident, verify the symptom and refer to the Jaguar Approved Diagnostic System.

Pinpoint Tests

PINPOINT TEST G189073p1 : J-GATE SYSTEM CIRCUIT CHECKS

G189073t1 : CHECK FOR IGNITION FEED TO THE J-GATE

1. Disconnect the J-gate assembly electrical connector CA245. 2. Turn the ignition to the "ON" position. 3. Measure the voltage at CA245 Pin 1 (GO).

Is the voltage greater than 10 Volts?

-> Yes
GO to Pinpoint Test G189073t6.

www.JagDocs.com

-> No
Repair the electrical circuit between the J-gate assembly electrical connector CA245 Pin 1 (GO) and the rear power distribution box FUSE 3. Clear the DTC. TEST the system for normal operation. NOTE: This circuit incorporates the ignition switch and the primary junction box. For additional information, refer to the vehicle wiring diagrams.

G189073t6 : CHECK THE GROUND SUPPLY TO THE J-GATE

1. Measure the resistance between the J-gate assembly electrical connector CA245 Pin 2 (B) and GROUND.

Is the resistance less than 5.0 Ohms?

-> Yes
GO to Pinpoint Test G189073t2.

-> No
Repair the circuit between the J-gate assembly electrical connector CA245 Pin 2 (B) and GROUND. Clear the DTC. TEST the system for normal operation.

G189073t2 : CHECK FOR J-GATE ILLUMINATION FEED

1. Turn the ignition to the "ON" position. 2. Measure the voltage at CA245 Pin 3 (UY).

Is the voltage greater than 10 Volts?

-> Yes
GO to Pinpoint Test G189073t3.

-> No
Repair the electrical circuit between the J-gate assembly electrical connector CA245 Pin 3 (UY) and the front electronics module electrical connector. For additional information, refer to the vehicle wiring diagrams. Clear the DTC. TEST the system for normal operation.

G189073t3 : CHECK FOR KEY INTERLOCK FEED CIRCUIT FOR CONTINUITY

1. Disconnect the J-gate assembly electrical connector CA245. 2. Disconnect the ignition switch electrical connector FC018. 3. 3) Measure the resistance between the J-gate assembly electrical connector CA245 Pin 4 (Y) and the ignition switch electrical connector FC018 Pin 3 (Y).

Is the resistance less than 5.0 Ohms?

-> Yes
GO to Pinpoint Test G189073t4.

-> No

Repair the electrical circuit between the J-gate assembly electrical connector CA245 Pin 4 (Y) and the ignition switch electrical connector FC018 Pin 3 (Y). Clear the DTC. TEST the system for normal operation.

G189073t4 : CHECK FOR KEY INTERLOCK ACTION

1. Check for continuity between Pin 3 and Pin 4 of the ignition switch lock cylinder.

Is the circuit continuous?

-> Yes

Install a new J-gate. For additional information,
Clear the DTC. TEST the system for normal operation.

-> No

Install a new ignition switch lock cylinder. For additional information, <<211-04>> Clear the DTC. TEST the system for normal operation.

www.JagDocs.com

Selector Lever Cable and Bracket (44.15.08)

Removal

1 . Remove the floor console. <<501-12>>

2 . Move the transmission selector lever to the "R" position.

3 . Detach the wiring harness bracket.

1) Reposition the wiring harness.

2) Detach the wiring harness bracket.

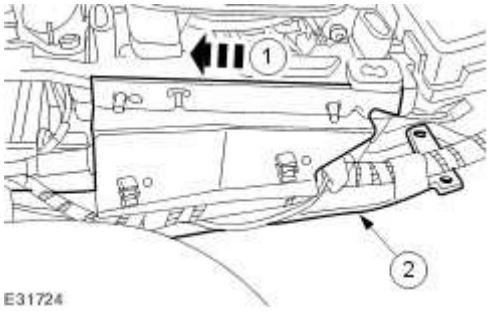

4 . Detach the selector lever cable.

- Loosen the selector lever cable retaining nuts.

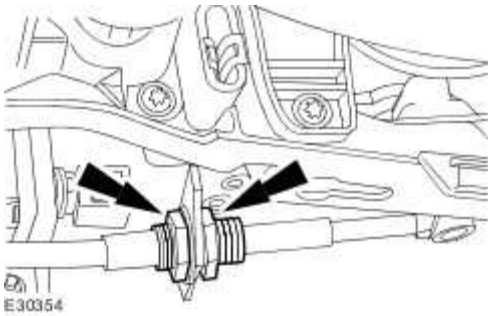

5 . Detach the selector lever cable.

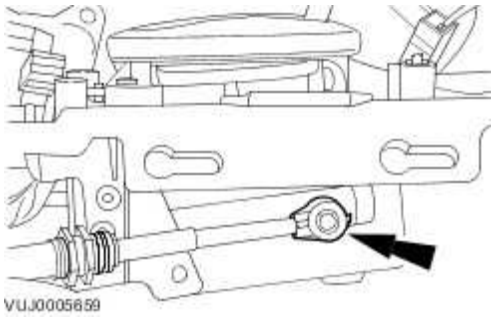

6 . Detach the selector lever cable.

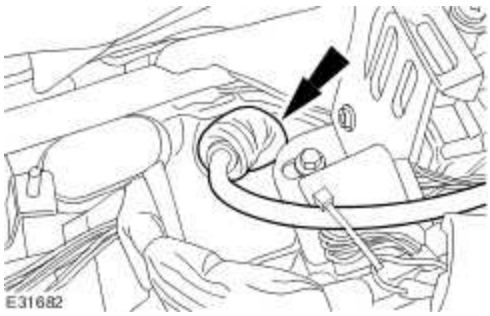

7 . Raise and support the vehicle. <<100-02>>

8 . Detach the selector lever cable.

www.JagDocs.com

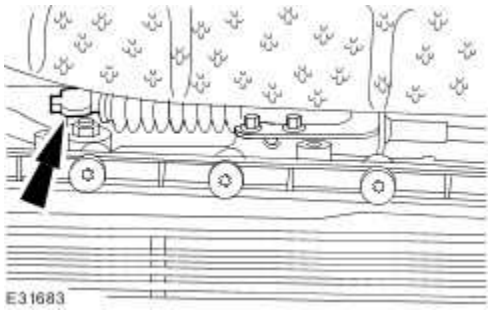

9 . Remove the selector lever cable.

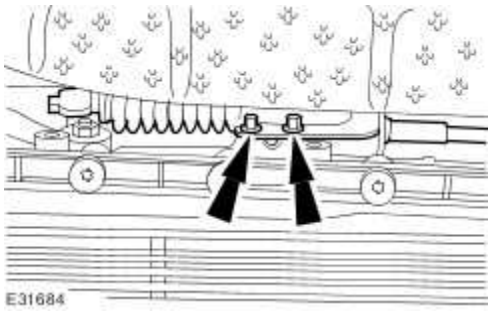

Installation

1 . Install the selector lever cable.

Tighten to 11 Nm.

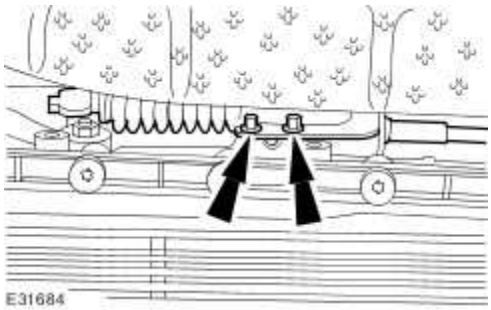

2 **NOTE:**

.

Make sure the selector lever cable is fully seated to the transmission unit gear selector pivot ball.

Attach the selector lever cable.

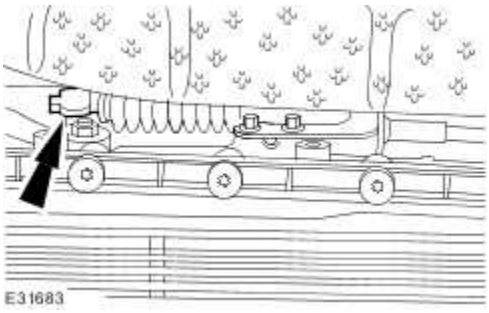

3 . Lower the vehicle.

4 . **NOTE:**

Make sure the selector lever cable grommet is seated correctly.

Attach the selector lever cable.

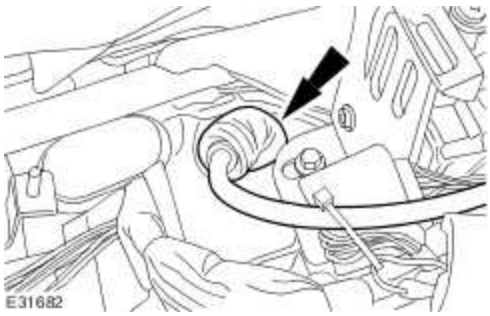

5 . **NOTE:**

Fully extend the selector cable, then retract the selector cable one detent.

Make sure the selector lever cable is in the "R" position.

6 . Make sure the transmission selector lever is in the "R" position.

7 . Attach the selector lever cable.

www.JagDocs.com

Do not tighten the selector lever cable retaining nuts.

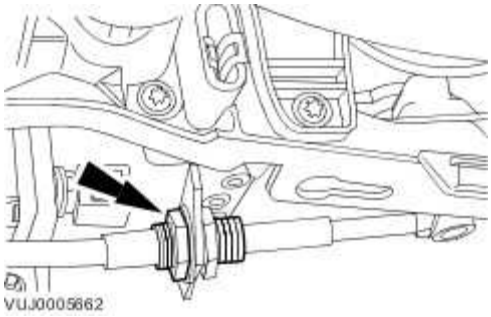

8 . Connect the selector lever cable.

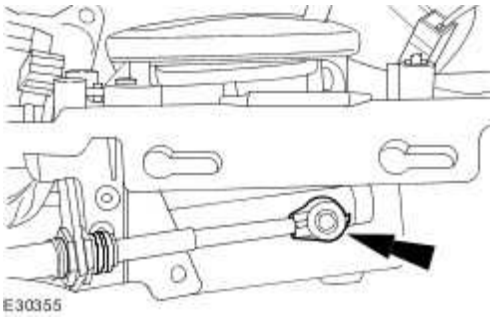

9 . Adjust the selector lever cable retaining nuts to lock against the retaining bracket without moving the set position of either the shift lever or the selector lever cable.

Do not tighten the selector lever cable retaining nuts.

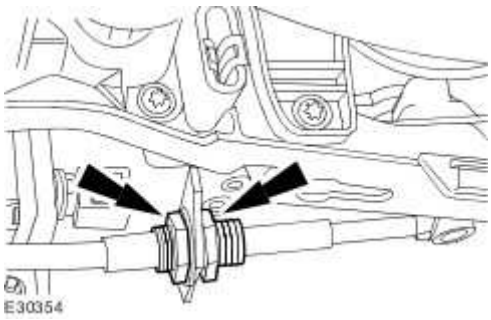

10 . **NOTE:**

Make sure all transmission selector lever positions are illuminated to indicate the

selected gear and the automatic transmission selects the relevant transmission state.

Move the transmission selector lever to all positions.

11 **NOTE:**

.

When tightening the selector lever cable retaining nuts, make sure both retaining nuts are tightened to the specified torque simultaneously.

Tighten the selector lever cable retaining nuts.

- Tighten to 20 Nm.

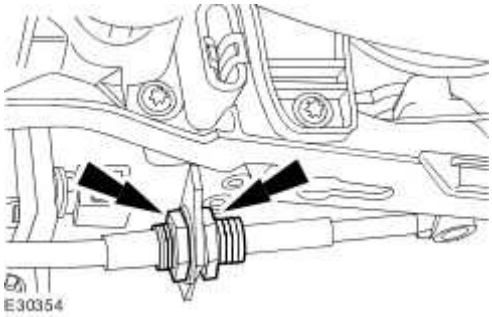

12 . Attach the wiring harness bracket.

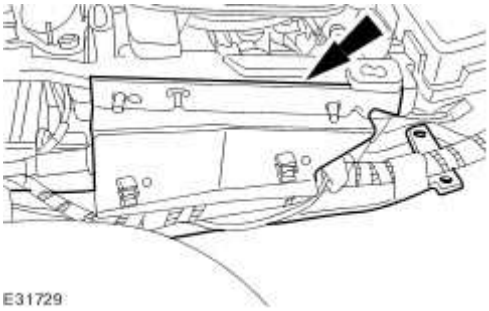

13 . Install the floor console. <<501-12>>

www.JagDocs.com

Selector Lever Assembly (44.15.04)

Removal

1 . Remove the instrument panel console. <<501-12>>

2 . Remove the ash tray retaining screws.

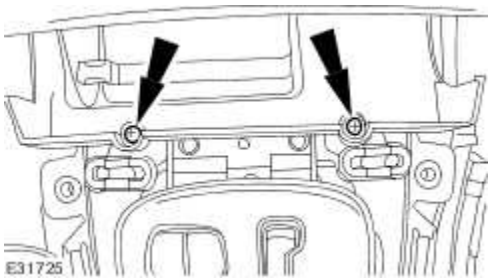

3 . Detach the ash tray.

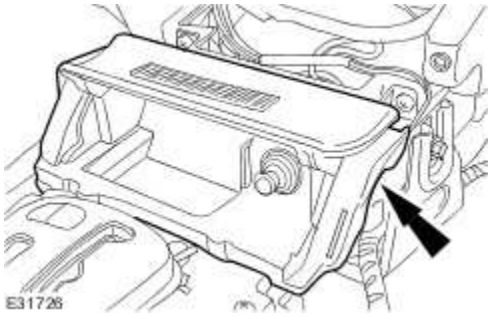

4 . Place the transmission selector lever to the "R" position.

5 . **NOTE:**

Shown with the electric parking brake switch removed for clarity.

Disconnect the electrical connector.

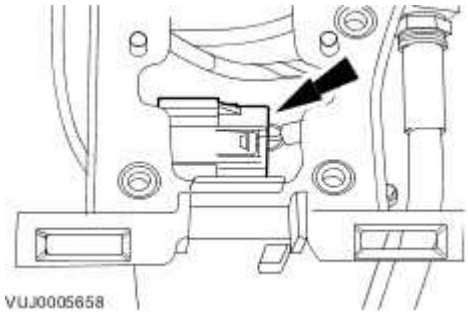

6 . Detach the wiring harness bracket.

1) Reposition the wiring harness.

2) Detach the wiring harness bracket.

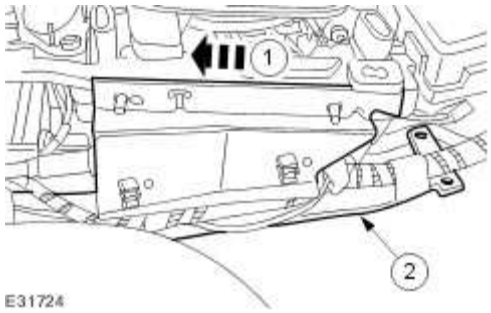

7 . Detach the selector lever cable.

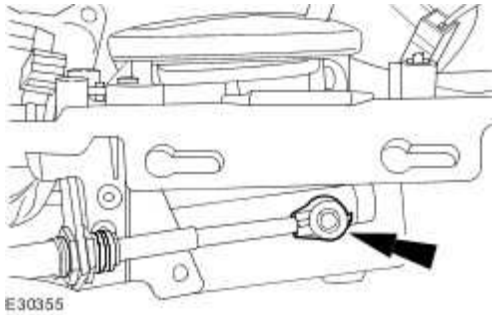

8 . Detach the transmission selector lever.

- Remove the retaining bolts.

www.JagDocs.com

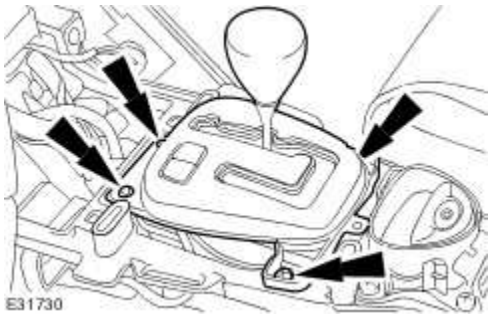

9 . Disconnect the ignition switch interlock cable.

1) Detach the ignition switch interlock cable.

2) Disconnect the ignition switch interlock cable.

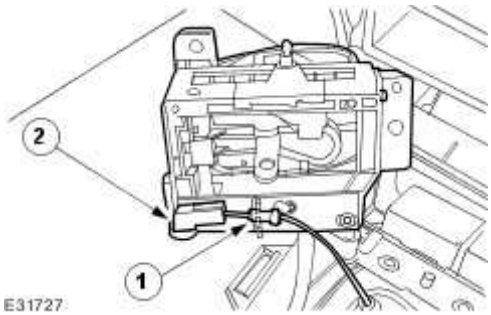

Installation

1 . Attach the ignition switch interlock cable.

1) Connect the ignition switch interlock cable.

2) Attach the ignition switch interlock cable.

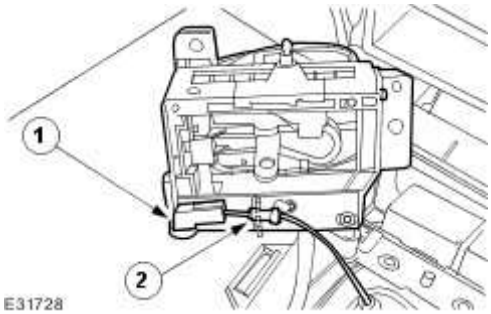

2 . Attach the transmission selector lever.

Tighten to 11 Nm.

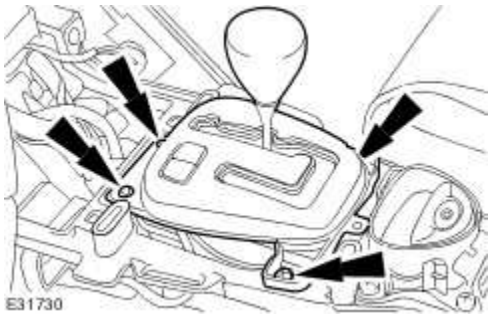

3 . **NOTE:**

Shown with the electric parking brake switch removed for clarity.

Connect the electrical connector.

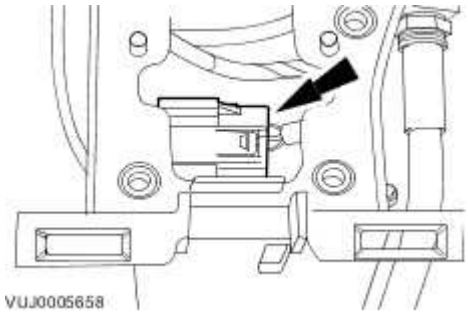

4 . **NOTE:**

Fully extend the selector cable, then retract the selector cable one detent.

Make sure the selector lever cable is in the "R" position.

5 . Make sure the transmission selector lever is in the "R" position.

www.JagDocs.com

6 . Attach the selector lever cable.

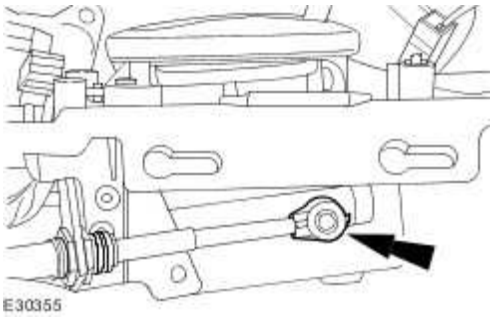

7 . Loosen the selector lever cable lock nuts.

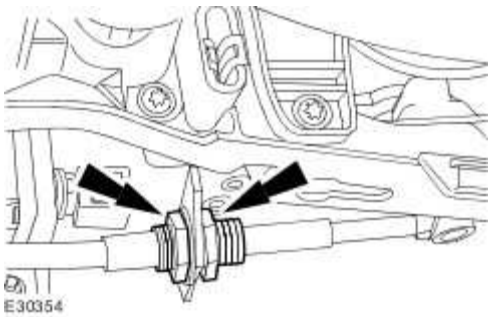

8 . Adjust the selector lever cable lock nuts to lock against the retaining bracket without moving the set position of either the shift lever or the selector lever cable.

Do not fully tighten the selector lever cable lock nuts.

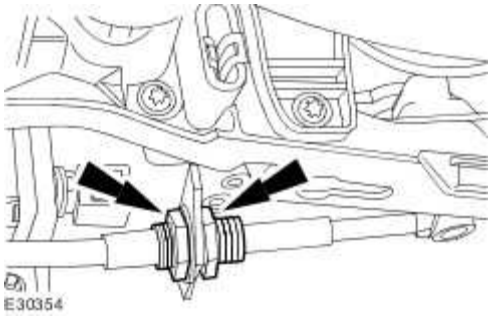

9 . **NOTE:**

Make sure all transmission selector lever positions select the relevant automatic transmission states.

Move the transmission selector lever to all positions.

10 **NOTE:**

.

When tightening the selector lever cable lock nuts, make sure both lock nuts are tightened to the specified torque simultaneously.

Tighten the selector lever cable lock nuts.

Tighten to 20 Nm.

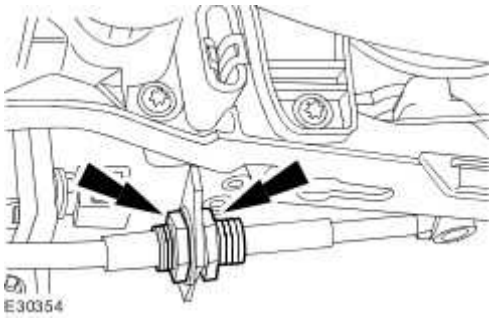

11 . Attach the wiring harness bracket.

12 . Attach the ash tray.

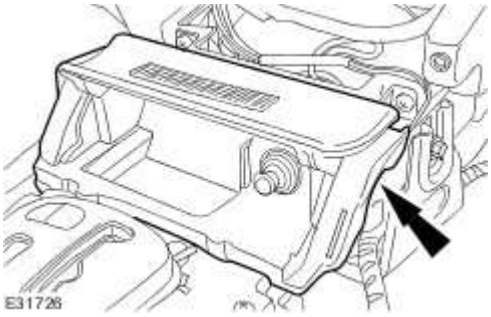

www.JagDocs.com

13 . Install the ash tray retaining screws.

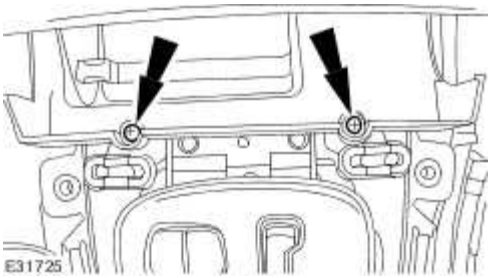

14 . Install the instrument panel console. <<501-12>>

309 : Exhaust System

309-00 : Exhaust System

Specifications

Specifications

Torque Specifications

Description	Nm	lb-ft	lb-in
Exhaust manifold to catalytic converter retaining nuts - Vehicles without diesel engines	40	30	-
Catalytic convertor retaining clamp - Vehicles without diesel engines	55	41	-
Front muffler retaining clamps - Vehicles without diesel engines	55	41	-
Muffler and tailpipe retaining clamp	55	41	-
Heated oxygen (HO2S) sensors - Vehicles without diesel engines	40	30	-
Catalyst monitor sensors - Vehicles without diesel engines	40	30	-
Catalyst temperature sensors - Vehicles with diesel engines	35	26	-
Diesel particulate filter temperature sensor - Vehicles with diesel engines	35	26	-
Turbocharger to catalytic convertor retaining studs - Vehicles with diesel engines	15	11	-
Turbocharger to downpipe catalytic convertor retaining nuts - Vehicles with diesel engines*	25	18	-
Catalytic convertor to diesel particulate filter retaining clamp retaining bolts - Vehicles diesel engines	11	8	-
Diesel particulate filter to front muffler retaining clamp retaining bolts - Vehicles diesel engines	55	41	-
Diesel particulate filter differential pressure sensor retaining nuts - Vehicles diesel engines	5	4	-

*For vehicles prior to VIN 5B001494, refit old fixings and tighten to 22 Nm (16 lb.ft)

www.JagDocs.com

Exhaust System

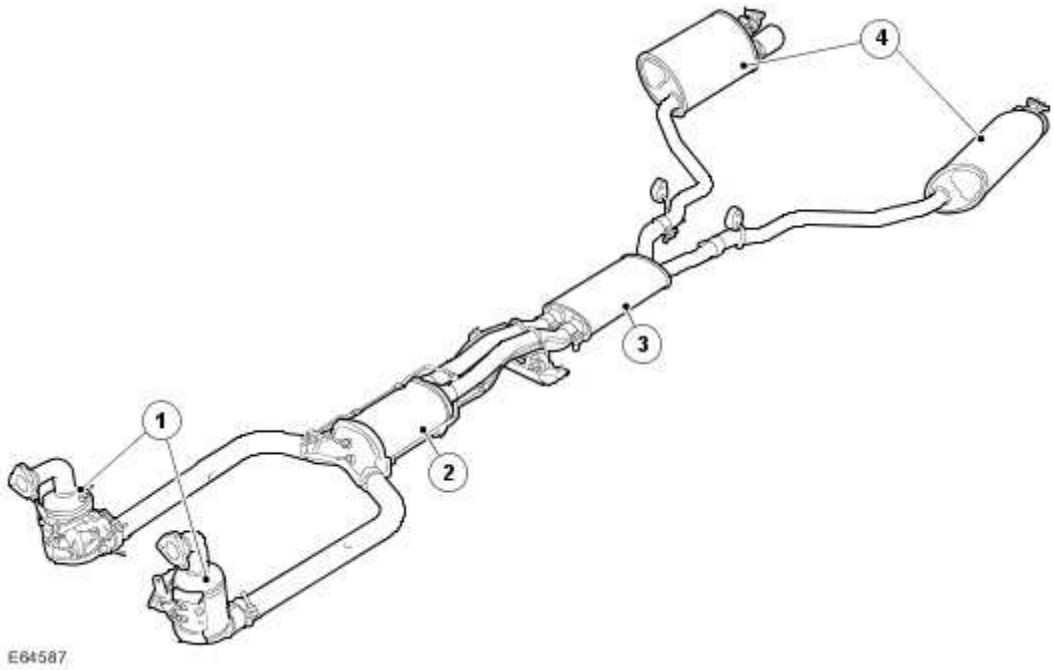

Item	Part Number	Description
1		Catalytic converters
2		Diesel particulate filter
3		Front muffler
4		Muffler and tailpipes

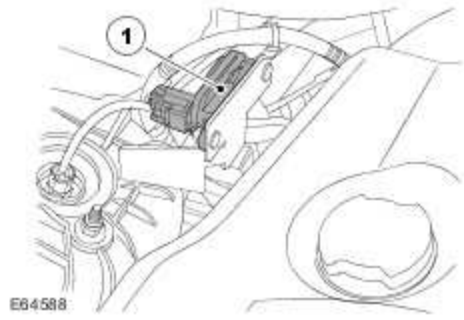

Item	Part Number	Description
1		Diesel particulate filter differential pressure sensor

The exhaust system for various engines are of similar design but utilize different internal elements to achieve a distinct exhaust note for each variant.

Catalytic Converters

The catalytic converters are of a monolithic structure and are coated in platinum. The platinum coating is used to control the emissions of hydrocarbons (HC), carbon monoxide (CO) and oxides of nitrogen (NOx) and to convert them into less harmful products for example carbon dioxide (CO) nitrogen (N) and water (HO).

The catalytic converters are connected to the turbocharger by a three nut flange and is sealed by a gasket. Exhaust jointing compound must not be applied to these joints due to the possibility of catalytic converter contamination. Avoid allowing any foreign particles of debris into the catalytic downpipe as this can result in damage to the catalytic converter.

Diesel Particulate Filter

In order to meet strict Euro IV emission limits there is now a stipulation to reduce gaseous and particulate emissions greatly. The primary component within the exhaust system of the diesel is the diesel particulate filter. The diesel particulate filter uses new filter technology based on a combined filter and oxidation catalytic converter to store, and when conditions allow, destroy the particulates. The diesel particulate filter is of a silicon carbide filter construction. It has an additional wash coating on its filter surface of platinum and other active components which are used in the manufacture of oxidation catalytic converters. The exhaust gasses pass through the filter, leaving the particulates behind that are too big to pass through the filters pores. With engine management intervention and the catalytic coating this will promote particulate combustion and oxidation of carbon monoxide (CO) and hydrocarbon (HC) emissions. By carrying out this process, this will regenerate the diesel particulate filter to prevent increased back-pressure and the possibility of a completely blocked filter.

Diesel particulate filter differential pressure sensor

The diesel particulate filter differential pressure sensor monitors the differential pressure in the pipeline, upstream and downstream of the diesel particulate filter. The filtering of the particulates will lead to a greater resistance to the exhaust gas flow through the diesel particulate filter. This leads to a greater pressure difference upstream and downstream of the diesel particulate filter. The diesel particulate filter differential pressure sensor is a membrane sensor with strain resistances. The strain resistances change depending on the pressure difference. This leads to a change in the signal voltage. This signal is one of the parameters required for the strategy of the regeneration of the diesel particulate filter.

Exhaust System – Armoured Vehicles

Muffler and Tailpipe

The exhaust system is modified so that the engine cannot be stalled by stopping the flow of exhaust system emissions. Unique muffler and tailpipes are installed to the vehicle for this purpose.

www.JagDocs.com

Exhaust System

Overview

2006MY sees the introduction of diesel to X350 and is accompanied by a diesel particulate filter (DPF) system to comply with strict stage four emissions requirements. The engine management system (EMS) makes use of 7-digit diagnostic trouble codes (DTCs) rather than the familiar 5-digit.

Refer to the DTC index in this section for guidance on how to use these codes with the Jaguar approved diagnostic system or a scan tool.

For information on the operation of the system,
Exhaust System

Inspection and Verification

1 . Verify the customer concern.

2 . Visually inspect for obvious signs of mechanical or electrical damage.

Mechanical	Electrical
Leaks	
Metal fatigue	Battery charge and condition
Pipes, mufflers and catalytic converters	Wiring harness
Diesel particulate filter (DPF)	Electrical connector(s)
DPF differential pressure sensor tubes	5 volt sensor supply
Joints	Sensor(s)
Mountings	Engine control module (ECM)
Clearance around components	

3 . If an obvious cause for an observed or reported concern is found, correct the cause (if possible) before proceeding to the next step.

4 . If the cause is not visually evident use the Jaguar approved diagnostic system or a scan tool to retrieve the fault codes before proceeding to the DTC index, or the symptom chart if no DTCs are set.

Symptom Chart

Symptom	Possible source	Action
Noisy or leaking exhaust	Exhaust system/components	Install new components as necessary. Exhaust System - 2.7L V6 - TdV6
Lack of power	Air intake system fault Diesel particulate fliter (DPF) blocked/restricted Restricted exhaust system Low fuel pressure Exhaust gas recirculation (EGR) valve(s) fault Turbocharger(s) fault	Check the air intake system, Intake Air Distribution and Filtering Check for a blocked DPF or catalytic converter, install new components as necessary. Diesel Particulate Filter (DPF) or Catalytic Converter - 2.7L V6 - TdV6 (17.50.05) Check the fuel pressure, Fuel Charging and Controls For EGR tests, Engine Emission Control For turbocharger tests, Turbocharger

DTC index

NOTE:

Generic scan tools may not read the codes listed, or may read only 5-digit codes. Match the 5 digits from the scan tool to the first 5 digits of the 7-digit code listed to identify the fault (the last 2 digits give extra information read by the manufacturer-approved diagnostic system).

NOTE:

For a full list of powertrain DTCs,
Electronic Engine Controls

P024B00	Diesel particulate filter (DPF) temperature sensor - catalyst downstream circuit range/performance (right hand bank)	Temperature sensor - catalyst downstream circuit: high resistance Temperature sensor - catalyst downstream circuit: short	For temperature sensor - catalyst downstream circuit tests, GO to Pinpoint Test G552286p2.

www.JagDocs.com

		circuit to ground Temperature sensor - catalyst downstream circuit: short circuit to power Temperature sensor - catalyst downstream failure	
P042600	Diesel particulate filter (DPF) temperature sensor - catalyst upstream circuit range/performance (right hand bank)	Temperature sensor - catalyst upstream circuit: high resistance Temperature sensor - catalyst upstream circuit: short circuit to ground Temperature sensor - catalyst upstream circuit: short circuit to power Temperature sensor - catalyst upstream failure	For temperature sensor - catalyst upstream circuit tests, GO to Pinpoint Test G552286p1.
P042700	Diesel particulate filter (DPF) temperature sensor - catalyst upstream circuit low (right hand bank)	Temperature sensor - catalyst upstream circuit: high resistance Temperature sensor - catalyst upstream circuit: short circuit to ground Temperature sensor - catalyst upstream failure	For temperature sensor - catalyst upstream circuit tests, GO to Pinpoint Test G552286p1.
P042800	Diesel particulate filter (DPF) temperature sensor - catalyst upstream circuit high (right hand bank)	Temperature sensor - catalyst upstream circuit: short circuit to power Temperature sensor - catalyst upstream	For temperature sensor - catalyst upstream circuit tests, GO to Pinpoint Test G552286p1.

		failure	
P042C00	Diesel particulate filter (DPF) temperature sensor - catalyst downstream circuit low (right hand bank)	Temperature sensor - catalyst downstream circuit: high resistance Temperature sensor - catalyst downstream circuit: short circuit to ground Temperature sensor - catalyst downstream failure	For temperature sensor - catalyst downstream circuit tests, GO to Pinpoint Test G552286p2.
P042D00	Diesel particulate filter (DPF) temperature sensor - catalyst downstream circuit high (right hand bank)	Temperature sensor - catalyst downstream circuit: short circuit to power Temperature sensor - catalyst downstream failure	For temperature sensor - catalyst downstream circuit tests, GO to Pinpoint Test G552286p2.
P043600	Diesel particulate filter (DPF) temperature sensor - catalyst upstream circuit range/performance (left hand bank)	Temperature sensor - catalyst upstream circuit: high resistance Temperature sensor - catalyst upstream circuit: short circuit to ground Temperature sensor - catalyst upstream circuit: short circuit to power Temperature sensor - catalyst upstream failure	For temperature sensor - catalyst upstream circuit tests, GO to Pinpoint Test G552286p3.
P043700	Diesel particulate filter (DPF) temperature sensor - catalyst upstream circuit low	Temperature sensor - catalyst upstream circuit: high resistance	For temperature sensor - catalyst upstream circuit tests, GO to Pinpoint Test G552286p3.

www.JagDocs.com

	(left hand bank)	Temperature sensor - catalyst upstream circuit: short circuit to ground Temperature sensor - catalyst upstream failure	
P043800	Diesel particulate filter (DPF) temperature sensor - catalyst upstream circuit high (left hand bank)	Temperature sensor - catalyst upstream circuit: short circuit to power Temperature sensor - catalyst upstream failure	For temperature sensor - catalyst upstream circuit tests, GO to Pinpoint Test G552286p3.
P043B00	Diesel particulate filter (DPF) temperature sensor - catalyst downstream circuit range/performance (left hand bank)	Temperature sensor - catalyst downstream circuit: high resistance Temperature sensor - catalyst downstream circuit: short circuit to ground Temperature sensor - catalyst downstream circuit: short circuit to power Temperature sensor - catalyst downstream failure	For temperature sensor - catalyst downstream circuit tests, GO to Pinpoint Test G552286p4.
P043C00	Diesel particulate filter (DPF) temperature sensor - catalyst downstream circuit low (left hand bank)	Temperature sensor - catalyst downstream circuit: high resistance Temperature sensor - catalyst downstream circuit: short circuit to ground	For temperature sensor - catalyst downstream circuit tests, GO to Pinpoint Test G552286p4.

		Temperature sensor - catalyst downstream failure	
P043D00	Diesel particulate filter (DPF) temperature sensor - catalyst downstream circuit high (left hand bank)	Temperature sensor - catalyst downstream circuit: short circuit to power Temperature sensor - catalyst downstream failure	For temperature sensor - catalyst downstream circuit tests, GO to Pinpoint Test G552286p4.
P242B00	Diesel particulate filter (DPF) temperature sensor circuit range/performance	DPF temperature sensor circuit: high resistance DPF temperature sensor circuit: short circuit to ground DPF temperature sensor circuit: short circuit to power DPF temperature sensor failure	For DPF temperature sensor circuit tests, GO to Pinpoint Test G552286p5.
P242C00	Diesel particulate filter (DPF) temperature sensor circuit low	DPF temperature sensor circuit: high resistance DPF temperature sensor circuit: short circuit to ground DPF temperature sensor failure	For DPF temperature sensor circuit tests, GO to Pinpoint Test G552286p5.
P242D00	Diesel particulate filter (DPF) temperature sensor circuit high	DPF temperature sensor circuit: short circuit to power DPF temperature sensor failure	For DPF temperature sensor circuit tests, GO to Pinpoint Test G552286p5.

www.JagDocs.com

P242E00	Diesel particulate filter (DPF) temperature sensor circuit intermittent/erratic	DPF temperature sensor circuit: high resistance DPF temperature sensor circuit: short circuit to ground DPF temperature sensor circuit: short circuit to power DPF temperature sensor failure	For DPF temperature sensor circuit tests, GO to Pinpoint Test G552286p5.
P244A00	Diesel particulate filter (DPF) exhaust back pressure too low	Differential pressure sensor tubes/hoses split/leaking DPF split/leaking DPF differential pressure sensor failure	Check the DPF and differential pressure sensor tubes/hoses for leaks/damage, install new components as necessary. Diesel Particulate Filter (DPF) For DPF differential pressure sensor circuit tests, GO to Pinpoint Test G552286p6.
P244B00	Diesel particulate filter (DPF) exhaust back pressure too high	Differential pressure tubes/hoses blockage/restriction DPF blockage/restriction DPF differential pressure sensor failure	Check the DPF and differential pressure sensor tubes/hoses for blockages/damage, install new components as necessary. Diesel Particulate Filter (DPF) For DPF differential pressure sensor circuit tests, GO to Pinpoint Test G552286p6.
P245300	Diesel particulate filter (DPF) differential pressure sensor value too high before engine start	Exhaust blockage/restriction DPF blockage/restriction Differential pressure sensor circuit: high resistance	Check the DPF and differential pressure sensor tubes/hoses for blockages/damage, install new components as necessary. Diesel Particulate Filter (DPF) For DPF differential pressure sensor circuit tests, GO to Pinpoint Test G552286p6.

		Differential pressure sensor circuit: short circuit to ground Differential pressure sensor circuit: short circuit to power Differential pressure sensor failure	
P245400	Diesel particulate filter (DPF) differential pressure sensor circuit low	Differential pressure sensor circuit: high resistance Differential pressure sensor circuit: short circuit to ground Differential pressure sensor failure	For DPF differential pressure sensor circuit tests, GO to Pinpoint Test G552286p6.
P245500	Diesel particulate filter (DPF) differential pressure sensor circuit high	Differential pressure sensor circuit: short circuit to power Differential pressure sensor failure	For DPF differential pressure sensor circuit tests, GO to Pinpoint Test G552286p6.
P245600	Diesel particulate filter (DPF) differential pressure sensor circuit intermittent/erratic	Differential pressure tubes/hoses split/leaking DPF split/leaking Differential pressure sensor circuit: high resistance Differential pressure sensor circuit: short circuit to ground Differential pressure sensor circuit: short circuit to power	Check the DPF and differential pressure sensor tubes/hoses for leaks/damage, install new components as necessary. Diesel Particulate Filter (DPF) For DPF differential pressure sensor circuit tests, GO to Pinpoint Test G552286p6.

www.JagDocs.com

		Differential pressure sensor failure	
P245900	Diesel particulate filter (DPF) regeneration frequency	Driving conditions not appropriate for DPF regeneration	Carry out DPF service remedy, drive the vehicle, preferably on a main road or motorway, until the engine reaches its normal operating temperature. The vehicle should then be driven for approximately a further 20 minutes, preferably at a speed of 48 km/h (30 mph) or more, but always observing speed limits and road conditions. Successful regeneration of the DPF is indicated by the warning message and AMBER priority indicator being extinguished from the message centre. For additional information refer to the owner's handbook

Pinpoint tests

CAUTION: When probing connectors to take measurements in the course of the pinpoint tests, use the adaptor kit, part number 3548-1358-00. Failure to follow this instruction may result in damage to the vehicle.

NOTE:

When performing voltage or resistance tests, always use a digital multimeter (DMM) accurate to 3 decimal places, and with an up-to-date calibration certificate. When testing resistance, always take the resistance of the DMM leads into account.

NOTE:

Check and rectify basic faults before beginning diagnostic routines involving pinpoint tests.

NOTE:

If DTCs are recorded and a fault is not present when performing the pinpoint tests, an intermittent concern may be the cause. Always check for loose connections and corroded terminals.

PINPOINT TEST G552286p1 : RIGHT HAND TEMPERATURE SENSOR - CATALYST UPSTREAM

G552286t1 : CHECK THE RIGHT HAND TEMPERATURE SENSOR - CATALYST UPSTREAM SIGNAL CIRCUIT FOR SHORT CIRCUIT TO GROUND

1. **Right hand temperature sensor - catalyst upstream connector, GB09**

Circuit	Pin
Right hand temperature sensor catalyst upstream - signal	01
Right hand temperature sensor catalyst upstream - ground	02

2. **Engine control module (ECM) connector, C100**

Circuit	Pin
Right hand temperature sensor catalyst upstream - signal	B1

Circuit	Pin
Right hand temperature sensor catalyst upstream - ground	F4

3. Key off. 4. Disconnect the right hand temperature sensor - catalyst upstream connector, GB09. 5. Measure the resistance between:

GB09, harness side	Battery
Pin 01	Negative terminal

Is the resistance greater than 100 Kohms?

-> Yes

GO to Pinpoint Test G552286t2.

www.JagDocs.com

-> No
REPAIR the short circuit. For additional information, refer to the wiring diagrams. Clear any DTCs, test the system for normal operation.

G552286t2 : CHECK THE RIGHT HAND TEMPERATURE SENSOR - CATALYST UPSTREAM SIGNAL CIRCUIT FOR SHORT CIRCUIT TO POWER

1. Measure the resistance between:

GB09, harness side	Battery
Pin 01	Positive terminal

Is the resistance greater than 100 Kohms?

-> Yes
GO to Pinpoint Test G552286t3.

-> No
REPAIR the short circuit. For additional information, refer to the wiring diagrams. Clear any DTCs, test the system for normal operation.

G552286t3 : CHECK THE RIGHT HAND TEMPERATURE SENSOR - CATALYST UPSTREAM GROUND CIRCUIT FOR SHORT CIRCUIT TO POWER

1. Measure the resistance between:

GB09, harness side	Battery
Pin 02	Positive terminal

Is the resistance greater than 100 Kohms?

-> Yes
GO to Pinpoint Test G552286t4.

-> No
REPAIR the short circuit. For additional information, refer to the wiring diagrams. Clear any DTCs, test the system for normal operation.

G552286t4 : CHECK THE RIGHT HAND TEMPERATURE SENSOR - CATALYST UPSTREAM SIGNAL CIRCUIT FOR HIGH RESISTANCE

1. Disconnect the ECM connector, C100. 2. Measure the resistance between:

GB09, harness side	C100, harness side
Pin 01	B1

Is the resistance less than 10 ohms?

-> Yes

GO to Pinpoint Test G552286t5.

-> No

REPAIR the high resistance circuit. For additional information, refer to the wiring diagrams. Clear any DTCs, test the system for normal operation.

G552286t5 : CHECK THE RIGHT HAND TEMPERATURE SENSOR - CATALYST UPSTREAM GROUND CIRCUIT FOR HIGH RESISTANCE

1. Disconnect the ECM connector, C101. 2. Measure the resistance between:

GB09, harness side	C100, harness side
Pin 02	F4

Is the resistance less than 10 ohms?

-> Yes

An intermittent fault may be present in the wiring harness. Visually check for chaffed wires or other physical damage to the harness. If no fault is found in the circuit, suspect the following component(s): **-** Right hand temperature sensor - catalyst upstream connector. **-** Right hand temperature sensor - catalyst upstream. **-** ECM connector(s). **-** ECM.

-> No

REPAIR the high resistance circuit. For additional information, refer to the wiring diagrams. Clear any DTCs, test the system for normal operation.

www.JagDocs.com

PINPOINT TEST G552286p2 : RIGHT HAND TEMPERATURE SENSOR - CATALYST DOWNSTREAM

G552286t6 : CHECK THE RIGHT HAND TEMPERATURE SENSOR - CATALYST DOWNSTREAM SIGNAL CIRCUIT FOR SHORT CIRCUIT TO GROUND

1. **Right hand temperature sensor - catalyst downstream connector, GB07**

Circuit	Pin
Right hand temperature sensor catalyst downstream - signal	01
Right hand temperature sensor catalyst downstream - ground	02

2. **Engine control module (ECM) connector, C101**

Circuit	Pin
Right hand temperature sensor catalyst downstream - signal	E3
Right hand temperature sensor catalyst downstream - ground	F4

3. Key off. 4. Disconnect the right hand temperature sensor - catalyst downstream connector, GB07.
5. Measure the resistance between:

GB07, harness side	Battery
Pin 01	Negative terminal

Is the resistance greater than 100 Kohms?

-> Yes
GO to Pinpoint Test G552286t7.

-> No
REPAIR the short circuit. For additional information, refer to the wiring diagrams. Clear any DTCs, test the system for normal operation.

G552286t7 : CHECK THE RIGHT HAND TEMPERATURE SENSOR - CATALYST DOWNSTREAM SIGNAL CIRCUIT FOR SHORT CIRCUIT TO POWER

1. Measure the resistance between:

GB07, harness side	Battery
Pin 01	Positive terminal

Is the resistance greater than 100 Kohms?

-> Yes

GO to Pinpoint Test G552286t8.

-> No

REPAIR the short circuit. For additional information, refer to the wiring diagrams. Clear any DTCs, test the system for normal operation.

G552286t8 : CHECK THE RIGHT HAND TEMPERATURE SENSOR - CATALYST DOWNSTREAM GROUND CIRCUIT FOR SHORT CIRCUIT TO POWER

1. Measure the resistance between:

GB07, harness side	Battery
Pin 02	Positive terminal

Is the resistance greater than 100 Kohms?

-> Yes

GO to Pinpoint Test G552286t9.

-> No

REPAIR the short circuit. For additional information, refer to the wiring diagrams. Clear any DTCs, test the system for normal operation.

G552286t9 : CHECK THE RIGHT HAND TEMPERATURE SENSOR - CATALYST DOWNSTREAM SIGNAL CIRCUIT FOR HIGH RESISTANCE

1. Disconnect the ECM connector, C101. 2. Measure the resistance between:

GB07, harness side	C101, harness side

www.JagDocs.com

Pin 01	E3

Is the resistance less than 10 ohms?

-> Yes
GO to Pinpoint Test G552286t10.

-> No
REPAIR the high resistance circuit. For additional information, refer to the wiring diagrams. Clear any DTCs, test the system for normal operation.

G552286t10 : CHECK THE RIGHT HAND TEMPERATURE SENSOR - CATALYST DOWNSTREAM GROUND CIRCUIT FOR HIGH RESISTANCE

1. Measure the resistance between:

GB07, harness side	C101, harness side
Pin 02	F4

Is the resistance less than 10 ohms?

-> Yes
An intermittent fault may be present in the wiring harness. Visually check for chaffed wires or other physical damage to the harness. If no fault is found in the circuit, suspect the following component(s): **-** Right hand temperature sensor - catalyst downstream connector. **-** Right hand temperature sensor - catalyst downstream. **-** ECM connector. **-** ECM.

-> No
REPAIR the high resistance circuit. For additional information, refer to the wiring diagrams. Clear any DTCs, test the system for normal operation.

PINPOINT TEST G552286p3 : LEFT HAND TEMPERATURE SENSOR - CATALYST UPSTREAM

G552286t11 : CHECK THE LEFT HAND TEMPERATURE SENSOR - CATALYST UPSTREAM SIGNAL CIRCUIT FOR SHORT CIRCUIT TO GROUND

1. **Left hand temperature sensor - catalyst upstream connector, GB08**

Circuit	Pin
Left hand temperature sensor catalyst upstream - signal	01
Left hand temperature sensor catalyst upstream - ground	02

2. **Engine control module (ECM) connector, C101**

Circuit	Pin
Left hand temperature sensor catalyst upstream - signal	A4
Left hand temperature sensor catalyst upstream - ground	F3

3. Key off. 4. Disconnect the left hand temperature sensor - catalyst upstream connector, GB08. 5. Measure the resistance between:

GB08, harness side	Battery
Pin 01	Negative terminal

Is the resistance greater than 100 Kohms?

-> Yes
GO to Pinpoint Test G552286t12.

-> No
REPAIR the short circuit. For additional information, refer to the wiring diagrams. Clear any DTCs, test the system for normal operation.

G552286t12 : CHECK THE LEFT HAND TEMPERATURE SENSOR - CATALYST UPSTREAM SIGNAL CIRCUIT FOR SHORT CIRCUIT TO POWER

1. Measure the resistance between:

GB08, harness side	Battery
Pin 01	Positive terminal

Is the resistance greater than 100 Kohms?

www.JagDocs.com

-> Yes
GO to Pinpoint Test G552286t13.

-> No
REPAIR the short circuit. For additional information, refer to the wiring diagrams. Clear any DTCs, test the system for normal operation.

G552286t13 : CHECK THE LEFT HAND TEMPERATURE SENSOR - CATALYST UPSTREAM GROUND CIRCUIT FOR SHORT CIRCUIT TO POWER

1. Measure the resistance between:

GB08, harness side	Battery
Pin 02	Positive terminal

Is the resistance greater than 100 Kohms?

-> Yes
GO to Pinpoint Test G552286t14.

-> No
REPAIR the short circuit. For additional information, refer to the wiring diagrams. Clear any DTCs, test the system for normal operation.

G552286t14 : CHECK THE LEFT HAND TEMPERATURE SENSOR - CATALYST UPSTREAM SIGNAL CIRCUIT FOR HIGH RESISTANCE

1. Disconnect the ECM connector, C101. 2. Measure the resistance between:

GB08, harness side	C101, harness side
Pin 01	A4

Is the resistance less than 10 ohms?

-> Yes
GO to Pinpoint Test G552286t15.

-> No

REPAIR the high resistance circuit. For additional information, refer to the wiring diagrams. Clear any DTCs, test the system for normal operation.

G552286t15 : CHECK THE LEFT HAND TEMPERATURE SENSOR - CATALYST UPSTREAM GROUND CIRCUIT FOR HIGH RESISTANCE

1. Measure the resistance between:

GB08, harness side	C101, harness side
Pin 02	F3

Is the resistance less than 10 ohms?

-> Yes
An intermittent fault may be present in the wiring harness. Visually check for chaffed wires or other physical damage to the harness. If no fault is found in the circuit, suspect the following component(s): **-** Left hand temperature sensor - catalyst upstream connector. **-** Left hand temperature sensor - catalyst upstream. **-** ECM connector. **-** ECM.

-> No
REPAIR the high resistance circuit. For additional information, refer to the wiring diagrams. Clear any DTCs, test the system for normal operation.

PINPOINT TEST G552286p4 : LEFT HAND TEMPERATURE SENSOR - CATALYST DOWNSTREAM

G552286t16 : CHECK THE LEFT HAND TEMPERATURE SENSOR - CATALYST DOWNSTREAM SIGNAL CIRCUIT FOR SHORT CIRCUIT TO GROUND

1. **Left hand temperature sensor - catalyst downstream connector, GB06**

Circuit	Pin
Left hand temperature sensor catalyst downstream - signal	01
Left hand temperature sensor catalyst downstream - ground	02

2. **Engine control module (ECM) connector, C101**

Circuit	Pin

www.JagDocs.com

Left hand temperature sensor catalyst downstream - signal	E4
Left hand temperature sensor catalyst downstream - ground	F3

3. Key off. 4. Disconnect the left hand temperature sensor - catalyst downstream connector, GB06. 5. Measure the resistance between:

GB06, harness side	Battery
Pin 01	Negative terminal

Is the resistance greater than 100 Kohms?

-> Yes
GO to Pinpoint Test G552286t17.

-> No
REPAIR the short circuit. For additional information, refer to the wiring diagrams. Clear any DTCs, test the system for normal operation.

G552286t17 : CHECK THE LEFT HAND TEMPERATURE SENSOR - CATALYST DOWNSTREAM SIGNAL CIRCUIT FOR SHORT CIRCUIT TO POWER

1. Measure the resistance between:

GB06, harness side	Battery
Pin 01	Positive terminal

Is the resistance greater than 100 Kohms?

-> Yes
GO to Pinpoint Test G552286t18.

-> No
REPAIR the short circuit. For additional information, refer to the wiring diagrams. Clear any DTCs, test the system for normal operation.

G552286t18 : CHECK THE LEFT HAND TEMPERATURE SENSOR - CATALYST DOWNSTREAM GROUND CIRCUIT FOR SHORT CIRCUIT TO POWER

1. Measure the resistance between:

GB06, harness side	Battery
Pin 02	Positive terminal

Is the resistance greater than 100 Kohms?

-> Yes

GO to Pinpoint Test G552286t19.

-> No

REPAIR the short circuit. For additional information, refer to the wiring diagrams. Clear any DTCs, test the system for normal operation.

G552286t19 : CHECK THE LEFT HAND TEMPERATURE SENSOR - CATALYST DOWNSTREAM SIGNAL CIRCUIT FOR HIGH RESISTANCE

1. Disconnect the ECM connector, C101. 2. Measure the resistance between:

GB06, harness side	C101, harness side
Pin 01	E4

Is the resistance less than 10 ohms?

-> Yes

GO to Pinpoint Test G552286t20.

-> No

REPAIR the high resistance circuit. For additional information, refer to the wiring diagrams. Clear any DTCs, test the system for normal operation.

G552286t20 : CHECK THE LEFT HAND TEMPERATURE SENSOR - CATALYST DOWNSTREAM GROUND CIRCUIT FOR HIGH RESISTANCE

1. Measure the resistance between:

GB06, harness side	C101, harness side

www.JagDocs.com

Pin 02	F3

Is the resistance less than 10 ohms?

-> Yes
An intermittent fault may be present in the wiring harness. Visually check for chaffed wires or other physical damage to the harness. If no fault is found in the circuit, suspect the following component(s): **-** Left hand temperature sensor - catalyst downstream connector. **-** Left hand temperature sensor - catalyst downstream. **-** ECM connector. **-** ECM.

-> No
REPAIR the high resistance circuit. For additional information, refer to the wiring diagrams. Clear any DTCs, test the system for normal operation.

PINPOINT TEST G552286p5 : DIESEL PARTICULATE FILTER (DPF) TEMPERATURE SENSOR

G552286t21 : CHECK THE DPF TEMPERATURE SENSOR SIGNAL CIRCUIT FOR SHORT CIRCUIT TO GROUND

1. **Diesel particulate filter (DPF) temperature sensor connector, GB10**

Circuit	Pin
Diesel particulate filter (DPF) temperature sensor - signal	01
Diesel particulate filter (DPF) temperature sensor - ground	02

2. **Engine control module (ECM) connector, C101**

Circuit	Pin
Diesel particulate filter (DPF) temperature sensor - signal	D4
Diesel particulate filter (DPF) temperature sensor - ground	F3

3. Key off. 4. Disconnect the DPF temperature sensor connector, GB10. 5. Measure the resistance between:

GB10, harness side	Battery
Pin 01	Negative terminal

Is the resistance greater than 100 Kohms?

-> Yes
GO to Pinpoint Test G552286t22.

-> No
REPAIR the short circuit. For additional information, refer to the wiring diagrams. Clear any DTCs, test the system for normal operation.

G552286t22 : CHECK THE DPF TEMPERATURE SENSOR SIGNAL CIRCUIT FOR SHORT CIRCUIT TO POWER

1. Measure the resistance between:

GB10, harness side	Battery
Pin 01	Positive terminal

Is the resistance greater than 100 Kohms?

-> Yes
GO to Pinpoint Test G552286t23.

-> No
REPAIR the short circuit. For additional information, refer to the wiring diagrams. Clear any DTCs, test the system for normal operation.

G552286t23 : CHECK THE DPF TEMPERATURE SENSOR GROUND CIRCUIT FOR SHORT CIRCUIT TO POWER

1. Measure the resistance between:

GB10, harness side	Battery
Pin 02	Positive terminal

www.JagDocs.com

Is the resistance greater than 100 Kohms?

-> Yes
GO to Pinpoint Test G552286t24.

-> No
REPAIR the short circuit. For additional information, refer to the wiring diagrams. Clear any DTCs, test the system for normal operation.

G552286t24 : CHECK THE DPF TEMPERATURE SENSOR SIGNAL CIRCUIT FOR HIGH RESISTANCE

1. Disconnect the ECM connector, C101. 2. Measure the resistance between:

GB10, harness side	C101, harness side
Pin 01	D4

Is the resistance less than 10 ohms?

-> Yes
GO to Pinpoint Test G552286t25.

-> No
REPAIR the high resistance circuit. For additional information, refer to the wiring diagrams. Clear any DTCs, test the system for normal operation.

G552286t25 : CHECK THE DPF TEMPERATURE SENSOR GROUND CIRCUIT FOR HIGH RESISTANCE

1. Measure the resistance between:

GB10, harness side	C101, harness side
Pin 02	F3

Is the resistance less than 10 ohms?

-> Yes
An intermittent fault may be present in the wiring harness. Visually check for chaffed wires or other physical damage to the harness. If no fault is found in the circuit, suspect the following component(s): - DPF temperature sensor connector. - DPF temperature sensor. - ECM connector. -

ECM.

-> No
REPAIR the high resistance circuit. For additional information, refer to the wiring diagrams. Clear any DTCs, test the system for normal operation.

PINPOINT TEST G552286p6 : DIESEL PARTICULATE FILTER (DPF) DIFFERENTIAL PRESSURE SENSOR

G552286t26 : CHECK THE POWER SUPPLY TO THE DPF DIFFERENTIAL PRESSURE SENSOR

1. **Diesel particulate filter (DPF) differential pressure sensor connector, EC65**

Circuit	Pin
Diesel particulate filter (DPF) differential pressure sensor - signal	01
Diesel particulate filter (DPF) differential pressure sensor - ground	02
Diesel particulate filter (DPF) differential pressure sensor - supply	03

2. **Engine control module (ECM) connector, C101**

Circuit	Pin
Diesel particulate filter (DPF) differential pressure sensor - signal	D3
Diesel particulate filter (DPF) differential pressure sensor - ground	D2
Diesel particulate filter (DPF) differential pressure sensor - supply	C3

3. Key off. 4. Disconnect the DPF differential pressure sensor connector, EC65. 5. Key on, engine off. 6. Measure the voltage between:

EC65, harness side	Battery
Pin 03	Negative terminal

Is the voltage between 4.8 and 5.2 volts?

www.JagDocs.com

-> Yes
GO to Pinpoint Test G552286t27.

-> No
REPAIR the power supply circuit as necessary. For additional information, refer to the wiring diagrams. Clear any DTCs, test the system for normal operation.

G552286t27 : CHECK THE DPF DIFFERENTIAL PRESSURE SENSOR SIGNAL CIRCUIT FOR SHORT CIRCUIT TO GROUND

1. Key off. 2. Measure the resistance between:

EC65, harness side	Battery
Pin 01	Negative terminal

Is the resistance greater than 100 Kohms?

-> Yes
GO to Pinpoint Test G552286t28.

-> No
REPAIR the short circuit. For additional information, refer to the wiring diagrams. Clear any DTCs, test the system for normal operation.

G552286t28 : CHECK THE DPF DIFFERENTIAL PRESSURE SENSOR SIGNAL CIRCUIT FOR SHORT CIRCUIT TO POWER

1. Measure the resistance between:

EC65, harness side	Battery
Pin 01	Positive terminal

Is the resistance greater than 100 Kohms?

-> Yes
GO to Pinpoint Test G552286t29.

-> No

REPAIR the short circuit. For additional information, refer to the wiring diagrams. Clear any DTCs, test the system for normal operation.

G552286t29 : CHECK THE DPF DIFFERENTIAL PRESSURE SENSOR SIGNAL CIRCUIT FOR HIGH RESISTANCE

1. Disconnect the ECM connector, C101. 2. Measure the resistance between:

EC65, harness side	C101, harness side
Pin 01	D3

Is the resistance less than 10 ohms?

-> Yes
GO to Pinpoint Test G552286t30.

-> No
REPAIR the high resistance circuit. For additional information, refer to the wiring diagrams. Clear any DTCs, test the system for normal operation.

G552286t30 : CHECK THE DPF DIFFERENTIAL PRESSURE SENSOR GROUND CIRCUIT FOR HIGH RESISTANCE

1. Measure the resistance between:

EC65, harness side	C101, harness side
Pin 02	D2

Is the resistance less than 10 ohms?

-> Yes
An intermittent fault may be present in the wiring harness. Visually check for chaffed wires or other physical damage to the harness. If no fault is found in the circuit, suspect the following component(s): - DPF differential pressure sensor connector. - DPF differential pressure sensor. - ECM connector. - ECM.

-> No
REPAIR the high resistance circuit. For additional information, refer to the wiring diagrams. Clear any DTCs, test the system for normal operation.

www.JagDocs.com

Catalytic Converter - 4.2L NA V8 - AJV8/4.2L SC V8 - AJV8/3.0L NA V6 - AJ27/3.5L NA V8 - AJV8 (17.50.05)

Removal

1 . Raise and support the vehicle.
For additional information, refer to

2 . Remove the air deflector.
For additional information, refer to Air Deflector (76.11.41)

3 . Support the exhaust system with suitable stands.

4 . **NOTE:**

Right-hand shown, left-hand similar.

Disconnect the heated oxygen sensor electrical connector (HO2S).

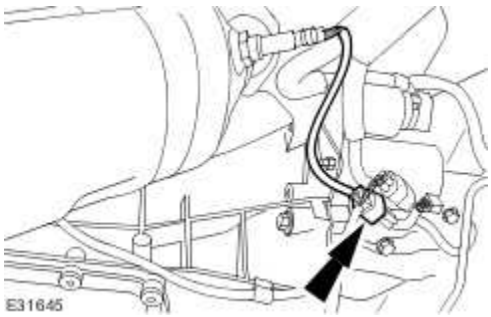

5 . **NOTE:**

Right-hand shown, left-hand similar.

Remove the (HO2S).

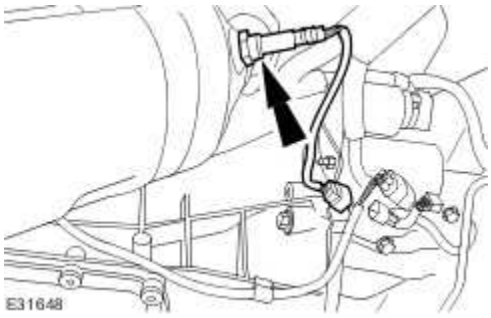

6 . **NOTE:**

Right-hand shown, left-hand similar.

Disconnect the catalyst monitor sensor electrical connector.

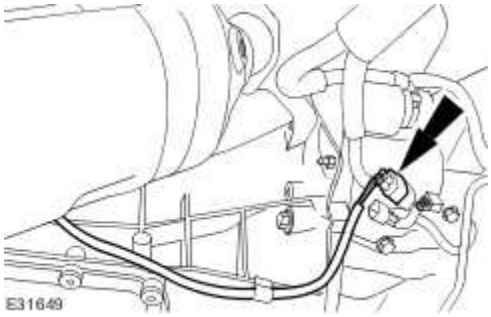

7 . **NOTE:**

Right-hand shown, left-hand similar.

Detach the catalyst monitor sensor.

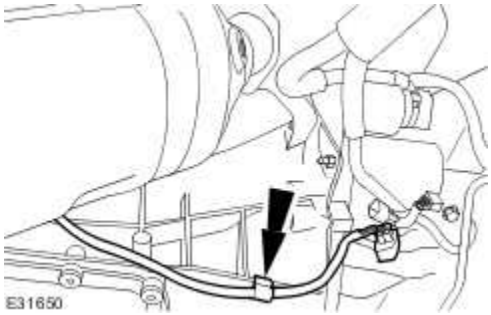

www.JagDocs.com

8 . **NOTE:**

Right-hand shown, left-hand similar.

Remove the catalyst monitor sensor.

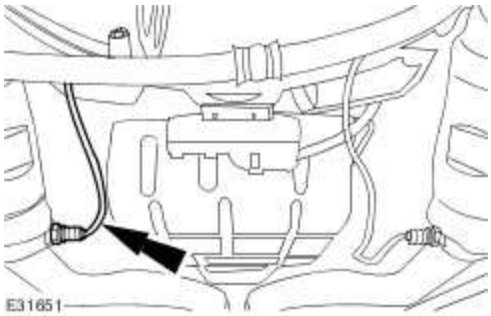

9 . **NOTE:**

Left-hand shown, right-hand similar.

Loosen the catalytic converter retaining clamp.

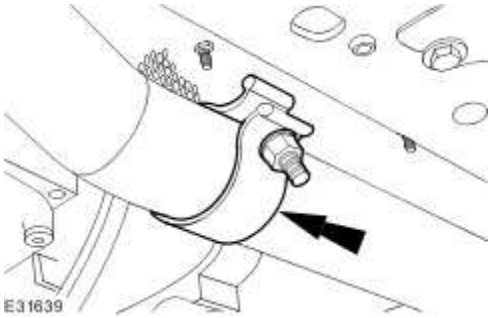

10 . **NOTE:**

Right-hand shown, left-hand similar.

Detach the catalytic converter.

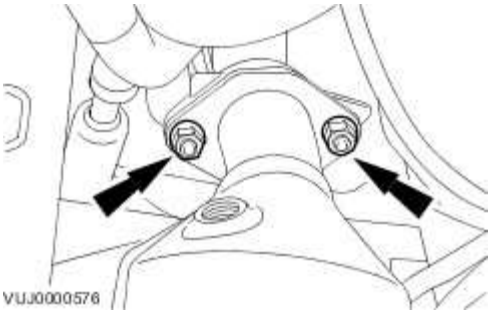

11 . **NOTE:**

Right-hand shown, left-hand similar.

Remove the catalytic converter.

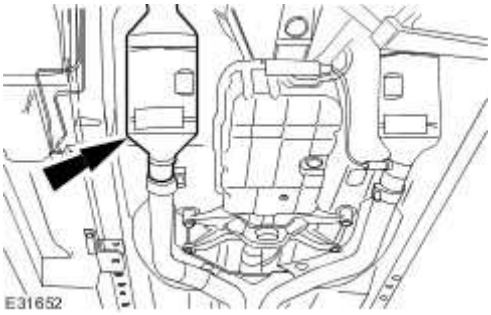

Installation

1 . **CAUTION: Never use jointing compound forward of the catalytic converter.**

NOTE:

Right-hand shown, left-hand similar.

To install reverse, the removal procedure.

Tighten to 40 Nm.

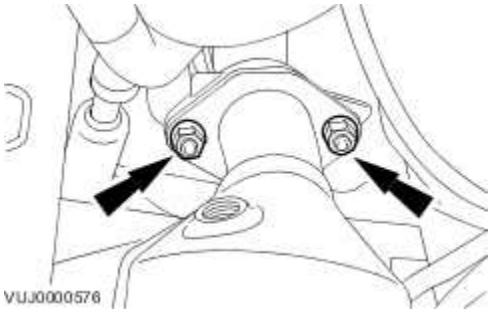

www.JagDocs.com

2 . **NOTE:**

Left-hand shown, right-hand similar.

Tighten to 55 Nm.

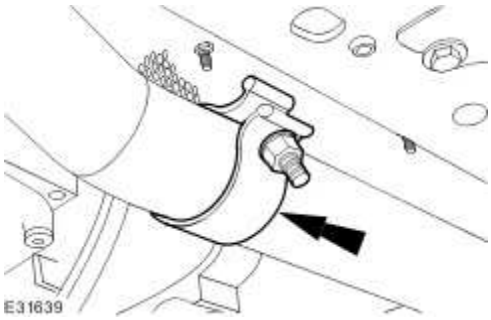

3 . **NOTE:**

Right-hand shown, left-hand similar.

Tighten to 40 Nm.

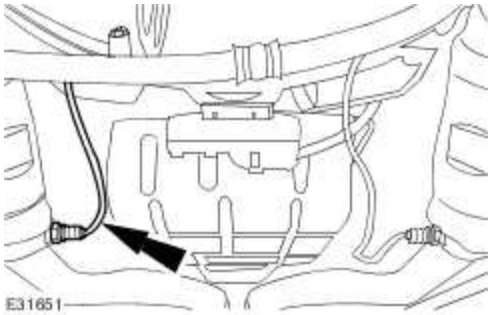

4 . **NOTE:**

Right-hand shown, left-hand similar.

Tighten to 40 Nm.

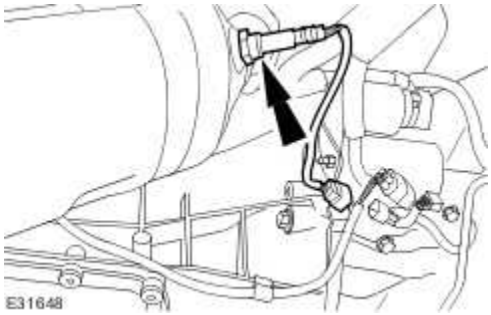

5 **NOTE:**

.

For NAS vehicles only.

If required, carry out a long drive cycle.
For additional information, refer to Powertrain Control Module (PCM) Long Drive Cycle Self-Test

www.JagDocs.com

Catalytic Converter - 2.7L V6 - TdV6 (17.50.05)

Removal

1 . Remove the air deflector.
For additional information, refer to Air Deflector (76.11.41)

2 . **NOTE:**

Right-hand shown, left-hand similar.

Loosen the catalytic converter to particulate filter retaining clamp.

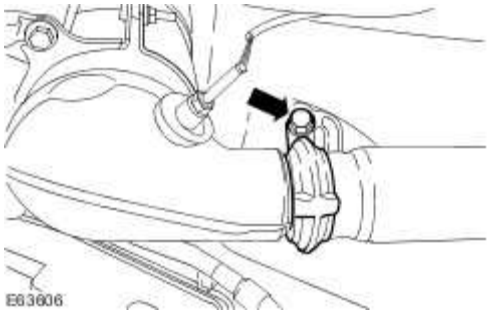

3 . **NOTE:**

Right-hand shown, left-hand similar.

Disconnect the catalytic converter temperature sensor electrical connectors.

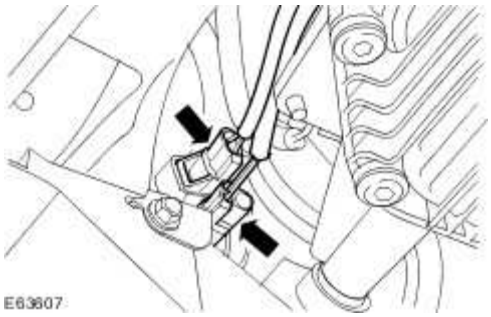

4 . **NOTE:**

Right-hand shown, left-hand similar.

Detach the catalytic converter temperature sensor wiring harness from the transmission.

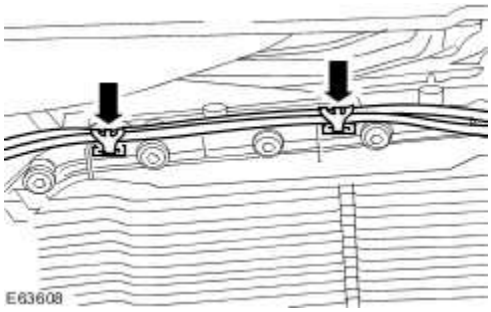

5 . **NOTE:**

Right-hand shown, left-hand similar.

Remove and discard the catalytic converter to turbocharger retaining nuts.

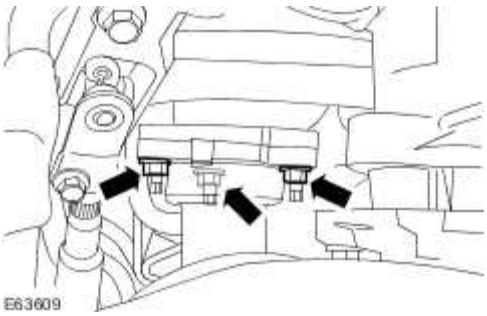

6 . **CAUTION: Make sure the catalytic converter is fully supported during removal. Failure to follow this instruction will result in damage to the catalytic converter decoupler joint.**

NOTE:

Right-hand shown, left-hand similar.

Remove the catalytic converter.

- Remove the retaining bolts.

www.JagDocs.com

- Remove and discard the gasket.

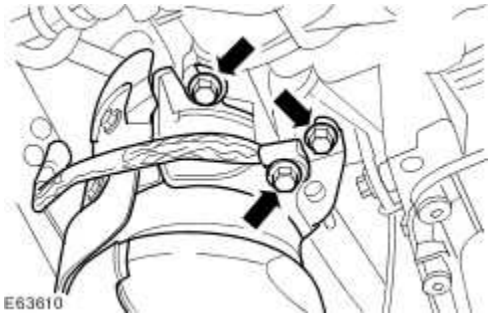

Installation

1. **CAUTION: Make sure the catalytic converter is fully supported during installation. Failure to follow this instruction will result in damage to the catalytic converter decoupler joint.**

CAUTION: Never use jointing compound forward of the catalytic converter.

NOTE:

Right-hand shown, left-hand similar.

Loosely install the catalytic converter.

- Install a new gasket.
- Install the retaining bolts.

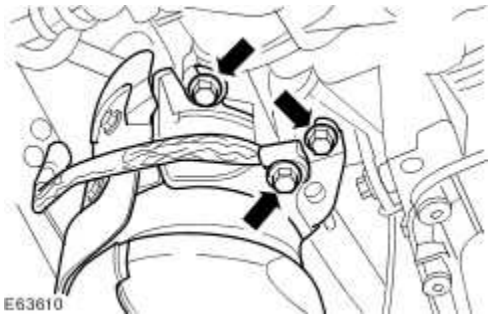

2 . **NOTE:**

Right-hand shown, left-hand similar.

Install new retaining nuts.

- Tighten to 22 Nm.

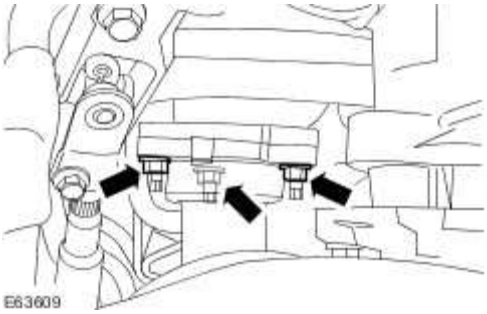

3 . **NOTE:**

Right-hand shown, left-hand similar.

Install the catalytic convertor to particulate filter retaining clamp.

- Tighten to 11 Nm.

www.JagDocs.com

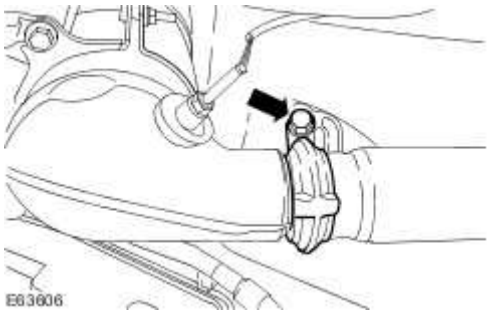

4 . **NOTE:**

Right-hand shown, left-hand similar.

Fully tighten the catalytic converter bracket retaining bolts.

Tighten to 25 Nm.

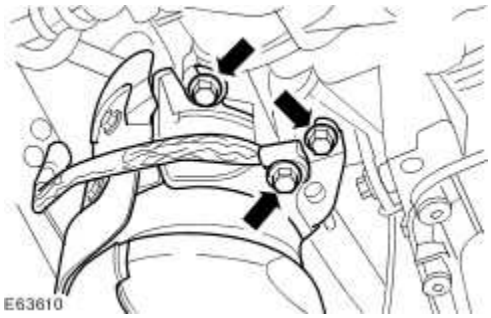

NOTE:

For vehicles prior to VIN H16767, refit old fixings and tighten to 22 Nm.

5 . **NOTE:**

Right-hand shown, left-hand similar.

Attach the catalytic converter temperature sensor wiring harness to the transmission.

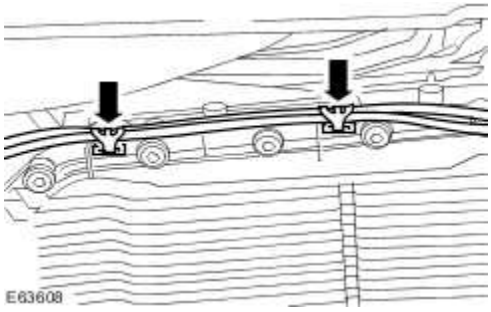

6 . **NOTE:**

Right-hand shown, left-hand similar.

Connect the catalytic converter temperature sensor electrical connectors.

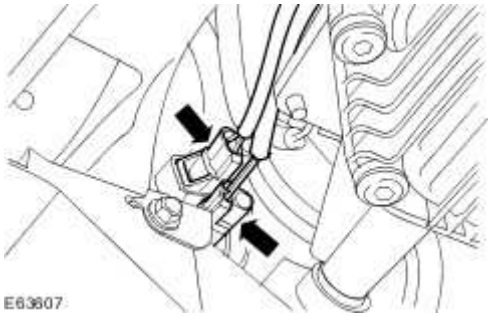

7 . Install the air deflector.
For additional information, refer to Air Deflector (76.11.41)

www.JagDocs.com

Diesel Particulate Filter (DPF)

Removal

1 . Raise the vehicle.
For additional information, refer to Lifting

2 . Loosen the front muffler retaining clamps.

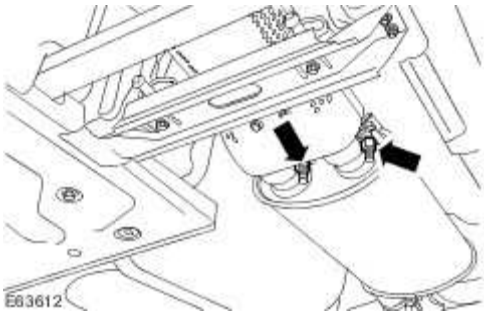

3 Remove the diesel particulate filter mount bracket.
.

Remove and discard the diesel particulate filter mount bracket retaining nuts.

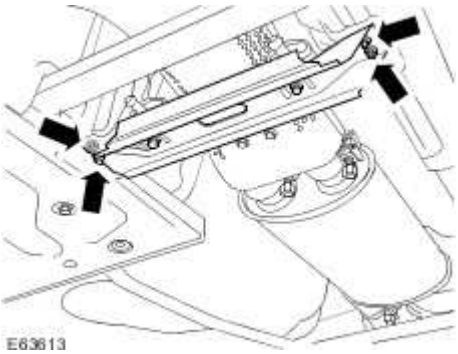

4 . Disconnect the diesel particulate filter temperature sensor electrical connector.

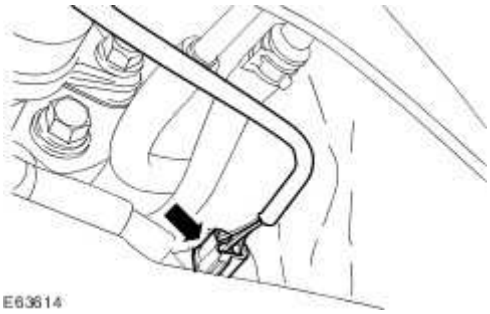

5 **NOTE:**

.

Note the orientation of the diesel particulate filter high-pressure and low-pressure hoses and make sure they are installed in the same position. There is a paint mark to identify their position.

Detach the diesel particulate filter high-pressure and low-pressure hoses.

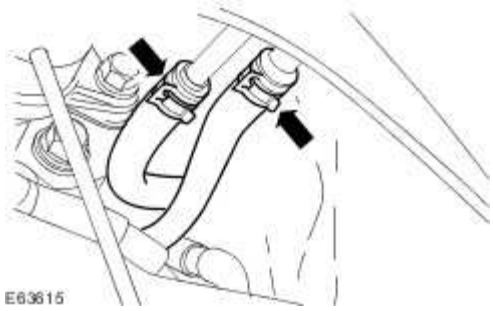

6 . **NOTE:**

Right-hand shown, left-hand similar.

Remove the diesel particulate filter to catalytic convertor retaining clamps.

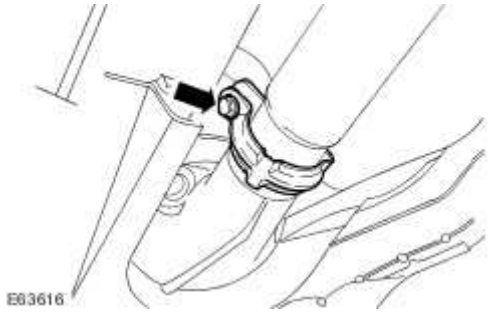

www.JagDocs.com

7 . Using an assistant remove the diesel particulate filter.

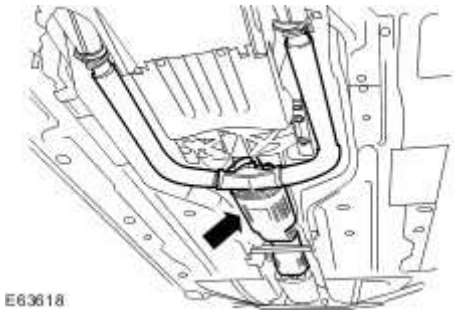

Installation

1 . **NOTE:**

Right-hand shown, left-hand similar.

To install, reverse the removal procedure.

Tighten to 11 Nm.

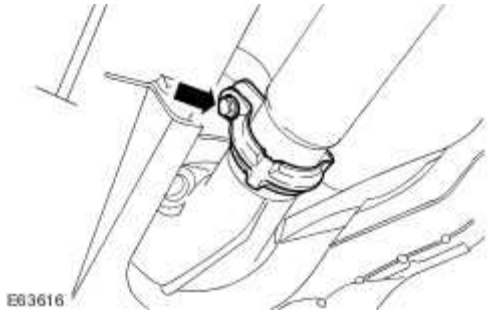

2 . Tighten to 55 Nm.

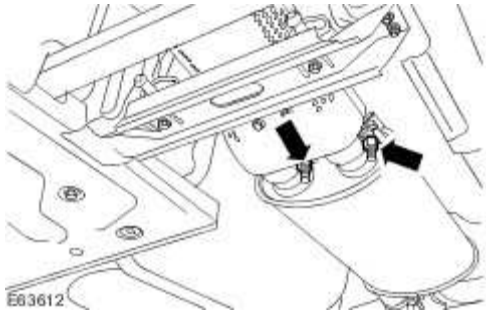

3 . **NOTE:**

Install new diesel particulate filter mount bracket retaining nuts.

Tighten to 9 Nm.

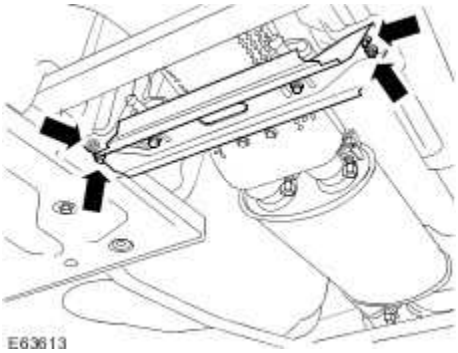

www.JagDocs.com

Diesel Particulate Filter (DPF) Differential Pressure Sensor

Removal

1 . Disconnect the diesel particulate filter differential pressure sensor electrical connector.

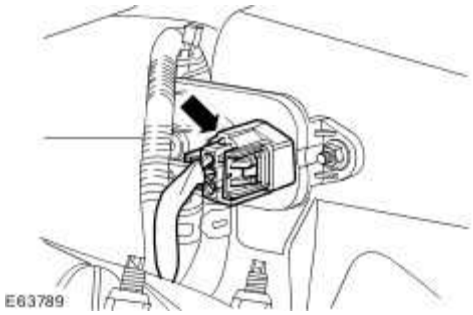

2 . **CAUTION: Make a note of the connection orientation of the high and low pressure hoses to the sensor ports. Make sure the hoses are located to the correct sensor port when installed. Failure to follow these instructions may result in damage to the vehicle.**

Detach the diesel particulate filter differential pressure sensor high-pressure and low-pressure hoses.

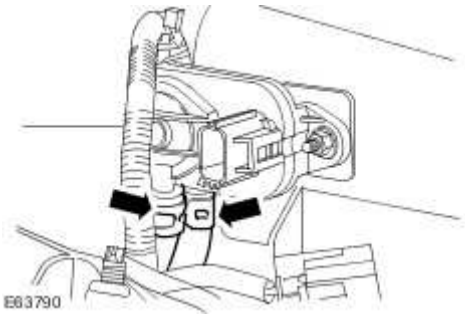

3 . Remove the diesel particulate filter differential pressure sensor.

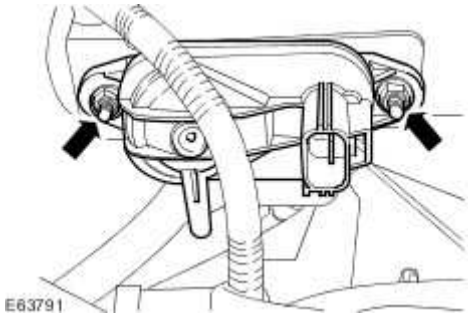

Installation

1. **CAUTION: Make sure the high and low pressure hoses are fully installed and the retaining clips are positioned in their original position.**

To install, reverse the removal procedure.

- Tighten to 5 Nm.

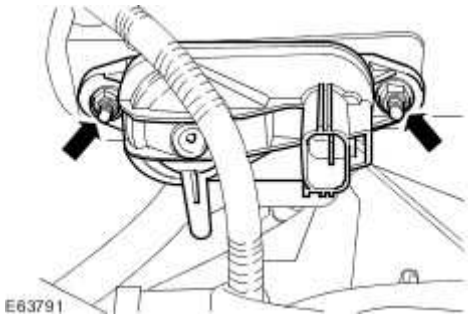

www.JagDocs.com

Exhaust System - 4.2L NA V8 - AJV8/4.2L SC V8 - AJV8/3.0L NA V6 - AJ27/3.5L NA V8 - AJV8

Removal

1 . Remove both muffler and tailpipes.
For additional information, refer to

2 . Remove the air deflector. <<501-02>>

3 . Support the exhaust system with suitable stands.

4 . **NOTE:**

Right-hand shown, left-hand similar.

Disconnect the heated oxygen sensor (HO2S) electrical connector.

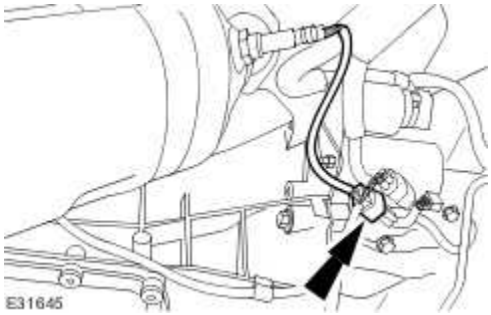

5 . **NOTE:**

Right-hand shown, left-hand similar.

Disconnect the catalyst monitor sensor electrical connector.

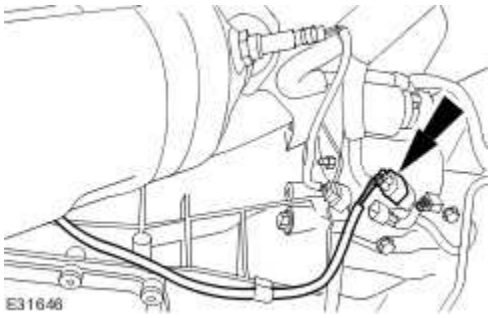

6 . **NOTE:**

Right-hand shown, left-hand similar.

Detach the catalyst monitor sensor.

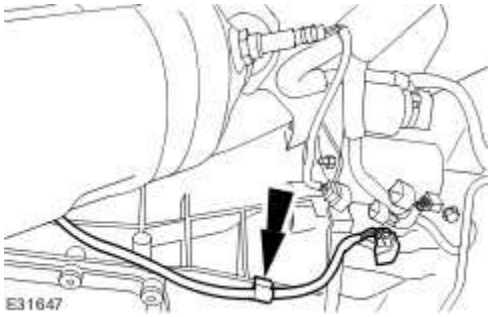

7 . **NOTE:**

Right-hand shown, left-hand similar.

Detach the catalytic converter.

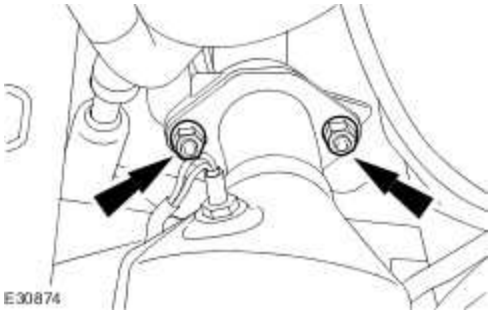

8 . Remove the exhaust system.

www.JagDocs.com

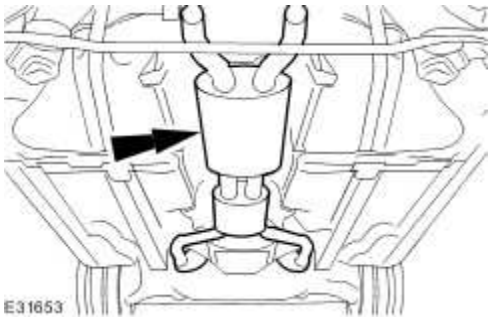

Installation

1 . **NOTE:**

Right-hand shown, left-hand similar.

To install, reverse the removal procedure.

Tighten to 40 Nm.

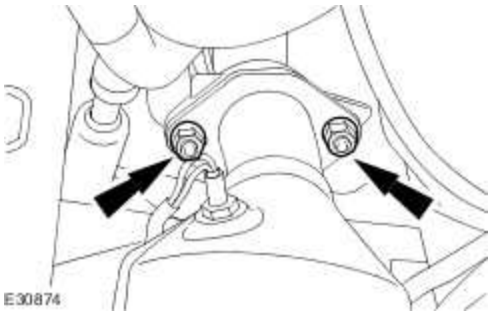

Exhaust System - 2.7L V6 - TdV6

Removal

1 . Remove both muffler and tailpipes.
For additional information, refer to Muffler and Tailpipe (30.10.52)

2 . **NOTE:**

Right-hand shown, left-hand similar.

Loosen the catalytic converter to particulate filter retaining clamp.

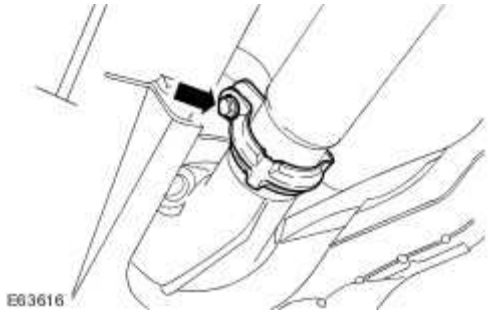

3 . **NOTE:**

Discard the diesel particulate filter mount bracket retaining nuts.

Remove the diesel particulate filter mount bracket.

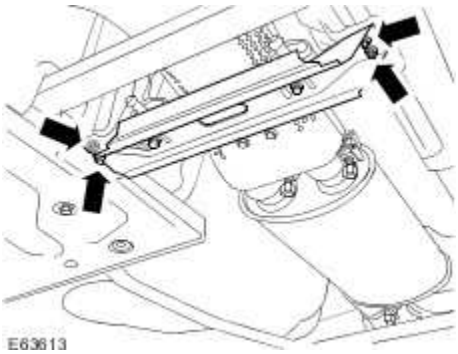

4 . Disconnect the diesel particulate filter temperature sensor electrical connector.

www.JagDocs.com

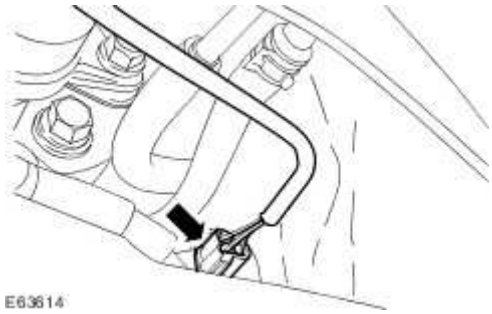

5 **NOTE:**

.

Note the orientation of the diesel particulate filter high-pressure and low-pressure hoses and make sure they are installed in the same position. There is a paint mark to identify the high-pressure hose.

Detach the diesel particulate filter high-pressure and low-pressure hoses.

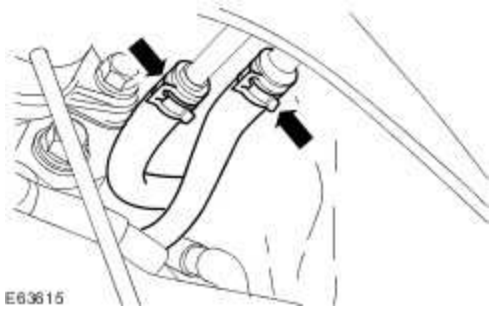

6 . **NOTE:**

Left-hand shown, right-hand similar.

Detach the under body tray.

1) Remove the under body tray retaining bolts.

2) Reposition the under body tray.

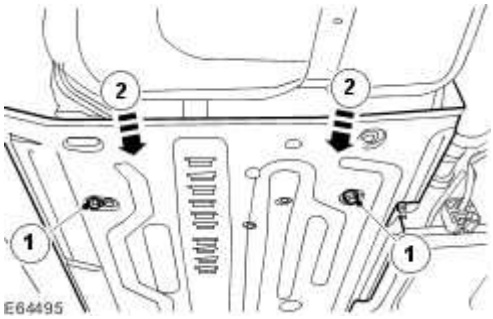

7 . Remove the support bracket.

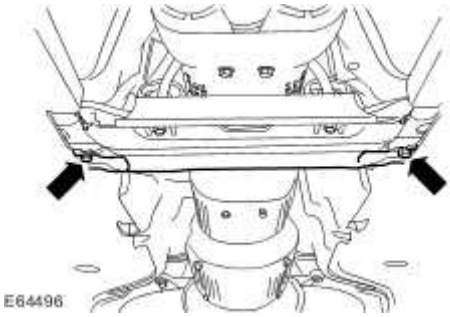

8 . Support the exhaust system with suitable stands.

9 . **NOTE:**

Discard the exhaust system to catalytic converter gaskets.

Using an assistant remove the exhaust system.

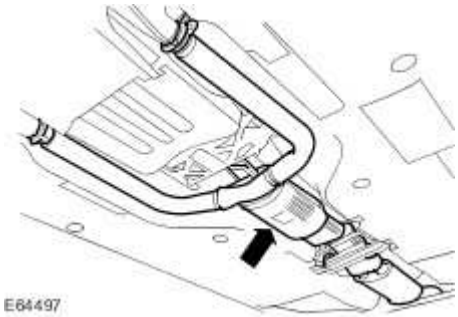

www.JagDocs.com

Installation

1 . **NOTE:**

Right-hand shown, left-hand similar.

NOTE:

Install new exhaust system to catalytic converter gaskets.

To install, reverse the removal procedure.

Tighten to 11 Nm.

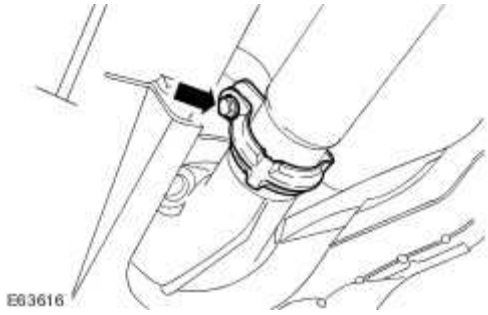

2 . Tighten to 9 Nm.

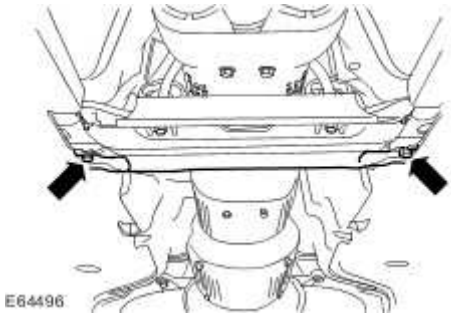

3 . Tighten to 10 Nm.

4 . **NOTE:**

Install new diesel particulate filter mount bracket retaining nuts.

Tighten to 9 Nm.

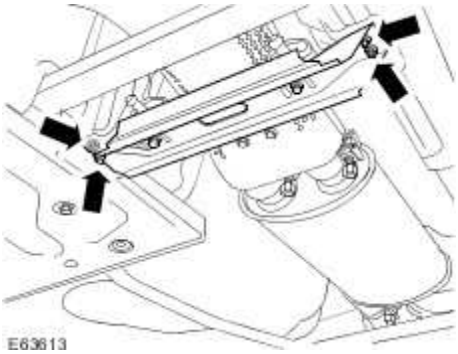

www.JagDocs.com

Front Muffler - 4.2L NA V8 - AJV8/4.2L SC V8 - AJV8/3.0L NA V6 - AJ27/3.5L NA V8 - AJV8 (30.10.18)

Removal

1 . Remove both muffler and tailpipes.
For additional information, refer to

2 . Support the exhaust system using suitable stands.

3 . **NOTE:**

Left-hand shown, right-hand similar.

Loosen both front muffler retaining clamps.

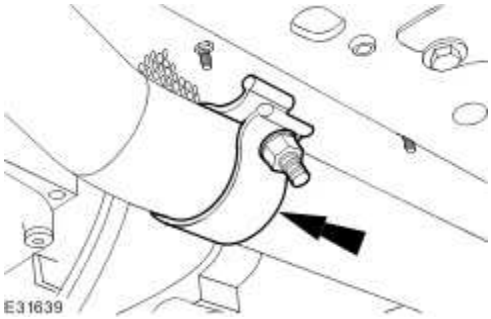

4 . Remove the front muffler.

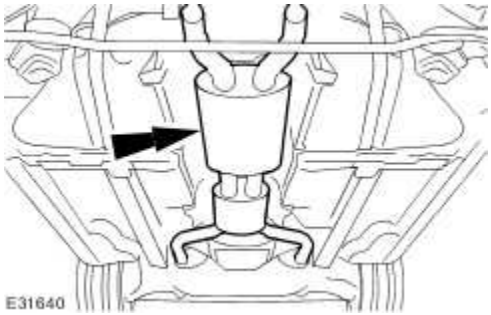

Installation

1 . **NOTE:**

Left-hand shown, right-hand similar.

To install, reverse the removal procedure.

Tighten to 55 Nm.

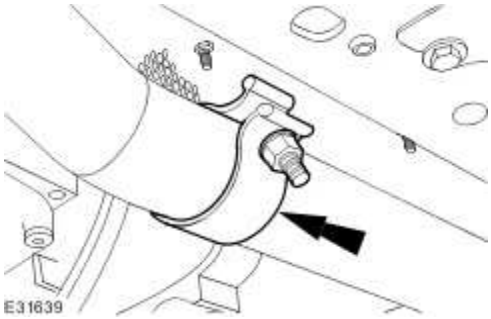

www.JagDocs.com

Front Muffler - 2.7L V6 - TdV6 (30.10.18)

Removal

1 . Raise and support the vehicle.
For additional information, refer to Lifting

2 . **CAUTION: The hanger insulators are constructed of a special material. Make sure the insulators are not damaged on removal of the front muffler. Failure to follow this instruction may result in damage to the vehicle.**

Detach the rear muffler and tailpipe assemblies.

- Loosen the rear muffler and tailpipe retaining clamps.

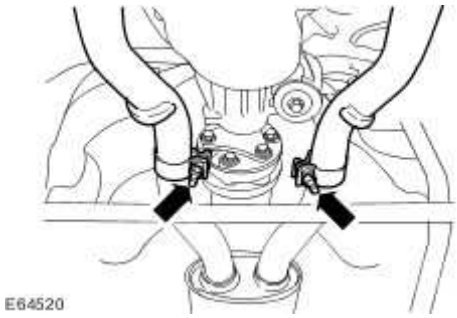

3 . Remove the front muffler.

- Loosen the front muffler to particulate filter retaining clamps.

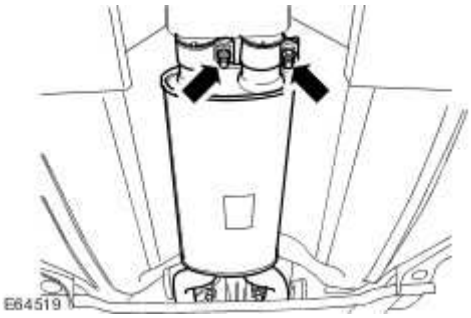

Installation

1 **NOTE:**

.

Make sure the front muffler is installed fully to the alignment pips on the diesel particulate filter outlet pipes.

Install the front muffler.

Tighten to 55 Nm.

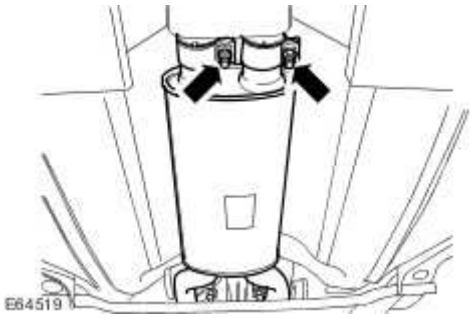

2

. **CAUTION: The hanger insulators are constructed of a special material. Make sure the insulators are not damaged on installation. Split or cracked insulators should be replaced. Failure to follow this instruction may result in damage to the vehicle.**

CAUTION: Alignment marks are provided for the correct alignment of the muffler and tailpipe assemblies to the front muffler. Make sure the muffler and tailpipe assemblies align between the two tolerance markers. Failure to follow this instruction may result in damage to the vehicle.

NOTE:

Make sure the muffler and tailpipe is central in the bumper aperture.

Attach the rear muffler and tailpipe assemblies.

Tighten to 55 Nm.

www.JagDocs.com

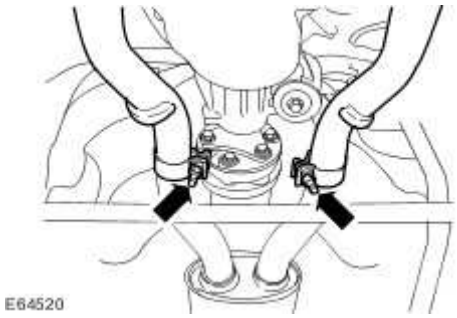

3 . Lower the vehicle.

Muffler and Tailpipe (30.10.52)

Removal

1 . Raise and support the vehicle.
For additional information, refer to Lifting

2 . **NOTE:**

Right-hand shown, left-hand similar.

Loosen the muffler and tailpipe retaining clamp.

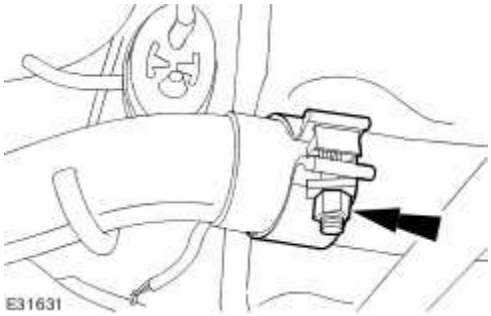

3 . **NOTE:**

Right-hand shown, left-hand similar.

Detach the muffler and tailpipe hanger insulator.

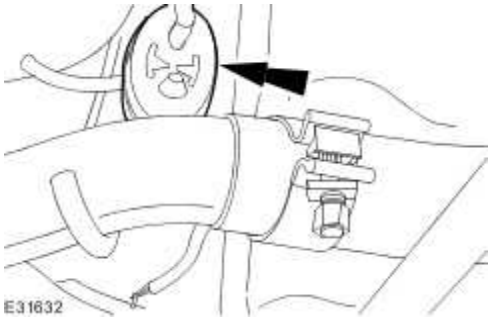

4 . **CAUTION: Do not over stretch the hanger insulator. Failure to follow this instruction may result in damage to the vehicle.**

www.JagDocs.com

NOTE:

Right-hand shown, left-hand similar.

Detach the muffler and tailpipe hanger insulator.

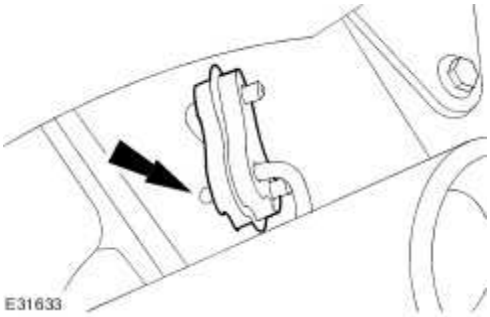

5 . **NOTE:**

Right-hand shown, left-hand similar.

Remove the muffler and tailpipe.

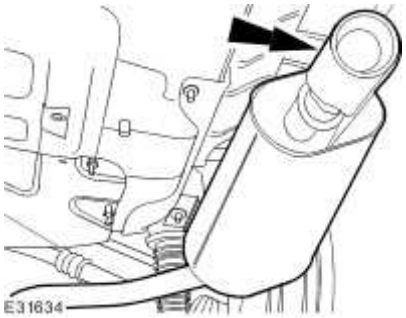

Installation

1 . **CAUTION: The hanger insulators are constructed of a special material. Make sure the insulators are not damaged on installation. Split or cracked insulators should be replaced. Failure to follow this instruction may result in damage to the vehicle.**

CAUTION: Alignment marks are provided for the correct alignment of the muffler

and tailpipe assemblies to the front muffler. Make sure the muffler and tailpipe assemblies align between the two tolerance markers. Failure to follow this instruction may result in damage to the vehicle.

NOTE:

Make sure the muffler and tailpipe is central in the bumper aperture.

NOTE:

Right-hand shown, left-hand similar.

To install, reverse the removal procedure.

- Tighten to 55 Nm.

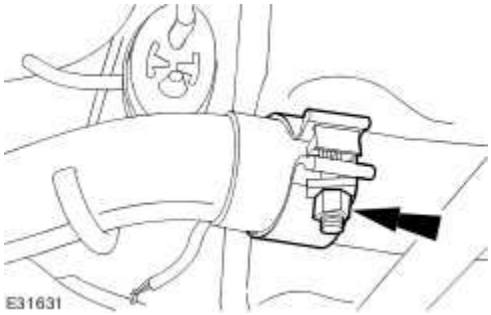

www.JagDocs.com

310 : Fuel System

310-00 : Fuel System – General Information

Specifications

Specifications

General Specifications

Item	Specification
Usable fuel tank capacity	85 liters

Fuel System Pressure Check

NOTE:

This procedure is for the installation of the adaptor into the fuel line due to the removal of the schraeder valve from the fuel line.

1.

WARNING: Place the vehicle in a quarantined area and arrange "No Smoking/Petrol Fumes" signs about the vehicle.

WARNING: Before any work is carried out on the fuel system, ground the vehicle to earth and maintain the ground connection until the work is complete.

WARNING: Do not smoke or carry lighted tobacco or open flame of any type when working on or near any fuel related components. Highly flammable vapors are always present and may ignite. Failure to follow these instructions may result in personal injury.

WARNING: Do not carry or operate cellular phones when working on or near any fuel related components. Highly flammable vapors are always present and may ignite. Failure to follow these instructions may result in personal injury.

WARNING: The fuel system remains pressurized for a long time after the ignition is switched off. The fuel pressure must be relieved before attempting any repairs. Failure to follow these instructions may result in personal injury.

WARNING: This procedure involves fuel handling. Be prepared for fuel spillage at all times and always observe fuel handling precautions. Failure to follow these instructions may result in personal injury.

WARNING: After carrying out repairs, the fuel system must be checked visually for leaks. Failure to follow these instructions may result in personal injury.

Disconnect the battery ground cable.
Battery Disconnect and Connect

www.JagDocs.com

2. Remove the engine cover.

3. Remove the air cleaner outlet pipe.
Air Cleaner Outlet Pipe (19.10.31)

4. Detach the power steering fluid reservoir and reposition.

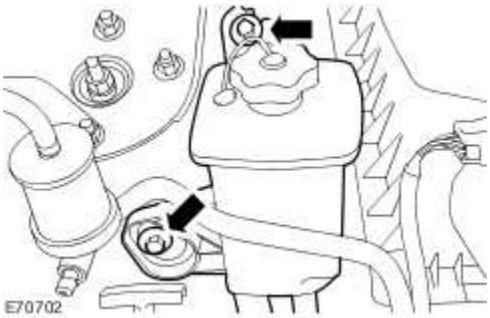

5. Disconnect the electrical connector.

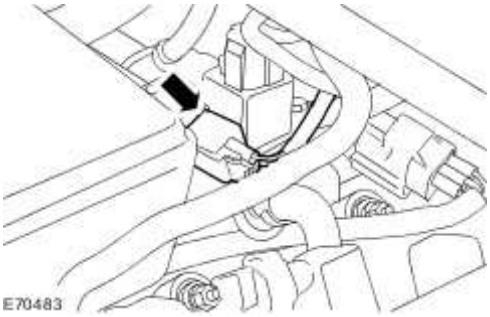

6. Detach the fuel line retaining clip.

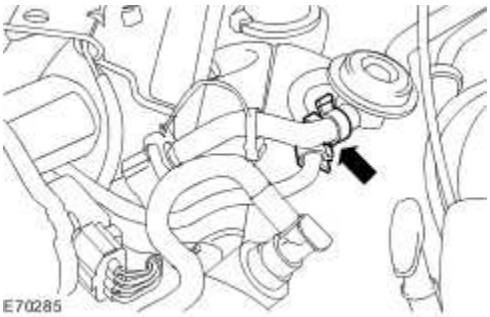

7. Disconnect the fuel rail feed pipe.
Spring Lock Couplings

8. **NOTE:**
   Make sure the special tool is fully seated to the fuel pipe connections.

Install the special tool.

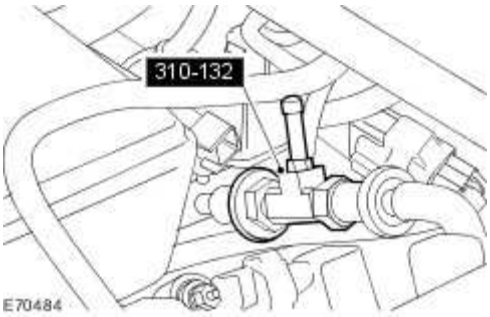

9. **NOTE:**
   Make sure the special tool is fully seated to the fuel pipe connections.

Install the special tool.

10. **NOTE:**
    Make sure the special tool is fully seated to the fuel pipe connections.

Install the special tool.

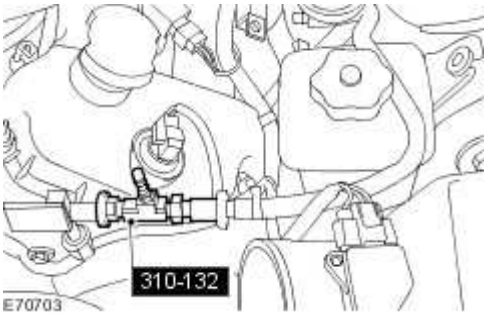

11. Install the air cleaner outlet pipe.
Air Cleaner Outlet Pipe (19.10.31)

12. **NOTE:**
    Vehicles with 4.2L engine shown, other vehicles similar.

Install the fuel pressure gauge.

www.JagDocs.com

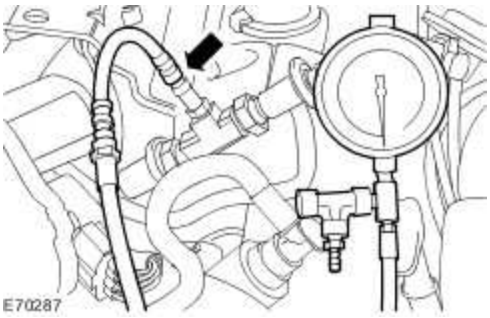

13. Connect the battery ground cable.
Battery Connect (86.15.15)

14. Carry out the fuel system pressure check.
Fuel Charging and Controls - VIN Range: G45704->G99999
Fuel Charging and Controls - VIN Range: G45704->G99999

Fuel System Pressure Release - 4.2L NA V8 - AJV8/4.2L SC V8 - AJV8/3.0L NA V6 - AJ27/3.5L NA V8 - AJV8 (19.50.02)

Special Service Tools

310012

Fuel Pressure Gauge
310-012 (JD209)

1.

WARNING: Place the vehicle in a quarantined area and arrange "No Smoking/Petrol Fumes" signs about the vehicle.

WARNING: Before any work is carried out on the fuel system, ground the vehicle to earth and maintain the ground connection until the work is complete.

WARNING: Do not smoke or carry lighted tobacco or open flame of any type when working on or near any fuel related components. Highly flammable vapors are always present and may ignite. Failure to follow these instructions may result in personal injury.

WARNING: The fuel system remains pressurized for a long time after the ignition is switched off. The fuel pressure must be relieved before attempting any repairs. Failure to follow these instructions may result in personal injury.

WARNING: After carrying out repairs, the fuel system must be checked visually for leaks. Failure to follow these instructions may result in personal injury.

www.JagDocs.com

WARNING: This procedure involves fuel handling. Be prepared for fuel spillage at all times and always observe fuel handling precautions. Failure to follow these instructions may result in personal injury.

WARNING: If taken internally do not induce vomiting, seek immediate medical attention. Failure to follow these instructions may result in personal injury.

WARNING: If fuel contacts the eyes, flush the eyes with cold water or eyewash solution and seek medical attention.

WARNING: Wash hands thoroughly after handling, as prolonged contact may cause irritation. Should irritation develop, seek medical attention.

Disconnect the battery ground cable.

2. Remove the fuel system pressure relief valve cap.

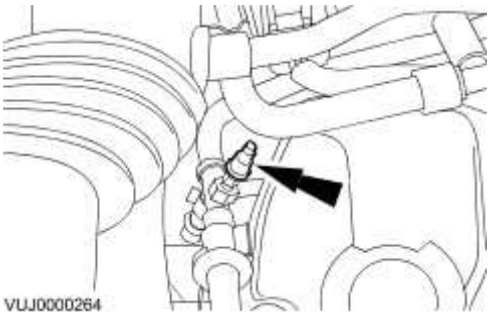

3.

WARNING: Make sure the tap of the special tool is rotated fully clockwise before installing the special tool to the fuel system pressure relief valve. Failure to follow these instructions may result in personal injury.

Install the special tool to the fuel system pressure relief valve.

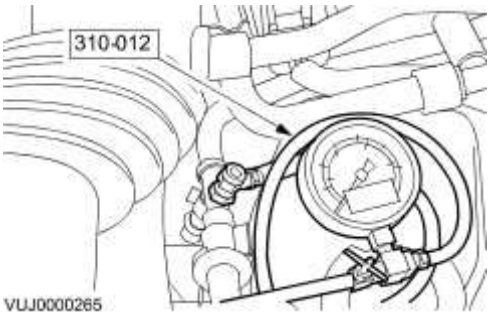

4. **NOTE:**

   When relieving the fuel system pressure, catch any displaced fuel in a suitable container.

Relieve the fuel system pressure.

- Rotate the tap of the special tool fully counterclockwise.

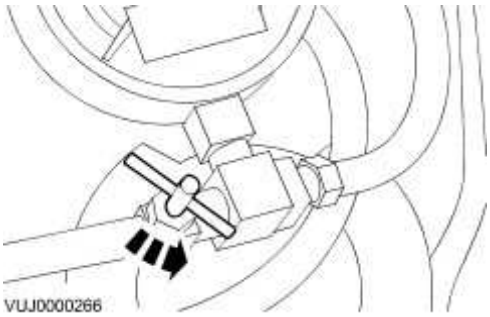

5. Remove the special tool from the fuel system pressure relief valve.

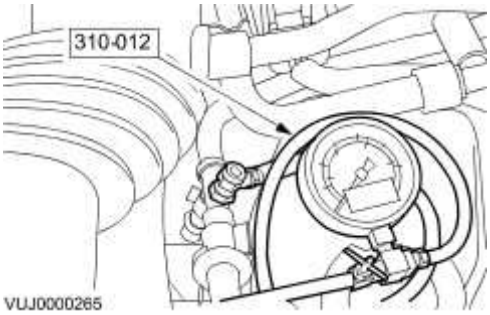

6. Install the fuel system pressure relief valve cap.

www.JagDocs.com

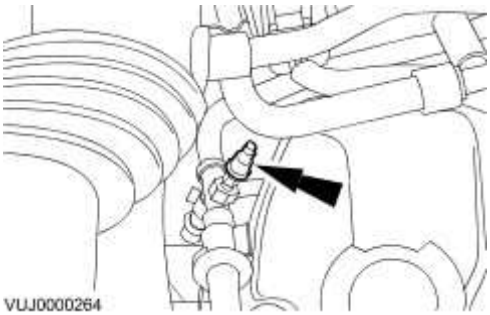

7. Connect the battery ground cable.

Fuel System Pressure Release - 2.7L V6 - TdV6 (19.50.02)

WARNING: Place the vehicle in a quarantined area and arrange "No Smoking/Petrol Fumes" signs about the vehicle.

WARNING: Before any work is carried out on the fuel system, ground the vehicle to earth and maintain the ground connection until the work is complete.

WARNING: Do not smoke or carry lighted tobacco or open flame of any type when working on or near any fuel related components. Highly flammable vapors are always present and may ignite. Failure to follow these instructions may result in personal injury.

WARNING: The fuel system remains pressurized for a long time after the ignition is switched off. The fuel pressure must be relieved before attempting any repairs. Failure to follow these instructions may result in personal injury.

WARNING: After carrying out repairs, the fuel system must be checked visually for leaks. Failure to follow these instructions may result in personal injury.

WARNING: This procedure involves fuel handling. Be prepared for fuel spillage at all times and always observe fuel handling precautions. Failure to follow these instructions may result in personal injury.

WARNING: If taken internally do not induce vomiting, seek immediate medical attention. Failure to follow these instructions may result in personal injury.

WARNING: If fuel contacts the eyes, flush the eyes with cold water or eyewash solution and seek medical attention.

WARNING: Wash hands thoroughly after handling, as prolonged contact may cause irritation. Should irritation develop, seek medical attention.

1. Disconnect the battery ground cable.
Battery Disconnect and Connect

www.JagDocs.com

2. **NOTE:**

When relieving the fuel system pressure, catch any displaced fuel in a suitable container.

Relieve the fuel system pressure.

- Disconnect the fuel filter to fuel pump supply line from the fuel filter.

Quick Release Coupling - Push Connect

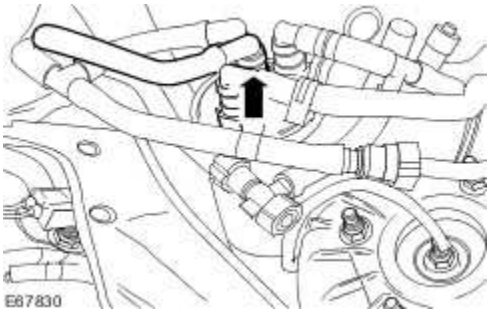

3. Connect the fuel filter to fuel pump supply line to the fuel filter.

Quick Release Coupling - Push Connect

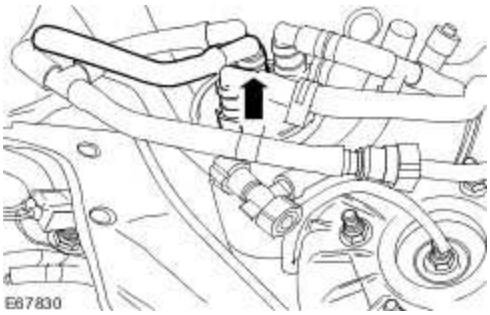

4. Connect the battery ground cable.

Battery Connect (86.15.15)

Fuel Tank Draining - VIN Range: G00442->G45703

Special Service Tools

Remover/Installer, Fuel Pump Module/Fuel Transfer Pump Locking Ring
310-072A

1.

WARNING: Place the vehicle in a well ventilated, quarantined area and arrange "No Smoking/Petrol Fumes" signs about the vehicle.

WARNING: Before any work is carried out on the fuel system, ground the vehicle to earth and maintain the ground connection until the work is complete.

WARNING: Do not smoke or carry lighted tobacco or open flame of any type when working on or near any fuel related components. Highly flammable vapors are always present and may ignite. Failure to follow these instructions may result in personal injury.

WARNING: Do not carry or operate cellular phones when working on any fuel related components. Highly flammable vapors are always present and may ignite. Failure to follow these instructions may result in personal injury.

WARNING: The fuel system remains pressurized for a long time after the ignition is switched off. The fuel pressure must be relieved before attempting any repairs. Failure to follow these instructions may result in personal injury.

www.JagDocs.com

WARNING: After carrying out repairs, the fuel system must be checked visually for leaks. Failure to follow these instructions may result in personal injury.

WARNING: This procedure involves fuel handling. Be prepared for fuel spillage at all times and always observe fuel handling precautions. Failure to follow these instructions may result in personal injury.

WARNING: If taken internally do not induce vomiting, seek immediate medical attention. Failure to follow these instructions may result in personal injury.

WARNING: If fuel contacts the eyes, flush the eyes with cold water or eyewash solution and seek medical attention.

WARNING: Wash hands thoroughly after handling, as prolonged contact may cause irritation. Should irritation develop, seek medical attention.

Release the pressure in the fuel system.
Fuel System Pressure Release - 4.2L NA V8 - AJV8/4.2L SC V8 - AJV8/3.0L NA V6 - AJ27/3.5L NA V8 - AJV8 (19.50.02)

2. Open the fuel filler flap.

3. Disconnect the battery ground cable. <<414-01>>

4. Detach the fuel tank filler pipe cap.

5. Raise and support the vehicle. <<100-02>>

6. Remove the left-hand under body tray.

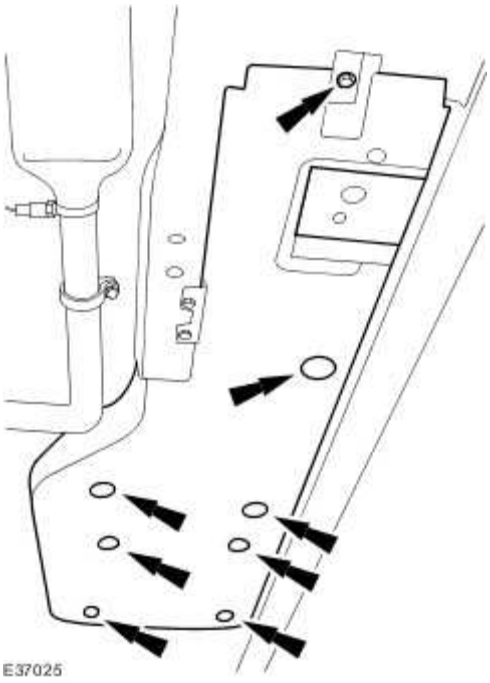

7.

CAUTION: Using a suitable container, catch any escaping fuel.

Disconnect the fuel feed pipe.

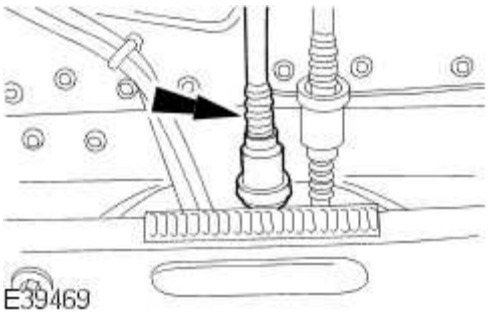

8. Using a suitable pneumatic pump, remove the fuel from the fuel tank. Follow the manufacturers operating instructions.

- Connect the pneumatic fuel draining equipment to the fuel feed pipe.

9. Connect the fuel feed pipe.

www.JagDocs.com

10. Fit the left-hand under body tray.

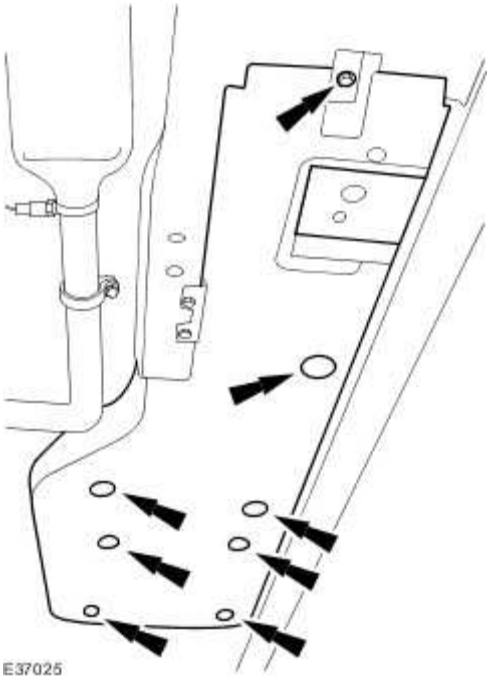

11. Lower the vehicle.

12. Remove the rear seat cushion. <<501-10>>

13. **NOTE:**

    Right-hand shown, left-hand similar.

Remove the scuff plate trim panel.

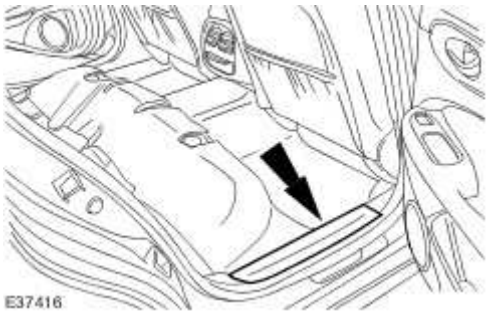

14. **NOTE:**

Right-hand shown, left-hand similar.

Detach and reposition the floor covering.

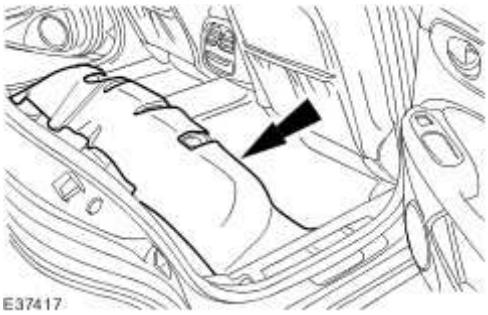

15. **NOTE:**

Right-hand shown, left-hand similar.

Detach and reposition the rear seat cushion insulation.

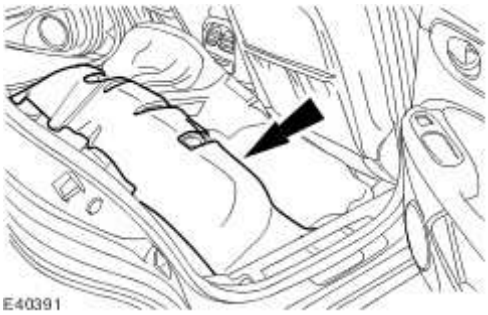

16. Remove the floor aperture cover.

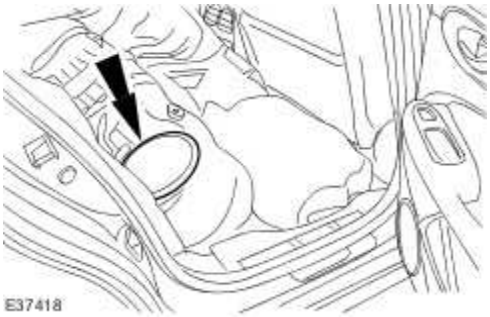

17. Disconnect the fuel pump module quick release coupling.

www.JagDocs.com

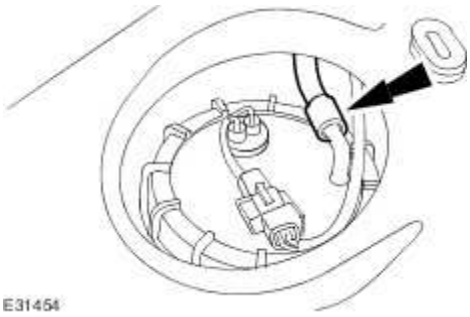

18. Detach the fuel pump module electrical connector from the retaining bracket.

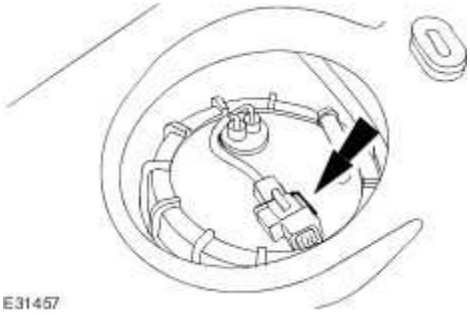

19. Disconnect the fuel pump module electrical connector.

20. Using the special tool, remove the fuel pump module locking ring.

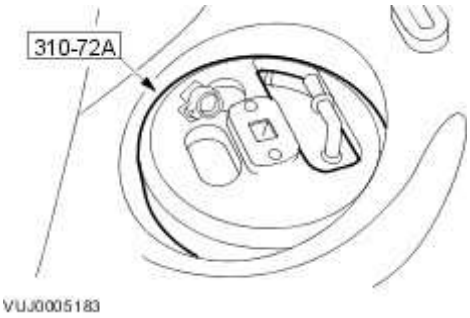

21. Detach and reposition the upper part of the fuel pump module.

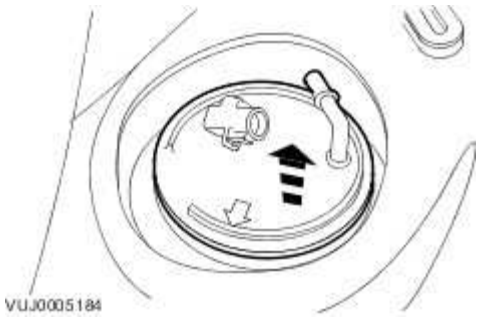

22. Remove the floor aperture cover.

23. **NOTE:**

    Vehicles without supercharger shown, vehicles with supercharger similar.

Detach the fuel transfer pump module electrical connector from the retaining bracket.

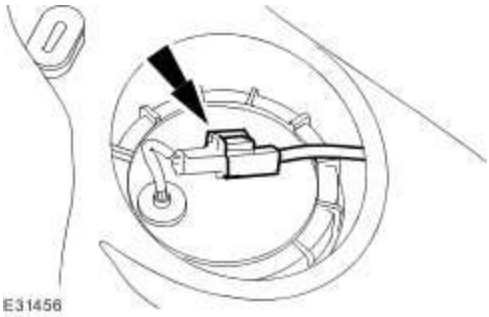

24. **NOTE:**

    Vehicles without supercharger shown, vehicles with supercharger similar.

Disconnect the fuel transfer pump electrical connector.

www.JagDocs.com

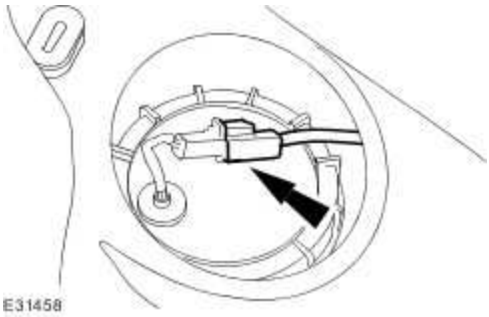

25. **NOTE:**

Vehicles without supercharger shown, vehicles with supercharger similar.

Using the special tool, remove the fuel transfer pump locking ring.

26. **NOTE:**

Vehicles without supercharger shown, vehicles with supercharger similar.

Detach and reposition the upper part of the fuel transfer pump.

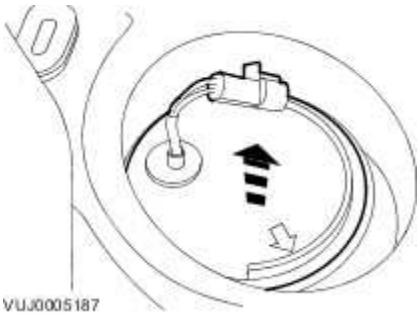

27.

CAUTION: Make sure no damage occurs to the fuel level float.

Remove the fuel transfer pump.

- Disconnect the fuel cross over lines.

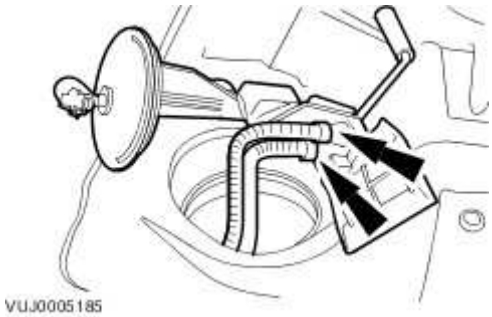

28. Remove and discard the fuel transfer pump O-ring seal.

29.

CAUTION: Make sure no damage occurs to the fuel level float.

Remove the fuel pump module.

- Remove and discard the fuel pump module O-ring seal.

30. Using the fuel pump module hole in the fuel tank to gain access to the fuel, remove the fuel from the fuel tank using the fuel tank draining equipment. Follow the manufacturers operating instructions.

31. Using the fuel transfer pump hole in the fuel tank to gain access to the fuel, remove the fuel from the fuel tank using the fuel tank draining equipment. Follow the manufacturers operating instructions.

32.

CAUTION: On vehicles with supercharger make sure the arrow on the fuel pump module and the 'SC' marker on the fuel tank are aligned.

www.JagDocs.com

CAUTION: On vehicles without supercharger make sure the arrow on the fuel pump module and the 'NA' marker on the fuel tank are aligned.

CAUTION: On vehicles without supercharger make sure the arrow on the fuel transfer module and the 'NA' marker on the fuel tank are aligned.

CAUTION: Make sure no damage occurs to the fuel level floats.

NOTE:

Install a new O-ring seal to the fuel pump module flange.

NOTE:

Take care not to stretch the O-ring seal.

Install the fuel pump module.

- For vehicles without supercharger feed the fuel cross-over lines through the fuel pump module hole and across the front of the fuel tank saddle.

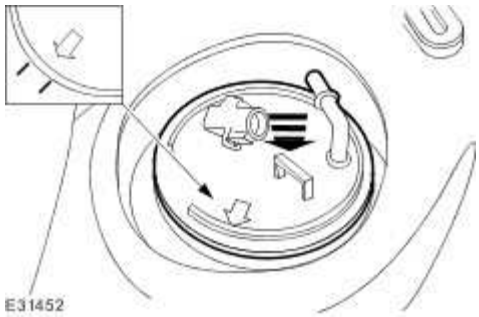

33. Using the special tool, install the fuel pump module locking ring.

- Tighten to 70 Nm.

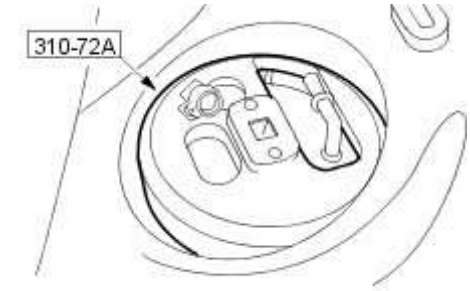

VUJ0005183

34. Connect the fuel pump module electrical connector.

E31453

35. Attach the fuel pump module electrical connector to the retaining bracket.

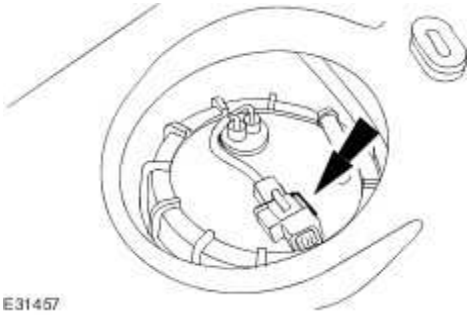

E31457

36. Connect the fuel pump module quick release coupling.

- Make sure the quick release coupling has latched onto the fuel pump module fuel pipe by pulling the pipe after the connection has been made.

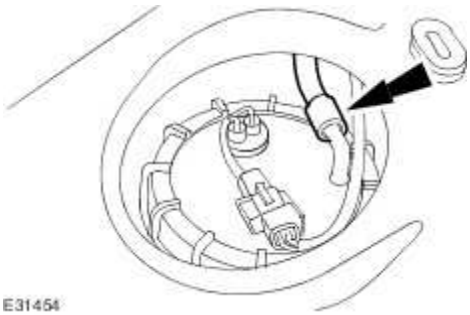

E31454

www.JagDocs.com

37. Install the floor aperture cover.

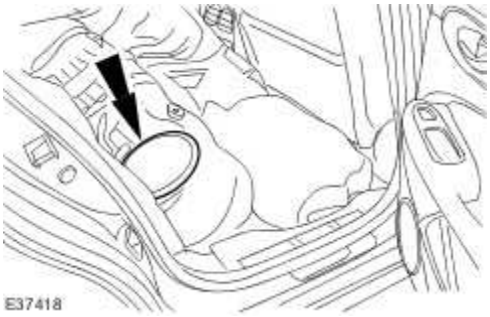

38.

CAUTION: Vehicles with supercharger - make sure the arrow on the left-hand fuel pump module lines up with the 'SC' marker on the fuel tank.

CAUTION: Vehicles without supercharger - make sure the arrow on the fuel transfer pump lines up with the 'NA' marker on the fuel tank.

CAUTION: Make sure no damage occurs to the fuel level float.

NOTE:

Install a new O-ring seal to the fuel transfer pump flange.

NOTE:

Take care not to stretch the O-ring seal.

Install the fuel transfer pump.

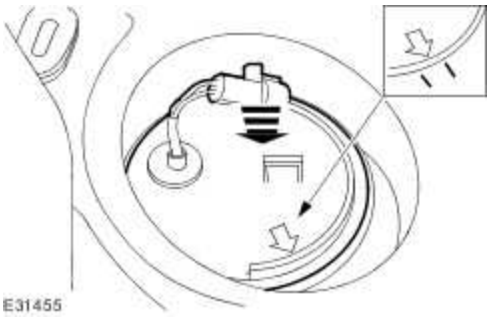

39. **NOTE:**

Vehicles without supercharger shown, vehicles with supercharger similar.

Using the special tool, install the fuel transfer pump locking ring.

- Tighten to 70 Nm.

40. **NOTE:**

Vehicles without supercharger shown, vehicles with supercharger similar.

Connect the fuel transfer pump electrical connector.

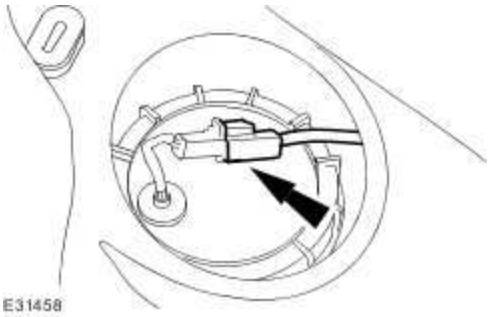

www.JagDocs.com

41. **NOTE:**

Vehicles without supercharger shown, vehicles with supercharger similar.

Attach the fuel transfer pump module electrical connector to the retaining bracket.

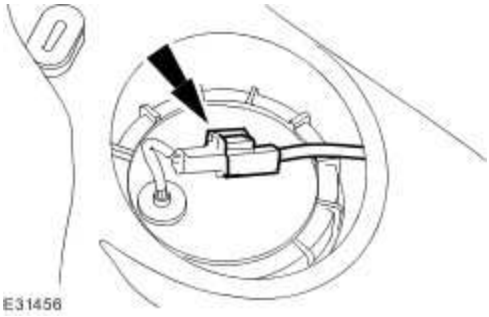

42. Install the floor aperture cover.

43. **NOTE:**

Right-hand shown, left-hand similar.

Attach the rear seat cushion insulation.

44. **NOTE:**

Right-hand shown, left-hand similar.

Attach the floor covering.

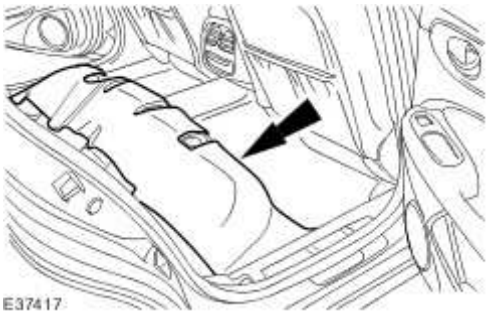

45. **NOTE:**

    Right-hand shown, left-hand similar.

Install the scuff plate trim panels.

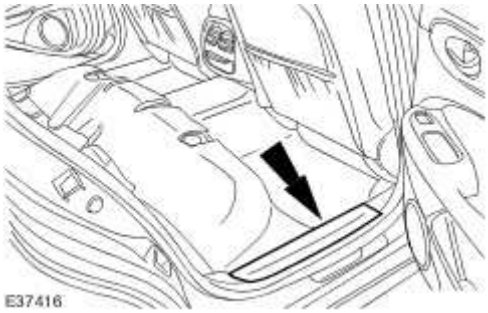

46. Install the rear seat cushion. <<501-10>>

47. Attach the fuel tank filler pipe cap.

48. Connect the battery ground cable. <<414-01>>

49. Close the fuel tank filler pipe flap.

www.JagDocs.com

Fuel Tank Draining - VIN Range: G45704->G99999

Special Service Tools

Fuel tank drain adaptor
310-154

WARNING: Place the vehicle in a quarantined area and arrange "No Smoking/Petrol Fumes" signs about the vehicle.

WARNING: Before any work is carried out on the fuel system, ground the vehicle to earth and maintain the ground connection until the work is complete.

WARNING: Do not smoke or carry lighted tobacco or open flame of any type when working on or near any fuel related components. Highly flammable vapors are always present and may ignite. Failure to follow these instructions may result in personal injury.

WARNING: Do not carry or operate cellular phones when working on any fuel related components. Highly flammable vapors are always present and may ignite. Failure to follow these instructions may result in personal injury.

WARNING: The fuel system remains pressurized for a long time after the ignition is switched off. The fuel pressure must be relieved before attempting any repairs. Failure to follow these instructions may result in personal injury.

WARNING: After carrying out repairs, the fuel system must be checked visually for leaks. Failure to follow these instructions may result in personal injury.

WARNING: This procedure involves fuel handling. Be prepared for fuel spillage at all times and always observe fuel handling precautions. Failure to follow these instructions may result in personal injury.

WARNING: If taken internally do not induce vomiting, seek immediate medical attention. Failure to follow these instructions may result in personal injury.

WARNING: If fuel contacts the eyes, flush the eyes with cold water or eyewash solution and seek medical attention.

WARNING: Wash hands thoroughly after handling, as prolonged contact may cause irritation. Should irritation develop, seek medical attention.

1. Release the pressure in the fuel system.
Fuel System Pressure Release - 2.7L V6 - TdV6 (19.50.02)

2. Remove the rear seat cushion.
Rear Seat Cushion (76.70.37)

3. Remove the scuff plate trim panel.

www.JagDocs.com

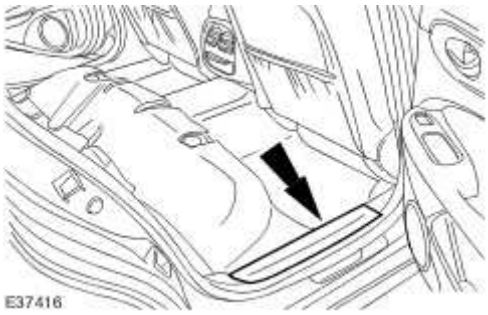

4. Detach and reposition the floor covering.

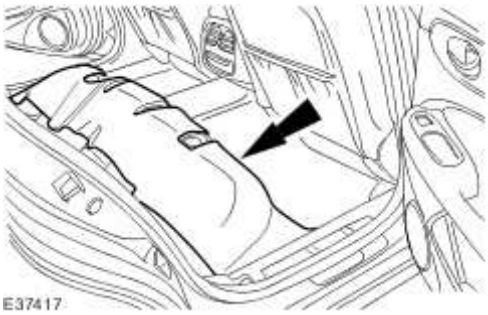

5. Remove the floor aperture cover.

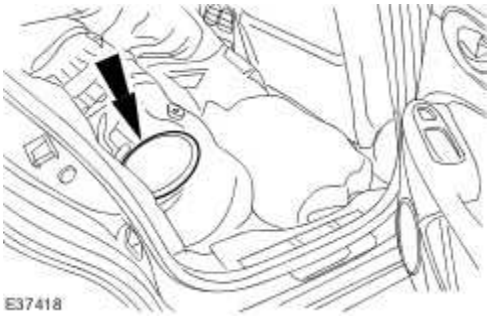

6.

CAUTION: The correct measurement must be used to remove the fuel tank drain port top. Failure to follow this instruction may result in damage to the vehicle.

NOTE:

The fuel tank drain port is marked with DRAIN.

NOTE:

Vehicles without Diesel engine shown, vehicles with Diesel engine similar.

Using a suitable tool, remove the top of the fuel tank drain port.

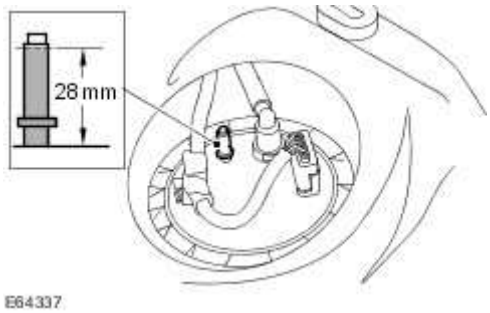

7. **NOTE:**

   Vehicles without Diesel engine shown, vehicles with Diesel engine similar.

Install the special tool to the right-hand side of the fuel tank.

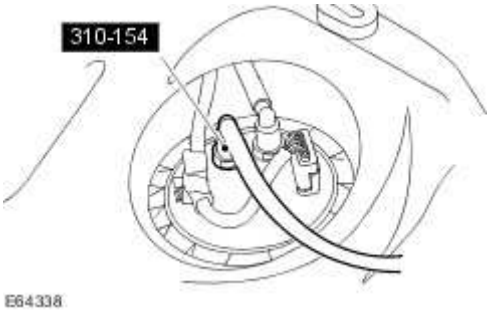

8. Using a suitable fuel vacuum drainer, remove the fuel from the right-hand side of the fuel tank.

9. **NOTE:**

   Vehicles without Diesel engine shown, vehicles with Diesel engine similar.

Remove the special tool.

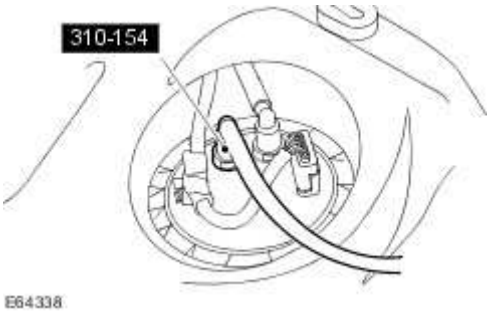

www.JagDocs.com

10.

CAUTION: Make sure the new fuel tank drain port sealing cap is correctly installed. Failure to follow this instruction may result in damage to the vehicle.

NOTE:

Vehicles without Diesel engine shown, vehicles with Diesel engine similar.

Install a new fuel tank drain port sealing cap.

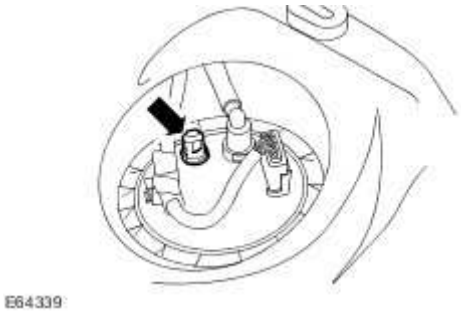

11. Install the floor aperture cover.

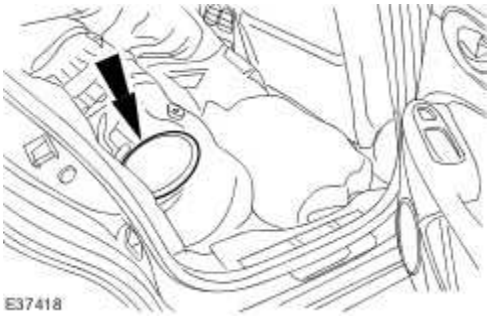

12. Attach the floor covering.

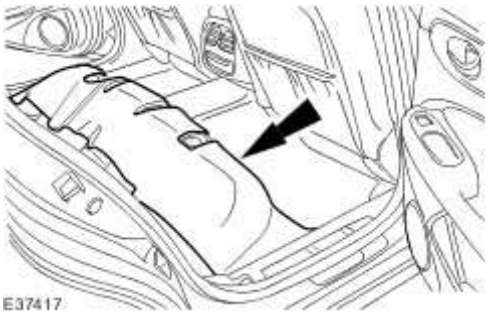

13. Install the scuff plate trim panel.

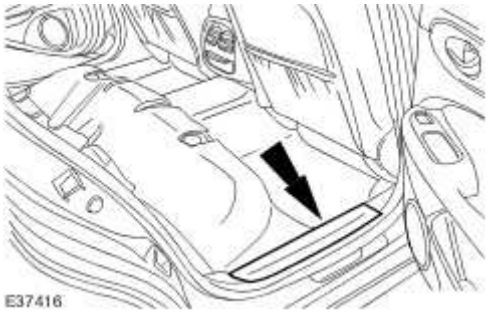

14. Remove the scuff plate trim panel.

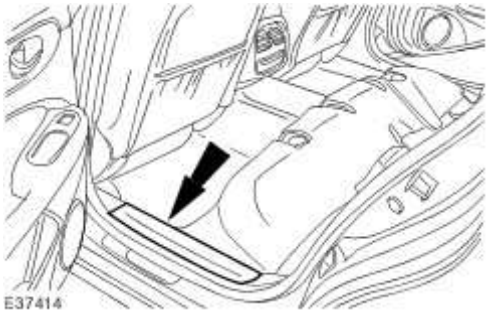

15. Detach and reposition the floor covering.

16. Remove the floor aperture cover.

www.JagDocs.com

17.

CAUTION: The correct measurement must be used to remove the fuel tank drain port top. Failure to follow this instruction may result in damage to the vehicle.

NOTE:

The fuel tank drain port is marked with DRAIN.

NOTE:

Vehicles without Diesel engine shown, vehicles with Diesel engine similar.

Using a suitable tool, remove the top of the fuel tank drain port.

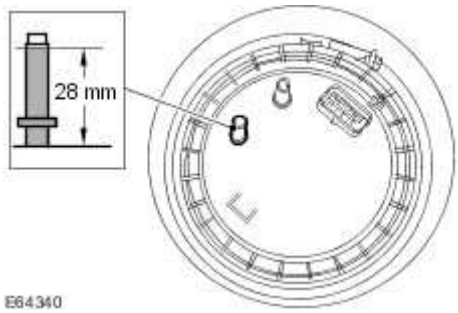

18. **NOTE:**

Vehicles without Diesel engine shown, vehicles with Diesel engine similar.

Install the special tool to the left-hand side of the fuel tank.

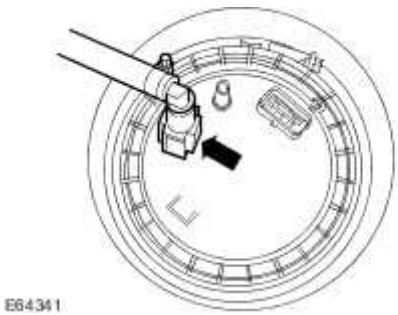

19. Using a suitable fuel vacuum drainer, remove the fuel from the left-hand side of the fuel tank.

20. **NOTE:**

Vehicles without Diesel engine shown, vehicles with Diesel engine similar.

Remove the special tool.

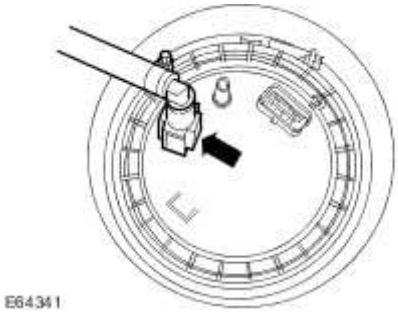

21.

CAUTION: Make sure the new fuel tank drain port sealing cap is correctly installed. Failure to follow this instruction may result in damage to the vehicle.

NOTE:

Vehicles without Diesel engine shown, vehicles with Diesel engine similar.

Install a new fuel tank drain port sealing cap.

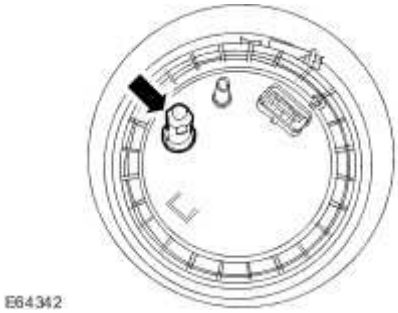

22. Install the floor aperture cover.

www.JagDocs.com

23. Attach the floor covering.

24. Install the scuff plate trim panel.

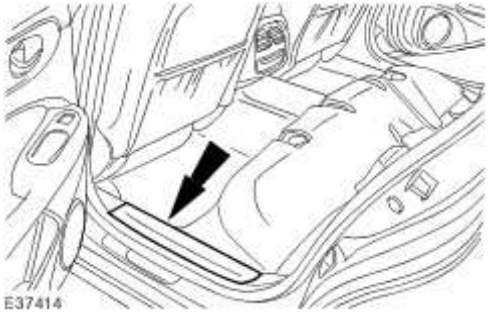

25. Install the rear seat cushion.
Rear Seat Cushion (76.70.37)

High-Pressure Fuel System Bleeding - 2.7L V6 - TdV6

Pneumatic vacuum gun

WARNING: Wait at least 30 seconds after the engine stops before commencing any repair to the high-pressure fuel injection system. Failure to follow this instruction may result in personal injury.

WARNING: Place the vehicle in a well ventilated, quarantined, area and arrange "No Smoking/Fuel Fumes" signs about the vehicle.

WARNING: Before any work is carried out on the fuel system, ground the vehicle to earth and maintain the ground connection until the work is complete.

WARNING: Do not carry out any repairs to the fuel injection system with the engine running. The fuel pressure within the system can be as high as 1650 bar. Failure to follow this instruction may result in personal injury.

WARNING: Do not smoke or carry lighted tobacco or open flame of any type when working on or near any fuel related components. Highly flammable vapors are always present and may ignite. Failure to follow these instructions may result in personal injury.

WARNING: After carrying out repairs, the fuel system must be checked visually for leaks. Failure to follow these instructions may result in personal injury.

WARNING: If taken internally do not induce vomiting, seek immediate medical attention. Failure to follow these instructions may result in personal injury.

WARNING: If fuel contacts the eyes, flush the eyes with cold water or eyewash solution and seek medical attention.

WARNING: Wash hands thoroughly after handling fuel, as prolonged contact may cause irritation. Should irritation develop, seek medical attention.

www.JagDocs.com

WARNING: This procedure involves fuel handling. Be prepared for fuel spillage at all times and always observe fuel handling precautions. Failure to follow these instructions may result in personal injury.

CAUTION: Diesel fuel injection equipment is manufactured to very precise tolerances and fine clearances. It is therefore essential that absolute cleanliness is observed when working with these components. Always fit blanking plugs to any open orifices or lines.

CAUTION: Always carry out the cleaning process before carrying out any repairs to the fuel injection system components. Failure to follow these instructions may result in foreign matter ingress to the fuel injection system.

CAUTION: The low-pressure fuel system bleeding procedure must be carried out before this procedure is carried out, or the engine is attempted to be started, following removal or replacement of any low-pressure fuel system component. Failure to follow this instruction may result in damage to the fuel injection pump.

CAUTION: The engine must not be cranked using the starter motor for more than 30 seconds. The starter motor must be allowed to cool for at least 5 minutes after cranking for 30 seconds. Failure to follow these instructions will result in damage to the starter motor.

NOTE:

If a new fuel filter is to be installed, make sure the fuel filter is installed AFTER the high-pressure fuel system has been bled.

NOTE:

This procedure is necessary if the fuel injection pump, or the fuel line between the fuel filter and the fuel injection pump is removed, drained of fuel or replaced.

1. Bleed the low-pressure fuel system.

Low-Pressure Fuel System Bleeding - 2.7L V6 - TdV6

2. Remove the oil filler cap.

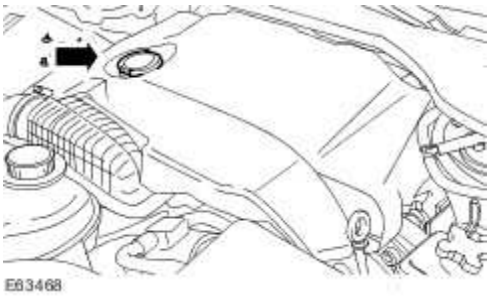

3. Remove the engine cover.

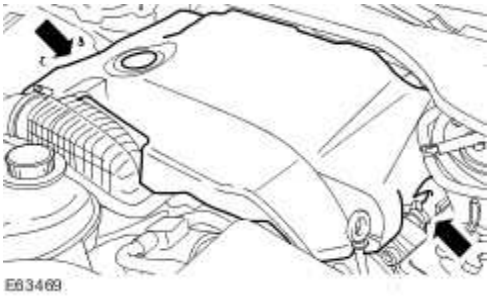

4. Install the engine oil filler cap to prevent foreign material entering the valve cover.

5. Remove the cowl vent screen.
Cowl Vent Screen (76.10.01)

6. Detach the high-pressure fuel supply line clamp.

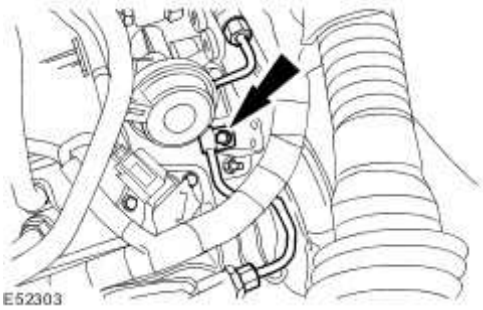

7. Using the pneumatic vacuum gun, vacuum foreign material from the fuel injectors, high-pressure fuel supply lines and surrounding areas.
Fuel Injection Component Cleaning

8.

CAUTION: Make sure that the high-pressure fuel supply line remains in contact with the fuel injection supply manifold and fuel injection diverter rail until both unions have been detached and cleaned. Failure to follow this instruction may result in foreign matter ingress to the fuel injection system.

www.JagDocs.com

CAUTION: Make sure that the tool used to loosen the high-pressure fuel supply line unions is used at the top of the unions as this is where there is most material. Failure to follow this instruction may result in damage to the unions.

Loosen the high-pressure fuel supply lines.

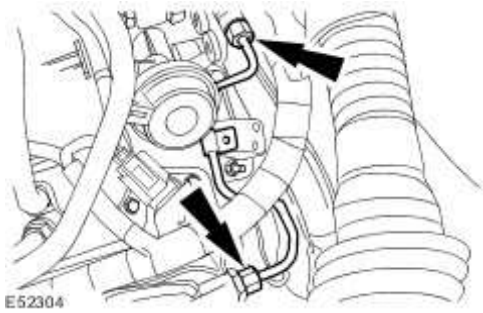

9. Using the pneumatic vacuum gun, vacuum foreign material from the fuel injectors, high-pressure fuel supply lines and surrounding areas.
Fuel Injection Component Cleaning

10. Remove and discard the high-pressure fuel supply line.

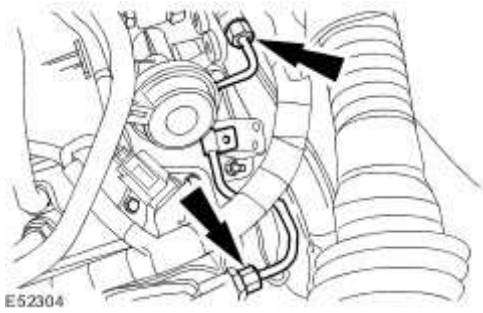

11. Install a new high-pressure fuel supply line, but do not fully tighten the unions at this stage.

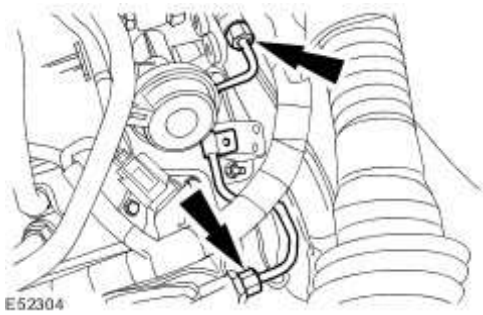

12. Position suitable lint free material under the left-hand high-pressure fuel line unions to catch escaping fuel.

13. Turn the ignition switch to the RUN position for 20 seconds.

14. If fuel does not appear at the fuel line unions after 20 seconds, allow the starter motor to cool for five minutes.

15. Repeat steps 11 and 12 until fuel appears at the fuel line unions.

16.

CAUTION: Make sure that the tool used to tighten the high-pressure fuel supply line unions is used at the top of the unions as this is where there is most material. Failure to follow this instruction may result in damage to the unions.

Tighten the the high-pressure fuel supply line unions.

- Tighten the high-pressure fuel supply line in the sequence shown:
- Tighten the high-pressure fuel supply line union 1 to fuel diverter rail to 15 Nm.
- Tighten the high-pressure fuel supply line union 2 to fuel rail to 15 Nm.
- Tighten the high-pressure fuel supply line union 1 to fuel diverter rail to 30 Nm.
- Tighten the high-pressure fuel supply line union 2 to fuel rail to 30 Nm.

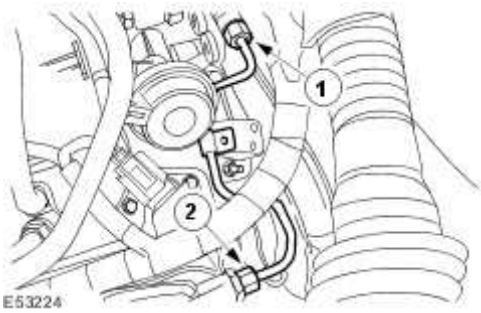

17. Attach the high-pressure fuel supply line clamp.
- Tighten to 10 Nm.

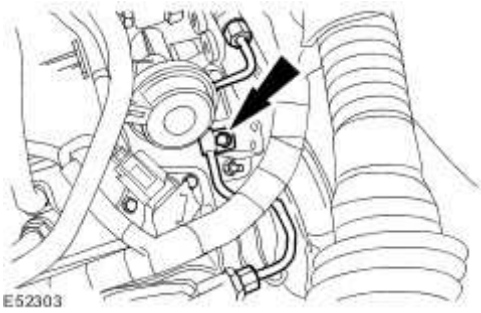

www.JagDocs.com

18.

WARNING: Do not carry out any repairs to the fuel system with the engine running. The fuel pressure within the high-pressure system can be as high as 1650 bar. Failure to follow this instruction may result in personal injury.

Start the engine and check visually for fuel leaks.

19. Install the cowl vent screen.
Cowl Vent Screen (76.10.01)

20. Remove the engine oil filler cap.

21. Install the engine cover.

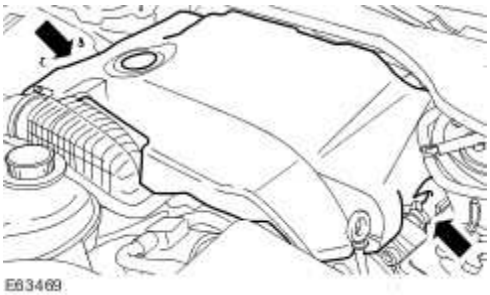

22. Install the oil filler cap.

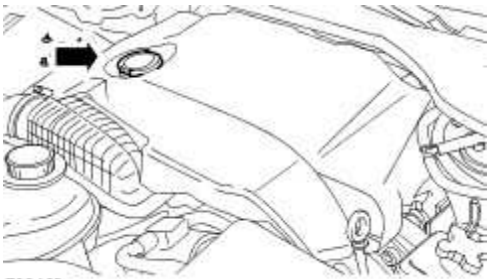

Low-Pressure Fuel System Bleeding - 2.7L V6 - TdV6

WARNING: Wait at least 30 seconds after the engine stops before commencing any repair to the high-pressure fuel injection system. Failure to follow this instruction may result in personal injury.

WARNING: Before any work is carried out on the fuel system, ground the vehicle to earth and maintain the ground connection until the work is complete.

WARNING: Do not smoke or carry lighted tobacco or open flame of any type when working on or near any fuel related components. Highly flammable vapors are always present and may ignite. Failure to follow these instructions may result in personal injury.

WARNING: After carrying out repairs, the fuel system must be checked visually for leaks. Failure to follow these instructions may result in personal injury.

WARNING: If taken internally do not induce vomiting, seek immediate medical attention. Failure to follow these instructions may result in personal injury.

WARNING: If fuel contacts the eyes, flush the eyes with cold water or eyewash solution and seek medical attention.

WARNING: Wash hands thoroughly after handling, as prolonged contact may cause irritation. Should irritation develop, seek medical attention.

WARNING: This procedure involves fuel handling. Be prepared for fuel spillage at all times and always observe fuel handling precautions. Failure to follow these instructions may result in personal injury.

CAUTION: Diesel fuel injection equipment is manufactured to very precise tolerances and fine clearances. It is therefore essential that absolute cleanliness is observed when working with these components. Always fit blanking plugs to any exposed ports.

www.JagDocs.com

CAUTION: This procedure must be carried out before the engine is attempted to be started, following removal or replacement of any low pressure fuel system component. Failure to follow this instruction will result in damage to the fuel injection pump.

CAUTION: The engine must not be cranked using the starter motor for more than 30 seconds. The starter motor must be allowed to cool for at least 5 minutes after cranking for 30 seconds. Failure to follow these instructions will result in damage to the starter motor.

NOTE:

This procedure is necessary if any low-pressure fuel system components are removed or replaced. These include the fuel filter, fuel lines, fuel tank or fuel cooler.

1. Disconnect the battery ground cable.

Battery Disconnect and Connect

2. **NOTE:**

When relieving the fuel system pressure, catch any displaced fuel in a suitable container.

NOTE:

Fit a suitable blanking cap to the exposed port on the fuel filter.

Relieve the fuel system pressure.

- Disconnect the fuel filter to fuel pump supply line from the fuel filter.

Quick Release Coupling - Push Connect

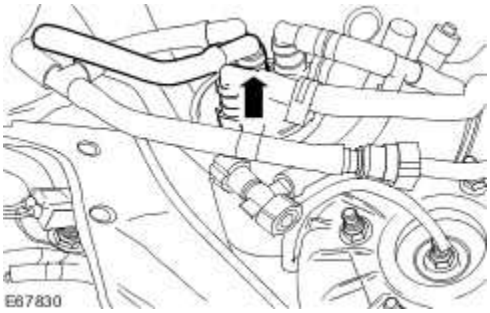

3.

CAUTION: The tube used to bleed the low-pressure fuel system must be absolutely clean. Failure to follow this instruction may result in foreign matter ingress to the fuel injection system.

Connect a suitable clean, clear tube to the fuel pump supply outlet.

4. Place a suitable container under the tube to catch any escaping fuel.

5. Turn the ignition switch to the ON position for 10 seconds. The fuel pump in the fuel tank will be audible.

6. Turn the ignition switch to the OFF position.

7. Repeat steps 5 and 6 until air-free fuel escapes from the tube.

8. Disconnect and discard the tube from the fuel pump supply outlet.

9. **NOTE:**
   Remove the blanking cap.

Connect the fuel filter to fuel pump supply line to the fuel filter.
Quick Release Coupling - Push Connect

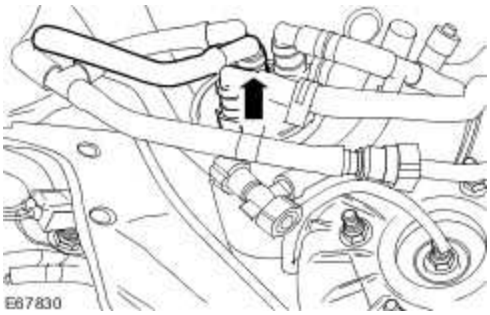

10. Connect the battery ground cable.
Battery Connect (86.15.15)

11.

CAUTION: If any high-pressure fuel system components have been removed or replaced, the high-pressure fuel system bleeding procedure must be carried out before the engine is started. Failure to follow this instruction may result in damage to the vehicle.

If necessary, bleed the high-pressure fuel system.

12. Start the engine and allow to idle.

www.JagDocs.com

Quick Release Coupling

Disconnect

1.

WARNING: Place the vehicle in a quarantined area and arrange "No Smoking/Petrol Fumes" signs about the vehicle.

WARNING: Before any work is carried out on the fuel system, ground the vehicle to earth and maintain the ground connection until the work is complete.

WARNING: Do not smoke or carry lighted tobacco or open flame of any type when working on or near any fuel related components. Highly flammable vapors are always present and may ignite. Failure to follow these instructions may result in personal injury.

WARNING: Do not carry or operate cellular phones when working on or near any fuel related components. Highly flammable vapors are always present and may ignite. Failure to follow these instructions may result in personal injury.

WARNING: The fuel system remains pressurized for a long time after the ignition is switched off. The fuel pressure must be relieved before attempting any repairs. Failure to follow these instructions may result in personal injury.

WARNING: After carrying out repairs, the fuel system must be checked visually for leaks. Failure to follow these instructions may result in personal injury.

WARNING: This procedure involves fuel handling. Be prepared for fuel spillage at all times and always observe fuel handling precautions. Failure to follow these instructions may result in personal injury.

WARNING: If taken internally do not induce vomiting, seek immediate medical attention. Failure to follow these instructions may result in personal injury.

WARNING: If fuel contacts the eyes, flush the eyes with cold water or eyewash solution and seek medical attention.

WARNING: Wash hands thoroughly after handling, as prolonged contact may cause irritation. Should irritation develop, seek medical attention.

Relieve the fuel system pressure.

2. Disconnect the quick release fitting.
   1. Release the retaining clip.
   2. Disconnect the quick release fitting.

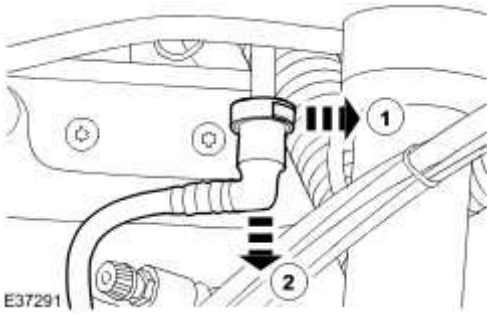

Connect

1. To connect, reverse the disconnect procedure.

www.JagDocs.com

Quick Release Coupling - Push Connect Disconnect

1.

WARNING: Place the vehicle in a quarantined area and arrange "No Smoking/Petrol Fumes" signs about the vehicle.

WARNING: Before any work is carried out on the fuel system, ground the vehicle to earth and maintain the ground connection until the work is complete.

WARNING: Do not smoke or carry lighted tobacco or open flame of any type when working on or near any fuel related components. Highly flammable vapors are always present and may ignite. Failure to follow these instructions may result in personal injury.

WARNING: Do not carry or operate cellular phones when working on or near any fuel related components. Highly flammable vapors are always present and may ignite. Failure to follow these instructions may result in personal injury.

WARNING: The fuel system remains pressurized for a long time after the ignition is switched off. The fuel pressure must be relieved before attempting any repairs. Failure to follow these instructions may result in personal injury.

WARNING: After carrying out repairs, the fuel system must be checked visually for leaks. Failure to follow these instructions may result in personal injury.

WARNING: This procedure involves fuel handling. Be prepared for fuel spillage at all times and always observe fuel handling precautions. Failure to follow these instructions may result in personal injury.

WARNING: If taken internally do not induce vomiting, seek immediate medical attention. Failure to follow these instructions may result in personal injury.

WARNING: If fuel contacts the eyes, flush the eyes with cold water or eyewash solution and seek medical attention.

WARNING: Wash hands thoroughly after handling, as prolonged contact may cause irritation. Should irritation develop, seek medical attention.

Relieve the fuel system pressure.

2. Disconnect the push connect fitting.
   - Press the collar.
   - Disconnect the push connect fitting.

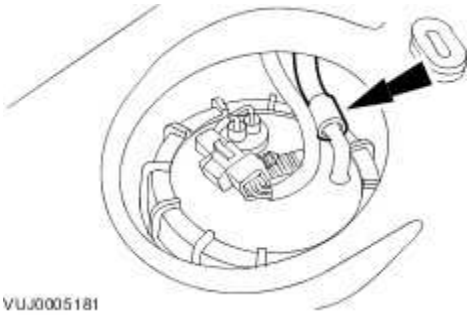

Connect

1. To connect.
   - Support the male stub.
   - Push the connector fitting onto the stub until an audible click can be heard.
   - Check the connection by a gentle tug test.

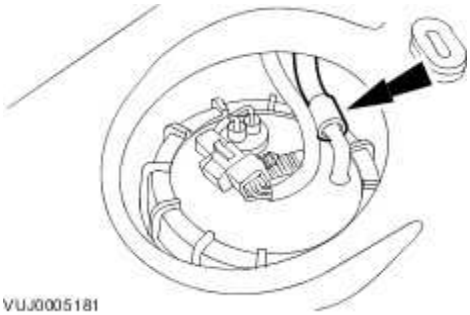

www.JagDocs.com

Spring Lock Couplings

Special Service Tools

Spring Lock Coupling Tool or Equivalent
310-D005 (23-040)

Disconnect

1.

WARNING: Place the vehicle in a quarantined area and arrange "No Smoking/Petrol Fumes" signs about the vehicle.

WARNING: Before any work is carried out on the fuel system, ground the vehicle to earth and maintain the ground connection until the work is complete.

WARNING: Do not smoke or carry lighted tobacco or open flame of any type when working on or near any fuel related components. Highly flammable vapors are always present and may ignite. Failure to follow these instructions may result in personal injury.

WARNING: The fuel system remains pressurized for a long time after the ignition is switched off. The fuel pressure must be relieved before attempting any repairs. Failure to follow these instructions may result in personal injury.

WARNING: After carrying out repairs, the fuel system must be checked visually for leaks. Failure to follow these instructions may result in personal injury.

WARNING: This procedure involves fuel handling. Be prepared for fuel spillage at all times and always observe fuel handling precautions. Failure to follow these instructions may result in personal injury.

WARNING: If taken internally do not induce vomiting, seek immediate medical attention. Failure to follow these instructions may result in personal injury.

WARNING: If fuel contacts the eyes, flush the eyes with cold water or eyewash solution and seek medical attention.

WARNING: Wash hands thoroughly after handling, as prolonged contact may cause irritation. Should irritation develop, seek medical attention.

Relieve the fuel system pressure. For additional information, refer to the procedure in this section: .

2. Remove the safety clip from the spring lock coupling.

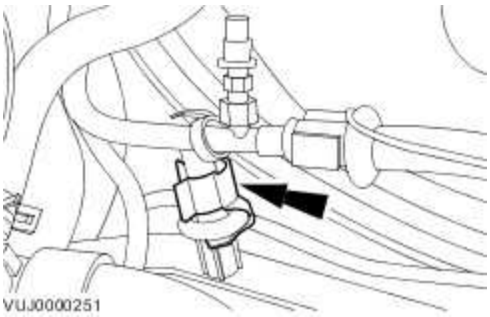

3. Install the special tool.

www.JagDocs.com

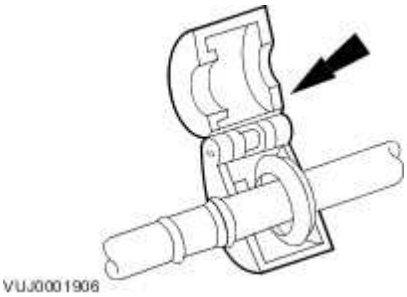

4. Close the special tool and push it into the female end of the spring lock coupling.

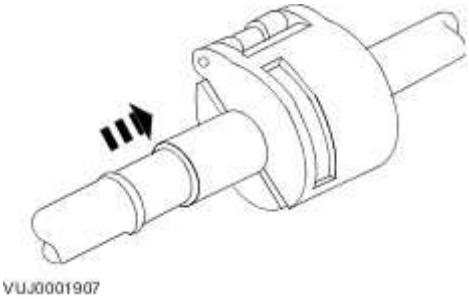

5. Disconnect the spring lock coupling.

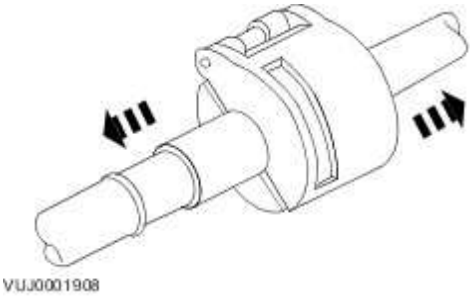

6. Remove the special tool.

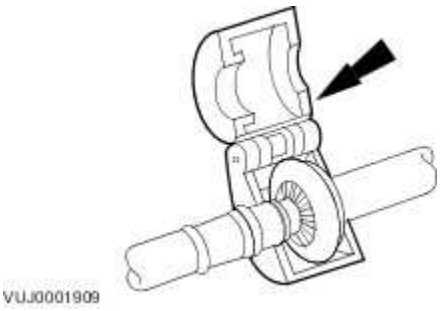

Connect

1. **NOTE:**

Install new O-ring seals.

NOTE:

Install a new garter spring.

Clean and inspect the male and female ends of the spring lock coupling.

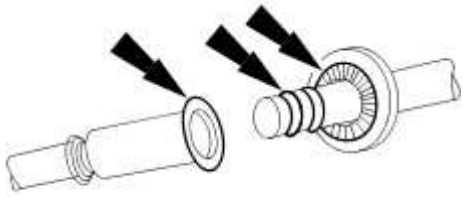

VUJ0001910

2.

WARNING: Make sure the garter spring snaps over the male end of the spring lock coupling.

Connect the spring lock coupling.

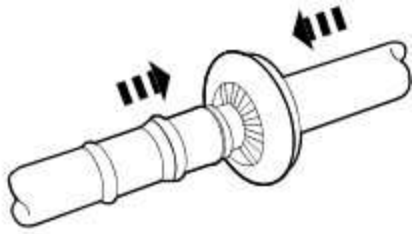

E31439

3. Check the spring lock coupling to make sure it is correctly connected.

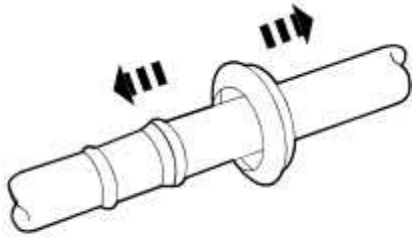

E31440

4. Install the safety clip to the spring lock coupling.

www.JagDocs.com

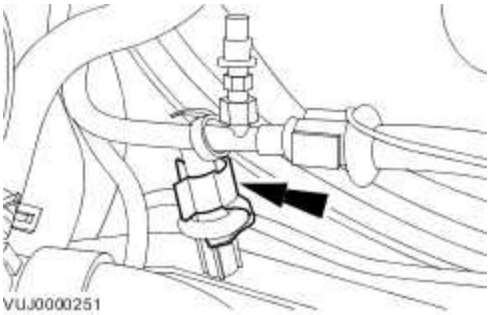
VUJ0000251

Fuel System - VIN Range: G00442->G45703

Vehicles with supercharger

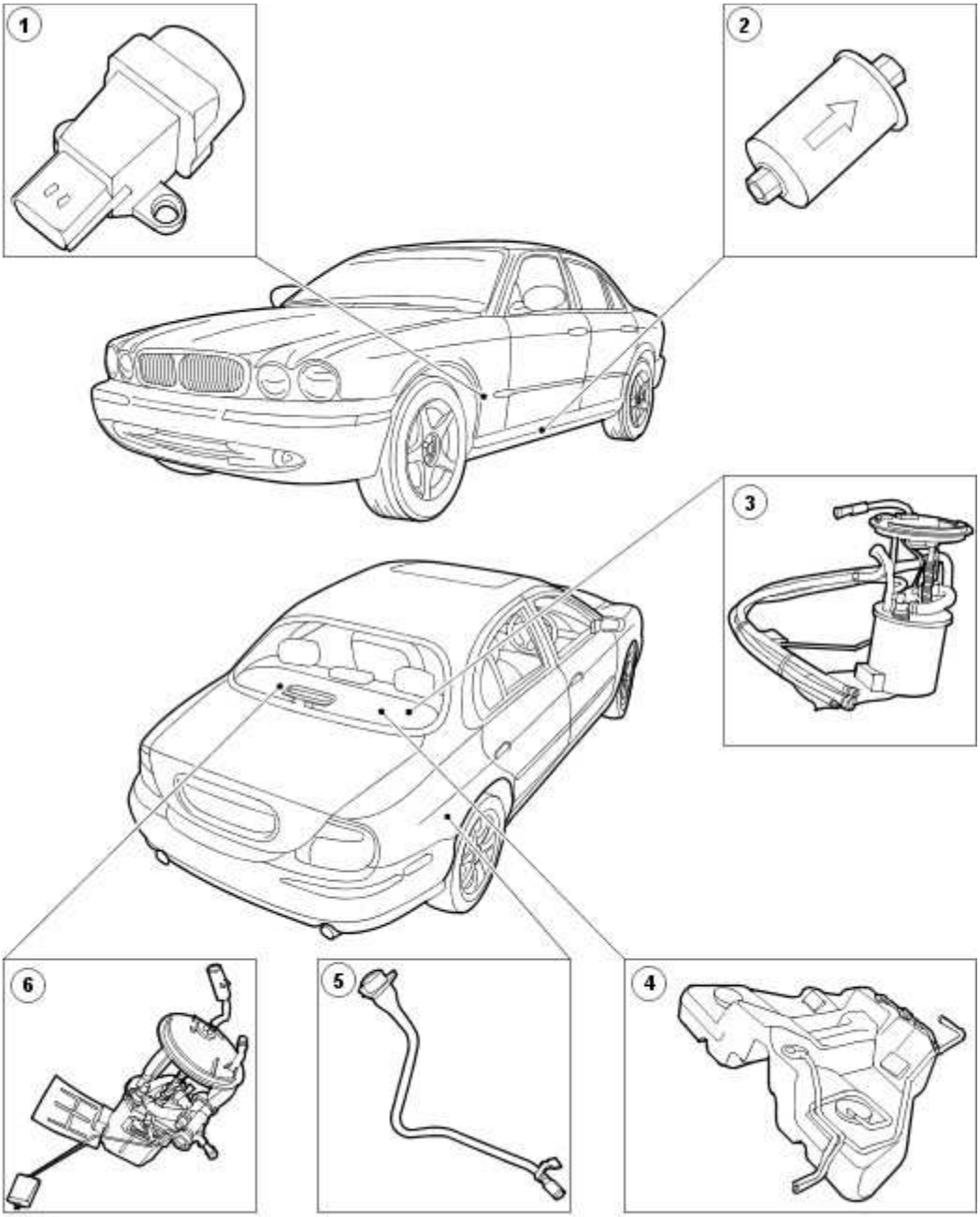

E36750

www.JagDocs.com

Item	Part Number	Description
1	—	Inertia fuel shutoff (IFS) switch
2	—	Fuel filter
3	—	Right-hand side fuel pump module
4	—	Fuel tank
5	—	Fuel tank filler pipe
6	—	Left-hand side fuel pump module

Vehicles without supercharger

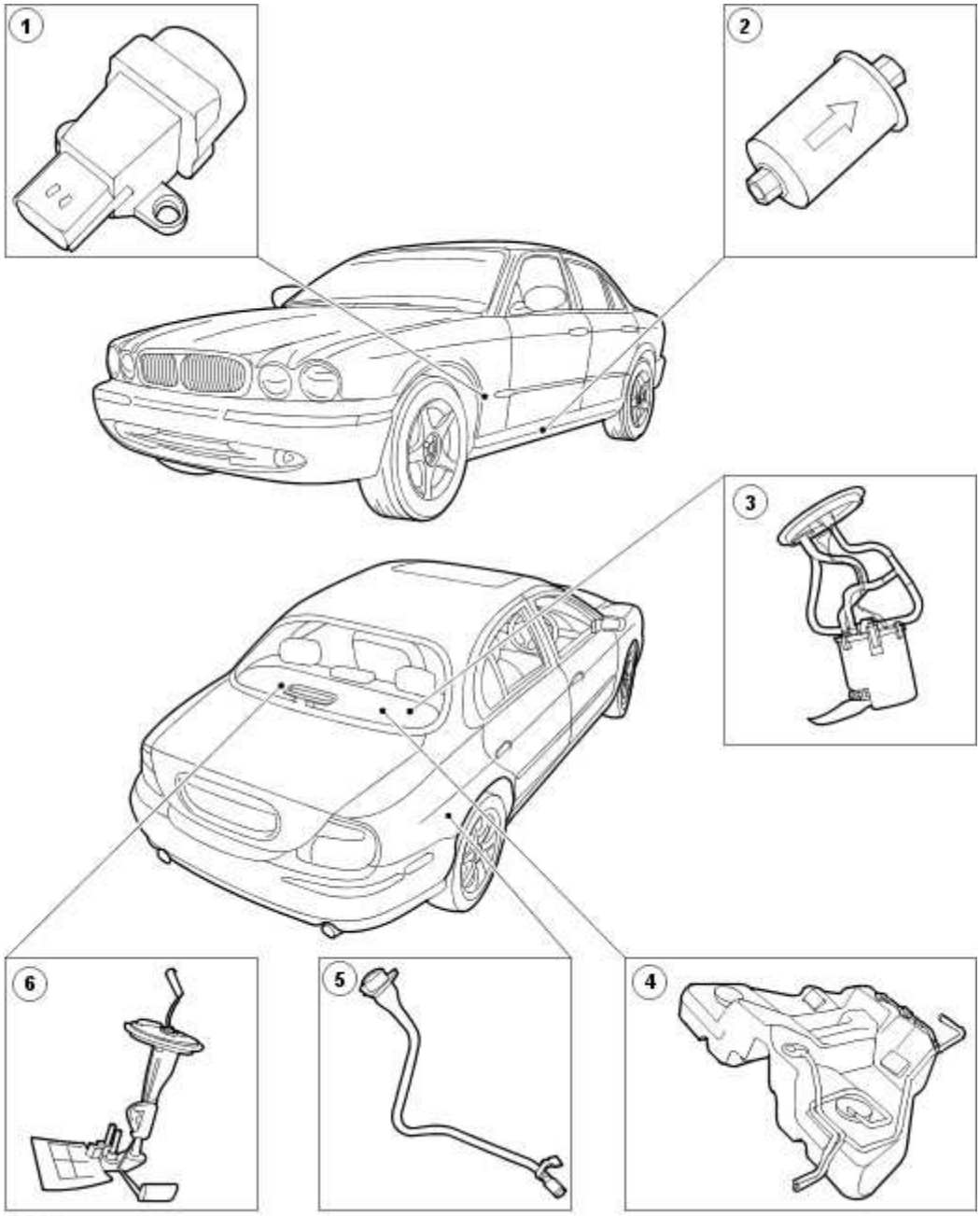

Item	Part Number	Description
1	—	Inertia fuel shutoff (IFS) switch
2	—	Fuel filter
3	—	Fuel pump module
4	—	Fuel tank

www.JagDocs.com

5	—	Fuel tank filler pipe
6	—	Fuel transfer pump

The electronic returnless fuel system utilized has the following advantages:

- reduced fuel tank vapor generation
- requires less electrical power
- does not require a fuel return line

The intelligence of this system is contained within the Engine control module (ECM).

The ECM determines the required fuel flow and communicates this information to the rear electronic module (REM). The REM has the fuel pump driver functions fully integrated into the microprocessor. The fuel pump relay is activated by the ECM power relay and provides a fused power supply to the REM. The ECM and the REM calculate the frequency and determine the current required by the fuel pump to maintain the correct fuel pressure at the fuel injectors.

The fuel tank is of a saddle design which incorporates a pump/sender unit in both sides of the tank on vehicles with superchargers. On vehicles without superchargers, the right-hand side houses the fuel pump module and the left-hand side houses the fuel transfer pump. The fuel pump cross over lines are internal to the fuel tank to reduce potential leak paths.

Fuel is supplied at high pressure to the injectors via a fuel rail which incorporates a fuel pressure and a fuel temperature sensor. The ECM increases the fuel pressure to minimize fuel vapor formation to maintain fuel flow across the injectors. An inertia type fuel shutoff switch will cut power to the fuel pump in the event of an accident.

Fuel System - VIN Range: G45704->G99999

Vehicles without Diesel engine

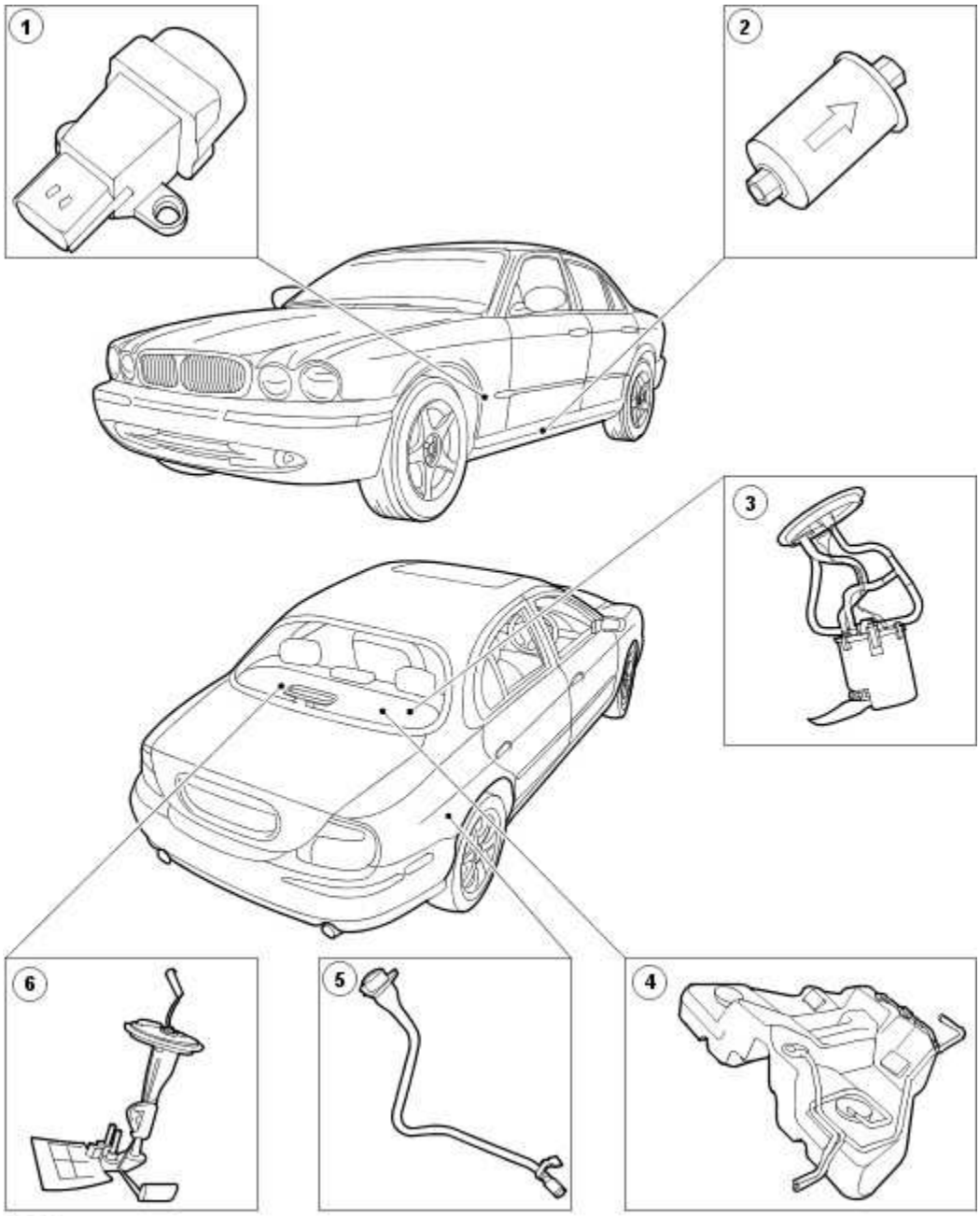

E36751

Item	Part Number	Description
1	—	Inertia fuel shut-off (IFS) switch
2	—	Fuel filter

www.JagDocs.com

3	—	Fuel pump module
4	—	Fuel tank
5	—	Fuel tank filler pipe
6	—	Fuel transfer pump

The electronic returnless fuel system utilized has the following advantages:

reduced fuel tank vapor generation

requires less electrical power

does not require a fuel return line.

The intelligence of this system is contained within the engine control module (ECM).

The ECM determines the required fuel flow and communicates this information to the rear electronic module (REM). The REM has the fuel pump driver functions fully integrated into the microprocessor. The fuel pump relay is activated by the ECM power relay and provides a fused power supply to the REM. The ECM and the REM calculate the frequency and determine the current required by the fuel pump to maintain the correct fuel pressure at the fuel injectors.

The fuel tank is of a saddle design which incorporates a fuel pump module on the right-hand side and a fuel transfer module on the left-hand side. The fuel pump crossover lines are internal to the fuel tank to reduce potential leak paths.

Fuel is supplied at high pressure to the injectors through a fuel rail which incorporates a fuel pressure and a fuel temperature sensor. The ECM increases the fuel pressure to minimize fuel vapor formation to maintain fuel flow across the injectors. An inertia type fuel shut-off switch will cut power to the fuel pump in the event of an accident.

Vehicles with Diesel Engine

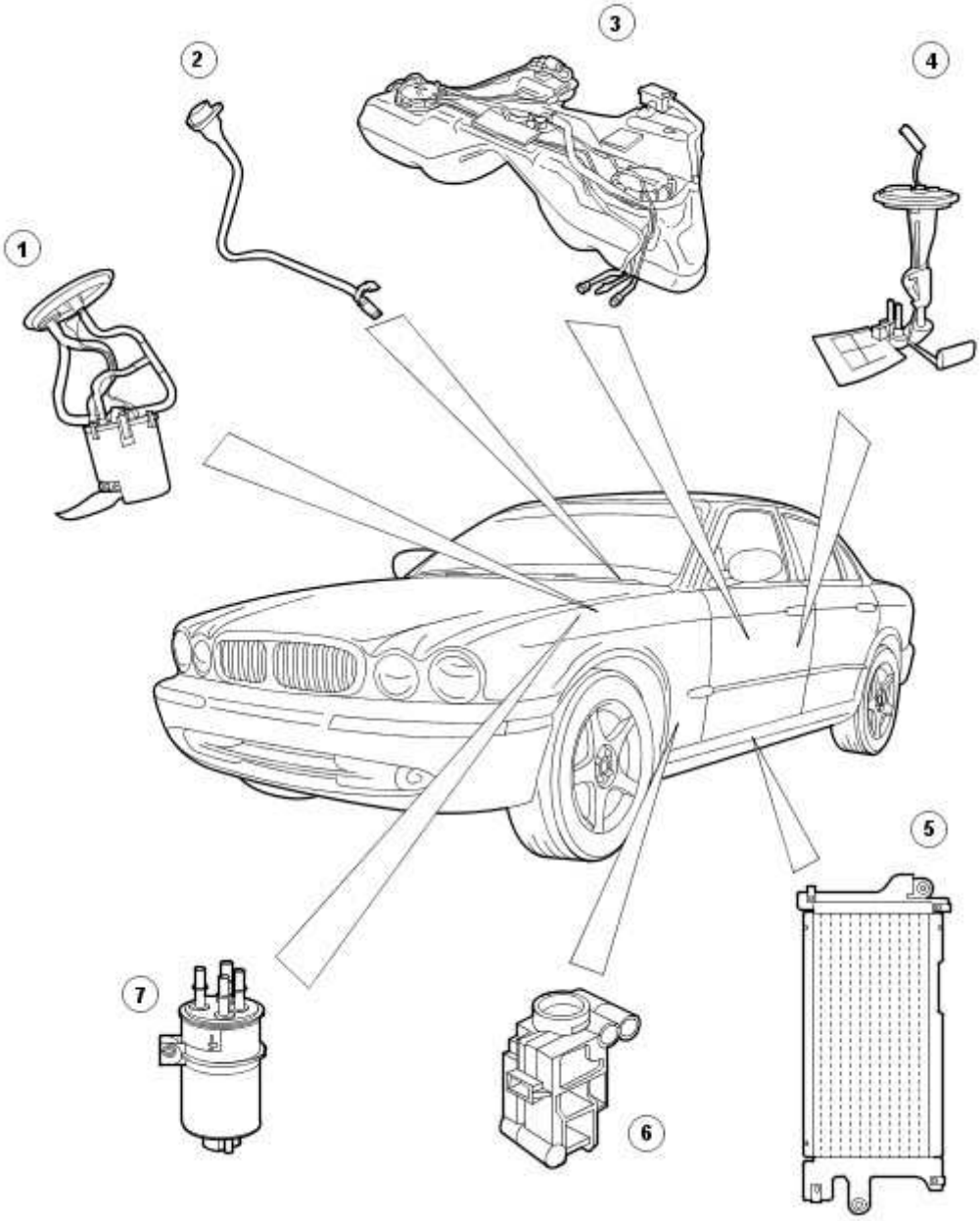

E64249

Item	Part Number	Description
1	—	Fuel pump module
2	—	Fuel tank filler pipe
3	—	Fuel level sensor
4	—	Fuel tank

www.JagDocs.com

5	—	Fuel filter
6	—	Inertia fuel shut-off (IFS) switch
7	—	Fuel Cooler

Fuel System - Vehicles with Diesel Engine

The diesel fuel is drawn from the fuel tank by an internal electric lift pump which is supplied with battery voltage from the fuel pump relay located in the rear power distribution box. The fuel pump relay is controlled by the ECM. The fuel pump provides a low pressure diesel fuel supply to the transfer pump incorporated in to the fuel injection pump. The fuel metering valve (FMV) governs the amount of fuel supplied to the fuel injection pump. The fuel injection pump has a fuel return circuit to the fuel filter, which is independent of the injector return pipes.

The fuel tank is of a saddle design which incorporates a fuel pump module and fuel level sensor in the right-hand side and a fuel level sensor module in the left-hand side of the tank. The fuel pump crossover lines are internal to the fuel tank to reduce potential leak paths. The signals from the fuel level sensors are used both for the fuel gauge and the run dry prevention strategy within the ECM.

The driver will always be aware of the risk of running out of fuel as the fuel gauge will show empty and the fuel warning lamp will be illuminated. In order to protect the fuel lift pump and fuel injection pump and to prevent the need for fuel priming after the vehicle has run out of fuel, the ECM will instigate the run dry prevention strategy prior to the fuel tank becoming completely empty. In order to recognize the fuel tank becoming empty, a low level switch is incorporated in to the fuel tank swirl pot. The signal from this switch, together with the signal from two fuel level sensors is relayed to the ECM, through the controller area network (CAN) bus.

Before a run dry event occurs the ECM will take a series of actions to inform the driver of the low fuel level in the fuel tank.

Fuel remaining in fuel tank	Approximate distance remaining*	Action
9·4 L	112 Km (70 Miles)	**Low Fuel** warning lamp illuminated in instrument cluster
5·2 L	48 Km (30 Miles)	Fuel gauge reads **Empty**; **RANGE** display reads **0 Km (0 Miles)**
3·9 L	28 Km (18 Miles)	ECM simulates engine misfire
3·7 L	25 Km (16 Miles)	Engine is stopped but restarts with misfire

2·0 L	0 Km (0 Miles)	Engine stops and will not restart

* Dependant on average fuel consumption

If, when the ignition key is turned to the **ON** position, the run dry event is still detected, this would indicate that either no, or insufficient, fuel has been added to the fuel tank, or that the vehicle may be parked on a slope. In this instance the fuel pump will run to fill the swirl pot and cover the low fuel level switch. The ECM will not prevent the engine from cranking, but it will inhibit fuel injection. If, after a delay, a run dry event is still detected, the fuel pump will be inhibited for the rest of the ignition cycle. As soon as a run dry event is no longer detected normal starting can resume.

www.JagDocs.com

Specifications

Torque Specifications

Description	Nm	lb-ft	lb-in
Engine compartment brace bar retaining bolt	25	18	-
Fuel tank support strap retaining bolts	35	26	-
Fuel pump module locking ring	60	44	-
Fuel transfer pump locking ring	60	44	-
Fuel transfer unit locking ring	60	44	-
Fuel filter support bracket retaining bolts - Vehicles without diesel engines	10	-	89
Fuel filter support bracket retaining bolt - Vehicles with diesel engines	5	-	44
Fuel filter connection to pipe	30	22	-
Fuel filler pipe retaining bolts	5	-	44
Fuel filler pipe retaining nut	4	-	35
Fuel filler hose worm drive	2	-	18

Fuel Tank and Lines - VIN Range: G00442->G45703

Vehicles without supercharger

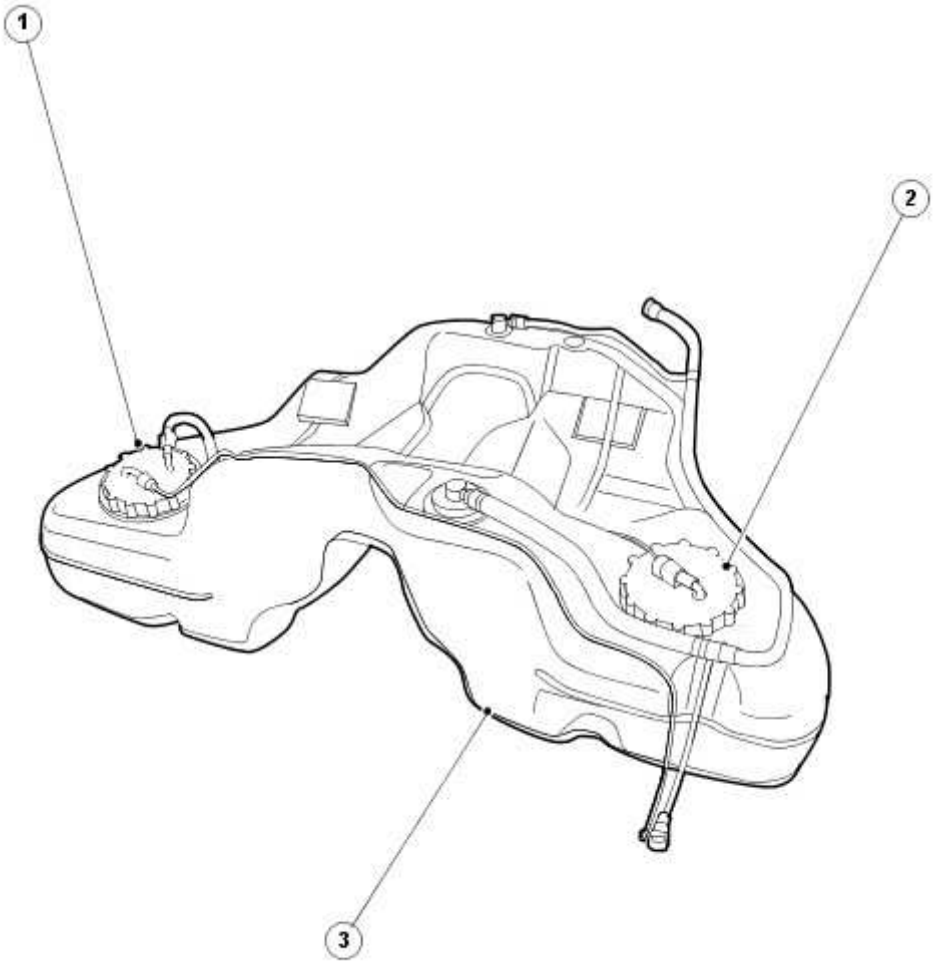

E37161

Item	Part Number	Description
1		Fuel pump module
2		Fuel transfer pump
3		Fuel tank

www.JagDocs.com

Vehicles with supercharger

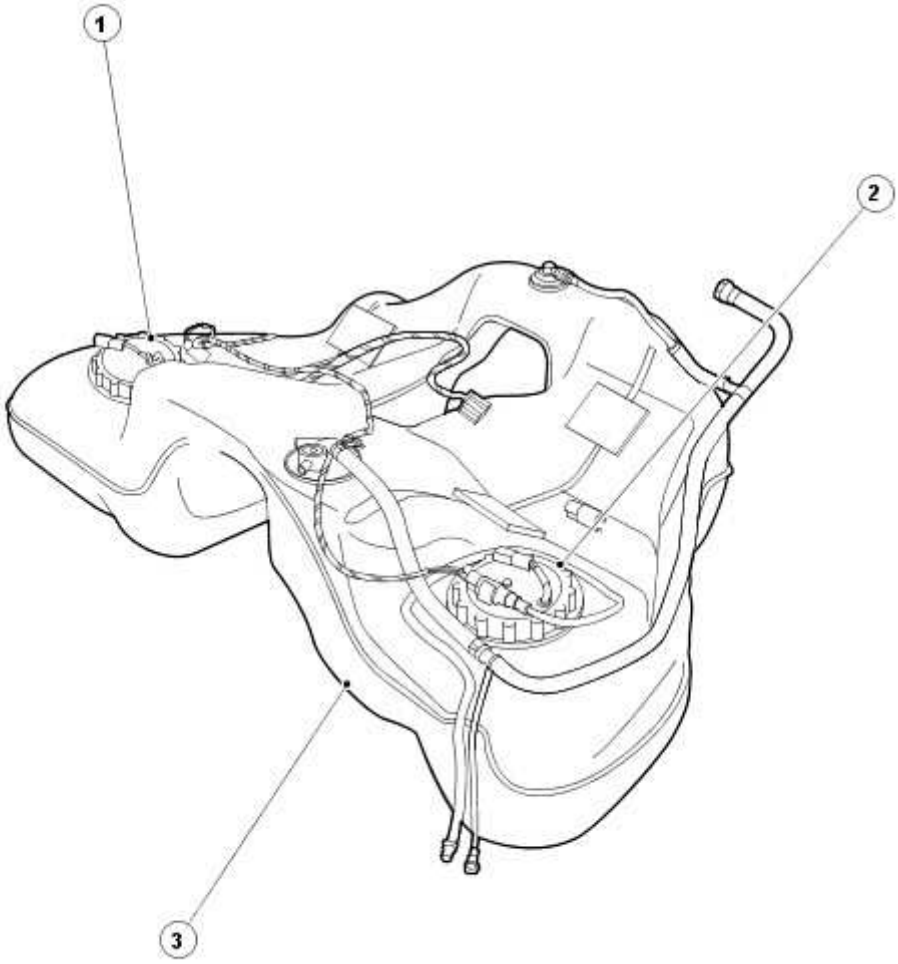

E37162

Item	Part Number	Description
1	—	Right-hand fuel pump module
2	—	Left-hand fuel pump module
3	—	Fuel tank

Fuel Tank

The fuel tank is of a plastic construction and is retained to the vehicle by means of two steel support straps. The fuel tank support straps are mounted onto the underside of the vehicle chassis towards the front of the fuel tank and bolt to the vehicle towards the rear of the fuel tank. Fuel tank ventilation is achieved through a fuel tank roll-over valve into an evaporative emission canister which absorbs fuel tank vapor. The fuel tank roll-over valve is integral to the fuel tank and will prevent fuel loss from the fuel tank if the vehicle becomes inverted.

Fuel Filter

The fuel filter is of a conventional construction being that of a paper element sealed within a steel canister. The fuel filter is located on the left-hand front longitudinal member, under the left-hand splash shield.

Fuel Tank Filler Pipe

The fuel tank filler pipe is of steel construction and is retained to the vehicle by means of two lower retaining bolts and one upper retaining nut. The fuel tank filler pipe is fitted with a twist-fit filler cap, which seals the system.

Inertia Fuel Shutoff (IFS) Switch

The inertia fuel shutoff (IFS) switch is designed to cut power to the fuel pump in the event of an accident. It is located behind the left-hand cowl side trim panel.

Fuel Pumps

The fuel pumps are electric turbine type pumps and are located inside the fuel tank, one on the left-hand side and one on the right-hand side on supercharged vehicles. They both feature an integral fuel tank sender unit and each is retained to the fuel tank by means of a locking ring.

Vehicles without supercharger

As the fuel tank is of a saddle design, a fuel pump module and a fuel transfer pump are incorporated. The fuel pump module located in the right-hand side of the fuel tank transfers fuel to the left-hand side of the fuel tank. The fuel transfer pump located in the left-hand side of the fuel tank transfers fuel to the fuel pump module and then the engine.

Vehicles with supercharger

Both pumps continually transfer fuel from one side of the tank to the other, whilst also providing a fuel supply to the engine.

www.JagDocs.com

Fuel Tank and Lines - VIN Range: G45704->G99999

Vehicles without Diesel Engine

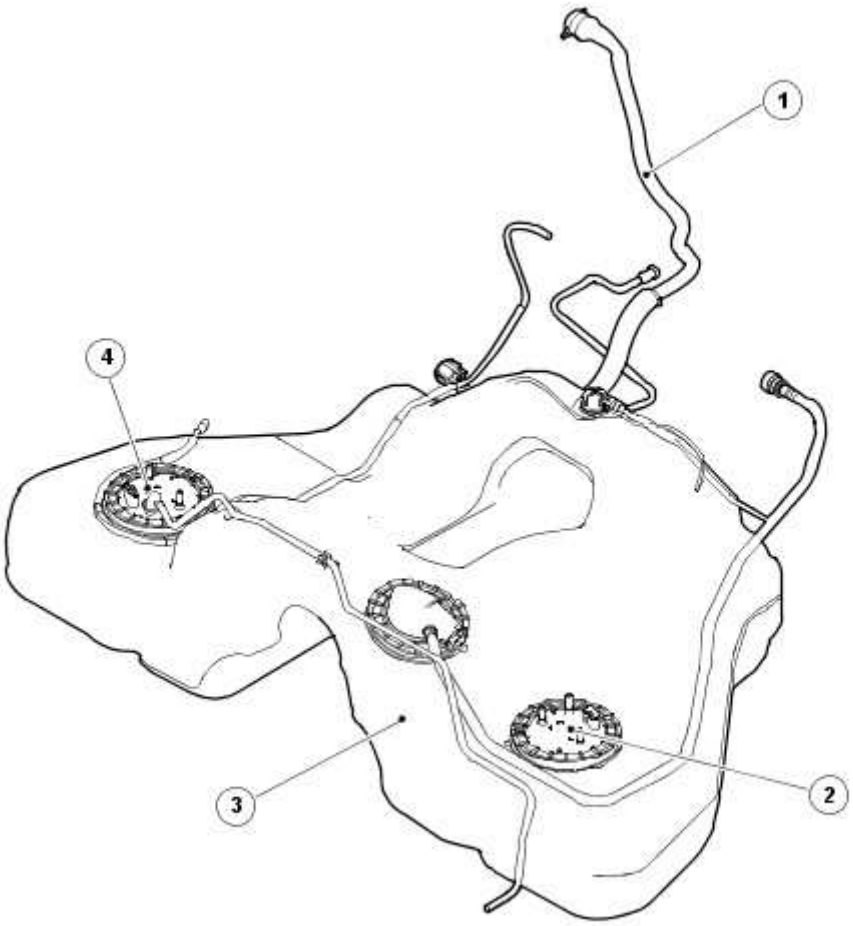

E64139

Item	Part Number	Description
1		Fuel tank filler pipe
2		Fuel transfer module
3		Fuel tank
4		Fuel pump module

Vehicles with Diesel Engine

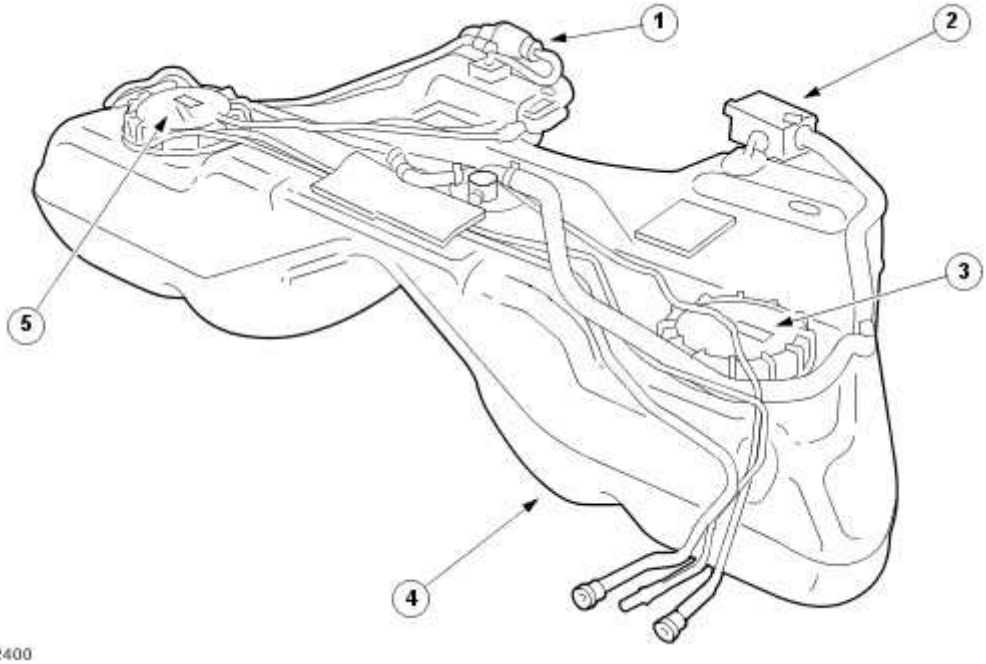

E52400

Item	Part Number	Description
1		Auxiliary heater fuel supply pump
2		Fuel tank ventilation filter
3		Left-hand fuel level sensor module
4		Fuel tank
5		Right-hand fuel pump module

Fuel Tank

Vehicles without Diesel Engine

The fuel tank is of a plastic construction and is retained to the vehicle by means of two steel support straps. The fuel tank support straps are mounted onto the underside of the vehicle chassis towards the front of the fuel tank and bolt to the vehicle towards the rear of the fuel tank. Fuel tank ventilation is achieved through a fuel tank roll-over valve into an evaporative emission canister which absorbs fuel tank vapor. The fuel tank roll-over valve is integral to the fuel tank and will prevent fuel loss from the fuel tank if the vehicle becomes inverted.

Vehicles with Diesel Engine

The fuel tank is of a plastic construction and is retained to the vehicle by means of two steel support straps. The fuel tank support straps are mounted onto the underside of the vehicle chassis towards

www.JagDocs.com

the front of the fuel tank and bolt to the vehicle towards the rear of the fuel tank. Fuel tank ventilation is achieved through a fuel tank roll-over valve into a ventilation filter. The fuel tank roll-over valve is integral to the fuel tank and will prevent fuel loss from the fuel tank if the vehicle becomes inverted.

Fuel Filter

Vehicles without Diesel Engine

The fuel filter is of a conventional construction being that of a paper element sealed within a steel canister. The fuel filter is located behind the left-hand front fender splash shield.

Vehicles with Diesel Engine

The diesel fuel filter is located in the engine compartment. Incorporated in to the fuel filter housing is a bimetallic valve which will start to close at 30°C (86°F) and will fully close at 50°C (122°F).

When the bimetallic valve is open, fuel is only allowed to pass through the fuel cooler in the engine vee, which aids warm up of the fuel at low temperatures. When the fuel temperature increases, the bimetallic valve closes, diverting fuel through the under-floor fuel cooler which then lowers the fuel temperature before returning the fuel back to the fuel filter.

The fuel filter has an air bleed return to the fuel tank which returns excess air and fuel back to the fuel tank.

Fuel Tank Filler Pipe

The fuel tank filler pipe is of stainless steel construction and is retained to the vehicle by means of one lower retaining bolt, one lower retaining nut and one upper retaining nut. The fuel tank filler pipe is fitted with a twist-fit filler cap, which seals the system.

Inertia Fuel Shutoff (IFS) Switch

The inertia fuel shutoff (IFS) switch is designed to cut power to the fuel pump in the event of an accident. It is located behind the left-hand cowl side trim panel.

Fuel Modules

Vehicles without Diesel Engine

As the fuel tank is of a saddle design, a fuel pump module and a fuel transfer module are incorporated.

The fuel pump module is an electric turbine type pump and is located inside the fuel tank, on the right-hand side. Both the fuel pump and fuel transfer module feature an integral fuel tank sender unit and each is retained to the fuel tank by means of a locking ring.

Vehicles with Diesel Engine

The fuel pump is an electric turbine type and is located in the right-hand side of the fuel tank. The fuel pump supplies fuel to the fuel injection pump and also circulates fuel from the left-hand side of the fuel tank by means of fuel transfer pipes incorporated in the fuel pump module.

The fuel tank incorporates two fuel level sensors, one in the right-hand fuel pump module and one in the left-hand fuel tank level sensor. Both the fuel pump and fuel tank level sensor modules are retained to the fuel tank by means of a locking ring.

Fuel cooler

Vehicles with Diesel Engine

Two fuel coolers are fitted to the vehicle. One is located in the vee of the engine block, which has a coolant connection to aid heat transfer. The second cooler is located in the fuel return line and is located under the vehicle on the left-hand side. Fuel flow through the underfloor cooler is controlled by the fuel filter.

www.JagDocs.com

Fuel Tank and Lines - 4.2L NA V8 - AJV8/4.2L SC V8 - AJV8/3.0L NA V6 - AJ27/3.5L NA V8 - AJV8, VIN Range: G00442->G45703

Inspection and Verification

1 . Verify the customer concern.

2 . Visually inspect for obvious signs of mechanical or electrical damage.

Mechanical	Electrical
Damaged fuel lines	Fuses (see table)
Damaged push connect fittings	Loose or corroded electrical connectors
Fuel leaks	Fuel pump module
Damaged fuel tank filler pipe cap	Rear electronic module
Damaged fuel tank filler pipe	Fuel pump relay

3 . Verify the following systems are working correctly:

Air intake system

Cooling system

Charging system

Ignition system

4 . If an obvious cause for an observed or reported concern is found, correct the cause (if possible) before proceeding to the next step.

5 . If the cause is not visually evident and the Jaguar approved diagnostic system is not available, use a fault code reader to retrieve the fault codes before proceeding to the diagnostic trouble code (DTC) index.

6 . Where the Jaguar approved diagnostic system is available, complete the S93 report before clearing any or all fault codes from the vehicle.

NOTE:

If a DTC cannot be cleared, then there is a permanent fault present that flags again as soon as it is cleared (the exception to this is P1260, which will only clear following an ignition OFF/ON cycle after rectification).

7 . Using the Jaguar approved diagnostic system where available, and a scan tool where not, check the freeze frame data for information on the conditions applicable when the fault was flagged. The format of this will vary, depending on the tool used, but can provide information useful to the technician in diagnosing the fault.

Control module Power and Ground supplies

DTCs can be set if a module's power or ground supply is interrupted.

Check the fuses listed in the table below, and check the power and ground circuit pinpoint tests before condemning components.

Fuse	Rating	Circuit	Location
33	20 Amp	Rear electronic module (from fuel pump relay)	Rear power distribution box
19	5 Amp	Rear electronic module (ignition)	Primary junction box
24	20 Amp	Fuel pump driver module	Rear power distribution box

For REM power and ground supply tests, GO to Pinpoint Test G251562p6.
.

For fuel pump driver module power and ground supply tests, GO to Pinpoint Test G251562p7.
.

For ECM power and ground supply tests, <<303-14>>

DTC index

DTC	Description	Possible Source	Action
P0460	Fuel level sensor circuit range/performance	Fuel level sensor to rear electronic module (REM) circuits; intermittent short or open circuit, high resistance	For fuel level sensor circuit tests, GO to Pinpoint Test G251562p1.

www.JagDocs.com

		Fuel level sensor failure REM fault (incorrect fuel level data)	.
P1233	Fuel pump 2 drive circuit fault	ECM to fuel pump 2 module control drive circuit; open circuit, short circuit, high resistance Fuel pump 2 module failure	For fuel pump 2 module tests, GO to Pinpoint Test G251562p2. .
P1234	No fuel pump commands received by ECM	ECM to rear electronic module (REM) drive circuit; open circuit, short circuit, high resistance REM failure	For ECM to REM circuit tests, GO to Pinpoint Test G251562p3. .
P1236	Fuel pump not activated when requested by ECM	ECM to rear electronic module (REM) drive circuit; open circuit, short circuit, high resistance REM failure	For ECM to REM circuit tests, GO to Pinpoint Test G251562p3. .
P1338	Fuel pump drive circuit low/high voltage	REM to fuel pump drive circuit; open circuit, short circuit, high resistance REM failure Fuel pump failure	For fuel pump drive circuit tests, GO to Pinpoint Test G251562p4. .
P1339	Fuel pump 2 drive circuit low/high voltage	Fuel pump 2 module to fuel pump drive circuit; open circuit, short circuit, high resistance Fuel pump 2 module to ECM monitor circuit; open circuit, short circuit, high resistance Fuel pump 2 module failure Fuel pump 2 failure	For fuel pump 2 module tests, GO to Pinpoint Test G251562p5. .

Power and Ground Pinpoint tests

PINPOINT TEST G251562p6 : CHECK THE POWER AND GROUND SUPPLIES TO THE REM

G251562t31 : CHECK THE IGNITION POWER SUPPLY TO THE REM

1. Disconnect the REM electrical connector, CR12. 2. Turn the ignition switch to the ON position. 3. Measure the voltage between CR12, pin 08 (GU) and GROUND.

Is the voltage less than 10 volts?

-> Yes
REPAIR the circuit between the battery and the REM. This circuit includes the primary junction box (fuse 19). For additional information, refer to the wiring diagrams.

-> No
GO to Pinpoint Test G251562t32.

G251562t32 : CHECK THE POWER SUPPLY FROM THE FUEL PUMP RELAY TO THE REM

1. Reconnect the REM electrical connector, CR12. 2. Disconnect the REM electrical connector, CR73 3. Make sure the fuel pump relay is energized. 4. Measure the voltage between CR73, pin 01 (N) and GROUND.

Is the voltage less than 10 volts?

-> Yes
REPAIR the circuit between the battery and the REM. This circuit includes the fuel pump relay and the rear power distribution box (fuse 33). For additional information, refer to the wiring diagrams.

-> No
GO to Pinpoint Test G251562t33.

G251562t33 : CHECK THE GROUND TO THE REM

1. Measure the resistance between CR73, pins 02 and 15 (B) and GROUND.

Is the resistance greater than 5 ohms?

-> Yes
REPAIR the high resistance circuit. For additional information, refer to the wiring diagrams.

-> No
CHECK for DTCs. Continue to pinpoint test indicated by the DTC.

www.JagDocs.com

PINPOINT TEST G251562p7 : CHECK THE POWER AND GROUND SUPPLIES TO THE FUEL PUMP DRIVER MODULE

G251562t34 : CHECK THE POWER SUPPLY FROM THE FUEL PUMP RELAY TO THE FUEL PUMP DRIVER MODULE

1. Disconnect the fuel pump driver module electrical connector, CR26. 2. Make sure the fuel pump relay is energized. 3. Measure the voltage between CR26, pin 09 (N) and GROUND.

Is the voltage less than 10 volts?

-> Yes
REPAIR the circuit between the battery and the fuel pump driver module. This circuit includes the fuel pump relay and the rear power distribution box (fuse 24). For additional information, refer to the wiring diagrams.

-> No
GO to Pinpoint Test G251562t35.

G251562t35 : CHECK THE GROUND TO THE FUEL PUMP DRIVER MODULE

1. Measure the resistance between CR26, pin 02 (B) and GROUND.

Is the resistance greater than 5 ohms?

-> Yes
REPAIR the high resistance circuit. For additional information, refer to the wiring diagrams.

-> No
CHECK for DTCs. Continue to pinpoint test indicated by the DTC.

Pinpoint Tests

PINPOINT TEST G251562p1 : P0460; FUEL LEVEL SENSOR(S) CIRCUIT RANGE/PERFORMANCE

G251562t1 : CHECK THE SIGNAL CIRCUIT BETWEEN THE REM AND LEVEL SENSOR 1 FOR HIGH RESISTANCE

1. Disconnect the REM electrical connector, CR04. 2. Disconnect the left-hand fuel level sensor electrical connector, FP04. 3. Measure the resistance between CR04, pin 15 (WR) and FP04, pin 01 (WR).

Is the resistance greater than 5 ohms?

-> Yes
REPAIR the high resistance circuit. For additional information, refer to the wiring diagrams. CLEAR the DTC. TEST the system for normal operation.

-> No
GO to Pinpoint Test G251562t4.

G251562t4 : CHECK THE SIGNAL CIRCUIT BETWEEN THE REM AND LEVEL SENSOR 1 FOR SHORT TO GROUND

1. Measure the resistance between CR04, pin 15 (WR) and GROUND.

Is the resistance less than 10,000 ohms?

-> Yes
REPAIR the short circuit. For additional information, refer to the wiring diagrams. CLEAR the DTC. TEST the system for normal operation.

-> No
GO to Pinpoint Test G251562t5.

G251562t5 : CHECK THE SIGNAL CIRCUIT BETWEEN THE REM AND LEVEL SENSOR 1 FOR SHORT TO B+

1. Measure the voltage between CR04, pin 15 (WR) and GROUND.

Is the voltage greater than 3 volts?

-> Yes
REPAIR the short circuit. For additional information, refer to the wiring diagrams. CLEAR the DTC. TEST the system for normal operation.

-> No
GO to Pinpoint Test G251562t2.

www.JagDocs.com

G251562t2 : CHECK THE SIGNAL CIRCUIT BETWEEN THE REM AND LEVEL SENSOR 2 FOR HIGH RESISTANCE

1. Disconnect the right-hand fuel level sensor electrical connector, FP07. 2. For vehicles without supercharger, measure the resistance between CR04, pin 16 (WU) and FP07, pin 01 (WU). 3. For vehicles with supercharger, measure the resistance between CR04, pin 16 (WU) and FP03, pin 01 (WU).

Is the resistance greater than 5 ohms?

-> Yes
REPAIR the high resistance circuit. For additional information, refer to the wiring diagrams. CLEAR the DTC. TEST the system for normal operation.

-> No
GO to Pinpoint Test G251562t6.

G251562t6 : CHECK THE SIGNAL CIRCUIT BETWEEN THE REM AND LEVEL SENSOR 2 FOR SHORT TO GROUND

1. Measure the resistance between CR04, pin 16 (WU) and GROUND.

Is the resistance less than 10,000 ohms?

-> Yes
REPAIR the short circuit. For additional information, refer to the wiring diagrams. CLEAR the DTC. TEST the system for normal operation.

-> No
GO to Pinpoint Test G251562t7.

G251562t7 : CHECK THE SIGNAL CIRCUIT BETWEEN THE REM AND LEVEL SENSOR 2 FOR SHORT TO B+

1. Measure the voltage between CR04, pin 16 (WU) and GROUND.

Is the voltage greater than 3 volts?

-> Yes
REPAIR the short circuit. For additional information, refer to the wiring diagrams. CLEAR the DTC. TEST the system for normal operation.

-> No
GO to Pinpoint Test G251562t3.

G251562t3 : CHECK THE COMMON CIRCUIT BETWEEN THE REM AND LEVEL SENSORS FOR HIGH RESISTANCE

1. Disconnect the REM electrical connector, CR11. 2. Measure the resistance between CR11, pin 23 (BK) and FP04, pin 03 (BK). 3. Measure the resistance between CR11, pin 23 (BK) and FP07, pin 03 (BK).

Is either resistance greater than 5 ohms?

-> Yes
REPAIR the high resistance circuit. For additional information, refer to the wiring diagrams. CLEAR the DTC. TEST the system for normal operation.

-> No
GO to Pinpoint Test G251562t8.

G251562t8 : CHECK THE COMMON CIRCUIT BETWEEN THE REM AND LEVEL SENSORS FOR SHORT TO GROUND

1. Measure the resistance between CR11, pin 23 (BK) and GROUND.

Is the resistance less than 10,000 ohms?

-> Yes
REPAIR the short circuit. For additional information, refer to the wiring diagrams. CLEAR the DTC. TEST the system for normal operation.

-> No
GO to Pinpoint Test G251562t9.

G251562t9 : CHECK THE COMMON CIRCUIT BETWEEN THE REM AND LEVEL SENSORS FOR SHORT TO B+

1. Measure the voltage between CR11, pin 23 (BK) and GROUND.

Is the voltage greater than 3 volts?

-> Yes
REPAIR the short circuit. For additional information, refer to the wiring diagrams. CLEAR the DTC. TEST the system for normal operation.

-> No
GO to Pinpoint Test G251562t10.

www.JagDocs.com

G251562t10 : CHECK THE SENSOR 1 RESISTANCE EMPTY

1. Remove the left-hand module. 2. Move the sensor float to it's lowest position. 3. Measure the resistance between FP04, pins 01 and 03 to the module.

Is the resistance 15 ohms?

-> Yes
GO to Pinpoint Test G251562t11.

-> No
INSTALL a new level sensor,
CLEAR the DTC. TEST the system for normal operation.

G251562t11 : CHECK THE SENSOR 1 RESISTANCE FULL

1. Move the sensor float to it's highest position. 2. Measure the resistance between FP04, pins 01 and 03 to the module.

Is the resistance 160 ohms?

-> Yes
GO to Pinpoint Test G251562t12.

-> No
INSTALL a new level sensor,
CLEAR the DTC. TEST the system for normal operation.

G251562t12 : CHECK THE SENSOR 2 RESISTANCE EMPTY

1. Remove the right-hand module. 2. Move the sensor float to it's lowest position. 3. For vehicles without supercharger, measure the resistance between FP07, pins 01 and 03 to the module. 4. For vehicles with supercharger, measure the resistance between FP03, pins 01 and 03 to the module.

Is the resistance 15 ohms?

-> Yes
GO to Pinpoint Test G251562t13.

-> No
INSTALL a new level sensor,
CLEAR the DTC. TEST the system for normal operation.

G251562t13 : CHECK THE SENSOR 2 RESISTANCE FULL

1. Move the sensor float to it's highest position. 2. For vehicles without supercharger, measure the resistance between FP07, pins 01 and 03 to the module. 3. For vehicles with supercharger, measure the resistance between FP03, pins 01 and 03 to the module.

Is the resistance 160 ohms?

-> Yes
Contact dealer technical support for advice on possible REM or instrument cluster failure.

-> No
INSTALL a new level sensor,
CLEAR the DTC. TEST the system for normal operation.

PINPOINT TEST G251562p2 : P1233; FUEL PUMP 2 DRIVE CIRCUIT FAULT

G251562t14 : CHECK THE ECM TO FUEL PUMP 2 MODULE DRIVE CIRCUIT FOR HIGH RESISTANCE

1. Disconnect the battery negative terminal. 2. Disconnect the ECM electrical connector, PI01. 3. Disconnect the fuel pump module electrical connector, CR26. 4. Measure the resistance between PI01, pin 11 (Y) and CR26, pin 07 (Y).

Is the resistance greater than 5 ohms?

-> Yes
REPAIR the high resistance circuit. For additional information, refer to the wiring diagrams. CLEAR the DTC. TEST the system for normal operation.

-> No
GO to Pinpoint Test G251562t15.

G251562t15 : CHECK THE ECM TO FUEL PUMP 2 MODULE DRIVE CIRCUIT FOR SHORT TO GROUND

1. Reconnect the battery negative terminal. 2. Measure the resistance between PI01, pin 11 (Y) and GROUND.

Is the resistance less than 10,000 ohms?

-> Yes
REPAIR the short circuit. For additional information, refer to the wiring diagrams. CLEAR the DTC. TEST the system for normal operation.

www.JagDocs.com

-> No
GO to Pinpoint Test G251562t16.

G251562t16 : CHECK THE ECM TO FUEL PUMP 2 MODULE DRIVE CIRCUIT FOR SHORT TO B+

1. Measure the voltage between PI01, pin 11 (Y) and GROUND.

Is the voltage greater than 3 volts?

-> Yes
REPAIR the short circuit. For additional information, refer to the wiring diagrams. CLEAR the DTC. TEST the system for normal operation.

-> No
INSTALL a new fuel pump module. CLEAR the DTC. TEST the system for normal operation.

PINPOINT TEST G251562p3 : P1234, P1236; NO FUEL PUMP COMMANDS RECEIVED BY THE ECM

G251562t17 : CHECK THE ECM TO REM DRIVE CIRCUIT FOR HIGH RESISTANCE

1. Disconnect the battery negative terminal. 2. Disconnect the ECM electrical connector, PI01. 3. Disconnect the REM electrical connector, CR11. 4. Measure the resistance between PI01, pin 27 (WR) and CR11, pin 19 (N).

Is the resistance greater than 5 ohms?

-> Yes
REPAIR the high resistance circuit. For additional information, refer to the wiring diagrams. CLEAR the DTC. TEST the system for normal operation.

-> No
GO to Pinpoint Test G251562t18.

G251562t18 : CHECK THE ECM TO REM DRIVE CIRCUIT FOR SHORT TO GROUND

1. Reconnect the battery negative terminal. 2. Measure the resistance between PI01, pin 27 (WR) and GROUND.

Is the resistance less than 10,000 ohms?

-> Yes
REPAIR the short circuit. For additional information, refer to the wiring diagrams. CLEAR the DTC. TEST the system for normal operation.

-> No
GO to Pinpoint Test G251562t19.

G251562t19 : CHECK THE ECM TO REM DRIVE CIRCUIT FOR SHORT TO B+

1. Measure the voltage between PI01, pin 27 (WR) and GROUND.

Is the voltage greater than 3 volts?

-> Yes
REPAIR the short circuit. For additional information, refer to the wiring diagrams. CLEAR the DTC. TEST the system for normal operation.

-> No
Contact dealer technical support for advice on possible REM failure.

PINPOINT TEST G251562p4 : P1338; FUEL PUMP DRIVE CIRCUIT LOW/HIGH VOLTAGE

G251562t20 : CHECK THE REM TO FUEL PUMP DRIVE CIRCUIT FOR HIGH RESISTANCE

1. Disconnect the REM electrical connector, CR73. 2. Disconnect the fuel pump electrical connector, FP04. 3. Measure the resistance between CR73, pin 03 (R) and FP04, pin 04 (R).

Is the resistance greater than 5 ohms?

-> Yes
REPAIR the high resistance circuit. For additional information, refer to the wiring diagrams. CLEAR the DTC. TEST the system for normal operation.

-> No
GO to Pinpoint Test G251562t21.

G251562t21 : CHECK THE REM TO FUEL PUMP DRIVE CIRCUIT FOR SHORT TO GROUND

1. Measure the resistance between CR73, pin 03 (R) and GROUND.

www.JagDocs.com

Is the resistance less than 10,000 ohms?

-> Yes
REPAIR the short circuit. For additional information, refer to the wiring diagrams. CLEAR the DTC. TEST the system for normal operation.

-> No
GO to Pinpoint Test G251562t22.

G251562t22 : CHECK THE REM TO FUEL PUMP DRIVE CIRCUIT FOR SHORT TO B+

1. Measure the voltage between CR73, pin 03 (R) and GROUND.

Is the voltage greater than 3 volts?

-> Yes
REPAIR the short circuit. For additional information, refer to the wiring diagrams. CLEAR the DTC. TEST the system for normal operation.

-> No
GO to Pinpoint Test G251562t23.

G251562t23 : CHECK THE POWER OUTPUT TO THE FUEL PUMP

1. Reconnect the REM electrical connector, CR73. 2. Turn the ignition switch to the ON position. 3. Measure the voltage between FP04, pin 02 (Y) and GROUND.

Is the voltage greater than 5 volts?

-> Yes
INSTALL a new fuel pump module,
CLEAR the DTC. TEST the system for normal operation.

-> No
GO to Pinpoint Test G251562t24.

G251562t24 : CHECK THE POWER CIRCUIT TO THE FUEL PUMP FOR HIGH RESISTANCE

1. Disconnect the REM electrical connector, CR73. 2. Measure the resistance between CR73, pin 04 (Y) and FP04, pin 02 (Y).

Is the resistance greater than 5 ohms?

-> Yes
REPAIR the high resistance circuit. For additional information, refer to the wiring diagrams. CLEAR the DTC. TEST the system for normal operation.

-> No
Contact dealer technical support for advice on possible REM failure.

PINPOINT TEST G251562p5 : P1339; FUEL PUMP 2 DRIVE CIRCUIT LOW/HIGH VOLTAGE

G251562t25 : CHECK THE FUEL PUMP 2 MODULE TO FUEL PUMP DRIVE CIRCUIT FOR HIGH RESISTANCE

1. Disconnect the fuel pump module electrical connector, CR26. 2. Disconnect the fuel pump 2 electrical connector, FP03. 3. Measure the resistance between CR26, pin 10 (R) and FP03, pin 02 (R).

Is the resistance greater than 5 ohms?

-> Yes
REPAIR the high resistance circuit. For additional information, refer to the wiring diagrams. CLEAR the DTC. TEST the system for normal operation.

-> No
GO to Pinpoint Test G251562t26.

G251562t26 : CHECK THE FUEL PUMP 2 MODULE TO FUEL PUMP DRIVE CIRCUIT FOR SHORT TO GROUND

1. Measure the resistance between CR26, pin 10 (R) and GROUND.

Is the resistance less than 10,000 ohms?

-> Yes
REPAIR the short circuit. For additional information, refer to the wiring diagrams. CLEAR the DTC. TEST the system for normal operation.

-> No
GO to Pinpoint Test G251562t27.

G251562t27 : CHECK THE FUEL PUMP 2 MODULE TO FUEL PUMP DRIVE CIRCUIT FOR SHORT TO B+

1. Measure the voltage between CR26, pin 10 (R) and GROUND.

www.JagDocs.com

Is the voltage greater than 3 volts?

-> Yes
REPAIR the short circuit. For additional information, refer to the wiring diagrams. CLEAR the DTC. TEST the system for normal operation.

-> No
GO to Pinpoint Test G251562t28.

G251562t28 : CHECK THE FUEL PUMP MODULE TO ECM MONITOR CIRCUIT FOR HIGH RESISTANCE

1. Disconnect the battery negative terminal. 2. Disconnect the ECM electrical connector, PI01. 3. Measure the resistance between CR26, pin 01 (WU) and PI01, pin 53 (WU).

Is the resistance greater than 5 ohms?

-> Yes
REPAIR the high resistance circuit. For additional information, refer to the wiring diagrams. CLEAR the DTC. TEST the system for normal operation.

-> No
GO to Pinpoint Test G251562t29.

G251562t29 : CHECK THE FUEL PUMP MODULE TO ECM MONITOR CIRCUIT FOR SHORT TO GROUND

1. Measure the resistance between CR26, pin 01 (WU) and GROUND.

Is the resistance less than 10,000 ohms?

-> Yes
REPAIR the short circuit. For additional information, refer to the wiring diagrams. CLEAR the DTC. TEST the system for normal operation.

-> No
GO to Pinpoint Test G251562t30.

G251562t30 : CHECK THE FUEL PUMP MODULE TO ECM MONITOR CIRCUIT FOR SHORT TO B+

1. Measure the voltage between CR26, pin 01 (WU) and GROUND.

Is the voltage greater than 3 volts?

-> Yes

REPAIR the short circuit. For additional information, refer to the wiring diagrams. CLEAR the DTC. TEST the system for normal operation.

-> No

Contact dealer technical support for advice on possible fuel pump driver module failure.

www.JagDocs.com

Fuel Tank and Lines - 4.2L NA V8 - AJV8/4.2L SC V8 - AJV8/3.0L NA V6 - AJ27/3.5L NA V8 - AJV8, VIN Range: G45704->G99999

Overview

There are changes to the engine management system (EMS) for 2006 my, the most obvious of which will be the change to 7-digit diagnostic trouble codes (DTCs) from the familiar 5-digit, and the change from two fuel pumps for vehicles with supercharger to a single pump.

For additional information on the description and operation of the fuel system.
Fuel Tank and Lines - 2.7L V6 - TdV6

Inspection and Verification

1 . Verify the customer concern.

2 . Visually inspect for obvious signs of mechanical or electrical damage.

Mechanical	Electrical
Fuel leaks Damaged fuel lines Damaged push connect fittings Fuel level Fuel contamination/grade/quality Damaged fuel tank filler pipe cap Damaged fuel tank filler pipe	Fuses Inertia switch Loose or corroded electrical connectors Harnesses Fuel pump driver module (FPDM) Rear electronic module (REM) Fuel pump relay Engine control module (ECM)

3 . If an obvious cause for an observed or reported symptom is found, correct the cause (if possible) before proceeding to the next step.

4 . If the cause is not visually evident use the Jaguar approved diagnostic system or a scan tool to retrieve the fault codes before proceeding to the diagnostic trouble code (DTC) Index.

Symptom Chart

Symptom	Possible source	Action
Engine cranks, but does not fire	Engine breather system disconnected/restricted Ignition system Fuel system Harness Crankshaft position (CKP) sensor ECM fault	Check the engine breather system, Engine Emission Control - VIN Range: G45704->G99999 For ignition system, Engine Ignition - VIN Range: G45704->G99999 or Engine Ignition - VIN Range: G45704->G99999 For fuel pressure test, GO to Pinpoint Test G532449p8. For CKP tests, Electronic Engine Controls - VIN Range: G45704->G99999 or Electronic Engine Controls - VIN Range: G45704->G99999 Refer to the warranty policy and procedures manual if an ECM is suspect.
Engine cranks and fires, but will not start	Evaporative emissions purge valve Fuel pump Spark plugs HT short to ground (tracking) check rubber boots for cracks/damage Ignition coil failure(s) Harness	For purge valve tests, Evaporative Emissions - VIN Range: G45704->G99999 For fuel pressure test, GO to Pinpoint Test G532449p8. For ignition system, Engine Ignition - VIN Range: G45704->G99999 or Engine Ignition - VIN Range: G45704->G99999
Difficult to start cold	Check coolant anti-freeze content Battery CKP sensor Exhaust gas recirculation (EGR) valve stuck open Fuel pump Evaporative emissions purge	Check engine coolant level and condition. For battery information, Battery For CKP sensor tests, Electronic Engine Controls - VIN Range: G45704->G99999 or Electronic Engine Controls - VIN Range: G45704->G99999 For EGR system information, Engine Emission Control - VIN Range: G45704->G99999 For fuel pressure test, GO to Pinpoint Test G532449p8.

www.JagDocs.com

	valve	For purge valve tests, Evaporative Emissions - VIN Range: G45704->G99999
Difficult to start hot	Injector leak Engine fuel temperature (EFT) sensor Intake air temperature (IAT) sensor Mass air flow (MAF) sensor Evaporative emissions purge valve Fuel pump Ignition system EGR valve stuck open	For fuel injector information, Fuel Injectors (18.10.02) or Fuel Injectors (18.10.02) For EFT, IAT and MAF sensor tests, Electronic Engine Controls - VIN Range: G45704->G99999 or Electronic Engine Controls - VIN Range: G45704->G99999 For purge valve tests, Evaporative Emissions - VIN Range: G45704->G99999 For fuel pressure test, GO to Pinpoint Test G532449p8. For ignition system, Engine Ignition - VIN Range: G45704->G99999 or Engine Ignition - VIN Range: G45704->G99999 For EGR tests, Engine Emission Control - VIN Range: G45704->G99999
Difficult to start after hot soak (vehicle standing after engine has reached operating temperature)	Injector leak EFT sensor IAT sensor MAF sensor Evaporative emissions purge valve Fuel pump Ignition system EGR valve stuck open	For fuel injector tests, Fuel Charging and Controls - VIN Range: G45704->G99999 Fuel Charging and Controls - VIN Range: G45704->G99999 For EFT sensor, IAT sensor and MAF sensor tests, Electronic Engine Controls - VIN Range: G45704->G99999 or Electronic Engine Controls - VIN Range: G45704->G99999 For purge valve tests, Evaporative Emissions - VIN Range: G45704->G99999 For fuel pressure test, GO to Pinpoint Test G532449p8. For ignition system, Engine Ignition - VIN Range: G45704->G99999 or Engine Ignition - VIN Range: G45704-

		>G99999 For EGR tests, Engine Emission Control - VIN Range: G45704->G99999
Engine stalls soon after start	Breather system disconnected/restricted ECM relay Harness MAF sensor Ignition system Air filter restricted Fuel lines Fuel rail pressure (FRP) sensor Air leakage	For breather system information, Engine Emission Control - VIN Range: G45704->G99999 For ECM relay and MAF sensor tests, Electronic Engine Controls - VIN Range: G45704->G99999 or Electronic Engine Controls - VIN Range: G45704->G99999 For ignition system, Engine Ignition - VIN Range: G45704->G99999 or Engine Ignition - VIN Range: G45704->G99999 For air filter information, Intake Air Distribution and Filtering - VIN Range: G45704->G99999 or Intake Air Distribution and Filtering - VIN Range: G45704->G99999 For fuel line tests, GO to Pinpoint Test G532449p2. For FRP sensor tests, Electronic Engine Controls - VIN Range: G45704->G99999 or Electronic Engine Controls - VIN Range: G45704->G99999 For intake system information, Intake Air Distribution and Filtering - VIN Range: G45704->G99999 or Intake Air Distribution and Filtering - VIN Range: G45704->G99999
Engine hesitates/poor acceleration	Fuel pump Injector leak Fuel pressure Fuel lines Air leakage Throttle position (TP) sensors	For fuel pressure test, GO to Pinpoint Test G532449p8. For FRP sensor tests, Electronic Engine Controls - VIN Range: G45704->G99999 or Electronic Engine Controls - VIN Range: G45704->G99999 For fuel line tests, GO to Pinpoint Test G532449p2. For intake system, Intake Air Distribution and Filtering -

www.JagDocs.com

	Throttle motor Ignition system EGR system HO2 sensors Transmission malfunction Restricted pedal travel (carpet, etc) Accelerator pedal position (APP) sensor	VIN Range: G45704->G99999 or Intake Air Distribution and Filtering - VIN Range: G45704->G99999 For TP sensor and throttle motor tests, Electronic Engine Controls - VIN Range: G45704->G99999 or Electronic Engine Controls - VIN Range: G45704->G99999 For ignition system, Engine Ignition - VIN Range: G45704->G99999 or Engine Ignition - VIN Range: G45704->G99999 For EGR, Engine Emission Control - VIN Range: G45704->G99999 Check for DTCs indicating a faulty HO2 sensor. Refer to the DTC index. For transmission information, Check accelerator pedal travel. For APP sensor tests, Electronic Engine Controls - VIN Range: G45704->G99999 or Electronic Engine Controls - VIN Range: G45704->G99999
Engine backfires	Fuel pump Fuel lines Air leakage MAF sensor HO2 sensors Ignition system Sticking variable camshaft timing (VCT) hub APP sensor	For fuel pressure test, GO to Pinpoint Test G532449p8. For fuel line tests, GO to Pinpoint Test G532449p2. For intake system, Intake Air Distribution and Filtering - VIN Range: G45704->G99999 or Intake Air Distribution and Filtering - VIN Range: G45704->G99999 For MAF sensor tests, Electronic Engine Controls - VIN Range: G45704->G99999 or Electronic Engine Controls - VIN Range: G45704->G99999 Check for DTCs indicating a faulty HO2 sensor. Refer to the DTC index. For ignition system, Engine Ignition - VIN Range: G45704->G99999 or Engine Ignition - VIN Range: G45704-

		>G99999 Check DTCs for VCT range/performance fault. For VCT information, Engine For APP sensor tests, Electronic Engine Controls - VIN Range: G45704->G99999 or Electronic Engine Controls - VIN Range: G45704->G99999
Engine surges	Fuel pump Fuel lines MAF sensor Harness TP sensors Throttle motor Ignition system	For fuel pressure test, GO to Pinpoint Test G532449p8. For fuel line tests, GO to Pinpoint Test G532449p2. For MAF sensor, TP sensor, and throttle motor relay tests, Electronic Engine Controls - VIN Range: G45704->G99999 or Electronic Engine Controls - VIN Range: G45704->G99999 For ignition system, Engine Ignition - VIN Range: G45704->G99999 or Engine Ignition - VIN Range: G45704->G99999
Engine detonates/knocks	Knock sensor (KS)/circuit malfunction Fuel pump Fuel lines FRP sensor MAF sensor HO2 sensors Air leakage Sticking VCT hub BARO sensor malfunction (internal ECM fault)	For KS circuit tests, Electronic Engine Controls - VIN Range: G45704->G99999 For fuel pressure test, GO to Pinpoint Test G532449p8. For fuel line tests, GO to Pinpoint Test G532449p2. For MAF, FRP sensor and HO2 sensor tests, Electronic Engine Controls - VIN Range: G45704->G99999 or Electronic Engine Controls - VIN Range: G45704->G99999 For intake system, Intake Air Distribution and Filtering - VIN Range: G45704->G99999 or Intake Air Distribution and Filtering - VIN Range: G45704->G99999 Check DTCs for VCT range/performance fault. For VCT information,

www.JagDocs.com

		Engine Refer to the warranty policy and procedures manual if an ECM is suspect.

DTC index

NOTE:

Generic scan tools may not read the codes listed, or may read only 5-digit codes. Match the 5 digits from the scan tool to the first 5 digits of the 7-digit code listed to identify the fault (the last 2 digits give extra information read by the manufacturer-approved diagnostic system).

NOTE:

For a full list of DTCs,
Electronic Engine Controls - VIN Range: G45704->G99999 or
Electronic Engine Controls - VIN Range: G45704->G99999

DTC	Description	Possible source	Action
P008700	Fuel rail/system pressure - too low	Fuel rail pressure (FRP) sensor disconnected FRP sensor to ECM sensing circuit: short circuit to ground FRP sensor supply circuit: high resistance FRP sensor failure Fuel pump failure Fuel line leak Restricted fuel line	For FRP sensor tests, Electronic Engine Controls - VIN Range: G45704->G99999 or Electronic Engine Controls - VIN Range: G45704->G99999 For fuel line tests, GO to Pinpoint Test G532449p2. For fuel pressure tests, GO to Pinpoint Test G532449p8.
P008800	Fuel rail/system pressure - too high	FRP sensor to ECM wiring (supply/sense): short circuit to each other FRP sensor to ECM sense circuit: short circuit to power	For FRP sensor tests, Electronic Engine Controls - VIN Range: G45704->G99999 or Electronic Engine Controls - VIN Range:

		FRP sensor ground circuit: high resistance FRP sensor failure Restricted fuel line Fuel pump short circuit to battery	G45704->G99999 For fuel line tests, GO to Pinpoint Test G532449p2.
P017100	System too lean (right hand bank)	Air intake leak between MAF sensor and cylinder head Fuel filter/system restriction Fuel injector restriction MAF sensor fault (low intake air flow) Exhaust leak (before catalyst)	For intake system information, Intake Air Distribution and Filtering - VIN Range: G45704->G99999 or Intake Air Distribution and Filtering - VIN Range: G45704->G99999 For fuel line tests, GO to Pinpoint Test G532449p2. For fuel pressure tests, GO to Pinpoint Test G532449p8. For fuel injector information, Fuel Injectors (18.10.02) For MAF sensor circuit tests, Electronic Engine Controls - VIN Range: G45704->G99999 or Electronic Engine Controls - VIN Range: G45704->G99999 Check the exhaust system (before catalyst) for condition and security, Exhaust System
P017400	System too lean (left hand bank)	Air intake leak between MAF sensor and cylinder head Fuel filter/system restriction Fuel injector restriction	For intake system information, Intake Air Distribution and Filtering - VIN Range: G45704->G99999 or Intake Air Distribution

www.JagDocs.com

		MAF sensor fault (low intake air flow) Exhaust leak (before catalyst)	and Filtering - VIN Range: G45704->G99999 For fuel line tests, GO to Pinpoint Test G532449p2. For fuel pressure tests, GO to Pinpoint Test G532449p8. For fuel injector information, Fuel Injectors (18.10.02) For MAF sensor circuit tests, Electronic Engine Controls - VIN Range: G45704->G99999 or Electronic Engine Controls - VIN Range: G45704->G99999 Check the exhaust system (before catalyst) for condition and security, Exhaust System
P030000	Random/multiple cylinder misfire detected	ECM to ignition coil primary circuit faults (cylinder misfire detected DTCs also logged) Ignition coil failure Spark plug failure/fouled/incorrect gap Fuel delivery pressure (low/high) Fuel injector circuit fault(s) (injector DTCs also logged) Fuel injectors restricted/leaking Fuel injectors continuously open Fuel contamination	For ignition coil and spark plug tests, Engine Ignition - VIN Range: G45704->G99999 or Engine Ignition - VIN Range: G45704->G99999 For fuel pressure test, GO to Pinpoint Test G532449p8. For fuel injector circuit tests, Fuel Charging and Controls - VIN Range: G45704->G99999 or Fuel Charging and Controls - VIN Range: G45704->G99999 Check compressions, valve gear, etc,

		Cylinder compression low Worn camshaft/broken valve springs Valve clearance adjustment	Engine - 2.7L V6 - TdV6
P046129	Fuel level sensor A circuit range/performance - signal invalid	Fuel level sensor to rear electronic module (REM) circuits; intermittent short circuit, high resistance Fuel level sensor failure REM fault (incorrect fuel level data)	For fuel level sensor tests, GO to Pinpoint Test G532449p3.
P04612F	Fuel level sensor A circuit range/performance - signal erratic	Fuel level sensor to rear electronic module (REM) circuits; intermittent short circuit, high resistance Fuel level sensor failure REM fault (incorrect fuel level data)	For fuel level sensor tests, GO to Pinpoint Test G532449p3.
P046200	Fuel level sensor A circuit low input	Fuel level sensor to rear electronic module (REM) circuits; intermittent short circuit to ground or high resistance Fuel level sensor failure REM fault (incorrect fuel level data)	For fuel level sensor tests, GO to Pinpoint Test G532449p3.
P046300	Fuel level sensor A circuit high input	Fuel level sensor to rear electronic module (REM) circuits; intermittent short circuit to power Fuel level sensor failure REM fault (incorrect fuel level data)	For fuel level sensor tests, GO to Pinpoint Test G532449p3.
P062700	Fuel pump A control circuit/open	Invalid fuel pump duty requested by ECM	Refer to the warranty policy and procedures manual if an ECM is suspect.

www.JagDocs.com

P062A00	Fuel pump driver module (FPDM) control circuit range/performance (vehicles with supercharger only)	ECM to FPDM control drive circuits; intermittent short circuit, high resistance FPDM failure Rear electronic module (REM) failure	For REM power and ground tests, GO to Pinpoint Test G532449p1. For FPDM power and ground tests, GO to Pinpoint Test G532449p9. For ECM to FPDM circuit tests, GO to Pinpoint Test G532449p7.
P263500	Fuel pump A low flow/performance (fuel pump not activated when requested by ECM)	ECM to rear electronic module (REM) drive circuit: short circuit, high resistance Fuel pump failure REM failure	For REM power and ground tests, GO to Pinpoint Test G532449p1. For ECM to REM circuit tests, Check the fuel pressure. GO to Pinpoint Test G532449p8.

Pinpoint tests

CAUTION: When probing connectors to take measurements in the course of the pinpoint tests, use the adaptor kit, part number 3548-1358-00.

NOTE:

When performing electrical voltage or resistance tests, always use a digital multimeter (DMM) accurate to 3 decimal places, and with an up-to-date calibration certificate. When testing resistance, always take the resistance of the DMM leads into account.

NOTE:

Check and rectify basic faults before beginning diagnostic routines involving pinpoint tests.

PINPOINT TEST G532449p1 : REM POWER AND GROUND CIRCUITS

G532449t1 : CHECK THE IGNITION POWER SUPPLY TO THE REM

1. Disconnect the REM electrical connector, CR12. 2. Key on, engine off. 3. Measure the voltage between:

REM connector CR12, harness side	Battery
Pin 08	Negative terminal

Is the voltage less than 10 volts?

-> Yes
REPAIR the circuit between the battery and the REM. This circuit includes fuse 19 of the primary junction box and the inertia switch. For additional information, refer to the wiring diagrams. CLEAR the DTC, test the system for normal operation.

-> No
GO to Pinpoint Test G532449t2.

G532449t2 : CHECK THE POWER SUPPLY VOLTAGE TO THE REM

1. Key off. 2. Disconnect the REM electrical connector, CR73. 3. Key on, engine off. 4. Make sure the fuel pump relay is energized. 5. Measure the voltage between:

REM connector CR73, harness side	Battery
Pin 01	Negative terminal

Is the voltage less than 10 volts?

-> Yes
REPAIR the circuit between the battery and the REM. This circuit includes fuse 33 of the rear power distribution box and the fuel pump relay. For additional information, refer to the wiring diagrams. CLEAR the DTC, test the system for normal operation.

-> No
GO to Pinpoint Test G532449t3.

G532449t3 : CHECK THE REM GROUNDS FOR HIGH RESISTANCE

1. Key off. 2. Disconnect the REM electrical connector, CR71. 3. Measure the resistance between:

www.JagDocs.com

REM connector CR73, harness side	Battery
Pin 02	Negative terminal

4. Measure the resistance between:

REM connector CR71, harness side	Battery
Pin 15	Negative terminal

Is either resistance greater than 5 ohms?

-> Yes
REPAIR the high resistance circuit. For additional information, refer to the wiring diagrams. CLEAR the DTC, test the system for normal operation.

-> No
CHECK for DTCs indicating a REM or ECM fault. REFER to the DTC index.
Electronic Engine Controls - VIN Range: G45704->G99999 For vehicles with 3.0L engines and
Electronic Engine Controls - VIN Range: G45704->G99999 For vehicles with 3.5L and 4.2L engines.

PINPOINT TEST G532449p9 : FUEL PUMP DRIVER MODULE (FPDM) POWER AND GROUND CIRCUITS (V8 VEHICLES WITH SUPERCHARGER)

G532449t43 : CHECK THE POWER SUPPLY VOLTAGE TO THE FPDM

1. Disconnect the FPDM electrical connector, FP26. 2. Key on, engine off. 3. Make sure the fuel pump relay is energized. 4. Measure the voltage between:

FPDM connector FP26, harness side	Battery
Pin 05	Negative terminal

Is the voltage less than 10 volts?

-> Yes
REPAIR the circuit between the battery and the FPDM. This circuit includes fuse 24 of the rear power

distribution box, the fuel pump relay and the mega fuses. For additional information, refer to the wiring diagrams. CLEAR the DTC, test the system for normal operation.

-> No
GO to Pinpoint Test G532449t44.

G532449t44 : CHECK THE FPDM GROUND FOR HIGH RESISTANCE

1. Measure the resistance between:

FPDM connector FP26, harness side	Battery
Pin 06	Negative terminal

Is the resistance greater than 5 ohms?

-> Yes
REPAIR the high resistance circuit. For additional information, refer to the wiring diagrams. CLEAR the DTC, test the system for normal operation.

-> No
CHECK for DTCs indicating a FPDM or ECM fault.
Electronic Engine Controls - VIN Range: G45704->G99999 For vehicles with 3.0L engines and
Electronic Engine Controls - VIN Range: G45704->G99999 For vehicles with 3.5L and 4.2L engines.

PINPOINT TEST G532449p3 : FUEL LEVEL SENSOR(S) CIRCUIT RANGE/PERFORMANCE

G532449t7 : CHECK THE SIGNAL CIRCUIT BETWEEN THE REM AND LEVEL SENSOR A FOR SHORT CIRCUIT TO GROUND

1. Disconnect the fuel pump module electrical connector, FP06. 2. Measure the resistance between:

Fuel module connector FP06, harness side	Battery
Pin 12	Negative terminal

Is the resistance less than 10,000 ohms?

www.JagDocs.com

-> Yes
REPAIR the short circuit. For additional information, refer to the wiring diagrams. CLEAR the DTC, test the system for normal operation.

-> No
GO to Pinpoint Test G532449t8.

G532449t8 : CHECK THE SIGNAL CIRCUIT BETWEEN THE REM AND LEVEL SENSOR A FOR SHORT CIRCUIT TO POWER

1. Measure the resistance between:

Fuel module connector FP06, harness side	Battery
Pin 12	Positive terminal

Is the resistance less than 10,000 ohms?

-> Yes
REPAIR the short circuit. For additional information, refer to the wiring diagrams. CLEAR the DTC, test the system for normal operation.

-> No
GO to Pinpoint Test G532449t10.

G532449t10 : CHECK THE SIGNAL CIRCUIT BETWEEN THE REM AND LEVEL SENSOR B FOR SHORT CIRCUIT TO GROUND

1. Measure the resistance between:

Fuel module connector FP06, harness side	Battery
Pin 14	Negative terminal

Is the resistance less than 10,000 ohms?

-> Yes
REPAIR the short circuit. For additional information, refer to the wiring diagrams. CLEAR the DTC, test the system for normal operation.

-> No

GO to Pinpoint Test G532449t11.

G532449t11 : CHECK THE SIGNAL CIRCUIT BETWEEN THE REM AND LEVEL SENSOR B FOR SHORT CIRCUIT TO POWER

1. Measure the resistance between:

Fuel module connector FP06, harness side	Battery
Pin 14	Positive terminal

Is the resistance less than 10,000 ohms?

-> Yes
REPAIR the short circuit. For additional information, refer to the wiring diagrams. CLEAR the DTC, test the system for normal operation.

-> No
GO to Pinpoint Test G532449t13.

G532449t13 : CHECK THE SIGNAL RETURN CIRCUIT BETWEEN THE REM AND LEVEL SENSORS FOR SHORT CIRCUIT TO GROUND

1. Measure the resistance between:

Fuel module connector FP06, harness side	Battery
Pin 13	Negative terminal

Is the resistance less than 10,000 ohms?

-> Yes
REPAIR the short circuit. For additional information, refer to the wiring diagrams. CLEAR the DTC, test the system for normal operation.

-> No
GO to Pinpoint Test G532449t14.

G532449t14 : CHECK THE SIGNAL RETURN CIRCUIT BETWEEN THE REM AND LEVEL SENSORS FOR SHORT CIRCUIT TO POWER

1. Measure the resistance between:

www.JagDocs.com

Fuel module connector FP06, harness side	Battery
Pin 13	Positive terminal

Is the resistance less than 10,000 ohms?

-> Yes
REPAIR the short circuit. For additional information, refer to the wiring diagrams. CLEAR the DTC, test the system for normal operation.

-> No
GO to Pinpoint Test G532449t15.

G532449t15 : CHECK THE SENSOR A RESISTANCE EMPTY

1. Remove the right-hand fuel pump module.
Fuel Pump Module - 2.7L V6 - TdV6 (19.45.08) 2. Move the sensor float to it's lowest position. 3. Measure the resistance between:

Fuel module connector FP06, component side	Fuel module connector FP06, component side
Pin 12	Pin 13

Is the resistance 15 ohms?

-> Yes
GO to Pinpoint Test G532449t16.

-> No
INSTALL a new level sensor,
Fuel Level Sender RH - 2.7L V6 - TdV6 CLEAR the DTC, test the system for normal operation.

G532449t16 : CHECK THE SENSOR A RESISTANCE FULL

1. Move the sensor float to it's highest position. 2. Measure the resistance between:

Fuel module connector FP06, component side	Fuel module connector FP06, component side
Pin 12	Pin 13

Is the resistance 160 ohms?

-> Yes
GO to Pinpoint Test G532449t17.

-> No
INSTALL a new level sensor,
Fuel Level Sender RH - 2.7L V6 - TdV6 CLEAR the DTC, test the system for normal operation.

G532449t17 : CHECK THE SENSOR B RESISTANCE EMPTY

1. Remove the left-hand fuel pump module.
Fuel Pump Module - 2.7L V6 - TdV6 (19.45.08) 2. Move the sensor float to it's lowest position. 3. Measure the resistance between:

Fuel module connector FP06, component side	Fuel module connector FP06, component side
Pin 13	Pin 14

Is the resistance 15 ohms?

-> Yes
GO to Pinpoint Test G532449t18.

-> No
INSTALL a new level sensor,
Fuel Level Sender LH - 2.7L V6 - TdV6 CLEAR the DTC, test the system for normal operation.

G532449t18 : CHECK THE SENSOR B RESISTANCE FULL

1. Move the sensor float to it's highest position. 2. Measure the resistance between:

Fuel module connector FP06, component side	Fuel module connector FP06, component side
Pin 13	Pin 14

Is the resistance 160 ohms?

-> Yes
GO to Pinpoint Test G532449t6.

-> No

www.JagDocs.com

INSTALL a new level sensor,
Fuel Level Sender LH - 2.7L V6 - TdV6 CLEAR the DTC, test the system for normal operation.

G532449t6 : CHECK THE SIGNAL CIRCUIT BETWEEN THE REM AND LEVEL SENSOR A FOR HIGH RESISTANCE

1. Disconnect the REM electrical connector, CR04. 2. Measure the resistance between CR04, pin 15 (WR) and FP06, pin 12 (WR).

REM connector CR04, harness side	Fuel module connector FP06, harness side
Pin 15	Pin 12

Is the resistance greater than 5 ohms?

-> Yes
REPAIR the high resistance circuit. For additional information, refer to the wiring diagrams. CLEAR the DTC, test the system for normal operation.

-> No
GO to Pinpoint Test G532449t9.

G532449t9 : CHECK THE SIGNAL CIRCUIT BETWEEN THE REM AND LEVEL SENSOR B FOR HIGH RESISTANCE

1. Measure the resistance between:

REM connector CR04, harness side	Fuel module connector FP06, harness side
Pin 16	Pin 14

Is the resistance greater than 5 ohms?

-> Yes
REPAIR the high resistance circuit. For additional information, refer to the wiring diagrams. CLEAR the DTC, test the system for normal operation.

-> No
GO to Pinpoint Test G532449t12.

G532449t12 : CHECK THE SIGNAL RETURN CIRCUIT BETWEEN THE REM AND LEVEL SENSORS FOR HIGH RESISTANCE

1. Disconnect the REM electrical connector, CR11. 2. Measure the resistance between:

REM connector CR11, harness side	Fuel module connector FP06, harness side
Pin 23	Pin 13

Is the resistance greater than 5 ohms?

-> Yes

REPAIR the high resistance circuit. For additional information, refer to the wiring diagrams. CLEAR the DTC, test the system for normal operation.

-> No

CHECK for DTCs indicating another cause of the complaint.

Electronic Engine Controls - VIN Range: G45704->G99999 For vehicles with 3.0L engines and

Electronic Engine Controls - VIN Range: G45704->G99999 For vehicles with 3.5L and 4.2L engines.

PINPOINT TEST G532449p5 : ECM TO REM DRIVE CIRCUIT (V6 AND V8 VEHICLES WITHOUT SUPERCHARGER)

G532449t23 : CHECK THE ECM TO REM DRIVE CIRCUIT FOR SHORT CIRCUIT TO GROUND

1. Disconnect the REM electrical connector, CR11. 2. Measure the resistance between:

REM connector CR11, harness side	Battery
Pin 19	Negative terminal

Is the resistance less than 10,000 ohms?

-> Yes

REPAIR the short circuit. For additional information, refer to the wiring diagrams. CLEAR the DTC, test the system for normal operation.

-> No

www.JagDocs.com

GO to Pinpoint Test G532449t24.

G532449t24 : CHECK THE ECM TO REM DRIVE CIRCUIT FOR SHORT CIRCUIT TO POWER

1. Measure the resistance between:

REM connector CR11, harness side	Battery
Pin 19	Positive terminal

Is the resistance less than 10,000 ohms?

-> Yes
REPAIR the short circuit. For additional information, refer to the wiring diagrams. CLEAR the DTC, test the system for normal operation.

-> No
GO to Pinpoint Test G532449t22.

G532449t22 : CHECK THE ECM TO REM DRIVE CIRCUIT FOR HIGH RESISTANCE

1. Disconnect the ECM electrical connector, EC300. 2. Measure the resistance between:

REM connector CR11, harness side	ECM connector EC300, harness side
Pin 19	Pin 20

Is the resistance greater than 5 ohms?

-> Yes
REPAIR the high resistance circuit. For additional information, refer to the wiring diagrams. CLEAR the DTC, test the system for normal operation.

-> No
CHECK for DTCs indicating a REM or ECM fault.
Electronic Engine Controls - VIN Range: G45704->G99999 For vehicles with 3.0L engines and
Electronic Engine Controls - VIN Range: G45704->G99999 For vehicles with 3.5L and 4.2L engines.

PINPOINT TEST G532449p7 : ECM TO FPDM MONITOR AND CONTROL CIRCUITS (V8 VEHICLES WITH SUPERCHARGER)

G532449t21 : CHECK THE ECM TO FPDM MONITOR CIRCUIT FOR SHORT CIRCUIT TO GROUND

1. Key off. 2. Disconnect the FPDM electrical connector, FP26. 3. Measure the resistance between:

FPDM connector FP26, harness side	Battery
Pin 04	Negative terminal

Is the resistance less than 10,000 ohms?

-> Yes
REPAIR the short circuit. For additional information, refer to the wiring diagrams. CLEAR the DTC, test the system for normal operation.

-> No
GO to Pinpoint Test G532449t28.

G532449t28 : CHECK THE ECM TO FPDM MONITOR CIRCUIT FOR SHORT CIRCUIT TO POWER

1. Measure the resistance between:

FPDM connector FP26, harness side	Battery
Pin 04	Positive terminal

Is the resistance less than 10,000 ohms?

-> Yes
REPAIR the short circuit. For additional information, refer to the wiring diagrams. CLEAR the DTC, test the system for normal operation.

-> No

www.JagDocs.com

GO to Pinpoint Test G532449t30.

G532449t30 : CHECK THE ECM TO FPDM CONTROL CIRCUIT FOR SHORT CIRCUIT TO GROUND

1. Measure the resistance between:

FPDM connector FP26, harness side	Battery
Pin 03	Negative terminal

Is the resistance less than 10,000 ohms?

-> Yes
REPAIR the short circuit. For additional information, refer to the wiring diagrams. CLEAR the DTC, test the system for normal operation.

-> No
GO to Pinpoint Test G532449t31.

G532449t31 : CHECK THE ECM TO FPDM CONTROL CIRCUIT FOR SHORT CIRCUIT TO POWER

1. Measure the resistance between:

FPDM connector FP26, harness side	Battery
Pin 03	Positive terminal

Is the resistance less than 10,000 ohms?

-> Yes
REPAIR the short circuit. For additional information, refer to the wiring diagrams. CLEAR the DTC, test the system for normal operation.

-> No
GO to Pinpoint Test G532449t32.

G532449t32 : CHECK THE ECM TO FPDM MONITOR CIRCUIT FOR HIGH RESISTANCE

1. Disconnect the ECM electrical connector, EC300. 2. Measure the resistance between:

FPDM connector FP26, harness side	ECM connector EC300, harness side
Pin 04	Pin 21

Is the resistance greater than 5 ohms?

-> Yes
REPAIR the high resistance circuit. For additional information, refer to the wiring diagrams. CLEAR the DTC, test the system for normal operation.

-> No
GO to Pinpoint Test G532449t33.

G532449t33 : CHECK THE ECM TO FPDM CONTROL CIRCUIT FOR HIGH RESISTANCE

1. Measure the resistance between:

FPDM connector FP26, harness side	ECM connector EC300, harness side
Pin 03	Pin 20

Is the resistance greater than 5 ohms?

-> Yes
REPAIR the high resistance circuit. For additional information, refer to the wiring diagrams. CLEAR the DTC, test the system for normal operation.

-> No
CHECK for DTCs indicating a module fault.
Electronic Engine Controls - VIN Range: G45704->G99999 For vehicles with 3.0L engines and
Electronic Engine Controls - VIN Range: G45704->G99999 For vehicles with 3.5L and 4.2L engines.

PINPOINT TEST G532449p6 : FUEL PUMP POWER AND GROUND CIRCUITS (V6 AND V8 VEHICLES WITHOUT SUPERCHARGER)

www.JagDocs.com

G532449t26 : CHECK THE REM TO FUEL PUMP NEGATIVE CIRCUIT FOR SHORT CIRCUIT TO GROUND

1. Key off. 2. Disconnect the fuel pump module electrical connector, FP02. 3. Measure the resistance between:

Fuel pump module connector FP02, harness side	Battery
Pin 04	Negative terminal

Is the resistance less than 10,000 ohms?

-> Yes
REPAIR the short circuit. For additional information, refer to the wiring diagrams. CLEAR the DTC, test the system for normal operation.

-> No
GO to Pinpoint Test G532449t27.

G532449t27 : CHECK THE REM TO FUEL PUMP NEGATIVE CIRCUIT FOR SHORT CIRCUIT TO POWER

1. Measure the resistance between:

Fuel pump module connector FP02, harness side	Battery
Pin 04	Positive terminal

Is the resistance less than 10,000 ohms?

-> Yes
REPAIR the short circuit. For additional information, refer to the wiring diagrams. CLEAR the DTC, test the system for normal operation.

-> No
GO to Pinpoint Test G532449t39.

G532449t39 : CHECK THE REM TO FUEL PUMP POSITIVE CIRCUIT FOR SHORT CIRCUIT TO GROUND

1. Measure the resistance between:

Fuel pump module connector FP02, harness side	Battery
Pin 01	Negative terminal

Is the resistance less than 10,000 ohms?

-> Yes
REPAIR the short circuit. For additional information, refer to the wiring diagrams. CLEAR the DTC, test the system for normal operation.

-> No
GO to Pinpoint Test G532449t40.

G532449t40 : CHECK THE REM TO FUEL PUMP POSITIVE CIRCUIT FOR SHORT CIRCUIT TO POWER

1. Measure the resistance between:

Fuel pump module connector FP02, harness side	Battery
Pin 01	Positive terminal

Is the resistance less than 10,000 ohms?

-> Yes
REPAIR the short circuit. For additional information, refer to the wiring diagrams. CLEAR the DTC, test the system for normal operation.

-> No
GO to Pinpoint Test G532449t25.

G532449t25 : CHECK THE REM TO FUEL PUMP NEGATIVE CIRCUIT FOR HIGH RESISTANCE

1. Disconnect the REM electrical connector, CR73. 2. Measure the resistance between:

REM connector CR73, harness side	Fuel module connector FP02, harness side
Pin 03	Pin 04

www.JagDocs.com

Is the resistance greater than 5 ohms?

-> Yes
REPAIR the high resistance circuit. For additional information, refer to the wiring diagrams. CLEAR the DTC, test the system for normal operation.

-> No
GO to Pinpoint Test G532449t29.

G532449t29 : CHECK THE REM TO FUEL PUMP POSITIVE CIRCUIT FOR HIGH RESISTANCE

1. Measure the resistance between:

REM connector CR73, harness side	Fuel module connector FP02, harness side
Pin 04	Pin 01

Is the resistance greater than 5 ohms?

-> Yes
REPAIR the high resistance circuit. For additional information, refer to the wiring diagrams. CLEAR the DTC, test the system for normal operation.

-> No
FOR REM power and ground tests, GO to Pinpoint Test G532449p1.

PINPOINT TEST G532449p4 : FUEL PUMP POWER AND GROUND CIRCUITS (V8 VEHICLES WITH SUPERCHARGER)

G532449t20 : CHECK THE FPDM TO FUEL PUMP NEGATIVE CIRCUIT FOR SHORT CIRCUIT TO POWER

1. Remove the fuel pump module
Fuel Pump Module - 2.7L V6 - TdV6 (19.45.08) 2. Disconnect the fuel pump module electrical connector, FP08. 3. Measure the resistance between:

Fuel pump module connector FP08, harness side	Battery

Pin 03	Positive terminal

Is the resistance less than 10,000 ohms?

-> Yes
REPAIR the short circuit. For additional information, refer to the wiring diagrams. CLEAR the DTC, test the system for normal operation.

-> No
GO to Pinpoint Test G532449t34.

G532449t34 : CHECK THE FPDM TO FUEL PUMP POSITIVE CIRCUIT FOR SHORT CIRCUIT TO GROUND

1. Measure the resistance between:

Fuel pump module connector FP08, harness side	Battery
Pin 04	Negative terminal

Is the resistance less than 10,000 ohms?

-> Yes
REPAIR the short circuit. For additional information, refer to the wiring diagrams. CLEAR the DTC, test the system for normal operation.

-> No
GO to Pinpoint Test G532449t35.

G532449t35 : CHECK THE FPDM TO FUEL PUMP POSITIVE CIRCUIT FOR SHORT CIRCUIT TO POWER

1. Measure the resistance between:

Fuel pump module connector FP08, harness side	Battery
Pin 04	Positive terminal

Is the resistance less than 10,000 ohms?

www.JagDocs.com

-> Yes
REPAIR the short circuit. For additional information, refer to the wiring diagrams. CLEAR the DTC, test the system for normal operation.

-> No
GO to Pinpoint Test G532449t41.

G532449t41 : CHECK THE FPDM TO FUEL PUMP NEGATIVE CIRCUIT FOR HIGH RESISTANCE

1. Disconnect the FPDM electrical connector, FP26. 2. Measure the resistance between:

Fuel pump module connector FP08, harness side	FPDM connector FP26, harness side
Pin 03	Pin 02

Is the resistance greater than 5 ohms?

-> Yes
REPAIR the high resistance circuit. For additional information, refer to the wiring diagrams. CLEAR the DTC, test the system for normal operation.

-> No
GO to Pinpoint Test G532449t42.

G532449t42 : CHECK THE FPDM TO FUEL PUMP POSITIVE CIRCUIT FOR HIGH RESISTANCE

1. Measure the resistance between:

Fuel pump module connector FP08, harness side	FPDM connector FP26, harness side
Pin 04	Pin 01

Is the resistance greater than 5 ohms?

-> Yes
REPAIR the high resistance circuit. For additional information, refer to the wiring diagrams. CLEAR the DTC, test the system for normal operation.

-> No

FOR FPDM power and ground tests, GO to Pinpoint Test G532449p9.

PINPOINT TEST G532449p8 : CHECK THE FUEL SYSTEM PRESSURE

G532449t19 : CHECK THE PUMP ACTIVITY

1. Remove the rear seat cushion.
Rear Seat Cushion (76.70.37) 2. Key on, engine off. 3. Listen for pump noise.

Can the fuel pump be heard running?

-> Yes
GO to Pinpoint Test G532449t36.

-> No
CHECK for DTCs.
Electronic Engine Controls - VIN Range: G45704->G99999 For vehicles with 3.0L engines and
Electronic Engine Controls - VIN Range: G45704->G99999 For vehicles with 3.5L and 4.2L engines.

G532449t36 : CHECK THE FUEL SYSTEM PRESSURE

1.

WARNING: This procedure involves fuel handling. Be prepared for fuel spillage at all times and always observe fuel handling precautions. Failure to follow these instructions may result in personal injury.

NOTE:

The fuel pressure can be tested using the Jaguar approved diagnostic system datalogger facility, or by the use of a suitable gauge from the schraeder connector on the special tool fitted to the fuel rail.
Fuel System Pressure Check

Apply the parking brake. 2. Make sure the gear selector is in the **NEUTRAL** position for vehicles fitted with manual transmission, **PARK** position for vehicles fitted with automatic transmission. 3. Connect a suitable gauge to the fuel Schraeder valve. 4. Disconnect and plug the vacuum hose from the pressure regulator. 5. Key on, engine off.

Make sure there are no leaks from the gauge connections 6. Record the fuel pressure reading.

www.JagDocs.com

Is the fuel pressure between 4 and 5 bar (58.01 and 72.51 lb/in²)?

-> Yes
GO to Pinpoint Test G532449t37.

-> No
CHECK for DTCs.
Electronic Engine Controls - VIN Range: G45704->G99999 For vehicles with 3.0L engines and
Electronic Engine Controls - VIN Range: G45704->G99999 For vehicles with 3.5L and 4.2L engines.

G532449t37 : CHECK THE FUEL SYSTEM PRESSURE WITH THE ENGINE CRANKING

1. Key in start position. 2. Record the fuel pressure reading.

Is the fuel pressure 4.5 bar (65.25 lb/in²)?

-> Yes
GO to Pinpoint Test G532449t38.

-> No
CHECK for DTCs.
Electronic Engine Controls - VIN Range: G45704->G99999 For vehicles with 3.0L engines and
Electronic Engine Controls - VIN Range: G45704->G99999 For vehicles with 3.5L and 4.2L engines.

G532449t38 : CHECK THE FUEL SYSTEM PRESSURE WITH THE ENGINE IDLING (WHERE POSSIBLE)

1. Key on, engine running.

Is the fuel pressure 4.5 bar (65.25 lb/in²)?

-> Yes
CHECK for DTCs and symptoms indicating another cause of the problem.
Electronic Engine Controls - VIN Range: G45704->G99999 For vehicles with 3.0L engines and
Electronic Engine Controls - VIN Range: G45704->G99999 For vehicles with 3.5L and 4.2L engines.

-> No
CHECK the fuel pump power and ground circuits, GO to Pinpoint Test G532449p6.
For V6 and V8 vehicles without supercharger and GO to Pinpoint Test G532449p4.
For V8 vehicles with supercharger.

PINPOINT TEST G532449p2 : CHECK THE FUEL LINES

G532449t4 : CHECK THE FUEL LINES FOR RESTRICTIONS

1.

WARNING: This procedure involves fuel handling. Be prepared for fuel spillage at all times and always observe fuel handling precautions. Failure to follow these instructions may result in personal injury.

Detach the fuel line from the fuel rail and from the fuel pump module. 2. Using an air line gently blow through the line checking for blockages or restrictions.

Is a blockage or restriction evident?

-> Yes
CLEAR/REPAIR the blocked or restricted fuel line and test the system for normal operation.

-> No
GO to Pinpoint Test G532449t5.

G532449t5 : CHECK THE FUEL TANK LINES FOR RESTRICTIONS

1. Remove the fuel and transfer pump module locking rings.
Fuel Pump Module - 2.7L V6 - TdV6 (19.45.08) 2. Detach the fuel lines from the transfer and fuel pump modules. 3. Using an air line gently blow through the line checking for blockages or restrictions.

Is a blockage or restriction evident?

-> Yes
CLEAR/REPAIR the blocked or restricted fuel line and test the system for normal operation.

-> No
CHECK for DTCs and symptoms indicating another cause of the problem.
Electronic Engine Controls - VIN Range: G45704->G99999 For vehicles with 3.0L engines and
Electronic Engine Controls - VIN Range: G45704->G99999 For vehicles with 3.5L and 4.2L engines.

www.JagDocs.com

Fuel Tank and Lines - 2.7L V6 - TdV6

Principles of Operation

The fuel tank shares many features of the petrol variant, being of the same shape to facilitate the driveshaft, using a fuel pump module in the right hand side and a fuel transfer pump in the left hand side to transfer fuel across the tank. The 2.7L diesel also uses a critical fuel level switch which activates an anti air suction strategy, preventing air from entering the system during a low fuel level condition by preventing the pump from running.

For additional information,
Fuel Tank and Lines - VIN Range: G45704->G99999

Overview

There are changes to the engine management system (EMS) for 2006 my, the most obvious of which will be the change to 7-digit diagnostic trouble codes (DTCs) from the familiar 5-digit.

Refer to the DTC index in this section for guidance on how to use these codes with the Jaguar approved diagnostic system or a scan tool.

Inspection and Verification

WARNING: Do NOT carry out any work on the fuel system with the engine running. The fuel pressure within the system can be as high as 1600 bar (23,206 lb/in²). Failure to follow this instruction may result in personal injury.

WARNING: Eye protection must be worn at all times when working on or near any fuel related components. Failure to follow this instruction may result in personal injury.

WARNING: This procedure involves fuel handling. Be prepared for fuel spillage at all times and always observe fuel handling precautions. Failure to follow this instruction may result in personal injury.

WARNING: After carrying out repairs, the fuel system must be checked visually for leaks. This should be done after the engine has been run, but with the engine switched OFF. Failure to follow this instruction may result in personal injury.

WARNING: If taken internally, DO NOT induce vomiting. Seek immediate medical attention. Failure to follow this instruction may result in personal injury.

WARNING: If fuel contacts the eyes, flush the eyes with cold water or eyewash solution and seek medical attention. Failure to follow this instruction may result in personal injury.

WARNING: Wash hands thoroughly after handling, as prolonged contact may cause irritation. Should irritation develop, seek medical attention. Failure to follow this instruction may result in personal injury.

CAUTION: Before disconnecting any part of the system, it is imperative that all dust, dirt and debris is removed from around components to prevent ingress of foreign matter into the fuel system. Failure to follow this instruction may result in damage to the vehicle.

CAUTION: The fuel pipes between the injectors and the rail must be discarded after each use, and new pipes installed. Failure to follow this instruction may result in damage to the vehicle.

CAUTION: It is essential that absolute cleanliness is observed when working with these components. Always install blanking plugs to any open orifices or lines. Failure to follow this instruction may result in damage to the vehicle.

CAUTION: Make sure that the workshop area in which the vehicle is being worked on is as clean and dust-free as possible. Areas in which work on clutches, brakes or where welding or machining are carried out are not suitable in view of the risk of contamination to the fuel system. Failure to follow this instruction may result in damage to the vehicle.

www.JagDocs.com

CAUTION: Make sure that any protective clothing worn is clean and made from lint-free non-flocking material. Failure to follow this instruction may result in damage to the vehicle.

CAUTION: Make sure that any protective gloves worn are new and are of the non-powdered latex type. Failure to follow this instruction may result in damage to the vehicle.

CAUTION: Make sure that clean, non-plated tools are used. Clean tools using a new brush that will not lose it's bristles and fresh cleaning fluid prior to starting work on the vehicle. Failure to follow this instruction may result in damage to the vehicle.

CAUTION: Use a steel-topped work bench and cover it with clean, lint-free, non-flocking material. Failure to follow this instruction may result in damage to the vehicle.

NOTE:

This section contains references to Parameter Identifiers (PIDs). Where the Jaguar approved diagnostic system is not available, a scantool may be used to access these PIDs, all of which give information, and some of which can be used to both read information and to activate components. The format of the information may vary, depending on the tool used.

1 . Verify the customer concern.

2 . Visually inspect for obvious signs of mechanical or electrical damage.

Mechanical	Electrical
Fuel level	Battery charge and condition
Contaminated fuel	Fuse(s)
Fuel supply line(s)	Inertia fuel shutoff (IFS) switch
Fuel return line(s)	Fuel pump module relay

High-pressure fuel supply line(s) Fuel tank filler pipe Fuel leak(s) Fuel tank Fuel filler cap Fuel filter Push connect fittings Fuel rail Fuel injection pump Exhaust gas recirculation (EGR) system	Fuel pump module Electrical connector(s) Damaged or corroded wiring harness Fuel volume control valve (FVCV) Fuel pressure control valve (FPCV) Rear electronic module (REM) Engine control module (ECM)

3 . If an obvious cause for an observed or reported concern is found, correct the cause (if possible) before proceeding to the next step.

4 . If the cause is not visually evident use the Jaguar approved diagnostic system or a scan tool to retrieve the fault codes before proceeding to the DTC index, or the symptom chart if no DTCs are set.

The fuel system interacts with a number of modules, therefore a complete vehicle DTC read will be necessary.

www.JagDocs.com

Symptom Chart

Symptom	Possible source	Action
Engine cranks, but does not start	Inertia fuel shutoff (IFS) switch Low/contaminated fuel Anti air suction initiated Fuel pump module fault Low pressure fuel system fault Blocked fuel filter Fuel volume control valve	Check that the inertia switch has not tripped. Check the fuel level/condition, Fuel Charging and Controls If there is sufficient fuel check the critical fuel level switch, GO to Pinpoint Test G552807p2. Check Check the fuel pump module operation, GO to Pinpoint Test G552807p8. Check the low pressure fuel system for leaks/damage, GO to Pinpoint Test G552807p9. Check the fuel filter, check the FVCV and FPCV,

	(FVCV) blocked/contaminated Fuel pressure control valve (FPCV) blocked/contaminated Fuel injection pump failure Air leakage Crankshaft position (CKP) sensor ECM fault	Fuel Charging and Controls Check the fuel injection pump, Fuel Injection Pump For air intake system, Intake Air Distribution and Filtering Check the CKP sensor, Electronic Engine Controls Refer to the warranty policy and procedures manual if an ECM is suspect.
Difficult to start	Glow plug system fault (very cold conditions) Low/contaminated fuel Fuel pump module fault Low pressure fuel system fault Blocked fuel filter Fuel volume control valve (FVCV) blocked/contaminated Fuel pressure control valve (FPCV) blocked/contaminated Air leakage Exhaust gas recirculation (EGR) valve(s) fault	Check the glow plug circuits, Glow Plug System Check the fuel level/condition, Fuel Charging and Controls Check the fuel pump module operation, GO to Pinpoint Test G552807p8. Check the low pressure fuel system for leaks/damage, GO to Pinpoint Test G552807p9. Check the fuel filter, check the FVCV and FPCV, Fuel Charging and Controls For air intake system, Intake Air Distribution and Filtering For EGR tests, Engine Emission Control
Rough idle	Low/contaminated fuel Air ingress Low pressure fuel system fault Blocked fuel filter Fuel volume control valve (FVCV) blocked/contaminated	Check the fuel level/condition, Fuel Charging and Controls Check the low pressure fuel system for leaks/damage, GO to Pinpoint Test G552807p9. Check the fuel filter, check the FVCV and FPCV, Fuel Charging and Controls For EGR tests, Engine Emission Control

	Fuel pressure control valve (FPCV) blocked/contaminated Exhaust gas recirculation (EGR) valve(s) fault	
Lack of power when accelerating	Air intake system fault Catalytic converter blocked Diesel particulate filter (DPF) blocked Low fuel pressure Exhaust gas recirculation (EGR) valve(s) fault Turbocharger(s) fault	Check the air intake system, Intake Air Distribution and Filtering Check for a blocked catalytic converter or DPF, Exhaust System Check the fuel pump module operation, GO to Pinpoint Test G552807p8. For EGR tests, Engine Emission Control For turbocharger tests, Turbocharger
Engine stops/stalls	Low/contaminated fuel Anti air suction initiated Fuel pump module fault Air ingress Low pressure fuel system fault Fuel volume control valve (FVCV) blocked/contaminated Fuel pressure control valve (FPCV) blocked/contaminated High pressure fuel leak Exhaust gas recirculation (EGR) valve(s) fault	Check the fuel level/condition, Fuel Charging and Controls If there is sufficient fuel check the critical fuel level switch, GO to Pinpoint Test G552807p2. Check the fuel pump module operation, GO to Pinpoint Test G552807p8. Check the low pressure fuel system for leaks/damage, GO to Pinpoint Test G552807p9. Check for fuel system leaks, check the FVCV and FPCV, Fuel Charging and Controls For EGR tests, Engine Emission Control
Engine judders	Low/contaminated fuel Air ingress Low pressure fuel system fault Fuel volume control valve (FVCV)	Check the fuel level/condition, Fuel Charging and Controls Check the low pressure fuel system for leaks/damage, GO to Pinpoint Test G552807p9. Check for fuel system leaks, check the FVCV and FPCV, Fuel Charging and Controls Check the fuel

www.JagDocs.com

	blocked/contaminated Fuel pressure control valve (FPCV) blocked/contaminated High pressure fuel leak Fuel injection pump fault	injection pump, Fuel Injection Pump
Excessive fuel consumption	Low pressure fuel system fault Fuel volume control valve (FVCV) blocked/contaminated Fuel pressure control valve (FPCV) blocked/contaminated Fuel temperature sensor leak High pressure fuel leak Injector(s) failure Exhaust gas recirculation (EGR) valve(s) fault	Check the low pressure fuel system for leaks/damage, GO to Pinpoint Test G552807p9. Check the FVCV and FPCV, Fuel Charging and Controls Check the fuel temperature sensor, fuel injection pump, etc for leaks, Fuel Charging and Controls Check for injector DTCs. For EGR tests, Engine Emission Control

DTC index

NOTE:

Generic scan tools may not read the codes listed, or may read only 5-digit codes. Match the 5 digits from the scan tool to the first 5 digits of the 7-digit code listed to identify the fault (the last 2 digits give extra information read by the manufacturer-approved diagnostic system).

NOTE:

For a full list of powertrain DTCs,
Electronic Engine Controls

DTC	Description	Possible source	Action
B120200	Fuel pump module, level sender above threshold	Fuel level float stuck/sticking	For fuel pump module level sender tests, GO to Pinpoint

		Fuel level sender circuit: high resistance Fuel level sender failure	Test G552807p3.
B120400	Fuel pump module, level sender below threshold	Fuel level float stuck/sticking Fuel level sender circuit: short circuit to ground Fuel level sender failure	For fuel pump module level sender tests, GO to Pinpoint Test G552807p3.
B262700	Fuel transfer pump, level sender above threshold	Fuel level float stuck/sticking Fuel level sender circuit: high resistance Fuel level sender failure	For fuel transfer pump level sender tests, GO to Pinpoint Test G552807p11.
B262800	Fuel transfer pump, level sender below threshold	Fuel level float stuck/sticking Fuel level sender circuit: short circuit to ground Fuel level sender failure	For fuel transfer pump level sender tests, GO to Pinpoint Test G552807p11.
B287900	Fuel transfer pump fault	Low pressure fuel bleed tap open Low pressure fuel system leak Fuel transfer pump failure	Check the status of the low pressure fuel bleed tap, GO to Pinpoint Test G552807p8. Check the low pressure fuel system for leaks, GO to Pinpoint Test G552807p9. Check the function of the fuel transfer pump, GO to Pinpoint Test G552807p5.
P008700	Fuel rail/system pressure too low	Fuel rail pressure (FRP) sensor disconnected FRP sensor to ECM sensing circuit: short circuit to ground FRP sensor supply circuit: high resistance FRP sensor failure	For FRP sensor circuit tests, Fuel Charging and Controls Check the fuel lines, GO to Pinpoint Test G552807p9. Check the fuel pressure, GO to Pinpoint Test G552807p8. For fuel pump module circuit tests, GO to Pinpoint Test G552807p4. and GO to Pinpoint Test G552807p6.

www.JagDocs.com

		Fuel line leak Restricted fuel line Fuel pump module circuit: high resistance Fuel pump module circuit: short circuit to ground Fuel pump module failure	
P008800	Fuel rail/system pressure too high	Fuel rail pressure (FRP) sensor to ECM wiring (supply/sense): short circuit to each other FRP sensor to ECM sense circuit: short circuit to power FRP sensor failure Fuel pressure control valve (FPCV) fault Fuel pump module circuit: short circuit to power Fuel pump module failure	For FRP sensor circuit tests and FPCV tests, Fuel Charging and Controls For fuel pump module circuit tests, GO to Pinpoint Test G552807p4. and GO to Pinpoint Test G552807p6.
P046000	Fuel level sender, signal range high	Fuel level sender signal circuit: high resistance Fuel level sender signal circuit: short circuit to power Fuel level sender failure ECM failure	For fuel level sender and circuit tests, GO to Pinpoint Test G552807p3. and GO to Pinpoint Test G552807p11. Refer to the warranty policy and procedures manual if an ECM is suspect.
P046100	Fuel level sender, signal range low	Fuel level sender signal circuit: high resistance Fuel level sender signal circuit: short circuit to ground Fuel level sender failure ECM failure	For fuel level sender and circuit tests, GO to Pinpoint Test G552807p3. and GO to Pinpoint Test G552807p11. Refer to the warranty policy and procedures manual if an ECM is suspect.

P062700	Fuel pump module relay control circuit high	Fuel pump module relay control circuit: short circuit to power Fuel pump module relay failure	For fuel pump module relay and circuit tests, GO to Pinpoint Test G552807p4.
P062800	Fuel pump module relay control circuit low	Fuel pump module relay control circuit: high resistance Fuel pump module relay control circuit: short circuit to ground Fuel pump module relay failure	For fuel pump module relay and circuit tests, GO to Pinpoint Test G552807p4.
P062900	Fuel pump module relay control circuit/open	Fuel pump module relay control circuit: high resistance Fuel pump module relay failure	For fuel pump module relay and circuit tests, GO to Pinpoint Test G552807p4.
P115A00	Low fuel level - forced limited power	Fuel reserve signal range Low fuel level condition Critical fuel level switch signal circuit: high resistance Critical fuel level switch signal circuit: short circuit to ground Critical fuel level switch failure Fuel level sender signal circuit: high resistance Fuel level sender signal circuit: short circuit to ground Fuel level sender signal circuit: short circuit to power Fuel level sender failure	Check the fuel level. If there is sufficient fuel check the critical fuel level switch circuits, GO to Pinpoint Test G552807p2. Check the fuel level sender circuits, GO to Pinpoint Test G552807p3. and GO to Pinpoint Test G552807p11. Refer to the warranty policy and procedures manual if an ECM is suspect.

www.JagDocs.com

		ECM failure	
P115B00	Low fuel level - forced engine shutdown	Anti air suction intervention Low fuel level condition Critical fuel level switch signal circuit: high resistance Critical fuel level switch signal circuit: short circuit to ground Critical fuel level switch failure Fuel level sender signal circuit: high resistance Fuel level sender signal circuit: short circuit to ground Fuel level sender signal circuit: short circuit to power Fuel level sender failure ECM failure	Check the fuel level. If there is sufficient fuel check the critical fuel level switch circuits, GO to Pinpoint Test G552807p2. Check the fuel level sender circuits, GO to Pinpoint Test G552807p3. and GO to Pinpoint Test G552807p11. Refer to the warranty policy and procedures manual if an ECM is suspect.
P120F00	Fuel rail pressure (FRP) regulator - fuel pressure low at start	FRP sensor circuit: high resistance FRP sensor circuit: short circuit to ground FRP sensor circuit: short circuit to power FRP sensor failure Restricted fuel line Fuel pump module failure ECM failure	For FRP sensor tests, Fuel Charging and Controls For fuel pump module circuit tests, GO to Pinpoint Test G552807p4. and GO to Pinpoint Test G552807p6. For fuel line tests, GO to Pinpoint Test G552807p9. Refer to the warranty policy and procedure manual if an ECM is suspect.
P193300	Fuel level sender CAN signal	Fuel level sender signal circuit: high resistance Fuel level sender signal	For fuel level sender and circuit tests, GO to Pinpoint Test G552807p3.

		circuit: short circuit to ground Fuel level sender signal circuit: short circuit to power Fuel level sender signal circuit: short circuit to other resistive sensors Fuel level sender failure ECM failure	and GO to Pinpoint Test G552807p11. Refer to the warranty policy and procedures manual if an ECM is suspect.
P228800	Injector control pressure too high - fuel pressure control valve (FPCV) minimum limit reached	Fuel injector control pressure: too high FPCV circuit fault FPCV failure Fuel pump module circuit: short circuit to power Fuel pump module failure Fuel injection pump failure	For fuel pressure, GO to Pinpoint Test G552807p8. For fuel pump module circuit tests, GO to Pinpoint Test G552807p4. and GO to Pinpoint Test G552807p6. For FPCV and circuit tests, Fuel Charging and Controls For fuel injection pump, Fuel Injection Pump
P229000	Injector control pressure too low - fuel pressure control valve (FPCV) maximum limit reached	Fuel injector control pressure: too low Fuel line leak Fuel filter/system restriction FPCV circuit fault FPCV failure Fuel pump module circuit: short circuit to ground Fuel pump module failure Fuel injection pump failure	Check the fuel lines, GO to Pinpoint Test G552807p9. Check the fuel pressure, GO to Pinpoint Test G552807p8. For fuel pump module circuit tests, GO to Pinpoint Test G552807p4. and GO to Pinpoint Test G552807p6. For FPCV and circuit tests, Fuel Charging and Controls For fuel injection pump, Fuel Injection Pump
P229200	Injector control pressure erratic - fuel pressure control valve (FPCV)	Fuel injector control pressure: erratic	Check the fuel lines, GO to Pinpoint Test G552807p9. Check the fuel pressure, GO to Pinpoint Test G552807p8.

www.JagDocs.com

	dynamic	FPCV circuit fault FPCV failure Fuel pump module circuit(s): high resistance, short circuit to ground, short circuit to power Fuel pump module failure Fuel injection pump failure	For fuel pump module circuit tests, GO to Pinpoint Test G552807p4. and GO to Pinpoint Test G552807p6. For FPCV and circuit tests, Fuel Charging and Controls For fuel injection pump, Fuel Injection Pump

Pinpoint tests

CAUTION: When probing connectors to take measurements in the course of the pinpoint tests, use the adaptor kit, part number 3548-1358-00. Failure to follow this instruction may result in damage to the vehicle.

NOTE:

When performing voltage or resistance tests, always use a digital multimeter (DMM) accurate to 3 decimal places, and with an up-to-date calibration certificate. When testing resistance, always take the resistance of the DMM leads into account.

NOTE:

Check and rectify basic faults before beginning diagnostic routines involving pinpoint tests.

NOTE:

If DTCs are recorded and a fault is not present when performing the pinpoint tests, an intermittent concern may be the cause. Always check for loose connections and corroded terminals.

PINPOINT TEST G552807p1 : REM POWER SUPPLY AND GROUND CIRCUITS

G552807t2 : CHECK FOR POWER TO THE REM

1. **Rear electronic control module (REM) connector, CR04**

Circuit	Pin
REM - power	03

2. **Rear electronic control module (REM) connector, CR12**

Circuit	Pin
REM - ignition supply	08

3. **Rear electronic control module (REM) connector, CR71**

Circuit	Pin
REM - ground	15

4. **Rear electronic control module (REM) connector, CR73**

Circuit	Pin
REM - ground	02

5. Key off. 6. Disconnect the REM electrical connector, CR04. 7. Key on, engine off. 8. Measure the voltage between:

CR04, harness side	Battery
Pin 03	Negative terminal

Is the voltage greater than 10 volts?

-> Yes
GO to Pinpoint Test G552807t46.

-> No
REPAIR the battery power supply circuit as necessary. For additional information, refer to the wiring diagrams. Clear any DTCs, test the system for normal operation.

www.JagDocs.com

G552807t46 : CHECK FOR POWER TO THE REM

1. Key off. 2. Disconnect the REM electrical connector, CR12. 3. Key on, engine off. 4. Measure the voltage between:

CR12, harness side	Battery
Pin 08	Negative terminal

Is the voltage greater than 10 volts?

-> Yes
GO to Pinpoint Test G552807t3.

-> No
REPAIR the ignition supply circuit as necessary. For additional information, refer to the wiring diagrams. Clear any DTCs, test the system for normal operation.

G552807t3 : CHECK THE REM GROUNDS FOR HIGH RESISTANCE

1. Key off. 2. Disconnect the REM electrical connector, CR71. 3. Measure the resistance between:

CR71, harness side	Battery
Pin 15	Negative terminal

4. Disconnect the REM electrical connector, CR73. 5. Measure the resistance between:

CR73, harness side	Battery
Pin 02	Negative terminal

Are the resistances less than 10 ohms?

-> Yes
An intermittent fault may be present in the wiring harness. Visually check for chaffed wires or other physical damage to the harness. If no fault is found in the circuit, suspect the following component(s): **-** REM connector(s). **-** REM.

-> No
REPAIR the high resistance circuit. For additional information, refer to the wiring diagrams. Clear any DTCs, test the system for normal operation.

PINPOINT TEST G552807p2 : CRITICAL FUEL LEVEL SWITCH

G552807t26 : CHECK FOR FUEL IN THE FUEL PUMP MODULE SWIRL POT

1. Remove the fuel pump module locking ring
Fuel Pump Module - 2.7L V6 - TdV6 (19.45.08) 2. Detach and reposition the upper part of the fuel pump module sufficiently to gain visual access to the swirl pot.

Is there fuel in the swirl pot?

-> Yes
GO to Pinpoint Test G552807t48.

-> No
GO to Pinpoint Test G552807t27.

G552807t27 : CHECK THE FUEL PUMP MODULE SWIRL POT FOR FUEL LEAKAGE

1. Using a suitable clean container, add fuel to the swirl pot. 2. Check that the swirl pot holds the fuel for over one minute.

Does the swirl pot hold the fuel?

-> Yes
GO to Pinpoint Test G552807t48.

-> No
INSTALL a new fuel pump module.
Fuel Pump Module - 2.7L V6 - TdV6 (19.45.08) Report the findings in an electronic product quality report (EPQR).

G552807t48 : CHECK THE CRITICAL FUEL LEVEL SWITCH RESISTANCE (FULL)

1. **Fuel pump module connector, FP13**

Circuit	Pin
Critical fuel level switch - signal	06
Critical fuel level switch - signal return	05

www.JagDocs.com

2. **Rear electronic control module (REM) connector, CR04**

Circuit	Pin
Critical fuel level switch - signal	13

3. **Rear electronic control module (REM) connector, CR11**

Circuit	Pin
Critical fuel level switch - signal return	23

4. Key off. 5. Disconnect the fuel pump module connector, FP13. 6. Measure the resistance between:

FP13, component side	FP13, component side
Pin 05	Pin 06

Is the resistance between 425 and 440 ohms?

-> Yes
GO to Pinpoint Test G552807t25.

-> No
INSTALL a new fuel pump module.
Fuel Pump Module - 2.7L V6 - TdV6 (19.45.08) Report the findings in an electronic product quality report (EPQR).

G552807t25 : CHECK THE CRITICAL FUEL LEVEL SWITCH RESISTANCE (EMPTY)

1. Remove and drain the fuel pump module. 2. Measure the resistance between:

FP13, component side	FP13, component side
Pin 05	Pin 06

Is the resistance between 100 and 105 ohms?

-> Yes
GO to Pinpoint Test G552807t4.

-> No
INSTALL a new fuel pump module.
Fuel Pump Module - 2.7L V6 - TdV6 (19.45.08) Report the findings in an electronic product quality report (EPQR).

G552807t4 : CHECK THE CRITICAL FUEL LEVEL SWITCH SIGNAL CIRCUIT FOR SHORT CIRCUIT TO GROUND

1. Measure the resistance between:

FP13, harness side	Battery
Pin 06	Negative terminal

Is the resistance greater than 100 Kohms?

-> Yes
GO to Pinpoint Test G552807t5.

-> No
REPAIR the short circuit. For additional information, refer to the wiring diagrams. Clear any DTCs, test the system for normal operation.

G552807t5 : CHECK THE CRITICAL FUEL LEVEL SWITCH SIGNAL CIRCUIT FOR SHORT CIRCUIT TO POWER

1. Measure the resistance between:

FP13, harness side	Battery
Pin 06	Positive terminal

Is the resistance greater than 100 Kohms?

-> Yes
GO to Pinpoint Test G552807t45.

-> No

www.JagDocs.com

REPAIR the short circuit. For additional information, refer to the wiring diagrams. Clear any DTCs, test the system for normal operation.

G552807t45 : CHECK THE CRITICAL FUEL LEVEL SWITCH SIGNAL RETURN CIRCUIT FOR SHORT CIRCUIT TO POWER

1. Measure the resistance between:

FP13, harness side	Battery
Pin 05	Positive terminal

Is the resistance greater than 100 Kohms?

-> Yes
GO to Pinpoint Test G552807t1.

-> No
REPAIR the short circuit. For additional information, refer to the wiring diagrams. Clear any DTCs, test the system for normal operation.

G552807t1 : CHECK THE CRITICAL FUEL LEVEL SWITCH SIGNAL CIRCUIT FOR HIGH RESISTANCE

1. Disconnect the REM electrical connector, CR04. 2. Measure the resistance between:

FP13, harness side	CR04, harness side
Pin 06	Pin 13

Is the resistance less than 10 ohms?

-> Yes
GO to Pinpoint Test G552807t47.

-> No
REPAIR the high resistance circuit. For additional information, refer to the wiring diagrams. Clear any DTCs, test the system for normal operation.

G552807t47 : CHECK THE CRITICAL FUEL LEVEL SWITCH SIGNAL RETURN CIRCUIT FOR HIGH RESISTANCE

1. Disconnect the REM electrical connector, CR11. 2. Measure the resistance between:

FP13, harness side	CR11, harness side
Pin 05	Pin 23

Is the resistance less than 10 ohms?

-> Yes
Check the fuel pump module relay, GO to Pinpoint Test G552807p4.

-> No
REPAIR the high resistance circuit. For additional information, refer to the wiring diagrams. Clear any DTCs, test the system for normal operation.

PINPOINT TEST G552807p3 : RIGHT HAND FUEL LEVEL SENDER

G552807t6 : CHECK THE RIGHT HAND FUEL LEVEL SENDER SIGNAL CIRCUIT FOR SHORT CIRCUIT TO GROUND

1. **Fuel pump module connector, FP13**

Circuit	Pin
Fuel level sender - signal	02
Fuel level sender - signal return	01

2. **Rear electronic control module (REM) connector, CR04**

Circuit	Pin
Fuel level sender - signal	15

3. **Rear electronic control module (REM) connector, CR11**

Circuit	Pin
Fuel level sender - signal return	23

www.JagDocs.com

4. Key off. 5. Disconnect the fuel pump module connector, FP13. 6. Measure the resistance between:

FP13, harness side	Battery
Pin 02	Negative terminal

Is the resistance greater than 100 Kohms?

-> Yes
GO to Pinpoint Test G552807t49.

-> No
REPAIR the short circuit. For additional information, refer to the wiring diagrams. Clear any DTCs, test the system for normal operation.

G552807t49 : CHECK THE RIGHT HAND FUEL LEVEL SENDER SIGNAL CIRCUIT FOR SHORT CIRCUIT TO POWER

1. Measure the resistance between:

FP13, harness side	Battery
Pin 02	Positive terminal

Is the resistance greater than 100 Kohms?

-> Yes
GO to Pinpoint Test G552807t51.

-> No
REPAIR the short circuit. For additional information, refer to the wiring diagrams. Clear any DTCs, test the system for normal operation.

G552807t51 : CHECK THE RIGHT HAND FUEL LEVEL SENDER SIGNAL RETURN CIRCUIT FOR SHORT CIRCUIT TO POWER

1. Measure the resistance between:

FP13, harness side	Battery

Pin 01	Positive terminal

Is the resistance greater than 100 Kohms?

-> Yes
GO to Pinpoint Test G552807t52.

-> No
REPAIR the short circuit. For additional information, refer to the wiring diagrams. Clear any DTCs, test the system for normal operation.

G552807t52 : CHECK THE RIGHT HAND FUEL LEVEL SENDER SIGNAL CIRCUIT FOR HIGH RESISTANCE

1. Disconnect the REM electrical connector, CR04. 2. Measure the resistance between:

FP13, harness side	CR04, harness side
Pin 02	Pin 15

Is the resistance less than 10 ohms?

-> Yes
GO to Pinpoint Test G552807t53.

-> No
REPAIR the high resistance circuit. For additional information, refer to the wiring diagrams. Clear any DTCs, test the system for normal operation.

G552807t53 : CHECK THE RIGHT HAND FUEL LEVEL SENDER SIGNAL RETURN CIRCUIT FOR HIGH RESISTANCE

1. Disconnect the REM electrical connector, CR11. 2. Measure the resistance between:

FP13, harness side	CR11, harness side
Pin 01	Pin 23

Is the resistance less than 10 ohms?

www.JagDocs.com

-> Yes
GO to Pinpoint Test G552807t54.

-> No
REPAIR the high resistance circuit. For additional information, refer to the wiring diagrams. Clear any DTCs, test the system for normal operation.

G552807t54 : CHECK THE RIGHT HAND FUEL LEVEL SENDER RESISTANCE EMPTY

1. Remove the fuel pump module.
Fuel Pump Module - 2.7L V6 - TdV6 (19.45.08) 2. Move the sensor float to it's lowest position. 3. Measure the resistance between:

FP13, component side	FP13, component side
Pin 01	Pin 02

Is the resistance between 50 and 52 ohms?

-> Yes
GO to Pinpoint Test G552807t55.

-> No
INSTALL a new fuel level sender,
Fuel Level Sender RH - 2.7L V6 - TdV6 Clear any DTCs, test the system for normal operation.

G552807t55 : CHECK THE RIGHT HAND FUEL LEVEL SENDER RESISTANCE FULL

1. Move the sensor float to it's highest position. 2. Measure the resistance between:

FP13, component side	FP13, component side
Pin 01	Pin 02

Is the resistance greater than 591 ohms?

-> Yes
An intermittent fault may be present in the wiring harness. Visually check for chaffed wires or other physical damage to the harness. If no fault is found in the circuit, suspect the following component(s): **-** Fuel pump module connector. **-** Fuel level sender. **-** REM connector. **-** REM.

-> No
INSTALL a new fuel level sender,
Fuel Level Sender RH - 2.7L V6 - TdV6 Clear any DTCs, test the system for normal operation.

PINPOINT TEST G552807p11 : LEFT HAND FUEL LEVEL SENDER

G552807t56 : CHECK THE LEFT HAND FUEL LEVEL SENDER SIGNAL CIRCUIT FOR SHORT CIRCUIT TO GROUND

1. **Fuel transfer pump connector, FP14**

Circuit	Pin
Fuel level sender - signal	02
Fuel level sender - signal return	01

2. **Rear electronic control module (REM) connector, CR04**

Circuit	Pin
Fuel level sender - signal	16

3. **Rear electronic control module (REM) connector, CR11**

Circuit	Pin
Fuel level sender - signal return	23

4. Key off. 5. Disconnect the fuel transfer pump connector, FP14. 6. Measure the resistance between:

FP14, harness side	Battery
Pin 02	Negative terminal

Is the resistance greater than 100 Kohms?

-> Yes
GO to Pinpoint Test G552807t7.

www.JagDocs.com

-> No
REPAIR the short circuit. For additional information, refer to the wiring diagrams. Clear any DTCs, test the system for normal operation.

G552807t7 : CHECK THE LEFT HAND FUEL LEVEL SENDER SIGNAL CIRCUIT FOR SHORT CIRCUIT TO POWER

1. Measure the resistance between:

FP14, harness side	Battery
Pin 02	Positive terminal

Is the resistance greater than 100 Kohms?

-> Yes
GO to Pinpoint Test G552807t9.

-> No
REPAIR the short circuit. For additional information, refer to the wiring diagrams. Clear any DTCs, test the system for normal operation.

G552807t9 : CHECK THE LEFT HAND FUEL LEVEL SENDER SIGNAL RETURN CIRCUIT FOR SHORT CIRCUIT TO POWER

1. Measure the resistance between:

FP14, harness side	Battery
Pin 01	Positive terminal

Is the resistance greater than 100 Kohms?

-> Yes
GO to Pinpoint Test G552807t10.

-> No
REPAIR the short circuit. For additional information, refer to the wiring diagrams. Clear any DTCs, test the system for normal operation.

G552807t10 : CHECK THE LEFT HAND FUEL LEVEL SENDER SIGNAL CIRCUIT FOR HIGH RESISTANCE

1. Disconnect the REM electrical connector, CR04. 2. Measure the resistance between:

FP14, harness side	CR04, harness side
Pin 02	Pin 16

Is the resistance less than 10 ohms?

-> Yes

GO to Pinpoint Test G552807t11.

-> No

REPAIR the high resistance circuit. For additional information, refer to the wiring diagrams. Clear any DTCs, test the system for normal operation.

G552807t11 : CHECK THE LEFT HAND FUEL LEVEL SENDER SIGNAL RETURN CIRCUIT FOR HIGH RESISTANCE

1. Disconnect the REM electrical connector, CR11. 2. Measure the resistance between:

FP14, harness side	CR04, harness side
Pin 01	Pin 23

Is the resistance less than 10 ohms?

-> Yes

GO to Pinpoint Test G552807t12.

-> No

REPAIR the high resistance circuit. For additional information, refer to the wiring diagrams. Clear any DTCs, test the system for normal operation.

G552807t12 : CHECK THE LEFT HAND FUEL LEVEL SENDER RESISTANCE EMPTY

1. Remove the fuel transfer pump.

Fuel Transfer Pump - 4.2L NA V8 - AJV8/4.2L SC V8 - AJV8/3.0L NA V6 - AJ27/3.5L NA V8 - AJV8, VIN Range: G00442->G45703 (19.45.21) 2. Move the sensor float to it's lowest position. 3. Measure the resistance between:

www.JagDocs.com

FP14, component side	FP14, component side
Pin 01	Pin 02

Is the resistance between 50 and 52 ohms?

-> Yes
GO to Pinpoint Test G552807t13.

-> No
INSTALL a new fuel level sender,
Fuel Level Sender LH - 2.7L V6 - TdV6 Clear any DTCs, test the system for normal operation.

G552807t13 : CHECK THE LEFT HAND FUEL LEVEL SENDER RESISTANCE FULL

1. Move the sensor float to it's highest position. 2. Measure the resistance between:

FP14, component side	FP14, component side
Pin 01	Pin 02

Is the resistance greater than 591 ohms?

-> Yes
An intermittent fault may be present in the wiring harness. Visually check for chaffed wires or other physical damage to the harness. If no fault is found in the circuit, suspect the following component(s): **-** Fuel transfer pump connector. **-** Fuel level sender. **-** REM connector. **-** REM.

-> No
INSTALL a new fuel level sender,
Fuel Level Sender LH - 2.7L V6 - TdV6 Clear any DTCs, test the system for normal operation.

PINPOINT TEST G552807p4 : FUEL PUMP MODULE RELAY

G552807t14 : CHECK FOR POWER TO THE FUEL PUMP MODULE RELAY BASE

1. **Engine control module (ECM) connector, EC66**

Circuit	Pin
Fuel pump module relay - control	J4

2. Remove the fuel pump module relay. 3. Measure the voltage between:

Fuel pump module relay base	Battery
Pin 04	Negative terminal

Is the voltage greater than 10 volts?

-> Yes
GO to Pinpoint Test G552807t15.

-> No
REPAIR the power supply circuit as necessary. For additional information, refer to the wiring diagrams. Clear any DTCs, test the system for normal operation.

G552807t15 : CHECK THE SWITCHED SUPPLY TO THE FUEL PUMP MODULE RELAY BASE

1. Key on, engine off. 2. Measure the voltage between:

Fuel pump module relay base	Battery
Pin 02	Negative terminal

Is the voltage greater than 10 volts?

-> Yes
GO to Pinpoint Test G552807t16.

-> No
REPAIR the switched supply circuit as necessary, this circuit includes the slave ignition relay. For additional information, refer to the wiring diagrams. Clear any DTCs, test the system for normal operation.

www.JagDocs.com

G552807t16 : CHECK THE FUEL PUMP MODULE RELAY CONTROL CIRCUIT FOR SHORT CIRCUIT TO GROUND

1. Key off. 2. Measure the resistance between:

Fuel pump module relay base	Battery
Pin 01	Negative terminal

Is the resistance greater than 100 Kohms?

-> Yes

GO to Pinpoint Test G552807t17.

-> No

REPAIR the short circuit. For additional information, refer to the wiring diagrams. Clear any DTCs, test the system for normal operation.

G552807t17 : CHECK THE FUEL PUMP MODULE RELAY CONTROL CIRCUIT FOR SHORT CIRCUIT TO POWER

1. Measure the resistance between:

Fuel pump module relay base	Battery
Pin 01	Positive terminal

Is the resistance greater than 100 Kohms?

-> Yes

GO to Pinpoint Test G552807t18.

-> No

REPAIR the short circuit. For additional information, refer to the wiring diagrams. Clear any DTCs, test the system for normal operation.

G552807t18 : CHECK THE FUEL PUMP MODULE RELAY CONTROL CIRCUIT FOR HIGH RESISTANCE

1. Disconnect the ECM connector, EC66. 2. Measure the resistance between:

Fuel pump module relay base	EC66, harness side

Pin 01	Pin J4

Is the resistance less than 10 ohms?

-> Yes
Check the fuel pump module circuits, GO to Pinpoint Test G552807p6.

-> No
REPAIR the high resistance circuit. For additional information, refer to the wiring diagrams. Clear any DTCs, test the system for normal operation.

PINPOINT TEST G552807p6 : FUEL PUMP MODULE

G552807t28 : CHECK THE FUEL PUMP MODULE GROUND CIRCUIT FOR SHORT CIRCUIT TO POWER

1. **Fuel pump module connector, FP13**

Circuit	Pin
Fuel pump module - supply	04
Fuel pump module - ground	03

2. Key off. 3. Disconnect the fuel pump module electrical connector, FP13. 4. Key on, engine off. 5. Measure the resistance between:

FP13, harness side	Battery
Pin 03	Positive terminal

Is the resistance greater than 100 Kohms?

-> Yes
GO to Pinpoint Test G552807t21.

-> No

www.JagDocs.com

REPAIR the short circuit. For additional information, refer to the wiring diagrams. Clear any DTCs, test the system for normal operation.

G552807t21 : CHECK THE FUEL PUMP MODULE GROUND CIRCUIT FOR HIGH RESISTANCE

1. Key off. 2. Measure the resistance between:

FP13, harness side	Battery
Pin 03	Negative terminal

Is the resistance less than 10 ohms?

-> Yes
GO to Pinpoint Test G552807t22.

-> No
REPAIR the high resistance circuit. For additional information, refer to the wiring diagrams. Clear any DTCs, test the system for normal operation.

G552807t22 : CHECK THE FUEL PUMP MODULE SUPPLY CIRCUIT FOR SHORT CIRCUIT TO GROUND

1. Measure the resistance between:

FP13, harness side	Battery
Pin 04	Negative terminal

Is the resistance greater than 100 Kohms?

-> Yes
GO to Pinpoint Test G552807t19.

-> No
REPAIR the short circuit. For additional information, refer to the wiring diagrams. Clear any DTCs, test the system for normal operation.

G552807t19 : CHECK THE FUEL PUMP MODULE SUPPLY CIRCUIT FOR SHORT CIRCUIT TO POWER

1. Measure the resistance between:

FP13, harness side	Battery
Pin 04	Positive terminal

Is the resistance greater than 100 Kohms?

-> Yes
GO to Pinpoint Test G552807t20.

-> No
REPAIR the short circuit. For additional information, refer to the wiring diagrams. Clear any DTCs, test the system for normal operation.

G552807t20 : CHECK THE FUEL PUMP MODULE SUPPLY CIRCUIT FOR HIGH RESISTANCE

1. Remove the fuel pump module relay. 2. Measure the resistance between:

FP13, harness side	Fuel pump module relay base
Pin 04	Pin 05

Is the resistance less than 10 ohms?

-> Yes
An intermittent fault may be present in the wiring harness. Visually check for chaffed wires or other physical damage to the harness. If no fault is found in the circuit, suspect the following component(s): **-** Fuel pump module connector. **-** Fuel pump module relay. **-** Fuel pump module.

-> No
REPAIR the high resistance circuit. For additional information, refer to the wiring diagrams. Clear any DTCs, test the system for normal operation.

PINPOINT TEST G552807p8 : CHECK THE LOW PRESSURE FUEL SYSTEM

G552807t8 : CHECK THE LOW PRESSURE FUEL SYSTEM BLEED TAP STATUS

1. Make sure that the low pressure fuel bleed tap is in the **CLOSED** position.

Is the low pressure fuel bleed tap in the CLOSED position?

www.JagDocs.com

-> Yes
GO to Pinpoint Test G552807t39.

-> No
Turn the low pressure fuel bleed tap to the **CLOSED** position and test for normal operation.

G552807t39 : CHECK THE PUMP ACTIVITY

1. Remove the rear seat cushion.
Rear Seat Cushion (76.70.37) 2. Key on, engine off. 3. Listen for pump noise.

Can the fuel pump be heard running?

-> Yes
GO to Pinpoint Test G552807t23.

-> No
GO to Pinpoint Test G552807p2.

G552807t23 : CHECK THE FUEL PUMP MODULE FUNCTION

1.

WARNING: This procedure involves fuel handling. Be prepared for fuel spillage at all times and always observe fuel handling precautions. Failure to follow these instructions may result in personal injury.

After thoroughly cleaning around the connections, disconnect the inlet pipe from the fuel filter. 2. Position a suitable container beneath the fuel filter inlet pipe to collect fuel. 3. Key on, engine off (the pump should run for a short period, depending on temperature, etc). 4. Check that fuel is pumped from the fuel filter inlet pipe.

Is fuel pumped from the fuel filter inlet pipe?

-> Yes
CHECK the drive belt to the fuel injection pump.
Fuel Injection Pump Belt Check for DTCs. Test the system for normal operation.

-> No
CHECK the fuel lines for a blockage/restriction, GO to Pinpoint Test G552807p9.

PINPOINT TEST G552807p9 : CHECK THE FUEL LINES

G552807t24 : CHECK FOR FUEL SYSTEM LEAKS

1. Start and run the engine for five minutes. 2. Key off. 3. Inspect the fuel lines, pump, etc, in the engine bay for cracks/damage. 4. Raise and support the vehicle.
Lifting 5. Inspect the fuel lines for cracks/damage. 6. Check the integrity of the joints in the supply and return lines between the fuel tank and the fuel pump. 7. Carefully check around the fuel pipes, injectors and pump for evidence of leakage. 8. If there is evidence of a significant leak, clean the engine and repeat the test.

Is there any evidence of leakage?

-> Yes
RECTIFY the leak as necessary. Test the system for normal operation.

-> No
GO to Pinpoint Test G552807t43.

G552807t43 : CHECK THE FUEL LINES FOR RESTRICTIONS

1.

WARNING: This procedure involves fuel handling. Be prepared for fuel spillage at all times and always observe fuel handling precautions. Failure to follow these instructions may result in personal injury.

Detach the fuel line from the fuel rail and from the fuel pump module. 2. Using an air line gently blow through the line checking for blockages or restrictions.

Is a blockage or restriction evident?

-> Yes
CLEAR/REPAIR the blocked or restricted fuel line and test the system for normal operation.

-> No
GO to Pinpoint Test G552807t44.

G552807t44 : CHECK THE IN TANK FUEL LINES

1. Remove the fuel and transfer pump module locking rings.
Fuel Pump Module - 2.7L V6 - TdV6 (19.45.08) 2. Detach the fuel lines from the transfer and fuel

www.JagDocs.com

pump modules. 3. Using an air line gently blow through the line checking for blockages, restrictions or leaks.

Is a blockage, restriction or leak evident?

-> Yes
CLEAR/REPAIR the blocked, restricted or leaking fuel line as necessary and test the system for normal operation.

-> No
CHECK for DTCs and symptoms indicating another cause of the problem.

PINPOINT TEST G552807p5 : CHECK THE IN TANK FUEL LEVEL

G552807t29 : CHECK THE FUEL LEVEL IN EACH SIDE OF THE FUEL TANK

1. Remove the fuel transfer pump and fuel pump module locking rings.
Fuel Pump Module - 2.7L V6 - TdV6 (19.45.08) 2. Reposition the fuel pump modules such that you can see the fuel levels in the tank.

Is there fuel in both sides of the tank?

-> Yes
The fuel transfer pump is functioning.

-> No
If fuel is evident in the fuel transfer pump side and the fuel pump module side is empty then suspect the following: **-** Low pressure fuel bleed tap is open. GO to Pinpoint Test G552807p8.
- Fuel transfer pump failure.
Fuel Transfer Pump - 4.2L NA V8 - AJV8/4.2L SC V8 - AJV8/3.0L NA V6 - AJ27/3.5L NA V8 - AJV8, VIN Range: G00442->G45703 (19.45.21)

Fuel Filter - 4.2L NA V8 - AJV8/4.2L SC V8 - AJV8/3.0L NA V6 - AJ27/3.5L NA V8 - AJV8 (19.25.02)

Removal

1. **WARNING: Place the vehicle in a quarantined area and arrange "No Smoking/Petrol Fumes" signs about the vehicle.**

WARNING: Before any work is carried out on the fuel system, ground the vehicle to earth and maintain the ground connection until the work is complete.

WARNING: Do not smoke or carry lighted tobacco or open flame of any type when working on or near any fuel related components. Highly flammable vapors are always present and may ignite. Failure to follow these instructions may result in personal injury.

WARNING: Do not carry or operate cellular phones when working on or near any fuel related components. Highly flammable vapors are always present and may ignite. Failure to follow these instructions may result in personal injury.

WARNING: The fuel system remains pressurized for a long time after the ignition is switched off. The fuel pressure must be relieved before attempting any repairs. Failure to follow these instructions may result in personal injury.

WARNING: After carrying out repairs, the fuel system must be checked visually for

www.JagDocs.com

leaks. Failure to follow these instructions may result in personal injury.

WARNING: This procedure involves fuel handling. Be prepared for fuel spillage at all times and always observe fuel handling precautions. Failure to follow these instructions may result in personal injury.

WARNING: If taken internally do not induce vomiting, seek immediate medical attention. Failure to follow these instructions may result in personal injury.

WARNING: If fuel contacts the eyes, flush the eyes with cold water or eyewash solution and seek medical attention.

WARNING: Wash hands thoroughly after handling, as prolonged contact may cause irritation. Should irritation develop, seek medical attention.

Disconnect the battery ground cable. <<414-01>>

2 . De-pressurize the fuel system. <<310-00>>

3 . Raise and support the vehicle. <<100-02>>

4 . Remove the under engine air deflector tray. <<501-02>>

5 . Detach the left-hand splash shield.

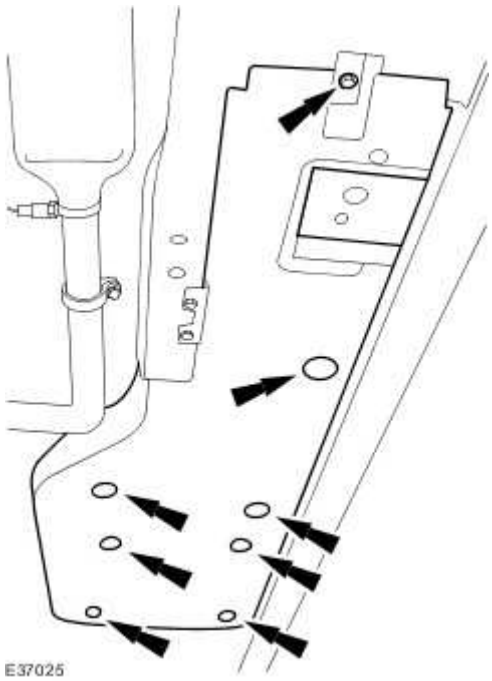

6 . Detach the fuel filter retaining bracket.

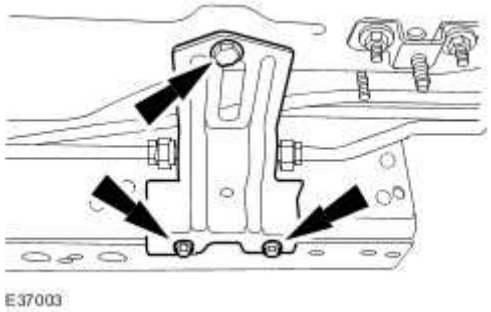

7 . Remove the fuel filter.

- Remove and discard the O-ring seals.

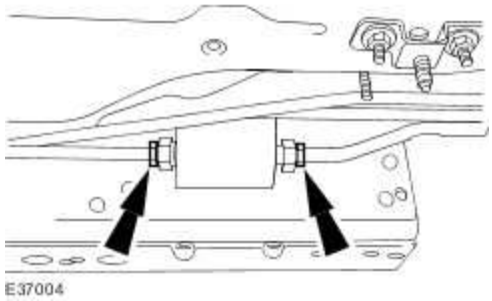

www.JagDocs.com

Installation

1 . To install, reverse the removal procedure.

- Install new O-ring seals.
- Tighten to 30 Nm.

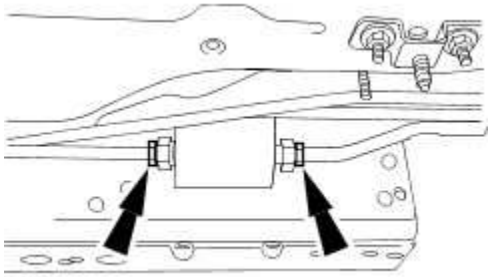

E37004

2 . Tighten to 5 Nm.

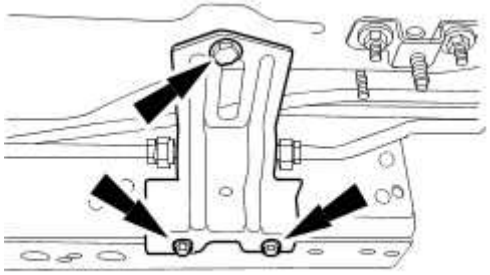

E37003

Fuel Filter - 2.7L V6 - TdV6 (19.25.02)

Removal

WARNING: Place the vehicle in a quarantined area and arrange "No Smoking/Petrol Fumes" signs about the vehicle.

WARNING: Before any work is carried out on the fuel system, ground the vehicle to earth and maintain the ground connection until the work is complete.

WARNING: Do not smoke or carry lighted tobacco or open flame of any type when working on or near any fuel related components. Highly flammable vapors are always present and may ignite. Failure to follow these instructions may result in personal injury.

WARNING: The fuel system remains pressurized for a long time after the ignition is switched off. The fuel pressure must be relieved before attempting any repairs. Failure to follow these instructions may result in personal injury.

WARNING: After carrying out repairs, the fuel system must be checked visually for leaks. Failure to follow these instructions may result in personal injury.

WARNING: This procedure involves fuel handling. Be prepared for fuel spillage at all times and always observe fuel handling precautions. Failure to follow these instructions may result in personal injury.

WARNING: If taken internally do not induce vomiting, seek immediate medical attention. Failure to follow these instructions may result in personal injury.

www.JagDocs.com

WARNING: If fuel contacts the eyes, flush the eyes with cold water or eyewash solution and seek medical attention.

WARNING: Wash hands thoroughly after handling, as prolonged contact may cause irritation. Should irritation develop, seek medical attention.

CAUTION: Diesel fuel injection equipment is manufactured to very precise tolerances and fine clearances. It is therefore essential that absolute cleanliness is observed when working with these components. Always fit blanking plugs to open orifices or lines. Failure to follow this instruction may result in damage to the vehicle.

CAUTION: Make sure the fuel lines are connected to the correct fuel line connector on the fuel filter. Note the orientation of the fuel filter alignment mark before removing it from the fuel filter retaining bracket. Failure to follow this instruction may result in damage to the vehicle.

CAUTION: Always carry out the cleaning process before carrying out any repairs to the fuel injection system components. Failure to follow this instruction may result in damage to the vehicle.

1 . **NOTE:**

Make sure the position of the fuel lines are noted before removal from the fuel filter.

NOTE:

Fit suitable blanking caps to the fuel filter unions, fuel supply lines and fuel return lines.

Detach the fuel filter supply and return lines.
For additional information, refer to Quick Release Coupling - Push Connect

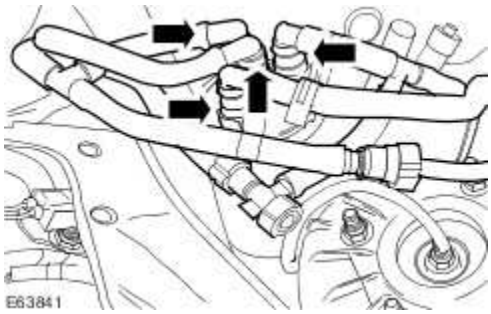

2 . Loosen the fuel filter securing bolt.

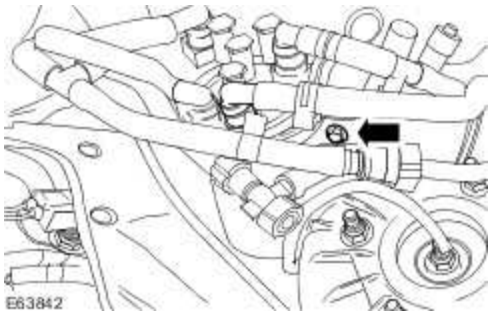

3 . Remove the fuel filter from the retaining bracket.

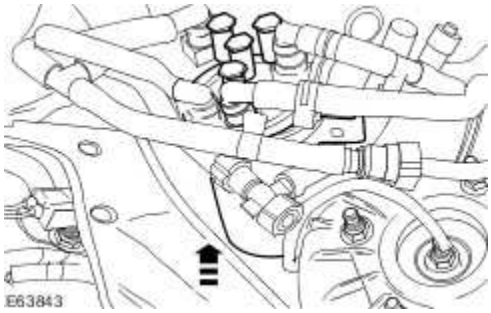

Installation

WARNING: Place the vehicle in a quarantined area and arrange "No Smoking/Petrol Fumes" signs about the vehicle.

WARNING: Before any work is carried out on the fuel system, ground the vehicle to earth and maintain the ground connection until the work is complete.

www.JagDocs.com

WARNING: Do not smoke or carry lighted tobacco or open flame of any type when working on or near any fuel related components. Highly flammable vapors are always present and may ignite. Failure to follow these instructions may result in personal injury.

WARNING: The fuel system remains pressurized for a long time after the ignition is switched off. The fuel pressure must be relieved before attempting any repairs. Failure to follow these instructions may result in personal injury.

WARNING: After carrying out repairs, the fuel system must be checked visually for leaks. Failure to follow these instructions may result in personal injury.

WARNING: This procedure involves fuel handling. Be prepared for fuel spillage at all times and always observe fuel handling precautions. Failure to follow these instructions may result in personal injury.

WARNING: If taken internally do not induce vomiting, seek immediate medical attention. Failure to follow these instructions may result in personal injury.

WARNING: If fuel contacts the eyes, flush the eyes with cold water or eyewash solution and seek medical attention.

WARNING: Wash hands thoroughly after handling, as prolonged contact may cause irritation. Should irritation develop, seek medical attention.

CAUTION: Diesel fuel injection equipment is manufactured to very precise tolerances and

fine clearances. It is therefore essential that absolute cleanliness is observed when working with these components. Always fit blanking plugs to open orifices or lines. Failure to follow this instruction may result in damage to the vehicle.

CAUTION: Make sure the fuel lines are connected to the correct fuel line connector on the fuel filter. Note the orientation of the fuel filter alignment mark before removing it from the fuel filter retaining bracket. Failure to follow this instruction may result in damage to the vehicle.

CAUTION: Always carry out the cleaning process before carrying out any repairs to the fuel injection system components. Failure to follow this instruction may result in damage to the vehicle.

1 . To install, reverse the removal procedure.

Tighten to 7 Nm.

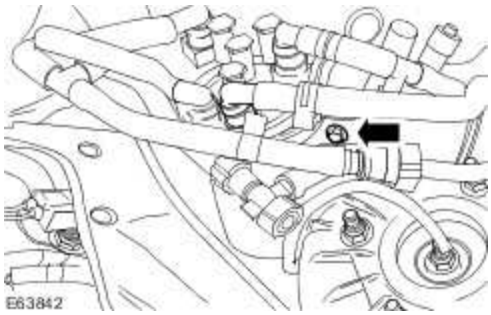

2 . Bleed the low-pressure fuel system.
For additional information, refer to

www.JagDocs.com

Fuel Level Sender LH - 4.2L NA V8 - AJV8/4.2L SC V8 - AJV8/3.0L NA V6 - AJ27/3.5L NA V8 - AJV8, VIN Range: G00442->G45703

Removal

WARNING: Do not smoke or carry lighted tobacco or an open flame of any type when working on or near any fuel related components. Highly flammable vapors are always present and may ignite. Failure to follow these instructions may result in personal injury.

WARNING: Do not carry or operate cellular phones when working on or near any fuel related components. Highly flammable vapors are always present and may ignite. Failure to follow these instructions may result in personal injury.

WARNING: This procedure involves fuel handling. Be prepared for fuel spillage at all times and always observe fuel handling precautions. Failure to follow these instructions may result in personal injury.

1 Remove the transfer pump.
. For additional information, refer to Fuel Transfer Pump - 4.2L NA V8 - AJV8/4.2L SC V8 - AJV8/3.0L NA V6 - AJ27/3.5L NA V8 - AJV8, VIN Range: G00442->G45703 (19.45.21)

2 . Disconnect the fuel level sender electrical connector.

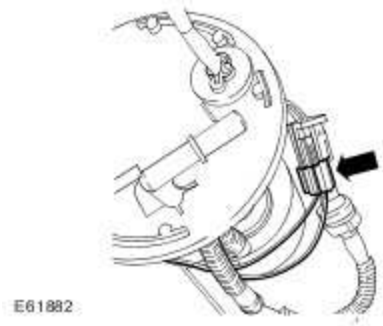

3 . Remove the fuel level sender and harness.

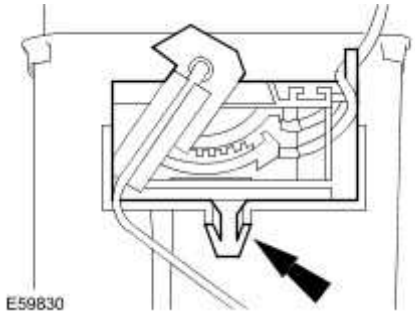

Installation

WARNING: Do not smoke or carry lighted tobacco or an open flame of any type when working on or near any fuel related components. Highly flammable vapors are always present and may ignite. Failure to follow these instructions may result in personal injury.

WARNING: Do not carry or operate cellular phones when working on or near any fuel related components. Highly flammable vapors are always present and may ignite. Failure to follow these instructions may result in personal injury.

WARNING: This procedure involves fuel handling. Be prepared for fuel spillage at all times and always observe fuel handling precautions. Failure to follow these instructions may result in personal injury.

1 . To install, reverse the removal procedure.

www.JagDocs.com

Fuel Level Sender LH - 4.2L NA V8 - AJV8/4.2L SC V8 - AJV8/3.0L NA V6 - AJ27/3.5L NA V8 - AJV8, VIN Range: G45704->G99999

Removal

WARNING: Do not smoke or carry lighted tobacco or an open flame of any type when working on or near any fuel related components. Highly flammable vapors are always present and may ignite. Failure to follow these instructions may result in personal injury.

WARNING: Do not carry or operate cellular phones when working on or near any fuel related components. Highly flammable vapors are always present and may ignite. Failure to follow these instructions may result in personal injury.

WARNING: This procedure involves fuel handling. Be prepared for fuel spillage at all times and always observe fuel handling precautions. Failure to follow these instructions may result in personal injury.

1 Remove the fuel transfer unit.
. For additional information, refer to Fuel Transfer Unit - 4.2L NA V8 - AJV8/4.2L SC V8 - AJV8/3.0L NA V6 - AJ27/3.5L NA V8 - AJV8, VIN Range: G45704->G99999

2 . Remove the fuel level sender and harness.

- Cut the fuel level sender harness tie straps.

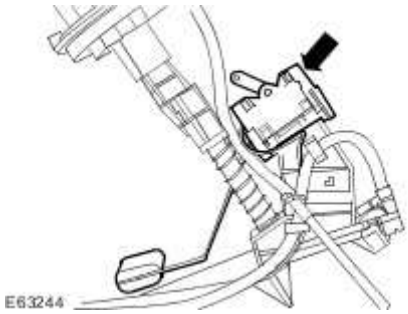

Installation

WARNING: Do not smoke or carry lighted tobacco or an open flame of any type when working on or near any fuel related components. Highly flammable vapors are always present and may ignite. Failure to follow these instructions may result in personal injury.

WARNING: Do not carry or operate cellular phones when working on or near any fuel related components. Highly flammable vapors are always present and may ignite. Failure to follow these instructions may result in personal injury.

WARNING: This procedure involves fuel handling. Be prepared for fuel spillage at all times and always observe fuel handling precautions. Failure to follow these instructions may result in personal injury.

1 . To install, reverse the removal procedure.

www.JagDocs.com

Fuel Level Sender LH - 2.7L V6 - TdV6

Special Service Tools

Remover/Installer, Fuel Pump Module/Fuel Transfer Pump Locking Ring
310-146

Removal

WARNING: Place the vehicle in a quarantined area and arrange "No Smoking/Petrol Fumes" signs about the vehicle.

WARNING: Before any work is carried out on the fuel system, ground the vehicle to earth and maintain the ground connection until the work is complete.

WARNING: Do not smoke or carry lighted tobacco or open flame of any type when working on or near any fuel related components. Highly flammable vapors are always present and may ignite. Failure to follow these instructions may result in personal injury.

WARNING: The fuel system remains pressurized for a long time after the ignition is switched off. The fuel pressure must be relieved before attempting any repairs. Failure to follow these instructions may result in personal injury.

WARNING: After carrying out repairs, the fuel system must be checked visually for leaks. Failure to follow these instructions may result in personal injury.

WARNING: This procedure involves fuel handling. Be prepared for fuel spillage at all times and always observe fuel handling precautions. Failure to follow these instructions may result in personal injury.

WARNING: If taken internally do not induce vomiting, seek immediate medical attention. Failure to follow these instructions may result in personal injury.

WARNING: If fuel contacts the eyes, flush the eyes with cold water or eyewash solution and seek medical attention.

WARNING: Wash hands thoroughly after handling, as prolonged contact may cause irritation. Should irritation develop, seek medical attention.

1 . Disconnect the battery ground cable.
For additional information, refer to Battery Disconnect and Connect

2 . Detach the fuel tank filler pipe cap.

3 . Release the pressure in the fuel system.
For additional information, refer to Fuel System Pressure Release - 4.2L NA V8 - AJV8/4.2L SC V8 - AJV8/3.0L NA V6 - AJ27/3.5L NA V8 - AJV8 (19.50.02)

4 . Drain the fuel system.
For additional information, refer to Fuel Tank Draining - VIN Range: G45704->G99999

5 . Remove the rear seat cushion.
For additional information, refer to Rear Seat Cushion (76.70.37)

www.JagDocs.com

6 . Remove the scuff plate trim panel.

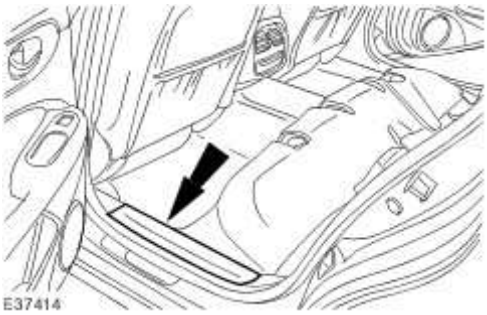

7 . Detach and reposition the floor covering.

8 . Remove the floor aperture cover.

9 . Detach the fuel transfer unit electrical connector from the retaining bracket.

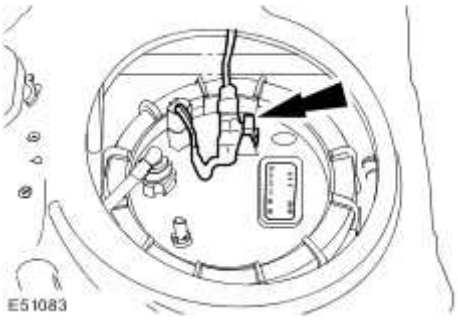

10 . Disconnect the fuel transfer unit electrical connector.

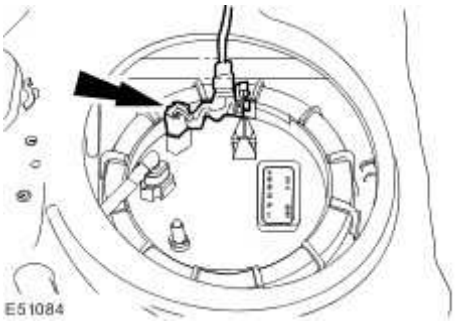

11 . Disconnect the fuel return line from the fuel transfer unit.

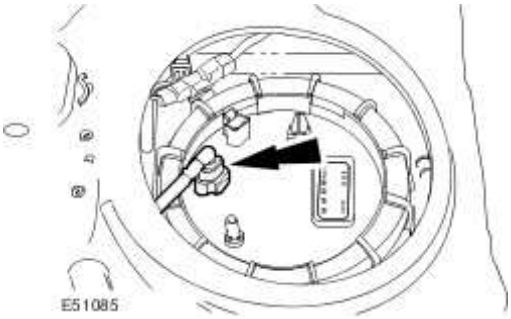

12 . **CAUTION: Make sure no damage occurs to the fuel transfer unit when removing the locking ring.**

Using the special tool, remove the fuel transfer unit locking ring.

- Remove and discard the O-ring seal.

www.JagDocs.com

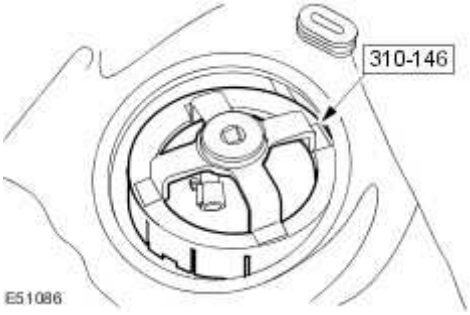

13 . Detach and reposition the upper part of the fuel transfer unit.

14 . **CAUTION: Make sure no damage occurs to the fuel level float.**

Remove the fuel level float.

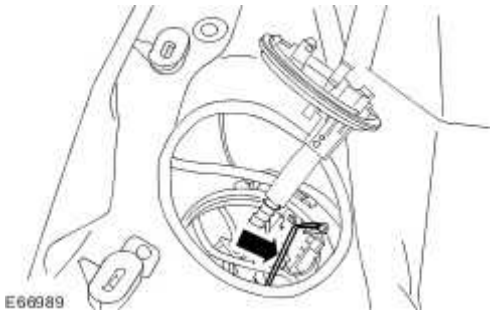

15 . Disconnect the fuel level sender electrical connector.

16 . Remove the fuel level sender and harness.

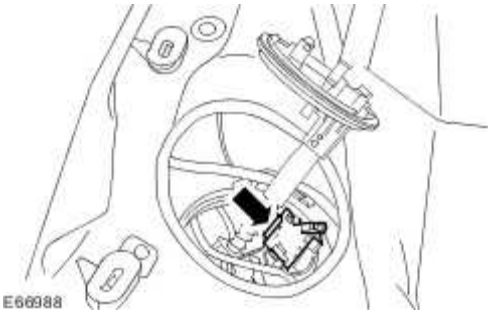

Installation

WARNING: Place the vehicle in a quarantined area and arrange "No Smoking/Petrol Fumes" signs about the vehicle.

WARNING: Before any work is carried out on the fuel system, ground the vehicle to earth and maintain the ground connection until the work is complete.

WARNING: Do not smoke or carry lighted tobacco or open flame of any type when working on or near any fuel related components. Highly flammable vapors are always present and may ignite. Failure to follow these instructions may result in personal injury.

WARNING: The fuel system remains pressurized for a long time after the ignition is switched off. The fuel pressure must be relieved before attempting any repairs. Failure to follow these

www.JagDocs.com

instructions may result in personal injury.

WARNING: After carrying out repairs, the fuel system must be checked visually for leaks. Failure to follow these instructions may result in personal injury.

WARNING: This procedure involves fuel handling. Be prepared for fuel spillage at all times and always observe fuel handling precautions. Failure to follow these instructions may result in personal injury.

WARNING: If taken internally do not induce vomiting, seek immediate medical attention. Failure to follow these instructions may result in personal injury.

WARNING: If fuel contacts the eyes, flush the eyes with cold water or eyewash solution and seek medical attention.

WARNING: Wash hands thoroughly after handling, as prolonged contact may cause irritation. Should irritation develop, seek medical attention.

1 . To install, reverse the removal procedure.

- Install a new O-ring seal.
- Tighten to 60 Nm.

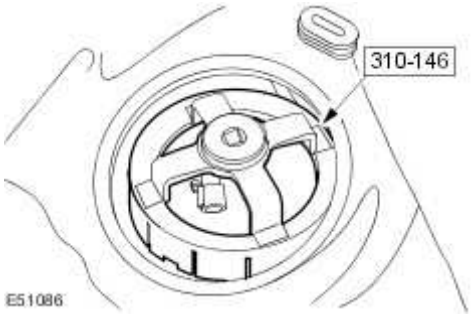

www.JagDocs.com

Fuel Level Sender RH - 4.2L NA V8 - AJV8/4.2L SC V8 - AJV8/3.0L NA V6 - AJ27/3.5L NA V8 - AJV8, VIN Range: G00442->G45703

Removal

WARNING: Do not smoke or carry lighted tobacco or an open flame of any type when working on or near any fuel related components. Highly flammable vapors are always present and may ignite. Failure to follow these instructions may result in personal injury.

WARNING: Do not carry or operate cellular phones when working on or near any fuel related components. Highly flammable vapors are always present and may ignite. Failure to follow these instructions may result in personal injury.

WARNING: This procedure involves fuel handling. Be prepared for fuel spillage at all times and always observe fuel handling precautions. Failure to follow these instructions may result in personal injury.

1 Remove the fuel pump module.
. For additional information, refer to Fuel Pump Module - 4.2L NA V8 - AJV8/4.2L SC V8 - AJV8/3.0L NA V6 - AJ27/3.5L NA V8 - AJV8, VIN Range: G00442->G45703 (19.45.08)

2 . Disconnect the fuel level sender electrical connector.

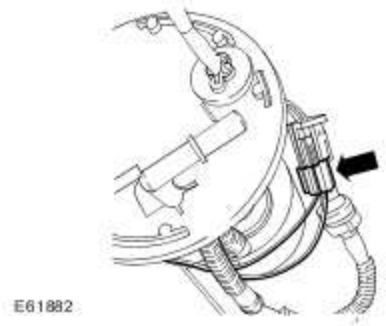

3 . Remove the fuel level sender and harness.

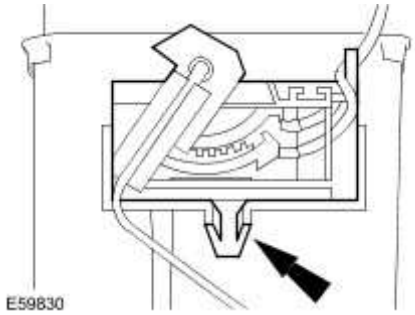

Installation

WARNING: Do not smoke or carry lighted tobacco or an open flame of any type when working on or near any fuel related components. Highly flammable vapors are always present and may ignite. Failure to follow these instructions may result in personal injury.

WARNING: Do not carry or operate cellular phones when working on or near any fuel related components. Highly flammable vapors are always present and may ignite. Failure to follow these instructions may result in personal injury.

WARNING: This procedure involves fuel handling. Be prepared for fuel spillage at all times and always observe fuel handling precautions. Failure to follow these instructions may result in personal injury.

1 . To install, reverse the removal procedure.

www.JagDocs.com

Fuel Level Sender RH - 4.2L NA V8 - AJV8/4.2L SC V8 - AJV8/3.0L NA V6 - AJ27/3.5L NA V8 - AJV8, VIN Range: G45704->G99999

Removal

WARNING: Do not smoke or carry lighted tobacco or an open flame of any type when working on or near any fuel related components. Highly flammable vapors are always present and may ignite. Failure to follow these instructions may result in personal injury.

WARNING: Do not carry or operate cellular phones when working on or near any fuel related components. Highly flammable vapors are always present and may ignite. Failure to follow these instructions may result in personal injury.

WARNING: This procedure involves fuel handling. Be prepared for fuel spillage at all times and always observe fuel handling precautions. Failure to follow these instructions may result in personal injury.

1 Remove the fuel pump module.
. For additional information, refer to Fuel Pump Module - 4.2L NA V8 - AJV8/4.2L SC V8 - AJV8/3.0L NA V6 - AJ27/3.5L NA V8 - AJV8, VIN Range: G45704->G99999 (19.45.08)

2 . Disconnect the fuel pump module electrical connector.

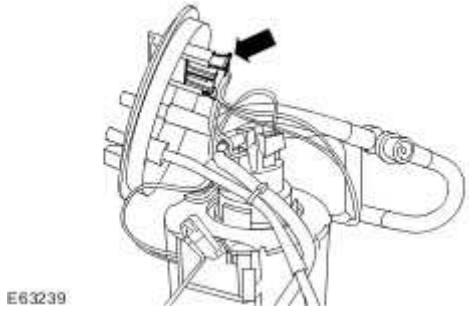

3 . Disconnect the fuel level sender electrical connector.

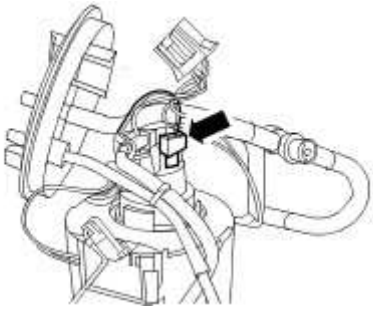

4 . Disconnect the fuel level sender electrical connector.

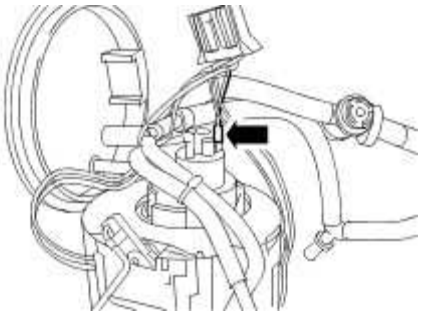

5 . Disconnect the fuel level sender electrical connector.

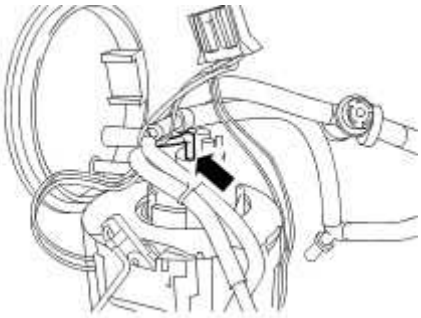

6 . Remove the fuel level sender and harness.

- Cut the fuel level sender harness tie strap.

www.JagDocs.com

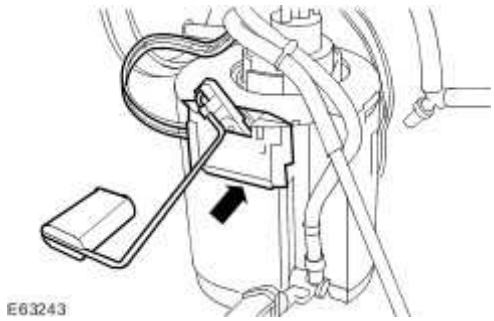

Installation

WARNING: Do not smoke or carry lighted tobacco or an open flame of any type when working on or near any fuel related components. Highly flammable vapors are always present and may ignite. Failure to follow these instructions may result in personal injury.

WARNING: Do not carry or operate cellular phones when working on or near any fuel related components. Highly flammable vapors are always present and may ignite. Failure to follow these instructions may result in personal injury.

WARNING: This procedure involves fuel handling. Be prepared for fuel spillage at all times and always observe fuel handling precautions. Failure to follow these instructions may result in personal injury.

1 . To install, reverse the removal procedure.

Fuel Level Sender RH - 2.7L V6 - TdV6

Removal

WARNING: Place the vehicle in a quarantined area and arrange "No Smoking/Petrol Fumes" signs about the vehicle.

WARNING: Before any work is carried out on the fuel system, ground the vehicle to earth and maintain the ground connection until the work is complete.

WARNING: Do not smoke or carry lighted tobacco or open flame of any type when working on or near any fuel related components. Highly flammable vapors are always present and may ignite. Failure to follow these instructions may result in personal injury.

WARNING: The fuel system remains pressurized for a long time after the ignition is switched off. The fuel pressure must be relieved before attempting any repairs. Failure to follow these instructions may result in personal injury.

WARNING: After carrying out repairs, the fuel system must be checked visually for leaks. Failure to follow these instructions may result in personal injury.

WARNING: This procedure involves fuel handling. Be prepared for fuel spillage at all times and always observe fuel handling precautions. Failure to follow these instructions may result in personal injury.

WARNING: If taken internally do not induce vomiting, seek immediate medical attention. Failure to follow these instructions may result in personal injury.

www.JagDocs.com

WARNING: If fuel contacts the eyes, flush the eyes with cold water or eyewash solution and seek medical attention.

WARNING: Wash hands thoroughly after handling, as prolonged contact may cause irritation. Should irritation develop, seek medical attention.

1 . Remove the fuel pump module.
For additional information, refer to Fuel Pump Module - 2.7L V6 - TdV6 (19.45.08)

2 . Disconnect the fuel level sender electrical connector.

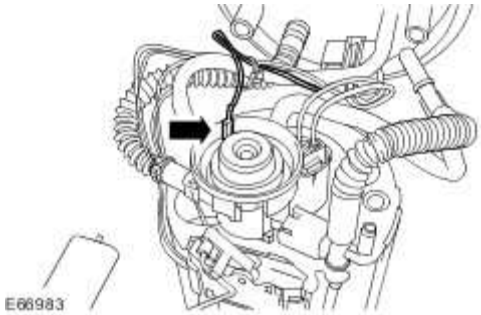

3 . Disconnect the fuel level sender electrical connector.

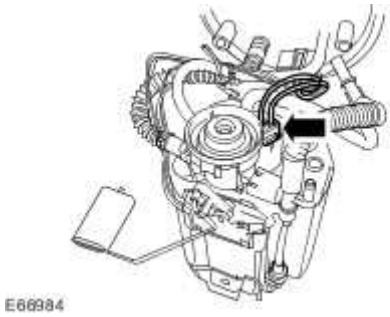

4 . Disconnect the fuel pump module electrical connector.

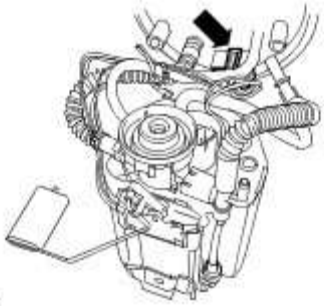

5 . Remove the fuel level sender and harness.

- Cut the fuel level sender harness tie straps.

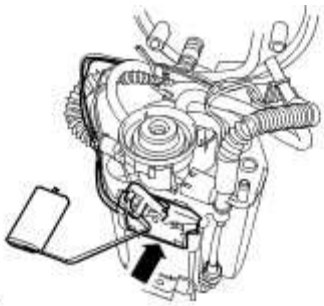

Installation

WARNING: Place the vehicle in a quarantined area and arrange "No Smoking/Petrol Fumes" signs about the vehicle.

WARNING: Before any work is carried out on the fuel system, ground the vehicle to earth and maintain the ground connection until the work is complete.

WARNING: Do not smoke or carry lighted tobacco or open flame of any type when working on or near any fuel related components. Highly flammable vapors are always present and may ignite. Failure to follow these instructions may result in personal injury.

www.JagDocs.com

WARNING: The fuel system remains pressurized for a long time after the ignition is switched off. The fuel pressure must be relieved before attempting any repairs. Failure to follow these instructions may result in personal injury.

WARNING: After carrying out repairs, the fuel system must be checked visually for leaks. Failure to follow these instructions may result in personal injury.

WARNING: This procedure involves fuel handling. Be prepared for fuel spillage at all times and always observe fuel handling precautions. Failure to follow these instructions may result in personal injury.

WARNING: If taken internally do not induce vomiting, seek immediate medical attention. Failure to follow these instructions may result in personal injury.

WARNING: If fuel contacts the eyes, flush the eyes with cold water or eyewash solution and seek medical attention.

WARNING: Wash hands thoroughly after handling, as prolonged contact may cause irritation. Should irritation develop, seek medical attention.

1 . To install, reverse the removal procedure.

Fuel Pump Module - 4.2L NA V8 - AJV8/4.2L SC V8 - AJV8/3.0L NA V6 - AJ27/3.5L NA V8 - AJV8, VIN Range: G00442->G45703 (19.45.08)

Special Service Tools

Remover/Installer, Fuel Pump Module/Fuel Transfer Pump Locking Ring
310-072A

Removal

All vehicles

1. **WARNING: Place the vehicle in a quarantined area and arrange "No Smoking/Petrol Fumes" signs about the vehicle.**

   WARNING: Before any work is carried out on the fuel system, ground the vehicle to earth and maintain the ground connection until the work is complete.

   WARNING: Do not smoke, carry lighted tobacco or open flame of any type when working on or near any fuel related components. Highly flammable vapors are always present and may ignite. Failure to follow these instructions may result in personal injury.

   WARNING: Do not carry or operate cellular phones when working on or near any fuel related components. Highly flammable vapors are always present and may ignite. Failure to follow these instructions may result in personal injury.

www.JagDocs.com

WARNING: The fuel system remains pressurized for a long period of time after the ignition is switched off. The fuel pressure must be relieved before attempting any repairs. Failure to follow these instructions may result in personal injury.

WARNING: After carrying out repairs, the fuel system must be checked visually for leaks. Failure to follow these instructions may result in personal injury.

WARNING: This procedure involves fuel handling. Be prepared for fuel spillage at all times and always observe fuel handling precautions. Failure to follow these instructions may result in personal injury.

WARNING: If taken internally do not induce vomiting, seek immediate medical attention. Failure to follow these instructions may result in personal injury.

WARNING: If fuel contacts the eyes, flush the eyes with cold water or eyewash solution and seek medical attention.

WARNING: Wash hands thoroughly after handling, as prolonged contact may cause irritation. Should irritation develop, seek medical attention.

Disconnect the battery ground cable. <<414-01>>

2 . Detach the fuel tank filler pipe cap.

3 . De-pressurize the fuel system. <<310-00>>

4 . Drain the fuel system. <<310-00>>

5 . Remove the rear seat cushion. <<501-10>>

6 . Remove the scuff plate trim panel.

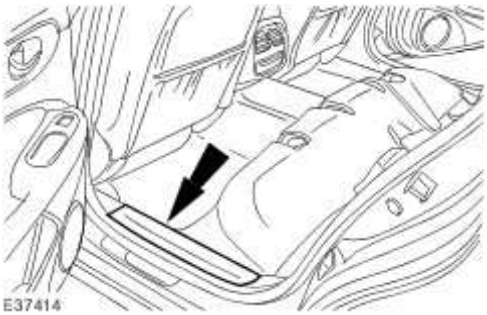

7 . Remove the scuff plate trim panel.

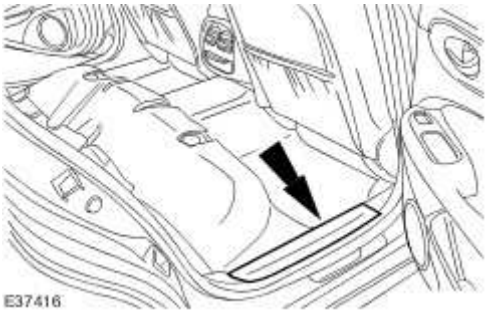

8 . Detach and reposition the floor covering.

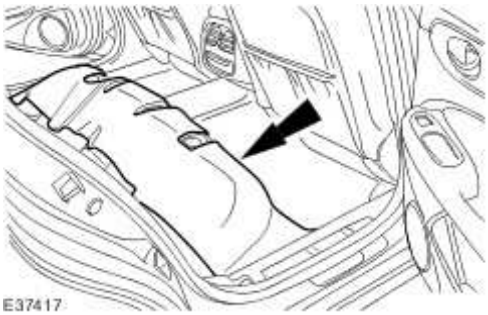

Vehicles without supercharger

9 . Remove the floor aperture cover.

www.JagDocs.com

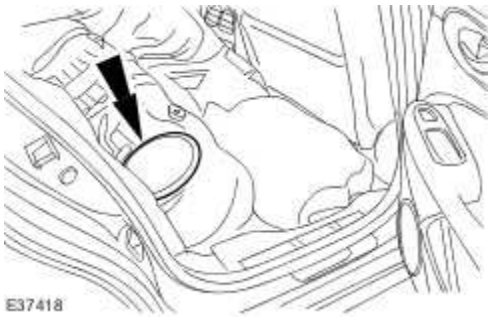

10 . Disconnect the fuel pump module quick release coupling.

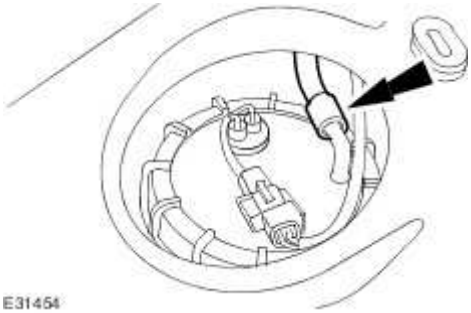

11 . Detach the fuel pump module electrical connector from the retaining bracket.

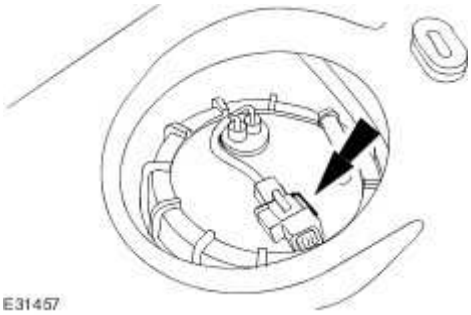

12 . Disconnect the fuel pump module electrical connector.

13 . Using the special tool, remove the fuel pump module locking ring.

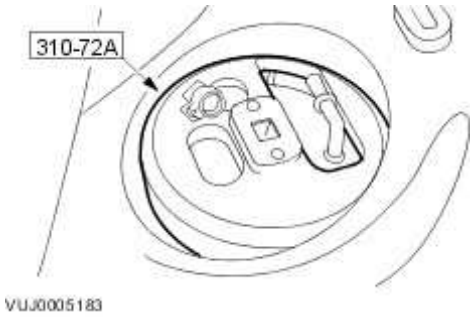

14 . Detach and reposition the upper part of the fuel pump module.

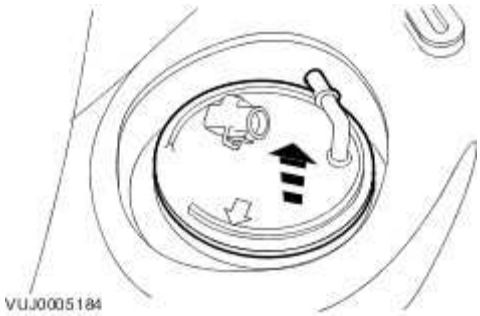

15 . Remove the floor aperture cover.

16 . Detach the fuel transfer pump module electrical connector from the retaining bracket.

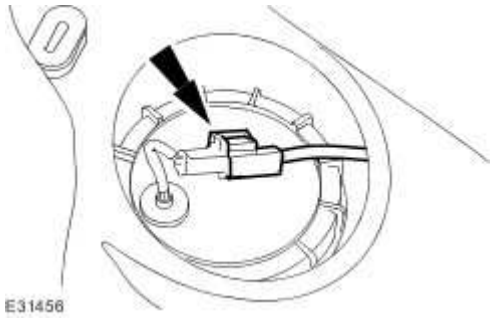

www.JagDocs.com

17 . Disconnect the fuel transfer pump electrical connector.

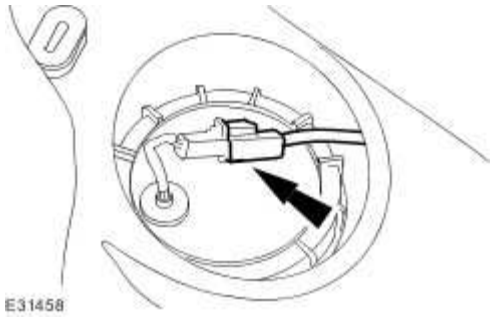

18 . Using the special tool, remove the fuel transfer pump locking ring.

19 . Detach and reposition the upper part of the fuel transfer pump.

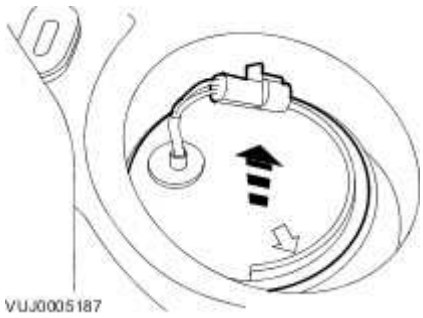

20 . **CAUTION: Make sure no damage occurs to the fuel level float.**

NOTE:

Remove and discard the fuel transfer pump O-ring seal.

Remove the fuel transfer pump.

- Disconnect the fuel cross over lines.

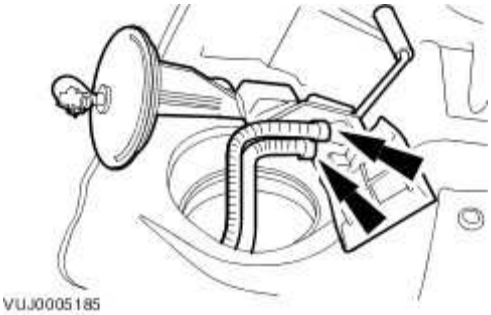

21 . **CAUTION: Make sure no damage occurs to the fuel level float.**

Remove the fuel pump module.

- Remove and discard the fuel pump module O-ring seal.

Vehicles with supercharger

22 . **NOTE:**

Left-hand shown, right-hand similar.

Remove the floor aperture cover.

23 . **NOTE:**

Left-hand shown, right-hand similar.

www.JagDocs.com

Disconnect the fuel pump module quick release coupling.

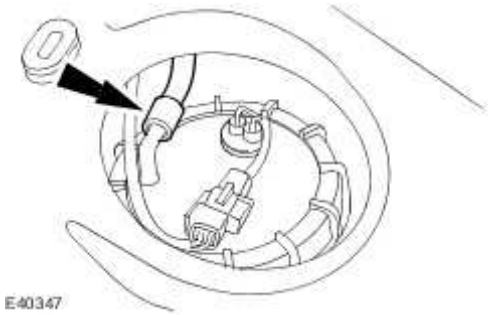

24 . **NOTE:**

Left-hand shown, right-hand similar.

Detach the fuel pump module electrical connector from the retaining bracket.

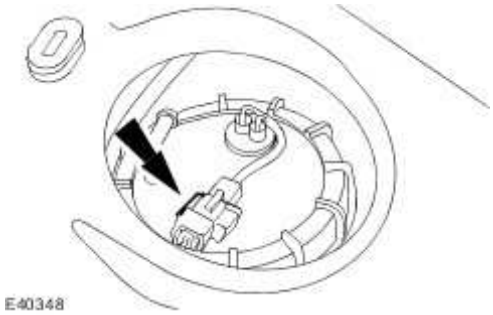

25 . **NOTE:**

Left-hand shown, right-hand similar.

Disconnect the fuel pump module electrical connector.

26 . **NOTE:**

Left-hand shown, right-hand similar.

Using the special tool, remove the fuel pump module locking ring.

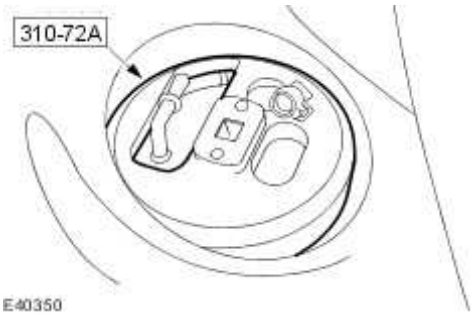

27 . **CAUTION: Make sure no damage occurs to the fuel level float.**

NOTE:

Left-hand shown, right-hand similar.

Remove the fuel pump module.

- Remove and discard the fuel pump module O-ring seal.

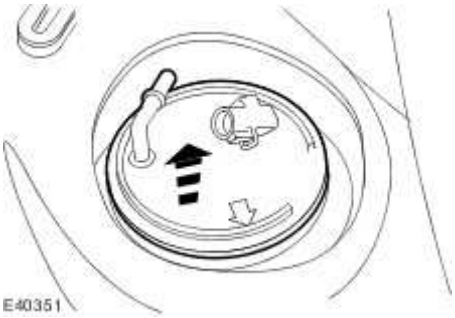

Installation

Vehicles with supercharger

1 . **CAUTION: Make sure the arrow on the fuel pump module and the 'SC' marker on**

www.JagDocs.com

the fuel tank are aligned.

CAUTION: Make sure no damage occurs to the fuel level float.

NOTE:

Install a new O-ring seal to the fuel pump module flange.

NOTE:

Take care not to stretch the O-ring seal.

NOTE:

Left-hand shown, right-hand similar.

Install the fuel pump module.

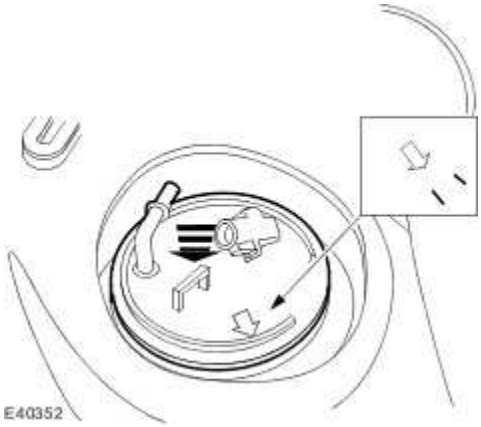

2 . **NOTE:**

Left-hand shown, right-hand similar.

Using the special tool, tighten to 70 Nm.

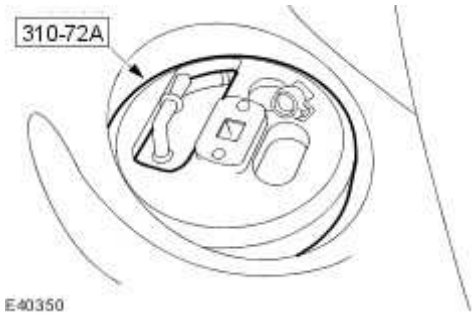

3 . **NOTE:**

Left-hand shown, right-hand similar.

Connect the fuel pump module electrical connector.

4 . **NOTE:**

Left-hand shown, right-hand similar.

Attach the fuel pump module electrical connector to the retaining bracket.

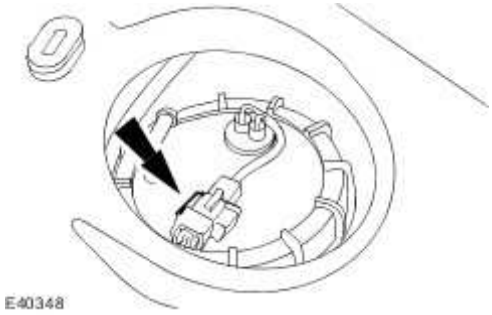

www.JagDocs.com

5 **NOTE:**

.

Left-hand shown, right-hand similar.

Connect the fuel pump module quick release coupling.

Make sure the quick release coupling has latched onto the fuel pump module fuel pipe by pulling the pipe after the connection has been made.

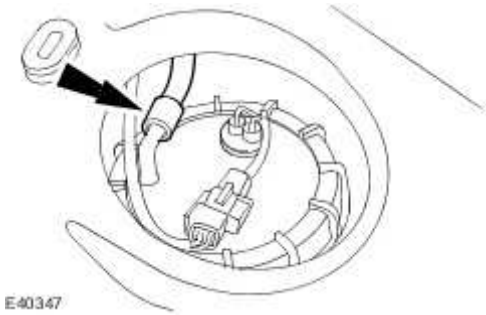

6 . Install the floor aperture cover.

Vehicles without supercharger

7

. **CAUTION: Make sure the arrow on the fuel pump module and the 'NA' marker on the fuel tank are aligned.**

CAUTION: Make sure no damage occurs to the fuel level float.

NOTE:

Install a new O-ring seal to the fuel pump module flange.

NOTE:

Take care not to stretch the O-ring seal.

Install the fuel pump module.

- Feed the fuel cross-over lines through the fuel pump module hole and across the front of the fuel tank saddle.

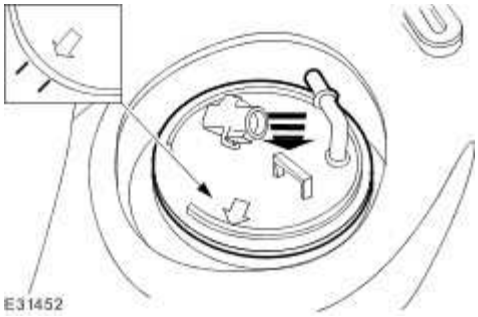

8 . Using the special tool, install the fuel pump locking ring.

- Tighten to 70 Nm.

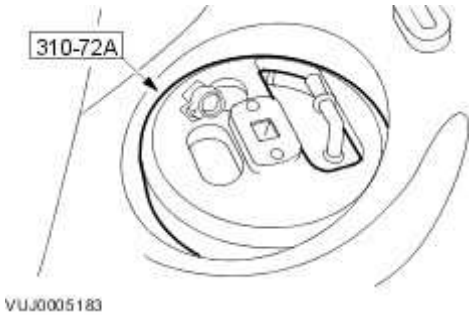

9 . Connect the fuel pump module electrical connector.

www.JagDocs.com

10 . Attach the fuel pump module electrical connector to the retaining bracket.

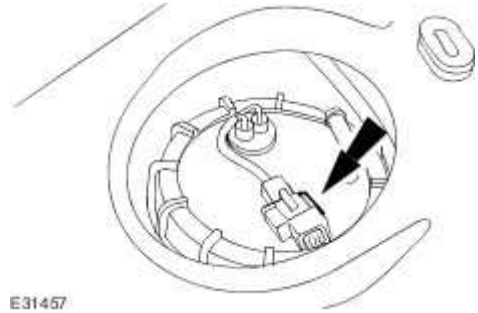

11 Connect the fuel pump module quick release coupling.

.

Make sure the quick release coupling has latched onto the fuel pump module fuel pipe by pulling the pipe after the connection has been made.

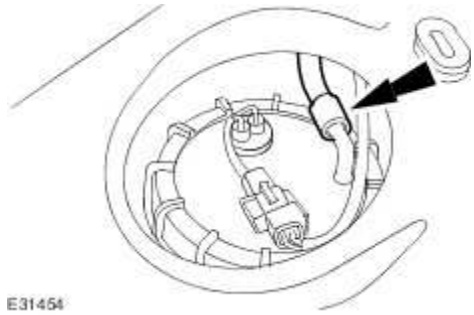

12 . Install the floor aperture cover.

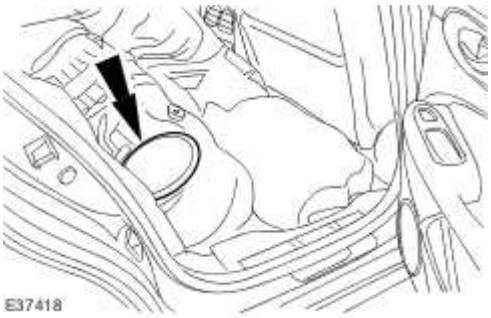

13 . Connect the fuel cross over lines.

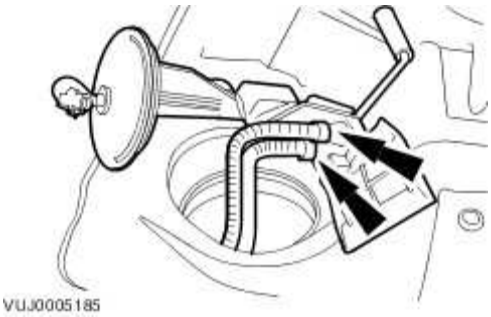

14 . **CAUTION: Make sure the arrow on the fuel transfer pump lines up with the 'NA' marker on the fuel tank.**

CAUTION: Make sure no damage occurs to the fuel level float.

NOTE:

Install a new O-ring seal to the fuel transfer pump flange.

NOTE:

Take care not to stretch the O-ring seal.

Install the fuel transfer pump.

www.JagDocs.com

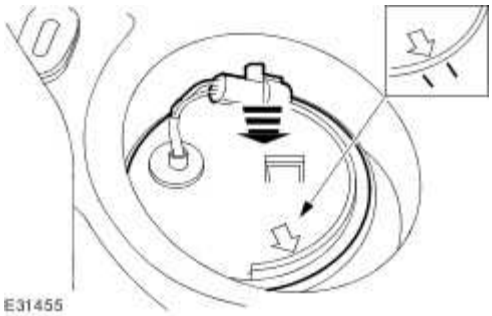

15 . Using the special tool, tighten to 70 Nm.

16 . Connect the fuel transfer pump electrical connector.

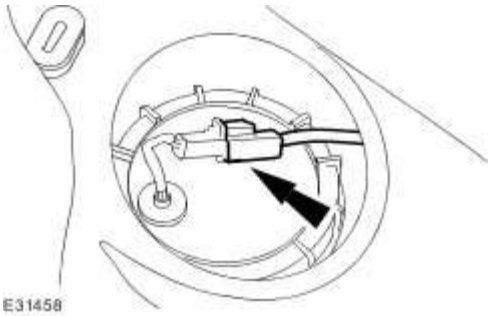

17 . Attach the fuel transfer pump module electrical connector to the retaining bracket.

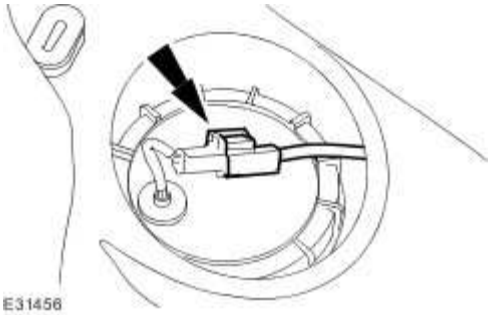

18 . Install the floor aperture cover.

All vehicles

19 . Attach the floor covering.

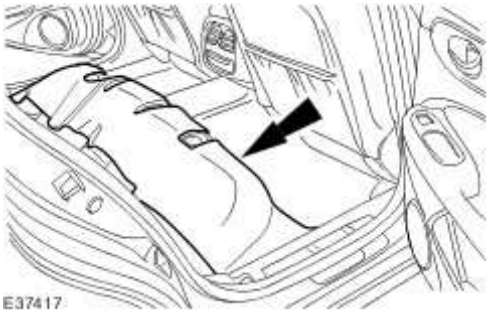

20 . Install the scuff plate trim panel.

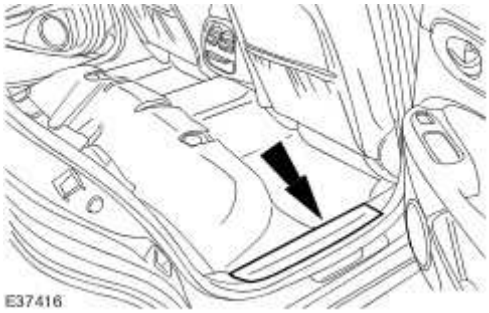

21 . Install the scuff plate trim panel.

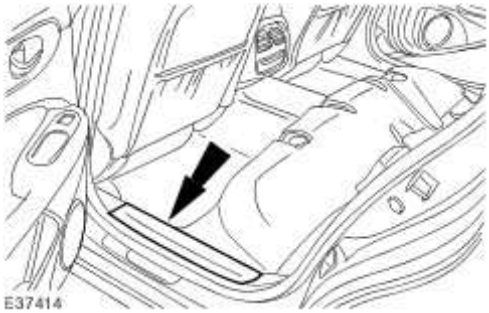

www.JagDocs.com

22 . Install the rear seat cushion. <<501-10>>

23 . Attach the fuel tank filler pipe cap.

24 . Connect the battery ground cable. <<414-01>>

Fuel Pump Module - 4.2L NA V8 - AJV8/4.2L SC V8 - AJV8/3.0L NA V6 - AJ27/3.5L NA V8 - AJV8, VIN Range: G45704->G99999 (19.45.08)

Special Service Tools

Remover/Installer, Fuel Pump Module/Fuel Transfer Pump Locking Ring
310-146

Removal

WARNING: Place the vehicle in a quarantined area and arrange "No Smoking/Petrol Fumes" signs about the vehicle.

WARNING: Before any work is carried out on the fuel system, ground the vehicle to earth and maintain the ground connection until the work is complete.

WARNING: Do not smoke or carry lighted tobacco or open flame of any type when working on or near any fuel related components. Highly flammable vapors are always present and may ignite. Failure to follow these instructions may result in personal injury.

WARNING: The fuel system remains pressurized for a long time after the ignition is switched off. The fuel pressure must be relieved before attempting any repairs. Failure to follow these instructions may result in personal injury.

www.JagDocs.com

WARNING: After carrying out repairs, the fuel system must be checked visually for leaks. Failure to follow these instructions may result in personal injury.

WARNING: This procedure involves fuel handling. Be prepared for fuel spillage at all times and always observe fuel handling precautions. Failure to follow these instructions may result in personal injury.

WARNING: If taken internally do not induce vomiting, seek immediate medical attention. Failure to follow these instructions may result in personal injury.

WARNING: If fuel contacts the eyes, flush the eyes with cold water or eyewash solution and seek medical attention.

WARNING: Wash hands thoroughly after handling, as prolonged contact may cause irritation. Should irritation develop, seek medical attention.

NOTE:

Federal market vehicles, refer to step 12.

NOTE:

Non federal market vehicles, refer to step 13.

1 . **NOTE:**

All vehicles.

Open the fuel tank filler pipe flap.

2 . Disconnect the battery ground cable.
For additional information, refer to Battery Disconnect and Connect

3 . Detach the fuel tank filler pipe cap.

4 Release the pressure in the fuel system.
. For additional information, refer to Fuel System Pressure Release - 4.2L NA V8 - AJV8/4.2L SC V8 - AJV8/3.0L NA V6 - AJ27/3.5L NA V8 - AJV8 (19.50.02)

5 . Drain the fuel system.
For additional information, refer to Fuel Tank Draining - VIN Range: G45704->G99999

6 . Remove the rear seat cushion.
For additional information, refer to Rear Seat Cushion (76.70.37)

7 . Remove the scuff plate trim panel.

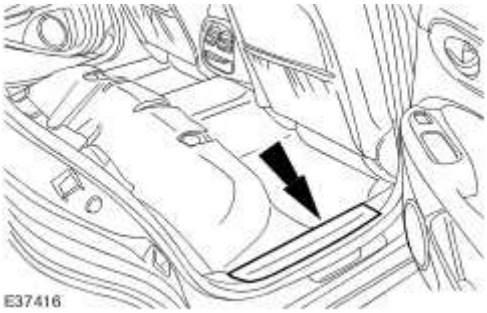

8 . Detach and reposition the floor covering.

www.JagDocs.com

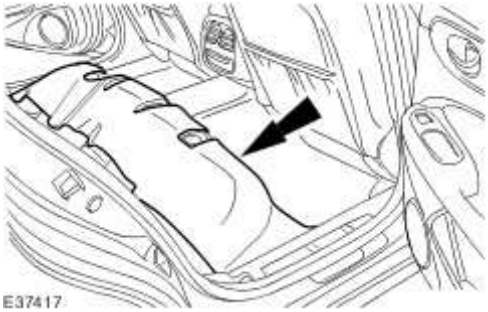

9 . Remove the floor aperture cover.

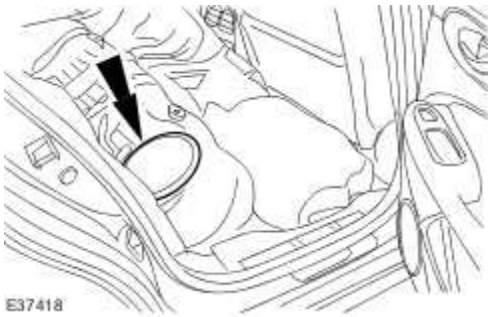

10 . Disconnect the fuel pump module electrical connector.

- Detach the fuel pump module wiring harness from the retaining bracket.

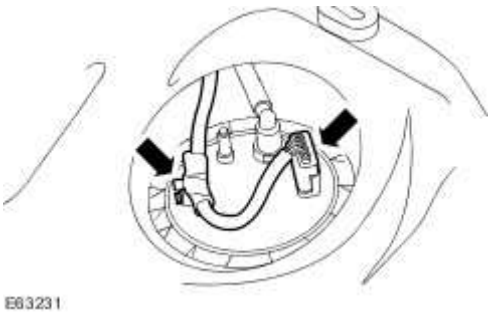

11 . Disconnect the fuel pump module quick release coupling.

12 . **NOTE:**

Federal market vehicles only.

Remove the fuel pump module locking ring.

- Remove and discard the O-ring seal.

13 . **NOTE:**

Non federal market vehicles only.

Using the special tool, remove the fuel pump module locking ring.

- Remove and discard the O-ring seal.

14 . **NOTE:**

All vehicles.

Disconnect the fuel transfer module transfer feed tube.

15 . Disconnect the left-hand fuel sender gauge electrical connector.

16 . Disconnect the fuel transfer module transfer return tube.

www.JagDocs.com

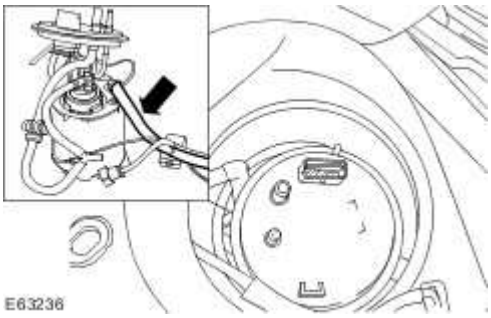

17. **CAUTION: Make sure no damage occurs to the fuel level float.**

Remove the fuel pump module.

- Press down and rotate the base of the fuel pump module counter-clockwise.

Installation

WARNING: Place the vehicle in a quarantined area and arrange "No Smoking/Petrol Fumes" signs about the vehicle.

WARNING: Before any work is carried out on the fuel system, ground the vehicle to earth and maintain the ground connection until the work is complete.

WARNING: Do not smoke or carry lighted tobacco or open flame of any type when working on or near any fuel related components. Highly flammable vapors are always present and may ignite. Failure to follow these instructions may result in personal injury.

WARNING: The fuel system remains pressurized for a long time after the ignition is switched off. The fuel pressure must be relieved before attempting any repairs. Failure to follow these instructions may result in personal injury.

WARNING: After carrying out repairs, the fuel system must be checked visually for leaks. Failure to follow these instructions may result in personal injury.

WARNING: This procedure involves fuel handling. Be prepared for fuel spillage at all times and always observe fuel handling precautions. Failure to follow these instructions may result in personal injury.

WARNING: If taken internally do not induce vomiting, seek immediate medical attention. Failure to follow these instructions may result in personal injury.

WARNING: If fuel contacts the eyes, flush the eyes with cold water or eyewash solution and seek medical attention.

WARNING: Wash hands thoroughly after handling, as prolonged contact may cause irritation. Should irritation develop, seek medical attention.

NOTE:

Federal market vehicles, refer to step 6.

NOTE:

Non federal market vehicles, refer to step 5.

www.JagDocs.com

1 . **CAUTION: On vehicles with supercharger make sure the arrow on the fuel pump module and the 'SC' marker on the fuel tank are aligned.**

CAUTION: On vehicles without supercharger make sure the arrow on the fuel transfer module and the 'NA' marker on the fuel tank are aligned.

CAUTION: Make sure no damage occurs to the fuel level float.

NOTE:

All vehicles.

Install the fuel pump module.

- Press down and rotate the base of the fuel pump module clockwise.

2 . Connect the fuel transfer module transfer return tube.

- Make sure the coupling has latched onto the fuel pump module by pulling the tube after the connection has been made.

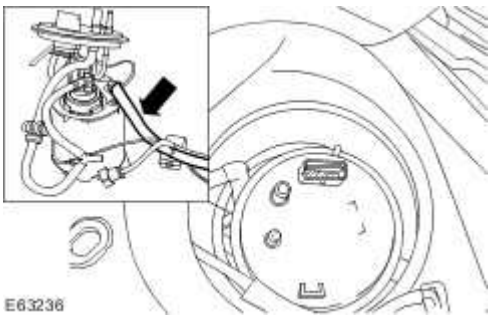

3 . Connect the left-hand fuel sender gauge electrical connector.

4 Connect the fuel transfer module transfer feed tube.

.

- Make sure the quick release coupling has latched onto the fuel pump module fuel tube by pulling the tube after the connection has been made.

5 . **NOTE:**

Non federal market vehicles only.

Using the special tool, install the fuel pump module locking ring.

- Install a new O-ring seal.
- Tighten to 60 Nm.

6 . **NOTE:**

Federal market vehicles only.

Install the fuel pump module locking ring.

- Install a new O-ring seal.
- Tighten to 4 Nm.

www.JagDocs.com

7 **NOTE:**

.

All vehicles.

Connect the fuel pump module quick release coupling.

- Make sure the quick release coupling has latched onto the fuel pump module fuel pipe by pulling the pipe after the connection has been made.

8 . Connect the fuel pump module electrical connector.

- Attach the fuel pump module wiring harness to the retaining bracket.

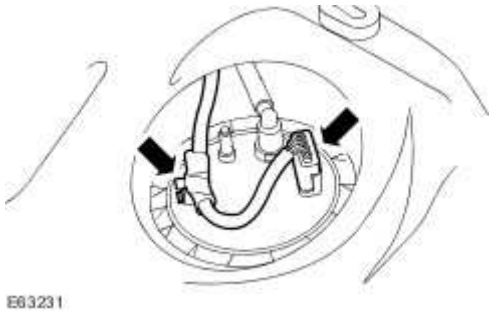

9 . Install the floor aperture cover.

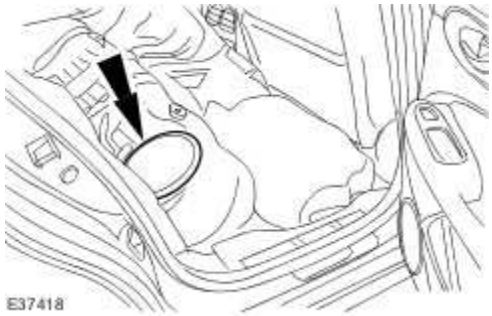

10 . Attach the floor covering.

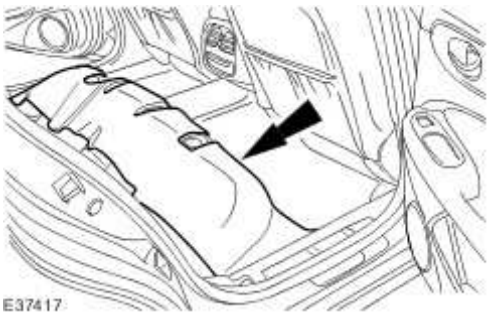

11 . Install the scuff plate trim panel.

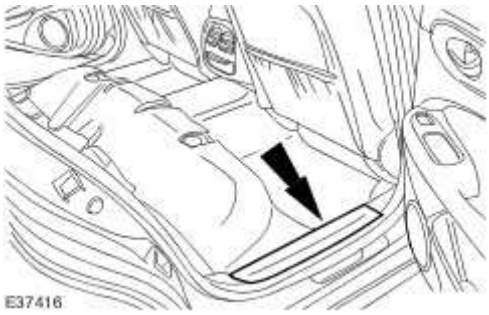

12 . Install the rear seat cushion.
For additional information, refer to Rear Seat Cushion (76.70.37)

13 . Attach the fuel tank filler pipe cap.

14 . Connect the battery ground cable.
For additional information, refer to Battery Connect (86.15.15)

15 . Close the fuel tank filler pipe flap.

www.JagDocs.com

Fuel Pump Module - 2.7L V6 - TdV6 (19.45.08)

Special Service Tools

Remover/Installer, Fuel Pump Module/Fuel Transfer Pump Locking Ring
310-146

Removal

WARNING: Place the vehicle in a quarantined area and arrange "No Smoking/Petrol Fumes" signs about the vehicle.

WARNING: Before any work is carried out on the fuel system, ground the vehicle to earth and maintain the ground connection until the work is complete.

WARNING: Do not smoke or carry lighted tobacco or open flame of any type when working on or near any fuel related components. Highly flammable vapors are always present and may ignite. Failure to follow these instructions may result in personal injury.

WARNING: The fuel system remains pressurized for a long time after the ignition is switched off. The fuel pressure must be relieved before attempting any repairs. Failure to follow these instructions may result in personal injury.

WARNING: After carrying out repairs, the fuel system must be checked visually for leaks. Failure to follow these instructions may result in personal injury.

WARNING: This procedure involves fuel handling. Be prepared for fuel spillage at all times and always observe fuel handling precautions. Failure to follow these instructions may result in personal injury.

WARNING: If taken internally do not induce vomiting, seek immediate medical attention. Failure to follow these instructions may result in personal injury.

WARNING: If fuel contacts the eyes, flush the eyes with cold water or eyewash solution and seek medical attention.

WARNING: Wash hands thoroughly after handling, as prolonged contact may cause irritation. Should irritation develop, seek medical attention.

1 . Disconnect the battery ground cable.
For additional information, refer to Battery Disconnect and Connect

2 . Detach the fuel tank filler pipe cap.

3 . Release the pressure in the fuel system.
For additional information, refer to Fuel System Pressure Release - 4.2L NA V8 - AJV8/4.2L SC V8 - AJV8/3.0L NA V6 - AJ27/3.5L NA V8 - AJV8 (19.50.02)

4 . Drain the fuel system.
For additional information, refer to Fuel Tank Draining - VIN Range: G45704->G99999

5 . Remove the rear seat cushion.
For additional information, refer to Rear Seat Cushion (76.70.37)

www.JagDocs.com

6 . Remove the scuff plate trim panel.

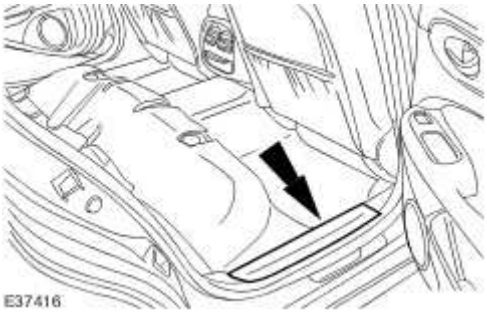

7 . Detach and reposition the floor covering.

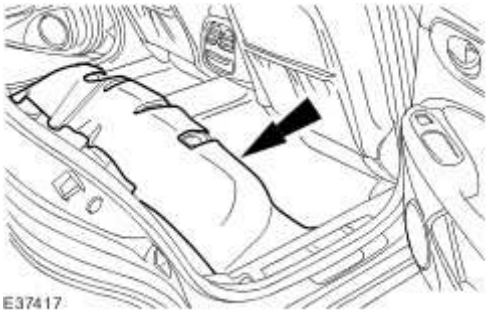

8 . Remove the floor aperture cover.

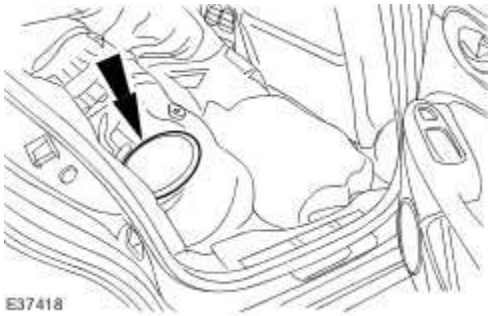

9 . Detach the fuel pump module electrical connector from the retaining bracket.

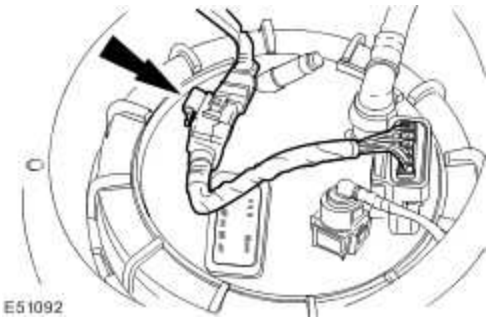

10 . Disconnect the fuel pump module electrical connector.

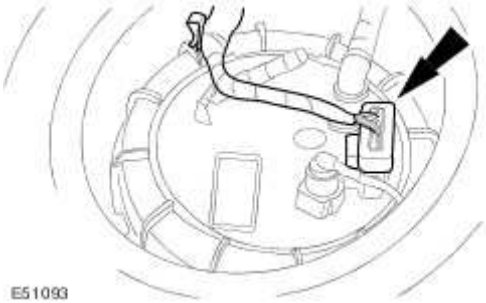

11 . Disconnect the fuel fired booster heater fuel supply line quick release coupling.
For additional information, refer to Quick Release Coupling - Push Connect

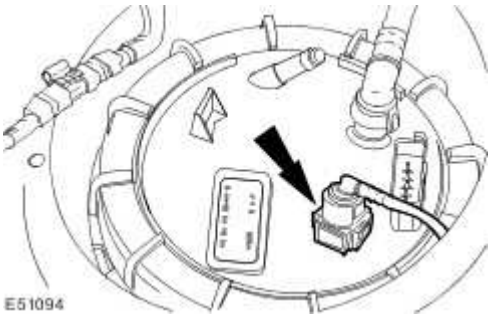

12 . Disconnect the fuel supply line quick release coupling.
For additional information, refer to Quick Release Coupling - Push Connect

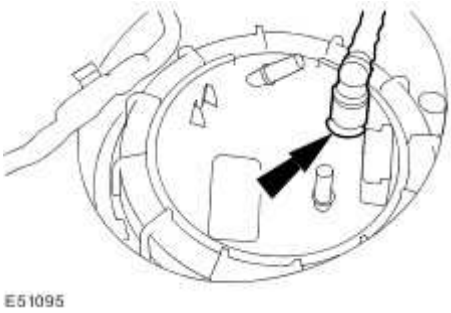

www.JagDocs.com

13 . **CAUTION: Make sure no damage occurs to the fuel pump module when removing the locking ring.**

Using the special tool, remove the fuel pump module locking ring.

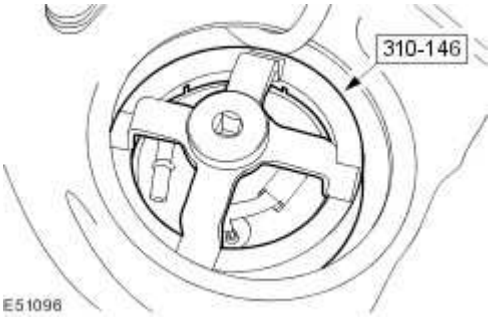

14 . Detach and reposition the upper part of the fuel pump module.

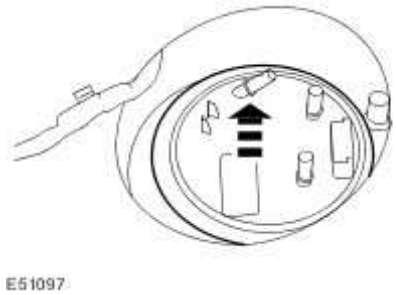

15 . Disconnect the fuel transfer line quick release coupling.
For additional information, refer to Quick Release Coupling - Push Connect

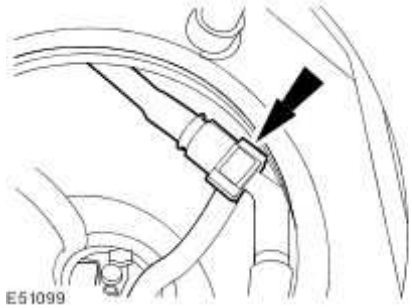

16 . Disconnect the fuel transfer line.

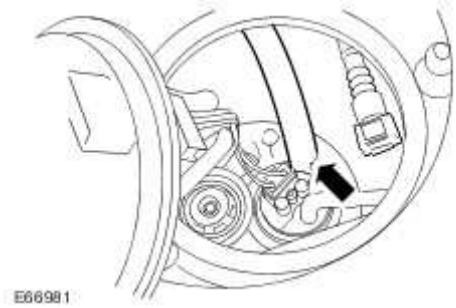

17 . **CAUTION: Make sure no damage occurs to the fuel level float.**

Remove the fuel pump module.

- Remove and discard the fuel pump module gasket.

www.JagDocs.com

Installation

WARNING: Place the vehicle in a quarantined area and arrange "No Smoking/Petrol Fumes" signs about the vehicle.

WARNING: Before any work is carried out on the fuel system, ground the vehicle to earth and maintain the ground connection until the work is complete.

WARNING: Do not smoke or carry lighted tobacco or open flame of any type when working

on or near any fuel related components. Highly flammable vapors are always present and may ignite. Failure to follow these instructions may result in personal injury.

WARNING: The fuel system remains pressurized for a long time after the ignition is switched off. The fuel pressure must be relieved before attempting any repairs. Failure to follow these instructions may result in personal injury.

WARNING: After carrying out repairs, the fuel system must be checked visually for leaks. Failure to follow these instructions may result in personal injury.

WARNING: This procedure involves fuel handling. Be prepared for fuel spillage at all times and always observe fuel handling precautions. Failure to follow these instructions may result in personal injury.

WARNING: If taken internally do not induce vomiting, seek immediate medical attention. Failure to follow these instructions may result in personal injury.

WARNING: If fuel contacts the eyes, flush the eyes with cold water or eyewash solution and seek medical attention.

WARNING: Wash hands thoroughly after handling, as prolonged contact may cause irritation. Should irritation develop, seek medical attention.

1. **CAUTION: Make sure no damage occurs to the fuel level float or fuel pump module components.**

NOTE:

Install a new gasket to the fuel pump module flange.

NOTE:

Take care not to stretch the gasket.

Install the fuel pump module.

2 . Connect the fuel transfer line.

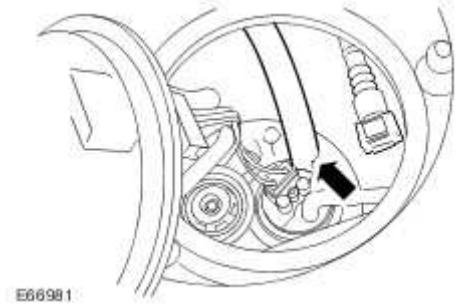

3 . Connect the fuel transfer pipe quick release coupling.
For additional information, refer to Quick Release Coupling - Push Connect .

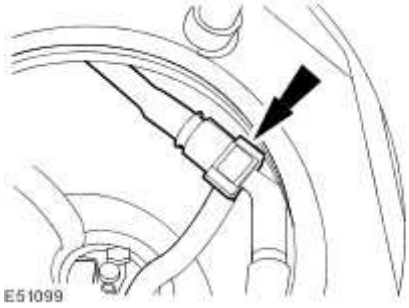

www.JagDocs.com

4 . Reposition and align the upper part of the fuel pump module.

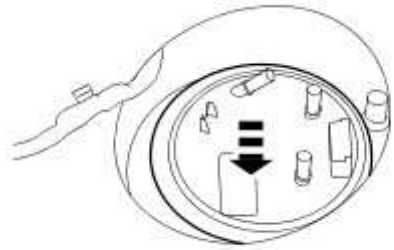

E51102

5 . Align the arrow on the fuel pump module with the alignment marks on the fuel tank.

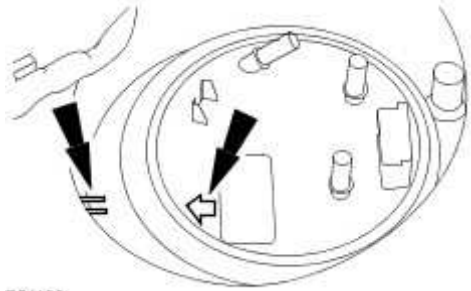

E51103

6 . **CAUTION: Make sure no damage occurs to the fuel pump module when installing the locking ring.**

Using the special tool, install the fuel pump module locking ring.

Tighten to 60 Nm.

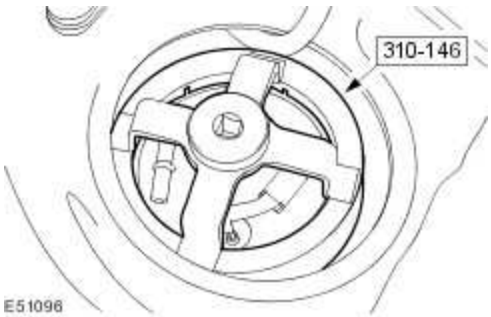

E51096

7 . Connect the fuel pump module quick release coupling.
For additional information, refer to Quick Release Coupling - Push Connect

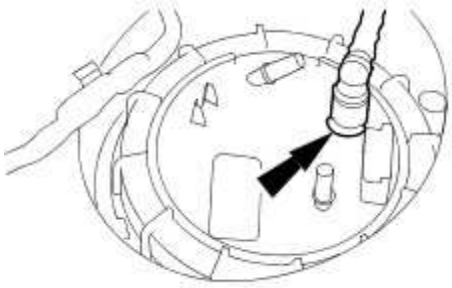

8 . Connect the fuel fired booster heater fuel supply line quick release coupling.
For additional information, refer to Quick Release Coupling - Push Connect

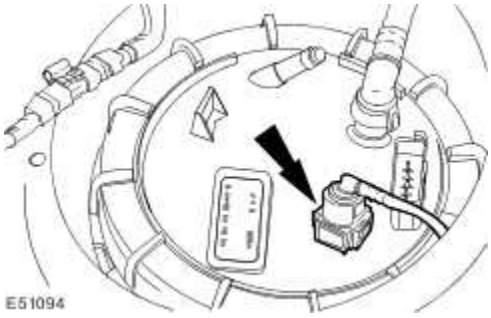

9 . Connect the fuel pump module electrical connector.

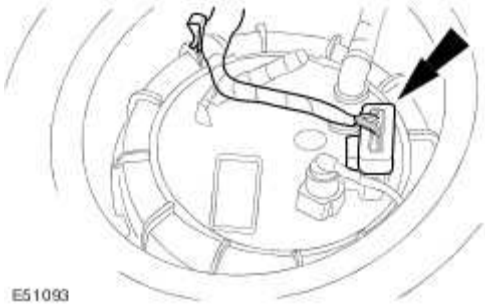

10 . Attach the fuel pump module electrical connector to the retaining bracket.

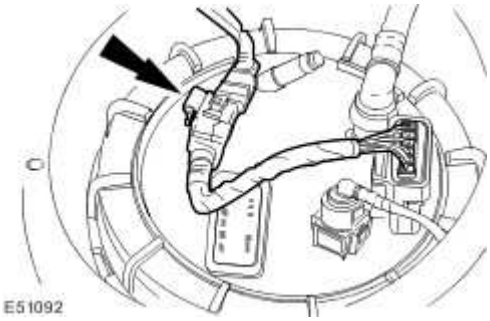

www.JagDocs.com

11 . Install the floor aperture cover.

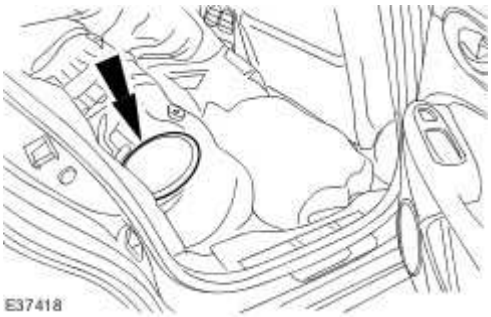

12 . Attach the floor covering.

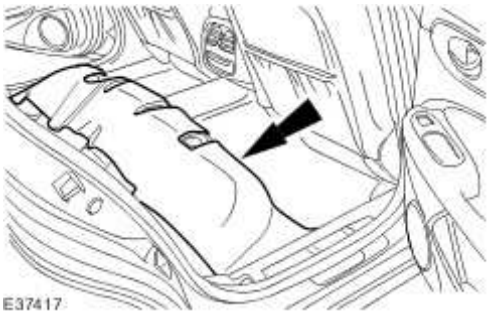

13 . Install the scuff plate trim panel.

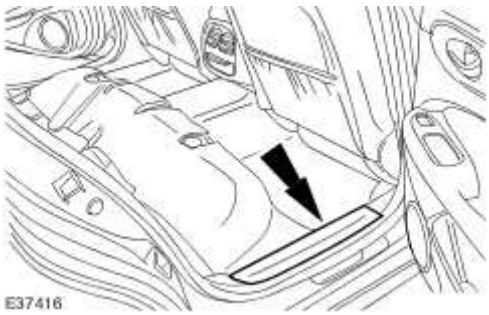

14 . Install the rear seat cushion.
For additional information, refer to Rear Seat Cushion (76.70.37)

15 . Attach the fuel tank filler pipe cap.

16 . Close the fuel tank filler pipe flap.

17 . Connect the battery ground cable.
For additional information, refer to Battery Connect (86.15.15)

Fuel Tank - 4.2L NA V8 - AJV8/4.2L SC V8 - AJV8/3.0L NA V6 - AJ27/3.5L NA V8 - AJV8 (19.55.01)

Removal

1. **WARNING: Place the vehicle in a quarantined area and arrange "No Smoking/Petrol Fumes" signs about the vehicle.**

WARNING: Before any work is carried out on the fuel system, ground the vehicle to earth and maintain the ground connection until the work is complete.

WARNING: Do not smoke or carry lighted tobacco or open flame of any type when working on or near any fuel related components. Highly flammable vapors are always present and may ignite. Failure to follow these instructions may result in personal injury.

WARNING: Do not carry or operate cellular phones when working on or near any fuel related components. Highly flammable vapors are always present and may ignite. Failure to follow these instructions may result in personal injury.

WARNING: The fuel system remains pressurized for a long time after the ignition is switched off. The fuel pressure must be relieved before attempting any repairs. Failure to follow these instructions may result in personal injury.

WARNING: After carrying out repairs, the fuel system must be checked visually for leaks. Failure to follow these instructions may result in personal injury.

www.JagDocs.com

WARNING: This procedure involves fuel handling. Be prepared for fuel spillage at all times and always observe fuel handling precautions. Failure to follow these instructions may result in personal injury.

WARNING: If taken internally do not induce vomiting, seek immediate medical attention. Failure to follow these instructions may result in personal injury.

WARNING: If fuel contacts the eyes, flush the eyes with cold water or eyewash solution and seek medical attention.

WARNING: Wash hands thoroughly after handling, as prolonged contact may cause irritation. Should irritation develop, seek medical attention.

Drain the fuel tank.
For additional information, refer to Fuel Tank Draining - VIN Range: G00442->G45703
For additional information, refer to Fuel Tank Draining - VIN Range: G45704->G99999

2 . Remove the rear seat cushion.
For additional information, refer to Rear Seat Cushion (76.70.37)

3 . Disconnect the fuel tank electrical connectors.

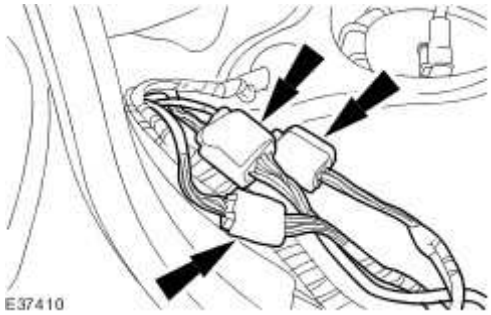

4 . Remove the wiring grommet from the floor pan.

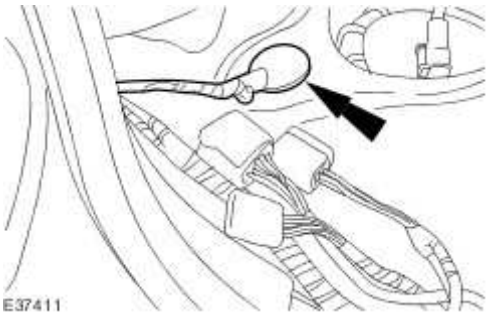

5 . Feed the wiring loom and connectors through the grommet hole in the vehicle floor pan.

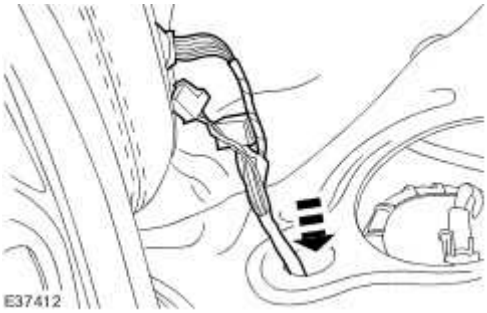

6 . Remove the driveshaft.
For additional information, refer to Driveshaft (47.15.01)

7 . Disconnect the evaporative emissions pipe.

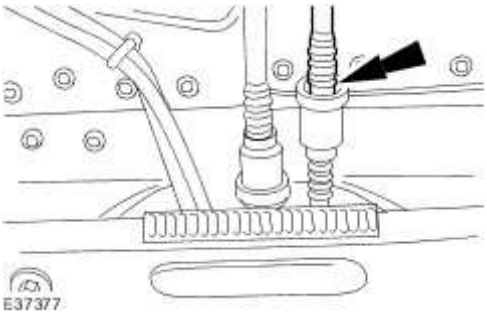

8 . Disconnect the fuel supply hose.

www.JagDocs.com

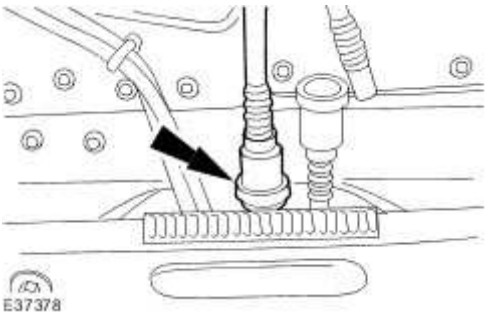

9 . Remove the fuel tank filler pipe to fuel tank hose.

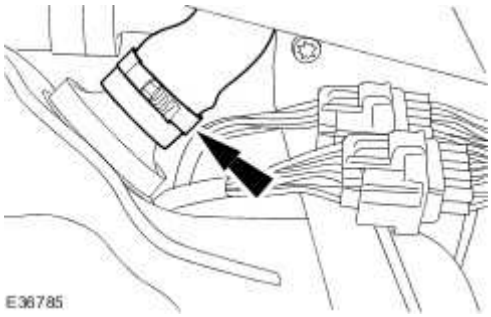

10 . Disconnect the rear axle electrical connectors.

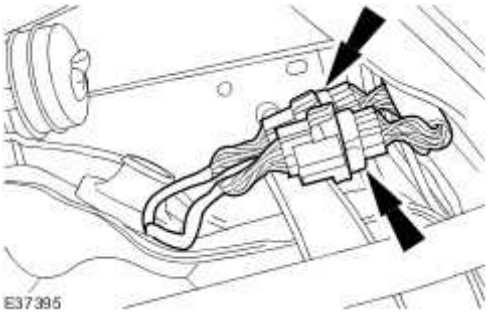

11 . Detach the rear axle electrical connectors.

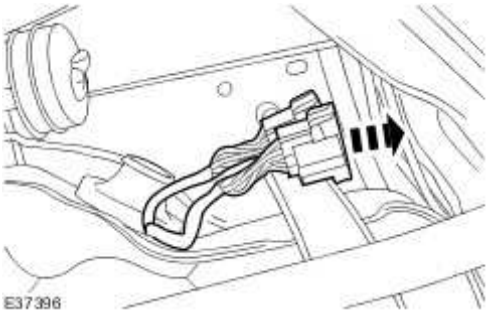

12 . Disconnect the evaporative emission pipe.

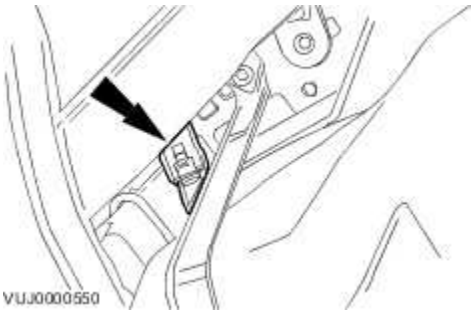

13 . **NOTE:**

Left-hand shown, right-hand similar.

Remove and discard the 2 rear subframe front retaining bolts

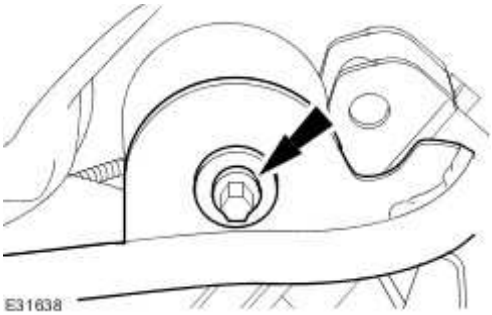

14 . **NOTE:**

Left-hand shown, right-hand similar.

Remove the noise, vibration and harshness brace.

- Remove the 6 bolts.

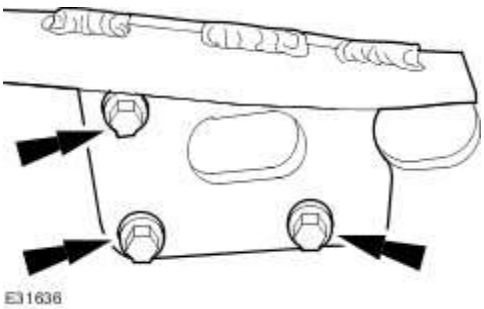

www.JagDocs.com

15 . **CAUTION: When supporting the fuel tank, use a suitable packing material to prevent damage to the underside of the fuel tank.**

Remove the fuel tank.

- Detach the fuel tank support straps.

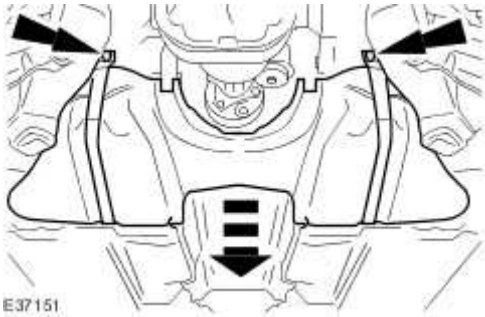

Installation

1 . To install, reverse the removal procedure.

- Tighten to 35 Nm.

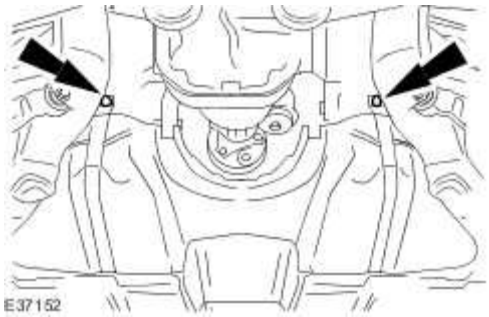

2 . **NOTE:**

Left-hand shown, right-hand similar

Loosely install the 2 rear subframe front retaining bolts.

Install new retaining bolts.

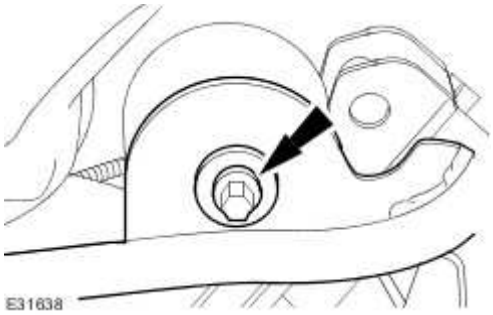

3 . **NOTE:**

Left-hand shown, right-hand similar

Loosely install the 6 noise, vibration and harshness brace retaining bolts.

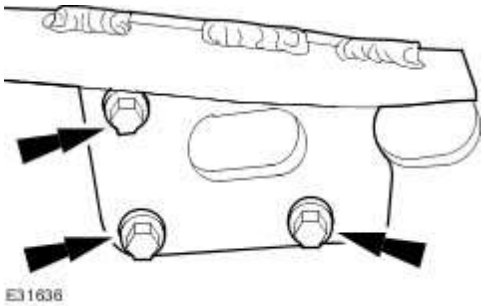

4 . **NOTE:**

Left-hand shown, right-hand similar

Tighten the 2 bolts to 125 Nm.

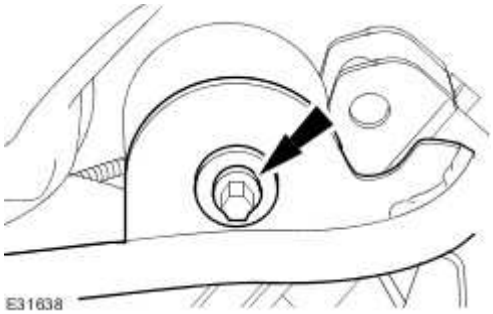

www.JagDocs.com

5 . **NOTE:**

Left-hand shown, right-hand similar

Tighten the 6 bolts to 48 Nm.

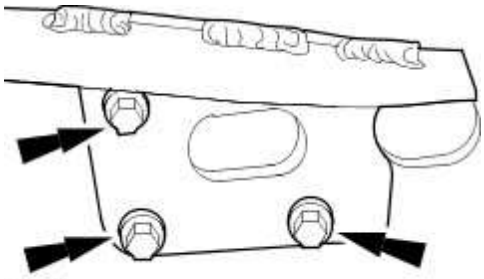

Fuel Tank - 2.7L V6 - TdV6 (19.55.01)

Removal

WARNING: Place the vehicle in a quarantined area and arrange "No Smoking/Petrol Fumes" signs about the vehicle.

WARNING: Before any work is carried out on the fuel system, ground the vehicle to earth and maintain the ground connection until the work is complete.

WARNING: Do not smoke or carry lighted tobacco or open flame of any type when working on or near any fuel related components. Highly flammable vapors are always present and may ignite. Failure to follow these instructions may result in personal injury.

WARNING: Do not carry or operate cellular phones when working on or near any fuel related components. Highly flammable vapors are always present and may ignite. Failure to follow these instructions may result in personal injury.

WARNING: The fuel system remains pressurized for a long time after the ignition is switched off. The fuel pressure must be relieved before attempting any repairs. Failure to follow these instructions may result in personal injury.

WARNING: After carrying out repairs, the fuel system must be checked visually for leaks. Failure to follow these instructions may result in personal injury.

WARNING: This procedure involves fuel handling. Be prepared for fuel spillage at all times and always observe fuel handling precautions. Failure to follow these instructions may result in

www.JagDocs.com

personal injury.

WARNING: If taken internally do not induce vomiting, seek immediate medical attention. Failure to follow these instructions may result in personal injury.

WARNING: If fuel contacts the eyes, flush the eyes with cold water or eyewash solution and seek medical attention.

WARNING: Wash hands thoroughly after handling, as prolonged contact may cause irritation. Should irritation develop, seek medical attention.

1 . Drain the fuel tank.
For additional information, refer to Fuel Tank Draining - VIN Range: G45704->G99999

2 . **NOTE:**

Fit suitable blanking plugs to the exposed ports.

Disconnect the fuel fired booster heater fuel supply line quick release coupling.
For additional information, refer to Quick Release Coupling - Push Connect

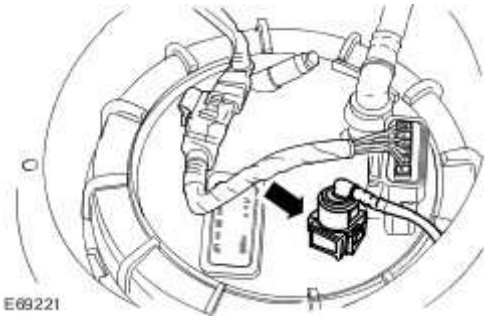

3 . Disconnect the fuel tank electrical connectors.

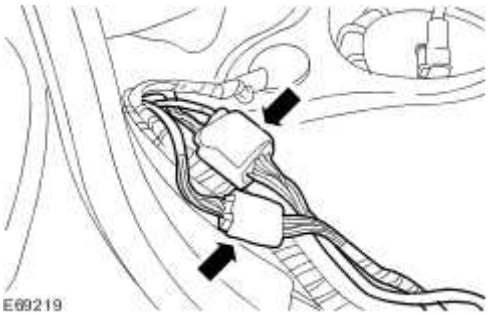

4 . Remove the wiring grommet from the floor pan.

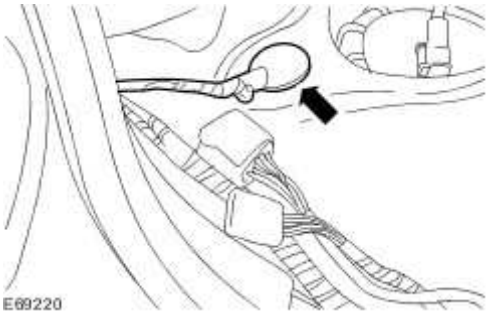

5 . Feed the wiring loom and connectors through the grommet hole in the vehicle floor pan.

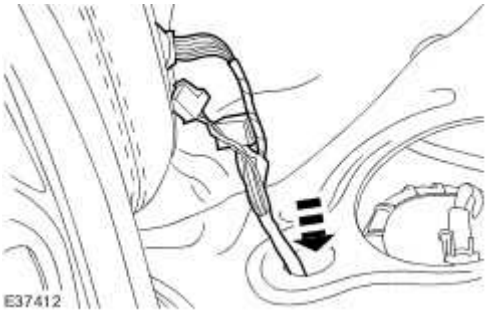

6 . Raise the vehicle.
For additional information, refer to Lifting

7 . **NOTE:**

Left-hand shown, right-hand similar.

Remove the splash shields.

www.JagDocs.com

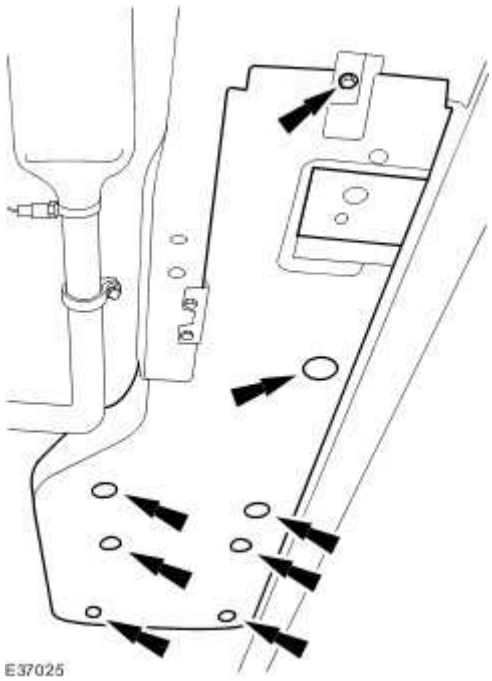

8 . Remove the driveshaft.
For additional information, refer to Driveshaft (47.15.01)

9 . Remove the fuel lines protective bracket.

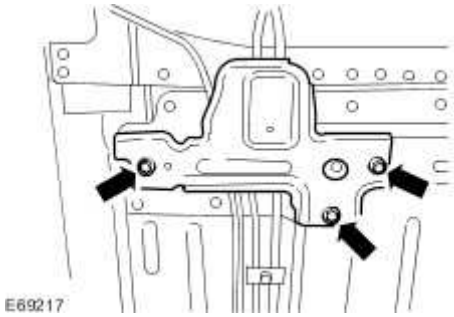

10 . **NOTE:**

Fit suitable blanking plugs to the exposed ports.

Disconnect the fuel return line.

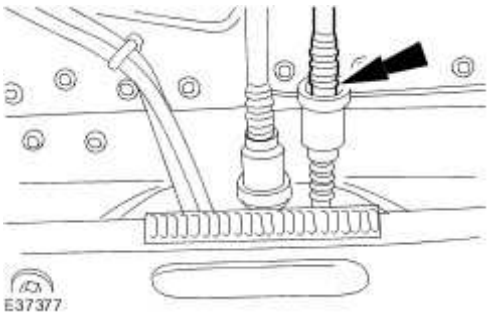

11 . **NOTE:**

Fit suitable blanking plugs to the exposed ports.

Disconnect the fuel supply line.

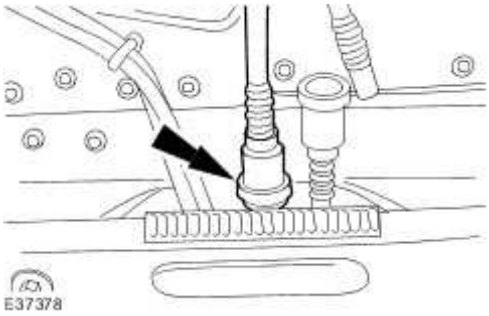

12 . **NOTE:**

Fit suitable blanking plugs to the exposed ports.

Disconnect the fuel tank filler pipe to fuel tank hose.

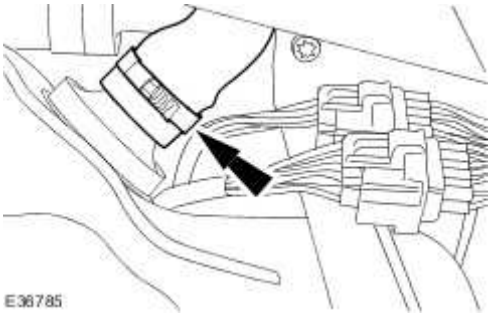

13 . Disconnect the rear axle electrical connectors.

www.JagDocs.com

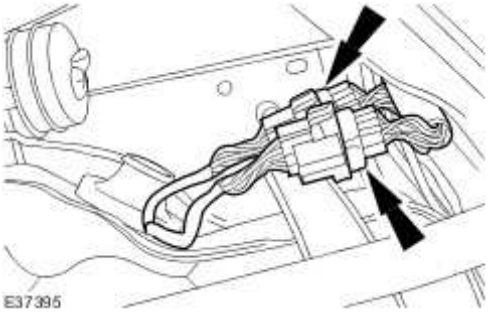

14 . Detach the rear axle electrical connectors.

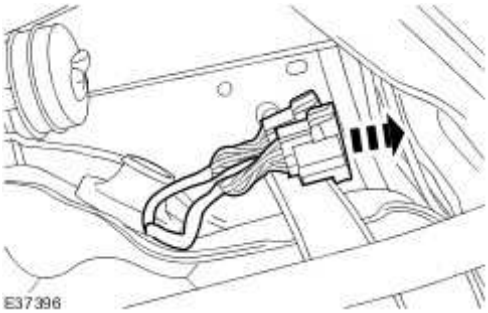

15 . Detach the evaporative emission cannister.

16 . **NOTE:**

Left-hand shown, right-hand similar.

Remove and discard the 2 rear subframe front retaining bolts

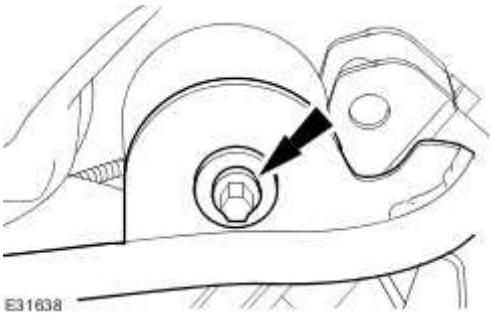

17 . **NOTE:**

Left-hand shown, right-hand similar.

Remove the noise, vibration and harshness brace.

- Remove the 6 bolts.

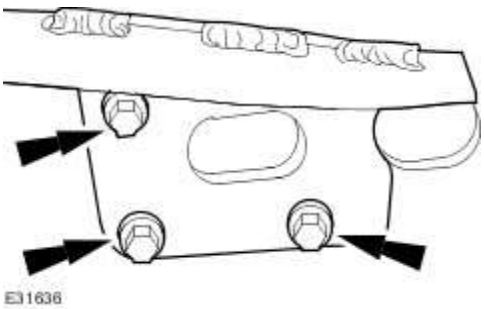

18 . **CAUTION: When supporting the fuel tank, use a suitable packing material to prevent damage to the underside of the fuel tank.**

Remove the fuel tank.

- Detach the fuel tank support straps.

www.JagDocs.com

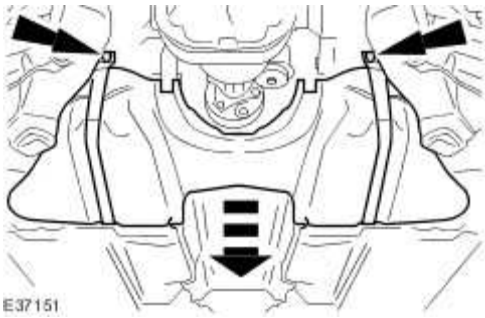

Installation

WARNING: Place the vehicle in a quarantined area and arrange "No Smoking/Petrol Fumes" signs about the vehicle.

WARNING: Before any work is carried out on the fuel system, ground the vehicle to earth and maintain the ground connection until the work is complete.

WARNING: Do not smoke or carry lighted tobacco or open flame of any type when working on or near any fuel related components. Highly flammable vapors are always present and may ignite. Failure to follow these instructions may result in personal injury.

WARNING: Do not carry or operate cellular phones when working on or near any fuel related components. Highly flammable vapors are always present and may ignite. Failure to follow these instructions may result in personal injury.

WARNING: The fuel system remains pressurized for a long time after the ignition is switched off. The fuel pressure must be relieved before attempting any repairs. Failure to follow these instructions may result in personal injury.

WARNING: After carrying out repairs, the fuel system must be checked visually for leaks. Failure to follow these instructions may result in personal injury.

WARNING: This procedure involves fuel handling. Be prepared for fuel spillage at all times and always observe fuel handling precautions. Failure to follow these instructions may result in personal injury.

WARNING: If taken internally do not induce vomiting, seek immediate medical attention. Failure to follow these instructions may result in personal injury.

WARNING: If fuel contacts the eyes, flush the eyes with cold water or eyewash solution and seek medical attention.

WARNING: Wash hands thoroughly after handling, as prolonged contact may cause irritation. Should irritation develop, seek medical attention.

1 . To install, reverse the removal procedure.

Tighten to 35 Nm.

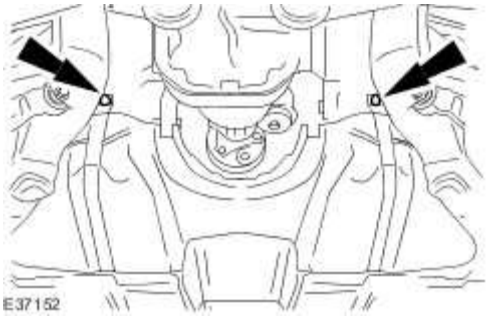

www.JagDocs.com

2 . **NOTE:**

Left-hand shown, right-hand similar

Loosely install the 2 rear subframe front retaining bolts.

Install new retaining bolts.

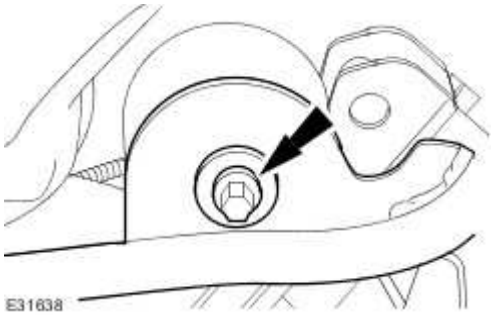

3 . **NOTE:**

Left-hand shown, right-hand similar

Loosely install the 6 noise, vibration and harshness brace retaining bolts.

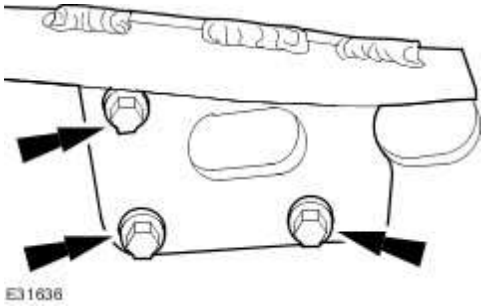

4 . **NOTE:**

Left-hand shown, right-hand similar

Tighten the 2 bolts to 125 Nm.

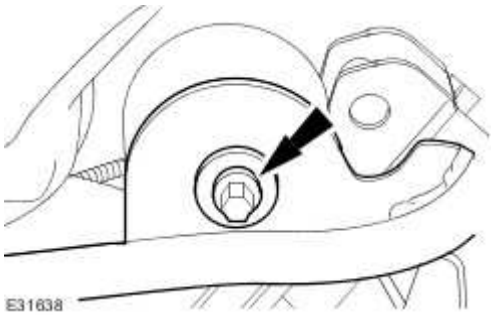

5 . **NOTE:**

Left-hand shown, right-hand similar

Tighten the 6 bolts to 48 Nm.

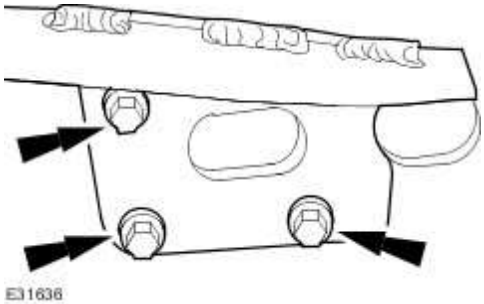

www.JagDocs.com

Fuel Tank Filler Pipe (19.55.33)

Removal

WARNING: Place the vehicle in a quarantined area and arrange "No Smoking/Petrol Fumes" signs about the vehicle.

WARNING: Before any work is carried out on the fuel system, ground the vehicle to earth and maintain the ground connection until the work is complete.

WARNING: Do not smoke or carry lighted tobacco or open flame of any type when working on or near any fuel related components. Highly flammable vapors are always present and may ignite. Failure to follow these instructions may result in personal injury.

WARNING: Do not carry or operate cellular phones when working on or near any fuel related components. Highly flammable vapors are always present and may ignite. Failure to follow these instructions may result in personal injury.

WARNING: The fuel system remains pressurized for a long time after the ignition is switched off. The fuel pressure must be relieved before attempting any repairs. Failure to follow these instructions may result in personal injury.

WARNING: After carrying out repairs, the fuel system must be checked visually for leaks. Failure to follow these instructions may result in personal injury.

WARNING: This procedure involves fuel handling. Be prepared for fuel spillage at all times and always observe fuel handling precautions. Failure to follow these instructions may result in

personal injury.

WARNING: If taken internally do not induce vomiting, seek immediate medical attention. Failure to follow these instructions may result in personal injury.

WARNING: If fuel contacts the eyes, flush the eyes with cold water or eyewash solution and seek medical attention.

WARNING: Wash hands thoroughly after handling, as prolonged contact may cause irritation. Should irritation develop, seek medical attention.

CAUTION: Ensure filler hose worm drive retaining clip is not overtightened. Failure to follow these instructions may result in damage to the fuel tank assembly.

1 . Remove the fuel tank filler pipe cap.

2 . Remove the wheel and tire assembly. <<204-04>>

3 . Remove the rear fender splash shield retaining screws.

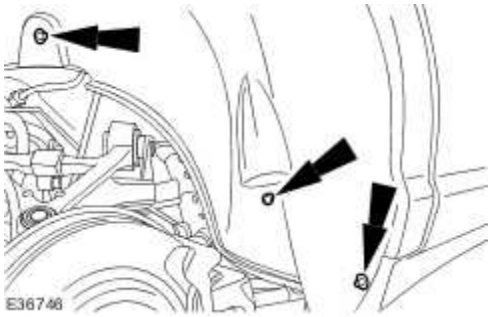

www.JagDocs.com

4 . Remove the rear fender splash shield.

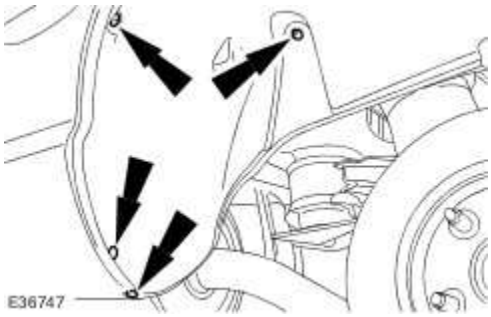

5 . Remove the right-hand rear muffler. <<309-00>>

6 . Remove the exhaust heat shield.

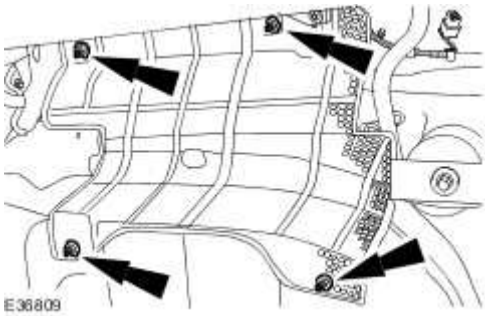

7 . Detach the fuel filler pipe.

1) Release the fuel filler hose retaining clip.

2) Remove the fuel filler pipe securing bolt.

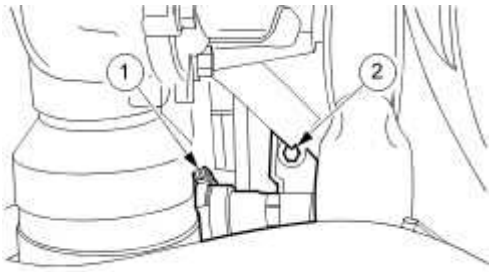

8 . Detach the fuel filler pipe.

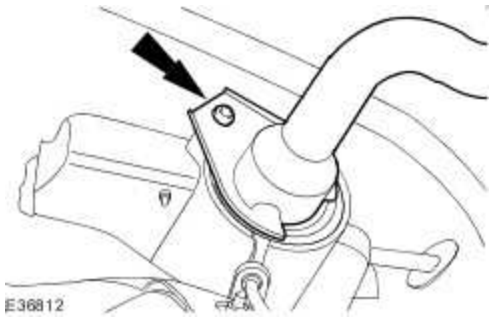

9 . Detach the fuel filler pipe.

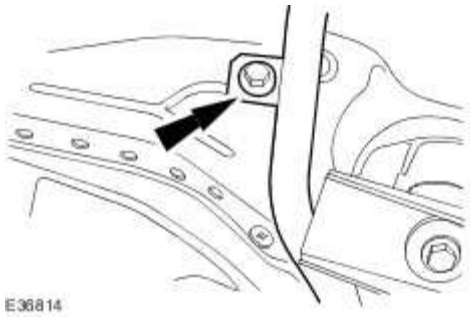

10 . Remove the fuel filler pipe.

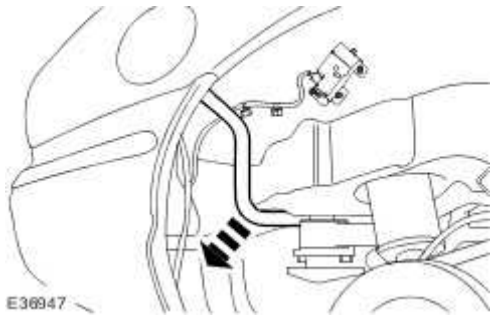

Installation

1 . Install the fuel filler pipe.

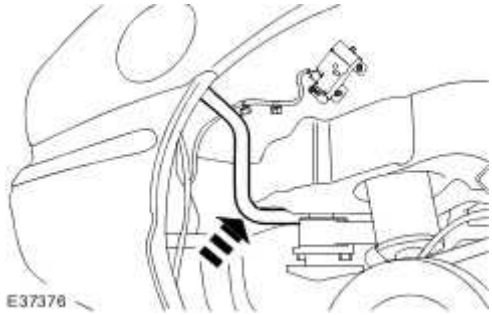

www.JagDocs.com

2 . Attach the fuel filler pipe.

Tighten to 5 Nm.

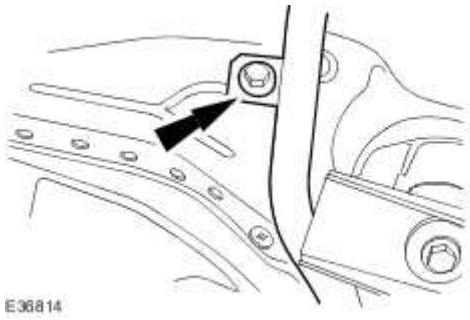

3 . Attach the fuel filler pipe.

Tighten to 4 Nm.

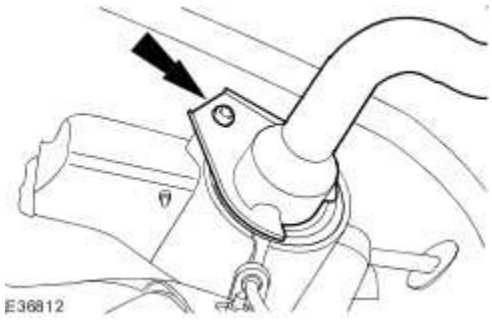

4 . Attach the fuel filler pipe.

1) Tighten to 2 Nm.

2) Tighten to 5 Nm.

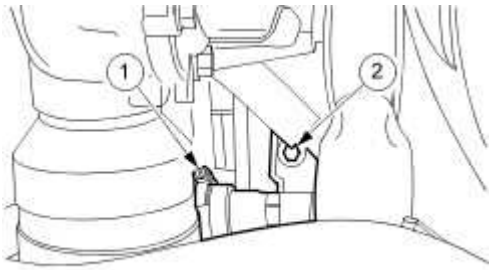

VUJ0000532

5 . Install the exhaust heat shield.

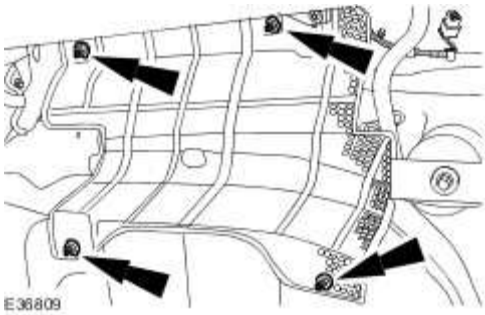

E36809

6 . Install the rear fender splash shield.

Refit the rear fender splash shield retaining screws.

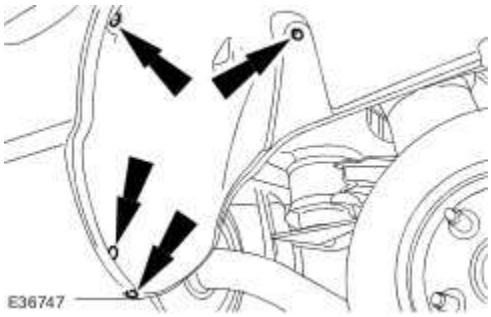

E36747

7 . Install the rear fender splash shield retaining screws.

www.JagDocs.com

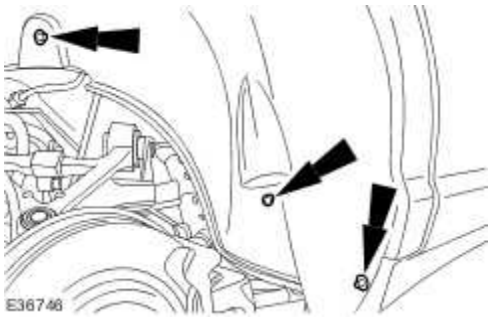

8 . Install the wheel and tire assembly. <<204-04>>

9 . Install the fuel tank filler pipe cap.

Fuel Transfer Pump - 4.2L NA V8 - AJV8/4.2L SC V8 - AJV8/3.0L NA V6 - AJ27/3.5L NA V8 - AJV8, VIN Range: G00442->G45703 (19.45.21)

Special Service Tools

Remover/Installer, Fuel Pump Module/Fuel Transfer Pump Locking Ring
310-072A

Removal

1. **WARNING: Place the vehicle in a quarantined area and arrange "No Smoking/Petrol Fumes" signs about the vehicle.**

WARNING: Before any work is carried out on the fuel system, ground the vehicle to earth and maintain the ground connection until the work is complete.

WARNING: Do not smoke or carry lighted tobacco or open flame of any type when working on or near any fuel related components. Highly flammable vapors are always present and may ignite. Failure to follow these instructions may result in personal injury.

WARNING: Do not carry or operate cellular phones when working on or near any fuel related components. Highly flammable vapors are always present and may ignite. Failure to follow these instructions may result in personal injury.

WARNING: The fuel system remains pressurized for a long time after the ignition is

www.JagDocs.com

switched off. The fuel pressure must be relieved before attempting any repairs. Failure to follow these instructions may result in personal injury.

WARNING: After carrying out repairs, the fuel system must be checked visually for leaks. Failure to follow these instructions may result in personal injury.

WARNING: This procedure involves fuel handling. Be prepared for fuel spillage at all times and always observe fuel handling precautions. Failure to follow these instructions may result in personal injury.

WARNING: If taken internally do not induce vomiting, seek immediate medical attention. Failure to follow these instructions may result in personal injury.

WARNING: If fuel contacts the eyes, flush the eyes with cold water or eyewash solution and seek medical attention.

WARNING: Wash hands thoroughly after handling, as prolonged contact may cause irritation. Should irritation develop, seek medical attention.

Disconnect the battery ground cable. <<414-01>>

2 . Detach the fuel tank filler pipe cap.

3 . De-pressurize the fuel system. <<310-00>>

4 . Drain the fuel system. <<310-00>>

5 . Remove the rear seat cushion. <<501-10>>

6 . Remove the scuff plate trim panel.

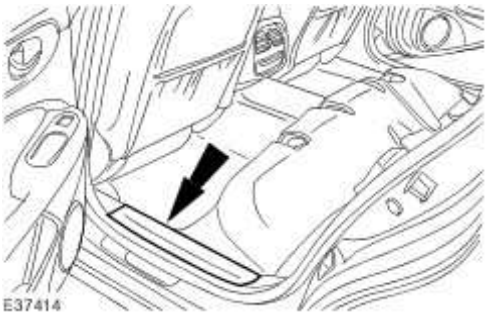

7 . Detach and reposition the floor covering.

8 . Remove the floor aperture cover.

9 . Detach the fuel transfer pump module electrical connector from the retaining bracket.

www.JagDocs.com

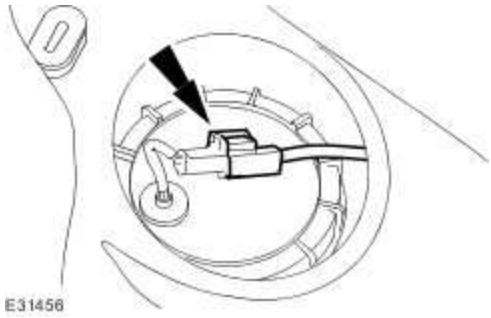

10 . Disconnect the fuel transfer pump electrical connector.

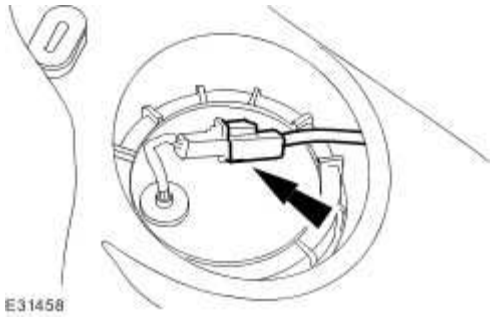

11 . Using the special tool, remove the fuel transfer pump locking ring.

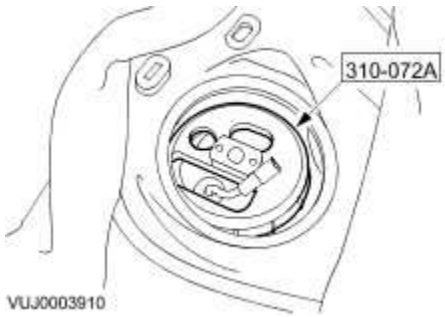

12 . Detach and reposition the upper part of the fuel transfer pump.

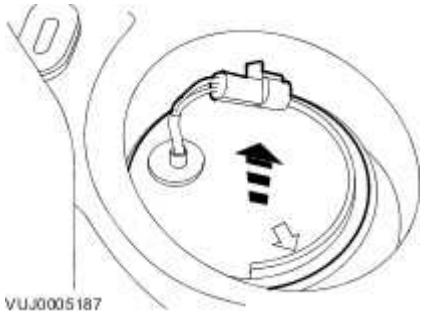

13 . **CAUTION: Make sure no damage occurs to the fuel level float.**

NOTE:

Remove and discard the fuel transfer pump gasket.

Remove the fuel transfer pump.

- Disconnect the fuel cross over lines.

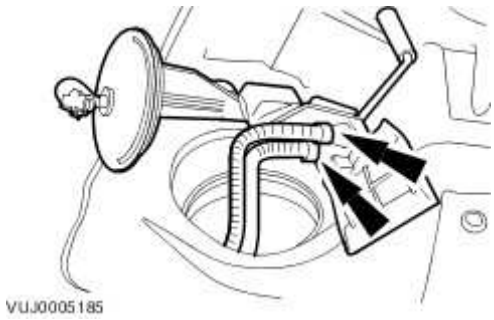

Installation

1 . **CAUTION: Make sure the arrow on the fuel transfer pump lines up with the 'NA' marker on the fuel tank.**

CAUTION: Make sure no damage occurs to the fuel level float.

NOTE:

Install a new gasket to the fuel transfer pump flange.

NOTE:

Take care not to stretch the gasket.

www.JagDocs.com

To install, reverse the removal procedure.

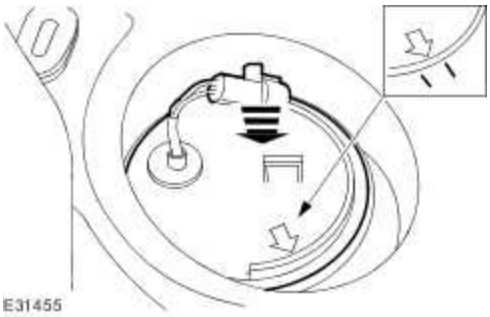

2 . Tighten to 70 Nm.

Fuel Transfer Unit - 4.2L NA V8 - AJV8/4.2L SC V8 - AJV8/3.0L NA V6 - AJ27/3.5L NA V8 - AJV8, VIN Range: G45704->G99999

Special Service Tools

Remover/Installer, Fuel Pump Module/Fuel Transfer Pump Locking Ring
310-146

Removal

WARNING: Place the vehicle in a quarantined area and arrange "No Smoking/Petrol Fumes" signs about the vehicle.

WARNING: Before any work is carried out on the fuel system, ground the vehicle to earth and maintain the ground connection until the work is complete.

WARNING: Do not smoke or carry lighted tobacco or open flame of any type when working on or near any fuel related components. Highly flammable vapors are always present and may ignite. Failure to follow these instructions may result in personal injury.

WARNING: The fuel system remains pressurized for a long time after the ignition is switched off. The fuel pressure must be relieved before attempting any repairs. Failure to follow these instructions may result in personal injury.

www.JagDocs.com

WARNING: After carrying out repairs, the fuel system must be checked visually for leaks. Failure to follow these instructions may result in personal injury.

WARNING: This procedure involves fuel handling. Be prepared for fuel spillage at all times and always observe fuel handling precautions. Failure to follow these instructions may result in personal injury.

WARNING: If taken internally do not induce vomiting, seek immediate medical attention. Failure to follow these instructions may result in personal injury.

WARNING: If fuel contacts the eyes, flush the eyes with cold water or eyewash solution and seek medical attention.

WARNING: Wash hands thoroughly after handling, as prolonged contact may cause irritation. Should irritation develop, seek medical attention.

NOTE:

Federal market vehicles, refer to steps 12 and 21.

NOTE:

Non federal market vehicles, refer to steps 13 and 22.

1 . Open the fuel tank filler pipe flap.

2 . Disconnect the battery ground cable.
For additional information, refer to Battery Disconnect and Connect

3 . Detach the fuel tank filler pipe cap.

4 Release the pressure in the fuel system.
. For additional information, refer to Fuel System Pressure Release - 4.2L NA V8 - AJV8/4.2L SC V8 - AJV8/3.0L NA V6 - AJ27/3.5L NA V8 - AJV8 (19.50.02)

5 . Drain the fuel system.
For additional information, refer to Fuel Tank Draining - VIN Range: G45704->G99999

6 . Remove the rear seat cushion.
For additional information, refer to Rear Seat Cushion (76.70.37)

7 . Remove the scuff plate trim panel.

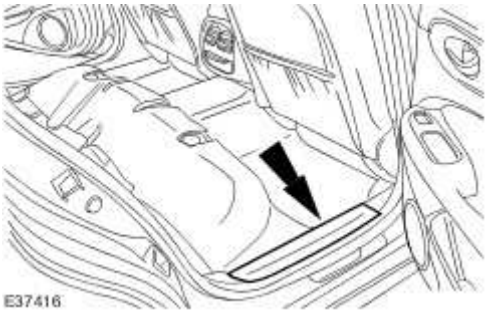

8 . Detach and reposition the floor covering.

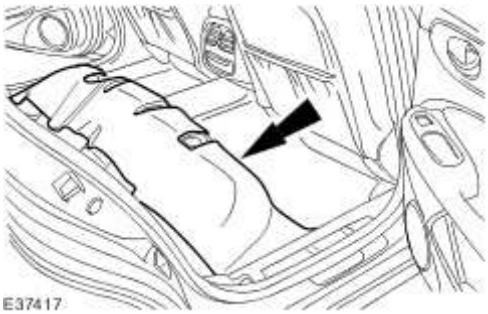

9 . Remove the floor aperture cover.

www.JagDocs.com

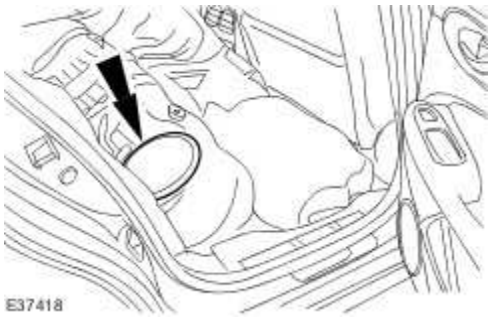

10 . Disconnect the fuel pump module electrical connector.

- Detach the fuel pump module wiring harness from the retaining bracket.

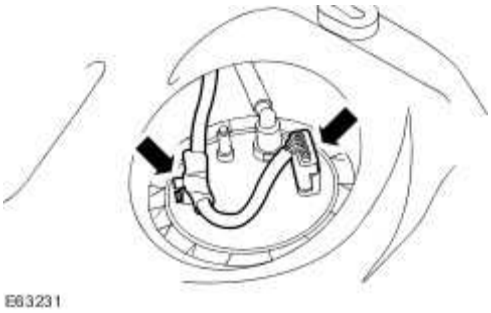

11 . Disconnect the fuel pump module quick release coupling.

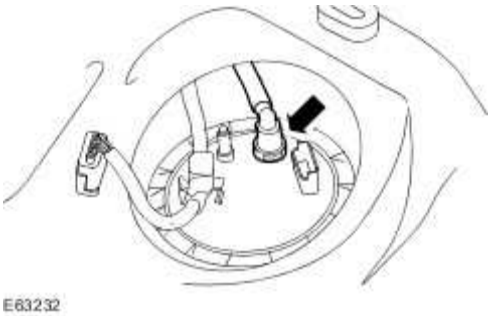

12 . **NOTE:**

Federal market vehicles only.

Remove the fuel pump module locking ring.

- Remove and discard the O-ring seal.

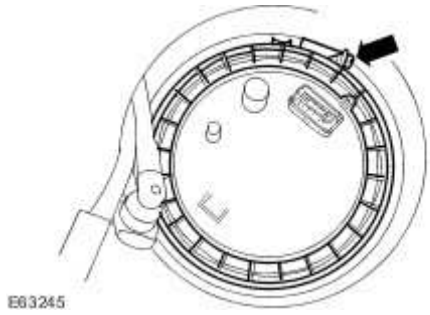

13 . **NOTE:**

Non federal market vehicles only.

Using the special tool, remove the fuel pump module locking ring.

- Remove and discard the O-ring seal.

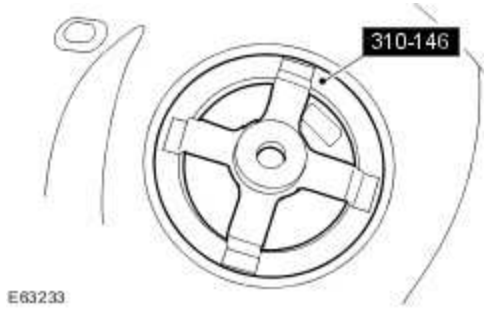

14 . **NOTE:**

All vehicles.

Disconnect the fuel transfer unit transfer feed tube.

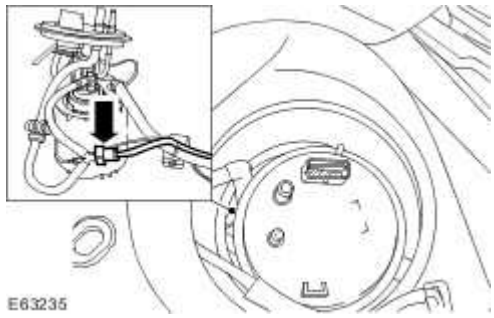

www.JagDocs.com

15 . Disconnect the left-hand fuel sender gauge electrical connector.

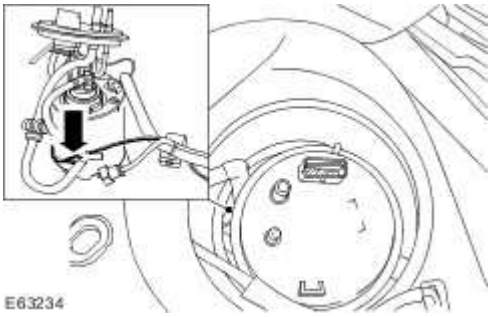

16 . Disconnect the fuel transfer unit transfer return tube.

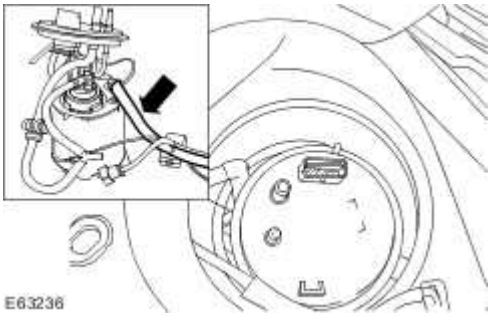

17 Release the fuel pump module.

.

- Press down and rotate the base of the fuel pump module counter-clockwise.

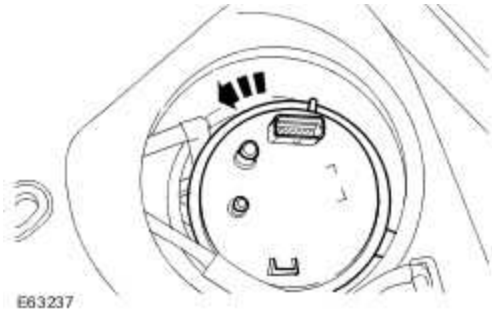

18 . Remove the scuff plate trim panel.

19 . Detach and reposition the floor covering.

20 . Remove the floor aperture cover.

21 . **NOTE:**

Federal market vehicles only.

Remove the fuel transfer unit locking ring.

www.JagDocs.com

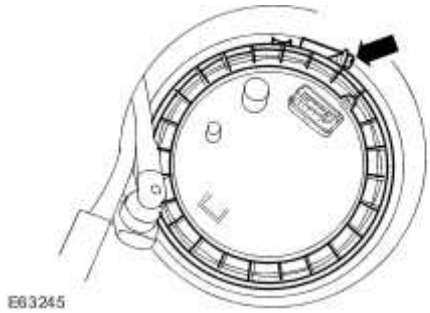

22 . **NOTE:**

Non federal market vehicles only.

Using the special tool, remove the fuel transfer unit locking ring.

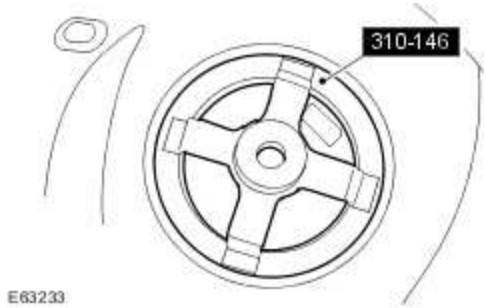

23 . **CAUTION: Make sure no damage occurs to the fuel level float.**

NOTE:

All vehicles.

Remove the fuel transfer unit.

- Press down and rotate the base of the fuel transfer unit counter-clockwise.
- Remove and discard the O-ring seal.

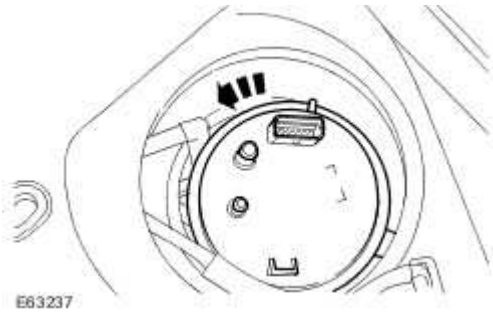

Installation

NOTE:

Federal market vehicles, refer to steps 3 and 13.

NOTE:

Non federal market vehicles, refer to steps 2 and 12.

1 . **CAUTION: Make sure no damage occurs to the fuel level float.**

NOTE:

All vehicles.

Install the fuel transfer unit.

- Press down and rotate the base of the fuel transfer unit clockwise.
- Install a new O-ring seal.

www.JagDocs.com

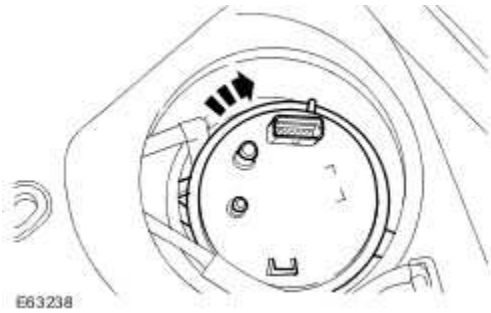

2 . **NOTE:**

Non federal market vehicles only.

Using the special tool, install the fuel transfer unit locking ring.

- Tighten to 60 Nm.

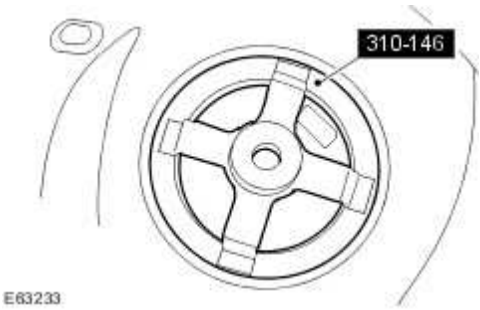

3 . **NOTE:**

Federal market vehicles only.

Install the fuel transfer unit locking ring.

- Tighten to 4 Nm.

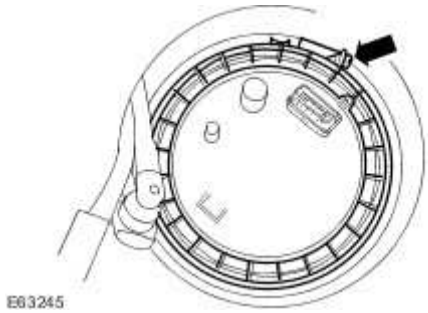

4 . **NOTE:**

All vehicles.

Install the floor aperture cover.

5 . Attach the floor covering.

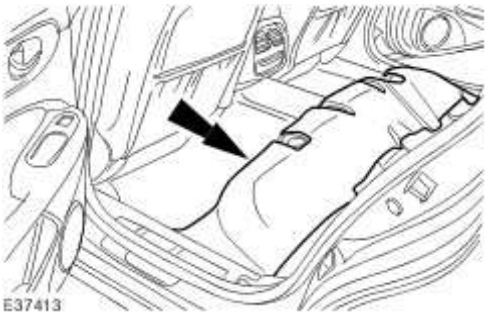

6 . Install the scuff plate trim panel.

www.JagDocs.com

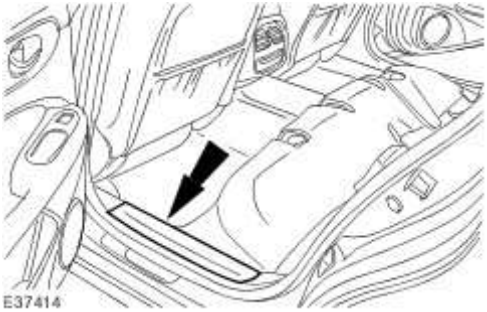

7. **CAUTION: On vehicles with supercharger make sure the arrow on the fuel pump module and the 'SC' marker on the fuel tank are aligned.**

CAUTION: On vehicles without supercharger make sure the arrow on the fuel transfer unit and the 'NA' marker on the fuel tank are aligned.

Secure the fuel pump module.

- Press down and rotate the base of the fuel pump module clockwise.

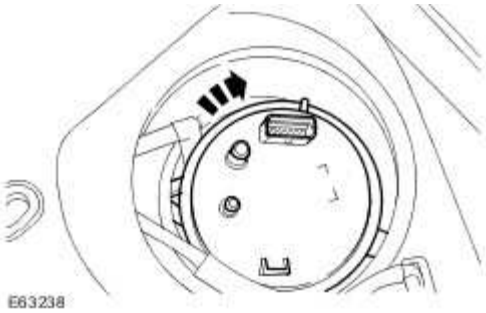

8. Connect the fuel transfer unit transfer return tube.

- Make sure the coupling has latched onto the fuel pump module by pulling the tube after the connection has been made.

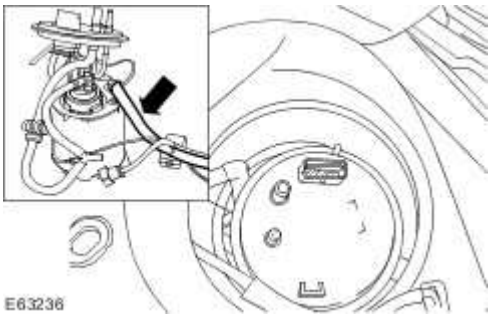

9 Connect the fuel transfer unit transfer return tube.

.

Make sure the coupling has latched onto the fuel pump module by pulling the tube after the connection has been made.

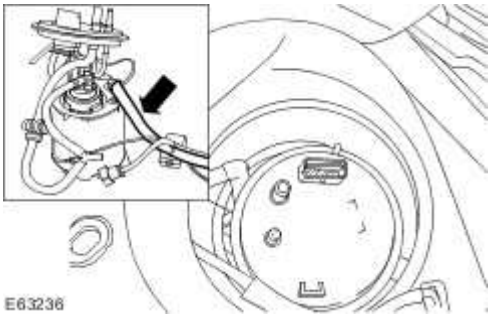

10 . Connect the left-hand fuel sender gauge electrical connector.

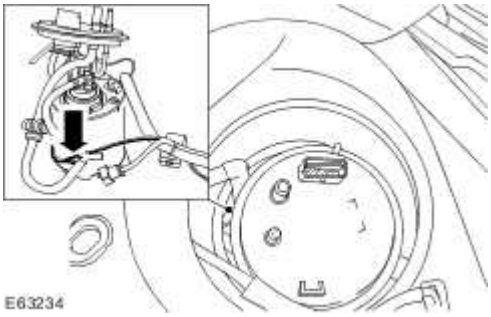

11 Connect the fuel transfer unit transfer feed tube.

.

Make sure the quick release coupling has latched onto the fuel pump module fuel tube by pulling the tube after the connection has been made.

www.JagDocs.com

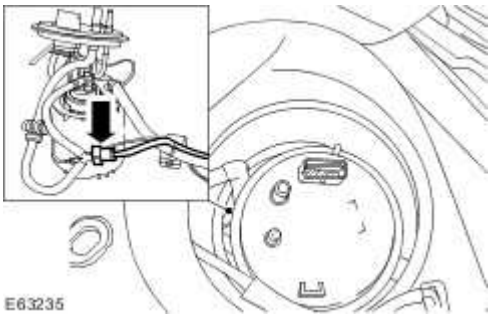

12 . **NOTE:**

Non federal market vehicles only.

Using the special tool, install the fuel pump module locking ring.

- Install a new O-ring seal.
- Tighten to 60 Nm.

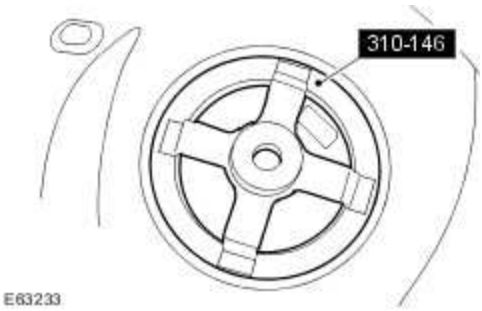

13 . **NOTE:**

Federal market vehicles only.

Install the fuel pump module locking ring.

- Tighten to 4 Nm.

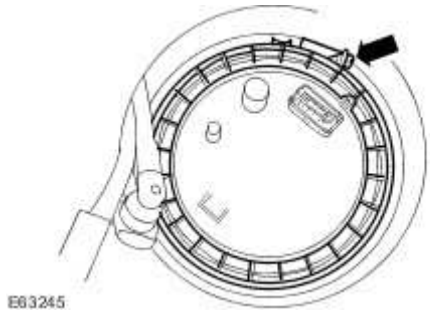

14 **NOTE:**

.

All vehicles.

Connect the fuel pump module quick release coupling.

- Make sure the quick release coupling has latched onto the fuel pump module fuel pipe by pulling the pipe after the connection has been made.

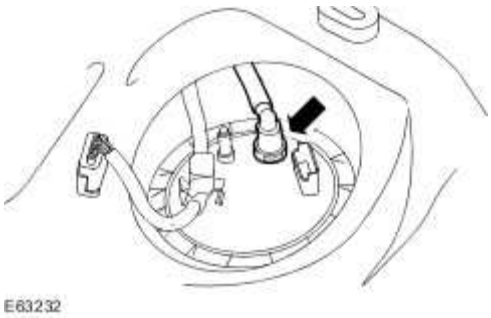

15 . Connect the fuel pump module electrical connector.

- Attach the fuel pump module wiring harness to the retaining bracket.

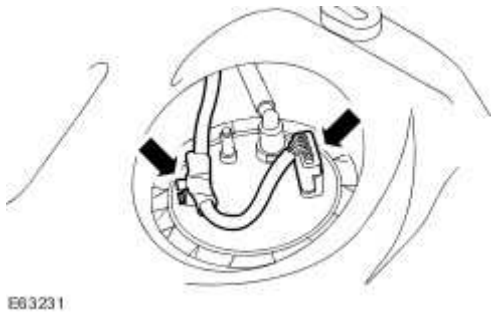

www.JagDocs.com

16 . Install the floor aperture cover.

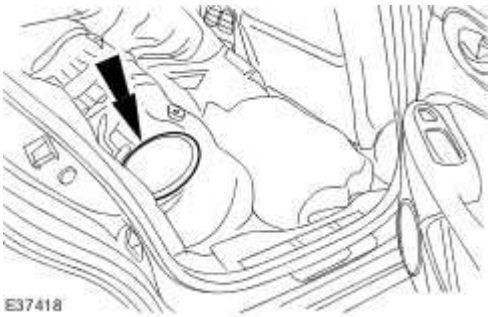

17 . Attach the floor covering.

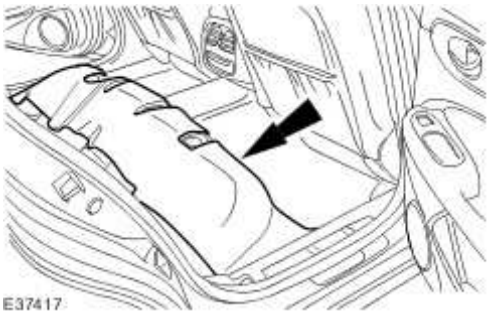

18 . Install the scuff plate trim panel.

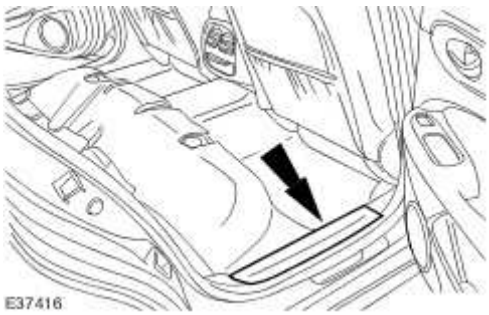

19 . Install the rear seat cushion.
For additional information, refer to Rear Seat Cushion (76.70.37)

20 . Attach the fuel tank filler pipe cap.

21 . Connect the battery ground cable.
For additional information, refer to Battery Connect (86.15.15)

22 . Close the fuel tank filler pipe flap.

Fuel Transfer Unit - 2.7L V6 - TdV6

Special Service Tools

Remover/Installer, Fuel Pump Module/Fuel Transfer Pump Locking Ring
310-146

Removal

WARNING: Place the vehicle in a quarantined area and arrange "No Smoking/Petrol Fumes" signs about the vehicle.

WARNING: Before any work is carried out on the fuel system, ground the vehicle to earth and maintain the ground connection until the work is complete.

WARNING: Do not smoke or carry lighted tobacco or open flame of any type when working on or near any fuel related components. Highly flammable vapors are always present and may ignite. Failure to follow these instructions may result in personal injury.

WARNING: The fuel system remains pressurized for a long time after the ignition is switched off. The fuel pressure must be relieved before attempting any repairs. Failure to follow these instructions may result in personal injury.

WARNING: After carrying out repairs, the fuel system must be checked visually for leaks. Failure to follow these instructions may result in personal injury.

www.JagDocs.com

WARNING: This procedure involves fuel handling. Be prepared for fuel spillage at all times and always observe fuel handling precautions. Failure to follow these instructions may result in personal injury.

WARNING: If taken internally do not induce vomiting, seek immediate medical attention. Failure to follow these instructions may result in personal injury.

WARNING: If fuel contacts the eyes, flush the eyes with cold water or eyewash solution and seek medical attention.

WARNING: Wash hands thoroughly after handling, as prolonged contact may cause irritation. Should irritation develop, seek medical attention.

1 . Disconnect the battery ground cable.
For additional information, refer to Battery Disconnect and Connect

2 . Detach the fuel tank filler pipe cap.

3 . Release the pressure in the fuel system.
For additional information, refer to Fuel System Pressure Release - 4.2L NA V8 - AJV8/4.2L SC V8 - AJV8/3.0L NA V6 - AJ27/3.5L NA V8 - AJV8 (19.50.02)

4 . Drain the fuel system.
For additional information, refer to Fuel Tank Draining - VIN Range: G45704->G99999

5 . Remove the rear seat cushion.
For additional information, refer to Rear Seat Cushion (76.70.37)

6 . Remove the scuff plate trim panel.

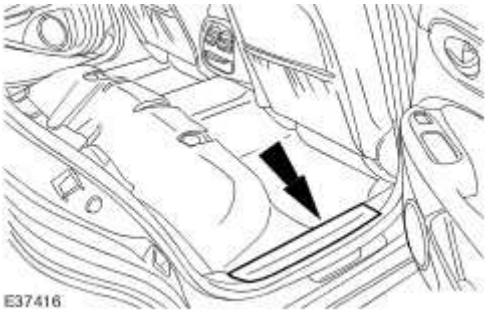

7 . Detach and reposition the floor covering.

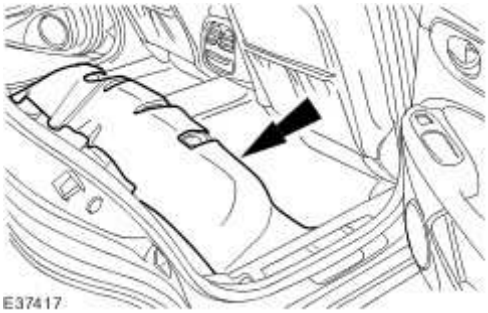

8 . Remove the floor aperture cover.

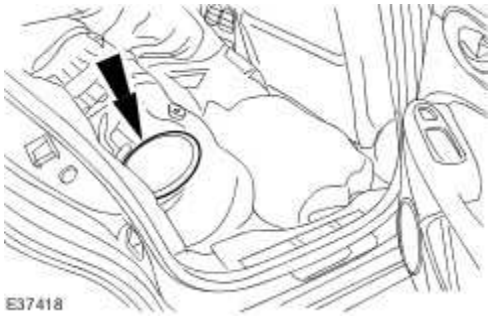

9 . Detach the fuel pump module electrical connector from the retaining bracket.

www.JagDocs.com

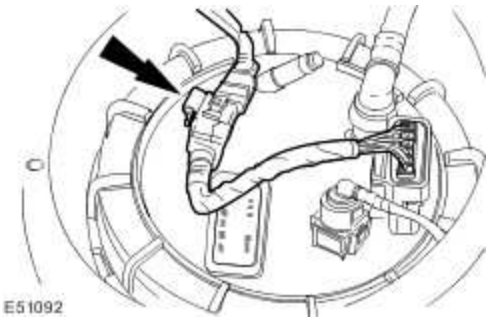

10 . Disconnect the fuel pump module electrical connector.

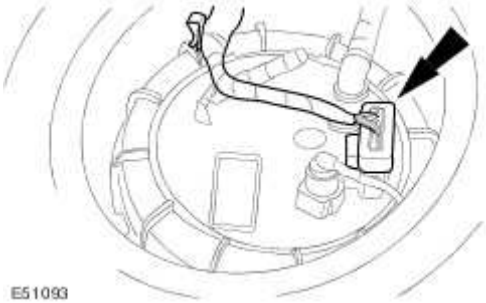

11 . Disconnect the fuel fired booster heater fuel supply line quick release coupling.
For additional information, refer to Quick Release Coupling - Push Connect

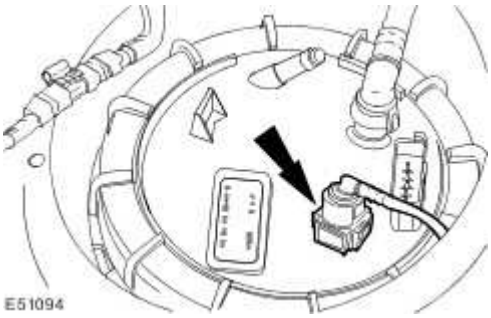

12 . Disconnect the fuel supply line quick release coupling.
For additional information, refer to Quick Release Coupling - Push Connect

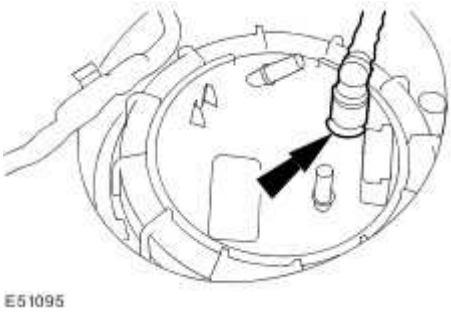

13 . **CAUTION: Make sure no damage occurs to the fuel pump module when removing the locking ring.**

Using the special tool, remove the fuel pump module locking ring.

- Remove and discard the O-ring seal.

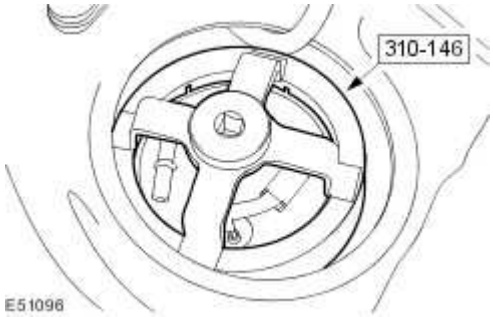

14 . Detach and reposition the upper part of the fuel pump module.

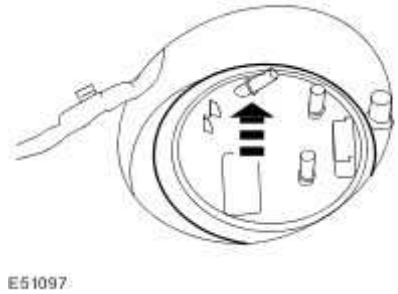

15 . Disconnect the fuel transfer line quick release coupling.
For additional information, refer to Quick Release Coupling - Push Connect

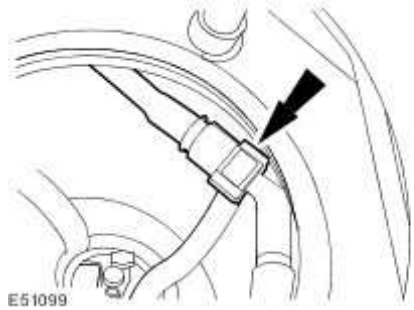

www.JagDocs.com

16 . Disconnect the fuel transfer line.

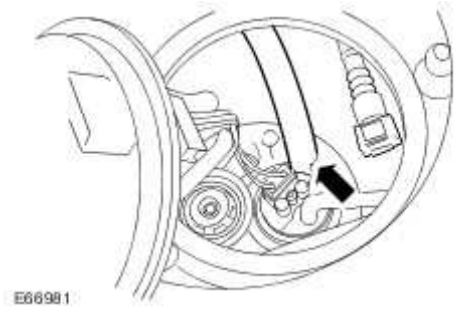

17 . Remove the scuff plate trim panel.

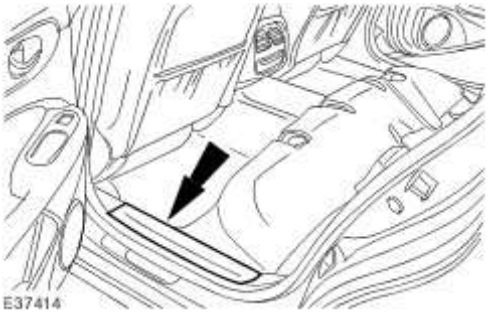

18 . Detach and reposition the floor covering.

19 . Remove the floor aperture cover.

20 . Detach the fuel transfer unit electrical connector from the retaining bracket.

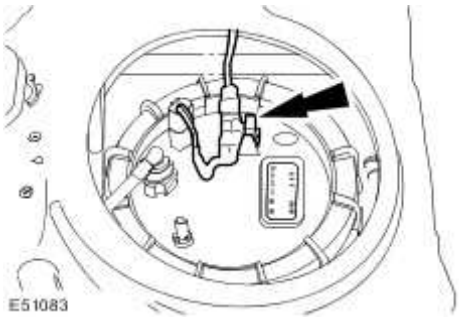

21 . Disconnect the fuel transfer unit electrical connector.

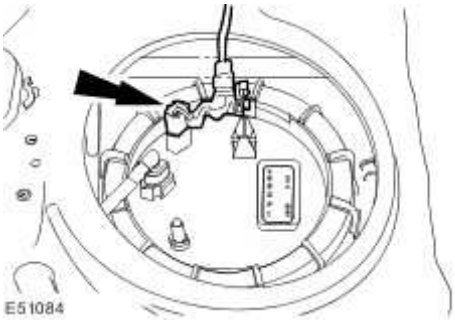

22 . Disconnect the fuel return line from the fuel transfer unit.
For additional information, refer to Quick Release Coupling - Push Connect

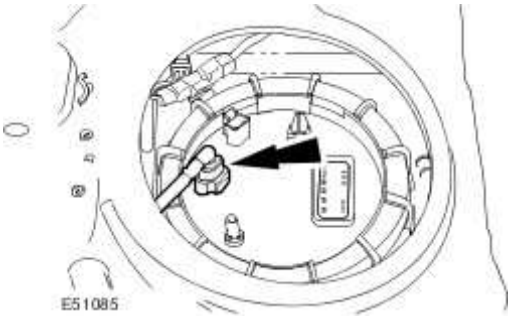

23 . **CAUTION: Make sure no damage occurs to the fuel transfer unit when removing the locking ring.**

Using the special tool, remove the fuel transfer unit locking ring.

- Remove and discard the O-ring seal.

www.JagDocs.com

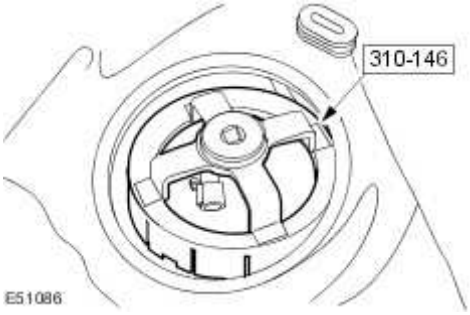

24 . Detach and reposition the upper part of the fuel transfer unit.

25 . **CAUTION: Make sure no damage occurs to the fuel level float.**

Remove the fuel level float.

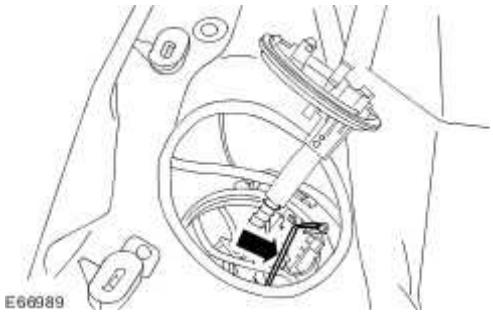

26 . Remove the fuel transfer unit.

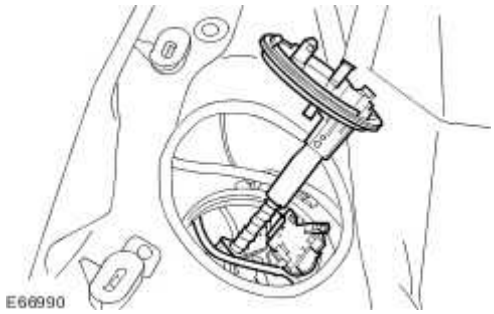

Installation

1 . Install the fuel transfer unit.

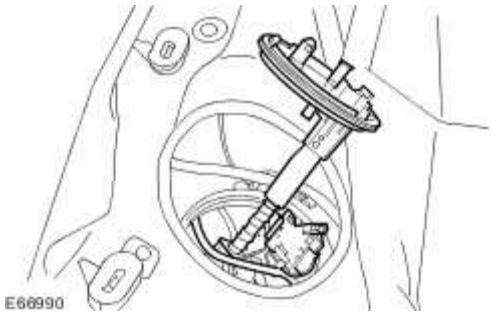

2 . **CAUTION: Make sure no damage occurs to the fuel level float.**

Install the fuel level float.

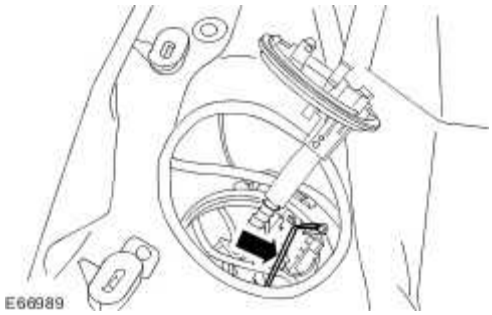

3 . Reposition and align the upper part of the fuel transfer unit.

www.JagDocs.com

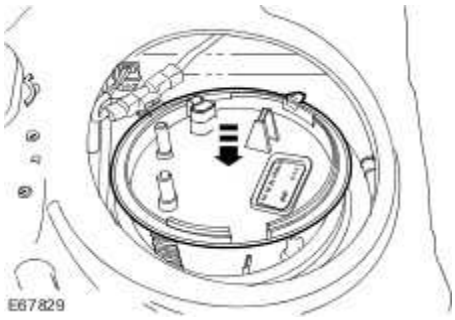

4 . Align the arrow on the fuel transfer unit with the alignment marks on the fuel tank.

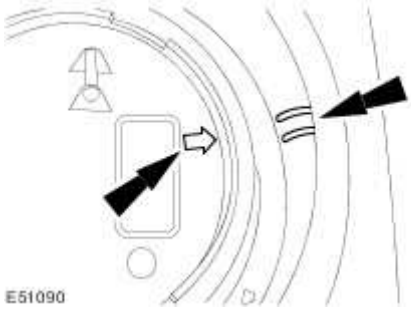

5 . **CAUTION: Make sure no damage occurs to the fuel transfer unit when installing the locking ring.**

Using the special tool, install the fuel transfer unit locking ring.

- Install a new O-ring seal.
- Tighten to 60 Nm.

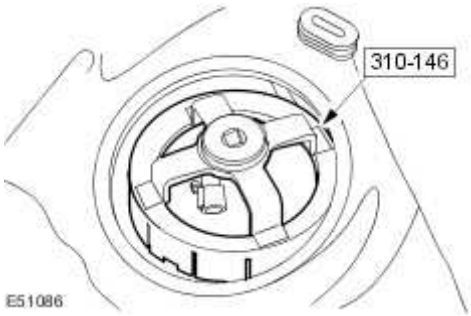

6 . Connect the fuel return line to the fuel transfer unit.
For additional information, refer to Quick Release Coupling - Push Connect

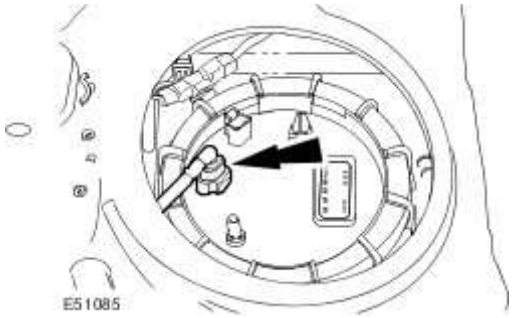

7 . Attach the fuel transfer unit electrical connector to the retaining bracket.

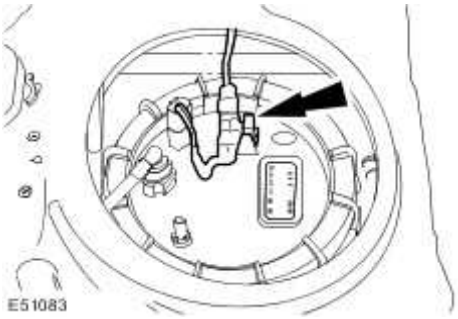

8 . Install the floor aperture cover.

9 . Attach the floor covering.

www.JagDocs.com

10 . Install the scuff plate trim panel.

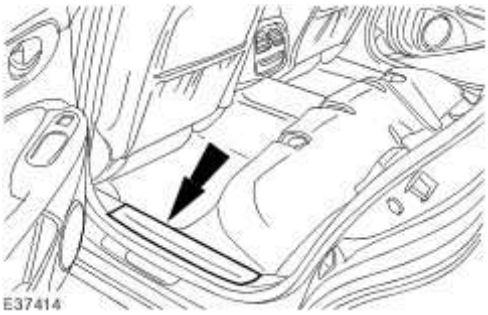

11 . Connect the fuel transfer line.

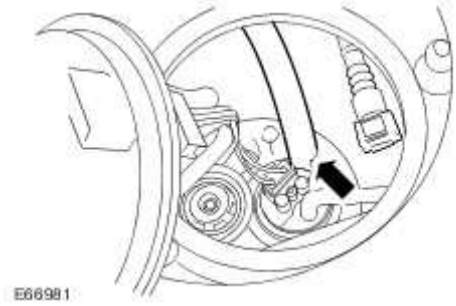

12 . Connect the fuel transfer pipe quick release coupling.
For additional information, refer to Quick Release Coupling - Push Connect .

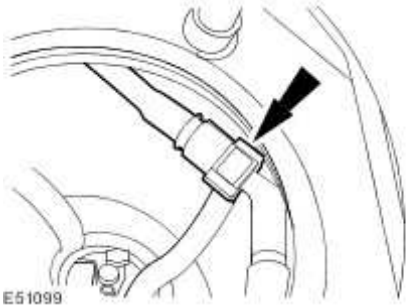

13 . Reposition and align the upper part of the fuel pump module.

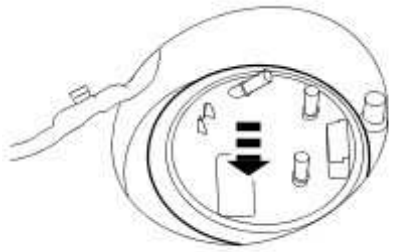

E51102

14 . Align the arrow on the fuel pump module with the alignment marks on the fuel tank.

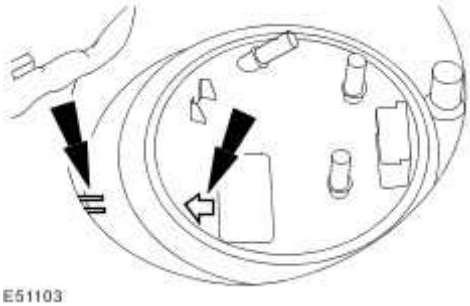

E51103

15 . **CAUTION: Make sure no damage occurs to the fuel pump module when installing the locking ring.**

Using the special tool, install the fuel pump module locking ring.

- Install a new O-ring seal.
- Tighten to 60 Nm.

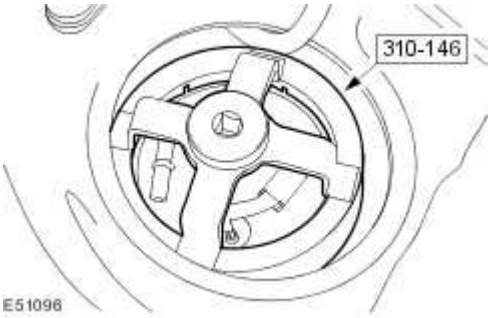

E51096

www.JagDocs.com

16 . Connect the fuel pump module quick release coupling.
For additional information, refer to Quick Release Coupling - Push Connect

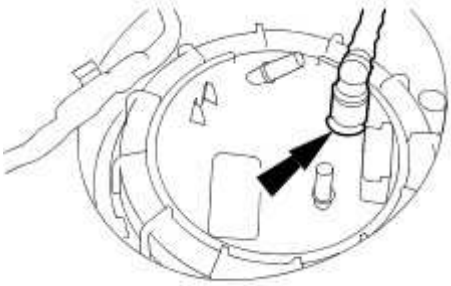

17 . Connect the fuel fired booster heater fuel supply line quick release coupling.
For additional information, refer to Quick Release Coupling - Push Connect

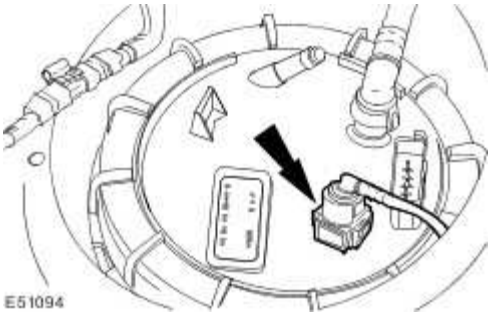

18 . Connect the fuel pump module electrical connector.

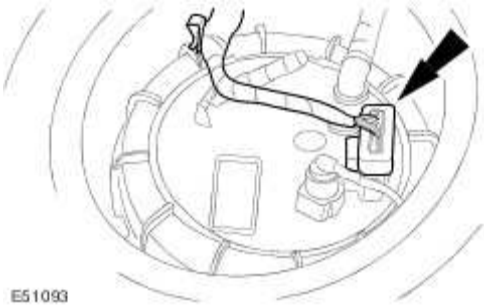

19 . Attach the fuel pump module electrical connector to the retaining bracket.

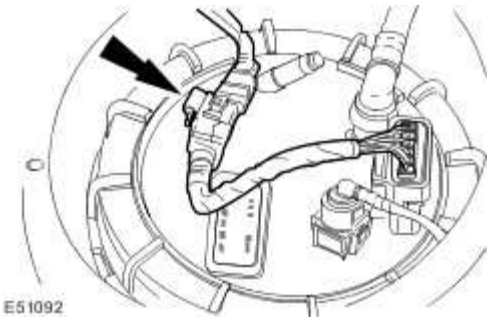

20 . Install the floor aperture cover.

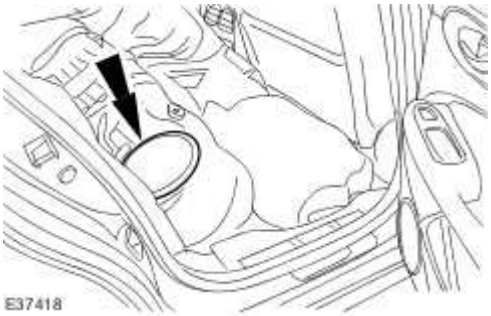

21 . Attach the floor covering.

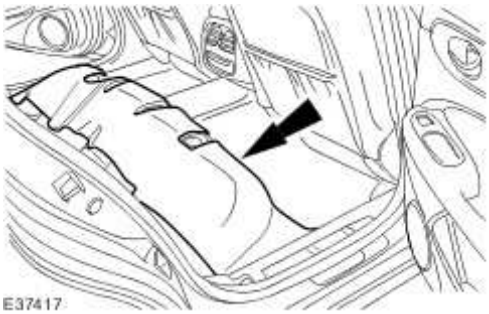

22 . Install the scuff plate trim panel.

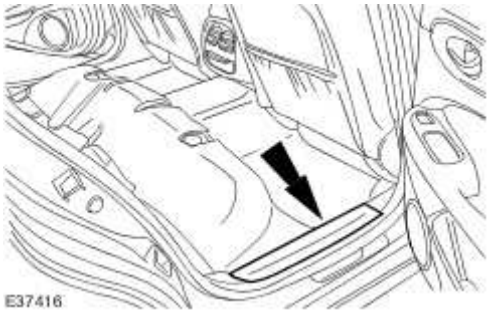

www.JagDocs.com

23 . Install the rear seat cushion.
For additional information, refer to Rear Seat Cushion (76.70.37)

24 . Attach the fuel tank filler pipe cap.

25 . Close the fuel tank filler pipe flap.

26 . Connect the battery ground cable.
For additional information, refer to Battery Connect (86.15.15)

Inertia Fuel Shutoff (IFS) Switch (18.30.35)

Removal

1 . Remove the cowl side trim panel.

1) Detach the door opening weatherstrip.

2) Detach the scuff plate trim panel.

3) Remove the cowl side trim panel.

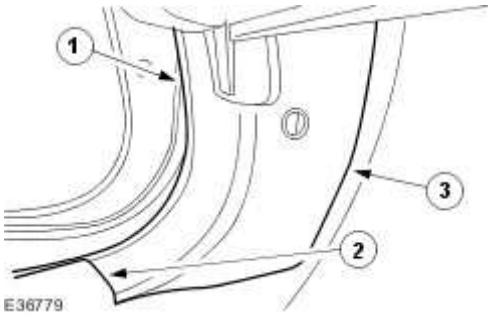

2 . Disconnect the inertia fuel shutoff (IFS) switch electrical connector.

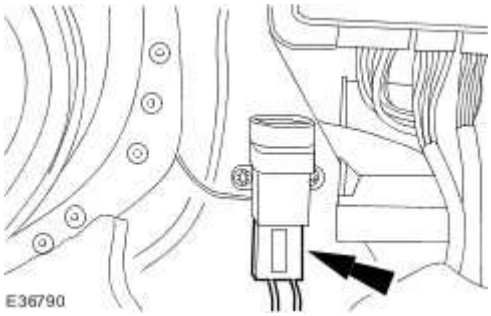

3 . Remove the IFS switch.

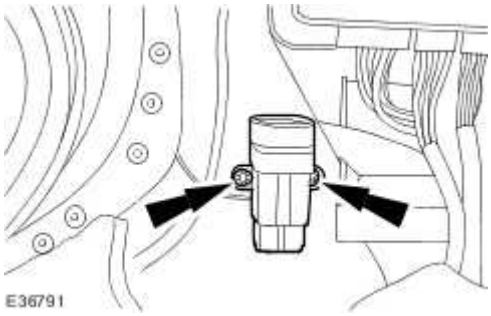

Installation

1 . To install, reverse the removal procedure.

www.JagDocs.com

Specifications

Torque Specifications

Description	Nm	lb-ft	lb-in
Acceleratror pedal	10	7	89

Acceleration Control

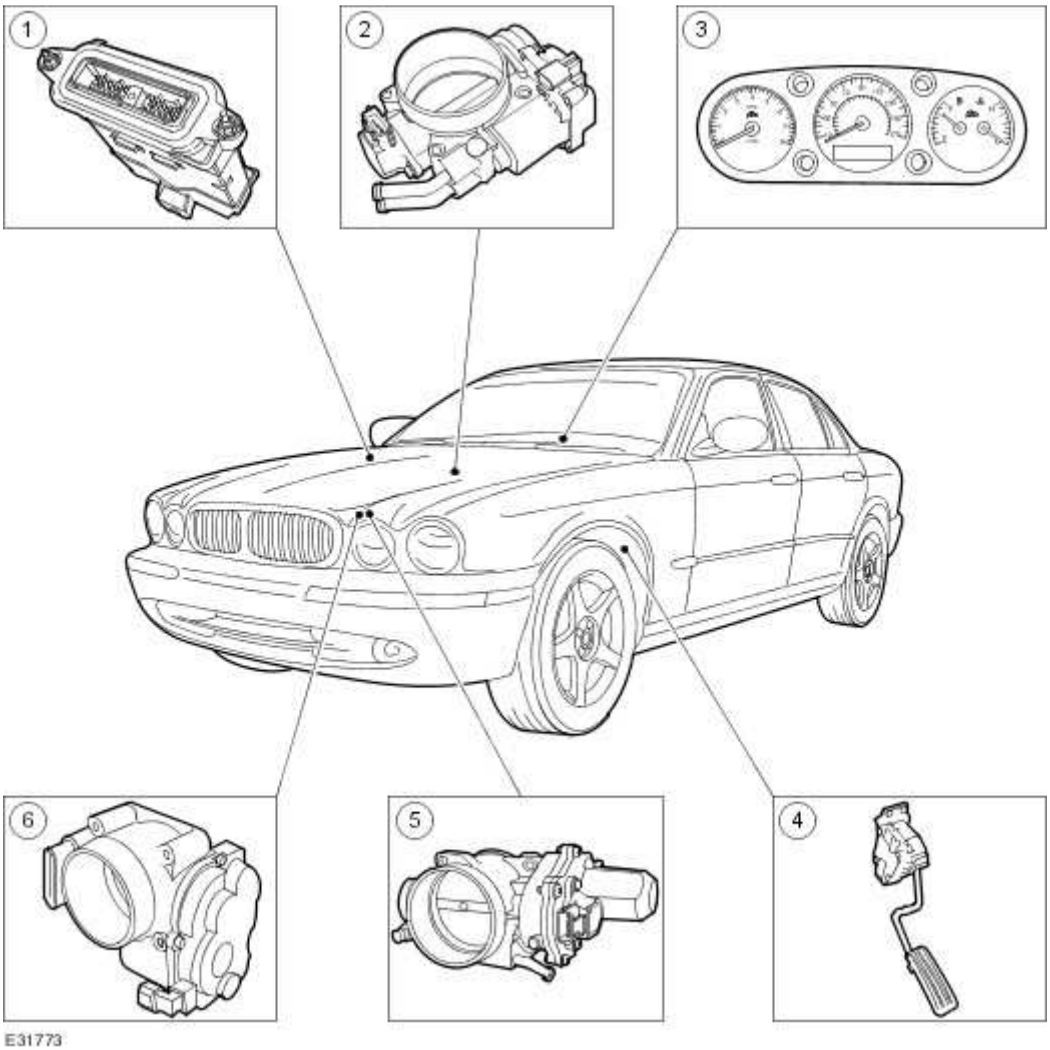

Item	Part Number	Description
1	—	Engine control module (ECM)
2	—	Throttle body (Vehicles with supercharger)
3	—	Instrument cluster (IC)
4	—	Accelerator pedal
5	—	Throttle body (Vehicles without supercharger)
6	—	Throttle body (Vehicles with 3.0L engine)

When the accelerator pedal is applied, the two accelerator position sensors measure the pedal movement and provide an output voltage proportional to pedal movement to the engine control module (ECM). Two sensors are used as a safety feature. The accelerator pedal has

www.JagDocs.com

two return springs to guarantee the accelerator returns to the zero position when the pedal is released. Whilst comparison checks are carried out on the accelerator pedal for rational values, communications within the ECM are monitored for rational values and responses.

The ECM then provides an output, based on the accelerator pedal position, which drives a DC motor which positions the throttle blade at the requested angle. The throttle blade position is monitored by two sensors for rational value.

The acceleration control system has the necessary safety features to monitor the correct operation of all the components. Depending on the failure state, the acceleration control system can be put in appropriate safe state, from restricting the RPM to limphome mode.

Acceleration Control

1 . Verify the customer concern by operating the system.

2 . Visually inspect for obvious signs of mechanical or electrical damage.

3 . If an obvious cause for an observed or reported concern is found, correct the cause (if possible) before proceeding to the next step.

4 . If the concern is not visually evident, use a fault code reader to retreive fault codes before proceeding to the Symptom Chart.

DTC P1240, P1241, P1242

Possible Source(s):

Accelerator pedal power supply circuit out of range

Action(s) to take:

GO to Pinpoint Test A.

DTC P1122, P1123, P1215, P1216, P1344

Possible Source(s):

Accelerator pedal demand sensor output circuit out of range

Action(s) to take:

GO to Pinpoint Test B.

DTC P0121, P0122, P0123

Possible Source(s):

Throttle position sensor circuit out of range

Action(s) to take:

GO to Pinpoint Test C.

DTC P1251, P1658, P1631,
P1657

Possible Source(s):

Throttle motor relay failure

www.JagDocs.com

Action(s) to take:

GO to Pinpoint Test D.

DTC P1243

Possible Source(s):

Accelerator pedal demand sensor ground; open circuit

Action(s) to take:

GO to Pinpoint Test E.

DTC P1611, P1633

Possible Source(s):

Engine control module (ECM) failure

Action(s) to take:

INSTALL a new ECM. For additional information, refer to <<303-14>>.

DTC P1254, P1250

Possible Source(s):

Throttle limp home spring malfunction.

Action(s) to take:

INSTALL a new throttle body. For additional information refer to <<303-14>>.

PINPOINT TEST G240070p1 : DTC P1240, P1241, P1242

G240070t1 : CHECK THE POWER SUPPLY TO THE ACCELERATOR PEDAL DEMAND SENSOR

1. TURN the ignition switch to the RUN position. 2. Measure the voltage between electrical connector CA88 pin 5 (Y) and ground. 3. Measure the voltage between electrical connector CA88 pin 2 (Y) and ground.

Is the voltage less than 4.5 volts?

-> Yes

GO to Pinpoint Test G240070t2.

.

-> No
DIAGNOSE the electronic engine control system. For additional information, refer to <<303-14>>.

G240070t2 : CHECK CONTINUITY OF THE ACCELERATOR PEDAL DEMAND SENSOR POWER SUPPLY CIRCUIT

1. Turn the ignition switch to the OFF position. 2. Disconnect the ECM electrical connector PI 1 and the accelerator pedal electrical connector CA 88. 3. Measure the resistance between PI 1 pin 13 (Y) and CA88 pin 5 (Y). 4. Measure the resistance between PI 1 pin 12 (OY) and CA88 pin 2 (OY).

Is the resistance less than 5 ohms?

-> Yes
GO to Pinpoint Test G240070t3.
.

-> No
REPAIR the power supply circuit from the ECM to the accelerator pedal. CLEAR the DTC. TEST the system for normal operation.

G240070t3 : CHECK THE ACCELERATOR PEDAL DEMAND SENSOR POWER SUPPLY FOR A SHORT CIRCUIT TO GROUND

1. Measure the resistance between CA88 pin 5 (Y) and ground. 2. Measure the resistance between CA88 pin 2 (OY) and ground.

Is the resistance greater than 10,000 ohms?

-> Yes
DIAGNOSE the electronic engine control system. For additional information, refer to <<303-14>>.

-> No
REPAIR the power supply circuit from the ECM to the accelerator pedal. CLEAR the DTC. TEST the system for normal operation.

PINPOINT TEST G240070p2 : DTC P1122, P1123, P1215, P1216, P1344

G240070t4 : CHECK THE ACCELERATOR PEDAL DEMAND SENSOR OUTPUT

1. Turn the ignition switch to the RUN position. 2. Measure the voltage between electrical connector CA88 pin 1 (O) and ground with the accelerator pedal released and with the accelerator pedal at full throttle. 3. Measure the voltage between electrical connector CA88 pin 4 (B) and ground with the accelerator pedal released and with the accelerator pedal at full throttle.

Does the voltage vary between 0.75 volts and 3.5 volts?

www.JagDocs.com

-> Yes
GO to Pinpoint Test G240070t7.
.

-> No
GO to Pinpoint Test G240070t5.
.

G240070t5 : CARRY OUT AN ACCELERATOR PEDAL POSITION SENSOR COMPONENT CHECK

1. Remove the accelerator pedal. For additional information, refer to
2. Measure the resistance between pin 1 and pin 6 of the accelerator pedal. 3. Measure the resistance between pin 4 and pin 5 of the accelerator pedal.

Is the resistance between pin 1 and pin 6 between 546 and 1134 ohms, and between pin 4 and pin 5 between 975 and 2025 ohms?

-> Yes
GO to Pinpoint Test G240070t6.
.

-> No
INSTALL a new accelerator pedal. For additional information, refer to
CLEAR the DTC. TEST the system for normal operation.

G240070t6 : CHECK THE ACCELERATOR PEDAL DEMAND SENSOR CIRCUIT FOR A SHORT TO GROUND

1. Disconnect the ECM electrical connector PI 1. 2. Measure the resistance between electrical connector CA 88 pin 1 (O) and ground. 3. Measure the resistance between electrical connector CA88 pin 4 (B) and ground.

Is the resistance greater than 10,000 ohms?

-> Yes
GO to Pinpoint Test G240070t7.
.

-> No
REPAIR the accelerator pedal demand sensor circuit from the ECM to the accelerator pedal. CLEAR the DTC. TEST the system for normal operation.

G240070t7 : CHECK THE ACCELERATOR PEDAL DEMAND SENSOR CIRCUIT FOR OPEN CIRCUIT

1. Disconnect the ECM electrical connector PI 1 and the accelerator pedal electrical connector CA 88.
2. Measure the resistance between PI 1 pin 103 (O) and CA 88 pin 1 (O). 3. Measure the resistance between PI 1 pin 102 (B) and CA 88 pin 4 (B).

Is the resistance less than 5 ohms?

-> Yes
DIAGNOSE the electronic engine control system. For additional information, refer to <<303-14>>.

-> No
REPAIR the accelerator pedal demand sensor circuit from the ECM to the accelerator pedal. CLEAR the DTC. TEST the system for normal operation.

PINPOINT TEST G240070p3 : DTC P0121, P0122, P0123

G240070t8 : CHECK THE POWER SUPPLY TO THE THROTTLE POSITION SENSOR

1. Turn the ignition switch the to the RUN position. 2. Measure the voltage between the throttle position sensor electrical connector PI 26 pin 4 (OY) and ground.

Is the voltage less than 4.5 volts?

-> Yes
GO to Pinpoint Test G240070t9.
.

-> No
GO to Pinpoint Test G240070t11.
.

G240070t9 : CHECK THE THROTTLE POSITION SENSOR POWER SUPPLY CIRCUIT FOR OPEN CIRCUIT

1. Turn the ignition switch to the OFF position. 2. Disconnect the ECM electrical connector PI 1 and the throttle position sensor electrical connector PI 26. 3. Measure the resistance between PI 1 pin 12 (OY) and PI 26 pin 4 (OY).

Is the resistance less than 5 ohms?

-> Yes
GO to Pinpoint Test G240070t10.
.

-> No
REPAIR the throttle position sensor power supply circuit from the ECM to the throttle position sensor. CLEAR the DTC. TEST the system for normal operation.

www.JagDocs.com

G240070t10 : CHECK THE THROTTLE POSITION SENSOR POWER SUPPLY CIRCUIT FOR A SHORT TO GROUND

1. Measure the resistance between PI 26-pin 4 (OY) and ground.

Is the resistance greater than 10,000 ohms?

-> Yes
DIAGNOSE the electronic engine control system. For additional information, refer to <<303-14>>.

-> No
REPAIR the throttle position sensor power supply circuit from the ECM to the throttle position sensor. CLEAR the DTC. TEST the system for normal operation.

G240070t11 : CHECK THE THROTTLE POSITION SENSOR GROUND CIRCUIT

1. Turn the ignition switch to the OFF position. 2. Disconnect the throttle position sensor electrical connector PI 26. 3. Measure the resistance between PI 26 pin 1 (BG) and ground.

Is the resistance less than 5 ohms?

-> Yes
GO to Pinpoint Test G240070t13.
.

-> No
GO to Pinpoint Test G240070t12.
.

G240070t12 : CHECK THE THROTTLE POSITION SENSOR GROUND WIRE FOR OPEN CIRCUIT

1. Disconnect the ECM electrical connector PI I and the throttle position sensor electrical connector PI 26. 2. Measure the resistance between PI 26 pin 1 (BG) and PI 1 pin 19 (BG).

Is the resistance less than 5 ohms?

-> Yes
GO to Pinpoint Test G240070t13.
.

-> No
REPAIR the throttle position sensor ground circuit from the ECM to the throttle position sensor. CLEAR the DTC. TEST the system for normal operation.

G240070t13 : CHECK THE THROTTLE POSITION SENSOR

1. Measure the resistance between PI 26 pin 2 and PI 26 pin 4. 2. Measure the resistance between PI 26 pin 3 and PI 26 pin 4.

Are the resistor values the same?

-> Yes
GO to Pinpoint Test G240070t14.
.

-> No
INSTALL a new throttle body. For additional information refer to <<303-14>>.

G240070t14 : CHECK CONTINUITY OF THE THROTTLE POSITION SENSOR OUTPUT CIRCUIT

1. Measure the resistance between PI 1 pin 75 (R) and PI 26 pin 3 (R). 2. Measure the resistance between PI 1 pin 76 (Y) and PI 26 pin 2 (Y).

Is the resistance less than 5 ohms?

-> Yes
GO to Pinpoint Test G240070t15.
.

-> No
REPAIR the circuit from the ECM to the throttle position sensor. CLEAR the DTC. TEST the system for normal operation.

G240070t15 : CHECK THE THROTTLE POSITION SENSOR OUTPUT CIRCUIT FOR A SHORT TO GROUND

1. Measure the resistance between PI 26 pin 3 (R) and ground. 2. Measure the resistance between PI 26 pin 2 (Y) and ground.

Is the resistance greater than 10,000 ohms?

-> Yes
DIAGNOSE the electronic engine control system. For additional information, refer to <<303-14>>.

-> No
REPAIR the circuit from the ECM to the throttle position sensor. CLEAR the DTC. TEST the system for normal operation.

PINPOINT TEST G240070p4 : DTC P1251, P1658, P1631, P1657

G240070t16 : CHECK THE THROTTLE MOTOR RELAY

1. Turn the ignition switch to the RUN position.

www.JagDocs.com

Does the throttle motor relay make an audible click?

-> Yes
GO to Pinpoint Test G240070t17.
.

-> No
GO to Pinpoint Test G240070t22.
.

G240070t17 : CHECK THE ECM POWER SUPPLY FROM THE THROTTLE MOTOR RELAY

1. Measure the voltage between the throttle motor relay connector FH 32D pin 5 (NR) and ground.

Is the voltage greater than 10 volts?

-> Yes
GO to Pinpoint Test G240070t18.
.

-> No
GO to Pinpoint Test G240070t19.
.

G240070t18 : CHECK CONTINUITY OF THE ECM POWER SUPPLY WIRE FROM THE THROTTLE MOTOR RELAY

1. Turn the ignition switch to the OFF position. 2. Disconnect the ECM electrical connector PI 1 and remove the throttle motor relay. 3. Measure the resistance between the throttle motor relay electrical connector FH 32D pin 5 (NR) and the ECM electrical connector PI 1 pin 134 (GU).

Is the resistance less than 5 ohms?

-> Yes
DIAGNOSE the electronic engine control system. For additional information, refer to <<303-14>>.

-> No
REPAIR the ECM power supply wire from the throttle motor relay. CLEAR the DTC. TEST the system for normal operation.

G240070t19 : CHECK FUSE 18 IN THE FRONT POWER DISTRIBUTION BOX (FPDB)

1. Check the fuse.

Is the fuse OK?

-> Yes
GO to Pinpoint Test G240070t20.
.

-> No
GO to Pinpoint Test G240070t21.
.

G240070t20 : CHECK THE THROTTLE MOTOR RELAY POWER SUPPLY CIRCUIT

1. Remove the throttle motor relay. 2. Measure the voltage between the throttle motor relay connector FH 32D pin 3 (YR) and ground.

Is the voltage less than 10 volts?

-> Yes
REPAIR the throttle motor relay power supply circuit. CLEAR the DTC. TEST the system for normal operation.

-> No
INSTALL a new throttle motor relay. CLEAR the DTC. TEST the system for normal operation.

G240070t21 : CHECK FUSE 18 FOR A SHORT TO GROUND

1. Measure the resistance between fuse 18 and ground.

Is the resistance greater than 10,000 ohms?

-> Yes
INSTALL a new fuse. CLEAR the DTC. TEST the system for normal operation.

-> No
REPAIR short to ground between engine compartment fuse box and the throttle motor relay. INSTALL a new fuse. CLEAR the DTC. TEST the system for normal operation.

G240070t22 : CHECK THE POWER SUPPLY CIRCUIT TO THE THROTTLE MOTOR RELAY COIL

1. Turn the ignition switch to the RUN position. 2. Measure the voltage between the throttle motor relay connector FH 32D pin 1 (GR) and ground.

Is the voltage greater than 10 volts?

-> Yes
GO to Pinpoint Test G240070t23.
.

-> No

www.JagDocs.com

REPAIR the throttle motor relay coil power supply circuit from the engine compartment fuse box. CLEAR the DTC. TEST the system for normal operation.

G240070t23 : CHECK CONTINUITY OF THE THROTTLE MOTOR RELAY COIL

1. Remove the throttle motor relay (if not already removed). 2. Measure the resistance between terminal 1 and terminal 2 of the throttle motor relay.

Is the resistance between 70 and 90 ohms?

-> Yes
GO to Pinpoint Test G240070t24.
.

-> No
INSTALL a new throttle motor relay. CLEAR the DTC. TEST the system for normal operation.

G240070t24 : CHECK CONTINUITY OF THE THROTTLE MOTOR RELAY GROUND CIRCUIT

1. Disconnect the ECM electrical connector PI 1. 2. Measure the resistance between the throttle motor relay electrical connector FH 32D pin 2 (GR) and the ECM electrical connector PI 1 pin 52 (GR).

Is the resistance less than 5 ohms?

-> Yes
DIAGNOSE the electronic engine control system. For additional information, refer to <<303-14>>.

-> No
REPAIR the throttle motor relay ground circuit from the ECM to the engine compartment fuse box. CLEAR the DTC. TEST the system for normal operation.

PINPOINT TEST G240070p5 : DTC P1243

G240070t25 : CHECK THE ACCELERATOR PEDAL DEMAND SENSOR GROUND CIRCUIT

1. Disconnect the ECM electrical connector PI 1 and the accelerator pedal electrical connector CA 88. 2. Measure the resistance between PI 1 pin 19 (BG) and CA 88 pin 6 (BG). 3. Measure the resistance between PI 1 pin 20 (BG) and CA 88 pin 3 (BG).

Is the resistance less than 5 ohms?

-> Yes
DIAGNOSE the electronic engine control system. For additional information, refer to <<303-14>>.

-> No
REPAIR the accelerator pedal demand sensor ground circuit from the accelerator pedal to the ECM. CLEAR the DTC. TEST the system for normal operation.

Accelerator Pedal (19.20.01)

Removal

1 . Remove the driver side instrument panel lower trim panel.

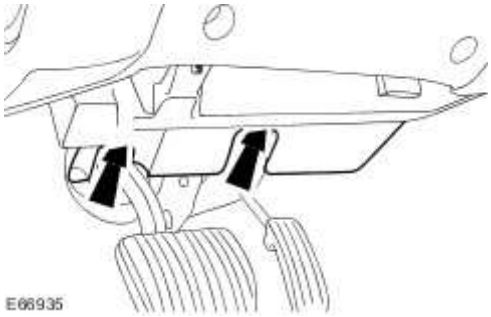

2 . Detach the accelerator pedal retaining bracket.

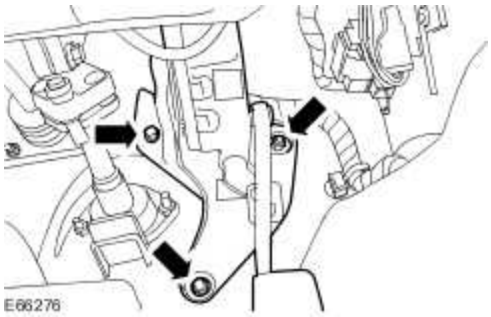

3 . Disconnect the accelerator pedal electrical connector.

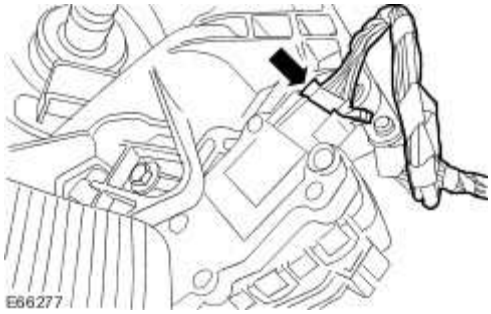

4 . Detach the accelerator pedal wiring harness.

www.JagDocs.com

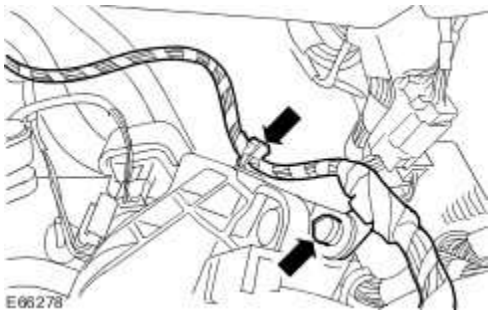

5 . Disconnect the electrical connectors.

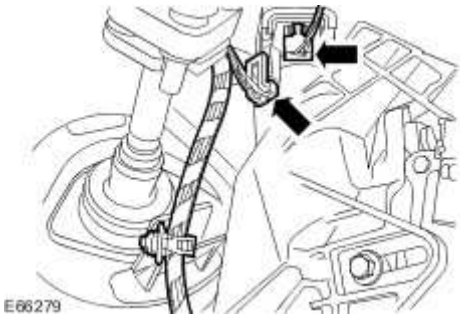

6 . Remove the accelerator pedal.

- Disconnect the height adjustable drive cable.

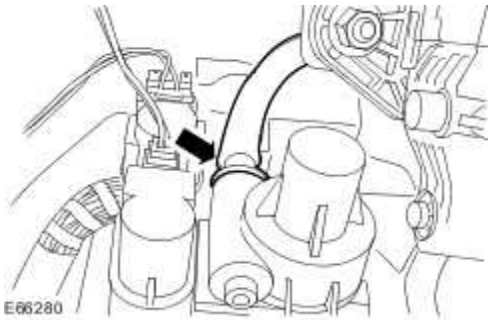

Installation

1 . To install, reverse the removal procedure.

- Tighten to 10 Nm.

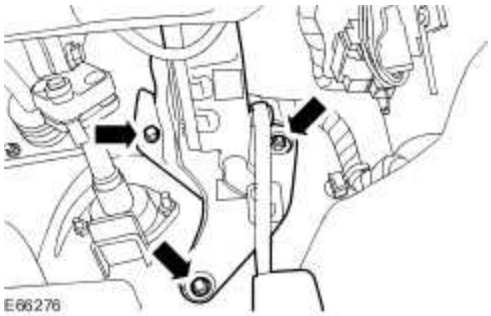

www.JagDocs.com

Specifications

General Specifications

Item	Specification
Speed control module vertical alignment	90° ± 0.75°

Torque Specifications

Description	Nm	lb-ft	lb-in
Speed control module retaining nuts	5	-	44
Speed control module alignment bolt lock nut	5	-	44

Speed Control Module Alignment - VIN Range: G00442->H18679

Special Service Tools

E31844

Inclinometer
501-F007

1. **NOTE:**

   Make sure the vehicle is positioned on level ground such as the headlamp alignment area.

Level the vehicle ride height. For additional information, refer to the Jaguar approved diagnostic system.

2. Remove the left-hand front bumper access cover.

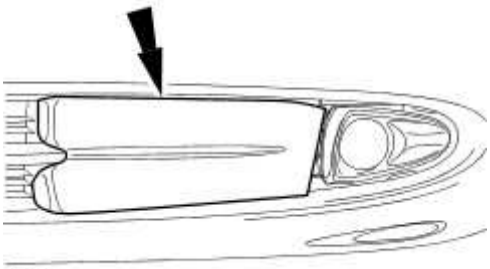

E44643

3. Using the special tool, check the speed control module vertical levelling.

www.JagDocs.com

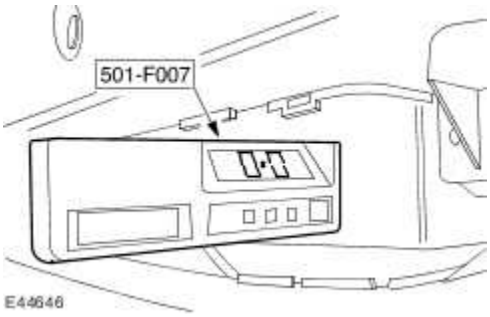

4. Level the speed control module.

- Rotate the speed control module levelling bolt to achieve a reading of zero degrees ± 0.75°.

5. Using the special tool, check the speed control module vertical levelling.

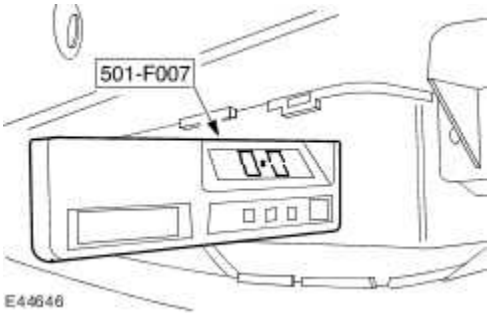

6. Install the left-hand front bumper access cover.

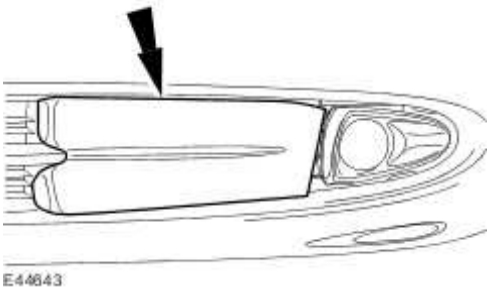

7. Carry out the speed control module calibration procedure. For further information, refer to the Jaguar approved diagnostic system.

Speed Control Module Alignment - VIN Range: H18680->H99999

Special Service Tools

E31844

Inclinometer
501-F007

1. Remove the radiator splash shield.
Radiator Splash Shield (76.22.90)

2. **NOTE:**

   Make sure the vehicle is positioned on level ground such as the headlamp alignment area.

Level the vehicle ride height. For additional information, refer to the Jaguar approved diagnostic system.

3. Using the special tool, check the speed control module vertical leveling.

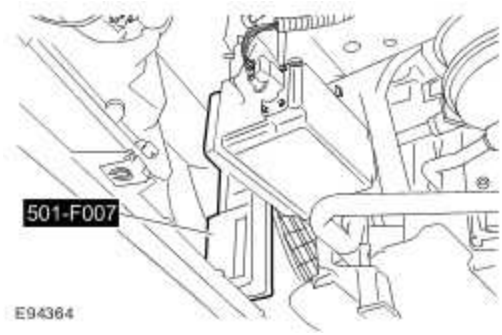

E94364

4. Level the speed control module.

   - Rotate the speed control module leveling bolt to achieve a reading of 90 degrees ± 0.75°.

www.JagDocs.com

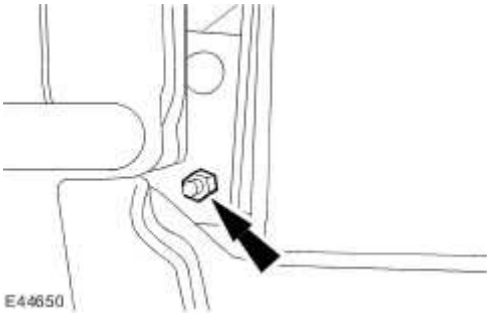

5. Using the special tool, check the speed control module vertical leveling.

6. Carry out the speed control module calibration procedure. For further information, refer to the Jaguar approved diagnostic system.

7. Install the radiator splash shield.
Radiator Splash Shield (76.22.90)

Speed Control - VIN Range: G00442->G45703

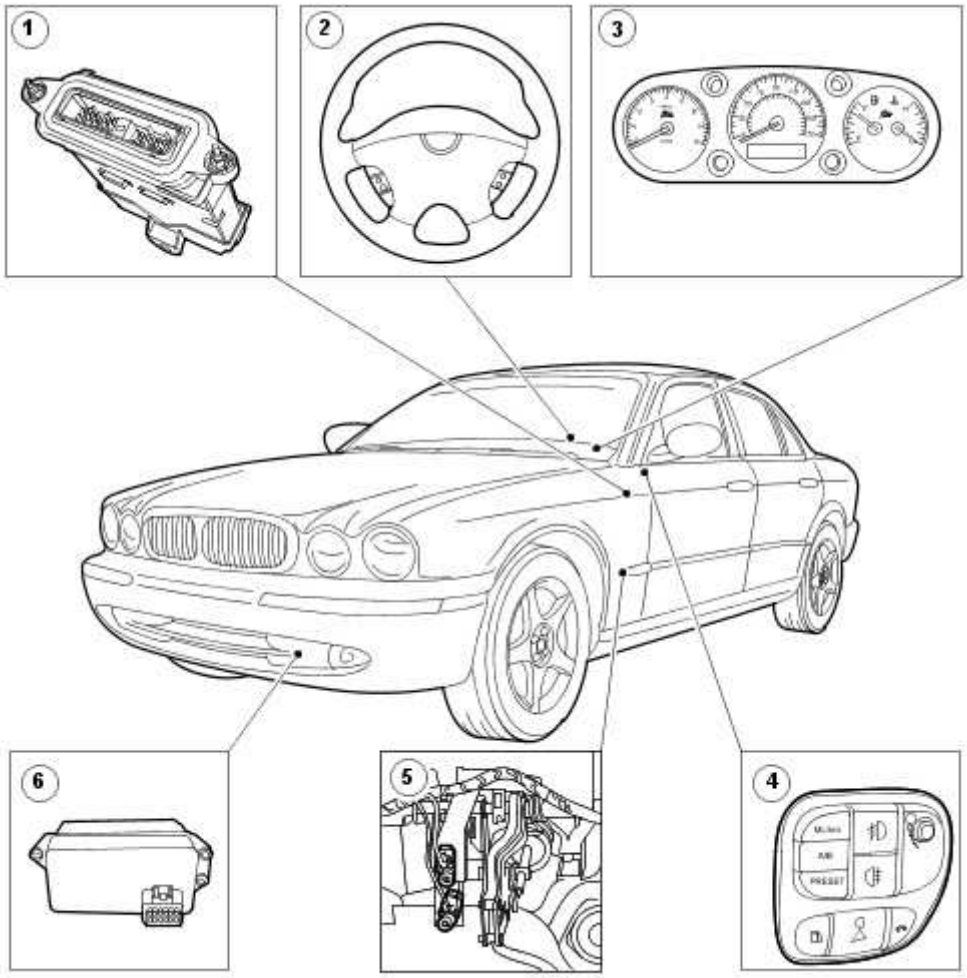

Item	Part Number	Description
1	—	Engine control module (ECM)
2	—	Speed control actuator switches
3	—	Message center
4	—	Forward alert switch - vehicles with adaptive speed control

www.JagDocs.com

5	—	Brake pedal position switch and speed control deactivation switch
6	—	Adaptive speed control module - vehicles with adaptive speed control

System operation

The speed control system is inoperative below 43 kph (27 mile/h) and inoperative above the following speeds:

193 kph (120 mile/h) for vehicles fitted with a 3.0L engine.

201 kph (125 mile/h) for all other variants.

The speed control system is designed to maintain a selected vehicle speed between these two parameters.

Any of the switches operated by the brake will interrupt the speed control operation by switching the signal to the engine control module (ECM). This will allow the system to go into STANDBY mode. Pressing the RESUME switch with the vehicle travelling above 43 kph (27 mile/h) while the system is in STANDBY mode will allow the vehicle to accelerate until the last set speed is resumed.

Steering Wheel Switches

RESUME Switch

When the RESUME switch is pressed with the vehicle travelling above 43 kph (27 mile/h) with the system in STANDBY mode, the vehicle is allowed to accelerate until the last set speed is resumed. The RESUME switch will not function if the ignition switch has been cycled or if the vehicle speed is below 43 kph (27 mile/h).

CANCEL Switch

When the CANCEL switch is pressed with the vehicle travelling above 43 kph (27 mile/h) the system will enter STANDBY mode.

SET Switch

When the SET +/- switch is pressed with the vehicle travelling above 43 kph (27 mile/h) the system allows the vehicle speed to be maintained to ± 1.62 kph (1 mile/h). Pressing the SET +/- switch will increase or decrease the vehicle speed respectively until the switch is released. If the respective switch is pressed momentarily, the speed will accelerate or decelerate in 1.62 kph (1 mile/h) increments.

Brake Pedal Position (BPP) Switch

If the brake pedal is activated while the speed control system is active, the ECM receives a signal from the brake pedal position switch. This will cancel speed control and allow the throttle blade to return to the position as demanded by the accelerator pedal.

Speed Control Deactivation Switch (brake).

If the brake pedal is activated while the speed control system is active, the ECM receives a signal from the speed control deactivation switch. This will cancel speed control and allow the throttle blade to return to the position as demanded by the accelerator pedal.

Adaptive speed control

On vehicles for certain markets, an adaptive speed control system is installed as an option. In addition to the normal vehicle speed control functions, this system enables a preset distance to be maintained behind a moving vehicle immediately ahead, without driver intervention.

Automatic Switch Off - Vehicles with Adaptive Speed Control

The adaptive speed control will disengage, but not clear the memory when:

- the CANCEL button is activated.
- the brake pedal is applied.
- the vehicle speed falls below 26Km/h (16mph).
- neutral, park or reverse gear positions are selected.
- traction control is activated.

The adaptive speed control will disengage, and clear the memory when:

- the ignition switch is set to position '0'.
- maximum vehicle speed is reached.
- the parkbrake is applied.
- a fault occurs in the adaptive speed control system.

Forward Alert Switch - Vehicles with Adaptive Speed Control

E44824

Forward Alert

The forward alert system is switched on and off by the forward alert switch, which is incorporated in to the message center switch. The forward alert system additionally provides warnings while the adaptive speed control is not activated.

www.JagDocs.com

Speed Control Module - Vehicles with Adaptive Speed Control

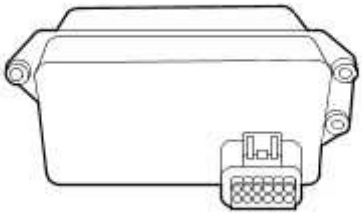

E44823

The adaptive speed control module incorporates a radar sensor and yaw rate sensor to provide system control functions.

Adaptive Speed Control Failure

If a fault occurs during any adaptive speed control operation the adaptive speed control system will be deactivated and will remain in this state until the fault is rectified. The message center will display 'CRUISE NOT AVAILABLE'.

Speed Control - VIN Range: G45704->G99999

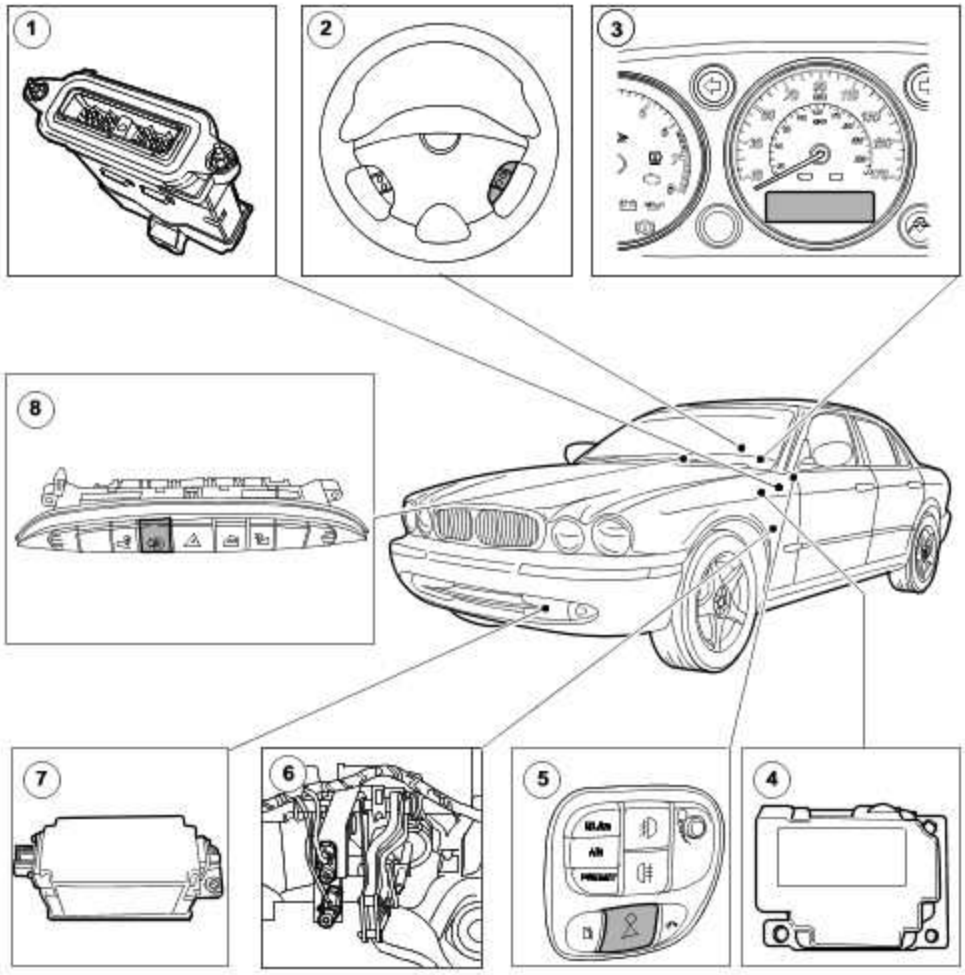

E64559

Item	Part Number	Description
1	—	Engine control module (ECM)
2	—	Speed control steering wheel switches
3	—	Message center
4	—	Speed control module - vehicles with adaptive speed control
5	—	Forward alert switch - vehicles with adaptive speed control
6	—	Brake pedal position switch and speed control deactivation switch

www.JagDocs.com

7	—	Speed control sensor - vehicles with adaptive speed control
8		Automatic speed limiter switch - vehicles with automatic speed limiter

System operation

The speed control system is inoperative below 32 kph (20 mile/h) and above 250 kph (155 mile/h).

The speed control system is designed to maintain a selected vehicle speed between 32 kph (20 mile/h) and 180 kph (112 mile/h).

Any of the switches operated by the brake will interrupt the speed control operation by switching the signal to the engine control module (ECM). This will allow the system to go into STANDBY mode. Pressing the RESUME switch with the vehicle travelling above 32 kph (20 mile/h) while the system is in STANDBY mode will allow the vehicle to accelerate until the last set speed is resumed.

Speed Control Steering Wheel Switches

RESUME Switch

When the RESUME switch is operated with the vehicle travelling above 32 kph (20 mile/h) with the system in STANDBY mode, the vehicle is allowed to accelerate until the last set speed is resumed. The RESUME switch will not function if the ignition switch has been cycled or if the vehicle speed is below 32 kph (20 mile/h).

CANCEL Switch

When the CANCEL switch is operated with the vehicle travelling above 32 kph (20 mile/h) the system will enter STANDBY mode.

SET Switch

When the SET +/- switch is operated with the vehicle travelling above 32 kph (20 mile/h) the system allows the vehicle speed to be maintained to ± 1.62 kph (1 mile/h). Pressing the SET +/- switch will increase or decrease the vehicle speed respectively until the switch is released. If the respective switch is pressed momentarily, the speed will accelerate or decelerate in 1.62 kph (1 mile/h) increments.

Brake Pedal Position (BPP) Switch

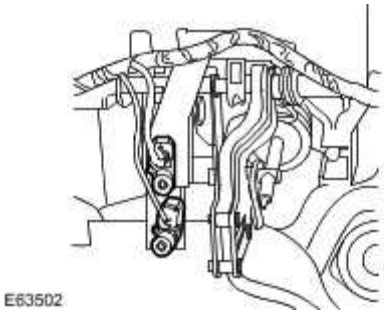

If the brake pedal is operated while the speed control system is active, the ECM receives a signal from the BPP switch. This will cancel vehicle speed control and allow the throttle blade to return to the position as demanded by the accelerator pedal.

Speed Control Deactivation Switch (brake).

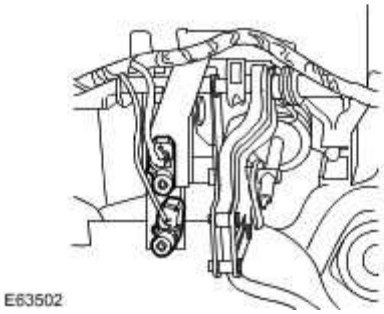

If the brake pedal is activated while the speed control system is active, the ECM receives a signal from the speed control deactivation switch. This will cancel speed control and allow the throttle blade to return to the position as demanded by the accelerator pedal.

Adaptive Speed Control

On vehicles for certain markets, an adaptive speed control system is installed as an option. In addition to the normal vehicle speed control functions, this system enables a preset distance to be maintained behind a moving vehicle immediately ahead, without driver intervention.

Automatic Switch Off - Vehicles with Adaptive Speed Control

The adaptive speed control will disengage, but not clear the memory when:

- the CANCEL button is operated.
- the brake pedal is applied.
- the vehicle speed falls below 26 kph (16 mile/h).
- neutral, park or reverse gear positions are selected.
- traction control is activated.
- cruise override activated for more than five minutes.

www.JagDocs.com

The adaptive speed control will disengage, and clear the memory when:

the ignition switch is set to position '0'.

a fault occurs in the adaptive speed control system.

Forward Alert Switch - Vehicles with Adaptive Speed Control

E63568

Forward Alert

The forward alert system is switched on and off by the forward alert switch, which is incorporated into the message center switch. The forward alert system additionally provides warnings while the adaptive speed control is not activated.

Speed Control Module - Vehicles with Adaptive Speed Control

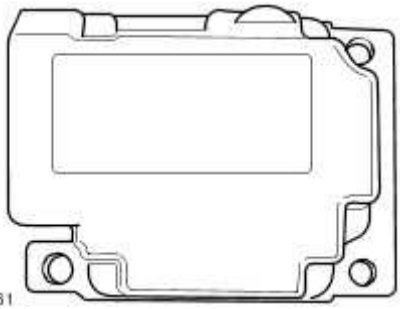

E64561

The speed control module provides system control functions.

Speed Control Sensor - Vehicles with Adaptive Speed Control

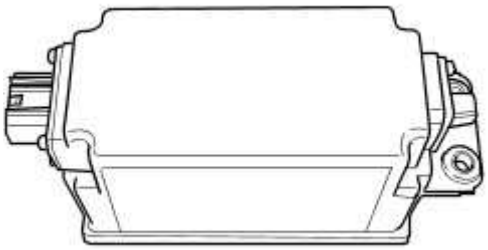

E63818

The speed control sensor incorporates the forward looking radar sensor.

Adaptive Speed Control Failure

If a fault occurs during any adaptive speed control operation, the adaptive speed control system will deactivate and will remain in this state until the fault is rectified. The 'CRUISE NOT AVAILABLE' message will be displayed on the message center on 'demand' by trying to operate the steering wheel control switches. This on 'demand' strategy is intended to show that adaptive speed control is not available and another fault may exist. For example: If an anti-lock brake system or traction control error message is displayed this would imply that the brake system may be effecting or inhibiting the adaptive speed control. If the message center displays 'CRUISE NOT AVAILABLE' permanently or no message is displayed, this may imply that the vehicle has an ECM fault.

Automatic Speed Limiter

The automatic speed limiter enables the vehicle speed to be limited. The vehicle speed is selected from the message center, the ECM limits the throttle response and stops the vehicle from accelerating over the preset speed limit.

Note: Automatic speed limiter is restricted to controlling the throttle only.

Note: Automatic speed limiter is unable to request automatic braking.

Automatic Speed Limiter Switch

Vehicles fitted with an automatic speed limiter are fitted with an automatic speed limiter master switch. This switch is intended for use as an automatic speed limiter ON/OFF switch, it also functions as a selection switch between adaptive/normal speed control and the automatic speed limiter options.

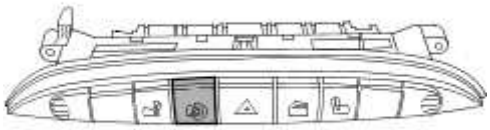

E63503

If the automatic speed limiter is selected the adaptive/normal speed control is cancelled.

If the automatic speed limiter is NOT selected the adaptive/normal speed control can be used.

The automatic speed limiter switch will be a standard fit to all XJ variations.

The automatic speed limiter switch is illuminated when switched on.

Cruise switches

Existing speed control; switch pack is used for automatic speed limiter.

Set +/- switch.

www.JagDocs.com

Resume switch.

Resume switch.

Cancel switch.

When adaptive speed control is fitted, the headway switches have no affect on automatic speed limiter.

Message center

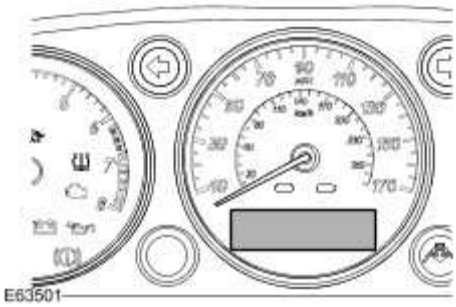

Automatic Speed Limiter Messages

The automatic speed limiter will keep the driver informed of it's status by displaying messages in the message center.

Message Displayed	Petrol Description	Diesel Description
LIMITER SET XXX mile/h	Display speed always shown to driver.	Display speed always shown to driver.
LIMITER SET XXX kph	Display speed always shown to driver.	Display speed always shown to driver.
TOO FAST TOO RESUME	Resume pressed at 25 +/- 5 kph above the previous set speed.	Resume pressed at 25 +/- 5 kph above the previous set speed.
OVER LIMIT + Amber light	Vehicle speed at 3 kph (1.8 mile/h) above speed limiter speed.	Vehicle speed at 3.25 kph (2.0 mile/h) above speed limiter speed.
OVER LIMIT + Flashing Amber Light	Vehicle speed at 15 kph (9.3 mile/h) above speed limiter speed.	Vehicle speed at 7.5 kph (4.6 mile/h) above speed limiter speed.
OVER LIMIT + Flashing Amber light + bong	Vehicle speed at 15 kph (9.3 mile/h) above speed limiter speed for period of time X.	Vehicle speed at 7.5 kph (4.6 mile/h) above speed limiter speed for period of time X.

Activation of the Automatic Speed Limiter

The driver has the ability to change trip units, which will make the display speed change in increments of 2 kph or 1 mile/h.

The automatic speed limiter can be set using the set +/- switch to the nearest 2 kph (1 mile/h) depending on the drivers selected trip units.

The automatic speed limiter can be ramped up to major increments of 10 kph or 5 mile/h depending on the drivers selected trip units.

The automatic speed limiter has a minimum set speed of approximately 32 kph (20 mile/h).

The automatic speed limiter will stay active and not cancel if the vehicle speed falls below the minimum set speed.

Maximum Operating Speed of the Automatic Speed Limiter

Engine	Maximum Speed
2.7L Diesel	249 kph (155 mile/h)
3.0L	249 kph (155 mile/h)
3.5L	249 kph (155 mile/h)
4.2L	249 kph (155 mile/h)
4.2L Supercharged	249 kph (155 mile/h)

www.JagDocs.com

Cancellation of the Automatic Speed Limiter

The following three actions will cause the automatic speed limiter to cancel.

Cancel switch.

Accelerator kick down.

De-selection by the master switch.

Service Issues

Limiter Not Available

It is difficult to get 'LIMITER NOT AVAILABLE' without a 'CRUISE NOT AVAILABLE' or a throttle malfunction. The automatic speed limiter is designed to limit the throttle and it is therefore very difficult to make the feature fail.

The automatic speed limiter shares the master ON/OFF switch and cruise switches with the speed

control/adaptive speed control. Any failure will inhibit the speed control/adaptive speed control as well as automatic speed limiter.

Over speed down hill

The automatic speed limiter does not have any brake assistance, this means automatic speed limiter will over speed on down hill gradients.

The message center will display over speed warnings if the pre set thresholds have been exceeded. This is the intended functionality.

When message center provides the driver with over speed warnings; it is the driver's responsibility to apply the brakes.

Ramp down of set speed

The driver has the ability to ramp down the set speed i.e. transition from 96.5 kph (60 mile/h) to 48.2 kph (30 mile/h) zone.

Automatic speed limiter is not able to apply the brakes. The vehicle will be slowed down by engine braking ONLY.

The message center will display over speed warnings if the preset thresholds have been exceeded. This is the intended functionality.

When message center provides the driver with over speed warnings; it is the driver's responsibility to apply the brakes.

Differences between Diesel and Petrol Automatic Speed Limiter

Set Events

The diesel automatic speed limiter is set by holding the set + switch for a specific (approximately 400ms) period of time.

The petrol automatic speed limiter is set by pressing and releasing the set + switch.

Automatic Speed Limiter, CC and ACC Tolerances

Both the adaptive speed control and the automatic speed limiter display a 'set speed' to the driver. This 'set speed' should match the speedometer, however it is acceptable for it to be within a tolerance of one increment +/- 1 kph (0.5 mile/h).

When switching between the automatic speed limiter and adaptive speed control functions there may be a difference in speed of +/- 2 kph or +/- 1 mile/h, this is acceptable due to both speeds being calculated on different modules. If the difference is greater than 4 kph or 2 mile/h there may be a configuration issue.

The ECM calculates the displayed speed for the automatic speed limiter.

The ACC module calculates the display speed for the adaptive speed control.

The speedo and set speed tolerance region will be approximately between 48 kph (30 mile/h) and 145 kph (90 mile/h). The speedometer may not match the set speeds when travelling in excess of 145 kph (90 mile/h), this is acceptable.

www.JagDocs.com

Speed Control - VIN Range: G00442->G45703

Principles of Operation

There are two types of speed (cruise) control fitted, adaptive cruise control (ACC) and non-adaptive cruise control.

The non-adaptive system maintains a road speed selected by the driver from the steering wheel switches, and is cancelled by inputs from the steering wheel **CANCEL** switch, the brake pedal (the system will disengage if the brake pedal is pressed), road speed (the system will disengage if the road speed falls below 26 kph [16 mph]), gear selector position (the system will disengage if **NEUTRAL, PARK** or **REVERSE** gears are selected), traction or stability control (the system will disengage if the traction or stability control is activated).

The adaptive system also maintains a road speed selected by the driver from the steering wheel switches, and is cancelled by the same inputs (the only difference being that the stored set speed will show in the message center display), but can also maintain a selected gap from the vehicle in front.

The ACC system fitted to this vehicle varies from past ACC systems in that the forward looking radar (FLR) sensor is a separate component and not integrated into the ACC module.

When the system is enabled, the vehicle will maintain the selected speed until another vehicle is detected travelling in the same lane and direction, when it will enter **FOLLOW MODE.**

In this mode, the vehicle will maintain a time gap from the vehicle in front, rather than the selected speed. **This is not a fault**, but a designed feature of the system. The time gap is adjustable, using the **HEADWAY** switches on the steering wheel switch assembly, but will default to a longer gap, unless overridden by the driver.

When the vehicle enters **FOLLOW MODE**, the message center will display the **ACC** tell-tale symbol (see the owner's handbook), with a **GAP** indication for four seconds, and the vehicle will maintain the gap from the vehicle in front until:

- the vehicle in front accelerates to a speed above the stored set speed, in which case the stored set speed will be resumed.
- the vehicle in front moves out of lane, or out of view, in which case the stored set speed will be resumed.
- the vehicle in front slows to below 26 km/h (16 mph), at which speed the system disengages, the message **DRIVER INTERVENE** will display on the message center accompanied by a chime,

and any braking applied by the ACC system will be smoothly reduced. **This is not a fault** but may involve the driver having to take control and brake him/herself.

a new gap distance is set by the driver from the steering wheel switches.

The ACC system can apply the brakes to maintain the gap to the vehicle in front. The braking force which the system can apply is limited, but can be overridden by the driver braking. This action will cancel the cruise control function, but the system will "remember" the stored set speed, and will resume the stored set speed by the driver pressing the **RESUME** switch on the steering wheel switch assembly.

NOTE:

When the system applies the brakes, the brake lights will function exactly as if the driver were braking.

It is possible (for example, when a slow-moving vehicle pulls out into the lane in front), for the degree of braking necessary to avoid a collision to exceed the maximum level of the ACC system. Should this happen, an audible warning will sound, accompanied by a **red** warning light and a **DRIVER INTERVENE** display on the message center, at which point, the driver must take action. **This is not a fault**, but a designed feature of the system.

Should the driver need to go faster than the stored set speed, he/she can override the system simply by pressing the accelerator, in which case, the message center will display **CRUISE OVERRIDE.** When the pedal is released, the system will resume operation in whichever mode is appropriate, follow or selected speed.

Detection

As with most sensors, there are certain conditions under which detection issues can occur. The owner/driver's attention should be drawn to the driver's handbook to avoid misunderstandings as to what is, and isn't, a fault.

Detection issues may occur:

when driving on a different line to the vehicle in front

when vehicles edge into your lane.

when going into or coming out of a bend.

with detecting motorcycles.

with detecting stationary objects, such as traffic queues, broken down vehicles, etc.

In circumstances such as these, the ACC system may brake late or unexpectedly, or may increase speed. **This is not a fault**, but is the system reacting to detection issues.

www.JagDocs.com

The owner's handbook makes it clear that the system should only be used under suitable conditions, but technicians should be wary of wasting time on complaints which are not actually faults.

Inspection and verification

1 . Verify the customer concern.

2 . Confirm which, if any, warning lights and/or messages were displayed on the instrument cluster.

NOTE:

If any warning lights and/or messages were displayed when the fault occurred, refer to the Driver Information table for DTCs associated with the display, then to the DTC index table for possible sources and actions. Some warnings will appear to clear when the ignition is cycled. This is often because the warning has flagged as a result of one of the vehicle's on-board diagnostic routines having run to detect the fault. If the same routine is not run when the ignition is switched **ON**, the warning will not reflag until the routine does run. See the DTC summaries for drive cycle routines.

3 . Visually inspect for obvious signs of mechanical or electrical damage.

Visual Inspection Chart

Mechanical	Electrical
FLR sensor levelling	Fuses
Engine oil level	Wiring harness
Cooling system coolant level	Electrical connector(s)
Fuel level	Controller Area Network (CAN) circuits
Fuel contamination/grade/quality	Sensor(s)
Throttle body	Engine control module (ECM)
Poly-vee belt	Transmission control module (TCM)

1 . Verify the following systems are working correctly:

air intake system

cooling system

charging system

fuel charging system

ignition system

braking system

2 . If an obvious cause for an observed or reported concern is found, correct the cause (if possible) before proceeding to the next step.

NOTE:

If a DTC cannot be cleared, then there is a permanent fault present that flags again as soon as it is cleared. (The exception to this is P1260, which will only clear following an ignition **OFF/ON** cycle after rectification).

3 . If the cause is not visually evident and the Jaguar approved diagnostic system is not available, use a scan tool to retrieve the fault codes before proceeding to the diagnostic trouble code (DTC) index chart, or the symptom chart if no DTCs are set.

Forward looking radar (FLR) sensor levelling

An incorrectly aligned FLR sensor can cause incorrect system operation. Before starting any repair work on the ACC system, check the levelling of the FLR sensor. This is carried out in a similar way to the module levelling in previous systems.

Symptom Chart

Symptom	Possible source	Action
Speed control inhibited or disabled	Default mode enabled Supply voltage to ACC module Supply voltage to FLR sensor Steering wheel speed control switch(es) Steering wheel speed control switch circuit Throttle sensors Stop lamp switch	Check message center for default message. For ACC module circuit tests, GO to Pinpoint Test G240073p9. For FLR sensor circuit tests, GO to Pinpoint Test G240073p9. For steering wheel speed control switch tests, GO to Pinpoint Test G240073p11. For steering wheel speed control switch circuit tests, GO to Pinpoint Test G240073p11. For 3.0 L engine throttle position sensor tests, Electronic Engine Controls - VIN Range: G00442->G45703 For 3.5 and 4.2 L engine throttle

www.JagDocs.com

		position sensor tests, Electronic Engine Controls - VIN Range: G00442->G45703 For brake cancel switch tests, GO to Pinpoint Test G240073p8.
Unable to regulate/adjust vehicle speed	Steering wheel switch malfunction	For speed control switch circuit tests, GO to Pinpoint Test G240073p11. For speed control switch input signal tests, GO to Pinpoint Test G240073p11.
Unable to cancel speed control from steering wheel	Steering wheel switch malfunction	For speed control switch circuit tests, GO to Pinpoint Test G240073p11. For speed control switch input signal tests, GO to Pinpoint Test G240073p11.
Unable to cancel speed control from brake pedal	Brake cancel switch malfunction	For brake cancel switch tests, GO to Pinpoint Test G240073p8.

Driver Information Chart

Warning light	Message	Default Mode	DTC
Red	Engine systems fault	Engine shut-down (all cylinders fuel cut)	P1224
Red	Engine systems fault	Limp-Home	P1229
Red	Engine systems fault	Limp-Home	P0121, P0122, P0123, P0222, P0223
Red	Engine systems fault	Limp-Home	P1251, P1631
Red	Engine systems fault	Limp-Home	P1611
Red	Engine systems fault	Limp-Home	P1633
Red	Engine systems	High idle	P1344, P1122, P1123, P1215, P1216

	fault		
Red	Restricted performance	Limp-Home unavailable	P1254
Red	Restricted performance	Limp-Home unavailable	P1250
Red	Restricted performance	Safety redundancy	P1657, P1658
Red	Restricted performance	Safety redundancy	P1634
None	Cruise overrride	None	None. See principles of operation in this section
Red	Driver intervene	None	None. See principles of operation in this section
Amber	Cruise not available	None	P1571
Amber	Cruise not available	None	P0568
Amber	Cruise not available	None	P0567
Amber	Cruise not available	None	P0570
Amber	Cruise not available	None	P0569
Amber	Cruise not available	None	P0566
Amber	Cruise not available	None	P1697
Amber	Cruise not available	None	P1696
Amber	Restricted	Engine speed limited	P0116, P0117, P0118, P0125

www.JagDocs.com

	performance		
Amber	Restricted performance	Engine speed limited	P0101, P0102, P0103, P0104
Amber	Restricted performance	Engine speed limited	P0300, P0301, p0302, P0303, P0304, P0305, P0306, P0307, P0308, P1313, P1314
Amber	Restricted performance	Engine speed limited	P0327, P0328, P0332, P0333, P1648
Amber	Restricted performance	Engine speed limited	P0351, P0352, P0353, P0354, P0355, P0356, P0357, P0358, P1367, P1368
Amber	Restricted performance	Engine speed limited	P0171, P0172, P0174, P0175
Amber	Restricted performance	Engine speed limited	P0201, P0202, P0203, P0204, P0205, P0206, P0207, P0208
Amber	Restricted performance	Engine speed limited	P0335, P0336
Amber	Restricted performance	Engine speed limited, reverse throttle progression enabled	P1642
Amber	Restricted performance	Engine speed limited, reverse throttle progression enabled	P1643
Amber	Restricted performance	Engine speed limited, reverse throttle progression enabled	P0096, P0097, P0098
Amber	Restricted performance	Engine speed limited, reverse throttle progression enabled	P1474
Amber	Restricted performance	Engine speed limited	P1234, P1236, P1338

Default mode definitions

Limp-Home Mode

Throttle motor off

Throttle motor relay off

Throttle motor circuit off

Fuel intervention

Speed (cruise) control inhibited

Limp-Home unavailable

Power limitation

Vehicle speed limited to 120 kph (75 mph)

Reverse throttle progression enabled

Speed (cruise) control inhibited

Reverse Throttle Progression

Throttle opening limited to maximum 30%

NOTE:

The throttle operation uses the same map as for reverse gear.

Engine Speed Limited

Engine runs normally, up to 3000 rpm

Engine speed restricted to 3000 rpm maximum, by fuel cut-off

High Idle

Throttle valve kept in fixed position by motor

Speed (cruise) control inhibited

Safety Redundancy

Power limitation

Vehicle speed limited to 120 kph (75 mph)

Reverse throttle progression enabled

Speed (cruise) control inhibited

www.JagDocs.com

Diagnostic trouble code (DTC) index

DTC	Description	Possible Source	Action
C1291	Forward Looking Radar (FLR) sensor temperature out of range	FLR sensor is too warm or too cold FLR sensor failure	Warm up or cool down the FLR sensor to above 40°C or below 70°C. CLEAR the DTC. TEST the system for normal operation. If the DTC is repeated, INSTALL a new FLR sensor.
C1292	FLR sensor blockage detection	FLR sensor is blocked	Remove any blockages (snow/leaves etc.) from the FLR sensor.
C1293	FLR sensor automatic alignment offset angle out of range	Sensor requires mechanical levelling FLR sensor is in service alignment mode	Check FLR sensor levelling. (This is done in a similar way to control module alignment in earlier systems). Complete service alignment. Refer to the Jaguar approved diagnostic system.
C1294	Active speed or vehicle speed out of range	Speed related fault with the engine control module (ECM), transmission control module (TCM), dynamic suspension control module (DSCM), or instrument cluster modules ACC module failure	Carry out a full vehicle DTC check. Check the ECM, TCM, DSCM, or instrument cluster modules for stored codes. If no DTC's are indicated in the ECM, TCM, DSCM, or instrument cluster modules, INSTALL a new ACC module.
C1459	Forward alert switch circuit failure	Forward alert switch failure Forward alert switch to ACC module circuit short circuit to B+ Forward alert switch to ACC module circuit open circuit	For forward alert switch circuit tests, GO to Pinpoint Test G240073p1.
C1748	Forward alert switch circuit short to GROUND	Forward alert switch failure Forward alert switch to ACC module circuit short circuit to GROUND	For forward alert switch circuit tests, GO to Pinpoint Test G240073p2.
B2373	Forward alert switch LED 1 circuit failure	Forward alert switch failure Forward alert switch LED to ACC module circuit short	For forward alert switch LED tests, GO to Pinpoint Test G240073p3.

		to B+ Forward alert switch LED to ACC module circuit open circuit	
C1920	Forward alert switch LED 1 circuit short to GROUND	Forward alert switch failure Forward alert switch LED to ACC module circuit short circuit to GROUND	For forward alert switch LED tests, GO to Pinpoint Test G240073p4.
C1935	Chime circuit failure	Chime module to ACC module circuit short to B+ Chime module to ACC module circuit open circuit	For adaptive speed control chime module circuit tests, GO to Pinpoint Test G240073p5.
B1342	Internal ACC module fault	ACC module failure	INSTALL a new ACC module.
B2369	Chime output circuit short to GROUND	Chime output circuit short to GROUND	For adaptive speed control chime module circuit tests, GO to Pinpoint Test G240073p6.
B2477	Module configuration failure	ACC module is not correctly configured	Configure the ACC module. Refer to the Jaguar approved diagnostic system.
U2023	CAN fault message received from other network modules	CAN/ACC module related fault with the ECM, TCM, DSCM, or instrument cluster modules ACC module internal CAN fault CAN network fault	Carry out a full vehicle DTC check. Check the ECM, TCM, DSCM, or instrument cluster modules for stored ACC related codes. For CAN circuit tests, Communications Network
U2520	CAN IC missing	IC CAN circuit short to B+, open circuit, short circuit to ground	For CAN circuit tests, Communications Network
U2521	CAN DSCM missing	DSCM CAN circuit short to B+, open circuit, short circuit to ground	For CAN circuit tests, Communications Network
U2522	CAN TCM missing	TCM CAN circuit short to B+, open circuit, short circuit to ground	For CAN circuit tests, Communications Network

www.JagDocs.com

U2523	CAN ECM missing	ECM CAN circuit short to B+, open circuit, short circuit to ground	For CAN circuit tests, Communications Network
U2516	CAN network fault	Can network circuit fault	For CAN circuit tests, Communications Network
U0433	Invalid data from FLR sensor	FLR sensor failure	INSTALL a new FLR sensor.
U0235	No communication with FLR sensor	FLR sensor FLR sensor CAN circuit	FLR sensor CAN circuit tests, GO to Pinpoint Test G240073p7.
P0610	ACC module vehicle option configuration error	ECM configuration does not support ACC	Check the configuration of the ECM. Refer to the Jaguar approved diagnostic system.
P2583	FLR sensor data	FLR sensor FLR sensor CAN circuit	FLR sensor CAN circuit tests, GO to Pinpoint Test G240073p7.

Pinpoint Tests

PINPOINT TEST G240073p1 : DTC C1459: FORWARD ALERT SWITCH CIRCUIT TESTS

G240073t1 : CHECK THE FORWARD ALERT SWITCH FOR OPEN CIRCUIT

1. Disconnect the battery negative terminal.
Battery Disconnect and Connect 2. Disconnect the ACC module connector IP78. 3. Disconnect the forward alert switch connector IP50. 4. Measure the resistance between the ACC module connector IP78, pin 20 (U) and forward alert switch connector IP50, pin 04 (U).

Is the resistance greater than 5 ohms?

-> Yes
REPAIR the high resistance circuit. For additional information, refer to the wiring diagrams. CLEAR the DTC. TEST the system for normal operation.

-> No
GO to Pinpoint Test G240073t8.

G240073t8 : CHECK THE FORWARD ALERT SWITCH FOR SHORT CIRCUIT TO B+

1. Reconnect the battery negative terminal.
Battery Connect (86.15.15) 2. Turn the ignition switch to the **ON** position. 3. Measure the voltage between the ACC module connector IP78, pin 20 (U) and GROUND.

Is the voltage greater than 3 volts?

-> Yes
REPAIR the short to B+. For additional information, refer to the wiring diagrams. CLEAR the DTC. TEST the system for normal operation.

-> No
INSTALL a new forward alert switch.
Speed Control Deactivator Switch (19.75.20) CLEAR the DTC. TEST the system for normal operation.
If the DTC is repeated, INSTALL a new ACC module.
Speed Control Module (19.75.26)

PINPOINT TEST G240073p2 : DTC C1748: FORWARD ALERT SWITCH CIRCUIT TEST

G240073t2 : CHECK THE FORWARD ALERT SWITCH CIRCUIT FOR SHORT CIRCUIT TO GROUND

1. Disconnect the battery negative terminal.
Battery Disconnect and Connect 2. Disconnect the ACC module connector IP78. 3. Disconnect the forward alert switch connector IP50. 4. Measure the resistance between the ACC module connector, pin 20 (U) and GROUND.

Is the resistance less than 10,000 ohms?

-> Yes
REPAIR the short to ground. For additional information, refer to the wiring diagrams. CLEAR the DTC. TEST the system for normal operation.

-> No
INSTALL a new forward alert switch.
Speed Control Deactivator Switch (19.75.20) CLEAR the DTC. TEST the system for normal operation.
If the DTC is repeated, INSTALL a new ACC module.
Speed Control Module (19.75.26)

www.JagDocs.com

PINPOINT TEST G240073p3 : DTC B2373: FORWARD ALERT SWITCH LED CIRCUIT TESTS

G240073t3 : CHECK THE FORWARD ALERT SWITCH LED CIRCUIT FOR OPEN CIRCUIT

1. Disconnect the battery negative terminal.
Battery Disconnect and Connect 2. Disconnect the ACC module connector IP78. 3. Disconnect the forward alert switch connector IP50. 4. Measure the resistance between the ACC module connector IP78, pin 05 (U) and forward alert switch connector IP50, pin 07 (U).

Is the resistance greater than 5 ohms?

-> Yes
REPAIR the high resistance circuit. For additional information, refer to the wiring diagrams. CLEAR the DTC. TEST the system for normal operation.

-> No
GO to Pinpoint Test G240073t9.

G240073t9 : CHECK THE FORWARD ALERT SWITCH LED CIRCUIT FOR SHORT CIRCUIT TO B+

1. Reconnect the battery negative terminal.
Battery Connect (86.15.15) 2. Turn the ignition switch to the **ON** position. 3. Measure the voltage between the ACC module connector IP78, pin 05 (U) and GROUND.

Is the voltage greater than 3 volts?

-> Yes
REPAIR the short to B+. For additional information, refer to the wiring diagrams. CLEAR the DTC. TEST the system for normal operation.

-> No
INSTALL a new forward alert switch.
Speed Control Deactivator Switch (19.75.20) CLEAR the DTC. TEST the system for normal operation. If the DTC is repeated, INSTALL a new ACC control module, not the forward looking sensor.

PINPOINT TEST G240073p4 : DTC C1920: FORWARD ALERT SWITCH LED CIRCUIT TESTS

G240073t4 : CHECK THE FORWARD ALERT SWITCH LED CIRCUIT FOR SHORT CIRCUIT TO GROUND

1. Disconnect the battery negative terminal.
Battery Disconnect and Connect 2. Disconnect the ACC module connector IP78. 3. Disconnect the forward alert switch connector IP50. 4. Measure the resistance between the ACC module connector, pin 05 (U) and GROUND.

Is the resistance less than 10,000 ohms?

-> Yes
REPAIR the short to ground. For additional information, refer to the wiring diagrams. CLEAR the DTC. TEST the system for normal operation.

-> No
INSTALL a new forward alert switch.
Speed Control Deactivator Switch (19.75.20) CLEAR the DTC. TEST the system for normal operation. If the DTC is repeated, INSTALL a new ACC control module, not the forward looking sensor.

PINPOINT TEST G240073p5 : DTC C1935: CHIME CIRCUIT TESTS

G240073t5 : CHECK THE CHIME CIRCUIT FOR OPEN CIRCUIT

1. Disconnect the battery negative terminal.
Battery Disconnect and Connect 2. Disconnect the ACC module connector IP78. 3. Disconnect the chime module connector IP11. 4. Measure the resistance between the ACC module connector IP78, pin 06 (R) and chime module connector IP11, pin 03 (R).

Is the resistance greater than 5 ohms?

-> Yes
REPAIR the open circuit. For additional information, refer to the wiring diagrams. CLEAR the DTC. TEST the system for normal operation.

-> No
GO to Pinpoint Test G240073t10.

G240073t10 : CHECK THE CHIME CIRCUIT FOR SHORT CIRCUIT TO B+

1. Reconnect the battery negative terminal.
Battery Connect (86.15.15) 2. Connect the battery ground terminal. 3. Turn the ignition switch to the **ON** position. 4. Measure the voltage between the ACC module connector IP78, pin 06 (R) and GROUND.

Is the voltage greater than 3 volts?

www.JagDocs.com

-> Yes
REPAIR the short to B+. For additional information, refer to the wiring diagrams. CLEAR the DTC. TEST the system for normal operation.

-> No
INSTALL a new chime module. CLEAR the DTC. TEST the system for normal operation, If the DTC is repeated, INSTALL a new ACC module.

PINPOINT TEST G240073p6 : DTC B2369: CHIME CIRCUIT TEST

G240073t6 : CHECK THE CHIME CIRCUIT FOR SHORT CIRCUIT TO GROUND

1. Disconnect the battery negative terminal.
Battery Disconnect and Connect 2. Disconnect the ACC module connector IP78. 3. Disconnect the chime module connector IP11. 4. Measure the resistance between the ACC module connector IP78, pin 06 (R) and GROUND.

Is the resistance less than 10,000 ohms?

-> Yes
REPAIR the short to ground. For additional information, refer to the wiring diagrams. CLEAR the DTC. TEST the system for normal operation.

-> No
INSTALL a new chime module. CLEAR the DTC. TEST the system for normal operation. If the DTC is repeated, INSTALL a new ACC module.

PINPOINT TEST G240073p7 : DTC U0235, P2583: FLR SENSOR CAN CIRCUIT TESTS

G240073t7 : CHECK THE ACC MODULE TO FLR SENSOR CAN 'L' CIRCUIT FOR OPEN CIRCUIT

1. Disconnect the battery negative terminal.
Battery Disconnect and Connect 2. Disconnect the ACC module connector IP78. 3. Disconnect the FLR sensor connector EC23. 4. Measure the resistance between the ACC module connector IP78, pin 02 (U) and FLR sensor connector EC23, pin 03 (U).

Is the resistance greater than 5 ohms?

-> Yes
CHECK connector IP55 for security. REPAIR the open circuit. For additional information, refer to the

wiring diagrams. CLEAR the DTC. TEST the system for normal operation.

-> No
GO to Pinpoint Test G240073t11.

G240073t11 : CHECK THE ACC MODULE TO FLR SENSOR CAN 'L' CIRCUIT FOR SHORT CIRCUIT TO B+

1. Reconnect the battery negative terminal.
Battery Connect (86.15.15) 2. Turn the ignition switch to the **ON** position. 3. Measure the voltage between the ACC module connector IP78, pin 02 (U) and GROUND.

Is the voltage greater than 3 volts?

-> Yes
REPAIR the short to B+. For additional information, refer to the wiring diagrams. CLEAR the DTC. TEST the system for normal operation.

-> No
GO to Pinpoint Test G240073t12.

G240073t12 : CHECK THE ACC MODULE TO FLR SENSOR CAN 'L' CIRCUIT FOR SHORT CIRCUIT TO GROUND

1. Measure the resistance between the ACC module connector IP78, pin 02 (U) and GROUND.

Is the resistance less than 10,000 ohms?

-> Yes
REPAIR the short to GROUND. For additional information, refer to the wiring diagrams. CLEAR the DTC. TEST the system for normal operation.

-> No
GO to Pinpoint Test G240073t13.

G240073t13 : CHECK THE ACC MODULE TO FLR SENSOR CAN 'H' CIRCUIT FOR OPEN CIRCUIT

1. Measure the resistance between the ACC module connector IP78, pin 03 (R) and FLR sensor connector EC23, pin 04 (R).

Is the resistance greater than 5 ohms?

-> Yes
CHECK connector IP55 for security. REPAIR the open circuit. For additional information, refer to the wiring diagrams. CLEAR the DTC. TEST the system for normal operation.

www.JagDocs.com

-> No
GO to Pinpoint Test G240073t14.

G240073t14 : CHECK THE ACC MODULE TO FLR SENSOR CAN 'H' CIRCUIT FOR SHORT CIRCUIT TO B+

1. Measure the voltage between the ACC module connector IP78, pin 03 (R) and GROUND.

Is the voltage greater than 3 volts?

-> Yes
REPAIR the short to B+. For additional information, refer to the wiring diagrams. CLEAR the DTC. TEST the system for normal operation.

-> No
GO to Pinpoint Test G240073t15.

G240073t15 : CHECK THE ACC MODULE TO FLR SENSOR CAN 'H' CIRCUIT FOR SHORT CIRCUIT TO GROUND

1. Measure the resistance between the ACC module connector IP78, pin 03 (R) and GROUND.

Is the resistance less than 10,000 ohms?

-> Yes
REPAIR the short to GROUND. For additional information, refer to the wiring diagrams. CLEAR the DTC. TEST the system for normal operation.

-> No
INSTALL a new FLR sensor. CLEAR the DTC. TEST the system for normal operation. If the DTC is repeated, INSTALL a new ACC control module.

PINPOINT TEST G240073p9 : ACC SYSTEM VOLTAGE TESTS

G240073t17 : CHECK THE IGNITION SUPPLY TO THE ACC MODULE

1. Disconnect the battery negative terminal.
Battery Disconnect and Connect 2. Disconnect the ACC module connector IP78. 3. Reconnect the battery negative terminal.
Battery Connect (86.15.15) 4. Turn the ignition switch to the **ON** position. 5. Measure the voltage between the ACC connector IP78, pin 14 (WG) and GROUND.

Is the voltage less than 10 volts?

-> Yes
REPAIR the circuit between the ACC connector IP78, pin 14 (WG) and battery. This circuit includes the passenger junction fuse box, (fuse 02). For additional information, refer to the wiring diagrams. TEST the system for normal operation.

-> No
GO to Pinpoint Test G240073t16.

G240073t16 : CHECK THE BATTERY SUPPLY TO THE ACC MODULE

1. Measure the voltage between the ACC connector IP78, pin 15 (NW) and GROUND.

Is the voltage less than 10 volts?

-> Yes
REPAIR the circuit between the ACC module connector IP78, pin 15 (NW) and battery. This circuit includes the passenger junction fuse box, (fuse 27 and the switched system power relay). For additional information, refer to the wiring diagrams. TEST the system for normal operation.

-> No
GO to Pinpoint Test G240073t20.

G240073t20 : CHECK THE GROUND TO THE ACC MODULE

1. Turn the ignition switch to the **OFF** position. 2. Disconnect the battery negative terminal. Battery Disconnect and Connect 3. Measure the resistance between the ACC connector IP78, pin 12 (B) and GROUND.

Is the resistance greater than 5 ohms?

-> Yes
REPAIR the circuit between the ACC module connector IP78, pin 12 (B) and ground connection G31AL. Check the ground connection for contamination and security. For additional information, refer to the wiring diagrams. TEST the system for normal operation.

-> No
GO to Pinpoint Test G240073t21.

G240073t21 : CHECK THE IGNITION SUPPLY TO THE FLR SENSOR

1. Disconnect the FLR sensor connector EC23. 2. Reconnect the battery negative terminal. Battery Connect (86.15.15) 3. Turn the ignition switch to the **ON** position. 4. Measure the voltage between the FLR sensor connector EC23, pin 01 (WG) and GROUND.

Is the voltage less than 10 volts?

www.JagDocs.com

-> Yes
REPAIR the circuit between the FLR connector EC23, pin 01 (WG) and battery. For additional information, refer to the wiring diagrams. TEST the system for normal operation.

-> No
GO to Pinpoint Test G240073t18.

G240073t18 : CHECK THE BATTERY SUPPLY TO THE FLR SENSOR

1. Measure the voltage between the FLR sensor connector EC23, pin 05 (NW) and GROUND.

Is the voltage less than 10 volts?

-> Yes
REPAIR the circuit between the FLR sensor connector EC23, pin 05 (NW) and battery. For additional information, refer to the wiring diagrams. TEST the system for normal operation.

-> No
GO to Pinpoint Test G240073t22.

G240073t22 : CHECK THE GROUND TO THE FLR SENSOR

1. Turn the ignition switch to the **OFF** position. 2. Measure the resistance between the FLR sensor connector EC23, pin 02 (B) and GROUND.

Is the resistance greater than 5 ohms?

-> Yes
REPAIR the circuit between the FLR sensor connector EC23, pin 02 (B) and ground connection G01AL. Check ground connection for contamination and security. For additional information, refer to the wiring diagrams. TEST the system for normal operation.

-> No
No fault is indicated with the ACC system supply voltages or grounds. To continue the diagnostics, return to the Symptom Chart.

PINPOINT TEST G240073p11 : SPEED CONTROL SWITCH CIRCUIT TESTS

G240073t19 : CHECK THE STEERING WHEEL SPEED CONTROL SWITCH CIRCUIT FOR OPEN CIRCUIT

1. Disconnect the battery negative terminal.
Battery Disconnect and Connect 2. Wait one minute for the system to become safe. 3. Disconnect

the ECM connector PI01. 4. Measure the resistance between the ECM connector PI01, pin 47 (WG) and ECM connector PI01, pin 48 (YG).

Is the resistance 4310 ohms?

-> Yes
GO to Pinpoint Test G240073t23.

-> No
GO to Pinpoint Test G240073t29.

G240073t23 : CHECK THE STEERING WHEEL SPEED CONTROL RESUME SWITCH CIRCUIT

1. Measure the resistance between the ECM connector PI01, pin 47 (WG) and ECM connector PI01, pin 48 (YG). 2. Operate the **RESUME** switch.

Does the resistance switch between 4310 ohms and 2110 ohms when the switch is operated?

-> Yes
GO to Pinpoint Test G240073t24.

-> No
INSTALL a new speed control switch assembly.
Speed Control Switch (19.75.25) TEST the system for normal operation.

G240073t24 : CHECK THE STEERING WHEEL SPEED CONTROL SET+ SWITCH CIRCUIT

1. Measure the resistance between the ECM connector PI01, pin 47 (WG) and ECM connector PI01, pin 48 (YG). 2. Operate the **SET+** switch.

Does the resistance switch between 4310 ohms and 1110 ohms when the switch is operated?

-> Yes
GO to Pinpoint Test G240073t25.

-> No
INSTALL a new speed control switch assembly.
Speed Control Switch (19.75.25) TEST the system for normal operation.

www.JagDocs.com

G240073t25 : CHECK THE STEERING WHEEL SPEED CONTROL HEADWAY- SWITCH CIRCUIT

1. Measure the resistance between the ECM connector PI01, pin 47 (WG) and ECM connector PI01, pin 48 (YG). 2. Operate the **HEADWAY-** switch.

Does the resistance switch between 4310 ohms and 600 ohms when the switch is operated?

-> Yes
GO to Pinpoint Test G240073t26.

-> No
INSTALL a new speed control switch assembly.
Speed Control Switch (19.75.25) TEST the system for normal operation.

G240073t26 : CHECK THE STEERING WHEEL SPEED CONTROL HEADWAY+ SWITCH CIRCUIT

1. Measure the resistance between the ECM connector PI01, pin 47 (WG) and ECM connector PI01, pin 48 (YG). 2. Operate the **HEADWAY+** switch.

Does the resistance switch between 4310 ohms and 300 ohms when the switch is operated?

-> Yes
GO to Pinpoint Test G240073t27.

-> No
INSTALL a new speed control switch assembly.
Speed Control Switch (19.75.25) TEST the system for normal operation.

G240073t27 : CHECK THE STEERING WHEEL SPEED CONTROL SET- SWITCH CIRCUIT

1. Measure the resistance between the ECM connector PI01, pin 47 (WG) and ECM connector PI01, pin 48 (YG). 2. Operate the **SET-** switch.

Does the resistance switch between 4310 ohms and 120 ohms when the switch is operated?

-> Yes
GO to Pinpoint Test G240073t28.

-> No
INSTALL a new speed control switch assembly.
Speed Control Switch (19.75.25) TEST the system for normal operation.

G240073t28 : CHECK THE STEERING WHEEL SPEED CONTROL CANCEL SWITCH CIRCUIT

1. Measure the resistance between the ECM connector PI01, pin 47 (WG) and ECM connector PI01, pin 48 (YG). 2. Operate the **CANCEL** switch.

Does the resistance switch between 4310 ohms and zero ohms when the switch is operated?

-> Yes
No fault is indicated with the steering wheel speed control switches or circuit. To continue the diagnostics, return to the Symptom Chart.

-> No
INSTALL a new speed control switch assembly.
Speed Control Switch (19.75.25) TEST the system for normal operation.

G240073t29 : CHECK THE STEERING WHEEL SPEED CONTROL SWITCH CIRCUIT FOR OPEN CIRCUIT

1. Disconnect the clockspring connector SW08. 2. Measure the resistance between the clockspring connector SW08, pin 08, component side and clockspring connector SW08, pin 06, component side.

Is the resistance 4310 ohms?

-> Yes
GO to Pinpoint Test G240073t31.

-> No
GO to Pinpoint Test G240073t30.

G240073t30 : CHECK THE STEERING WHEEL SPEED CONTROL SWITCH FOR OPEN CIRCUIT

1. Disconnect the steering wheel speed control switch. 2. Measure the resistance between the steering wheel speed control switch connector pins 01 and 02 component side.

Is the resistance 4310 ohms?

-> Yes
INSTALL a new clockspring.
Clockspring (86.65.92) TEST the system for normal operation.

-> No
INSTALL a new speed control switch assembly.
Speed Control Switch (19.75.25) TEST the system for normal operation.

www.JagDocs.com

G240073t31 : CHECK THE STEERING WHEEL SPEED CONTROL SWITCH CIRCUIT FOR OPEN CIRCUIT

1. Measure the resistance between the ECM connector PI01, pin 47 (WG) and clockspring connector SW08, pin 08 (YR).

Is the resistance greater than 5 ohms?

-> Yes
REPAIR the circuit ECM connector PI01, pin 47 (WG) to clockspring connector SW08, pin 08 (YR). For additional information, refer to the wiring diagrams. TEST the system for normal operation.

-> No
GO to Pinpoint Test G240073t36.

G240073t36 : CHECK THE STEERING WHEEL SPEED CONTROL SWITCH CIRCUIT FOR OPEN CIRCUIT

1. Measure the resistance between the ECM connector PI01, pin 48 (YG) and clockspring connector SW08, pin 06 (YG).

Is the resistance greater than 5 ohms?

-> Yes
REPAIR the circuit ECM connector PI01, pin 48 (YG) to clockspring connector SW08, pin 06 (YG). For additional information, refer to the wiring diagrams. TEST the system for normal operation.

-> No
INSTALL a new speed control switch assembly.
Speed Control Switch (19.75.25) TEST the system for normal operation.

PINPOINT TEST G240073p8 : BRAKE CANCEL SWITCH CIRCUIT TEST

G240073t32 : CHECK THE BRAKE CANCEL SWITCH CIRCUIT FOR OPEN

1. Disconnect the battery negative terminal.
Battery Disconnect and Connect 2. Disconnect the ECM connector PI01. 3. Reconnect the battery negative terminal.
Battery Connect (86.15.15) 4. Turn the ignition switch to the **ON** position. 5. Measure the voltage between the ECM connector PI01, pin 09 (U) and GROUND.

Is the voltage less than 12 volts?

-> Yes
GO to Pinpoint Test G240073t34.

-> No
GO to Pinpoint Test G240073t33.

G240073t33 : CHECK THE BRAKE CANCEL SWITCH FUNCTION

1. Press the **brake** pedal.

Does the voltage drop to zero with the brake pedal pressed?

-> Yes
No fault is indicated with the brake cancel switch or circuit. To continue the diagnostics, return to the Symptom Chart.

-> No
INSTALL a new brake cancel switch.
Speed Control Deactivator Switch (19.75.20) TEST the system for normal operation.

G240073t34 : CHECK THE VOLTAGE TO THE BRAKE CANCEL SWITCH

1. Disconnect the brake cancel switch connector SW08. 2. Measure the voltage between the brake cancel connector SW08, pin 01 (WG) and GROUND.

Is the voltage less than 10 volts?

-> Yes
REPAIR the circuit between the brake cancel switch connector SW08, pin 1 (WG) and splice ECS12. For additional information, refer to the wiring diagrams. TEST the system for normal operation.

-> No
GO to Pinpoint Test G240073t35.

G240073t35 : CHECK THE BRAKE CANCEL SWITCH CIRCUIT FOR OPEN CIRCUIT

1. Turn the ignition switch to the **OFF** position. 2. Measure the resistance between the ECM connector PI01, pin 09 (U) and brake cancel switch connector CR77, pin 02 (U).

Is the resistance greater than 5 ohms?

-> Yes
REPAIR the circuit between the ECM connector PI01, pin 09 (U) and the brake cancel switch connector CR77, pin 02 (U). For additional information, refer to the wiring diagrams. TEST the system for normal operation.

-> No

INSTALL a new brake cancel switch.
Speed Control Deactivator Switch (19.75.20) TEST the system for normal operation.

www.JagDocs.com

Speed Control - VIN Range: G45704->G99999

Principles of Operation

There are two types of speed (cruise) control fitted, adaptive cruise control (ACC) and non-adaptive cruise control.

For additional information on the operation of either system,
Speed Control - VIN Range: G45704->G99999

Inspection and verification

1 . Verify the customer concern.

2 . Confirm which, if any, warning lights and/or messages were displayed on the instrument cluster.

NOTE:

For information on the messages displayed, refer to the owner handbook.

3 . Visually inspect for obvious signs of mechanical or electrical damage.

Mechanical	Electrical
Forward looking radar (FLR) sensor levelling Obstructions in the way of the FLR sensor	Fuses/Relays Damaged, Loose or Corroded Connector(s) Damage to Wiring Loom/Incorrect Location, Stretched or Taught

4 . If an obvious cause for an observed or reported concern is found, correct the cause (if possible) before proceeding to the next step.

5 . If the cause is not visually evident use the Jaguar approved diagnostic system or a scan tool to retrieve the fault codes before proceeding to the DTC index or the symptom chart if no DTCs are set.

Forward looking radar (FLR) sensor levelling

An incorrectly aligned FLR sensor can cause incorrect system operation. Before starting any repair work on the ACC system, check the levelling of the FLR sensor. This is carried out in a similar way to the module levelling in previous systems.
Speed Control Module Alignment - VIN Range: H18680->H99999

Symptom Chart

Symptom	Possible source	Action
Speed control inhibited or disabled	Default mode enabled Supply voltage to ACC module Supply voltage to FLR sensor Steering wheel speed control switch(es) Steering wheel speed control switch circuit Throttle sensors Brake cancel switch	Check message center for default message. For ACC module circuit tests, GO to Pinpoint Test G532451p8. For FLR sensor circuit tests, GO to Pinpoint Test G532451p8. For steering wheel speed control switch tests, GO to Pinpoint Test G532451p9. For steering wheel speed control switch circuit tests, GO to Pinpoint Test G532451p9. For 3.0 L engine throttle position sensor tests, Electronic Engine Controls - VIN Range: G45704->G99999 For 3.5 and 4.2 L engine throttle position sensor tests, Electronic Engine Controls - VIN Range: G45704->G99999 For brake cancel switch tests, GO to Pinpoint Test G532451p10.
Unable to regulate/adjust vehicle speed	Steering wheel switch malfunction	For speed control switch circuit tests, GO to Pinpoint Test G532451p9. For speed control switch input signal tests, GO to Pinpoint Test G532451p9.
Unable to cancel speed control from steering wheel	Steering wheel switch malfunction	For speed control switch circuit tests, GO to Pinpoint Test G532451p9. For speed control switch input signal tests, GO to Pinpoint Test G532451p9.
Unable to cancel speed control from brake pedal	Brake cancel switch malfunction	For brake cancel switch tests, GO to Pinpoint Test G532451p10.

www.JagDocs.com

Diagnostic trouble code (DTC) index

CAUTION: When probing connectors to take measurements in the course of the pinpoint tests, use the adaptor kit, part number 3548-1358-00

NOTE:

If the control module/component is suspect and the vehicle remains under manufacturer warranty, refer to the Warranty Policy and Procedures manual (section B1.2), or determine if any prior approval program is in operation, prior to the installation of a new module.

NOTE:

When performing voltage or resistance tests, always use a digital multimeter (DMM) accurate to three decimal places and with a current calibration certificate. When testing resistance, always take the resistance of the DMM leads into account.

NOTE:

Check and rectify basic faults before beginning diagnostic routines that involve pinpoint tests.

NOTE:

Inspect connectors for signs of water ingress, and pins for damage and/or corrosion.

NOTE:

If DTCs are recorded and, after performing the pinpoint tests, a fault is not present, an intermittent concern may be the cause. Always check for loose connections and corroded terminals.

DTC	Description	Possible Source	Action
C1291	ACC Module Overheated	Forward Looking Radar (FLR) sensor is too warm or too cold FLR sensor failure	Carry out any pinpoint tests associated with this DTC using the manufacturer approved diagnostic system. CLEAR the DTC. TEST the system for correct operation. If the DTC returns, INSTALL a new FLR sensor.

C1292	ACC Blockage Detection	Forward Looking Radar (FLR) sensor is blocked	Remove any blockages (snow/leaves etc) from the FLR sensor. CLEAR the DTC. TEST the system for normal operation. If the DTC returns, INSTALL a new FLR sensor.
C1293	ACC Alignment Offset Angle Out of Range	Sensor requires mechanical levelling Forward Looking Radar (FLR) sensor is in service alignment mode	Carry out any pinpoint tests associated with this DTC using the manufacturer approved diagnostic system. Check FLR sensor levelling. (This is done in a similar way to control module alignment in earlier systems). Complete service alignment. Refer to the Jaguar approved diagnostic system.
C1294	ACC Active Speed Out of Range	Speed related fault with the engine control module (ECM), transmission control module (TCM), dynamic suspension control module (DSCM), or instrument cluster modules ACC module failure	Carry out any pinpoint tests associated with this DTC using the manufacturer approved diagnostic system. Carry out a full vehicle DTC check. Check the ECM, TCM, DSCM, or instrument cluster modules for stored codes. If no DTCs are indicated in the ECM, TCM, DSCM, or instrument cluster modules, INSTALL a new ACC module.
C1459	Adaptive Mode Switch - Circuit Failure	Forward alert switch failure Forward alert switch to ACC module circuit short circuit to power Forward alert switch to ACC module circuit open circuit	Refer to electrical circuit diagrams, notes and check the forward alert switch circuit for failure. For forward alert switch circuit tests, GO to Pinpoint Test G532451p1.
C1748	Switch input Circuit - Short to Ground	Forward alert switch failure Forward alert switch to ACC module circuit short circuit to GROUND	Carry out any pinpoint tests associated with this DTC using the manufacturer approved diagnostic system. Refer to electrical circuit diagrams, notes and check the forward alert switch circuit for short to ground. For forward alert switch circuit tests, GO to Pinpoint Test G532451p2.

www.JagDocs.com

B2373	LED #1 Circuit - Short to Power	Forward alert switch failure Forward alert switch LED to ACC module circuit short to power Forward alert switch LED to ACC module circuit open circuit	Refer to electrical circuit diagrams, notes and check Forward alert switch circuit for short to power. For forward alert switch LED tests, GO to Pinpoint Test G532451p3.
C1920	Led #1 Circuit Failure	Forward alert switch failure Forward alert switch LED to ACC module circuit short circuit to GROUND	Refer to electrical circuit diagrams, notes and check Forward alert switch circuit for short to ground. For forward alert switch LED tests, GO to Pinpoint Test G532451p4.
C1935	Chime Circuit Failure	Chime module to ACC module circuit short to power Chime module to ACC module circuit open circuit	Carry out any pinpoint tests associated with this DTC using the manufacturer approved diagnostic system. Refer to electrical circuit diagrams, notes and check chime module circuit for short to power or open circuit For adaptive speed control chime module circuit tests, GO to Pinpoint Test G532451p5.
B1342	ECU Is Faulted	ACC module failure	Suspect ACC module internal fault , check and replace as required, refer to the new module installation note at the top of the DTC Index
B2369	Chime OUTPUT Request Circuit - Short to Ground	Chime output circuit short to GROUND	Refer to electrical circuit diagrams, notes and check chime module circuit for short to ground. For adaptive speed control chime module circuit tests, GO to Pinpoint Test G532451p6.
B2477	Module Configuration Failure	ACC module is not correctly configured	Configure the ACC module. Refer to the Jaguar approved diagnostic system.
U0235	Lost Communication With Cruise Control Front Distance Range Sensor	Forward Looking Radar (FLR) sensor FLR sensor CAN circuit	Carry out any pinpoint tests associated with this DTC using the manufacturer approved diagnostic system. Refer to electrical circuit diagrams, notes and

	(FDSM)		check CAN bus circuit for fault. For FLR sensor CAN circuit tests, GO to Pinpoint Test G532451p7.
U0433	Invalid Data Received From Cruise Control Front Distance Range Sensor	Forward Looking Radar (FLR) sensor failure	INSTALL a new FLR sensor.
U2023	Fault Received From External Node	CAN Bus /ACC module related fault with the ECM, TCM, DSCM, or instrument cluster modules ACC module internal CAN fault CAN network fault	Carry out a full vehicle DTC check. Check the ECM, TCM, DSCM, or instrument cluster modules for stored ACC related codes. For CAN circuit tests, Communications Network
U2501	Missing Message From Engine Management System For ACC	Speed control module - CAN Bus circuit fault	Carry out any pinpoint tests associated with this DTC using the manufacturer approved diagnostic system. Check engine management system module for stored fault codes. Refer to electrical circuit diagrams, notes and check CAN Bus circuit for fault. For CAN circuit tests, Communications Network
U2502	Missing Message From Transmission Control Module For ACC	Speed control module - CAN Bus circuit fault	Carry out any pinpoint tests associated with this DTC using the manufacturer approved diagnostic system. Check transmission control module for stored fault codes. Refer to electrical circuit diagrams, notes and check CAN Bus circuit for fault. For CAN circuit tests, Communications Network
U2503	Missing Message From Instrument Cluster For ACC	Speed control module - CAN Bus circuit fault	Carry out any pinpoint tests associated with this DTC using the manufacturer approved diagnostic system. Check instrument cluster for stored fault codes. Refer to electrical circuit diagrams, notes and check CAN Bus circuit for fault. For CAN circuit tests,

www.JagDocs.com

			Communications Network
U2504	Missing Message From ABS For ACC	Speed control module - CAN Bus circuit fault	Check anti-lock brake system control module for related stored fault codes. Refer to electrical circuit diagrams, notes and check CAN Bus circuit for fault. For CAN circuit tests, Communications Network
U2505	Missing Message From Smart Booster Controller For ACC	Speed control module - CAN Bus circuit fault	Check smart booster controller module for related stored fault codes. Refer to electrical circuit diagrams, notes and check CAN Bus circuit for fault. For CAN circuit tests, Communications Network
U2516	CAN Bus Fault network fault	CAN Bus (network) circuit fault	Refer to electrical circuit diagrams, notes and check CAN Bus circuit for fault. For CAN circuit tests, Communications Network
U2520	CAN Bus Fault IC missing	Instrument Cluster CAN Bus circuit short to power, open circuit, short circuit to ground	Refer to electrical circuit diagrams, notes and check CAN Bus circuit to instrument cluster for fault. For CAN circuit tests, Communications Network
U2521	CAN Bus Fault ABS missing	DSC (ABS) CAN circuit short to power, open circuit, short circuit to ground	Refer to electrical circuit diagrams, notes and check CAN Bus circuit to ABS module for fault. For CAN circuit tests, Communications Network
U2522	CAN Bus Fault TCM missing	TCM CAN circuit short to power, open circuit, short circuit to ground	Refer to electrical circuit diagrams, notes and check CAN Bus circuit to TCM module for fault. For CAN circuit tests, Communications Network
U2523	CAN Bus Fault ECM missing	ECM CAN circuit short to power, open circuit, short circuit to ground	Refer to electrical circuit diagrams, notes and check CAN Bus circuit to ECM module for fault. For CAN circuit tests, Communications Network
P0610	Control Module Vehicle Options Error	ACC module not configured ACC configured to the	Configure the system using the manufacturer approved diagnostic system.

		wrong model year ACC module configured to the wrong fuel type Wrong brake system fitted	
P2583	Cruise Control Front Distance Range Sensor - Single Sensor or Center	FLR sensor FLR sensor CAN circuit	Carry out any pinpoint tests associated with this DTC using the manufacturer approved diagnostic system. Refer to electrical circuit diagrams, notes and check FLR circuit fault. For FLR sensor CAN circuit tests, GO to Pinpoint Test G532451p7.

www.JagDocs.com

Pinpoint Tests

PINPOINT TEST G532451p1 : FORWARD ALERT SWITCH CIRCUIT TESTS

G532451t1 : CHECK THE FORWARD ALERT SWITCH FOR OPEN CIRCUIT

1. Turn the ignition switch to the **OFF** position. 2. Disconnect the ACC module connector IP78. 3. Disconnect the forward alert switch connector IP50. 4. Measure the resistance between the ACC module connector IP78, pin 20 (U) and forward alert switch connector IP50, pin 04 (U).

Is the resistance greater than 5 ohms?

-> Yes
REPAIR the high resistance circuit. For additional information, refer to the wiring diagrams. CLEAR the DTC. TEST the system for normal operation.

-> No
GO to Pinpoint Test G532451t2.

G532451t2 : CHECK THE FORWARD ALERT SWITCH FOR SHORT CIRCUIT TO B+

1. Turn the ignition switch to the **ON** position. 2. Measure the voltage between the ACC module connector IP78, pin 20 (U) and GROUND.

Is the voltage greater than 3 volts?

-> Yes
REPAIR the short to B+. For additional information, refer to the wiring diagrams. CLEAR the DTC. TEST the system for normal operation.

-> No
INSTALL a new forward alert switch.
Speed Control Deactivator Switch (19.75.20) CLEAR the DTC. TEST the system for normal operation.
If the DTC is repeated, INSTALL a new ACC module.
Speed Control Module (19.75.26)

PINPOINT TEST G532451p2 : FORWARD ALERT SWITCH CIRCUIT TEST

G532451t3 : CHECK THE FORWARD ALERT SWITCH CIRCUIT FOR SHORT CIRCUIT TO GROUND

1. Turn the ignition switch to the **OFF** position. 2. Disconnect the ACC module connector IP78. 3. Disconnect the forward alert switch connector IP50. 4. Measure the resistance between the ACC module connector, IP78 pin 20 (U) and GROUND.

Is the resistance less than 10,000 ohms?

-> Yes
REPAIR the short to ground. For additional information, refer to the wiring diagrams. CLEAR the DTC. TEST the system for normal operation.

-> No
INSTALL a new forward alert switch.
Speed Control Deactivator Switch (19.75.20) CLEAR the DTC. TEST the system for normal operation.
If the DTC is repeated, INSTALL a new ACC module.
Speed Control Module (19.75.26)

PINPOINT TEST G532451p3 : FORWARD ALERT SWITCH LED CIRCUIT TESTS

G532451t4 : CHECK THE FORWARD ALERT SWITCH LED CIRCUIT FOR OPEN CIRCUIT

1. Turn the ignition switch to the **OFF** position. 2. Disconnect the ACC module connector IP78. 3. Disconnect the forward alert switch connector IP50. 4. Measure the resistance between the ACC module connector IP78, pin 05 (R) and forward alert switch connector IP50, pin 07 (R).

Is the resistance greater than 5 ohms?

-> Yes
REPAIR the high resistance circuit. For additional information, refer to the wiring diagrams. CLEAR the DTC. TEST the system for normal operation.

-> No
GO to Pinpoint Test G532451t5.

G532451t5 : CHECK THE FORWARD ALERT SWITCH LED CIRCUIT FOR SHORT CIRCUIT TO B+

1. Turn the ignition switch to the **ON** position. 2. Measure the voltage between the ACC module connector IP78, pin 05 (R) and GROUND.

Is the voltage greater than 3 volts?

-> Yes
REPAIR the short to B+. For additional information, refer to the wiring diagrams. CLEAR the DTC. TEST the system for normal operation.

-> No
INSTALL a new forward alert switch.
Speed Control Deactivator Switch (19.75.20) CLEAR the DTC. TEST the system for normal operation.
If the DTC is repeated, INSTALL a new ACC control module, not the forward looking sensor.

PINPOINT TEST G532451p4 : FORWARD ALERT SWITCH LED CIRCUIT TESTS

G532451t6 : CHECK THE FORWARD ALERT SWITCH LED CIRCUIT FOR SHORT CIRCUIT TO GROUND

1. Turn the ignition switch to the **OFF** position. 2. Disconnect the ACC module connector IP78. 3. Disconnect the forward alert switch connector IP50. 4. Measure the resistance between the ACC module connector IP78, pin 05 (R) and GROUND.

Is the resistance less than 10,000 ohms?

www.JagDocs.com

-> Yes
REPAIR the short to ground. For additional information, refer to the wiring diagrams. CLEAR the DTC. TEST the system for normal operation.

-> No
INSTALL a new forward alert switch.
Speed Control Deactivator Switch (19.75.20) CLEAR the DTC. TEST the system for normal operation. If the DTC is repeated, INSTALL a new ACC control module, not the forward looking sensor.

PINPOINT TEST G532451p5 : CHIME CIRCUIT TESTS

G532451t7 : CHECK THE CHIME CIRCUIT FOR OPEN CIRCUIT

1. Turn the ignition switch to the **OFF** position. 2. Disconnect the ACC module connector IP78. 3. Disconnect the chime module connector IP11. 4. Measure the resistance between the ACC module connector IP78, pin 06 (R) and chime module connector IP11, pin 03 (R).

Is the resistance greater than 5 ohms?

-> Yes
REPAIR the open circuit. For additional information, refer to the wiring diagrams. CLEAR the DTC. TEST the system for normal operation.

-> No
GO to Pinpoint Test G532451t8.

G532451t8 : CHECK THE CHIME CIRCUIT FOR SHORT CIRCUIT TO B+

1. Turn the ignition switch to the **ON** position. 2. Measure the voltage between the ACC module connector IP78, pin 06 (R) and GROUND.

Is the voltage greater than 3 volts?

-> Yes
REPAIR the short to B+. For additional information, refer to the wiring diagrams. CLEAR the DTC. TEST the system for normal operation.

-> No
INSTALL a new chime module. CLEAR the DTC. TEST the system for normal operation, If the DTC is repeated, INSTALL a new ACC module.

PINPOINT TEST G532451p6 : CHIME CIRCUIT TEST

G532451t9 : CHECK THE CHIME CIRCUIT FOR SHORT CIRCUIT TO GROUND

1. Turn the ignition switch to the **OFF** position. 2. Disconnect the ACC module connector IP78. 3. Disconnect the chime module connector IP11. 4. Measure the resistance between the ACC module connector IP78, pin 06 (R) and GROUND.

Is the resistance less than 10,000 ohms?

-> Yes
REPAIR the short to ground. For additional information, refer to the wiring diagrams. CLEAR the DTC. TEST the system for normal operation.

-> No
INSTALL a new chime module. CLEAR the DTC. TEST the system for normal operation. If the DTC is repeated, INSTALL a new ACC module.

PINPOINT TEST G532451p7 : FLR SENSOR CAN CIRCUIT TESTS

G532451t10 : CHECK THE ACC MODULE TO FLR SENSOR CAN 'L' CIRCUIT FOR OPEN CIRCUIT

1. Turn the ignition switch to the **OFF** position. 2. Disconnect the ACC module connector IP78. 3. Disconnect the FLR sensor connector EC23. 4. Measure the resistance between the ACC module connector IP78, pin 02 (U) and FLR sensor connector EC23, pin 03 (U).

Is the resistance greater than 5 ohms?

-> Yes
CHECK connector IP55 for security. REPAIR the open circuit. For additional information, refer to the wiring diagrams. CLEAR the DTC. TEST the system for normal operation.

-> No
GO to Pinpoint Test G532451t11.

G532451t11 : CHECK THE ACC MODULE TO FLR SENSOR CAN 'L' CIRCUIT FOR SHORT CIRCUIT TO B+

1. Turn the ignition switch to the **ON** position. 2. Measure the voltage between the ACC module connector IP78, pin 02 (U) and GROUND.

Is the voltage greater than 3 volts?

-> Yes
REPAIR the short to Power. For additional information, refer to the wiring diagrams. CLEAR the DTC. TEST the system for normal operation.

www.JagDocs.com

-> No
GO to Pinpoint Test G532451t12.

G532451t12 : CHECK THE ACC MODULE TO FLR SENSOR CAN 'L' CIRCUIT FOR SHORT CIRCUIT TO GROUND

1. Turn the ignition switch to the **OFF** position. 2. Measure the resistance between the ACC module connector IP78, pin 02 (U) and GROUND.

Is the resistance less than 10,000 ohms?

-> Yes
REPAIR the short to GROUND. For additional information, refer to the wiring diagrams. CLEAR the DTC. TEST the system for normal operation.

-> No
GO to Pinpoint Test G532451t13.

G532451t13 : CHECK THE ACC MODULE TO FLR SENSOR CAN 'H' CIRCUIT FOR OPEN CIRCUIT

1. Measure the resistance between the ACC module connector IP78, pin 03 (R) and FLR sensor connector EC23, pin 04 (R).

Is the resistance greater than 5 ohms?

-> Yes
CHECK connector IP55 for security. REPAIR the open circuit. For additional information, refer to the wiring diagrams. CLEAR the DTC. TEST the system for normal operation.

-> No
GO to Pinpoint Test G532451t14.

G532451t14 : CHECK THE ACC MODULE TO FLR SENSOR CAN 'H' CIRCUIT FOR SHORT CIRCUIT TO Power

1. Turn the ignition switch to the **ON** position. 2. Measure the voltage between the ACC module connector IP78, pin 03 (R) and GROUND.

Is the voltage greater than 3 volts?

-> Yes
REPAIR the short to Power. For additional information, refer to the wiring diagrams. CLEAR the DTC. TEST the system for normal operation.

-> No
GO to Pinpoint Test G532451t15.

G532451t15 : CHECK THE ACC MODULE TO FLR SENSOR CAN 'H' CIRCUIT FOR SHORT CIRCUIT TO GROUND

1. Turn the ignition switch to the **OFF** position. 2. Measure the resistance between the ACC module connector IP78, pin 03 (R) and GROUND.

Is the resistance less than 10,000 ohms?

-> Yes
REPAIR the short to GROUND. For additional information, refer to the wiring diagrams. CLEAR the DTC. TEST the system for normal operation.

-> No
INSTALL a new FLR sensor. CLEAR the DTC. TEST the system for normal operation. If the DTC is repeated, INSTALL a new ACC control module.

PINPOINT TEST G532451p8 : ACC SYSTEM VOLTAGE TESTS

G532451t16 : CHECK THE IGNITION SUPPLY TO THE ACC MODULE

1. Turn the ignition switch to the **OFF** position. 2. Disconnect the ACC module connector IP78. 3. Turn the ignition switch to the **ON** position. 4. Measure the voltage between the ACC connector IP78, pin 14 (WG) and GROUND.

Is the voltage less than 10 volts?

-> Yes
REPAIR the circuit between the ACC connector IP78, pin 14 (WG) and battery. This circuit includes the passenger junction fuse box, (fuse 02). For additional information, refer to the wiring diagrams. TEST the system for normal operation.

-> No
GO to Pinpoint Test G532451t17.

G532451t17 : CHECK THE BATTERY SUPPLY TO THE ACC MODULE

1. Measure the voltage between the ACC connector IP78, pin 15 (NW) and GROUND.

Is the voltage less than 10 volts?

www.JagDocs.com

-> Yes
REPAIR the circuit between the ACC module connector IP78, pin 15 (NW) and battery. This circuit includes the passenger junction fuse box, (fuse 27 and the switched system power relay). For additional information, refer to the wiring diagrams. TEST the system for normal operation.

-> No
GO to Pinpoint Test G532451t18.

G532451t18 : CHECK THE GROUND TO THE ACC MODULE

1. Turn the ignition switch to the **OFF** position. 2. Measure the resistance between the ACC connector IP78, pin 12 (B) and GROUND.

Is the resistance greater than 5 ohms?

-> Yes
REPAIR the circuit between the ACC module connector IP78, pin 12 (B) and ground connection G31BS. Check the ground connection for contamination and security. For additional information, refer to the wiring diagrams. TEST the system for normal operation.

-> No
GO to Pinpoint Test G532451t19.

G532451t19 : CHECK THE IGNITION SUPPLY TO THE FLR SENSOR

1. Disconnect the FLR sensor connector EC23. 2. Turn the ignition switch to the **ON** position. 3. Measure the voltage between the FLR sensor connector EC23, pin 01 (WG) and GROUND.

Is the voltage less than 10 volts?

-> Yes
REPAIR the circuit between the FLR connector EC23, pin 01 (WG) and battery. For additional information, refer to the wiring diagrams. TEST the system for normal operation.

-> No
GO to Pinpoint Test G532451t20.

G532451t20 : CHECK THE BATTERY SUPPLY TO THE FLR SENSOR

1. Measure the voltage between the FLR sensor connector EC23, pin 05 (NW) and GROUND.

Is the voltage less than 10 volts?

-> Yes
REPAIR the circuit between the FLR sensor connector EC23, pin 05 (NW) and battery. For additional information, refer to the wiring diagrams. TEST the system for normal operation.

-> No
GO to Pinpoint Test G532451t21.

G532451t21 : CHECK THE GROUND TO THE FLR SENSOR

1. Turn the ignition switch to the **OFF** position. 2. Measure the resistance between the FLR sensor connector EC23, pin 02 (B) and GROUND.

Is the resistance greater than 5 ohms?

-> Yes
REPAIR the circuit between the FLR sensor connector EC23, pin 02 (B) and ground connection G01AR. Check ground connection for contamination and security. For additional information, refer to the wiring diagrams. TEST the system for normal operation.

-> No
No fault is indicated with the ACC system supply voltages or grounds. To continue the diagnostics, return to the Symptom Chart.

PINPOINT TEST G532451p9 : SPEED CONTROL SWITCH CIRCUIT TESTS

G532451t22 : CHECK THE STEERING WHEEL SPEED CONTROL SWITCH CIRCUIT FOR OPEN CIRCUIT

1. Disconnect the battery negative terminal.
Battery Disconnect and Connect 2. Wait one minute for the system to become safe. 3. Disconnect the ECM connector, EC300 (petrol) or EC66 (diesel). 4. Measure the resistance between the ECM connector:

(Petrol) EC300, pin 35 (YG) and EC300, pin 30 (YR).

(Diesel) EC66, pin B4 (YG) and EC66, pin C4 (YR).

Is the resistance 4310 ohms?

-> Yes
GO to Pinpoint Test G532451t23.

-> No
GO to Pinpoint Test G532451t29.

www.JagDocs.com

G532451t23 : CHECK THE STEERING WHEEL SPEED CONTROL RESUME SWITCH CIRCUIT

1. Measure the resistance between the ECM connector:

(Petrol) EC300, pin 35 (YG) and EC300, pin 30 (YR).

(Diesel) EC66, pin B4 (YG) and EC66, pin C4 (YR). 2. Operate the **RESUME** switch.

Does the resistance switch between 4310 ohms and 2110 ohms when the switch is operated?

-> Yes
GO to Pinpoint Test G532451t24.

-> No
INSTALL a new speed control switch assembly.
Speed Control Switch (19.75.25) TEST the system for normal operation.

G532451t24 : CHECK THE STEERING WHEEL SPEED CONTROL SET+ SWITCH CIRCUIT

1. Measure the resistance between the ECM connector:

(Petrol) EC300, pin 35 (YG) and EC300, pin 30 (YR).

(Diesel) EC66, pin B4 (YG) and EC66, pin C4 (YR). 2. Operate the **SET+** switch.

Does the resistance switch between 4310 ohms and 1110 ohms when the switch is operated?

-> Yes
GO to Pinpoint Test G532451t25.

-> No
INSTALL a new speed control switch assembly.
Speed Control Switch (19.75.25) TEST the system for normal operation.

G532451t25 : CHECK THE STEERING WHEEL SPEED CONTROL HEADWAY-SWITCH CIRCUIT

1. Measure the resistance between the ECM connector:

(Petrol) EC300, pin 35 (YG) and EC300, pin 30 (YR).

(Diesel) EC66, pin B4 (YG) and EC66, pin C4 (YR). 2. Operate the **HEADWAY-** switch.

Does the resistance switch between 4310 ohms and 600 ohms when the switch is operated?

-> Yes
GO to Pinpoint Test G532451t26.

-> No
INSTALL a new speed control switch assembly.
Speed Control Switch (19.75.25) TEST the system for normal operation.

G532451t26 : CHECK THE STEERING WHEEL SPEED CONTROL HEADWAY+ SWITCH CIRCUIT

1. Measure the resistance between the ECM connector:

(Petrol) EC300, pin 35 (YG) and EC300, pin 30 (YR).

(Diesel) EC66, pin B4 (YG) and EC66, pin C4 (YR). 2. Operate the **HEADWAY+** switch.

Does the resistance switch between 4310 ohms and 300 ohms when the switch is operated?

-> Yes
GO to Pinpoint Test G532451t27.

-> No
INSTALL a new speed control switch assembly.
Speed Control Switch (19.75.25) TEST the system for normal operation.

G532451t27 : CHECK THE STEERING WHEEL SPEED CONTROL SET- SWITCH CIRCUIT

1. Measure the resistance between the ECM connector:

(Petrol) EC300, pin 35 (YG) and EC300, pin 30 (YR).

(Diesel) EC66, pin B4 (YG) and EC66, pin C4 (YR). 2. Operate the **SET-** switch.

Does the resistance switch between 4310 ohms and 120 ohms when the switch is operated?

-> Yes
GO to Pinpoint Test G532451t28.

-> No
INSTALL a new speed control switch assembly.
Speed Control Switch (19.75.25) TEST the system for normal operation.

www.JagDocs.com

G532451t28 : CHECK THE STEERING WHEEL SPEED CONTROL CANCEL SWITCH CIRCUIT

1. Measure the resistance between the ECM connector:

(Petrol) EC300, pin 35 (YG) and EC300, pin 30 (YR).

(Diesel) EC66, pin B4 (YG) and EC66, pin C4 (YR). 2. Operate the **CANCEL** switch.

Does the resistance switch between 4310 ohms and zero ohms when the switch is operated?

-> Yes
No fault is indicated with the steering wheel speed control switches or circuit. To continue the diagnostics, return to the Symptom Chart.

-> No
INSTALL a new speed control switch assembly.
Speed Control Switch (19.75.25) TEST the system for normal operation.

G532451t29 : CHECK THE STEERING WHEEL SPEED CONTROL SWITCH CIRCUIT FOR OPEN CIRCUIT

1. Disconnect the clockspring connector SW08. 2. Measure the resistance between the clockspring connector SW08, pin 08, component side and clockspring connector SW08, pin 06, component side.

Is the resistance 4310 ohms?

-> Yes
GO to Pinpoint Test G532451t31.

-> No
GO to Pinpoint Test G532451t30.

G532451t30 : CHECK THE STEERING WHEEL SPEED CONTROL SWITCH FOR OPEN CIRCUIT

1. Disconnect the steering wheel speed control switch. 2. Measure the resistance between the steering wheel speed control switch connector pins 01 and 02 component side.

Is the resistance 4310 ohms?

-> Yes
INSTALL a new clockspring.
Clockspring (86.65.92) TEST the system for normal operation.

-> No

INSTALL a new speed control switch assembly.
Speed Control Switch (19.75.25) TEST the system for normal operation.

G532451t31 : CHECK THE STEERING WHEEL SPEED CONTROL SWITCH CIRCUIT FOR OPEN CIRCUIT

1. Measure the resistance between the clockspring connector SW08, pin 08 (YR) and the ECM connector:

(Petrol) EC300, pin 30 (YR).

(Diesel) EC66, pin C4 (YR).

Is the resistance greater than 5 ohms?

-> Yes
REPAIR the circuit ECM connector to clockspring connector SW08, pin 08 (YR). For additional information, refer to the wiring diagrams. TEST the system for normal operation.

-> No
GO to Pinpoint Test G532451t32.

G532451t32 : CHECK THE STEERING WHEEL SPEED CONTROL SWITCH CIRCUIT FOR OPEN CIRCUIT

1. Measure the resistance between the clockspring connector SW08, pin 06 (YG) and the ECM connector:

(Petrol) EC300, pin 35 (YG).

(Diesel) EC66, pin B4 (YG).

Is the resistance greater than 5 ohms?

-> Yes
REPAIR the circuit ECM connector to clockspring connector SW08, pin 06 (YG). For additional information, refer to the wiring diagrams. TEST the system for normal operation.

-> No
INSTALL a new speed control switch assembly.
Speed Control Switch (19.75.25) TEST the system for normal operation.

www.JagDocs.com

PINPOINT TEST G532451p10 : BRAKE CANCEL SWITCH CIRCUIT TEST (PETROL VEHICLES)

G532451t38 : CHECK THE BRAKE CANCEL SWITCH FUNCTION, WITH THE BRAKE PEDAL RELEASED

1. Turn the ignition switch to the **OFF** position. 2. Disconnect the brake cancel switch connector CR77. 3. Measure the resistance between the brake cancel switch connector CR77, pin 01 component side and the brake cancel switch connector CR77, pin 02 component side.

Is the resistance greater than 5 ohms?

-> Yes
INSTALL a new brake cancel switch.
Speed Control Deactivator Switch (19.75.20) TEST the system for normal operation.

-> No
GO to Pinpoint Test G532451t39.

G532451t39 : CHECK THE BRAKE CANCEL SWITCH FUNCTION, WITH THE BRAKE PEDAL DEPRESSED

1. Measure the resistance between the brake cancel switch connector CR77, pin 01 component side and the brake cancel switch connector CR77, pin 02 component side.

Is the resistance greater than 10,000 ohms?

-> Yes
GO to Pinpoint Test G532451t33.

-> No
INSTALL a new brake cancel switch.
Speed Control Deactivator Switch (19.75.20) TEST the system for normal operation.

G532451t33 : CHECK THE BRAKE CANCEL SWITCH GROUND CIRCUIT FOR OPEN CIRCUIT

1. Measure the resistance between the brake cancel switch connector CR77, pin 01 (B) and GROUND.

Is the resistance greater than 5 ohms?

-> Yes
REPAIR the circuit between the brake cancel switch connector CR77, pin 01 (B) and GROUND. For

additional information, refer to the wiring diagrams. TEST the system for normal operation.

-> No
GO to Pinpoint Test G532451t34.

G532451t34 : CHECK THE ECM TO BRAKE CANCEL SWITCH CIRCUIT FOR OPEN CIRCUIT

1. Disconnect the ECM connector, EC300. 2. Measure the resistance between the ECM connector EC300, pin 40 (U) and brake cancel switch connector CR77, pin 02 (U).

Is the resistance greater than 5 ohms?

-> Yes
REPAIR the circuit between the ECM connector EC300, pin 40 (U) and brake cancel switch connector CR77, pin 02 (U). For additional information, refer to the wiring diagrams. TEST the system for normal operation.

-> No
No fault is indicated with the brake cancel switch or circuit. To continue the diagnostics, return to the Symptom Chart.

PINPOINT TEST G532451p11 : BRAKE CANCEL SWITCH CIRCUIT TEST (DIESEL VEHICLES)

G532451t37 : CHECK THE BRAKE CANCEL SWITCH OUTPUT VOLTAGE

1. Turn the ignition switch to the **OFF** position. 2. Disconnect the ECM connector EC66. 3. Turn the ignition switch to the **ON** position. 4. Measure the voltage between the ECM connector EC66, pin E3 (U) and GROUND.

Is the voltage less than 12 volts?

-> Yes
GO to Pinpoint Test G532451t36.

-> No
GO to Pinpoint Test G532451t35.

G532451t35 : CHECK THE BRAKE CANCEL SWITCH FUNCTION

1. Press the **brake** pedal.

www.JagDocs.com

Does the voltage drop to zero with the brake pedal pressed?

-> Yes
No fault is indicated with the brake cancel switch or circuit. To continue the diagnostics, return to the Symptom Chart.

-> No
INSTALL a new brake cancel switch.
Speed Control Deactivator Switch (19.75.20) TEST the system for normal operation.

G532451t36 : CHECK THE VOLTAGE TO THE BRAKE CANCEL SWITCH

1. Disconnect the brake cancel switch connector CR77. 2. Measure the voltage between the brake cancel connector CR77, pin 01 (WG) and GROUND.

Is the voltage less than 10 volts?

-> Yes
REPAIR the circuit between the brake cancel switch connector CR77, pin 1 (WG) and splice ECS12. For additional information, refer to the wiring diagrams. TEST the system for normal operation.

-> No
GO to Pinpoint Test G532451t40.

G532451t40 : CHECK THE BRAKE CANCEL SWITCH TO ECM CIRCUIT FOR OPEN CIRCUIT

1. Turn the ignition switch to the **OFF** position. 2. Measure the resistance between the ECM connector EC66, pin E3 (U) and brake cancel switch connector CR77, pin 02 (U).

Is the resistance greater than 5 ohms?

-> Yes
REPAIR the circuit between the ECM connector EC66, pin E3 (U) and the brake cancel switch connector CR77, pin 02 (U). For additional information, refer to the wiring diagrams. TEST the system for normal operation.

-> No
INSTALL a new brake cancel switch.
Speed Control Deactivator Switch (19.75.20) TEST the system for normal operation.

Speed Control Deactivator Switch (19.75.20)

Removal

1 . Remove the driver side instrument panel lower panel.

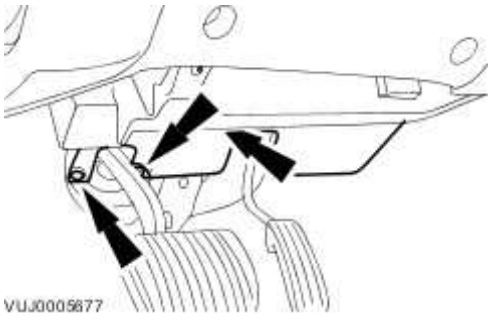

2 . Reposition the driver seat to its maximum rearward position.

3 . Remove the speed control deactivator switch.

1) Disconnect the speed control deactivator switch electrical connector.

2) Remove the speed control deactivator switch.

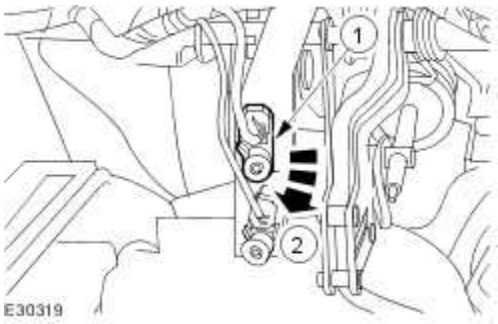

Installation

1 To install, reverse the removal procedure.

.

www.JagDocs.com

- Operate the brake pedal to allow the speed control deactivator switch to remain in the fully extended position during installation.

- Releasing and then pulling back on the pedal untill the pedal reaches the stop in the brake booster, will adjust the speed control de-activator switch plunger to the required setting.

Speed Control Module (19.75.26)

Removal

1. **CAUTION: Electronic modules are sensitive to static electrical charges. If exposed to these charges, damage may result.**

NOTE:

Make sure the audio unit keycode is available before disconnecting the battery ground cable.

Disconnect the battery ground cable.
For additional information, refer to Battery Disconnect and Connect

2 . Remove the driver side instrument panel lower trim.

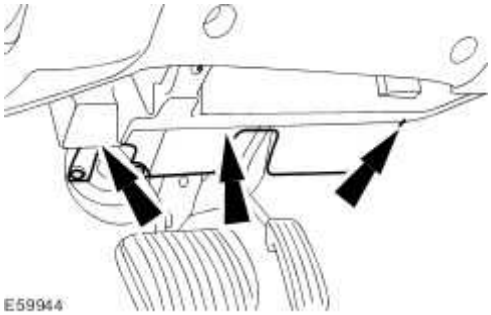

3 . Remove the instrument panel trim.

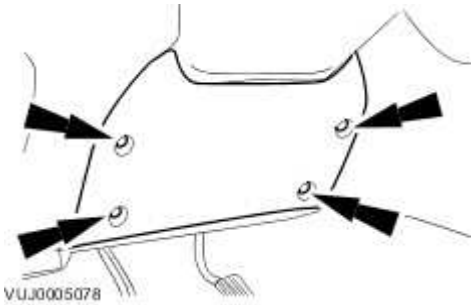

4 . Disconnect the speed control module electrical connector.

www.JagDocs.com

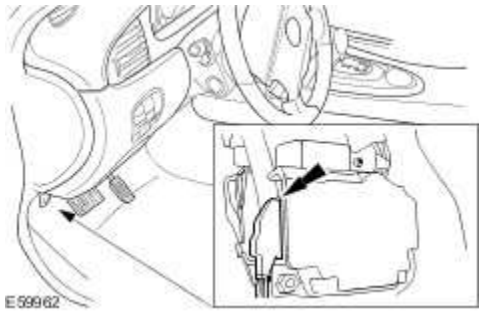

5 . Remove the speed control module.

- Remove the speed control module retaining nuts.

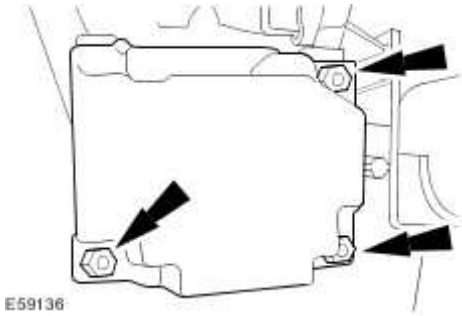

Installation

1 . Install the speed control module.

- Tighten to 5 Nm.

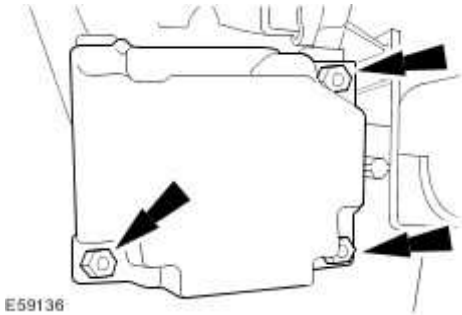

2 . Connect the speed control module electrical connector.

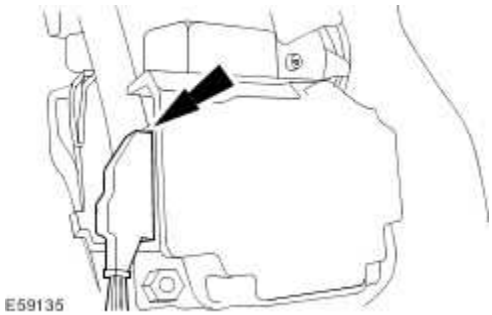

3 . Install the instrument panel trim.

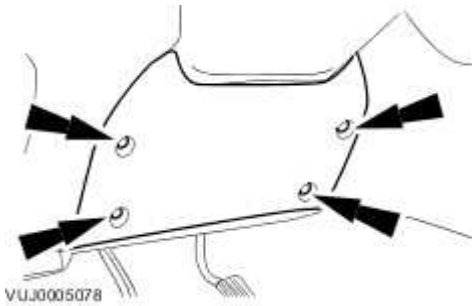

4 . Install the driver side instrument panel lower trim.

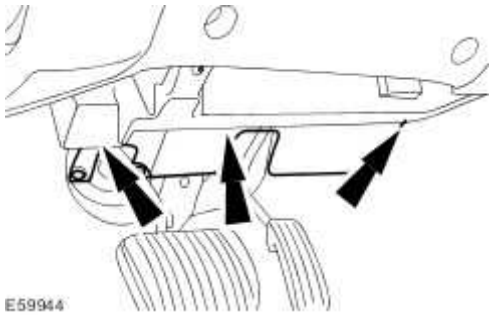

5 . Connect the battery ground cable.
For additional information, refer to Battery Connect (86.15.15)

6 . Using the approved Jaguar diagnostic system configure the speed control module.

www.JagDocs.com

Speed Control Sensor

Removal

All vehicles

1 . Disconnect the battery ground cable.
For additional information, refer to Battery Disconnect and Connect

2 . Remove the radiator splash shield.
For additional information, refer to Radiator Splash Shield (76.22.90)

3 . Disconnect the speed control sensor electrical connector.

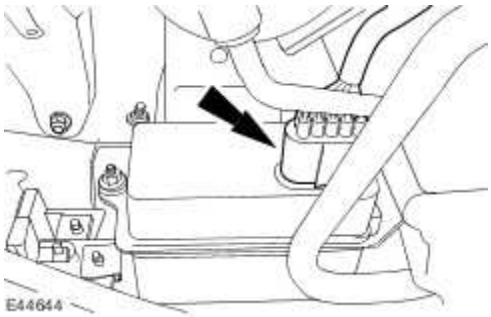

Vehicles built up to VIN:H18680

4 . Remove the left-hand front bumper access cover.

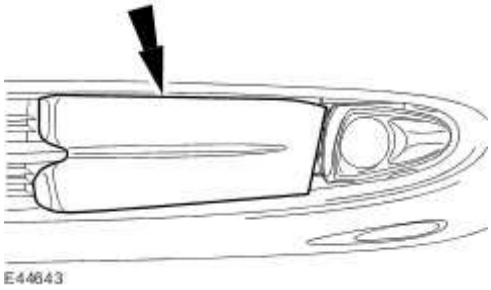

All vehicles

5 . Remove the speed control sensor.

Remove the bolts.

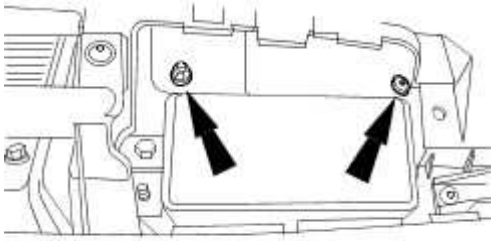

E44645

6 . Remove the speed control sensor retaining bracket.

- Remove the nuts.

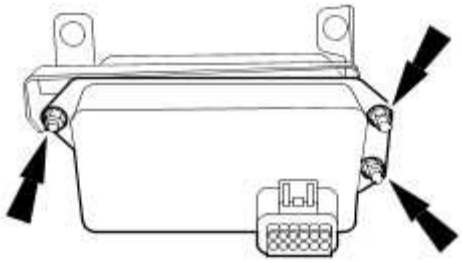

E44649

Installation

All vehicles

1 . Install the speed control sensor retaining bracket.

- Install the nuts.
- Tighten to 5 Nm.

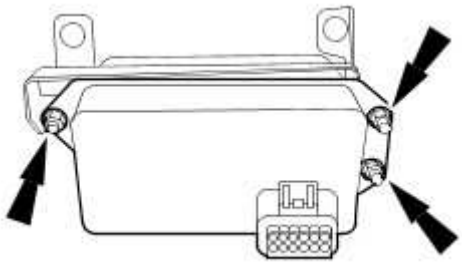

E44649

www.JagDocs.com

2 . Adjust the speed control sensor leveling bolt shoulder to mounting bracket clearance to 4.5 mm.

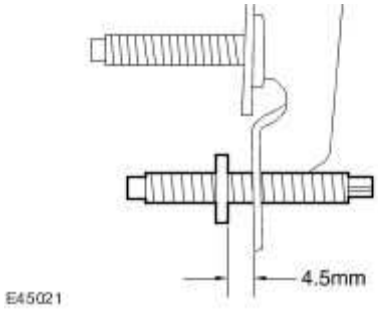

3 . Install the speed control sensor.

Tighten to 5 Nm.

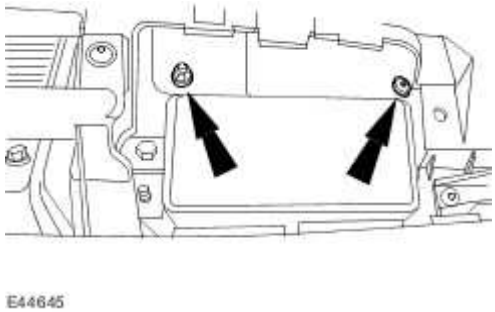

4 . Connect the speed control sensor electrical connector.

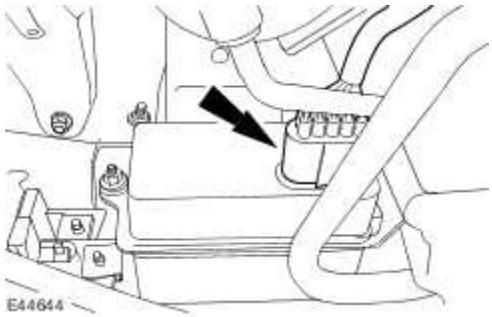

5 . Connect the battery ground cable.
For additional information, refer to Battery Connect (86.15.15)

6 Check and adjust the speed control sensor leveling.

. For additional information, refer to Speed Control Module Alignment - VIN Range: G00442->H18679

Vehicles built up to VIN:H18680

7 . Install the left-hand front bumper access cover.

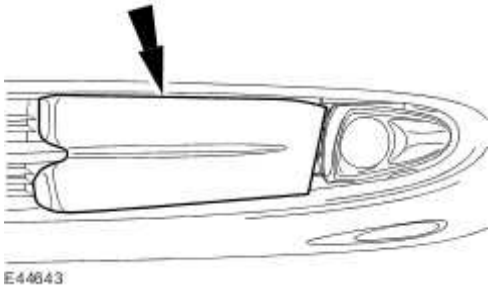

All vehicles

8 . Install the radiator splash shield.
For additional information, refer to Radiator Splash Shield (76.22.90)

9 . Initialize the system. For additional information, refer to the Jaguar approved diagnostic system.

www.JagDocs.com

Speed Control Switch (19.75.25)

Removal

1 . Remove the driver airbag module. For additional information refer to <<501-20b>>

2 . Disconnect the speed control switch electrical connector.

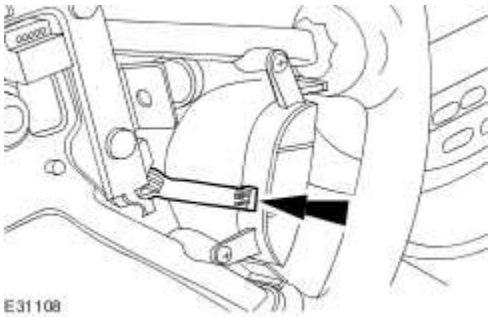

3 . Remove the speed control switch

Installation

1 . To install, reverse the removal procedure.

Tighten to 2 Nm.

www.JagDocs.com

4. ELECTRICAL

412 : Climate Control System

412-00 : Climate Control System – General Information

Specifications

Specifications

Lubricants, Fluids, Sealers and Adhesives

Description	Specification
Air conditioning refrigerant	HFC 134a
Air conditioning compressor oil	ND8 oil

Capacities

Description	Grammes
Air conditioning refrigerant - vehicles fitted with 2 zone	650g
Air conditioning refrigerant - vehicles fitted with 4 zone	800g

Refrigerant Oil Adding Capacities

Item	Cubic Centimeters (cc)
Desiccant bag	Add 30 cc
Condenser core	Add 40 cc
Evaporator - Front	Add 40 cc
Evaporator - Rear	Add 40 cc
Air conditioning (A/C) compressor - If the quantity of oil taken from the old compressor is less than 30 cc	Add 30 cc

Air conditioning (A/C) compressor - If the quantity of oil taken from the old compressor is greater than 30 cc	Add the same amount of oil as drained from the old compressor.
Air conditioning lines - If air conditioning has been operational	Add 10 cc per line

www.JagDocs.com

Air Conditioning (A/C) System Flushing

1.

WARNING: Use extreme care and observe all safety precautions related to the use of refrigerants. Due to refrigerant hazards, always wear safety goggles and non-penetrable gloves when working on or flushing air conditioning (A/C) systems. Failure to follow this instruction may result in personal injury.

WARNING: When flushing the A/C system, refer to the manufacturers equipment instructions for additional information. Failure to do so may result in system damage or personal injury.

WARNING: The A/C refrigerant analyzer must be used before the recovery of any vehicle's A/C refrigerant. Failure to do so puts shop bulk refrigerant at risk of contamination. If the vehicle A/C refrigerant is contaminated, refer the customer to return to the repair facility that performed the last A/C repair. If the customer wishes to pay the additional cost, use the A/C recovery equipment that is designated for recovering contaminated A/C refrigerant. All contaminated A/C refrigerant must be disposed of as hazardous waste. For additional information, refer to the manufacturers equipment instructions. Failure to follow this instruction may result in personal injury.

WARNING: Prior to using the A/C flushing equipment for the first time, follow the operating instructions. Failure to follow this instruction may result in personal injury.

CAUTION: Prior to flushing, remove and discard the desiccant sack. Depending on the equipment used, other A/C components may have to be removed prior to flushing. For additional information, refer to the manufacturers equipment instructions before flushing the A/C system.

Recover the refrigerant.

2. Remove the desiccant sack. <<412-03>>

3. Flush the system. For additional information, refer to the manufacturers equipment instructions.

4. Install new refrigerant lines if blocked with debris.

5. Install a new desiccant sack. <<412-03>>

6. Add the required amount of oil to the A/C system depending on the repair procedure.

7. Evacuate and charge the A/C system.

8. Carry out fluorescent dye leak detection test.
Fluorescent Dye Leak Detection

9. Check the A/C system for correct operation.

www.JagDocs.com

Air Conditioning (A/C) System Recovery, Evacuation and Charging (82.30.30)

1.

WARNING: The air conditioning (A/C) refrigerant analyzer must be used before the recovery of any vehicles A/C refrigerant. Failure to do so puts shop bulk refrigerant at risk of contamination. If the vehicle A/C refrigerant is contaminated, refer the customer to return to the repair facility that carried out the last A/C repair. If the customer wishes to pay the additional cost, use the A/C recovery equipment that is designated for recovering contaminated A/C refrigerant. All contaminated A/C refrigerant must be disposed of as hazardous waste. For all equipment, follow the manufacturers equipment procedures and instructions. Failure to follow this instruction may result in personal injury.

WARNING: Jaguar Cars Limited recommend the use of a charging station to carry out the recovery, evacuation and charging of the refrigerant system. Follow the manufacturers equipment procedures and instructions. Failure to follow this instruction may result in personal injury.

CAUTION: Do not add R-12 refrigerant to an A/C system that requires the use of R-134a refrigerant. These two types of refrigerant should never be mixed. Doing so may cause damage to the A/C system.

Connect the charging station. For additional information, refer to the manufacturers equipment instructions.

2. Recover the refrigerant. For additional information, refer to the manufacturers equipment instructions.

3. Carry out the required repair procedure.

4. Add the required amount of oil to the A/C system depending on the repair procedure. Specifications

5. Evacuate the A/C system. For additional information, refer to the manufacturers equipment instructions.

6. Check the A/C system for sufficient vacuum. For additional information, refer to the manufacturers equipment instructions.

7. Charge the A/C system.
Specifications

8. Check the A/C system for correct operation.

9. Carry out fluorescent dye leak detection test.
Fluorescent Dye Leak Detection

www.JagDocs.com

Contaminated Refrigerant Handling

1. If contaminated refrigerant is detected DO NOT recover the refrigerant into your R-134a OR R-12 recovery/recycling equipment. Take the follow actions:

   1. Repeat the test to verify contaminated refrigerant is present.

   2. Advise the customer of the contaminated A/C system and any additional cost to repair the system. The customer may wish to return to the repair facility performing the last A/C repair.

   3. Recover the contaminated refrigerant using suitable recovery only equipment designed for capturing and storing contaminated refrigerant. This equipment must only be used to recover contaminated refrigerant to prevent the spread to other vehicles. As an alternative, contact an A/C repair facility in your area with the proper equipment to perform the repair.

   - On completion of the recovery of the contaminated refrigerant, it will be necessary to carry out the A/C system flushing procedure.

   Air Conditioning (A/C) System Flushing

Electronic Leak Detection

1.

WARNING: Good ventilation is necessary in the area where A/C leak testing is to be carried out. If the surrounding air is contaminated with refrigerant gas, the leak detector will indicate this gas all the time. Odors from other chemicals such as antifreeze, diesel fuel, disc brake cleaner, or other cleaning solvents can cause the same problem. A fan, even in a well ventilated area, is very helpful in removing small traces of contamination from the air that might affect the leak detector. Failure to follow this instruction may result in personal injury.

Attach an R-134a manifold gauge set or use a UL-approved recovery/recycling device such as an R-134a A/C refrigerant center (which meets SAE Standard J 1991). For additional information, refer to the manufacturers equipment instructions.

- Both gauges should indicate 413-551 kPa (60-80 psi) at 24°C (75°F) with the engine off.
- If little or no pressure is indicated, carry out the air conditioning (A/C) system recovery, evacuation and charging procedure.

2. Use an R134-a Automatic calibration halogen leak detector to leak test the refrigerant system. For additional information, refer to the manufacturers equipment instructions.

3. If a leak is found, carry out the air conditioning (A/C) system recovery procedure.

www.JagDocs.com

Fluorescent Dye Leak Detection

1.

WARNING: Eye protection glasses supplied with the ultraviolet (UV) lamp should be used to protect eyesight from harm.

NOTE:

The air conditioning (A/C) system has an R-134a leak trace dye wafer incorporated into the desiccant bag. The exact location of leaks can be pinpointed by the bright yellow/green glow of the tracer dye. Since more than one leak may exist, always inspect each component. If it is necessary to add dye (due to a severe leakage for example) use proprietary tracer dye injection equipment.

Check for leaks using ultraviolet (UV) lamp.

2. Check all components, fittings and lines of the A/C system.

3. Carry out the repair. For additional information, refer to <<412-03>>.

4. After the leak is repaired, remove any traces of leak trace dye with a general purpose oil solvent.

5. Check the A/C system for correct operation.

6. Verify the repair by operating the system for a short time and inspecting with the (UV) lamp.

Inspection and Assembly Requirements

1. Check for leaks using ultraviolet (UV) Lamp.
Fluorescent Dye Leak Detection

2. **NOTE:**
   Any time a hose or component connection leak is observed, the component and fitting must be separated, cleaned and a new O-ring fitted and lubricated with air conditioning compressor oil.

NOTE:
When separating A/C joints, cap the open connections immediately. Do not leave open to atmosphere.

O-ring seal surfaces must be free of dirt, lint, burrs and scratches. The O-ring and connector should be lubricated with air conditioning compressor oil.

www.JagDocs.com

Manifold Gauge Set Connection

1.

WARNING: Use extreme care and observe all safety precautions related to the use of refrigerants. Failure to follow this instruction may result in personal injury.

WARNING: For additional information, refer to the manufacturers equipment instructions. Failure to follow this instruction may result in personal injury and system damage.

Install the manifold gauge set. For additional information, refer to the manufacturers equipment instructions.

2. Carry out the repair.

3. Remove the manifold gauge set. For additional information, refer to the manufacturers equipment instructions.

4. Carry out flourescent dye leak detection test.
Fluorescent Dye Leak Detection

5. Check air conditioning (A/C) system for correct operation.

Refrigerant Oil Adding

CAUTION: Make sure when disconnecting air conditioning (A/C) connections, that the exposed ports are capped immediately. Make sure you do not leave the A/C system open to the atmosphere. Failure to follow this instruction may result damage to the vehicle.

NOTE:

A new replacement A/C compressor is pre-filled with ND8 oil.

1. Drain the oil from the old compressor and measure the quantity of oil drained.

2. Drain the oil from the new compressor into a clean container.

3.

CAUTION: If less than 30 cc of oil was drained from the old compressor, then 30 cc of oil must be refilled into the new compressor. Failure to follow this instruction may result in damage to the vehicle.

NOTE:

Use the new compressor oil to refill to the required quantity.

Refill the new compressor with the same amount of oil which was measured from the old compressor.

Specifications

www.JagDocs.com

Refrigerant System Tests

1.

WARNING: Use extreme care and observe all safety precautions related to the use of refrigerants. Failure to follow this instruction may result in personal injury.

WARNING: The A/C refrigerant analyzer must be used before the recovery of any vehicle's A/C refrigerant. Failure to do so puts shop bulk refrigerant at risk of contamination. If the vehicle A/C refrigerant is contaminated, refer the customer to return to the repair facility that carried out the last A/C repair. If the customer wishes to pay the additional cost, use the A/C recovery equipment that is designated for recovering contaminated A/C refrigerant. All contaminated A/C refrigerant must be disposed of as hazardous waste. For all equipment, follow the equipment manufacturers procedures and instructions. Failure to follow this instruction may result in personal injury.

NOTE:

Jaguar Cars Ltd. supports the efficient usage, recovery and recycling of the refrigerant used in passenger car air conditioners. Jaguar Cars Ltd. recommends the use of UL-approved recovery/recycling device such as R-134a A/C refrigerant center (which meets SAE Standard J 1991) during any A/C system repair and recharge procedure which requires that the system be evacuated.

Use R-134a A/C Refrigerant Centre to evacuate and recover the A/C system.

- Follow the equipment manufactures procedures and instructions for use of equipment.

Climate Control System

The purpose of the air distribution system is to route air to the designated registers. This is accomplished when air enters the heater core and evaporator core housing and is directed to the desired ducts by the use of air distribution doors.

The air distribution system contains the heater core and evaporator core, blower motor and distribution doors. All of the air is mixed and distributed from the heater core and evaporator core housing assembly depending on the distribution door positions.

For additional information, refer to Air Distribution and Filtering (412-01)

Heating/Defrosting

The heating system is an air blend controlled system. The ambient air is passed through the cabin air filter, directed through the evaporator core, through and/or around the heater core, mixed and distributed from the heater core and evaporator housing to the floor, panel and/or the defrost ducts as desired. For additional information, refer to Heating and Ventilation (412-02A)

Auxiliary Heater - Vehicles with Diesel engine

The system consists of a fuel operated heater unit and a fuel dosing pump.

Fuel for the heater system is taken from the vehicle fuel tank, through a line attached to the fuel pump module. Fuel is drawn from the fuel tank by a lift pump and supplied via the dosing pump to the heater unit. In the heater unit, the fuel delivered by the fuel pump is burned and the resultant heat output is used to heat the engine coolant.

An electronic control unit (ECU) integrated into the heater unit controls the operation of the heater unit and the dosing pump. The climate control unit controls the operation of the re-circulation flaps on initial start up. For additional information, refer to Fuel Fired Booster Heater (412-02B)

Heater Core and Evaporator core

The heater core consists of a number of fins and tubes in an arrangement to extract heat from the engine coolant and transfer the heat to the air that passes through the heater core. The evaporator core is a plate/fin type arrangement. For additional information, refer to Air Conditioning (412-03A)

www.JagDocs.com

Air Conditioning Line Peanut Fitting

Peanut Fitting Assembly

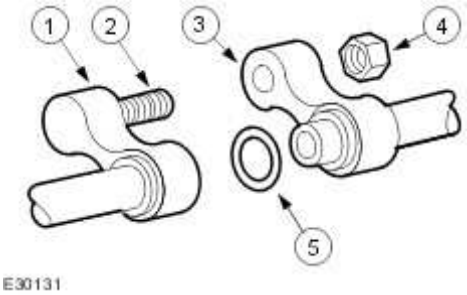

Item	Part Number	Description
1	—	Female air conditioning line
2	—	Stud
3	—	Male air conditioning line
4	—	Retaining nut
5	—	O-ring seal

The connections between the air conditioning (A/C) condenser core/receiver drier and the connections between the lines use peanut fittings.

- The male and female line of the peanut fitting are retained with a nut.
- An O-ring seal is installed around the tube on the male line.
- The female line is welded to the tube and is not adjustable.
- Support the female line with a wrench to prevent the twisting of the tubes.
- The male line will pivot around the tube to allow for alignment with the female line during assembly.
- When correctly assembled, the mating surfaces of the male and female fittings should be flush.

Blower motor

The blower motor pulls air from the air inlet and forces it into the heater core and evaporator core housing where it is mixed and distributed. The blower motor has eleven speeds (vehicles with telematics have seven speeds) and is controlled by the remote climate control module (RCCM).

Air conditioning refrigerant

The R-134a air conditioning system uses a hydrofluorocarbon (HFC) non-CFC based refrigerant. R-134a requires the use of Jaguar compressor oil or equivalent meeting Jaguar specification. Do not use R-12 tools and equipment when repairing an R-134a system unless specified in the workshop manual. Never mix R-12 and R-134a refrigerants and oils. They are not compatible.

Air Conditioning (A/C) System

The air conditioning (A/C) system is a multi-piece, single case design, with an integral blower motor. The system allows the operator to control the temperature by delivering heated or cooled air to maintain a constant temperature. In addition, during A/C operation, it reduces the relative humidity of air inside the vehicle. Controls are provided to adjust the temperature and system functions, including blower motor speeds for desired airflow. Ambient air is passed through during all system operations, except for when the auto system switches to recirculation for maximum A/C performance, or when the air quality sensor (Japanese market only) requires the system to be in recirculation, or when recirculation is manually selected, or when the system is switched off. For additional information, refer to Air Conditioning (412-03A)

Control System Inputs

The climate control system inputs can be selected from the climate control assembly which offers either AUTO or manual control (MODE).

Control System Outputs

The air inlet, air distribution and air temperature blend doors are all controlled by electronic actuators. For additional information, refer to Control Components (412-04)

www.JagDocs.com

Climate Control System

Principles of Operation

For a detailed description of the Climate Control system, refer to the relevant Description and Operation sections in the workshop manual.
Climate Control System

Inspection and Verification

1 . Verify the customer concern by operating the system.

2 . Visually inspect for obvious signs of damage and system integrity.

Visual Inspection Chart

Mechanical	Electrical
• Coolant Level	• Fuses/Relays • Damaged, Loose or Corroded Connector(s) • Damage to Wiring Loom/Incorrect Location, Stretched or Taught

1 . If an obvious cause for an observed or reported concern is found, correct the cause (if possible) before proceeding to the next step.

2 . If the cause is not visually evident, check for Diagnostic Trouble Codes (DTCs) and refer to the DTC Index.

DTC Index

Climate Control Module

CAUTION: When probing connectors to take measurements in the course of the pinpoint tests, use the adaptor kit, part number 3548-1358-00

NOTE:

If the control module/component is suspect and the vehicle remains under manufacturer warranty, refer to the Warranty Policy and Procedures manual (section B1.2), or determine if any prior approval program is in operation, prior to the installation of a new module/component.

NOTE:

When performing voltage or resistance tests, always use a digital multimeter (DMM) accurate to three decimal places and with a current calibration certificate. When testing resistance, always take the resistance of the DMM leads into account.

NOTE:

Check and rectify basic faults before beginning diagnostic routines that involve pinpoint tests.

NOTE:

Inspect connectors for signs of water ingress, and pins for damage and/or corrosion.

NOTE:

If DTCs are recorded and, after performing the pinpoint tests, a fault is not present, an intermittent concern may be the cause. Always check for loose connections and corroded terminals.

DTC	Description	Possible Causes	Action
B2413	Humidity Sensor Fault	• Climate control module humidity sensor signal circuit - short to power, open circuit	Carry out any pinpoint tests associated with this DTC using the manufacturer approved diagnostic system. Refer to electrical circuit diagrams, notes and check humidity sensor signal circuit for short to power or open circuit
B2477	Module Configuration Failure	• Climate control module - configuration failure	The module can be configured using the new module configuration procedure
B2513	Blower Fault	• Climate control module blower motor drive signal circuit - short to ground or open	Carry out any pinpoint tests associated with this DTC using the manufacturer approved diagnostic system. Refer to electrical circuit diagrams, notes and check blower circuit for short to ground or open
B2514	Blower Fault	• Climate control module blower fault - short	Carry out any pinpoint tests associated with this DTC using the manufacturer

www.JagDocs.com

		circuit to power	approved diagnostic system. Refer to electrical circuit diagrams, notes and check blower power circuit for short to power
B2585	Smog Sensor Fault	• Climate control module, smog sensor - hydrocarbon signal circuit short to ground	Carry out any pinpoint tests associated with this DTC using the manufacturer approved diagnostic system. Refer to electrical circuit diagrams, notes and check smog sensor circuit for short to ground
B2826	Evaporator Temperature Sensor Fault	• Climate control module, evaporator temperature sensor circuit - short to power or open	Carry out any pinpoint tests associated with this DTC using the manufacturer approved diagnostic system. Refer to electrical circuit diagrams, notes and check evaporator temperature sensor circuit for short to power or open
B2827	Evaporator Temperature Sensor Fault	• Climate control module, evaporator temperature sensor circuit - short to ground	Carry out any pinpoint tests associated with this DTC using the manufacturer approved diagnostic system. Refer to electrical circuit diagrams, notes and check evaporator temperature sensor circuit for short to ground
B2832	Mode Servo Fault	• Climate control module, mode servo circuit - short to ground, power or open	Carry out any pinpoint tests associated with this DTC using the manufacturer approved diagnostic system. Refer to electrical circuit diagrams, notes and check mode servo's and circuit for short to ground, power or open
B2833	Sensor Supply Fault	• Climate control module, servo circuit sensor supply - short to ground, power or open	Carry out any pinpoint tests associated with this DTC using the manufacturer approved diagnostic system. Refer to electrical circuit diagrams, notes and check sensor supply circuit for short to ground, power or open
B2834	RH or LH Air Mix Servo Fault	• Climate control module, air mix servo circuit - short to ground, power or open	Carry out any pinpoint tests associated with this DTC using the manufacturer approved diagnostic system. Refer to electrical circuit diagrams, notes and check air mix servo's and circuit for short to ground, power or open

B2835	RH /LH Outlet Air Temp Sensor Fault	• Climate control module, outlet air temp sensor circuit - short to ground, power or open	Carry out any pinpoint tests associated with this DTC using the manufacturer approved diagnostic system. Refer to electrical circuit diagrams, notes and check outlet air temp sensor circuit for short to ground, power or open
B2836	In car Temperature Sensor Fault	• Climate control module, in car temperature sensor circuit - short to power or open	Carry out any pinpoint tests associated with this DTC using the manufacturer approved diagnostic system. Refer to electrical circuit diagrams, notes and check in car temperature sensor for short to power or open circuit
B2837	In car Temperature Sensor Fault	• Climate control module, in car temperature sensor circuit - short to ground	Carry out any pinpoint tests associated with this DTC using the manufacturer approved diagnostic system. Refer to electrical circuit diagrams, notes and check in car temperature sensor circuit for short to ground
B2840	Ambient Air Temperature Sensor Fault	• Climate control module, ambient air temperature sensor circuit - short to power or open	Carry out any pinpoint tests associated with this DTC using the manufacturer approved diagnostic system. Refer to electrical circuit diagrams, notes and check ambient air temperature sensor circuit for short to power or open
B2841	Ambient Air Temperature Sensor Fault	• Climate control module, ambient air temperature sensor circuit - short to ground	Carry out any pinpoint tests associated with this DTC using the manufacturer approved diagnostic system. Refer to electrical circuit diagrams, notes and check ambient air temperature sensor circuit for short to ground
B2842	LH or RH Cool Air Bypass Servo Fault	• Climate control module, cool air bypass servo circuit - short to ground, power or open	Carry out any pinpoint tests associated with this DTC using the manufacturer approved diagnostic system. Refer to electrical circuit diagrams, notes and check cool air bypass servo circuit for short to ground, power or open
B2843	Air Intake Servo Fault	• Climate control module, air intake servo circuit - short to	Carry out any pinpoint tests associated with this DTC using the manufacturer approved diagnostic system. Refer to

www.JagDocs.com

		ground, power or open	electrical circuit diagrams, notes and check air intake servo and circuit for short to ground, power or open
B2844	Ignition Fault	• Climate control module, ignition signal circuit - short to ground or open	Refer to electrical circuit diagrams, notes and check ignition signal circuit for short to ground or open
B2846	Dual Solar Sensor Fault	• Climate control module, dual solar sensor circuit - short to ground, power or open	Carry out any pinpoint tests associated with this DTC using the manufacturer approved diagnostic system. Refer to electrical circuit diagrams, notes and check dual solar sensor circuit for short to ground, power or open
C2781	Air Conditioning Compressor Solenoid	• Climate control module, air conditioning compressor solenoid circuit - short to ground, power or open	Carry out any pinpoint tests associated with this DTC using the manufacturer approved diagnostic system. Refer to electrical circuit diagrams, notes and check air conditioning compressor solenoid circuit for short to ground, power or open
U2022	Climate Control Panel	• Climate control module to climate control panel - communication error (non nav only)	Refer to electrical circuit diagrams, notes and check climate control module communication circuit for fault
U2516	CAN Bus Off	• Climate control module, CAN Bus - circuit fault No CAN messages received during ignition on/missing messages from other ecus	Carry out any pinpoint tests associated with this DTC using the manufacturer approved diagnostic system. Refer to electrical circuit diagrams, notes and check CAN Bus circuit for short to ground, power or open
U2520	CAN Node Missing	• Climate control module - CAN Node missing	Check other modules for stored DTCs. Carry out any pinpoint tests associated with this DTC using the manufacturer approved diagnostic system. Refer to electrical circuit diagrams, notes and check CAN Bus circuit to instrument cluster for short to ground, power or open
U2521	CAN Node	• Climate control module	Check other modules for stored DTCs. Carry out any pinpoint tests associated

	Missing	- CAN Node missing	with this DTC using the manufacturer approved diagnostic system. Refer to electrical circuit diagrams, notes and check CAN Bus circuit to dynamic stability control module for short to ground, power or open
U2523	CAN Node Missing	• Climate control module - CAN Node missing	Check other modules for stored DTCs. Carry out any pinpoint tests associated with this DTC using the manufacturer approved diagnostic system. Refer to electrical circuit diagrams, notes and check CAN Bus circuit to engine control module for short to ground, power or open
U2525	CAN Node Missing	• Rear climate control module - CAN Node missing 4 zone configurations only	Check other modules for stored DTCs. Carry out any pinpoint tests associated with this DTC using the manufacturer approved diagnostic system. Refer to electrical circuit diagrams and check CAN bus circuit to rear climate control module for short to ground, power or open

www.JagDocs.com

Specifications

Torque Specifications

Description	Nm	lb-ft	lb-in
Floor console register duct	3	-	27

Air Distribution and Filtering

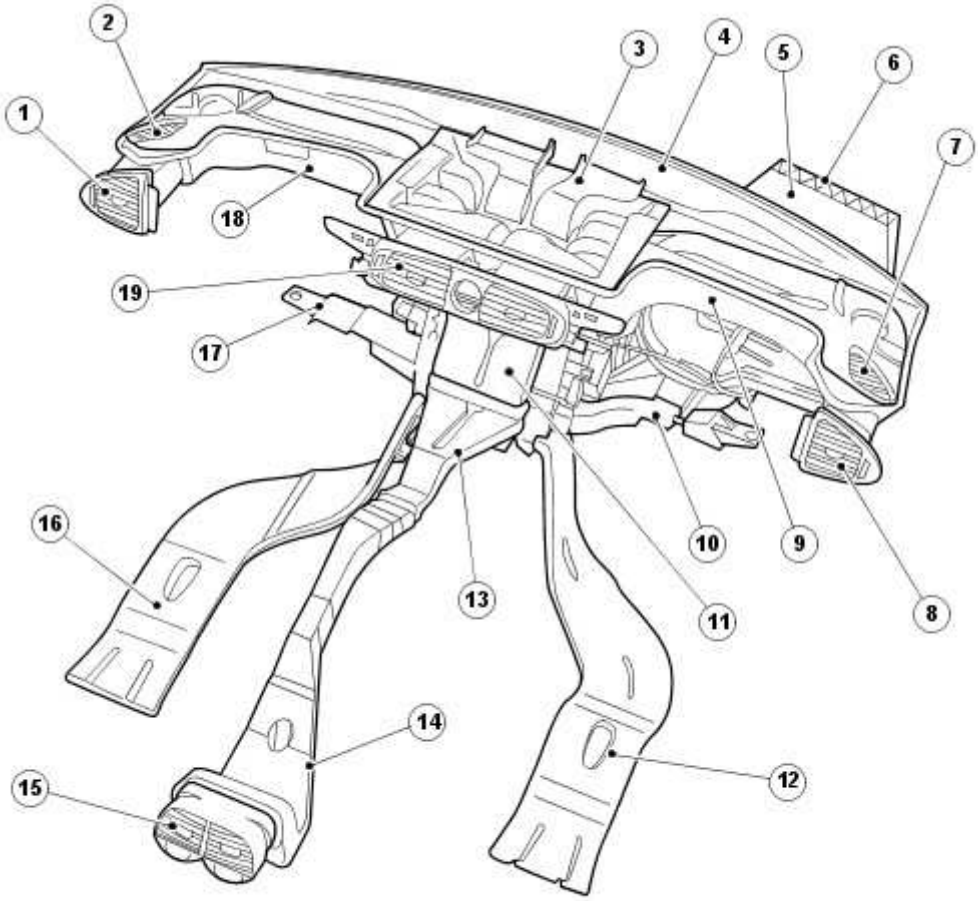

E36537

Item	Part Number	Description
1	—	Driver side register
2	—	Driver side demister
3	—	Air distribution box (part of instrument panel)
4	—	Defroster duct
5	—	Cowl vent
6	—	Cabin air filter
7	—	Passenger side demister
8	—	Passenger side register
9	—	Passenger side register duct (part of instrument panel)

www.JagDocs.com

10	—	Front footwell duct RH
11	—	Heater core and evaporator core housing
12	—	Passenger side rear footwell duct
13	—	Floor console register adaptor duct
14	—	Floor console register duct
15	—	Floor console register
16	—	Driver side rear footwell duct
17	—	Front footwell duct LH
18	—	Driver side register duct (part of instrument panel)
19	—	Center registers

The purpose of the air distribution system is to route air to the designated registers. This is accomplished when ambient air (fresh mode) enters through the cabin air filter and blower motor (in recirculation mode cabin air is drawn into the blower motor). <<412-02>> The air is then mixed and distributed to the desired outlets via the air distribution box and ducting, depending on the distribution door positions.

The cabin air filter is a combination particulate and odour filter.

Air ducts channel air to the registers depending on the specific request from the climate control assembly. For additional information, refer to <<412-04.>>

Air Distribution and Filtering

For additional information, refer to <<412-00.>>

www.JagDocs.com

Cabin Air Filter (76.10.09)

Removal

1 . Remove the cabin air filter housing cover.

Detach the retaining tangs

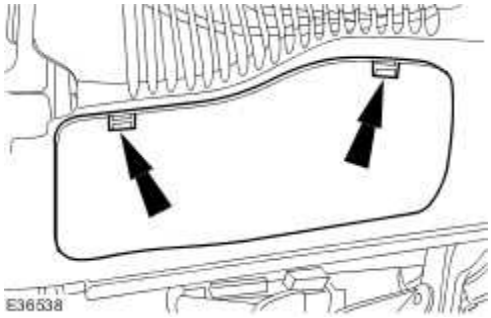

2 . Detach the cabin filter retaining plate.

1) Depress the cabin filter retaining plate tangs.

2) Swing the cabin filter retaining plate down.

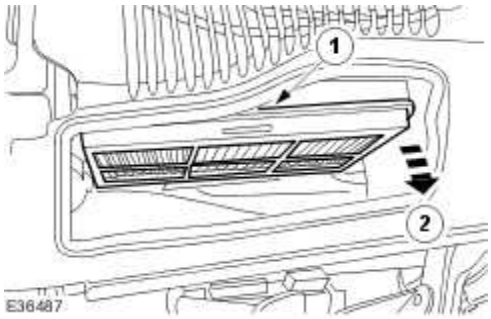

3 . Remove the cabin air filter.

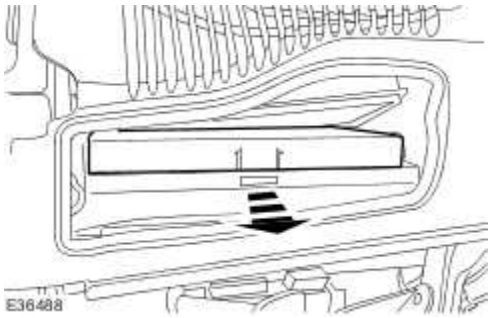

Installation

1 **NOTE:**

.

Make sure the new cabin air filter is fitted correctly, with the air flow markings on the cabin air filter showing the direction of air flow.

To install, reverse the removal procedure.

www.JagDocs.com

Center Registers (82.20.38)

Removal

1 . Remove the floor console. <<501-12>>

2 . **CAUTION: Make sure damage does not occur to the instrument panel finish panel.**

Remove the instrument panel finish panel.

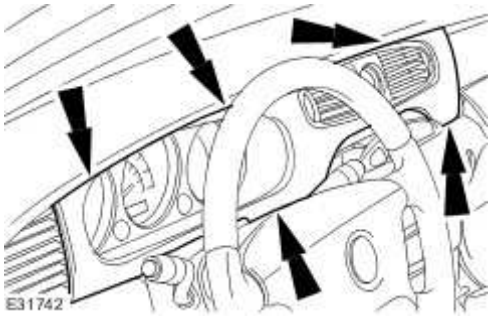

3 . **CAUTION: Make sure damage does not occur to the air bag module finish panel.**

Remove the passenger air bag module finish panel.

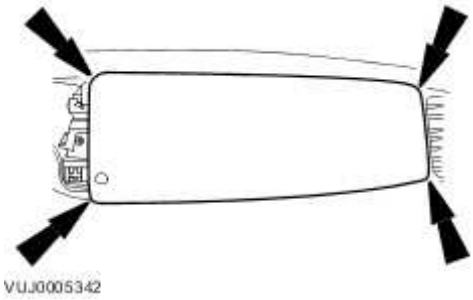

4 . Remove the instrument cluster finish panel.

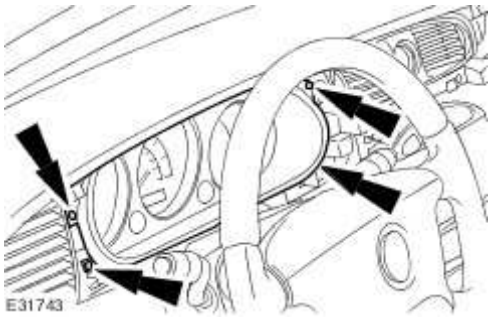

5 . Detach the center registers.

1) Remove the center registers retaining screws.

2) Detach the center registers.

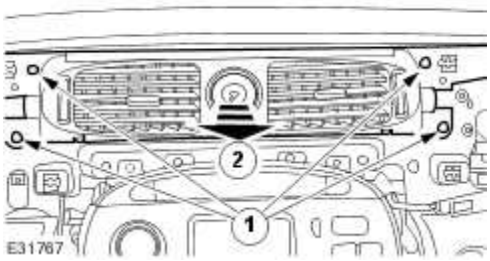

6 . Disconnect the center register electrical connector.

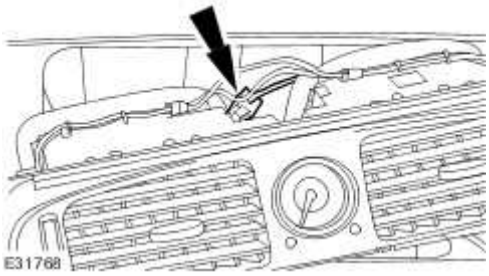

7 . Disconnect the clock electrical connector.

www.JagDocs.com

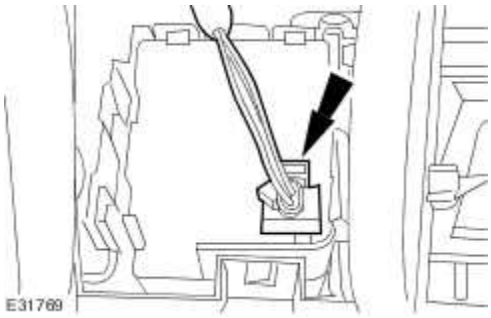

8 . Remove the center registers.

1) Depress the clock retaining tangs.

2) Remove the clock.

3) Remove the center registers.

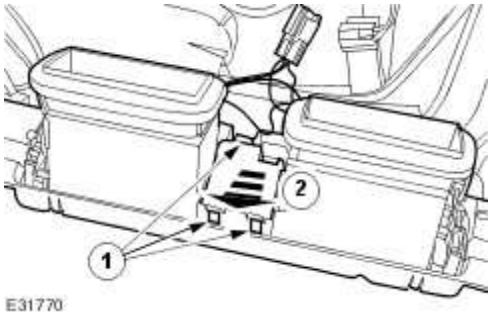

Installation

1 . To install, reverse the removal procedure.

Driver Side Register (82.20.39)

Removal

1 . Remove the floor console assembly. <<501-12>>

2 . **CAUTION: Make sure damage does not occur to the instrument panel finish panel.**

Remove the instrument panel finish panel.

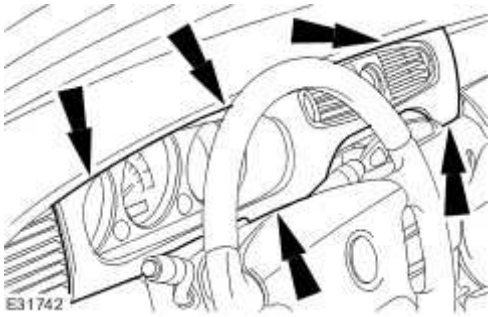

3 . Remove the instrument cluster finish panel.

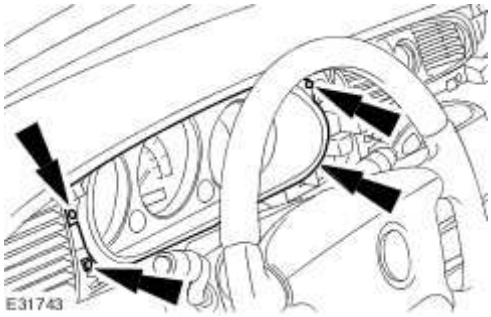

4 . Detach the driver side register.

1) Remove the driver side register retaining screw.

2) Detach the driver side register.

www.JagDocs.com

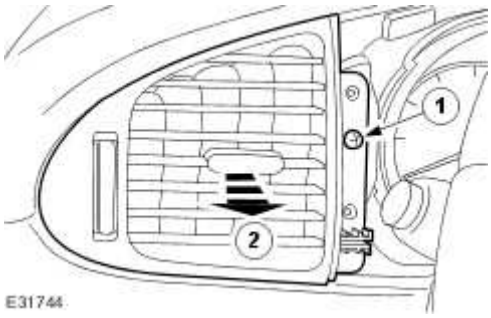

5 . Remove the driver side register.

- Disconnect the driver side register electrical connector.

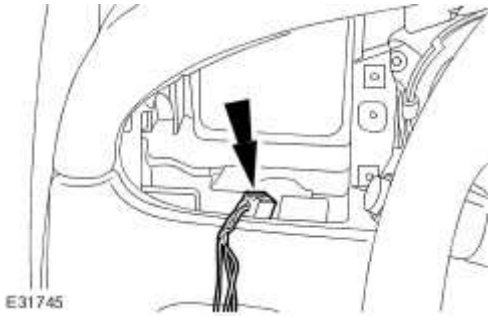

Installation

1 . To install, reverse the removal procedure.

Floor Console Register Duct (82.20.37)

Removal

1 . Remove the floor console. <<501-12>>

2 . Remove the floor console register duct.

1) Remove the retaining nut.

2) Remove the floor console register duct.

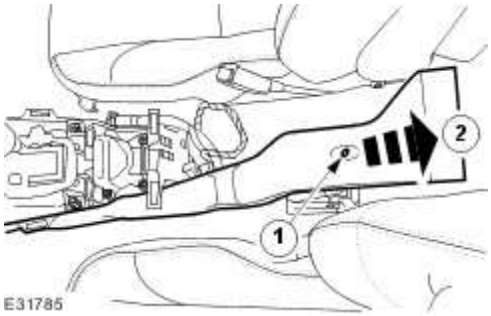

Installation

1 . To install, reverse the removal procedure.

Tighten to 3 Nm.

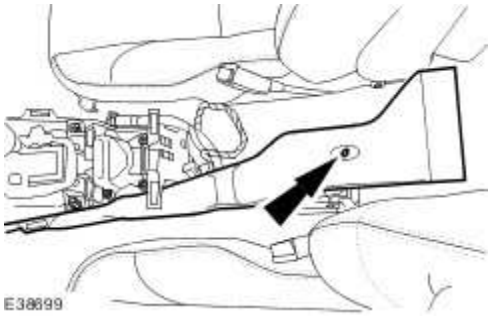

www.JagDocs.com

Front Footwell Duct LH (82.20.91)

Removal

1 . Remove the instrument panel lower trim panel.

1) Remove the retaining scrivets.

2) Remove the instrument panel lower trim panel.

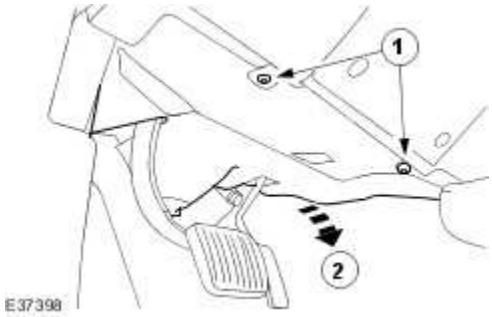

2 . Detach the front footwell lamp from the front footwell duct.

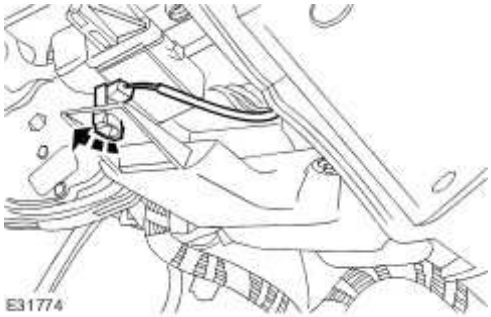

3 . Remove the front footwell duct.

1) Remove the retaining scrivet.

2) Remove the front footwell duct.

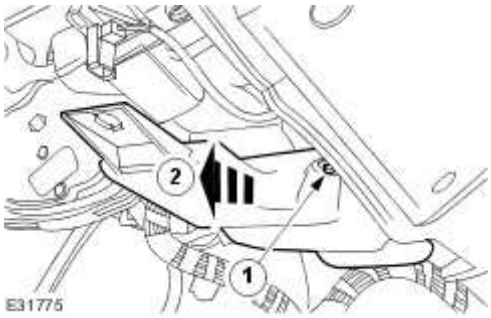

Installation

1 . To install, reverse the removal procedure.

www.JagDocs.com

Front Footwell Duct RH (82.20.92)

Removal

1 . Remove the instrument panel lower trim panel.

1) Remove the retaining scrivets.

2) Remove the instrument panel lower trim panel.

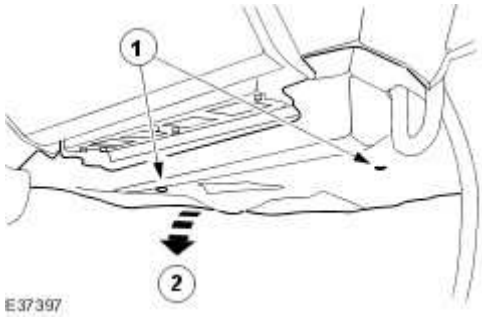

2 . Detach the front footwell duct.

1) Remove the retaining scrivet.

2) Detach the front footwell duct.

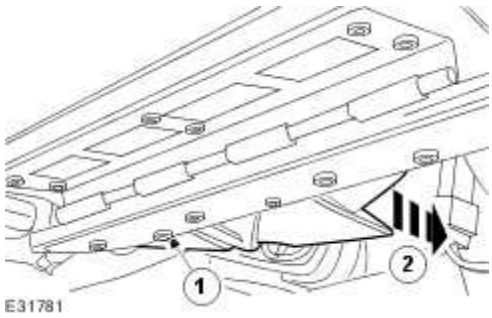

3 . Remove the front footwell duct.

- Detach the footwell lamp from the front footwell duct.

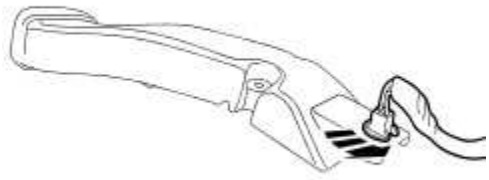

E31782

Installation

1 . To install, reverse the removal procedure.

www.JagDocs.com

Passenger Side Register (82.20.40)

Removal

1 . **CAUTION: Make sure damage does not occur to the air bag module finish panel.**

Remove the passenger air bag module finish panel.

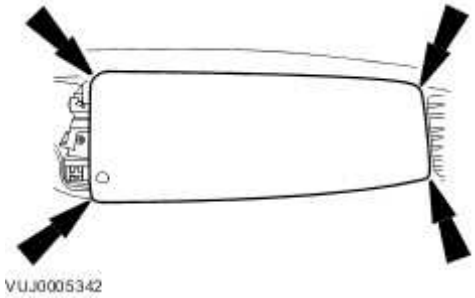

2 . Detach the passenger side register.

1) Remove the passenger side register retaining screws

2) Detach the passenger side register.

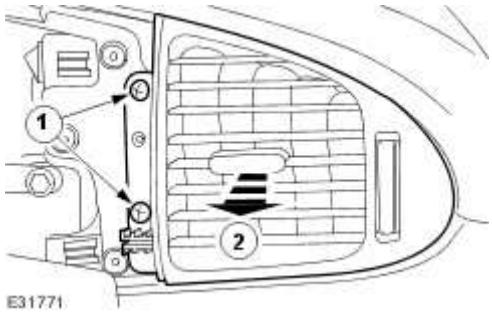

3 . Remove the passenger side register.

- Disconnect the passenger side register electrical connector.

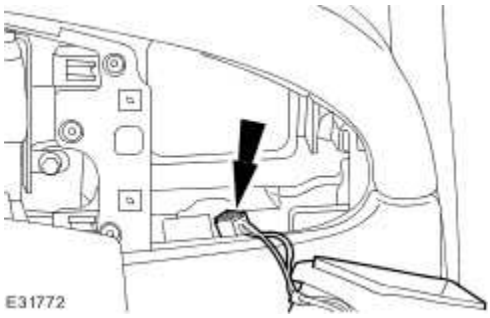

Installation

1 . To install, reverse the removal procedure.

www.JagDocs.com

Rear Footwell Duct (82.20.96)

Removal

1 . Remove the front seat. <<501-10>>

2 . Remove the floor console assembly. <<501-12>>

3 . Remove the B-pillar lower trim panel. <<501-05>>

4 . **CAUTION: Make sure damage does not occur to the floor covering.**

NOTE:

Right-hand shown, left-hand similar.

Reposition the floor covering to access the rear floor duct.

1) Raise the floor covering at the front.

2) Raise the floor covering to access the rear floor duct.

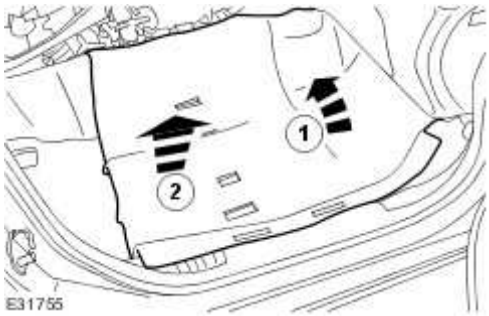

5 . Remove the rear footwell duct.

1) Remove the rear footwell duct retaining screw.

2) Remove the rear footwell duct retaining clip.

3) Remove the rear footwell duct.

Installation

1 . To install, reverse the removal procedure.

www.JagDocs.com

Specifications

Torque Specifications

Description	Nm	lb-ft	lb-in
Heater hose bracket retaining bolt.	7	–	62
Heater core and evaporator core housing retaining nut.	7	–	62
Heater core and evaporator core housing retaining bolt.	7	–	62
Blower motor housing lower retaining nut.	7	–	62
Expansion valve manifold and tube assembly retaining bolt.	8	–	71
Auxillary coolant flow pump retaining bolt.	10	–	89
Engine compartment support retaining bolt.	25	18	–
Cabin filter housing retaining bolt.	6	–	53

Heating and Ventilation

The heating and defrosting system:

- controls the vehicle air temperature, and during air conditioning (A/C) operation reduces the relative humidity of the air inside the vehicle.
- delivers heated or cooled air to maintain the vehicle interior temperature and comfort level.
- controls the blower motor speed.
- allows temperature to be adjusted individually by the driver and the passenger to maintain comfort.
- uses a reheat method to provide conditioned air to the passenger compartment. All airflow from the blower motor passes through the A/C evaporator core. Temperature is regulated by reheating a portion of the air and blending it with the remaining cool air to achieve the desired temperature.
- blends the air temperature by regulating the flow of air through or around the heater core.

The blower motor draws ambient air through the cabin air filter during all system operations except for when the auto system switches to recirculation for maximum A/C performance, or when the ambient air temperatue sensor requires the system to be in recirculation mode or when recirculation is manually selected.

For additional information, refer to <<412-03>>.

www.JagDocs.com

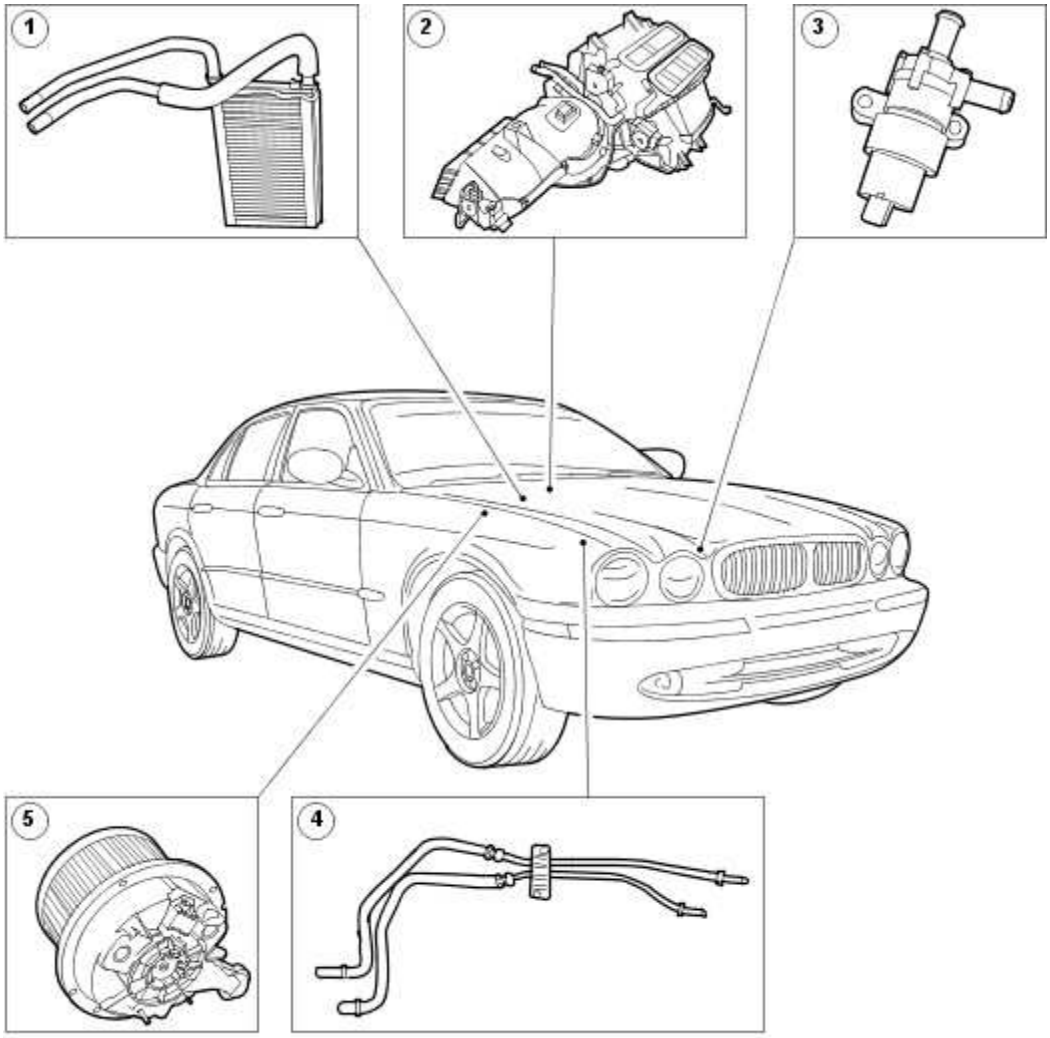

E36819

Item	Part Number	Description
1	—	Heater core
2	—	Heater core and evaporator core housing
3	—	Auxiliary coolant flow pump -3.5L and 4.2L only
4	—	Heater hose assembly
5	—	Blower motor

Heater core

The heater core consists of fins and tubes arranged to extract heat from the engine coolant and transfer it to the air passing through the heater core and evaporator core. The heater core and

evaporator core is separated into two sections. Air passing through one section is directed to the driver side of the vehicle, while air passing through the other section is directed to the passenger side of the vehicle.

Auxiliary coolant flow pump vehicles fitted with 3.5L or 4.2L engine

The auxiliary coolant flow pump is electrically driven and provides increased coolant flow during low engine speed operation. The pump is also used to circulate coolant after the engine is turned off under certain conditions.

Blower motor

The blower motor pulls air from the air inlet and forces it into the heater core and evaporator core assembly where it is mixed and distributed. The blower motor has eleven speeds (vehicles with telematics have seven speeds) and is controlled by the climate control assembly.

www.JagDocs.com

Heating and Ventilation

<<412-00>>

Auxiliary Coolant Flow Pump - 4.2L NA V8 - AJV8/4.2L SC V8 - AJV8/3.5L NA V8 - AJV8 (82.25.59)

Removal

1 . Carry out the cooling system drain procedure. <<303-03>>

2 . Remove the radiator upper hose.

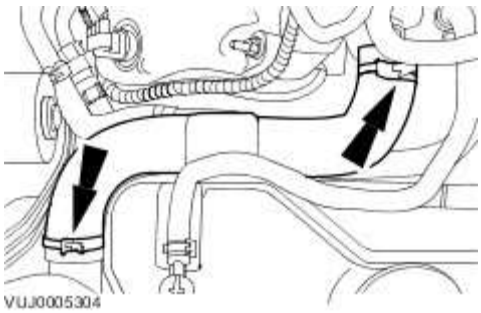

3 . Detach the thermostat housing lower hose.

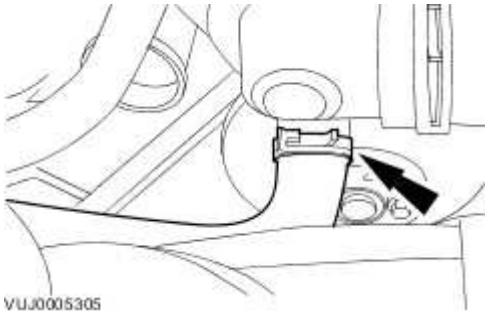

4 . Disconnect the coolant expansion tank lower hose.

1) Remove the coolant expansion tank lower hose retaining clip.

2) Disconnect the coolant expansion tank lower hose.

www.JagDocs.com

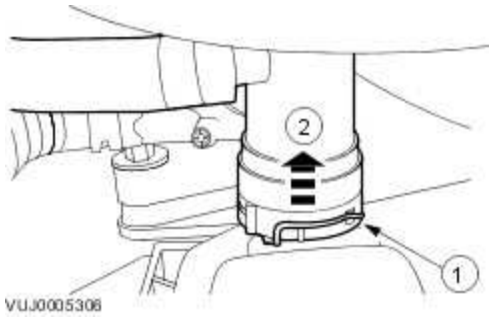

5 . Disconnect the heater hose.

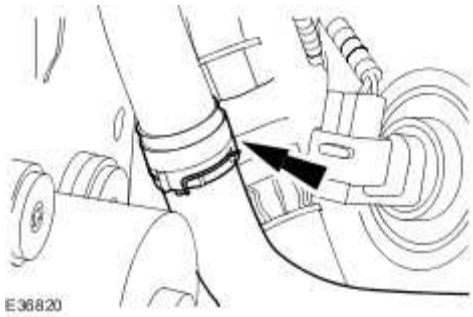

6 . Detach the auxillary coolant flow pump.

1) Remove the retaining bolt.

2) Detach the auxillary coolant flow pump.

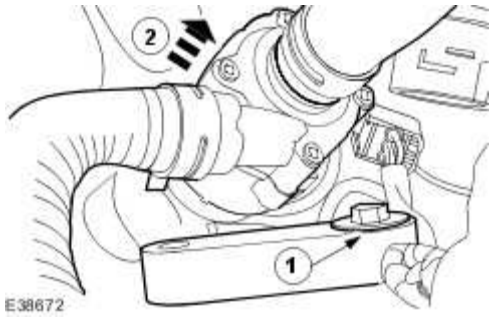

7 . Remove the auxillary coolant flow pump and hoses.

1) Disconnect the electrical connector.

2) Remove the auxillary coolant flow pump and hoses.

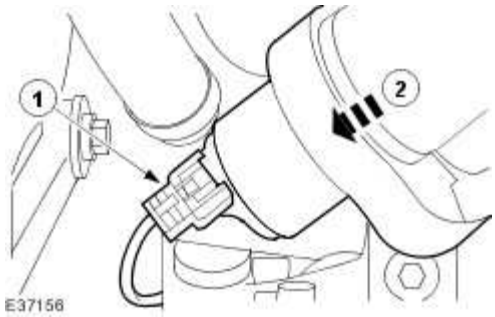

8 . Remove the auxillary coolant flow pump hoses.

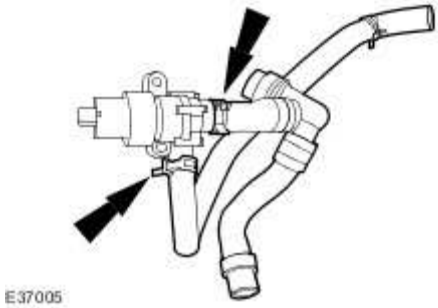

Installation

1 . To install, reverse the removal procedure.

Tighten to 10 Nm.

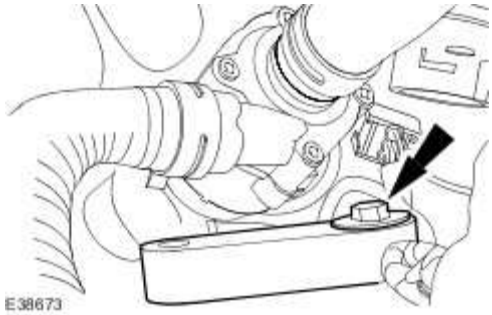

2 . Carry out the cooling system filling and bleeding procedure. <<303-03>>

www.JagDocs.com

Auxiliary Coolant Flow Pump - 2.7L V6 - TdV6 (82.25.59)

Removal

1 . Remove the air deflector.
For additional information, refer to Air Deflector (76.11.41)

2 . Disconnect the auxiliary coolant flow pump electrical connector.

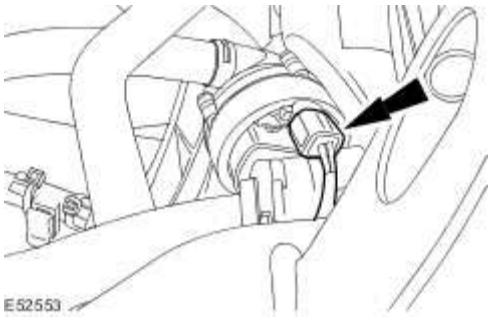

3 . **NOTE:**

Using a suitable tool, clamp the hose to minimize coolant loss.

Detach the lower coolant hose.

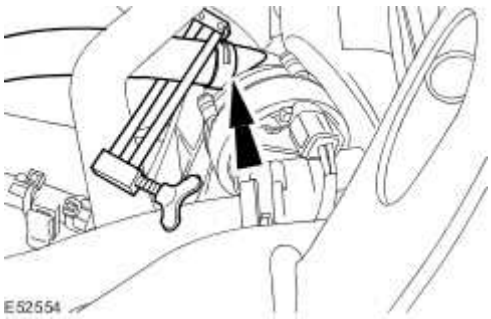

4 . **NOTE:**

Using a suitable tool, clamp the hose to minimize coolant loss.

Detach the upper coolant hose.

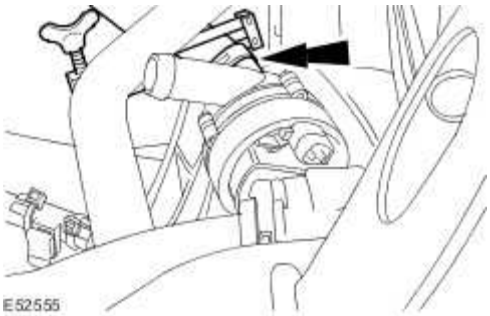

5 . Remove the auxiliary coolant flow pump.

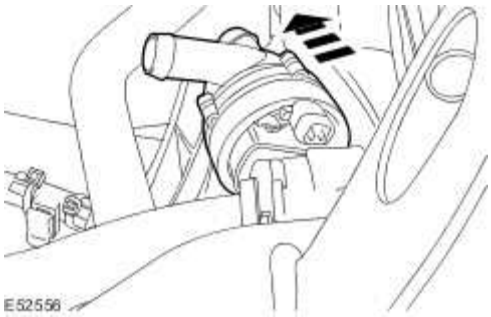

Installation

1 . Install the auxiliary coolant flow pump.

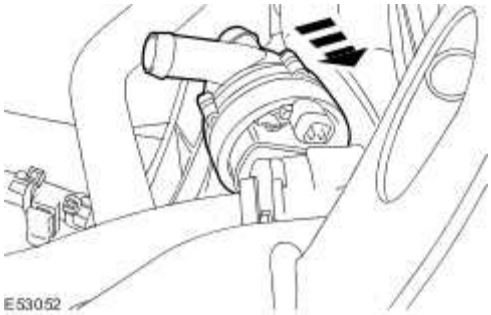

2 . Attach the upper coolant hose.

Remove the pipe clamp.

www.JagDocs.com

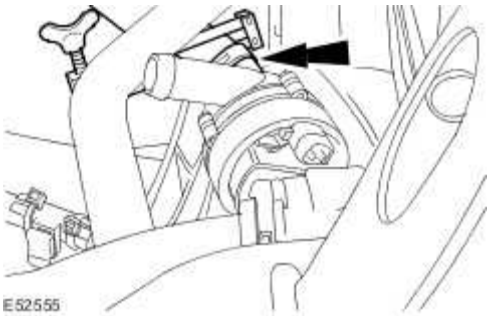

3 . Attach the lower coolant hose.

Remove the pipe clamp.

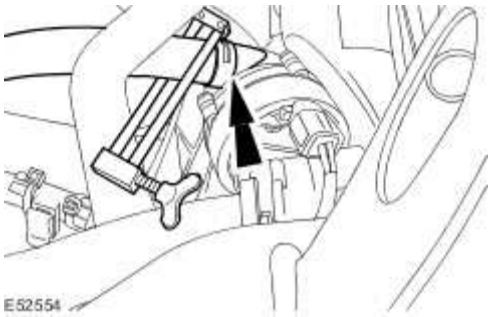

4 . Connect the auxiliary coolant flow pump electrical connector.

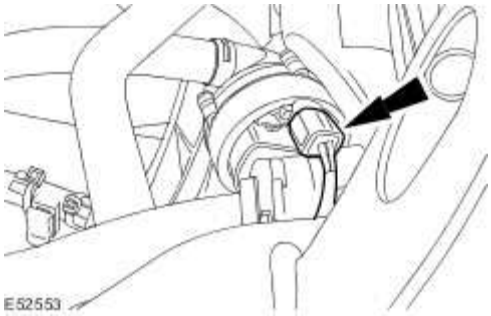

5 . Remove the coolant expansion tank pressure cap.

6 . Fill the cooling system up to the MAX mark on the coolant expansion tank using a fifty percent mixture of Jaguar premium cooling system fluid or equivalent, meeting Jaguar specification WSS M97B44-D and fifty percent water.

7 . Install the coolant expansion tank pressure cap.

8 . START and RUN the engine.

9 . Set the heating system to MAX heat, the blower motor to MAX speed and the air distribution to instrument panel registers.

10 . **CAUTION: Observe the engine temperature gauge. If the engine starts to over-heat switch off immediately and allow to cool. Failure to follow this instruction may result in damage to the vehicle.**

Allow the engine to RUN until hot air is emitted from the instrument panel registers, while observing the engine temperature gauge.

11 . Switch off the engine.

12 . Allow the engine to cool.

13 . **WARNING: Never remove the coolant pressure cap under any circumstances while the engine is operating. Failure to follow this instruction may result in personal injury. To avoid having scalding hot coolant or steam blow out of the cooling system, use extreme care when removing the coolant pressure cap from a hot cooling system. Wait until the engine has cooled, then wrap a thick cloth around the coolant pressure cap and turn it slowly until the pressure begins to release. Step back while the pressure is released from the system. When certain all the pressure has been released (still with a cloth) turn and remove the coolant pressure cap from the coolant expansion tank. Failure to follow these instructions may result in personal injury.**

Release the cooling system pressure.

- Remove the coolant expansion tank pressure cap.

www.JagDocs.com

14. Fill the cooling system up to the MAX mark on the coolant expansion tank using a fifty percent mixture of Jaguar premium cooling system fluid or equivalent, meeting Jaguar specification WSS M97B44-D and fifty percent water.

15. Install the coolant expansion tank pressure cap.

16. Raise the vehicle.

17. Check for water leaks.

18. Install the air deflector.
    For additional information, refer to Air Deflector (76.11.41)

Blower Motor (82.25.66)

Removal

1 . Disconnect the battery ground cable. <<414-01>>

2 . Remove the passenger side instrument panel closing panel.

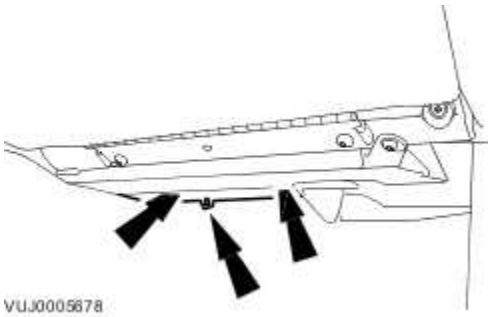

3 . Remove the blower motor.

1) Disconnect the electrical connector.

2) Remove the blower motor.

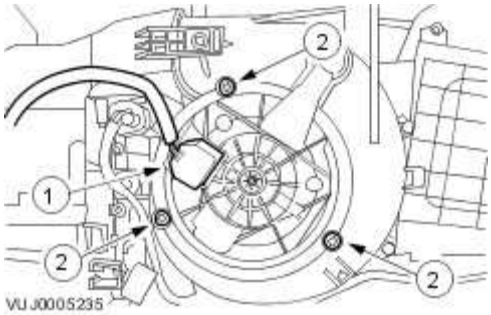

Installation

1 . To install, reverse the removal procedure.

www.JagDocs.com

Heater Core (80.20.29)

Removal

1 . Disconnect the battery ground cable. <<414-01>>

2 . Remove the cowl vent screen. <<501-02>>

3 . Remove the engine compartment support.

E36600

4 . Remove the engine compartment support.

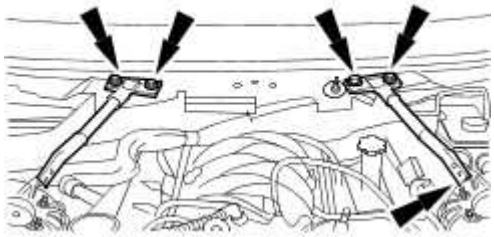

E36601

5 . Remove the cabin filter cover and cabin filter.

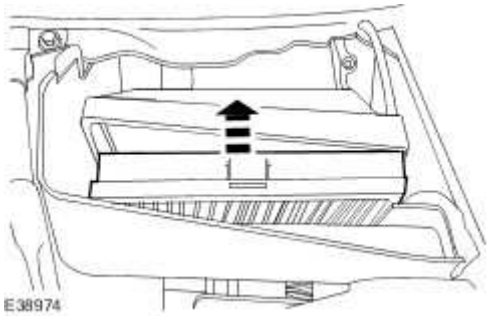

E38974

6 . Remove the cabin filter housing.

1) Remove the cabin filter housing retaining nuts.

2) Remove the cabin filter housing.

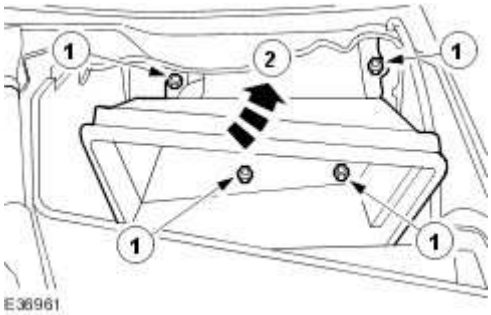

7 . Remove the engine compartment panel.

1) Remove the engine compartment panel retaining bolt.

2) Remove the engine compartment panel.

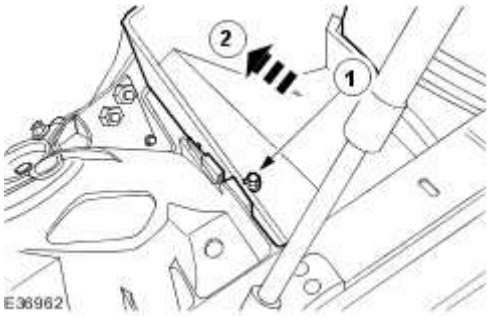

8 . Remove the engine control module. <<303-14A>> <<303-14B>>

9 . Remove the engine compartment panel.

1) Remove the engine compartment panel retaining clip.

2) Remove the engine compartment panel.

www.JagDocs.com

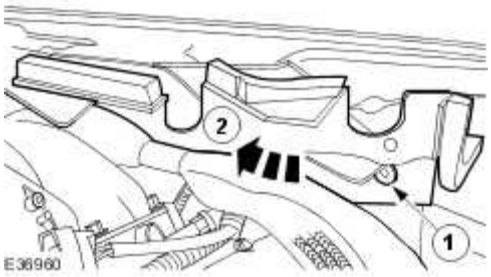

10 . **NOTE:**

Cap the heater hoses to prevent coolant loss.

Detach the heater hoses.

- Reposition the heater hose retaining clips.
- Detach the heater hoses.

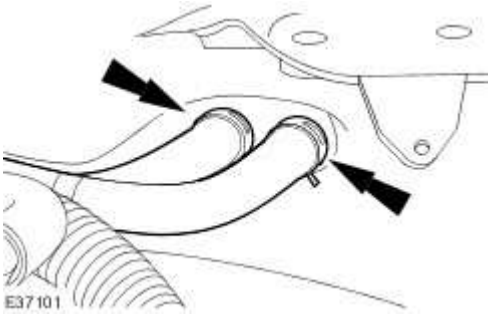

11 . Remove the passenger footwell vent duct. <<412-01>>

12 . Remove the glove box. <<501-12>>

13 . Disconnect the blower motor electrical connector.

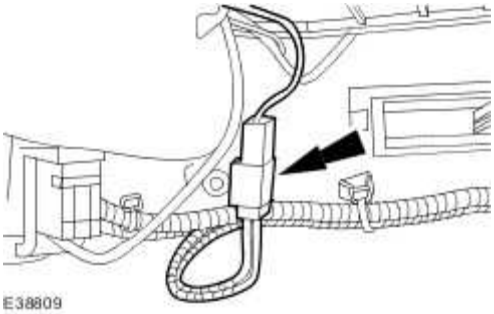

14 . Remove the blower motor housing securing bolts.

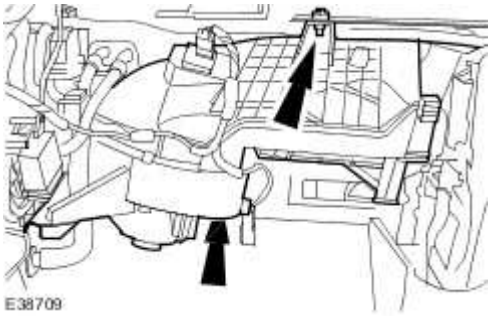

15 . Remove the blower motor housing securing bolts.

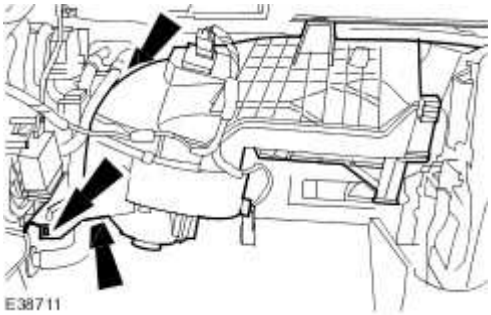

16 . Remove the blower motor housing.

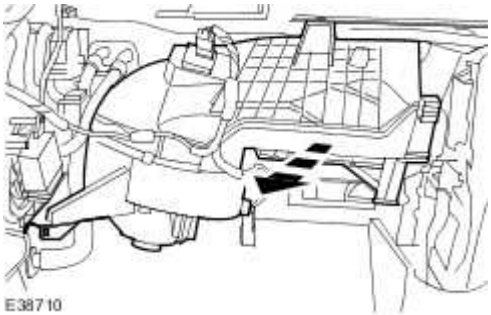

www.JagDocs.com

17 . Remove the heater core inlet and outlet pipes.

1) Remove the heater core inlet and outlet pipes retaining plate.

2) Remove the heater core inlet and outlet pipes retaining clamps.

Remove and discard the O-ring seals.

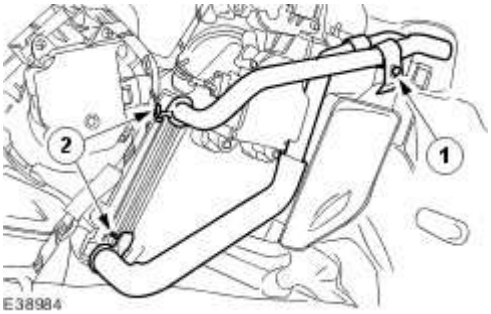

18 . Remove the heater core.

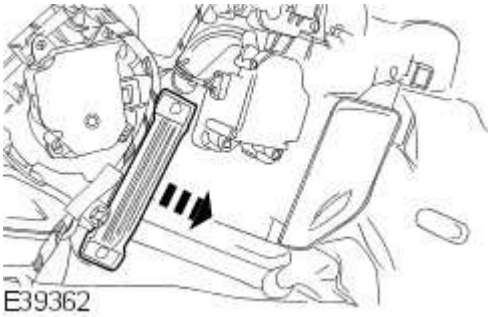

Installation

1 . To install, reverse the removal procedure.

Install new O-ring seals to the heater core inlet and outlet pipes.

2 . Tighten to 7 Nm.

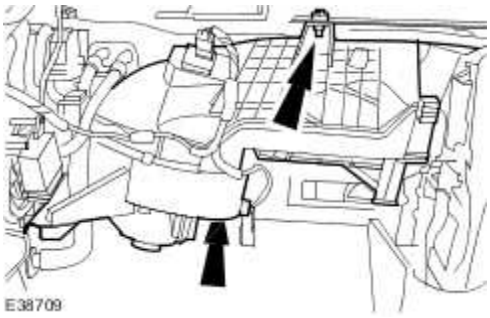

3 . Tighten to 7 Nm.

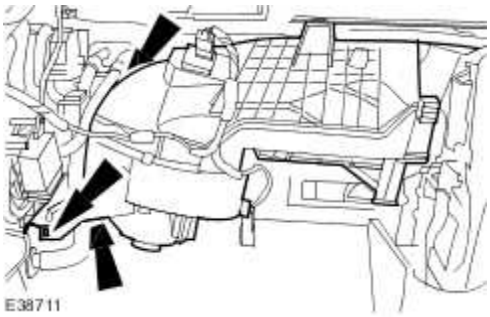

4 . Tighten to 25 Nm.

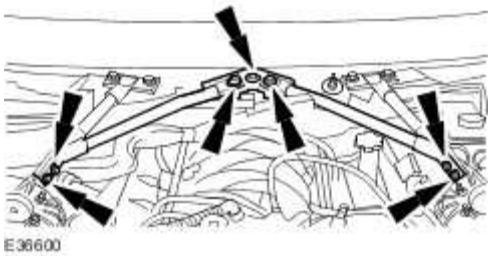

5 . Carry out the coolant system refill and bleeding procedure. <<303-03A>> <<303-03B>>

www.JagDocs.com

Heater Core and Evaporator Core Housing (82.25.21)

Removal

All vehicles

1 . Disconnect the battery ground cable. <<414-01>>

2 . Carry out the air conditioning recovery procedure. <<412-00>>

3 . **WARNING: Never remove the coolant pressure cap under any circumstances while the engine is operating. Failure to follow this instruction may result in personal injury.**

WARNING: To avoid having scalding hot coolant or steam blow out of the cooling system, use extreme care when removing the coolant pressure cap from a hot cooling system. Wait until the engine has cooled, then wrap a thick cloth around the coolant pressure cap and turn it slowly until the pressure begins to release. Step back while the pressure is released from the system. When certain all the pressure has been released (still with a cloth) turn and remove the coolant pressure cap from the coolant expansion tank. Failure to follow these instructions may result in personal injury.

WARNING: To avoid the possibility of personal injury, do not operate the engine with the hood open until the fan blades have been examined for cracks and separation. Failure to follow this instruction may result in personal injury.

WARNING: Remove fuse 14 from the engine compartment fuse box prior to performing any under hood service in the area of the cooling fan when the engine is hot, since the cooling fan motor could operate if the engine has been switched OFF. Failure to follow this instruction may result in personal injury.

CAUTION: The engine cooling system must be maintained with the correct concentration and type of anti-freeze solution to prevent corrosion and frost damage. Failure to follow this instruction may result in damage to the engine.

CAUTION: Never remove the coolant pressure cap under any circumstances while the engine is operating. Failure to follow this instruction may result in damage to the engine.

Release the cooling system pressure.

- Remove the coolant expansion tank pressure cap.

4 . Remove the cowl vent screen. <<501-02>>

5 . Remove the engine compartment support.

E36600

6 . Remove the engine compartment support.

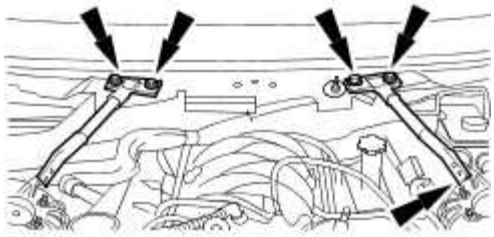

E36601

www.JagDocs.com

7 . Remove the cabin filter cover and cabin filter.

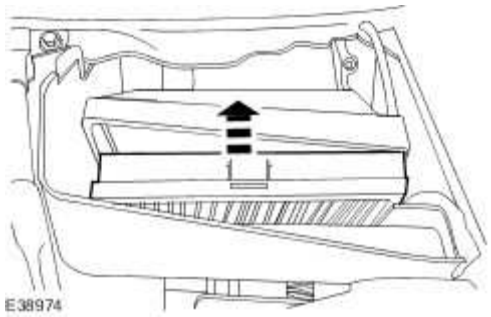

8 . Remove the cabin filter housing.

1) Remove the cabin filter housing retaining nuts.

2) Remove the cabin filter housing.

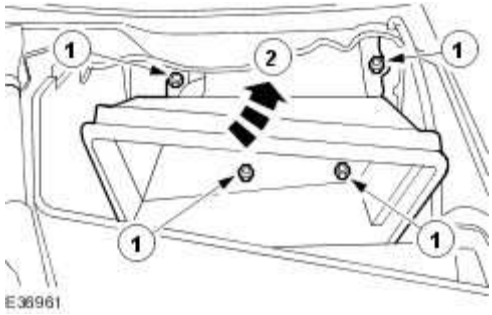

9 . Remove the engine compartment panel.

1) Remove the engine compartment panel retaining bolt.

2) Remove the engine compartment panel.

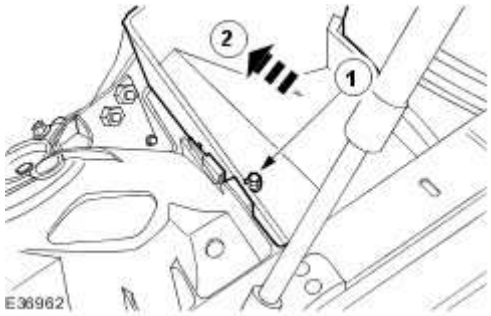

Right-hand drive vehicles

10 . Disconnect the bonnet cable.

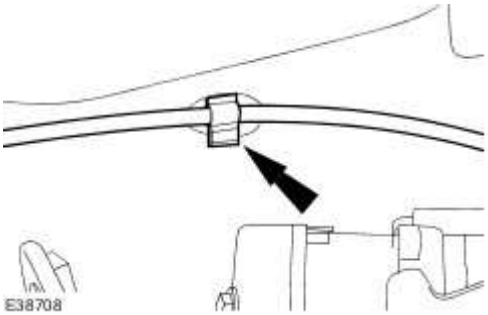

All vehicles

11 . Remove the engine compartment panel.

1) Remove the engine compartment panel retaining clip.

2) Remove the engine compartment panel.

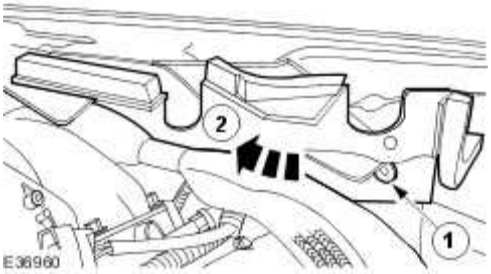

12 . **NOTE:**

Cap the heater hoses to prevent coolant loss.

Detach the heater hoses.

- Reposition the heater hose retaining clips.
- Detach the heater hoses.

www.JagDocs.com

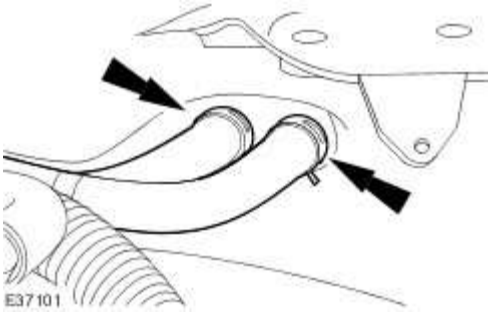

13 . **NOTE:**

Cap the air conditioning ports.

Disconnect the expansion valve manifold and tube assembly.

- Remove and discard the O-ring seals.

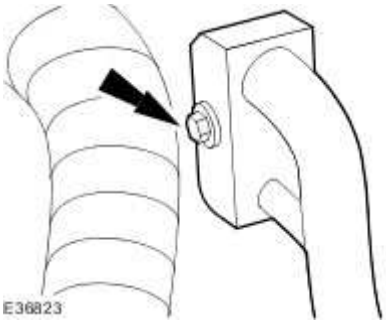

14 . Remove the instrument panel. <<501-12>>

15 . Remove the floor console register duct.

1) Remove the retaining nut.

2) Remove the floor console register duct.

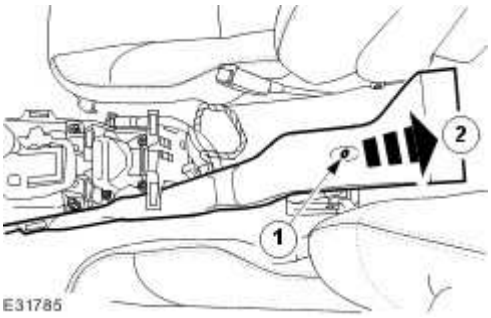

16 . Remove the floor console adaptor duct.

1) Detach the floor console adaptor duct retaining tang.

2) Remove the floor console adaptor duct.

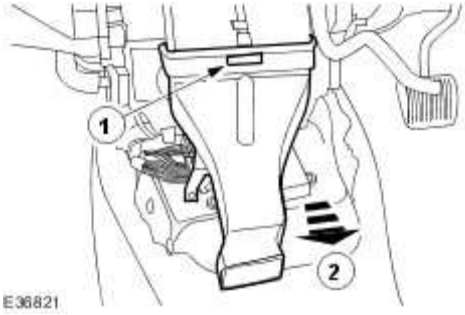

17 . Disconnect the AC module electrical connector.

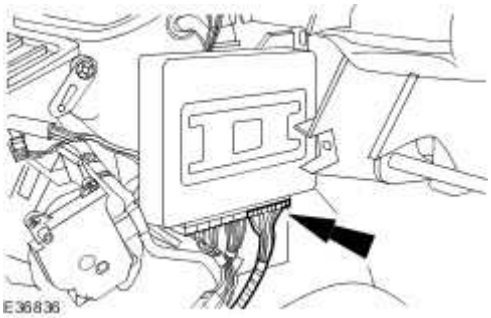

18 . Disconnect the heater motor electrical connector.

www.JagDocs.com

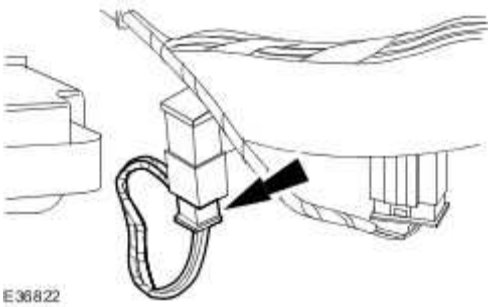

19 . Remove the heater core and evaporator core housing retaining bolt.

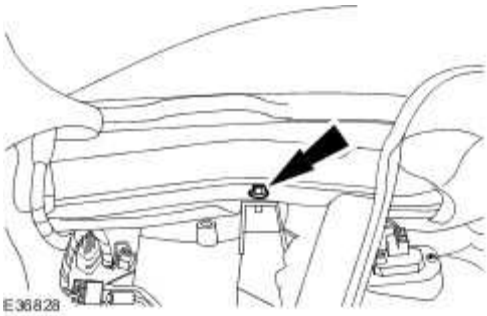

20 . Remove the heater core and evaporator core housing retaining bolt.

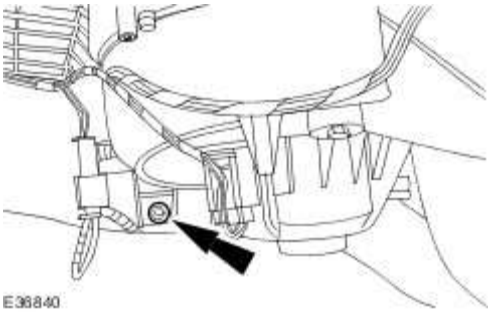

21 . **CAUTION: Care should be taken when handling the heater core and evaporator core housing not to lift it by the heater core inlet or outlet pipes, actuator units or by the AC module. Failure to follow this instruction may result in damage to the heater core and evaporator core housing.**

CAUTION: Care should be taken when handling the heater core and evaporator core housing as coolant may leak out of the unit.

Remove the heater core and evaporator core housing.

1) Detach the rear footwell vent ducts.

2) Remove the heater core and evaporator core housing retaining bolts.

3) Remove the heater core and evaporator core housing.

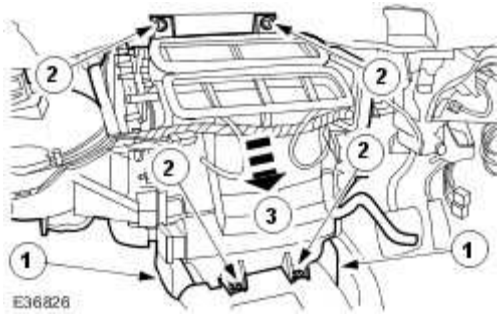

Installation

1 . To install, reverse the removal procedure.

Tighten to 7 Nm.

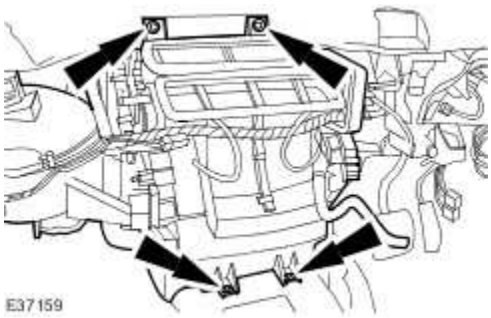

2 . Tighten to 7 Nm.

www.JagDocs.com

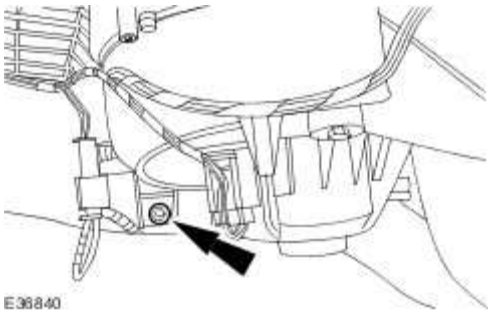

3 . Tighten to 7 Nm.

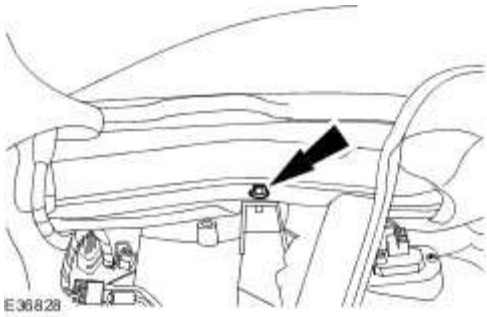

4 . **NOTE:**

Fit new O-ring seals to expansion valve manifold and tube assembly.

Tighten to 8 Nm.

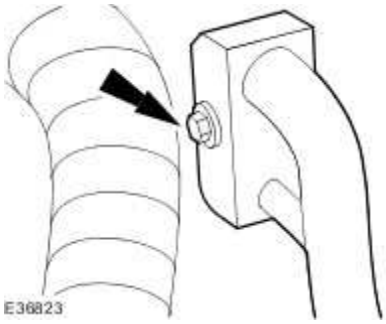

5 . Tighten to 25 Nm.

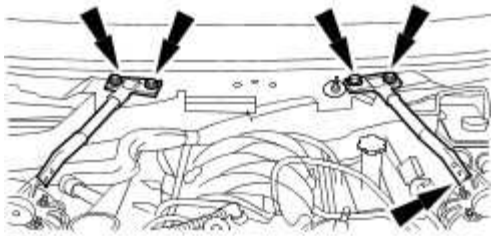

6 . Tighten to 25 Nm.

7 . Reconnect the battery ground cable. <<414-01>>

8 . Carry out coolant system filling and bleeding procedure. <<303-03>>

9 . Carry out the air conditioning system evacuation and charging procedure. <<412-00>>

www.JagDocs.com

Heater Hose (80.25.01)

Removal

All vehicles

1. **WARNING: Never remove the coolant pressure cap under any circumstances while the engine is operating. Failure to follow this instruction may result in personal injury.**

WARNING: To avoid having scalding hot coolant or steam blow out of the cooling system, use extreme care when removing the coolant pressure cap from a hot cooling system. Wait until the engine has cooled, then wrap a thick cloth around the coolant pressure cap and turn it slowly until the pressure begins to release. Step back while the pressure is released from the system. When certain all the pressure has been released (still with a cloth) turn and remove the coolant pressure cap from the coolant expansion tank. Failure to follow these instructions may result in personal injury.

WARNING: To avoid the possibility of personal injury, do not operate the engine with the hood open until the fan blades have been examined for cracks and separation. Failure to follow this instruction may result in personal injury.

WARNING: Remove fuse 14 from the engine compartment fuse box prior to performing any under hood service in the area of the cooling fan when the engine is hot, since the cooling fan motor could operate if the engine has been switched OFF. Failure to follow this instruction may result in personal injury.

CAUTION: The engine cooling system must be maintained with the correct concentration and type of anti-freeze solution to prevent corrosion and frost damage. Failure to follow this instruction may result in damage to the engine.

CAUTION: Never remove the coolant pressure cap under any circumstances while

the engine is operating. Failure to follow this instruction may result in damage to the engine.

Release the cooling system pressure.

- Remove the coolant expansion tank pressure cap.

2 . Remove the air deflector. <<501-02>>

3 . Remove the heater hose retaining bolt.

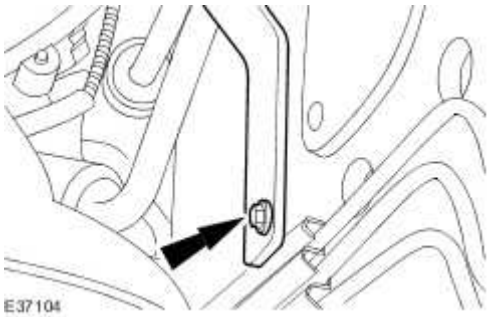

4 . Remove the cowl vent screen. <<501-02>>

5 . Remove the engine compartment support.

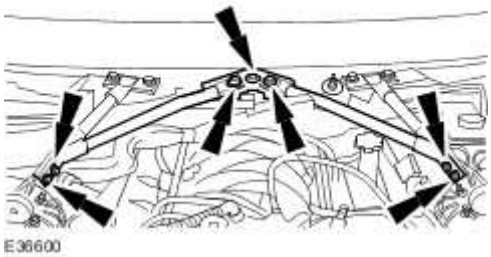

6 . Remove the engine compartment support.

www.JagDocs.com

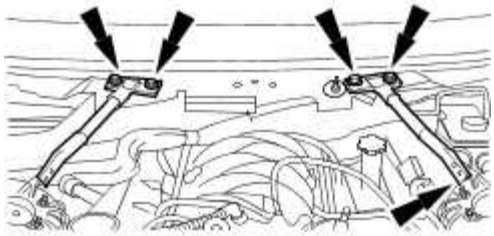

7 . Remove the cabin filter cover and cabin filter.

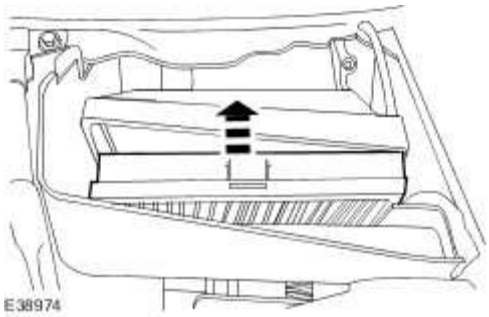

8 . Remove the cabin filter housing.

1) Remove the cabin filter housing retaining nuts.

2) Remove the cabin filter housing.

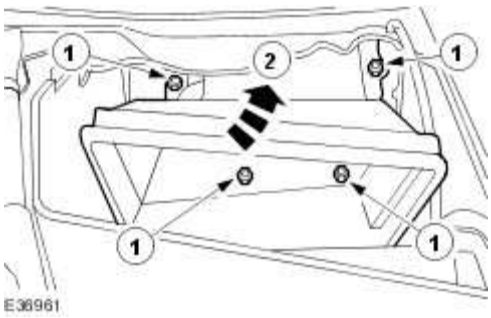

9 . Remove the engine compartment panel.

1) Remove the engine compartment panel retaining bolt.

2) Remove the engine compartment panel.

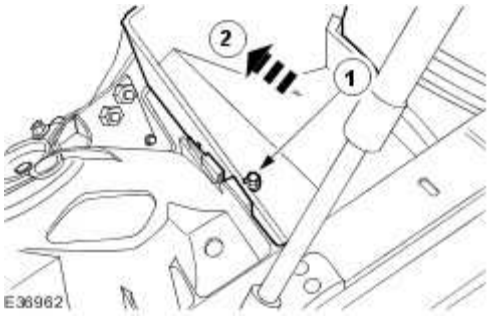

Right-hand drive vehicles

10 . Disconnect the bonnet cable.

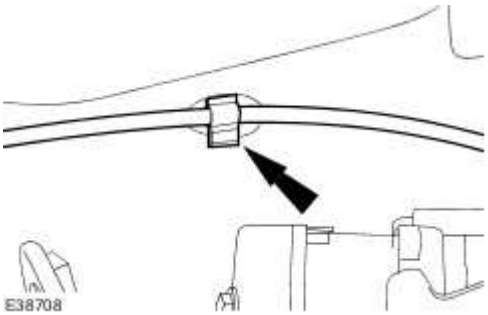

All vehicles

11 . Remove the engine compartment panel.

1) Remove the engine compartment panel retaining clip.

2) Remove the engine compartment panel.

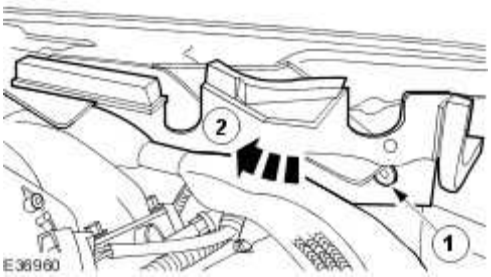

www.JagDocs.com

12 . **NOTE:**

Cap the heater hoses to prevent coolant loss.

Detach the heater hoses.

1) Remove the heater hose retaining clips.

2) Detach the heater hoses.

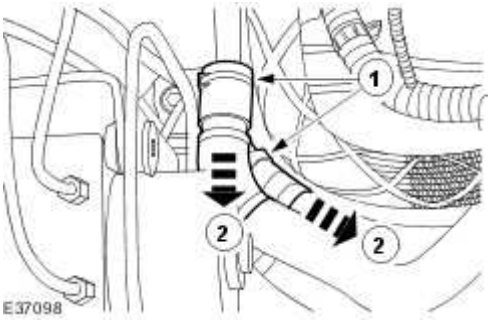

13 . Remove the heater hose retaining nut.

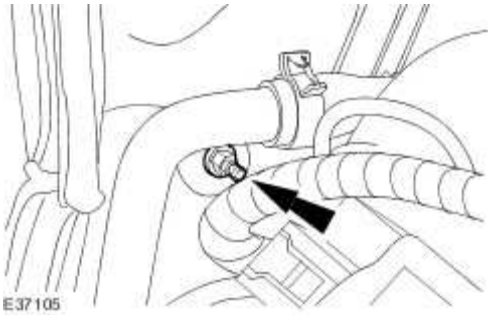

14 . **NOTE:**

Cap the heater hoses to prevent coolant loss.

Remove the heater hoses.

- Reposition the heater hose retaining clips.

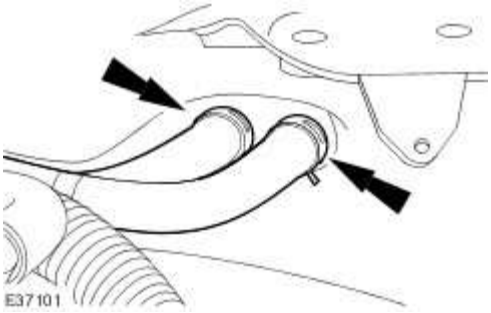

Installation

1 . To install, reverse the removal procedure.

Tighten to 7 Nm.

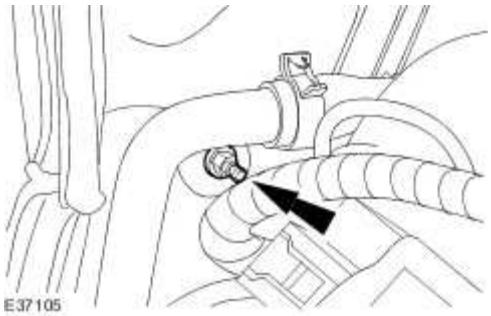

2 . Tighten to 7 Nm.

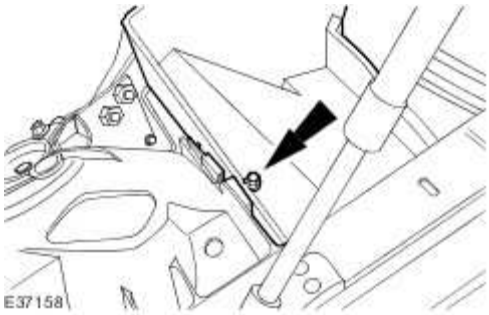

3 . Tighten to 6 Nm.

www.JagDocs.com

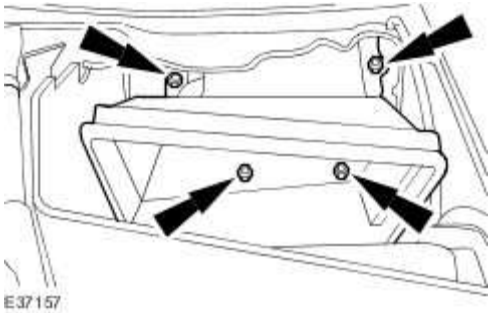

4 . Tighten to 25 Nm.

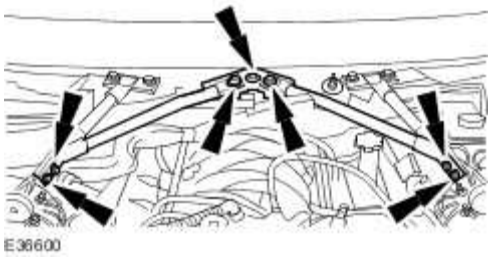

5 . Tighten to 25 Nm.

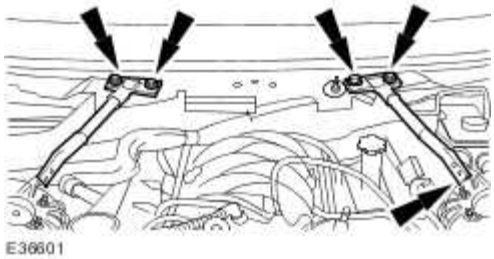

6 . Tighten to 7 Nm.

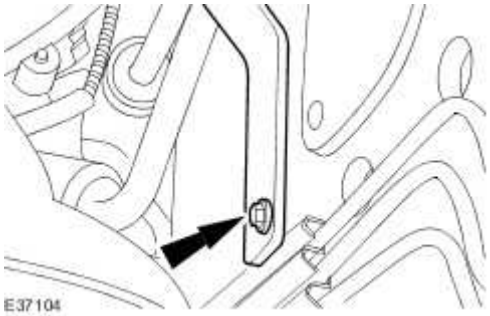

7 . Carry out the cooling system filling and bleeding procedure. <<303-03>>

www.JagDocs.com

Specifications

Torque Specifications

Description	Nm	lb-ft	lb-in
Fuel fired booster heater retaining bolts	9	-	80

Fuel Fired Booster Heater

The system consists of a fuel operated heater unit and a fuel dosing pump.

Fuel for the heater system is taken from the vehicle fuel tank, through a fuel line attached to the fuel pump module. Fuel is drawn from the fuel tank by the dosing pump to the heater unit. In the heater unit, the fuel delivered by the fuel pump is burned and the resultant heat output is used to heat the engine coolant.

An electronic control module integrated into the heater unit controls the operation of the heater unit and the dosing pump. The climate control unit controls the operation of the re-circulation flaps on initial start up.

www.JagDocs.com

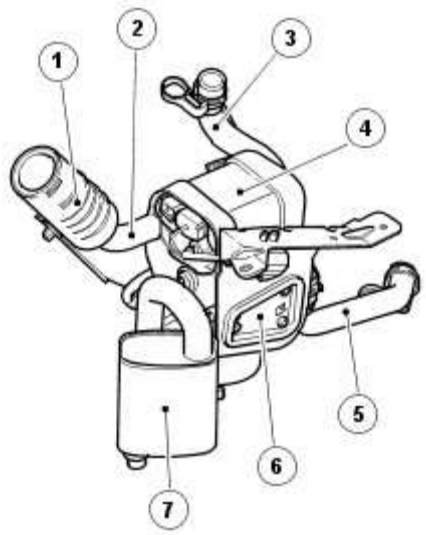

E67544

Item	Part Number	Description
1		Air intake silencer
2		Air intake hose
3		Coolant outlet hose
4		Fuel fired booster heater assembly
5		Coolant inlet hose
6		Fuel fired booster heater bracket
7		Exhaust silencer assembly

The fuel fired booster heater is located behind the right-hand side of the front bumper and is

accessed through the right-hand fender splash shield and the radiator splash shield.

The fuel fired booster heater operates at two levels. The system will only ever operate if the engine is running. When the ambient temperature is below 8° C (46° F) and the coolant temperature is lower than 76° C (169° F) the fuel fired booster heater operates at full power.

This stage will operate until the coolant temperature reaches 87° C (189° F), and it will then switch to the second level and run at half power until the coolant temperature reaches 90° C (194° F). At this point the system will switch off. It will switch on again at half power if the coolant temperature drops below 79° C (174° F). If the coolant temperature drops to below 76° C (169° F), the system will operate at full power.

The fuel fired booster heater will not operate if:

- the supply voltage is below 10.25V
- it is in 'fault lockout'

Fuel Fired Booster Heater

Principles of Operation

For a detailed description of the fuel fired booster heater, refer to the relevant Description and Operation sections in the workshop manual.
Fuel Fired Booster Heater

Inspection and Verification

1 . Verify the customer concern.

2 . Visually inspect for obvious signs of mechanical or electrical damage.

Mechanical	Electrical
• Coolant Level • Fuel Level	• Fuses/Relays • Damaged, Loose or Corroded Connector(s) • Damage to Wiring Loom/Incorrect Location, Stretched or Taught

3 . If an obvious cause for an observed or reported concern is found, correct the cause (if possible) before proceeding to the next step.

4 . If the cause is not visually evident, verify the symptom and refer to the Jaguar Approved Diagnostic System.

DTC Index

CAUTION: When probing connectors to take measurements in the course of the pinpoint tests, use the adaptor kit, part number 3548-1358-00

NOTE:

If the control module/component is suspect and the vehicle remains under manufacturer warranty, refer to the Warranty Policy and Procedures manual (section B1.2), or determine if any prior approval program is in operation, prior to the installation of a new module.

www.JagDocs.com

NOTE:

Generic scan tools may not read the codes listed, or may read only 5 digit codes. Match the five digits from the scan tool to the first five digits of the seven digit code listed to identify the fault (the last two digits give additional information read by the manufacturer approved diagnostic system).

NOTE:

When performing voltage or resistance tests, always use a digital multimeter (DMM) accurate to three decimal places and with a current calibration certificate. When testing resistance, always take the resistance of the DMM leads into account.

NOTE:

Check and rectify basic faults before beginning diagnostic routines that involve pinpoint tests.

NOTE:

Inspect connectors for signs of water ingress, and pins for damage and/or corrosion.

NOTE:

If DTCs are recorded and, after performing the pinpoint tests, a fault is not present, an intermittent concern may be the cause. Always check for loose connections and corroded terminals.

DTC	Description	Possible Causes	Action
B1A0016	Control Module	• Fuel fired booster heater module - low supply voltage • Generator voltage is regulated by the engine control module	Refer to electrical circuit diagrams, notes and check fuel fired booster heater module for circuit voltage below threshold (check power and ground circuit)
B1A0017	Control Module	• Fuel fired booster heater module - high supply voltage • Generator voltage is regulated by the engine control module	Refer to electrical circuit diagrams, notes and check fuel fired booster heater module for circuit voltage above threshold (check power and ground circuit)

B1A0043	Control Module	• Fuel fired booster heater module - deactivated	Suspect the fuel fired heater assembly, check and install a new heater assembly as required, refer to the new module installation note at the top of the DTC Index
B1A0049	Control Module	• Fuel fired booster heater module - internal circuit electronic failure	Suspect the fuel fired heater assembly, check and install a new heater assembly as required, refer to the new module installation note at the top of the DTC Index
B1D2211	Coolant Temperature Sensor	• Fuel fired booster heater module - internal circuit fault short to ground	Suspect the fuel fired heater assembly, check and install a new heater assembly as required, refer to the new module installation note at the top of the DTC Index
B1D2215	Coolant Temperature Sensor	• Fuel fired booster heater module, coolant temperature sensor circuit fault - short to power or open circuit	Suspect the fuel fired heater assembly, check and install a new heater assembly as required, refer to the new module installation note at the top of the DTC Index
B1D2313	Overheat Sensor	• Fuel fired booster heater module, overheat sensor circuit - open circuit	Suspect the fuel fired heater assembly, check and install a new heater assembly as required, refer to the new module installation note at the top of the DTC Index
B1D2411	Glow Plug	• Fuel fired booster heater module, glow plug circuit - short to ground	Suspect the fuel fired heater assembly, check and install a new heater assembly as required, refer to the new module installation note at the top of the DTC Index
B1D2415	Glow Plug	• Fuel fired booster heater module, glowplug circuit -	Suspect the fuel fired heater assembly, check and install a new heater assembly as required,

www.JagDocs.com

		short to power or open	refer to the new module installation note at the top of the DTC Index
B1D2511	Heater Fuel Pump	• Fuel fired booster heater module, heater fuel pump circuit - short to ground	Refer to electrical circuit diagrams, notes and check fuel fired booster heater fuel pump circuit for short to ground
B1D2515	Heater Fuel Pump	• Fuel fired booster heater module, fuel pump circuit - short to power or open	Refer to electrical circuit diagrams, notes and check fuel fired booster heater fuel pump circuit for short to power or open
B1D2611	Combustion Air Blower	• Fuel fired booster heater module, combustion air fan circuit - short to ground	Suspect the fuel fired heater assembly, check and install a new heater assembly as required, refer to the new module installation note at the top of the DTC Index
B1D2615	Combustion Air Blower	• Fuel fired booster heater module, combustion air fan circuit - short circuit to power or open	Suspect the fuel fired heater assembly, check and install a new heater assembly as required, refer to the new module installation note at the top of the DTC Index
B1D2692	Combustion Air Blower	• Fuel fired booster heater module, combustion air fan circuit - performance or incorrect operation (fan speed low)	Suspect the fuel fired heater assembly, check and install a new heater assembly as required, refer to the new module installation note at the top of the DTC Index
B1D2693	Combustion Air Blower	• Fuel fired booster heater module, combustion air blower circuit - no operation	Suspect the fuel fired heater assembly, check and install a new heater assembly as required, refer to the new module installation note at the top of the DTC Index
B1D2711	Heater Coolant Pump	• Fuel fired booster heater module, coolant pump	Pin not connected on Jaguar, DTC will not log on Jaguar

		circuit - short to ground	applications
B1D2715	Heater Coolant Pump	• Fuel fired booster heater module, coolant pump circuit - short to power or open	Pin not connected on Jaguar, DTC will not log on Jaguar applications
B1D2993	No Start, even after restart attempt	• Fuel fired booster heater module - no operation	Suspect the fuel fired heater fuel supply, check fuel supply pipe's and joints for security Check fuel pump for correct operation
B1D3093	No Start In Test Mode, No generation of flame detected in test mode	• Fuel fired booster heater module - no generation of flame detected in test mode	Suspect the fuel fired heater fuel supply, check fuel supply pipe's and joints for security Check fuel pump for correct operation
B1D3194	Flame Detected Prior to Normal Operation	• Fuel fired booster heater module - unexpected operation	Suspect the fuel fired heater assembly, check and install a new heater assembly as required, refer to the new module installation note at the top of the DTC Index
B1D3292	Multiple Flame Interruption During Heating Cycle	• Fuel fired booster heater module - performance or incorrect operation	Suspect the fuel fired heater fuel supply, check fuel supply pipe's and joints for security Check fuel pump for correct operation
B1D3392	Flame Interruption During Normal Operation	• Fuel fired booster heater module - performance or incorrect operation	Suspect the fuel fired heater fuel supply, check fuel supply pipe's and joints for security Check fuel pump for correct operation
B1D3468	Heater In Lock Out Mode	• Fuel fired booster heater module - event information	Suspect the fuel fired heater fuel supply, check fuel supply pipe's and joints for security Check fuel pump for correct operation
U007308	Control Module Communication Bus "A" Off	• Fuel fired booster heater module - CAN bus signal/message failure	Refer to electrical circuit diagrams and check fuel fired booster heater module circuit for CAN bus circuit fault

www.JagDocs.com

U016487	Lost Communication With HVAC Control Module	• Fuel fired booster heater module - missing message from climate control module	Refer to electrical circuit diagrams and check fuel fired booster heater module circuit for CAN bus to climate control module circuit fault
U030055	Internal Control Module Software Incompatibility	• Fuel fired booster heater module - not configured	The module can be configured using the new module configuration procedure. Check and configure as required
U1A0008	Private Communication Network	• Fuel fired booster heater module - Can Bus signal/message failure	Refer to electrical circuit diagrams and check fuel fired booster heater module for W-Bus communication fault (Telestart only)
U1A0395	Car Config Parameter	• Fuel fired booster heater module - incorrect assembly car configuration code miss-match (e.g. petrol fuel burning heater in diesel vehicle)	The module can be configured using the new module procedure. Check and configure as required
U1A3787	Crash Status Telegram	• Fuel fired booster heater module - missing message from restraints control Module	Refer to electrical circuit diagrams and check fuel fired booster heater module circuit for CAN bus to restraints control Module circuit fault
U1A446C	Fuel Level	• Fuel fired booster heater module - low fuel	This is not a fault! The vehicle fuel level was low and the fuel fired booster heater module shut down to improve the MPG, advise vehicle driver that below a certain fuel level the auxiliary heater shuts down

Fuel Fired Booster Heater

Removal

1 . Remove the fender splash shield.
For additional information, refer to Fender Splash Shield (76.10.90)

2 . Disconnect the fuel fired booster heater fuel line.

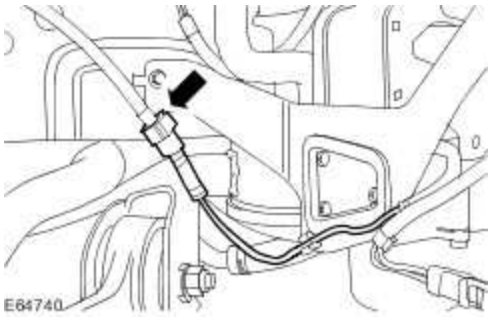

3 . Remove the fuel fired booster heater retaining bolt.

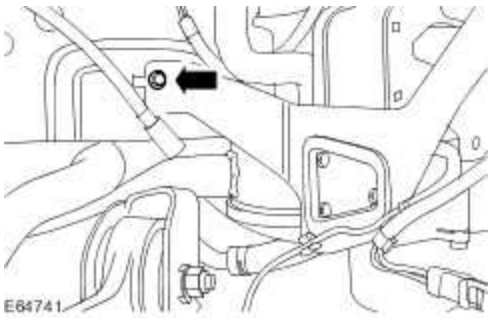

4 . Raise the vehicle.

5 . Remove the radiator splash shield.

www.JagDocs.com

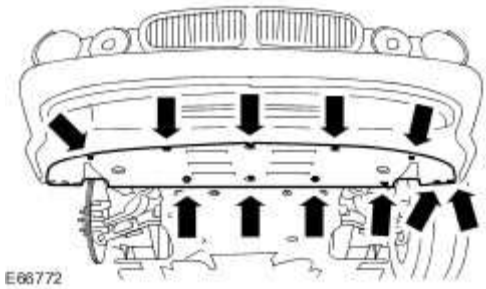

6 . Disconnect the fuel fired booster heater electrical connector.

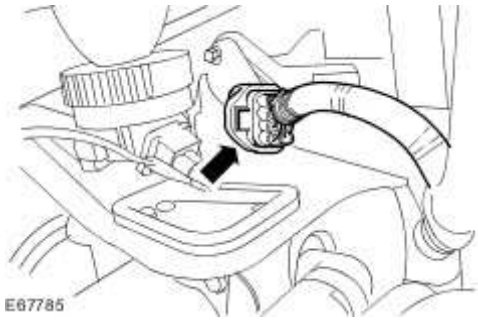

7 . Detach the cooling module wiring harness.

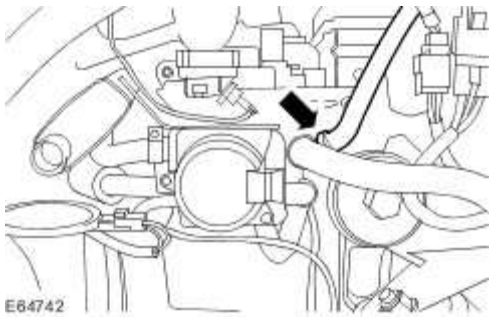

8 . **NOTE:**

Clamp the coolant hose to minimize coolant loss.

Disconnect the fuel fired booster heater coolant outlet hose.

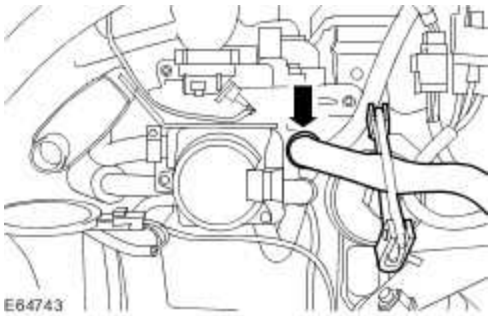

9 . Detach the fuel fired booster heater.

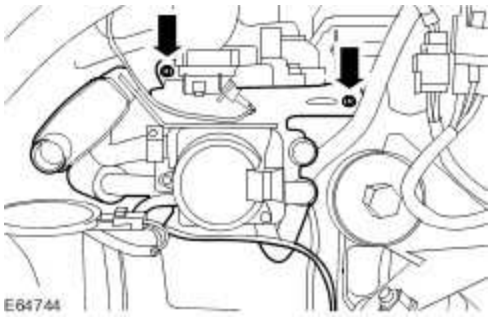

10 . **NOTE:**

Clamp the coolant hose to minimize coolant loss.

Remove the fuel fired booster heater.

- Disconnect the fuel fired booster heater coolant inlet hose.

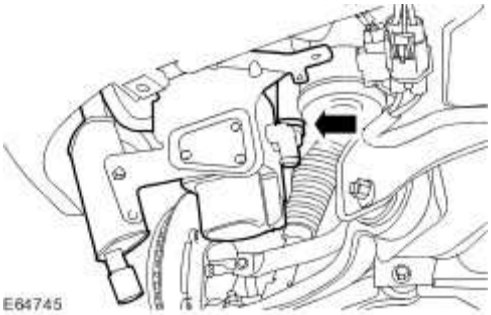

www.JagDocs.com

Installation

1 . To install, reverse the removal procedure.

Tighten to 9 Nm.

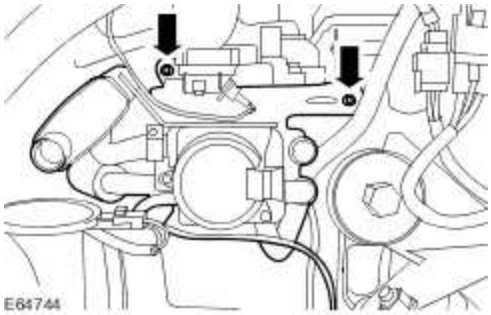

2 . Tighten to 9 Nm.

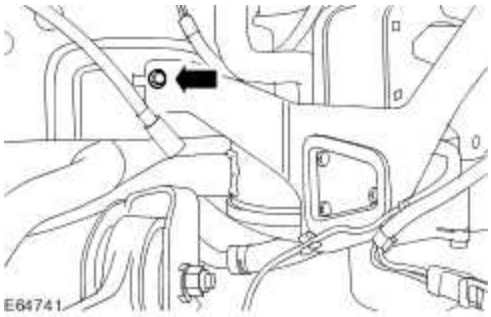

3 . Check and top-up the engine coolant as necessary.

Specifications

Torque Specifications

Description	Nm	lb-ft	lb-in
Air conditioning (A/C) compressor mounting retaining bolts	25	18	—
Air conditioning (A/C) compressor manifold and tube retaining bolt	20	15	—
Air conditioning (A/C) condenser core retaining studs	7	—	62
Air conditioning (A/C) condenser core supply and return lines retaining nuts	8	—	71
Power steering oil cooler retaining nuts	7	—	62
Air conditioning (A/C) desiccant bag retaining screw	22	16	—
Air conditioning (A/C) pressure cutoff switch	8	—	71
Air conditioning (A/C) compressor supply and return lines	20	15	—
Engine mounting and bracket assembly retaining bolts	25	18	—
Engine mounting bracket lower retaining bolt	63	46	—
Steering gear mounting bolts	100	74	—
Steering gear shaft pinch bolt	35	26	—
Cooling module retaining bolts	8	—	71
Radiator support bracket retaining bolts	9	—	80

www.JagDocs.com

Air Conditioning

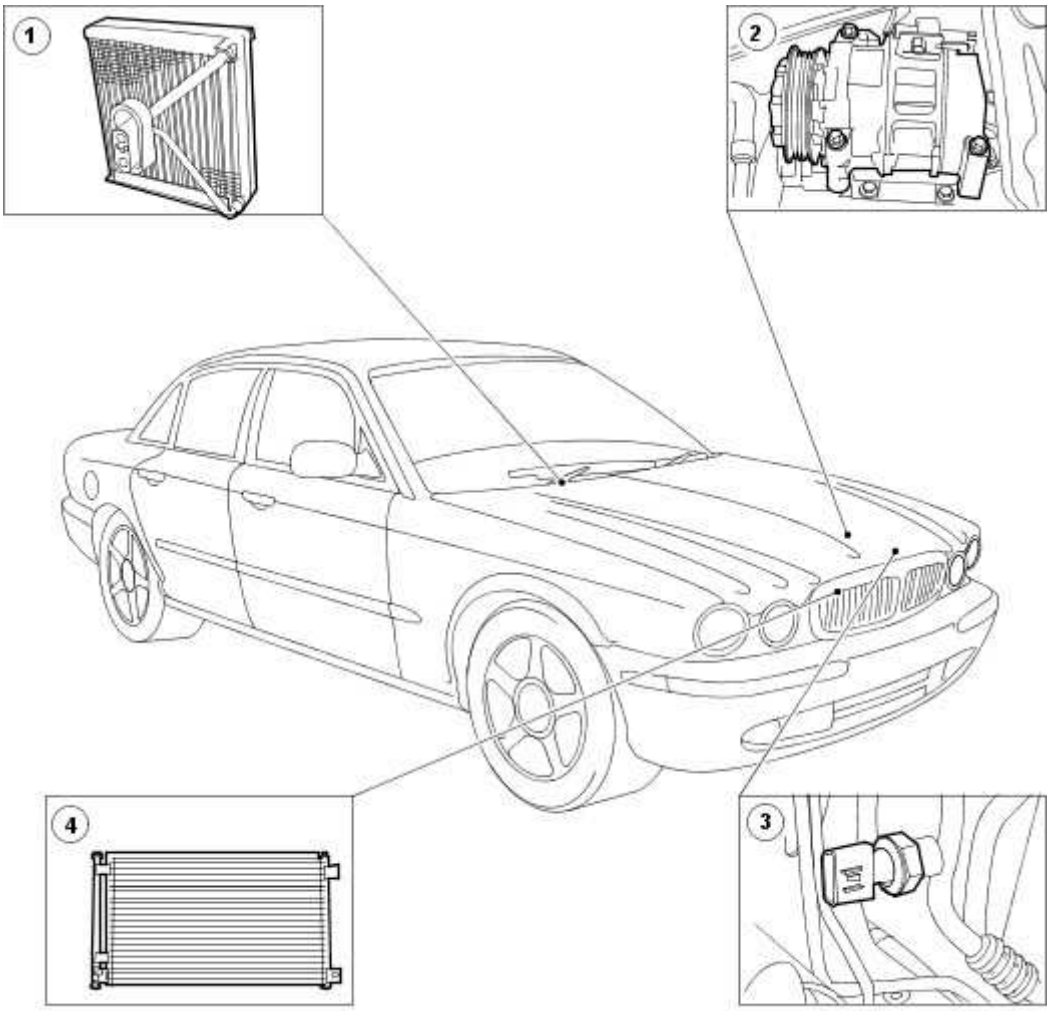

E37260

Item	Part Number	Description
1	—	Evaporator core
2	—	Air conditioning (A/C) compressor
3	—	Pressure cut off switch
4	—	Condenser core

The air conditioning (A/C) system components are:

- A/C Compressor
- Condenser core
- Evaporator core
- Thermostatic expansion valve
- Desiccant bag
- Connecting refrigerant lines

The refrigeration system operation is controlled by the:

- thermostatic expansion valve.
- evaporator discharge temperature sensor.
- pressure cut off switch.
- engine control module (ECM).
- remote climate control module (RCCM).

The refrigerant system incorporates a variable capacity A/C compressor.

The RCCM monitors the evaporator discharge temperature sensor and communicates with the ECM to control A/C compressor operation. The RCCM also monitors the ambient air temperature and disables A/C operation when the ambient air temperature is below 0°C (30°F).

The pressure switch is located in the A/C compressor discharge line and communicates with the ECM. If high or low refrigerant pressures are experienced, the ECM will interrupt A/C compressor operation.

The pressure relief valve is installed in the A/C compressor and protects the system from excessively high refrigerant pressure.

The thermostatic expansion valve, which is mounted to the evaporator core supply and return lines, contains an adjustable orifice which provides the restriction that separates the high and low pressure liquid phases in the refrigerant system.

A/C Compressor

NOTE:

> The A/C compressor internal components are not serviced separately. The A/C compressor is serviced only as an assembly.

The A/C compressor has the following characteristics:

- A variable capacity function controlled by an external solenoid.
- A displacement capacity of 160cc on the petrol variants and 170cc on the diesel variant.
- The compressor is clutchless.
- The compressor operates all the time (from 2% to 100% while the engine is running).

A/C Compressor Pressure Relief Valve

An A/C compressor pressure relief valve is incorporated in the compressor to:

www.JagDocs.com

- relieve unusually high refrigerant system discharge pressure buildups.
- prevent damage to the A/C compressor and other system components.
- avoid total refrigerant loss by closing after the excessive pressure has been relieved.

Condenser Core

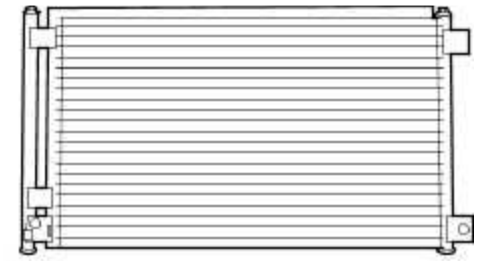

The A/C condenser core has the following characteristics:

- It is an aluminum fin and tube design heat exchanger located in front of the vehicle radiator.
- It cools compressed refrigerant gas by allowing air to pass over fins and tubes to extract heat and by condensing gas to liquid refrigerant as it is cooled.

- The tube assembly mounted on the side of the condenser core contains the desiccant bag.

Desiccant Bag

The desiccant bag removes any retained moisture in the A/C system. The A/C system has an R-134a leak trace dye wafer incorporated into the desiccant bag.

Refrigerant Lines

The manifold and tube assembly - thermostatic expansion valve carries high pressure liquid to the thermostatic expansion valve and low pressure gas from the thermostatic expansion valve to the manifold and tube assembly-compressor.

The tube assembly - A/C compressor to condenser carries the high pressure gas from the A/C compressor to the condenser core. It also houses the high pressure service port and has a serviceable high pressure relief valve.

The tube assembly - thermostatic expansion valve to the A/C compressor carries the low pressure gas received from the thermostatic expansion valve to the compressor, houses the low pressure service port and has a serviceable low pressure relief valve.

- The manifold and tube assembly - A/C compressor vehicles fitted with 3.5 or 4.2L petrol engines are are not interchangeable with vehicles fitted with a 3.0L petrol or 2.7L diesel engines.

The tube assembly - condenser to thermostatic expansion valve carries high pressure liquid to the manifold and tube assembly-thermostatic expansion valve and houses the high pressure service port.

Evaporator Core

The A/C evaporator core is the plate/fin type with a unique refrigerant flow path.

- A mixture of refrigerant and oil exits the thermostatic expansion valve (TXV) and enters the evaporator tank area through the 12.7 mm (0.5 in) tube.
- The tank area is divided into three sections: front inlet, front outlet and rear tank.
- The refrigerant enters the evaporator core tank area at the front inlet, flows down through the core and up the back side in a "U-flow" pattern.
- The refrigerant moves into the rear tank area and across to the other half of the core. The refrigerant moves down through the core and back up the front side of the core to the front outlet tank area.
- The refrigerant at this point is in a gaseous state. It exits the evaporator through the 16 mm (0.64 in) tube then passes through the TXV.

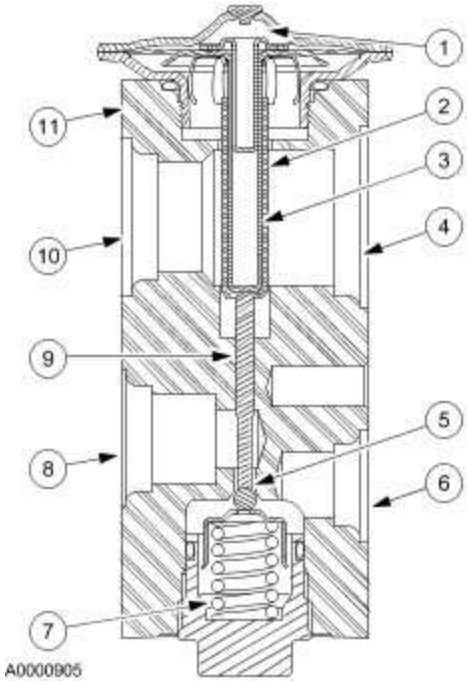

Item	Part Number	Description
1	—	Sensing bulb
2	—	Insulator
3	—	Hollow core pin-type retainer
4	—	Outlet port—low pressure liquid
5	—	Metering orifice
6	—	Inlet port—high pressure liquid
7	—	Spring
8	—	Evaporator inlet port—low pressure liquid

www.JagDocs.com

9	—	Pin
10	—	Evaporator outlet port—low pressure gas
11	—	Housing

The thermostatic expansion valve has the following characteristics:

- It is mounted on the evaporator core supply and return lines.
- It is a block-type valve.
- It contains an internal sensing bulb to increase the effectiveness of temperature sensing.
- It is not serviceable. A new thermostatic expansion valve must be installed as a unit.

Pressure Cut Off Switch

The pressure cut off switch monitors the A/C compressor discharge pressure and communicates with the engine control module (ECM). The ECM will interrupt A/C compressor operation in the event that the pressure cut off switch indicates high system discharge pressures. It is also used to sense no or low charge conditions. If the pressure is below a predetermined value for a given ambient temperature, the ECM will interrupt A/C compressor operation.

- The pressure cut off switch is mounted on a Schrader-type valve fitting on the compressor to condenser discharge line.
- A valve depressor, located inside the threaded end of the pressure cut off switch, presses on the Schrader valve stem and allows the pressure cut off switch to monitor the compressor discharge pressure.
- When the compressor discharge pressure rises to approximately 2,896 kPa (420 psi), the ECM will interrupt the compressor operation and disable the compressor.
- When the pressure drops to approximately 1,724 kPa (250 psi) the ECM will enable the A/C compressor circuit.

Service Gauge Port Valves

WARNING: Wear eye protection when opening/servicing the service gauge port valves.

The high-pressure service gauge port valve is located on the tube assembly - condenser to thermostatic expansion valve.

The low pressure service gauge port valve is located on the manifold and tube assembly - A/C compressor.

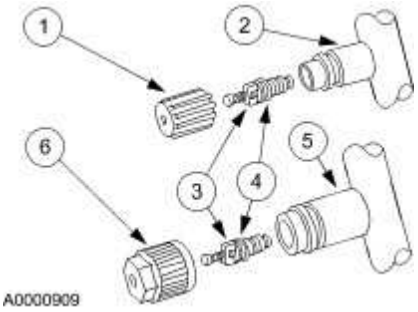

Item	Part Number	Description
1	—	A/C charging valve cap
2	—	Low pressure service gauge port valve
3	—	Schrader-type valve
4	—	O-ring seal
5	—	High pressure service gauge port valve
6	—	A/C charging valve cap

The fitting is an integral part of the refrigerant line or component.

- Special couplings are necessary for both the high side and low side service gauge ports.
- A new Schrader-type valve can be installed if the seal leaks.
- Always install the A/C charging valve cap on the service gauge port valves after repairing the refrigerant system.

www.JagDocs.com

Air Conditioning

For additional information refer to<<412-00>>

Air Conditioning (A/C) Compressor - 3.0L NA V6 - AJ27, VIN Range: G00442->G45703 (82.10.20)

Removal

All vehicles

1 . Carry out the air conditioning (A/C) system recovery procedure.
For additional information, refer to Air Conditioning (A/C) System Recovery, Evacuation and Charging (82.30.30)

2 . Disconnect the battery ground cable.
For additional information, refer to Battery Disconnect and Connect

3 . Remove the air cleaner.
For additional information, refer to Air Cleaner (19.10.05)

4 . Detach the accessory drive belt.

1) Rotate the accessory drive belt tensioner counter-clockwise.

Use a 3/8 inch square drive bar to rotate the accessory drive belt tensioner.

2) Detach the accessory drive belt.

www.JagDocs.com

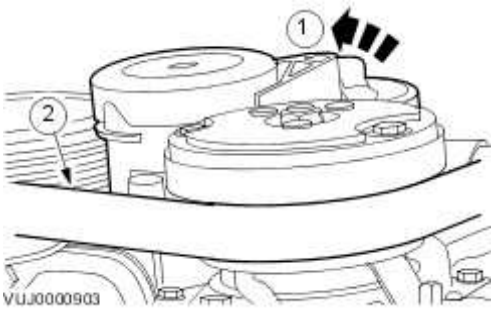

5 . Remove the left-hand front wheel and tire.
For additional information, refer to Wheel and Tire (74.20.05)

6 . Remove the air deflector.
For additional information, refer to Air Deflector (76.11.41)

Left-hand drive vehicles

7 . Remove the steering gear shaft pinch bolt.

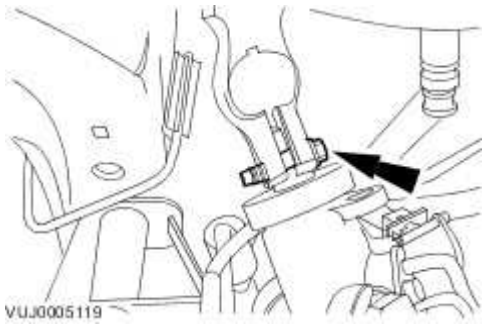

8 . Detach the steering gear.

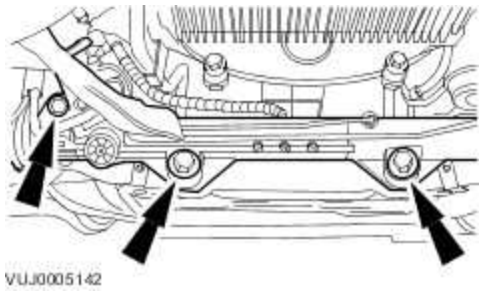

9 . Secure the steering gear.

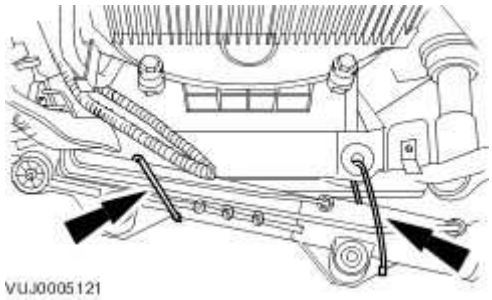

All vehicles

10 . Disconnect the A/C compressor electrical connector.

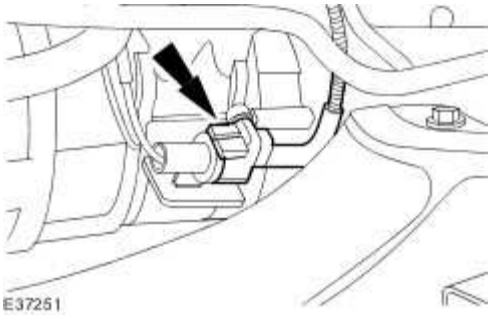

11 . Disconnect the A/C compressor supply and return lines.

- Remove and discard the A/C compressor O-ring seals.
- Cap the exposed ports.

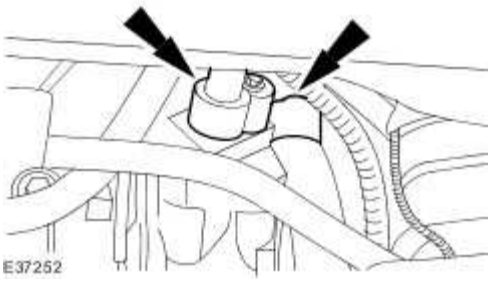

12 . Remove the A/C compressor.

www.JagDocs.com

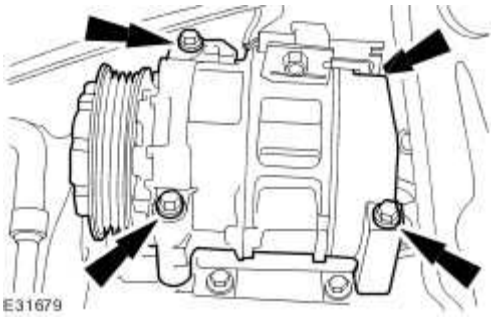

Installation

All vehicles

1 . Install the A/C compressor.

Tighten to 25 Nm.

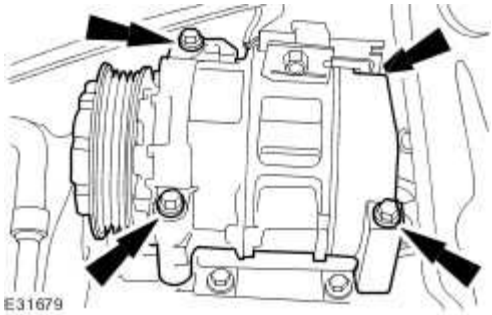

2 . **NOTE:**

Un-cap the exposed ports.

Install new A/C compressor O-ring seals.

Lubricate the new O-rings with A/C refrigerant oil.

3 . Clean off any oil residue that may contain A/C system flourescent dye.

4 . Connect the A/C compressor supply and return lines.

Tighten to 20 Nm.

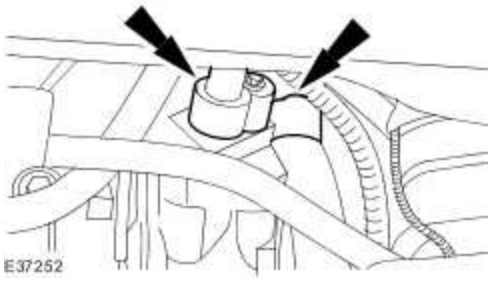

5 . Connect the A/C compressor electrical connector.

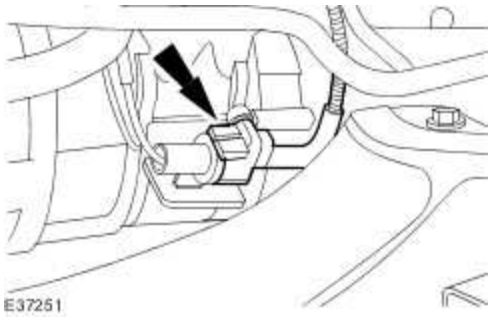

Left-hand drive vehicles

6 . Detach the steering gear.

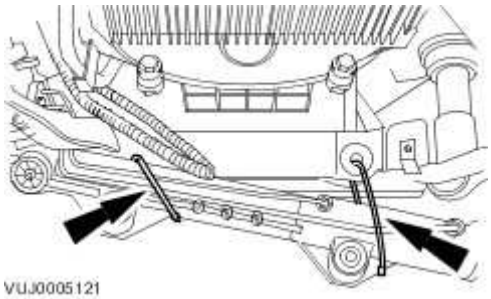

7 . Attach the steering gear.

Tighten to 100 Nm.

www.JagDocs.com

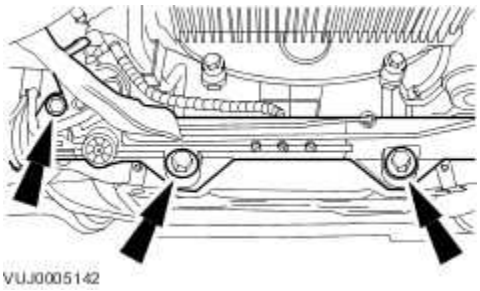

8 . Install the steering gear shaft pinch bolt.

- Tighten to 35 Nm.

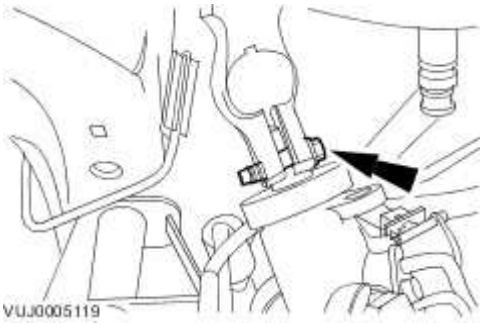

All vehicles

9 . Install the air deflector.
For additional information, refer to Air Deflector (76.11.41)

10 . Install the left-hand front wheel and tire assembly.
For additional information, refer to Wheel and Tire (74.20.05)

- Tighten to 125 Nm.

11 Attach the accessory drive belt.
.

1) Rotate the accessory drive belt tensioner counter-clockwise.

- Use a 3/8 inch square drive bar to rotate the accessory drive belt tensioner.

2) Attach the accessory drive belt.

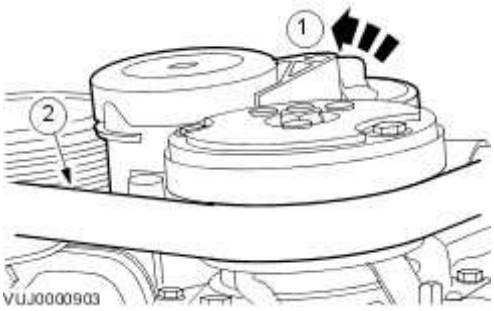

12 . Install the air cleaner.
For additional information, refer to Air Cleaner (19.10.05)

13 . Connect the battery ground cable.
For additional information, refer to Battery Connect (86.15.15)

14 Carry out the A/C system evacuation and charging procedure.
. For additional information, refer to Air Conditioning (A/C) System Recovery, Evacuation and Charging (82.30.30)

www.JagDocs.com

Air Conditioning (A/C) Compressor - 3.0L NA V6 - AJ27, VIN Range: G45704->G99999 (82.10.20)

Removal

All vehicles

1 Carry out the air conditioning (A/C) system recovery procedure.
. For additional information, refer to Air Conditioning (A/C) System Recovery, Evacuation and Charging (82.30.30)

2 . Disconnect the battery ground cable.
For additional information, refer to Battery Disconnect and Connect

3 . Remove the air cleaner.
For additional information, refer to Air Cleaner (19.10.05)

4 Detach the accessory drive belt.
.

1) Rotate the accessory drive belt tensioner counter-clockwise.

Use a 3/8 inch square drive bar to rotate the accessory drive belt tensioner.

2) Detach the accessory drive belt.

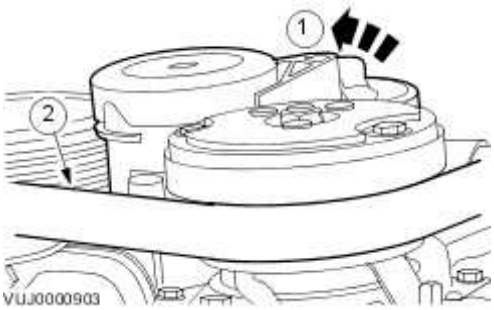

5 . Remove the left-hand front wheel and tire.
For additional information, refer to Wheel and Tire (74.20.05)

6 . Remove the air deflector.
For additional information, refer to Air Deflector (76.11.41)

Left-hand drive vehicles

7 . Remove the steering gear shaft pinch bolt.

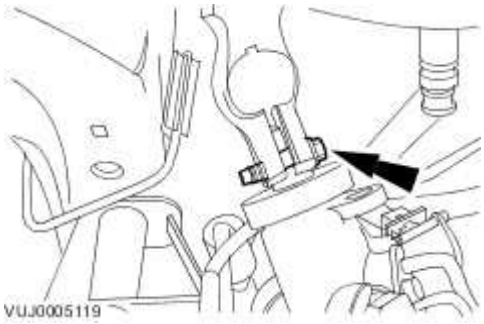

8 . **CAUTION: The steering gear must be supported at all times.**

Detach the steering gear.

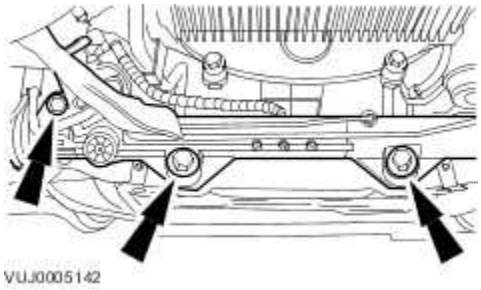

9 . **CAUTION: The steering gear must be supported at all times.**

Using suitable tie straps, secure the steering gear.

www.JagDocs.com

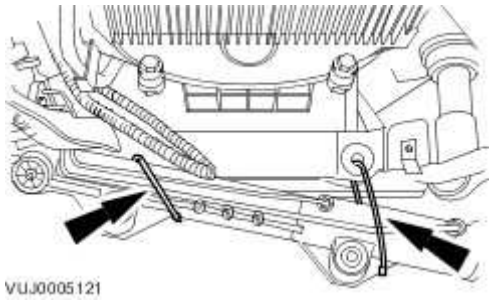

All vehicles

10 . Disconnect the A/C compressor electrical connector.

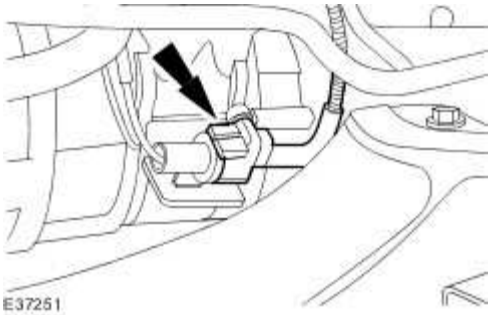

11 . Disconnect the A/C compressor return line.

- Remove and discard the A/C compressor O-ring seal.
- Cap the exposed ports.

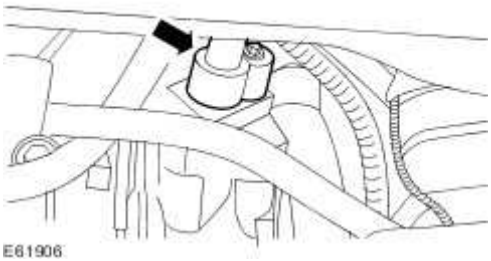

12 . Detach the A/C compressor.

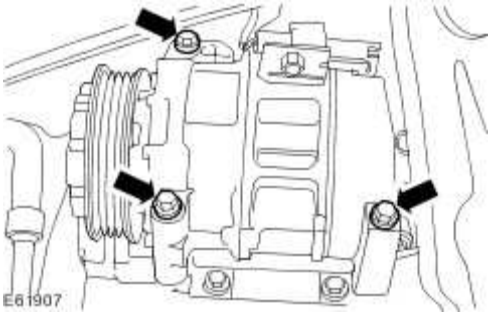

13 . Remove the A/C compressor.

- Disconnect the A/C compressor supply line.
- Remove and discard the A/C compressor O-ring seal.

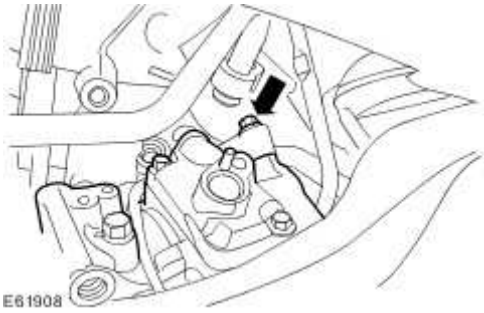

www.JagDocs.com

Installation

All vehicles

1 . **NOTE:**

Remove the blanking caps.

Install the A/C compressor.

- Install a new A/C compressor O-ring seal.
- Lubricate the new O-ring seal with clean A/C refrigerant oil.
- Connect the A/C compressor supply line.
- Tighten to 20 Nm.

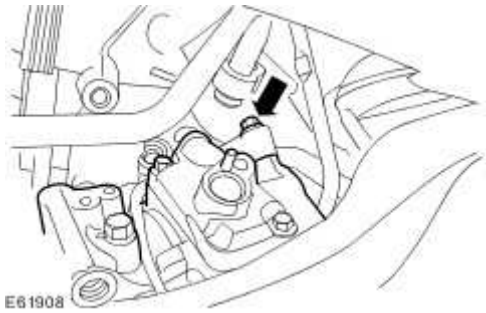

2 . Attach the A/C compressor.

- Tighten to 25 Nm.

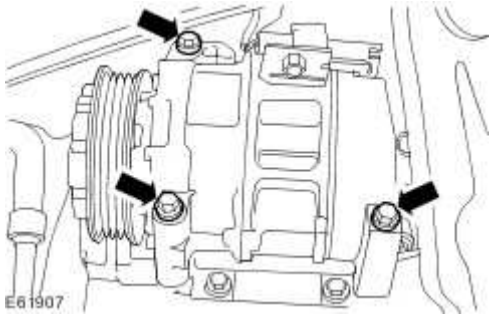

3 . Connect the A/C compressor return line.

- Install a new A/C compressor O-ring seal.
- Lubricate the new O-ring seal with clean A/C refrigerant oil.
- Tighten to 20 Nm.

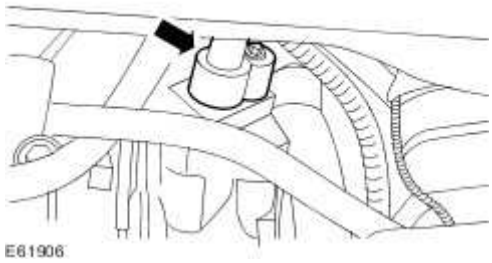

4 . Connect the A/C compressor electrical connector.

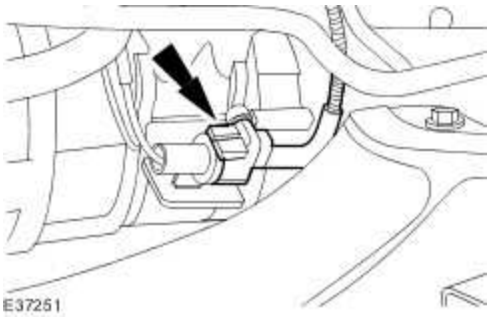

Left-hand drive vehicles

5 . **CAUTION: The steering gear must be supported at all times.**

Detach the steering gear.

- Remove and discard the tie straps.

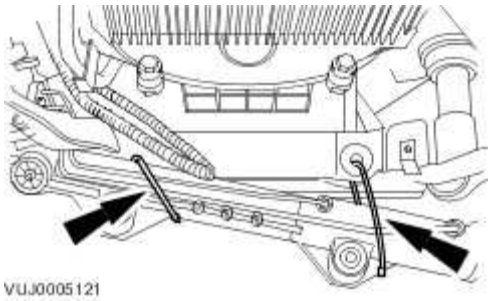

6 . **CAUTION: The steering gear must be supported at all times.**

Attach the steering gear.

- Tighten to 100 Nm.

www.JagDocs.com

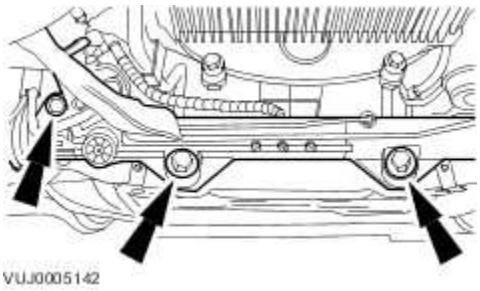

7 . Install the steering gear shaft pinch bolt.

- Tighten to 35 Nm.

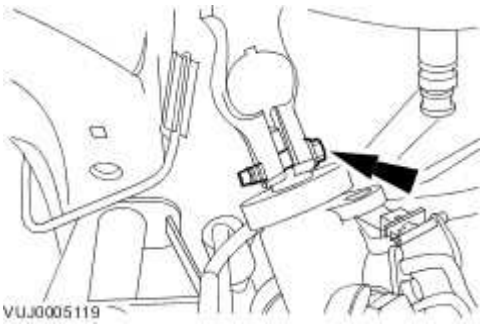

All vehicles

8 . Install the air deflector.
For additional information, refer to Air Deflector (76.11.41)

9 . Install the left-hand front wheel and tire assembly.
For additional information, refer to Wheel and Tire (74.20.05)

10 Attach the accessory drive belt.
.

1) Rotate the accessory drive belt tensioner counter-clockwise.

- Use a 3/8 inch square drive bar to rotate the accessory drive belt tensioner.

2) Attach the accessory drive belt.

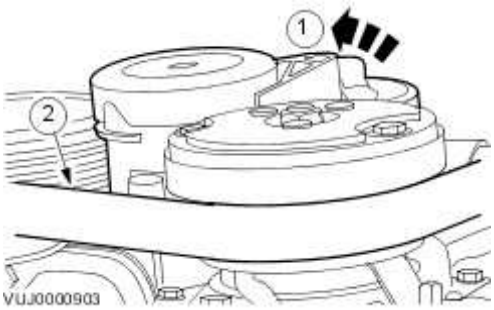

11 . Install the air cleaner.
For additional information, refer to Air Cleaner (19.10.05)

12 . Connect the battery ground cable.
For additional information, refer to Battery Connect (86.15.15)

13 . Carry out the A/C system evacuation and charging procedure.
For additional information, refer to Air Conditioning (A/C) System Recovery, Evacuation and Charging (82.30.30)

www.JagDocs.com

Air Conditioning (A/C) Compressor - 4.2L NA V8 - AJV8/4.2L SC V8 - AJV8/3.5L NA V8 - AJV8, VIN Range: G00442->G45703 (82.10.20)

Special Service Tools

Engine support beam
303-021

Engine lifting brackets
303-749

Removal

All vehicles

1 Carry out the air conditioning (A/C) system recovery procedure.
. For additional information, refer to Air Conditioning (A/C) System Recovery, Evacuation and Charging (82.30.30)

2 . Disconnect the battery ground cable.
For additional information, refer to Battery Disconnect and Connect

3 . Remove the air cleaner outlet pipe.
For additional information, refer to Air Cleaner Outlet Pipe (19.10.31)

4 Detach the accessory drive belt.
.

1) Rotate the accessory drive belt tensioner counter-clockwise.

Use a 3/8 inch square drive bar to rotate the accessory drive belt tensioner.

2) Detach the accessory drive belt.

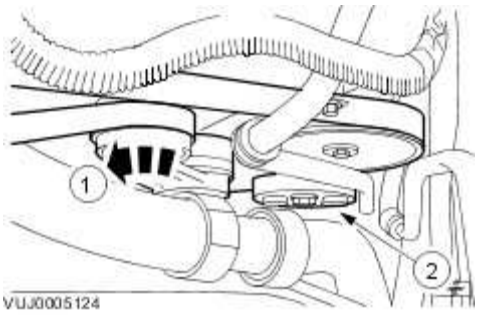

Vehicles without supercharger

5 Remove the throttle body.

. For additional information, refer to Throttle Body - 4.2L NA V8 - AJV8/3.5L NA V8 - AJV8, VIN Range: G00442->G45703 (19.70.04)

All vehicles

6 . **NOTE:**

Vehicles without supercharger shown, vehicles with supercharger similar.

Install the special tools.

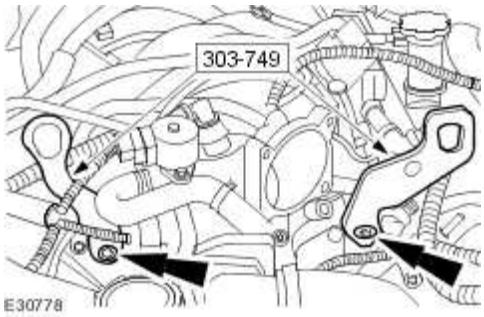

www.JagDocs.com

7 . **NOTE:**

Vehicles without supercharger shown, vehicles with supercharger similar.

Install the special tool.

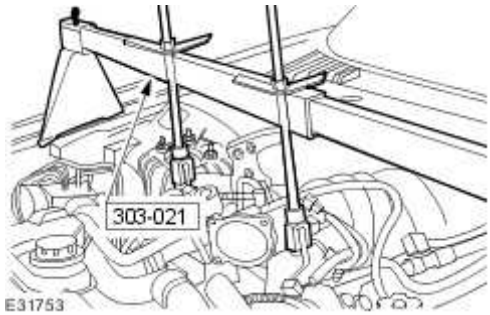

8 . **NOTE:**

Vehicles with supercharger shown, vehicles without supercharger similar.

Raise the engine to a suitable height.

1) Adjust the engine support beam (clockwise).

2) Raise the engine to a suitable height.

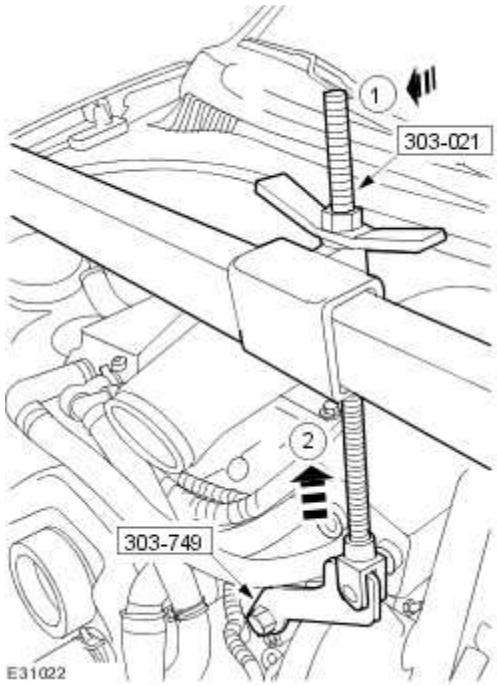

9 . Remove the left-hand front wheel and tire assembly.
For additional information, refer to Wheel and Tire (74.20.05)

10 . Remove the air deflector.
For additional information, refer to Air Deflector (76.11.41)

Left-hand drive vehicles

11 . Remove the steering gear shaft pinch bolt.

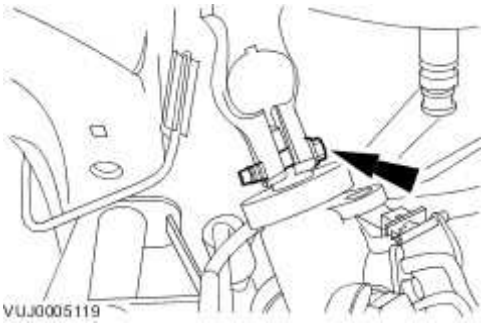

12 . Detach the steering gear.

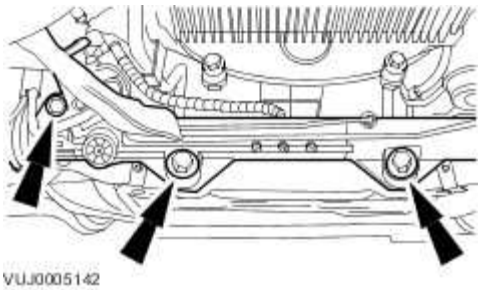

13 . Secure the steering gear.

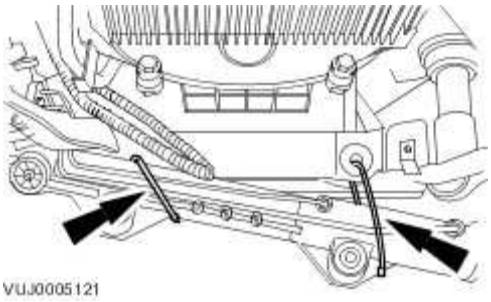

www.JagDocs.com

All vehicles

14 . Remove the left-hand engine mounting lower retaining nut.

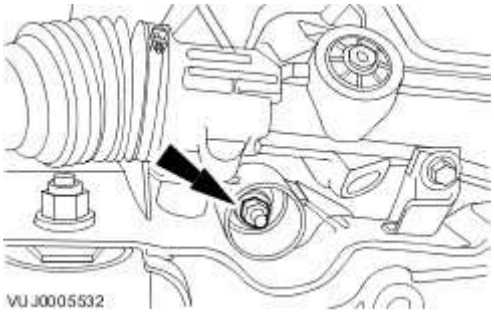

15 . Lower the vehicle.

16 **NOTE:**

.

Vehicles with supercharger shown, vehicles without supercharger similar.

Lift the engine to a suitable height to access the A/C compressor retaining bolts.

1) Adjust the engine support beam.

2) Lift the engine to a suitable height to access the A/C compressor retaining bolts.

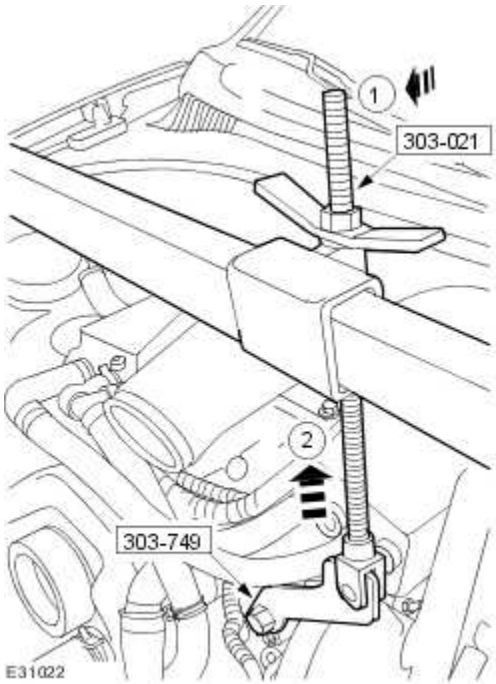

17 . Raise the vehicle.

18 . Remove the engine mounting and bracket assembly.

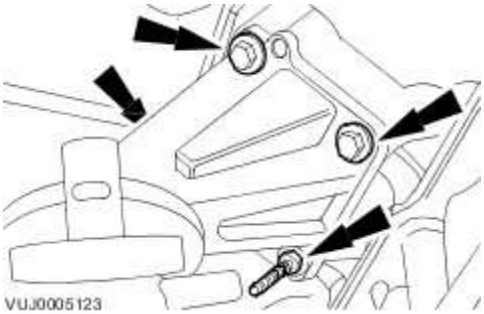

19 . Disconnect the A/C compressor electrical connector.

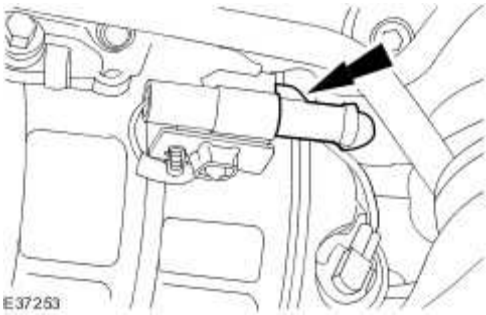

www.JagDocs.com

20 . Detach the A/C compressor return line.

- Remove and discard the A/C compressor O-ring seal.
- Cap the exposed port.

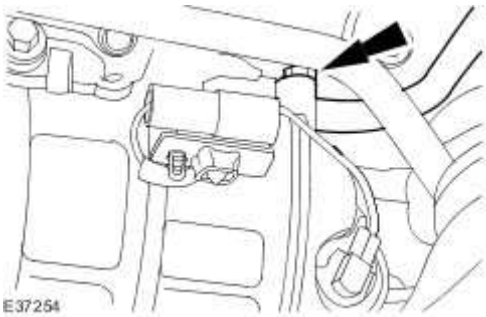

21 . Detach the A/C compressor supply line.

- Remove and discard the A/C compressor O-ring seal.
- Cap the exposed port.

22 . Remove the A/C compressor.

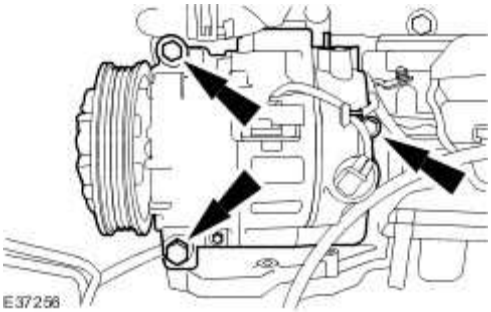

Installation

All vehicles

1 . Install the A/C compressor.

- Tighten to 25 Nm.

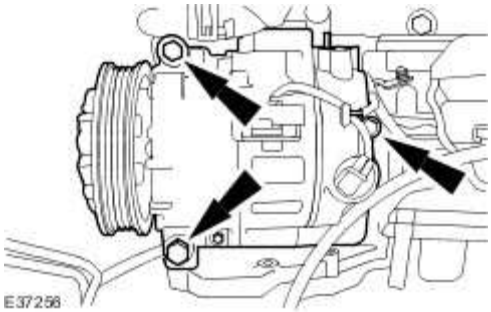

2 . **NOTE:**

Un-cap the exposed ports.

Install new A/C compressor O-ring seals.

- Lubricate the new O-rings with A/C refrigerant oil.

3 . Clean off any oil residue that may contain A/C system flourescent dye.

4 . Connect the A/C compressor supply line.

- Tighten to 20 Nm.

5 . Connect the A/C compressor return line.

- Tighten to 20 Nm.

www.JagDocs.com

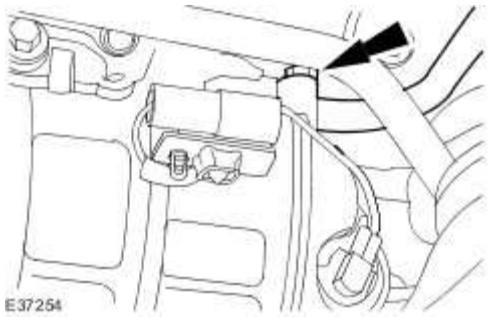

6 . Connect the A/C compressor electrical connector.

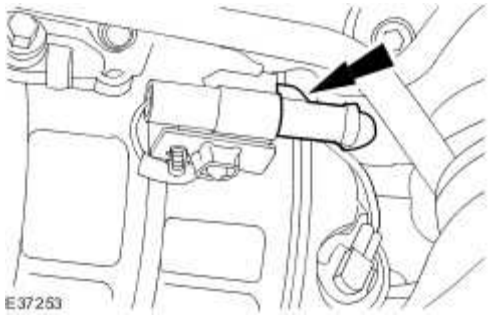

7 . Install the engine mounting and bracket assembly.

Tighten to 25 Nm.

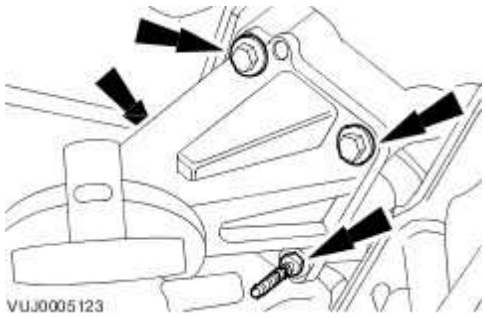

8 . Lower the vehicle.

9 . **NOTE:**

Vehicles with supercharger shown, vehicles without supercharger similar.

Lower the engine.

1) Adjust the engine support beam.

2) Lower the engine.

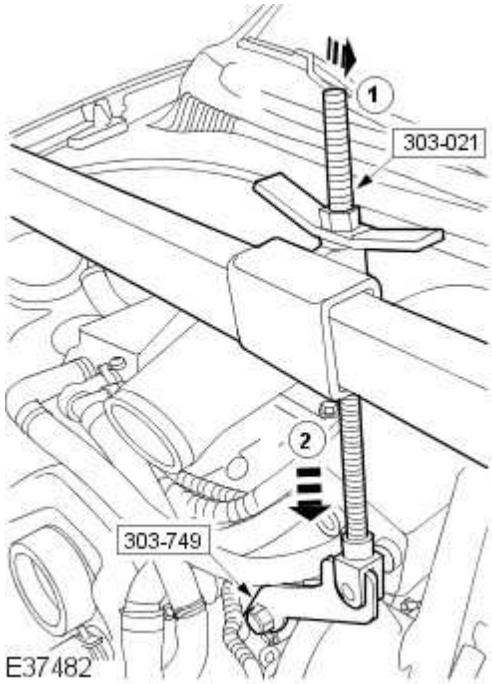

10 . Raise the vehicle.

11 . Install the left-hand engine mounting lower retaining nut.

Tighten to 63 Nm.

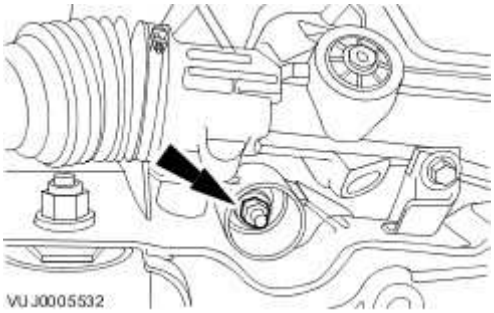

www.JagDocs.com

Left-hand drive vehicles

12 . Detach the steering gear.

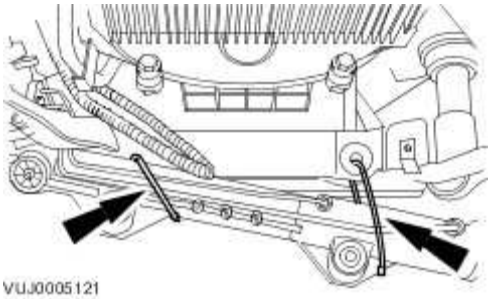

13 . Attach the steering gear.

Tighten to 100 Nm.

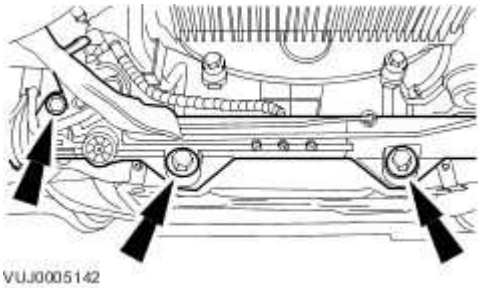

14 . Install the steering gear shaft pinch bolt.

Tighten to 35 Nm.

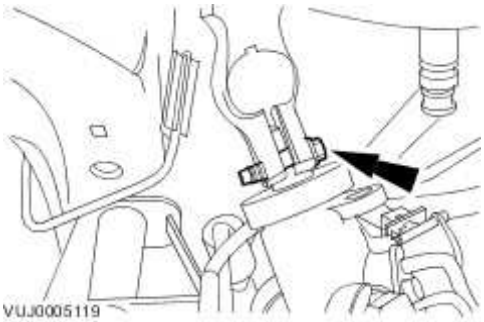

All vehicles

15 . Install the left-hand front wheel and tire assembly.

For additional information, refer to Wheel and Tire (74.20.05)

16 . Install the air deflector.
For additional information, refer to Air Deflector (76.11.41)

17 . **NOTE:**

Vehicles without supercharger shown, vehicles with supercharger similar.

Remove the special tool.

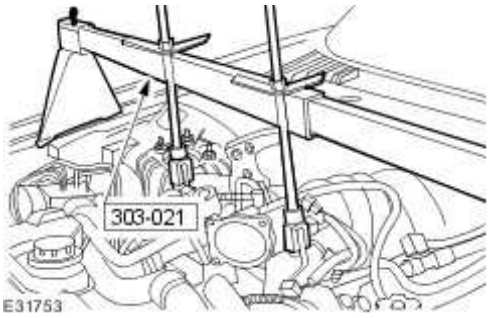

18 . **NOTE:**

Vehicles without supercharger shown, vehicles with supercharger similar.

Remove the special tools.

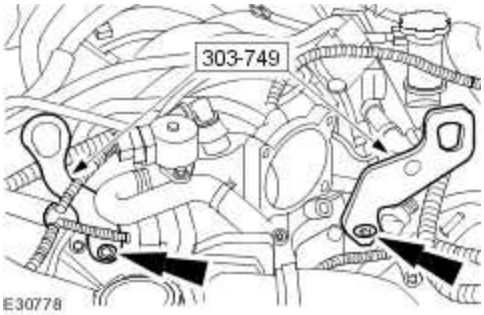

Vehicles without supercharger

19 Install the throttle body.
. For additional information, refer to Throttle Body - 4.2L NA V8 - AJV8/3.5L NA V8 - AJV8, VIN Range: G00442->G45703 (19.70.04)

www.JagDocs.com

All vehicles

20 Attach the accessory drive belt.

.

1) Rotate the accessory drive belt tensioner counter-clockwise.

Use a 3/8 inch square drive bar to rotate the accessory drive belt tensioner.

2) Attach the accessory drive belt.

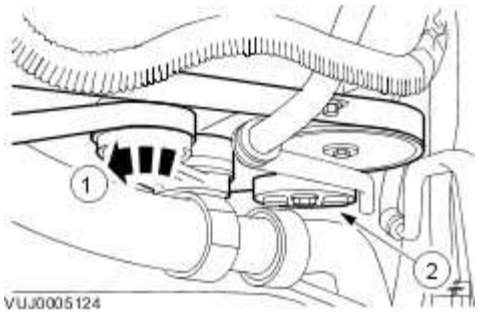

21 . Install the air cleaner outlet pipe.
For additional information, refer to Air Cleaner Outlet Pipe (19.10.31)

22 . Connect the battery ground cable.
For additional information, refer to Battery Connect (86.15.15)

23 Carry out the A/C system evacuation and charging procedure.
. For additional information, refer to Air Conditioning (A/C) System Recovery, Evacuation and Charging (82.30.30)

Air Conditioning (A/C) Compressor - 4.2L NA V8 - AJV8/4.2L SC V8 - AJV8/3.5L NA V8 - AJV8, VIN Range: G45704->G99999 (82.10.20)

Special Service Tools

Engine support beam
303-021

Engine lifting brackets
303-749

Removal

All vehicles

1 Carry out the air conditioning (A/C) system recovery procedure.
. For additional information, refer to Air Conditioning (A/C) System Recovery, Evacuation and Charging (82.30.30)

2 . Disconnect the battery ground cable.
For additional information, refer to Battery Disconnect and Connect

3 . Remove the air cleaner.
For additional information, refer to Air Cleaner (19.10.05)

4 Detach the accessory drive belt.
.

www.JagDocs.com

1) Rotate the accessory drive belt tensioner counter-clockwise.

Use a 3/8 inch square drive bar to rotate the accessory drive belt tensioner.

2) Detach the accessory drive belt.

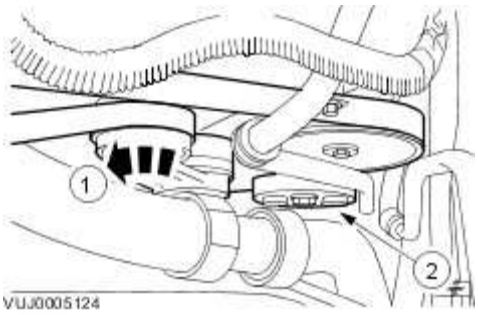

Vehicles without supercharger

5 Remove the throttle body.

. For additional information, refer to Throttle Body - 4.2L NA V8 - AJV8/3.5L NA V8 - AJV8, VIN Range: G45704->G99999 (19.70.04)

All vehicles

6 . **NOTE:**

Vehicles without supercharger shown, vehicles with supercharger similar.

Install the special tools.

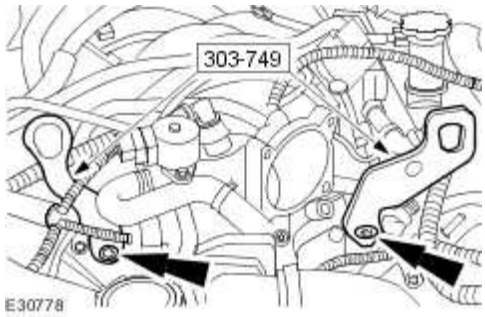

7 . **NOTE:**

Vehicles without supercharger shown, vehicles with supercharger similar.

Install the special tool.

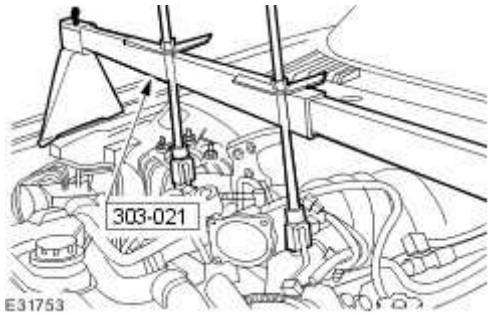

8 . **NOTE:**

Vehicles with supercharger shown, vehicles without supercharger similar.

Using the special tool, raise the engine to a suitable height.

1) Adjust the engine support beam (clockwise).

2) Raise the engine to a suitable height.

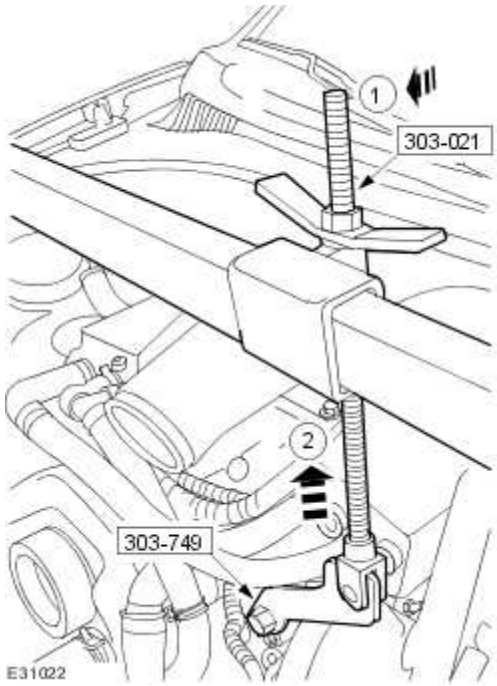

www.JagDocs.com

9 . Remove the left-hand front wheel and tire assembly.
For additional information, refer to Wheel and Tire (74.20.05)

10 . Remove the air deflector.
For additional information, refer to Air Deflector (76.11.41)

Left-hand drive vehicles

11 . Remove the steering gear shaft pinch bolt.

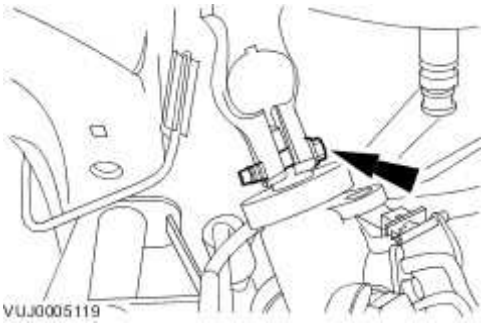

12 . **CAUTION: The steering gear must be supported at all times.**

Detach the steering gear.

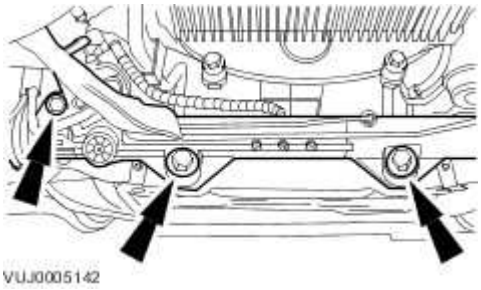

13 . **CAUTION: The steering gear must be supported at all times.**

Using suitable tie straps, secure the steering gear.

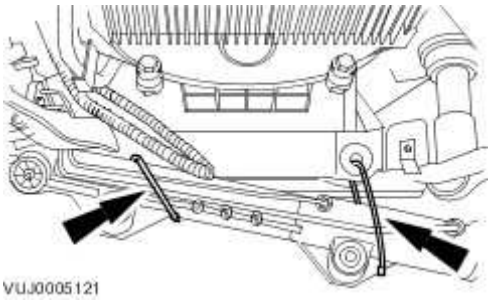

All vehicles

14 . Remove the left-hand engine mounting lower retaining nut.

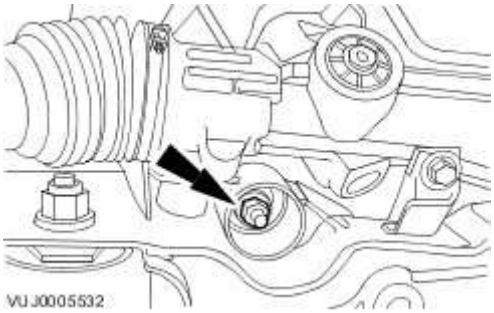

15 . Lower the vehicle.

16 **NOTE:**
.

Vehicles with supercharger shown, vehicles without supercharger similar.

Lift the engine to a suitable height to access the A/C compressor retaining bolts.

1) Adjust the engine support beam.

2) Lift the engine to a suitable height to access the A/C compressor retaining bolts.

www.JagDocs.com

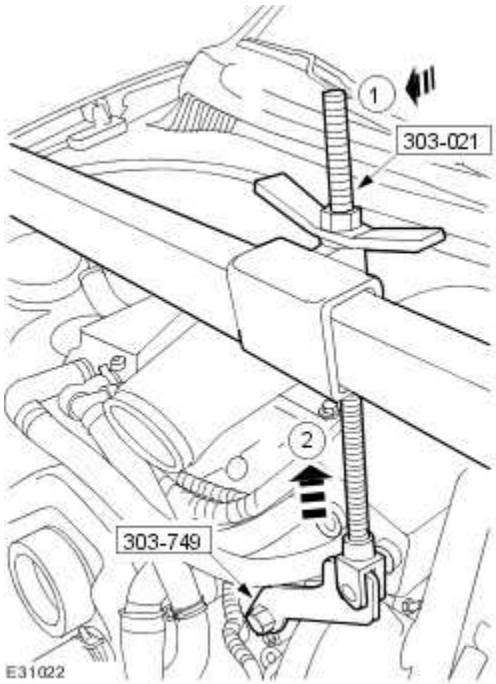

17 . Raise the vehicle.

18 . Remove the engine mounting and bracket assembly.

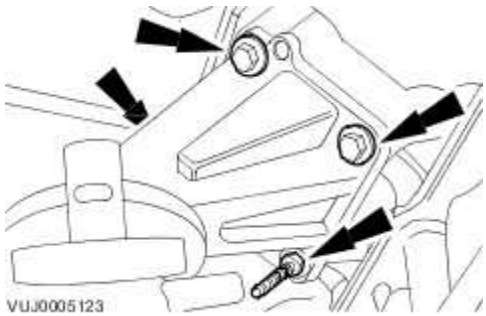

19 . Disconnect the A/C compressor electrical connector.

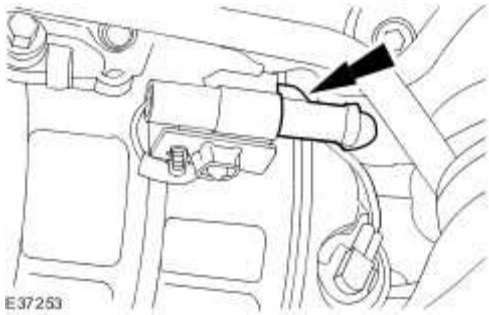

20 . Detach the A/C compressor return line.

- Remove and discard the A/C compressor O-ring seal.
- Cap the exposed port.

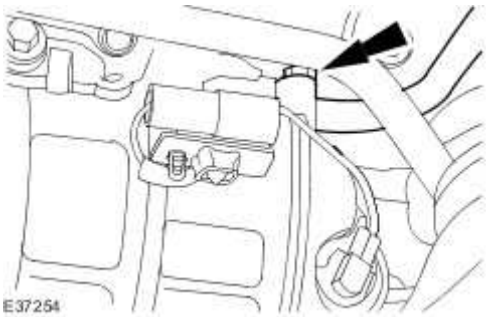

21 . Detach the A/C compressor supply line.

- Remove and discard the A/C compressor O-ring seal.
- Cap the exposed port.

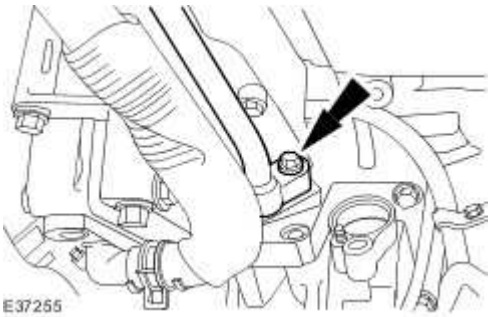

22 . Remove the A/C compressor.

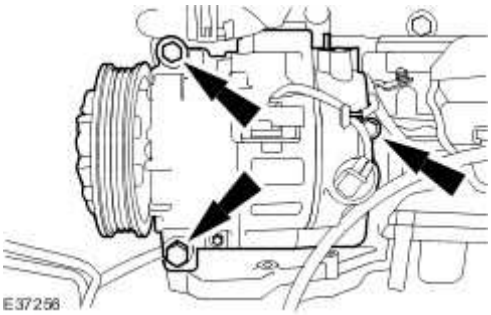

www.JagDocs.com

Installation

All vehicles

1 . Install the A/C compressor.

- Tighten to 25 Nm.

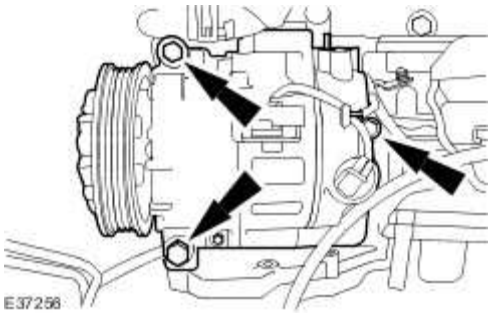

2 . **NOTE:**

Un-cap the exposed ports.

Install new A/C compressor O-ring seals.

- Lubricate the new O-rings with A/C refrigerant oil.

3 . Clean off any oil residue that may contain A/C system flourescent dye.

4 . Connect the A/C compressor supply line.

- Tighten to 20 Nm.

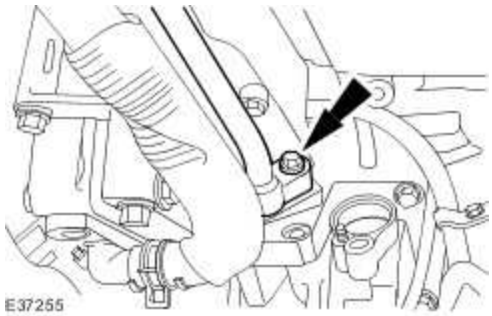

5 . Connect the A/C compressor return line.

Tighten to 20 Nm.

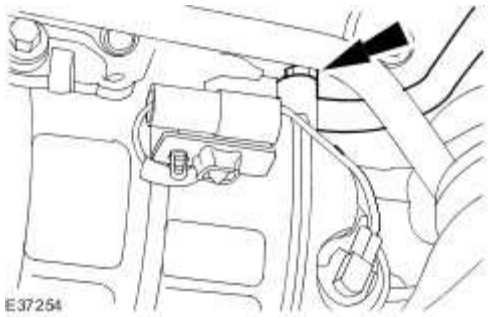

6 . Connect the A/C compressor electrical connector.

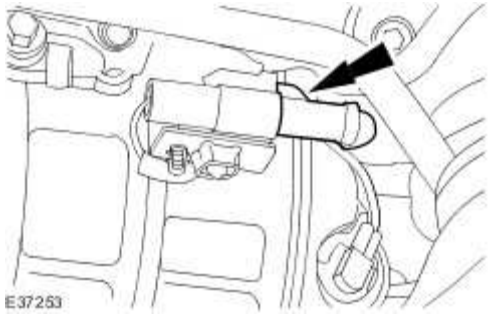

7 . Install the engine mounting and bracket assembly.

Tighten to 25 Nm.

www.JagDocs.com

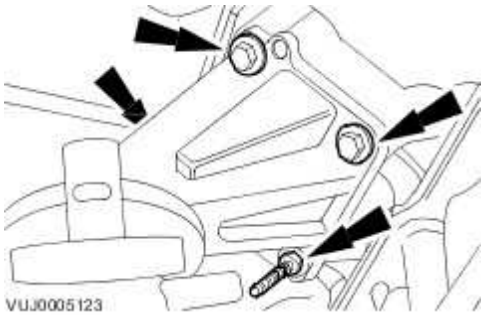

8 . Lower the vehicle.

9 . **NOTE:**

Vehicles with supercharger shown, vehicles without supercharger similar.

Using the special tool, lower the engine.

1) Adjust the engine support beam.

2) Lower the engine.

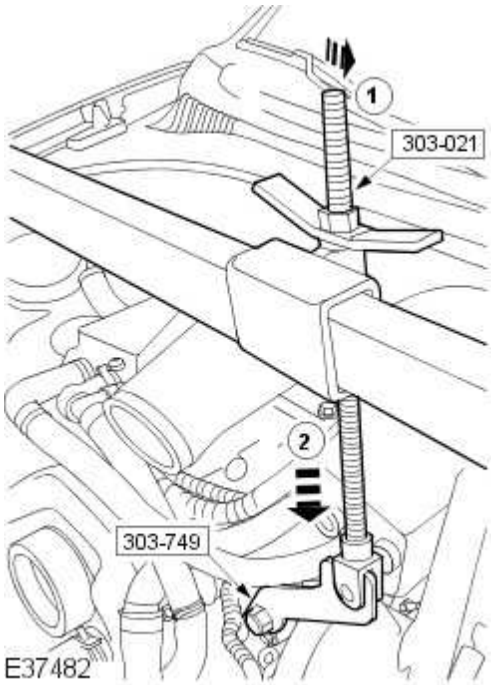

10 . Raise the vehicle.

11 . Install the left-hand engine mounting lower retaining nut.

- Tighten to 63 Nm.

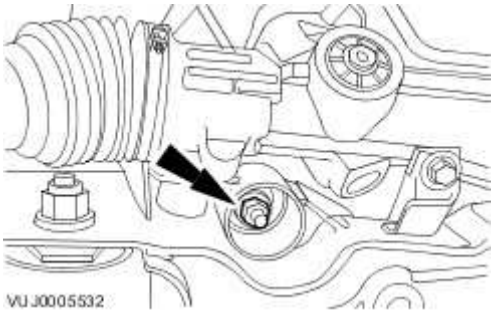

Left-hand drive vehicles

12 . **CAUTION: The steering gear must be supported at all times.**

Detach the steering gear.

- Remove and discard the tie straps.

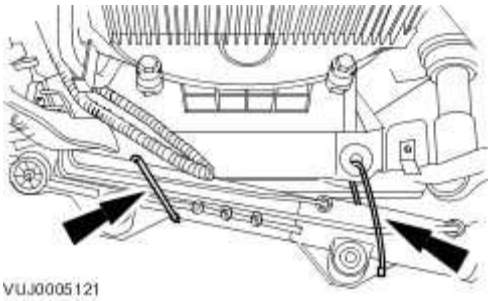

13 . **CAUTION: The steering gear must be supported at all times.**

Attach the steering gear.

www.JagDocs.com

Tighten to 100 Nm.

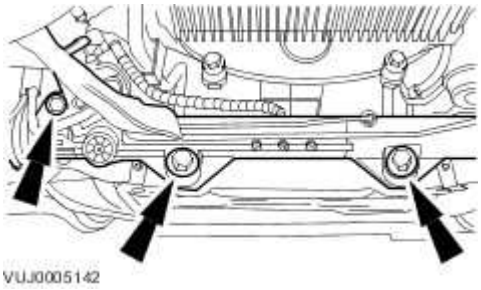

14 . Install the steering gear shaft pinch bolt.

Tighten to 35 Nm.

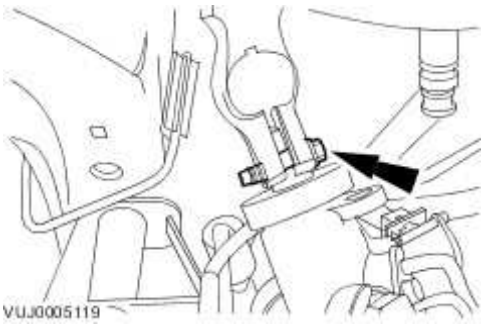

All vehicles

15 . Install the left-hand front wheel and tire assembly.
For additional information, refer to Wheel and Tire (74.20.05)

16 . Install the air deflector.
For additional information, refer to Air Deflector (76.11.41)

17 . **NOTE:**

Vehicles without supercharger shown, vehicles with supercharger similar.

Remove the special tool.

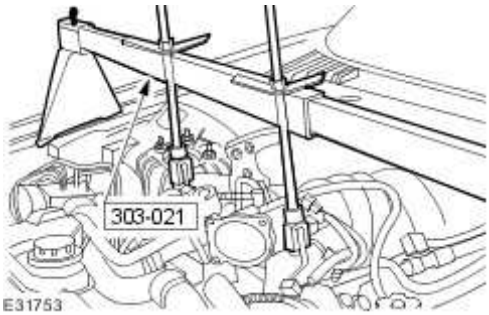

18 . **NOTE:**

Vehicles without supercharger shown, vehicles with supercharger similar.

Remove the special tools.

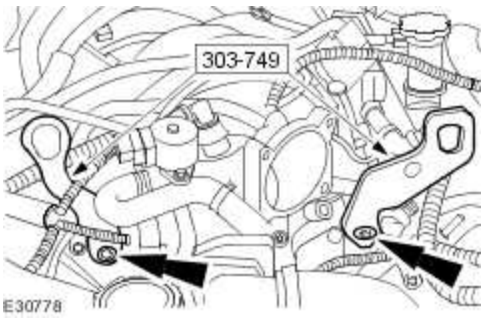

Vehicles without supercharger

19 Install the throttle body.

. For additional information, refer to Throttle Body - 4.2L NA V8 - AJV8/3.5L NA V8 - AJV8, VIN Range: G45704->G99999 (19.70.04)

All vehicles

20 Attach the accessory drive belt.

.

1) Rotate the accessory drive belt tensioner counter-clockwise.

Use a 3/8 inch square drive bar to rotate the accessory drive belt tensioner.

2) Attach the accessory drive belt.

www.JagDocs.com

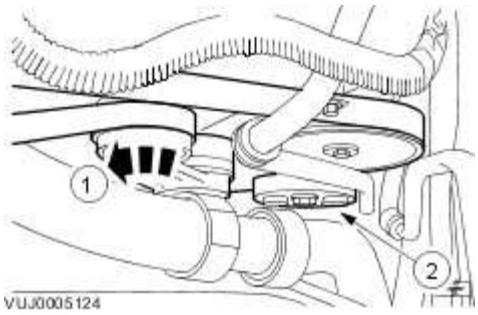

21 . Install the air cleaner.
For additional information, refer to Air Cleaner (19.10.05)

22 . Connect the battery ground cable.
For additional information, refer to Battery Connect (86.15.15)

23 Carry out the A/C system evacuation and charging procedure.
. For additional information, refer to Air Conditioning (A/C) System Recovery, Evacuation and Charging (82.30.30)

Air Conditioning (A/C) Compressor - 2.7L V6 - TdV6 (82.10.20)

Special Service Tools

Accessory Belt Detensioner
303-703

Removal

1 . Carry out the air conditioning (A/C) system recovery procedure.
For additional information, refer to Air Conditioning (A/C) System Recovery, Evacuation and Charging (82.30.30)

2 . Remove the air cleaner assembly.
For additional information, refer to

3 . Remove the air deflector.
For additional information, refer to Air Deflector (76.11.41)

4 . Detach the accessory drive belt.

1) Using the special tool, rotate the accessory drive belt tensioner counter clockwise.

2) Detach the accessory drive belt.

www.JagDocs.com

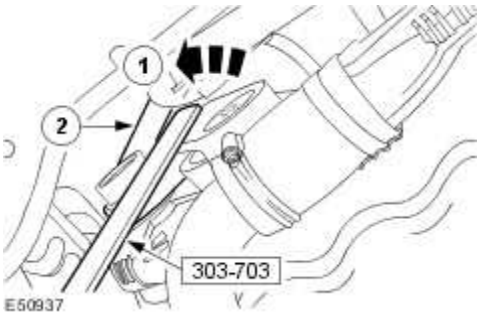

5 . Lower the vehicle.

6 . Detach the accessory drive belt from the power steering pump pulley and the A/C compressor pulley.

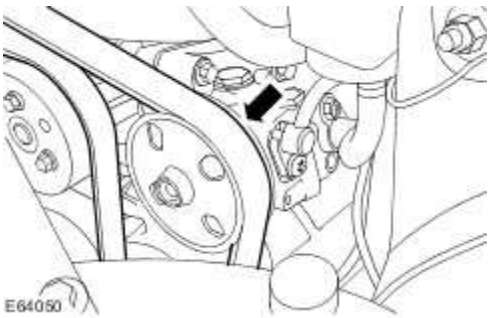

7 . Remove the power steering pump retaining bolts.

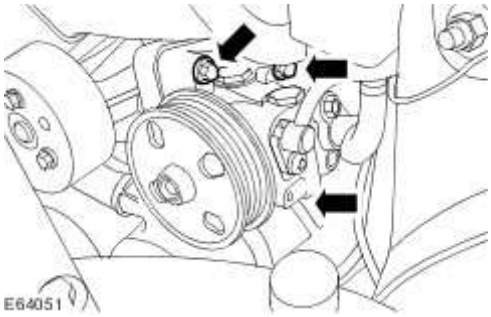

8 . Reposition the power steering pump forwards.

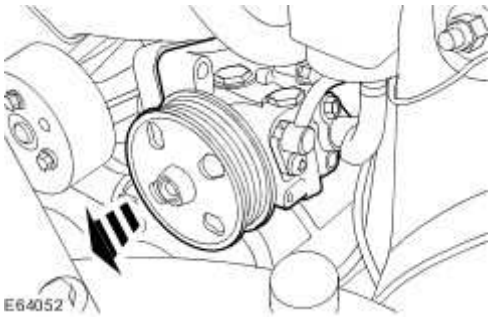

9 . Detach the A/C compressor return line.

- Remove and discard the A/C compressor O-ring seal.
- Cap the exposed ports.

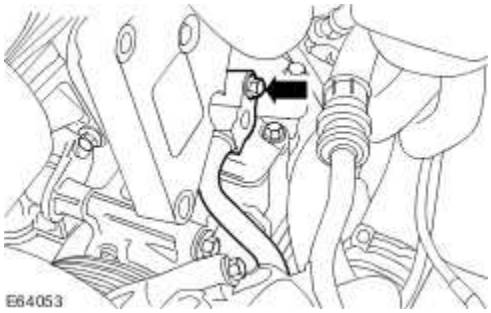

10 . Detach the A/C compressor supply line.

- Remove and discard the A/C compressor O-ring seal.
- Cap the exposed ports.

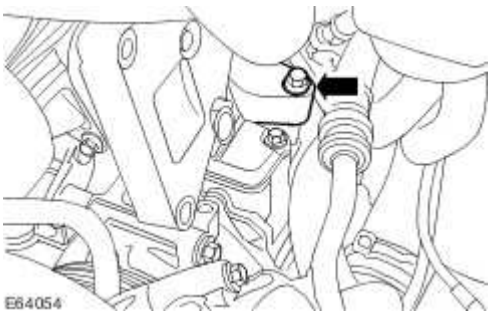

www.JagDocs.com

11 . Remove the power steering pump retaining bracket.

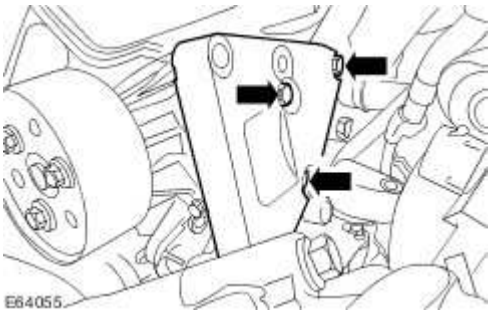

12 . Disconnect the A/C compressor electrical connector.

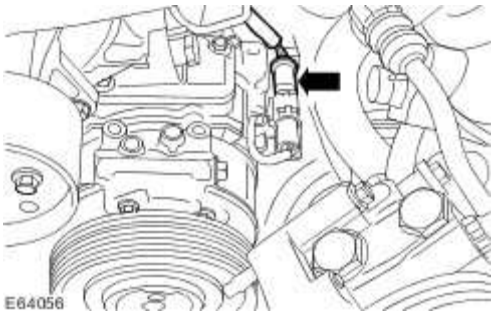

13 . Detach the A/C compressor electrical connector retaining bracket.

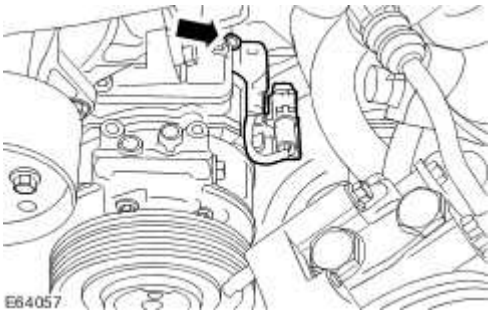

14 . **CAUTION: Carefully remove the A/C compressor past the coolant pipes. Failure to follow this instruction, may result in damage to the coolant pipes.**

Remove the A/C compressor.

- Remove the A/C compressor retaining bolts.

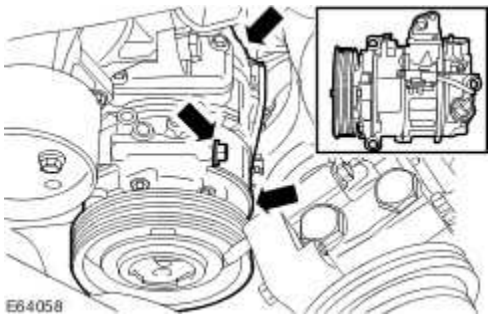

Installation

1 . To install, reverse the removal procedure.

Add the correct amount of A/C refrigerant oil to the A/C compressor. For additional information, refer to Refrigerant Oil Adding

2 . **CAUTION: Carefully install the A/C compressor past the coolant pipes. Failure to follow this instruction, may result in damage to the coolant pipes.**

Tighten to 25 Nm.

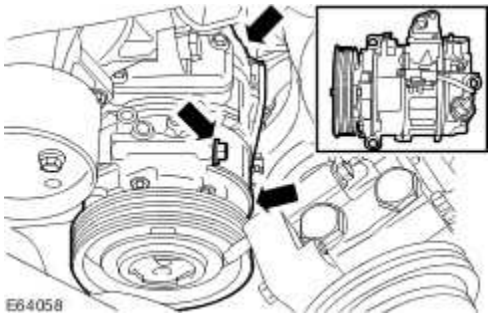

3 . Tighten to 4 Nm.

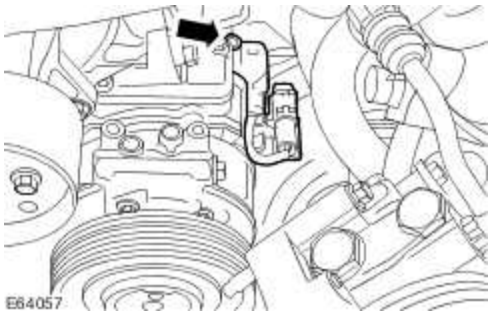

www.JagDocs.com

4 . Tighten to 23 Nm.

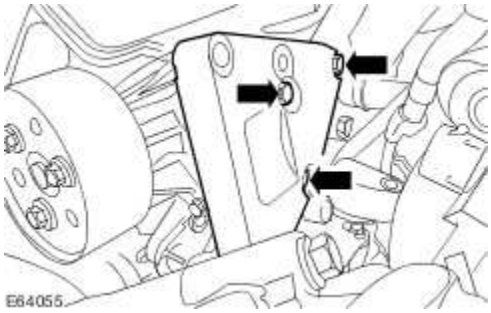

5 . Tighten to 20 Nm.

- Install new A/C compressor O-ring seal.
- Lubricate the new O-ring seal with A/C refrigerant oil.

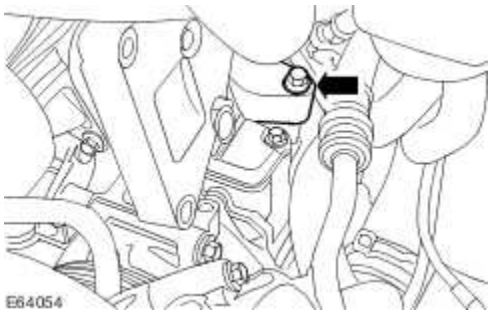

6 . Tighten to 20 Nm.

- Install new A/C compressor O-ring seal.
- Lubricate the new O-ring seal with A/C refrigerant oil.

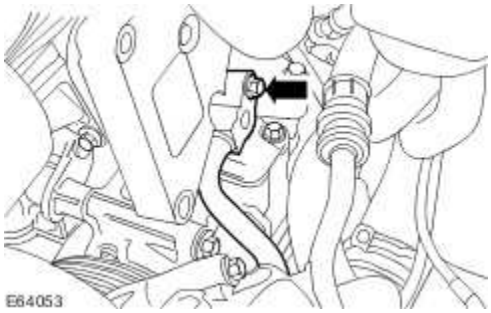

7 . Tighten to 22 Nm.

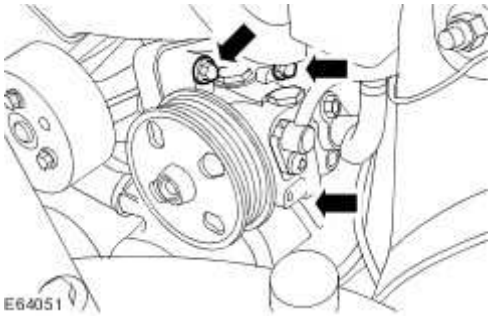

8 Carry out the A/C system evacuation and charging procedure.

. For additional information, refer to Air Conditioning (A/C) System Recovery, Evacuation and Charging (82.30.30)

www.JagDocs.com

Condenser Core - 4.2L NA V8 - AJV8/4.2L SC V8 - AJV8/3.0L NA V6 - AJ27/3.5L NA V8 - AJV8 (82.15.07)

Installation

All vehicles

1 . Add the correct amount of A/C refrigerant oil to the A/C Condenser. <<412-00>>

2 . **CAUTION: Make sure damage does not occur to the cooling components.**

Install the condensor core.

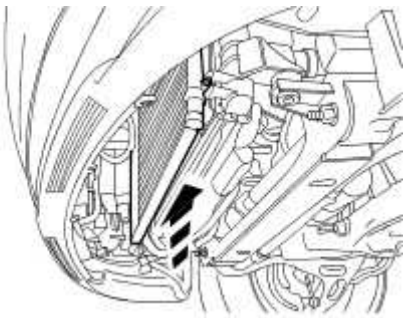

3 . **NOTE:**

Right-hand shown, left-hand similar

Locate the condenser in the upper fixing.

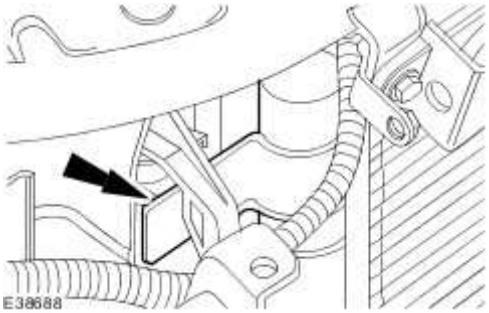

Vehicles with supercharger

4 . **NOTE:**

Right-hand shown, left-hand similar.

Install the cooling module retaining bolts.

Tighten to 8 Nm.

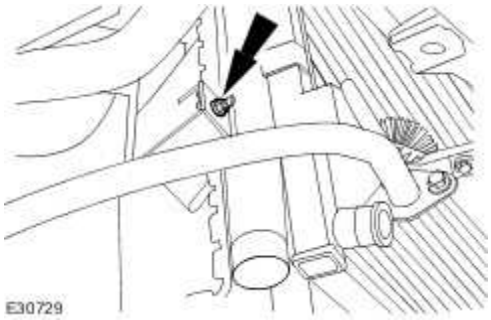

Vehicles without supercharger

5 . **NOTE:**

Left-hand shown, right-hand similar.

Install the condenser core retaining studs.

Tighten to 7 Nm.

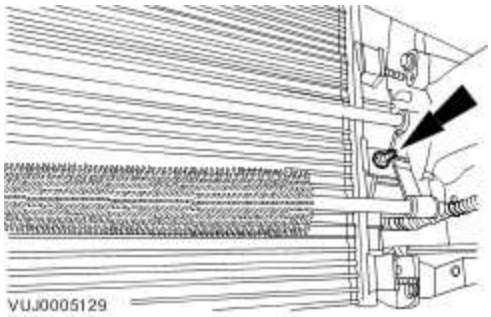

6 . **NOTE:**

Left-hand shown, right-hand similar.

www.JagDocs.com

Attach the power steering oil cooler.

- Tighten to 7 Nm.

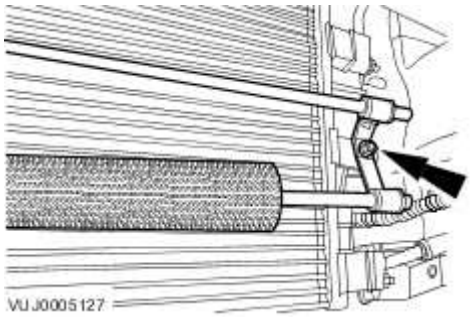

All vehicles

7 . Install new O-ring seals to the condenser core supply and return lines.

- Lubricate O-ring seals with A/C refrigerant oil. <<412-00>>

8 . **NOTE:**

Un-cap the port.

Connect the lower refrigerant pipe.

- Tighten to 8 Nm.

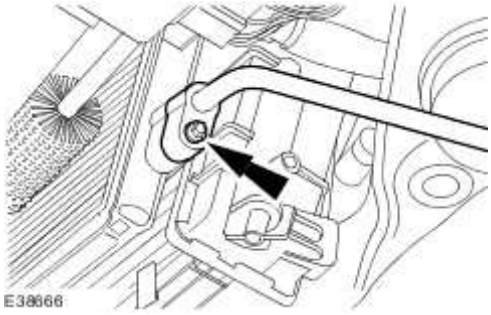

9 . Clean off any oil residue that may contain A/C system flourescent dye.

10 . Install the radiator lower cowl.

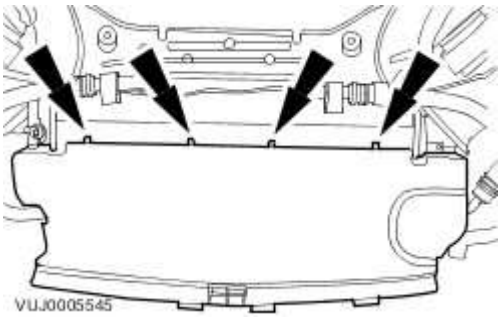

11 . Install the radiator splash shield. <<501-02>>

12 . Lower the vehicle. <<100-02>>

13 . **NOTE:**

Un-cap the port.

Connect the upper refrigerant pipe.

Tighten to 8 Nm.

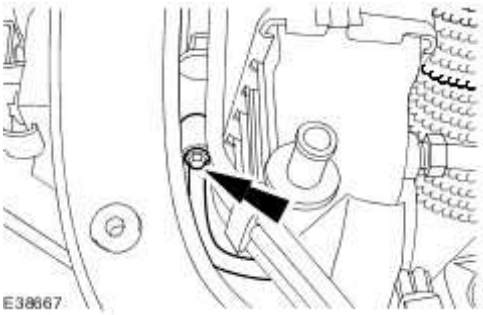

14 . Clean off any oil residue that may contain A/C system flourescent dye.

15 . Install the radiator support bracket.

www.JagDocs.com

Tighten to 9 Nm.

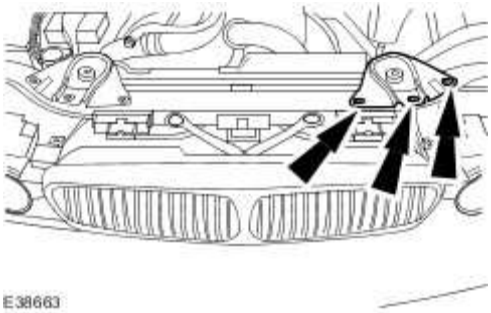

16 . Carry out the air conditioning (A/C) system evacuation and charging procedure. <<412-00>>

17 . Carry out the A/C system flourescent dye leak detection procedure. <<412-00>>

18 . Refit the radiator grille opening panel. <<501-02>>

Condenser Core - 2.7L V6 - TdV6 (82.15.07)

Removal

1 Carry out the air conditioning (A/C) system recovery procedure.
. For additional information, refer to Air Conditioning (A/C) System Recovery, Evacuation and Charging (82.30.30)

2 . **NOTE:**

Petrol engine variant shown, diesel engine variant similar.

Remove the radiator grille opening panel.

3 . **NOTE:**

Cap the exposed ports.

Disconnect the condenser core supply line.

Remove and discard the O-ring seal.

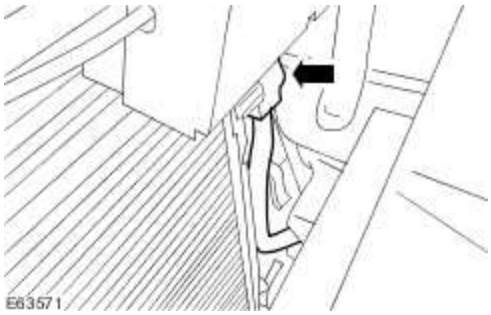

www.JagDocs.com

4 . Remove the radiator splash shield.
For additional information, refer to Radiator Splash Shield (76.22.90)

5 . Remove the radiator lower cowl.

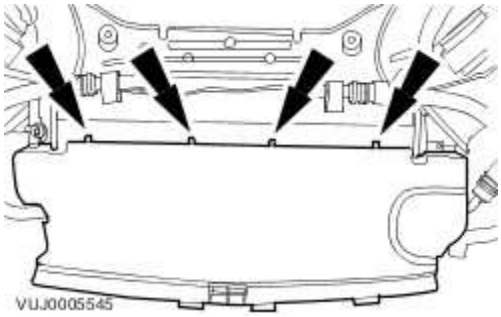

6 . **NOTE:**

Cap the exposed ports.

Disconnect the condenser core return line.

- Remove and discard the O-ring seal.

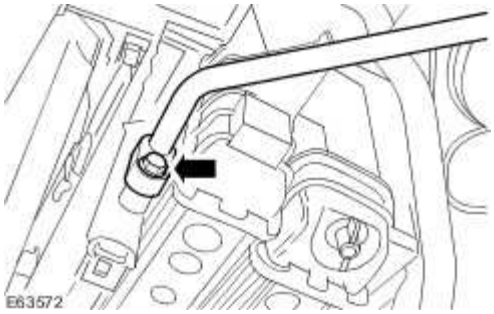

7 . Detach the condenser core.

- Remove the retaining bolts.

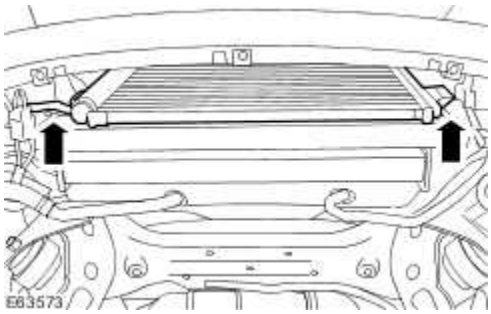

8 . Remove the condenser core.

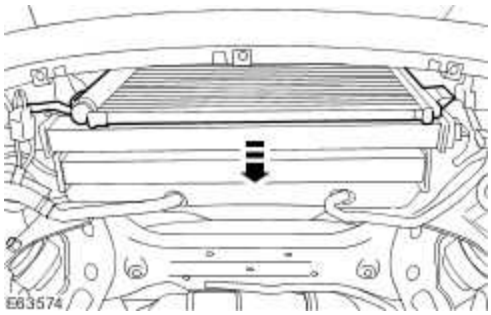

Installation

1 . To install, reverse the removal procedure.

Tighten to 7 Nm.

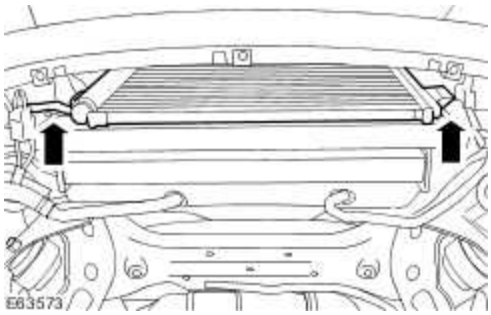

2 . **NOTE:**

Install a new O-ring seal.

www.JagDocs.com

NOTE:

Lubricate the new O-ring seal with A/C refrigerant oil.

Tighten to 5 Nm.

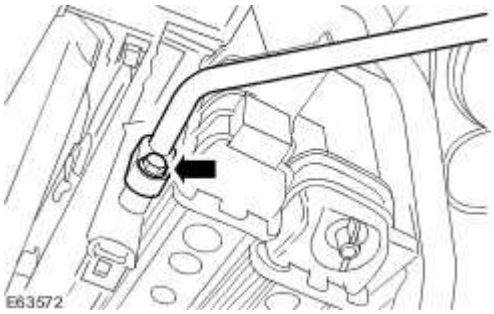

3 . **NOTE:**

Install a new O-ring seal.

NOTE:

Lubricate the new O-ring seal with A/C refrigerant oil.

Tighten to 5 Nm.

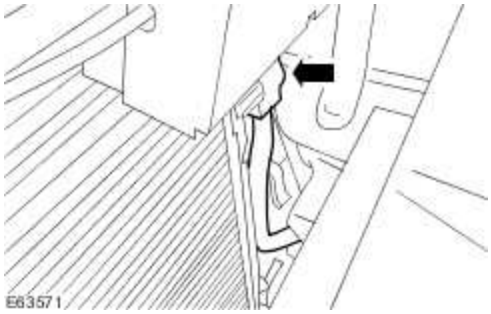

4 Carry out the A/C system evacuation and charging procedure.
. For additional information, refer to Air Conditioning (A/C) System Recovery, Evacuation and Charging (82.30.30)

Desiccant Bag - 4.2L NA V8 - AJV8/4.2L SC V8 - AJV8/3.0L NA V6 - AJ27/3.5L NA V8 - AJV8 (82.17.03)

Installation

1 . Install new desiccant bag retaining screw O-ring seals.

- Lubricate the new O-ring seals with A/C refrigerant oil.

2 . **CAUTION: Do not leave the desiccant bag exposed to atmosphere for longer than five minutes.**

Install the desiccant bag.

3 . **NOTE:**

Un-cap the exposed port.

Install the retaining screw.

- Tighten to 22 Nm.

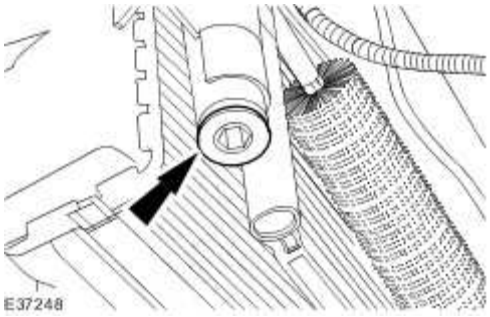

4 . Clean off any oil residue that may contain A/C system flourescent dye.

www.JagDocs.com

5 . Install the radiator lower cowl.

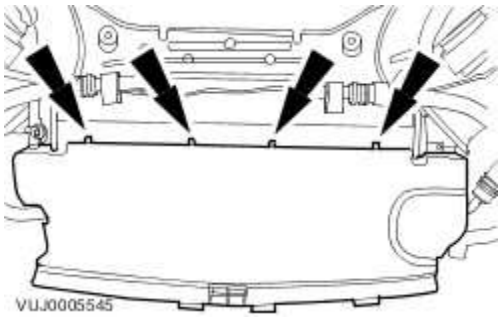

6 . Install the radiator splash shield. <<501-02>>

7 . Lower the vehicle. <<100-02>>

8 . Carry out the A/C system evacuation and charging procedure. <<412-00>>

9 . Carry out the A/C system flourescent dye leak detection procedure. <<412-00>>

Desiccant Bag - 2.7L V6 - TdV6 (82.17.03)

Removal

1 Carry out the air conditioning (A/C) system recovery procedure.
. For additional information, refer to Air Conditioning (A/C) System Recovery, Evacuation and Charging (82.30.30)

2 . Raise the vehicle.
For additional information, refer to Lifting

3 . Remove the radiator splash shield.
For additional information, refer to Radiator Splash Shield (76.22.90)

4 . Remove the radiator lower cowl.

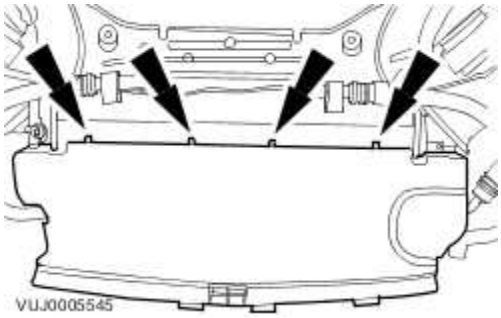

5 . **NOTE:**

Discard the desiccant bag retaining screw O-ring seal.

Remove the desiccant bag retaining screw.

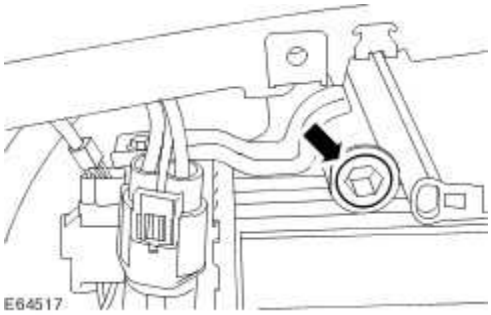

www.JagDocs.com

6. **CAUTION: Do not leave the desiccant bag exposed to atmosphere for longer than five minutes.**

NOTE:

Catch the escaping oil into a suitable container.

NOTE:

On removal of the desiccant bag cap the exposed port immediately.

Remove the desiccant bag.

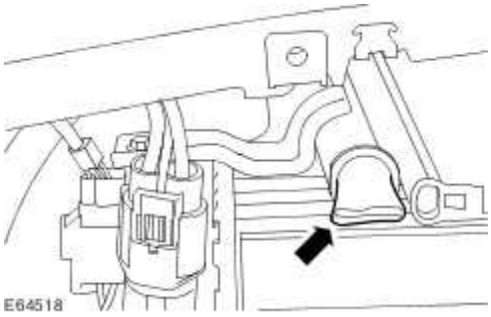

Installation

1. **CAUTION: Do not leave the desiccant bag exposed to atmosphere for longer than five minutes.**

NOTE:

Uncap the exposed port.

Install the desiccant bag.

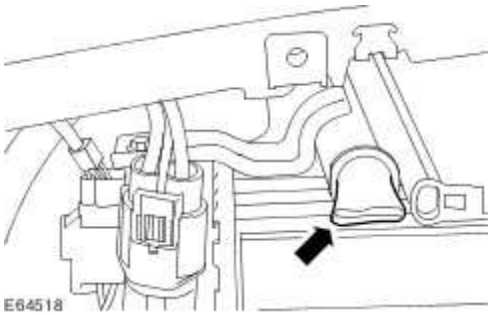

2 . **NOTE:**

Install a new desiccant bag retaining screw O-ring seal.

NOTE:

Lubricate the new O-ring seal with A/C refrigerant oil.

Install the retaining screw.

Tighten to 3 Nm.

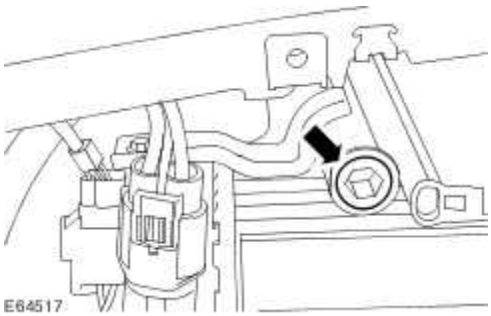

3 . Clean off any oil residue that may contain A/C system fluorescent dye.

4 . Install the radiator lower cowl.

www.JagDocs.com

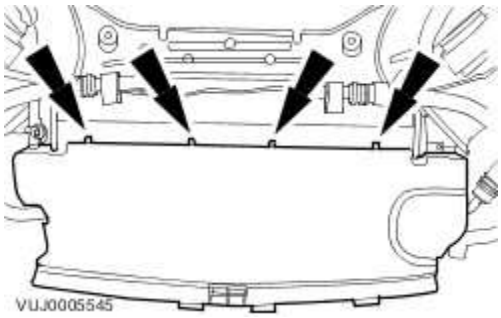

5 . Install the radiator splash shield.
For additional information, refer to Radiator Splash Shield (76.22.90)

6 . Lower the vehicle.

7 . Carry out the A/C system evacuation and charging procedure.
For additional information, refer to Air Conditioning (A/C) System Recovery, Evacuation and Charging (82.30.30)

8 . Carry out the A/C system fluorescent dye leak detection procedure.
For additional information, refer to Fluorescent Dye Leak Detection

Pressure Cutoff Switch - 4.2L NA V8 - AJV8/4.2L SC V8 - AJV8/3.0L NA V6 - AJ27/3.5L NA V8 - AJV8 (82.10.32)

Removal

1 . Remove the air cleaner.
For additional information, refer to Air Cleaner (19.10.05)
For additional information, refer to Air Cleaner (19.10.05)

2 . Disconnect the pressure cutoff switch electrical connector.

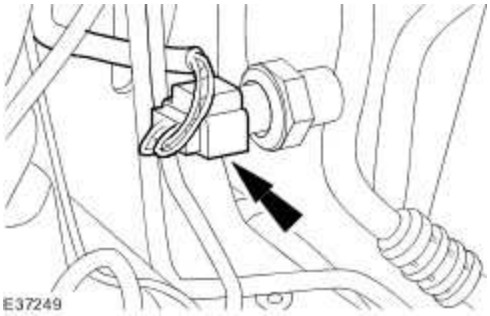

3 . Remove the pressure cutoff switch.

- Remove and discard the pressure cutoff switch O-ring seal.

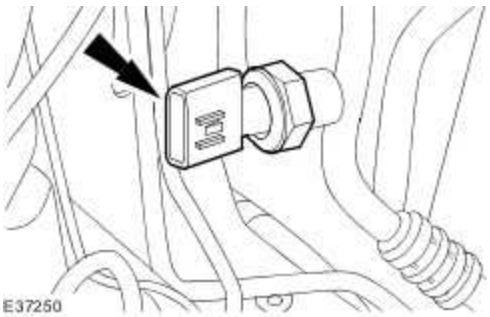

Installation

1 . Install a new pressure cutoff switch O-ring seal.

www.JagDocs.com

Lubricate the new 0-ring seal with A/C refrigerant oil.

2 . Install the pressure cutoff switch.

1) Tighten to 8 Nm.

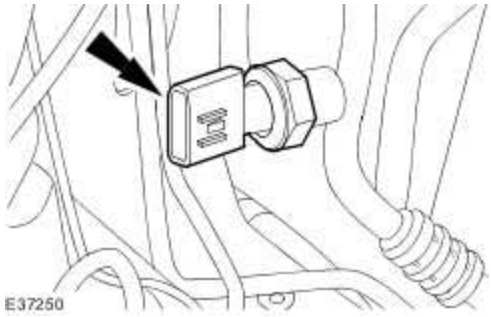

3 . Connect the pressure cutoff switch electrical connector.

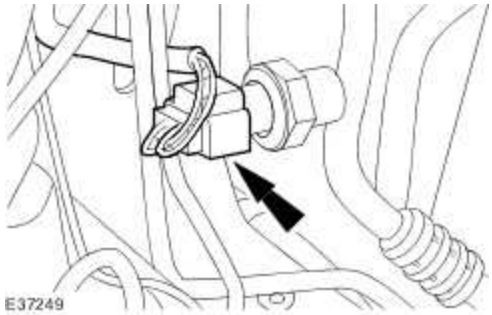

4 . Clean off any oil residue that may contain A/C system fluorescent dye.

5 . Install the air cleaner.
For additional information, refer to Air Cleaner (19.10.05)
For additional information, refer to Air Cleaner (19.10.05)

6 . Carry out the A/C system fluorescent dye leak detection procedure.
For additional information, refer to Fluorescent Dye Leak Detection

Pressure Cutoff Switch - 2.7L V6 - TdV6 (82.10.32)

Removal

1 Carry out the air conditioning (A/C) system recovery procedure.
. For additional information, refer to Air Conditioning (A/C) System Recovery, Evacuation and Charging (82.30.30)

2 . Remove the radiator splash shield.
For additional information, refer to Radiator Splash Shield (76.22.90)

3 . Disconnect the pressure cutoff switch electrical connector.

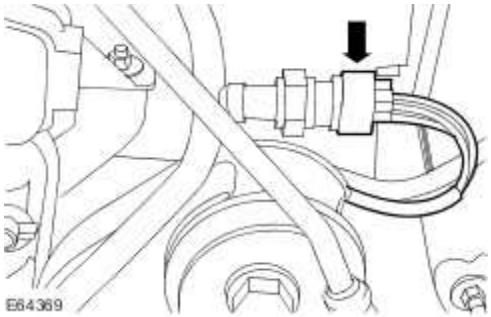

4 . Remove the pressure cutoff switch.

Remove and discard the pressure cutoff switch O-ring seal.

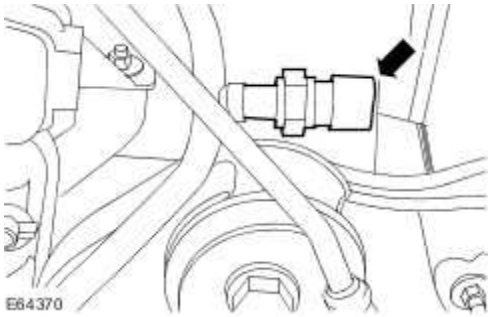

www.JagDocs.com

Installation

1 . **NOTE:**

Install a new pressure cutoff switch O-ring seal.

NOTE:

Lubricate the new O-ring seal with A/C refrigerant oil.

Install the pressure cutoff switch.

Tighten to 8 Nm.

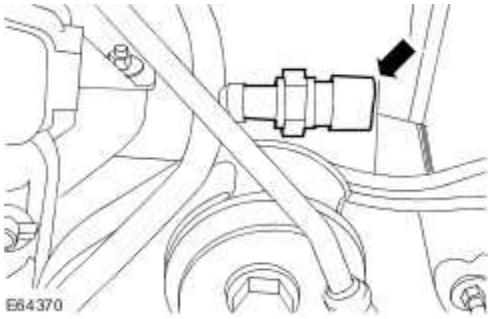

2 . Connect the pressure cutoff switch electrical connector.

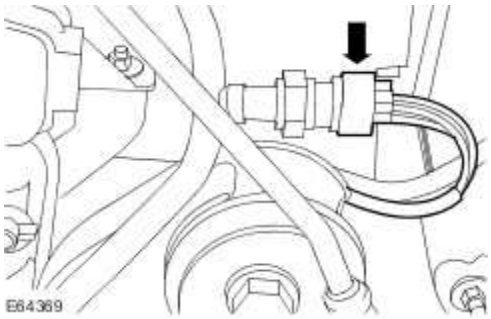

3 . Clean off any oil residue that may contain A/C system fluorescent dye.

4 . Install the radiator splash shield.
For additional information, refer to Radiator Splash Shield (76.22.90)

5 Carry out the A/C system evacuation and charging procedure.

. For additional information, refer to Air Conditioning (A/C) System Recovery, Evacuation and Charging (82.30.30)

6 . Carry out the A/C system fluorescent dye leak detection procedure.

For additional information, refer to Fluorescent Dye Leak Detection

www.JagDocs.com

Specifications

Description	Nm	lb-ft	lb-in
Auxiliary evaporator outlet and inlet lines retaining nut	2	–	18
Auxiliary evaporator outlet and inlet lines retaining bolts	2	–	18
Auxiliary heater core and evaporator core housing retaining nuts	4	–	35
Heater core inlet and outlet pipes retaining clamps	2	–	18

Auxiliary Climate Control

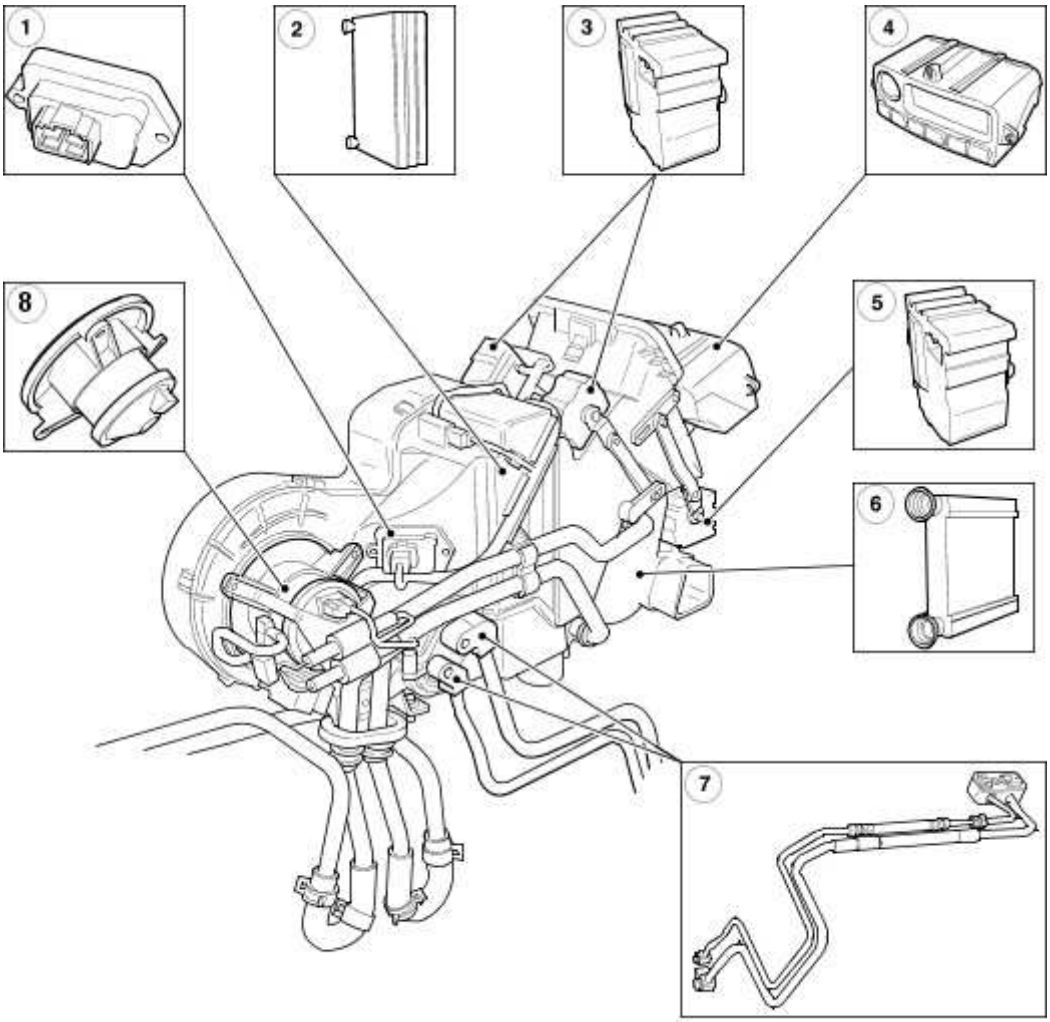

E53552

Item	Part Number	Description
1		Auxiliary blower motor resistor
2		Auxiliary evaporator core
3		Auxiliary temperature blend door actuator
4		Auxiliary climate control assembly
5		Auxiliary foot well vent/duct blend door actuator

www.JagDocs.com

6		Auxiliary heater core
7		Auxiliary evaporator outlet and inlet line
8		Auxiliary blower motor

The auxiliary climate control system will only function when the climate control system has been activated. Any deactivation of the climate control system, will automatically deactivate the auxiliary climate control system. Reactivation of the climate control system will not automatically reactivate the auxiliary climate control system, manual intervention is required.

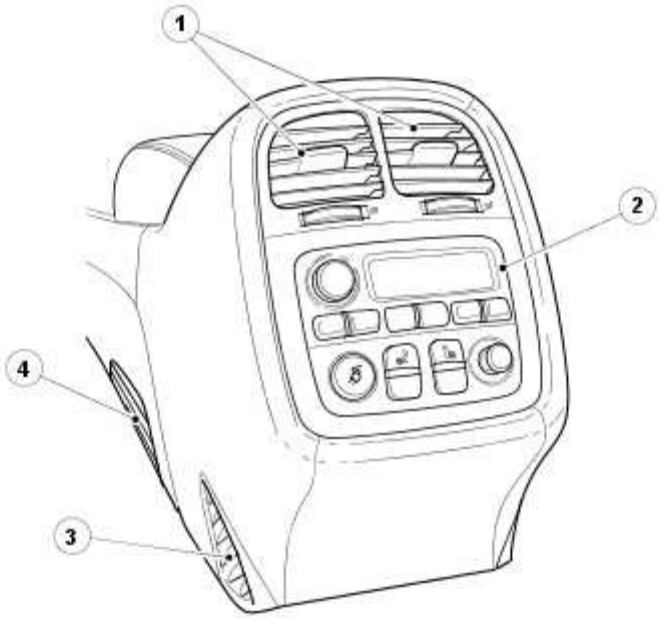

E53553

Item	Part Number	Description
1		Rear face registers
2		Auxiliary climate control assembly
3		Rear floor register
4		Input register

Auxiliary climate control assembly

The auxiliary climate control assembly has its own intergrated control module that, where appropriate, can be overridden by signals from the climate control module.

If the climate control assembly is activated the auxiliary climate control assembly can be controlled by the:

- rear seat passengers using the auxiliary climate control assembly.
- front seat passengers using the instrument panel console touch-screen.

The auxiliary climate control assembly is not configurable but may be reprogrammed using the Jaguar approved diagnostic system.

www.JagDocs.com

Published: Mar 12, 2014

Auxiliary Climate Control – Armoured Vehicles

WARNING: The compressed air cylinder valve must be open for the fresh air system to operate.

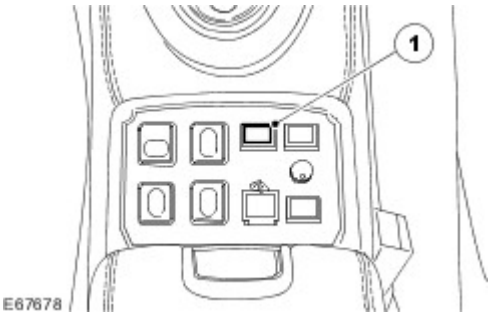

Item	Part Number	Description
1		Fresh air supply switch

NOTE:

The duration of the air supply is dependant on the pressure in the compressed air cylinder, how many people are using the system and their breathing rate.

Fresh Air System

This fresh air system provides fresh air to the vehicle occupants by means of individual masks in the event that the exterior or ambient air becomes contaminated. The masks are to be connected to the individual connection points located on the floor console of the vehicle. The fresh air system comprises a compressed air cylinder mounted in the rear of the luggage compartment. The compressed air cylinder incorporates a manually operated on/off valve with integral pressure gauge graduated from 0 bar (0 lbf/in²) - 400 bar (5802 lbf/in²). The compressed air cylinder valve must be open for the fresh air system to operate. A regulator valve and high pressure gauge are connected to the compressed air cylinder by means of a hand tightened connector. There is a protective shield fitted around the regulator valve. The high pressure gauge is graduated from 0 bar (0 lbf/in²) – 315 bar (4569 lbf/in²) and displays the pressure in the compressed air cylinder. The regulator valve is factory set to supply air at a pressure of 6.2 bar (90 lbf/in²) – 7.0 bar (102 lbf/in²) to the mask. (This effectively pressurizes the mask, restricting ambient air from leaking into the mask). In the event of a system malfunction and the supply pressure exceeding 12 bar (174 lbf/in²), a pressure relief valve opens. The regulator valve is connected to an electrically operated solenoid valve by a flexible hose. The solenoid valve is connected to the manifold block. Connections to this manifold are by means of quick release connectors. A pressure gauge situated in the manifold displays the regulated air supply pressure 6.2 bar (90 lbf/in²) – 7.0 bar (102 lbf/in²). Four branches are taken from this manifold to supply the individual occupants of the vehicle. When connected to the supply point on the vehicle floor console, air is supplied into the mask by a demand valve. Exhaled air is released from the mask by means of an exhaust valve set to between 5.0 millibar (0.07 lbf/in²) – 6.0 millibar (0.09 lbf/in²). The demand valve is attached to the mask by either 2 or 4 buttons. It can only be detached from the mask by using two hands to simultaneously press the release buttons. Pressing the release button on the front of the demand valve operates the bypass which increases the supply of compressed air into the mask if required. It can also be used to purge the system after use. The system is activated by pressing the blue button on the switch pack mounted to the centre console. This opens the solenoid connected to the manifold which permits air to flow to the 4 individual connection points in the vehicle. Air is only released to the occupants when the masks are plugged into these individual connection points.

NOTE:

Vehicles subjected to use in arduous conditions, it is advisable to undertake the system maintenance more frequently.

Maintenance

When charging the compressed air cylinder, European standards relating to use of stored breathable air shall be observed. Changing the mask demand valve diaphragm – it is recommended that this operation be undertaken by a specialist company or a new demand valve be purchased from the original equipment supplier. NOTE:- the complete fresh air system must be checked and tested after replacing any of the functional components. NOTE:- the pressure regulator is factory sealed with a lead pin and painted with varnish. The performance of a regulator without this seal cannot be guaranteed. Cleaning, disinfecting and drying instructions – refer to vehicle handbook. After each usage – wash, disinfect and dry masks; check and if necessary recharge compressed air cylinder. Every 12 months – check system operation from each seating position in the car. Every 5 years – check all valves and regulator, replace perishable parts of face mask and flexible hoses that connect masks to the air connection point.

www.JagDocs.com

Auxiliary Climate Control

Principles of Operation

For a detailed description of the Climate Control system, refer to the relevant Description and Operation sections in the workshop manual.
Auxiliary Climate Control

Inspection and Verification

1 . Verify the customer concern by operating the system.

2 . Visually inspect for obvious signs of damage and system integrity.

Visual Inspection Chart

Mechanical	Electrical
• Coolant Level	• Fuses/Relays • Damaged, Loose or Corroded Connector(s) • Damage to Wiring Loom/Incorrect Location, Stretched or Taught

1 . If an obvious cause for an observed or reported concern is found, correct the cause (if possible) before proceeding to the next step.

2 . If the cause is not visually evident, check for Diagnostic Trouble Codes (DTCs) and refer to the DTC Index.

Symptom Chart

Symptom	Possible source	Action
Rear blower motor is inoperative / does not operate correctly	• Rear blower motor circuits • Rear blower motor • Rear blower motor control module • Auxiliary climate control module	For rear blower motor and control module tests, GO to Pinpoint Test G426404p9.
Auxiliary climate control is inoperative / does not operate correctly	• Auxiliary climate control module circuits • Auxiliary climate	For auxiliary climate control circuit checks, GO to Pinpoint Test G426404p10.

	control module	

DTC Index

Auxiliary Control Module

CAUTION: When probing connectors to take measurements in the course of the pinpoint tests, use the adaptor kit, part number 3548-1358-00

NOTE:

If the control module/component is suspect and the vehicle remains under manufacturer warranty, refer to the Warranty Policy and Procedures manual (section B1.2), or determine if any prior approval program is in operation, prior to the installation of a new module/component.

NOTE:

When performing voltage or resistance tests, always use a digital multimeter (DMM) accurate to three decimal places and with a current calibration certificate. When testing resistance, always take the resistance of the DMM leads into account.

NOTE:

Check and rectify basic faults before beginning diagnostic routines that involve pinpoint tests.

NOTE:

Inspect connectors for signs of water ingress, and pins for damage and/or corrosion.

NOTE:

If DTCs are recorded and, after performing the pinpoint tests, a fault is not present, an intermittent concern may be the cause. Always check for loose connections and corroded terminals.

DTC	Description	Possible Source	Action

www.JagDocs.com

B2513	Blower (Fan) Circuit Failure	• Rear climate control module to blower motor control module - circuit fault	Carry out any pinpoint tests associated with this DTC using the manufacturer approved diagnostic system. Refer to electrical circuit diagrams and check rear climate control module to blower motor control module for circuit fault. For blower motor control circuit test, GO to Pinpoint Test G426404p6.
B2514	Blower (Fan) Circuit Short to Power	• Rear climate control module to blower motor control module circuit - short to power	Carry out any pinpoint tests associated with this DTC using the manufacturer approved diagnostic system. Refer to electrical circuit diagrams and check rear climate control module to blower motor control module for circuit short to power. For blower motor control circuit test, GO to Pinpoint Test G426404p7.
B2828	Rear Evaporator Temp Sensor Circuit Failure	• Evaporator temperature circuit - open or short to power	Refer to electrical circuit diagrams and check evaporator temperature circuit for open or short to power. For evaporator temperature sensor circuit tests, GO to Pinpoint Test G426404p4.
B2829	Rear Evaporator Temp Sensor Short to Ground	• Evaporator temperature circuit - short to ground	Refer to electrical circuit diagrams and check evaporator temperature circuit for short to ground. For evaporator temperature sensor circuit test, GO to Pinpoint Test G426404p3.
B2832	Rear Mode Servo Failure	• Rear mode servo position feedback circuit - open circuit, short to power or ground	Carry out any pinpoint tests associated with this DTC using the manufacturer approved diagnostic system. Refer to electrical circuit diagrams and check rear mode servo position feedback circuit for open circuit, short to power or ground For mode servo circuit tests, GO to Pinpoint Test G426404p1. and GO to Pinpoint Test G426404p5.
B2833	Servo Sensor Supply Fault	• Servo sensor power supply circuit - open or short to power or ground	Carry out any pinpoint tests associated with this DTC using the manufacturer approved diagnostic system. Refer to electrical circuit diagrams and check Servo sensor power supply circuit for open

			circuit, short to power or ground. For sensor power supply circuit tests, GO to Pinpoint Test G426404p11.
B2834	Air Mix Servo Failure	• LH or RH air mix servo position feedback circuit - open or short to power or ground	Carry out any pinpoint tests associated with this DTC using the manufacturer approved diagnostic system. Refer to electrical circuit diagrams and check LH or RH air mix servo position feedback circuit's for open circuit, short to power or ground. For air mix servo circuit tests, GO to Pinpoint Test G426404p2. and GO to Pinpoint Test G426404p5.
B2844	Ignition Circuit Fault	• Ignition power circuit to climate control module circuit - open or short to ground	Refer to electrical circuit diagrams and check ignition power circuit to climate control module circuit for open circuit or short to ground. For climate control module ignition power circuit tests, GO to Pinpoint Test G426404p8.
U2022	Communication Fault on Dedicated Protocol	Internal climate control module failure	Suspect the climate control module. Replace as required, refer to the new module installation note at the top of the DTC Index
U2516	CAN Bus fault	CAN Bus circuit fault (No CAN messages received during ignition on from other electronic control module's)	Refer to electrical circuit diagrams and check CAN Bus circuit for fault. For CAN circuit tests, Communications Network

Pinpoint Tests

PINPOINT TEST G426404p1 : DTC B2832: MODE SERVO CIRCUIT TEST

G426404t1 : CHECK THE MODE SERVO POSITION FEEDBACK CIRCUIT FOR SHORT TO GROUND

1. Disconnect the battery negative terminal.
Battery Disconnect and Connect 2. Disconnect the rear climate control module connector RA1. 3. Disconnect the mode servo connector RA09. 4. Measure the resistance between the rear climate control module connector RA1, pin 01 and GROUND.

www.JagDocs.com

- **Is the resistance less than 10,000 ohms?**

-> Yes
REPAIR the short circuit. For additional information, refer to the wiring diagrams. CLEAR the DTC. TEST the system for normal operation.

-> No
GO to Pinpoint Test G426404t2.

G426404t2 : CHECK THE MODE SERVO POSITION FEEDBACK CIRCUIT FOR OPEN CIRCUIT

1. Measure the resistance between the rear climate control module connector RA1, pin 01 and mode servo connector RA09, pin 02.

- **Is the resistance greater than 5 ohms?**

-> Yes
REPAIR the high resistance circuit. For additional information, refer to the wiring diagrams. CLEAR the DTC. TEST the system for normal operation.

-> No
GO to Pinpoint Test G426404t3.

G426404t34 : CHECK THE MODE SERVO MOTOR FEED CIRCUIT FOR OPEN CIRCUIT

1. Measure the resistance between the rear climate control module connector RA2, pin 04 and mode servo connector RA09, pin 04.

- **Is the resistance greater than 5 ohms?**

-> Yes
REPAIR the high resistance circuit. For additional information, refer to the wiring diagrams. CLEAR the DTC. TEST the system for normal operation.

-> No
GO to Pinpoint Test G426404t35.

G426404t35 : CHECK THE MODE SERVO MOTOR FEED CIRCUIT FOR SHORT TO GROUND

1. Measure the resistance between the rear climate control module connector RA2, pin 04 and GROUND.

- **Is the resistance less than 10,000 ohms?**

-> Yes
REPAIR the short circuit. For additional information, refer to the wiring diagrams. CLEAR the DTC. TEST the system for normal operation.

-> No
GO to Pinpoint Test G426404t36.

G426404t36 : CHECK THE MODE SERVO MOTOR RETURN CIRCUIT FOR OPEN CIRCUIT

1. Measure the resistance between the rear climate control module connector RA2, pin 05 and mode servo connector RA09, pin 05.

- **Is the resistance greater than 5 ohms?**

-> Yes
REPAIR the high resistance circuit. For additional information, refer to the wiring diagrams. CLEAR the DTC. TEST the system for normal operation.

-> No
GO to Pinpoint Test G426404t37.

G426404t37 : CHECK THE MODE SERVO MOTOR RETURN CIRCUIT FOR SHORT TO GROUND

1. Measure the resistance between the rear climate control module connector RA2, pin 05 and GROUND.

- **Is the resistance less than 10,000 ohms?**

-> Yes
REPAIR the short circuit. For additional information, refer to the wiring diagrams. CLEAR the DTC. TEST the system for normal operation.

-> No
GO to Pinpoint Test G426404t3.

G426404t3 : CHECK THE MODE SERVO POSITION FEEDBACK CIRCUIT FOR SHORT TO B+

1. Reconnect the battery negative terminal.
Battery Connect (86.15.15) 2. Turn the ignition switch to the **ON** position. 3. Measure the voltage between the rear climate control module connector RA1, pin 01 and GROUND.

- **Is the voltage greater than 3 volts?**

www.JagDocs.com

-> Yes
REPAIR the short circuit. For additional information, refer to the wiring diagrams. CLEAR the DTC. TEST the system for normal operation.

-> No
INSTALL a new mode servo. CLEAR the DTC. TEST the system for normal operation. If the DTC is repeated, INSTALL a new rear climate control module.

PINPOINT TEST G426404p2 : DTC 2834: AIR MIX SERVO LH AND RH CIRCUIT TESTS

G426404t4 : CHECK THE LH AIR MIX SERVO POSITION FEEDBACK CIRCUIT FOR OPEN CIRCUIT

1. Disconnect the battery negative terminal.
Battery Disconnect and Connect 2. Disconnect the rear climate control module connector RA1. 3. Disconnect the LH air mix servo connector RA7. 4. Measure the resistance between the rear climate control module connector RA1, pin 02 and LH air mix servo connector RA7, pin 02.

- **Is the resistance greater than 5 ohms?**

-> Yes
REPAIR the high resistance circuit. For additional information, refer to the wiring diagrams. CLEAR the DTC. TEST the system for normal operation.

-> No
GO to Pinpoint Test G426404t5.

G426404t5 : CHECK THE LH AIR MIX SERVO POSITION FEEDBACK CIRCUIT FOR SHORT TO GROUND

1. Measure the resistance between the rear climate control module connector RA1, pin 02 and GROUND.

- **Is the resistance less than 10,000 ohms?**

-> Yes
REPAIR the short circuit. For additional information, refer to the wiring diagrams. CLEAR the DTC. TEST the system for normal operation.

-> No
GO to Pinpoint Test G426404t7.

G426404t38 : CHECK THE LH AIR MIX SERVO MOTOR FEED CIRCUIT FOR OPEN CIRCUIT

1. Measure the resistance between the rear climate control module connector RA2, pin 06 and LH air mix servo connector RA7, pin 05.

- **Is the resistance greater than 5 ohms?**

-> Yes
REPAIR the high resistance circuit. For additional information, refer to the wiring diagrams. CLEAR the DTC. TEST the system for normal operation.

-> No
GO to Pinpoint Test G426404t39.

G426404t39 : CHECK THE LH AIR MIX SERVO MOTOR FEED CIRCUIT FOR SHORT TO GROUND

1. Measure the resistance between the rear climate control module connector RA2, pin 06 and GROUND.

- **Is the resistance less than 10,000 ohms?**

-> Yes
REPAIR the short circuit. For additional information, refer to the wiring diagrams. CLEAR the DTC. TEST the system for normal operation.

-> No
GO to Pinpoint Test G426404t40.

G426404t40 : CHECK THE LH AIR MIX SERVO MOTOR RETURN CIRCUIT FOR OPEN CIRCUIT

1. Measure the resistance between the rear climate control module connector RA2, pin 12 and LH air mix servo connector RA7, pin 04.

- **Is the resistance greater than 5 ohms?**

-> Yes
REPAIR the high resistance circuit. For additional information, refer to the wiring diagrams. CLEAR the DTC. TEST the system for normal operation.

-> No
GO to Pinpoint Test G426404t41.

www.JagDocs.com

G426404t41 : CHECK THE LH AIR MIX SERVO MOTOR RETURN CIRCUIT FOR SHORT TO GROUND

1. Measure the resistance between the rear climate control module connector RA2, pin 12 and GROUND.

- **Is the resistance less than 10,000 ohms?**

-> Yes
REPAIR the short circuit. For additional information, refer to the wiring diagrams. CLEAR the DTC. TEST the system for normal operation.

-> No
GO to Pinpoint Test G426404t7.

G426404t7 : CHECK THE RH AIR MIX SERVO POSITION FEEDBACK CIRCUIT FOR OPEN CIRCUIT

1. Disconnect the RH air mix servo connector RA8. 2. Measure the resistance between the rear climate control module connector RA1, pin 03 and RH air mix servo connector RA8, pin 02.

- **Is the resistance greater than 5 ohms?**

-> Yes
REPAIR the high resistance circuit. For additional information, refer to the wiring diagrams. CLEAR the DTC. TEST the system for normal operation.

-> No
GO to Pinpoint Test G426404t8.

G426404t42 : CHECK THE RH AIR MIX SERVO MOTOR FEED CIRCUIT FOR OPEN CIRCUIT

1. Measure the resistance between the rear climate control module connector RA2, pin 11 and RH air mix servo connector RA8, pin 04.

- **Is the resistance greater than 5 ohms?**

-> Yes
REPAIR the high resistance circuit. For additional information, refer to the wiring diagrams. CLEAR the DTC. TEST the system for normal operation.

-> No
GO to Pinpoint Test G426404t43.

G426404t43 : CHECK THE RH AIR MIX SERVO MOTOR FEED CIRCUIT FOR SHORT TO GROUND

1. Measure the resistance between the rear climate control module connector RA2, pin 11 and GROUND.

- **Is the resistance less than 10,000 ohms?**

-> Yes
REPAIR the short circuit. For additional information, refer to the wiring diagrams. CLEAR the DTC. TEST the system for normal operation.

-> No
GO to Pinpoint Test G426404t44.

G426404t44 : CHECK THE RH AIR MIX SERVO MOTOR RETURN CIRCUIT FOR OPEN CIRCUIT

1. Measure the resistance between the rear climate control module connector RA2, pin 10 and RH air mix servo connector RA8, pin 05.

- **Is the resistance greater than 5 ohms?**

-> Yes
REPAIR the high resistance circuit. For additional information, refer to the wiring diagrams. CLEAR the DTC. TEST the system for normal operation.

-> No
GO to Pinpoint Test G426404t45.

G426404t45 : CHECK THE RH AIR MIX SERVO MOTOR RETURN CIRCUIT FOR SHORT TO GROUND

1. Measure the resistance between the rear climate control module connector RA2, pin 10 and GROUND.

- **Is the resistance less than 10,000 ohms?**

-> Yes
REPAIR the short circuit. For additional information, refer to the wiring diagrams. CLEAR the DTC. TEST the system for normal operation.

-> No
GO to Pinpoint Test G426404t8.

www.JagDocs.com

G426404t8 : CHECK THE RH AIR MIX SERVO POSITION FEEDBACK CIRCUIT FOR SHORT TO GROUND

1. Measure the resistance between the rear climate control module connector RA1, pin 03 and GROUND.

- **Is the resistance less than 10,000 ohms?**

-> Yes
REPAIR the short circuit. For additional information, refer to the wiring diagrams. CLEAR the DTC. TEST the system for normal operation.

-> No
GO to Pinpoint Test G426404t6.

G426404t6 : CHECK THE RH AIR MIX SERVO POSITION FEEDBACK CIRCUIT FOR SHORT TO B+

1. Reconnect the battery negative terminal.
Battery Connect (86.15.15) 2. Turn the ignition switch to the **ON** position. 3. Measure the voltage between the rear climate control module connector RA1, pin 03 and GROUND.

- **Is the voltage greater than 3 volts?**

-> Yes
REPAIR the short circuit. For additional information, refer to the wiring diagrams. CLEAR the DTC. TEST the system for normal operation.

-> No
GO to Pinpoint Test G426404t9.

G426404t9 : CHECK THE LH AIR MIX SERVO POSITION FEEDBACK CIRCUIT FOR SHORT TO B+

1. Measure the voltage between the rear climate control module connector RA1, pin 02 and GROUND.

- **Is the voltage greater than 3 volts?**

-> Yes
REPAIR the short circuit. For additional information, refer to the wiring diagrams. CLEAR the DTC. TEST the system for normal operation.

-> No
INSTALL a new air mix servo. CLEAR the DTC. TEST the system for normal operation. If the DTC is repeated, INSTALL a new rear climate control module.

PINPOINT TEST G426404p3 : DTC B2829: EVAPORATOR TEMPERATURE SENSOR CIRCUIT TEST

G426404t10 : CHECK THE EVAPORATOR TEMPERATURE SENSOR CIRCUIT FOR SHORT TO GROUND

1. Disconnect the battery negative terminal.
Battery Disconnect and Connect 2. Disconnect the rear climate control module connector RA1. 3. Disconnect the evaporator temperature sensor connector RA10. 4. Measure the resistance between the rear climate control module connector RA1, pin 09 and GROUND.

- **Is the resistance less than 10,000 ohms?**

-> Yes
REPAIR the short circuit. For additional information, refer to the wiring diagrams. CLEAR the DTC. TEST the system for normal operation.

-> No
INSTALL a new evaporator temperature sensor. CLEAR the DTC. TEST the system for normal operation. If the DTC is repeated, INSTALL a new rear climate control module.

PINPOINT TEST G426404p4 : DTC B2828: EVAPORATOR TEMPERATURE SENSOR CIRCUIT TEST

G426404t11 : CHECK THE EVAPORATOR TEMPERATURE SENSOR CIRCUIT FOR OPEN CIRCUIT

1. Disconnect the battery negative terminal.
Battery Disconnect and Connect 2. Disconnect the rear climate control module connector RA1. 3. Disconnect the evaporator temperature sensor connector RA10. 4. Measure the resistance between the rear climate control module connector RA1, pin 09 and evaporator temperature sensor connector RA10, pin 01.

- **Is the resistance greater than 5 ohms?**

-> Yes
REPAIR the high resistance circuit. For additional information, refer to the wiring diagrams. CLEAR the DTC. TEST the system for normal operation.

-> No

www.JagDocs.com

GO to Pinpoint Test G426404t13.

G426404t13 : CHECK THE EVAPORATOR TEMPERATURE SENSOR CIRCUIT FOR SHORT TO B+

1. Reconnect the battery negative terminal.
Battery Connect (86.15.15) 2. Turn the ignition switch to the **ON** position. 3. Measure the voltage between the rear climate control module connector RA1, pin 09 and GROUND.

- **Is the voltage greater than 3 volts?**

-> Yes
REPAIR the short circuit. For additional information, refer to the wiring diagrams. CLEAR the DTC. TEST the system for normal operation.

-> No
INSTALL a new evaporator temperature sensor. CLEAR the DTC. TEST the system for normal operation. If the DTC is repeated, INSTALL a new rear climate control module.

PINPOINT TEST G426404p5 : SERVO POWER SUPPLY CIRCUIT TESTS

G426404t12 : CHECK THE SERVO POWER SUPPLY CIRCUIT FOR OPEN CIRCUIT

1. Disconnect the battery negative terminal.
Battery Disconnect and Connect 2. Disconnect the rear climate control module connector RA1. 3. Disconnect the mode servo connector RA09. 4. Measure the resistance between the rear climate control module connector RA1, pin 11 and mode servo connector RA09, pin 03.

- **Is the resistance greater than 5 ohms?**

-> Yes
REPAIR the high resistance circuit between the rear climate control module connector RA1, pin 11 and splice RAS10. For additional information, refer to the wiring diagrams. CLEAR the DTC. TEST the system for normal operation.

-> No
GO to Pinpoint Test G426404t14.

G426404t14 : CHECK THE SERVO POWER SUPPLY CIRCUIT FOR SHORT TO GROUND

1. Disconnect the LH air mix servo connector RA7. 2. Disconnect the RH air mix servo connector RA8. 3. Measure the resistance between the rear climate control module connector RA1, pin 11 and GROUND.

- **Is the resistance less than 10,000 ohms?**

-> Yes
REPAIR the short circuit between the rear climate control connector RA1, pin 11, mode servo connector RA09, pin 03, LH air mix servo connector RA7, pin 03 and RH air mix servo connector RA8, pin 03. For additional information, refer to the wiring diagrams. CLEAR the DTC. TEST the system for normal operation.

-> No
GO to Pinpoint Test G426404t15.

G426404t15 : CHECK THE SERVO POWER SUPPLY CIRCUIT FOR SHORT TO B+

1. Reconnect the battery negative terminal.
Battery Connect (86.15.15) 2. Turn the ignition switch to the **ON** position. 3. Measure the voltage between the rear climate control module connector RA1, pin 11 and GROUND.

- **Is the voltage greater than 3 volts?**

-> Yes
REPAIR the short circuit between the rear climate control connector RA1, pin 11, mode servo connector RA09, pin 03, LH air mix servo connector RA7, pin 03 and RH air mix servo connector RA8, pin 03. For additional information, refer to the wiring diagrams. CLEAR the DTC. TEST the system for normal operation.

-> No
GO to Pinpoint Test G426404t16.

G426404t16 : CHECK THE MODE SERVO FOR SHORT TO B+

1. Reconnect the mode servo connector RA09. 2. Measure the voltage between the rear climate control module connector RA1, pin 11 and GROUND.

- **Is the voltage greater than 3 volts?**

-> Yes
INSTALL a new mode servo. CLEAR the DTC. TEST the system for normal operation.

-> No

www.JagDocs.com

GO to Pinpoint Test G426404t17.

G426404t17 : CHECK THE LH AIR MIX SERVO FOR SHORT TO B+

1. Reconnect the LH air mix servo connector RA7. 2. Measure the voltage between the rear climate control module connector RA1, pin 11 and GROUND.

- **Is the voltage greater than 3 volts?**

-> Yes
INSTALL a new LH air mix servo. CLEAR the DTC. TEST the system for normal operation.

-> No
GO to Pinpoint Test G426404t18.

G426404t18 : CHECK THE RH AIR MIX SERVO FOR SHORT TO B+

1. Reconnect the RH air mix servo connector RA8. 2. Measure the voltage between the rear climate control module connector RA1, pin 11 and GROUND.

- **Is the voltage greater than 3 volts?**

-> Yes
INSTALL a new RH air mix servo. CLEAR the DTC. TEST the system for normal operation.

-> No
GO to Pinpoint Test G426404t19.

G426404t19 : CHECK THE SERVO'S FOR SHORT TO GROUND

1. Disconnect the battery negative terminal.
Battery Disconnect and Connect 2. Measure the resistance between the rear climate control module connector RA1, pin 11 and GROUND.

- **Is the resistance less than 10,000 ohms?**

-> Yes
GO to Pinpoint Test G426404t20.

-> No
INSTALL a new rear climate control module. CLEAR the DTC. TEST the system for normal operation.

G426404t20 : CHECK THE MODE SERVO FOR SHORT TO GROUND

1. Disconnect the mode servo connector RA09. 2. Measure the resistance between the rear climate control module connector RA1, pin 11 and GROUND.

- **Is the resistance less than 10,000 ohms?**

-> Yes
GO to Pinpoint Test G426404t21.

-> No
INSTALL a new mode servo. CLEAR the DTC. TEST the system for normal operation.

G426404t21 : CHECK THE LH AIR MIX SERVO FOR SHORT TO GROUND

1. Disconnect the LH air mix connector RA7. 2. Measure the resistance between the rear climate control module connector RA1, pin 11 and GROUND.

- **Is the resistance less than 10,000 ohms?**

-> Yes
INSTALL a new LH air mix servo. CLEAR the DTC. TEST the system for normal operation.

-> No
INSTALL a new RH air mix servo. CLEAR the DTC. TEST the system for normal operation.

www.JagDocs.com

PINPOINT TEST G426404p6 : DTC B2513: BLOWER MOTOR CONTROL MODULE CIRCUIT TEST

G426404t22 : CHECK THE REAR BLOWER MOTOR CONTROL MODULE CIRCUIT FOR OPEN CIRCUIT

1. Disconnect the battery negative terminal.
Battery Disconnect and Connect 2. Disconnect the rear climate control module connector RA1. 3. Disconnect the rear blower motor control module connector RA3. 4. Measure the resistance between the rear climate control module connector RA1, pin 14 and the rear blower motor control module connector RA3, pin 02.

- **Is the resistance greater than 5 ohms?**

-> Yes
REPAIR the high resistance circuit. For additional information, refer to the wiring diagrams. CLEAR the DTC. TEST the system for normal operation.

-> No
INSTALL a new rear blower motor control module. CLEAR the DTC. TEST the system for normal operation. If the DTC is repeated, INSTALL a new rear climate control module.

PINPOINT TEST G426404p7 : DTC B2514: BLOWER MOTOR CONTROL MODULE CIRCUIT TEST

G426404t23 : CHECK THE REAR BLOWER MOTOR CONTROL MODULE CIRCUIT FOR SHORT TO B+

1. Disconnect the battery negative terminal.
Battery Disconnect and Connect 2. Disconnect the rear climate control module connector RA1. 3. Disconnect the rear blower motor control module connector RA3. 4. Reconnect the battery negative terminal.
Battery Connect (86.15.15) 5. Turn the ignition switch to the **ON** position. 6. Measure the voltage between the rear climate control module connector RA1, pin 14 and GROUND.

- **Is the voltage greater than 3 volts?**

-> Yes
REPAIR the short circuit. For additional information, refer to the wiring diagrams. CLEAR the DTC. TEST the system for normal operation.

-> No
INSTALL a new rear blower motor control module. CLEAR the DTC. TEST the system for normal operation. If the DTC is repeated, INSTALL a new rear climate control module.

PINPOINT TEST G426404p8 : DTC B2844: REAR CLIMATE CONTROL MODULE IGNITION FEED CIRCUIT TESTS

G426404t25 : CHECK THE REAR CLIMATE CONTROL MODULE IGNITION FEED CIRCUIT FOR VOLTAGE

1. Disconnect the battery negative terminal.
Battery Disconnect and Connect 2. Disconnect the rear climate control module connector RA2. 3. Reconnect the battery negative terminal.
Battery Connect (86.15.15) 4. Turn the ignition switch to the **ON** position. 5. Measure the voltage between the rear climate control module connector RA2, pin 07 and GROUND.

- **Is the voltage less than 10 volts?**

-> Yes
GO to Pinpoint Test G426404t24.

-> No
CHECK the ground to the rear climate control module. If a ground is present, INSTALL a new rear climate control module. CLEAR the DTC. TEST the system for normal operation.

G426404t24 : CHECK REAR PASSENGER DISTRIBUTION BOX FUSE F53

1. Turn the ignition switch to the **OFF** position. 2. Remove the rear passenger distribution box fuse F53. 3. Inspect fuse F53 for open circuit.

- **Is the fuse OK?**

-> Yes
GO to Pinpoint Test G426404t26.

-> No
GO to Pinpoint Test G426404t27.

G426404t26 : CHECK THE REAR CLIMATE CONTROL MODULE IGNITION FEED CIRCUIT FOR OPEN CIRCUIT

1. Disconnect the battery negative terminal.
Battery Disconnect and Connect 2. Measure the resistance between the rear climate control module connector RA2, pin 07 and rear passenger distribution box fuse F53.

- **Is the resistance greater than 5 ohms?**

-> Yes
REPAIR the high resistance circuit. For additional information, refer to the wiring diagrams. CLEAR the DTC. TEST the system for normal operation.

-> No
REPAIR the high resistance circuit between the rear passenger distribution box fuse F53 and battery positive. This circuit includes the rear ignition relay R2. For additional information, refer to the wiring diagrams. CLEAR the DTC. TEST the system for normal operation.

G426404t27 : CHECK THE REAR CLIMATE CONTROL MODULE IGNITION FEED CIRCUIT FOR SHORT TO GROUND

1. Disconnect the battery negative terminal.
Battery Disconnect and Connect 2. Measure the resistance between the rear climate control module connector RA2, pin 07 and GROUND.

- **Is the resistance less than 10,000 ohms?**

www.JagDocs.com

-> Yes
GO to Pinpoint Test G426404t28.

-> No
INSTALL a new rear climate control module. CLEAR the DTC. TEST the system for normal operation.

G426404t28 : CHECK THE REAR BLOWER MOTOR FOR SHORT TO GROUND

1. Disconnect the rear blower motor connector RA4. 2. Measure the resistance between the rear climate control module connector RA2, pin 07 and GROUND.

- **Is the resistance less than 10,000 ohms?**

-> Yes
REPAIR the short circuit. For additional information, refer to the wiring diagrams. CLEAR the DTC. TEST the system for normal operation.

-> No
INSTALL a new rear blower motor. CLEAR the DTC. TEST the system for normal operation.

PINPOINT TEST G426404p9 : REAR BLOWER MOTOR AND CONTROL MODULE TESTS

G426404t29 : CHECK THE REAR BLOWER MOTOR FOR BATTERY VOLTAGE

1. Disconnect the battery negative terminal.
Battery Disconnect and Connect 2. Disconnect the rear blower motor connector RA4. 3. Reconnect the battery negative terminal.
Battery Connect (86.15.15) 4. Turn the ignition switch to the **ON** position. 5. Measure the voltage between the rear blower motor connector RA4, pin 01 and GROUND.

- **Is the voltage less than 10 volts?**

-> Yes
REPAIR the circuit between the rear blower motor connector RA4, pin 01 and battery positive. This circuit includes the rear passenger distribution box (fuse 53) and rear ignition relay R2. Test the system for normal operation.

-> No
GO to Pinpoint Test G426404t30.

G426404t30 : CHECK THE REAR BLOWER MOTOR CONTROL MODULE GROUND CIRCUIT

1. Turn the ignition switch to the **OFF** position. 2. Disconnect the battery negative terminal. Battery Disconnect and Connect 3. Disconnect the rear blower motor control module connector RA3. 4. Measure the resistance between the rear blower motor module connector RA3, pin 01 and ground.

- **Is the resistance greater than 5 ohms?**

-> Yes
REPAIR the high resistance circuit between the rear blower motor module connector RA3, pin 01 and ground connection G32BS. Check the ground connection for contamination and security. For additional information, refer to the wiring diagrams. TEST the system for normal operation.

-> No
GO to Pinpoint Test G426404t31.

G426404t31 : CHECK THE REAR BLOWER MOTOR GROUND CIRCUIT FOR OPEN CIRCUIT

1. Measure the resistance between the rear blower motor connector RA4, pin 02 and rear blower motor module connector RA3, pin 04.

- **Is the resistance greater than 5 ohms?**

-> Yes
REPAIR the high resistance circuit. For additional information, refer to the wiring diagrams. TEST the system for normal operation.

-> No
GO to Pinpoint Test G426404t32.

G426404t32 : CHECK THE REAR BLOWER MOTOR CONTROL MODULE FEEDBACK CIRCUIT FOR OPEN CIRCUIT

1. Disconnect the rear climate control module connector RA1. 2. Measure the resistance between the rear blower motor module connector RA3, pin 03 and rear climate control module RA1, pin 13.

- **Is the resistance greater than 5 ohms?**

-> Yes
REPAIR the high resistance circuit. For additional information, refer to the wiring diagrams. TEST the system for normal operation.

-> No
TEST the rear blower motor. If the rear blower motor is OK, INSTALL a new rear blower motor control

www.JagDocs.com

module. TEST the system for normal operation. If the concern persists, INSTALL a new rear climate control module.

PINPOINT TEST G426404p10 : AUXILIARY CLIMATE CONTROL MODULE CIRCUIT TESTS

G426404t33 : CHECK THE AUXILIARY CLIMATE CONTROL MODULE BATTERY SUPPLY CIRCUIT FOR OPEN CIRCUIT

1. Disconnect the battery negative terminal.
Battery Disconnect and Connect 2. Disconnect the rear climate control module connector RA2. 3. Reconnect the battery negative terminal.
Battery Connect (86.15.15) 4. Turn the ignition switch to the **ON** position. 5. Measure the voltage between the rear climate control module connector RA2, pin 08 and GROUND.

- **Is the voltage less than 10 volts?**

-> Yes
REPAIR the high resistance circuit between the rear climate control module connector RA2, pin 08 and battery. This circuit includes the passenger junction fuse box (fuse 28) and the switched system power relay. For additional information, refer to the wiring diagrams. TEST the system for normal operation.

-> No
GO to Pinpoint Test G426404t46.

G426404t46 : CHECK THE AUXILIARY CLIMATE CONTROL MODULE GROUND CIRCUIT FOR OPEN CIRCUIT

1. Turn the ignition switch to the **OFF** position. 2. Disconnect the battery negative terminal.
Battery Disconnect and Connect 3. Measure the resistance between the rear climate control module connector RA2, pin 01 and GROUND.

- **Is the resistance greater than 5 ohms?**

-> Yes
REPAIR the high resistance circuit between the rear climate control module connector RA2, pin 01 and ground connection G32BS. Check the ground connection for contamination and security. For additional information, refer to the wiring diagrams. TEST the system for normal operation.

-> No
INSTALL a new rear climate control module. TEST the system for normal operation.

PINPOINT TEST G426404p11 : DTC B2833: SENSOR POWER SUPPLY CIRCUIT TESTS

G426404t47 : CHECK THE SENSOR POWER SUPPLY CIRCUIT FOR OPEN CIRCUIT

1. Disconnect the battery negative terminal.
Battery Disconnect and Connect 2. Disconnect the evaporator sensor connector, RA10. 3. Disconnect the rear climate control module connector, RA1. 4. Measure the resistance between RA1, pin 09 and RA10, pin 01.

- **Is the resistance greater than 5 ohms?**

-> Yes
REPAIR the high resistance circuit. For additional information, refer to the wiring diagrams. TEST the system for normal operation.

-> No
GO to Pinpoint Test G426404t48.

G426404t48 : CHECK THE SENSOR POWER SUPPLY CIRCUIT FOR SHORT CIRCUIT TO GROUND

1. Measure the resistance between RA10, pin 01 and GROUND.

- **Is the resistance less than 10,000 ohms?**

-> Yes
REPAIR the short circuit. For additional information, refer to the wiring diagrams. TEST the system for normal operation.

-> No
GO to Pinpoint Test G426404t49.

G426404t49 : CHECK THE SENSOR POWER SUPPLY CIRCUIT FOR SHORT CIRCUIT TO B+

1. Reconnect the battery negative terminal.
Battery Connect (86.15.15) 2. Turn the ignition switch to the **ON** position. 3. Measure the voltage between RA10, pin 01 and GROUND.

- **Is the voltage greater than 3 volts?**

www.JagDocs.com

-> Yes
REPAIR the short circuit. For additional information, refer to the wiring diagrams. TEST the system for normal operation.

-> No
INSTALL a new evaporator sensor. TEST the system for normal operation.

Auxiliary Climate Control Assembly

Removal

1 . **CAUTION: Make sure damage does not occur to the auxiliary climate control assembly finish panel.**

Remove the auxiliary climate control assembly finish panel.

2 . Detach the auxiliary climate control assembly.

- Remove the auxiliary climate control assembly retaining screws.

3 . Remove the auxiliary climate control assembly.

- Disconnect the auxiliary climate control assembly electrical connectors.

www.JagDocs.com

Installation

1 . To install, reverse the removal procedure.

Auxiliary Evaporator Outlet and Inlet Line

Removal

1 Carry out the air conditioning (A/C) system recovery procedure.
. For additional information, refer to Air Conditioning (A/C) System Recovery, Evacuation and Charging (82.30.30)

2 . Raise and support the vehicle.
For additional information, refer to Lifting

3 . Remove the air deflector.
For additional information, refer to Air Deflector (76.11.41)

4 . Remove the left-hand splash shield.

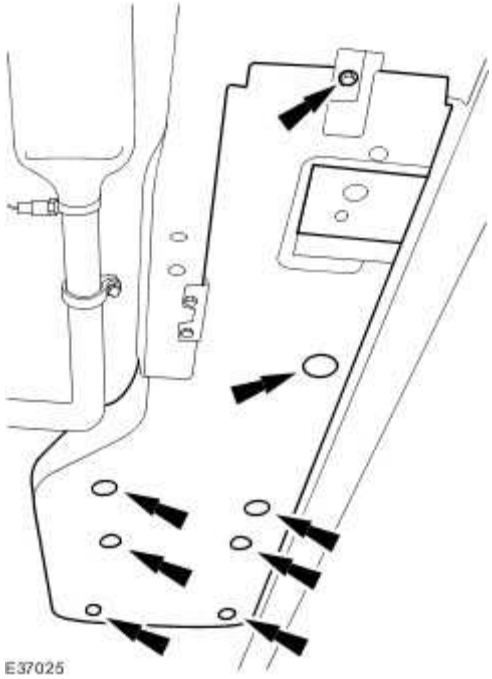

5 . **NOTE:**

Remove and discard the auxiliary evaporator outlet and inlet line O-ring seals.

www.JagDocs.com

Detach the auxiliary evaporator outlet and inlet lines.

- Remove the auxiliary evaporator outlet and inlet line retaining bolts.

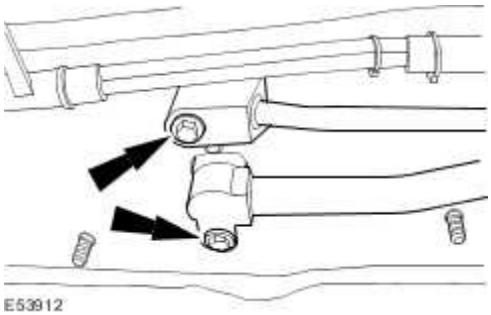

6 . Lower the vehicle.

7 . Remove the front seat.
For additional information, refer to Front Seat (76.70.01)

8 Remove the floor console.
. For additional information, refer to Floor Console - Vehicles With: Auxiliary Climate Control (76.25.01)

9 . **NOTE:**

Remove and discard the auxiliary evaporator outlet and inlet line O-ring seals.

Detach the auxiliary evaporator outlet and inlet lines.

- Remove the auxiliary evaporator outlet and inlet line retaining bolts.

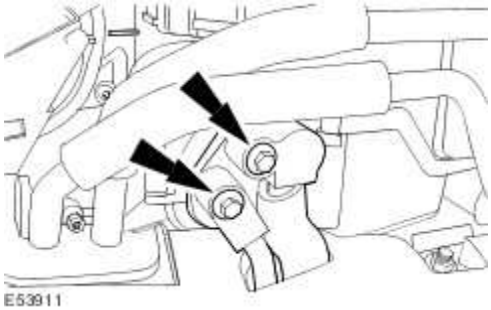

10 . Reposition the floor carpet.

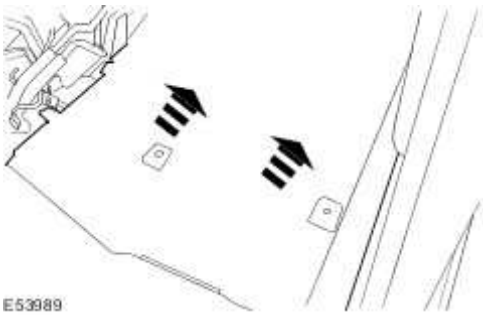

11 . Detach the auxiliary evaporator outlet and inlet lines.

- Remove the auxiliary evaporator outlet and inlet line retaining nut.

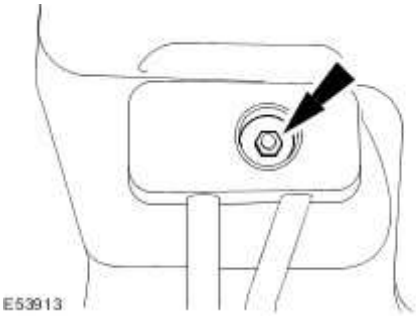

12 . Remove the the auxiliary evaporator outlet and inlet lines.

www.JagDocs.com

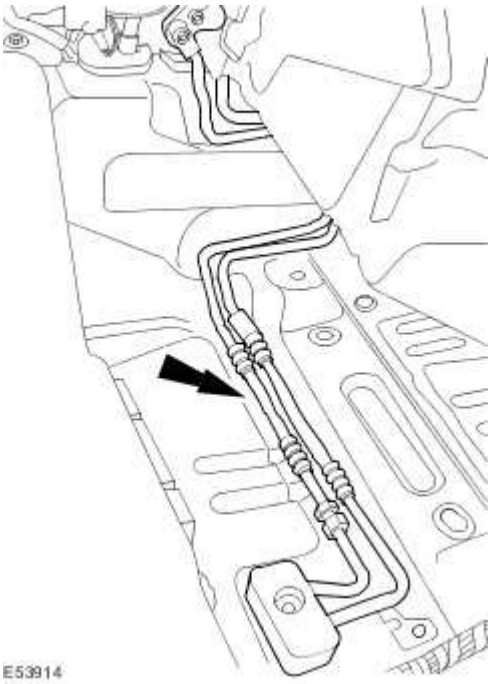

Installation

1 . To install, reverse the removal procedure.

Tighten to 2 Nm.

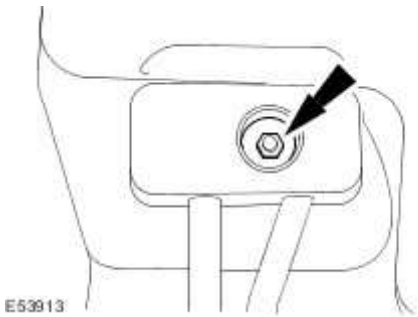

2 . **NOTE:**

Install new auxiliary evaporator outlet and inlet line O-ring seals.

Tighten to 2 Nm.

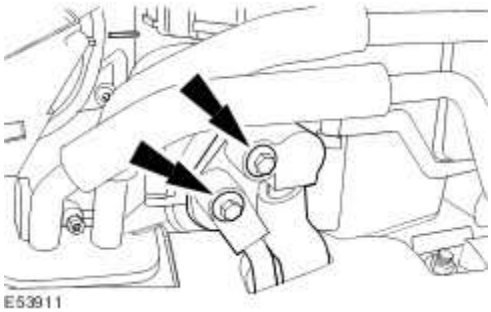

3 . **NOTE:**

Install new auxiliary evaporator outlet and inlet line O-ring seals.

Tighten to 2 Nm.

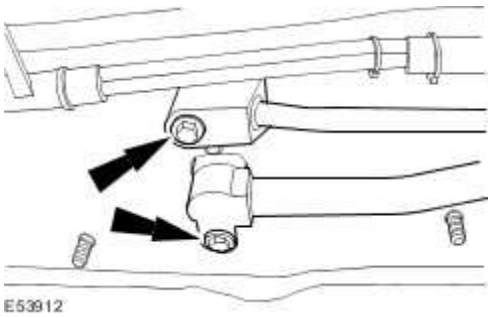

4 Carry out the A/C system evacuation and charging procedure.
. For additional information, refer to Air Conditioning (A/C) System Recovery, Evacuation and Charging (82.30.30)

www.JagDocs.com

Auxiliary Footwell Vent/Duct Blend Door Actuator

Removal

1 Remove the floor console.
. For additional information, refer to Floor Console - Vehicles With: Auxiliary Climate Control (76.25.01)

2
. **CAUTION: Make sure no damage occurs to the auxiliary temperature blend door actuator link rod.**

Detach the footwell vent/duct blend door actuator link rod.

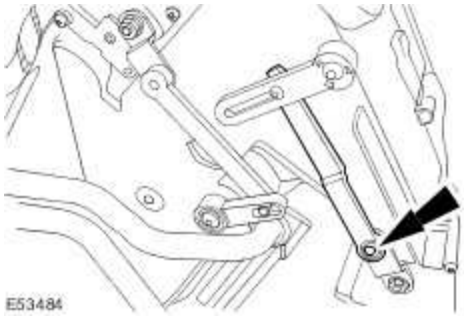

3 . Disconnect the footwell vent/duct blend door actuator electrical connector.

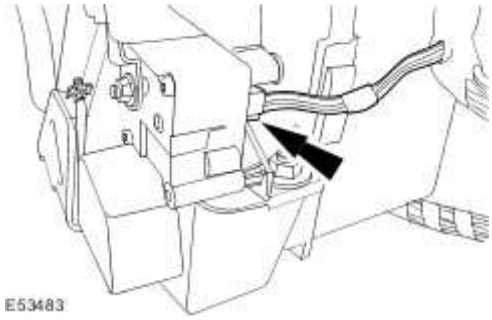

4 . Remove the footwell vent/duct blend door actuator.

- Remove the footwell vent/duct blend door actuator retaining screws.

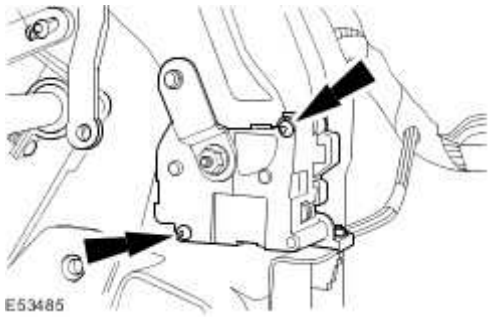

Installation

1 . To install, reverse the removal procedure.

www.JagDocs.com

Auxiliary Heater Core and Evaporator Core Housing

Removal

1 Carry out the air conditioning (A/C) system recovery procedure.
. For additional information, refer to Air Conditioning (A/C) System Recovery, Evacuation and Charging (82.30.30)

2 . Remove the heater core.
For additional information, refer to Heater Core

3 . Disconnect the auxiliary heater core and evaporator core housing electrical connector.

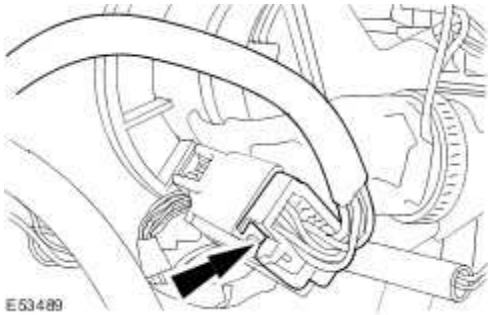

4 . **NOTE:**

Remove and discard the auxiliary evaporator outlet and inlet line O-ring seals.

Detach the auxiliary evaporator outlet and inlet lines.

Remove the auxiliary evaporator outlet and inlet line retaining bolts.

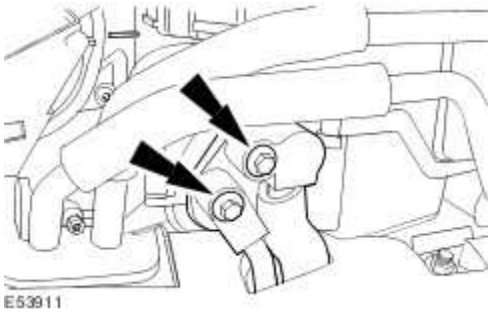

5 . Remove the auxiliary heater core and evaporator core housing retaining nut.

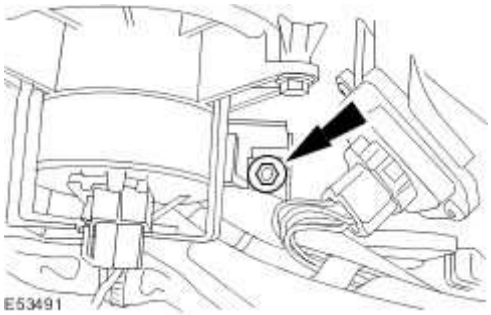

6 . Remove the auxiliary heater core and evaporator core housing retaining nut.

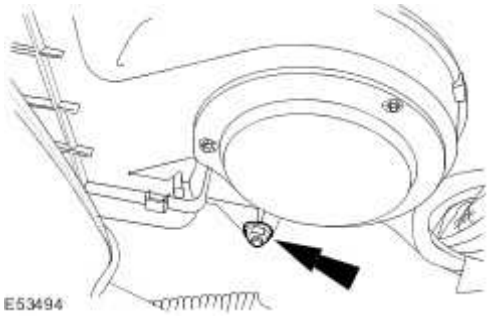

7 Remove the auxiliary heater core and evaporator core housing.

.

Remove the auxiliary heater core and evaporator core housing retaining nut.

Installation

1 . Install the auxiliary heater core and evaporator core housing.

www.JagDocs.com

- Install the auxiliary heater core and evaporator core housing retaining nut.
- Tighten to 4 Nm.

2 . Install the auxiliary heater core and evaporator core housing retaining nut.

- Tighten to 4 Nm.

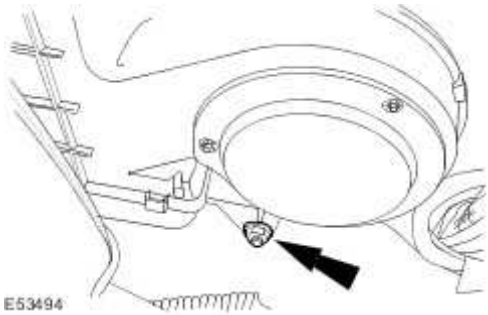

3 . Install the auxiliary heater core and evaporator core housing retaining nut.

- Tighten to 4 Nm.

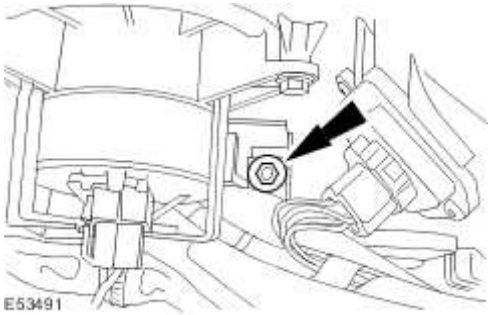

4 . **NOTE:**

Install new auxiliary evaporator outlet and inlet line O-ring seals.

Attach the auxiliary evaporator outlet and inlet lines.

- Install the auxiliary evaporator outlet and inlet line retaining bolts.
- Tighten to 2 Nm.

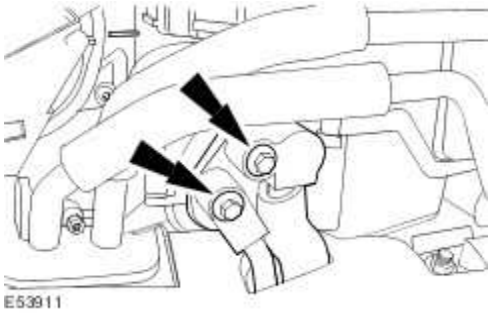

5 . Connect the auxiliary heater core and evaporator core housing electrical connector.

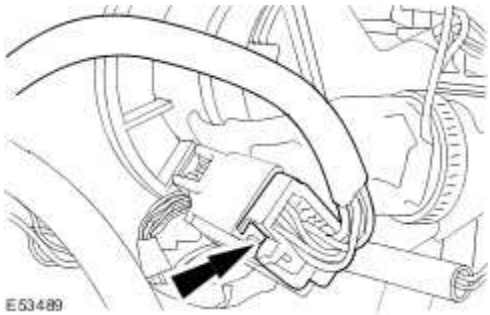

6 . Install the heater core.
For additional information, refer to Heater Core

7 . Carry out the A/C system evacuation and charging procedure.
For additional information, refer to Air Conditioning (A/C) System Recovery, Evacuation and Charging (82.30.30)

www.JagDocs.com

Auxiliary Temperature Blend Door Actuator

Removal

1 Remove the floor console.
. For additional information, refer to Floor Console - Vehicles With: Auxiliary Climate Control (76.25.01)

2
. **CAUTION: Make sure no damage occurs to the auxiliary temperature blend door actuator link rod.**

Detach the auxiliary temperature blend door actuator link rod.

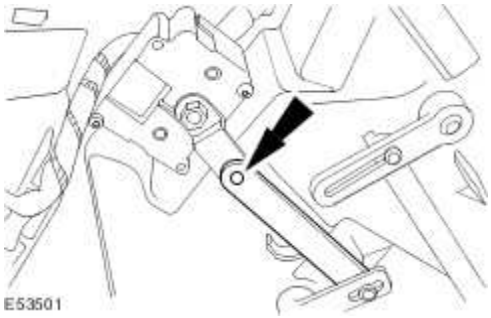

3 . Detach the auxiliary temperature blend door actuator.

Remove the auxiliary temperature blend door actuator retaining screws.

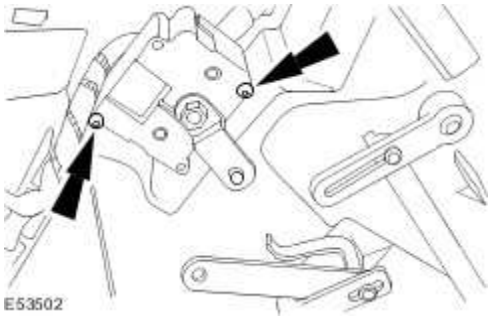

4 Remove the auxiliary temperature blend door actuator.

- Disconnect the auxiliary temperature blend door actuator electrical connector.

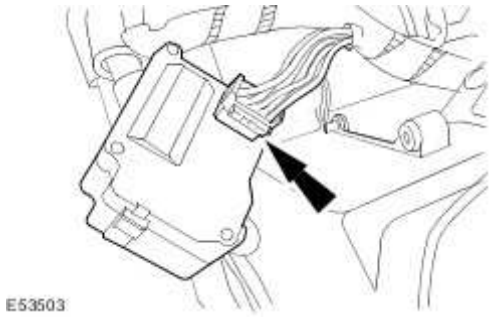

Installation

1 . To install, reverse the removal procedure.

www.JagDocs.com

Auxiliary Blower Motor

Removal

1 . Disconnect the battery ground cable.
For additional information, refer to Battery Disconnect and Connect

2 Remove the floor console.
. For additional information, refer to Floor Console - Vehicles With: Auxiliary Climate Control (76.25.01)

3 . Disconnect the blower motor electrical connector.

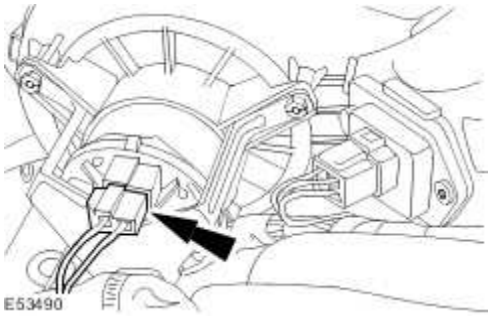

4 . Detach the heater core and evaporator core housing wiring harness.

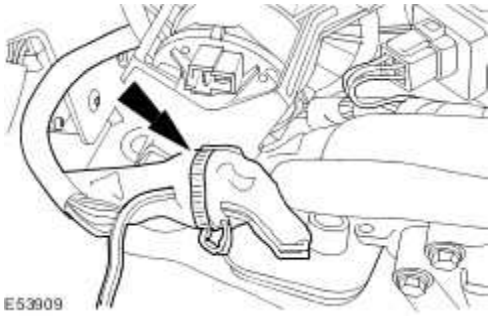

5 . Detach the heater core and evaporator core housing electrical connector.

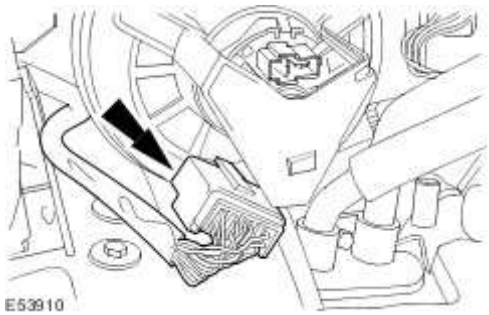

6 . Remove the blower motor retaining bracket.

- Remove the blower motor retaining bracket securing screws.

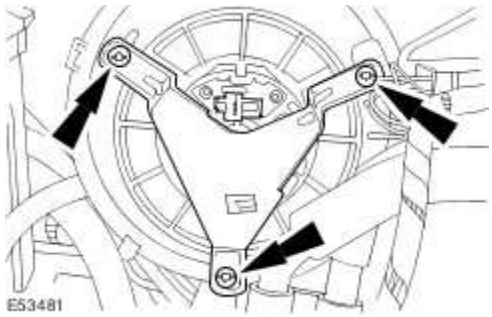

7 . Remove the blower motor.

- To aid removal, turn the blower motor in a clockwise direction.

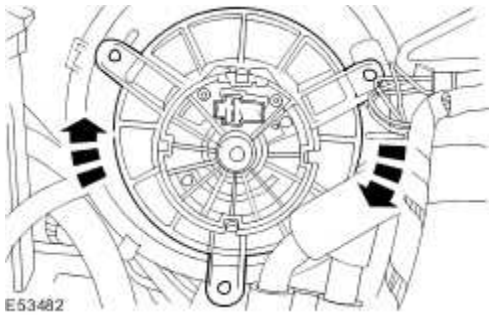

Installation

1 . Install the blower motor.

www.JagDocs.com

- To aid installation turn the blower motor in a counter-clockwise direction.

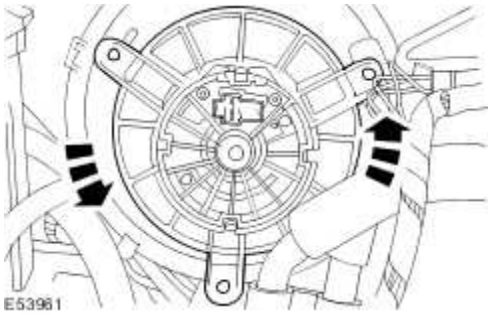

2 . Install the blower motor retaining bracket.

- Install the blower motor retaining bracket securing screws.

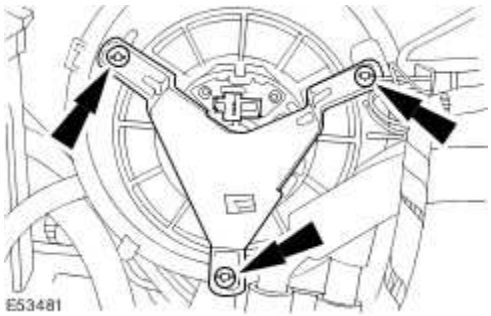

3 . Attach the heater core and evaporator core housing electrical connector.

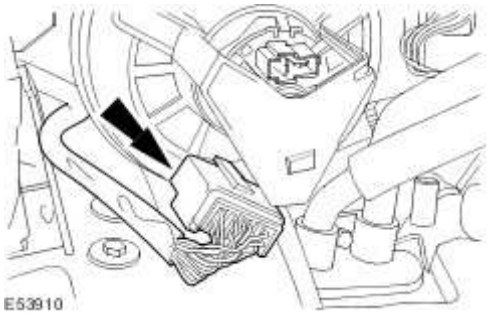

4 . Attach the heater core and evaporator core housing wiring harness.

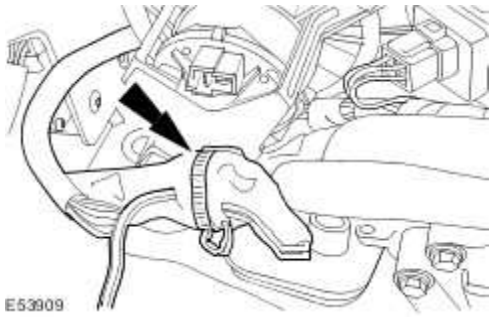

5 . Connect the blower motor electrical connector.

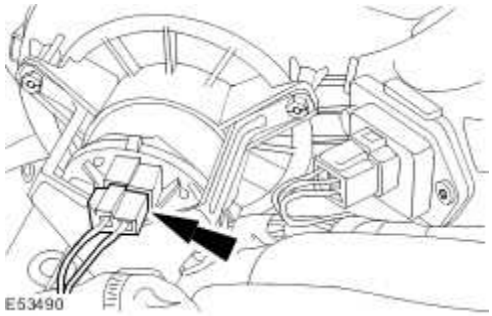

6 Install the floor console.
. For additional information, refer to Floor Console - Vehicles With: Auxiliary Climate Control (76.25.01)

7 . Connect the battery ground cable.
For additional information, refer to Battery Connect (86.15.15)

www.JagDocs.com

Auxiliary Blower Motor Resistor

Removal

1 Remove the floor console.

. For additional information, refer to Floor Console - Vehicles With: Auxiliary Climate Control (76.25.01)

2 . Disconnect the blower motor resistor.

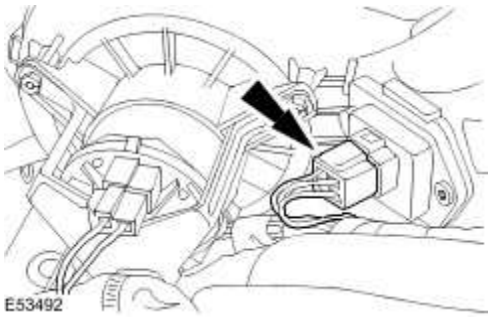

3 . Remove the blower motor resistor.

Remove the blower motor resistor retaining screw.

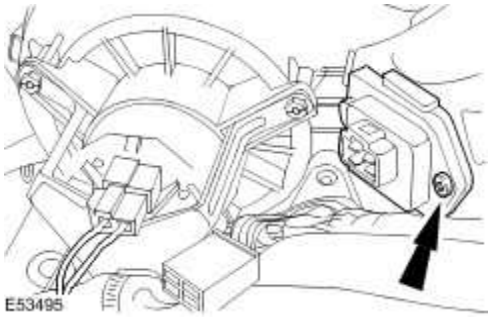

Installation

1 . To install, reverse the removal procedure.

Evaporator Core

Removal

1 . Remove the auxiliary heater core and evaporator core housing.
For additional information, refer to Auxiliary Heater Core and Evaporator Core Housing

2 . Disconnect the evaporator core electrical connector.

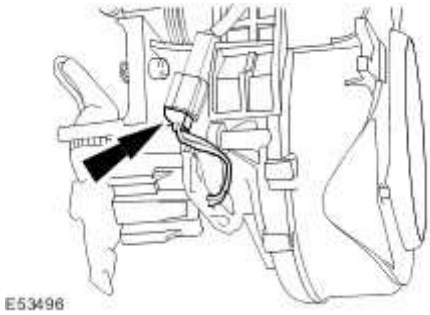

3 . Detach the evaporator core electrical connector.

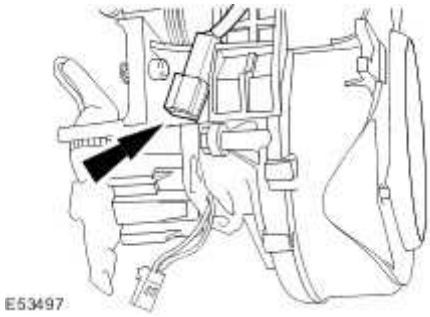

4 . Remove the evaporator core cover retaining clips.

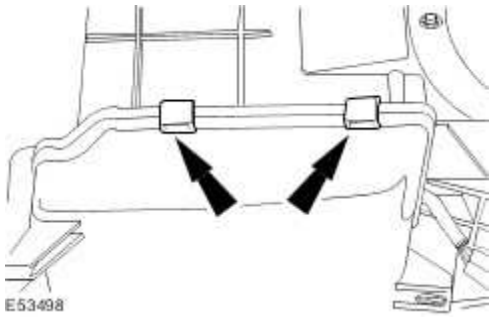

5 . Remove the evaporator core cover.

www.JagDocs.com

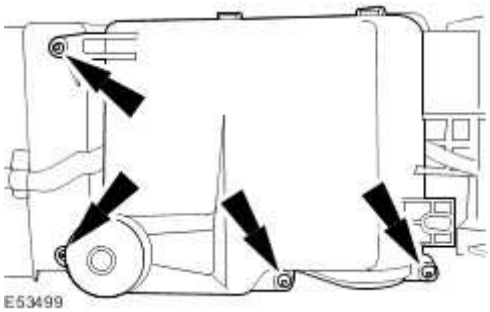

6 . Remove the evaporator core.

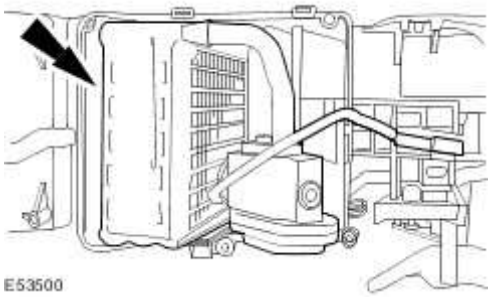

Installation

1 . To install, reverse the removal procedure.

Heater Core

Removal

1. **WARNING: Never remove the coolant pressure cap under any circumstances while the engine is operating. Failure to follow this instruction may result in personal injury.**

WARNING: To avoid having scalding hot coolant or steam blow out of the cooling system, use extreme care when removing the coolant pressure cap from a hot cooling system. Wait until the engine has cooled, then wrap a thick cloth around the coolant pressure cap and turn it slowly until the pressure begins to release. Step back while the pressure is released from the cooling system. When certain all the pressure has been released (still with a cloth) turn and remove the coolant pressure cap from the coolant expansion tank. Failure to allow these instructions may result in personal injury.

CAUTION: The engine cooling system must be maintained with the correct concentration and type of anti-freeze solution to prevent corrosion and frost damage. Failure to follow this instruction may result in damage to the engine.

CAUTION: Never remove the coolant pressure cap under any circumstances while the engine is operating. Failure to follow this instruction may result in damage to the engine.

CAUTION: If coolant comes into contact with the paintwork, the affected area must be immediately washed down with cold water.

Release the cooling system pressure.

- Remove the coolant expansion tank pressure cap.

www.JagDocs.com

2 . Remove the front seat.
For additional information, refer to Front Seat (76.70.01)

3 . Remove the floor console.
For additional information, refer to Floor Console - Vehicles With: Auxiliary Climate Control (76.25.01)

4 . Remove the heater core inlet and outlet pipes retaining plates.

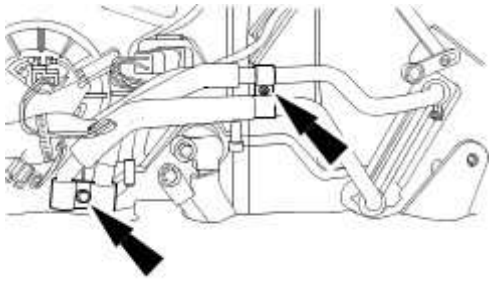

E53486

5 . Detach the heater core.

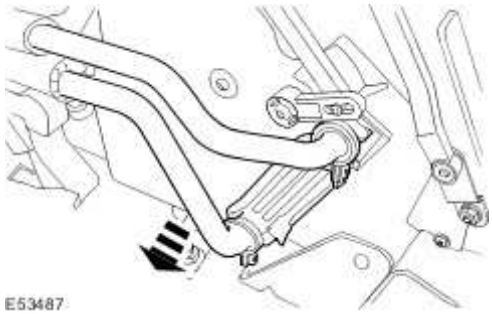

E53487

6 . **CAUTION: Drain the coolant in the heater core and inlet and outlet pipes into a suitable container. Failure to follow this instruction may result in damage to the floor carpet.**

Remove the heater core.

- Remove the heater core inlet and outlet pipes retaining clamps.

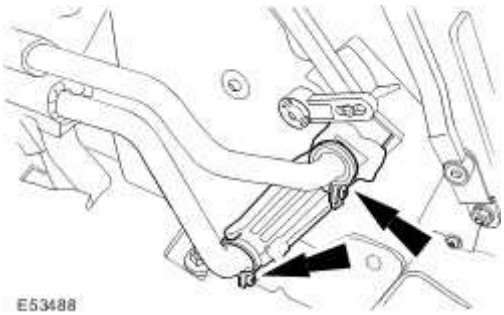

Installation

1. **WARNING: Never remove the coolant pressure cap under any circumstances while the engine is operating. Failure to follow this instruction may result in personal injury.**

WARNING: To avoid having scalding hot coolant or steam blow out of the cooling system, use extreme care when removing the coolant pressure cap from a hot cooling system. Wait until the engine has cooled, then wrap a thick cloth around the coolant pressure cap and turn it slowly until the pressure begins to release. Step back while the pressure is released from the cooling system. When certain all the pressure has been released (still with a cloth) turn and remove the coolant pressure cap from the coolant expansion tank. Failure to allow these instructions may result in personal injury.

CAUTION: The engine cooling system must be maintained with the correct concentration and type of anti-freeze solution to prevent corrosion and frost damage. Failure to follow this instruction may result in damage to the engine.

CAUTION: Never remove the coolant pressure cap under any circumstances while the engine is operating. Failure to follow this instruction may result in damage to the engine.

CAUTION: If coolant comes into contact with the paintwork, the affected area must

www.JagDocs.com

be immediately washed down with cold water.

Install the heater core.

- Install the heater core inlet and outlet pipes retaining clamps.
- Tighten to 2 Nm.

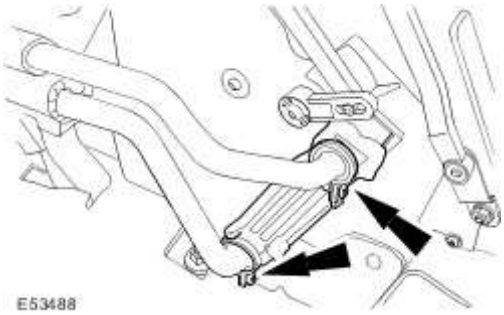

2 . Attach the heater core.

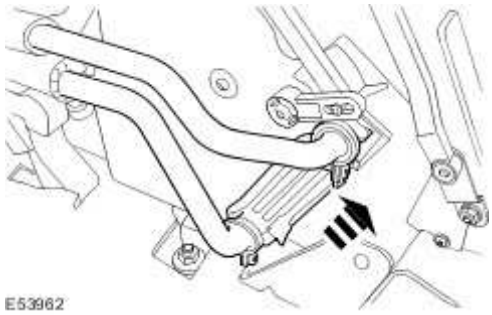

3 . Install the heater core inlet and outlet pipes retaining plates.

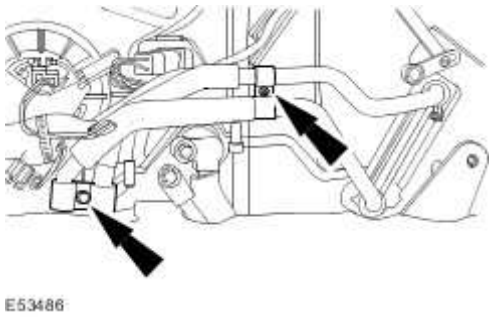

4 Install the floor console.
For additional information, refer to Floor Console - Vehicles With: Auxiliary Climate Control

. (76.25.01)

5 . Install the front seat.
For additional information, refer to Front Seat (76.70.01)

6 . Check and top up the cooling system as required.

7 . Install the coolant expansion tank pressure cap.

8 . **CAUTION: Do not RUN the engine with the coolant expansion tank pressure cap removed. Failure to follow this instruction may result in damage to the vehicle.**

START and RUN the engine.

9 . SET the heating system to MAX heat, the blower motor to MAX speed and the air distribution to instrument panel and console assembly registers.

10 . **CAUTION: Observe the engine temperature gauge. If the engine starts to over-heat switch off immediately and allow to cool. Failure to follow this instruction may result in damage to the vehicle.**

Allow the engine to RUN until hot air is emitted from the instrument panel and console assembly registers, while observing the engine temperature gauge.

11 . Switch off the engine.

12 . Allow the engine to cool.

www.JagDocs.com

13 . Release the cooling system pressure.

- Remove the coolant expansion tank pressure cap.

14 . Fill the cooling system up to the MAX mark on the coolant expansion tank using a fifty percent mixture of Jaguar Premium Cooling System Fluid or equivalent, meeting Jaguar specification WSS M97B44-D and fifty percent water.

15 . Install the coolant expansion tank pressure cap.

Register

Removal

1 . Remove the auxiliary climate control assembly.
For additional information, refer to Auxiliary Climate Control Assembly

2 . Remove the rear heated seat switch and cigar lighter assembly.

Disconnect the electrical connectors.

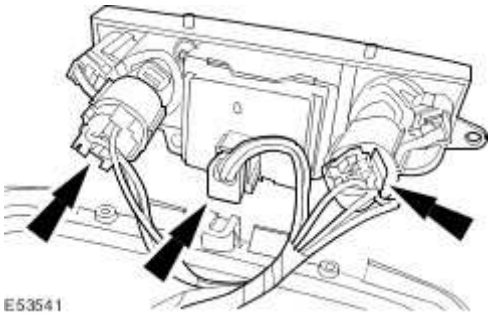

3 . Detach the register.

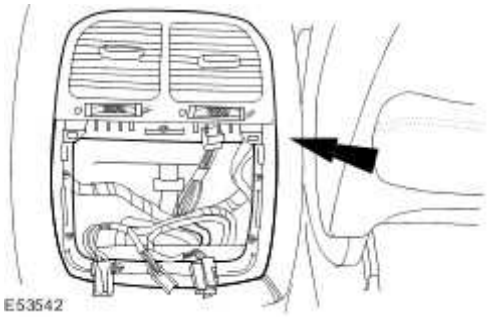

4 . Detach the register electrical connector.

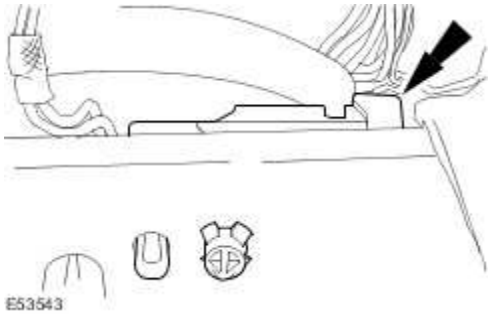

www.JagDocs.com

5 . Remove the register.

- Disconnect the electrical connector.

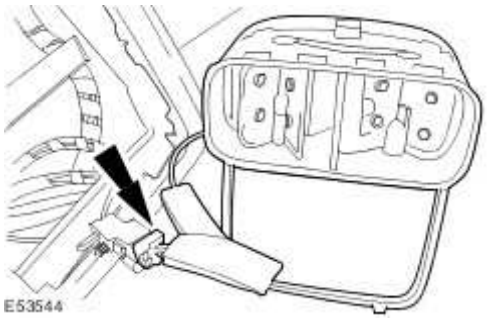

Installation

1 . To install, reverse the removal procedure.

Specifications

Torque Specifications

Description	Nm	lb-ft	lb-in
Blower motor housing retaining bolt.	7	–	62

www.JagDocs.com

Control Components

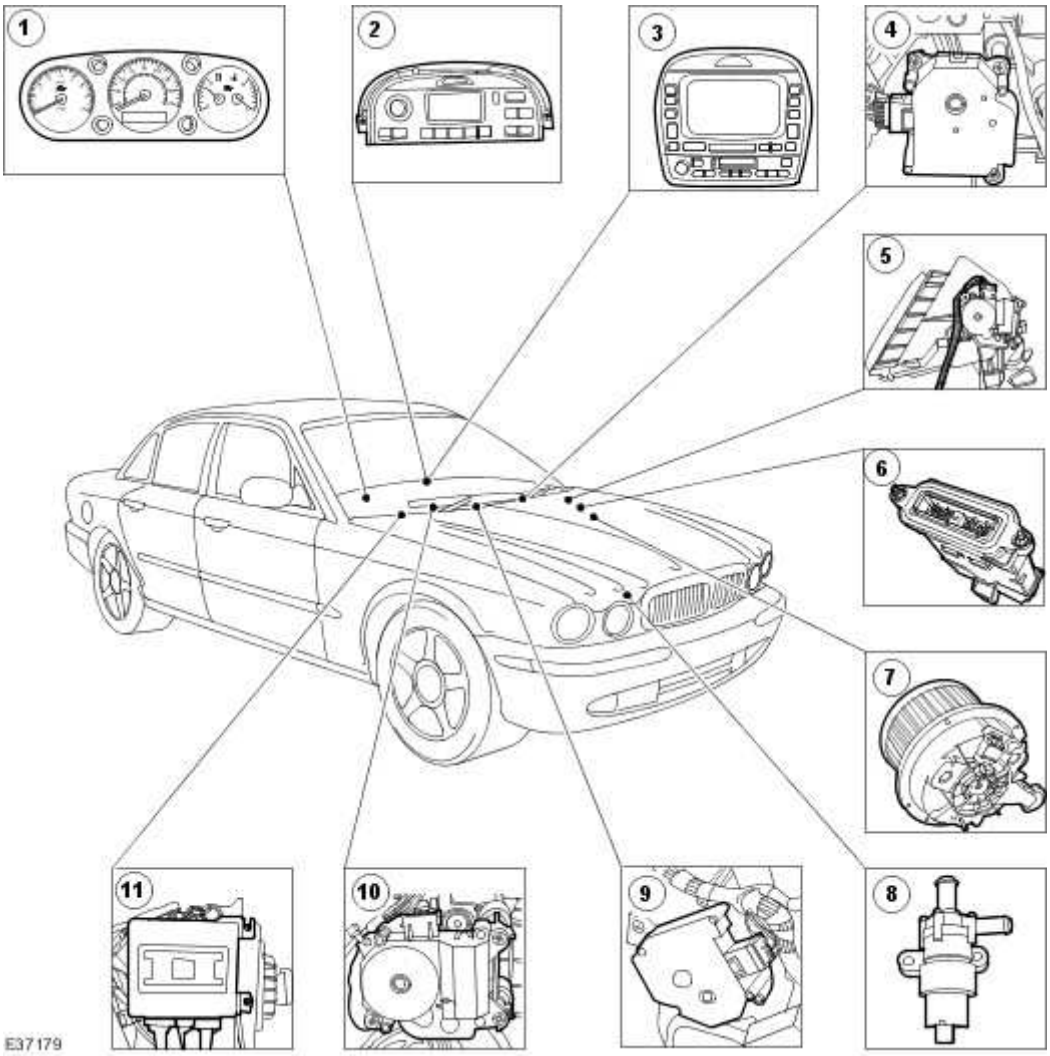

Item	Part Number	Description
1	—	Instrument Cluster (IC)
2	—	Climate control assembly
3	—	Climate control assembly (vehicles with navigation)
4	—	Cold air bypass blend door actuator

5	—	Recirculation blend door actuator
6	—	Engine Control Module (ECM)
7	—	Blower motor
8	—	Auxillary coolant flow pump (Not fitted to 3.0L engine with 2 zone climate control)
9	—	Footwell vent/duct blend door actuator
10	—	Defrost vent/register blend door actuator
11	—	Remote Climate Control Module (RCCM).

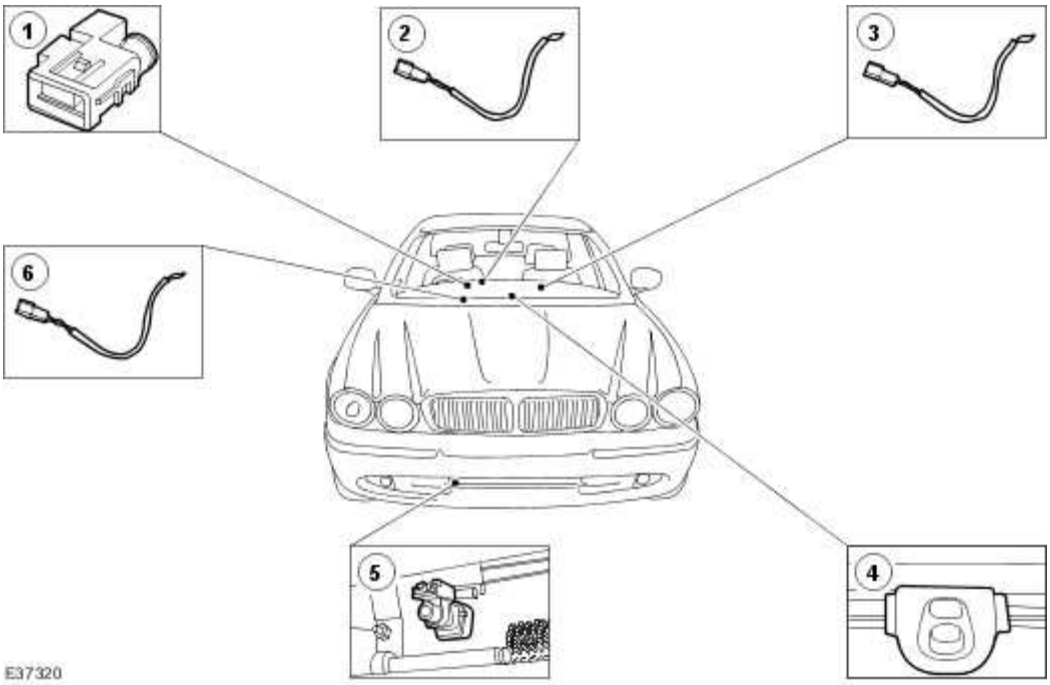

Item	Part Number	Description
1	—	In-vehicle temperature and humidity sensor
2	—	Air discharge temperature sensor RH
3	—	Air discharge temperature sensor LH
4	—	Sunload sensor
5	—	Ambient air temperature sensor

www.JagDocs.com

6	—	Evaporator temperature sensor

The climate control assembly is a single module packaged in the instrument panel consol of the vehicle. It is a microprocessor-based control consisting of a bezel assembly (including all buttons and switches), a main control board and a housing for the unit.

The climate control assembly provides the following driver interface controls:

- Climate control assembly ON/OFF switch/fan speed switch
- Manual temperature adjustment switches (drivers/passengers)
- DUAL temperature selection switch
- DEFROST switch
- Heated front screen ON/OFF switch
- Heated rear screen ON/OFF switch
- Manual air distribution MODE switch
- Fahrenheit/Centigrade option switch
- AUTO mode switch
- A/C selection switch
- Recirculate air switch

Operating any of the climate control assembly controls activates a chime (emitted from the instrument cluster).

The climate control assembly automatically maintains a selected temperature for the interior of the vehicle. The system regulates the volume of airflow between the instrument panel registers, floor console registers, front and rear floor ducts, windshield defroster and side window registers. The system can automatically select between fresh and recirculated air with an optional manual override. The climate control assembly will try to provide both driver and passenger with their selected temperature for comfort. The fan controls and air distribution are not controlled individually.

Blower Motor Control

The climate control system has a variable blower speed control. The operator has the option of manually selecting one of eleven preset blower speeds from the control panel (seven preset blower speeds with telematics fitted) or selecting to operate the climate control assembly in automatic mode.

In automatic mode, the blower speed is determined as a function of many input variables. Based on the desired in-vehicle temperature, the system constantly monitors the ambient temperature, discharge air temperatures, in-vehicle temperature and sunload levels then calculates the desired blower setting.

There are special conditions that affect the blower speed while in the automatic mode of operation.

In a cold ambient temperature condition, the climate control assembly implements a Cold Engine Lock Out (CELO) feature with the blower motor. For a cold vehicle interior, the climate control assembly will operate in low blower/defrost mode until the engine coolant temperature reaches a

required value. Once the engine coolant has warmed up the blower motor will continue in the automatic mode.

At increasing vehicle speeds, monitored via the Standard Corporate Protocol (SCP) vehicle speed status message, the climate control assembly system may adjust the blower motor speed to maintain constant air flow. This may be necessary in situations where the ram air effect at high speed alters the air flow into the vehicle interior.

For vehicles fitted with a cellular phone, the climate control assembly may lower the blower motor speed to reduce the level of ambient noise in the vehicle interior when the phone is in use. The status of the cellular phone is monitored via the SCP cellular phone ON/OFF message.

Air Distribution Control

The climate control system has variable position control provided by the electrical actuators. The system gives the option of manually selecting one of five preset air distribution modes or operating the climate control assembly in automatic mode.

Climate Control - Battery Disconnection

The climate control assembly will store the panel settings in volatile memory. Therefore, in the event of battery disconnection, or interruption of the supply, the information is lost. After reconnection, historical fault codes are available, and the panel will be set to OFF. An average automatic setting will be recovered when the climate control assembly is next switched ON.

If the battery is disconnected, the panel settings will be lost. The customers personal settings should be recorded and re-set before the vehicle is returned to the customer.

www.JagDocs.com

Control Components - VIN Range: H18680->H99999

No Data Available

Control Components

1 . Verify the customer concern.

2 . Visually inspect for obvious signs of mechanical or electrical damage.

Visual Inspection Chart

Mechanical	Electrical
• Refrigerant • Heater control flaps • Ducting	• Fuse(s) • Harness • Electrical connectors • Switch(es)

1 . If an obvious cause for an observed or reported concern is found, correct the cause (if possible) before proceeding to the next step.

2 . If the cause is not visually evident, verify the symptom and refer to the Jaguar Approved Diagnostic System.

www.JagDocs.com

Air Discharge Temperature Sensor (82.20.64)

Removal

1 . Disconnect the battery ground cable. <<414-01>>

2 . Remove the instrument panel. <<501-12>>

3 . Remove the foam seal and filter screen.

1) Remove the foam seal .

2) Remove the filter screen.

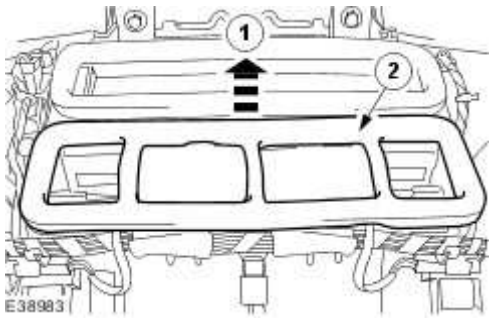

4 . **NOTE:**

Right-hand shown, left-hand similar.

Remove the air discharge temperature sensor.

- Disconnect the air discharge temperature sensor electrical connector.

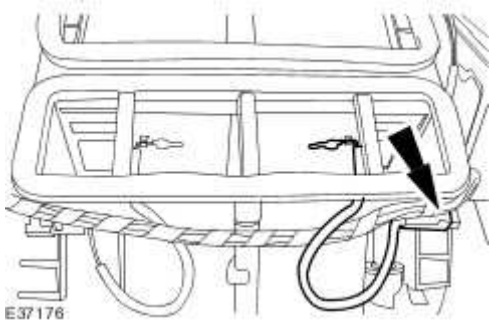

Installation

1 . To install, reverse the removal procedure.

www.JagDocs.com

Ambient Air Temperature Sensor (82.20.02)

Removal

1 . Disconnect the ambient air temperature electrical connector

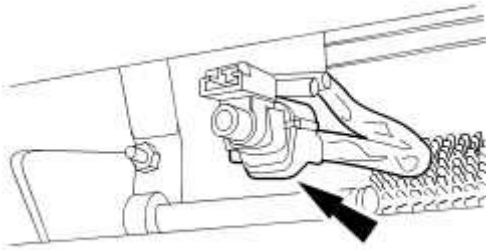

E37177

2 . Remove the ambient air temperature sensor.

1) Displace the ambient air temperature sensor retaining tang.

2) Remove the ambient air temperature sensor.

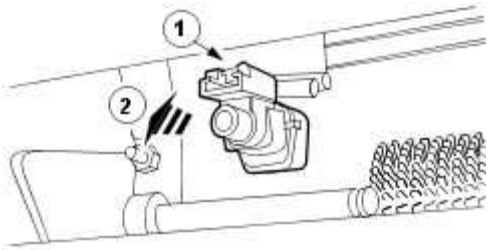

E37178

Installation

1 . To install, reverse the removal procedure.

Climate Control Assembly (82.20.07)

Removal

1 **NOTE:**

.

When the battery is disconnected and reconnected all previous panel settings and fault codes will be lost. It is necessary to record any non-standard settings or fault codes before battery disconnection to prevent customer complaint and carry out correct diagnosis.

Disconnect the battery ground cable. <<414-01>>

2 . Remove the instrument panel console. <<501-12>>

3 . Remove the center console switch assembly.

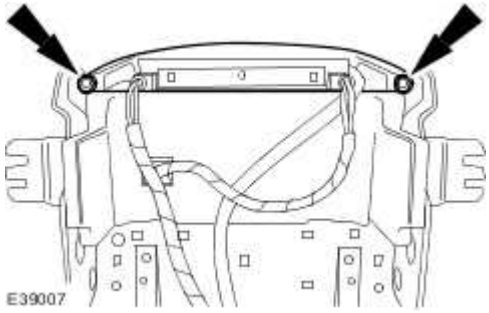

4 . Remove the climate control assembly.

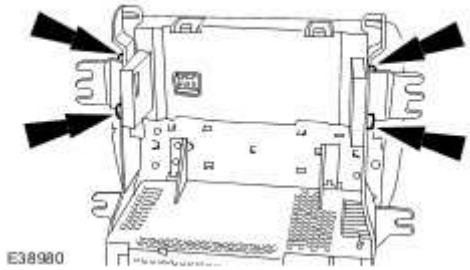

Installation

1 . To install, reverse the removal procedure.

www.JagDocs.com

2 . Make sure the climate control assembly is correctly located to the audio unit.

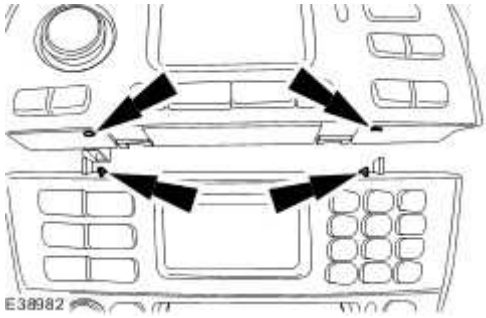

3 . Make sure the center console switch assembly is correctly located to the climate control assembly.

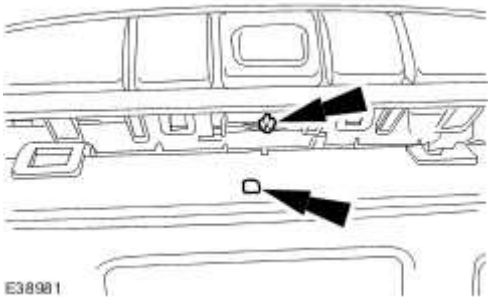

Cold Air Bypass Blend Door Actuator LH

Removal

All vehicles

1 . Disconnect the battery ground cable. <<414-01>>

Right-hand drive vehicles

2 . **WARNING: Never remove the coolant pressure cap under any circumstances while the engine is operating. Failure to follow this instruction may result in personal injury.**

WARNING: To avoid having scalding hot coolant or steam blow out of the cooling system, use extreme care when removing the coolant pressure cap from a hot cooling system. Wait until the engine has cooled, then wrap a thick cloth around the coolant pressure cap and turn it slowly until the pressure begins to release. Step back while the pressure is released from the system. When certain all the pressure has been released (still with a cloth) turn and remove the coolant pressure cap from the coolant expansion tank. Failure to follow these instructions may result in personal injury.

WARNING: To avoid the possibility of personal injury, do not operate the engine with the hood open until the fan blades have been examined for cracks and separation. Failure to follow this instruction may result in personal injury.

WARNING: Remove fuse 14 from the engine compartment fuse box prior to performing any under hood service in the area of the cooling fan when the engine is hot, since the cooling fan motor could operate even if the engine has been switched OFF. Failure to follow this instruction may result in personal injury.

CAUTION: The engine cooling system must be maintained with the correct concentration and type of anti-freeze solution to prevent corrosion and frost damage.

www.JagDocs.com

Failure to follow this instruction may result in damage to the engine.

CAUTION: Never remove the coolant pressure cap under any circumstances while the engine is operating. Failure to follow this instruction may result in damage to the engine.

Release the cooling system pressure.

- Remove the coolant expansion tank pressure cap.

3 . Remove the front footwell vent duct. <<412-01>>

4 . Remove the glove box. <<501-12>>

5 . Remove the engine control module. <<303-14A>> <<303-14B>>

6 . Disconnect the blower motor electrical connector.

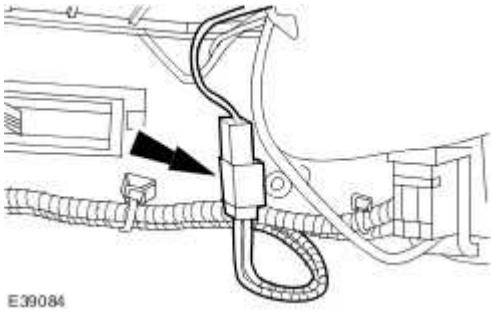

7 . Remove the blower motor housing securing bolts.

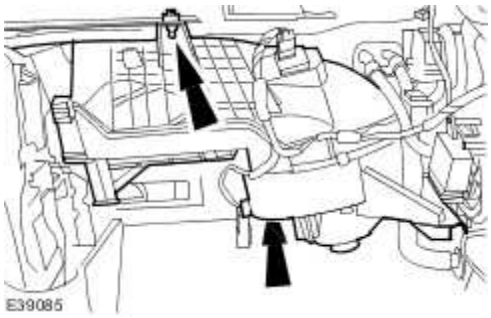

8 . Remove the blower motor housing securing bolts.

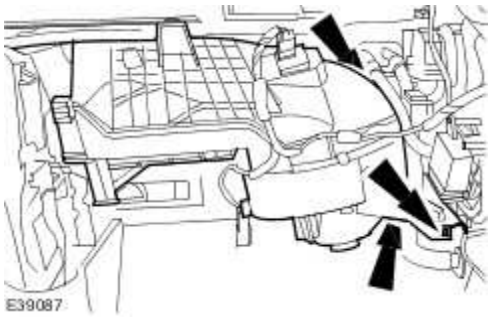

9 . Remove the blower motor housing.

10 . **CAUTION: Care should be taken when removing the heater core inlet and outlet pipes as coolant may leak out of the heater core.**

NOTE:

Cap the heater core inlet and outlet pipes to prevent coolant loss.

Remove the heater core inlet and outlet pipes.

www.JagDocs.com

1) Remove the heater core retaining plate.

2) Remove the heater core.

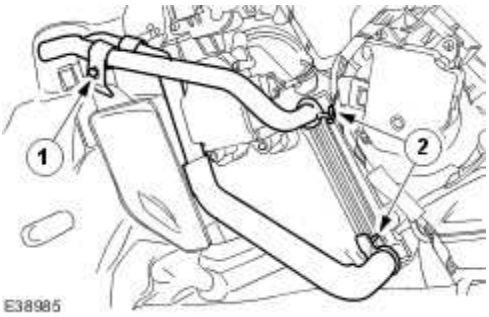

11 . Remove the cold air bypass blend door actuator.

1) Disconnect the electrical connector.

2) Remove the cold air bypass blend door actuator.

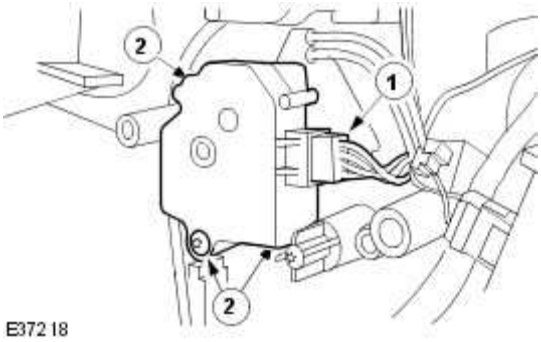

Left-hand drive vehicles

12 . Remove the front footwell duct LH. <<412-01>>

13 . Remove the remote climate control module.

1) Disconnect the electrical connectors.

2) Remove the lower retaining screws.

3) Loosen but do not remove the upper retaining screw.

4) Remove the remote climate control module.

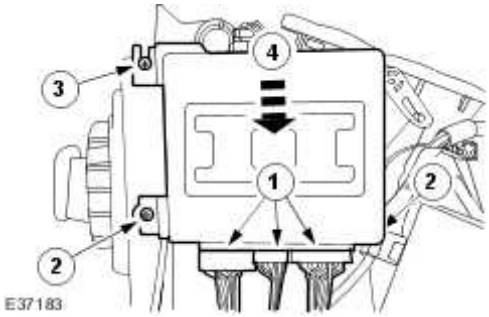

14 . Remove the cold air bypass blend door actuator.

1) Disconnect the electrical connector.

2) Remove the cold air bypass blend door actuator.

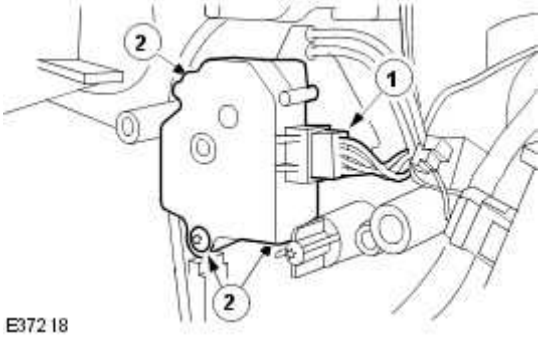

www.JagDocs.com

Installation

Right-hand drive vehicles

1 . **NOTE:**

Care should be taken to ensure the actuator linkages are correctly engaged.

To install, reverse the removal procedure.

- Tighten to 7 Nm.

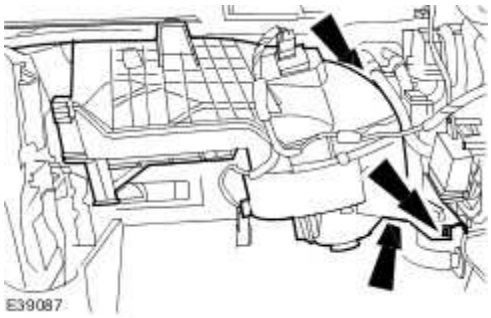

2 . Tighten to 7 Nm.

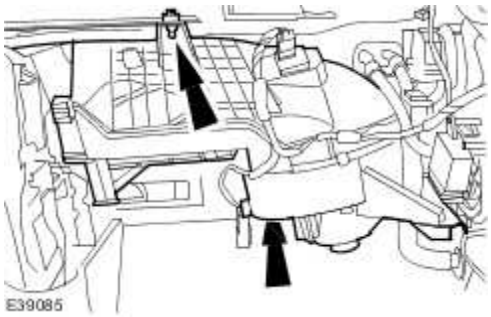

3 . Carry out the coolant system refill and bleeding procedure. <<303-03A>> <<303-03B>>

Left-hand drive vehicles

4 . **NOTE:**

Care should be taken to ensure the actuator linkages are correctly engaged.

To install, reverse the removal procedure.

Cold Air Bypass Blend Door Actuator RH

Removal

All vehicles

1 . Disconnect the battery ground cable. <<414-01>>

Left-hand drive vehicles

2 . **WARNING: Never remove the coolant pressure cap under any circumstances while the engine is operating. Failure to follow this instruction may result in personal injury.**

WARNING: To avoid having scalding hot coolant or steam blow out of the cooling system, use extreme care when removing the coolant pressure cap from a hot cooling system. Wait until the engine has cooled, then wrap a thick cloth around the coolant pressure cap and turn it slowly until the pressure begins to release. Step back while the pressure is released from the system. When certain all the pressure has been released (still with a cloth) turn and remove the coolant pressure cap from the coolant expansion tank. Failure to follow these instructions may result in personal injury.

WARNING: To avoid the possibility of personal injury, do not operate the engine with the hood open until the fan blades have been examined for cracks and separation. Failure to follow this instruction may result in personal injury.

WARNING: Remove fuse 14 from the engine compartment fuse box prior to performing any under hood service in the area of the cooling fan when the engine is hot, since the cooling fan motor could operate even if the engine has been switched OFF. Failure to follow this instruction may result in personal injury.

CAUTION: The engine cooling system must be maintained with the correct concentration and type of anti-freeze solution to prevent corrosion and frost damage.

www.JagDocs.com

Failure to follow this instruction may result in damage to the engine.

CAUTION: Never remove the coolant pressure cap under any circumstances while the engine is operating. Failure to follow this instruction may result in damage to the engine.

Release the cooling system pressure.

- Remove the coolant expansion tank pressure cap.

3 . Remove the passenger footwell vent duct. <<412-01>>

4 . Remove the glove box. <<501-12>>

5 . Remove the engine control module. <<303-14A>> <<303-14B>>

6 . Disconnect the blower motor electrical connector.

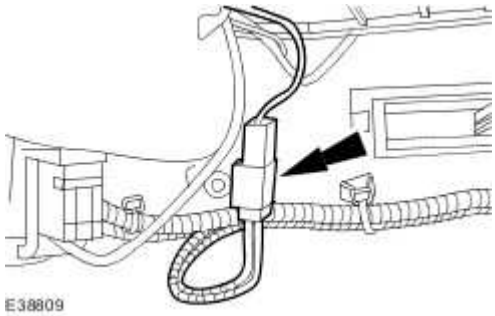

7 . Remove the blower motor housing securing bolts.

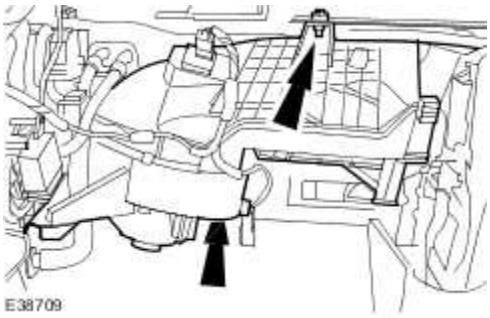

8 . Remove the blower motor housing securing bolts.

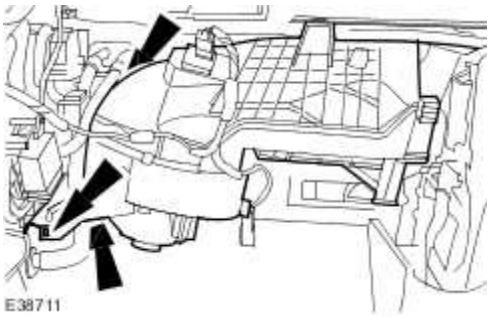

9 . Remove the blower motor housing.

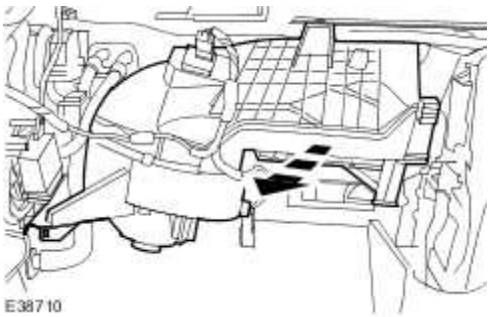

10 . **CAUTION: Care should be taken when removing the heater core inlet and outlet pipes as coolant may leak out of the heater core.**

NOTE:

Cap the heater core inlet and outlet pipes to prevent coolant loss.

Remove the heater core inlet and outlet pipes.

www.JagDocs.com

1) Remove the heater core retaining plate.

2) Remove the heater core.

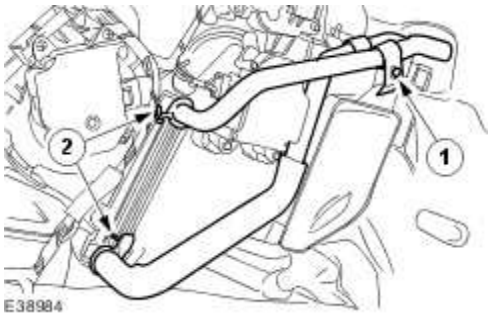

11 . Remove the cold air bypass blend door actuator.

1) Disconnect the electrical connector.

2) Remove the cold air bypass blend door actuator.

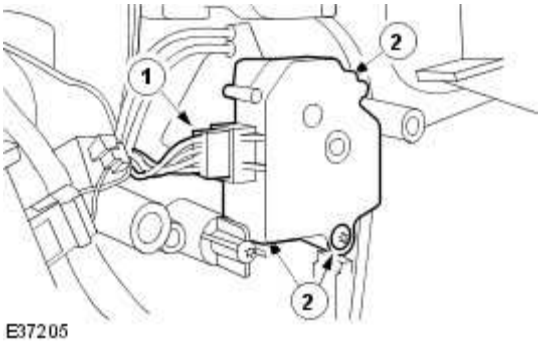

Right-hand drive vehicles

12 . Remove the front footwell duct RH. <<412-01>>

13 . Remove the remote climate control module.

1) Disconnect the electrical connectors.

2) Remove the lower securing screws.

3) Loosen but do not remove the upper securing screw.

4) Remove the remote climate control module.

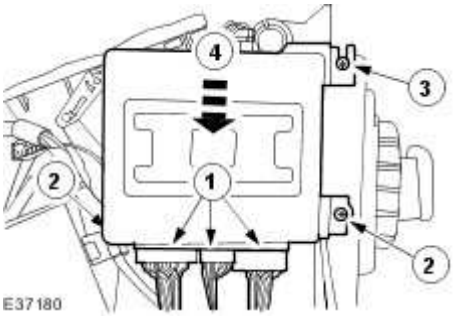

14 . Remove the cold air bypass blend door actuator.

1) Disconnect the electrical connector.

2) Remove the cold air bypass blend door actuator securing screws.

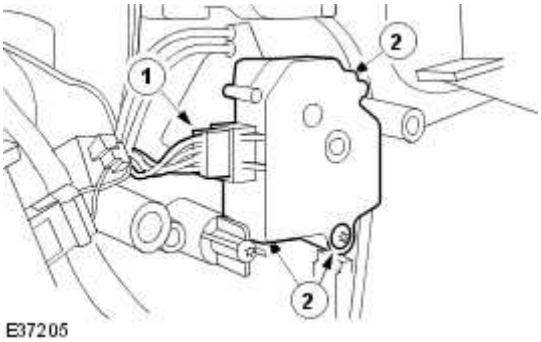

www.JagDocs.com

Installation

Right-hand drive vehicles

1 . **NOTE:**

Care should be taken to make sure the actuator linkages are correctly engaged.

To install, reverse the removal procedure.

Left-hand drive vehicles

2 . **NOTE:**

Care should be taken to make sure the actuator linkages are correctly engaged.

To install, reverse the removal procedure.

Tighten to 7 Nm.

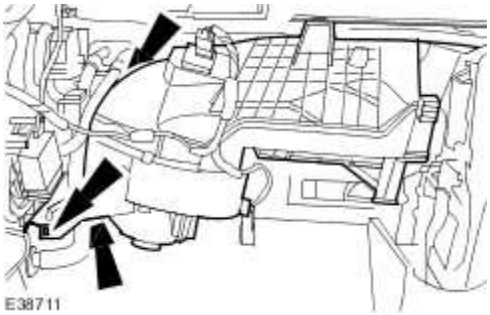

3 . Tighten to 7 Nm.

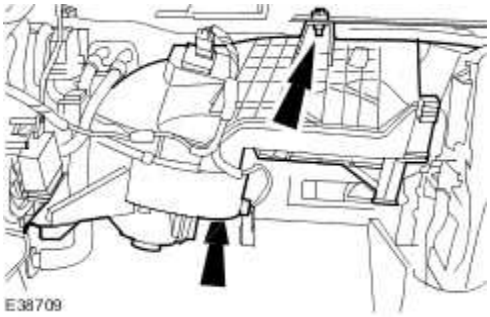

4 . Carry out the coolant system refill and bleeding procedure. <<303-03>>

Defrost Vent/Register Blend Door Actuator LH

Removal

All vehicles

1 . Disconnect the battery ground cable. <<414-01>>

Left-hand drive vehicles

2 . Remove the remote climate control module.

1) Disconnect the electrical connectors.

2) Remove the lower retaining screws.

3) Loosen but do not remove the upper retaining screw.

4) Remove the remote climate control module.

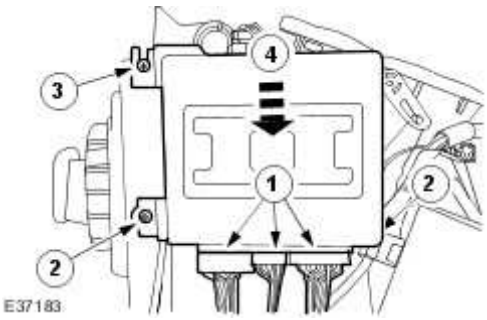

3 . Remove the defrost vent/register blend door actuator.

1) Disconnect the electrical connector.

2) Remove the defrost vent/register blend door actuator.

www.JagDocs.com

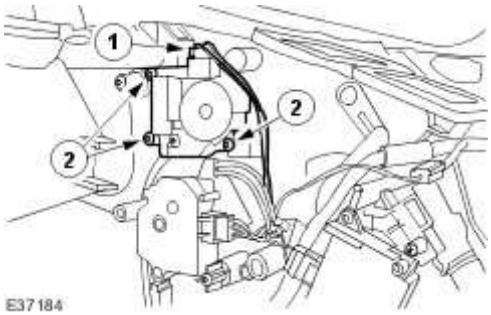

Right-hand drive vehicles

4 . Remove the glove compartment. <<501-12>>

5 . Remove the defrost vent/register blend door actuator.

1) Disconnect the electrical connector.

2) Remove the defrost vent/register blend door actuator.

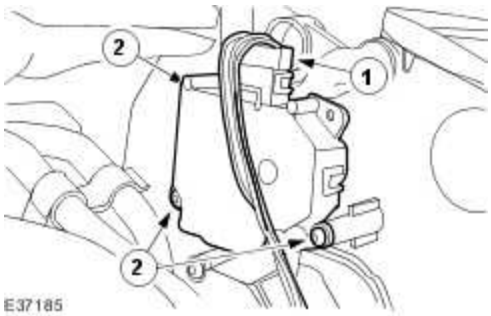

Installation

1 . **NOTE:**

Care should be taken to make sure the actuator linkages are correctly engaged.

To install, reverse the removal procedure.

Defrost Vent/Register Blend Door Actuator RH

Removal

All vehicles

1 . Disconnect the battery ground cable. <<414-01>>

Left-hand drive vehicles

2 . Remove the glove compartment. <<501-12>>

3 . Remove the defrost vent/register blend door actuator.

1) Disconnect the electrical connector.

2) Remove the defrost vent/register blend door actuator.

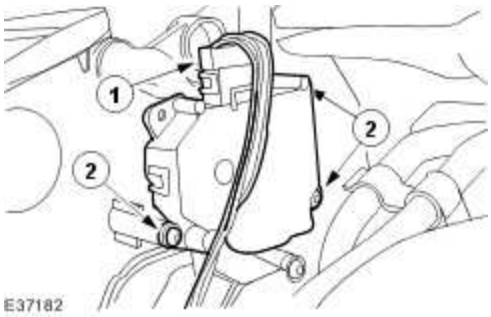

Right-hand drive vehicles

4 . Remove the front footwell duct RH. <<412-01>>

5 . Remove the remote climate control module.

1) Disconnect the electrical connectors.

2) Remove the lower retaining screws.

3) Loosen but do not remove the upper retaining screw.

www.JagDocs.com

4) Remove the remote climate control module.

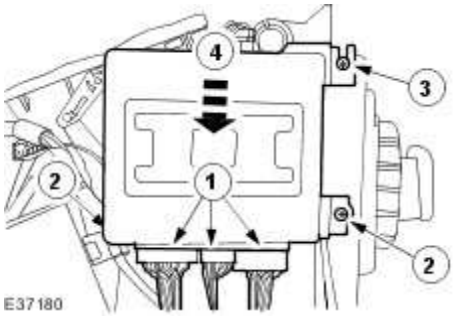

6 . Remove the defrost vent/register blend door actuator.

1) Disconnect the electrical connector.

2) Remove the defrost vent/register blend door actuator.

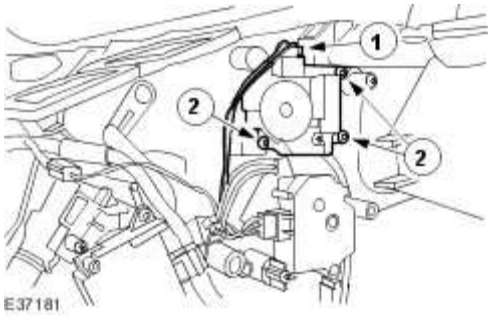

Installation

1 . **NOTE:**

Care should be taken to make sure the actuator linkages are correctly engaged.

To install, reverse the removal procedure.

Footwell Vent/Duct Blend Door Actuator LH

Removal

All vehicles

1 . Disconnect the battery ground cable. <<414-01>>

Left-hand drive vehicles

2 . Remove the instrument panel. <<501-12>>

3 . Remove the remote climate control module.

1) Disconnect the electrical connectors.

2) Remove the lower retaining screws.

3) Loosen but do not remove the upper retaining screw.

4) Remove the remote climate control module.

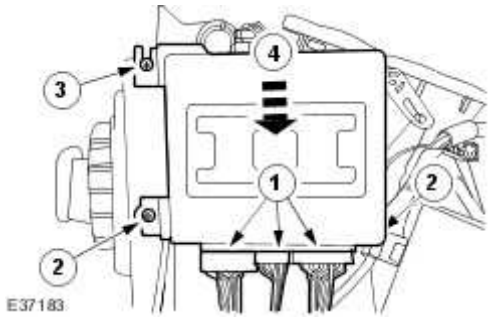

4 . Remove the footwell vent/duct blend door actuator.

1) Disconnect the electrical connector.

2) Remove the footwell vent/duct blend door actuator.

www.JagDocs.com

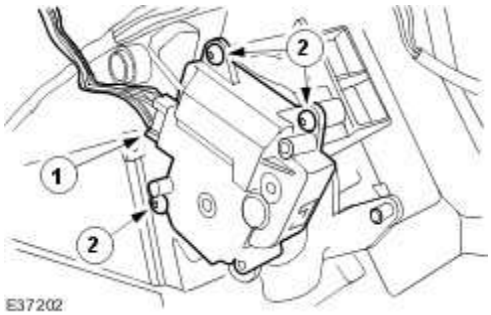

Right-hand drive vehicles

5 . Remove the front footwell vent duct. <<412-01>>

6 . Remove the glove box. <<501-12>>

7 . Remove the engine control module. <<303-14A>> <<303-14B>>

8 . Disconnect the blower motor electrical connector.

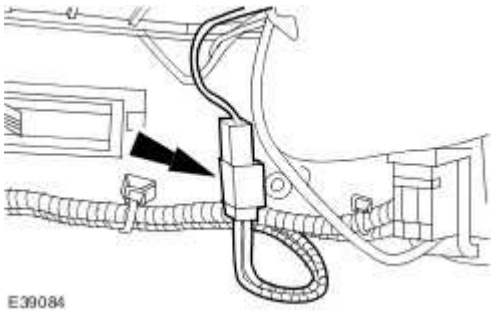

9 . Remove the blower motor housing securing bolts.

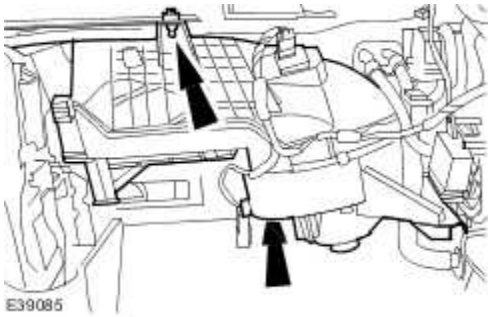

10 . Remove the blower motor housing securing bolts.

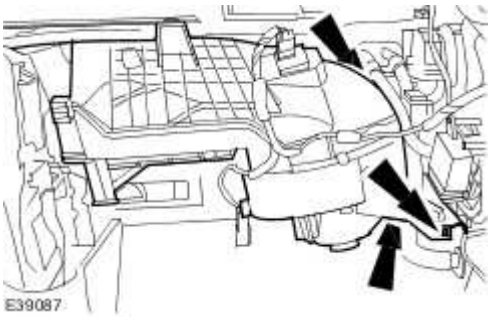

11 . Remove the blower motor housing.

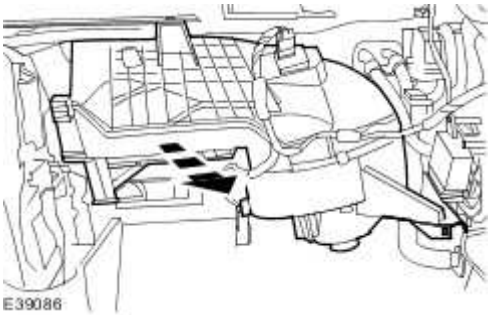

12 . Remove the footwell vent/duct blend door actuator.

1) Disconnect the electrical connector.

2) Remove the footwell vent/duct blend door actuator.

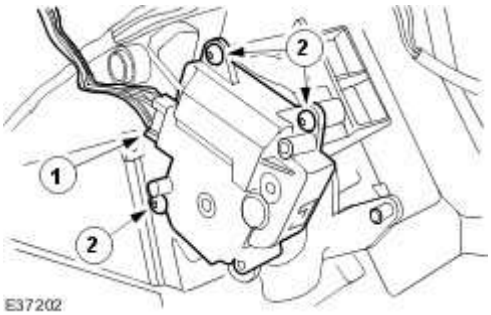

www.JagDocs.com

Installation

Left-hand drive vehicles

1 . **NOTE:**

Care should be taken to ensure the actuator linkages are correctly engaged.

To install, reverse the removal procedure.

Right-hand drive vehicles

2 . **NOTE:**

Care should be taken to ensure the actuator linkages are correctly engaged.

To install, reverse the removal procedure.

Tighten to 7 Nm.

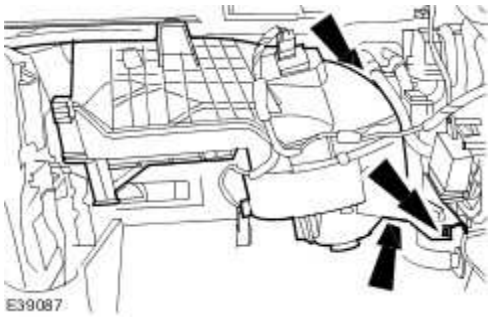

3 . Tighten to 7 Nm.

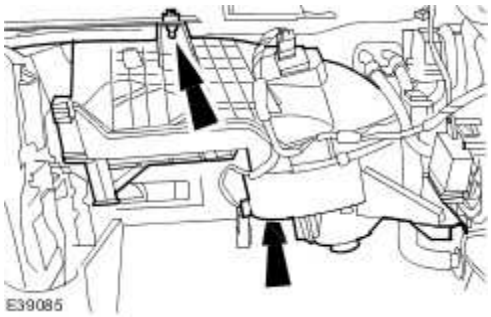

Footwell Vent/Duct Blend Door Actuator RH

Removal

All vehicles

1 . Disconnect the battery ground cable. <<414-01>>

Right-hand drive vehicles

2 . Remove the instrument panel. <<501-12>>

3 . Remove the remote climate control module.

1) Disconnect the electrical connectors.

2) Remove the lower securing screws.

3) Loosen but do not remove the upper securing screw.

4) Remove the remote climate control module.

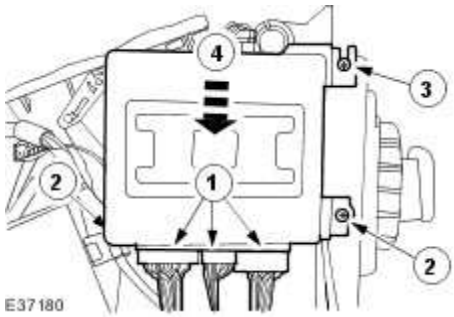

4 . Remove the footwell vent/duct blend door actuator.

1) Disconnect the electrical connector.

2) Remove the footwell vent/duct blend door actuator.

www.JagDocs.com

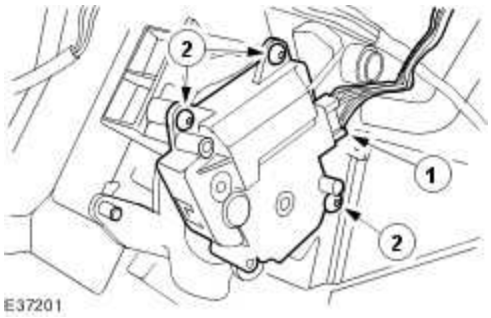

Left-hand drive vehicles

5 . Remove the passenger footwell vent duct. <<412-01>>

6 . Remove the glove box. <<501-12>>

7 . Remove the engine control module. <<303-14A>> <<303-14B>>

8 . Disconnect the blower motor electrical connector.

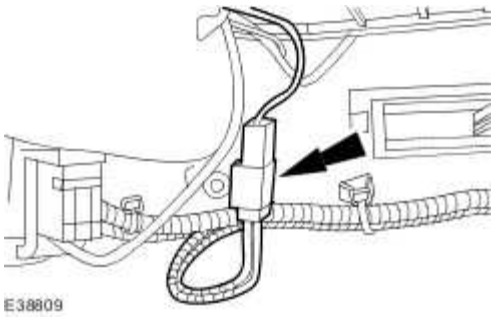

9 . Remove the blower motor housing securing bolts.

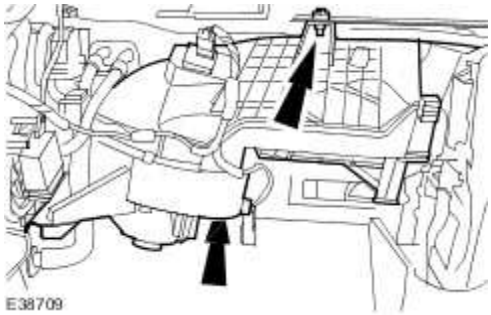

10 . Remove the blower motor housing securing bolts.

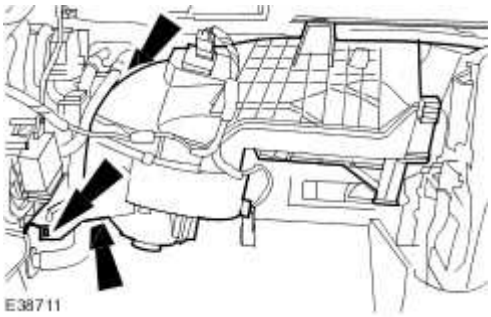

11 . Remove the blower motor housing.

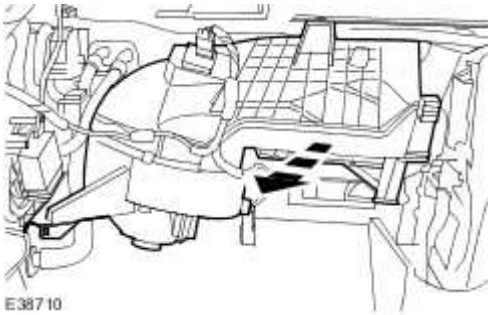

12 . Remove the footwell vent/duct blend door actuator.

1) Disconnect the electrical connector.

2) Remove the footwell vent/duct blend door actuator.

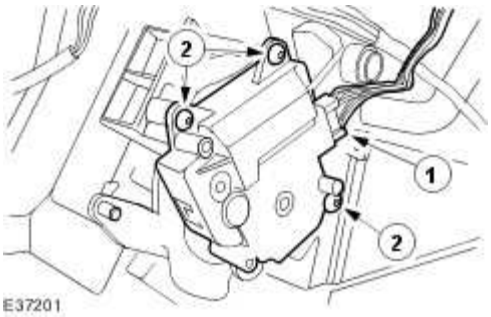

www.JagDocs.com

Installation

Right-hand drive vehicles

1 . **NOTE:**

Care should be taken to ensure the actuator linkages are correctly engaged.

To install, reverse the removal procedure.

Left-hand drive vehicles

2 . **NOTE:**

Care should be taken to ensure the actuator linkages are correctly engaged.

To install, reverse the removal procedure.

Tighten to 7 Nm.

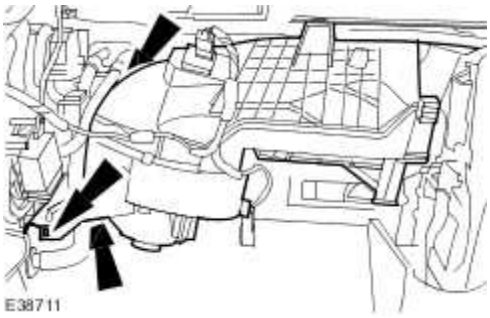

3 . Tighten to 7 Nm.

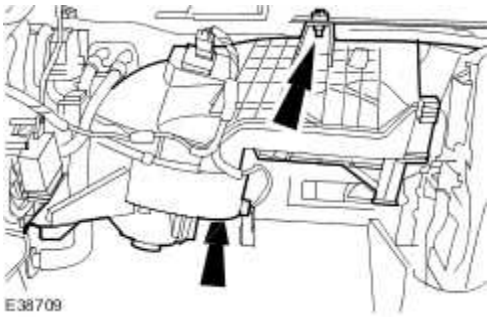

In-Vehicle Temperature Sensor (82.20.03)

Removal

1 . Reposition the steering column to its highest position.

2 . Disconnect the battery ground cable. <<414-01>>

3 . Remove the instrument panel lower trim panel.

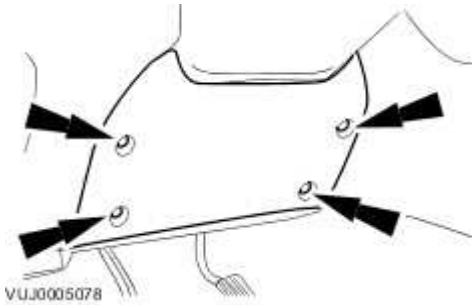

4 . Detach the steering column lower shroud.

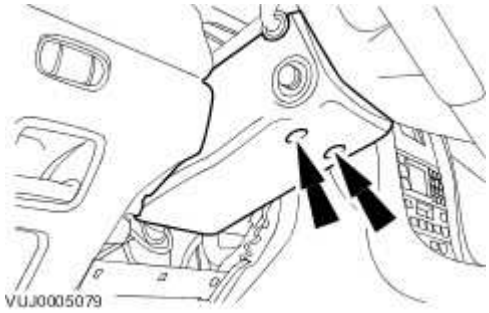

5 . Remove the lower steering column lower shroud.

- Disconnect the electrical connector.

www.JagDocs.com

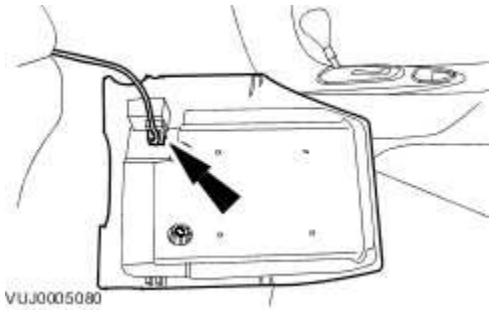

6 . Disconnect the in-vehicle temperature sensor hose.

1) Detach the hose from the bracket.

2) Remove the hose from the retaining clip.

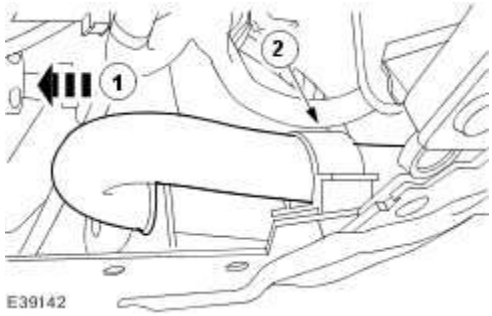

7 . Disconnect the in-vehicle temperature sensor electrical connector.

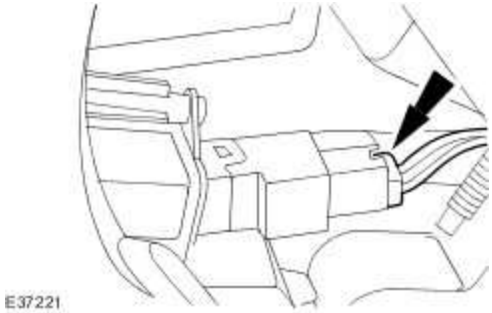

8 . Remove the in-vehicle temperature sensor.

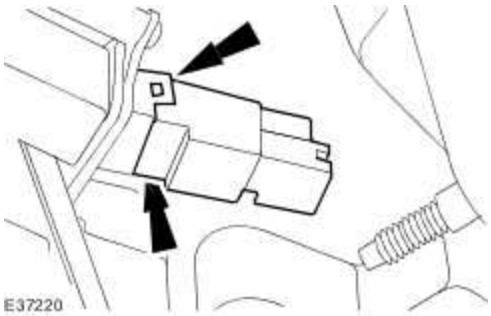

Installation

1 . To install, reverse the removal procedure.

www.JagDocs.com

Recirculation Blend Door Actuator (82.20.67)

Removal

1 . Remove the passenger footwell vent duct. <<412-01>>

2 . Remove the glove box. <<501-12>>

3 . Remove the Engine control module. <<303-14A>> <<303-14B>>

4 . Disconnect the blower motor electrical connector.

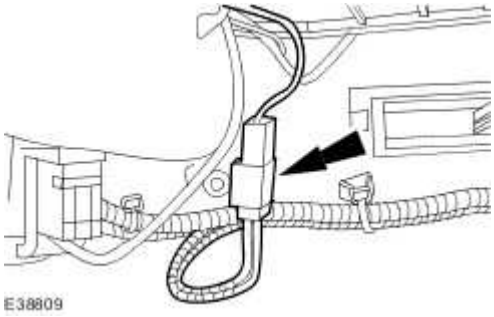

5 . Remove the blower motor housing securing bolts.

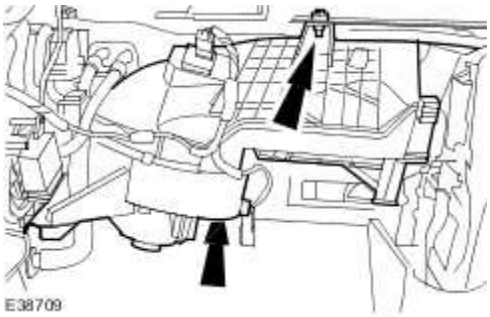

6 . Remove the blower motor housing securing bolts.

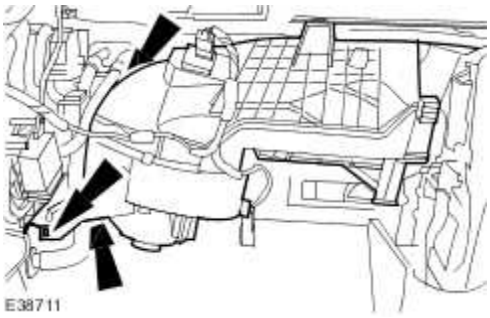

7 . Remove the blower motor housing.

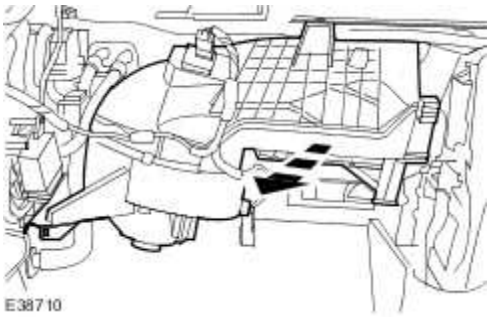

8 . Remove the recirculation blend door actuator electrical connector.

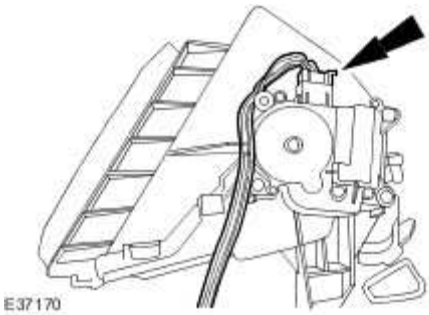

9 . Remove the recirculation blend door operating lever.

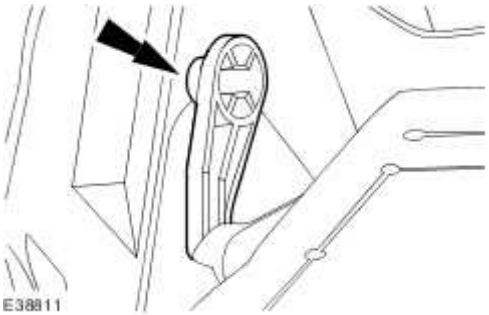

www.JagDocs.com

10 . Remove the recirculation blend door actuator.

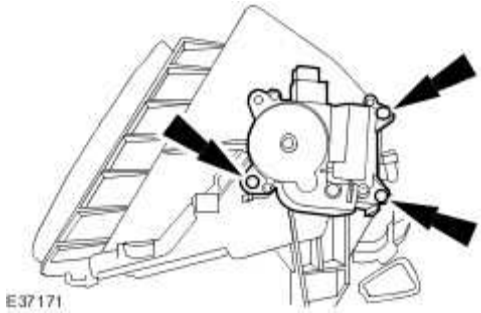

Installation

1 . **NOTE:**

Ensure the recirculation blend door operating lever is correctly located.

To install, reverse the removal procedure.

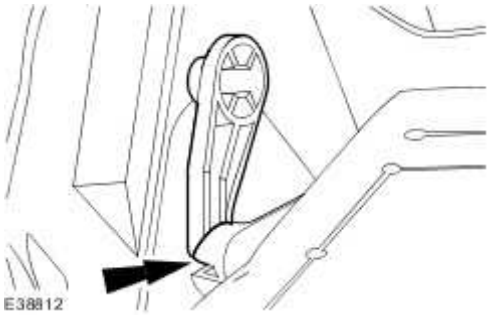

2 . Tighten to 7 Nm.

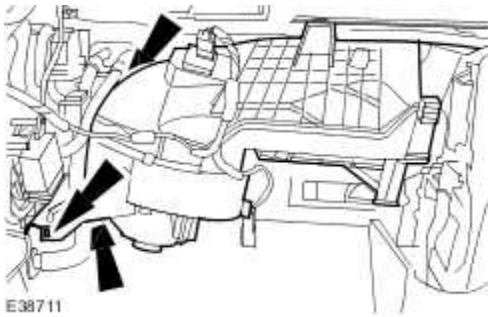

3 . Tighten to 7 Nm.

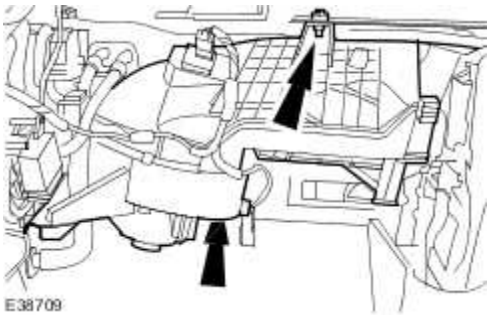

www.JagDocs.com

Sunload Sensor (82.20.70)

Removal

1 . Detach the sunload sensor trim panel.

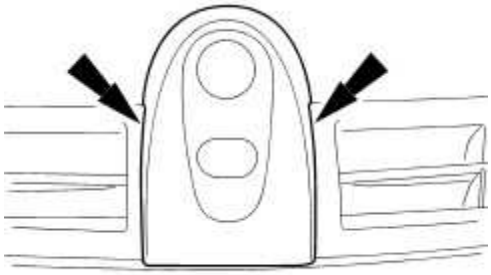

E39038

2 . Disconnect the sunload sensor electrical multiplug.

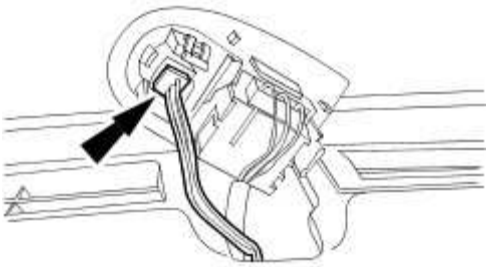

E37173

3 . Remove the sunload sensor.

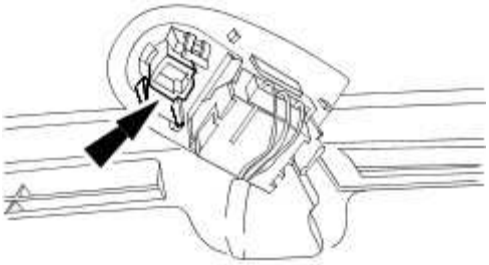

E37174

Installation

1 . To install, reverse the removal procedure.

413 : Instrument and Warning Systems

413-00 : Instrument Cluster and Panel Illumination

Diagnosis and testing

Instrument Cluster and Panel Illumination

1 . Verify the customer concern.

2 . Visually inspect for obvious signs of mechanical or electrical damage.

Visual Inspection Chart

Mechanical	Electrical
• Fluid level(s) • Accessory installations	• Bulbs(s) • Fuse(s) • Wiring harness • Electrical connector(s) • Engine compartment components • Underbody components • Instrument cluster • Front electronic module (FEM) • Dimmer switch • Headlamp switch • Autolamp sensor • Ignition switch

1 . If an obvious cause for an observed or reported concern is found, correct the cause (if possible) before proceeding to the next step.

2 . If the cause is not visually evident, verify the symptom and refer to the Jaguar approved diagnostic system.

www.JagDocs.com

Specifications

General specifications

Item	Specification
Illumination bulb.	3.0 Watt

Instrument Cluster

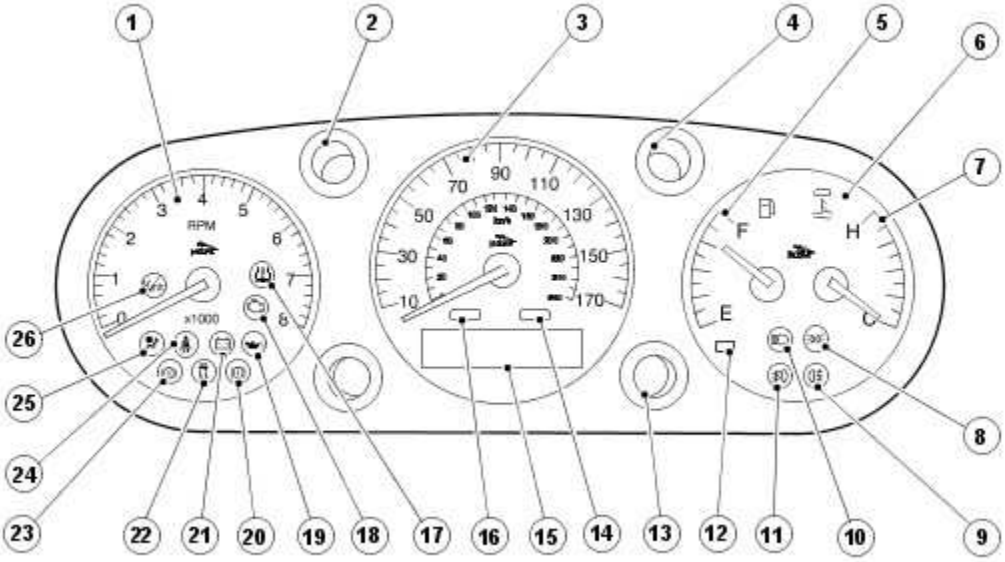

E63548

Item	Part Number	Description
1	—	Tachometer
2	—	Left-hand direction indicator
3	—	Speedometer
4	—	Right-hand direction indicator
5	—	Fuel gauge
6	—	High engine temperature indicator
7	—	Engine temperature gauge
8	—	Side lamps indicator
9	—	Rear fog lamps indicator
10	—	High beam indicator
11	—	Front fog lamps indicator
12	—	Low fuel level indicator
13	—	Adaptive speed control indicator
14	—	Message center red warning indicator-primary warning
15	—	Message center display
16	—	Message center amber warning indicator-secondary warning
17	—	Low tire pressure warning indicator

www.JagDocs.com

18	—	Check engine warning indicator
19	—	Engine oil pressure warning indicator
20	—	Parking brake, low brake fluid indicator
21	—	Battery charge warning indicator
22	—	Traction control/Dynamic Stability Control (DSC) warning indicator
23	—	Anti-Lock Brake System (ABS) warning indicator
24	—	Safety belt warning indicator
25	—	Airbag warning indicator
26	—	Vehicle overspeed warning indicator

The instrument cluster provides the driver with information, indicators and warning indicators on the vehicle systems.

The gauges and warning indicators may use the outputs from common sensors to carry out their respective functions.

Instrument Cluster – Armoured Vehicles

WARNING: Make sure that the correct calibration is programmed into the instrument cluster. Failure to follow this instruction may result in personal injury.

CAUTION: Make sure that the correct calibration is programmed into the instrument cluster. Failure to follow this instruction may result in damage to the vehicle.

This vehicle has a unique instrument cluster calibration. If the incorrect instrument cluster calibration is programmed to the vehicle, the speedometer will display an inaccurate vehicle speed.

Instrument Cluster

Principles of Operation

For a detailed description of the Instrument Cluster, refer to the relevant Description and Operation sections in the workshop manual.
Instrument Cluster

Inspection and Verification

1 . Verify the customer concern.

2 . Visually inspect for obvious signs of mechanical or electrical damage.

Visual Inspection Chart

Electrical
• Fuses/Relays • Damaged, Loose or Corroded Connector(s) • Damage to Wiring Loom/Incorrect Location, Stretched or Taught

1 . If an obvious cause for an observed or reported concern is found, correct the cause (if possible) before proceeding to the next step.

2 . If the cause is not visually evident, verify the symptom and refer to the Jaguar approved diagnostic system.

3 . If an instrument cluster warning lamp is illuminated, this normally indicates a non instrument cluster fault. Interrogate the relevant module for stored DTCs and act on this information. When the repair has been carried out, the fault codes cleared and after cycling the ignition the instrument cluster warning lamp should extinguish.

DTC Index

Instrument Cluster

CAUTION: When probing connectors to take measurements in the course of the pinpoint tests, use the adaptor kit, part number 3548-1358-00

www.JagDocs.com

NOTE:

If the control module/component is suspect and the vehicle remains under manufacturer warranty, refer to the Warranty Policy and Procedures manual (section B1.2), or determine if any prior approval program is in operation, prior to the installation of a new module/component.

NOTE:

When performing voltage or resistance tests, always use a digital multimeter (DMM) accurate to three decimal places and with a current calibration certificate. When testing resistance, always take the resistance of the DMM leads into account.

NOTE:

Check and rectify basic faults before beginning diagnostic routines that involve pinpoint tests.

NOTE:

Inspect connectors for signs of water ingress, and pins for damage and/or corrosion.

NOTE:

If DTCs are recorded and, after performing the pinpoint tests, a fault is not present, an intermittent concern may be the cause. Always check for loose connections and corroded terminals.

DTC	Description	Possible Causes	Action
B1202	Fuel Sender Circuit Open	• Instrument cluster, fuel sender - circuit open	Carry out any pinpoint tests associated with this DTC using the manufacturer approved diagnostic system. Refer to electrical circuit diagrams, notes and check rear electronic module, fuel sender circuit for open circuit
B1204	Fuel Sender Circuit Short To Ground	• Instrument cluster, fuel sender - short to ground	Carry out any pinpoint tests associated with this DTC using the manufacturer approved diagnostic system. Refer to electrical circuit diagrams, notes and check rear electronic module, fuel sender

			circuit for short to ground
B1205	EIC Switch-1 Assembly Circuit Failure	• Instrument cluster, auxiliary lighting switch pack - circuit fault	Refer to electrical circuit diagrams, notes and check instrument cluster, auxiliary lighting switch pack for circuit fault
B1209	EIC Switch-2 Assembly Circuit Failure	• Instrument cluster, main lighting switch (column switchgear) - circuit fault	Refer to electrical circuit diagrams, notes and check instrument cluster, main lighting switch pack (column switchgear) for circuit fault
B1213	Anti-Theft Number of Programmed Keys Is Below Minimum	• (LED flash 21) Number of programmed keys below minimum (2 keys minimum/8 keys maximum)	Count stored number of transponder keys using the manufacturer approved diagnostic system. Add key's as required
B1246	Dim Panel Potentiometer Switch Circuit Failure	• Instrument cluster, auxiliary lighting switch pack (dimmer) - circuit fault	Refer to electrical circuit diagrams, notes and check instrument cluster, auxiliary lighting switch pack and(dimmer) for circuit fault
B1317	Battery Voltage High	• Instrument cluster, power supply voltage above high limit Generator voltage is regulated by the engine control module	Refer to electrical circuit diagrams, notes and check instrument cluster, power supply circuit for voltage fault
B1318	Battery Voltage Low	• Instrument cluster, power supply voltage below low limit Generator voltage is regulated by the engine control module	Refer to electrical circuit diagrams, notes and check instrument cluster, power supply circuit for voltage fault
B1342	ECU Is Defective	• Instrument cluster - memory fault with ROM or EEPROM checksum	Suspect instrument cluster module check and install a new instrument cluster as required, refer to the new module installation note at the top of the DTC Index
B1352	Ignition Key-In Circuit Failure	• Instrument cluster, ignition switch, key-in switch - circuit fault	Carry out any pinpoint tests associated with this DTC using the manufacturer approved diagnostic

www.JagDocs.com

			system. Refer to electrical circuit diagrams, notes and check instrument cluster, ignition switch, key-in switch for circuit fault
B1359	Ignition Run/Acc Circuit Failure	• Instrument cluster - ignition power input voltage low (more than 15 seconds, starter crank timeout)	Refer to electrical circuit diagrams, notes and check instrument cluster, ignition power and ground for circuit fault
B1470	Lamp Headlamp Input Circuit Failure	• Instrument cluster - main lighting switch (column switchgear) headlamp - circuit fault	Carry out any pinpoint tests associated with this DTC using the manufacturer approved diagnostic system. Refer to electrical circuit diagrams, notes and check instrument cluster, main lighting switch (column switchgear) headlamp switch and circuit for fault
B1567	Lamp Headlamp Highbeam Circuit Failure	• Instrument cluster - main lighting switch (column switchgear) highbeam - circuit fault	Carry out any pinpoint tests associated with this DTC using the manufacturer approved diagnostic system. Refer to electrical circuit diagrams, notes and check instrument cluster, main lighting switch (column switchgear) highbeam switch and circuit for fault
B1600	PATS Ignition Key Transponder Signal Is Not Received	• (LED flash 13) Instrument cluster - no PATS code received from (passive anti-theft system) key transponder (key fault)	Carry out any pinpoint tests associated with this DTC using the manufacturer approved diagnostic system. Check for transponder key fault
B1601	PATS Received Incorrect Key-Code From Ignition Key Transponder	• (LED flash 15) Instrument cluster - not programmed (passive anti-theft system) transponder key in ignition switch	Carry out any pinpoint tests associated with this DTC using the manufacturer approved diagnostic system. Refer to electrical circuit diagrams, notes and check transponder key is programmed to vehicle

B1602	PATS Received Invalid Format Of Key-Code From Ignition Key Transponder	• (LED flash 14) Instrument cluster - PATS (passive anti-theft system) code received from transceiver module is incomplete	Carry out any pinpoint tests associated with this DTC using the manufacturer approved diagnostic system. Refer to electrical circuit diagrams, notes and check instrument cluster communication to PATS transceiver module circuit for fault
B1681	PATS Transceiver Module Signal Is Not Received	• (LED flash 11) Instrument cluster - no communication with the PATS (passive anti-theft system) transceiver module	Carry out any pinpoint tests associated with this DTC using the manufacturer approved diagnostic system. Refer to electrical circuit diagrams, notes and check PATS transceiver module circuit for fault
B1689	Autolamp Delay Circuit Failure	• Instrument cluster, main lighting switch (column switchgear) autolamp delay - circuit fault	Carry out any pinpoint tests associated with this DTC using the manufacturer approved diagnostic system. Refer to electrical circuit diagrams, notes and check instrument cluster, main lighting switch (column switchgear) autolamp delay circuit for fault
B1875	Turn Signal/Hazard Switch Signal Circuit Failure	• Instrument cluster, turn signal/hazard switch - signal circuit fault	Carry out any pinpoint tests associated with this DTC using the manufacturer approved diagnostic system. Refer to electrical circuit diagrams, notes and check instrument cluster, turn signal/hazard switch for signal circuit fault
B2103	Antenna Not Connected	• (LED flash 12) PATS (passive anti-theft system) transceiver circuit fault	Carry out any pinpoint tests associated with this DTC using the manufacturer approved diagnostic system. Check other modules for related DTCs. Refer to electrical circuit diagrams, notes and check instrument cluster circuit to PATS transceiver for fault
B2139	Data Mismatch (receive data does not	• Instrument cluster, security identification	Check Instrument cluster for security identification mismatch

www.JagDocs.com

	match what was expected)	mismatch with the rear electronic module REM (challenge-response error)	with the rear electronic module REM
B2141	NVM Configuration Failure	• (LED flash 22) Instrument cluster, vehicle ID is not stored in cluster	Carry out any pinpoint tests associated with this DTC using the manufacturer approved diagnostic system. Enter vehicle id into instrument cluster (Enable PCM ID transfer) using the manufacturer approved diagnostic system.
B2143	NVM Memory Failure	• Instrument cluster, Internal EEPROM error	Carry out any pinpoint tests associated with this DTC using the manufacturer approved diagnostic system. Suspect instrument cluster internal failure. Clear DTC carry out battery reset, if DTC returns suspect instrument cluster internal failure, check and replace as required, refer to the new module installation note at the top of the DTC Index
B2162	Data Mismatch #2 (receive data does not match what was expected)	• Electronic steering column lock ID mismatch with instrument cluster stored ID	Enable Electronic steering column lock ID transfer using the manufacturer approved diagnostic system.
B2329	Column Reach Feedback Potentiometer Circuit Open	• Instrument cluster, steering column movement assembly, telescope position signal circuit fault - open circuit or short to ground	Carry out any pinpoint tests associated with this DTC using the manufacturer approved diagnostic system. Refer to electrical circuit diagrams, notes and check instrument cluster, steering column movement assembly, telescope position feedback circuit for open circuit or short to ground
B2330	Column Reach Feedback Potentiometer Circuit Short to Power	• Instrument cluster, steering column movement assembly, telescope position signal circuit fault -	Carry out any pinpoint tests associated with this DTC using the manufacturer approved diagnostic system. Refer to electrical circuit diagrams, notes and check

		short to power	instrument cluster, steering column movement assembly, telescope position feedback circuit for short to power
B2333	Column Tilt Feedback Potentiometer Circuit Open	• Instrument cluster, steering column movement assembly, tilt position signal circuit fault - open circuit or short to ground	Carry out any pinpoint tests associated with this DTC using the manufacturer approved diagnostic system. Refer to electrical circuit diagrams, notes and check instrument cluster, steering column movement assembly, tilt position feedback circuit for open circuit or short to ground
B2334	Column Tilt Feedback Potentiometer Circuit Short to Power	• Instrument cluster, steering column movement assembly, tilt position signal circuit fault - short to power	Carry out any pinpoint tests associated with this DTC using the manufacturer approved diagnostic system. Refer to electrical circuit diagrams, notes and check instrument cluster, steering column movement assembly, tilt position feedback circuit for short to power
B2351	Steering Column Switch Circuit Failure	• Instrument cluster, column and pedal adjust switches - input voltage out of range	Carry out any pinpoint tests associated with this DTC using the manufacturer approved diagnostic system. Refer to electrical circuit diagrams, notes and check instrument cluster, column and pedal adjust switchpack and input circuit for fault
B2431	Transponder Programming Failure	• Instrument cluster, transponder keyfob PATS code transmit fault	Suspect transponder keyfob PATS code transmit fault. Check and replace keyfob as require
B2472	Fog Lamp Switch Failure	• Instrument cluster, auxiliary lighting switchpack, foglamp switch's - input voltage out of range	Carry out any pinpoint tests associated with this DTC using the manufacturer approved diagnostic system. Refer to electrical circuit diagrams, notes and check instrument cluster, auxiliary lighting switchpack (foglamp's input) circuit

www.JagDocs.com

			for voltage fault
B2477	Module Configuration Failure	• Instrument cluster, vehicle configuration not programmed or configuration write failure	Enter vehicle configuration into instrument cluster using the manufacturer approved diagnostic system
B2627	Fuel Sender Circuit Open #2	• Fuel tank level sender circuit to rear electronic module - circuit open	Carry out any pinpoint tests associated with this DTC using the manufacturer approved diagnostic system. Refer to electrical circuit diagrams, notes and check fuel tank level sender circuit to rear electronic module for open circuit
B2628	Fuel Sender Circuit Short To Ground #2	• Fuel tank level sender circuit to rear electronic module - short to ground	Carry out any pinpoint tests associated with this DTC using the manufacturer approved diagnostic system. Refer to electrical circuit diagrams, notes and check fuel tank level sender circuit to rear electronic module for short to ground
B2879	Fuel Tank Jet Pump Fault	• Fuel pump module, fuel tank jet pump fault • Fuel level (check both sides of the saddle tank)	Refer to electrical circuit diagrams, notes and check fuel level sender's and fuel tank jet pump circuit's for fault
B2881	Column Reach Movement Fault - Primary Axis	• Instrument cluster, steering column movement assembly, telescope primary axis position sensor fault	Carry out any pinpoint tests associated with this DTC using the manufacturer approved diagnostic system. Check steering column movement (telescope primary axis position sensor) assembly for fault
B2882	Column Reach Movement Fault - Secondary Axis	• Instrument cluster, steering column movement assembly, telescope secondary axis position sensor fault	Carry out any pinpoint tests associated with this DTC using the manufacturer approved diagnostic system. Check steering column movement (telescope secondary axis position sensor) assembly for fault

B2883	Column Tilt Movement Fault - Primary Axis	• Instrument cluster, steering column movement assembly, tilt primary axis position sensor fault	Carry out any pinpoint tests associated with this DTC using the manufacturer approved diagnostic system. Check steering column movement (tilt primary axis position sensor) assembly for fault
B2884	Column Tilt Movement Fault - Secondary Axis	• Instrument cluster, steering column movement assembly, tilt secondary axis position sensor fault	Carry out any pinpoint tests associated with this DTC using the manufacturer approved diagnostic system. Check steering column movement (tilt secondary axis position sensor) assembly for fault
C1778	Power Steering Failure	• Instrument cluster, incorrect reply from variable assist steering actuator output transistor or NVM checksum error	Suspect instrument cluster electronic failure. Check and install a new instrument cluster as required, refer to the new module installation note at the top of the DTC Index
C1922	VAPS Solenoid Actuator Output Circuit Open	• Instrument cluster, variable assist steering actuator output - open circuit	Refer to electrical circuit diagrams, notes and check instrument cluster, variable assist steering actuator circuit for open circuit
C1923	VAPS Solenoid Actuator Output Circuit Short To Power	• Instrument cluster, variable assist steering actuator output - short to power	Refer to electrical circuit diagrams, notes and check instrument cluster, variable assist steering actuator circuit for short to power
C1924	VAPS Solenoid Actuator Output Circuit Short To Ground	• Instrument cluster, variable assist steering actuator output - short to ground	Refer to electrical circuit diagrams, notes and check instrument cluster, variable assist steering actuator circuit for short to ground
C1986	VAPS Initial Speed Above threshold	• Instrument cluster, variable assist steering actuator output - circuit fault	Refer to electrical circuit diagrams, notes and check instrument cluster power circuit and variable assist steering actuator circuit for loose power connection's or short circuit
U0128	Lost Communication With Park Brake Control Module (EPB	• Instrument cluster - electronic parking brake message missing even	Check electronic parking brake for stored DTCs. Refer to electrical circuit diagrams, notes and check

www.JagDocs.com

	message missing even though CAN keep awake message was received)	though (CAN Bus) keep awake message was received	CAN Bus circuit between instrument cluster and electronic parking brake
U1147	SCP (J1850) Invalid or Missing Data for Vehicle Security	• Instrument cluster, invalid response from rear electronic module during challenge/response	Check rear electronic module for stored DTCs
U1262	SCP (J1850) Communication Bus Fault	• Instrument cluster - No response from rear electronic module during challenge/response	Check rear electronic module for stored DTCs
U1751	Steering Column Lock System Status Message Missing from REM	• Instrument cluster - missing (electronic steering column lock) enable status - OFF message from rear electronic module (logged after 2 retries)	Check rear electronic module for stored DTCs
U1752	Steering Column Lock System Status Message Missing from FEM	• Instrument cluster - (electronic steering column lock) missing enable status - OFF message from front electronic module (logged after 2 retries)	Check front electronic module for stored DTCs
U1900	CAN Communication Bus Fault (PATS use only - Receive Error)	• Instrument cluster - missing messages on CAN bus	Refer to electrical circuit diagrams, notes and check instrument cluster CAN Bus circuit for fault
U2150	SCP (J1850) Invalid Data from REM	• Instrument cluster - (electronic steering column lock) missing or incorrect (electronic steering column lock) enable status from rear electronic module	Check rear electronic module for stored DTCs
U2152	SCP (J1850) Invalid Data from FEM	• Instrument cluster - (electronic steering column lock) missing or	Check front electronic module for stored DTCs

		incorrect enable status from front electronic module	
U2195	SCP (J1850) Invalid Data from SCLM	• Instrument cluster - (electronic steering column lock) missing or incorrect enable status from electronic steering column lock module	Check electronic steering column lock module for stored DTCs
U2196	Invalid Data for Engine RPM	• Instrument cluster receive CAN Bus message with default data for >1 Sec	Check dynamic stability control module for stored DTCs
U2197	Invalid data for Vehicle Speed	• Instrument cluster receive CAN Bus message with default data for >1 Sec	Check dynamic stability control module for stored DTCs
U2199	Invalid data for Engine Coolant	• Instrument cluster received CAN Bus message with default data for >1 Sec	Check engine control module for stored DTCs
U2200	Invalid 'ODO Count' data	• Instrument cluster received CAN Bus message with default data for >1 Sec	Check dynamic stability control module for stored DTCs
U2510	CAN - Invalid data for Vehicle Security	• (LED flash 23) Instrument cluster, engine control module PATS identification wrong/mismatch with cluster	Enable engine control module PATS identification transfer to instrument cluster using the manufacturer approved diagnostic system
U2511	CAN - Data Mis-Match (Receive data does not match expected)	• Instrument cluster - CAN Bus communication failure with engine management control module	Refer to electrical circuit diagrams, notes and check instrument cluster to engine management control module CAN Bus circuit for fault
U2515	Data Missing for Adaptive Cruise	• Instrument cluster - CAN message missing from adaptive cruise	Check adaptive cruise control module for stored DTCs

www.JagDocs.com

	Control	control (only logged when cruise control is enabled)	
U2516	CAN bus Off	• Instrument cluster - CAN Bus communication failure	Refer to electrical circuit diagrams, notes and check Instrument cluster CAN Bus circuit for fault
U2519	Data Missing for EPB	• Instrument cluster - CAN message missing from electronic parking brake	Check electronic parking brake module for stored DTCs
U2521	Data Missing for Vehicle Speed	• Instrument cluster - CAN message missing from dynamic stability control module	Check dynamic stability control module for stored DTCs
U2522	Data Missing for Transmission Gear Selected	• Instrument cluster - CAN message missing from transmission control module	Check transmission control module for stored DTCs
U2523	Data Missing for Engine Speed	• Instrument cluster - CAN message missing from engine control module	Check engine control module for stored DTCs
U2524	Data Missing for Air Suspension	• Instrument cluster - CAN message missing from air suspension control module	Check air suspension control module for stored DTCs

Indicator Bulb (86.45.61)

Removal

1 . Remove the instrument cluster.
For additional information, refer to

2 . **CAUTION: Disassembly and assembly of the instrument cluster must only be carried out in an electrostatically protected area.**

Remove the instrument cluster housing.

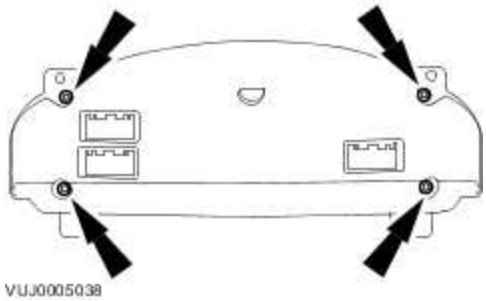

3 . Remove the indicator bulb.

Installation

1 . To install, reverse the removal procedure.

www.JagDocs.com

Instrument Cluster (88.20.01)

Removal

1 . Lower and extend the steering column to its maximum rearward position.

2 . Disconnect the battery ground cable. <<414-01>>

3 . Remove the centre console. <<501-12>>

4 . **CAUTION: Make sure damage does not occur to the instrument panel finish panel.**

Remove the instrument panel finish panel.

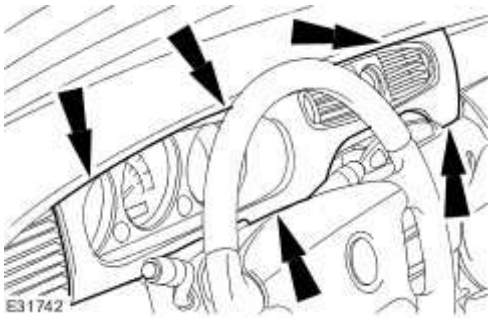

5 . Remove the instrument cluster finish panel.

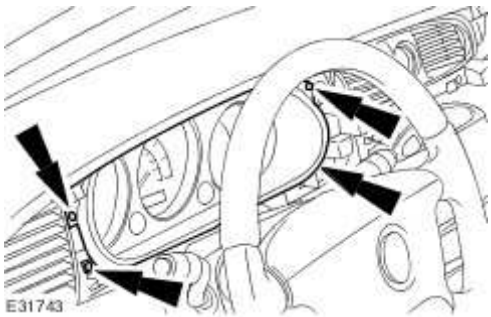

6 . Detach the instrument cluster.

- Remove the instrument cluster retaining nuts.

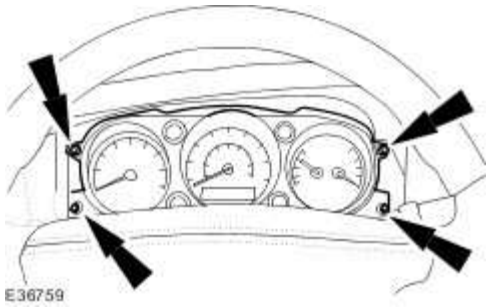

7 . Remove the instrument cluster.

- Disconnect the electrical connectors.

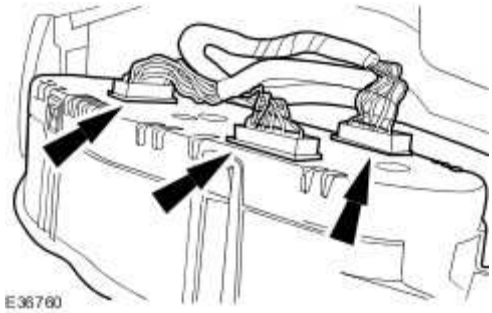

Installation

1 **NOTE:**

.

A new instrument cluster must be configured using the Jaguar approved diagnostic equipment.

To install, reverse the removal procedure.

www.JagDocs.com

Instrument Cluster Lens (88.20.28)

Removal

1 . Remove the instrument cluster.
For additional information, refer to

2 . **CAUTION: Disassembly and assembly of the instrument cluster must only be carried out in a dust free and electrostatically protected area.**

CAUTION: Care must be taken when removing or installing the cluster lens not to touch the dial faces or lens surface.

Remove the instrument cluster lens.

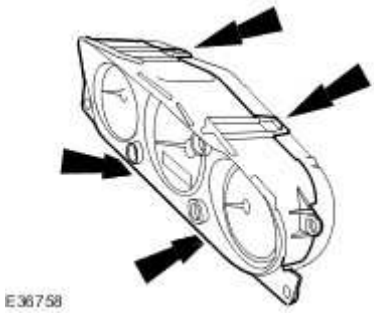

Installation

1 . **CAUTION: Care must be taken when installing the cluster lens to prevent damage to the instrument cluster pointers.**

To install, reverse the removal procedure.

Specifications

Torque Specifications

Description	Nm	lb-ft	lb-in
Horn Switch Retaining Screws	5	—	44

www.JagDocs.com

Horn

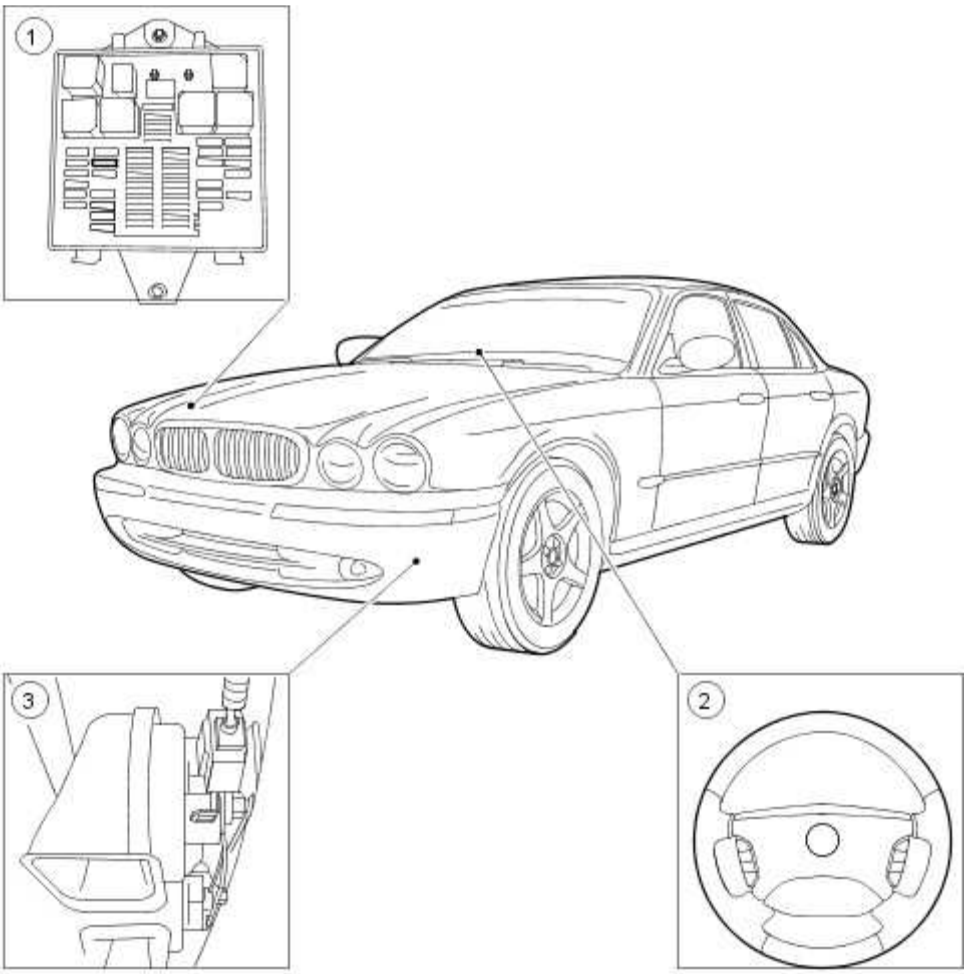

E31655

Item	Part Number	Description
1	—	Horn fuse
2	—	Horn switch
3	—	Horn

The horn system includes the following:

- Power distribution box fuse 25 (15A)
- Horn relay
- Horn
- Air bag sliding contact
- Steering wheel control switch harness
- Horn switch
- Generic Electronic Module (GEM)

The horn system is designed to sound the horn when the horn switch is operated. The horn relay is supplied voltage at all times through the power distribution box fuse 25 (15A). Operating the horn switch provides a ground circuit to the coil side of the horn relay. In turn, the switch side of the horn relay is closed, allowing voltage to be applied to the horn.

www.JagDocs.com

Horn

1 . Verify the customer concern.

2 . Visually inspect for obvious signs of electrical damage.

Visual Inspection Chart

Electrical
• Fuse(s) • Wiring Harness • Electrical connector(s) • Horn(s) • Relay • Horn switch • Clockspring

1 . If an obvious cause for an observed or reported concern is found, correct the cause (if possible) before proceeding to the next step.

2 . If the cause is not visually evident, verify the symptom and refer to the Jaguar Approved Diagnostic System.

Horn (86.30.02)

Removal

1 . Remove the radiator splash shield. <<501-02>>

2 . Disconnect the electrical connector.

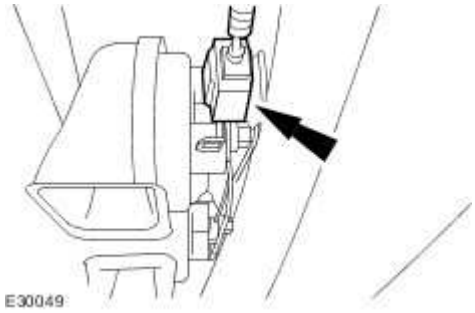

3 . Remove the horn.

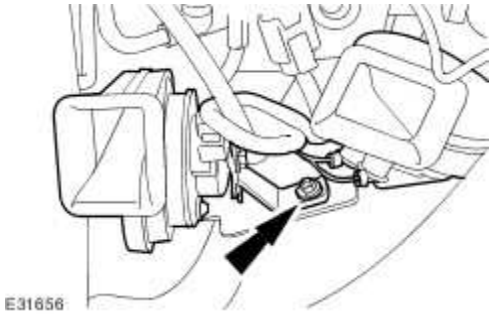

Installation

1 . To install, reverse the removal procedure.

www.JagDocs.com

Horn Switch (86.30.01)

Removal

1 . Remove the driver air bag module. <<501-20B>>

2 . Disconnect the electrical connectors.

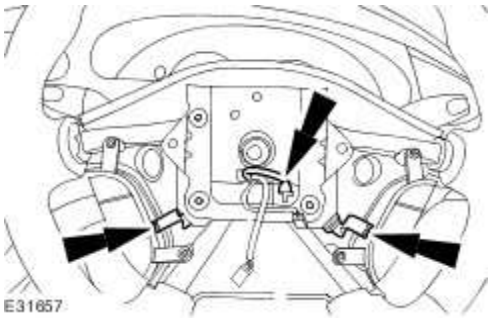

3 . Remove the horn switch.

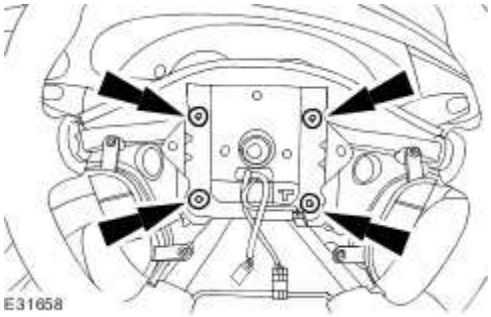

Installation

1 . To install, reverse the removal procedure.

Tighten to 5 Nm.

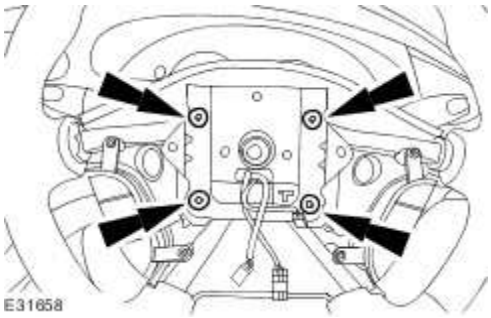

www.JagDocs.com

413-07 : Clock

Specifications

Clock

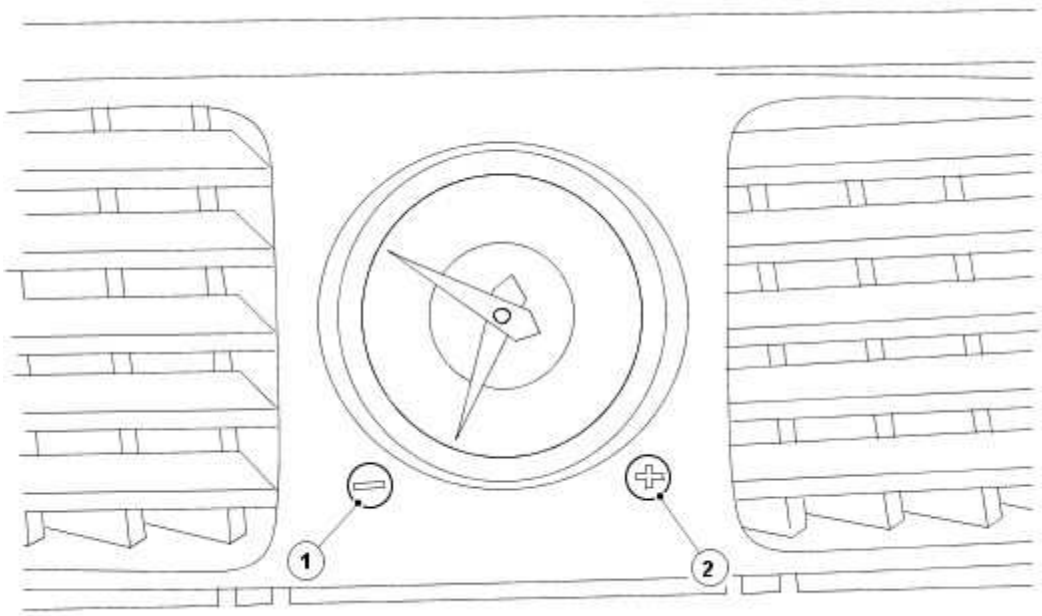

E39310

Item	Part Number	Description
1		Time retard button
2		Time advance button

The analogue clock is mounted in the center of the center register assembly and can only be removed after the removal of the center registers.

The clock is protected by a 10A fuse in location F42 of the passenger compartment fuse box, illumination is controlled by the dimmer switch in the same manner as the other instruments.

The time displayed can be advanced using the time advance button and retarded using the time retard button.

Clock

Inspection and Verification

1 . Verify the customer concern.

2 . Visually inspect for obvious signs of mechanical or electrical damage.

Visual Inspection Chart

Mechanical	Electrical
• Clock • Advance/Retard button(s)	• Bulbs(s) • Fuse(s) • Wiring harness • Loose or corroded connector(s) • Switch(es)

1 . If an obvious cause for an observed or reported concern is found, correct the cause (if possible) before proceeding to the next step.

2 . If the cause is not visually evident, verify the symptom and refer to the Jaguar approved diagnostic system.

www.JagDocs.com

Clock (88.15.07)

Removal

1 . Remove the floor console. <<501-12>>

2 . **CAUTION: Care must be taken when removing the instrument finish panel. Failure to follow this instruction may result in damage to the vehicle.**

Remove the instrument panel finish panel.

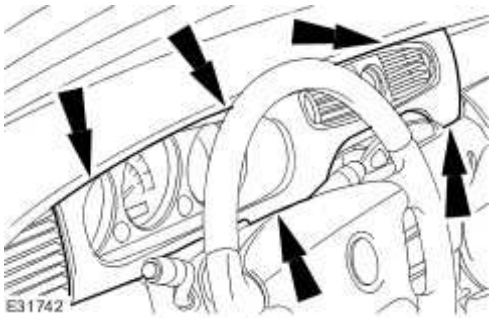

3 . **CAUTION: Care must be taken when removing the passenger air bag module finish panel. Failure to follow this instruction may result in damage to the vehicle.**

Detach the passenger air bag module finish panel.

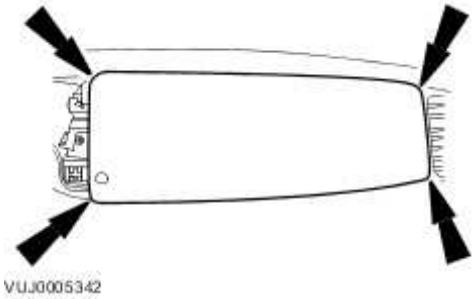

4 . Remove the instrument cluster finish panel.

- Remove the retaining screws.
- Remove the instrument cluster finish panel.

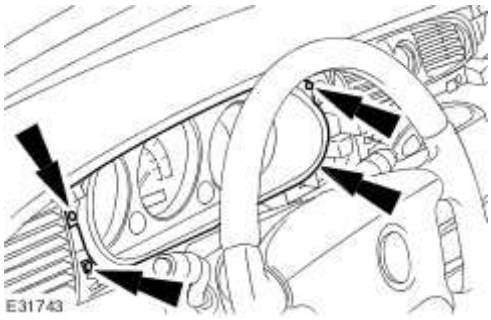

5 . Detach the center registers.

1) Remove the center registers retaining screws.

2) Detach the center registers.

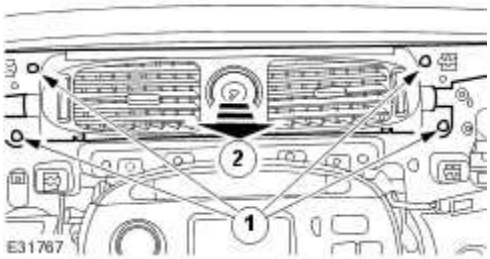

6 . Remove the center register.

- Disconnect the center register electrical connector.

www.JagDocs.com

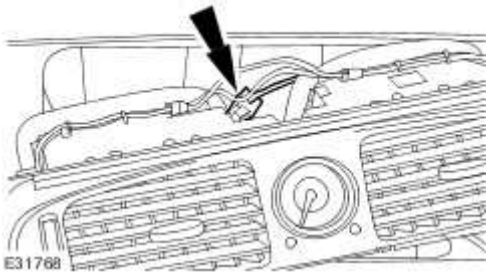

7 . Disconnect the clock electrical connector.

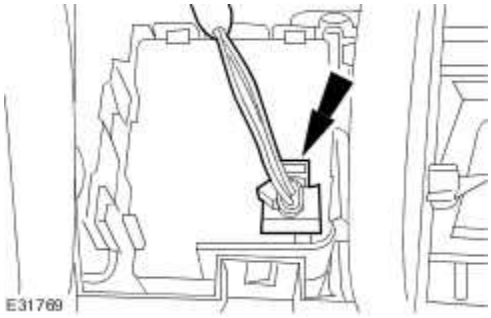

8 . Remove the clock.

1) Depress the clock retaining tangs.

2) Remove the clock.

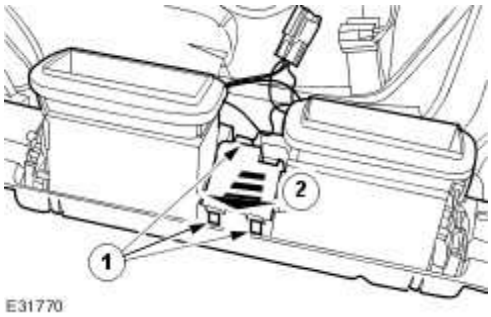

Installation

1 . To install, reverse the removal procedure.

413-08 : Information and Message Center

Description and operation

Information and Message Center

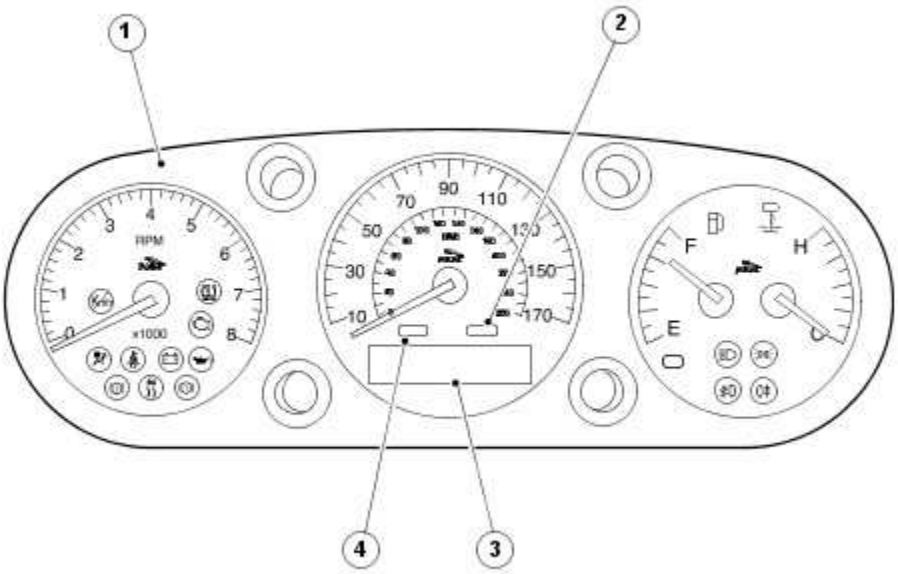

E63638

Item	Part Number	Description
1	—	Instrument Cluster
2	—	Red Warning Lamp
3	—	Drivers Information/Message Center
4	—	Amber Warning Lamp

The drivers information and message center has a liquid crystal display (LCD) and is located in the lower area of the speedometer.

The message center displays messages in text form for the driver, including odometer readings and trip computer data. It can also provide information normally covered by conventional warning lamps or indicate that a feature such as the cruise control is operating.

www.JagDocs.com

Located above the message center are two lamps, red for warning and amber for caution. When a message is displayed, the appropriate lamp will illuminate to attract the drivers attention and to signify the importance of the message.

Trip Computer

Pressing the trip computer cycle switch displays trip data on the message center. Warning and information messages have priority over trip data. If a driver information message is displayed prior to activation of the trip computer, the trip data will appear for 10 seconds only, before being replaced by the original message.

Each successive press of the trip switch causes the computer to continually cycle through the stored data which is then displayed on the message center.

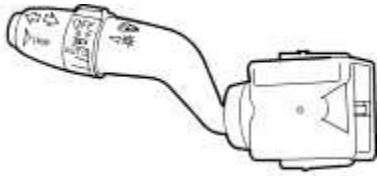

E30184

The trip computer switch pack, mounted on the instrument panel is only enabled while the trip computer output is displayed. Refer to the Drivers Handbook for full operating instructions.

Message Center switch

The message center switch operates the various functions of the message center.

E89960

The message center switch can be used to select trip memory A or B, switch the display between metric or imperial units or clear (hide) the displayed message.

Pressing the A/B switch and at the same time turning the ignition switch to position II will display the vehicle identification number. Pressing the ML/km switch and at the same time turning the ignition switch to position II will change the displayed language. Press the ML/km switch again to toggle the available languages. Press the A/B switch to select the desired language. Refer to the Drivers Handbook for full operating instructions.

Oil Change Reminder Indicator - Vehicles with Diesel Particulate Filter (DPF)

The service required reminder indicator informs the driver that the engine requires an engine oil change due to excessive build-up of fuel within the engine oil. This is due to the diesel particulate filter (DPF) regeneration process where additional fuel quantities are added to increase exhaust gas temperatures. As a result small quantities of unburnt fuel remain in the combustion chamber and bypass the piston rings into the engine oil.

The amount of excessive fuel is calculated by the powertrain control module (ECM). The ECM monitors the engine operating conditions and the values from the exhaust gas temperature sensor during the DPF regeneration process and calculates the amount of fuel in the oil. If the fuel content exceeds the permitted level, the ECM will illuminate the service required reminder indicator in the instrument cluster.

After the engine oil has been changed, a service indicator reset procedure must be carried out. For additional information, refer to Oil Change Reminder Indicator Reset (413-09)

www.JagDocs.com

Information and Message Center

1 . Verify the customer concern.

2 . Visually inspect for obvious signs of mechanical or electrical damage.

Visual Inspection Chart

Mechanical	Electrical
• Fluid level(s) • Accessory installations	• Fuse(s) • Wiring harness • Electrical connector(s) • Engine compartment components • Underbody components • Instrument cluster • Door switches • Electronic modules • Boot/bonnet switch

1 . If an obvious cause for an observed or reported concern is found, correct the cause (if possible) before proceeding to the next step.

2 . If the cause is not visually evident, verify the symptom and refer to the Jaguar approved diagnostic system.

Message Center Switch (86.66.11)

Removal

1 . Remove the coin holder.

Remove the retaining screw.

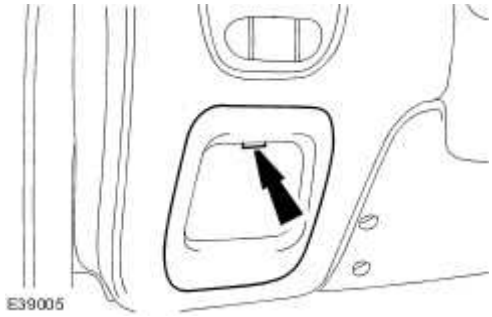

2 . Detach the message center switch.

3 . Disconnect the message center switch electrical connector.

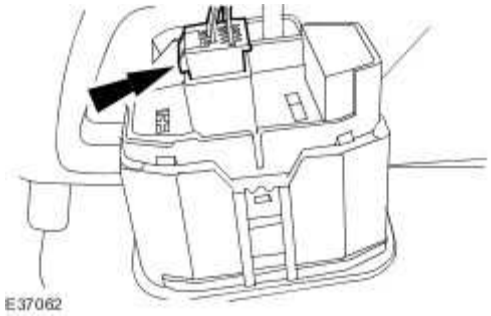

www.JagDocs.com

4 . Disconnect the luggage compartment switch electrical connector.

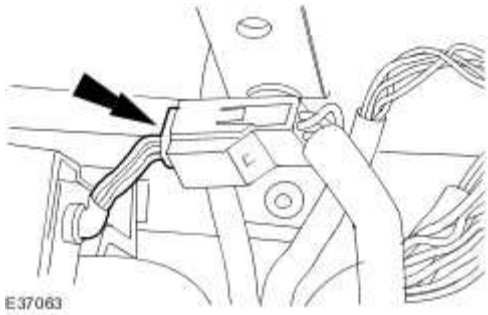

5 Remove the message center switch.

.

Disconnect the luggage compartment switch electrical connector securing clip.

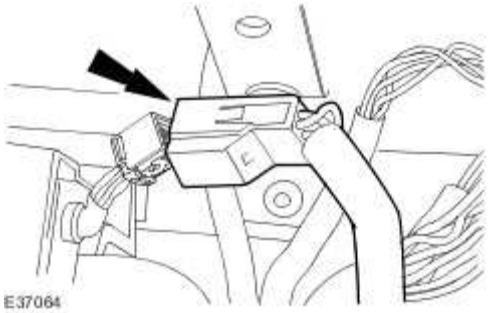

Installation

1 . To install, reverse the removal procedure.

Oil Change Indicator Reset

1. **NOTE:**
   Steps 2 to 5 must be completed within 3 seconds for successful service mode resetting.

NOTE:
Ignition key in the OFF position.

Press and hold down the trip computer CLEAR/RESET button.

2. Continue to hold down the trip computer CLEAR/RESET button and turn the ignition switch to the ON position.

3. Release the trip computer CLEAR/RESET button.

4. Press and hold down the trip computer TRIP button located on the left-hand steering column multifunction switch.

5. Continue to hold down the trip computer TRIP button and press and hold down the trip computer CLEAR/RESET button.

6. Continue to hold down the trip computer TRIP and CLEAR/RESET buttons, RESETTING SERVICE MODE will display in the information and message center if steps 2 to 5 are completed successfully.

7. After 10 seconds the information and message center will then display SERVICE MODE RESET once the process is complete.

8. **NOTE:**
   If the information and message center does NOT display SERVICE MODE RESET, steps 1 to 8 must be repeated.

Release the trip computer TRIP and CLEAR/RESET buttons and turn the ignition switch to the OFF position.

www.JagDocs.com

Warning Devices

Driver Audible Warning

The audible warning system provides the driver with an audible warning when the key is in the ignition lock cylinder, a door is open, headlamps are on or the safety belt is not engaged. The driver will also be provided with a visual warning message displayed in the message center when the ignition lock cylinder is in the **ON** position. The system uses a number of inputs to provide the driver with audible and visual warnings.

Instrument Cluster

CAUTION: If a red warning light is displayed in the instrument cluster the vehicle must be stopped as soon as possible, but only when it is safe to do so. A red warning light indicates a primary warning. Primary warnings must be reported to a Jaguar Dealer and investigated immediately. Failure to follow these instructions may result in damage to the vehicle.

CAUTION: If an amber warning light is displayed in the instrument cluster the driver must take the appropriate action, but only when it is safe to do so. An amber warning light indicates a secondary warning. Secondary warnings must be reported to a Jaguar Dealer and investigated at the drivers earliest opportunity. Failure to follow these instructions may result in damage to the vehicle.

The instrument cluster acts as a system monitor for the audible and visual warnings. It receives inputs from switches and sensors directly or through the multiplex link from another module and triggers the necessary audible or visual warnings.

Message Center

CAUTION: If a red warning light is displayed in the instrument cluster the vehicle must be stopped as soon as possible, but only when it is safe to do so. A red warning light indicates a primary warning. Primary warnings must be reported to a Jaguar Dealer and investigated immediately. Failure to follow these instructions may result in damage to the vehicle.

CAUTION: If an amber warning light is displayed in the instrument cluster the driver must take the appropriate action, but only when it is safe to do so. An amber warning light indicates a

secondary warning. Secondary warnings must be reported to a Jaguar Dealer and investigated at the drivers earliest opportunity. Failure to follow these instructions may result in damage to the vehicle.

When warning messages are displayed they have an associated warning light, red or amber, located within the instrument cluster which will come on to indicate the message priority. If more than one message is active, each message will be displayed in turn for 2 seconds in order of priority.

Ignition Lock Cylinder (North America Only)

An audible warning will sound continuously when the drivers door is open and the key is in the ignition lock cylinder, on removal of the key the audible warning will stop.

Luggage Compartment Switch

The luggage compartment switch will activate a visual warning when the ignition lock cylinder is in the **ON** position and the luggage compartment is ajar.

Door Ajar Switches

The door ajar switches will activate a visual warning when the ignition lock cylinder is in the **ON** position and any of the doors are ajar.

Headlamp Switch

An audible warning will sound continuously when the driver door is ajar and the vehicle lamps are on. The audible warning is provided whether the key is in or out of the ignition lock cylinder and will cease after five minutes or when the lamps are switched off or when the door is closed.

Direction Indicators

An audible warning and a flashing green arrow on the instrument cluster indicates that the selected direction indicator is on. If a direction indicator lamp should fail, the audible warning will sound at twice the normal speed and the corresponding flashing green arrow will flash at twice the normal speed.

Hazard Warning

An audible warning and both flashing green arrows on the instrument cluster indicates that the hazard warning lights are on, also the hazard warning light switch symbol will be illuminated and flashing.

Safety Belt Reminder

The safety belt reminder switch is an integral part of the front safety belt buckle. An audible warning will sound continuously for approximately six seconds (North America only) when the driver turns the ignition lock cylinder to the **ON** position and the safety belt is not engaged, a warning lamp will also be illuminated and show continuously (the warning lamp will illuminate for one minute only in North America). The audible warning and warning lamp will cease if the safety belt is engaged. (If only the driver is present the safety belt warning will relate only to the driver. If both front seats are occupied the safety belt reminder will relate to both front seats). The passenger seat weight sensor is used to determine if the passenger seat is occupied.

www.JagDocs.com

Beltminder

European Beltminder

The beltminder function is an additional warning to the safety belt reminder. Under the conditions where a front seat occupant is unbelted or becomes unbelted and the vehicle is moving above 16 km/h (10 mile/h) then an additional audible warning of an intermittent tone will start accompanied by the safety belt warning lamp flashing. The intermittent audible warning and flashing lamp will last for 10 seconds and will repeat every 30 seconds for five minutes. The additional warnings will stop when all occupants seated in the front of the vehicle have their safety belts fastened or if the vehicle speed drops below 5 km/h (3 mile/h).

North American Beltminder

The system will function the same as for European beltminder after 75 seconds.

Beltminder Disabling

This process is common to both European and North American beltminder.

1 . Make sure the front passenger seat is unoccupied.

NOTE:

Steps two to five must be completed within 60 seconds.

2 . Turn the ignition lock cylinder to the **ON** position (do not start the engine).

3 . Buckle the driver safety belt buckle and wait until the safety belt warning lamp extinguishes.

4 . Unbuckle the driver safety belt buckle and wait until the safety belt warning lamp illuminates.

5 . Repeat Steps three and four a further eight times.

6 . When the driver safety belt buckle is unbuckled for the ninth time a single audible warning will sound. The single audible warning is acknowledgment that the beltminder feature has been disabled.

The beltminder feature will be disabled until the above process (steps one to six) are repeated. Upon repeating the process the beltminder feature will be reactivated.

Air Bag Inactive Warning

If a fault is present in the supplementary restraints system and the warning lamp in the instrument cluster is inoperative, then the restraints control module will send a signal to the instrument cluster to activate an audible warning. The audible warning will not sound for the first 90 seconds when the ignition lock cylinder is in the **ON** position . The audible warning will then sound continuously for 5 seconds and stay silent for 5 seconds, this sequence repeats 5 times and the function will repeat every 30 minutes until the fault has been rectified.

Parking Brake Warning

Operation of the parking brake when the vehicle is in motion will cause the message 'PARKBRAKE ON' to be displayed in the message center, the warning lamp in the instrument cluster will be displayed and an audible warning will sound.

Parking Aid

CAUTION: It is the drivers responsibility to check for any obstacles and judge the vehicles distance from them. Overhanging objects, barriers, thin obstructions or painted surfaces may not be detected by the vehicles parking aid. Failure to follow this instruction may result in damage to the vehicle.

NOTE:

Front parking aid will also operate when reverse gear is selected.

Parking aid provides an audible proximity warning when parking. If an obstacle is detected at the front or rear of the vehicle, an audible warning will sound from the front or rear speakers respectively, the audible warning will increase in speed as the vehicle approaches the obstacle. The front and rear parking aid audible warning will become continuous when an object is detected at or within 300 mm (12 inch) from the rear of the vehicle or approximately 250 mm (10 inch) from the front of the vehicle. If the parking aid has a fault when engaging reverse gear or switching the ignition lock cylinder to the **ON** position, a single 3 second audible warning will sound. Parking aid will be automatically disabled as soon as a fault is detected.

Adaptive Cruise Control (ACC)

WARNING: It is the drivers responsibility to slow the vehicle down when the 'DRIVER INTERVENE' message is displayed in the message center. Failure to follow this instruction may result in personal injury.

CAUTION: It is the drivers responsibility to slow the vehicle down when the 'DRIVER INTERVENE' message is displayed in the message center. Failure to follow this instruction may result in damage to the vehicle.

If adaptive cruise control (ACC) is active, an amber warning light is illuminated to indicate that the vehicle is in 'FOLLOW MODE' and is automatically maintaining the set distance from the vehicle immediately ahead. Maximum braking which is applied to the ACC system is limited and can be overridden by the driver applying the brakes. If the ACC system predicts that it's maximum braking level will not be sufficient, an audible warning will sound and the message 'DRIVER INTERVENE' will

www.JagDocs.com

be displayed in the message center. If the vehicle speed decreases below 30 km/h (18 mile/h), the ACC system will be automatically switched off and the instrument warning light will go out. If the brakes have been applied by the ACC system, they will be slowly released, this will be accompanied by an audible warning, the message 'DRIVER INTERVENE' will again be displayed in the message center.

Adaptive Cruise Control (ACC) Failure

WARNING: It is the drivers responsibility to slow the vehicle down when the 'DRIVER INTERVENE' message is displayed in the message center. Failure to follow this instruction may result in personal injury.

CAUTION: It is the drivers responsibility to slow the vehicle down when the 'DRIVER INTERVENE' message is displayed in the message center. Failure to follow this instruction may result in damage to the vehicle.

If a fault occurs during the operation of the ACC system in 'CRUISE' or 'FOLLOW' modes, the ACC system will switch off and cannot be used until the fault is cleared. The message 'DRIVER INTERVENE' will be displayed briefly in the message center followed by the message 'CRUISE NOT AVAILABLE'. If failure of the ACC or any related system occurs at any other time the message 'CRUISE NOT AVAILABLE' will be displayed and it will not be possible to active the ACC system. Accumulated debris, dirt, snow or ice on the ACC sensor or it's cover may inhibit the ACC operation. Fitting of a vehicle front protector or metallized badges may also affect ACC operation. If this occurs and audible warning will sound and the message 'DRIVER INTERVENE' will be briefly displayed in the message center followed by the message 'ACC SENSOR BLOCKED'. This will render the ACC system inactive.

Warning Devices – Armoured Vehicles

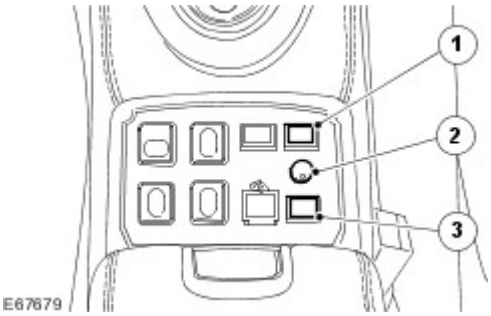

Item	Part Number	Description
1		Intercom switch ON/OFF
2		Intercom switch INSIDE/OUTSIDE
3		Potentiometer

Intercom

In order to activate the intercom system, press the green switch. Communication is as follows: To speak from the inside of the vehicle to the outside of the vehicle press the yellow switch whilst speaking. Release the yellow switch to make the outside listening permanent. If you want to increase the interior volume of the loud speaker, turn the potentiometer clock wise. The amplifier is located in the rear luggage area inside the ‘options box’. The microphone inside of the vehicle is located near to the driver. The microphone outside of the vehicle is located near to the rear view door mirror. The outside loudspeaker is located under the front of the bumper cover. The inside loudspeaker is located under the instrument panel.

Siren

The siren system consists of a luggage compartment amplifier and two relays, a floor console mounted switch, and a speaker mounted behind the front bumper cover on the left hand side of the vehicle. The siren system is integrated into the vehicle with a harness kit part number 6W9M-12B654-BA. The electrical feed is via fuse number 5 in the luggage compartment mounted auxiliary fuse box. An electrical feed from the battery positive terminal is supplied on a red wire to the auxiliary junction box mounted in the luggage compartment of the vehicle. Fuse 5 provides a feed to the power relay on a PY wire. The siren 'arm' signal (XS007-6) is taken to the relay siren XS006-30 on a G wire. The arm signal is grounded at the amplifier XS007-4 on a B wire via the relay siren. When the siren switch (XS005) is activated an ignition feed is provided to the power relay coil (XS002-85) on a WB wire, and to the relay siren (XS006-85) on a WB wire. The coils are earthed on B wires. The power relay (XS002) is pulled in connecting a feed to the siren amplifier XS010-1 on a RY wire. The amplifier ground connection (XS010-2) is taken to XS012-1 via a B wire. At the same time, the relay siren (XS006) is pulled in, and the siren 'arm' signal has its path to ground removed. The siren is now 'armed' and under the control of the vehicle horn switch. When the vehicle horn switch is pushed the siren starts in wail mode. A further push toggles the siren into yelp mode. Two pushes in quick succession will cancel the siren, as will returning the siren switch to the off position. The toggle function is enabled via the vehicle horn circuit connected to the amplifier XS007-15 on an YB wire. The siren speaker (XS008 and XS009) is connected to the amplifier XS007 via an N and NW wire. A feed for the switch illumination is provided on a RW wire, and is grounded via a B wire at XI001.

www.JagDocs.com

Published: Mar 12, 2014

Engine Protection System – Armoured Vehicles

CAUTION: Failure to follow the manufacturers instructions can damage or degrade this system and the vehicle in which it is installed.

CAUTION: The fire suppression system uses aqueous film forming foam fire suppressant.

CAUTION: Unauthorised modifications to this system are not permitted.

CAUTION: The manufacturer does not accept any responsibility for this system in the event that unapproved modifications are made and / or the maintenance schedule is not carried out.

NOTE:

The key in the control module must be in the "system armed" position otherwise the system will not operate.

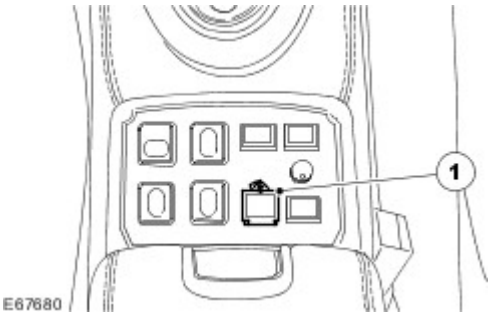

Item	Part Number	Description
1		Fire suppression manual operation

Fire suppression

The purpose of the fire suppression system is to suppress engine bay fires. It has both manual and automatic operation. The system is stand-alone and has no electrical interface to the vehicle wiring. The system comprises of a 4 litre, non pressurized cylinder containing aqueous film forming foam fire suppressant (mounted in the rear of the luggage compartment area). A gas generator cartridge is fitted to one end of the cylinder with electrical connection to the control module. At the other end of the cylinder is the outlet which is connected to a pipe which conveys the suppressant to several nozzles located in the engine bay. The system is controlled by means of a control module (located in the rear of the luggage compartment area) with integral 9 volt battery. When armed, the system may be activated as follows:- **Automatically** – when the temperature sensor installed on the underside of the hood reaches 180°C (356°F). **Manually** – by pressing the red button on the switch pack mounted on the centre console.

Maintenance

Aqueous film forming foam cylinder replacement – disconnect the electrical connection to the gas generator; disconnect the outlet hose from the cylinder. Note: that the hose connections are of the "quick-release" type and the black collar of the connector must be pushed in to release the hose. After system activation – replace the 9 volt battery, replace gas generator and aqueous film forming foam cylinder, any other components

damaged during the operation of the system (hoses, temperature sensor etc). Every 6 months – carry out system and battery check; check expiry date on aqueous film forming foam cylinder and replace as necessary. Every 12 months – replace 9 volt battery.

www.JagDocs.com

Warning Devices

Inspection and Verification

1 . Verify the customer concern.

2 . Visually inspect for obvious signs of mechanical or electrical damage.

Visual Inspection Chart

Mechanical	Electrical
• Door ajar switch(es) • Safety belt buckle and pretensioner • Headlamp switch • Fuel gauge • Inertia switch	• Fuse(s) • Wiring harness • Electrical connector(s) • Switch(es) • Sensor(s)

1 . If an obvious cause for an observed or reported concern is found, correct the cause (if possible) before proceeding to the next step.

2 . If the cause is not visually evident, verify the symptom and refer to the Jaguar approved diagnostic system.

413-13 : Parking Aid

Description and operation

Parking Aid

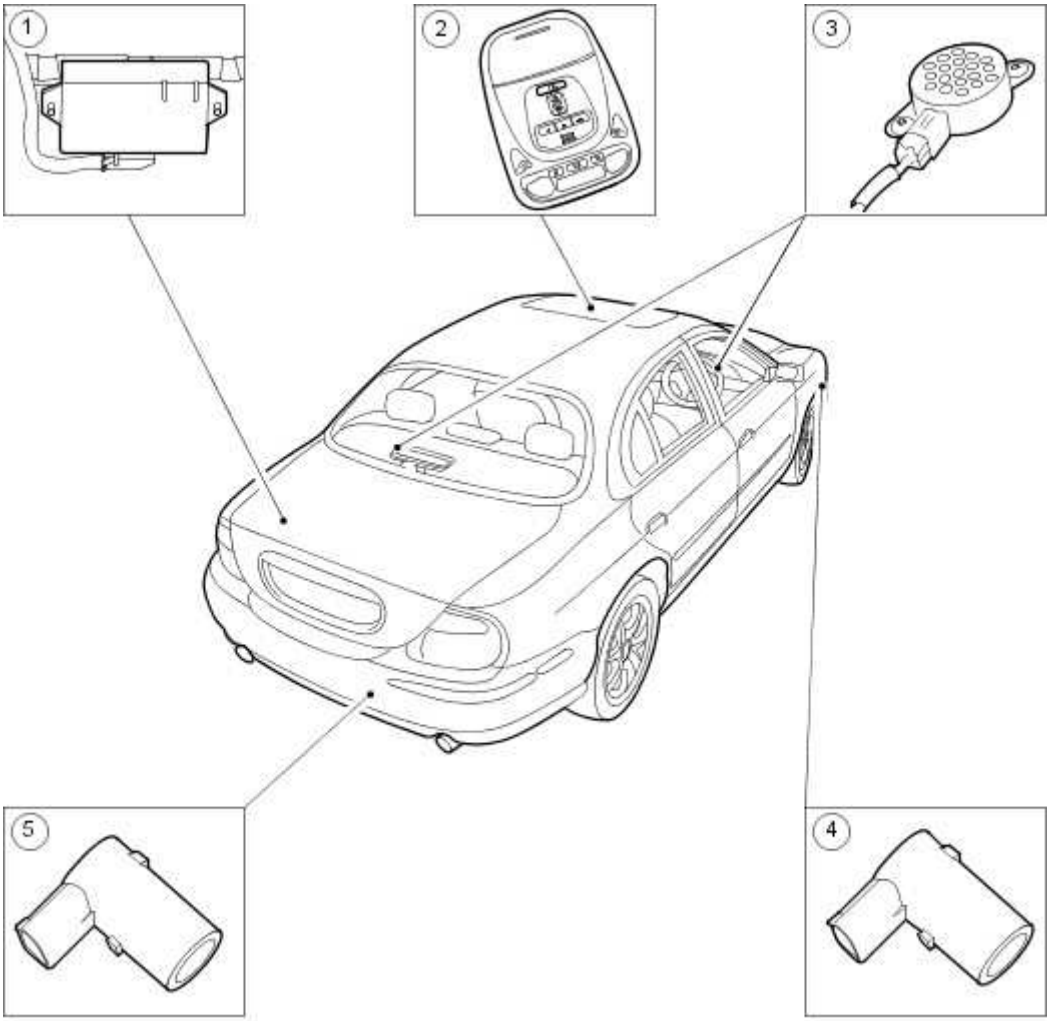

Item	Part Number	Description
1	—	Parking aid module
2	—	Parking aid switch
3	—	Front and rear parking aid speakers
4	—	Front parking aid sensors
5	—	Rear parking aid sensors

The function of the parking aid is to provide an audible warning to the driver of the distance

www.JagDocs.com

to obstacles near the front or rear bumper of the vehicle when parking or travelling at a slow speed. The system provides an assistance to the driver when parking in order to help avoid collision with obstacles.

The sensor range at the front of the vehicle should be 0.8 meters and the sensor range at the rear of the vehicle should be 1.8 meters. This should extend the full width of the rear bumper and reduce to 50 cm at the vehicle corners. The vertical range is adequate to protect the highest and lowest points of the front and rear of the vehicle. The system will detect curbs with heights of at least 18 cm. Obstacles, such as curbs, that are low enough to pass under the vehicle until they make contact with the tires will not be detected.

The system activates a specific speaker with a tone signifying the distance to the obstacle. The tone consists of a beep and defined space ratio which varies depending on the calculated distance. When the distance to the obstacle is less than 20 cm the speaker tone is continuous.

The parking aid is continuously in operation, unless towing when the system automatically switches off. If the reverse aid develops a fault the tone will sound continuously for three seconds when the ignition is switched on or the reverse gear is selected.

The parking aid system comprises of:

- a module mounted in the spare wheel well just rearward of the spare tyre.
- four rear bumper mounted sensors which have a straight electrical connector plug.
- four front bumper mounted sensors of which the two inner sensors have a 90° angled electrical connector in order to give clearance to the bumper reinforcing frame.
- two audible speakers, one mounted on the rear parcel shelf and the other mounted behind the speedo binnacle.
- a cancellation switch that is mounted into the roof console. This is fitted for the driver to disable the system when in slow moving traffic. This stops the front parking aid continuously monitoring the vehicle in front, however, the system will only stay inoperative whilst the vehicle is moving or when the ignition switch is reset OFF or ON.

Parking Aid

Principles of Operation

For a detailed description of the Parking Aid, refer to the relevant Description and Operation sections in the workshop manual.
Parking Aid

Inspection and Verification

1 . Verify the customer concern.

2 . Visually inspect for obvious signs of electrical damage.

Mechanical	Electrical
• Obstructions or Damage to Parking Sensors • Parking Sensor Face Obstructed (e.g. snow, ice, dirt, flies etc)	• Fuses/Relays • Damaged, Loose or Corroded Connector(s) • Damage to Wiring Loom/Incorrect Location, Stretched or Taught

3 . If an obvious cause for an observed or reported concern is found, correct the cause (if possible) before proceeding to the next step.

4 . If the cause is not visually evident, verify the symptom and refer to the Jaguar approved diagnostic system.

DTC Index

Parking Aid Module

CAUTION: When probing connectors to take measurements in the course of the pinpoint tests, use the adaptor kit, part number 3548-1358-00.

NOTE:

If the control module/component is suspect and the vehicle remains under manufacturer warranty, refer to the Warranty Policy and Procedures manual (section B1.2), or determine if any prior approval program is in operation, prior to the installation of a new module/component.

www.JagDocs.com

NOTE:

When performing voltage or resistance tests, always use a digital multimeter (DMM) accurate to three decimal places and with a current calibration certificate. When testing resistance, always take the resistance of the DMM leads into account.

NOTE:

Check and rectify basic faults before beginning diagnostic routines that involve pinpoint tests.

NOTE:

Inspect connectors for signs of water ingress, and pins for damage and/or corrosion.

NOTE:

If DTCs are recorded and, after performing the pinpoint tests, a fault is not present, an intermittent concern may be the cause. Always check for loose connections and corroded terminals.

DTC	Description	Possible Causes	Action
B1299	Power Supply Sensor Circuit Short To Ground	• Parking aid module, parking distance sensor (rear)power circuit - short to ground	Refer to electrical circuit diagrams, notes and check parking aid module, parking distance sensor (rear) power circuit for short to ground
B1342	ECU is Defective	• Parking aid module - memory failure (RAM)	Suspect faulty module, check and install as required, refer to the new module installation note at the top of the DTC Index
B2207	ECU ROM Checksum Error	• Parking aid module - memory failure (ROM)	Suspect faulty module, check and install as required, refer to the new module installation note at the top of the DTC Index
B2373	LED #1 Circuit Short to Power	• Parking aid module, parking aid status (roof console LED) circuit - short to power or open	Refer to electrical circuit diagrams, notes and check parking aid module, parking aid status (roof console LED) circuit for short to power or open

		circuit	circuit
B2477	Module Configuration Failure	• Parking aid module - configuration failure (EEPROM error during power up)	Reconfigure. If this fails suspect faulty module, check and install as required, refer to the new module installation note at the top of the DTC Index
C1699	Left Rear Sensor Circuit Short to Power	• Parking aid module, rear outer left sensor data circuit - short to power	Carry out any pinpoint tests associated with this DTC using the manufacturer approved diagnostic system. Refer to electrical circuit diagrams, notes and check parking aid module, rear outer left sensor data circuit for short to power
C1700	Left Rear Sensor Circuit Failure Or Blockage	• Parking aid module, rear outer left sensor data circuit - open or short to ground	Carry out any pinpoint tests associated with this DTC using the manufacturer approved diagnostic system. Refer to electrical circuit diagrams, notes and check parking aid module, rear outer left sensor data circuit for open circuit or short to ground
C1701	Left Rear Sensor Circuit Fault	• Parking aid module - rear outer left sensor fault	Carry out any pinpoint tests associated with this DTC using the manufacturer approved diagnostic system. Suspect rear outer left sensor fault
C1702	Right Rear Sensor Circuit Short to Power	• Parking aid module, rear outer right sensor data circuit - short to power	Carry out any pinpoint tests associated with this DTC using the manufacturer approved diagnostic system. Refer to electrical circuit diagrams, notes and check parking aid module, rear outer right sensor data circuit for short to power
C1703	Right Rear Sensor Circuit Failure Or Blockage	• Parking aid module, rear outer right sensor data circuit - open or short to ground	Carry out any pinpoint tests associated with this DTC using the manufacturer approved diagnostic system. Refer to electrical circuit diagrams, notes and check parking aid module, rear outer right sensor data circuit for open circuit or short to ground

www.JagDocs.com

C1704	Right Rear Sensor Circuit Fault	• Parking aid module - rear outer right sensor fault	Carry out any pinpoint tests associated with this DTC using the manufacturer approved diagnostic system. Suspect rear outer right sensor fault
C1705	Left Rear Center Sensor Circuit Short to Power	• Parking aid module, rear inner left sensor data circuit - short to power	Carry out any pinpoint tests associated with this DTC using the manufacturer approved diagnostic system. Refer to electrical circuit diagrams, notes and check parking aid module, rear inner left sensor data circuit for short to power
C1706	Left Rear Center Sensor Circuit Failure	• Parking aid module, rear inner left sensor data circuit - open or short to ground	Carry out any pinpoint tests associated with this DTC using the manufacturer approved diagnostic system. Refer to electrical circuit diagrams, notes and check parking aid module, rear inner left sensor data circuit for open circuit or short to ground
C1707	Left Rear Center Sensor Circuit Fault	• Parking aid module - rear inner left sensor fault	Carry out any pinpoint tests associated with this DTC using the manufacturer approved diagnostic system. Suspect rear inner left sensor fault
C1708	Right Rear Center Sensor Circuit Short to Power	• Parking aid module, rear inner right sensor data circuit - short to power	Carry out any pinpoint tests associated with this DTC using the manufacturer approved diagnostic system. Refer to electrical circuit diagrams, notes and check parking aid module, rear inner right sensor data circuit for short to power
C1709	Right Rear Center Sensor Circuit Failure	• Parking aid module, rear inner right sensor data circuit - open or short to ground	Carry out any pinpoint tests associated with this DTC using the manufacturer approved diagnostic system. Refer to electrical circuit diagrams, notes and check parking aid module, rear inner right sensor data circuit for open circuit or short to ground
C1710	Right Rear Center Sensor	• Parking aid module - rear inner right sensor fault	Carry out any pinpoint tests associated with this DTC using the manufacturer approved diagnostic system. Suspect

	Circuit Fault		rear inner right sensor fault
C1711	Left Front Sensor Circuit Short to Power	• Parking aid module, front outer left sensor data circuit - short to power	Carry out any pinpoint tests associated with this DTC using the manufacturer approved diagnostic system. Refer to electrical circuit diagrams, notes and check parking aid module, front outer left sensor data circuit for short to power
C1712	Left Front Sensor Circuit Failure	• Parking aid module, front outer left sensor data circuit - open or short to ground	Carry out any pinpoint tests associated with this DTC using the manufacturer approved diagnostic system. Refer to electrical circuit diagrams, notes and check parking aid module, front outer left sensor data circuit for open circuit or short to ground
C1713	Left Front Sensor Circuit Fault	• Parking aid module - front outer left sensor fault	Carry out any pinpoint tests associated with this DTC using the manufacturer approved diagnostic system. Suspect front outer left sensor fault
C1714	Right Front Sensor Circuit Short to Power	• Parking aid module, front outer right sensor data circuit - short to power	Carry out any pinpoint tests associated with this DTC using the manufacturer approved diagnostic system. Refer to electrical circuit diagrams, notes and check parking aid module, front outer right sensor data circuit for short to power
C1715	Right Front Sensor Circuit Failure	• Parking aid module, front outer right sensor data circuit - open or short to ground	Carry out any pinpoint tests associated with this DTC using the manufacturer approved diagnostic system. Refer to electrical circuit diagrams, notes and check parking aid module, front outer right sensor data circuit for open circuit or short to ground
C1716	Right Front Sensor Circuit Fault	• Parking aid module - front outer right sensor fault	Carry out any pinpoint tests associated with this DTC using the manufacturer approved diagnostic system. Suspect front outer right sensor fault

www.JagDocs.com

C1717	Left Front Center Sensor Circuit Short to Power	• Parking aid module, front inner left sensor data circuit - short to power	Carry out any pinpoint tests associated with this DTC using the manufacturer approved diagnostic system. Refer to electrical circuit diagrams, notes and check parking aid module, front inner left sensor data circuit for short to power
C1718	Left Front Center Sensor Circuit Failure	• Parking aid module, front inner left sensor data circuit - open or short to ground	Carry out any pinpoint tests associated with this DTC using the manufacturer approved diagnostic system. Refer to electrical circuit diagrams, notes and check parking aid module, front inner left sensor data circuit for open circuit or short to ground
C1719	Left Front Center Sensor Circuit Fault	• Parking aid module - front inner left sensor fault	Carry out any pinpoint tests associated with this DTC using the manufacturer approved diagnostic system. Suspect front inner left sensor fault
C1739	Right Front Center Sensor Circuit Short to Power	• Parking aid module, front inner right sensor data circuit - short to power	Carry out any pinpoint tests associated with this DTC using the manufacturer approved diagnostic system. Refer to electrical circuit diagrams, notes and check parking aid module, front inner right sensor data circuit for short to power
C1740	Right Front Center Sensor Circuit Failure	• Parking aid module, front inner right sensor data circuit - open or short to ground	Carry out any pinpoint tests associated with this DTC using the manufacturer approved diagnostic system. Refer to electrical circuit diagrams, notes and check parking aid module, front inner right sensor data circuit for open circuit or short to ground
C1741	Right Front Center Sensor Circuit Fault	• Parking aid module - front inner right sensor fault	Carry out any pinpoint tests associated with this DTC using the manufacturer approved diagnostic system. Suspect front inner right sensor fault
C1742	Rear Sounder Circuit Failure	• Parking aid module - rear sounder circuit failure (detected when speaker	Carry out any pinpoint tests associated with this DTC using the manufacturer approved diagnostic system. Refer to

		is off)	electrical circuit diagrams, notes and check parking aid module, rear sounder circuit for fault
C1743	Rear Sounder Circuit Short to Power	• Parking aid module - rear sounder circuit short to power (detected when speaker is on)	Carry out any pinpoint tests associated with this DTC using the manufacturer approved diagnostic system. Refer to electrical circuit diagrams, notes and check parking aid module, rear sounder circuit for short to power
C1744	Front Sounder Circuit Failure	• Parking aid module - front sounder circuit failure (detected when speaker is off)	Carry out any pinpoint tests associated with this DTC using the manufacturer approved diagnostic system. Refer to electrical circuit diagrams, notes and check parking aid module, front sounder circuit for fault
C1745	Front Sounder Circuit Short to Power	• Parking aid module - front sounder circuit short to power (detected when speaker is on)	Carry out any pinpoint tests associated with this DTC using the manufacturer approved diagnostic system. Refer to electrical circuit diagrams, notes and check parking aid module, front sounder circuit for short to power
C1748	Switch Input Circuit Short to Ground	• Parking aid module, roof console, parking aid switch, momentary disable switch circuit - short to ground (set if switch pushed > 10 seconds)	Refer to electrical circuit diagrams, notes and check parking aid module, momentary disable switch circuit for short to ground
C1920	LED #1 Circuit Failure	• Parking aid module, roof console, parking aid status LED circuit short to ground	Refer to electrical circuit diagrams, notes and check parking aid module, parking aid status LED circuit for short to ground

www.JagDocs.com

Front Parking Aid Speaker (86.54.18)

Removal

1 . Remove the instrument cluster. <<413-01>>

2 . Disconnect the electrical connector.

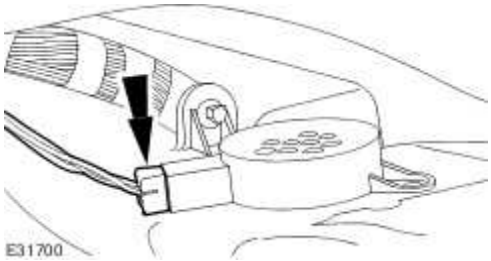

3 . Remove the parking aid speaker.

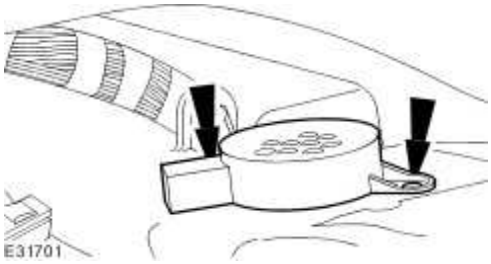

Installation

1 . To install, reverse the removal procedure.

Parking Aid Module - VIN Range: G00442->G45703 (86.80.39)

Removal

1 . Disconnect the battery ground cable.
For additional information, refer to

2 . Remove the spare wheel.

3 . Disconnect the electrical connector.

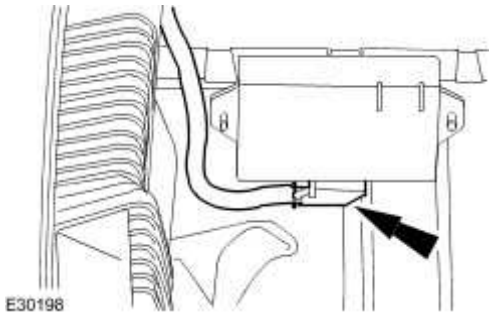

4 . Remove the parking aid module.

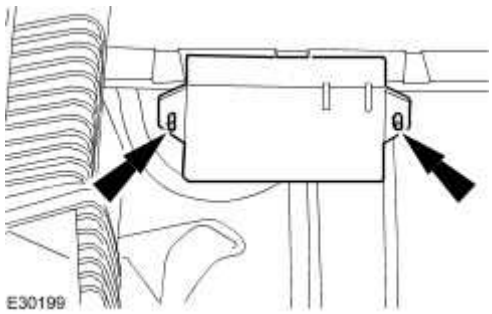

Installation

1 . To install, reverse the removal procedure.

www.JagDocs.com

Parking Aid Module - VIN Range: G45704->G99999 (86.80.39)

Removal

1 . Disconnect the battery ground cable.
For additional information, refer to Battery Ground Cable (86.15.19)

2 . Reposition the luggage compartment floor covering.

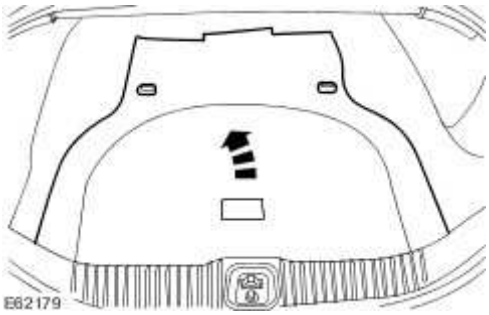

3 . Detach the parking aid module and bracket assembly.

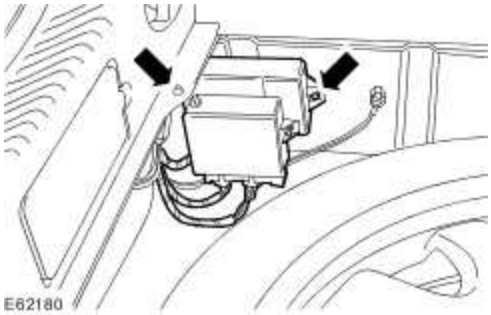

4 . Remove the parking aid module.

- Disconnect the parking aid module electrical connector.

Installation

1 . To install, reverse the removal procedure.

Tighten to 10 Nm.

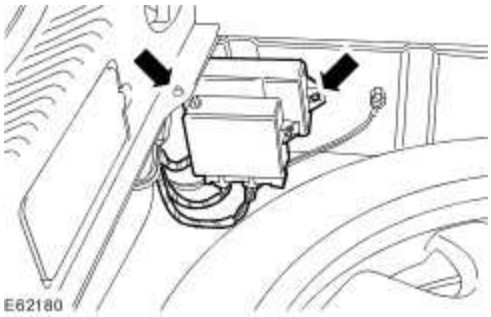

www.JagDocs.com

Parking Aid Sensor (86.62.01)

Removal

1 . Remove the bumper cover. <<501-19>>

2 . **NOTE:**

Rear parking aid sensor shown, front parking aid sensor similar.

Disconnect the electrical connector.

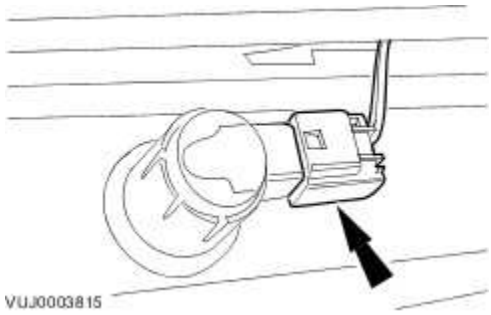

3 . **CAUTION: Make sure excessive pressure or tools are not used when removing the parking aid sensor from the housing.**

NOTE:

Rear parking aid sensor shown, front parking aid sensor similar.

Remove the parking aid sensor.

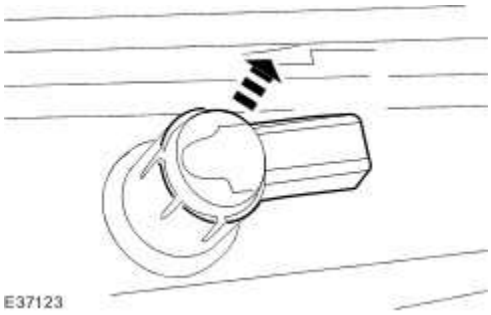

Installation

1 . To install, reverse the removal procedure.

Rear Parking Aid Speaker (86.54.19)

Removal

1 . Remove the parcel shelf. <<501-05>>

2 . Disconnect the electrical connector.

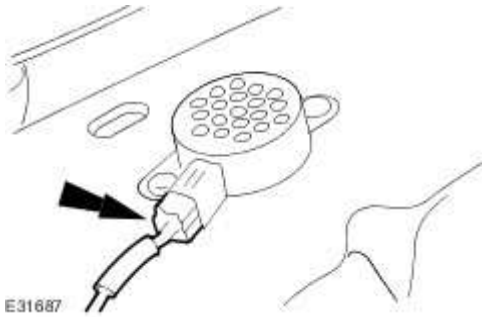

3 . Remove the parking aid speaker.

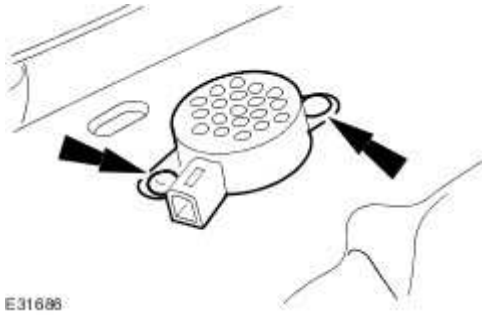

Installation

1 . To install, reverse the removal procedure.

www.JagDocs.com

414 : Battery and Charging System

414-00 : Charging System – General Information

General Procedures

Battery Charging

1. Before charging a discharged battery inspect and repair the following conditions, if necessary:

- Loose accessory drive belt.
- Pinched or grounded wiring harness to the generator or voltage regulator.
- Loose wiring harness connections at the generator or voltage regulator.
- Loose or corroded connections at battery, headlamp panel junction wire or engine ground.
- Carry out generator charging checks.
- Excessive battery quiescent drain due to:
  engine compartment, load space, glove compartment and courtesy lamps remaining on (switch damaged or out of adjustment, glove compartment left open).

Battery Charging - Maintenance-Free Batteries

WARNING: KEEP BATTERIES OUT OF REACH OF CHILDREN. BATTERIES CONTAIN SULPHURIC ACID, AVOID CONTACT WITH SKIN, EYES OR CLOTHING. SHIELD YOUR EYES WHEN WORKING NEAR THE BATTERY TO PROTECT AGAINST POSSIBLE SPLASHING OF THE ACID SOLUTION. IN CASE OF ACID CONTACT WITH SKIN OR EYES, FLUSH IMMEDIATELY WITH WATER FOR A MINIMUM OF 15 MINUTES AND SEEK PROMPT MEDICAL ATTENTION. IF ACID IS SWALLOWED, CALL A PHYSICIAN IMMEDIATELY. FAILURE TO FOLLOW THESE INSTRUCTIONS MAY RESULT IN PERSONAL INJURY.

WARNING: BATTERIES NORMALLY PRODUCE EXPLOSIVE GASES WHICH CAN CAUSE PERSONAL INJURY, THEREFORE DO NOT ALLOW FLAMES, SPARKS, OR LIGHTED SUBSTANCES TO COME NEAR THE

BATTERY. WHEN CHARGING OR WORKING NEAR A BATTERY ALWAYS SHIELD YOUR FACE AND PROTECT YOUR EYES . ALWAYS PROVIDE ADEQUATE VENTILATION. FAILURE TO FOLLOW THESE INSTRUCTIONS MAY RESULT IN PERSONAL INJURY.

1. Cold batteries will not readily accept a charge. Therefore, batteries should be allowed to warm up approximately to 15 degrees centigrade (59 degrees Fahrenheit) before charging. This may require 12 hours at room temperature depending on the initial temperature and battery size.

2. A battery which has been completely discharged may be slow to accept a charge initially, and in some cases may not accept a charge at the normal charger setting. When batteries are in this condition, charging can be started by use of the 'dead battery' switch which is fitted to certain types of battery chargers. Follow the manufacturer's instructions when carrying out this procedure.

3. To determine whether a battery is accepting a charge, follow the manufacturer's instructions for the charger.

4. After releasing dead battery switch and with the charger still operating, measure battery voltage. If the voltage is 12 volts or higher, the battery may be accepting a charge and may be capable of being recharged. If the temperature of the battery is below 15 degrees centigrade (59 degrees Fahrenheit) the battery may require charging for up to two hours before the charge rate is high enough to show on the charger ammeter. It has been found that all un-damaged batteries can be charged by this procedure. If a battery cannot be charged by this procedure, it should be replaced.

5. A rapid recharge procedure has been developed for recharging batteries that have passed the 'No-Load Test' and only need a recharge. This can be due to non start battery failures or battery discharged in vehicle due to key-off loads.

6. The battery can be rapidly recharged by using either of the following methods:
   - Perform a two hour charge using a constant current of 20 amps (manual setting on the charger).
   - Perform a two hour charge using a constant voltage (automatic setting on the charger).

Quiescent Current Measurement

1. **NOTE:**

   The following quiescent current measurement does not apply to vehicles fitted with the Tracker system. If the vehicle is fitted with the tracker system the quiescent current may be up to 14 milliamps higher. If non-jaguar approved accessories are installed the

www.JagDocs.com

following measurements may not apply.

Disconnect the battery ground cable. <<414-01>>

2. Check the vehicle off-load battery voltage. If below 12.5 volts, install a fully charged slave battery for the tests and recharge the vehicle battery.

3. Connect a suitable ammeter to the battery with the negative test lead clip to the negative battery terminal, and the positive test lead clip to the battery negative lead.

4. **NOTE:**
   Make sure that all electrical accessories are switched off.

Operate the key fob unlock button to disarm the vehicle security system.

- Switch the ignition to the RUN position for a 10 second duration.
- Switch the ignition to the OFF position. Remove the key.
- Close the vehicle doors and luggage compartment lid.

5. Monitor the ammeter reading for 30 minutes.

6. After 30 minutes the quiescent current reading should be no greater than 30 milliamps.

7. Disconnect the ammeter. Reconnect the battery ground cable. <<414-01>>

Charging System

The charging system for vehicles fitted with a 3.0L engine consist of a 120 amp L3B generator. Vehicles fitted with a 3.5L or 4.2L engine consist of a 130 amp SC1 generator. Vehicles fitted with a 2.7L Diesel engine consist of a 150 amp SC2 generator. The generator and regulator assembly generates current to supply the vehicle electrical system with electricity when the engine is running and maintain the battery in a charged state.

The generator is belt driven by the accessory drive belt. For additional information, refer to Accessory Drive (303-05)
When the engine is started, the generator begins to generate alternating current (AC) which is converted to direct current (DC) internally. The DC current and voltage is controlled by the voltage regulator, (located inside the generator) and then supplied to the battery through the main battery positive cable.

The 3.0L generator is solidly mounted to the engine, while the 3.5L and 4.2L generator is pivot mounted. The 2.7L Diesel generator is also solidly mounted to the engine. The generators are driven at approximately three times engine speed.

Vehicles fitted with 3.0L engine (L3B generator)

The engine control module (ECM) can switch the voltage regulator between two voltages to optimize the charging of the battery.

The low voltage regulator setting is 13.6 volts and the high voltage regulator setting 15.3 volts, measured with the generator at 25°C (77°F) and charging at a rate of 5 amps. These values decrease with a rise in temperature or current flow.

The ECM determines the output voltage setting of the generator. The high voltage setting is always selected by the ECM once the vehicle has started. The ECM determines the period of time that the high voltage setting is selected for.

There are three different time periods selected by the ECM which is dependent upon the vehicle conditions when the vehicle is started:

- The longest period of time is selected if the ECM determines that the vehicle has been 'soaking' for sufficient time to allow the engine coolant temperature (ECT) and the air intake temperature (IAT) to fall within 6°C (43°F) of each other.
- The intermediate time period is selected when the ECT and the IAT are below 15°C (59°F).
- The shortest time period is the default time and is used to provide a short period of boost charge.

www.JagDocs.com

At the end of these time periods the voltage is always set to the low voltage setting to prevent the battery from being over charged.

The time periods are variable depending upon the temperature and battery voltage. The target voltage of the battery varies between 14 volts and 15 volts depending upon the ambient temperature and the vehicle operating conditions. Once this target voltage has been achieved, providing the vehicle has been operating for at least the shortest time period, the ECM will reduce the voltage regulator to the minimum setting of 13.6 volts.

Vehicles fitted with 3.5L or 4.2L engine (SC1 generator)

The battery charging voltage is determined by the temperature of the generator. In cold conditions, starting the vehicle from cold the battery voltage will be between 14.2 volts and 15.1 volts and will reduce as the engine warms up. In hot conditions starting the vehicle when the engine is already warm the battery voltage will be between 13.5 volts and 14.3 volts.

A fault in the wiring or the connections from the generator to the ECM, will cause a fault code to be generated and stored in the ECM and the charge warning indicator lamp to be displayed in the instrument cluster after a short time.

With the ignition switch in the RUN position the charge warning lamp will be displayed in the instrument cluster when the generator is not generating power.

If a fault is detected with the generator a fault code will be generated and stored by the ECM. The charge warning indicator lamp will also be displayed in the instrument cluster. Units should be repaired as an assembly and not dismantled for repair. For additional information, refer to Generator (414-02)

Vehicles fitted with 2.7L Diesel engine (SC2 generator)

All vehicles use a PCM (Pulse Control Modulated) generator. This allows the output voltage to be controlled between 12.5 volts and 16 volts via a signal from the ECM.

This voltage is controlled between 13.5 volts & 15.5 volts. The system voltage is tailored more closely to the demands of the battery. At low ambient temperatures (as measured by the air conditioning ambient air sensor), the charging voltage is higher to improve charge acceptance. At high ambient temperatures the voltage is lower to reduce electrolyte loss and unnecessary battery self-heating. Also built into the strategy, is the ability to measure the battery voltage with the ignition switch in the ON position. A battery with low voltage, with the ignition switch in the ON position, is boost charged at a higher voltage for a calculated time before returning to its 'Base Characteristic' (defined by the prevailing ambient temperatures). The time and boost voltage depends upon the temperature and battery voltage with the ignition switch in the ON position.

All vehicles have a one way clutch fitted to the drive pulley, which reduces belt slip.

A fault in the wiring or the connections from the generator to the ECM, will cause a fault code to be

generated and stored in the ECM and the charge warning indicator lamp to be displayed in the instrument cluster after a short time.

With the ignition switch in the RUN position the charge warning lamp will be displayed in the instrument cluster when the generator is not generating power.

If a fault is detected with the generator a fault code will be generated and stored by the ECM. The charge warning indicator lamp will also be displayed in the instrument cluster. Units should be repaired as an assembly and not dismantled for repair. For additional information, refer to Generator (414-02)

www.JagDocs.com

Charging System

Principle of operation

For a detailed principle of operation,
Charging System

Inspection and Verification

1 . Verify the customer concern.

2 . Visually inspect for obvious signs of mechanical or electrical damage.

3 . Check the vehicle battery condition and state of charge before condemning any of the charging system components. For additional information, refer to the battery care manual.

Visual Inspection Chart

Mechanical	Electrical
• Generator • Drive belt • Drive belt tensioner • Generator pulley • Check the security of the generator fittings	• Generator • Battery • Charging system warning light function (ignition **ON**, engine **OFF**) • Fuse 33 (5A) (passenger junction fuse box) • Fuse 30 (10A) (Rear power distribution box) Vehicles with 3.5L or 4.2L engine • Engine/generator ground connection • Circuit(s) • Electrical connector(s) • Engine control module (ECM)

1 . If an obvious cause for an observed or reported concern is found, correct the cause (if possible) before proceeding to the next step.

2 . If the cause is not visually evident and the Jaguar approved diagnostic system is not available, use a scan tool to retrieve the fault codes before proceeding to the Symptom Chart.

CAUTION: When probing connectors to take measurements in the course of the pinpoint tests, use the adaptor kit, part number 3548-1358-00.

NOTE:

When performing electrical voltage or resistance tests, always use a digital multimeter (DMM) accurate to 3 decimal places, and with an up-to-date calibration certificate. When testing resistance, always take the resistance of the DMM leads into account.

NOTE:

Check and rectify basic faults before beginning diagnostic routines involving pinpoint tests.

DTC	Condition	Possible Source	Action
P1146 (V6 only)	Generator **control** circuit low voltage	• Generator to ECM **control** circuit: open circuit, high resistance • Generator regulator failure • ECM	For generator and **control** circuit open circuit and high resistance tests, GO to Pinpoint Test G215852p1. .
P1244 (V6 only)	Generator **control** circuit high voltage	• Generator to ECM **control** circuit: short circuit to high voltage • Generator regulator failure • Generator failure • ECM	For generator and **control** circuit short circuit tests, GO to Pinpoint Test G215852p2. .
P1629 (V6 only)	Generator **field return** circuit failure (battery warning light illuminated)	• Generator **field return** circuit: open circuit, high resistance, short circuit • Generator regulator failure • Generator failure • ECM	For generator **field return** circuit tests, GO to Pinpoint Test G215852p3. .
P1632	Charging system fault (battery warning light illuminated)	• Accessory drive belt • ECM to generator **charge/fault** circuit: short circuit, open circuit, high resistance • Fuse 30 (10A), rear power distribution box (vehicles with	Check the accessory drive belt tension, <<303-05>> For **charge/fault** circuit tests, GO to Pinpoint Test G215852p4. .

www.JagDocs.com

		V8 engine only) • Generator failure • ECM	
P2503 (may also set P1146) vehicles with V6 engine only	Charging system voltage low	• **B+** cable between generator and battery: open circuit, high resistance • Starter motor GROUND circuit: open circuit, high resistance • Generator GROUND fault • ECM	For P1146, GO to Pinpoint Test G215852p1. , for charging system circuit tests, GO to Pinpoint Test G215852p5. .
P2504 (may also set P1146) vehicles with V6 engine only	Charging system voltage high	• Generator failure • Charging system exposed to high voltage	For P1146, GO to Pinpoint Test G215852p1. , for charging system circuit tests, GO to Pinpoint Test G215852p6. .
None	The battery warning light is on, intermittent, or flickers with the engine running	• Battery, low voltage • Accessory drive belt tension • Fuse 33, passenger junction box (vehicles with 3.5L or 4.2L engine) • Generator failure • ECM • Instrument cluster (IC) fault • Controller area network (CAN) fault	Check the battery condition and state of charge. Refer to the battery care manual. Check the accessory drive belt tension, <<303-05>> If a generator, ECM or IC fault occurs, this should be signalled by the setting of a DTC. For details of all DTCs set by the ECM, <<303-14>> For CAN circuit tests, <<418-00>>
None	The battery keeps discharging	• Battery fault • Battery quiescent drain • Accessory drive belt tension • Fuse 33, primary junction box (vehicles with 3.5L or 4.2L engine) • Generator failure • Generator pulley	Check the battery condition and state of charge. Refer to the battery care manual. Check the accessory drive belt tension, <<303-05>> If a generator fault occurs, this should be signalled by the setting of a DTC. For details of all DTCs set by the ECM, <<303-14>> Check that the generator pulley does not turn independently of the generator.

		fault	
None	Generator noisy	• Generator failure • Accessory drive belt tension • Accessory drive belt • Accessory drive belt tensioner	For generator mechanical tests, GO to Pinpoint Test G215852p8. . Check the accessory drive belt and tensioners, <<303-05>>
None	Radio interference	• Generator • Wiring harness	For interference tests, GO to Pinpoint Test G215852p9. .

Pinpoint tests

PINPOINT TEST G215852p1 : P1146: GENERATOR CONTROL CIRCUIT, LOW VOLTAGE OR OPEN CIRCUIT

G215852t13 : CHECK THE IGNITION SUPPLY TO THE GENERATOR

1. Turn the ignition switch to the **OFF** position. 2. Disconnect the generator electrical connector, PI47. 3. Turn the ignition switch to the **ON** position. 4. Measure the voltage between PI47, pin 02 (GO) and GROUND.

- **Is the voltage less than 10 volts?**

-> Yes
REPAIR the circuit between PI47, pin 02 and battery. This circuit includes the passenger junction fuse box (fuse 33), the ignition switch and the megafuses. For additional information, refer to the wiring diagrams. CLEAR the DTC, test the system for normal operation.

-> No
GO to Pinpoint Test G215852t4.

G215852t4 : CHECK THE GENERATOR TO ECM CONTROL CIRCUIT FOR HIGH RESISTANCE

1. Disconnect the ECM electrical connector, PI01. 2. Measure the resistance between PI47, pin 01 (YR) and PI01, pin 53 (YR).

- **Is the resistance greater than 5 ohms?**

www.JagDocs.com

-> Yes
REPAIR the high resistance circuit. For additional information, refer to the wiring diagrams. CLEAR the DTC, test the system for normal operation.

-> No
INSTALL a new generator. CLEAR the DTC, test the system for normal operation. If the DTC is repeated, contact dealer technical support for advice on possible ECM failure.

PINPOINT TEST G215852p2 : P1244: GENERATOR CONTROL CIRCUIT, HIGH VOLTAGE

G215852t11 : CHECK THE GENERATOR TO ECM CONTROL CIRCUIT FOR SHORT CIRCUIT TO HIGH VOLTAGE

1. Disconnect the battery negative terminal. 2. Disconnect the generator electrical connector, PI47. 3. Measure the resistance between PI47, pin 01 (YR) and the battery positive terminal.

- **Is the resistance less than 10,000 ohms?**

-> Yes
REPAIR the short circuit. For additional information, refer to the wiring diagrams. CLEAR the DTC, test the system for normal operation.

-> No
INSTALL a new generator. CLEAR the DTC, test the system for normal operation. If the DTC is repeated, contact dealer technical support for advice on possible ECM failure.

PINPOINT TEST G215852p3 : P1629: GENERATOR FIELD RETURN CIRCUIT FAILURE

G215852t1 : CHECK THE GENERATOR ELECTRICAL CONNECTOR FOR DAMAGE

1. Carefully inspect the generator connector, PI47 for damage/correct installation.

- **Is the connector damaged or incorrectly installed?**

-> Yes
INSTALL/REPAIR the connector as necessary. Test the system for normal operation.

-> No

GO to Pinpoint Test G215852t2.

G215852t2 : CHECK THE IGNITION SUPPLY TO THE GENERATOR

1. Disconnect the generator connector, PI47. 2. Turn the ignition switch to the **ON** position. 3. Measure the voltage between PI47, pin 02 (GO) and GROUND.

- **Is the voltage more than 9 volts?**

-> Yes
GO to Pinpoint Test G215852t3.

-> No
REPAIR the circuit between the generator and the ignition switch. This circuit includes fuse 40 of the rear power distribution box. For additional information, refer to the wiring diagrams. CLEAR the DTC. TEST the system for normal operation.

G215852t3 : CHECK THE VOLTAGE AT THE FIELD RETURN TERMINAL

1. Turn the ignition switch to the **ON** position. 2. Measure the voltage between PI47, pin 03 (WR) and GROUND.

- **Is the voltage more than 9 volts?**

-> Yes
GO to Pinpoint Test G215852t5.

-> No
GO to Pinpoint Test G215852t12.

G215852t5 : CHECK THE FIELD RETURN CIRCUIT FOR A SHORT TO BATTERY

1. Turn the ignition switch to the **OFF** position. 2. Measure the voltage between PI47, pin 03 (WR) and GROUND.

- **Is the voltage less than 1 volt?**

-> Yes
INSTALL a new generator. CLEAR the DTC. TEST the system for normal operation.

-> No
REPAIR the short circuit. For additional information, refer to the wiring diagrams. CLEAR the DTC. TEST the system for normal operation.

www.JagDocs.com

G215852t12 : CHECK THE GENERATOR FIELD RETURN CIRCUIT FOR HIGH RESISTANCE

1. Disconnect the battery negative terminal. 2. Disconnect the generator electrical connector, PI47. 3. Disconnect the ECM electrical connector, PI01. 4. Measure the resistance between PI47, pin 03 (WR) and PI01, pin 65 (WR).

- **Is the resistance greater than 5 ohms?**

-> Yes
REPAIR the high resistance circuit. For additional information, refer to the wiring diagrams. CLEAR the DTC, test the system for normal operation.

-> No
INSTALL a new generator. Clear the DTC, test the system for normal operation. If the fault is repeated, contact dealer technical support for advice on possible ECM failure.

PINPOINT TEST G215852p4 : P1632: CHARGING SYSTEM FAULT

G215852t6 : CHECK THE BATTERY VOLTAGE WITH THE ENGINE RUNNING

1. Connect a suitable voltmeter across the battery terminals. 2. Start the engine and allow to idle with no electrical loads applied. 3. Measure the maximum voltage achieved at the battery after start.

- **Is the voltage less than 10.5 volts?**

-> Yes
GO to Pinpoint Test G215852t8.

-> No
For vehicles with V6 engine; GO to Pinpoint Test G215852t8.

For vehicles with V8 engine; GO to Pinpoint Test G215852t7.

G215852t8 : CARRY OUT BATTERY CONDITION TEST (SEE BATTERY CARE MANUAL)

1. Carry out the procedure in the battery care manual.

- **Is the battery OK?**

-> Yes
GO to Pinpoint Test G215852t18.

-> No
INSTALL a fully-charged battery.

G215852t18 : CHECK THE GROUND TO THE GENERATOR

1. Turn the ignition switch to the **OFF** position. 2. Measure the resistance between the generator body and GROUND.

- **Is the resistance greater than 5 ohms?**

-> Yes
CHECK the security and condition of the GROUND lead to the transmission. CHECK that there is a good electrical contact between the generator and it's mounting. CLEAR the DTC, test the system for normal operation.

-> No
GO to Pinpoint Test G215852t19.

G215852t19 : CHECK THE BATTERY TO GENERATOR CABLES FOR HIGH RESISTANCE

1. Disconnect the battery negative terminal. 2. Disconnect the battery positive terminal. 3. Disconnect the **B+** terminal from the starter motor. 4. Disconnect the **B+** terminal from the generator. 5. Measure the resistance of both leads.

- **Is either resistance greater than 5 ohms?**

-> Yes
INSTALL a new lead. CLEAR the DTC, test the system for normal operation.

-> No
GO to Pinpoint Test G215852t20.

G215852t20 : CHECK THE "L" LINE TO THE ECM

1. Reconnect both battery terminals. 2. Disconnect the alternator connector, PI47. 3. Turn the ignition switch to the **ON** position. **For vehicles with V6 engine**

- Measure the voltage between PI47, pin 04 (YR) and GROUND.

For vehicles with V8 engine

- Measure the voltage between PI47, pin 01 (YR) and GROUND.

- **Is the voltage greater than 10 volts?**

www.JagDocs.com

-> Yes
GO to Pinpoint Test G215852t9.

-> No
CHECK the circuit between the ECM and the generator for open circuit/high resistance. REPAIR as necessary. CLEAR the DTC, test the system for normal operation. If the fault persists, contact dealer technical support for advice on possible ECM failure.

G215852t9 : CHECK THE "L" LINE FOR SHORT TO BATTERY

1. Turn the ignition switch to the **OFF** position. **For vehicles with V6 engine**

- Measure the voltage between PI47, pin 04 (YR) and GROUND.

For vehicles with V8 engine

- Measure the voltage between PI47, pin 01 (YR) and GROUND.
- **Is the voltage less than 1 volt?**

-> Yes
GO to Pinpoint Test G215852t21.

-> No
REPAIR the short circuit. For additional information, refer to the wiring diagrams. CLEAR the DTC, test the system for normal operation.

G215852t21 : CHECK THE GENERATOR DRIVE PULLEY

1. Remove the accessory drive belt, <<303-05>> 2. Rotate the generator pulley by hand.

- **Does the generator rotor shaft rotate with the pulley?**

-> Yes
INSTALL a new generator. CLEAR the DTC, test the system for normal operation. If the fault is repeated, contact dealer technical support for advice on possible ECM failure.

-> No
INSTALL a new generator. CLEAR the DTC, test the system for normal operation.

G215852t7 : CHECK THE VOLTAGE AT THE GENERATOR SENSE TERMINAL (VEHICLES WITH V8 ENGINE ONLY)

1. Disconnect the generator electrical connector, PI48. 2. Measure the voltage between PI48, pin 03 (NG) and GROUND.

- **Is the voltage less than 10 volts?**

-> Yes
REPAIR the high resistance circuit. For additional information, refer to the wiring diagrams. CLEAR the DTC, test the system for normal operation.

-> No
GO to Pinpoint Test G215852t10.

G215852t10 : CHECK FUSE 30 IN THE REAR DISTRIBUTION BOX (VEHICLES WITH V8 ENGINE ONLY)

1. Check the fuse condition.

- **Is the fuse blown?**

-> Yes
GO to Pinpoint Test G215852t22.

-> No
REPAIR the circuit between the rear power distribution box and the generator, test the system for normal operation.

G215852t22 : CHECK FUSE 30 IN THE REAR DISTRIBUTION BOX FOR A SHORT TO GROUND (VEHICLES WITH V8 ENGINE ONLY)

1. Measure the resistance between the fuse box, terminal 01 and GROUND.

- **Is the resistance less than 10,000 ohms?**

-> Yes
REPAIR the short circuit. For additional information, refer to the wiring diagrams. INSTALL a new fuse, test the system for normal operation.

-> No
INSTALL a new fuse, test the system for normal operation.

PINPOINT TEST G215852p5 : P2503: CHARGING SYSTEM VOLTAGE LOW

G215852t14 : CHECK FOR DTC AFTER FULL LOAD TEST

1. Clear all DTCs. 2. Start the engine and run at 1500 rpm with all electrical loads switched **ON**, except the heated front screen.

- **Does P2503 reflag within five minutes?**

www.JagDocs.com

-> Yes
GO to Pinpoint Test G215852t15.

-> No
No charging system fault found.

G215852t15 : CHECK THE BATTERY TO GENERATOR CABLES FOR HIGH RESISTANCE

1. Turn the ignition switch to the **OFF** position. 2. Disconnect the battery negative terminal. 3. Disconnect the battery positive terminal. 4. Disconnect the **B+** terminal from the starter motor. 5. Disconnect the **B+** terminal from the generator. 6. Measure the resistance of both leads.

- **Is either resistance greater than 5 ohms?**

-> Yes
INSTALL a new lead. CLEAR the DTC, test the system for normal operation.

-> No
GO to Pinpoint Test G215852t16.

G215852t16 : CHECK FOR DTC AFTER CLEANING CONNECTIONS

1. Clean all connections in the supply and GROUND circuits. 2. Clear all DTCs. 3. Start the engine and run at 1500 rpm with all electrical loads switched **ON**, except the heated front screen.

- **Does P2503 reflag within five minutes?**

-> Yes
INSTALL a new generator. CLEAR the DTC, test the system for normal operation. If the DTC is repeated, contact dealer technical support for advice on possible ECM and/or power feeds failure.

-> No
Fault rectified.

PINPOINT TEST G215852p6 : P2504: CHARGING SYSTEM VOLTAGE HIGH

G215852t17 : CHECK FOR DTC AFTER MINIMUM LOAD TEST

1. Clear all DTCs. 2. Start the engine and allow to idle with no additional electrical load. 3. Allow the engine to idle for at least five minutes while checking for DTCs.

- **Does P2504 reflag within five minutes?**

-> Yes
INSTALL a new generator. CLEAR the DTC, test the system for normal operation.

-> No
CHECK with owner/driver for any history of boost charging.

PINPOINT TEST G215852p8 : GENERATOR NOISY

G215852t74 : CHECK THE GENERATOR FOR SECURITY

1. Inspect the generator fixings.

- **Is the generator secure?**

-> Yes
GO to Pinpoint Test G215852t75.

-> No
SECURE the generator. TEST the system for normal operation.

G215852t75 : CHECK THE ACCESSORY DRIVE BELT

1. Remove and inspect the accessory drive belt. For additional information <<303-05>>

- **Is the accessory drive belt in good condition?**

-> Yes
GO to Pinpoint Test G215852t76.

-> No
INSTALL a new accessory drive belt. TEST the system for normal operation.

G215852t76 : CHECK THE ACCESSORY DRIVE BELT TENSIONER

1. Remove and inspect the accessory drive belt tensioner. <<303-05>>

- **Is the accessory drive belt tensioner in good condition?**

-> Yes
GO to Pinpoint Test G215852t77.

-> No
INSTALL a new accessory drive belt tensioner. TEST the system for normal operation.

www.JagDocs.com

G215852t77 : CHECK THE GENERATOR FOR MECHANICAL NOISE

1. Rotate the generator pulley by hand.

- **Does the generator rotor shaft rotate smoothly and quietly?**

-> Yes
GO to Pinpoint Test G215852t79.

-> No
INSTALL a new generator. TEST the system for normal operation.

G215852t79 : CHECK THE ACCESSORY DRIVE BELT IDLER PULLEYS

1. Rotate the accessory drive belt idler pulleys by hand.

- **Do the accessory drive belt idler pulleys rotate smoothly and quietly?**

-> Yes
GO to Pinpoint Test G215852t80.

-> No
INSTALL new accessory drive belt pulleys as necessary. TEST the system for normal operation.

G215852t80 : CHECK THE GENERATOR FOR ELECTRICAL NOISE

1. Install the accessory drive belt. 2. Start and run the engine at 1500 rpm. Apply a high electrical load to the battery.

- **Is the noise only heard with the high electrical load applied?**

-> Yes
GO to Pinpoint Test G215852t81.

-> No
CHECK the air conditioning compressor. For additional information <<412-03>> CHECK the power steering pump. For additional information <<211-02>> TEST the system for normal operation.

G215852t81 : ELIMINATE THE GENERATOR AS THE CAUSE OF ELECTRICAL NOISE

1. Remove fuse 15 from the primary junction fuse box. 2. Start and run the engine at 1500 rpm.

- **Is the noise still present?**

-> Yes
CHECK the air conditioning compressor. For additional information <<412-03>> CHECK the power

steering pump. For additional information <<211-02>> TEST the system for normal operation.

-> No
INSTALL a new generator. TEST the system for normal operation.

PINPOINT TEST G215852p9 : RADIO INTERFERENCE

G215852t82 : CHECK IF THE GENERATOR IS THE CAUSE OF THE RADIO INTERFERENCE

1. Start and run the engine at 1500 rpm. 2. Turn the radio to the **ON** position, and select the affected station.

- **Is the radio interference present?**

-> Yes
GO to Pinpoint Test G215852t84.

-> No
GO to Pinpoint Test G215852t83.

G215852t83 : CHECK IF THE GENERATOR IS THE CAUSE OF THE RADIO INTERFERENCE WITH A HIGH ELECTRICAL LOAD APPLIED TO THE BATTERY

1. Start and run the engine at 1500 rpm. 2. Apply a high electrical load to the battery. 3. Turn the radio to the **ON** position, and select the affected station.

- **Is the radio interference present?**

-> Yes
GO to Pinpoint Test G215852t84.

-> No
DIAGNOSE the entertainment system. For additional information <<415-00>>

G215852t84 : ELIMINATE THE GENERATOR AS THE CAUSE OF RADIO INTERFERENCE

1. Remove fuse 33 from the primary junction fuse box. 2. Start and run the engine at 1500 rpm. 3. Turn the radio to the **ON** position, and select the affected station.

- **Is the radio interference present?**

www.JagDocs.com

-> Yes
DIAGNOSE the entertainment system. For additional information <<415-00>>

-> No
CLEAN and tighten all mounting points, positive and negative cable connections (including the bonnet, boot and engine GROUND straps). INSTALL fuse 15 from the primary junction fuse box. TEST the system for normal operation. If interference is still present, INSTALL a new generator.

Charging System - 2.7L V6 - TdV6

Overview

There are changes to diagnostics for 2006 my, the most obvious of which will be the change to 7-digit diagnostic trouble codes (DTCs) from the familiar 5-digit.

Refer to the DTC index in this section for guidance on how to use these codes with the Jaguar approved diagnostic system or a scan tool.

For information on the operation of the system,
Charging System

Inspection and Verification

1 . Verify the customer concern.

2 . Visually inspect for obvious signs of mechanical and electrical damage.

Mechanical	Electrical
• Generator • Front end accessory drive (FEAD) belt condition and tension • Accessory drive belt tensioner • Generator pulley • Generator fittings/connections	• Generator • Battery • Starter motor • Harnesses and connectors • Fuse 30, rear power distribution box • Starter motor megafuse • Charge warning light function • Controller area network (CAN) circuit fault • Engine control module (ECM)

3 . Check the vehicle battery condition and state of charge before condemning any charging system components. For additional information, refer to the battery care manual.

4 . If an obvious cause for an observed or reported concern is found, correct the cause (if possible) before proceeding to the next step.

5 . If the cause is not visually evident use the Jaguar approved diagnostic system or a scan tool to retrieve the fault codes before proceeding to the DTC index, or the symptom chart if no DTCs are set.

Symptom chart

Symptom	Possible cause	Action
Charge warning	• Bulb/circuit fault	Check the warning light function with the ignition on

www.JagDocs.com

light does not come on	• Generator fault • CAN circuit fault • ECM fault	and the engine off. Replace bulbs or repair the circuit(s) as necessary. Check for DTCs indicating a generator, CAN or ECM fault.
Charge warning light stays on/battery discharges	• Accessory drive belt broken • Generator pulley slipping on shaft • Generator fault • Battery cable fault • CAN circuit fault • ECM fault	Check fuse 30 of the rear power distribution box. GO to Pinpoint Test G552802p4. Check the battery and generator cables. GO to Pinpoint Test G552802p3. Check for DTCs indicating a generator fault. Check the accessory drive belt condition and tension (see visual inspection chart). Check that the pulley does not rotate independently of the generator. Check for DTCs indicating a CAN or ECM fault.
Charge warning light intermittent	• Accessory drive belt slipping • Battery cable fault • Generator wiring fault • Generator fault • CAN circuit fault	Check the accessory drive belt condition and tension (see visual inspection chart). Check the battery and generator cables. GO to Pinpoint Test G552802p3. Check for DTCs indicating a generator or CAN circuit fault. Note that the use of a power pack or boost charger may bring the warning light on until disconnected.
Battery discharges without the charge warning light staying on	• Battery fault • Battery quiescent drain • Intermittent generator fault	Check the battery condition, check for battery drain. Refer to the battery care manual. Check for DTCs indicating a generator fault. It is possible for the altcom circuit to short circuit to ground without setting a DTC. If no other reason for discharge can be found, check this circuit. GO to Pinpoint Test G552802p1.
Noise (mechanical)	• Accessory drive belt slipping • Generator fault	Check the accessory drive belt condition and tension (see visual inspection chart). Disconnect the accessory drive belt and check that the generator rotates freely. For additional information. Accessory Drive Belt - 2.7L V6 - TdV6 (12.10.40)

DTC index

NOTE:

Generic scan tools may not read the codes listed, or may read only 5-digit codes. Match the 5 digits from the scan tool to the first 5 digits of the 7-digit code listed to identify the fault (the last 2 digits give extra information read by the manufacturer-approved diagnostic system).

NOTE:

For a full list of powertrain DTCs,
Electronic Engine Controls

DTC	Description	Possible causes	Action
P062200	Generator monitor circuit plausibility	• PWM signal incorrect	For generator monitor circuit tests, GO to Pinpoint Test G552802p1.
P062500	Generator monitor circuit fault	• Voltage sense circuit: high resistance • Generator B+ circuit: high resistance/intermittent • Generator monitor circuit: short circuit to ground	Check fuse 30 of the rear power distribution box. GO to Pinpoint Test G552802p4. Carry out the battery cable volt drop tests. GO to Pinpoint Test G552802p3. For generator monitor circuit tests. GO to Pinpoint Test G552802p1.
P062600	Generator monitor circuit fault	• Generator connector: loose/not connected • Generator monitor circuit: short circuit to power • Generator monitor circuit: high resistance	Carry out the battery cable volt drop tests. GO to Pinpoint Test G552802p3. For generator monitor circuit tests. GO to Pinpoint Test G552802p1.
P065B00	Generator command circuit fault	• Generator command circuit: short circuit to ground • Generator command circuit: short circuit to power • Generator command circuit: high resistance	For generator command circuit tests. GO to Pinpoint Test G552802p2.

Pinpoint tests

CAUTION: When probing connectors to take measurements in the course of the pinpoint tests, use the adaptor kit, part number 3548-1358-00. Failure to follow this instruction may result in damage to the vehicle.

www.JagDocs.com

NOTE:

When performing voltage or resistance tests, always use a digital multimeter (DMM) accurate to 3 decimal places, and with an up-to-date calibration certificate. When testing resistance, always take the resistance of the DMM leads into account.

NOTE:

Check and rectify basic faults before beginning diagnostic routines involving pinpoint tests.

NOTE:

If DTCs are recorded and a fault is not present when performing the pinpoint tests, an intermittent concern may be the cause. Always check for loose connections and corroded terminals.

PINPOINT TEST G552802p1 : GENERATOR MONITOR CIRCUIT

G552802t1 : CHECK THE MONITOR CIRCUIT FOR SHORT CIRCUIT TO GROUND

1.

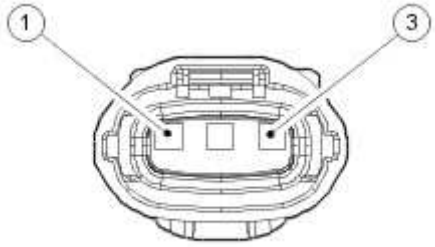

E66145

Circuit	Pin
Voltage sense circuit	01
Altcom	02
Altmon	03

2.

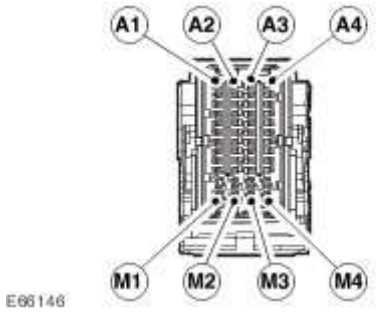

Circuit	Pin
Altmon	F2

3. Key off. 4. Disconnect the generator connector, C073. 5. Key on, engine off. 6. Measure the resistance between:

C073, harness side	Battery
Pin 03	Negative terminal

- **Is the resistance greater than 10 Kohms?**

-> Yes
GO to Pinpoint Test G552802t3.

-> No
GO to Pinpoint Test G552802t2.

G552802t2 : CHECK WHETHER THE SHORT CIRCUIT IS IN THE HARNESS OR THE MODULE

1. Key off. 2. Disconnect the ECM connector, C101. 3. Key on, engine off. 4. Measure the resistance between:

C073, harness side	Battery
Pin 03	Negative terminal

- **Is the resistance greater than 10 Kohms?**

www.JagDocs.com

-> Yes
An intermittent fault may be present in the wiring harness. Visually check for chaffed wires or other physical damage to the harness. Refer to the warranty policy and procedures manual if a module is suspect.

-> No
REPAIR the short circuit. For additional information, refer to the wiring diagrams. Clear the DTC, test the system for normal operation.

G552802t3 : CHECK THE MONITOR CIRCUIT FOR SHORT CIRCUIT TO POWER

1. Measure the resistance between:

C073, harness side	Battery
Pin 03	Positive terminal

- **Is the resistance greater than 10 Kohms?**

-> Yes
GO to Pinpoint Test G552802t5.

-> No
GO to Pinpoint Test G552802t4.

G552802t4 : CHECK WHETHER THE SHORT CIRCUIT IS IN THE HARNESS OR THE MODULE

1. Key off. 2. Disconnect the ECM connector, C101 3. Key on, engine off. 4. Measure the resistance between:

C073, harness side	Battery
Pin 03	Negative terminal

- **Is the resistance greater than 10 Kohms?**

-> Yes
An intermittent fault may be present in the wiring harness. Visually check for chaffed wires or other physical damage to the harness. Refer to the warranty policy and procedures manual if a module is suspect.

-> No
REPAIR the short circuit. For additional information, refer to the wiring diagrams. Clear the DTC, test the system for normal operation.

G552802t5 : CHECK THE MONITOR CIRCUIT FOR HIGH RESISTANCE

1. Key off. 2. Disconnect the ECM connector, C101 3. Key on, engine off. 4. Measure the resistance between:

C073, harness side	C101, harness side
Pin 03	Pin F2

- **Is the resistance less than 10 ohms?**

-> Yes
An intermittent fault may be present in the wiring harness. Visually check for chaffed wires or other physical damage to the harness.

-> No
REPAIR the high resistance circuit. For additional information, refer to the wiring diagrams. Clear the DTC, test the system for normal operation.

PINPOINT TEST G552802p2 : GENERATOR COMMAND CIRCUIT

G552802t6 : CHECK THE COMMAND CIRCUIT FOR SHORT CIRCUIT TO GROUND

1.

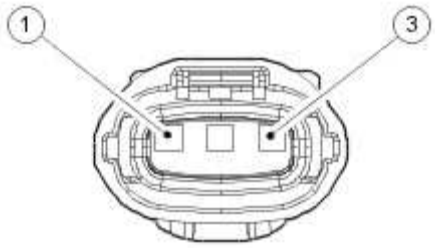

E66145

Circuit	Pin
Voltage sense circuit	01

www.JagDocs.com

Altcom	02
Altmon	03

2.

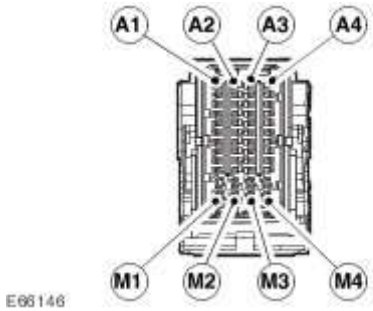

Circuit	Pin
Altcom	H1

3. Key off. 4. Disconnect the generator connector, C073. 5. Key on, engine off. 6. Measure the resistance between:

C073, harness side	Battery
Pin 02	Negative terminal

- **Is the resistance greater than 10 Kohms?**

-> Yes
GO to Pinpoint Test G552802t8.

-> No
GO to Pinpoint Test G552802t7.

G552802t7 : CHECK WHETHER THE SHORT CIRCUIT IS IN THE HARNESS OR THE MODULE

1. Key off. 2. Disconnect the ECM connector, C101. 3. Key on, engine off. 4. Measure the resistance between:

C073, harness side	Battery

Pin 02	Negative terminal

- **Is the resistance greater than 10 Kohms?**

-> Yes
An intermittent fault may be present in the wiring harness. Visually check for chaffed wires or other physical damage to the harness. Refer to the warranty policy and procedures manual if a module is suspect.

-> No
REPAIR the short circuit. For additional information, refer to the wiring diagrams. Clear the DTC, test the system for normal operation.

G552802t8 : CHECK THE COMMAND CIRCUIT FOR SHORT CIRCUIT TO POWER

1. Measure the resistance between:

C073, harness side	Battery
Pin 02	Positive terminal

- **Is the resistance greater than 10 Kohms?**

-> Yes
GO to Pinpoint Test G552802t10.

-> No
GO to Pinpoint Test G552802t9.

G552802t9 : CHECK WHETHER THE SHORT CIRCUIT IS IN THE HARNESS OR THE MODULE

1. Key off. 2. Disconnect the ECM connector, C101 3. Key on, engine off. 4. Measure the resistance between:

C073, harness side	Battery
Pin 02	Positive terminal

www.JagDocs.com

- **Is the resistance greater than 10 Kohms?**

-> Yes
An intermittent fault may be present in the wiring harness. Visually check for chaffed wires or other physical damage to the harness. Refer to the warranty policy and procedures manual if a module is suspect.

-> No
REPAIR the short circuit. For additional information, refer to the wiring diagrams. Clear the DTC, test the system for normal operation.

G552802t10 : CHECK THE COMMAND CIRCUIT FOR HIGH RESISTANCE

1. Key off. 2. Disconnect the ECM connector, C101 3. Key on, engine off. 4. Measure the resistance between:

C073, harness side	C101, harness side
Pin 02	Pin H1

- **Is the resistance less than 10 ohms?**

-> Yes
An intermittent fault may be present in the wiring harness. Visually check for chaffed wires or other physical damage to the harness.

-> No
REPAIR the high resistance circuit. For additional information, refer to the wiring diagrams. Clear the DTC, test the system for normal operation.

PINPOINT TEST G552802p3 : BATTERY CABLE VOLT DROP

G552802t11 : CHECK FOR GENERATOR OUTPUT

1. Key off. 2. Measure and record the voltage between:

Battery	Battery
Positive terminal	Negative terminal

3. Key on, engine running.

Allow to idle 4. Switch off all electrical loads, including heater blowers. 5. Measure and record the voltage between:

Battery	Battery
Positive terminal	Negative terminal

- **Is the voltage greater than in step 2?**

-> Yes
GO to Pinpoint Test G552802t12.

-> No
CHECK the connections at either end of the circuit for cleanliness and security. Check for high resistance in the circuit. Clean or replace as necessary. Check that the generator is charging. Test the system for normal operation.

G552802t12 : CHECK FOR VOLT DROP BETWEEN THE BATTERY AND THE GENERATOR

1. Switch on all lights, select maximum heater blower speed, and turn on the rear heated screen. 2. Measure the voltage between:

Generator	Battery
Connector, ST07	Positive terminal

- **Is the voltage less than 0.5 volts?**

-> Yes
An intermittent fault may be present in the wiring harness. Visually check for chaffed wires or other physical damage to the harness. Check for DTCs indicating another cause of the concern.

-> No
CHECK the connections at either end of the circuit for cleanliness and security. Check for high resistance in the circuit. Clean or replace as necessary. Test the system for normal operation.

PINPOINT TEST G552802p4 : GENERATOR VOLTAGE SENSE CIRCUIT

www.JagDocs.com

G552802t14 : CHECK THE VOLTAGE AT THE GENERATOR SENSE CIRCUIT

1.

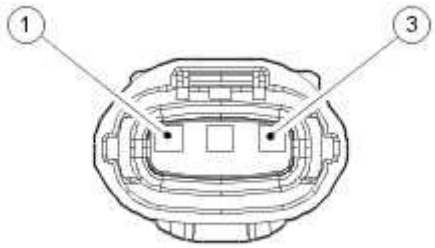

E66145

Circuit	Pin
Voltage sense circuit	01
Altcom	02
Altmon	03

2. Key off. 3. Disconnect the generator connector, C073. 4. Measure the voltage between:

C073, harness side	Battery
Pin 01	Negative terminal

- **Is the voltage greater than 10 volts?**

-> Yes
Voltage sense circuit is correct. GO to Pinpoint Test G552802p3.

-> No
GO to Pinpoint Test G552802t15.

G552802t15 : CHECK THE VOLTAGE AT THE REAR POWER DISTRIBUTION BOX

1. Key off. 2. Remove fuse 30 of the rear power distribution box. 3. Measure the voltage between:

Rear power distribution box	Battery
Fuse 30, input pin	Negative terminal

- **Is the voltage greater than 10 volts?**

-> Yes
GO to Pinpoint Test G552802t16.

-> No
REPAIR the power supply circuit to the rear power distribution box. For additional information, refer to the wiring diagrams. Clear the DTC, test the system for normal operation.

G552802t16 : CHECK THE VOLTAGE SENSE CIRCUIT FOR HIGH RESISTANCE

1. Measure the resistance between:

C073, harness side	Rear power distribution box
Pin 01	Fuse 30, output pin

- **Is the resistance less than 10 ohms?**

-> Yes
RECHECK the fuse. An intermittent fault may be present in the wiring harness. Visually check for chaffed wires or other physical damage to the harness.

-> No
REPAIR the high resistance circuit. For additional information, refer to the wiring diagrams. Clear the DTC, test the system for normal operation.

www.JagDocs.com

Specifications

Battery Specification

Engine Specification	Vehicle Specification		
	Europe		Rest of World
	Vehicles fitted without electrical optional extras.	Vehicles fitted with electrical optional extras.	
Vehicles fitted with 3.0L, 3.5L or 4.2L engine	90 Ah	90 Ah	90 Ah
Vehicles fitted with 2.7L Diesel engine	95Ah	95Ah	95Ah

Battery Cold Cranking Specification

Item	Specification
90 Ah Battery Cold Cranking	680 Amps
95 Ah Battery Cold Cranking	800 Amps

Torque Specifications

Description	Nm	lb-ft	lb-in
Battery positive cable to rear junction box retaining nut	12	9	-
Battery positive cable terminal retaining nut	4	-	35
Battery negative cable terminal retaining nut	4	-	35
Battery ground cable to body retaining bolt	12	9	-
Battery tray	13	10	-
Battery hold down clamp	13	10	-

Battery Connect (86.15.15)

WARNING: Batteries produce explosive gases which may cause personal injury. Do not expose the battery to a naked flame. When charging or working near a battery wear protective clothing and eye protectors. Always provide adequate ventilation. Failure to follow these instructions may result in personal injury.

WARNING: Batteries contain sulphuric acid, avoid contact with skin, eyes and clothing. Shield your eyes when working near the battery to protect against possible contact of the acid solution. In case of contact with the skin or eyes, flush immediately for a minimum of 15 minutes and seek prompt medical attention. If swallowed call a physician immediately. Failure to follow these instructions may result in personal injury.

CAUTION: Make sure all electrical systems are off before connecting the battery negative cable. Failure to follow these instructions may result in damage to the electrical system.

NOTE:

Following reconnection of the battery, the engine should be allowed to idle as the stored idle and drive values contained within the engine control module (ECM) have been lost. This may cause driveablity concern if the following procedure is not carried out.

1. Connect the battery negative cable.
   - Tighten to 4 Nm.

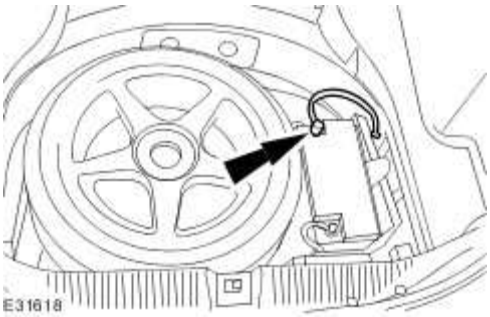

2. Fit the spare wheel cover.
   - Fit and tighten the spare wheel cover retaining clamp.

www.JagDocs.com

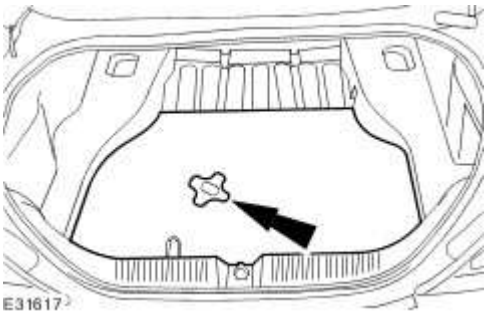

3. Fit the luggage compartment floor covering.

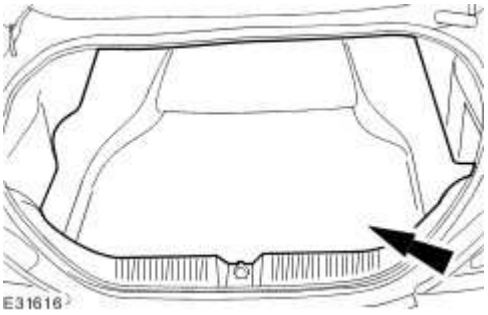

4. Fit the fire extinguisher.

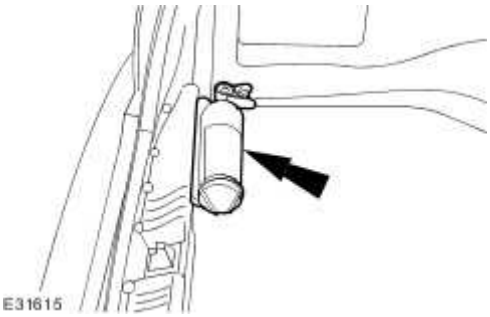

5. Start the engine and allow to idle until the engine reaches normal operating temperature.

6. Switch the engine off.

7. Restart the engine and allow to idle for approximately two minutes (this will allow the ECM to learn the idle values).

8. Apply and hold the brake pedal, select drive and allow the engine to idle for a further two minutes.

9. Drive the vehicle for approximately five miles/eight kilometers of varied driving to enable the ECM to complete it's learning strategy.

10. Reset the audio unit and climate control assembly to original settings to avoid customer complaint.

11. Reset the door window motors. <<501-11>>

www.JagDocs.com

Battery Disconnect and Connect

WARNING: Batteries produce explosive gases which may cause personal injury. Do not expose the battery to a naked flame. When charging or working near a battery wear protective clothing and eye protectors. Always provide adequate ventilation. Failure to follow these instructions may result in personal injury.

WARNING: Batteries contain sulphuric acid, avoid contact with skin, eyes and clothing. Shield your eyes when working near the battery to protect against possible contact of the acid solution. In case of contact with the skin or eyes, flush immediately for a minimum of fifteen minutes and seek prompt medical attention. if swallowed call a physician immediately. Failure to follow these instructions may result in personal injury.

WARNING: Audio unit key code saving devices must not be used when working on supplementary restraint systems or fuel systems. When using these devices the vehicle electrical system is still live but with a reduced current flow. Failure to follow this instruction may result in personal injury.

WARNING: The backup power supply energy must be depleted before any supplementary restraint system repairs are carried out. To deplete the backup supply energy, first disconnect the battery negative cable, then disconnect the battery positive cable and wait one minute to avoid accidental deployment and personal injury. Failure to follow this instruction may result in personal injury.

CAUTION: Make sure the engine is not running before disconnecting the battery negative cable to avoid damage to the electrical system.

NOTE:

Before disconnecting the battery make sure that no data is required from the engine control module (ECM), as battery cable disconnection will erase any fault codes and idle/drive values held in the keep alive memory (KAM). It is not necessary to disconnect or remove electronic control modules.

NOTE:

When the battery is disconnected all previous climate control assembly settings and fault codes will be lost. It is necessary to record any settings or fault codes before battery disconnection to prevent customer complaint.

NOTE:

This procedure should be used to disconnect the battery while carrying out repairs that

refer to the battery being disconnected.

1. Obtain and record the audio unit keycode and preset radio frequencies.

2. Remove the fire extinguisher.

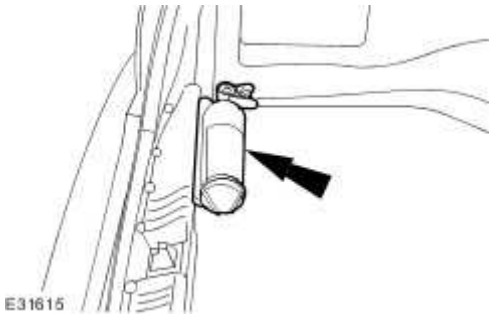

3. Remove the luggage compartment floor covering.

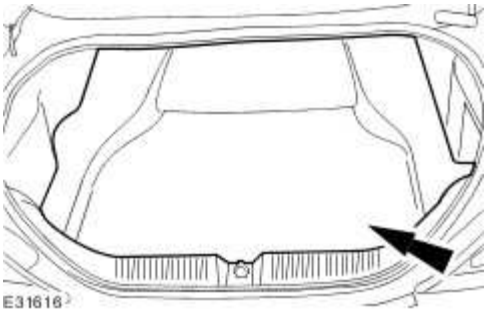

4. Remove the spare wheel cover.
   - Remove the spare wheel cover retaining clamp.

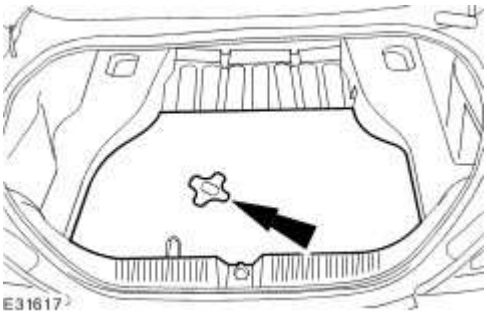

5. Disconnect the battery ground cable.

www.JagDocs.com

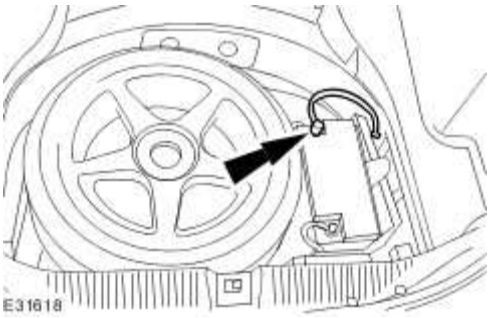
E31618

Battery and Cables

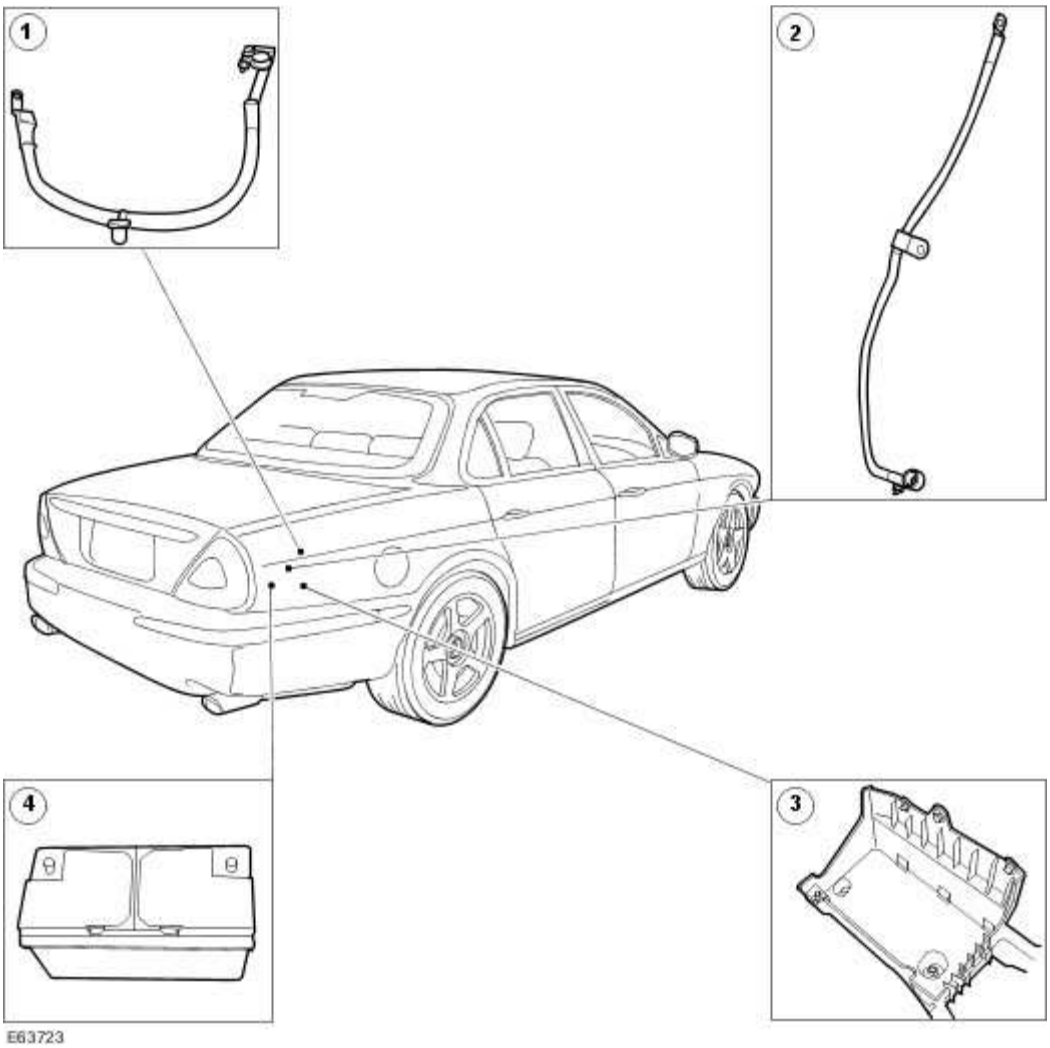

Item	Part Number	Description
1	—	Battery positive cable
2	—	Battery negative cable
3	—	Battery tray
4	—	Battery

The batteries fitted are 12 volts (DC) 90Ah 680CCA on the petrol variants and 12 volts (DC) 95Ah 800CCA on the diesel variant.

The battery cables consist of heavy duty negative and positive cables with crimped eyelets. They are bolted to the battery clamp distributor poles which are of dissimilar size to avoid reverse connection.

www.JagDocs.com

Battery

For additional information, <<414-00>>

Battery (86.15.01)

Removal

1 . Disconnect the battery ground cable.
For additional information, refer to Battery Disconnect and Connect

2 . Disconnect the battery positive cable.

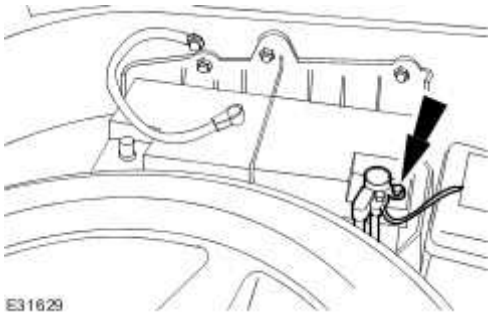

3 . Remove the battery.

1) Detach the battery vent tube.

2) Remove the battery retaining clamps.

3) Remove the battery.

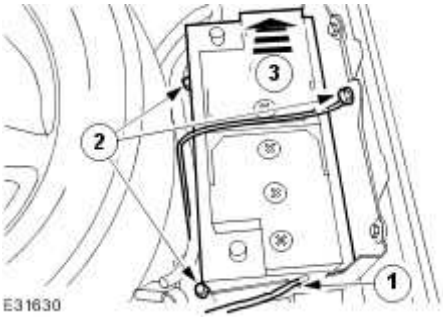

www.JagDocs.com

Installation

1 **NOTE:**

.

Make sure the battery vent tube is not kinked or trapped.

NOTE:

Make sure the battery vent tube passes through the guides and clips in the battery tray and through the grommet in the floor pan.

To install, reverse the removal procedure.

Tighten to 13 Nm.

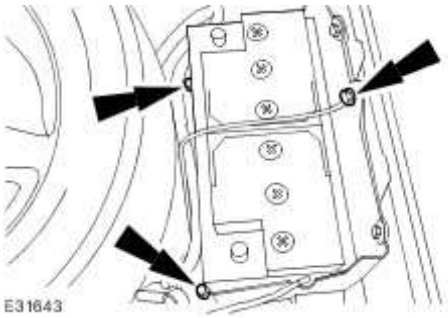

Battery Ground Cable (86.15.19)

Installation

1 . Install the battery ground cable.

Tighten to 9 Nm.

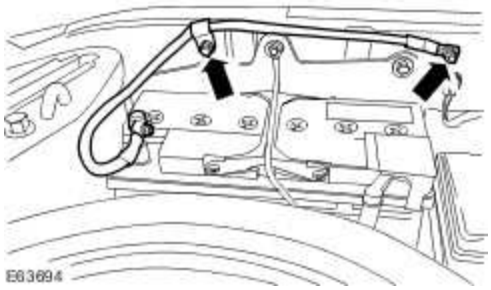

2 . Connect the battery ground cable.
For additional information, refer to Battery Connect (86.15.15)

www.JagDocs.com

Battery Tray (86.15.11)

Removal

1 . Remove the battery.
For additional information, refer to Battery (86.15.01)

2 . Remove the spare wheel and tire.

3 . Detach the rear power distribution box.

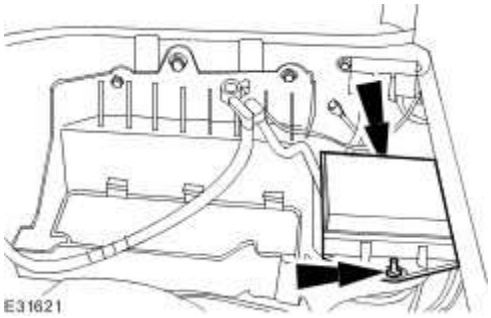

4 . Remove the battery tray.

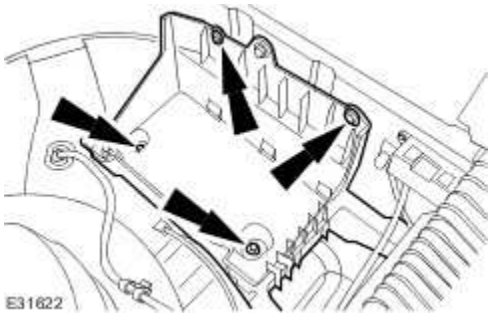

Installation

1 . To install, reverse the removal procedure.

1) Tighten to 13 Nm.

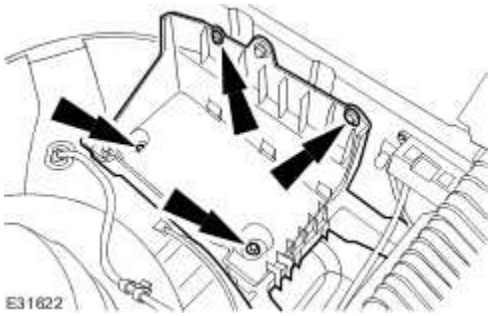

www.JagDocs.com

Specifications

Torque Specifications

Description	Nm	lb-ft	lb-in
Generator retaining bolts - vehicles fitted with 3.0L engine	48	35	-
Generator upper retaining bolt - vehicles fitted with 3.5 or 4.2L engine	21	15	-
Generator lower retaining bolt - vehicles fitted with 3.5 or 4.2L engine	40	30	-
Generator retaining bolts - vehicles fitted with 2.7L Diesel engine	47	35	-
Battery positive cable retaining nut	12	9	-

Generator

The generator is belt driven by the accessory drive belt. For additional information, refer to Accessory Drive (303-05)
When the engine is started, the generator begins to generate alternating current (AC) which is converted to direct current (DC) internally. The DC current and voltage is controlled by the voltage regulator, (located inside the generator) and then supplied to the battery through the main battery positive cable.

The 3.0L generator is solidly mounted to the engine, while the 3.5L and 4.2L generator is pivot mounted. The 2.7L Diesel generator is also solidly mounted to the engine. The generators are driven at approximately three times engine speed.

Vehicles fitted with 3.0L engine (L3B generator)

The engine control module (ECM) can switch the voltage regulator between two voltages to optimize the charging of the battery.

The low voltage regulator setting is 13.6 volts and the high voltage regulator setting 15.3 volts, measured with the generator at 25°C (77°F) and charging at a rate of 5 amps. These values decrease with a rise in temperature or current flow.

The ECM determines the output voltage setting of the generator. The high voltage setting is always selected by the ECM once the vehicle has started. The ECM determines the period of time that the high voltage setting is selected for.

There are three different time periods selected by the ECM which is dependent upon the vehicle conditions when the vehicle is started:

- The longest period of time is selected if the ECM determines that the vehicle has been 'soaking' for sufficient time to allow the engine coolant temperature (ECT) and the air intake temperature (IAT) to fall within 6°C (43°F) of each other.
- The intermediate time period is selected when the ECT and the IAT are below 15°C (59°F).
- The shortest time period is the default time and is used to provide a short period of boost charge.

At the end of these time periods the voltage is always set to the low voltage setting to prevent the battery from being over charged.

The time periods are variable depending upon the temperature and battery voltage. The target voltage of the battery varies between 14 volts and 15 volts depending upon the ambient temperature and the vehicle operating conditions. Once this target voltage has been achieved,

www.JagDocs.com

providing the vehicle has been operating for at least the shortest time period, the ECM will reduce the voltage regulator to the minimum setting of 13.6 volts.

Vehicles fitted with 3.5L or 4.2L engine (SC1 generator)

The battery charging voltage is determined by the temperature of the generator. In cold conditions, starting the vehicle from cold the battery voltage will be between 14.2 volts and 15.1 volts and will reduce as the engine warms up. In hot conditions starting the vehicle when the engine is already warm the battery voltage will be between 13.5 volts and 14.3 volts.

A fault in the wiring or the connections from the generator to the ECM, will cause a fault code to be generated and stored in the ECM and the charge warning indicator lamp to be displayed in the instrument cluster after a short time.

With the ignition switch in the RUN position the charge warning lamp will be displayed in the instrument cluster when the generator is not generating power.

If a fault is detected with the generator a fault code will be generated and stored by the ECM. The charge warning indicator lamp will also be displayed in the instrument cluster. Units should be repaired as an assembly and not dismantled for repair. For additional information, refer to Generator (414-02)

Vehicles fitted with 2.7L Diesel engine (SC2 generator)

All vehicles use a PCM (Pulse Control Modulated) generator. This allows the output voltage to be controlled between 12.5 volts and 16 volts via a signal from the ECM.

This voltage is controlled between 13.5 volts & 15.5 volts. The system voltage is tailored more closely to the demands of the battery. At low ambient temperatures (as measured by the air conditioning ambient air sensor), the charging voltage is higher to improve charge acceptance. At high ambient temperatures the voltage is lower to reduce electrolyte loss and unnecessary battery self-heating. Also built into the strategy, is the ability to measure the battery voltage with the ignition switch in the ON position. A battery with low voltage, with the ignition switch in the ON position, is boost charged at a higher voltage for a calculated time before returning to its 'Base Characteristic' (defined by the prevailing ambient temperatures). The time and boost voltage depends upon the temperature and battery voltage with the ignition switch in the ON position.

All vehicles have a one way clutch fitted to the drive pulley, which reduces belt slip.

A fault in the wiring or the connections from the generator to the ECM, will cause a fault code to be generated and stored in the ECM and the charge warning indicator lamp to be displayed in the instrument cluster after a short time.

With the ignition switch in the RUN position the charge warning lamp will be displayed in the instrument cluster when the generator is not generating power.

If a fault is detected with the generator a fault code will be generated and stored by the ECM. The charge warning indicator lamp will also be displayed in the instrument cluster. Units should be repaired as an assembly and not dismantled for repair. For additional information, refer to Generator (414-02)

www.JagDocs.com

Generator

For additional information, refer to section<<414-00>>

Generator - 3.0L NA V6 - AJ27 (86.10.02)

Removal

1 . Disconnect the battery ground cable. <<414-01>>

2 . Remove the air deflector <<501-02>>

3 Detach the accessory drive belt.

.

1) Rotate the accessory drive belt tensioner counter-clockwise.

Use a 3/8 inch square drive bar to rotate the accessory drive belt tensioner.

2) Detach the accessory drive belt.

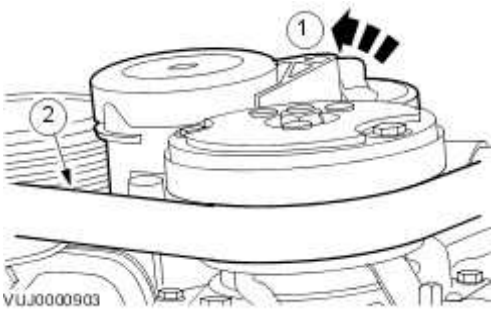

4 . Detach the generator battery positive cable protective cover.

www.JagDocs.com

5 . Remove the battery positive cable retaining nut.

6 . Disconnect the generator electrical connector.

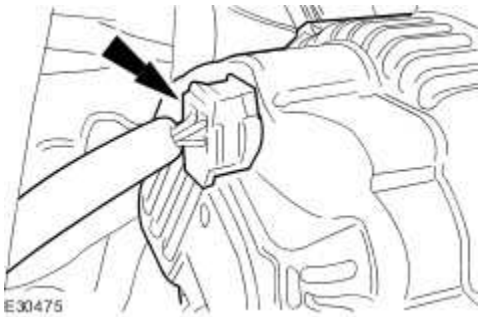

7 . Remove the generator.

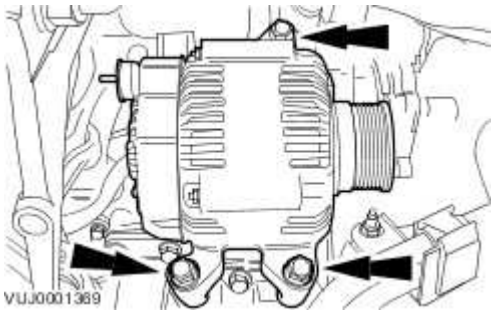

Installation

1 . To install, reverse the removal procedure.

Tighten to 48 Nm.

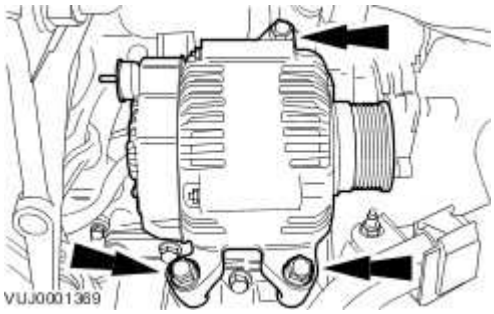

2 . Tighten to 12 Nm.

www.JagDocs.com

Generator - 4.2L NA V8 - AJV8/4.2L SC V8 - AJV8/3.5L NA V8 - AJV8 (86.10.02)

Special Service Tools

Engine support beam.
303-021

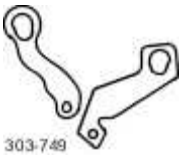

Engine lifting brackets
303-749

Removal

All vehicles

1 . Disconnect the battery ground cable.
For additional information, refer to Battery Disconnect and Connect

2 Detach the accessory drive belt.
.

1) Rotate the accessory drive belt tensioner counter-clockwise.

Use a 3/8 inch square drive bar to rotate the accessory drive belt tensioner.

2) Detach the accessory drive belt.

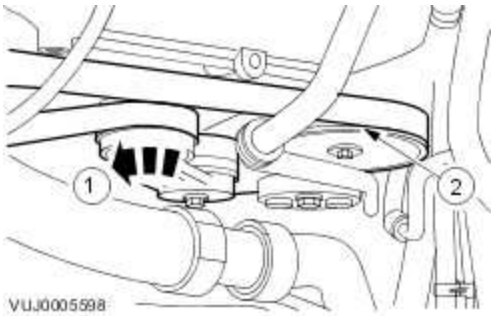

3 . Remove the air deflector.
For additional information, refer to Air Deflector (76.11.41)

4 . Remove the generator cooling duct.

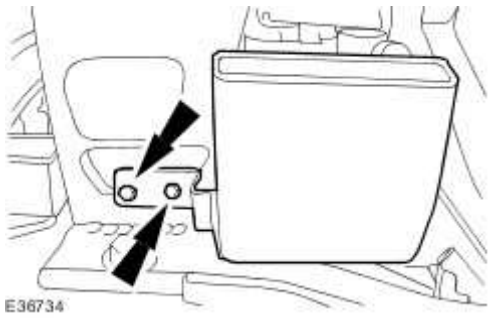

5 . Remove the radiator splash shield.
For additional information, refer to Radiator Splash Shield (76.22.90)

6 . Remove the right-hand engine mounting lower retaining bolt.

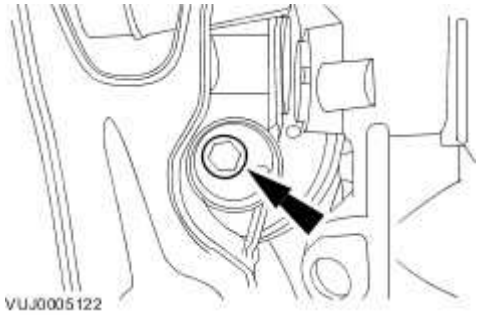

7 . Lower the vehicle.

www.JagDocs.com

8 . **NOTE:**

Left-hand side shown, right-hand similar.

Install the left hand engine lifting eye.

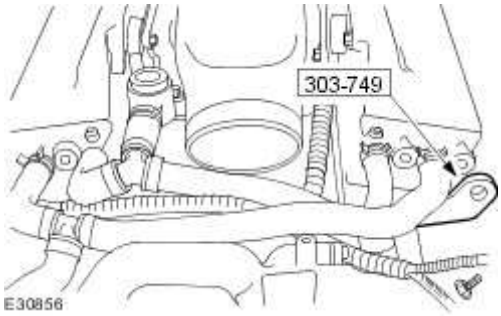

9 . Using the special tools, raise the engine to a suitable height.

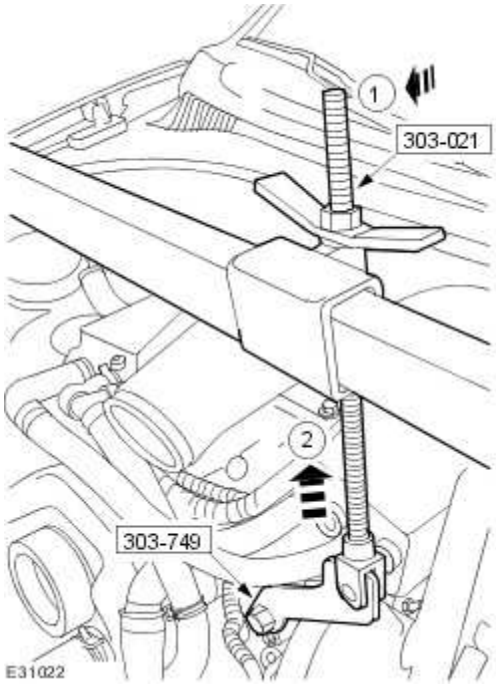

10 . Raise the vehicle.

Right-hand drive vehicles

11 . Remove the steering gear shaft pinch bolt.

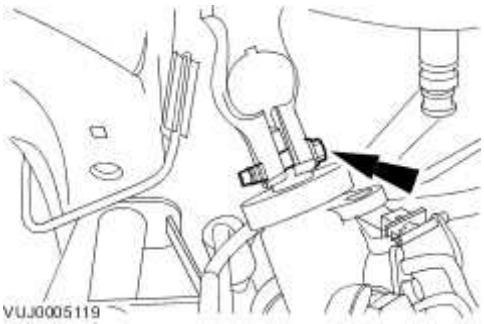

12 . Detach the steering gear.

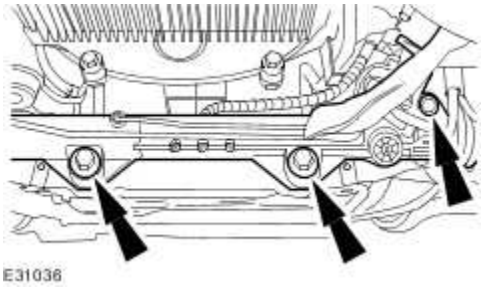

13 . Secure the steering gear.

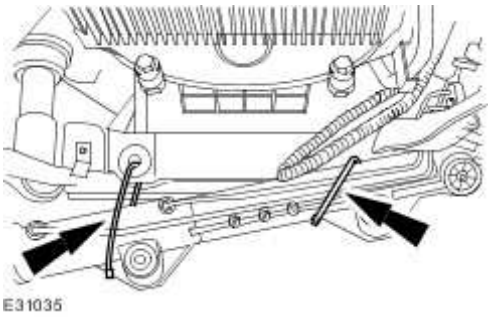

All vehicles

14 . Remove the engine mounting and bracket assembly.

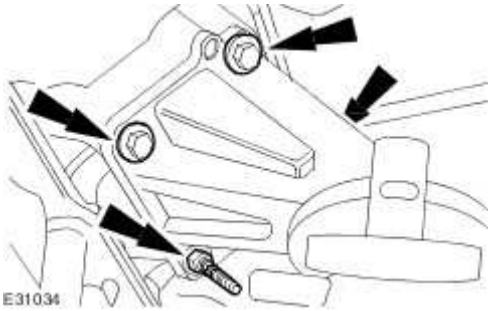

www.JagDocs.com

15 . Detach the wiring harness.

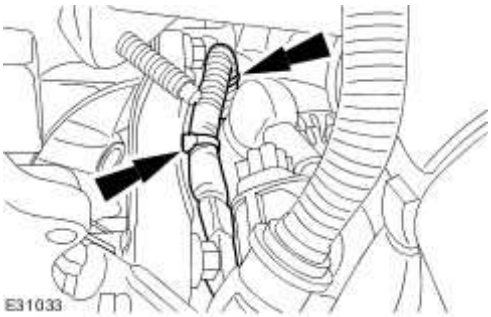

16 . Detach the generator battery positive cable protective cover.

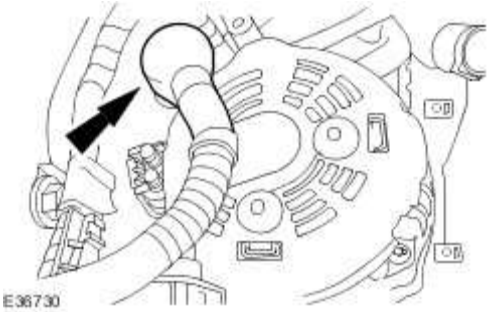

17 . Disconnect the battery positive cable.

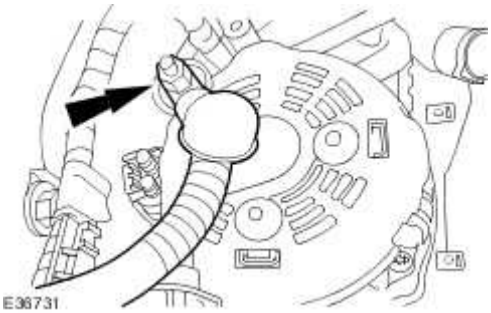

18 . Disconnect the generator electrical connector.

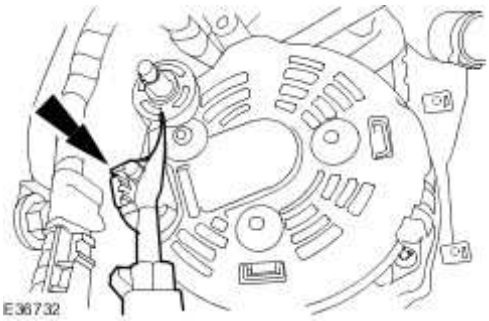

19 . Remove the generator.

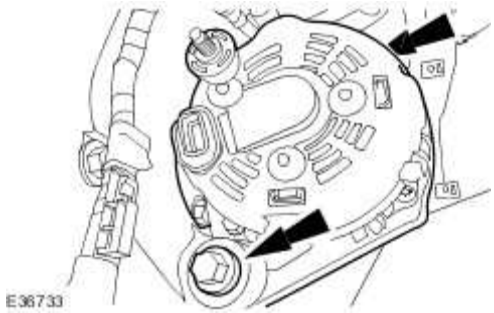

Installation

1 . To install reverse the removal procedure.

- Tighten the generator upper retaining bolt to 21 Nm.
- Tighten the generator lower retaining bolt to 40 Nm.

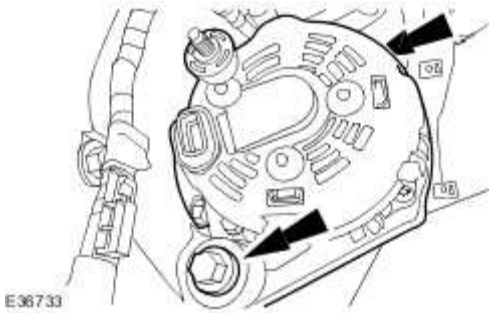

2 . Tighten to 12 Nm.

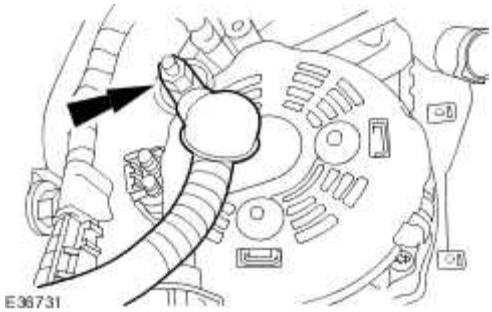

3 . Tighten to 25 Nm.

www.JagDocs.com

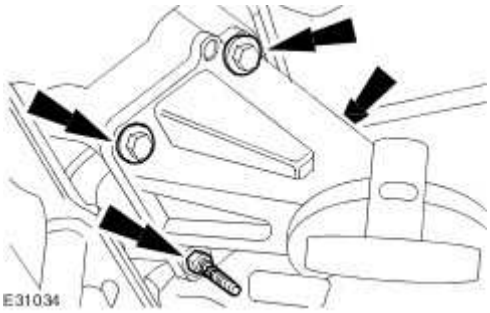

4 . Tighten to 100 Nm.

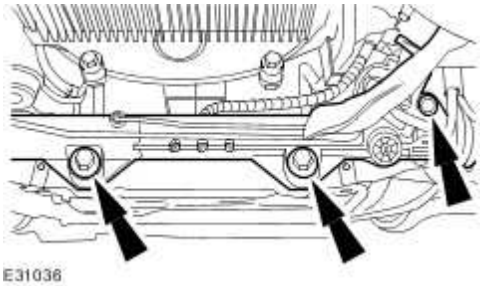

5 . Tighten to 35 Nm.

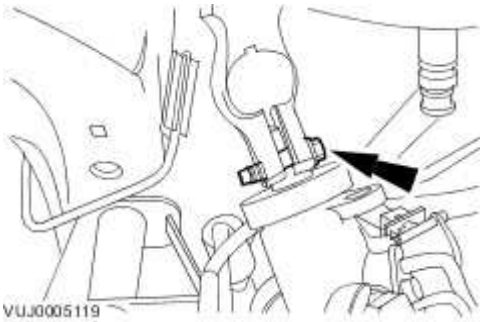

6 . Tighten to 63 Nm.

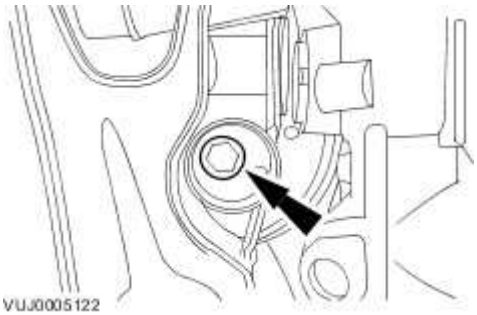

Generator - 2.7L V6 - TdV6 (86.10.02)

Special Service Tools

Accessory belt detensioner
303-703

Removal

1 . Disconnect the battery ground cable.
For additional information, refer to Battery Disconnect and Connect

2 . Remove the generator cooling duct (if equipped).

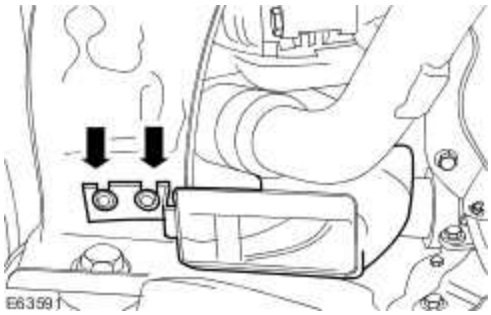

3 Detach the accessory drive belt.

.

1) Using the special tool, rotate the accessory drive belt tensioner counter clockwise.

2) Detach the accessory drive belt.

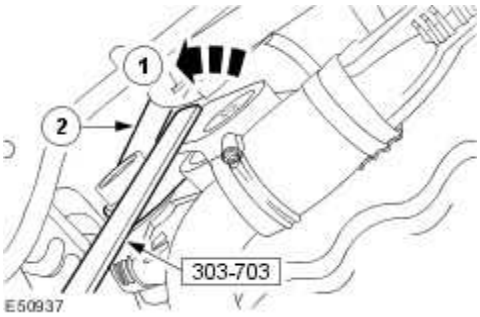

www.JagDocs.com

4 . Undo the right-hand turbocharger outlet tube securing clips.

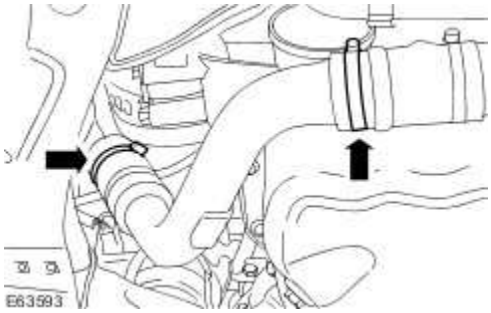

5 . Remove the right-hand turbocharger outlet tube.

- Remove the retaining bolt.

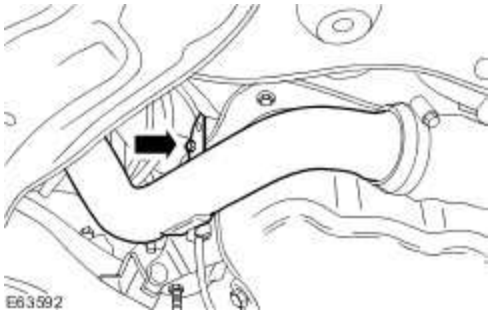

6 . Rotate the generator.

- Remove the generator retaining bolts.

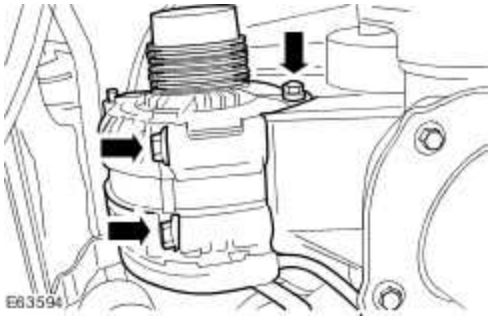

7 . Detach the generator battery positive cable protective cover.

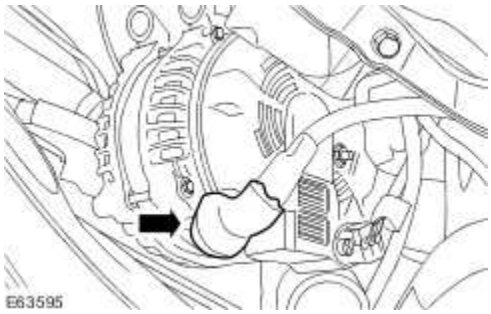

8 . Disconnect the battery positive cable.

- Remove the retaining nut.

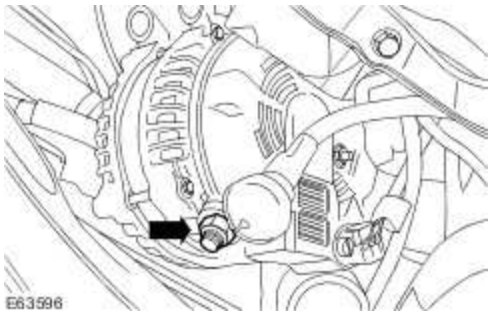

9 . Disconnect the generator electrical connector.

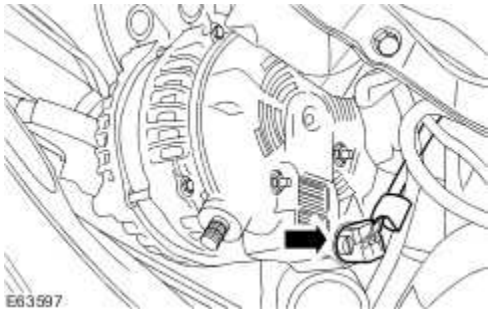

10 . Remove the right-hand engine mounting retaining nut.

www.JagDocs.com

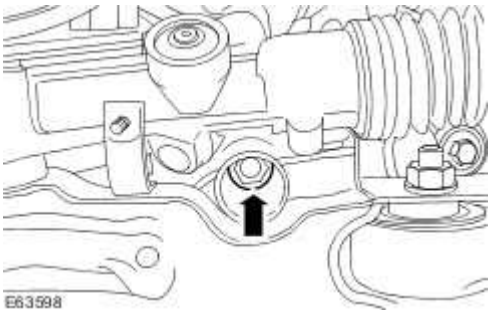

11 . Using the special tool raise the engine.

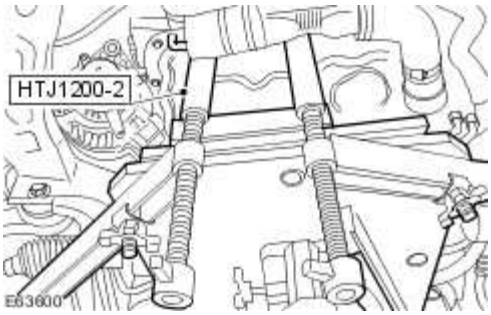

12 . Make sure the engine mounting is raised no more than 25 mm (0.984 inch's).

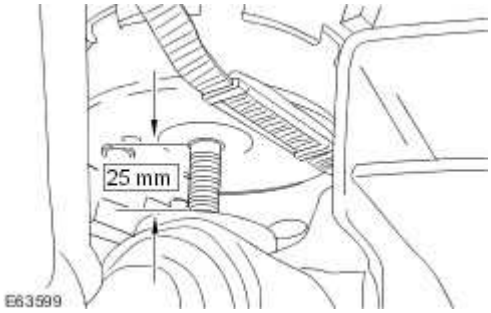

13 . Remove the generator.

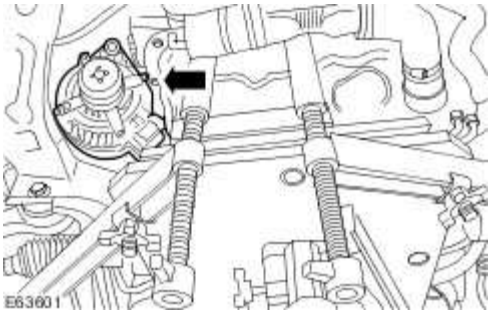

Installation

1 . To install, reverse the removal procedure.

Tighten to 63 Nm.

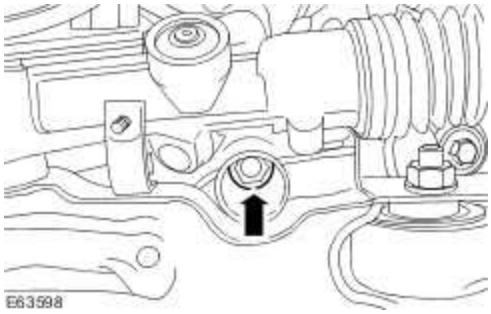

2 . Tighten to 12 Nm.

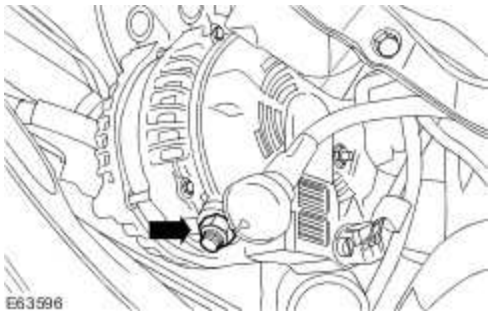

3 . Tighten to 47 Nm.

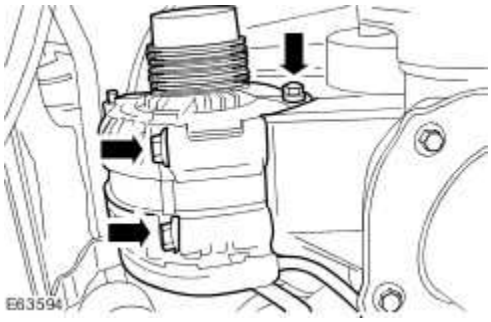

4 . Tighten to 10 Nm.

www.JagDocs.com

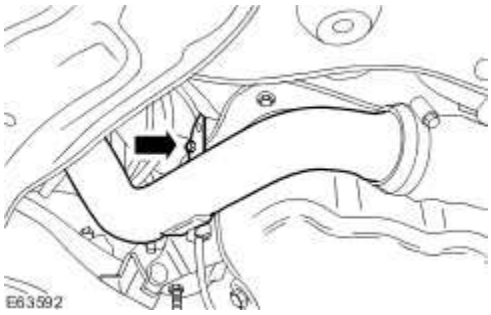

5 . Connect the battery ground cable.
For additional information, refer to Battery Connect (86.15.15)

415 : Information and Entertainement Systems

415-00 : Information and Entertainement System – General Information

General procedures

Cassette Player Cleaning

1. **NOTE:**
   Advise the customer of the need for regular tape head cleaning. It is recommended that the tape heads are cleaned after every 15 hours of play.

NOTE:
The audio unit incorporates a reminder facility to indicate when 15 hours of tape play has occurred. For more detail please refer to the audio handbook.

NOTE:
Question the customer on the type of tapes that are normally used. Low quality tapes can not only damage the cassette player heads, the plastic shells may twist and jam in the deck. Loose cassette labels may also become detached in the deck and jam the decks operation. Jaguar Audio units use high quality cassette decks which have precision moving parts, and need to be operated with care.

NOTE:
Jaguar cars only recommends the use of wet type cleaning tapes.

NOTE:
Make sure that the cleaning cassette is used prior to any assessment of tape audio quality.

Apply isopropyl alcohol to the cleaning cassette and insert it into the cassette player and run it for approximately 30 seconds.

www.JagDocs.com

Audio System

Principles of Operation

For a detailed description of the Audio system, refer to the relevant Description and Operation sections in the workshop manual.
Audio System
Audio System - VIN Range: H18680->H99999
Audio System
Antenna
Speakers
Speakers

Inspection and Verification

1 . Verify the customer concern.

2 . Visually inspect for obvious signs of mechanical or electrical damage.

Visual Inspection Chart

Electrical
• Fuses/Relays • Damaged, Loose or Corroded Connector(s) • Damage to Wiring Loom/Incorrect Location, Stretched or Taught

1 . If an obvious cause for an observed or reported concern is found, correct the cause (if possible) before proceeding to the next step.

2 . If the cause is not visually evident, check for Diagnostic Trouble Codes (DTCs) and refer to the DTC Index.

DTC Index

Gateway module

CAUTION: When probing connectors to take measurements in the course of the pinpoint tests, use the adaptor kit, part number 3548-1358-00

NOTE:

If the control module/component is suspect and the vehicle remains under manufacturer warranty, refer to the Warranty Policy and Procedures manual (section B1.2), or determine if any prior approval program is in operation, prior to the installation of a new module/component.

NOTE:

When performing voltage or resistance tests, always use a digital multi meter (DMM) accurate to three decimal places and with a current calibration certificate. When testing resistance, always take the resistance of the DMM leads into account.

NOTE:

Check and rectify basic faults before beginning diagnostic routines that involve pinpoint tests.

NOTE:

Inspect connectors for signs of water ingress, and pins for damage and/or corrosion.

NOTE:

If DTCs are recorded and, after performing the pinpoint tests, a fault is not present, an intermittent concern may be the cause. Always check for loose connections and corroded terminals.

www.JagDocs.com

DTC	Description	Possible Causes	Action
B11A4	DAB L Band Antenna	• DAB (digital audio broadcast) L band antenna circuit to DAB module - short to power, ground or open circuit	Refer to electrical circuit diagrams, notes and check DAB (digital audio broadcast) L band antenna circuit for short to power, ground or open
B11A5	DAB Band 3 Antenna	• DAB (digital audio broadcast) band 3 antenna circuit to DAB module - short to power, ground or open	Refer to electrical circuit diagrams, notes and check DAB (digital audio broadcast band 3) antenna circuit for short to power, ground or open
B1238	Over Temperature Fault	• Gateway module - over temperature	Check gateway module and location for causes of excessive

			temperature, install a new gateway module as required, refer to the new module installation note at the top of the DTC Index
B1342	ECU Internal failure	• Gateway module - internal failure	Internal failure, install a new gateway module as required, refer to the new module installation note at the top of the DTC Index
B1A89	Satellite Antenna	• Satellite radio module or digital tuner antenna circuit - short to power, ground or open	Refer to electrical circuit diagrams, notes and check satellite radio module or digital tuner antenna circuit for short to power, ground or open
B2477	Module Configuration Failure	• Gateway module - configuration failure	The module can be configured using the new module procedure. Check and configure as required
U0193	Lost Communication with Digital Audio Control Module(SDARS)	• Gateway module - lost communication with satellite radio module	Refer to electrical circuit diagrams, notes and check gateway module to satellite radio module power and bus circuit to gateway module on MOST ring
U0194	Lost Communication with Digital Audio Control Module	• Gateway module - lost communication with digital audio broadcast module	Refer to electrical circuit diagrams, notes and check gateway module to digital audio broadcast module power and bus circuit to gateway module on MOST ring
U0237	Lost Communication with Digital Audio Control Module	• Gateway module - lost communication with (DACMC) Digital Audio Control Module C	Refer to electrical circuit diagrams, notes and check gateway module to Digital Audio Control Module C power and bus circuit to gateway module on MOST ring
U1A15	Incomplete MOST Ring Reported By Gateway Module	• Gateway module - (MOST) ring break	Refer to electrical circuit diagrams, notes and check (MOST) circuit for ring break
U2601	(D2B)Wake-up Line Short To Ground	• Gateway module, wake-up line circuit - short to	Refer to electrical circuit diagrams, notes and check gateway module (D2B) wake-up line circuit for short

		ground	to ground
U2609	(D2B)Wake-up Pulsewidth Out Of Specification	• Gateway module - wake-up line circuit fault (pulse< 50mS, pulse > 110mS)	Refer to electrical circuit diagrams, notes and check gateway module (D2B) wake-up line circuit for fault
U2610	(D2B) Slave ECU Fails To Receive A Report Position	• Gateway module - during initialization no position status report is received from one or more slave modules	Refer to electrical circuit diagrams, notes and check (D2B) slave modules and circuit for fault, replace as required, refer to the new module installation note at the top of the DTC Index
U2611	(D2B) Slave ECU fails to receive an alarm clear command	• Gateway module - on entering alarm state, slave ECU has failed to receive alarm clear command	Refer to electrical circuit diagrams, notes and check (D2B) slave modules and circuit for fault, replace as required, refer to the new module installation note at the top of the DTC Index
U3004	Digital Tuner State	• Gateway module, digital tuner MOST slave - module is inoperative	Suspect digital tuner module replace as required, refer to the new module installation note at the top of the DTC Index
U3098	Over Temperature	• Gateway module, digital tuner (Most slave) - above temperature threshold	Check digital tuner module and location for causes of excessive temperature, install a new module as required, refer to the new module installation note at the top of the DTC Index

Audio Amplifier Module

CAUTION: When probing connectors to take measurements in the course of the pinpoint tests, use the adaptor kit, part number 3548-1358-00

NOTE:

If the control module/component is suspect and the vehicle remains under manufacturer warranty, refer to the Warranty Policy and Procedures manual (section B1.2), or determine if any prior approval program is in operation, prior to the installation of a new

www.JagDocs.com

module/component.

NOTE:

When performing voltage or resistance tests, always use a digital multi meter (DMM) accurate to three decimal places and with a current calibration certificate. When testing resistance, always take the resistance of the DMM leads into account.

NOTE:

Check and rectify basic faults before beginning diagnostic routines that involve pinpoint tests.

NOTE:

Inspect connectors for signs of water ingress, and pins for damage and/or corrosion.

NOTE:

If DTCs are recorded and, after performing the pinpoint tests, a fault is not present, an intermittent concern may be the cause. Always check for loose connections and corroded terminals.

DTC	Description	Possible Causes	Action
B1342	ECU Internal failure	• Audio amplifier module - internal failure	Suspect the audio amplifier module replace as required, refer to the new module installation note at the top of the DTC Index
B2408	Speaker Line Short Circuit	• Audio amplifier module - short to ground (speaker circuit)	If this DTC is stored run the audio speaker cycle test to identify which channel is shorted. Carry out any pinpoint tests associated with this DTC using the manufacturer approved diagnostic system. Refer to electrical circuit diagrams, notes and check amplifier to speaker circuit for short to ground
B2477	Module Configuration	• Audio amplifier module	The module can be configured using the new module procedure. Check and

	Failure	- configuration failure	configure as required
B2642	Low Power Detected	• Audio amplifier module has experienced more than 30 continuous seconds under 8.5volts Generator voltage is regulated by the engine control module	Carry out any pinpoint tests associated with this DTC using the manufacturer approved diagnostic system. Refer to electrical circuit diagrams, notes and check amplifier power circuit for low voltage
B2643	High Power Detected	• Audio amplifier module has experienced more than 30 continuous seconds above 16volts Generator voltage is regulated by the engine control module	Carry out any pinpoint tests associated with this DTC using the manufacturer approved diagnostic system. Refer to electrical circuit diagrams, notes and check amplifier power circuit for high voltage
U2601	(D2B)Wake-up Line Short to Ground	• Audio amplifier module - wake-up line circuit - short to ground	Refer to electrical circuit diagrams, notes and check Audio amplifier module (D2B) wake-up line circuit for short to ground
U2609	(D2B)Wake-up Line (pulsewidth out of spec)	• Audio amplifier module - wake-up line circuit fault (pulse< 50mS, pulse > 110mS)	Refer to electrical circuit diagrams, notes and check audio amplifier module (D2B) wake-up Line circuit for fault
U2610	D2B Slave ECU fails to receive a report position	• During initialization no position status report is received from one or more slave modules	Refer to electrical circuit diagrams, notes and check (D2B) slave modules and circuit for fault, replace as required, refer to the new module installation note at the top of the DTC Index
U2611	D2B Slave ECU fails to receive an alarm clear command	• On entering alarm state, (D2B) slave ECU has failed to receive alarm clear command	Refer to electrical circuit diagrams, notes and check (D2B) modules and circuit for fault, replace as required, refer to the new module installation note at the top of the DTC Index

Front Entertainment Control Module

CAUTION: When probing connectors to take measurements in the course of the pinpoint tests, use the adaptor kit, part number 3548-1358-00

www.JagDocs.com

NOTE:

If the control module/component is suspect and the vehicle remains under manufacturer warranty, refer to the Warranty Policy and Procedures manual (section B1.2), or determine if any prior approval program is in operation, prior to the installation of a new module/component.

NOTE:

When performing voltage or resistance tests, always use a digital multimeter (DMM) accurate to three decimal places and with a current calibration certificate. When testing resistance, always take the resistance of the DMM leads into account.

NOTE:

Check and rectify basic faults before beginning diagnostic routines that involve pinpoint tests.

NOTE:

Inspect connectors for signs of water ingress, and pins for damage and/or corrosion.

NOTE:

If DTCs are recorded and, after performing the pinpoint tests, a fault is not present, an intermittent concern may be the cause. Always check for loose connections and corroded terminals.

DTC	Description	Possible Causes	Action
B1238	Over Temperature Fault	• Front entertainment control module, CD multichanger - overheated (+80 degrees Celsius)	Check cd multichanger module and location for causes of excessive temperature, install a new module as required, refer to the new module installation note at the top of the DTC Index
B1342	ECU Internal Failure	• Front entertainment control module - no radio function	Refer to electrical circuit diagrams, notes and check front entertainment control module radio functions for fault, replace as required, refer to the new module

			installation note at the top of the DTC Index
B2004	Internal Media Over Temperature Fault	• Front entertainment control module - internal cd/md has overheated	Check front entertainment control module and location for causes of excessive temperature, install a new module as required, refer to the new module installation note at the top of the DTC Index
B2401	Audio Tape Deck Mechanism Fault	• Front entertainment control module - tape loading, tape eject, tape stuck, tape cut and seek stop error	Refer to electrical circuit diagrams, check front entertainment control module install a new module as required, refer to the new module installation note at the top of the DTC Index
B2403	Audio CD/DJ Internal Fault	• Front entertainment control module, CD multichanger module - cd eject error, cd loading error	Refer to electrical circuit diagrams, notes and check cd multichanger module install a new module as required, refer to the new module installation note at the top of the DTC Index
B2477	Module Configuration Failure	• Front entertainment control module - configuration failure	The module can be configured using the new module procedure. Check and configure as required
B2888	Audio Headunit Media Fault	• Front entertainment control module - tape loading, tape eject, tape stuck, tape cut and seek stop error	Check front entertainment control module install a new module as required, refer to the new module installation note at the top of the DTC Index
C1977	Audio Steering Wheel Switch Circuit Short To Ground	• Front entertainment control module, audio steering wheel switch circuit - short to ground	Refer to electrical circuit diagrams, notes suspect the audio steering wheel switch check for circuit short to ground
U0147	Lost Communication	• Front entertainment	Refer to electrical circuit diagrams, notes and check front entertainment control

www.JagDocs.com

	With Gateway "B"	control module, gateway module - no response (D2B/MOST)	module to gateway module control and power circuit`s, install a new module as required, refer to the new module installation note at the top of the DTC Index
U1262	SCP (J1850) Communication Bus Fault	• Front entertainment control module, ECU not responding - internal standard corporate protocol (SCP) chip failure	Refer to electrical circuit diagrams, notes and check Front entertainment control module SCP circuit for fault, suspect the front entertainment control module, install a new module as required, refer to the new module installation note at the top of the DTC Index
U2003	Audio Compact Disk / Disk Jockey Unit is Not Responding	• Front entertainment control module, CD multichanger - no response (D2B)	Carry out any pinpoint tests associated with this DTC using the manufacturer approved diagnostic system. Refer to electrical circuit diagrams, notes and check cd multichanger module and D2B circuit for fault, install a new module as required, refer to the new module installation note at the top of the DTC Index
U2008	Audio Phone Not Responding	• Front entertainment control module, telephone control module - no response(D2B)	Carry out any pinpoint tests associated with this DTC using the manufacturer approved diagnostic system. Refer to electrical circuit diagrams, notes and check telephone control module and D2B circuit for fault, install a new module as required, refer to the new module installation note at the top of the DTC Index
U2019	Audio Voice Module Not Responding	• Front entertainment control module, audio voice module - no response(D2B)	Carry out any pinpoint tests associated with this DTC using the manufacturer approved diagnostic system. Refer to electrical circuit diagrams, notes and check audio voice module and D2B circuit for fault, install a new module as required, refer to the new module/component installation note at the top of the DTC Index
U2601	(D2B)Wake-up Line Short To Ground	• Front entertainment control module, gateway module - wake-up line, short	Carry out any pinpoint tests associated with this DTC using the manufacturer approved diagnostic system. Refer to electrical circuit diagrams, notes and check gateway module

		to ground	(D2B) wake-up line for short to ground
U2602	Incomplete MOST Ring (fault report received)	• Front entertainment control module - (MOST) ring circuit fault	Carry out any pinpoint tests associated with this DTC using the manufacturer approved diagnostic system. Check front entertainment control module for most ring circuit fault
U2603	Incomplete MOST Ring (No Fault Report Received)	• Front entertainment control module - (MOST) ring circuit fault	Carry out any pinpoint tests associated with this DTC using the manufacturer approved diagnostic system. Check (MOST) ring for circuit fault
U2604	Incomplete MOST Ring (Corrupted Fault Report Received)	• Front entertainment control module - (MOST) ring circuit fault	Refer to electrical circuit diagrams, notes and check (MOST) ring for circuit fault
U2605	Master ECU Unable To Initialize It's Address	• Front entertainment control module - (MOST) ring circuit fault (more than one master on the MOST ring)	Refer to electrical circuit diagrams, notes and check for configuration fault on (MOST) ring modules. Install a new module as required, refer to the new module installation note at the top of the DTC Index
U2606	Slave ECU Unable To Initialize It's Address	• Front entertainment control module - (MOST) ring circuit fault slave ecu configuration fault	Refer to electrical circuit diagrams, notes and check for configuration fault on (MOST) ring modules. Install a new module as required, refer to the new module installation note at the top of the DTC Index
U2607	Slave ECU (switched into bypass mode)	• Front entertainment control module - (MOST) ring circuit fault (slave ecu configuration fault)	The module can be configured using the new module procedure. Check and configure as required
U2609	(D2B)Circuit Wake-up Line (pulse width out of spec)	• Front entertainment control module - wake up line circuit fault (pulse< 50mS,	Refer to electrical circuit diagrams, notes and check front entertainment control module(D2B) wake up line circuit for fault

www.JagDocs.com

		pulse > 110mS)	
U2613	Navigation Module Not Responding on D2B	• Front entertainment control module - no response from navigation module	Carry out any pinpoint tests associated with this DTC using the manufacturer approved diagnostic system. Check navigation module to front audio control module circuit
U2614	Amp Module Not Responding on D2B	• Front entertainment control module - no response from audio amplifier module	Carry out any pinpoint tests associated with this DTC using the manufacturer approved diagnostic system. Check audio amplifier module to front audio control module circuit
U2615	Rear Entertainment Module Not Responding on D2B	• Front entertainment control module - no response from rear entertainment control module	Refer to electrical circuit diagrams, notes and check rear entertainment control module to front entertainment control module control and power circuit`s. Install a new module as required, refer to the new module installation note at the top of the DTC Index

Rear Entertainment Control Module

CAUTION: When probing connectors to take measurements in the course of the pinpoint tests, use the adaptor kit, part number 3548-1358-00

NOTE:

If the control module/component is suspect and the vehicle remains under manufacturer warranty, refer to the Warranty Policy and Procedures manual (section B1.2), or determine if any prior approval program is in operation, prior to the installation of a new module/component.

NOTE:

When performing voltage or resistance tests, always use a digital multimeter (DMM) accurate to three decimal places and with a current calibration certificate. When testing resistance, always take the resistance of the DMM leads into account.

NOTE:

Check and rectify basic faults before beginning diagnostic routines that involve pinpoint tests.

NOTE:

Inspect connectors for signs of water ingress, and pins for damage and/or corrosion.

NOTE:

If DTCs are recorded and, after performing the pinpoint tests, a fault is not present, an intermittent concern may be the cause. Always check for loose connections and corroded terminals.

DTC	Description	Possible Causes	Action
B1238	Over Temperature Fault	• Rear entertainment control module - DVD player has overheated (+80 Degrees Celsius)	Check DVD player module and location for causes of excessive temperature, install a new module as required, refer to the new module installation note at the top of the DTC Index
B1342	ECU Internal Failure	• Rear entertainment control module - defective	Refer to electrical circuit diagrams, notes and check rear entertainment control module for fault. Install a new module as required, refer to the new module installation note at the top of the DTC Index
B2642	Low Power Detected	• Rear entertainment control module - has experienced more than 30 continuous seconds under 8.5volts Generator voltage is regulated by the engine control module	Refer to electrical circuit diagrams, notes and check rear entertainment control module power and ground circuit's
B2656	DVD (Digital Versatile Disk) Error	• Rear entertainment control module -DVD not detected	Refer to electrical circuit diagrams, notes and check rear entertainment control module to DVD control and power circuit
U2601	(D2B)Wake-up line short to	• Rear entertainment control module - wake up line	Carry out any pinpoint tests associated with this DTC using the

www.JagDocs.com

	ground	circuit short to ground	manufacturer approved diagnostic system. Refer to electrical circuit diagrams, notes and check gateway module (D2B) wake up line circuit for short to ground
U2609	(D2B)Wake-up line pulse width out of spec	• Rear entertainment control module wake up line fault (pulse< 50mS, pulse > 110mS)	Refer to electrical circuit diagrams, notes and check rear entertainment control module (D2B) wake up line circuit for fault
U2610	D2B Slave ECU (fails to receive a report position)	• During initialization no position status report is received from one or more slave modules	Refer to electrical circuit diagrams, notes and check (D2B) slave modules for circuit fault, replace as required, refer to the new module installation note at the top of the DTC Index
U2611	D2B Slave ECU (fails to receive an alarm clear command)	• Rear entertainment control module - on entering alarm state, slave ECU has failed to receive alarm clear command	Refer to electrical circuit diagrams, notes and check (D2B) slave modules and circuit for fault, replace as required, refer to the new module installation note at the top of the DTC Index

Satellite Radio Module

CAUTION: When probing connectors to take measurements in the course of the pinpoint tests, use the adaptor kit, part number 3548-1358-00

NOTE:

If the control module/component is suspect and the vehicle remains under manufacturer warranty, refer to the Warranty Policy and Procedures manual (section B1.2), or determine if any prior approval program is in operation, prior to the installation of a new module/component.

NOTE:

Generic scan tools may not read the codes listed, or may read only 5 digit codes. Match the five digits from the scan tool to the first five digits of the seven digit code listed to identify the fault (the last two digits give additional information read by the manufacturer approved diagnostic

system).

NOTE:

When performing voltage or resistance tests, always use a digital multi meter (DMM) accurate to three decimal places and with a current calibration certificate. When testing resistance, always take the resistance of the DMM leads into account.

NOTE:

Check and rectify basic faults before beginning diagnostic routines that involve pinpoint tests.

NOTE:

Inspect connectors for signs of water ingress, and pins for damage and/or corrosion.

NOTE:

If DTCs are recorded and, after performing the pinpoint tests, a fault is not present, an intermittent concern may be the cause. Always check for loose connections and corroded terminals.

DTC	Description	Possible Causes	Action
B1A8911	Satellite Antenna	• Satellite radio module satellite antenna circuit - short to ground	Refer to electrical circuit diagrams, notes and check satellite radio antenna circuit for short to ground
B1A8912	Satellite Antenna	• Satellite radio module satellite antenna circuit - short to power	Refer to electrical circuit diagrams, notes and check satellite radio antenna circuit for short to power
B1A8913	Satellite Antenna	• Satellite radio module satellite antenna circuit - open	Refer to electrical circuit diagrams, notes and check satellite radio antenna circuit for open circuit
U300004	Control Module	• Satellite radio module system - internal failure	Suspect satellite radio module replace as required, refer to the new module installation note at the top of the DTC Index

www.JagDocs.com

U30004A	Control Module	• Satellite radio module incorrect component installed (car configuration file mismatch)	Car configuration/installed-part mismatch Check and configure as required
U300055	Control Module	• Satellite radio module vehicle not configured for satellite radio	The vehicle can be configured using the vehicle configuration procedure. Check and configure as required
U300087	Control Module	• Satellite radio module - missing message (The configuration file wasn't received)	Refer to electrical circuit diagrams, notes and check Refer to electrical circuit diagrams, notes and check satellite radio module communication circuit for fault. The vehicle can be configured using the vehicle configuration procedure. Check and configure as required
U300098	Control Module	• Satellite radio module - over temperature	Check satellite radio module and location for causes of excessive temperature, install a new module as required, refer to the new module/component installation note at the top of the DTC Index
U300362	Battery Voltage	• Satellite radio module power circuit - over or under voltage Note generator voltage is regulated by the engine control module	Refer to electrical circuit diagrams, notes and check satellite radio module power circuit for fault

Specifications

Torque Specifications

Description	Nm	lb-ft	lb-in
Audio unit retaining screws	2	-	18
Compact disc (CD) changer retaining screws	1	-	9
Amplifier retaining nuts	4	-	35
Steering wheel audio control switch retaining screws	1	-	9

www.JagDocs.com

Audio System

Base cassette

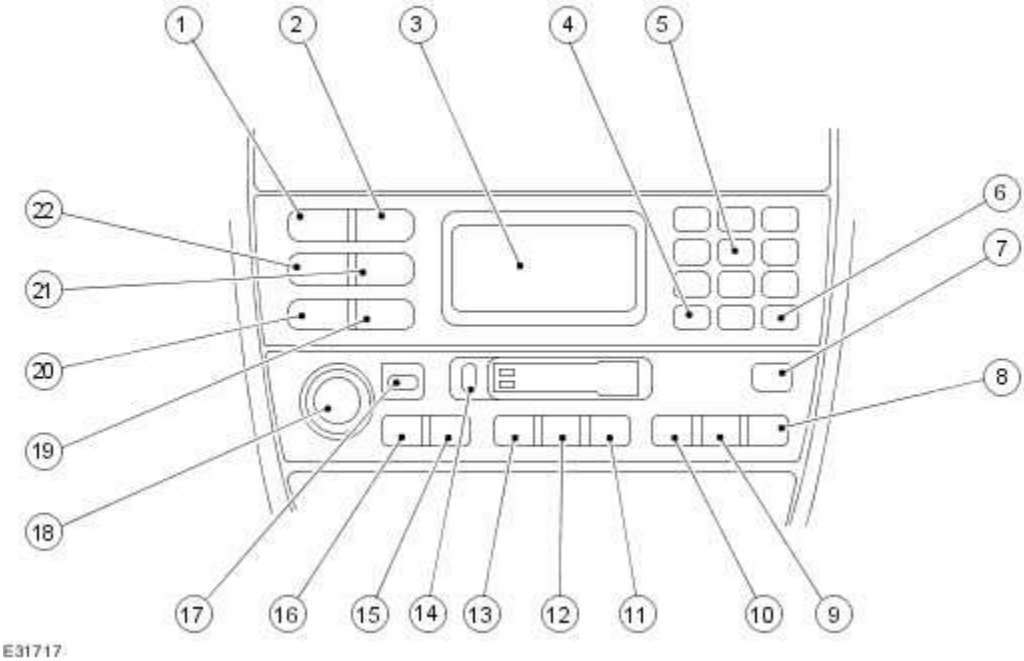

Item	Part Number	Description
1	—	Dolby noise reduction button
2	—	Repeat CD button
3	—	Audio system display
4	—	Seek a stored number from the phones memory
5	—	Radio station pre-set buttons
6	—	Seek a stored number from the phones memory
7	—	CD track mix button
8	—	Priority programme type button
9	—	Traffic announcement button

10	—	Auto memory button
11	—	Select CD changer
12	—	Cassette play and side change button
13	—	Audio Source - AM/FM radio
14	—	Cassette eject button
15	—	CD seek forward, cassette fast forward, radio seek forward button
16	—	CD seek back, cassette fast rewind, radio seek back button
17	—	Mode button (volume/bass/treble/balance/fade)
18	—	ON/OFF push (rotary volume/bass/treble/balance/fade) knob
19	—	Phone mode - send/end button
20	—	Phone mode select button
21	—	Memory recall button
22	—	Clear button

Base CD/MD

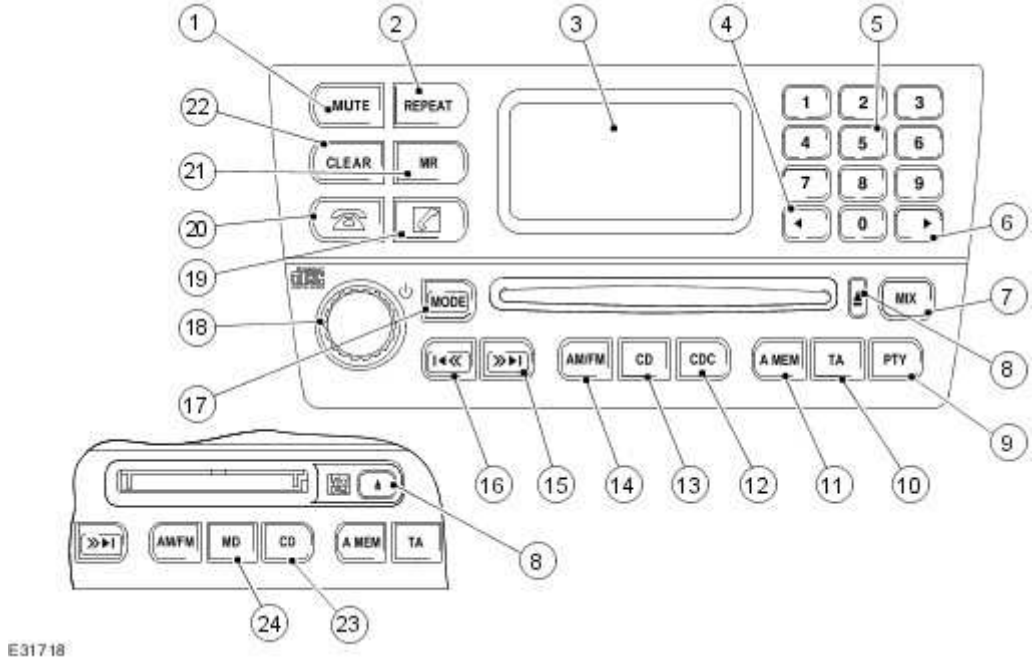

www.JagDocs.com

Item	Part Number	Description
1	—	Mutes audio
2	—	Repeat CD button
3	—	Audio system display
4	—	Seek a stored number from the phones memory
5	—	Radio station pre-set buttons
6	—	Seek a stored number from the phones memory
7	—	Mix CDs or CD/MD tracks button
8	—	Eject CD or MD
9	—	Priority programme type button
10	—	Traffic announcement button
11	—	Auto memory button
12	—	Select CD changer
13	—	Select compact disc when in other audio mode, or CD pause
14	—	Audio Source - AM/FM radio
15	—	CD seek forward, cassette fast forward, radio seek forward button
16	—	CD seek back, cassette fast rewind, radio seek back button
17	—	Mode button (volume/bass/treble/balance/fade)
18	—	ON/OFF push (rotary volume/bass/treble/balance/fade) knob
19	—	Phone mode - send/end button
20	—	Phone mode select button
21	—	Memory recall button
22	—	Clear button

23	—	Select CD changer
24	—	Select mini disc play when in other audio mode or MD pause

Touch screen cassette

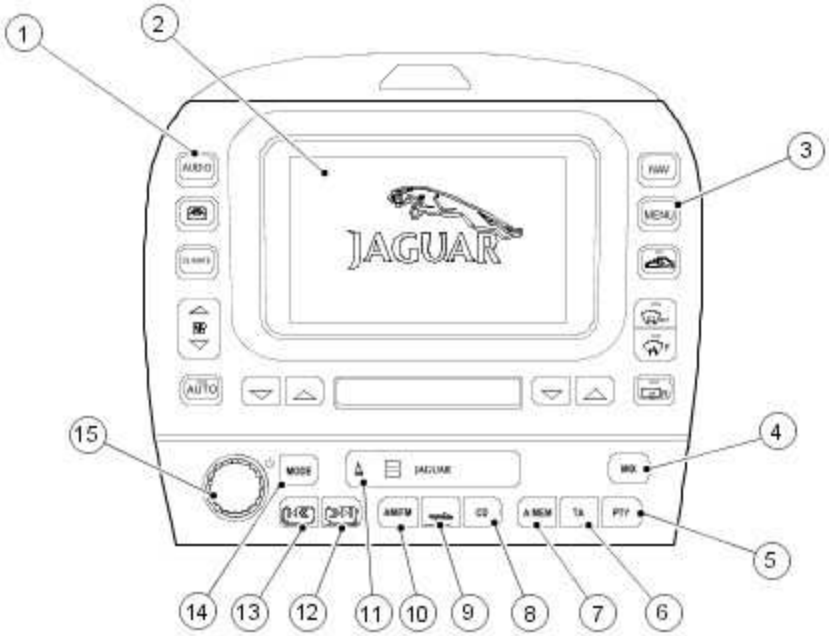

E31719

Item	Part Number	Description
1	—	On/Off push for touch-screen controls
2	—	Touch-screen display
3	—	Press to access touch-screen options
4	—	CD track mix button
5	—	Priority programme type button
6	—	Traffic announcement button
7	—	Auto memory button
8	—	Select CD changer
9	—	Cassette play and side change button
10	—	Audio Source - AM/FM radio

www.JagDocs.com

11	—	Cassette eject button
12	—	CD seek forward, cassette fast forward, radio seek forward button
13	—	CD seek back, cassette fast rewind, radio seek back button
14	—	Mode button (volume/bass/treble/balance/fade)
15	—	ON/OFF push (rotary volume/bass/treble/balance/fade) knob

Touch screen CD/MD

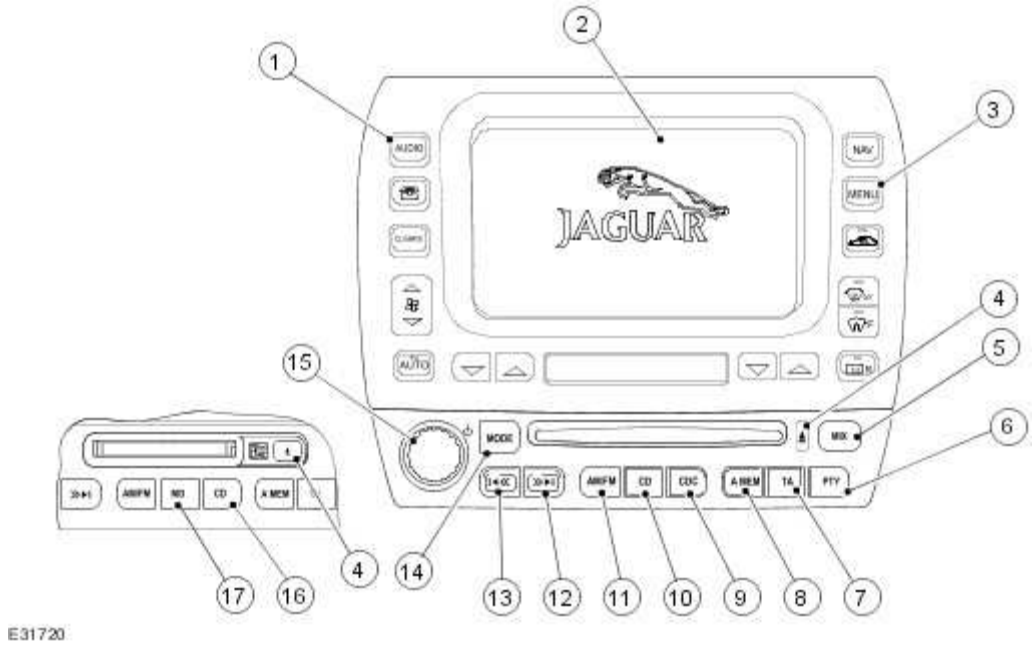

Item	Part Number	Description
1	—	On/Off push for touch-screen controls
2	—	Touch-screen display
3	—	Press to access touch-screen options
4	—	Eject CD or MD
5	—	Mix CDs or CD/MD tracks button
6	—	Priority programme type button
7	—	Traffic announcement button

8	—	Auto memory button
9	—	Select CD changer
10	—	Select compact disc when in other audio mode, or CD pause
11	—	Audio Source - AM/FM radio
12	—	CD seek forward, cassette fast forward, radio seek forward button
13	—	CD seek back, cassette fast rewind, radio seek back button
14	—	Mode button (volume/bass/treble/balance/fade)
15	—	ON/OFF push (rotary volume/bass/treble/balance/fade) knob
16	—	Select CD changer
17	—	Select mini disc play when in other audio mode or MD pause

The choice of two entertainment systems are available (base or premium), with three media types available cassette, compact disc or mini disc player. There is the addition of a compact disc muti-changer located in the luggage compartment. The aerial is common to both systems (base and premium). All of the systems may be operated remotely by use of switches located on the steering wheel.

The premium system has the addition of different door speakers, a subwoofer speaker mounted to the rear parcel shelf, two additional instrument panel speakers and an amplifier mounted in the luggage compartment.

An additional system is fitted to the Super V8 Portfolio. This system is an enhancement on the premium system, offering a 7.1 channel Dolby Pro Logic 2 surround sound system. In addition to the premier system, the Dolby Pro Logic 2 system has two additional surround speakers in the rear parcel shelf and a centrally mounted speaker in the instrument panel. It has an improved subwoofer with an enclosure, and this is mounted to the underside of the parcel shelf. The mid-bass door speakers have been uprated, with the front speakers needing an additional amplifier, and this is mounted in the luggage compartment. For the vehicles fitted with the rear seat entertainment, the system will also offer infra red headphones.

The touch screen audio unit is only fitted to the vehicle when satellite navigation has been selected as a option.

www.JagDocs.com

NOTE:

When working on any part of the audio unit the audio unit security code must be obtained first.

NOTE:

The use of any cleaning liquid to clean the high gloss facia of the audio unit is prohibited, to clean the high gloss facia the use of a lint free dry cloth is recommended.

NOTE:

Compact discs and mini discs should be checked for scratches and marks before condemning an audio unit, if the surface of a compact disc or mini disc is dirty, use an appropriate compact disc or mini disc cleaner.

Refer to the Sound System Handbook for setting-up procedures and use, after diagnostic or repair operations.

Audio System - VIN Range: H18680->H99999

COMPONENT LOCATION

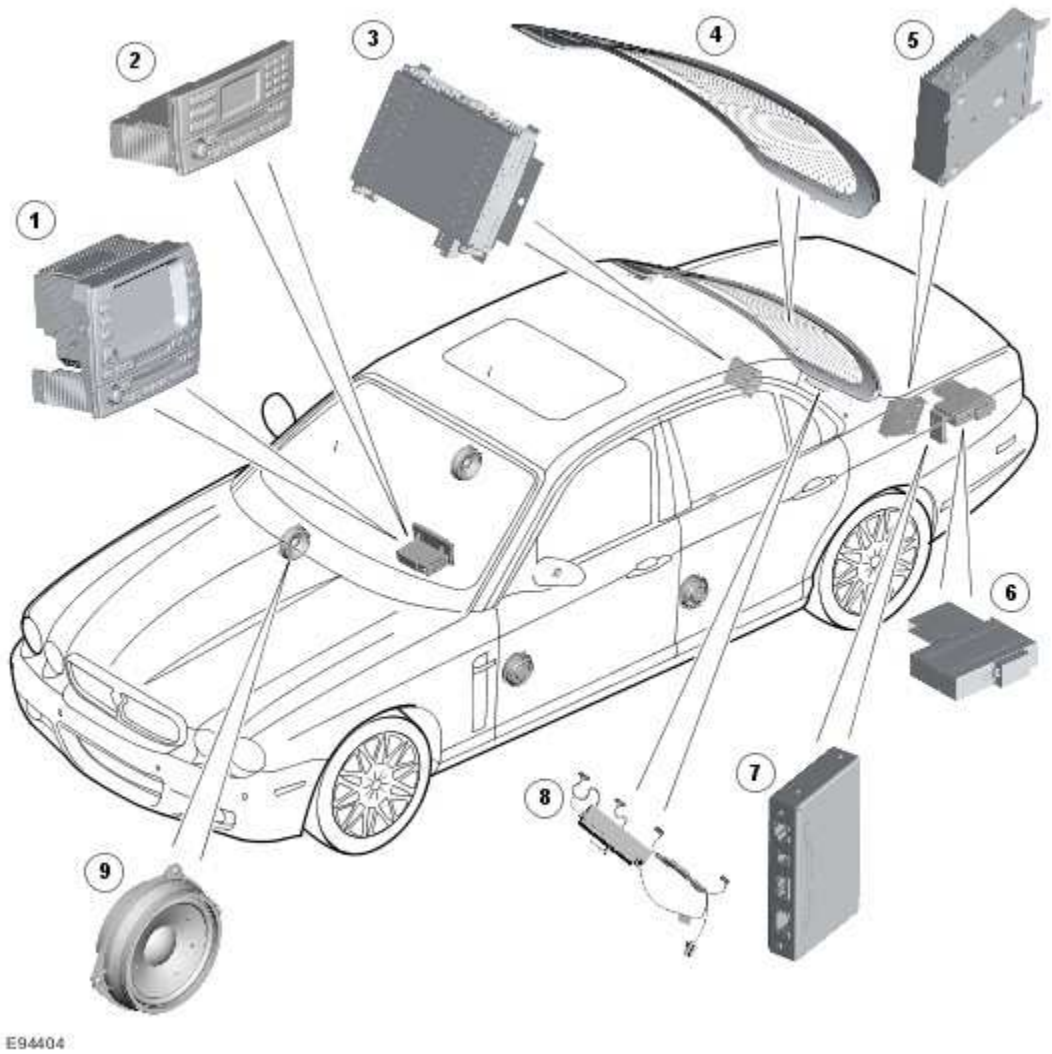

Item	Part Number	Description
1		Premium IHU
2		Low line IHU
3		DAB/SDARS/ IBOC radio module
4		Rear screen antenna
5		Audio amplifier

www.JagDocs.com

6		CD (compact disc) multichanger
7		Gateway module
8		Antenna amplifiers
9		Speakers

OVERVIEW

Three entertainment systems are available Base, Premium or Portfolio For additional information, refer to Audio System (415-01)
. All systems have FM (frequency modulation) radio and single disc CD (compact disc) player. There is also the option of a CD (compact disc) multi-changer located in the LH (left-hand) side of the luggage compartment. The antenna systems are common to all systems. All of the systems may be operated remotely by use of switches located on the steering wheel.

The premium system has the addition of different door speakers, a subwoofer speaker mounted to the rear parcel shelf, two additional instrument panel speakers and an amplifier mounted in the luggage compartment.

Three variants of digital radio are available as well as the normal RF radio signal. These are dependant upon which market the vehicle is built for:

- SDARS (Satellite Digital Audio Radio Service) NAS only
- IBOC (In Band On Channel) Nas only
- DAB (Digital Audio Broadcasting) Europe and Australia only

NOTE:

SDARS and IBOC cannot be specified together.

The audio system communicates on th D2B bus. DAB and SDARS/IBOC radio modules communicate on the MOST bus. The D2B and Most systems communicate with each other via a gateway module located in the LH (left-hand) side of the luggage compartment.

BASE AUDIO SYSTEM

Item	Part Number	Description
1		Mute
2		Repeat
3		LCD (liquid crystal display) screen
4		Seek down
5		Station presets/ telephone keypad
6		Seek up
7		Mix (shuffle CD (compact disc) s or CD (compact disc) tracks)
8		CD (compact disc) eject button
9		PTY (program Type)
10		Traffic announcement
11		Automatic memory store

www.JagDocs.com

12		CD (compact disc) changer
13		Single CD (compact disc) mode
14		AM (amplitude modulation) /FM (frequency modulation) band change
15		Seek up AM (amplitude modulation) /FM (frequency modulation) cue/review CD (compact disc)
16		Seek down AM (amplitude modulation) /FM (frequency modulation) cue/review CD (compact disc)
17		Mode
18		On/Off and volume control
19		Send/end telephone call
20		Phone mode
21		Memory recall, phone memory
22		Clear

The Base level audio system comprises:

- Audio head unit (IHU)
- LCD (liquid crystal display) and control panel
- Speakers
- Antenna system

PREMIUM AUDIO SYSTEM

Item	Part Number	Description
1		Audio system access button
2		Touch Screen Display (TSD)
3		Menu access button
4		CD (compact disc) eject button
5		Mix (shuffle CD (compact disc) s or CD (compact disc) tracks)
6		PTY (program Type)
7		Traffic announcement
8		Automatic memory store
9		CD (compact disc) changer
10		Single CD (compact disc) mode
11		AM (amplitude modulation) /FM (frequency modulation) band change

www.JagDocs.com

12		Seek up AM (amplitude modulation) /FM (frequency modulation) cue/review CD (compact disc)
13		Seek down AM (amplitude modulation) /FM (frequency modulation) cue/review CD (compact disc)
14		Mode
15		On/Off and volume control

The Premium audio system comprises:

- Audio head unit
- Touch screen display
- Amplifier
- Speakers
- Antenna system

The IHU incorporates a single CD (compact disc) player and audio controls. The unit is connected to other audio units on the D2B bus. Above the IHU is the TSD. The TSD displays audio and navigation system information as well as other vehicle systems.

TUNER

The IHU incorporates a AM/FM tuner which allows for 30 FM pre-sets (FM1 FM2 FM a) and 20 AM (10 AM & 10 AM a, for Europe the 10 strongest LW & MW will be stored in frequency order). Pre-set stations are stored in the IHU memory. The radio tuner also incorporates the following radio functions:

- Auto tune
- Traffic announcements (TA) – Europe only
- Radio Data System (RDS) EON function (Radio Broadcast Data System RBDS in NAS markets)
- Seek station
- Tune up/down
- Scan PTY

For DAB/SDARS/IBOC radio functions a separate tuner module is required.

SDARS

E94917

The SDARS systems operate in the S-Band frequency range (2.3 GHz) and, as a result of the use of satellite transmission have the ability to provide CD quality audio broadcasts over very large areas (typically continents). SDARS service providers transmit a signal from their up-link facility (which is the original point of transmission of data, voice or other information through an antenna system) to a satellite where the signal is then down linked to both the terrestrial repeater network and the individual SDARS car radios. The radio switches between the satellite signal and the repeater signal depending on the strength of the signal at any given time.

The service is provided by a company called Sirius. The service comprises over 100 channels of digital entertainment which is provided by subscription requiring a monthly payment.

Operation of the SDARS system is the same as the radio operation with selections made using the TSD icons or the TSD buttons and rotary controller.

The SDARS system requires additional components to be added to the audio system. An SDARS antenna and a receiver are fitted to allow reception of the service.

The customer must subscribe to receive the SDARS service. If the user selects a channel to which subscription is not authorised, the TSD will display the telephone number of the SDARS providers subscription service. The telephone number is stored in the IHU and can be changed or amended using Jaguar recommended diagnostic equipment.

The SDARS systems comprises:

- Satellites
- Ground repeaters
- Up-link ground stations
- Radio receiver systems

The SDARS system uses three satellites on an inclined elliptical orbit. This ensures that each satellite spends approximately 16 hours a day over the continent of the USA, with at least one satellite over the country at any one time.

The satellites beam their signals down to the ground where the signal is picked up by receivers or is transmitted to repeater stations to cover built up areas where the signal is obscured.

www.JagDocs.com

SDARS is a subscription based service which requires the user to contact Sirius to obtain a subscription. In order to obtain a subscription the SDARS unit ID number will need to be retrieved from the unit. This is achieved as follows:

- Press the MENU button and then rotate the menu control to scroll to advanced settings.
- Rotate the menu control to scroll to SIRIUS ID and press the menu control to select it.
- The Sirius ID is shown on the display screen.

If no subscription has been taken the ICM will display the Sirius telephone number. To subscribe to Sirius use the displayed phone number. The user will need payment details, the Sirius ID number and details of the required package.

The SDARS function is accessed by pressing the FM button and then pressing again to toggle through the SAT1 and SAT2 sources. SAT1 and SAT2 operate in the same manner as FM1 and FM2.

The SDARS module is located in the rear LH side of the luggage compartment. The SDARS module is connected to the rest of the audio system on the MOST ring. This allows control signals and received audio to be routed around the system to the relevant module.

The SDARS antenna is located in the roof pod and is shared with the telephone system and navigation system where fitted. The roof pod is located externally in a central position towards the rear of the roof.

The roof pod contains two antennas for the SDARS system. One receives the digital transmissions from the SDARS satellites and the second receives transmissions from the ground based repeater stations.

The SDARS antennas are connected to the SDARS receiver using co-axial cables.

DAB/IBOC

Digital Audio Broadcast (DAB) is a digital radio network designed to provide reliable, multi-service broadcasting for reception by mobile, portable and fixed receivers.

DAB is broadcast across Europe, Canada and most of Asia. In NAS markets DAB is replaced with the IBOC system. Both systems are transmitted via terrestrial networks, on band III and L-band.

When the IHU is in any tuner mode, a short press of the "BAND" button cycles between the tuners available to the user on the vehicle infotainment system. With DAB installed, these sources cycle as follows: FM -> MW -> LW -> DAB1 -> DAB2 -> FM. The cycle list can only be navigated in one direction.

The lowline IHU has an LCD (liquid crystal display) which is only capable of displaying upper-case letters and some symbols.

CD PLAYER

The IHU incorporates a single disc CD player. There is also the option of a CD multi changer located in the rear LH (left-hand) side of the luggage compartment. Both systems are capable of playing commercial CDs, CDRs, CDRWs and MP3 discs. TheCD (compact disc) multi changer communicates on the D2B bus with the rest of the audio system.

STEERING WHEEL SWITCHES

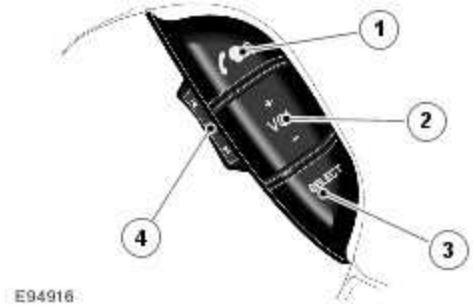

Item	Part Number	Description
1		Voice control/telephone
2		Volume up/down
3		Mode select
4		Cycle up/down

The audio and phone system steering wheel control switches are mounted on the LH (left-hand) side of the steering wheel. The switches comprise:

- Jaguar voice/telephone send/end receive switch
- Volume increase/decrease
- Mode select switch
- Up/down cycle button

The switches operate on a resistive ladder principle. A reference voltage is supplied to the switches and dependant upon which switch is operated a reduced voltage is returned to the head unit.

www.JagDocs.com

AMPLIFIER

E94929

The base audio system amplifier is integral to the IHU. The premium audio system is a separate unit located towards the front of the loadspace on the LH (left-hand) side. The amplifier

GATEWAY MODULE

E94928

The gateway module is located in the LH (left-hand) side of the luggage compartment.

The gateway module translates MOST signals from the digital radio module (SDARS, DAB or IBOC/HD) to D2B signals for the IHU. The gateway module also steams audio from the digital radio module to the IHU.

The gateway module appears as a slave module on the D2B bus and a master on the MOST bus. The gateway module incorporates basic ring break diagnostics and stores fault codes from the digital radio module. The fault codes can be retrieved by the recommended Jaguar diagnostic tool.

BASE AUDIO SYSTEM CONTROL DIAGRAM

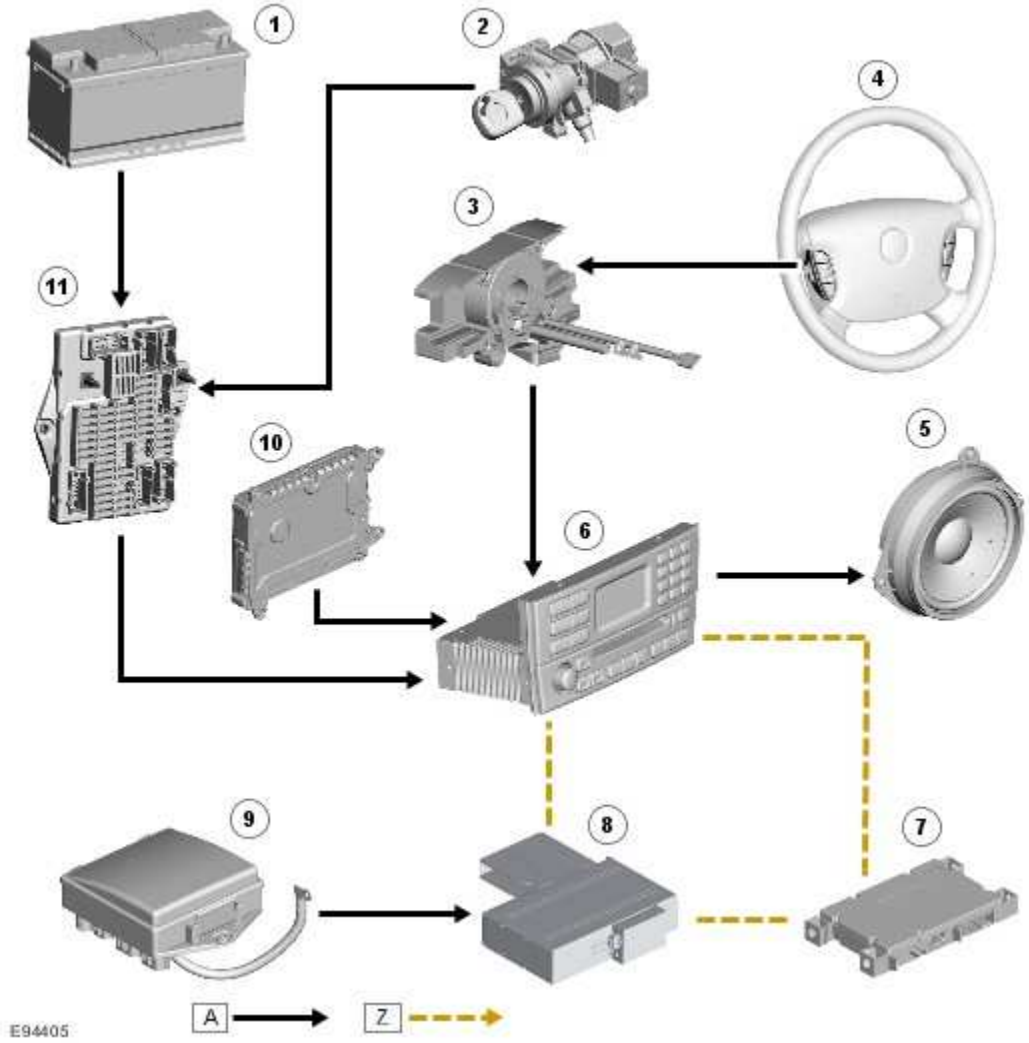

Item	Part Number	Description
1		Battery
2		Ignition switch
3		Clock spring
4		Steering wheel mounted controls
5		Speakers
6		IHU
7		Telephone module

www.JagDocs.com

8		CD (compact disc) changer
9		RJB (rear junction box)
10		FEM (front electronic module)
11		CJB (central junction box)

PREMIUM AUDIO SYSTEM CONTROL DIAGRAM

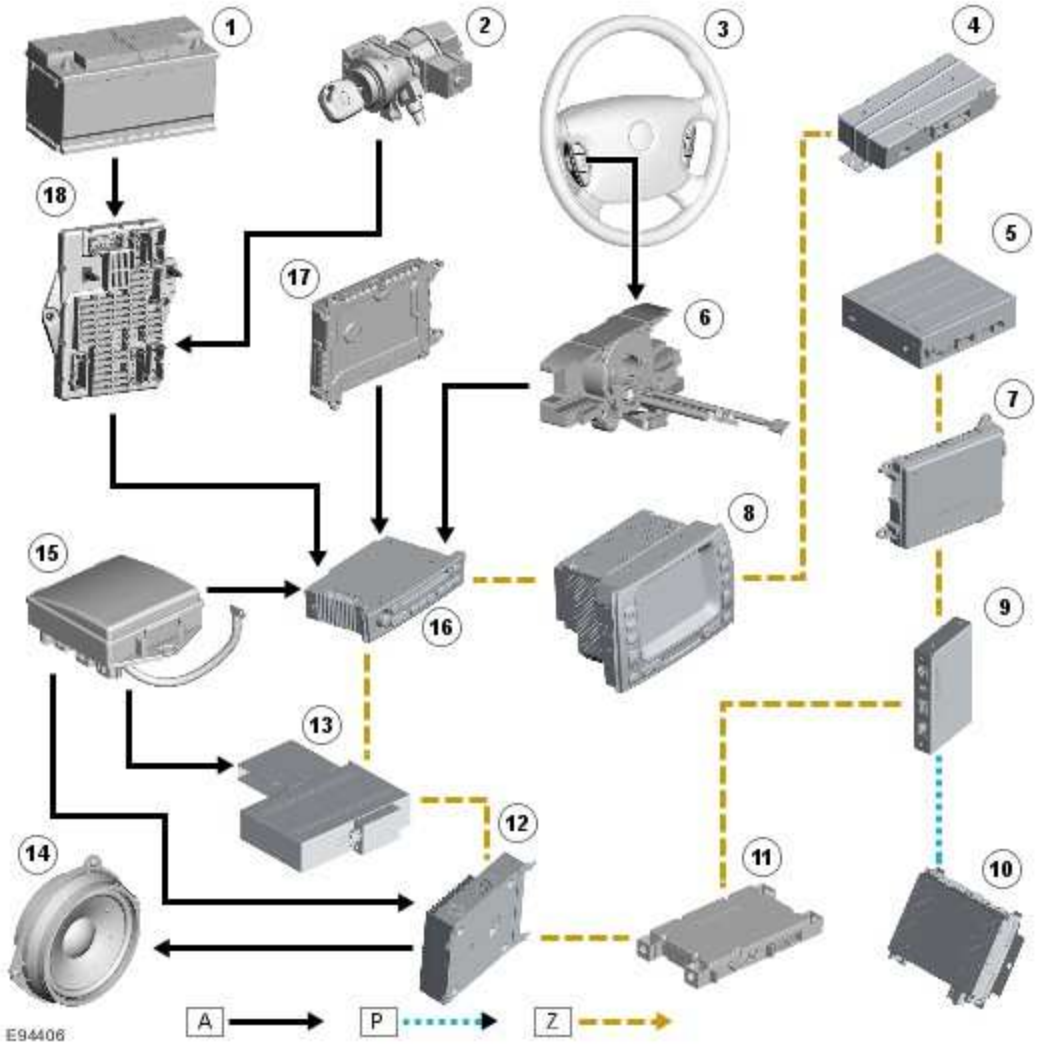

Item	Part Number	Description
1		Battery
2		Ignition switch

3		Clock spring
4		Voice control module
5		Navigation computer
6		Clock spring
7		Rear seat entertainment system control module
8		TSD
9		Gateway module
10		DAB/SDARS/IBOC radio module
11		Telephone control module
12		Amplifier
13		CD (compact disc) changer
14		Speakers
15		RJB (rear junction box)
16		IHU
17		FEM (front electronic module)
18		CJB (central junction box)

www.JagDocs.com

Audio System

OVERVIEW

The Portfolio audio system is an enhancement on the premium system, offering a 7.1 channel Dolby Pro Logic 2 surround sound system. In addition to the premier system, the Dolby Pro Logic 2 system has two additional surround speakers in the rear parcel shelf and a centrally mounted speaker

Audio System

For additional information, refer to<<415-00>>

www.JagDocs.com

Amplifier (86.50.10)

Removal

1 . Disconnect the battery ground cable. <<414-01>>

2 . Remove the luggage compartment floor covering.

1) Remove the luggage compartment floor covering securing screws.

2) Remove the luggage compartment floor covering.

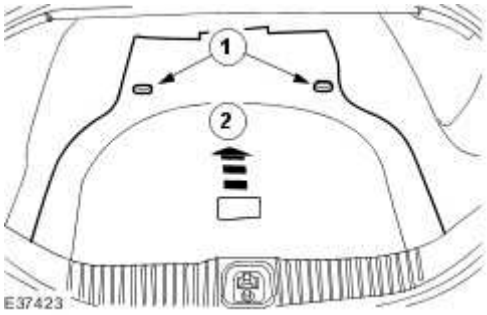

3 . Remove the luggage compartment side trim panel.

Remove the luggage compartment side trim retaining clip.

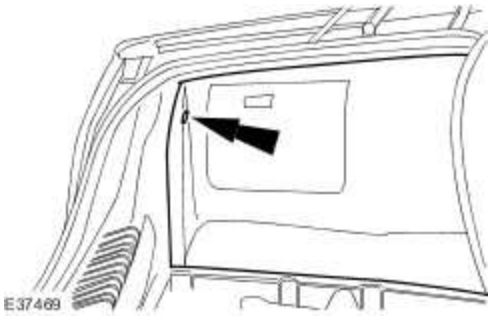

4 . Disconnect the audio unit amplifier electrical connectors.

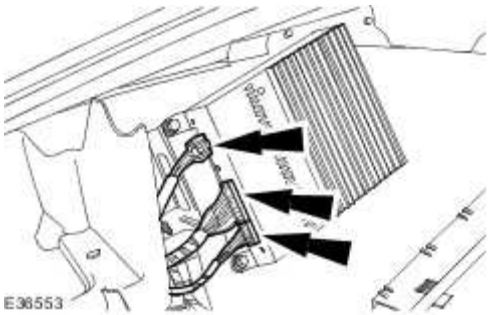

5 . Remove the audio unit amplifier rear retaining bolts.

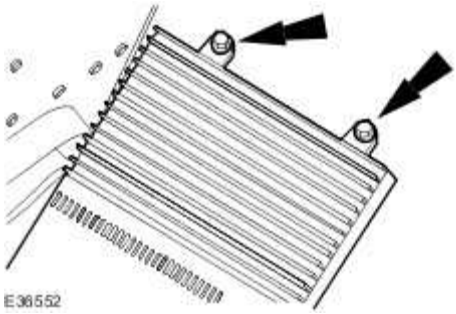

6 . Remove the audio unit amplifier.

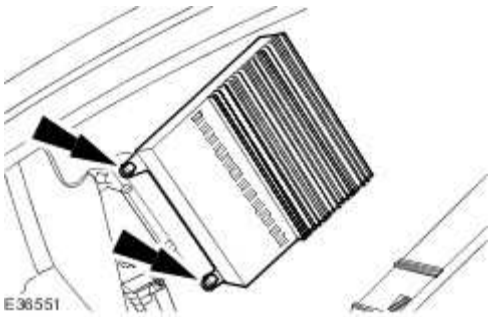

Installation

1 . To install, reverse the removal procedure.

Tighten to 4 Nm.

www.JagDocs.com

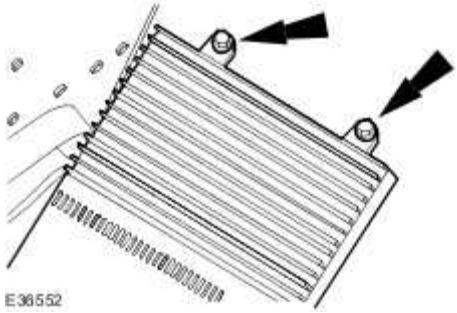

2 . Tighten to 4 Nm.

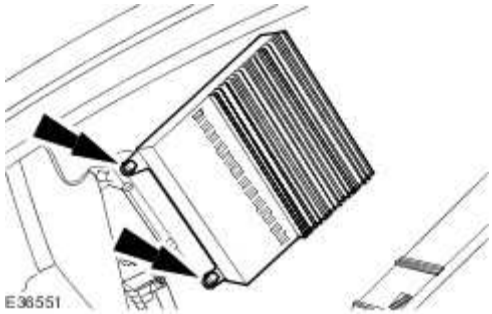

Audio Unit (86.50.03)

Removal

1 . Remove the instrument panel console. <<501-12>>

2 . **CAUTION: Extreme care must be observed not to damage the high gloss finish on the surface of the audio unit.**

CAUTION: Cleaning of the high gloss finish should only be carried out with a soft dry cloth. Failure to follow this procedure will cause damage to the audio unit facia.

NOTE:

Left-hand shown, right-hand similar.

Remove the audio unit.

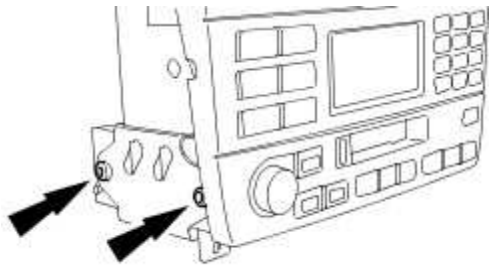

VUJ0004289

Installation

1 . To install, reverse the removal procedure.

Tighten to 2 Nm.

www.JagDocs.com

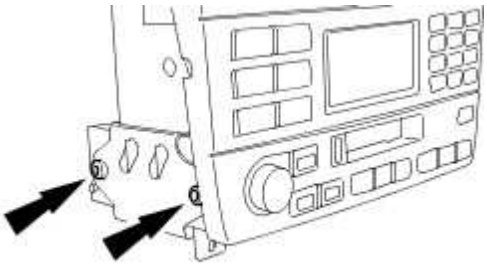

VUJ0004289

Compact Disc (CD) Changer (86.50.06)

Removal

1 . Disconnect the battery ground cable. <<414-01>>

2 . Remove the luggage compartment floor covering.

1) Remove the luggage compartment floor covering securing screws.

2) Remove the luggage compartment floor covering.

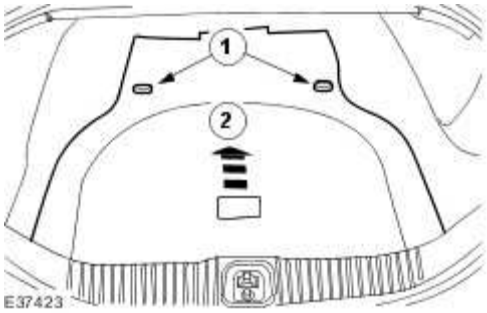

3 . Remove the luggage compartment side trim panel.

Remove the luggage compartment side trim retaining clip.

4 . Remove the boot storage tray.

www.JagDocs.com

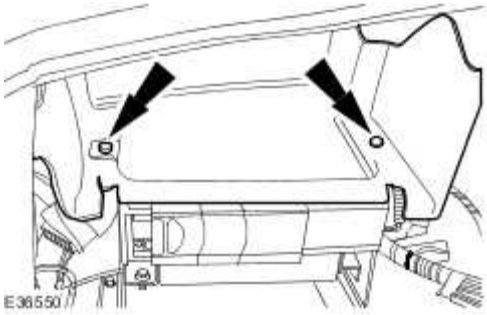

5 . Remove the left-hand compact disc player retaining screws.

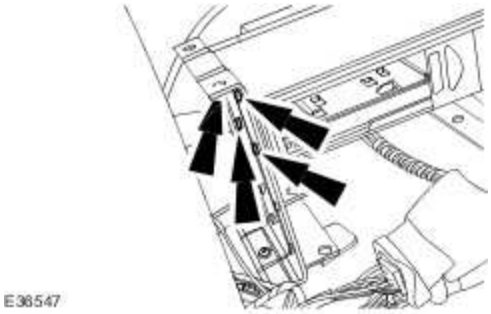

6 . Detach the compact disc changer from the mounting bracket.

Remove the right-hand retaining screws.

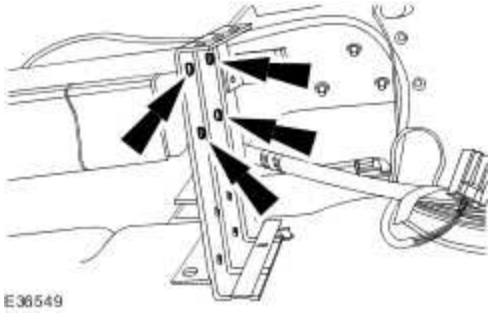

7 . Remove the compact disc player.

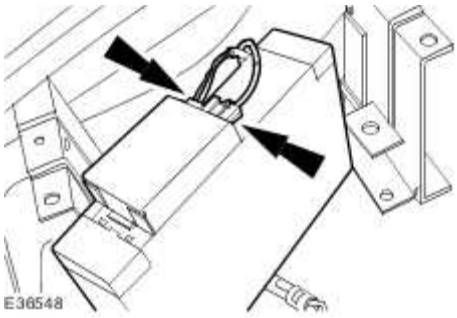

Installation

1. **CAUTION: Ensure the correct length compact disc player retaining screws are installed, If this procedure is not followed damage to the internal mechanism will result.**

To install, reverse the removal procedure.

Tighten to 1 Nm.

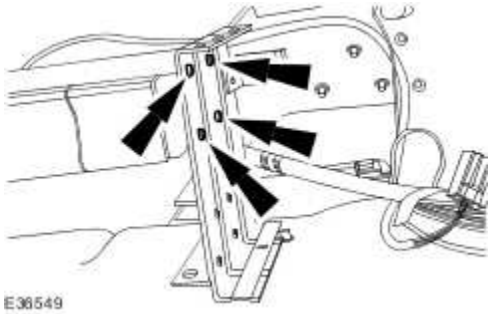

2 . Tighten to 1 Nm.

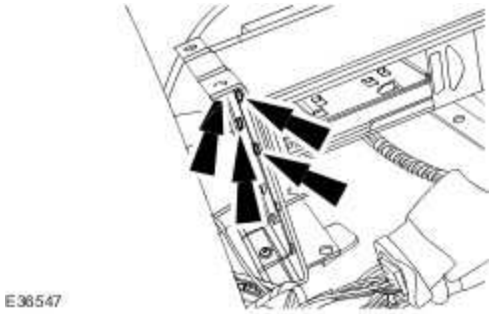

www.JagDocs.com

Steering Wheel Audio Controls (86.50.42)

Installation

1 . To install, reverse the removal procedure.

Tighten to 2 Nm.

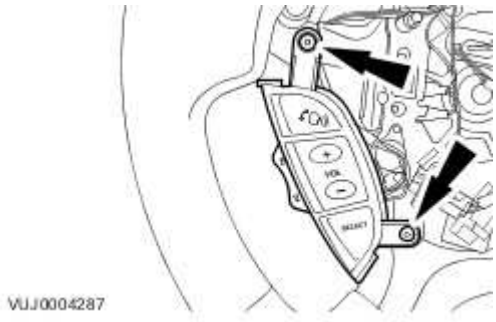

415-02 : Antenna

Description and operation

Antenna

Item	Part Number	Description
1	—	Antenna FM
2	—	Antenna AM
3	—	Antenna filter VICS (Japan only)
4	—	Amplifier(s) TV
5	—	Ground wave trap
6	—	Antenna isolator module
7	—	Positive wave trap
8	—	Antenna VICS beacon (Japan only)

The antenna cable is split into two sections:

- Audio unit to floor console connector.
- Floor console connector to antenna isolator module.

The audio unit to antenna isolator module cable is located in the body wiring harness.

There are two audio antennas fitted to the vehicle, an AM antenna and an FM antenna, both are located in the rear windshield glass. The AM antenna is above the heated rear windshield element to the left-hand side. The FM antenna utilizes the heated rear windshield demist element but does not carry the demist current. The power connector to the demist screen has a filter in line called a positive wavetrap and the ground connector to the demist screen has a filter called a negative wavetrap.

The diversity FM antenna is similar to the AM/FM antenna, except that two FM antennas are derived from the demist pattern. As the demist screen is split to create the extra antennas, a double wavetrap is fitted which has two positive connectors. The antenna isolator switches between the two FM inputs and sends the strongest to the radio.

The antenna isolator module controls both antennas.

The TV antenna system is split into four and works the same as the diversity system for the

www.JagDocs.com

FM antenna. The TV antenna system consists of four amplifiers colour coded black, two mounted onto the rear parcel tray and two mounted onto the right hand rear 'C' pillar. These are connected to the rear backlite and use the same antenna as the FM audio antenna. In order for a vehicle to have TV it must have the navigation option fitted.

The VICS (vehicle information and communication system, Japan only) has two antenna's, one located in the rear backlite and the other located on the facia panel in the left hand corner. The rear antenna has a filter which is located on the right hand rear 'C' pillar colour coded green.

Antenna

Inspection and Verification

1 . Verify the customer concern.

2 . Visually inspect for obvious signs of electrical damage.

Visual Inspection Chart

Electrical
• Antenna isolator module • Antenna AM • Antenna FM • Antenna beacon sensor VICS (Japan only) • Antenna filter VICS (Japan only) • Antenna(s) TV • Amplifier(s) TV • Positive wavetrap • Negative wavetrap • Harness/electrical connectors • Audio unit • Navigation unit

1 . If an obvious cause for an observed or reported concern is found, correct the cause (if possible) before proceeding to the next step.

2 . If the cause is not visually evident, verify the symptom and refer to the Jaguar Approved Diagnostic System.

www.JagDocs.com

Antenna Isolator Module (86.51.08)

Removal

NOTE:

Ensure that both ground connectors are connected to the rear backlite once any work has been carried out in this area as there is a risk that the rear backlite could shatter.

1 . Remove the C-pillar trim panel. <<501-05>>

2 . Disconnect the antenna isolator module electrical connectors.

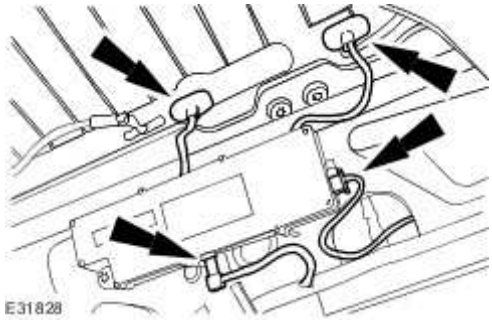

3 . Remove the antenna isolator module.

Remove the retaining screw.

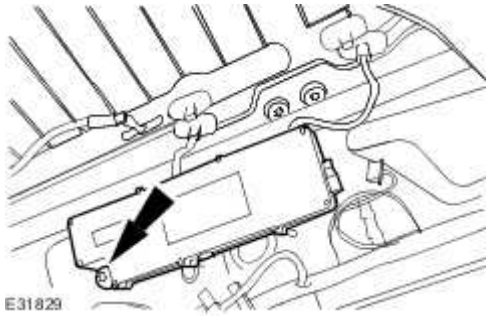

Installation

1 . To install, reverse the removal procedure.

Speakers

There are three speaker systems available, a standard system which has 8 speakers and a premium system which has 12 speakers. The Dolby Pro Logic 2 system, which is fitted to the Super V8 Portfolio, has a 14 speaker configuration.

On the standard system there are:

- door speakers mounted at the base of each door.
- door tweeters mounted together with each door release handle.

On the premium sound system there are:

- high power and high quality door speakers mounted at the base of each door.
- door tweeters mounted together with each door handle.
- mid range speakers mounted to the top left and right of the instrument panel next to the windshield.
- two subwoofers mounted onto the rear parcel shelf.

On the Pro Logic 2 surround sound system there are:

- high power and high quality door speakers mounted at the base of each door.
- door tweeters mounted together with each door release handle.
- mid range speakers mounted to the top left and right of the instrument panel next to the windshield.
- one center fill speaker in the center of the instrument panel.
- two surround speakers mounted in the rear parcel shelf.
- one subwoofer speaker mounted centrally under the rear parcel shelf.

www.JagDocs.com

Speakers

No Data Available

Speakers

Inspection and Verification

1 . Verify the customer concern.

2 . Visually inspect for obvious signs of electrical damage.

Visual Inspection Chart

Electrical
• Speaker(s) • Harness/electrical connectors • Audio unit • Amplifier

1 . If an obvious cause for an observed or reported concern is found, correct the cause (if possible) before proceeding to the next step.

2 . If the cause is not visually evident, verify the symptom and refer to the Jaguar Approved Diagnostic System.

www.JagDocs.com

Front Door Speaker (86.50.13)

Removal

1 . Remove the front door trim panel. For additional information, refer to <<501-05>>.

2 . Disconnect the front door speaker electrical connector.

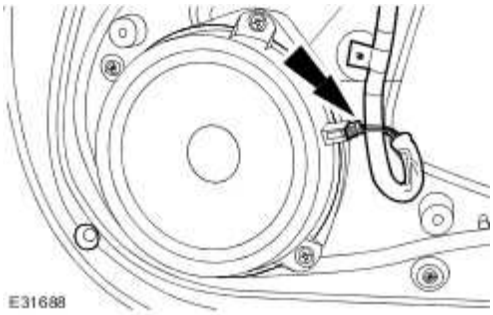

3 . Remove the front door speaker.

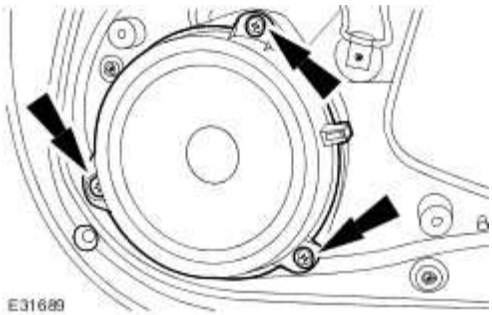

Installation

1 . To install, reverse the removal procedure.

Front Door Tweeter Speaker (86.50.63)

Removal

1 . Remove the front door trim panel. <<501-05>>

2 . Disconnect the electrical connector.

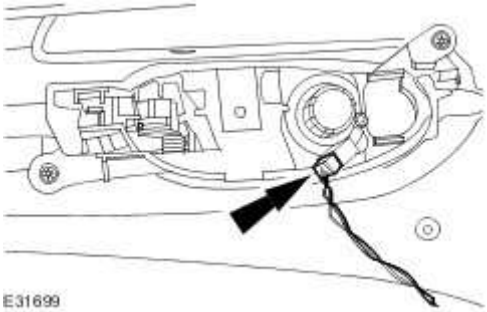

3 . Remove the tweeter speaker.

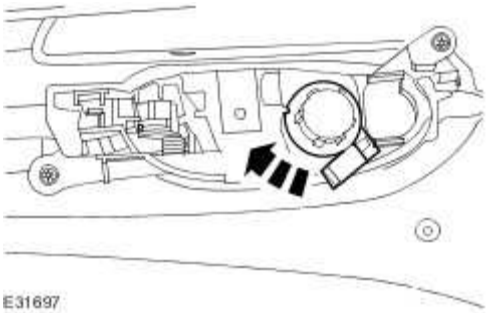

Installation

1 . Install the tweeter speaker.

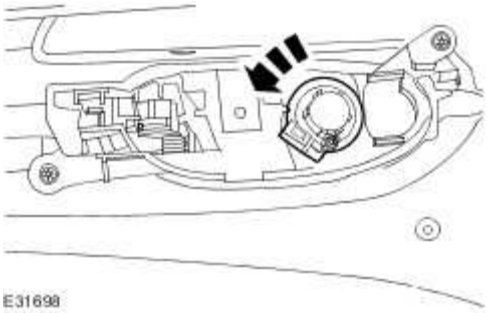

www.JagDocs.com

2 . Connect the electrical connector.

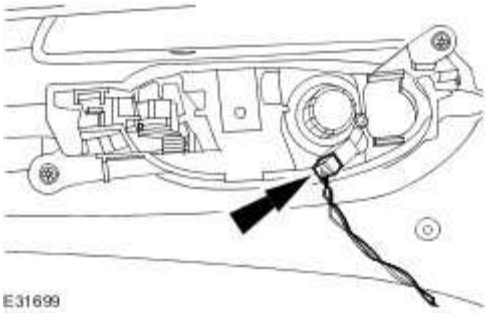

3 . Install the front door trim panel. <<501-05>>

Instrument Panel Speaker

Removal

1 . Using a suitable tool ease the speaker cover from the instrument panel.

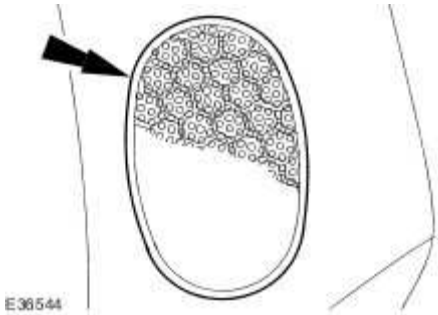

2 . Detach the instrument panel speaker.

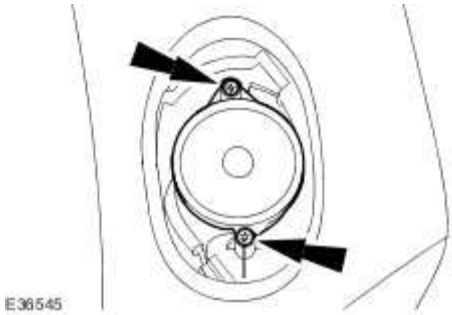

3 . Remove the instrument panel speaker.

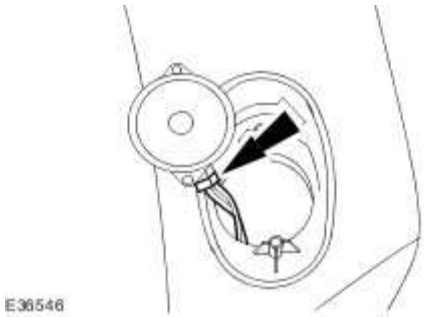

Installation

1 . To install, reverse the removal procedure.

www.JagDocs.com

Rear Door Speaker (86.50.14)

Removal

1 . Remove the rear door trim panel. For additional information, refer to <<501-05>>.

2 . Disconnect the rear door speaker electrical connector.

3 . Remove the rear door speaker.

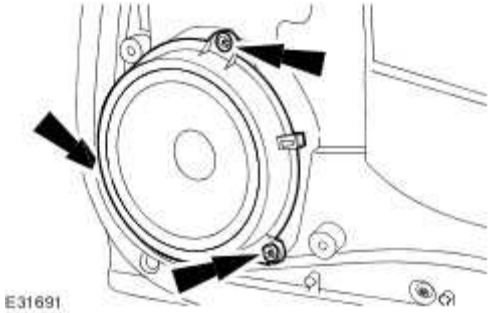

Installation

1 . To install, reverse the removal procedure.

Rear Door Tweeter Speaker (86.50.62)

Removal

1 . Remove the rear door trim panel. <<501-05>>

2 . Disconnect the electrical connector.

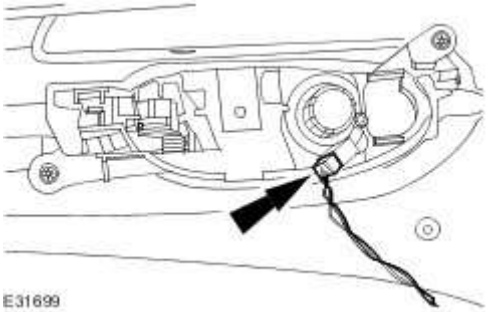

3 . Remove the tweeter speaker.

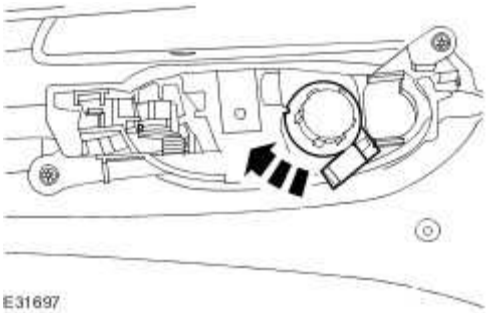

Installation

1 . Install the tweeter speaker.

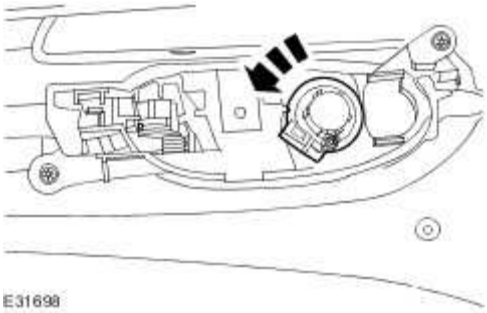

www.JagDocs.com

2 . Connect the electrical connector.

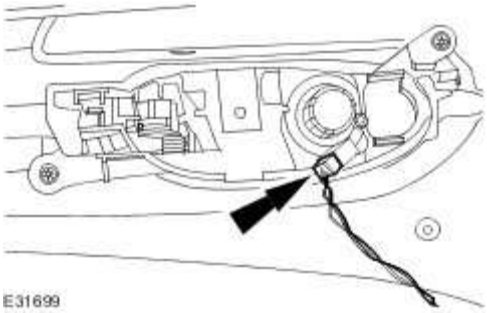

3 . Install the rear door trim panel. <<501-05>>

Subwoofer Speaker (86.51.05)

Removal

1 . Remove the parcel shelf. <<501-05>>

2 . **NOTE:**

Right-hand shown, left-hand similar.

Disconnect the subwoofer speaker electrical connector.

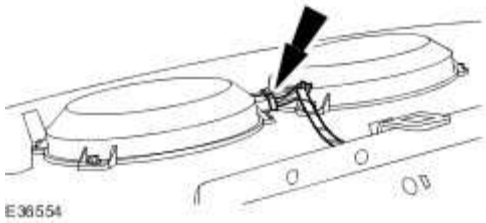

3 . **NOTE:**

Right-hand shown, left-hand similar.

Remove the subwoofer speaker.

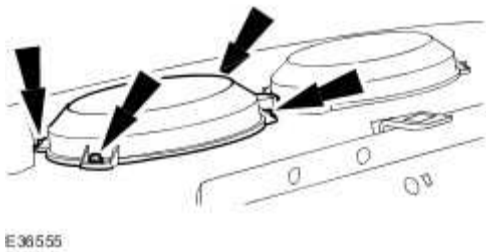

Installation

1 . To install, reverse the removal procedure.

www.JagDocs.com

Specifications

Torque Specifications

Description	Nm	lb-ft	lb-in
Video system module	6	—	53

Video System

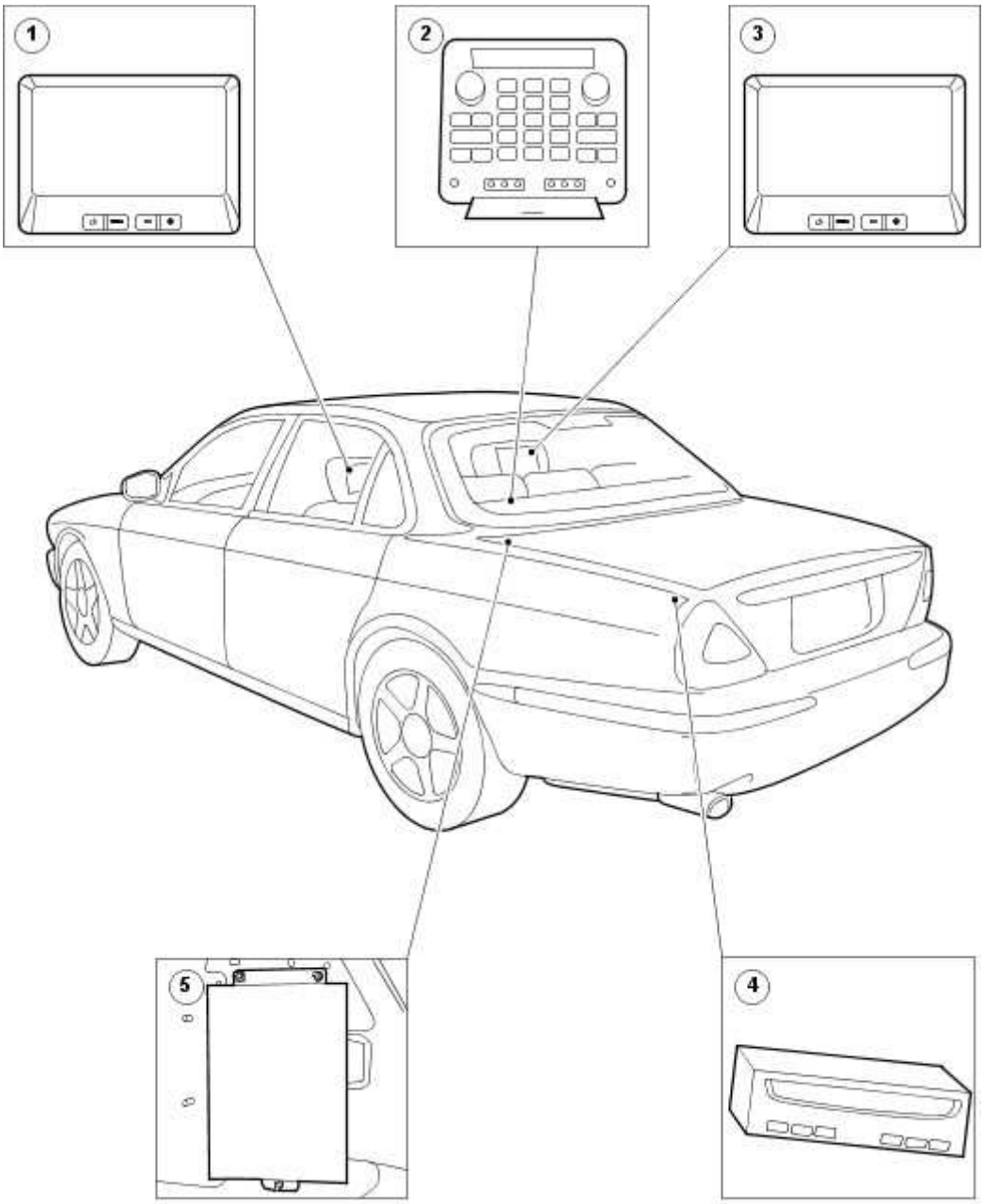

Item	Part Number	Description
1	—	Video display
2	—	Passenger entertainment control panel

www.JagDocs.com

3	—	Video display
4	—	Digital versatile disc (DVD) player
5	—	Video system module

The function of the rear seat multimedia system is to provide audio and video entertainment for the rear seat passengers.

It will provide control of a number of audio and video sources and channel the output independently to the rear left and rear right seat passengers via personal headphones and video screens, or allow output over the main vehicle audio speaker system.

The multimedia system includes the following components:

1. A passenger entertainment control panel (mounted in the rear seat center armrest/console).

2. Two 6.5'' video display screens (mounted in the back of the front headrests).

3. A DVD video player (mounted in the luggage compartment).

NOTE:

The DVD player is region specific and will only play DVD's of the correct region for the DVD player.

4. A video system module (mounted behind the rear seat backrest).

5. A microswitch is fitted to the rear armrest/console lid which will switch off the illumination to the passenger entertainment control panel when the lid is closed.

6. Two headphone sets (Jaguar accessory).

The system features available on a vehicle will depend on the particular vehicle specification.

There are 3 basic system levels:

a) Audio only.

b) Audio and video display screens.

c) Audio, video display screens and DVD video player.

System level a) provides rear seat audio entertainment only.

System level b) has audio/video capability.

System level c) has audio/video capability and includes a dedicated DVD movie player located in the luggage compartment.

The system will allow the rear passengers to control the main vehicle audio system functions and have the facility to connect 2 sets of headphones for private listening. The headphone sockets are incorporated into the passenger entertainment control panel.

The 6.5'' video display screens mounted in the front seat headrests can display video pictures from a number of sources, which can be selected using the passenger entertainment control panel. Signal sources available include the vehicle TV tuner (if specified), navigation screen display (duplication of the front screen), and a DVD video player (if specified). In addition to this the system is equipped with 2 sets of audio/video (auxiliary) inputs that will provide the facility to connect external audio/video media e.g. camcorder, or home video games console.

Each of the audio/video sources described above are independently switchable to either one or both of the headphones and video display screens.

Controllable Units

The rear passengers will be able to control the following units:

Head unit (Cassette/CD/MD and Tuner)

CD changer

Phone (if fitted)

Multizone Voice (if fitted)

DVD Player (if fitted)

AUX 1 and 2

TV (if fitted)

www.JagDocs.com

Rear Multimedia Controls

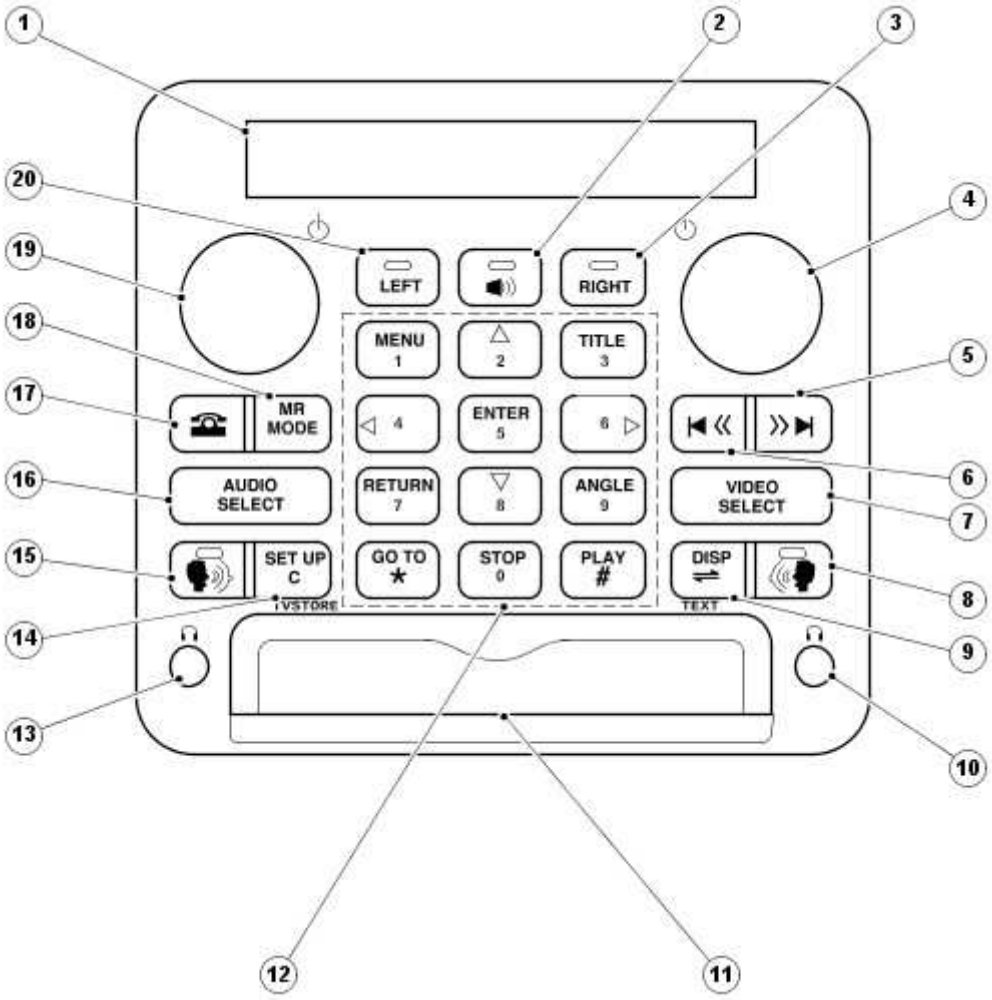

E37639

Passenger Entertainment Control Panel

No	General Function
1	Passenger entertainment control panel display
2	Cabin mode key and rear speaker control
3	Priority key with tell-tale LED for right headphone
4	ON/OFF rotary volume control for right
5	Arrow key (FF, Track Up, Seek Up etc)
6	Arrow key (REW, Track Down, Seek Down etc)
7	Video source selection key

8	PTT and send/end with tell-tale for right
9	DVD display, cassette direction and Teletext key
10	Head phone socket for right-hand side passenger
11	AUX jack socket panel
12	12 digit keypad
13	Head phone for left-hand side passenger
14	Telephone cancel, DVD set-up menu and TV auto store key
15	PTT and send/end with tell-tale for left
16	Audio source selection key
17	Phone key
18	Audio mode and telephone memory recall key
19	ON/OFF rotary volume control for left
20	Priority key with tell-tale LED for left headphone

12 Digit Keypad (12)

No	General Function
1	DVD mode: MENU key
2	DVD mode: CURSOR (UP) key
3	DVD mode: TITLE key
4	DVD mode: CURSOR (LEFT) key
5	DVD mode: ENTER key
6	DVD mode: CURSOR (RIGHT) key
7	DVD mode: RETURN key

www.JagDocs.com

8	DVD mode: CURSOR (DOWN) Key
9	DVD mode: ANGLE key
0	DVD mode: STOP key
#	DVD mode: PLAY key
*	DVD mode: GO TO key

Passenger Entertainment Control Panel Display (1)

The passenger entertainment control panel includes a single line 17 character LCD display. It will display text messages, information and icons relating to the system function selected. When a function has been selected e.g. voice command or phone call initiated, the LCD display will provide text feedback to the rear passengers indicating their selection. It will also display information relating to the audio and video mode selected or adjusted.

ON/OFF Rotary Volume Control (4 & 19)

Two ON/OFF master rotary controls are included in the system (one for left and one for right). Press the rotary control to turn the system ON/OFF. The volume level of the source selected can be adjusted by rotating the control knob clockwise for increase, and anti-clockwise for decrease, across a range of settings (0-35). The volume level will be indicated on the passenger entertainment control panel display during adjustment and momentarily afterwards. The system will memorise the volume setting for each audio source.

Priority Key with Tell-tale LEDs (3 & 20)

Pressing the LEFT key will make all subsequent key presses affect the rear left passenger zone. Pressing the RIGHT key will make all subsequent key presses affect the rear right passenger zone. To indicate which zone is currently in control of the control panel an LED in the relevant zone key will be illuminated. It will remain on until the priority zone is changed (e.g. right or cabin mode). Note: It is not necessary to press the LEFT/RIGHT key when entering phone or voice command mode.

Rear Speaker Control and Cabin Mode Key (2)

This is a dual function key (cabin mode select key and a rear speaker mute/demute key).

A short press on this button will switch the system to cabin mode. This will allow the rear passengers to control the main vehicle audio speaker system. When cabin mode is selected a tell-tale LED in the button will be illuminated.

A long press on this switch will mute the rear speakers and the sub-woofer. If they are already muted, speaker muting will be cancelled.

Audio Mode and Phone Memory Recall Key (18)

If this key is pressed the system will enter audio adjustment mode. Each press will toggle through the following audio settings in the order indicated below:

BASS>TREBLE>BALANCE>*FADE>*SUB>*DSP>BASS

* Only displayed when in cabin mode.

During cabin speaker operation the mode operation button will allow audio control setting and adjustment of:

1. Bass

2. Treble

3. Balance

4. Fade

5. Sub-Woofer

6. DSP setting

Bass and treble are adjusted and memorised for each available source.

During headphone mode operation only 1, 2 & 3 are available.

To adjust the audio settings selected, release the mode button when the control panel display indicates the audio setting (e.g. BASS), and use the master rotary knob to adjust the selected mode function.

The passenger entertainment control panel display will indicate the state of the selected source option.

Note: In phone mode this key is a memory recall and redial key.

Audio Source Selection Key (16)

The audio source select key allows the selection of the audio source signal (e.g. CD autochanger, Tuner Band FM/AM, MiniDisc, CD/Tape Headunit, Aux1, Aux2 etc).

Each key press will toggle through the available sources. The order of selection is:

FM>AM (MW/LW)>TAPE (or MD, CD)>CDC>**TV>**DVD>AUX1>AUX2>FM

The passenger entertainment control panel display will indicate the state of the selected source

www.JagDocs.com

option.

**If specified on vehicle.

Video Source Selection Key (7)

The video select key allows selection of a video source signal (e.g. DVD, TV, FRONT, AUX 1, AUX 2 etc).

Each key press will toggle through the available sources. The order of selection is:

FRONT>TV>**DVD>AUX 1>AUX 2>**FRONT

The audio will be changed automatically to the selected visual source except when FRONT is selected.

The passenger entertainment control panel display will indicate the state of the selected source option.

**If specified on vehicle.

Arrow Keys (5 & 6)

The arrow keys are multifunction buttons which have a different function depending on the specific audio/video mode selected at the time of use:

Tuner frequency adjust (up/down) - In tuner mode, momentarily pressing this button allows tuning (up or down) of the radio frequency band to the next available station. Pressing and holding the button allows manual tuning of the radio frequency. During either operation the passenger entertainment control panel display will show the frequency as it seeks up or down.

TV channel adjust (up/down) - In TV mode, momentarily pressing this button allows tuning (up or down) of the available TV frequency band to the next available preset. Long press of this button seeks the next station.

CD disc skip up/down - In CD mode, momentarily pressing this button allows selection of the next (Skip Up) or previous (Skip Down) CD track of the current disc selected. Long press of this button allows fast forward or fast reverse (Scan Up/Scan Down).

MiniDisc skip up/down - In MiniDisc (MD) mode, momentarily pressing this button allows selection of the next (Skip Up) or previous (Skip Down) MD track of the current disc selected. A long press of this button allows fast forward or fast reverse (Scan up/Scan down).

Tape forward (>>)/Rewind (<<) - In Tape mode, momentarily pressing the (>>) button allows selection of the next (Seek Up) or pressing the (<<) button allows selection of the previous (Seek Down) track. Multiple presses (up to a maximum of 9) will seek the chosen track. Pressing and holding the button for 2 seconds will select fast forward or rewind.

Talk Keys (8 & 15)

The function of these keys depends on the mode selected at the time and the vehicle specification.

Headphone audio mute keys - In a vehicle without a phone and multizone voice system, these keys are audio mute keys for the headphones. Pressing the left TALK or right TALK key will mute the respective headphone set. When the LEFT/RIGHT mute function button is active a tell-tale LED in the button will be illuminated.

Multizone voice if fitted (PTT keys) - Vehicles specified with a Multizone Voice command system will allow the rear passengers to execute a number of voice commands from the rear seat position. Press the left or right PTT key to inform the vehicle voice command system that a voice command is about to be issued.

The following are examples of voice commands functions which are supported:

TV COMMANDS -

TV channel select

Preset up/down

PHONE COMMANDS -

Phone on/off

Phone redial

Phone directory

AUDIO CONTROL -

Radio/Audio on/off

Seek tune up/down

Tape on

Track select

CDC disc select

A complete list of all the voice commands which are available can be found in the owner's handbook.

An associated text message for each rear voice command will appear in the passenger entertainment control panel display as confirmation of the issued voice command. In this mode, the passenger

www.JagDocs.com

entertainment control panel display will behave as a single 17-character display (not divided).

Handsfree phone mode (Send/End Keys) - vehicles equipped with a phone, and a multizone voice command system allow the rear passengers to carry out a handsfree phone call.

Press the PHONE button to select phone mode. Dial the telephone number required using keys 0-9 and press LEFT/RIGHT Talk button to initiate a hands- free phone call.

Phone Key (17)

If this key is pressed, the system will enter phone mode. In this mode, the passenger entertainment control panel display will behave as a single 17-character display (not divided). In this mode the user will be able to the use passenger entertainment control panel as telephone keypad.

NOTE:

Phone and multizone voice must be specified on the vehicle.

12 Digit Keypad (12)

The 12-digt keypad is a multifunction keypad. It has a different function depending on the audio/video mode at the time of use:

Tuner presets (1-9) - press and release the preset buttons (1-9) to select a preset radio station while in audio tuner mode. In each waveband (FM/MW) nine stations can be recalled using the bank of buttons marked 1-9. The passenger entertainment control panel display will indicate the selected waveband and frequency selected (e.g. 102.6 FM).

TV channel select (0-9) - Press and release one of the preset buttons (1-9) to select a preset TV station while in TV mode.

CD autochanger disc select (1-6) - Press and release one of the preset buttons (1-6) to select a CD disc while in CD mode.

DVD functions - The following functions are available in DVD mode when pressing the control panel keys, dependant on the functions being supported by the DVD disc. A short press of the relevant key in DVD mode will select the following function:

[1] MENU Key

[2] CURSOR (UP) Key

[3] TITLE Key

[4] CURSOR (LEFT) Key

[5] ENTER Key

[6] CURSOR (RIGHT) Key

[7] RETURN Key

[8] CURSOR (DOWN) Key

[9] ANGLE Key

[0] STOP Key

[#] PLAY Key

[*] Go To Key

[Disp] Display

[C] Set up

A long press of the keys 0-9 in DVD mode will select the respective digit (0-9).

Tape Reverse, Display and Teletext key (9)

This key has 3 functions:

TAPE REVERSE KEY - Pressing this key in tape mode will change the side/direction of the tape currently playing.

DVD DISPLAY KEY - In DVD mode the DVD display status information will be displayed on the 6.5" video display screen (e.g. current chapter number, current playing time etc). If the disc information is already displayed, it will be cancelled on pressing this button. A long press of this button will change from NTSC to PAL format.

TV/TELETEXT KEY - In TV mode pressing this key will display teletext on the 6.5" video display screen. If teletext is already displayed it will be cancelled on pressing this button and the picture will be displayed.

Note: TV/Teletext picture quality is dependant on the TV reception signal available.

Cancel, Set-Up Menu and TV Auto Store Key (14)

This key has three functions.

PHONE CANCEL KEY - The CANCEL key is used for deleting entered number(s). A short press will delete all entered digits. This function will be valid during phone mode only.

www.JagDocs.com

DVD SET-UP - During DVD mode, pressing this key will display the DVD set-up menu on the 6.5" video display screen.

TV STORE KEY - During TV mode pressing this key will initiate a TV autostore.

AUX1 and AUX2 Audio/Video Inputs (11)

Use the AUX 1 and AUX 2 inputs to connect external audio and video sources to the system (e.g. camcorder, DVD, games console). To select the AUX 1 or AUX 2 input source use the AUDIO or VIDEO Select buttons described above.

6.5" Video Display Rear Screen Controls

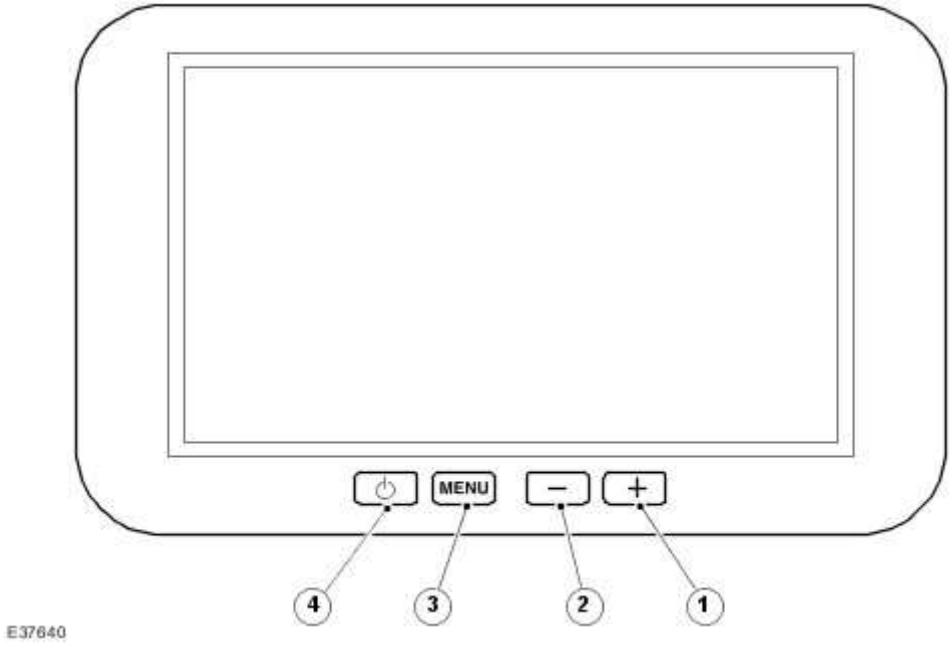

No	General Function
1	+/> Button
2	-/< Button
3	Menu Select Button
4	Power ON/OFF Button

Power ON and OFF (4)

Power ON/OFF button for 6.5" video display screen. Pressing this button will switch the screen on or off.

Menu Select Button (3)

This button will select the on-screen display (O.S.D.) menu for the video display screen. A menu will appear on the screen. The following screen settings will be available for adjustment:

Brightness: Adjust the brightness level of the screen.

Color: Adjust the color level of the screen (composite signal only).

Tint: Adjust the tint level of screen (composite NTSC signal only).

Dimmer: Select AUTO or MANUAL.

Dimmer level: Adjust dimmer level if set to MANUAL.

Screen mode: Select aspect ratio for screen.

Input: Select NTSC/PAL/AUTO.

Left (-/<) and Right (+/>) Cursor Control Keys (1 and 2)

These keys are used with the O.S.D. Menu key (3) to select and deselect the O.S.D. options available on the video display screen.

www.JagDocs.com

Video System

Principles of operation

The rear seat multimedia system can provide audio or audio/visual entertainment independently to the rear left-hand and right-hand passengers via personal headphones and display screens, or allow output over the main vehicle audio system speakers, and allows the rear seat passengers to control certain voice-activated functions, provided the multi-zone voice option is fitted.

There are three system levels:

Level One

Level one provides rear seat audio only, controlled independently of the main ICE control unit.

Level Two

Level two provides audio/visual capability, and allows the use of video inputs from a number of sources, selected from the rear entertainment control panel:

- TV tuner (where fitted)
- camcorder (via auxiliary connectors in the rear entertainment control panel)
- video games (via auxiliary connectors in the rear entertainment control panel)
- any other external audio or video source compatible with the auxiliary connectors

Level Three

Level three provides all the functions of level two, plus DVD (located in the luggage compartment).

Each of the audio/visual sources above are switchable to allow the headphones/display screens to operate independently of each other.

The rear seat passengers will be able to control the following units:

- ICE head unit (tuner, MC, CD, and MD)
- phone (where fitted)
- multizone voice control (where fitted)
- TV tuner (where fitted)
- DVD player (where fitted)
- auxiliary sources, 1 and 2

For further information on the operation of the system,
Video System

Inspection and verification

1 . Verify the customer concern.

2 . Visually inspect for obvious signs of mechanical or electrical damage.

Visual inspection chart

WARNING: Removal of the front seats will involve the disconnection of "hot" connectors (connectors in the SRS system to the air bag modules). <<501-20>> For safety information on disconnection of air bag connections.

NOTE:

The display screens for each side are not handed, and may be used to prove a fault by substituting one side for the other. Control modules should **NOT** be substituted from another vehicle.

Electrical
Fuse(s) REFER to fuse identification table
Wiring harness(es) REFER to symptom charts
Electrical connector(s)
Rear entertainment control unit (control panel)
ICE head unit
DVD player
Right-hand rear display screen
Left-hand rear display screen
Video system module

Fuse number	Rating	Circuit	Fuse box location

www.JagDocs.com

41	20 Amp	Ignition switch	Front power distribution box
20	5 Amp	Rear entertainment control panel (accessory supply)	Front power distribution box
30	10 Amp	Rear entertainment control panel/AV selector/DVD player (battery supply)	Front power distribution box

1 . If an obvious cause for an observed or reported concern is found, correct the cause (if possible) before proceeding to the next step.

Symptom chart

Symptom	Action
No display on either rear screen	To test the screens and circuits, GO to Pinpoint Test G240121p1. . For screen power and ground circuit tests, GO to Pinpoint Test G240121p11. and GO to Pinpoint Test G240121p12. .
No display on right-hand rear screen	To test the screen and circuit, GO to Pinpoint Test G240121p2. . For screen power and ground circuit tests, GO to Pinpoint Test G240121p11. and GO to Pinpoint Test G240121p12. .
No display on left-hand rear screen	To test the screen and circuit, GO to Pinpoint Test G240121p3. . For screen power and ground circuit tests, GO to Pinpoint Test G240121p11. and GO to Pinpoint Test G240121p12. .
PAL/NTSC malfunction	To test the screens and circuits, GO to Pinpoint Test G240121p1. , GO to Pinpoint Test G240121p2. , and GO to Pinpoint Test G240121p3. .
No sound from the auxiliary input	For **AUX1** tests, GO to Pinpoint Test G240121p8. . For **AUX2** tests, GO to Pinpoint Test G240121p10.
No display on **AUX1**	For **AUX1** tests, GO to Pinpoint Test G240121p1. , GO to Pinpoint Test G240121p2. , and GO to Pinpoint Test G240121p3.

	.
No display on **AUX2**	For **AUX2** tests, GO to Pinpoint Test G240121p9. , and GO to Pinpoint Test G240121p10. .
No display in **ACC** position	For power and ground tests, GO to Pinpoint Test G240121p5. .

Rear entertainment symptom chart

Symptom	Possible Source	Action
No rear entertainment function	• Rear entertainment control unit (control panel) • Control module failure • RCU control module harness • RCU control module power harness • RCU control module ground harness	Check the D2B wake-up signal, <<418-00>> For control panel circuit tests, GO to Pinpoint Test G240121p5. , GO to Pinpoint Test G240121p6. and GO to Pinpoint Test G240121p7. . For screen power and ground circuit tests, GO to Pinpoint Test G240121p11. and GO to Pinpoint Test G240121p12. .
Rear entertainment system not functioning correctly	• Rear entertainment control unit (control panel) • Control module failure (control module for incorrectly functioning system)	For control module circuit tests, GO to Pinpoint Test G240121p5. , GO to Pinpoint Test G240121p6. and GO to Pinpoint Test G240121p7. <<418-00>> For screen power and ground circuit tests, GO to Pinpoint Test G240121p11. and GO to Pinpoint Test G240121p12. .
Total or partial non-function of rear entertainment system	• Rear entertainment control unit (control panel) • AV selector unit	For rear entertainment control unit (control panel) tests, GO to Pinpoint Test G240121p5. , GO to Pinpoint Test G240121p6. and. GO to Pinpoint Test G240121p7. . For screen power and ground circuit

www.JagDocs.com

		tests, GO to Pinpoint Test G240121p11. and GO to Pinpoint Test G240121p12. .

TV symptom chart

Symptom	Possible Source	Action
Impaired screen image	• TV **G** signal harness • TV **B** signal harness • TV **R** signal harness • TV **RGB** ground harness • TV **sync** signal harness • TV **sync** ground	Check screen function from a different video source (DVD/Video game). For circuit tests, GO to Pinpoint Test G240121p13. .

DVD symptom chart

Symptom	Possible Source	Action
No DVD signal	• DVD player	Check disc. For DVD supply, ground and D2B circuit tests, <<418-00>>
Corrupted or unreadable DVD signal	• DVD player	Check disc. For DVD supply, ground and D2B circuit tests, <<418-00>>
No DVD signal, no DVD image available	• DVD harness	For DVD supply, ground and D2B circuit tests, <<418-00>>
No DVD player function	• DVD player power harness • DVD player ground harness	For DVD supply, ground and D2B circuit tests, <<418-00>>

Diagnostic trouble code (DTC) index

DTC	Description	Possible	Action

		Source	
U2003	CD changer is not responding	D2B	For D2B tests, <<418-00>>
U2008	Phone is not responding	D2B	For D2B tests, <<418-00>>
U2019	Voice module is not responding	D2B	For D2B tests, <<418-00>>
U2601	D2B wake-up line short to ground	D2B	For D2B tests, <<418-00>>
U2609	D2B wake-up pulse width out of spec	D2B	For D2B tests, <<418-00>>
U2613	Nav module is not responding	D2B	For D2B tests, <<418-00>>
U2614	Amp module is not responding	D2B	For D2B tests, <<418-00>>
U2615	Rear entertainment module is not responding	D2B	For D2B tests, <<418-00>>
U2602	D2B ring incomplete - fault report received	D2B	For D2B tests, <<418-00>>
U2603	D2B ring incomplete - **NO** fault report received	D2B	For D2B tests, <<418-00>>
U2604	D2B ring incomplete - **CORRUPTED** fault report received	D2B	For D2B tests, <<418-00>>

Selecting AUX1; AUX2 and audio functions

To set the rear entertainment control panel to AUX1:

- turn the rear control panel **ON** by pressing the left-hand or right-hand **ON/OFF** controls
- press the **LEFT** button (the LED should now be illuminated)
- press the **VIDEO SELECT** button repeatedly until **AUX1** is displayed in the left-hand side of the control panel display
- press the **RIGHT** button and repeat the above procedure until **AUX1** is displayed in both sides of the control panel display

www.JagDocs.com

To set the rear entertainment control panel to AUX2:

- repeat the procedure above, until **AUX2** is displayed in both sides of the control panel display

To set the cabin speakers to the AUX1 setting

- turn the rear control panel **ON** by pressing the left-hand and right-hand **ON/OFF** controls
- press the button between the **LEFT** and **RIGHT** buttons, marked with a speaker icon (the current setting will be displayed in the middle of the control panel display)
- press the **AUDIO SOURCE** button repeatedly until **AUX1** is displayed

To set the cabin speakers to the AUX2 setting

- repeat the procedure above, until **AUX2** is displayed

Selecting AUTO/PAL/NTSC

To set the display screen module to the selected mode:

- turn the selected display screen on, so that the background is illuminated
- press and hold the **MENU** button until two choices are displayed, **brightness** and **color**
- press the **MENU** button twice to display the next screen. This will show four choices, **dimmer mode, dimmer level, display mode, and NTSC/PAL**
- press the **MENU** button to select **NTSC/PAL**. This will show three setting choices
- press the **+** or **-** button to select the desired setting (testing requires the screens to be set to **AUTO**)

Oscilloscope set-up procedure

The following set-up instructions refer to the Jaguar approved diagnostic system, but uses terminology which can be adapted to suit other makes of oscilloscope.

Channel (first icon)

Select **SENSE** (listed under channel 1) in the left-hand side of the screen.

Select **RED PROBE (C-248)** in the right-hand side of the screen.

Select the second icon at the bottom of the screen.

Trigger (second icon)

Select **TRIGGER EDGE** in the left-hand side of the screen.

Select **FALLING** on the right-hand side of the screen.

Select the third icon at the bottom of the screen.

Signal (third icon)

Select **CHANNEL 1** in the left-hand side of the screen.

Select **FREQUENCY** in the right-hand side of the screen.

Select the fourth icon at the bottom of the screen.

Display (fourth icon)

Select the **Y** axis.

From the list of frequencies, select **500 mV/div**. This range should be available in most oscilloscopes.

Select the **X** axis.

From the list of frequencies, select **50 us/div**. This range should be available in most oscilloscopes.

Start

Depending on the type of oscilloscope being used, this may vary, but will usually be the triangular button.

With the oscilloscope capturing data, observe the waveforms. Examples of expected waveforms can be seen in "Waveforms" in this section.

Waveforms

The waveform below will be displayed when a test signal is being transmitted.

www.JagDocs.com

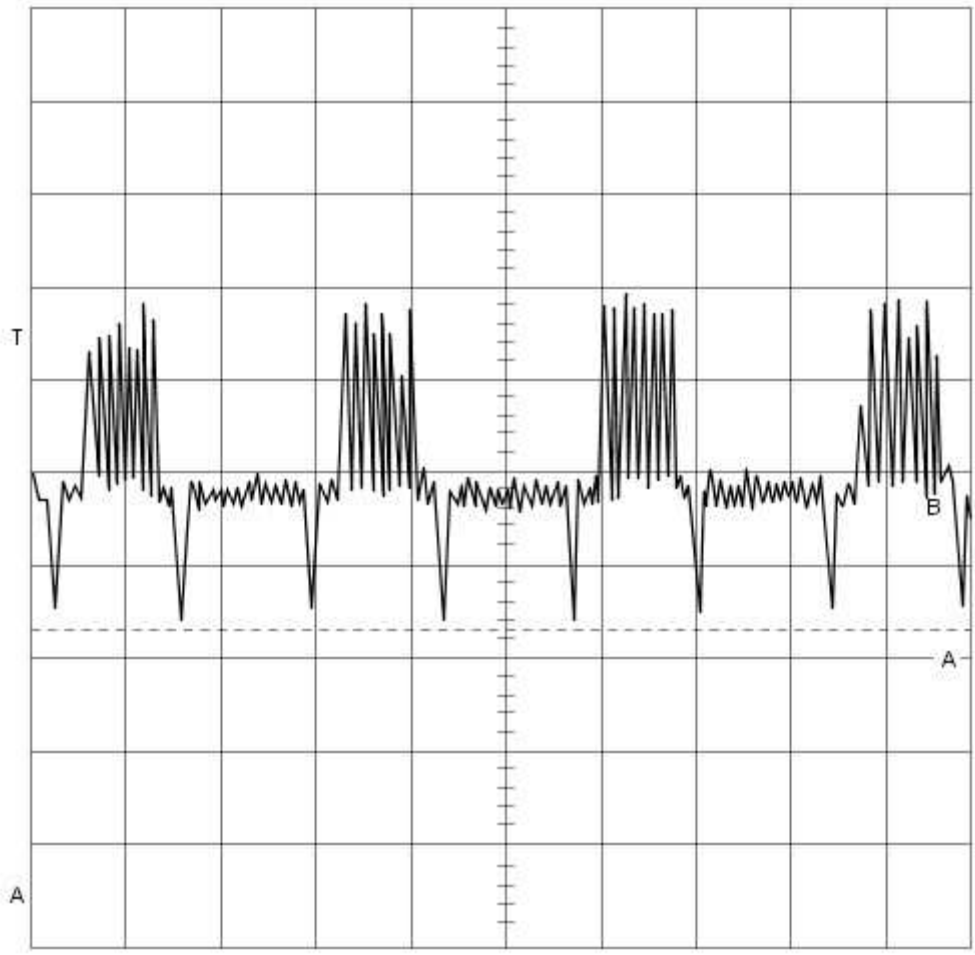

E39492

Connector access

Connector number	Function	Location
VL01	Screen connector	At left-hand screen, Video Display
VR01	Screen connector	At right-hand screen, Video Display
VL02	Intermediate connector	In the front seat back, <<501-10>>
VR02	Intermediate connector	In the front seat back, <<501-10>>
TL91	Intermediate connector	Beneath the right-hand front seat (move the seat fully forward and to the fully raised position).

TL92	Intermediate connector	Beneath the left-hand front seat (move the seat fully forward and to the fully raised position).
TL85, TL86, TL87, TL20	Audio video selector module connectors	Behind the rear seat back, Video System Module
RC04	Intermediate connector	Behind the rear seat back, below the audio video selector module, Video System Module
RC01, RC03	Control panel connectors	In the rear armrest, Rear Passenger Entertainment Control Panel

Pinpoint Tests

CAUTION: Electronic modules are sensitive to static electrical charges. If exposed to these charges, damage may result.

CAUTION: When probing connectors to take measurements in the course of the pinpoint tests, use the adaptor kit, part number 3548-1358-00.

CAUTION: The small size of the pins in the audio/visual harnesses mean that probing must be done with great care. The use of suitable adaptors is very important, and an assistant to hold the harness would make probing far easier.

NOTE:

Repairs to the harnesses would not be viable. If a circuit fails a pinpoint test, the harness should be replaced.

NOTE:

When performing electrical voltage or resistance tests, always use a digital multimeter (DMM) accurate to 3 decimal places, and with an up-to-date calibration certificate. When testing resistance, always take the resistance of the DMM leads into account.

www.JagDocs.com

NOTE:

Check and rectify basic faults before beginning diagnostic routines involving pinpoint tests.

PINPOINT TEST G240121p1 : CHECK THE NTSC SIGNAL AT THE REAR SCREENS

G240121t1 : CHECK THE SCREENS AND CIRCUITS USING THE VIDEO/AUDIO TESTER (NTSC)

1. Turn the ignition switch to the **ACC** position. 2. Set the rear entertainment control panel to **AUX1** for both screens (refer to **Selecting AUX1; AUX2 and audio functions** in this section). 3. Set the rear screens to **AUTO** (refer to **Selecting AUTO/PAL/NTSC** in this section). 4. Connect the video/audio tester to **AUX1**, video (yellow). 5. Select **NTSC** on the video/audio tester, make sure the blue LED is illuminated.

- **Is the NTSC test image displayed on both screens?**

-> Yes
For **PAL** signal tests, GO to Pinpoint Test G240121p4.
.

-> No
If the test image is displayed on the left-hand screen only, GO to Pinpoint Test G240121p2.
.

If the test image is displayed on the right-hand screen only, GO to Pinpoint Test G240121p3.
.

If the test image is displayed on neither screen, GO to Pinpoint Test G240121p4.
.

PINPOINT TEST G240121p2 : CHECK THE PAL SIGNAL AT THE THE RIGHT-HAND SCREEN

G240121t2 : CHECK THE PAL SIGNAL AT THE RIGHT-HAND SCREEN

1. Turn the ignition switch to the **ACC** position. 2. Set the rear entertainment control panel to **AUX1** for both screens (refer to **Selecting AUX1; AUX2 and Audio functions** in this section). 3. Set the rear screens to **AUTO** (refer to **Selecting AUTO/PAL/NTSC** in this section). 4. Connect the video/audio tester to **AUX1**, video (yellow). 5. Select **PAL** on the video/audio tester, make sure the blue LED is illuminated. 6. Observe the rear screen image.

- **Is the PAL test image displayed on the right-hand screen?**

-> Yes
INSTALL a new right-hand screen,
Rear Passenger Entertainment Control Panel (The screen cannot decode a NTSC signal).

-> No
GO to Pinpoint Test G240121t3.

G240121t3 : CHECK THE SIGNAL TO THE RIGHT-HAND REAR SCREEN INTERMEDIATE CONNECTOR TL91

1. Reposition the right-hand front seat fully forward and to the fully raised position. 2. Turn the ignition switch to the **OFF** position. 3. Make sure the video/audio tester is switched **OFF**. 4. Disconnect the intermediate connector, TL91. 5. Connect the oscilloscope. Refer to **Oscilloscope set-up procedure** in this section. 6. Turn the video/audio tester **ON**, and to the **TEST** position by holding in the **TEST** button while selecting **PAL** or **NTSC**. The blue and red LEDs will illuminate. 7. Turn the ignition switch to the **ON** position. 8. Using suitable adaptors, and an assistant if necessary, connect the red oscilloscope probe to TL91, pin 15 (RW). 9. Using suitable adaptors, and an assistant if necessary, connect the black oscilloscope probe to TL91, pin 09 (B).

- **Is the waveform similar to the example in Waveforms in this section?**

-> Yes
GO to Pinpoint Test G240121t5.

-> No
GO to Pinpoint Test G240121t4.

G240121t4 : CHECK THE CIRCUIT FROM THE AUDIO VIDEO SELECTOR MODULE TO THE INTERMEDIATE CONNECTOR TL91 FOR CONTINUITY

1. Turn the ignition switch to the **OFF** position. 2. Make sure the video/audio tester is switched **OFF**. 3. Disconnect the audio video module electrical connector, TL87. 4. Using suitable adaptors, measure the resistance between TL91, pin 15 (RW) and TL87, pin 15 (RW). 5. Using suitable adaptors, measure the resistance between TL91, pin 09 (B) and TL87, pin 09 (B).

www.JagDocs.com

- **Is either resistance greater than 5 ohms?**

-> Yes
INSTALL a new harness. For additional information, refer to the wiring diagrams.

-> No
For signal output from the control panel tests, GO to Pinpoint Test G240121p6.
.

G240121t5 : CHECK THE SIGNAL TO THE RIGHT-HAND REAR SCREEN CONNECTOR VR01

1. Turn the ignition switch to the **OFF** position. 2. Make sure the video/audio tester is switched **OFF**. 3. Reconnect the intermediate connector, TL91. 4. Reconnect the audio video module electrical connector, TL87. 5. Disconnect the screen connector, VR01. 6. Turn the video/audio tester **ON**, and to the **TEST** position by holding in the **TEST** button while selecting **PAL** or **NTSC**. The blue and red LEDs will illuminate. 7. Turn the ignition switch to the **ON** position. 8. Using suitable adaptors, and an assistant if necessary, connect the red oscilloscope probe to VR01, pin 15 (RW). 9. Using suitable adaptors, and an assistant if necessary, connect the black oscilloscope probe to VR01, pin 09 (B).

- **Is the waveform similar to the example in Waveforms in this section?**

-> Yes
INSTALL a new rear screen,
Video Display

-> No
GO to Pinpoint Test G240121t6.

G240121t6 : CHECK THE SIGNAL TO THE RIGHT-HAND REAR SCREEN INTERMEDIATE CONNECTOR VR02

1. Turn the ignition switch to the **OFF** position. 2. Make sure the video/audio tester is switched **OFF**. 3. Remove the seat back and disconnect the rear screen intermediate connector, VR02. 4. Turn the video/audio tester **ON**, and to the **TEST** position by holding in the **TEST** button while selecting **PAL** or **NTSC**. The blue and red LEDs will illuminate. 5. Turn the ignition switch to the **ON** position. 6. Using suitable adaptors, and an assistant if necessary, connect the red oscilloscope probe to VR02, pin 15 (RW). 7. Using suitable adaptors, and an assistant if necessary, connect the black oscilloscope probe to VR02, pin 09 (B).

- **Is the waveform similar to the example in Waveforms in this section?**

-> Yes
INSTALL a new harness between VR02 and VR01. Test the system for normal operation.

-> No

GO to Pinpoint Test G240121t7.

G240121t7 : CHECK THE CIRCUIT BETWEEN INTERMEDIATE CONNECTORS, VR02 AND TL91 FOR CONTINUITY

1. Turn the ignition switch to the **OFF** position. 2. Make sure the video/audio tester is switched **OFF**. 3. Disconnect the intermediate connector, TL91. 4. Using suitable adaptors, measure the resistance between TL91, pin 15 (RW) and VR02, pin 15 (RW). 5. Using suitable adaptors, measure the resistance between TL91, pin 09 (B) and VR02, pin 09 (09).

- **Is either resistance greater than 5 ohms?**

-> Yes
INSTALL a new harness between VR02 and TL91. Test the system for normal operation.

-> No
The harness from the audio/video selector module checks out, GO to Pinpoint Test G240121p5. and GO to Pinpoint Test G240121p7.
.

PINPOINT TEST G240121p3 : CHECK THE PAL SIGNAL AT THE THE LEFT-HAND SCREEN

G240121t8 : CHECK THE PAL SIGNAL AT THE LEFT-HAND SCREEN

1. Turn the ignition switch to the **ACC** position. 2. Set the rear entertainment control panel to **AUX1** for both screens (refer to **Selecting AUX1; AUX2 and Audio functions** in this section). 3. Set the rear screens to **AUTO** (refer to **Selecting AUTO/PAL/NTSC** in this section). 4. Connect the video/audio tester to **AUX1**, video (yellow). 5. Select **PAL** on the video/audio tester, make sure the blue LED is illuminated. 6. Observe the rear screen image.

- **Is the PAL test image displayed on the left-hand screen?**

-> Yes
INSTALL a new left-hand screen,
Rear Passenger Entertainment Control Panel (The screen cannot decode a NTSC signal).

-> No
GO to Pinpoint Test G240121t9.

www.JagDocs.com

G240121t9 : CHECK THE SIGNAL TO THE LEFT-HAND REAR SCREEN INTERMEDIATE CONNECTOR TL91

1. Reposition the left-hand front seat fully forward and to the fully raised position. 2. Turn the ignition switch to the **OFF** position. 3. Make sure the video/audio tester is switched **OFF**. 4. Disconnect the intermediate connector, TL92. 5. Connect the oscilloscope. Refer to **Oscilloscope set-up procedure** in this section. 6. Turn the video/audio tester **ON**, and to the **TEST** position by holding in the **TEST** button while selecting **PAL** or **NTSC**. The blue and red LEDs will illuminate. 7. Turn the ignition switch to the **ON** position. 8. Using suitable adaptors, and an assistant if necessary, connect the red oscilloscope probe to TL92, pin 15 (RW). 9. Using suitable adaptors, and an assistant if necessary, connect the black oscilloscope probe to TL92, pin 09 (B).

- **Is the waveform similar to the example in Waveforms in this section?**

-> Yes
GO to Pinpoint Test G240121t11.

-> No
GO to Pinpoint Test G240121t10.

G240121t10 : CHECK THE CIRCUIT FROM THE AUDIO VIDEO SELECTOR MODULE FOR CONTINUITY

1. Turn the ignition switch to the **OFF** position. 2. Make sure the video/audio tester is switched **OFF**. 3. Disconnect the audio video module electrical connector, TL85. 4. Using suitable adaptors, measure the resistance between TL92, pin 15 (RW) and TL85, pin 15 (RW). 5. Using suitable adaptors, measure the resistance between TL92, pin 09 (B) and TL85, pin 09 (B).

- **Is either resistance greater than 5 ohms?**

-> Yes
INSTALL a new harness. For additional information, refer to the wiring diagrams.

-> No
For signal output from the control panel tests, GO to Pinpoint Test G240121p6.
.

G240121t11 : CHECK THE SIGNAL TO THE LEFT-HAND REAR SCREEN CONNECTOR VL01

1. Turn the ignition switch to the **OFF** position. 2. Make sure the video/audio tester is switched **OFF**. 3. Reconnect the intermediate connector, TL92. 4. Reconnect the audio video module electrical connector, TL85. 5. Disconnect the screen connector, VL01. 6. Turn the video/audio tester **ON**, and to the **TEST** position by holding in the **TEST** button while selecting **PAL** or **NTSC**. The blue and red LEDs will illuminate. 7. Turn the ignition switch to the **ON** position. 8. Using suitable adaptors, and an

assistant if necessary, connect the red oscilloscope probe to VL01, pin 15 (RW). 9. Using suitable adaptors, and an assistant if necessary, connect the black oscilloscope probe to VL01, pin 09 (B).

- **Is the waveform similar to the example in Waveforms in this section?**

-> Yes
INSTALL a new rear screen,
Video Display

-> No
GO to Pinpoint Test G240121t12.

G240121t12 : CHECK THE SIGNAL TO THE LEFT-HAND REAR SCREEN INTERMEDIATE CONNECTOR VR02

1. Turn the ignition switch to the **OFF** position. 2. Make sure the video/audio tester is switched **OFF**. 3. Remove the seat back and disconnect the rear screen intermediate connector, VR02. 4. Turn the video/audio tester **ON**, and to the **TEST** position by holding in the **TEST** button while selecting **PAL** or **NTSC**. The blue and red LEDs will illuminate. 5. Turn the ignition switch to the **ON** position. 6. Using suitable adaptors, and an assistant if necessary, connect the red oscilloscope probe to VL02, pin 15 (RW). 7. Using suitable adaptors, and an assistant if necessary, connect the black oscilloscope probe to VL02, pin 09 (B).

- **Is the waveform similar to the example in Waveforms in this section?**

-> Yes
INSTALL a new harness between VL02 and VL01. Test the system for normal operation.

-> No
GO to Pinpoint Test G240121t13.

G240121t13 : CHECK THE CIRCUIT BETWEEN INTERMEDIATE CONNECTORS, VL02 AND TL92 FOR CONTINUITY

1. Turn the ignition switch to the **OFF** position. 2. Make sure the video/audio tester is switched **OFF**. 3. Disconnect the intermediate connector, TL92. 4. Using suitable adaptors, measure the resistance between TL92, pin 15 (RW) and VL02, pin 15 (RW). 5. Using suitable adaptors, measure the resistance between TL92, pin 09 (B) and VL02, pin 09 (09).

- **Is the resistance greater than 5 ohms?**

-> Yes
INSTALL a new harness between VL02 and TL92. Test the system for normal operation.

-> No
The harness from the audio/video selector module checks out, GO to Pinpoint Test G240121p5.

www.JagDocs.com

and GO to Pinpoint Test G240121p6.
.

PINPOINT TEST G240121p4 : CHECK THE PAL SIGNAL AT BOTH REAR SCREENS

G240121t14 : CHECK THE SCREENS AND CIRCUITS USING THE VIDEO/AUDIO TESTER (PAL)

1. Turn the ignition switch to the **ACC** position. 2. Set the rear entertainment control panel to **AUX1** for both screens (refer to **Selecting AUX1; AUX2 and audio functions** in this section). 3. Set the rear screens to **AUTO**. (Refer to **Selecting AUTO/PAL/NTSC** in this section). 4. Connect the video/audio tester to **AUX1**, video (yellow). 5. Select **PAL** on the video/audio tester, make sure the blue LED is illuminated. 6. Observe the rear screen images.

- **Is the PAL test image displayed on both screens?**

-> Yes
The signal from the **AUX1** system has passed.

-> No
If the test image is only on the left-hand screen, INSTALL a new right-hand screen,
Rear Passenger Entertainment Control Panel (The screen cannot decode a NTSC signal).

If the test image is only on the right-hand screen, INSTALL a new left-hand screen,
Rear Passenger Entertainment Control Panel (The screen cannot decode a NTSC signal).

If the test image is on neither screen, INSTALL two new screens,
Rear Passenger Entertainment Control Panel (The screens cannot decode a NTSC signal).

PINPOINT TEST G240121p5 : CHECK THE SIGNAL/CIRCUIT THROUGH THE REAR ENTERTAINMENT CONTROL PANEL

G240121t15 : CHECK THE SIGNAL THROUGH THE CONTROL PANEL

1. Turn the ignition switch to the **OFF** position. 2. Make sure the video/audio tester is switched **OFF**. 3. Disconnect the control panel electrical connector, RC03. 4. Turn the video/audio tester **ON**, and to the **TEST** position by holding in the **TEST** button while selecting **PAL** or **NTSC**. The blue and red LEDs will illuminate. 5. Connect the oscilloscope. Refer to **Oscilloscope set-up procedure** in this section. 6.

Turn the ignition switch to the **ON** position. 7. Using suitable adaptors, and an assistant if necessary, connect the red oscilloscope probe to RC03, pin 18 (probing **INTO** the control panel). 8. Using suitable adaptors, and an assistant if necessary, connect the red oscilloscope probe to RC03, pin 20 (probing **INTO** the control panel).

- **Is the waveform similar to the example in Waveforms in this section?**

-> Yes
GO to Pinpoint Test G240121t16.

-> No
For further control panel tests, GO to Pinpoint Test G240121p5.
, GO to Pinpoint Test G240121p6.
and GO to Pinpoint Test G240121p7.
.

G240121t16 : CHECK THE SIGNAL THROUGH THE REAR ENTERTAINMENT CONTROL PANEL TO INTERMEDIATE CONNECTOR, RC04

1. Turn the ignition switch to the **OFF** position. 2. Make sure the video/audio tester is switched **OFF**. 3. Reconnect the control panel electrical connector, RC03. 4. Disconnect intermediate connector, RC04. 5. Turn the video/audio tester **ON**, and to the **TEST** position by holding in the **TEST** button while selecting **PAL** or **NTSC**. The blue and red LEDs will illuminate. 6. Connect the oscilloscope. Refer to **Oscilloscope set-up procedure** in this section. 7. Turn the ignition switch to the **ON** position. 8. Using suitable adaptors, and an assistant if necessary, connect the red oscilloscope probe to RC04, pin 18 (YB). 9. Using suitable adaptors, and an assistant if necessary, connect the red oscilloscope probe to RC04, pin 20 (B).

- **Is the waveform similar to the example in Waveforms in this section?**

-> Yes
GO to Pinpoint Test G240121t18.

-> No
GO to Pinpoint Test G240121t17.

G240121t17 : CHECK THE HARNESS BETWEEN RC03 AND RC04 FOR CONTINUITY

1. Turn the ignition switch to the **OFF** position. 2. Make sure the video/audio tester is switched **OFF**. 3. Disconnect the control panel electrical connector, RC03. 4. Measure the resistance between RC03, pin 18 (YB) and RC04, pin 18 (YB). 5. Measure the resistance between RC03, pin 20 (B) and RC04, pin 20 (B).

- **Is either resistance greater than 5 ohms?**

www.JagDocs.com

-> Yes
INSTALL a new harness between RC03 and RC04. TEST the system for normal operation.

-> No
RECHECK all connections and harnesses, as no fault has been confirmed. TEST the system for normal operation.

G240121t18 : CHECK THE HARNESS BETWEEN TL86 AND RC04 FOR CONTINUITY

1. Turn the ignition switch to the **OFF** position. 2. Make sure the video/audio tester is switched **OFF**. 3. Disconnect the audio video selector electrical connector, TL86. 4. Measure the resistance between RC04, pin 18 (YB) and TL86, pin 18 (YB). 5. Measure the resistance between RC04, pin 20 (B) and TL86, pin 20 (B).

- **Is either resistance greater than 5 ohms?**

-> Yes
INSTALL a new harness between TL86 and RC04. TEST the system for normal operation.

-> No
GO to Pinpoint Test G240121t19.

G240121t19 : CHECK THE AC ON/OFF CONTROL TO THE AUDIO VIDEO SELECTOR MODULE AT CONNECTOR TL86

1. Make sure the ignition switch is in the **OFF** position. 2. Reconnect the control panel electrical connector, RC04. 3. Measure the resistance between TL86, pin 06 (RG) and GROUND.

- **Is the resistance greater than 5 ohms?**

-> Yes
GO to Pinpoint Test G240121t20.

-> No
GO to Pinpoint Test G240121t25.

G240121t20 : CHECK THE AC ON/OFF CONTROL TO THE AUDIO VIDEO SELECTOR MODULE AT CONNECTOR RC04

1. Make sure the ignition switch is in the **OFF** position. 2. Disconnect the intermediate connector, RC04. 3. Measure the resistance between RC04, pin 06 (RG) and GROUND.

- **Is the resistance greater than 5 ohms?**

-> Yes
GO to Pinpoint Test G240121t21.

-> No
INSTALL a new harness between TL86 and RC04. TEST the system for normal operation.

G240121t21 : CHECK THE AC ON/OFF CONTROL TO THE AUDIO VIDEO SELECTOR MODULE AT THE CONTROL PANEL

1. Make sure the ignition switch is in the **OFF** position. 2. Disconnect the control panel electrical connector, RC03. 3. Measure the resistance between RC03, pin 06 (probing into the control panel) and GROUND.

- **Is the resistance greater than 5 ohms?**

-> Yes
GO to Pinpoint Test G240121t22.

-> No
INSTALL a new harness between RC03 and RC04. TEST the system for normal operation.

G240121t22 : CHECK THE ACCESSORY POWER SUPPLY TO THE CONTROL PANEL

1. Make sure the ignition switch is in the **OFF** position. 2. Disconnect the control panel electrical connector, RC01. 3. Turn the ignition switch to the **ACC** position. 4. Measure the voltage between RC01, pin 07 (YU) and GROUND.

- **Is the voltage less than 10 volts?**

-> Yes
REPAIR the circuit between RC01, pin 07 and battery. This circuit includes the primary junction box (fuse 20). For additional information, refer to the wiring diagrams.

-> No
GO to Pinpoint Test G240121t23.

G240121t23 : CHECK THE PERMANENT POWER SUPPLY TO THE CONTROL PANEL

1. Turn the ignition switch to the **OFF** position. 2. Measure the voltage between RC01, pin 04 (RW) and GROUND.

- **Is the voltage less than 10 volts?**

www.JagDocs.com

-> Yes
REPAIR the circuit between RC01, pin 04 and battery. This circuit includes the primary junction box (fuse 30). For additional information, refer to the wiring diagrams. TEST the system for normal operation.

-> No
GO to Pinpoint Test G240121t24.

G240121t24 : CHECK THE GROUND TO THE CONTROL PANEL

1. Measure the resistance between RC01, pin 08 (B) and GROUND.

- **Is the resistance greater than 5 ohms?**

-> Yes
REPAIR the high resistance circuit, for additional information, refer to the wiring diagrams. TEST the system for normal operation.

-> No
INSTALL a new control panel,
Rear Passenger Entertainment Control Panel TEST the system for normal operation.

G240121t25 : CHECK THE AC ON/OFF CONTROL TO THE AUDIO VIDEO SELECTOR MODULE AT CONNECTOR TL86, IGNITION ON

1. Turn the ignition switch to the **ON** position. 2. Measure the voltage between TL86, pin 06 (RG) and GROUND.

- **Is the voltage less than 10 volts?**

-> Yes
GO to Pinpoint Test G240121t26.

-> No
For further control panel tests, GO to Pinpoint Test G240121p5.
, GO to Pinpoint Test G240121p6.
and GO to Pinpoint Test G240121p7.
.

G240121t26 : CHECK THE AC ON/OFF CONTROL TO THE AUDIO VIDEO SELECTOR MODULE FOR SHORT TO GROUND (TL86)

1. Disconnect the control panel electrical connector, RC03. 2. Measure the resistance between TL86, pin 06 (RG) and GROUND.

- **Is the resistance less than 10,000 ohms?**

-> Yes
GO to Pinpoint Test G240121t27.

-> No
INSTALL a new control panel,
Rear Passenger Entertainment Control Panel TEST the system for normal operation.

G240121t27 : CHECK THE AC ON/OFF CONTROL TO THE AUDIO VIDEO SELECTOR MODULE FOR SHORT TO GROUND (RC04)

1. Disconnect the intermediate connector, RC04. 2. Measure the resistance between TL86, pin 06 (RG) and GROUND.

- **Is the resistance less than 10,000 ohms?**

-> Yes
INSTALL a new harness between TL86 and RC04. TEST the system for normal operation.

-> No
INSTALL a new harness between RC03 and RC04. TEST the system for normal operation.

PINPOINT TEST G240121p6 : CHECK THE REAR ENTERTAINMENT CONTROL PANEL LEFT-HAND OUTPUTS

G240121t28 : CHECK THE CONT L1 OUTPUT FROM THE CONTROL PANEL

1. Disconnect the control panel electrical connector, RC03. 2. Turn the video/audio tester **ON**, and to the **TEST** position by holding in the **TEST** button while selecting **PAL** or **NTSC**. The blue and red LEDs will illuminate. 3. Make sure both screens are selected on the control panel. 4. Turn the ignition switch to the **ON** position. 5. Measure the voltage between RC03, pin 15 (probing **INTO** the control panel) and GROUND.

- **Is the voltage 5 volts?**

-> Yes
GO to Pinpoint Test G240121t29.

-> No
INSTALL a new control panel,
Rear Passenger Entertainment Control Panel TEST the system for normal operation.

www.JagDocs.com

G240121t29 : CHECK THE CONT L2 OUTPUT FROM THE CONTROL PANEL

1. Measure the voltage between RC03, pin 14 (probing **INTO** the control panel) and GROUND.

- **Is the voltage 0 volts?**

-> Yes
GO to Pinpoint Test G240121t30.

-> No
INSTALL a new control panel,
Rear Passenger Entertainment Control Panel TEST the system for normal operation.

G240121t30 : CHECK THE CONT L3 OUTPUT FROM THE CONTROL PANEL

1. Measure the voltage between RC03, pin 19 (probing **INTO** the control panel) and GROUND.

- **Is the voltage 5 volts?**

-> Yes
GO to Pinpoint Test G240121t31.

-> No
INSTALL a new control panel,
Rear Passenger Entertainment Control Panel TEST the system for normal operation.

G240121t31 : CHECK THE L1 CIRCUIT FROM RC03 TO TL86 FOR CONTINUITY

1. Disconnect the audio video selector electrical connector, TL86. 2. Measure the resistance between RC03, pin 15 (WR) and TL86, pin 15 (WR).

- **Is the resistance greater than 5 ohms?**

-> Yes
GO to Pinpoint Test G240121t32.

-> No
GO to Pinpoint Test G240121t33.

G240121t32 : CHECK THE L1 CIRCUIT FROM RC03 TO RC04 FOR CONTINUITY

1. Disconnect intermediate connector, RC04. 2. Measure the resistance between RC03, pin 15 (WR) and RC04, pin 15 (WR).

- **Is the resistance greater than 5 ohms?**

-> Yes
INSTALL a new harness between RC03 and RC04. TEST the system for normal operation.

-> No
INSTALL a new harness between RC03 and TL86. TEST the system for normal operation.

G240121t33 : CHECK THE L2 CIRCUIT FROM RC03 TO TL86 FOR CONTINUITY

1. Reconnect intermediate connector, RC04. 2. Measure the resistance between RC03, pin 14 (B) and TL86, pin 14 (B).

- **Is the resistance greater than 5 ohms?**

-> Yes
GO to Pinpoint Test G240121t34.

-> No
GO to Pinpoint Test G240121t35.

G240121t34 : CHECK THE L2 CIRCUIT FROM RC03 TO RC04 FOR CONTINUITY

1. Disconnect intermediate connector, RC04. 2. Measure the resistance between RC03, pin 14 (B) and RC04, pin 14 (B).

- **Is the resistance greater than 5 ohms?**

-> Yes
INSTALL a new harness between RC03 and RC04. TEST the system for normal operation.

-> No
INSTALL a new harness between RC03 and TL86. TEST the system for normal operation.

G240121t35 : CHECK THE L3 CIRCUIT FROM RC03 TO TL86 FOR CONTINUITY

1. Reconnect intermediate connector, RC04. 2. Measure the resistance between RC03, pin 19 (YG) and TL86, pin 19 (YG).

- **Is the resistance greater than 5 ohms?**

-> Yes
GO to Pinpoint Test G240121t36.

www.JagDocs.com

-> No
The **AUX1** circuit checks out.

G240121t36 : CHECK THE L3 CIRCUIT FROM RC03 TO RC04 FOR CONTINUITY

1. Disconnect intermediate connector, RC04. 2. Measure the resistance between RC03, pin 19 (YG) and RC04, pin 19 (YG).

- **Is the resistance greater than 5 ohms?**

-> Yes
INSTALL a new harness between RC03 and RC04. TEST the system for normal operation.

-> No
INSTALL a new harness between RC03 and TL86. TEST the system for normal operation.

PINPOINT TEST G240121p7 : CHECK THE REAR ENTERTAINMENT CONTROL PANEL RIGHT-HAND OUTPUTS

G240121t37 : CHECK THE CONT R1 OUTPUT FROM THE CONTROL PANEL

1. Disconnect the control panel electrical connector, RC03. 2. Turn the video/audio tester **ON**, and to the **TEST** position by holding in the **TEST** button while selecting **PAL** or **NTSC**. The blue and red LEDs will illuminate. 3. Make sure both screens are selected on the control panel. 4. Turn the ignition switch to the **ON** position. 5. Measure the voltage between RC03, pin 11 (probing **INTO** the control panel) and GROUND.

- **Is the voltage 5 volts?**

-> Yes
GO to Pinpoint Test G240121t38.

-> No
INSTALL a new control panel,
Rear Passenger Entertainment Control Panel TEST the system for normal operation.

G240121t38 : CHECK THE CONT R2 OUTPUT FROM THE CONTROL PANEL

1. Measure the voltage between RC03, pin 10 (probing **INTO** the control panel) and GROUND.

- **Is the voltage 0 volts?**

-> Yes
GO to Pinpoint Test G240121t39.

-> No
INSTALL a new control panel,
Rear Passenger Entertainment Control Panel TEST the system for normal operation.

G240121t39 : CHECK THE CONT R3 OUTPUT FROM THE CONTROL PANEL

1. Measure the voltage between RC03, pin 09 (probing **INTO** the control panel) and GROUND.

- **Is the voltage 5 volts?**

-> Yes
GO to Pinpoint Test G240121t40.

-> No
INSTALL a new control panel,
Rear Passenger Entertainment Control Panel TEST the system for normal operation.

G240121t40 : CHECK THE R1 CIRCUIT FROM RC03 TO TL86 FOR CONTINUITY

1. Disconnect the audio video selector electrical connector, TL86. 2. Measure the resistance between RC03, pin 11 (WU) and TL86, pin 11 (WU).

- **Is the resistance greater than 5 ohms?**

-> Yes
GO to Pinpoint Test G240121t41.

-> No
GO to Pinpoint Test G240121t42.

G240121t41 : CHECK THE R1 CIRCUIT FROM RC03 TO RC04 FOR CONTINUITY

1. Disconnect intermediate connector, RC04. 2. Measure the resistance between RC03, pin 11 (WU) and RC04, pin 11 (WU).

- **Is the resistance greater than 5 ohms?**

-> Yes
INSTALL a new harness between RC03 and RC04. TEST the system for normal operation.

www.JagDocs.com

-> No
INSTALL a new harness between RC03 and TL86. TEST the system for normal operation.

G240121t42 : CHECK THE R2 CIRCUIT FROM RC03 TO TL86 FOR CONTINUITY

1. Reconnect intermediate connector, RC04. 2. Measure the resistance between RC03, pin 10 (B) and TL86, pin 10 (B).

- **Is the resistance greater than 5 ohms?**

-> Yes
GO to Pinpoint Test G240121t43.

-> No
GO to Pinpoint Test G240121t44.

G240121t43 : CHECK THE R2 CIRCUIT FROM RC03 TO RC04 FOR CONTINUITY

1. Disconnect intermediate connector, RC04. 2. Measure the resistance between RC03, pin 10 (B) and RC04, pin 10 (B).

- **Is the resistance greater than 5 ohms?**

-> Yes
INSTALL a new harness between RC03 and RC04. TEST the system for normal operation.

-> No
INSTALL a new harness between RC03 and TL86. TEST the system for normal operation.

G240121t44 : CHECK THE R3 CIRCUIT FROM RC03 TO TL86 FOR CONTINUITY

1. Reconnect intermediate connector, RC04. 2. Measure the resistance between RC03, pin 09 (WB) and TL86, pin 09 (WB).

- **Is the resistance greater than 5 ohms?**

-> Yes
GO to Pinpoint Test G240121t36.

-> No
The **AUX1** circuit checks out.

G240121t45 : CHECK THE R3 CIRCUIT FROM RC03 TO RC04 FOR CONTINUITY

1. Disconnect intermediate connector, RC04. 2. Measure the resistance between RC03, pin 09 (WB) and RC04, pin 09 (WB).

- **Is the resistance greater than 5 ohms?**

-> Yes
INSTALL a new harness between RC03 and RC04. TEST the system for normal operation.

-> No
INSTALL a new harness between RC03 and TL86. TEST the system for normal operation.

PINPOINT TEST G240121p8 : CHECK THE REAR ENTERTAINMENT AUDIO

G240121t46 : CHECK THE CABIN SPEAKER OUTPUT FROM THE REAR ENTERTAINMENT CONTROL PANEL (RED CONNECTOR)

1. Set the rear entertainment control panel to **AUX1, cabin speakers** (refer to **Selecting AUX1; AUX2 and audio functions** in this section). 2. Connect the video/audio tester to the **AUX1** audio socket (**RED**), and to the corresponding socket on the video/audio tester. 3. Turn the video/audio tester **ON**, and to the **TEST** position by holding in the **TEST** button while selecting **PAL** or **NTSC**. The blue and red LEDs will illuminate. 4. Turn the ignition switch to the **ON** position. 5. Adjust the volume on the control panel to the desired level (eg 12).

- **Could a continuous "buzzing" noise be heard from the cabin speakers?**

-> Yes
GO to Pinpoint Test G240121t47.

-> No
CHECK for D2B related codes before installing a new control panel.
Rear Passenger Entertainment Control Panel TEST the system for normal operation.

G240121t47 : CHECK THE CABIN SPEAKER OUTPUT FROM THE REAR ENTERTAINMENT CONTROL PANEL (WHITE CONNECTOR)

1. Turn the ignition switch to the **OFF** position. 2. Make sure the video/audio tester is switched **OFF**.
3. Disconnect the test lead from the **RED AUX1** socket, and connect it into the **WHITE AUX1** socket.
4. Make sure the cabin speakers are still set to the desired level.

- **Could a continuous "buzzing" noise be heard from the cabin speakers?**

www.JagDocs.com

-> Yes
The **AUX1** audio test has passed.

-> No
INSTALL a new control panel,
Rear Passenger Entertainment Control Panel TEST the system for normal operation.

PINPOINT TEST G240121p9 : CHECK THE NTSC SIGNAL AT THE REAR SCREENS (AUX2)

G240121t48 : CHECK THE SCREENS AND CIRCUITS USING THE VIDEO/AUDIO TESTER (NTSC)

1. Turn the ignition switch to the **ACC** position. 2. Set the rear entertainment control panel to **AUX2** for both screens (refer to **Selecting AUX1; AUX2 and audio functions** in this section). 3. Set the rear screens to **AUTO** (refer to **Selecting AUTO/PAL/NTSC** in this section). 4. Connect the video/audio tester to **AUX2**, video (yellow). 5. Select **NTSC** on the video/audio tester, make sure the blue LED is illuminated.

- **Is the NTSC test image displayed on both screens?**

-> Yes
The **AUX2** signal test has passed.

-> No
If the test image is displayed on the left-hand screen only, GO to Pinpoint Test G240121p2.
.

If the test image is displayed on the right-hand screen only, GO to Pinpoint Test G240121p3.
.

If the test image is displayed on neither screen, GO to Pinpoint Test G240121t49.
.

G240121t49 : CHECK THE SCREENS AND CIRCUITS USING THE VIDEO/AUDIO TESTER (PAL)

1. Select **PAL** on the video/audio tester, make sure the blue LED is illuminated.

- **Is the PAL test image displayed on both screens?**

-> Yes
Neither screen can decode a **NTSC** signal. INSTALL two new screens,
Video Display

-> No
If the test image is displayed on the left-hand screen only, install a new left-hand screen, as it cannot decode a **NTSC** signal,
Video Display TEST the system for normal operation.

If the test image is displayed on the right-hand screen only, install a new right-hand screen, as it cannot decode a **NTSC** signal,
Video Display TEST the system for normal operation.

If the test image is displayed on neither screen, GO to Pinpoint Test G240121t50.
.

G240121t50 : CHECK THE TEST SIGNAL OUTPUT FROM THE CONTROL PANEL

1. Turn the ignition switch to the **OFF** position. 2. Make sure the video/audio tester is switched **OFF**. 3. Disconnect the control panel electrical connector, RC03. 4. Turn the ignition switch to the **ACC** position. 5. Set the rear entertainment control panel to **AUX2** for both screens (refer to **Selecting AUX1; AUX2 and audio functions** in this section). 6. Connect the oscilloscope. Refer to **Oscilloscope set-up procedure** in this section. 7. Using suitable adaptors, and an assistant if necessary, connect the red oscilloscope probe to RC03, pin 16 (probing **INTO** the control panel). 8. Using suitable adaptors, and an assistant if necessary, connect the black oscilloscope probe to RC03, pin 17 (probing **INTO** the control panel). 9. Turn the video/audio tester **ON**, and to the **TEST** position by holding in the **TEST** button while selecting **PAL** or **NTSC**. The blue and red LEDs will illuminate.

- **Is the waveform similar to the example in Waveforms in this section?**

-> Yes
GO to Pinpoint Test G240121t51.

-> No
For further control panel tests, GO to Pinpoint Test G240121p5.
, GO to Pinpoint Test G240121p6.
, and GO to Pinpoint Test G240121p7.
.

G240121t51 : CHECK THE TEST SIGNAL AT INTERMEDIATE CONNECTOR, RC04

1. Turn the ignition switch to the **OFF** position. 2. Make sure the video/audio tester is switched **OFF**. 3. Reconnect the control panel electrical connector, RC03. 4. Disconnect intermediate connector, RC04. 5. Turn the ignition switch to the **ACC** position. 6. Connect the oscilloscope. Refer to **Oscilloscope set-up procedure** in this section. 7. Using suitable adaptors, and an assistant if necessary, connect the red oscilloscope probe to RC04, pin 16 (Y). 8. Using suitable adaptors, and an assistant if necessary, connect the black oscilloscope probe to RC04, pin 17 (B). 9. Turn the

www.JagDocs.com

video/audio tester **ON**, and to the **TEST** position by holding in the **TEST** button while selecting **PAL** or **NTSC**. The blue and red LEDs will illuminate.

- **Is the waveform similar to the example in Waveforms in this section?**

-> Yes
GO to Pinpoint Test G240121t53.

-> No
GO to Pinpoint Test G240121t52.

G240121t52 : CHECK THE CIRCUIT BETWEEN RC03 AND RC04 FOR CONTINUITY

1. Turn the ignition switch to the **OFF** position. 2. Make sure the video/audio tester is switched **OFF**. 3. Measure the resistance between RC03, pin 16 (Y) and RC04, pin 16 (Y). 4. Measure the resistance between RC03, pin 17 (B) and RC04, pin 17 (B).

- **Is either resistance greater than 5 ohms?**

-> Yes
INSTALL a new harness between RC03 and RC04, TEST the system for normal operation.

-> No
RECHECK all connections and harness, as no fault has been confirmed.

G240121t53 : CHECK THE CIRCUIT BETWEEN RC04 AND TL86 FOR CONTINUITY

1. Disconnect the audio/video selector module electrical connector, TL86. 2. Measure the resistance between TL86, pin 16 (Y) and RC04, pin 16 (Y). 3. Measure the resistance between TL86, pin 17 (B) and RC04, pin 17 (B).

- **Is either resistance greater than 5 ohms?**

-> Yes
INSTALL a new harness between TL86 and RC04, TEST the system for normal operation.

-> No
GO to Pinpoint Test G240121t54.

G240121t54 : CHECK THE AC ON/OFF CONTROL TO THE AUDIO VIDEO SELECTOR MODULE AT CONNECTOR TL86

1. Make sure the ignition switch is in the **OFF** position. 2. Reconnect intermediate connector, RC04. 3. Measure the resistance between TL86, pin 06 (RG) and GROUND.

- **Is the resistance greater than 5 ohms?**

-> Yes
GO to Pinpoint Test G240121t56.

-> No
GO to Pinpoint Test G240121t55.

G240121t55 : CHECK THE AC ON/OFF CONTROL TO THE AUDIO VIDEO SELECTOR MODULE AT CONNECTOR TL86 IGNITION ON

1. Turn the ignition switch to the **ON** position. 2. Measure the voltage between TL86, pin 06 (RG) and GROUND.

- **Is the voltage battery voltage?**

-> Yes
For further control panel tests, GO to Pinpoint Test G240121p5.
, GO to Pinpoint Test G240121p6.
and GO to Pinpoint Test G240121p7.
.

-> No
GO to Pinpoint Test G240121t58.

G240121t56 : CHECK THE AC ON/OFF CONTROL TO THE AUDIO VIDEO SELECTOR MODULE AT CONNECTOR RC04

1. Make sure the ignition switch is in the **OFF** position. 2. Disconnect intermediate connector, RC04. 3. Measure the resistance between RC04, pin 06 (RG) and GROUND.

- **Is the resistance greater than 5 ohms?**

-> Yes
GO to Pinpoint Test G240121t57.

-> No
INSTALL a new harness between TL86 and RC04. TEST the system for normal operation.

G240121t57 : CHECK THE AC ON/OFF CONTROL TO THE AUDIO VIDEO SELECTOR MODULE AT CONNECTOR RC03

1. Make sure the ignition switch is in the **OFF** position. 2. Disconnect the control panel electrical connector, RC03. 3. Measure the resistance between RC03, pin 06 (probing **INTO** the control panel) and GROUND.

www.JagDocs.com

- **Is the resistance greater than 5 ohms?**

-> Yes
For further control panel tests, GO to Pinpoint Test G240121p5.
, GO to Pinpoint Test G240121p6.
and GO to Pinpoint Test G240121p7.
.

-> No
INSTALL a new harness between RC03 and RC04. TEST the system for normal operation.

G240121t58 : CHECK THE AC ON/OFF CONTROL TO THE AUDIO VIDEO SELECTOR MODULE FOR SHORT TO GROUND AT CONNECTOR TL86

1. Make sure the ignition switch is in the **OFF** position. 2. Disconnect the control panel electrical connector, RC03. 3. Measure the resistance between TL86, pin 06 (RG) and GROUND.

- **Is the resistance less than 10,000 ohms?**

-> Yes
INSTALL a new harness between TL86 and RC04. TEST the system for normal operation.

-> No
GO to Pinpoint Test G240121t59.

G240121t59 : CHECK THE AC ON/OFF CONTROL TO THE AUDIO VIDEO SELECTOR MODULE FOR SHORT TO GROUND AT CONNECTOR RC03

1. Measure the resistance between RC03, pin 06 (RG) and GROUND.

- **Is the resistance less than 10,000 ohms?**

-> Yes
INSTALL a new harness between RC03 and RC04. TEST the system for normal operation.

-> No
INSTALL a new control panel,
Rear Passenger Entertainment Control Panel TEST the system for normal operation.

PINPOINT TEST G240121p10 : CHECK THE REAR ENTERTAINMENT AUDIO (AUX2)

G240121t60 : CHECK THE CABIN SPEAKER OUTPUT FROM THE REAR ENTERTAINMENT CONTROL PANEL (RED CONNECTOR)

1. Set the rear entertainment control panel to **AUX2, cabin speakers** (refer to **Selecting AUX1; AUX2 and audio functions** in this section). 2. Connect the video/audio tester to the **AUX2** audio socket (**RED**), and to the corresponding socket on the video/audio tester. 3. Turn the video/audio tester **ON**, and to the **TEST** position by holding in the **TEST** button while selecting **PAL** or **NTSC**. The blue and red LEDs will illuminate. 4. Turn the ignition switch to the **ON** position. 5. Adjust the volume on the control panel to the desired level (eg 12).

- **Could a continuous "buzzing" noise be heard from the cabin speakers?**

-> Yes
GO to Pinpoint Test G240121t61.

-> No
CHECK for D2B related codes before installing a new control panel.
Rear Passenger Entertainment Control Panel TEST the system for normal operation.

G240121t61 : CHECK THE CABIN SPEAKER OUTPUT FROM THE REAR ENTERTAINMENT CONTROL PANEL (WHITE CONNECTOR)

1. Turn the ignition switch to the **OFF** position. 2. Make sure the video/audio tester is switched **OFF**. 3. Disconnect the test lead from the **RED AUX2** socket, and connect it into the **WHITE AUX2** socket. 4. Make sure the cabin speakers are still set to the desired level.

- **Could a continuous "buzzing" noise be heard from the cabin speakers?**

-> Yes
The **AUX2** audio test has passed.

-> No
INSTALL a new control panel,
Rear Passenger Entertainment Control Panel TEST the system for normal operation.

PINPOINT TEST G240121p11 : CHECK THE POWER AND GROUND SUPPLIES TO THE RIGHT-HAND SCREEN

G240121t62 : CHECK FOR BATTERY VOLTAGE AT THE SCREEN CONNECTOR, VR01

1. Disconnect the right-hand screen electrical connector, VR01. 2. Turn the ignition switch to the **ON** position. 3. Measure the voltage between VR01, pin 18 (OY) and GROUND.

www.JagDocs.com

- **Is the voltage greater than 10 volts?**

-> Yes
GO to Pinpoint Test G240121t67.

-> No
GO to Pinpoint Test G240121t63.

G240121t63 : CHECK THE CIRCUIT BETWEEN VR01 AND TL87 FOR CONTINUITY

1. Disconnect the audio video selector module electrical connector, TL87. 2. Measure the resistance between VR01, pin 18 (OY) and TL87, pin 18 (OY).

- **Is the resistance greater than 5 ohms?**

-> Yes
GO to Pinpoint Test G240121t64.

-> No
INSTALL a new audio video selector module,
Video System Module TEST the system for normal operation.

G240121t64 : CHECK THE CIRCUIT BETWEEN VR01 AND VR02 FOR CONTINUITY

1. Disconnect intermediate connector, VR02. 2. Measure the resistance between VR01, pin 18 (OY) and VR02, pin 18 (OY).

- **Is the resistance greater than 5 ohms?**

-> Yes
INSTALL a new harness between VR01 and VR02. TEST the system for normal operation.

-> No
GO to Pinpoint Test G240121t65.

G240121t65 : CHECK THE CIRCUIT BETWEEN VR02 AND TL91 FOR CONTINUITY

1. Disconnect intermediate connector, TL91. 2. Measure the resistance between VR02, pin 18 (OY) and TL91, pin 18 (OY).

- **Is the resistance greater than 5 ohms?**

-> Yes
INSTALL a new harness between VR02 and TL91. TEST the system for normal operation.

-> No
GO to Pinpoint Test G240121t66.

G240121t66 : CHECK THE CIRCUIT BETWEEN TL91 AND TL87 FOR CONTINUITY

1. Measure the resistance between TL91, pin 18 (OY) and TL87, pin 18 (OY).

- **Is the resistance greater than 5 ohms?**

-> Yes
INSTALL a new harness between TL91 and TL87. TEST the system for normal operation.

-> No
INSTALL a new audio video selector module,
Video System Module TEST the system for normal operation.

G240121t67 : CHECK FOR VOLTAGE AT VR01, PIN 08

1. Reconnect the audio video selector module electrical connector, TL87. 2. Turn the ignition switch to the **ON** position. 3. Measure the voltage between VR01, pin 08 (N) and GROUND.

- **Is the voltage -14 to -18 volts?**

-> Yes
GO to Pinpoint Test G240121t72.

-> No
GO to Pinpoint Test G240121t68.

G240121t68 : CHECK THE CIRCUIT BETWEEN VR01 AND TL87 FOR CONTINUITY

1. Turn the igntition switch to the **OFF** position. 2. Disconnect audio video selector module electrical connector, TL87. 3. Measure the resistance between VR01, pin 08 (N) and TL87, pin 08 (N).

- **Is the resistance greater than 5 ohms?**

-> Yes
GO to Pinpoint Test G240121t69.

-> No

www.JagDocs.com

INSTALL a new audio video selector module,
Video System Module TEST the system for normal operation.

G240121t69 : CHECK THE CIRCUIT BETWEEN VR01 AND VR02 FOR CONTINUITY

1. Disconnect intermediate connector, VR02. 2. Measure the resistance between VR01, pin 08 (N) and VR02, pin 08 (N).

- **Is the resistance greater than 5 ohms?**

-> Yes
INSTALL a new harness between VR01 and VR02. TEST the system for normal operation.

-> No
GO to Pinpoint Test G240121t70.

G240121t70 : CHECK THE CIRCUIT BETWEEN VR02 AND TL91 FOR CONTINUITY

1. Disconnect intermediate connector, TL91. 2. Measure the resistance between VR02, pin 08 (N) and TL91, pin 08 (N).

- **Is the resistance greater than 5 ohms?**

-> Yes
INSTALL a new harness between VR02 and TL91. TEST the system for normal operation.

-> No
GO to Pinpoint Test G240121t71.

G240121t71 : CHECK THE CIRCUIT BETWEEN TL91 AND TL87 FOR CONTINUITY

1. Measure the resistance between TL91, pin 08 (N) and TL87, pin 08 (N).

- **Is the resistance greater than 5 ohms?**

-> Yes
INSTALL a new harness between TL91 and TL87. TEST the system for normal operation.

-> No
INSTALL a new audio video selector module,
Video System Module TEST the system for normal operation.

G240121t72 : CHECK FOR VOLTAGE AT VR01, PIN 06

1. Reconnect audio video selector module electrical connector, TL87. 2. Make sure the ignition switch is in the **ON** position. 3. Measure the voltage between VR01, pin 06 (U) and GROUND.

- **Is the voltage 6 volts?**

-> Yes
GO to Pinpoint Test G240121t77.

-> No
GO to Pinpoint Test G240121t73.

G240121t73 : CHECK THE CIRCUIT BETWEEN VR01 AND TL87 FOR CONTINUITY

1. Turn the ignition switch to the **OFF** position. 2. Disconnect audio video selector module electrical connector, TL87. 3. Measure the resistance between VR01, pin 06 (U) and TL87, pin 06 (U).

- **Is the resistance greater than 5 ohms?**

-> Yes
GO to Pinpoint Test G240121t74.

-> No
INSTALL a new audio video selector module,
Video System Module TEST the system for normal operation.

G240121t74 : CHECK THE CIRCUIT BETWEEN VR01 AND VR02 FOR CONTINUITY

1. Disconnect intermediate connector, VR02. 2. Measure the resistance between VR01, pin 06 (U) and VR02, pin 06 (U).

- **Is the resistance greater than 5 ohms?**

-> Yes
INSTALL a new harness between VR01 and VR02. TEST the system for normal operation.

-> No
GO to Pinpoint Test G240121t75.

www.JagDocs.com

G240121t75 : CHECK THE CIRCUIT BETWEEN VR02 AND TL91 FOR CONTINUITY

1. Disconnect intermediate connector, TL91. 2. Measure the resistance between VR02, pin 06 (U) and TL91, pin 06 (U).

- **Is the resistance greater than 5 ohms?**

-> Yes
INSTALL a new harness between VR02 and TL91. TEST the system for normal operation.

-> No
GO to Pinpoint Test G240121t76.

G240121t76 : CHECK THE CIRCUIT BETWEEN TL91 AND TL87 FOR CONTINUITY

1. Measure the resistance between TL91, pin 06 (U) and TL87, pin 06 (U).

- **Is the resistance greater than 5 ohms?**

-> Yes
INSTALL a new harness between TL91 and TL87. TEST the system for normal operation.

-> No
INSTALL a new audio video selector module,
Video System Module TEST the system for normal operation.

G240121t77 : CHECK FOR VOLTAGE AT VR01, PIN 04

1. Reconnect the audio video selector module electrical connector, TL87. 2. Make sure the ignition switch is in the **ON** position. 3. Measure the voltage between VR01, pin 04 (BK) and GROUND.

- **Is the voltage battery voltage?**

-> Yes
GO to Pinpoint Test G240121t82.

-> No
GO to Pinpoint Test G240121t78.

G240121t78 : CHECK THE CIRCUIT BETWEEN VR01 AND TL87 FOR CONTINUITY

1. Make sure the ignition switch is in the **OFF** position. 2. Disconnect audio video selector module electrical connector, TL87. 3. Measure the resistance between VR01, pin 04 (BK) and TL87, pin 04 (BK).

- **Is the resistance greater than 5 ohms?**

-> Yes
GO to Pinpoint Test G240121t79.

-> No
INSTALL a new audio video selector module,
Video System Module TEST the system for normal operation.

G240121t79 : CHECK THE CIRCUIT BETWEEN VR01 AND VR02 FOR CONTINUITY

1. Disconnect intermediate connector, VR02. 2. Measure the resistance between VR01, pin 04 (BK) and VR02, pin 04 (BK).

- **Is the resistance greater than 5 ohms?**

-> Yes
INSTALL a new harness between VR01 and VR02. TEST the system for normal operation.

-> No
GO to Pinpoint Test G240121t80.

G240121t80 : CHECK THE CIRCUIT BETWEEN VR02 AND TL91 FOR CONTINUITY

1. Disconnect intermediate connector, TL91. 2. Measure the resistance between VR02, pin 04 (BK) and TL91, pin 04 (BK).

- **Is the resistance greater than 5 ohms?**

-> Yes
INSTALL a new harness between VR02 and TL91. TEST the system for normal operation.

-> No
GO to Pinpoint Test G240121t81.

G240121t81 : CHECK THE CIRCUIT BETWEEN TL91 AND TL87 FOR CONTINUITY

1. Measure the resistance between TL91, pin 04 (BK) and TL87, pin 04 (BK).

- **Is the resistance greater than 5 ohms?**

-> Yes
INSTALL a new harness between TL91 and TL87. TEST the system for normal operation.

www.JagDocs.com

-> No
INSTALL a new audio video selector module,
Video System Module TEST the system for normal operation.

G240121t82 : CHECK FOR VOLTAGE AT VR01, PIN 02

1. Reconnect the audio video selector module electrical connector, TL87. 2. Measure the voltage between VR01, pin 02 (YB) and GROUND.

- **Is the voltage battery voltage?**

-> Yes
GO to Pinpoint Test G240121t87.

-> No
GO to Pinpoint Test G240121t83.

G240121t83 : CHECK THE CIRCUIT BETWEEN VR01 AND TL87 FOR CONTINUITY

1. Disconnect audio video selector module electrical connector, TL87. 2. Measure the resistance between VR01, pin 02 (YB) and TL87, pin 02 (YB).

- **Is the resistance greater than 5 ohms?**

-> Yes
GO to Pinpoint Test G240121t84.

-> No
INSTALL a new audio video selector module,
Video System Module TEST the system for normal operation.

G240121t84 : CHECK THE CIRCUIT BETWEEN VR01 AND VR02 FOR CONTINUITY

1. Disconnect intermediate connector, VR02. 2. Measure the resistance between VR01, pin 02 (YB) and VR02, pin 02 (YB).

- **Is the resistance greater than 5 ohms?**

-> Yes
INSTALL a new harness between VR01 and VR02. TEST the system for normal operation.

-> No

GO to Pinpoint Test G240121t85.

G240121t85 : CHECK THE CIRCUIT BETWEEN VR02 AND TL91 FOR CONTINUITY

1. Disconnect intermediate connector, TL91. 2. Measure the resistance between VR02, pin 02 (YB) and TL91, pin 02 (YB).

- **Is the resistance greater than 5 ohms?**

-> Yes
INSTALL a new harness between VR02 and TL91. TEST the system for normal operation.

-> No
GO to Pinpoint Test G240121t86.

G240121t86 : CHECK THE CIRCUIT BETWEEN TL91 AND TL87 FOR CONTINUITY

1. Measure the resistance between TL91, pin 02 (YB) and TL87, pin 02 (YB).

- **Is the resistance greater than 5 ohms?**

-> Yes
INSTALL a new harness between TL91 and TL87. TEST the system for normal operation.

-> No
INSTALL a new audio video selector module,
Video System Module TEST the system for normal operation.

G240121t87 : CHECK FOR GROUND AT VR01, PIN 01

1. Reconnect the audio video selector module electrical connector, TL87. 2. Measure the resistance between VR01, pin 01 (YG) and GROUND.

- **Is the resistance greater than 5 ohms?**

-> Yes
GO to Pinpoint Test G240121t88.

-> No
GO to Pinpoint Test G240121t92.

www.JagDocs.com

G240121t88 : CHECK THE CIRCUIT BETWEEN VR01 AND TL87 FOR CONTINUITY

1. Disconnect the audio video selector module electrical connector, TL87. 2. Measure the resistance between VR01, pin 01 (YG) and TL87, pin 01 (YG).

- **Is the resistance greater than 5 ohms?**

-> Yes
GO to Pinpoint Test G240121t89.

-> No
INSTALL a new audio video selector module,
Video System Module TEST the system for normal operation.

G240121t89 : CHECK THE CIRCUIT BETWEEN VR01 AND VR02 FOR CONTINUITY

1. Disconnect intermediate connector, VR02. 2. Measure the resistance between VR01, pin 01 (YG) and VR02, pin 01 (YG).

- **Is the resistance greater than 5 ohms?**

-> Yes
INSTALL a new harness between VR01 and VR02. TEST the system for normal operation.

-> No
GO to Pinpoint Test G240121t90.

G240121t90 : CHECK THE CIRCUIT BETWEEN VR02 AND TL91 FOR CONTINUITY

1. Disconnect intermediate connector, TL91. 2. Measure the resistance between VR02, pin 01 (YG) and TL91, pin 01 (YG).

- **Is the resistance greater than 5 ohms?**

-> Yes
INSTALL a new harness between VR02 and TL91. TEST the system for normal operation.

-> No
GO to Pinpoint Test G240121t91.

G240121t91 : CHECK THE CIRCUIT BETWEEN TL91 AND TL87 FOR CONTINUITY

1. Measure the resistance between TL91, pin 01 (YG) and TL87, pin 01 (YG).

- **Is the resistance greater than 5 ohms?**

-> Yes
INSTALL a new harness between TL91 and TL87. TEST the system for normal operation.

-> No
INSTALL a new audio video selector module,
Video System Module TEST the system for normal operation.

G240121t92 : CHECK FOR IGNITION VOLTAGE AT VR01, PIN 16

1. Turn the ignition switch to the **ON** position. 2. Measure the voltage between VR01, pin 16 (RG) and GROUND.

- **Is the voltage 5 volts?**

-> Yes
INSTALL a new right-hand screen,
Video Display TEST the system for normal operation.

-> No
GO to Pinpoint Test G240121t93.

G240121t93 : CHECK FOR SHORT TO GROUND AT VR01, PIN 16

1. Reconnect the intermediate connectors. 2. Measure the resistance between VR01, pin 16 (RG) and GROUND.

- **Is the resistance less than 10,000 ohms?**

-> Yes
GO to Pinpoint Test G240121t94.

-> No
GO to Pinpoint Test G240121t101.

G240121t97 : CHECK THE CIRCUIT BETWEEN VR01 AND TL87 FOR CONTINUITY

1. Measure the resistance between VR01, pin 16 (RG) and TL87, pin 16 (RG).

- **Is the resistance greater than 5 ohms?**

-> Yes
GO to Pinpoint Test G240121t98.

www.JagDocs.com

-> No
GO to Pinpoint Test G240121t101.

G240121t94 : CHECK FOR SHORT TO GROUND AT VR02, PIN 16

1. Disconnect intermediate connector, VR02. 2. Measure the resistance between VR02, pin 16 (RG) and GROUND.

- **Is the resistance less than 10,000 ohms?**

-> Yes
INSTALL a new harness between VR01 and VR02. TEST the system for normal operation.

-> No
GO to Pinpoint Test G240121t95.

G240121t98 : CHECK THE CIRCUIT BETWEEN VR01 AND VR02 FOR CONTINUITY

1. Measure the resistance between VR01, pin 16 (RG) and VR02, pin 16 (RG).

- **Is the resistance greater than 5 ohms?**

-> Yes
INSTALL a new harness between VR01 and VR02. TEST the system for normal operation.

-> No
GO to Pinpoint Test G240121t99.

G240121t95 : CHECK FOR SHORT TO GROUND AT TL91, PIN 16

1. Disconnect intermediate connector, TL91. 2. Measure the resistance between TL91, pin 16 (RG) and GROUND.

- **Is the resistance less than 10,000 ohms?**

-> Yes
INSTALL a new harness between VR02 and TL91. TEST the system for normal operation.

-> No
GO to Pinpoint Test G240121t96.

G240121t99 : CHECK THE CIRCUIT BETWEEN VR02 AND TL91 FOR CONTINUITY

1. Measure the resistance between VR02, pin 16 (RG) and TL91, pin 16 (RG).

- **Is the resistance greater than 5 ohms?**

-> Yes
INSTALL a new harness between VR02 and TL91. TEST the system for normal operation.

-> No
GO to Pinpoint Test G240121t100.

G240121t96 : CHECK FOR SHORT TO GROUND AT TL87, PIN 16

1. Measure the resistance between TL87, pin 16 (RG) and GROUND.

- **Is the resistance less than 10,000 ohms?**

-> Yes
INSTALL a new harness between TL91 and TL87. TEST the system for normal operation.

-> No
GO to Pinpoint Test G240121t101.

G240121t100 : CHECK THE CIRCUIT BETWEEN TL91 AND TL87 FOR CONTINUITY

1. Measure the resistance between TL91, pin 16 (RG) and TL87, pin 16 (RG).

- **Is the resistance greater than 5 ohms?**

-> Yes
INSTALL a new harness between TL91 and TL87. TEST the system for normal operation.

-> No
GO to Pinpoint Test G240121t101.

G240121t101 : CHECK FOR VOLTAGE AT AUDIO VIDEO SELECTOR MODULE CONNECTOR TL86

1. Disconnect the audio video selector module electrical connector, TL86. 2. Turn the ignition switch to the **ON** position. 3. Measure the voltage between TL86, pin 05 (RU) and GROUND.

- **Is the voltage 5 volts?**

www.JagDocs.com

-> Yes
INSTALL a new audio video selector module,
Video System Module TEST the system for normal operation.

-> No
GO to Pinpoint Test G240121t102.

G240121t102 : CHECK FOR SHORT TO GROUND AT CONTROL PANEL CONNECTOR RC03

1. Disconnect the control panel electrical connector, RC03. 2. Measure the resistance between RC03, pin 05 (RU) and GROUND.

- **Is the resistance less than 10,000 ohms?**

-> Yes
GO to Pinpoint Test G240121t104.

-> No
GO to Pinpoint Test G240121t103.

G240121t103 : CHECK THE CIRCUIT BETWEEN RC03 AND TL86 FOR CONTINUITY

1. Measure the resistance between RC03, pin 05 (RU) and TL86, pin 05 (RU).

- **Is the resistance greater than 5 ohms?**

-> Yes
GO to Pinpoint Test G240121t105.

-> No
INSTALL a new control panel,
Rear Passenger Entertainment Control Panel TEST the system for normal operation.

G240121t104 : CHECK FOR SHORT TO GROUND AT INTERMEDIATE CONNECTOR RC04

1. Disconnect intermediate connector, RC04. 2. Measure the resistance between RC04, pin 05 (RU) working towards the control panel, and GROUND.

- **Is the resistance less than 10,000 ohms?**

-> Yes
INSTALL a new harness between RC03 and RC04. TEST the system for normal operation.

-> No
GO to Pinpoint Test G240121t105.

G240121t105 : CHECK THE CIRCUIT BETWEEN RC03 AND RC04 FOR CONTINUITY

1. Measure the resistance between RC03, pin 05 (RU) and RC04, pin 05 (RU).

- **Is the resistance greater than 5 ohms?**

-> Yes
INSTALL a new harness between RC03 and RC04. TEST the system for normal operation.

-> No
GO to Pinpoint Test G240121t106.

G240121t106 : CHECK FOR SHORT TO GROUND AT AUDIO VIDEO SELECTOR MODULE CONNECTOR TL86

1. Measure the resistance between TL86, pin 05 (RU) and GROUND.

- **Is the resistance less than 10,000 ohms?**

-> Yes
INSTALL a new harness between RC04 and TL86. TEST the system for normal operation.

-> No
GO to Pinpoint Test G240121t107.

G240121t107 : CHECK THE CIRCUIT BETWEEN RC04 AND TL86 FOR CONTINUITY

1. Measure the resistance between RC04, pin 05 (RU) and TL86, pin 05 (RU).

- **Is the resistance greater than 5 ohms?**

-> Yes
INSTALL a new harness between RC04 and TL86. TEST the system for normal operation.

-> No
INSTALL a new control panel,
Rear Passenger Entertainment Control Panel TEST the system for normal operation.

www.JagDocs.com

PINPOINT TEST G240121p12 : CHECK THE POWER AND GROUND SUPPLIES TO THE LEFT-HAND SCREEN

G240121t108 : CHECK FOR BATTERY VOLTAGE AT THE SCREEN CONNECTOR, VL01

1. Disconnect the left-hand screen electrical connector, VL01. 2. Turn the ignition switch to the **ON** position. 3. Measure the voltage between VL01, pin 18 (OY) and GROUND.

- **Is the voltage greater than 10 volts?**

-> Yes
GO to Pinpoint Test G240121t113.

-> No
GO to Pinpoint Test G240121t109.

G240121t109 : CHECK THE CIRCUIT BETWEEN VL01 AND TL85 FOR CONTINUITY

1. Disconnect the audio video selector module electrical connector, TL85. 2. Measure the resistance between VL01, pin 18 (OY) and TL85, pin 18 (OY).

- **Is the resistance greater than 5 ohms?**

-> Yes
GO to Pinpoint Test G240121t110.

-> No
INSTALL a new audio video selector module,
Video System Module TEST the system for normal operation.

G240121t110 : CHECK THE CIRCUIT BETWEEN VL01 AND VL02 FOR CONTINUITY

1. Disconnect intermediate connector, VL02. 2. Measure the resistance between VL01, pin 18 (OY) and VL02, pin 18 (OY).

- **Is the resistance greater than 5 ohms?**

-> Yes
INSTALL a new harness between VL01 and VL02. TEST the system for normal operation.

-> No
GO to Pinpoint Test G240121t111.

G240121t111 : CHECK THE CIRCUIT BETWEEN VL02 AND TL92 FOR CONTINUITY

1. Disconnect intermediate connector, TL92. 2. Measure the resistance between VL02, pin 18 (OY) and TL92, pin 18 (OY).

- **Is the resistance greater than 5 ohms?**

-> Yes
INSTALL a new harness between VL02 and TL92. TEST the system for normal operation.

-> No
GO to Pinpoint Test G240121t112.

G240121t112 : CHECK THE CIRCUIT BETWEEN TL92 AND TL85 FOR CONTINUITY

1. Measure the resistance between TL92, pin 18 (OY) and TL85, pin 18 (OY).

- **Is the resistance greater than 5 ohms?**

-> Yes
INSTALL a new harness between TL92 and TL85. TEST the system for normal operation.

-> No
INSTALL a new audio video selector module,
Video System Module TEST the system for normal operation.

G240121t113 : CHECK FOR VOLTAGE AT VL01, PIN 08

1. Reconnect the audio video selector module electrical connector, TL85. 2. Turn the igntition switch to the **ON** position. 3. Measure the voltage between VL01, pin 08 (N) and GROUND.

- **Is the voltage -14 to -18 volts?**

-> Yes
GO to Pinpoint Test G240121t118.

-> No
GO to Pinpoint Test G240121t114.

www.JagDocs.com

G240121t114 : CHECK THE CIRCUIT BETWEEN VL01 AND TL85 FOR CONTINUITY

1. Turn the igntition switch to the **OFF** position. 2. Disconnect audio video selector module electrical connector, TL85. 3. Measure the resistance between VL01, pin 08 (N) and TL85, pin 08 (N).

- **Is the resistance greater than 5 ohms?**

-> Yes
GO to Pinpoint Test G240121t115.

-> No
INSTALL a new audio video selector module,
Video System Module TEST the system for normal operation.

G240121t115 : CHECK THE CIRCUIT BETWEEN VL01 AND VL02 FOR CONTINUITY

1. Disconnect intermediate connector, VL02. 2. Measure the resistance between VL01, pin 08 (N) and VL02, pin 08 (N).

- **Is the resistance greater than 5 ohms?**

-> Yes
INSTALL a new harness between VL01 and VL02. TEST the system for normal operation.

-> No
GO to Pinpoint Test G240121t116.

G240121t116 : CHECK THE CIRCUIT BETWEEN VL02 AND TL92 FOR CONTINUITY

1. Disconnect intermediate connector, TL92. 2. Measure the resistance between VL02, pin 08 (N) and TL92, pin 08 (N).

- **Is the resistance greater than 5 ohms?**

-> Yes
INSTALL a new harness between VL02 and TL92. TEST the system for normal operation.

-> No
GO to Pinpoint Test G240121t117.

G240121t117 : CHECK THE CIRCUIT BETWEEN TL92 AND TL85 FOR CONTINUITY

1. Measure the resistance between TL92, pin 08 (N) and TL85, pin 08 (N).

- **Is the resistance greater than 5 ohms?**

-> Yes
INSTALL a new harness between TL92 and TL85. TEST the system for normal operation.

-> No
INSTALL a new audio video selector module,
Video System Module TEST the system for normal operation.

G240121t118 : CHECK FOR VOLTAGE AT VL01, PIN 06

1. Reconnect audio video selector module electrical connector, TL85. 2. Make sure the ignition switch is in the **ON** position. 3. Measure the voltage between VL01, pin 06 (B) and GROUND.

- **Is the voltage 6 volts?**

-> Yes
GO to Pinpoint Test G240121t123.

-> No
GO to Pinpoint Test G240121t119.

G240121t119 : CHECK THE CIRCUIT BETWEEN VL01 AND TL85 FOR CONTINUITY

1. Turn the ignition switch to the **OFF** position. 2. Disconnect audio video selector module electrical connector, TL85. 3. Measure the resistance between VL01, pin 06 (B) and TL85, pin 06 (B).

- **Is the resistance greater than 5 ohms?**

-> Yes
GO to Pinpoint Test G240121t120.

-> No
INSTALL a new audio video selector module,
Video System Module TEST the system for normal operation.

G240121t120 : CHECK THE CIRCUIT BETWEEN VL01 AND VL02 FOR CONTINUITY

1. Disconnect intermediate connector, VL02. 2. Measure the resistance between VL01, pin 06 (B) and VL02, pin 06 (B).

- **Is the resistance greater than 5 ohms?**

www.JagDocs.com

-> Yes
INSTALL a new harness between VL01 and VL02. TEST the system for normal operation.

-> No
GO to Pinpoint Test G240121t121.

G240121t121 : CHECK THE CIRCUIT BETWEEN VL02 AND TL92 FOR CONTINUITY

1. Disconnect intermediate connector, TL92. 2. Measure the resistance between VL02, pin 06 (B) and TL92, pin 06 (B).

- **Is the resistance greater than 5 ohms?**

-> Yes
INSTALL a new harness between VL02 and TL92. TEST the system for normal operation.

-> No
GO to Pinpoint Test G240121t122.

G240121t122 : CHECK THE CIRCUIT BETWEEN TL92 AND TL85 FOR CONTINUITY

1. Measure the resistance between TL92, pin 06 (B) and TL85, pin 06 (B).

- **Is the resistance greater than 5 ohms?**

-> Yes
INSTALL a new harness between TL92 and TL85. TEST the system for normal operation.

-> No
INSTALL a new audio video selector module,
Video System Module TEST the system for normal operation.

G240121t123 : CHECK FOR VOLTAGE AT VL01, PIN 04

1. Reconnect the audio video selector module electrical connector, TL85. 2. Make sure the ignition switch is in the **ON** position. 3. Measure the voltage between VL01, pin 04 (BK) and GROUND.

- **Is the voltage battery voltage?**

-> Yes
GO to Pinpoint Test G240121t128.

-> No

GO to Pinpoint Test G240121t124.

G240121t124 : CHECK THE CIRCUIT BETWEEN VL01 AND TL85 FOR CONTINUITY

1. Make sure the ignition switch is in the **OFF** position. 2. Disconnect audio video selector module electrical connector, TL85. 3. Measure the resistance between VL01, pin 04 (BK) and TL85, pin 04 (BK).

- **Is the resistance greater than 5 ohms?**

-> Yes
GO to Pinpoint Test G240121t125.

-> No
INSTALL a new audio video selector module,
Video System Module TEST the system for normal operation.

G240121t125 : CHECK THE CIRCUIT BETWEEN VL01 AND VL02 FOR CONTINUITY

1. Disconnect intermediate connector, VL02. 2. Measure the resistance between VL01, pin 04 (BK) and VL02, pin 04 (BK).

- **Is the resistance greater than 5 ohms?**

-> Yes
INSTALL a new harness between VL01 and VL02. TEST the system for normal operation.

-> No
GO to Pinpoint Test G240121t126.

G240121t126 : CHECK THE CIRCUIT BETWEEN VL02 AND TL92 FOR CONTINUITY

1. Disconnect intermediate connector, TL92. 2. Measure the resistance between VL02, pin 04 (BK) and TL92, pin 04 (BK).

- **Is the resistance greater than 5 ohms?**

-> Yes
INSTALL a new harness between VL02 and TL92. TEST the system for normal operation.

-> No
GO to Pinpoint Test G240121t127.

www.JagDocs.com

G240121t127 : CHECK THE CIRCUIT BETWEEN TL92 AND TL85 FOR CONTINUITY

1. Measure the resistance between TL92, pin 04 (BK) and TL85, pin 04 (BK).

- **Is the resistance greater than 5 ohms?**

-> Yes
INSTALL a new harness between TL92 and TL85. TEST the system for normal operation.

-> No
INSTALL a new audio video selector module,
Video System Module TEST the system for normal operation.

G240121t128 : CHECK FOR VOLTAGE AT VL01, PIN 02

1. Reconnect the audio video selector module electrical connector, TL85. 2. Measure the voltage between VL01, pin 02 (YU) and GROUND.

- **Is the voltage battery voltage?**

-> Yes
GO to Pinpoint Test G240121t133.

-> No
GO to Pinpoint Test G240121t129.

G240121t129 : CHECK THE CIRCUIT BETWEEN VL01 AND TL85 FOR CONTINUITY

1. Disconnect audio video selector module electrical connector, TL85. 2. Measure the resistance between VL01, pin 02 (YU) and TL85, pin 02 (YU).

- **Is the resistance greater than 5 ohms?**

-> Yes
GO to Pinpoint Test G240121t130.

-> No
INSTALL a new audio video selector module,
Video System Module TEST the system for normal operation.

G240121t130 : CHECK THE CIRCUIT BETWEEN VL01 AND VL02 FOR CONTINUITY

1. Disconnect intermediate connector, VL02. 2. Measure the resistance between VL01, pin 02 (YU) and VL02, pin 02 (YU).

- **Is the resistance greater than 5 ohms?**

-> Yes
INSTALL a new harness between VL01 and VL02. TEST the system for normal operation.

-> No
GO to Pinpoint Test G240121t131.

G240121t131 : CHECK THE CIRCUIT BETWEEN VL02 AND TL92 FOR CONTINUITY

1. Disconnect intermediate connector, TL92. 2. Measure the resistance between VL02, pin 02 (YU) and TL92, pin 02 (YU).

- **Is the resistance greater than 5 ohms?**

-> Yes
INSTALL a new harness between VL02 and TL92. TEST the system for normal operation.

-> No
GO to Pinpoint Test G240121t132.

G240121t132 : CHECK THE CIRCUIT BETWEEN TL92 AND TL85 FOR CONTINUITY

1. Measure the resistance between TL92, pin 02 (YU) and TL85, pin 02 (YU).

- **Is the resistance greater than 5 ohms?**

-> Yes
INSTALL a new harness between TL92 and TL85. TEST the system for normal operation.

-> No
INSTALL a new audio video selector module,
Video System Module TEST the system for normal operation.

G240121t133 : CHECK FOR GROUND AT VL01, PIN 01

1. Reconnect the audio video selector module electrical connector, TL85. 2. Measure the resistance between VL01, pin 01 (YR) and GROUND.

- **Is the resistance greater than 5 ohms?**

-> Yes
GO to Pinpoint Test G240121t134.

www.JagDocs.com

-> No
GO to Pinpoint Test G240121t138.

G240121t134 : CHECK THE CIRCUIT BETWEEN VL01 AND TL85 FOR CONTINUITY

1. Disconnect the audio video selector module electrical connector, TL85. 2. Measure the resistance between VL01, pin 01 (YR) and TL85, pin 01 (YR).

- **Is the resistance greater than 5 ohms?**

-> Yes
GO to Pinpoint Test G240121t135.

-> No
INSTALL a new audio video selector module,
Video System Module TEST the system for normal operation.

G240121t135 : CHECK THE CIRCUIT BETWEEN VL01 AND VL02 FOR CONTINUITY

1. Disconnect intermediate connector, VL02. 2. Measure the resistance between VL01, pin 01 (YR) and VL02, pin 01 (YR).

- **Is the resistance greater than 5 ohms?**

-> Yes
INSTALL a new harness between VL01 and VL02. TEST the system for normal operation.

-> No
GO to Pinpoint Test G240121t136.

G240121t136 : CHECK THE CIRCUIT BETWEEN VL02 AND TL92 FOR CONTINUITY

1. Disconnect intermediate connector, TL92. 2. Measure the resistance between VL02, pin 01 (YR) and TL92, pin 01 (YR).

- **Is the resistance greater than 5 ohms?**

-> Yes
INSTALL a new harness between VL02 and TL92. TEST the system for normal operation.

-> No
GO to Pinpoint Test G240121t137.

G240121t137 : CHECK THE CIRCUIT BETWEEN TL92 AND TL85 FOR CONTINUITY

1. Measure the resistance between TL92, pin 01 (YR) and TL85, pin 01 (YR).

- **Is the resistance greater than 5 ohms?**

-> Yes
INSTALL a new harness between TL92 and TL85. TEST the system for normal operation.

-> No
INSTALL a new audio video selector module,
Video System Module TEST the system for normal operation.

G240121t138 : CHECK FOR IGNITION VOLTAGE AT VL01, PIN 16

1. Turn the ignition switch to the **ON** position. 2. Measure the voltage between VL01, pin 16 (RG) and GROUND.

- **Is the voltage 5 volts?**

-> Yes
INSTALL a new right-hand screen,
Video Display TEST the system for normal operation.

-> No
GO to Pinpoint Test G240121t139.

G240121t139 : CHECK FOR SHORT TO GROUND AT VL01, PIN 16

1. Reconnect the intermediate connectors. 2. Measure the resistance between VL01, pin 16 (RG) and GROUND.

- **Is the resistance less than 10,000 ohms?**

-> Yes
GO to Pinpoint Test G240121t141.

-> No
GO to Pinpoint Test G240121t140.

G240121t140 : CHECK THE CIRCUIT BETWEEN VR01 AND TL85 FOR CONTINUITY

1. Measure the resistance between VL01, pin 16 (RG) and TL85, pin 16 (RG).

- **Is the resistance greater than 5 ohms?**

www.JagDocs.com

-> Yes
GO to Pinpoint Test G240121t142.

-> No
GO to Pinpoint Test G240121t101.

G240121t141 : CHECK FOR SHORT TO GROUND AT VL02, PIN 16

1. Disconnect intermediate connector, VL02. 2. Measure the resistance between VL02, pin 16 (RG) and GROUND.

- **Is the resistance less than 10,000 ohms?**

-> Yes
INSTALL a new harness between VL01 and VL02. TEST the system for normal operation.

-> No
GO to Pinpoint Test G240121t143.

G240121t142 : CHECK THE CIRCUIT BETWEEN VL01 AND VL02 FOR CONTINUITY

1. Measure the resistance between VL01, pin 16 (RG) and VL02, pin 16 (RG).

- **Is the resistance greater than 5 ohms?**

-> Yes
INSTALL a new harness between VL01 and VL02. TEST the system for normal operation.

-> No
GO to Pinpoint Test G240121t144.

G240121t143 : CHECK FOR SHORT TO GROUND AT TL92, PIN 16

1. Disconnect intermediate connector, TL92. 2. Measure the resistance between TL92, pin 16 (RG) and GROUND.

- **Is the resistance less than 10,000 ohms?**

-> Yes
INSTALL a new harness between VL02 and TL92. TEST the system for normal operation.

-> No
GO to Pinpoint Test G240121t145.

G240121t144 : CHECK THE CIRCUIT BETWEEN VL02 AND TL92 FOR CONTINUITY

1. Measure the resistance between VL02, pin 16 (RG) and TL92, pin 16 (RG).

- **Is the resistance greater than 5 ohms?**

-> Yes
INSTALL a new harness between VL02 and TL92. TEST the system for normal operation.

-> No
GO to Pinpoint Test G240121t146.

G240121t145 : CHECK FOR SHORT TO GROUND AT TL85, PIN 16

1. Measure the resistance between TL85, pin 16 (RG) and GROUND.

- **Is the resistance less than 10,000 ohms?**

-> Yes
INSTALL a new harness between TL92 and TL85. TEST the system for normal operation.

-> No
GO to Pinpoint Test G240121t147.

G240121t146 : CHECK THE CIRCUIT BETWEEN TL92 AND TL85 FOR CONTINUITY

1. Measure the resistance between TL92, pin 16 (RG) and TL85, pin 16 (RG).

- **Is the resistance greater than 5 ohms?**

-> Yes
INSTALL a new harness between TL92 and TL85. TEST the system for normal operation.

-> No
GO to Pinpoint Test G240121t147.

G240121t147 : CHECK FOR VOLTAGE AT AUDIO VIDEO SELECTOR MODULE CONNECTOR TL86

1. Disconnect the audio video selector module electrical connector, TL86. 2. Turn the ignition switch to the **ON** position. 3. Measure the voltage between TL86, pin 05 (RU) and GROUND.

- **Is the voltage 5 volts?**

www.JagDocs.com

-> Yes
INSTALL a new audio video selector module,
Video System Module TEST the system for normal operation.

-> No
GO to Pinpoint Test G240121t148.

G240121t148 : CHECK FOR SHORT TO GROUND AT CONTROL PANEL CONNECTOR RC03

1. Disconnect the control panel electrical connector, RC03. 2. Measure the resistance between RC03, pin 05 (RU) and GROUND.

- **Is the resistance less than 10,000 ohms?**

-> Yes
GO to Pinpoint Test G240121t150.

-> No
GO to Pinpoint Test G240121t149.

G240121t149 : CHECK THE CIRCUIT BETWEEN RC03 AND TL86 FOR CONTINUITY

1. Measure the resistance between RC03, pin 05 (RU) and TL86, pin 05 (RU).

- **Is the resistance greater than 5 ohms?**

-> Yes
GO to Pinpoint Test G240121t151.

-> No
INSTALL a new control panel,
Rear Passenger Entertainment Control Panel TEST the system for normal operation.

G240121t150 : CHECK FOR SHORT TO GROUND AT INTERMEDIATE CONNECTOR RC04

1. Disconnect intermediate connector, RC04. 2. Measure the resistance between RC04, pin 05 (RU) working towards the control panel, and GROUND.

- **Is the resistance less than 10,000 ohms?**

-> Yes
INSTALL a new harness between RC03 and RC04. TEST the system for normal operation.

-> No
GO to Pinpoint Test G240121t151.

G240121t151 : CHECK THE CIRCUIT BETWEEN RC03 AND RC04 FOR CONTINUITY

1. Measure the resistance between RC03, pin 05 (RU) and RC04, pin 05 (RU).

- **Is the resistance greater than 5 ohms?**

-> Yes
INSTALL a new harness between RC03 and RC04. TEST the system for normal operation.

-> No
GO to Pinpoint Test G240121t152.

G240121t152 : CHECK FOR SHORT TO GROUND AT AUDIO VIDEO SELECTOR MODULE CONNECTOR TL86

1. Measure the resistance between TL86, pin 05 (RU) and GROUND.

- **Is the resistance less than 10,000 ohms?**

-> Yes
INSTALL a new harness between RC04 and TL86. TEST the system for normal operation.

-> No
GO to Pinpoint Test G240121t153.

G240121t153 : CHECK THE CIRCUIT BETWEEN RC04 AND TL86 FOR CONTINUITY

1. Measure the resistance between RC04, pin 05 (RU) and TL86, pin 05 (RU).

- **Is the resistance greater than 5 ohms?**

-> Yes
INSTALL a new harness between RC04 and TL86. TEST the system for normal operation.

-> No
INSTALL a new control panel,
Rear Passenger Entertainment Control Panel TEST the system for normal operation.

www.JagDocs.com

PINPOINT TEST G240121p13 : TV IMPAIRED SCREEN IMAGE

G240121t154 : CHECK THE TV GREEN SIGNAL HARNESS FOR HIGH RESISTANCE

1. Disconnect the battery negative terminal. 2. Disconnect the audio video selector module electrical connector, TL20. 3. Disconnect the TV electrical connector, CC11. 4. Measure the resistance between TL20, pin 13 (K) and CC11, pin 03 (K).

- **Is the resistance greater than 5 ohms?**

-> Yes
GO to Pinpoint Test G240121t155.

-> No
GO to Pinpoint Test G240121t157.

G240121t157 : CHECK THE TV GREEN SIGNAL HARNESS FOR SHORT TO GROUND

1. Reconnect the battery negative terminal. 2. Measure the resistance between TL20, pin 13 (K) and GROUND.

- **Is the resistance less than 10,000 ohms?**

-> Yes
GO to Pinpoint Test G240121t156.

-> No
GO to Pinpoint Test G240121t158.

G240121t158 : CHECK THE TV GREEN SIGNAL HARNESS FOR SHORT TO B+

1. Measure the voltage between TL20, pin 13 (K) and GROUND.

- **Is the voltage greater than 3 volts?**

-> Yes
GO to Pinpoint Test G240121t159.

-> No

GO to Pinpoint Test G240121t160.

G240121t155 : CHECK THE CIRCUIT BETWEEN CC11 AND INTERMEDIATE CONNECTOR CC02 FOR HIGH RESISTANCE

1. Disconnect intermediate connector, CC02. 2. Measure the resistance between CC11, pin 03 (K) and CC02, pin 13 (K).

- **Is the resistance greater than 5 ohms?**

-> Yes
INSTALL a new harness between CC02 and CC11. TEST the system for normal operation.

-> No
INSTALL a new harness between CC02 and TL20. TEST the system for normal operation.

G240121t156 : CHECK THE CIRCUIT BETWEEN CC11 AND INTERMEDIATE CONNECTOR CC02 FOR SHORT TO GROUND

1. Disconnect intermediate connector, CC02. 2. Measure the resistance between CC11, pin 03 (K) and GROUND.

- **Is the resistance less than 10,000 ohms?**

-> Yes
INSTALL a new harness between CC02 and CC11. TEST the system for normal operation.

-> No
INSTALL a new harness between CC02 and TL20. TEST the system for normal operation.

G240121t159 : CHECK THE CIRCUIT BETWEEN CC11 AND INTERMEDIATE CONNECTOR CC02 FOR SHORT TO B+

1. Measure the voltage between CC11, pin 03 (K) and GROUND.

- **Is the voltage greater than 3 volts?**

-> Yes
INSTALL a new harness between CC02 and CC11. TEST the system for normal operation.

-> No
INSTALL a new harness between CC02 and TL20. TEST the system for normal operation.

G240121t160 : CHECK THE TV BLUE SIGNAL HARNESS FOR HIGH RESISTANCE

1. Measure the resistance between TL20, pin 14 (W) and CC11, pin 08 (W).

- **Is the resistance greater than 5 ohms?**

www.JagDocs.com

-> Yes
GO to Pinpoint Test G240121t163.

-> No
GO to Pinpoint Test G240121t161.

G240121t161 : CHECK THE TV BLUE SIGNAL HARNESS FOR SHORT TO GROUND

1. Measure the resistance between TL20, pin 14 (W) and GROUND.

- **Is the resistance less than 10,000 ohms?**

-> Yes
GO to Pinpoint Test G240121t164.

-> No
GO to Pinpoint Test G240121t162.

G240121t162 : CHECK THE TV BLUE SIGNAL HARNESS FOR SHORT TO B+

1. Measure the voltage between TL20, pin 14 (W) and GROUND.

- **Is the voltage greater than 3 volts?**

-> Yes
GO to Pinpoint Test G240121t165.

-> No
GO to Pinpoint Test G240121t166.

G240121t163 : CHECK THE CIRCUIT BETWEEN CC11 AND INTERMEDIATE CONNECTOR CC02 FOR HIGH RESISTANCE

1. Disconnect intermediate connector, CC02. 2. Measure the resistance between CC11, pin 08 (W) and CC02, pin 14 (W).

- **Is the resistance greater than 5 ohms?**

-> Yes
INSTALL a new harness between CC02 and CC11. TEST the system for normal operation.

-> No
INSTALL a new harness between CC02 and TL20. TEST the system for normal operation.

G240121t164 : CHECK THE CIRCUIT BETWEEN CC11 AND INTERMEDIATE CONNECTOR CC02 FOR SHORT TO GROUND

1. Disconnect intermediate connector, CC02. 2. Measure the resistance between CC11, pin 08 (W) and GROUND.

- **Is the resistance less than 10,000 ohms?**

-> Yes
INSTALL a new harness between CC02 and CC11. TEST the system for normal operation.

-> No
INSTALL a new harness between CC02 and TL20. TEST the system for normal operation.

G240121t165 : CHECK THE CIRCUIT BETWEEN CC11 AND INTERMEDIATE CONNECTOR CC02 FOR SHORT TO B+

1. Measure the voltage between CC11, pin 08 (W) and GROUND.

- **Is the voltage greater than 3 volts?**

-> Yes
INSTALL a new harness between CC02 and CC11. TEST the system for normal operation.

-> No
INSTALL a new harness between CC02 and TL20. TEST the system for normal operation.

G240121t166 : CHECK THE TV RED SIGNAL HARNESS FOR HIGH RESISTANCE

1. Disconnect the battery negative terminal. 2. Disconnect the audio video selector module electrical connector, TL20. 3. Disconnect the TV electrical connector, CC11. 4. Measure the resistance between TL20, pin 12 (R) and CC11, pin 02 (R).

- **Is the resistance greater than 5 ohms?**

-> Yes
GO to Pinpoint Test G240121t169.

-> No
GO to Pinpoint Test G240121t167.

www.JagDocs.com

G240121t167 : CHECK THE TV RED SIGNAL HARNESS FOR SHORT TO GROUND

1. Reconnect the battery negative terminal. 2. Measure the resistance between TL20, pin 12 (R) and GROUND.

- **Is the resistance less than 10,000 ohms?**

-> Yes
GO to Pinpoint Test G240121t170.

-> No
GO to Pinpoint Test G240121t168.

G240121t168 : CHECK THE TV RED SIGNAL HARNESS FOR SHORT TO B+

1. Measure the voltage between TL20, pin 12 (R) and GROUND.

- **Is the voltage greater than 3 volts?**

-> Yes
GO to Pinpoint Test G240121t171.

-> No
GO to Pinpoint Test G240121t172.

G240121t169 : CHECK THE CIRCUIT BETWEEN CC11 AND INTERMEDIATE CONNECTOR CC02 FOR HIGH RESISTANCE

1. Disconnect intermediate connector, CC02. 2. Measure the resistance between CC11, pin 02 (R) and CC02, pin 15 (R).

- **Is the resistance greater than 5 ohms?**

-> Yes
INSTALL a new harness between CC02 and CC11. TEST the system for normal operation.

-> No
INSTALL a new harness between CC02 and TL20. TEST the system for normal operation.

G240121t170 : CHECK THE CIRCUIT BETWEEN CC11 AND INTERMEDIATE CONNECTOR CC02 FOR SHORT TO GROUND

1. Disconnect intermediate connector, CC02. 2. Measure the resistance between CC11, pin 02 (R) and GROUND.

- **Is the resistance less than 10,000 ohms?**

-> Yes
INSTALL a new harness between CC02 and CC11. TEST the system for normal operation.

-> No
INSTALL a new harness between CC02 and TL20. TEST the system for normal operation.

G240121t171 : CHECK THE CIRCUIT BETWEEN CC11 AND INTERMEDIATE CONNECTOR CC02 FOR SHORT TO B+

1. Measure the voltage between CC11, pin 02 (R) and GROUND.

- **Is the voltage greater than 3 volts?**

-> Yes
INSTALL a new harness between CC02 and CC11. TEST the system for normal operation.

-> No
INSTALL a new harness between CC02 and TL20. TEST the system for normal operation.

G240121t172 : CHECK THE TV RGB SIGNAL GROUND HARNESS FOR HIGH RESISTANCE

1. Disconnect the battery negative terminal. 2. Disconnect the audio video selector module electrical connector, TL20. 3. Disconnect the TV electrical connector, CC11. 4. Measure the resistance between TL20, pin 11 (W) and CC11, pin 01 (W).

- **Is the resistance greater than 5 ohms?**

-> Yes
GO to Pinpoint Test G240121t175.

-> No
GO to Pinpoint Test G240121t173.

G240121t173 : CHECK THE TV RGB SIGNAL GROUND HARNESS FOR SHORT TO GROUND

1. Reconnect the battery negative terminal. 2. Measure the resistance between TL20, pin 11 (W) and GROUND.

- **Is the resistance less than 10,000 ohms?**

-> Yes
GO to Pinpoint Test G240121t176.

www.JagDocs.com

-> No
GO to Pinpoint Test G240121t174.

G240121t174 : CHECK THE TV RGB SIGNAL GROUND HARNESS FOR SHORT TO B+

1. Measure the voltage between TL20, pin 11 (W) and GROUND.

- **Is the voltage greater than 3 volts?**

-> Yes
GO to Pinpoint Test G240121t177.

-> No
GO to Pinpoint Test G240121t178.

G240121t175 : CHECK THE CIRCUIT BETWEEN CC11 AND INTERMEDIATE CONNECTOR CC02 FOR HIGH RESISTANCE

1. Disconnect intermediate connector, CC02. 2. Measure the resistance between CC11, pin 01 (W) and CC02, pin 16 (W).

- **Is the resistance greater than 5 ohms?**

-> Yes
INSTALL a new harness between CC02 and CC11. TEST the system for normal operation.

-> No
INSTALL a new harness between CC02 and TL20. TEST the system for normal operation.

G240121t176 : CHECK THE CIRCUIT BETWEEN CC11 AND INTERMEDIATE CONNECTOR CC02 FOR SHORT TO GROUND

1. Disconnect intermediate connector, CC02. 2. Measure the resistance between CC11, pin 01 (W) and GROUND.

- **Is the resistance less than 10,000 ohms?**

-> Yes
INSTALL a new harness between CC02 and CC11. TEST the system for normal operation.

-> No
INSTALL a new harness between CC02 and TL20. TEST the system for normal operation.

G240121t177 : CHECK THE CIRCUIT BETWEEN CC11 AND INTERMEDIATE CONNECTOR CC02 FOR SHORT TO B+

1. Measure the voltage between CC11, pin 01 (W) and GROUND.

- **Is the voltage greater than 3 volts?**

-> Yes
INSTALL a new harness between CC02 and CC11. TEST the system for normal operation.

-> No
INSTALL a new harness between CC02 and TL20. TEST the system for normal operation.

G240121t178 : CHECK THE TV SYNC SIGNAL HARNESS FOR HIGH RESISTANCE

1. Disconnect the battery negative terminal. 2. Disconnect the audio video selector module electrical connector, TL20. 3. Disconnect the TV electrical connector, CC11. 4. Measure the resistance between TL20, pin 16 (N) and CC11, pin 09 (N).

- **Is the resistance greater than 5 ohms?**

-> Yes
GO to Pinpoint Test G240121t181.

-> No
GO to Pinpoint Test G240121t179.

G240121t179 : CHECK THE TV SYNC SIGNAL HARNESS FOR SHORT TO GROUND

1. Reconnect the battery negative terminal. 2. Measure the resistance between TL20, pin 16 (N) and GROUND.

- **Is the resistance less than 10,000 ohms?**

-> Yes
GO to Pinpoint Test G240121t182.

-> No
GO to Pinpoint Test G240121t180.

G240121t180 : CHECK THE TV SYNC SIGNAL HARNESS FOR SHORT TO B+

1. Measure the voltage between TL20, pin 16 (N) and GROUND.

www.JagDocs.com

- **Is the voltage greater than 3 volts?**

-> Yes
GO to Pinpoint Test G240121t183.

-> No
GO to Pinpoint Test G240121t184.

G240121t181 : CHECK THE CIRCUIT BETWEEN CC11 AND INTERMEDIATE CONNECTOR CC02 FOR HIGH RESISTANCE

1. Disconnect intermediate connector, CC02. 2. Measure the resistance between CC11, pin 09 (N) and CC02, pin 17 (N).

- **Is the resistance greater than 5 ohms?**

-> Yes
INSTALL a new harness between CC02 and CC11. TEST the system for normal operation.

-> No
INSTALL a new harness between CC02 and TL20. TEST the system for normal operation.

G240121t182 : CHECK THE CIRCUIT BETWEEN CC11 AND INTERMEDIATE CONNECTOR CC02 FOR SHORT TO GROUND

1. Disconnect intermediate connector, CC02. 2. Measure the resistance between CC11, pin 09 (N) and GROUND.

- **Is the resistance less than 10,000 ohms?**

-> Yes
INSTALL a new harness between CC02 and CC11. TEST the system for normal operation.

-> No
INSTALL a new harness between CC02 and TL20. TEST the system for normal operation.

G240121t183 : CHECK THE CIRCUIT BETWEEN CC11 AND INTERMEDIATE CONNECTOR CC02 FOR SHORT TO B+

1. Measure the voltage between CC11, pin 09 (N) and GROUND.

- **Is the voltage greater than 3 volts?**

-> Yes
INSTALL a new harness between CC02 and CC11. TEST the system for normal operation.

-> No
INSTALL a new harness between CC02 and TL20. TEST the system for normal operation.

G240121t184 : CHECK THE TV SYNC GROUND HARNESS FOR HIGH RESISTANCE

1. Disconnect the battery negative terminal. 2. Disconnect the audio video selector module electrical connector, TL20. 3. Disconnect the TV electrical connector, CC11. 4. Measure the resistance between TL20, pin 15 (W) and CC11, pin 07 (W).

- **Is the resistance greater than 5 ohms?**

-> Yes
GO to Pinpoint Test G240121t187.

-> No
GO to Pinpoint Test G240121t185.

G240121t185 : CHECK THE TV SYNC GROUND HARNESS FOR SHORT TO GROUND

1. Reconnect the battery negative terminal. 2. Measure the resistance between TL20, pin 15 (W) and GROUND.

- **Is the resistance less than 10,000 ohms?**

-> Yes
GO to Pinpoint Test G240121t188.

-> No
GO to Pinpoint Test G240121t186.

G240121t186 : CHECK THE TV SYNC GROUND HARNESS FOR SHORT TO B+

1. Measure the voltage between TL20, pin 15 (W) and GROUND.

- **Is the voltage greater than 3 volts?**

-> Yes
GO to Pinpoint Test G240121t189.

-> No
No circuit fault found. Contact dealer technical support for advice on possible TV or audio video selector module failure.

www.JagDocs.com

G240121t187 : CHECK THE CIRCUIT BETWEEN CC11 AND INTERMEDIATE CONNECTOR CC02 FOR HIGH RESISTANCE

1. Disconnect intermediate connector, CC02. 2. Measure the resistance between CC11, pin 07 (W) and CC02, pin 18 (W).

- **Is the resistance greater than 5 ohms?**

-> Yes
INSTALL a new harness between CC02 and CC11. TEST the system for normal operation.

-> No
INSTALL a new harness between CC02 and TL20. TEST the system for normal operation.

G240121t188 : CHECK THE CIRCUIT BETWEEN CC11 AND INTERMEDIATE CONNECTOR CC02 FOR SHORT TO GROUND

1. Disconnect intermediate connector, CC02. 2. Measure the resistance between CC11, pin 07 (W) and GROUND.

- **Is the resistance less than 10,000 ohms?**

-> Yes
INSTALL a new harness between CC02 and CC11. TEST the system for normal operation.

-> No
INSTALL a new harness between CC02 and TL20. TEST the system for normal operation.

G240121t189 : CHECK THE CIRCUIT BETWEEN CC11 AND INTERMEDIATE CONNECTOR CC02 FOR SHORT TO B+

1. Measure the voltage between CC11, pin 07 (W) and GROUND.

- **Is the voltage greater than 3 volts?**

-> Yes
INSTALL a new harness between CC02 and CC11. TEST the system for normal operation.

-> No
INSTALL a new harness between CC02 and TL20. TEST the system for normal operation.

Digital Versatile Disc (DVD) Player

Removal

1 . Disconnect the battery ground cable. <<414-01>>

2 . Remove the luggage compartment floor covering.

1) Remove the luggage compartment floor covering securing screws.

2) Remove the luggage compartment floor covering.

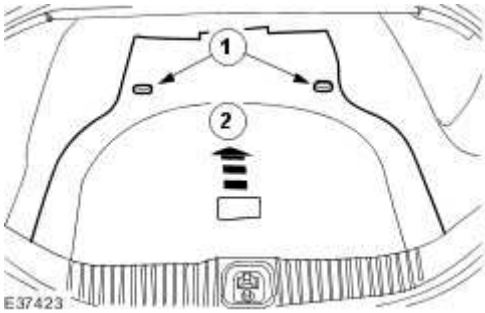

3 . Remove the luggage compartment side trim panel.

Remove the luggage compartment side trim retaining clip.

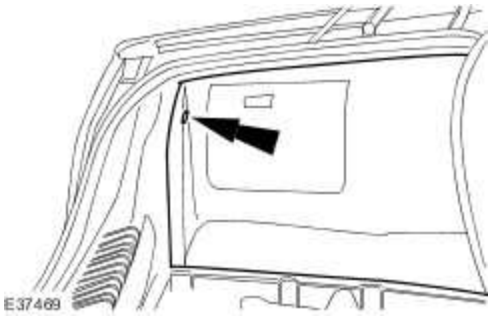

4 . Detach the rear module stack

www.JagDocs.com

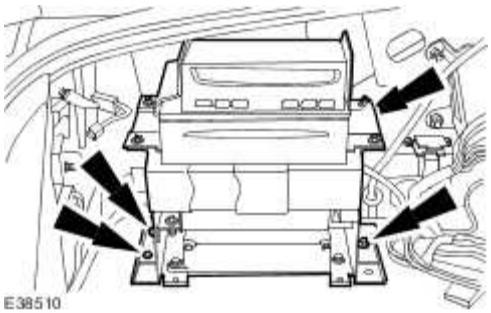

5 . **CAUTION: Care should be taken when removing the fir tree clip as damage could be caused to the DVD player.**

Detach the DVD player electrical connector.

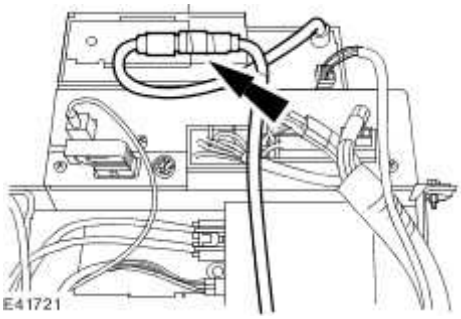

6 . Disconnect the DVD player electrical connectors.

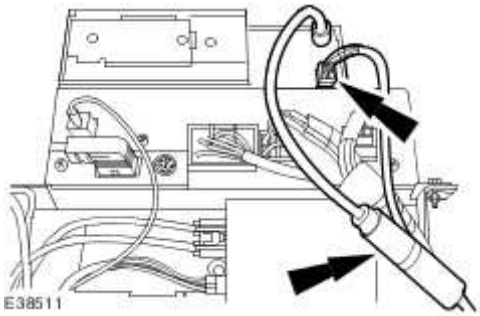

7 . Remove the DVD player.

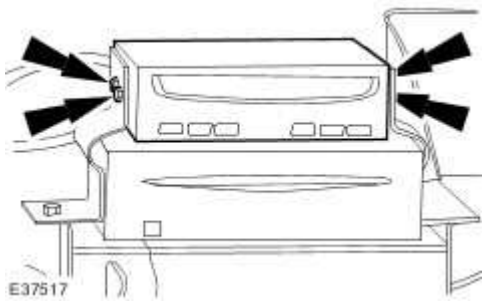

Installation

1 . To install, reverse the removal procedure.

www.JagDocs.com

Video System - Rear Passenger Entertainment Control Panel

Removal and Installation

Removal

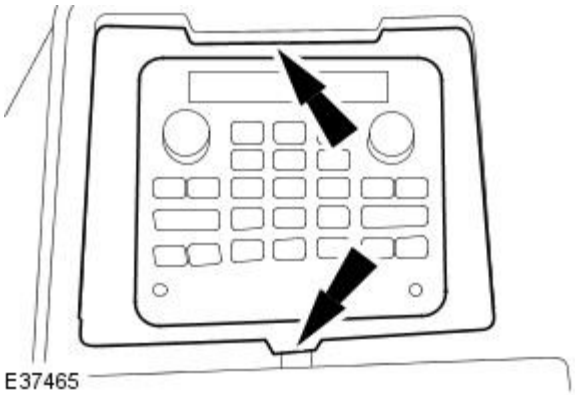

1. Remove the passenger entertainment control panel trim panel.

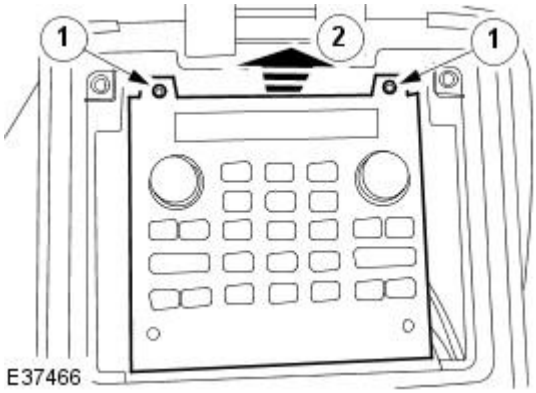

2. Detach the passenger entertainment control panel.

1. Remove the retaining screws.
2. Lift the passenger entertainment panel and slide fowards.

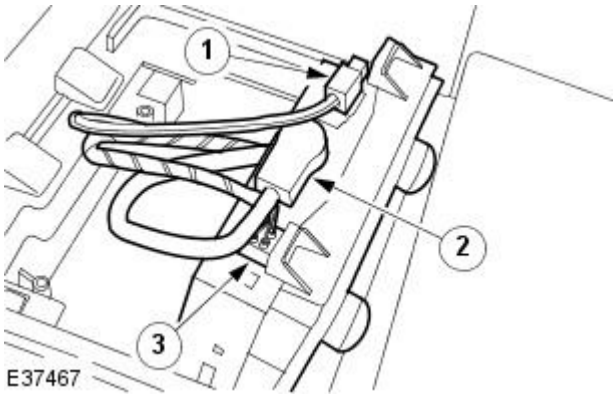

3. Remove the passenger entertainment control panel.

1. Disconnect the fibre optic cable.
2. Disconnect the 20 way connector.
3. Disconnect the 8 way connector.

Installation

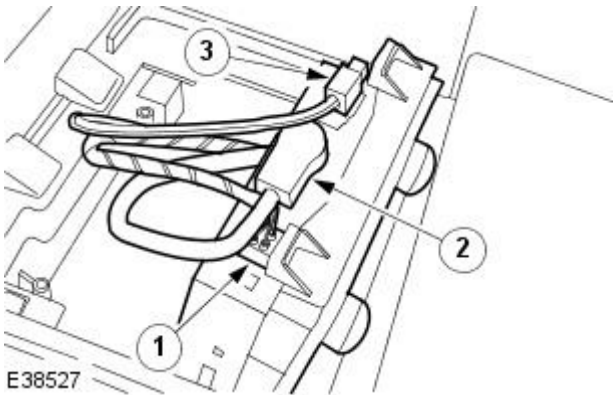

1. NOTE: The connectors must be installed in reverse order.

To install, reverse the removal procedure.

1. Connect the 8 way connector.
2. Connect the 20 way connector.
3. Connect the fibre optic cable.

Video Display

Removal

1 . **CAUTION: Care should be taken to avoid scratching the display screen.**

CAUTION: The display screen should only be cleaned with a soft cloth.

Remove the video display trim panel. <<501-05>>

2 . Detach the video display.

3 . Remove the video display.

- Disconnect the electrical connector.

www.JagDocs.com

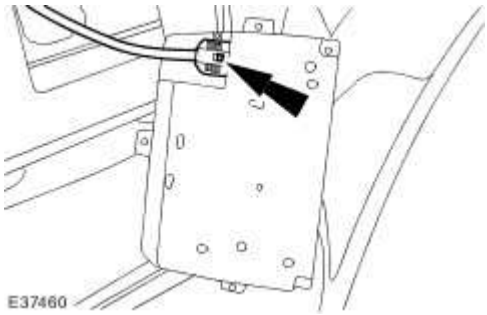

Installation

1 . **NOTE:**

Ensure the cable is not trapped.

To install, reverse the removal procedure.

Video System Module

Removal

1 . Remove the rear seat backrest. <<501-10>>

2 . Disconnect the video system module electrical connectors.

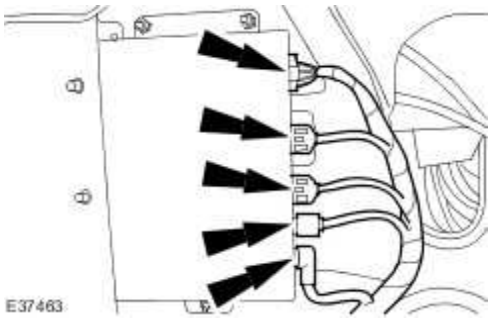

3 . Remove the video system module.

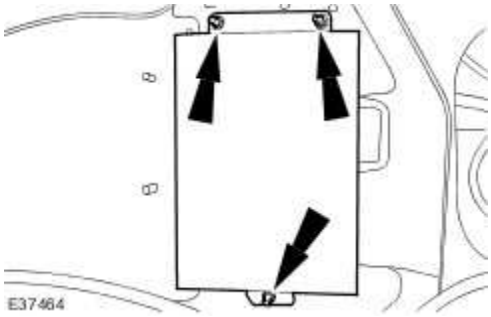

Installation

1 . To install, reverse the removal procedure.

Tighten to 6 Nm.

www.JagDocs.com

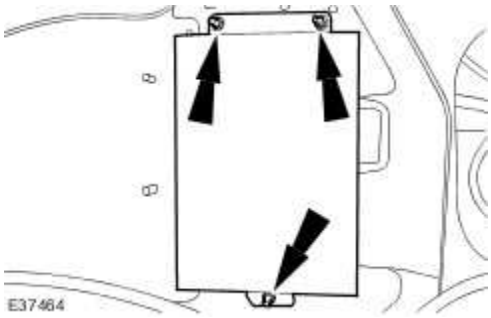
E37464

417 : Lighting

417-01 : Exterior Lighting

Specifications

Specifications

General Specifications

Item	Specification
Low beam headlamp bulb - Vehicles with conventional headlamps	H7
Low beam headlamp bulb - Vehicles with High Intensity Discharge (HID) headlamps	D2s35W
High beam headlamp bulb	H7
Side repeater lamp bulb	W5W
Side marker lamp bulb	W5W
Front turn signal lamp bulb	PY21W
Rear turn signal lamp bulb	PY21W
Front fog lamp bulb	H3
Rear fog lamp bulb	P21W
Front side/parking lamp bulb	W5W
Rear side/stoplamp bulb	Light emitting diode (LED)
Number plate lamp bulb	W5W
Reversing lamp bulb	P21W

Description	Nm	lb-ft	lb-in
Headlamp leveling sensor retaining bolts	20	15	-

www.JagDocs.com

Headlamp Adjustment (86.40.18)

1. **NOTE:**
   All adjustments should be made at room temperature.

Prepare the vehicle for headlamp adjustment.

- Place the vehicle on a level surface.
- Before adjusting the headlamps, check them for faulty lenses, reflectors and blackened bulbs, and install new components as necessary.
- Check the tire pressures and correct as necessary. <<204-04>>
- The vehicle must be at normal unladen weight.
- Normalize the suspension.

2. Adjust the headlamp using the adjustment bolts.

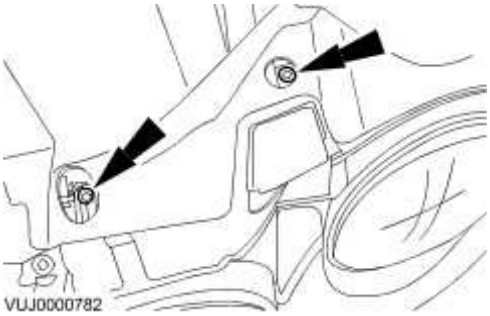

Exterior Lighting

The headlamp switch is located on the multifunction switch. The switch operates the sidelights, the dipped and main beam lamps, the switch also features an auto lamps function (operates the headlamps when the sunload sensor detects low light levels) and the exit delay variable timer switch (allows the headlamps to stay on for a period of time from ten seconds to two minutes).

Each headlamp assembly consists of two headlamp units. The main beam lamp unit and the front parking (side) lamp are in the inner unit and the dipped beam and the turn signal lamp unit are in the outer. Access for bulb replacement is from the engine compartment.

WARNING: VOLTAGES OF UP TO 25 KV ARE POSSIBLE WITH HIGH INTENSITY DISCHARGE HEADLAMPS (HID).

The HID headlamps, if fitted, consists of a headlamp bulb and a combined ballast and headlamp leveling module fitted to the headlamp. Burner wear for HID lamps is so low that the burner lasts the lifetime of the vehicle under normal use. Headlamp automatic leveling is controlled by the air suspension module receiving information from the controlled area network (CAN) data.

The fog lamps are located in recesses in the front bumper. The two retaining screws are located behind the anti-theft cover.

The license plate lamps are fitted in the license plate housing. Each bulb is accessible after removing the relevant lens.

Each rear lamp assembly incorporates a light emitting diode (LED) stop and tail lamp, a fog lamp, a reversing lamp and a direction indicator lamp. Access for bulb replacement is from the luggage compartment. The high mounted stoplamp is only replaceable as a unit.

The side repeater lamps are located within the front fender.

The sidemarker lamps are located within the rear bumper and front bumper and are supplied as part of a high level bumper assembly, (the side markers are located in the bumper by tangs on one side of the unit and held in position by a spring clip on the other side).

The exterior mirrors incorporate ground illumination, which is activated when the vehicle is locked and unlocked under low ambient light conditions. The ground illumination is timed to stay on for the same amount of time as the interior light.

www.JagDocs.com

Exterior Lighting - VIN Range: H18680->H99999

COMPONENT LOCATION

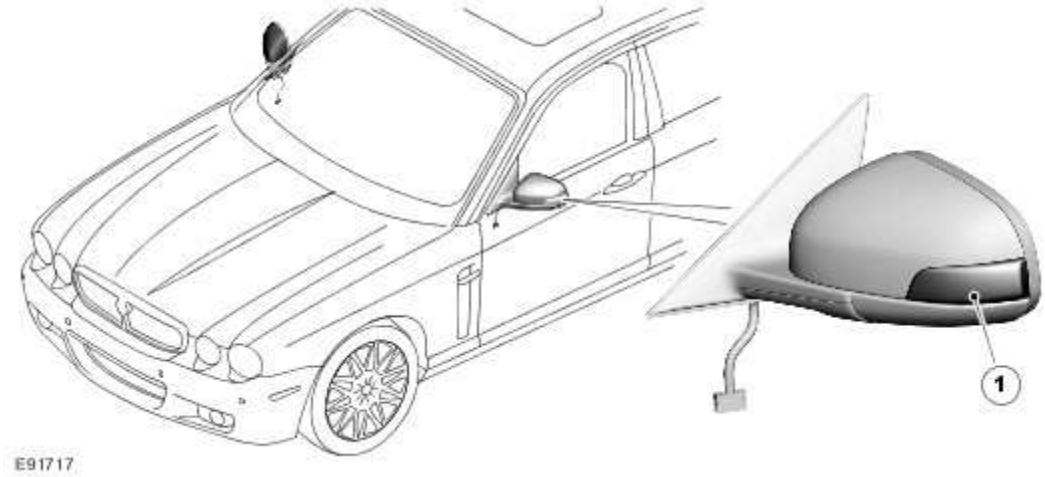

Item	Part Number	Description
1		Direction indicator repeaters

OVERVIEW

Vehicles built from June 2007 feature direction indicator repeaters located in the exterior rear view mirrors. The functionality and operation of the direction indicator repeaters remains the same as the previous fender mounted items. For additional information, refer to Exterior Lighting (417-01)
In the event of a direction indicator repeater bulb failure, the mirror glass will need to be removed. For additional information, refer to the Owners Handbook.

Vehicles built from June 2007 also feature revised side marker lamps. The revised side marker lamps also incorporate a reflector.

CONTROL DIAGRAM

NOTE:

A = Hardwired; **Y** = SCP (standard corporate protocol) network.

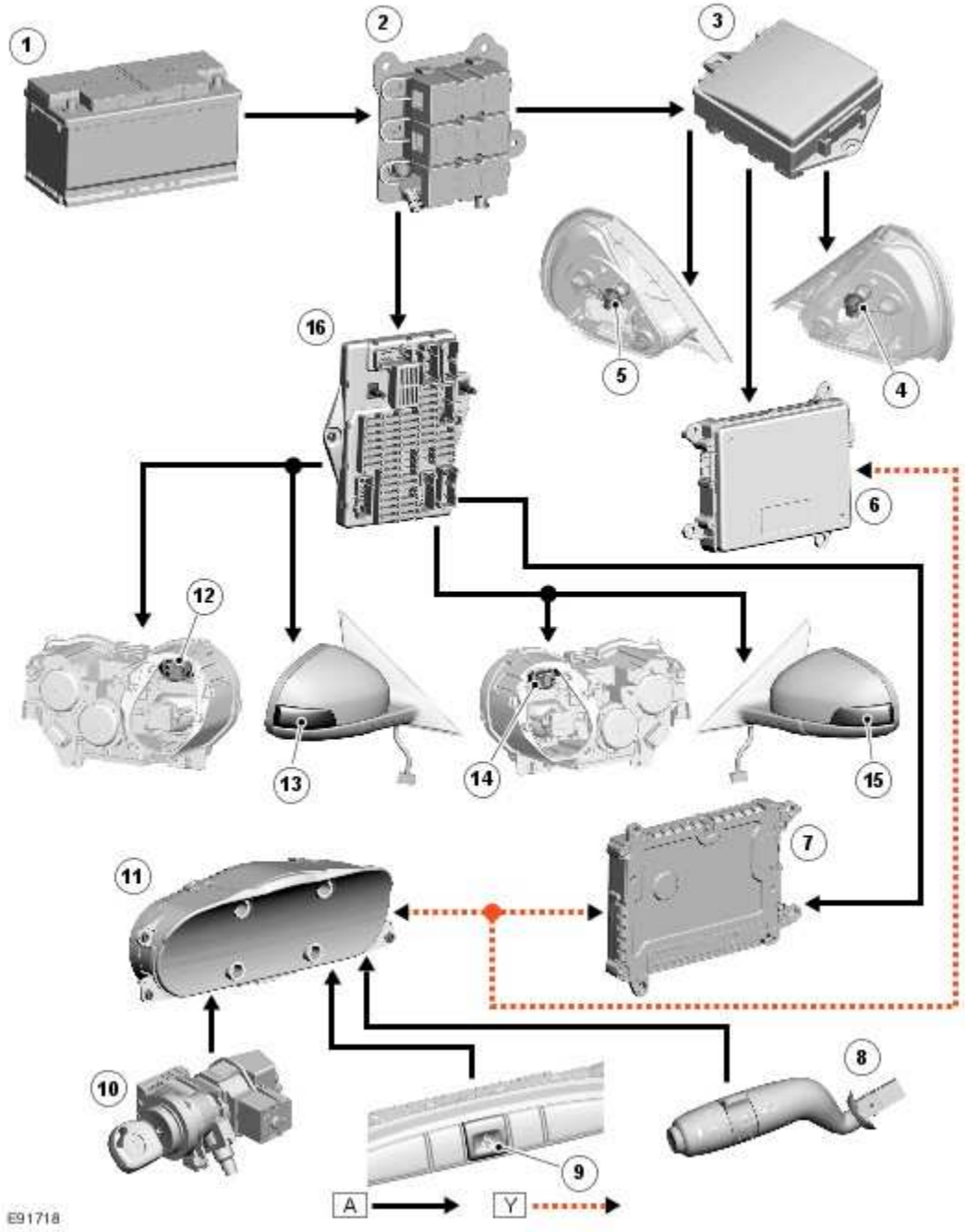

Item	Part Number	Description
1		Battery
2		Battery junction box
3		Rear power distribution box
4		LH (left-hand) rear direction indicator

www.JagDocs.com

5		RH (right-hand) rear direction indicator
6		REM (rear electronic module)
7		FEM (front electronic module)
8		Lighting switch
9		Hazard warning switch
10		Ignition switch
11		Instrument cluster
12		RH (right-hand) front direction indicator
13		RH (right-hand) direction indicator repeater
14		LH (left-hand) front direction indicator
15		LH (left-hand) direction indicator repeater
16		Passenger junction box

PRINCIPLES OF OPERATION

The direction indicator lamps will only operate when the ignition switch is in position II. An ignition switch status signal is transmitted to the FEM (front electronic module) from the instrument cluster on the SCP (standard corporate protocol) network. The hazard warning lamps will operate with the ignition switch in any position, including off.

Direction Indicators - Front

A battery feed is provided to passenger junction box relays R1A and R1B from a 100 Amp megafuse located in the BJB (battery junction box) . Relay R1A controls operation of the RH (right-hand) direction indicators; relay R1B controls operation of the LH (left-hand) direction indicators.

The ground path for both relays coils is controlled by the FEM (front electronic module) . The FEM (front electronic module) switches the ground path on and off when a request for direction indicator operation is received from the column switch or the hazard warning switch. The FEM (front electronic module) receives this request from the instrument cluster over the SCP (standard corporate protocol) network. When the request for direction indicator operation is withdrawn, the FEM (front electronic module) removes the ground path from both relay coils.

Direction Indicators - Rear

A battery feed is provided to rear power distribution box relays R8B and R7A. Relay R8B controls operation of the RH (right-hand) direction indicators; relay R7A controls operation of the LH (left-hand) direction indicators.

The ground path for both relay coils is controlled by the REM (rear electronic module) . The REM (rear electronic module) switches the ground path on and off when a request for direction indicator operation is received from the column switch or the hazard warning switch. The REM (rear electronic module) receives this request from the instrument cluster over the SCP (standard corporate protocol) network. When the request for direction indicator operation is withdrawn, the FEM (front electronic module) removes the ground path from both relay coils.

www.JagDocs.com

Published: Mar 12, 2014

Exterior Lighting – Armoured Vehicles

Headlamps

The air suspension system has been removed from the armoured vehicle. To prevent the generation of diagnostic trouble codes (DTC) being logged, the air suspension module has been removed from the vehicle. The headlamp levelling function is now provided by using a combination of components from X350 (XJ) 04MY, X100 (XK8) and the headlamp module supplier Valeo. The integral headlamp module within each headlamp receives electrical signals direct from the headlamp levelling sensors that are installed to the vehicles suspension.

Flashing Headlamps

The flashing headlamp system consists of a luggage compartment mounted alternating flash unit and relay, a floor console mounted switch and two changeover relays mounted adjacent to the front power distribution fuse box. The system is integrated into the vehicle with a harness kit.

The electrical feed is via fuse 4 in the luggage compartment mounted auxiliary fuse box. A switch located in the auxiliary switch panel in the floor console controls the flashing headlamps. With the switch in the on position, a battery feed is diverted through an alternating flash relay to the halogen "flash to pass" bulbs in the left and right hand headlamp units.

An electrical feed from the battery positive terminal is supplied on a red (R) wire to the auxiliary fuse box mounted in the luggage compartment of the vehicle. Fuse 4 provides a feed to the switch headlamp flash and relay 3 on a purple and blue (PU) wire. With the switch headlamp flash in the **ON** position a feed is provided to the coils of 1,2 and 3 on a blue and black (UB) wire. Relay 3 is pulled in and provides a feed to the alternating flash relay XF003-1 on a white and blue (WU) wire.

The alternating outputs XF004-1 and XF005-1 are connected to relay 1 and relay 2 on a white (W) and a blue (U) wire respectively, and as relay 1 and relay 2 are pulled in are connected to the left-hand headlamp unit and right-hand headlamp unit on orange (O) and orange and green (OG) wires respectively. NOTE: A conventional halogen headlamp bulb (flash to pass) is used for the flashing headlamp feature; the high intensity discharge headlamp lamp bulb is not operated. Igniting and extinguishing the high intensity discharge headlamp several times during a small period of time, will cause premature failure of the headlamp and/or the control module.

Covert Blue Lamps

The covert blue lamps system consists of a luggage compartment mounted alternating flash unit, a floor console mounted switch and two radiator grille mounted LED lamps. The system is integrated into the vehicle with a harness kit.

The electrical feed is provided via fuse 6 in the luggage compartment mounted auxiliary fuse box. A switch located in the auxiliary switch panel in the floor console controls the covert blue lamps. A battery feed is provided to the Switch on a purple green (PG) wire via fuse 6 of the auxiliary fuse box. With the switch in the **ON** position a feed is provided to the alternating flash relay XC003-1 an blue and red (UR) wire. The alternating outputs XC006-1 and XC005-1 of the flash relay are provided to the left and right LED lamp units on blue and slate (US) and blue and green (UG) wires respectively.

The LED lamp units are grounded via XC009. The alternating flash unit is grounded via XC010. Switch illumination is provided on a red and white (RW) wire to XC002-2 and XC002-5 is grounded at XI001. The LED lamp units are pre-set to display three consecutive pulses per flash at a rate of approximately 83 FPM.

Headlamps

Inspection and Verification

1 . Verify the customer concern.

2 . Visually inspect for obvious signs of electrical damage.

Visual Inspection Chart

Electrical
• Bulb(s) • Photocell(s) • Ballast • Wiring harness/electrical connectors • Fuse(s)

1 . If an obvious cause for an observed or reported concern is found, correct the cause (if possible) before proceeding to the next step.

2 . If the cause is not visually evident, verify the symptom and refer to the Jaguar Approved Diagnostic System.

www.JagDocs.com

Approach Lamp - VIN Range: G00442->H18679

Removal

1 . Reposition the exterior mirror.

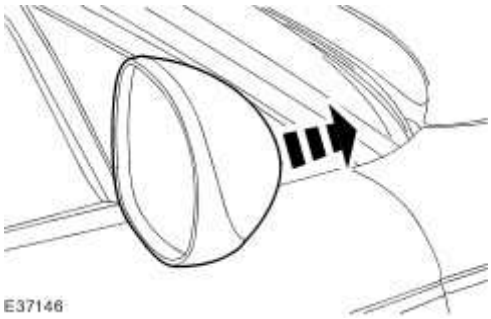

2 . Detach the approach lamp.

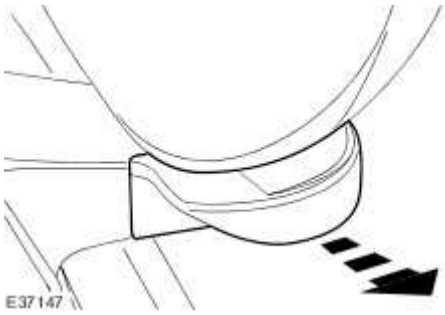

3 . Remove the approach lamp.

Disconnect the electrical connector.

Installation

1 . To install, reverse the removal procedure.

Approach Lamp - VIN Range: H18680->H99999

Removal

1 . Remove the exterior mirror glass.
For additional information, refer to Exterior Mirror Glass (76.10.53)

2 . Release and reposition the approach lamp.

- Release retaining clip.

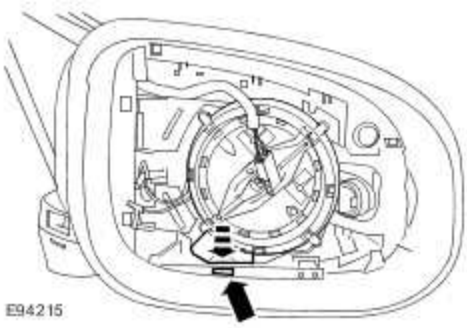

3 . Remove the approach lamp.

- Disconnect the electrical connector.

Installation

1 . To install, reverse the removal procedure.

www.JagDocs.com

Ballast - Vehicles With: High Intensity Discharge Headlamps (86.41.52)

Removal

1 . Disconnect the battery ground cable. <<414-01>>

2 . Remove the headlamp assembly.
For additional information, refer to

3 . Detach the ballast module.

- Remove the ballast module retaining screws.

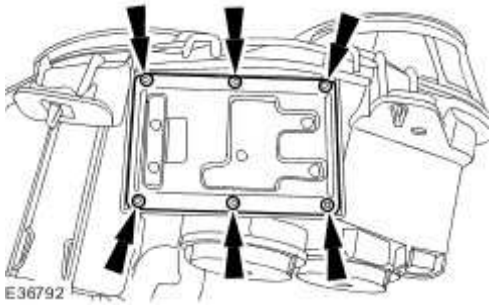

4 . Remove the ballast module.

- Disconnect the ballast module electrical connectors.

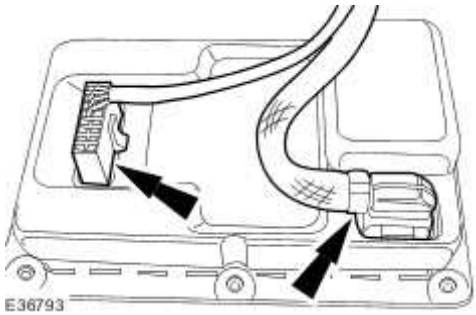

Installation

1 . To install, reverse the removal procedure.

Front Fog Lamp - VIN Range: G00442->H18679 (86.40.96)

Removal

1 . Remove the front fog lamp anti-theft cover.

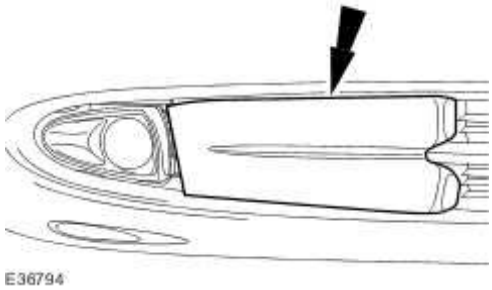

2 . Detach the front fog lamp.

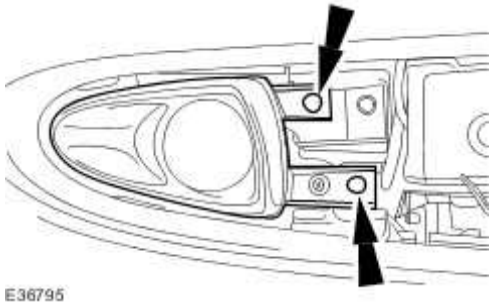

3 . Remove the front fog lamp.

- Disconnect the fog lamp electrical connector.

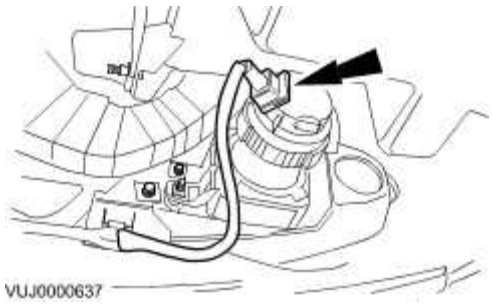

Installation

1 . To install, reverse the removal procedure.

www.JagDocs.com

Fog Lamp - VIN Range: H18680->H99999

Removal

1 . Remove the front fog lamp cover.

- Release the retaining clips.

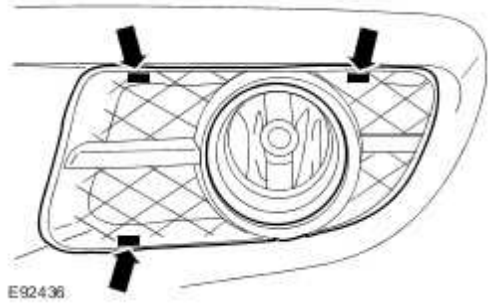

2 . Detach the fog lamp.

- Remove the retaining bolts.

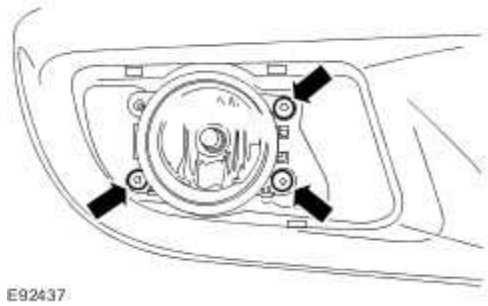

3 . Remove the fog lamp.

- Disconnect the electrical connector.

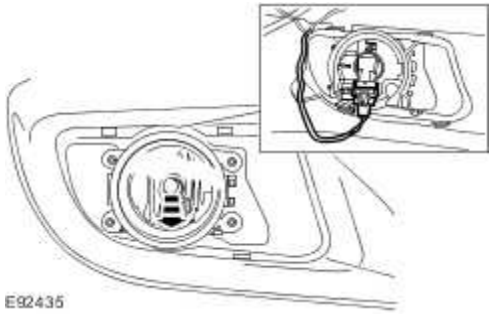

Installation

1 . To install, reverse the removal procedure.

www.JagDocs.com

Headlamp Assembly (86.41.33)

Removal

1 . Remove the front bumper cover. <<501-19>>

2 . Detach the headlamp assembly.

- Remove the headlamp retaining bolts.

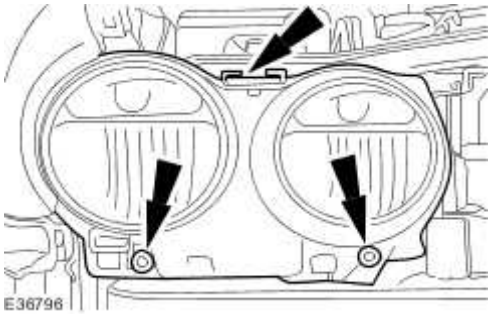

3 . Remove the headlamp assembly.

- Disconnect the headlamp electrical connector.

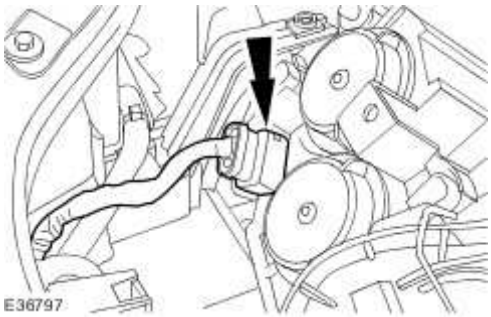

Installation

1 . To install, reverse the removal procedure.

2 . Check the headlamp adjustment.

Headlamp Bulb - Vehicles With: High Intensity Discharge Headlamps (86.42.14)

Removal

WARNING: VOLTAGES OF UP TO 25 KV ARE POSSIBLE WITH HIGH INTENSITY DISCHARGE HEADLAMPS (HID).

1 . Disconnect the battery ground cable. <<414-01>>

2 . Detach the headlamp bulb cover retaining clip.

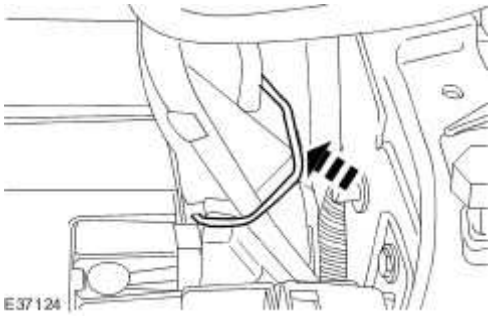

3 . Remove the headlamp bulb cover.

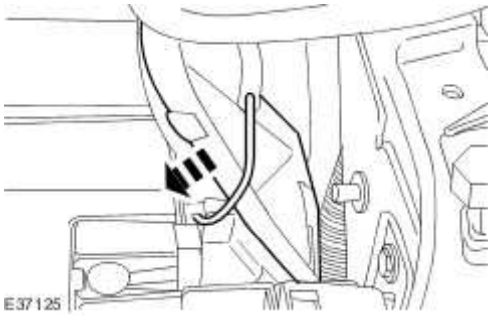

4 . **NOTE:**

Headlamp assembly removed for clarity.

Detach the headlamp bulb retaining clip.

www.JagDocs.com

- Detach the headlamp bulb.

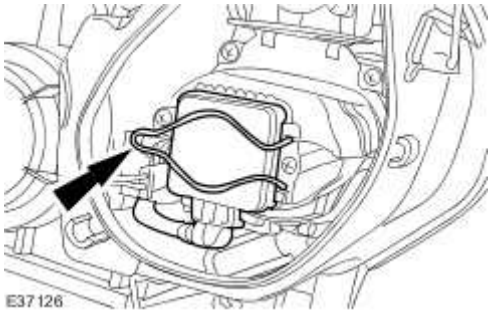

5 . **NOTE:**

Headlamp assembly removed for clarity.

Remove the headlamp bulb.

- Detach the headlamp bulb electrical connector.

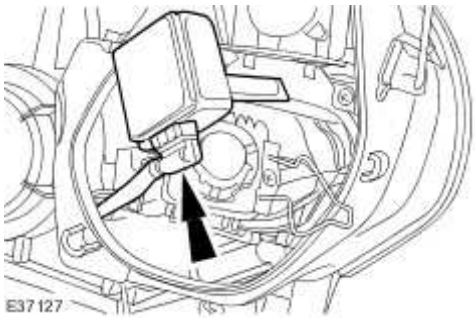

Installation

1 . To install, reverse the removal procedure.

Headlamp Leveling Motor (86.42.04)

Removal

1 . Remove the headlamp assembly.
For additional information, refer to

2 . Remove the headlamp leveling motor cover.

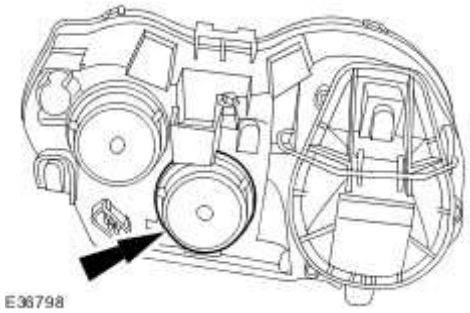

3 . Disconnect the headlamp leveling motor electrical connector.

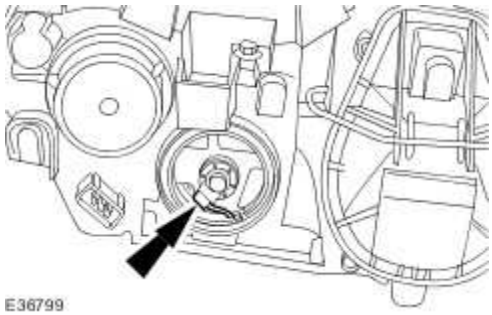

4 . Rotate and remove the headlamp leveling motor.

Make sure the internal pivot is disengaged from the slide.

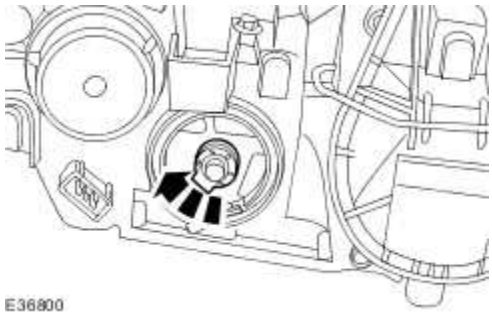

www.JagDocs.com

Installation

1 . To install, reverse the removal procedure.

Make sure the internal pivot is located in the slide.

2 . Check the headlamp adjustment.
For additional information, refer to

Headlamp Leveling Sensor (86.42.15)

Removal

1 . Remove the wheel and tire assembly. <<204-04>>

2 . Disconnect the headlamp leveling sensor electrical connector.

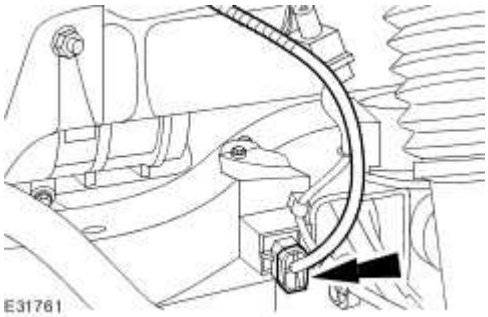

3 . Detach the wheel speed sensor harness.

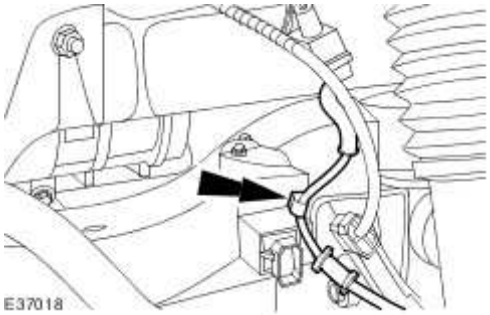

4 . Detach the headlamp leveling sensor link rod.

5 . Remove the headlamp leveling sensor.

www.JagDocs.com

Remove the headlamp leveling sensor retaining bolts.

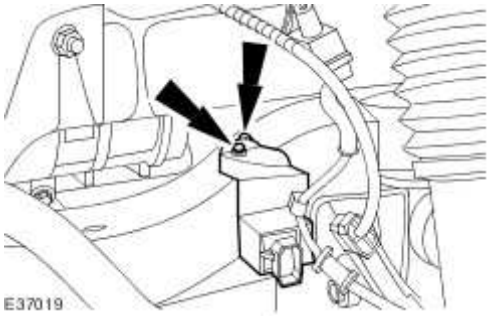

Installation

1 . To install, reverse the removal procedure.

2 . Tighten to 20 Nm.

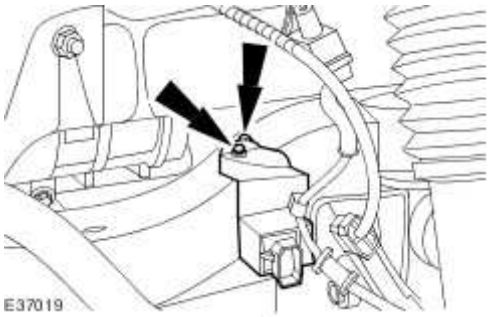

High Mounted Stoplamp (86.41.01)

Removal

1 . Detach the high mounted stoplamp from the header panel.

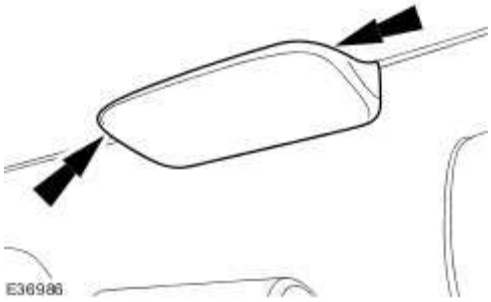

2 . Remove the high mounted stoplamp.

- Disconnect the high mounted stoplamp electrical connector.

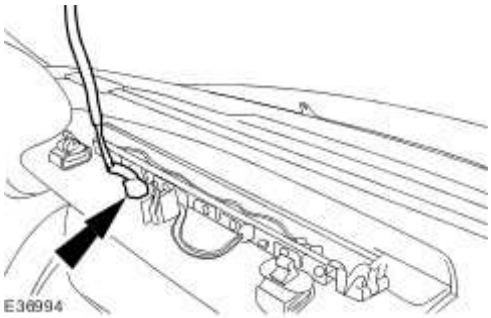

Installation

1 . To install, reverse the removal procedure.

www.JagDocs.com

Stoplamp Switch

Removal

1 . Remove the brake pedal position (BPP) switch.
For additional information, refer to Brake Pedal Position (BPP) Switch

2 . Release the stoplamp switch.

- Rotate the stoplamp switch 45 degrees clockwise.

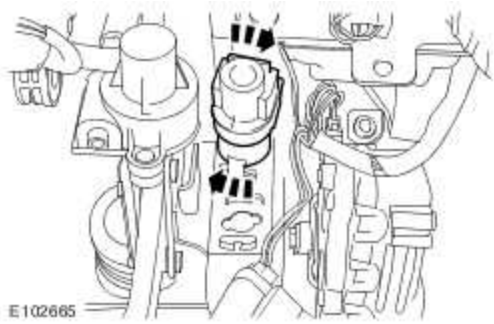

3 . Remove the stoplamp switch.

- Disconnect the electrical connector.

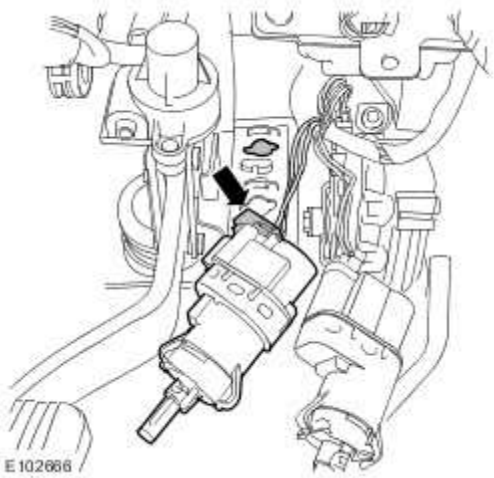

Installation

1. **CAUTION: Make sure that the brake pedal remains in the rest position during this procedure.**

   CAUTION: The bracket is keyed to avoid incorrect orientation. Failure to correctly align the switch may result in damage to the vehicle.

   Install the stoplamp switch.

   - Locate the stoplamp switch in the bracket.
   - Rotate the stoplamp switch 45 degrees counter-clockwise.

2. Connect the electrical connector.

3. Install the BPP switch.
   For additional information, refer to Brake Pedal Position (BPP) Switch

www.JagDocs.com

Rear Lamp Assembly (86.40.70)

Removal

1 . Reposition the luggage compartment floor covering.

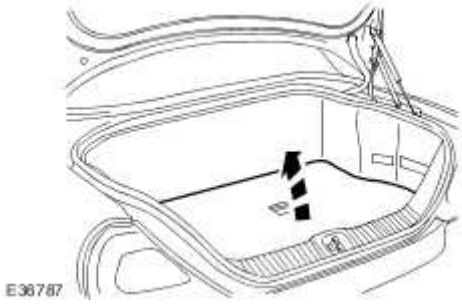

2 . **NOTE:**

Left-hand shown, right-hand similar

Detach and reposition the luggage compartment side trim panel.

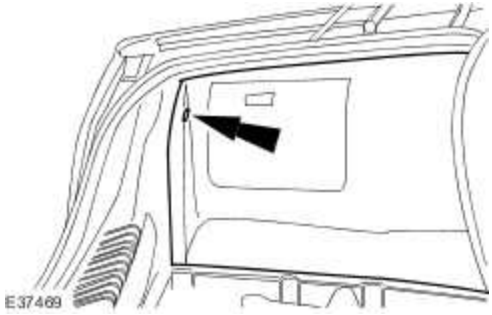

3 . Disconnect the rear lamp assembly electrical connector.

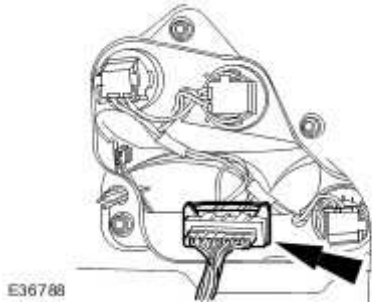

4 . Remove the rear lamp assembly.

- Remove the rear lamp assembly retaining nuts.

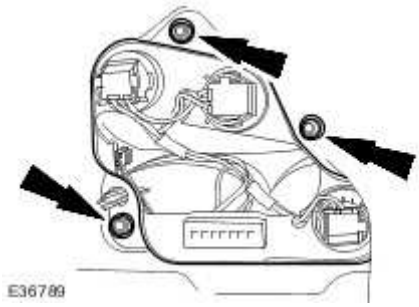

Installation

1 . To install, reverse the removal procedure.

www.JagDocs.com

417-02 : Interior Lighting

Description and operation

Interior Lighting

The interior lighting system consists of the following components:

- One front interior lamp and two map reading lamps.
- Soft mood lighting.
- Front footwell lamps.
- Two rear interior lamps with integral reading lamps.
- Front/rear door puddle lamps.
- Glove compartment lamp.
- Vanity mirror lamps.
- Two luggage compartment lamps..

The automatic operation of the interior lights is controlled by the front electronics module (FEM). Pressing the interior light switch in the overhead console switches the interior lighting control from automatic to the ON position. When the switch is in the ON position if any of the doors are open, none of the individual interior lamps can be turned off.

In the AUTOMATIC position, when the interior lights have faded out , each lamp can be switched on or off by pressing the associated switch. Also in this position, if a door is open when the vehicle is driven the interior lighting will fade off and then fade back on again when the vehicle slows down.

With the switch in the AUTOMATIC position the following times apply to the interior lights fading out assuming lights on.

Soft mood lighting is fitted in the roof console and to the top of the two rear interior lamps. This lighting scatters subtle illumination onto the floor console and the headlining with the headlamps on.

The interior lamp is incorporated in the roof console. <<501-12>>

Condition	Fade out time
Open any door with key not in ignition, close door	Lamps will fade out after 20 seconds
Any door ajar with the vehicle acclerating between 0-10 kph	Lamps will fade out above 5 kph
With engine in RUN position and open any door, close door	Lamps will fade out immediately
Open any door, switch ignition to the RUN position, close door	Lamps will fade out immediately

Interior Lighting

1 . Verify the customer concern.

2 . Visually inspect for obvious signs of electrical damage.

Visual Inspection Chart

Electrical
• Fuse(s) • Bulb(s) • Wiring harness • Loose or corroded connector(s) • Accessories • Switch(es)

1 . If an obvious cause for an observed or reported concern is found, correct the cause (if possible) before proceeding to the next step.

2 . If the cause is not visually evident, verify the symptom and refer to the Jaguar Approved Diagnostic System.

www.JagDocs.com

417-04 : Daytime Running Lamps

Description and operation

Daytime Running Lamps (DRL)

DRL use the full intensity low beam headlamps which are permanently illuminated when the vehicle is being driven. DRL are used in a number of markets and there are two systems to cover these markets.

DRL CANADIAN MARKET

DRL for this market use full intensity low beam headlamps. The side marker lamps and license plate lamps will be on, but instrument cluster illumination will be off. DRL are active when the following parameters are met:

- Parking brake is off on vehicles with manual transmission or PARK is not selected on vehicles with automatic transmission
- Ignition switch is in the ignition position (II)
- The central junction box receives an engine running signal
- The lighting control switch is in the off or side lamps position. If the switch is in the 'AUTO' position the DRL will be active when the light sensor is not operating the headlamps using the auto lamps function.

If the above conditions are met, the low beam headlamps are illuminated by a Pulse Width Modulated signal (PWM) for the vehicles fitted with halogen headlamps (when the average voltage exceeds 14V). Vehicles with High Intensity Discharge (HID) headlamps operate the dip beam at normal supply voltage.

The front park lamps (including front side markers) and low beam lamps are illuminated from the Front Electronic Module (FEM), the rear park lamps (including the rear side markers and the license plate lamps) are illuminated by the Rear Electronic Module (REM).

If the lighting control switch is moved to the side lamp or headlamp positions or the auto lamps feature has activated the headlamps, DRL are deactivated and normal side lamp and headlamp functionality is operational.

NOTE:

When DRL are active, the headlamp flash function using the left hand steering column multifunction switch will operate normally. The high beam headlamp function using the left hand steering column stalk switch will be deactivated.

When the parking brake is applied on manual transmission vehicles or the selector lever is in the

PARK position on automatic transmission vehicles, DRL are turned off. This is to reduce battery discharge during long periods of engine idling in cold climate conditions. When the parking brake is released or the selector lever is moved from the PARK position, normal DRL functionality is restored.

DRL DENMARK, HOLLAND, NORWAY, SWEDEN, FINLAND AND POLAND

NOTE:

DRL for Poland is on vehicles from 2008MY.

DRL for these markets use full intensity low beam headlamps. Side lamps and license plate lamps will be on, but instrument cluster illumination will be off. DRL are active when the following parameters are met:

- Ignition switch is in the ignition position (II)
- The central junction box receives an engine running signal
- The lighting control switch is in the off position. If the switch is in the 'AUTO' position the DRL will be active when the light sensor is not operating headlamps using the auto lamps function.

If the above conditions are met, the low beam headlamps are illuminated by a Pulse Width Modulated signal (PWM) for the vehicles fitted with halogen headlamps (when the average voltage exceeds 14V). Vehicles with High Intensity Discharge (HID) headlamps operate the dip beam at normal supply voltage.

The front park lamps (including front side markers) and low beam lamps are illuminated from the Front Electronic Module (FEM), the rear park lamps (including the rear side markers and the license plate lamps) are illuminated by the Rear Electronic Module (REM).

If the lighting control switch is moved to the side lamp or headlamp positions or the auto lamps feature has activated the headlamps, DRL are deactivated and normal side lamp and headlamp functionality is operational.

NOTE:

When DRL are active, the headlamp flash function using the left hand steering column multifunction switch will operate normally. The high beam headlamp function using the left hand steering column stalk switch will be deactivated.

www.JagDocs.com

Daytime Running Lamps (DRL)

1 . Verify the customer concern.

2 . Visually inspect for obvious signs of electrical damage.

Visual Inspection Chart

Electrical
• Fuse(s) • Bulb(s) • Switch(es) • Electrical connector(s) • Wiring Harness

1 . If an obvious cause for an observed or reported concern is found, correct the cause (if possible) before proceeding to the next step.

2 . If the cause is not visually evident, verify the symptom and refer to the Jaguar Approved Diagnostic System.

418 : Electrical Distribution

418-00 : Module Communications Network

Description and operation

Communications Network

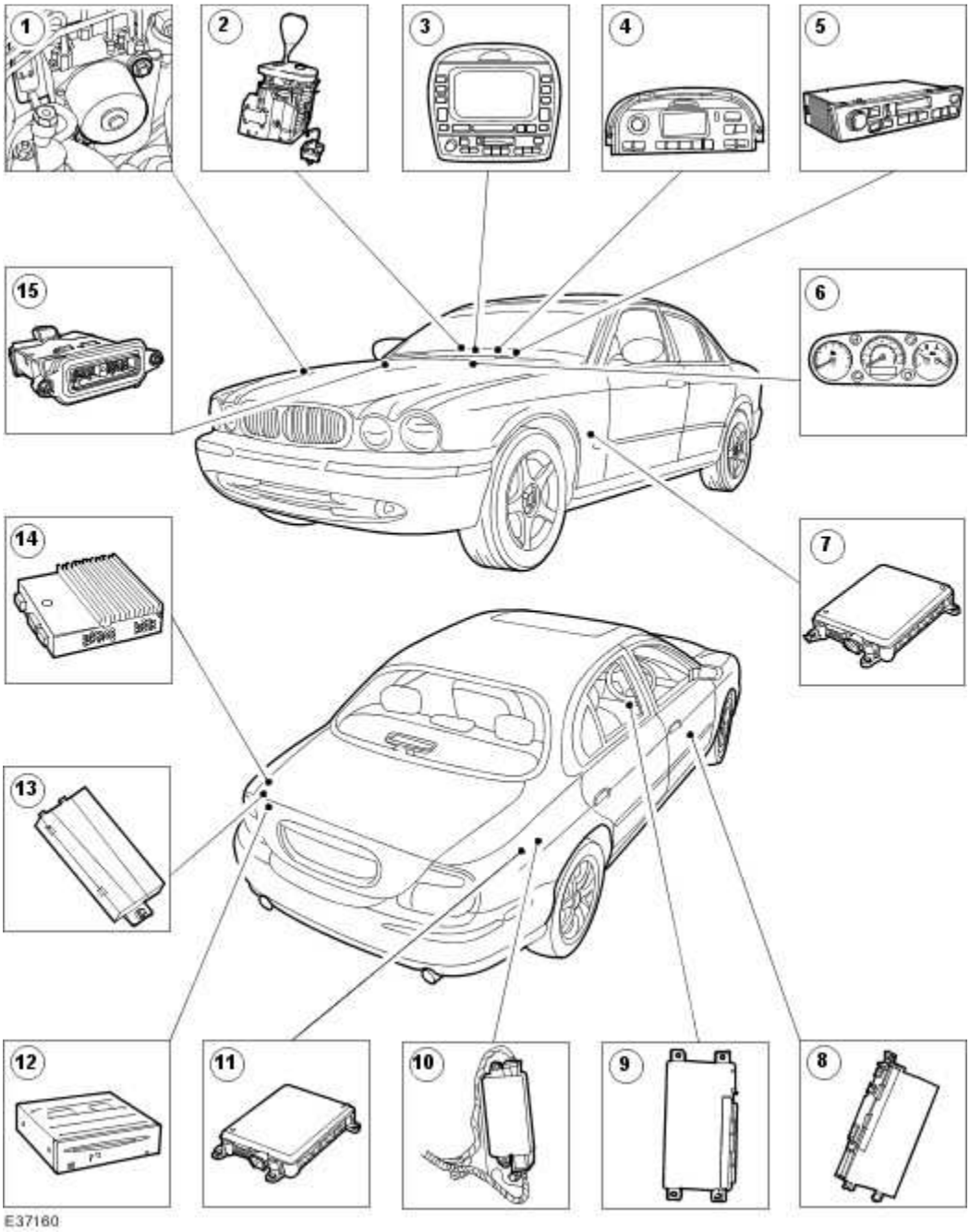

www.JagDocs.com

Item	Part Number	Description
1	—	Anti-Lock Brake System (ABS) Module
2	—	Transmission selector lever
3	—	Climate control module (vehicles fitted with telematics)
4	—	Climate control assembly
5	—	Audio control module (ACM)
6	—	Instrument Pack (IP)
7	—	Front electronic module (FEM)
8	—	Drivers door module (DDM)
9	—	Driver seat module (DSM)
10	—	Electronic parking brake module (EPB)
11	—	Rear electronic module (REM)
12	—	Navigation control module (NAV)
13	—	Voice activated control module (VACM)
14	—	Amplifier
15	—	Engine control module (ECM)

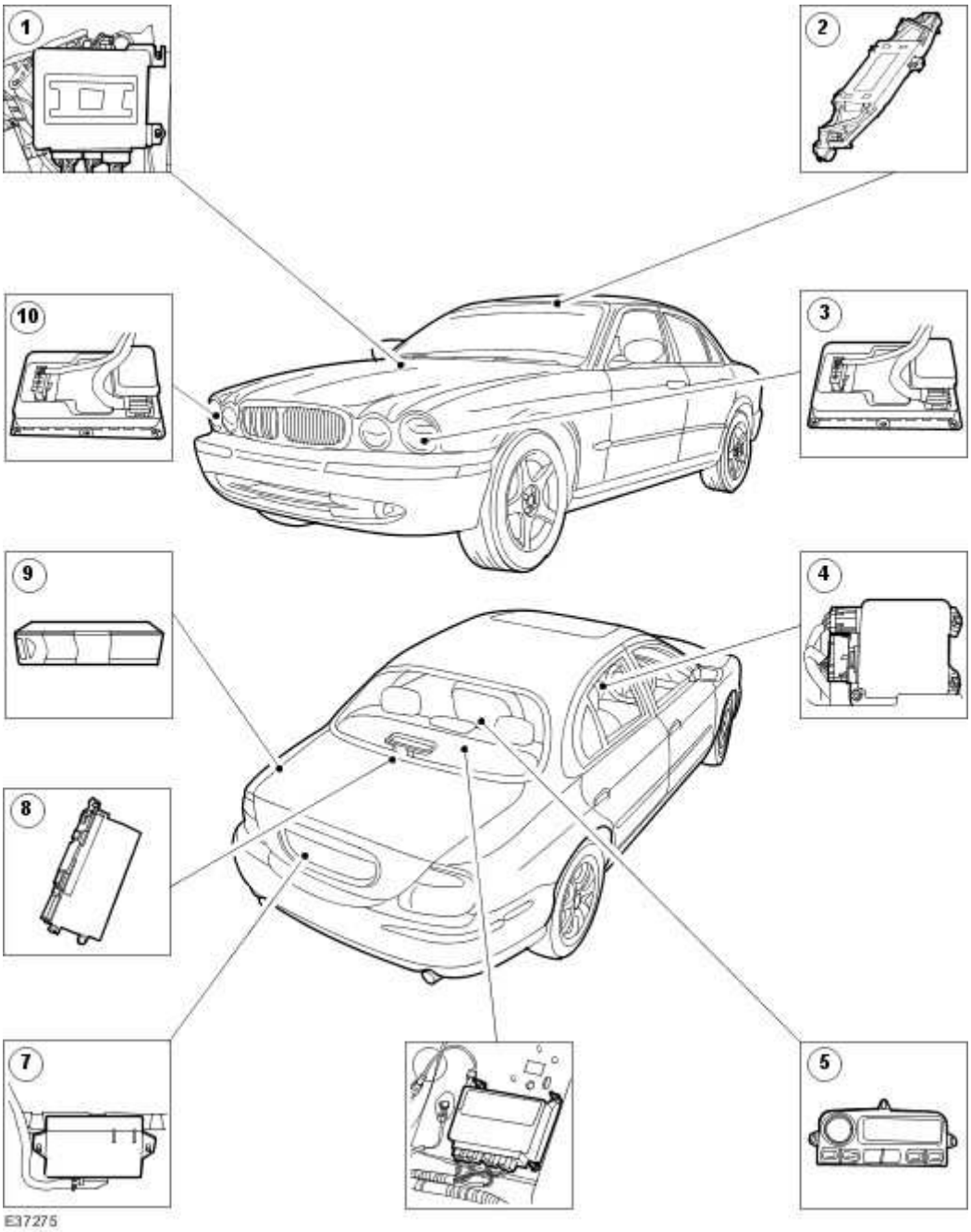

Item	Part Number	Description
1	—	Remote climate control module (RCCM)
2	—	Intrusion sensor module
3	—	High intensity discharge headlamp module (HID)
4	—	Restraints control module (RCM)
5	—	Rear climate control panel (RCCP)
6	—	Air suspension unit (ASU)
7	—	Parking aid module
8	—	Rear memory module (RMM)

www.JagDocs.com

9	—	Compact disc changer
10	—	High intensity discharge headlamp module (HID)

Communications Network

Principles of Operation

There are three module communication networks connected to the data link connector (DLC), **controller area network, (CAN)**, **standard corporate protocol (SCP)**, and **international standards organisation (ISO)**. CAN and SCP are unshielded twisted pair cable; data bus **+** and data bus **-**, while ISO is a single wire system. The networks can be connected to the Jaguar approved diagnostic system or scan tool by the DLC.

The SCP communication network remains operational even with the severing of one of the bus wires. Communications will also continue if one of the bus wires is shorted to ground or battery positive voltage (B+), or if some, but not all, termination resistors are lost.

The ISO network, however, will not function if the circuit is damaged.

The fourth module communication network is **domestic data bus (D2B)**, which is a fibre optic system.

The D2B network is diagnosed from the ICE head unit via the SCP network for DTCs, and by the use of the optical bus tester for diagnosis of the optical ring.

Modules may log DTCs if power supply or ground is interrupted. Supply and ground tests are in this section under the DTC number flagged, or by module name in the power supply and ground table.

The instrument cluster (also known as an instrument cluster module or ICM) is connected to the CAN and SCP communication networks, and forms a "gateway" between the networks. The networks share information, allowing sensors to serve more than one network.

Inspection and Verification

1 . Verify the customer concern.

2 . Confirm which, if any, warning lights and/or messages were displayed on the instrument cluster.

NOTE:

> If any warning lights and/or messages were displayed when the fault occurred, refer to the driver information table for DTCs associated with the display, then to the DTC index table for possible sources and actions. Some warnings will appear to clear when the ignition is cycled. This is often because the warning has flagged as a result of one of the vehicle's on-board diagnostic routines having run to detect the fault. If the same routine is not run when the ignition is switched **ON**, the warning will not reflag until the routine does run. See the DTC summaries for

www.JagDocs.com

drive cycle routines.

3 . Visually inspect for obvious signs of mechanical or electrical damage.

Electrical
General • Fuses (see table) • Wiring harness • Correct engagement of electrical connectors • Loose or corroded connections **Controller area network (CAN)** • Instrument cluster (IC) • J-Gate module (JGM) • Air conditioning control module (A/CCM) • Dynamic stability control control module (DSCCM) • Engine control module (ECM) • Transmission control module (TCM) • Adaptive speed control control module (ASCCM) • Yaw rate sensor • Rear climate control panel (RCCP) • Air suspension control module (ASU) **Standard corporate protocol (SCP)** • Instrument cluster (IC) • ICE head unit (HU) • Rear electronic module (REM) • Front electronic module (FEM) • Rear memory module (RMM) • Navigation module (NAV) • Steering column lock module (SCLM) • Electronic park brake module (EPB) • Driver door control module (DDCM) • Driver seat control module (DSCM) **International standards organisation (ISO)** • Engine control module (ECM) • Parking aid control module (PACM) • Intrusion sensor • Restraints control module (RCM) • Left-hand high intensity discharge headlamp assembly (HID) • Right-hand high intensity discharge headlamp assembly (HID)

Domestic data bus (D2B)

- Routing of fibre optic harnesses
- Correct engagement of optical connectors
- Correct placement of optical connectors (ring order)
- Correct assembly of optical connectors (backout, etc)
- Damage to fibre (chafing, abrasion, kinking, cuts, etc)
- ICE head unit (HU)
- Compact disc changer (CD)
- Cellular phone module (CPM)
- Voice module (VACM)
- Rear entertainment system
- Navigation system module (NSM)
- Amplifier (AMP)

Fuse	Rating	Circuit	Location
43	5 Amp	Diagnostic connector (battery)	Primary junction box
16	5 Amp	Diagnostic connector (ignition)	Primary junction box
11	5 Amp	ICE head unit	Primary junction box
34	5 Amp	Navigation	Primary junction box
08	5 Amp	Instrument cluster	Primary junction box
20	5 Amp	Cellular phone module, voice, VICS (Japan), rear entertainment system	Primary junction box
15	5 Amp	Front electronic module, engine control module, instrument cluster	Primary junction box
29	10 Amp	Restraints control module	Primary junction box
02	5 Amp	Adaptive speed control control module	Primary junction box
08	10	Air conditioning control module	Primary junction

www.JagDocs.com

	Amp		box
32	5 Amp	Parking aid module, voice, cellular phone module	Primary junction box
03	5 Amp	Left-hand/Right-hand HID headlight,	Primary junction box
33	5 Amp	J-Gate module, transmission control module	Primary junction box
04	5 Amp	Instrument cluster	Primary junction box
19	5 Amp	Rear electronic module, engine control module	Primary junction box
17	5 Amp	ABS module	Primary junction box

4 . Where the Jaguar approved diagnostic system is available, complete the S93 report before clearing any or all fault codes from the vehicle.

NOTE:

If a DTC cannot be cleared, then there is a permanent fault present that flags again as soon as it is cleared (the exception to this is P1260, which will only clear following an ignition **OFF**, wait one minute, ignition **ON** cycle after rectification).

5 . If the cause is not visually evident and the Jaguar approved diagnostic system is not available, use a scan tool to retrieve the fault codes before proceeding to the diagnostic trouble code (DTC) index chart, or the symptom chart if no DTCs are set.

6 . Using the Jaguar approved diagnostic system where available, and a scan tool where not, check the freeze frame data for information on the conditions applicable when the fault was flagged. The format of this will vary, depending on the tool used, but can provide information useful to the technician in diagnosing the fault.

CAUTION: Diagnosis by substitution from a donor vehicle is NOT acceptable. Each vehicle is configured to it's own VID block, and substitution of control modules may not only not confirm a fault, but may cause faults in the vehicle being tested and/or the donor vehicle.

CAUTION: Electronic modules are sensitive to static electrical charges. If exposed to these charges, damage may result.

CAUTION: When probing connectors to take measurements in the course of the pinpoint tests, use the adaptor kit, part number 3548-1358-00.

NOTE:

When performing electrical voltage or resistance tests, always use a digital multimeter (DMM) accurate to 3 decimal places, and with an up-to-date calibration certificate. When testing resistance, always take the resistance of the DMM leads into account.

NOTE:

Where indicated in the tests, use a suitable oscilloscope. The Jaguar approved diagnostic tester has an oscilloscope function in the "toolbox" menu.

NOTE:

Check and rectify basic faults before beginning diagnostic routines involving pinpoint tests.

7 . If an obvious cause for an observed or reported concern is found, correct the cause (if possible) before proceeding to the next step.

8 . If the cause is not visually evident, verify the symptom and refer to the diagnostic trouble code (DTC) index.

Power Supply and Ground table

Module	Action
Instrument cluster (IC)	GO to Pinpoint Test G239843p23. .
J-Gate module (JGM)	GO to Pinpoint Test G239843p31. .
Air conditioning control module (A/CCM)	GO to Pinpoint Test G239843p32. .

www.JagDocs.com

Dynamic stability control control module (DSCCM)	GO to Pinpoint Test G239843p33. .
Engine control module (ECM)	GO to Pinpoint Test G239843p19. .
Transmission control module (TCM)	GO to Pinpoint Test G239843p34. .
Adaptive speed control control module (ASCCM)	GO to Pinpoint Test G239843p35. .
Air suspension control module (ASU)	GO to Pinpoint Test G239843p36. .
ICE head unit (HU)	GO to Pinpoint Test G239843p12. .
Rear electronic module (REM)	GO to Pinpoint Test G239843p14. .
Front electronic module (FEM)	GO to Pinpoint Test G239843p13. .
Rear memory module (RMM)	GO to Pinpoint Test G239843p15. .
Navigation module (NAV)	GO to Pinpoint Test G239843p11. .
Electronic park brake module (EPB)	GO to Pinpoint Test G239843p16. .
Driver door control module (DDCM)	GO to Pinpoint Test G239843p17. .
Driver seat control module (DSCM)	GO to Pinpoint Test G239843p18. .
Parking aid control module (PACM)	GO to Pinpoint Test G239843p20. .
Restraints control module (RCM)	GO to Pinpoint Test G239843p22. .

Compact disc changer (CD)	GO to Pinpoint Test G239843p6. .
Cellular phone module (CPM)	GO to Pinpoint Test G239843p8. .
Voice module (VACM)	GO to Pinpoint Test G239843p9. .
Rear entertainment system	GO to Pinpoint Test G239843p10. .
Amplifier (AMP)	GO to Pinpoint Test G239843p7. .

Driver Information Chart

NOTE:

Use this table to identify DTCs associated with the message center display, then refer to the DTC index for possible sources and actions.

NOTE:

For definitions of default modes, see the foot of this table.

Warning light	Message	Default Mode	DTC
Amber	Restricted performance, DSC fault, DSC system fault	Engine speed limited, reverse throttle progression enabled	P1637
Amber	Restricted performance	Engine speed limited, reverse throttle progression enabled	P1638
Amber	Restricted performance	Engine speed limited, reverse throttle progression enabled	P1642
Amber	Restricted performance	Engine speed limited, reverse throttle progression enabled	P1643
Amber	Cruise not available	Cruise control inhibited	P1696

www.JagDocs.com

Amber	Restricted performance/Gearbox fault	Gearbox default to set gear	P1796
Amber	Restricted performance/Gearbox fault	Engine speed limited, reverse throttle progression enabled	P1797

Default mode Definitions

LIMP-HOME MODE

- Throttle motor off
- Throttle motor relay off
- Throttle motor circuit off
- Fuel intervention
- Cruise control inhibited

LIMP-HOME UNAVAILABLE

- Power limitation
- Vehicle speed limited to 120 kph
- Reverse throttle progression enabled
- Cruise control inhibited

REVERSE THROTTLE PROGRESSION

- Throttle opening limited to maximum 30%

NOTE:

The throttle operation uses the same map as for reverse gear.

ENGINE SPEED LIMITED

- Engine runs normally, up to 3000 rpm
- Engine speed restricted to 3000 rpm maximum, by fuel cut-off

HIGH IDLE

- Throttle valve kept in fixed position by motor
- Cruise control inhibited

SAFETY REDUNDANCY

- Power limitation
- Vehicle speed limited to 120 kph
- Reverse throttle progression enabled
- Cruise control inhibited

Diagnostic Trouble Code (DTC) index

DTC	Control Module	Description	Possible Source	Action
U2601	AMP	D2B "wake-up" circuit fault	• D2B "wake-up" circuit; short circuit to ground	For D2B "wake-up" circuit tests, GO to Pinpoint Test G239843p5. .
U2609	AMP	D2B "wake-up" signal out of specification	• D2B "wake-up" circuit; high resistance • D2B network slave module failure • Power amplifier failure	For D2B "wake-up" circuit tests, GO to Pinpoint Test G239843p5. .
U2610	AMP	D2B network "position status report" not received	• D2B network error	Check the D2B "wake-up" circuit, and the optical ring, GO to Pinpoint Test G239843p5. , GO to Pinpoint Test G239843p29. , and GO to Pinpoint Test G239843p30. .
U2611	AMP	D2B network "alarm clear command" not received	• D2B network error	Check the D2B "wake-up" circuit, and the optical ring, GO to Pinpoint Test G239843p5. , GO to Pinpoint Test G239843p29. , and GO to Pinpoint Test G239843p30. . GO to Pinpoint Test G239843p1.
U2023	ASCM	CAN fault message received from other network modules	• CAN/ASCM related fault; ECM, TCM, DSCM, IC • ASCM internal CAN fault	For CAN open circuit tests, GO to Pinpoint Test G239843p1. . For CAN short circuit tests, GO to

www.JagDocs.com

			• CAN network fault	Pinpoint Test G239843p2. .
U2501	ASCM	CAN ECM token missing	• CAN ECM token missing on network (other CAN modules also flag ECM token missing fault) • ECM/CAN fault • CAN network fault	For CAN open circuit tests, GO to Pinpoint Test G239843p1. . For CAN short circuit tests, GO to Pinpoint Test G239843p2. .
U2502	ASCM	CAN TCM token missing	• CAN TCM token missing on network (other CAN modules also flag TCM token missing fault) • TCM/CAN fault • CAN network fault	For CAN open circuit tests, GO to Pinpoint Test G239843p1. . For CAN short circuit tests, GO to Pinpoint Test G239843p2. .
U2503	ASCM	CAN IC token missing	• CAN IC token missing on network (other CAN modules also flag IC token missing fault) • IC/CAN fault • CAN network fault	For CAN open circuit tests, GO to Pinpoint Test G239843p1. . For CAN short circuit tests, GO to Pinpoint Test G239843p2. .
U2504	ASCM	CAN DSCM token missing	• CAN DSCM token missing on network (other CAN modules also flag DSCM token missing fault) • DSCM/CAN fault • CAN network fault	For CAN open circuit tests, GO to Pinpoint Test G239843p1. . For CAN short circuit tests, GO to Pinpoint Test G239843p2. .
U2505	ASCM	CAN TCM message missing	• TCM CAN DTC flagged	For CAN open circuit tests, GO to Pinpoint Test G239843p1. . For CAN short circuit tests, GO to

				Pinpoint Test G239843p2. .
U2520	ASCM	CAN IC module missing	• IC CAN circuit; open circuit, short circuit to B+, short circuit to ground • IC CAN fault • CAN network fault	For CAN open circuit tests, GO to Pinpoint Test G239843p1. . For CAN short circuit tests, GO to Pinpoint Test G239843p2. .
U2521	ASCM	CAN DSCM module missing	• DSCM CAN circuit; open circuit, short circuit to B+, short circuit to ground • DSCM CAN fault • CAN network fault	For CAN open circuit tests, GO to Pinpoint Test G239843p1. . For CAN short circuit tests, GO to Pinpoint Test G239843p2. .
U2522	ASCM	CAN TCM module missing	• TCM CAN circuit; open circuit, short circuit to B+, short circuit to ground • TCM CAN fault • CAN network fault	For CAN open circuit tests, GO to Pinpoint Test G239843p1. . For CAN short circuit tests, GO to Pinpoint Test G239843p2. .
U2523	ASCM	CAN ECM module missing	• ECM CAN circuit; open circuit, short circuit to B+, short circuit to ground • ECM CAN fault • CAN network fault	For CAN open circuit tests, GO to Pinpoint Test G239843p1. . For CAN short circuit tests, GO to Pinpoint Test G239843p2. .
U1900	ASM	CAN communication fault	• CAN circuit; open circuit, short circuit to B+, short circuit to ground • ASM internal CAN fault	For CAN open circuit tests, GO to Pinpoint Test G239843p1. . For CAN short circuit tests, GO to

www.JagDocs.com

			• CAN network fault	Pinpoint Test G239843p2. .
U2516	ASM	CAN not responding	• Multiple CAN modules with CAN DTCs flagged • CAN circuit; open circuit, short circuit to B+, short circuit to ground • ASM internal CAN fault • CAN network fault	For CAN open circuit tests, GO to Pinpoint Test G239843p1. . For CAN short circuit tests, GO to Pinpoint Test G239843p2. .
U2518	ASM	CAN CCM message missing	• CCM CAN DTC flagged	For CAN open circuit tests, GO to Pinpoint Test G239843p1. . For CAN short circuit tests, GO to Pinpoint Test G239843p2. .
U2521	ASM	CAN DSCM message missing	• DSCM CAN DTC flagged	For CAN open circuit tests, GO to Pinpoint Test G239843p1. . For CAN short circuit tests, GO to Pinpoint Test G239843p2. .
U2523	ASM	CAN ECM message missing	• ECM CAN DTC flagged	For CAN open circuit tests, GO to Pinpoint Test G239843p1. . For CAN short circuit tests, GO to Pinpoint Test G239843p2. .
U1262	Audio	SCP network fault	• SCP network circuit; open circuit, short circuit to B+, short	For SCP network tests, GO to Pinpoint Test G239843p3.

			circuit to ground	.
U2003	Audio	CD changer not responding on D2B network	• D2B "wake-up" circuit; open circuit, short circuit to B+ • CD changer D2B fault • D2B network fault	For D2B "wake-up" circuit tests, GO to Pinpoint Test G239843p5. . For optical ring tests, GO to Pinpoint Test G239843p24. .
U2008	Audio	CPM not responding on D2B network	• D2B "wake-up" circuit; open circuit, short circuit to B+ • D2B network fault	For D2B "wake-up" circuit tests, GO to Pinpoint Test G239843p5. . For optical ring tests, GO to Pinpoint Test G239843p25. .
U2019	Audio	VACM not responding on D2B network	• D2B "wake-up" circuit; open circuit, short circuit to B+ • VACM D2B fault • D2B network fault	For D2B "wake-up" circuit tests, GO to Pinpoint Test G239843p5. . For optical ring tests, GO to Pinpoint Test G239843p26. .
U2601	Audio	D2B "wake-up" circuit fault	• D2B "wake-up" circuit; short circuit to ground	For D2B "wake-up" circuit tests, GO to Pinpoint Test G239843p5. .
U2602	Audio	D2B network ring incomplete (fault reported)	• D2B network module disconnected • D2B network circuit; open circuit	Check the D2B "wake-up" circuit, and the optical ring, GO to Pinpoint Test G239843p5. , GO to Pinpoint Test G239843p29. , and GO to Pinpoint Test G239843p30.

www.JagDocs.com

				.
U2603	Audio	D2B network ring incomplete (fault **not** reported)	• D2B network module disconnected • D2B network circuit; open circuit	Check the D2B "wake-up" circuit, and the optical ring, GO to Pinpoint Test G239843p5. , GO to Pinpoint Test G239843p29. , and GO to Pinpoint Test G239843p30. .
U2604	Audio	D2B network ring incomplete (**corrupted** fault report)	• D2B network module disconnected • D2B network circuit; open circuit	Check the D2B "wake-up" circuit, and the optical ring, GO to Pinpoint Test G239843p5. , GO to Pinpoint Test G239843p29. , and GO to Pinpoint Test G239843p30. .
U2605	Audio	Audio unit unable to initialize it's address	• More than one master module (audio unit) on the D2B network ring	Check for correct configuration of the optical ring. REFER to the electrical guides.
U2506	Audio	D2B slave module unable to initialize it's address	• One or more slave modules duplicated on the D2B network ring	Check for corrrect configuration of the optical ring. REFER to the electrical guides.
U2607	Audio	D2B slave module switched into bypass mode	• One or more slave modules on the D2B network ring switched into bypass mode	Check the D2B "wake-up" circuit, and the optical ring, GO to Pinpoint Test G239843p5. , GO to Pinpoint Test G239843p29. , and GO to Pinpoint Test G239843p30.

				. Contact dealer technical support for advice on possible module failure if circuits are sound.
U2609	Audio	D2B "wake-up" signal out of specification	• D2B "wake-up" circuit; high resistance • D2B network slave module failure	For D2B "wake-up" circuit tests, GO to Pinpoint Test G239843p5. .
U2613	Audio	NSM not responding on D2B network	• D2B "wake-up" circuit; open circuit, short circuit to B+ • NSM D2B fault • D2B network fault	For D2B "wake-up" circuit tests, GO to Pinpoint Test G239843p5. .
U2614	Audio	AMP not responding on D2B network	• D2B "wake-up" circuit; open circuit, short circuit to B+ • AMP D2B fault • D2B network fault	For D2B "wake-up" circuit tests, GO to Pinpoint Test G239843p5. .
U2615	Audio	Rear entertainment control panel not responding on D2B network	• D2B "wake-up" circuit; open circuit, short circuit to B+ • Rear entertainment control panel D2B fault • D2B network fault	For D2B "wake-up" circuit tests, GO to Pinpoint Test G239843p5. .
U2022	CCM	Control panel communications error	• Control panel "clock" circuit; open circuit, short circuit to ground, short circuit to B+ • Control panel data circuit; open circuit, short circuit to ground, short circuit to B+ • Control panel failure	For control panel circuit tests, GO to Pinpoint Test G239843p37.
U2516	CCM	CAN not responding	• Multiple CAN modules with CAN DTCs flagged	For CAN open circuit tests, GO to Pinpoint Test G239843p1.

www.JagDocs.com

			• CAN circuit; open circuit, short circuit to B+, short circuit to ground • CCM internal CAN fault • CAN network fault	. For CAN short circuit tests, GO to Pinpoint Test G239843p2. .
U2520	CCM	CAN IC module missing	• IC CAN circuit; open circuit, short circuit to B+, short circuit to ground • IC CAN fault • CAN network fault	For CAN open circuit tests, GO to Pinpoint Test G239843p1. . For CAN short circuit tests, GO to Pinpoint Test G239843p2. .
U2521	CCM	CAN DSCM module missing	• DSCM CAN circuit; open circuit, short circuit to B+, short circuit to ground • DSCM CAN fault • CAN network fault	For CAN open circuit tests, GO to Pinpoint Test G239843p1. . For CAN short circuit tests, GO to Pinpoint Test G239843p2. .
U2523	CCM	CAN ECM module missing	• ECM CAN circuit; open circuit, short circuit to B+, short circuit to ground • ECM CAN fault • CAN network fault	For CAN open circuit tests, GO to Pinpoint Test G239843p1. . For CAN short circuit tests, GO to Pinpoint Test G239843p2. .
U2525	CCM	CAN RCCM module missing	• RCCM CAN circuit; open circuit, short circuit to B+, short circuit to ground • RCCM CAN fault • CAN network fault	For CAN open circuit tests, GO to Pinpoint Test G239843p1. . For CAN short circuit tests, GO to Pinpoint Test G239843p2. .
U2601	CPM	D2B "wake-up" circuit	• D2B "wake-up" circuit, short circuit to	For D2B "wake-up"

		fault	ground	circuit tests, GO to Pinpoint Test G239843p5. .
U2609	CPM	D2B "wake-up" signal out of specification	• D2B "wake-up" circuit; high resistance • D2B network slave module failure	For D2B "wake-up" circuit tests, GO to Pinpoint Test G239843p5. .
U2610	CPM	D2B network "position status report" not received	• D2B network error	Check the D2B "wake-up" circuit, and the optical ring, GO to Pinpoint Test G239843p5. , GO to Pinpoint Test G239843p29. , and GO to Pinpoint Test G239843p30. . Contact dealer technical support for advice on possible module failure if circuits are sound.
U2611	CPM	D2B "alarm clear command" not received	• D2B network error	Check the D2B "wake-up" circuit, and the optical ring, GO to Pinpoint Test G239843p5. , GO to Pinpoint Test G239843p29. , and GO to Pinpoint Test G239843p30. . Contact dealer technical support for advice on possible module failure if circuits are sound.
U1260	DDM	SCP positive circuit fault	• SCP positive circuit; open circuit, short circuit to ground,	For SCP network tests, GO to Pinpoint Test G239843p3.

www.JagDocs.com

			short circuit to B+	.
U1261	DDM	SCP negative circuit fault	• SCP negative circuit; open circuit, short circuit to ground, short circuit to B+	For SCP network tests, GO to Pinpoint Test G239843p3. .
U1262	DDM	SCP circuit fault	• SCP circuits; open circuit, short circuit to ground, short circuit to B+	For SCP network tests, GO to Pinpoint Test G239843p3. .
U2150	DDM	SCP invalid REM data during security and locking operations	• REM SCP circuit; open circuit, short circuit to B+, short circuit to ground • REM SCP fault • SCP network fault	For SCP network tests, GO to Pinpoint Test G239843p3. .
U2160	DDM	SCP invalid IC data during security and locking	• IC SCP circuit; open circuit, short circuit to B+, short circuit to ground • IC SCP fault • SCP network fault	For SCP network tests, GO to Pinpoint Test G239843p3. .
U2195	DDM	SCP invalid SCLM data during security and locking operations	• SCLM SCP circuit; open circuit, short circuit to B+, short circuit to ground • SCLM SCP fault • SCP network fault	For SCP network tests, GO to Pinpoint Test G239843p3. .
U1901	DSCM	Local CAN network (steering angle sensor, yaw rate and lateral acceleration sensor) communication fault	• Local CAN circuit; open circuit, short circuit to B+, short circuit to ground • DSCM internal local CAN fault • Local CAN network fault	For CAN open circuit tests, GO to Pinpoint Test G239843p1. . For CAN short circuit tests, GO to Pinpoint Test G239843p2. .
U2012	DSCM	CAN communications fault	• CAN circuit; open circuit, short circuit to B+, short circuit to ground • DSCM internal CAN	For CAN open circuit tests, GO to Pinpoint Test G239843p1. . For CAN short

			fault • CAN network fault	circuit tests, GO to Pinpoint Test G239843p2. .
U2202	DSCM	CAN invalid configuration data received	• ECM, TCM or ASCM incorrectly configured	Reconfigure modules.
U2515	DSCM	CAN adaptive speed control message missing	• TCM CAN DTC flagged	For CAN open circuit tests, GO to Pinpoint Test G239843p1. . For CAN short circuit tests, GO to Pinpoint Test G239843p2. .
U2522	DSCM	CAN TCM module missing	• TCM CAN circuit; open circuit, short circuit to B+, short circuit to ground • TCM CAN fault • CAN network fault	For CAN open circuit tests, GO to Pinpoint Test G239843p1. . For CAN short circuit tests, GO to Pinpoint Test G239843p2. .
U2523	DSCM	CAN ECM module missing	• ECM CAN circuit; open circuit, short circuit to B+, short circuit to ground • ECM CAN fault • CAN network fault	For CAN open circuit tests, GO to Pinpoint Test G239843p1. . For CAN short circuit tests, GO to Pinpoint Test G239843p2. .
U2527	DSCM	Local CAN network (steering angle sensor, yaw rate and lateral acceleration sensor) transmit fault	• Local CAN circuit; open circuit, short circuit to B+, short circuit to ground • DSCM internal local CAN fault • Local CAN network fault	For CAN open circuit tests, GO to Pinpoint Test G239843p1. . For CAN short circuit tests, GO to Pinpoint Test G239843p2. .

www.JagDocs.com

U1260	DSM	SCP positive circuit fault	• SCP positive circuit; open circuit, short circuit to ground, short circuit to B+	For SCP network tests, GO to Pinpoint Test G239843p3. .
U1261	DSM	SCP negative circuit fault	• SCP negative circuit; open circuit, short circuit to ground, short circuit to B+	For SCP network tests, GO to Pinpoint Test G239843p3. .
U1260	FEM	SCP positive circuit fault	• SCP positive circuit; open circuit, short circuit to ground, short circuit to B+	For SCP network tests, GO to Pinpoint Test G239843p3. .
U1261	FEM	SCP negative circuit fault	• SCP negative circuit; open circuit, short circuit to ground, short circuit to B+	For SCP network tests, GO to Pinpoint Test G239843p3. .
U1147	IC	SCP invalid or missing REM data during security operations	• REM SCP circuit; open circuit, short circuit to B+, short circuit to ground • REM SCP fault • SCP network fault	For SCP network tests, GO to Pinpoint Test G239843p3. .
U1262	IC	SCP network circuit fault	• SCP network circuit; open circuit, short circuit to B+, short circuit to ground • SCP network fault • IC SCP failure	For SCP network tests, GO to Pinpoint Test G239843p3. .
U1751	IC	SCP missing REM steering column lock status message	• REM SCP fault • SCP network fault	For SCP network tests, GO to Pinpoint Test G239843p3. .
U1752	IC	SCP missing FEM steering column lock status message	• FEM SCP fault • SCP network fault	For SCP network tests, GO to Pinpoint Test G239843p3. .
U1900	PATS	CAN communications	• CAN circuit; open circuit, short circuit to	For CAN open circuit tests, GO to Pinpoint

		fault	B+, short circuit to ground • IC internal CAN fault • CAN network fault	Test G239843p1. . For CAN short circuit tests, GO to Pinpoint Test G239843p2. .
U2150	IC	SCP missing or invalid REM steering column lock enable status message	• REM SCP fault • SCP network fault	For SCP network tests, GO to Pinpoint Test G239843p3. .
U2152	IC	SCP missing or invalid FEM steering column lock enable status message	• FEM SCP fault • SCP network fault	For SCP network tests, GO to Pinpoint Test G239843p3. .
U2195	IC	SCP missing or invalid SCLM steering column lock enable status message	• SCLM SCP fault • SCP network fault	For SCP network tests, GO to Pinpoint Test G239843p3. .
U2196	IC	CAN invalid ECM engine speed data	• ECM CAN fault • CAN network fault	For CAN open circuit tests, GO to Pinpoint Test G239843p1. . For CAN short circuit tests, GO to Pinpoint Test G239843p2. .
U2197	IC	CAN invalid DSCM vehicle speed data	• DSCM CAN fault • CAN network fault	For CAN open circuit tests, GO to Pinpoint Test G239843p1. . For CAN short circuit tests, GO to Pinpoint Test G239843p2. .
U2199	IC	CAN invalid ECM engine coolant temperature data	• ECM CAN fault • CAN network fault	For CAN open circuit tests, GO to Pinpoint Test G239843p1. . For CAN short circuit tests, GO to

www.JagDocs.com

				Pinpoint Test G239843p2. .
U2200	IC	CAN invalid DSCM odometer count "ODO count" data	• DSCM CAN fault • CAN network fault	For CAN open circuit tests, GO to Pinpoint Test G239843p1. . For CAN short circuit tests, GO to Pinpoint Test G239843p2. .
U2510	IC	CAN invalid ECM data for vehicle security (incorrect PATS identification -IC/ECM)	• IC/ECM configuration fault	Reconfigure IC/ECM. Contact dealer technical support for information on PATS system.
U2511	IC	CAN communication failure - IC to ECM	• CAN network circuit; open circuit, short circuit to B+, short circuit to ground • CAN network fault • ECM CAN failure	For CAN open circuit tests, GO to Pinpoint Test G239843p1. . For CAN short circuit tests, GO to Pinpoint Test G239843p2. .
U2515	IC	CAN ASCM data missing	• ASCM CAN DTC flagged	For CAN open circuit tests, GO to Pinpoint Test G239843p1. . For CAN short circuit tests, GO to Pinpoint Test G239843p2. .
U2516	IC	CAN network circuit fault	• CAN network circuit; open circuit, short circuit to B+, short circuit to ground • CAN network fault	For CAN open circuit tests, GO to Pinpoint Test G239843p1. . For CAN short circuit tests, GO to Pinpoint Test G239843p2.

				.
U2521	IC	CAN DSCM vehicle speed data missing	• DSCM CAN DTC flagged	For CAN open circuit tests, GO to Pinpoint Test G239843p1. . For CAN short circuit tests, GO to Pinpoint Test G239843p2. .
U2522	IC	CAN TCM gear selected data missing	• TCM CAN DTC flagged	For CAN open circuit tests, GO to Pinpoint Test G239843p1. . For CAN short circuit tests, GO to Pinpoint Test G239843p2. .
U2523	IC	CAN ECM engine speed data missing	• ECM CAN DTC flagged	For CAN open circuit tests, GO to Pinpoint Test G239843p1. . For CAN short circuit tests, GO to Pinpoint Test G239843p2. .
U2524	IC	CAN ASM data missing	• ASM CAN DTC flagged	For CAN open circuit tests, GO to Pinpoint Test G239843p1. . For CAN short circuit tests, GO to Pinpoint Test G239843p2. .
U2601	Rear entertainment control panel	D2B "wake-up" circuit fault	• D2B "wake-up" circuit; short circuit to ground	For D2B "wake-up" circuit tests, GO to Pinpoint Test G239843p5. .

www.JagDocs.com

U2609	Rear entertainment control panel	D2B "wake-up" signal out of specification	• D2B "wake-up" circuit; high resistance • D2B slave module failure • Rear entertainment control panel failure	For D2B "wake-up" circuit tests, GO to Pinpoint Test G239843p5. . For rear entertainment circuit tests, REFER to section 415-07.
U2610	Rear entertainment control panel	D2B network "position status report" not received	• D2B network error	Check the D2B "wake-up" circuit, and the optical ring, GO to Pinpoint Test G239843p5. , GO to Pinpoint Test G239843p29. , and GO to Pinpoint Test G239843p30. . Contact dealer technical support for advice on possible module failure if circuits are sound.
U2611	Rear entertainment control panel	D2B network "alarm clear command" not received	• D2B network error	Check the D2B "wake-up" circuit, and the optical ring, GO to Pinpoint Test G239843p5. , GO to Pinpoint Test G239843p29. , and GO to Pinpoint Test G239843p30. . Contact dealer technical support for advice on possible module failure if circuits are sound.
U2516	RCCM	CAN not responding	• Multiple CAN modules with CAN DTCs flagged • CAN circuit; open circuit, short circuit to B+, short circuit to ground	For CAN open circuit tests, GO to Pinpoint Test G239843p1. . For CAN short circuit tests, GO to Pinpoint Test

			• CCM internal CAN fault • CAN network fault	G239843p2. .
U1260	REM	SCP positive circuit fault	• SCP positive circuit; open circuit, short circuit to ground, short circuit to B+	For SCP network tests, GO to Pinpoint Test G239843p3. .
U1261	REM	SCP negative circuit fault	• SCP negative circuit; open circuit, short circuit to ground, short circuit to B+	For SCP network tests, GO to Pinpoint Test G239843p3. .
U1260	RMM	SCP positive circuit fault	• SCP positive circuit; open circuit, short circuit to ground, short circuit to B+	For SCP network tests, GO to Pinpoint Test G239843p3. .
U1261	RMM	SCP negative circuit fault	• SCP negative circuit; open circuit, short circuit to ground, short circuit to B+	For SCP network tests, GO to Pinpoint Test G239843p3. .
U2601	VACM	D2B "wake-up" circuit fault	• D2B "wake-up" circuit; short circuit to ground	For D2B "wake-up" circuit tests, GO to Pinpoint Test G239843p5. .
U2609	VACM	D2B "wake-up" signal out of specification	• D2B "wake-up" circuit; high resistance • D2B slave module failure • VACM failure	For D2B "wake-up" circuit tests, GO to Pinpoint Test G239843p5. .
U2610	VACM	D2B network "position status report" not received	• D2B network error	Check the D2B "wake-up" circuit, and the optical ring, GO to Pinpoint Test G239843p5. , GO to Pinpoint Test G239843p29. , and GO to Pinpoint Test G239843p30.

www.JagDocs.com

				. Contact dealer technical support for advice on possible module failure if circuits are sound.
U2611	VACM	D2B network "alarm clear command" not received	• D2B network error	Check the D2B "wake-up" circuit, and the optical ring, GO to Pinpoint Test G239843p5. , GO to Pinpoint Test G239843p29. , and GO to Pinpoint Test G239843p30. . Contact dealer technical support for advice on possible module failure if circuits are sound.

Pinpoint Tests

PINPOINT TEST G239843p1 : CHECK THE CONTROLLER AREA NETWORK FOR OPEN CIRCUIT

G239843t1 : CHECK THE CAN NETWORK FOR CONTINUITY

1. Measure the resistance between DLC, pins 06 (Y) and 14 (G).

- **Is the resistance 60 ohms?**

-> Yes
GO to Pinpoint Test G239843t2.

-> No
GO to Pinpoint Test G239843t10.

G239843t2 : CHECK THE REAR CLIMATE CONTROL CONTROL MODULE (RCCM) CAN + CIRCUIT FOR CONTINUITY

1. Disconnect the RCCM electrical connector, RA01. 2. Measure the resistance between DLC, pin 06 (Y) and RA01, pin 08 (Y).

- **Is the resistance greater than 5 ohms?**

-> Yes
REPAIR the high resistance circuit. For additional information, refer to the wiring diagrams. CLEAR the DTC. TEST the system for normal operation.

-> No
GO to Pinpoint Test G239843t3.

G239843t3 : CHECK THE REAR CLIMATE CONTROL CONTROL MODULE (RCCM) CAN - CIRCUIT FOR CONTINUITY

1. Measure the resistance between DLC, pin 14 (G) and RA01, pin 16 (G).

- **Is the resistance greater than 5 ohms?**

-> Yes
REPAIR the high resistance circuit. For additional information, refer to the wiring diagrams. CLEAR the DTC. TEST the system for normal operation.

-> No
GO to Pinpoint Test G239843t4.

G239843t4 : CHECK THE YAW RATE SENSOR CAN + CIRCUIT FOR CONTINUITY

1. Disconnect the Yaw rate sensor electrical connector, IP23. 2. Measure the resistance between DLC, pin 06 (Y) and IP23, pin 02 (Y).

- **Is the resistance greater than 5 ohms?**

-> Yes
REPAIR the high resistance circuit. For additional information, refer to the wiring diagrams. CLEAR the DTC. TEST the system for normal operation.

-> No
GO to Pinpoint Test G239843t5.

www.JagDocs.com

G239843t5 : CHECK THE YAW RATE SENSOR CAN - CIRCUIT FOR CONTINUITY

1. Measure the resistance between DLC, pin 14 (G) and IP23, pin 01 (U).

- **Is the resistance greater than 5 ohms?**

-> Yes
REPAIR the high resistance circuit. For additional information, refer to the wiring diagrams. CLEAR the DTC. TEST the system for normal operation.

-> No
GO to Pinpoint Test G239843t6.

G239843t6 : CHECK THE ASCCM CAN + CIRCUIT FOR CONTINUITY

1. Disconnect the ASCCM electrical connector, EC23. 2. Measure the resistance between DLC, pin 06 (Y) and EC23, pin 10 (Y).

- **Is the resistance greater than 5 ohms?**

-> Yes
REPAIR the high resistance circuit. For additional information, refer to the wiring diagrams. CLEAR the DTC. TEST the system for normal operation.

-> No
GO to Pinpoint Test G239843t7.

G239843t7 : CHECK THE ASCCM CAN - CIRCUIT FOR CONTINUITY

1. Measure the resistance between DLC, pin 14 (G) and EC23, pin 04 (G).

- **Is the resistance greater than 5 ohms?**

-> Yes
REPAIR the high resistance circuit. For additional information, refer to the wiring diagrams. CLEAR the DTC. TEST the system for normal operation.

-> No
GO to Pinpoint Test G239843t8.

G239843t8 : CHECK THE TCM CAN + CIRCUIT FOR CONTINUITY

1. Disconnect the TCM electrical connector, GB02. 2. Measure the resistance between DLC, pin 06 (Y) and GB02, pin 06 (Y).

- **Is the resistance greater than 5 ohms?**

-> Yes
REPAIR the high resistance circuit. For additional information, refer to the wiring diagrams. CLEAR the DTC. TEST the system for normal operation.

-> No
GO to Pinpoint Test G239843t9.

G239843t9 : CHECK THE TCM CAN - CIRCUIT FOR CONTINUITY

1. Measure the resistance between DLC, pin 14 (G) and GB02, pin 02 (G).

- **Is the resistance greater than 5 ohms?**

-> Yes
REPAIR the high resistance circuit. For additional information, refer to the wiring diagrams. CLEAR the DTC. TEST the system for normal operation.

-> No
The CAN resistances are all correct. Check for DTCs indicating a faulty module, carry out pinpoint tests for module indicated.

G239843t10 : CHECK THE CAN + CIRCUIT BETWEEN THE DLC AND THE INSTRUMENT CLUSTER (IC) FOR CONTINUITY

1. Disconnect the IC electrical connector, IP06. 2. Measure the resistance between DLC, pin 06 (Y) and IP06, pin 08 (Y).

- **Is the resistance greater than 5 ohms?**

-> Yes
REPAIR the high resistance circuit. For additional information, refer to the wiring diagrams. CLEAR the DTC. TEST the system for normal operation.

-> No
GO to Pinpoint Test G239843t11.

G239843t11 : CHECK THE CAN - CIRCUIT BETWEEN THE DLC AND THE INSTRUMENT CLUSTER (IC) FOR CONTINUITY

1. Measure the resistance between DLC, pin 14 (G) and IP06, pin 09 (G).

- **Is the resistance greater than 5 ohms?**

-> Yes
REPAIR the high resistance circuit. For additional information, refer to the wiring diagrams. CLEAR the DTC. TEST the system for normal operation.

www.JagDocs.com

-> No
GO to Pinpoint Test G239843t12.

G239843t12 : CHECK THE CAN + CIRCUIT BETWEEN THE INSTRUMENT CLUSTER (IC) AND THE AIR SUSPENSION MODULE (ASU) FOR CONTINUITY

1. Disconnect the ASU electrical connector, CR88. 2. Measure the resistance between IP06, pin 18 (Y) and CR88, pin 07 (Y).

- **Is the resistance greater than 5 ohms?**

-> Yes
REPAIR the high resistance circuit. For additional information, refer to the wiring diagrams. CLEAR the DTC. TEST the system for normal operation.

-> No
GO to Pinpoint Test G239843t13.

G239843t13 : CHECK THE CAN - CIRCUIT BETWEEN THE INSTRUMENT CLUSTER (IC) AND THE AIR SUSPENSION MODULE (ASU) FOR CONTINUITY

1. Measure the resistance between IP06, pin 19 (G) and CR88, pin 08 (G).

- **Is the resistance greater than 5 ohms?**

-> Yes
REPAIR the high resistance circuit. For additional information, refer to the wiring diagrams. CLEAR the DTC. TEST the system for normal operation.

-> No
GO to Pinpoint Test G239843t14.

G239843t14 : CHECK THE CAN + CIRCUIT BETWEEN THE INSTRUMENT CLUSTER (IC) AND THE J-GATE MODULE (JGM) FOR CONTINUITY

1. Disconnect the JGM electrical connector, IP32. 2. Measure the resistance between IP32, pin 11 (Y) and IP06, pin 08 (Y).

- **Is the resistance greater than 5 ohms?**

-> Yes
REPAIR the high resistance circuit. For additional information, refer to the wiring diagrams. CLEAR the DTC. TEST the system for normal operation.

-> No

GO to Pinpoint Test G239843t15.

G239843t15 : CHECK THE CAN - CIRCUIT BETWEEN THE INSTRUMENT CLUSTER (IC) AND THE J-GATE MODULE (JGM) FOR CONTINUITY

1. Measure the resistance between IP32, pin 12 (G) and IP06, pin 09 (G).

- **Is the resistance greater than 5 ohms?**

-> Yes
REPAIR the high resistance circuit. For additional information, refer to the wiring diagrams. CLEAR the DTC. TEST the system for normal operation.

-> No
GO to Pinpoint Test G239843t16.

G239843t16 : CHECK THE CAN + CIRCUIT BETWEEN THE J-GATE MODULE (JGM) AND THE AIR CONDITIONING MODULE (A/CCM) FOR CONTINUITY

1. Disconnect the A/CCM electrical connector, CR119. 2. Measure the resistance between IP32, pin 09 (Y) and CR119, pin 16 (Y).

- **Is the resistance greater than 5 ohms?**

-> Yes
REPAIR the high resistance circuit. For additional information, refer to the wiring diagrams. CLEAR the DTC. TEST the system for normal operation.

-> No
GO to Pinpoint Test G239843t17.

G239843t17 : CHECK THE CAN - CIRCUIT BETWEEN THE J-GATE MODULE (JGM) AND THE AIR CONDITIONING MODULE (A/CCM) FOR CONTINUITY

1. Measure the resistance between IP32, pin 10 (G) and CR119, pin 17 (G).

- **Is the resistance greater than 5 ohms?**

-> Yes
REPAIR the high resistance circuit. For additional information, refer to the wiring diagrams. CLEAR the DTC. TEST the system for normal operation.

-> No
GO to Pinpoint Test G239843t18.

www.JagDocs.com

G239843t18 : CHECK THE CAN + CIRCUIT BETWEEN THE AIR CONDITIONING MODULE (A/CCM) AND THE ABS CONTROL MODULE (ABSCM) FOR CONTINUITY

1. Disconnect the ABSCM electrical connector, EC30. 2. Measure the resistance between CR119, pin 06 (Y) and EC30, pin 11 (Y).

- **Is the resistance greater than 5 ohms?**

-> Yes
REPAIR the high resistance circuit. For additional information, refer to the wiring diagrams. CLEAR the DTC. TEST the system for normal operation.

-> No
GO to Pinpoint Test G239843t19.

G239843t19 : CHECK THE CAN - CIRCUIT BETWEEN THE AIR CONDITIONING MODULE (A/CCM) AND THE ABS CONTROL MODULE (ABSCM) FOR CONTINUITY

1. Measure the resistance between CR119, pin 07 (G) and EC30, pin 15 (G).

- **Is the resistance greater than 5 ohms?**

-> Yes
REPAIR the high resistance circuit. For additional information, refer to the wiring diagrams. CLEAR the DTC. TEST the system for normal operation.

-> No
GO to Pinpoint Test G239843t20.

G239843t20 : CHECK THE CAN + CIRCUIT BETWEEN THE ABS CONTROL MODULE (ABSCM) AND THE ENGINE CONTROL MODULE (ECM) FOR CONTINUITY

1. Disconnect the ECM electrical connector, PI01. 2. Measure the resistance between EC30, pin 12 (Y) and PI01, pin 124 (Y).

- **Is the resistance greater than 5 ohms?**

-> Yes
REPAIR the high resistance circuit. For additional information, refer to the wiring diagrams. CLEAR the DTC. TEST the system for normal operation.

-> No

GO to Pinpoint Test G239843t21.

G239843t21 : CHECK THE CAN - CIRCUIT BETWEEN THE ABS CONTROL MODULE (ABSCM) AND THE ENGINE CONTROL MODULE (ECM) FOR CONTINUITY

1. Measure the resistance between EC30, pin 14 (G) and PI01, pin 123 (G).

- **Is the resistance greater than 5 ohms?**

-> Yes
REPAIR the high resistance circuit. For additional information, refer to the wiring diagrams. CLEAR the DTC. TEST the system for normal operation.

-> No
Recheck the resistance in test A1. Check for DTCs indicating a module fault. Carry out the pinpoint test for the module indicated.

PINPOINT TEST G239843p2 : CHECK THE CONTROLLER AREA NETWORK FOR SHORT CIRCUIT

G239843t22 : CHECK THE CAN + FOR SHORT CIRCUIT TO B +

1. Measure the resistance between pins 06 (Y) and 16 (NW) of the DLC.

- **Is the resistance less than 10,000 ohms?**

-> Yes
REPAIR the short circuit. For additional information, refer to the wiring diagrams. CLEAR the DTC. TEST the system for normal operation.

-> No
GO to Pinpoint Test G239843t23.

G239843t23 : CHECK THE CAN + FOR SHORT CIRCUIT TO IGNITION SWITCHED +

1. Turn the ignition switch to the **ON** position. 2. Measure the resistance between pins 06 (Y) and 09 (GO) of the DLC.

- **Is the resistance less than 10,000 ohms?**

www.JagDocs.com

-> Yes
REPAIR the short circuit. For additional information, refer to the wiring diagrams. CLEAR the DTC. TEST the system for normal operation.

-> No
GO to Pinpoint Test G239843t24.

G239843t24 : CHECK THE CAN + FOR SHORT CIRCUIT TO GROUND

1. Turn the ignition switch to the **OFF** position. 2. Measure the resistance between pins 06 (Y) and 04 (B) of the DLC. 3. Measure the resistance between pins 06 (Y) and 05 (BK) of the DLC.

- **Is either resistance less than 10,000 ohms?**

-> Yes
REPAIR the short circuit. For additional information, refer to the wiring diagrams. CLEAR the DTC. TEST the system for normal operation.

-> No
GO to Pinpoint Test G239843t25.

G239843t25 : CHECK THE CAN - FOR SHORT CIRCUIT TO B +

1. Measure the resistance between pins 14 (G) and 16 (NW) of the DLC.

- **Is the resistance less than 10,000 ohms?**

-> Yes
REPAIR the short circuit. For additional information, refer to the wiring diagrams. CLEAR the DTC. TEST the system for normal operation.

-> No
GO to Pinpoint Test G239843t26.

G239843t26 : CHECK THE CAN - FOR SHORT CIRCUIT TO IGNITION SWITCHED +

1. Turn the ignition switch to the **ON** position. 2. Measure the resistance between pins 14 (G) and 09 (GO) of the DLC.

- **Is the resistance less than 10,000 ohms?**

-> Yes
REPAIR the short circuit. For additional information, refer to the wiring diagrams. CLEAR the DTC. TEST the system for normal operation.

-> No
GO to Pinpoint Test G239843t27.

G239843t27 : CHECK THE CAN - FOR SHORT CIRCUIT TO GROUND

1. Turn the ignition switch to the **OFF** position. 2. Measure the resistance between pins 14 (G) and 04 (B) of the DLC. 3. Measure the resistance between pins 14 (G) and 05 (BK) of the DLC.

- **Is either resistance less than 10,000 ohms?**

-> Yes
REPAIR the short circuit. For additional information, refer to the wiring diagrams. CLEAR the DTC. TEST the system for normal operation.

-> No
No short circuit fault found in controller area network. Check for DTCs indicating a module fault. Carry out the pinpoint test for the module indicated.

PINPOINT TEST G239843p3 : CHECK THE SCP NETWORK

G239843t28 : CHECK FOR CORRECT BUS TERMINATION IN THE SCP + NETWORK

1. Measure the resistance between pins 02 (Y) and 05 (BK) of the DLC.

- **Is the resistance 120 ohms?**

-> Yes
Network resistance is correct. Check for DTCs indicating a module or circuit fault. REFER to the DTC index.

-> No
GO to Pinpoint Test G239843t29.

G239843t29 : CHECK THE SCP + FOR SHORT CIRCUIT TO BATTERY

1. Measure the voltage across pins 02 (Y) and 16 (NW) of the DLC.

- **Is the voltage greater than 3 volts?**

-> Yes
REPAIR the short circuit. For additional information, refer to the wiring diagrams. Test the system for normal operation.

www.JagDocs.com

-> No
GO to Pinpoint Test G239843t30.

G239843t30 : CHECK THE SCP + FOR SHORT CIRCUIT TO IGNITION +

1. Turn the ignition switch to the **ON** position. 2. Measure the voltage across pins 02 (Y) and 09 (GO) of the DLC.

- **Is the voltage greater than 3 volts?**

-> Yes
REPAIR the short circuit. For additional information, refer to the wiring diagrams. Test the system for normal operation.

-> No
GO to Pinpoint Test G239843t31.

G239843t31 : CHECK THE SCP + FOR SHORT CIRCUIT TO GROUND

1. Measure the resistance between pins 02 (Y) and 05 (BK) of the DLC.

- **Is the resistance less than 90 ohms?**

-> Yes
REPAIR the short circuit. For additional information, refer to the wiring diagrams. Test the system for normal operation.

-> No
GO to Pinpoint Test G239843t32.

G239843t32 : CHECK THE SCP - FOR SHORT CIRCUIT TO BATTERY

1. Measure the voltage across pins 10 (U) and 16 (NW) of the DLC.

- **Is the voltage greater than 3 volts?**

-> Yes
REPAIR the short circuit. For additional information, refer to the wiring diagrams. Test the system for normal operation.

-> No
GO to Pinpoint Test G239843t33.

G239843t33 : CHECK THE SCP - FOR SHORT CIRCUIT TO IGNITION +

1. Turn the ignition switch to the **ON** position. 2. Measure the voltage across pins 10 (U) and 09 (GO) of the DLC.

- **Is the voltage greater than 3 volts?**

-> Yes
REPAIR the short circuit. For additional information, refer to the wiring diagrams. Test the system for normal operation.

-> No
GO to Pinpoint Test G239843t34.

G239843t34 : CHECK THE SCP - FOR SHORT CIRCUIT TO GROUND

1. Measure the resistance between pins 10 (U) and 05 (BK) of the DLC.

- **Is the resistance less than 10,000 ohms?**

-> Yes
REPAIR the short circuit. For additional information, refer to the wiring diagrams. Test the system for normal operation.

-> No
GO to Pinpoint Test G239843t35.

G239843t35 : CHECK FOR SHORT CIRCUIT BETWEEN SCP + AND SCP -

1. Measure the resistance between pins 10 (U) and 02 (BK) of the DLC.

- **Is the resistance less than 10,000 ohms?**

-> Yes
REPAIR the short circuit. For additional information, refer to the wiring diagrams. Test the system for normal operation.

-> No
Check for DTCs indicating a faulty module or circuit. Refer to the DTC index.

PINPOINT TEST G239843p4 : CHECK THE ISO NETWORK CIRCUIT

G239843t36 : CHECK THE TCM ISO CIRCUIT FOR SHORT TO BATTERY +

1. Measure the voltage between pin 11 of the DLC (O) and GROUND.

www.JagDocs.com

- **Is the voltage greater than 3 volts?**

-> Yes
REPAIR the short circuit. For additional information, refer to the wiring diagrams. Test the system for normal operation.

-> No
GO to Pinpoint Test G239843t37.

G239843t37 : CHECK THE TCM ISO CIRCUIT FOR SHORT TO IGNITION +

1. Turn the ignition switch to the **ON** position. 2. Measure the voltage between pin 11 of the DLC (O) and GROUND.

- **Is the voltage greater than 3 volts?**

-> Yes
REPAIR the short circuit. For additional information, refer to the wiring diagrams. Test the system for normal operation.

-> No
GO to Pinpoint Test G239843t38.

G239843t38 : CHECK THE TCM ISO CIRCUIT FOR SHORT TO GROUND

1. Measure the resistance between pin 11 of the DLC (O) and GROUND.

- **Is the resistance less than 10,000 ohms?**

-> Yes
REPAIR the short circuit. For additional information, refer to the wiring diagrams. Test the system for normal operation.

-> No
GO to Pinpoint Test G239843t39.

G239843t39 : CHECK THE TCM ISO CIRCUIT FOR HIGH RESISTANCE

1. Disconnect the battery negative terminal. 2. Disconnect the TCM electrical connector, GB02. 3. Measure the resistance between GB02, pin 03 (O) and pin 11 of the DLC (O).

- **Is the resistance greater than 5 ohms?**

-> Yes
REPAIR the high resistance circuit. For additional information, refer to the wiring diagrams. Test the system for normal operation.

-> No
GO to Pinpoint Test G239843t40.

G239843t40 : CHECK THE ISO CIRCUIT FOR SHORT TO BATTERY +

1. Reconnect the TCM electrical connector, GB02. 2. Reconnect the battery negative terminal. 3. Measure the voltage between pin 07 of the DLC (W) and GROUND.

- **Is the voltage greater than 3 volts?**

-> Yes
REPAIR the short circuit. For additional information, refer to the wiring diagrams. Test the system for normal operation.

-> No
GO to Pinpoint Test G239843t41.

G239843t41 : CHECK THE ISO CIRCUIT FOR SHORT TO IGNITION +

1. Turn the ignition switch to the **ON** position. 2. Measure the voltage between pin 07 of the DLC (W) and GROUND.

- **Is the voltage greater than 3 volts?**

-> Yes
REPAIR the short circuit. For additional information, refer to the wiring diagrams. Test the system for normal operation.

-> No
GO to Pinpoint Test G239843t42.

G239843t42 : CHECK THE ISO CIRCUIT FOR SHORT TO GROUND

1. Measure the resistance between pin 07 of the DLC (W) and GROUND.

- **Is the resistance less than 10,000 ohms?**

-> Yes
REPAIR the short circuit. For additional information, refer to the wiring diagrams. Test the system for normal operation.

-> No
GO to Pinpoint Test G239843t43.

www.JagDocs.com

G239843t43 : CHECK THE ISO CIRCUIT BETWEEN THE RIGHT-HAND HID AND THE DLC FOR HIGH RESISTANCE

1. Disconnect the battery negative terminal. 2. Disconnect the HID electrical connector, EC06. 3. Measure the resistance between EC06, pin 05 (W) and pin 07 of the DLC (W).

- **Is the resistance greater than 5 ohms?**

-> Yes
REPAIR the high resistance circuit. For additional information, refer to the wiring diagrams. Test the system for normal operation.

-> No
GO to Pinpoint Test G239843t44.

G239843t44 : CHECK THE ISO CIRCUIT BETWEEN THE LEFT-HAND HID AND THE DLC FOR HIGH RESISTANCE

1. Reconnect the HID electrical connector, EC06. 2. Disconnect the HID electrical connector, EC57. 3. Measure the resistance between EC57, pin 05 (W) and pin 07 of the DLC (W).

- **Is the resistance greater than 5 ohms?**

-> Yes
REPAIR the high resistance circuit. For additional information, refer to the wiring diagrams. Test the system for normal operation.

-> No
GO to Pinpoint Test G239843t45.

G239843t45 : CHECK THE ISO CIRCUIT BETWEEN THE ECM AND THE DLC FOR HIGH RESISTANCE

1. Reconnect the HID electrical connector, EC57. 2. Disconnect the ECM electrical connector, PI01. 3. Measure the resistance between PI01, pin 105 (W) and pin 07 of the DLC (W).

- **Is the resistance greater than 5 ohms?**

-> Yes
REPAIR the high resistance circuit. For additional information, refer to the wiring diagrams. Test the system for normal operation.

-> No
GO to Pinpoint Test G239843t46.

G239843t46 : CHECK THE ISO CIRCUIT BETWEEN THE PARKING AID MODULE AND THE DLC FOR HIGH RESISTANCE

1. Reconnect the ECM electrical connector, PI01. 2. Disconnect the parking aid control module electrical connector, CR52. 3. Measure the resistance between CR52, pin 05 (W) and pin 07 of the DLC (W).

- **Is the resistance greater than 5 ohms?**

-> Yes
REPAIR the high resistance circuit. For additional information, refer to the wiring diagrams. Test the system for normal operation.

-> No
GO to Pinpoint Test G239843t47.

G239843t47 : CHECK THE ISO CIRCUIT BETWEEN THE INTRUSION SENSOR AND THE DLC FOR HIGH RESISTANCE

1. Reconnect the parking aid control module electrical connector, CR52. 2. Disconnect the intrusion sensor electrical connector, RF03. 3. Measure the resistance between RF03, pin 08 (W) and pin 07 of the DLC (W).

- **Is the resistance greater than 5 ohms?**

-> Yes
REPAIR the high resistance circuit. For additional information, refer to the wiring diagrams. Test the system for normal operation.

-> No
GO to Pinpoint Test G239843t48.

G239843t48 : CHECK THE ISO CIRCUIT BETWEEN THE AIRBAG MODULE AND THE DLC FOR HIGH RESISTANCE

1. Reconnect the intrusion sensor electrical connector, RF03. 2. Disconnect the airbag module electrical connector, CR86. 3. Measure the resistance between CR86, pin 11 (W) and pin 07 of the DLC (W).

- **Is the resistance greater than 5 ohms?**

-> Yes
REPAIR the high resistance circuit. For additional information, refer to the wiring diagrams. Test the system for normal operation.

-> No

www.JagDocs.com

Reconnect the airbag module electrical connector, CR86. If a module fault is still suspected, check the module power supplies and GROUNDS.

PINPOINT TEST G239843p5 : ONE OR MORE D2B MODULES NOT RESPONDING. WAKE-UP SIGNAL FAULT

G239843t255 : CHECK THE WAKE-UP SIGNAL TO THE CD CHANGER

1. Disconnect the CD changer electrical connector TLO5. 2. Turn the ignition switch to the **ACC** position. 3. Measure the voltage between TLO5 pin 03 (OG) and GROUND, using an oscilloscope (see note above).

- **Does the oscilloscope show a wake-up signal as described?**

-> Yes
GO to Pinpoint Test G239843t256.

-> No
REPAIR the circuit between TLO5 pin 03 and ACU electrical connector CC08 pin 19. For additional information, refer to the wiring diagrams. CLEAR the DTC. TEST the system for normal operation.

G239843t256 : CHECK THE WAKE-UP SIGNAL TO THE PHONE MODULE

1. Disconnect the phone module electrical connector TLO7. 2. Turn the ignition switch to the **ACC** position. 3. Measure the voltage between TLO7 pin 23 (OG) and GROUND, using an oscilloscope (see note above).

- **Does the oscilloscope show a wake-up signal as described?**

-> Yes
GO to Pinpoint Test G239843t257.

-> No
REPAIR the circuit between TLO7 pin 23 and audio control module electrical connector CC08 pin 19. For additional information, refer to the wiring diagrams. CLEAR the DTC. TEST the system for normal operation.

G239843t257 : CHECK THE WAKE-UP SIGNAL TO THE VOICE ACTIVATED CONTROL MODULE

1. Disconnect the voice activated control module electrical connector TL68. 2. Turn the ignition switch to the **ACC** position. 3. Measure the voltage between TL68 pin 14 (OG) and GROUND, using an oscilloscope (see note above).

- **Does the oscilloscope show a wake-up signal as described?**

-> Yes
GO to Pinpoint Test G239843t258.

-> No
REPAIR the circuit between TL68 pin 14 and audio control module electrical connector CC08 pin 19. For additional information, refer to the wiring diagrams. CLEAR the DTC. TEST the system for normal operation.

G239843t258 : CHECK THE WAKE-UP SIGNAL TO THE NAVIGATION COMPUTER

1. Disconnect the navigation module electrical connector TLOO2. 2. Turn the ignition switch to the **ACC** position. 3. Measure the voltage between TLO2 pin 03 (OG) and GROUND, using an oscilloscope (see note above).

- **Does the oscilloscope show a wake-up signal as described?**

-> Yes
GO to Pinpoint Test G239843t259.

-> No
REPAIR the circuit between TLO2 pin 03 and audio control module electrical connector CC08 pin 19. For additional information, refer to the wiring diagrams. CLEAR the DTC. TEST the system for normal operation.

G239843t259 : CHECK THE WAKE-UP SIGNAL TO THE AMP

1. Disconnect the amplifier electrical connector TLO9. 2. Turn the ignition switch to the **ACC** position. 3. Measure the voltage between TLO9 pin 05 (OG) and GROUND, using an oscilloscope (see note above).

- **Does the oscilloscope show a wake-up signal as described?**

-> Yes
GO to Pinpoint Test G239843t351.

-> No

www.JagDocs.com

REPAIR the circuit between TLO9 pin 05 and audio control module electrical connector CC08 pin 19. For additional information, refer to the wiring diagrams. CLEAR the DTC. TEST the system for normal operation.

G239843t351 : CHECK THE WAKE-UP SIGNAL TO THE REAR ENTERTAINMENT MODULE

1. Disconnect the rear entertainment module electrical connector RC001. 2. Turn the ignition switch to the **ACC** position. 3. Measure the voltage between RC01 pin 06 (OG) and GROUND, using an oscilloscope (see note above).

- **Does the oscilloscope show a wake-up signal as described?**

-> Yes
Check for DTCs indicating a module fault.

-> No
REPAIR the circuit between RC01 pin 06 and audio control module electrical connector CC08 pin 19. For additional information, refer to the wiring diagrams. CLEAR the DTC. TEST the system for normal operation.

PINPOINT TEST G239843p24 : U2003; COMPACT DISC CHANGER NOT RESPONDING

G239843t233 : CHECK THE CD CHANGER MODULE, USING THE OPTICAL BUS TESTER

1. Connect the optical bus tester to the fibre optic lead connector DB02. 2. Set the optical bus tester to **BY-PASS**. 3. CLEAR the DTC. 4. Turn the ignition switch to the **ACC** position. 5. Wait for 10 seconds. 6. Check for "not responding" DTCs.

- **Is U2003 set?**

-> Yes
For "wake-up" signal circuit tests, GO to Pinpoint Test G239843p5.
. GO to Pinpoint Test G239843t255.

-> No
GO to Pinpoint Test G239843t234.

G239843t234 : CHECK FOR DTC U2602 OR U2603

1. Check DTCs.

- **Are codes U2602 or U2603 logged?**

-> Yes
For optical ring tests, GO to Pinpoint Test G239843p29.
, and GO to Pinpoint Test G239843p30.
.

-> No
Recheck DTCs. No break in optical harness.

PINPOINT TEST G239843p25 : U2008; PHONE MODULE NOT RESPONDING

G239843t235 : CHECK PHONE MODULE, USING OPTICAL BUS TESTER

1. Connect the optical bus tester to the fibre optic lead connector DB03. 2. Set the optical bus tester to **BY-PASS**. 3. CLEAR the DTC. 4. Turn the ignition switch to the **ACC** position. 5. Wait for 10 seconds. 6. Check for "not responding" DTCs.

- **Is U2008 set?**

-> Yes
For "wake-up" signal circuit tests, GO to Pinpoint Test G239843p5.
.

-> No
GO to Pinpoint Test G239843t236.

G239843t236 : CHECK FOR DTC U2602 OR U2603

1. Check DTCs.

- **Are codes U2602 or U2603 logged?**

-> Yes
For optical ring tests, GO to Pinpoint Test G239843p29.
, and GO to Pinpoint Test G239843p30.
.

-> No
Recheck DTCs. No break in optical harness.

www.JagDocs.com

PINPOINT TEST G239843p26 : U2019; VOICE ACTIVATED CONTROL MODULE (VACM) NOT RESPONDING

G239843t237 : CHECK VOICE CONTROL MODULE USING OPTICAL BUS TESTER

1. Connect the optical bus tester to the fibre optic lead connector DB04. 2. Set the optical bus tester to **BY-PASS**. 3. CLEAR the DTC. 4. Turn the ignition switch to the **ACC** position. 5. Wait for 10 seconds. 6. Check for "not responding" DTCs.

- **Is U2019 set?**

-> Yes
For "wake-up" signal circuit tests, GO to Pinpoint Test G239843p5.
.

-> No
GO to Pinpoint Test G239843t238.

G239843t238 : CHECK FOR DTC U2602 OR U2603

1. Check DTCs.

- **Are codes U2602 or U2603 logged?**

-> Yes
For optical ring tests, GO to Pinpoint Test G239843p29.
, and GO to Pinpoint Test G239843p30.
.

-> No
Recheck DTCs. No break in optical harness.

PINPOINT TEST G239843p27 : U2613; NAVIGATION CONTROL MODULE NOT RESPONDING

G239843t239 : CHECK NAVIGATION CONTROL MODULE, USING OPTICAL BUS TESTER

1. Connect the optical bus tester to the fibre optic lead connector DB06. 2. Set the optical bus tester to **BY-PASS**. 3. CLEAR the DTC. 4. Turn the ignition switch to the **ACC** position. 5. Wait for 10 seconds. 6. Check for DTCs.

- **Is U2613 set?**

-> Yes
For "wake-up" signal circuit tests, GO to Pinpoint Test G239843p5.
. GO to Pinpoint Test G239843t258.

-> No
GO to Pinpoint Test G239843t240.

G239843t240 : CHECK FOR DTC U2602 OR U2603

1. Check DTCs.

- **Are codes U2602 or U2603 logged?**

-> Yes
For optical ring tests, GO to Pinpoint Test G239843p29.
, and GO to Pinpoint Test G239843p30.
.

-> No
Recheck DTCs. No break in optical harness.

PINPOINT TEST G239843p28 : U2614; AMPLIFIER NOT RESPONDING

G239843t241 : CHECK AMPLIFIER USING OPTICAL BUS TESTER

1. Connect the optical bus tester to the fibre optic lead connector DB07. 2. Set the optical bus tester to **BY-PASS**. 3. CLEAR the DTC. 4. Turn the ignition switch to the **ACC** position. 5. Wait for 10 seconds. 6. Check for DTCs.

- **Is U2614 set?**

-> Yes
For "wake-up" signal circuit tests, GO to Pinpoint Test G239843p5.
.

www.JagDocs.com

-> No
GO to Pinpoint Test G239843t242.

G239843t242 : CHECK FOR DTC U2602 OR U2603

1. Check DTCs.

- **Are codes U2602 or U2603 logged?**

-> Yes
For optical ring tests, GO to Pinpoint Test G239843p29.
, and GO to Pinpoint Test G239843p30.
.

-> No
Recheck DTCs. No break in optical harness.

PINPOINT TEST G239843p43 : U2615; REAR ENTERTAINMENT MODULE NOT RESPONDING

G239843t349 : CHECK REAR ENTERTAINMENT MODULE USING OPTICAL BUS TESTER

1. Connect the optical bus tester to the fibre optic lead connector RC05. 2. Set the optical bus tester to **BY-PASS**. 3. CLEAR the DTC. 4. Turn the ignition switch to the **ACC** position. 5. Wait for 10 seconds. 6. Check for DTCs.

- **Is U2615 set?**

-> Yes
For "wake-up" signal circuit tests, GO to Pinpoint Test G239843p5.
.

-> No
GO to Pinpoint Test G239843t350.

G239843t350 : CHECK FOR DTC U2602 OR U2603

1. Check DTCs.

- **Are codes U2602 or U2603 logged?**

-> Yes
For optical ring tests, GO to Pinpoint Test G239843p29.

, and GO to Pinpoint Test G239843p30.
.

-> No
Recheck DTCs. No break in optical harness.

PINPOINT TEST G239843p29 : U2602: BREAK IN OPTICAL HARNESS FROM AUDIO CONTROL MODULE. (TRANSMITTER)

G239843t243 : CHECK FIBRE OPTIC LEAD BETWEEN LUGGAGE COMPARTMENT JOINT AND CD CHANGER

1. Disconnect fibre optic connector DB02. 2. Disconnect fibre optic connector DB01. 3. Connect the optical bus tester to the fibre optic lead connector DB01. 4. Set the optical bus tester to **TX**. 5. Set the optical bus tester to **ON**. 6. Check for light pulses at the receiver pin of disconnected D2B connector DB02.

- **Are light pulses visible?**

-> Yes
GO to Pinpoint Test G239843t244.

-> No
INSTALL a new telematic harness between DB03 and DB02. For additional information, refer to the electrical guide. CLEAR the DTC. TEST the system for normal operation.

G239843t244 : CHECK CABIN FIBRE OPTIC HARNESS

1. Disconnect the fibre optic connector FC107. 2. Disconnect the fibre optic connector DB01. 3. Connect the optical bus tester to TL95 using adaptor lead. 4. Set the optical bus tester to **TX**. 5. Set the optical bus tester to **ON**. 6. Check for light pulses at the receiver pin of disconnected D2B connector DB01.

- **Are light pulses visible?**

-> Yes
GO to Pinpoint Test G239843t245.

-> No

www.JagDocs.com

INSTALL a new cabin optical harness between DB01 and TL95. For additional information, refer to the electrical guide. CLEAR the DTC. TEST the system for normal operation.

G239843t245 : CHECK FIBRE OPTIC LEAD BETWEEN ASHTRAY AND AUDIO CONTROL MODULE

1. Connect the optical bus tester to CC21 using the adaptor lead. 2. Set the optical bus tester to **TX**. 3. Set the optical bus tester to **ON**. 4. Check for light pulses at the receiver pin of disconnected D2B connector TL95.

- **Are light pulses visible?**

-> Yes
GO to Pinpoint Test G239843t246.

-> No
INSTALL a new instrument optical harness between CC21 and TL95. For additional information, refer to the electrical guide. CLEAR the DTC. TEST the system for normal operation.

G239843t246 : CHECK THE AUDIO CONTROL MODULE

1. Turn the ignition switch to the **ACC** position. 2. Wait for 10 seconds. 3. Check for light pulses at the transmitter pin of disconnected D2B connector CC21 (rear of audio control module).

- **Are light pulses visible?**

-> Yes
GO to Pinpoint Test G239843t247.

-> No
INSTALL a new ACU. <<415-01>> CLEAR the DTC. TEST the system for normal operation.

G239843t247 : CHECK THE FIBRE OPTIC LEAD FROM THE CD CHANGER TO THE PHONE MODULE

1. Disconnect optical connector DB02. 2. Disconnect optical connector DB03. 3. Connect the optical bus tester to DB02. 4. Check for light pulses at the transmitter pin of disconnected D2B connector DB03.

- **Are light pulses visible?**

-> Yes
GO to Pinpoint Test G239843t248.

-> No

INSTALL a new telematic harness between DB03 and DB02. For additional information, refer to the electrical guide. CLEAR the DTC. TEST the system for normal operation.

G239843t248 : CHECK THE FIBRE OPTIC LEAD FROM THE PHONE MODULE TO THE VOICE MODULE

1. Disconnect optical connector DB03. 2. Disconnect optical connector DB04. 3. Connect the optical bus tester to DB03. 4. Check for light pulses at the transmitter pin of disconnected D2B connector DB04.

- **Are light pulses visible?**

-> Yes
GO to Pinpoint Test G239843t249.

-> No
INSTALL a new telematic harness between DB03 and DB04. For additional information, refer to the electrical guide. CLEAR the DTC. TEST the system for normal operation.

G239843t354 : CHECK THE FIBRE OPTIC LEAD FROM THE VOICE MODULE TO THE REAR ENTERTAINMENT MODULE

1. Disconnect optical connector DB04. 2. Disconnect optical connector RC05. 3. Connect the optical bus tester to DB04. 4. Check for light pulses at the transmitter pin of disconnected D2B connector RC05.

- **Are light pulses visible?**

-> Yes
GO to Pinpoint Test G239843t355.

-> No
INSTALL a new telematic harness between DB04 and RC05. For additional information, refer to the electrical guide. CLEAR the DTC. TEST the system for normal operation.

G239843t355 : CHECK THE FIBRE OPTIC LEAD FROM THE REAR ENTERTAINMENT MODULE TO THE NAVIGATION COMPUTER

1. Disconnect optical connector RC05. 2. Disconnect optical connector DB06. 3. Connect the optical bus tester to RC05.

- **Are light pulses visible?**

-> Yes
GO to Pinpoint Test G239843t249.

www.JagDocs.com

-> No
INSTALL a new telematic harness between RC05 and DB06. For additional information, refer to the electrical guide. CLEAR the DTC. TEST the system for normal operation.

G239843t249 : CHECK THE FIBRE OPTIC LEAD FROM THE VOICE MODULE TO THE NAVIGATION COMPUTER

1. Disconnect optical connector DB04. 2. Disconnect optical connector DB06. 3. Connect the optical bus tester to DB04. 4. Check for light pulses at the transmitter pin of disconnected D2B connector DB06.

- **Are light pulses visible?**

-> Yes
GO to Pinpoint Test G239843t250.

-> No
INSTALL a new telematic harness between DB04 and DB06. For additional information, refer to the electrical guide. CLEAR the DTC. TEST the system for normal operation.

G239843t250 : CHECK THE FIBRE OPTIC LEAD FROM THE NAVIGATION COMPUTER TO THE AMP

1. Disconnect optical connector DB06. 2. Disconnect optical connector DB07. 3. Connect the optical bus tester to DB06. 4. Check for light pulses at the transmitter pin of disconnected D2B connector DB07.

- **Are light pulses visible?**

-> Yes
Recheck DTCs. No fault found in D2B system.

-> No
INSTALL a new telematic harness between DB06 and DB07. For additional information, refer to the electrical guide. CLEAR the DTC. TEST the system for normal operation.

PINPOINT TEST G239843p30 : U2603: BREAK IN OPTICAL HARNESS TO AUDIO CONTROL MODULE. (RECEIVER)

G239843t251 : CHECK FIBRE OPTIC LEAD BETWEEN LUGGAGE COMPARTMENT JOINT AND AMPLIFIER

1. Disconnect the fibre optic connector DB07. 2. Disconnect the fibre optic connector DB01. 3. Connect the optical bus tester to DB07. 4. Set the optical bus tester to **TX**. 5. Set the optical bus tester to **ON**. 6. Check for light pulses at the receiver pin of disconnected D2B connector DB01.

- **Are light pulses visible?**

-> Yes
GO to Pinpoint Test G239843t252.

-> No
INSTALL a new telematic harness between DB01 and DB07. For additional information, refer to the electrical guide. CLEAR the DTC. TEST the system for normal operation.

G239843t252 : CHECK CABIN FIBRE OPTIC HARNESS

1. Disconnect the fibre optic connector TL95. 2. Disconnect the fibre optic connector DB01. 3. Connect the optical bus tester to DB01 using the adaptor lead, if required. 4. Set the optical bus tester to **TX**. 5. Set the optical bus tester to **ON**. 6. Check for light pulses at the receiver pin of disconnected D2B connector TL95.

- **Are light pulses visible?**

-> Yes
GO to Pinpoint Test G239843t253.

-> No
INSTALL a new cabin optical harness between RA01 and FC107. For additional information, refer to the electrical guide. CLEAR the DTC. TEST the system for normal operation.

G239843t253 : CHECK FIBRE OPTIC LEAD BETWEEN ASHTRAY AND AUDIO CONTROL MODULE

1. Disconnect the fibre optic connector CC21. 2. Disconnect the fibre optic connector TL95. 3. Connect the optical bus tester to CC21. 4. Set the optical bus tester to **TX**. 5. Set the optical bus tester to **ON**. 6. Check for light pulses at the receiver pin of disconnected D2B connector TL95.

- **Are light pulses visible?**

-> Yes
GO to Pinpoint Test G239843t254.

-> No

www.JagDocs.com

INSTALL a new instrument optical harness between CC21 and TL95. For additional information, refer to the electrical guide. CLEAR the DTC. TEST the system for normal operation.

G239843t254 : CHECK THE AUDIO CONTROL MODULE

1. Connect the optical short link between the receiver and transmitter of the audio control module. 2. Turn the ignition switch to the **ACC** position. 3. Wait for 10 seconds. 4. Check for DTC.

- **Is U2603 logged?**

-> Yes
INSTALL a new audio control module, <<415-01>> CLEAR the DTC. TEST the system for normal operation.

-> No
Recheck DTCs. No fault found in D2B system.

PINPOINT TEST G239843p6 : CHECK THE SUPPLIES AND GROUNDS TO THE CD CHANGER

G239843t49 : CHECK THE PERMANENT SUPPLY TO THE CD CHANGER

1. Disconnect the CD changer electrical connector, TL05. 2. Measure the voltage between TL05, pin 02 (NW) and GROUND.

- **Is the voltage less than 10 volts?**

-> Yes
REPAIR the circuit between the CD changer and battery. This circuit includes the rear power distribution box (fuse 27). For additional information, refer to the wiring diagrams. TEST the system for normal operation.

-> No
GO to Pinpoint Test G239843t50.

G239843t50 : CHECK THE GROUND TO THE CD CHANGER

1. Measure the resistance between TL05, pin 01 (BK) and GROUND.

- **Is the resistance greater than 5 ohms?**

-> Yes
REPAIR the high resistance circuit. For additional information, refer to the wiring diagrams. TEST the system for normal operation.

-> No
CHECK for DTCs indicating a wake-up circuit or optical ring fault. REFER to the DTC index.

PINPOINT TEST G239843p7 : CHECK THE SUPPLIES AND GROUNDS TO THE AMPLIFIER

G239843t51 : CHECK THE PERMANENT SUPPLY TO THE AMPLIFIER

1. Disconnect the amplifier electrical connector, TL09. 2. Measure the voltage between TL09, pins 03 and 09 (NR) and GROUND.

- **Is the voltage less than 10 volts?**

-> Yes
REPAIR the circuit between the amplifier and battery. This circuit includes the rear power distribution box (fuse 34). For additional information, refer to the wiring diagrams. TEST the system for normal operation.

-> No
GO to Pinpoint Test G239843t52.

G239843t52 : CHECK THE GROUND TO THE AMPLIFIER

1. Measure the resistance between TL09, pins 02 and 08 (B) and GROUND.

- **Is the resistance greater than 5 ohms?**

-> Yes
REPAIR the high resistance circuit. For additional information, refer to the wiring diagrams. TEST the system for normal operation.

-> No
CHECK for DTCs indicating a wake-up circuit or optical ring fault. REFER to the DTC index.

PINPOINT TEST G239843p8 : CHECK THE SUPPLIES AND GROUNDS TO THE CELLULAR PHONE MODULE

G239843t53 : CHECK THE PERMANENT SUPPLY TO THE PHONE MODULE

1. Disconnect the phone module electrical connector, TL07. 2. Measure the voltage between TL07, pins 12 and 13 (RW) and GROUND.

www.JagDocs.com

- **Is the voltage less than 10 volts?**

-> Yes
REPAIR the circuit between the phone module and battery. This circuit includes the primary junction box (fuse 30). For additional information, refer to the wiring diagrams. TEST the system for normal operation.

-> No
GO to Pinpoint Test G239843t54.

G239843t54 : CHECK THE ACCESSORY SUPPLY TO THE PHONE MODULE

1. Turn the ignition switch to the **ACC** position. 2. Measure the voltage between TL07, pin 14 (YU) and GROUND.

- **Is the voltage less than 10 volts?**

-> Yes
REPAIR the circuit between the phone module and battery. This circuit includes the primary junction box (fuse 20) and the ignition switch. For additional information, refer to the wiring diagrams. TEST the system for normal operation.

-> No
GO to Pinpoint Test G239843t55.

G239843t55 : CHECK THE IGNITION SUPPLY TO THE PHONE MODULE

1. Turn the ignition switch to the **ON** position. 2. Measure the voltage between TL07, pin 29 (WR) and GROUND.

- **Is the voltage less than 10 volts?**

-> Yes
REPAIR the circuit between the phone module and battery. This circuit includes the primary junction box (fuse 32) and the ignition switch. For additional information, refer to the wiring diagrams. TEST the system for normal operation.

-> No
GO to Pinpoint Test G239843t56.

G239843t56 : CHECK THE GROUND TO THE PHONE MODULE

1. Measure the resistance between TL07, pins 09 and 25 (BK) and GROUND.

- **Is the resistance greater than 5 ohms?**

-> Yes
REPAIR the high resistance circuit. For additional information, refer to the wiring diagrams. TEST the system for normal operation.

-> No
CHECK for DTCs indicating a wake-up circuit or optical ring fault. REFER to the DTC index.

PINPOINT TEST G239843p9 : CHECK THE SUPPLIES AND GROUNDS TO THE VOICE CONTROL MODULE

G239843t57 : CHECK THE PERMANENT SUPPLY TO THE VACM

1. Disconnect the voice module electrical connector, TL68. 2. Measure the voltage between TL68, pin 22 (RW) and GROUND.

- **Is the voltage less than 10 volts?**

-> Yes
REPAIR the circuit between the voice module and battery. This circuit includes the primary junction box (fuse 30). For additional information, refer to the wiring diagrams. TEST the system for normal operation.

-> No
GO to Pinpoint Test G239843t58.

G239843t58 : CHECK THE ACCESSORY SUPPLY TO THE VACM

1. Turn the ignition switch to the **ACC** position. 2. Measure the voltage between TL68, pin 08 (YU) and GROUND.

- **Is the voltage less than 10 volts?**

-> Yes
REPAIR the circuit between the phone module and battery. This circuit includes the primary junction box (fuse 20) and the ignition switch. For additional information, refer to the wiring diagrams. TEST the system for normal operation.

-> No
GO to Pinpoint Test G239843t59.

www.JagDocs.com

G239843t59 : CHECK THE IGNITION SUPPLY TO THE VACM

1. Turn the ignition switch to the **ON** position. 2. Measure the voltage between TL68, pin 06 (WR) and GROUND.

- **Is the voltage less than 10 volts?**

-> Yes
REPAIR the circuit between the phone module and battery. This circuit includes the primary junction box (fuse 32) and the ignition switch. For additional information, refer to the wiring diagrams. TEST the system for normal operation.

-> No
GO to Pinpoint Test G239843t60.

G239843t60 : CHECK THE GROUND TO THE VACM

1. Measure the resistance between TL68, pin 11 (BK) and GROUND.

- **Is the resistance greater than 5 ohms?**

-> Yes
REPAIR the high resistance circuit. For additional information, refer to the wiring diagrams. TEST the system for normal operation.

-> No
CHECK for DTCs indicating a wake-up circuit or optical ring fault. REFER to the DTC index.

PINPOINT TEST G239843p10 : CHECK THE SUPPLIES AND GROUNDS TO THE REAR ENTERTAINMENT CONTROL PANEL

G239843t61 : CHECK THE PERMANENT SUPPLY TO THE REAR ENTERTAINMENT CONTROL PANEL

1. Disconnect the rear entertainment control panel electrical connector, TL20. 2. Measure the voltage between TL20, pin 08 (RW) and GROUND.

- **Is the voltage less than 10 volts?**

-> Yes
REPAIR the circuit between the rear entertainment control panel and battery. This circuit includes the primary junction box (fuse 30). For additional information, refer to the wiring diagrams. TEST the system for normal operation.

-> No
GO to Pinpoint Test G239843t62.

G239843t62 : CHECK THE GROUND TO THE REAR ENTERTAINMENT CONTROL PANEL

1. Measure the resistance between TL20, pin 10 (B) and GROUND.

- **Is the resistance greater than 5 ohms?**

-> Yes
REPAIR the high resistance circuit. For additional information, refer to the wiring diagrams. TEST the system for normal operation.

-> No
CHECK for DTCs indicating a wake-up circuit or optical ring fault. REFER to the DTC index.

PINPOINT TEST G239843p11 : CHECK THE SUPPLIES AND GROUNDS TO THE NAVIGATION SYSTEM MODULE

G239843t63 : CHECK THE PERMANENT SUPPLY TO THE NSM

1. Disconnect the NSM electrical connector, TL02. 2. Measure the voltage between TL02, pin 01 (R) and GROUND.

- **Is the voltage less than 10 volts?**

-> Yes
REPAIR the circuit between the NSM and battery. This circuit includes the primary junction box (fuse 51). For additional information, refer to the wiring diagrams. TEST the system for normal operation.

-> No
GO to Pinpoint Test G239843t64.

G239843t64 : CHECK THE ACCESSORY SUPPLY TO THE NSM

1. Turn the ignition switch to the **ACC** position. 2. Measure the voltage between TL02, pin 1 (R) and GROUND.

- **Is the voltage less than 10 volts?**

-> Yes
REPAIR the circuit between the phone module and battery. This circuit includes the primary junction

www.JagDocs.com

box (fuse 34) and the ignition switch. For additional information, refer to the wiring diagrams. TEST the system for normal operation.

-> No
GO to Pinpoint Test G239843t65.

G239843t65 : CHECK THE GROUND TO THE NSM

1. Measure the resistance between TL02, pin 02 (BK) and GROUND.

- **Is the resistance greater than 5 ohms?**

-> Yes
REPAIR the high resistance circuit. For additional information, refer to the wiring diagrams. TEST the system for normal operation.

-> No
CHECK for DTCs indicating a wake-up circuit or optical ring fault. REFER to the DTC index.

PINPOINT TEST G239843p12 : CHECK THE SUPPLIES AND GROUNDS TO THE ICE HEAD UNIT

G239843t66 : CHECK THE PERMANENT SUPPLY TO THE HU

1. Disconnect the HU electrical connector, CC08. 2. Measure the voltage between CC08, pin 11 (NW) and GROUND.

- **Is the voltage less than 10 volts?**

-> Yes
REPAIR the circuit between the NU and battery. This circuit includes the primary junction box (fuse 38). For additional information, refer to the wiring diagrams. TEST the system for normal operation.

-> No
GO to Pinpoint Test G239843t67.

G239843t67 : CHECK THE ACCESSORY SUPPLY TO THE HU

1. Turn the ignition switch to the **ACC** position. 2. Measure the voltage between CC08, pin 02 (YR) and GROUND.

- **Is the voltage less than 10 volts?**

-> Yes
REPAIR the circuit between the HU and battery. This circuit includes the primary junction box (fuse 11) and the ignition switch. For additional information, refer to the wiring diagrams. TEST the system for normal operation.

-> No
GO to Pinpoint Test G239843t68.

G239843t68 : CHECK THE GROUND TO THE HU

1. Measure the resistance between CC08, pin 01 (B) and GROUND.

- **Is the resistance greater than 5 ohms?**

-> Yes
REPAIR the high resistance circuit. For additional information, refer to the wiring diagrams. TEST the system for normal operation.

-> No
CHECK for DTCs indicating a network or module fault. REFER to the DTC index.

PINPOINT TEST G239843p13 : CHECK THE SUPPLIES AND GROUNDS TO THE FRONT ELECTRONIC MODULE

G239843t69 : CHECK THE PERMANENT SUPPLY TO THE FEM

1. Disconnect the FEM electrical connector, CR09. 2. Measure the voltage between CR09, pin 06 (NW) and GROUND.

- **Is the voltage less than 10 volts?**

-> Yes
REPAIR the circuit between the FEM and battery. This circuit includes the primary junction box (fuse 42). For additional information, refer to the wiring diagrams. TEST the system for normal operation.

-> No
GO to Pinpoint Test G239843t70.

www.JagDocs.com

G239843t70 : CHECK THE SWITCHED SYSTEM POWER (SSP) SUPPLY TO THE FEM

1. Reconnect the FEM electrical connector, CR09. 2. Disconnect the FEM electrical connector, CR01. 3. Make sure the SSP relay is energized. 4. Measure the voltage between CR01, pins 07 and 08 (NW) and GROUND.

- **Is the voltage less than 10 volts?**

-> Yes
REPAIR the circuit between the FEM and battery. This circuit includes the primary junction box (fuse 47) and the SSP relay. For additional information, refer to the wiring diagrams. TEST the system for normal operation.

-> No
GO to Pinpoint Test G239843t71.

G239843t71 : CHECK THE GROUND TO THE FEM

1. Reconnect the FEM electrical connector, CR01. 2. Disconnect the FEM electrical connector, CR10. 3. Measure the resistance between CR10, pins 11 and 13 (B) and GROUND.

- **Is the resistance greater than 5 ohms?**

-> Yes
REPAIR the high resistance circuit. For additional information, refer to the wiring diagrams. TEST the system for normal operation.

-> No
CHECK for DTCs indicating a network or module fault. REFER to the DTC index.

PINPOINT TEST G239843p14 : CHECK THE SUPPLIES AND GROUNDS TO THE REAR ELECTRONIC MODULE

G239843t72 : CHECK THE PERMANENT SUPPLY TO THE REM

1. Disconnect the REM electrical connector, CR04. 2. Measure the voltage between CR04, pin 03 (NW) and GROUND.

- **Is the voltage less than 10 volts?**

-> Yes
REPAIR the circuit between the REM and battery. This circuit includes the primary junction box (fuse 42). For additional information, refer to the wiring diagrams. TEST the system for normal operation.

-> No
GO to Pinpoint Test G239843t73.

G239843t73 : CHECK THE SWITCHED SYSTEM POWER (SSP) SUPPLY TO THE REM

1. Reconnect the REM electrical connector, CR04. 2. Disconnect the REM electrical connector, CR13. 3. Make sure the SSP relay is energized. 4. Measure the voltage between CR13, pin 06 (N) and GROUND.

- **Is the voltage less than 10 volts?**

-> Yes
REPAIR the circuit between the REM and battery. This circuit includes the primary junction box (fuse 13) and the SSP relay. For additional information, refer to the wiring diagrams. TEST the system for normal operation.

-> No
GO to Pinpoint Test G239843t74.

G239843t74 : CHECK THE GROUND TO THE REM

1. Reconnect the REM electrical connector, CR13. 2. Disconnect the REM electrical connector, CR11. 3. Measure the resistance between CR11, pins 11 and 25 (B) and GROUND.

- **Is the resistance greater than 5 ohms?**

-> Yes
REPAIR the high resistance circuit. For additional information, refer to the wiring diagrams. TEST the system for normal operation.

-> No
CHECK for DTCs indicating a network or module fault. REFER to the DTC index.

PINPOINT TEST G239843p15 : CHECK THE SUPPLIES AND GROUNDS TO THE REAR MEMORY MODULE (RMM)

G239843t75 : CHECK THE PERMANENT SUPPLY (1) TO THE REM

1. Disconnect the RMM electrical connector, CR41. 2. Measure the voltage between CR41, pin 06 (NR) and GROUND.

www.JagDocs.com

- **Is the voltage less than 10 volts?**

-> Yes
REPAIR the circuit between the RMM and battery. This circuit includes the rear power distribution box (fuse 21). For additional information, refer to the wiring diagrams. TEST the system for normal operation.

-> No
GO to Pinpoint Test G239843t76.

G239843t76 : CHECK THE PERMANENT SUPPLY (2) TO THE REM

1. Reconnect the RMM electrical connector, CR41. 2. Disconnect the RMM electrical connector, CR59. 3. Measure the voltage between CR59, pin 02 (NG) and GROUND.

- **Is the voltage less than 10 volts?**

-> Yes
REPAIR the circuit between the RMM and battery. This circuit includes the rear power distribution box (fuse 09). For additional information, refer to the wiring diagrams. TEST the system for normal operation.

-> No
GO to Pinpoint Test G239843t77.

G239843t77 : CHECK THE SWITCHED SYSTEM POWER (SSP) SUPPLY TO THE RMM

1. Reconnect the RMM electrical connector, CR59. 2. Disconnect the RMM electrical connector, CR37. 3. Make sure the SSP relay is energized. 4. Measure the voltage between CR37, pin 13 (NG) and GROUND.

- **Is the voltage less than 10 volts?**

-> Yes
REPAIR the circuit between the RMM and battery. This circuit includes the primary junction box (fuse 21) and the SSP relay. For additional information, refer to the wiring diagrams. TEST the system for normal operation.

-> No
GO to Pinpoint Test G239843t78.

G239843t78 : CHECK THE LOGIC GROUND TO THE RMM

1. Measure the resistance between CR37, pin 26 (BK) and GROUND.

- **Is the resistance greater than 5 ohms?**

-> Yes
REPAIR the high resistance circuit. For additional information, refer to the wiring diagrams. TEST the system for normal operation.

-> No
GO to Pinpoint Test G239843t79.

G239843t79 : CHECK THE MOTOR GROUNDS TO THE RMM

1. Reconnect the RMM electrical connector, CR37. 2. Disconnect the RMM electrical connector, CR59. 3. Disconnect the RMM electrical connector, CR41. 4. Measure the resistance between CR59, pin 01 (B) and GROUND. 5. Measure the resistance between CR41, pin 05 (B) and GROUND.

- **Is either resistance greater than 5 ohms?**

-> Yes
REPAIR the high resistance circuit. For additional information, refer to the wiring diagrams. TEST the system for normal operation.

-> No
CHECK for DTCs indicating a network or module fault. REFER to the DTC index.

PINPOINT TEST G239843p16 : CHECK THE SUPPLIES AND GROUNDS TO THE ELECTRONIC PARK BRAKE MODULE (EPB)

G239843t80 : CHECK THE PERMANENT SUPPLY TO THE EPB

1. Disconnect the EPB electrical connector, CR50. 2. Measure the voltage between CR50, pin 01 (NW) and GROUND.

- **Is the voltage less than 10 volts?**

-> Yes
REPAIR the circuit between the EPB and battery. This circuit includes the rear power distribution box (fuse 32). For additional information, refer to the wiring diagrams. TEST the system for normal operation.

-> No
GO to Pinpoint Test G239843t81.

www.JagDocs.com

G239843t81 : CHECK THE GROUND TO THE EPB

1. Measure the resistance between CR50, pin 04 (B) and GROUND.

- **Is the resistance greater than 5 ohms?**

-> Yes
REPAIR the high resistance circuit. For additional information, refer to the wiring diagrams. TEST the system for normal operation.

-> No
CHECK for DTCs indicating a network or module fault. REFER to the DTC index.

PINPOINT TEST G239843p17 : CHECK THE SUPPLIES AND GROUNDS TO THE DRIVER DOOR CONTROL MODULE (DDCM)

G239843t82 : CHECK THE PERMANENT SUPPLY TO THE DDCM

1. Disconnect the DDCM electrical connector, DD13. 2. Measure the voltage between DD13, pin 11 (NW) and GROUND.

- **Is the voltage less than 10 volts?**

-> Yes
REPAIR the circuit between the DDCM and battery. This circuit includes the primary junction box (fuse 42). For additional information, refer to the wiring diagrams. TEST the system for normal operation.

-> No
GO to Pinpoint Test G239843t83.

G239843t83 : CHECK THE SWITCHED SYSTEM POWER (SSP) SUPPLY TO THE DDCM

1. Make sure the SSP relay is energized. 2. Measure the voltage between DD13, pin 12 (N) and GROUND.

- **Is the voltage less than 10 volts?**

-> Yes
REPAIR the circuit between the RMM and battery. This circuit includes the primary junction box (fuse 28) and the SSP relay. For additional information, refer to the wiring diagrams. TEST the system for normal operation.

-> No
CHECK for DTCs indicating a network or module fault. REFER to the DTC index.

PINPOINT TEST G239843p18 : CHECK THE SUPPLIES AND GROUNDS TO THE DRIVER SEAT CONTROL MODULE (DSCM)

G239843t84 : CHECK THE PERMANENT SUPPLY (1) TO THE DSCM

1. Disconnect the DSCM electrical connector, SD03. 2. Measure the voltage between SD03, pin 06 (NR) and GROUND.

- **Is the voltage less than 10 volts?**

-> Yes
REPAIR the circuit between the DSCM and battery. This circuit includes the primary junction box (fuse 49). For additional information, refer to the wiring diagrams. TEST the system for normal operation.

-> No
GO to Pinpoint Test G239843t85.

G239843t85 : CHECK THE PERMANENT SUPPLY (2) TO THE DSCM

1. Reconnect the DSCM electrical connector, SD03. 2. Disconnect the DSCM electrical connector, SD27. 3. Measure the voltage between SD27, pin 02 (NG) and GROUND.

- **Is the voltage less than 10 volts?**

-> Yes
REPAIR the circuit between the DSCM and battery. This circuit includes the primary junction box (fuse 49). For additional information, refer to the wiring diagrams. TEST the system for normal operation.

-> No
GO to Pinpoint Test G239843t86.

G239843t86 : CHECK THE SWITCHED SYSTEM POWER (SSP) SUPPLY TO THE DSCM

1. Reconnect the DSCM electrical connector, SD27. 2. Disconnect the DSCM electrical connector, SD04. 3. Make sure the SSP relay is energized. 4. Measure the voltage between SD04, pin 13 (NG) and GROUND.

www.JagDocs.com

- **Is the voltage less than 10 volts?**

-> Yes
REPAIR the circuit between the RMM and battery. This circuit includes the primary junction box (fuse 28) and the SSP relay. For additional information, refer to the wiring diagrams. TEST the system for normal operation.

-> No
CHECK for DTCs indicating a network or module fault. REFER to the DTC index.

PINPOINT TEST G239843p19 : CHECK THE SUPPLIES AND GROUNDS TO THE ENGINE CONTROL MODULE (ECM)

G239843t87 : CHECK THE PERMANENT SUPPLY TO THE ECM

1. Disconnect the ECM electrical connector, PI01. 2. Measure the voltage between PI01, pin 22 (NR) and GROUND.

- **Is either voltage less than 10 volts?**

-> Yes
REPAIR the circuit between the ECM and battery. This circuit includes the front power distribution box (fuse 17). For additional information, refer to the wiring diagrams. TEST the system for normal operation.

-> No
GO to Pinpoint Test G239843t88.

G239843t88 : CHECK THE EMS SUPPLY TO THE ECM

1. Turn the ignition switch to the **ON** position. 2. Make sure the EMS relay is energized. 3. Measure the voltage between PI01, pins 23 and 24 (WG) and GROUND.

- **Is the voltage less than 10 volts?**

-> Yes
REPAIR the circuit between the ECM and battery. This circuit includes the front power distribution box (fuse 12) and the EMS relay. For additional information, refer to the wiring diagrams. TEST the system for normal operation.

-> No
GO to Pinpoint Test G239843t89.

G239843t89 : CHECK THE POWER GROUND TO THE ECM

1. Measure the resistance between PI01, pin 04 (B) and GROUND.

- **Is the resistance greater than 5 ohms?**

-> Yes

REPAIR the high resistance circuit. For additional information, refer to the wiring diagrams. TEST the system for normal operation.

-> No

CHECK for DTCs indicating a network or module fault. REFER to the DTC index.

PINPOINT TEST G239843p20 : CHECK THE SUPPLIES AND GROUNDS TO THE PARKING AID CONTROL MODULE (PACM)

G239843t90 : CHECK THE IGNITION SUPPLY TO THE PACM

1. Disconnect the PACM electrical connector, CR52. 2. Turn the ignition switch to the **ON** position. 3. Measure the voltage between CR52, pin 01 (WR) and GROUND.

- **Is the voltage less than 10 volts?**

-> Yes

REPAIR the circuit between the PACM and battery. This circuit includes the primary junction box (fuse 32) and the ignition relay. For additional information, refer to the wiring diagrams. TEST the system for normal operation.

-> No

GO to Pinpoint Test G239843t91.

G239843t91 : CHECK THE GROUND TO THE PACM

1. Measure the resistance between CR52, pin 03 (B) and GROUND.

- **Is the resistance greater than 5 ohms?**

-> Yes

REPAIR the high resistance circuit. For additional information, refer to the wiring diagrams. TEST the system for normal operation.

-> No

CHECK for DTCs indicating a network or module fault. REFER to the DTC index.

www.JagDocs.com

PINPOINT TEST G239843p21 : CHECK THE SUPPLIES AND GROUNDS TO THE INTRUSION SENSOR

G239843t92 : CHECK THE POWER SUPPLY TO THE INTRUSION SENSOR

1. Disconnect the intrusion sensor electrical connector, RF03. 2. **ARM** the security system. 3. Measure the voltage between RF03, pin 06, (YU) and GROUND.

- **Is the voltage less than 5 volts?**

-> Yes
REPAIR the circuit between the intrusion sensor and battery. This circuit includes the REM. For additional information, refer to the wiring diagrams. TEST the system for normal operation.

-> No
GO to Pinpoint Test G239843t93.

G239843t93 : CHECK THE GROUND TO THE INTRUSION SENSOR

1. Measure the resistance between RF03, pin 01 (B) and GROUND.

- **Is the resistance greater than 5 ohms?**

-> Yes
REPAIR the high resistance circuit. For additional information, refer to the wiring diagrams. TEST the system for normal operation.

-> No
CHECK for DTCs indicating a network or module fault. REFER to the DTC index.

PINPOINT TEST G239843p22 : CHECK THE SUPPLIES AND GROUNDS TO THE RESTRAINTS CONTROL MODULE (RCM)

G239843t94 : CHECK THE PERMANENT SUPPLY TO THE RCM

1. Disconnect the RCM electrical connector, CR86. 2. Measure the voltage between CR86, pin 12, (WU) and GROUND.

- **Is the voltage less than 10 volts?**

-> Yes
REPAIR the circuit between the RCM and battery. This circuit includes the primary junction box (fuse 29). For additional information, refer to the wiring diagrams. TEST the system for normal operation.

-> No
GO to Pinpoint Test G239843t95.

G239843t95 : CHECK THE GROUND TO THE RCM

1. Measure the resistance between CR86, pin 16 (B) and GROUND.

- **Is the resistance greater than 5 ohms?**

-> Yes
REPAIR the high resistance circuit. For additional information, refer to the wiring diagrams. TEST the system for normal operation.

-> No
CHECK for DTCs indicating a network or module fault. REFER to the DTC index.

PINPOINT TEST G239843p23 : CHECK THE SUPPLIES AND GROUNDS TO THE INSTRUMENT CLUSTER (IC)

G239843t96 : CHECK THE PERMANENT SUPPLY TO THE IC

1. Disconnect the IC electrical connector, IP06. 2. Measure the voltage between IP06, pin 03, (O) and GROUND.

- **Is the voltage less than 10 volts?**

-> Yes
REPAIR the circuit between the IC and battery. This circuit includes the primary junction box (fuse 47). For additional information, refer to the wiring diagrams. TEST the system for normal operation.

-> No
GO to Pinpoint Test G239843t97.

G239843t97 : CHECK THE ACCESSORY SUPPLY TO THE IC

1. Reconnect the IC electrical connector, IP06. 2. Disconnect the IC electrical connector, IP05. 3. Turn the ignition switch to the **ACC** position. 4. Measure the voltage between IP05, pin 04, (YG) and GROUND.

- **Is the voltage less than 10 volts?**

www.JagDocs.com

-> Yes
REPAIR the circuit between the IC and battery. This circuit includes the primary junction box (fuse 08) and the ignition switch. For additional information, refer to the wiring diagrams. TEST the system for normal operation.

-> No
GO to Pinpoint Test G239843t98.

G239843t98 : CHECK THE IGNITION SUPPLY (1) TO THE IC

1. Turn the ignition switch to the **ON** position. 2. Measure the voltage between IP05, pin 03, (GR) and GROUND.

- **Is the voltage less than 10 volts?**

-> Yes
REPAIR the circuit between the IC and battery. This circuit includes the primary junction box (fuse 06) and the ignition switch. For additional information, refer to the wiring diagrams. TEST the system for normal operation.

-> No
GO to Pinpoint Test G239843t99.

G239843t99 : CHECK THE IGNITION SUPPLY (2) TO THE IC

1. Turn the ignition switch to the **OFF** position. 2. Reconnect the IC electrical connector, IP05. 3. Disconnect the IC electrical connector, IP06. 4. Turn the ignition switch to the **ON** position. 5. Measure the voltage between IP06, pin 17, (WB) and GROUND.

- **Is the voltage less than 10 volts?**

-> Yes
REPAIR the circuit between the IC and battery. This circuit includes the primary junction box (fuse 06) and the ignition switch. For additional information, refer to the wiring diagrams. TEST the system for normal operation.

-> No
GO to Pinpoint Test G239843t100.

G239843t100 : CHECK THE GROUND TO THE IC

1. Turn the ignition switch to the **OFF** position. 2. Reconnect the IC electrical connector, IP06. 3. Disconnect the IC electrical connector, IP05. 4. Measure the resistance between IP05, pin 14 (B) and GROUND.

- **Is the resistance greater than 5 ohms?**

-> Yes
REPAIR the high resistance circuit. For additional information, refer to the wiring diagrams. TEST the system for normal operation.

-> No
CHECK for DTCs indicating a network or module fault. REFER to the DTC index.

PINPOINT TEST G239843p31 : CHECK THE SUPPLIES AND GROUNDS TO THE J-GATE MODULE (JGM)

G239843t101 : CHECK THE IGNITION SUPPLY TO THE JGM

1. Disconnect the JGM electrical connector, IP32. 2. Measure the voltage between IP32, pin 01 (GO) and GROUND.

- **Is the voltage less than 10 volts?**

-> Yes
REPAIR the circuit between the JGM and battery. This circuit includes the primary junction box (fuse 33) and the ignition switch. For additional information, refer to the wiring diagrams. TEST the system for normal operation.

-> No
GO to Pinpoint Test G239843t102.

G239843t102 : CHECK THE GROUND TO THE JGM

1. Measure the resistance between IP32, pin 02 (B) and GROUND.

- **Is the resistance greater than 5 ohms?**

-> Yes
REPAIR the high resistance circuit. For additional information, refer to the wiring diagrams. TEST the system for normal operation.

-> No
CHECK for DTCs indicating a network or module fault. REFER to the DTC index.

PINPOINT TEST G239843p32 : CHECK THE SUPPLIES AND GROUNDS TO THE

www.JagDocs.com

AIR CONDITIONING CONTROL MODULE (A/CCM)

G239843t103 : CHECK THE IGNITION SUPPLY TO THE A/CCM

1. Disconnect the A/CCM electrical connector, CR119. 2. Turn the ignition switch to the **ON** position. 3. Measure the voltage between CR119, pin 03 (WG) and GROUND.

- **Is the voltage less than 10 volts?**

-> Yes
REPAIR the circuit between the A/CCM and battery. This circuit includes the primary junction box (fuse 01) and the ignition switch. For additional information, refer to the wiring diagrams. TEST the system for normal operation.

-> No
GO to Pinpoint Test G239843t104.

G239843t104 : CHECK THE SWITCHED SYSTEM POWER (SSP) SUPPLY TO THE A/CCM

1. Make sure the SSP relay is energized. 2. Measure the voltage between CR119, pin 02 (N) and GROUND.

- **Is the voltage less than 10 volts?**

-> Yes
REPAIR the circuit between the A/CCM and battery. This circuit includes the primary junction box (fuse 28). For additional information, refer to the wiring diagrams. TEST the system for normal operation.

-> No
GO to Pinpoint Test G239843t105.

G239843t105 : CHECK THE SYSTEM GROUND TO THE A/CCM

1. Measure the resistance between CR119, pin 22 (B) and GROUND.

- **Is the resistance greater than 5 ohms?**

-> Yes
REPAIR the high resistance circuit. For additional information, refer to the wiring diagrams. TEST the system for normal operation.

-> No
CHECK for DTCs indicating a network or module fault. REFER to the DTC index.

PINPOINT TEST G239843p33 : CHECK THE SUPPLIES AND GROUNDS TO THE DYNAMIC STABILITY CONTROL MODULE (DSCCM)

G239843t106 : CHECK THE PERMANENT SUPPLIES TO THE DSCCM

1. Disconnect the DSCCM electrical connector, EC30. 2. Measure the voltage between EC30, pins 01 (NR) and 32 (NW) and GROUND.

- **Is the voltage less than 10 volts?**

-> Yes
REPAIR the circuit between the DSCCM and battery. This circuit includes the front power distribution box (fuses 20 and 22). For additional information, refer to the wiring diagrams. TEST the system for normal operation.

-> No
GO to Pinpoint Test G239843t107.

G239843t107 : CHECK THE IGNITION SUPPLY TO THE DSCCM

1. Turn the ignition switch to the **ON** position. 2. Measure the voltage between EC30, pins 04 (W) and GROUND.

- **Is the voltage less than 10 volts?**

-> Yes
REPAIR the circuit between the DSCCM and battery. This circuit includes the primary junction box (fuse 17) and the ignition switch. For additional information, refer to the wiring diagrams. TEST the system for normal operation.

-> No
CHECK for DTCs indicating a network or module fault. REFER to the DTC index.

PINPOINT TEST G239843p34 : CHECK THE SUPPLIES AND GROUNDS TO THE

www.JagDocs.com

TRANSMISSION CONTROL MODULE (TCM)

G239843t108 : CHECK THE PERMANENT SUPPLY TO THE TCM

1. Disconnect the TCM electrical connector, GB02. 2. Measure the voltage between GB02, pin 14 (NR) and GROUND.

- **Is the voltage less than 10 volts?**

-> Yes
REPAIR the circuit between the TCM and battery. This circuit includes the front power distribution box (fuse 17). For additional information, refer to the wiring diagrams. TEST the system for normal operation.

-> No
GO to Pinpoint Test G239843t109.

G239843t109 : CHECK THE IGNITION SUPPLY TO THE TCM

1. Turn the ignition switch to the **ON** position. 2. Measure the voltage between GB02, pin 09 (GO) and GROUND.

- **Is the voltage less than 10 volts?**

-> Yes
REPAIR the circuit between the TCM and battery. This circuit includes the primary junction box (fuse 33) and the ignition switch. For additional information, refer to the wiring diagrams. TEST the system for normal operation.

-> No
GO to Pinpoint Test G239843t110.

G239843t110 : CHECK THE GROUND TO THE TCM

1. Measure the resistance between GB02, pins 13 and 16 (B) and GROUND.

- **Is the resistance greater than 5 ohms?**

-> Yes
REPAIR the high resistance circuit. For additional information, refer to the wiring diagrams. TEST the system for normal operation.

-> No
CHECK for DTCs indicating a network or module fault. REFER to the DTC index.

PINPOINT TEST G239843p35 : CHECK THE SUPPLIES AND GROUNDS TO THE ADAPTIVE SPEED CONTROL MODULE (ASCCM)

G239843t111 : CHECK THE IGNITION SUPPLY TO THE ASCCM

1. Disconnect the ASCCM electrical connector, EC23. 2. Turn the ignition switch to the **ON** position. 3. Measure the voltage between EC23, pin 07 (WU) and GROUND.

- **Is the voltage less than 10 volts?**

-> Yes
REPAIR the circuit between the ASCCM and battery. This circuit includes the primary junction box (fuse 02) and the ignition switch. For additional information, refer to the wiring diagrams. TEST the system for normal operation.

-> No
GO to Pinpoint Test G239843t112.

G239843t112 : CHECK THE SWITCHED SYSTEM POWER (SSP) SUPPLY TO THE ASCCM

1. Make sure the SSP relay is energized. 2. Measure the voltage between EC23, pin 01 (NW) and GROUND.

- **Is the voltage less than 10 volts?**

-> Yes
REPAIR the circuit between the ASCCM and battery. This circuit includes the primary junction box (fuse 27) and the SSP relay. For additional information, refer to the wiring diagrams. TEST the system for normal operation.

-> No
GO to Pinpoint Test G239843t113.

G239843t113 : CHECK THE GROUND TO THE ASCCM

1. Measure the resistance between EC23, pin 02 (B) and GROUND.

- **Is the resistance greater than 5 ohms?**

-> Yes
REPAIR the high resistance circuit. For additional information, refer to the wiring diagrams. TEST the

www.JagDocs.com

system for normal operation.

-> No
CHECK for DTCs indicating a network or module fault. REFER to the DTC index.

PINPOINT TEST G239843p36 : CHECK THE SUPPLIES AND GROUNDS TO THE AIR SUSPENSION CONTROL MODULE (ASU)

G239843t114 : CHECK THE PERMANENT SUPPLY TO THE ASU

1. Disconnect the ASU electrical connector, CR88. 2. Measure the voltage between CR88, pin 01 (NW) and GROUND.

- **Is the voltage less than 10 volts?**

-> Yes
REPAIR the circuit between the ASU and battery. This circuit includes the rear power distribution box (fuse 52). For additional information, refer to the wiring diagrams. TEST the system for normal operation.

-> No
GO to Pinpoint Test G239843t115.

G239843t115 : CHECK THE SWITCHED SYSTEM POWER (SSP) SUPPLY TO THE ASU

1. Make sure the SSP relay is energized. 2. Measure the voltage between CR88, pin 02 (N) and GROUND.

- **Is the voltage less than 10 volts?**

-> Yes
REPAIR the circuit between the ASU and battery. This circuit includes the rear power distribution box (fuse 12) and the SSP relay. For additional information, refer to the wiring diagrams. TEST the system for normal operation.

-> No
GO to Pinpoint Test G239843t116.

G239843t116 : CHECK THE GROUND TO THE ASU

1. Measure the resistance between CR88, pin 03 (B) and GROUND.

- **Is the resistance greater than 5 ohms?**

-> Yes
REPAIR the high resistance circuit. For additional information, refer to the wiring diagrams. TEST the system for normal operation.

-> No
CHECK for DTCs indicating a network or module fault. REFER to the DTC index.

PINPOINT TEST G239843p37 : U2022; CONTROL PANEL COMMUNICATIONS ERROR

G239843t117 : CHECK THE CONTROL PANEL CLOCK CIRCUIT FOR HIGH RESISTANCE

1. Disconnect the battery negative terminal. 2. Disconnect the control panel electrical connector, CC20. 3. Disconnect the A/CCM electrical connector, AC101 4. Measure the resistance between CC20, pin 07 (G) and AC101, pin 02 (G).

- **Is the resistance greater than 5 ohms?**

-> Yes
REPAIR the high resistance circuit. For additional information, refer to the wiring diagrams. CLEAR the DTC. TEST the system for normal operation.

-> No
GO to Pinpoint Test G239843t118.

G239843t118 : CHECK THE CONTROL PANEL CLOCK CIRCUIT FOR SHORT TO GROUND

1. Reconnect the battery negative terminal. 2. Measure the resistance between CC20, pin 07 (G) and GROUND.

- **Is the resistance less than 10,000 ohms?**

-> Yes
REPAIR the short circuit. For additional information, refer to the wiring diagrams. CLEAR the DTC. TEST the system for normal operation.

-> No
GO to Pinpoint Test G239843t119.

www.JagDocs.com

G239843t119 : CHECK THE CONTROL PANEL CLOCK CIRCUIT FOR SHORT TO B+

1. Measure the voltage between CC20, pin 07 (G) and GROUND.

- **Is the voltage greater than 3 volts?**

-> Yes
REPAIR the short circuit. For additional information, refer to the wiring diagrams. CLEAR the DTC. TEST the system for normal operation.

-> No
GO to Pinpoint Test G239843t120.

G239843t120 : CHECK THE CONTROL PANEL DATA CIRCUIT FOR HIGH RESISTANCE

1. Measure the resistance between CC20, pin 02 (RU) and AC101, pin 16 (RU).

- **Is the resistance greater than 5 ohms?**

-> Yes
REPAIR the high resistance circuit. For additional information, refer to the wiring diagrams. CLEAR the DTC. TEST the system for normal operation.

-> No
GO to Pinpoint Test G239843t121.

G239843t121 : CHECK THE CONTROL PANEL DATA CIRCUIT FOR SHORT TO GROUND

1. Measure the resistance between CC20, pin 02 (RU) and GROUND.

- **Is the resistance less than 10,000 ohms?**

-> Yes
REPAIR the short circuit. For additional information, refer to the wiring diagrams. CLEAR the DTC. TEST the system for normal operation.

-> No
GO to Pinpoint Test G239843t122.

G239843t122 : CHECK THE CONTROL PANEL DATA CIRCUIT FOR SHORT TO B+

1. Measure the voltage between CC20, pin 02 (RU) and GROUND.

- **Is the voltage greater than 3 volts?**

-> Yes
REPAIR the short circuit. For additional information, refer to the wiring diagrams. CLEAR the DTC. TEST the system for normal operation.

-> No
INSTALL a new control panel. <<412-02>> CLEAR the DTC. TEST the system for normal operation. If the DTC is repeated, contact dealer technical support for advice on possible control module failure.

www.JagDocs.com

418-01 : Module Configuration

Diagnosis and testing

Module Configuration

Principles of Operation

Module Configuration

There are two modes of configuration data. The first type requires configuration information so that the module can interact with the vehicle correctly. This information will be transferred to the new module using the Jaguar Approved Diagnostic System, so that it will contain the same settings as the old module.

Modules which require configuration when installing a replacement module are:

- Engine control module (ECM)
- Transmission control module (TCM)
- Audio unit
- Drivers door module (DDM)
- Rear electronic module (REM)
- Front electronic module (FEM)
- Amplifier
- Intrusion sensor module
- Multifunction voice activated control module
- Headlamp levelling module (ADHLS)
- Electronic park brake (EPB) module
- Instrument cluster and message centre
- Climate control module

Customer Driven Preferences

The second type of configuration data is customer preference driven. These are items that the customer may or may not want to have enabled. Typically, customer preference items can be toggled on or off by the use of a compatible scan tool. You may need to ask the customer which preferences they had enabled prior to installation of the new module, although after installation they will automatically learn the settings by receiving information from existing modules.

To carry out the customer configuration process, use the Jaguar Approved Diagnostic System. Refer to the Dealer Options Index for modules on the vehicle that have customer preference items. Configure the items as needed.

Modules which can be configured with dealer options are:

- The FEM.
- The instrument cluster and message centre.
- TCM (market configuration).
- ECM (market configuration).
- Intrusion sensor module.
- Multifunction voice activated control module (market configuration).
- Audio unit (market configuration

www.JagDocs.com

www.JagDocs.com

419 : Electronic Feature Group

419-01A : Anti-Theft - Active

Description and operation

Anti-Theft - Active

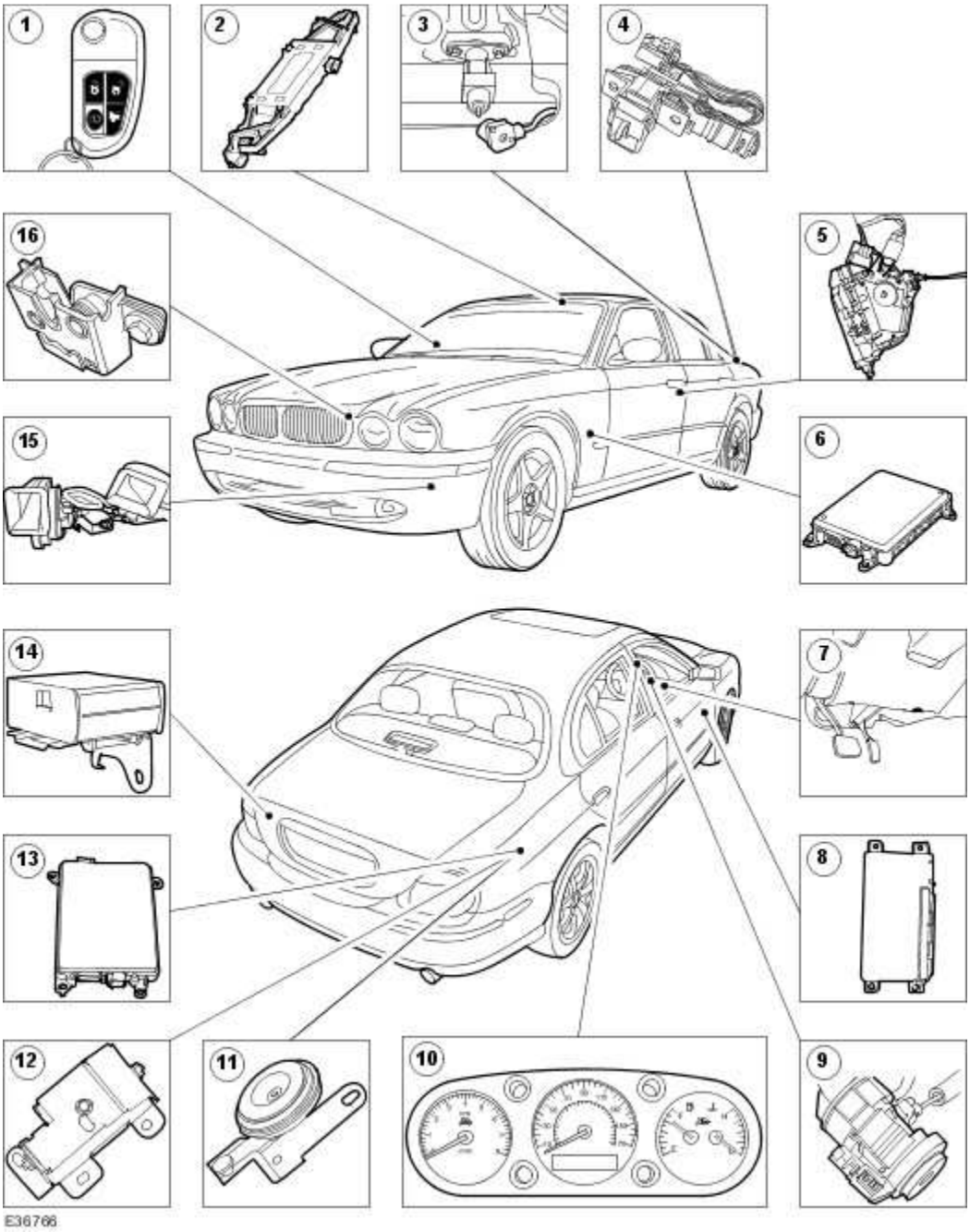

Item	Part Number	Description
1	—	Four button transmitter
2	—	Ultrasonic sensor
3	—	Luggage compartment key-in sensor
4	—	Luggage compartment actuator
5	—	Door actuator
6	—	Front electronic module (FEM)
7	—	Diagnostic connector
8	—	Driver door module (DDM)
9	—	Transceiver module
10	—	Instrument cluster
11	—	Anti theft alarm horn
12	—	Anti theft alarm horn (battery back-up)
13	—	Rear electronics module (REM)
14	—	Inclination sensor
15	—	Vehicle horn
16	—	Hood switch

The anti-theft system provides protection from unauthorized entry into the vehicle. The security system functions are controlled by the rear electronic module (REM), driver door module (DDM), front electronic module (FEM), and the instrument cluster (IC). When the alarm is triggered the system flashes the directional indicators, or turns on the front and rear lamps or flashes the front and rear lamps or a combination of front and rear lamps with directional indicators and can also sound the alarm system horns, siren or a combination of both, all are Market dependant.

The base perimeter alarm consists of four doors, hood and luggage compartment ajar switches, radio sense, key sense, vehicle horn and separate anti-theft alarm horn (rest of the world (ROW)) or anti-theft alarm horn (battery backed - UK, Holland, France, Belgium, Luxemburg, Israel, Ireland and Malta), visual feedback from direction indicators on arm, disarm, alarm and error states (note visual

www.JagDocs.com

feedback for error states is only a dealer programmable feature - standard configuration is an audible error state indicator enabled, and full alarm activation can also be from front and rear lamps), security light emitting diode (LED) located in the instrument panel. Audible feedback is provided for error state, full alarm, arming, disarming and double locking - all of these above feedbacks are market dependant. Higher levels of alarm can be added for specific market requirements - ultrasonic scanning sensors located in the overhead console, inclination sensor (Dealer fit option only) located in the luggage compartment, anti-theft alarm horn (battery backed) located in the right hand side rear wheel arch near to the fuel filler neck.

Security System Arming

The system will be activated by the keyless entry remote transmitter when the following input sequence is followed:

1 . Turn the ignition off and remove the key.

2 . Close all the doors (unlocked).

3 . Press the LOCK button on the transmitter to lock the doors. The directional indicators will flash once plus in some markets an audible warning will also be emitted.

4 . Press the LOCK button twice the vehicle will double lock (if enabled). The directional indicators will provide a longer flash plus an audible warning is emitted to indicate double locking action has occurred. In USA, Canada, Mexico and Dominican Republic a second press audible warning can be enabled, therefore if you press the four button transmitter lock button twice, then an audible warning will be emitted.

5 . If the directional indicators do not flash, the system is not activated. (If a door is open, luggage compartment and hood is ajar or a key is in the ignition, the remote lock function will be inhibited and two audible error sounds will be emitted, however the dealer has the option to enable the direction indicators, which will flash five times).

The system will also be activated when the following input sequence is followed:

6 . Turn the ignition off and remove the ignition key.

7 . Close all the doors (unlocked).

8 . Lock all the doors via the driver door key barrel with the ignition key, direction indicators will flash once. To double lock, activate the drivers door key barrel to the unlock then lock position within three seconds with the ignition key. The vehicle will double lock (if enabled). The directional indicators will provide a longer flash plus an audible warning is emitted to indicate that double locking action has occurred.

9 . If the directional indicators do not flash, the system is not activated.

10 . If two consecutive audible sounds with a 200ms pause period between them is emitted, then either a door, luggage compartment or hood is open or the ignition key is in the ignition barrel. Dealer option is, if the directional indicators flash five times either the door, hood or luggage compartment lid is open or the ignition key is in the ignition barrel.

Opening any of the doors, luggage compartment or hood will activate full alarm immediately in Europe and in North America there will be a seven second audible warning followed by activating full alarm immediately, providing the alarm has been activated.

Disarming an Untriggered Alarm System

Carrying out either of the following steps will deactivate an untriggered alarm system.

11 . Unlock the drivers door with a key (USA, Canada, Mexico, Dominican republic, ROW). The directional indicators will flash twice and two audible disarm warnings will be emitted (warnings are market dependant). If however a fault exists on the intrusion sensor or inclination sensor, then the system will disarm in one of a number of ways, depending upon the market configuration:

- USA, Canada, Mexico, Dominican republic, ROW only, the disarm warnings are: three direction indicator flashes with two audible tones on the first two flashes followed by the third direction indicator flash with two error tones. three direction indicator flashes with two audible error tones on the third direction indicator flash. seven direction indicator flashes. seven direction indicator flashes with two audible error tones. seven direction indicator flashes with two audible tones followed by two audible error tones.
    - three direction indicator flashes with two audible tones on the first two flashes followed by the third direction indicator flash with two error tones.
    - three direction indicator flashes with two audible error tones on the third direction indicator flash.
    - seven direction indicator flashes.
    - seven direction indicator flashes with two audible error tones.
    - seven direction indicator flashes with two audible tones followed by two audible error tones.

- EURO with error options are: three direction indicator flashes with two audible error tones on the third direction indicator flash. seven direction indicator flashes. seven direction indicator flashes with two audible error tones.
    - three direction indicator flashes with two audible error tones on the third direction indicator flash.
    - seven direction indicator flashes.
    - seven direction indicator flashes with two audible error tones.

12 . Press the UNLOCK button on the keyless entry remote transmitter. The directional indicators will flash twice and two audible disarm warnings will be emitted (warnings are market dependant). If however a fault exists on the intrusion sensor or inclination sensor, then the system will disarm in one of a number of ways, depending upon the market configuration:

- USA, Canada, Mexico, Dominican republic, ROW only, the disarm warnings are: three direction indicator flashes with two audible tones on the first two flashes followed by the third direction indicator flash with two error tones. three direction indicator flashes with two audible error tones on the third direction indicator flash. seven direction indicator flashes.

www.JagDocs.com

seven direction indicator flashes with two audible error tones. seven direction indicator flashes with two audible tones followed by two audible error tones.

- three direction indicator flashes with two audible tones on the first two flashes followed by the third direction indicator flash with two error tones.
- three direction indicator flashes with two audible error tones on the third direction indicator flash.
- seven direction indicator flashes.
- seven direction indicator flashes with two audible error tones.
- seven direction indicator flashes with two audible tones followed by two audible error tones.

- EURO with error options are: three direction indicator flashes with two audible error tones on the third direction indicator flash. seven direction indicator flashes. seven direction indicator flashes with two audible error tones.
    - three direction indicator flashes with two audible error tones on the third direction indicator flash.
    - seven direction indicator flashes.
    - seven direction indicator flashes with two audible error tones.

13 . If unlocked from the drivers door when the key barrel disarm is disabled (EURO) and the key is fitted in the ignition switch within 7 seconds from the door being opened, if the vehicle has been actively armed. The directional indicators will flash twice and two audible disarm warnings will be emitted (warnings are market dependant). If however a fault exists on the intrusion sensor or inclination sensor, then the system will disarm in one of a number of ways, depending upon the market configuration:

- USA, Canada, Mexico, Dominican republic, ROW only, the disarm warnings are: three direction indicator flashes with two audible tones on the first two flashes followed by the third direction indicator flash with two error tones. three direction indicator flashes with two audible error tones on the third direction indicator flash. seven direction indicator flashes. seven direction indicator flashes with two audible error tones. seven direction indicator flashes with two audible tones followed by two audible error tones.
    - three direction indicator flashes with two audible tones on the first two flashes followed by the third direction indicator flash with two error tones.
    - three direction indicator flashes with two audible error tones on the third direction indicator flash.
    - seven direction indicator flashes.
    - seven direction indicator flashes with two audible error tones.
    - seven direction indicator flashes with two audible tones followed by two audible error tones.

- EURO with error options are: three direction indicator flashes with two audible error tones on the third direction indicator flash. seven direction indicator flashes. seven direction indicator flashes with two audible error tones.
    - three direction indicator flashes with two audible error tones on the third direction indicator flash.
    - seven direction indicator flashes.
    - seven direction indicator flashes with two audible error tones.

14 . If unlocked from the drivers door when the key barrel disarm is disabled (EURO) and the key is fitted in the ignition switch within 7 seconds from the door being opened, if the vehicle has been passively armed. The directional indicators will flash twice and two audible disarm warnings will be emitted (warnings are market dependant). If however a fault exists on the intrusion sensor or inclination sensor, then the system will disarm in one of a number of ways, depending upon the market configuration:

- USA, Canada, Mexico, Dominican republic, ROW only, the disarm warnings are: three direction indicator flashes with two audible tones on the first two flashes followed by the third direction indicator flash with two error tones. three direction indicator flashes with two audible error tones on the third direction indicator flash. seven direction indicator flashes. seven direction indicator flashes with two audible error tones. seven direction indicator flashes with two audible tones followed by two audible error tones.
    - three direction indicator flashes with two audible tones on the first two flashes followed by the third direction indicator flash with two error tones.
    - three direction indicator flashes with two audible error tones on the third direction indicator flash.
    - seven direction indicator flashes.
    - seven direction indicator flashes with two audible error tones.
    - seven direction indicator flashes with two audible tones followed by two audible error tones.

- EURO with error options are: three direction indicator flashes with two audible error tones on the third direction indicator flash. seven direction indicator flashes. seven direction indicator flashes with two audible error tones.
    - three direction indicator flashes with two audible error tones on the third direction indicator flash.
    - seven direction indicator flashes.
    - seven direction indicator flashes with two audible error tones.

15 . If 2-stage unlocking is enabled, then when you press the remote key head unlock button once, this will unlock the drivers door only. The directional indicators will flash twice and two audible disarm warnings will be emitted (warnings are market dependant). By pressing the remote key head unlock button again the remainder of the doors will be unlocked and no additional warnings will be given. If however a fault exists on the intrusion sensor or inclination sensor, then the system will disarm in one of a number of ways, depending upon the market configuration:

- USA, Canada, Mexico, Dominican republic, ROW only, the disarm warnings are: three direction indicator flashes with two audible tones on the first two flashes followed by the third direction indicator flash with two error tones. three direction indicator flashes with two audible error tones on the third direction indicator flash. seven direction indicator flashes. seven direction indicator flashes with two audible error tones. seven direction indicator flashes with two audible tones followed by two audible error tones.
    - three direction indicator flashes with two audible tones on the first two flashes followed by the third direction indicator flash with two error tones.
    - three direction indicator flashes with two audible error tones on the third direction indicator flash.
    - seven direction indicator flashes.
    - seven direction indicator flashes with two audible error tones.

www.JagDocs.com

    - seven direction indicator flashes with two audible tones followed by two audible error tones.

- EURO with error options are: three direction indicator flashes with two audible error tones on the third direction indicator flash. seven direction indicator flashes. seven direction indicator flashes with two audible error tones.
    - three direction indicator flashes with two audible error tones on the third direction indicator flash.
    - seven direction indicator flashes.
    - seven direction indicator flashes with two audible error tones.

16 . If 2-stage unlocking is enabled then when you turn the key in the drivers door key barrel to the unlock position, this will unlock the drivers door only (USA, Canada, Mexico, Dominican republic, ROW). The directional indicators will flash twice and two audible disarm warnings will be emitted (warnings are market dependant). If however, a fault exists on the intrusion sensor or inclination sensor, then the system will disarm in one of a number of ways, depending upon the market configuration:

- USA, Canada, Mexico, Dominican republic, ROW only, the disarm warnings are: three direction indicator flashes with two audible tones on the first two flashes followed by the third direction indicator flash with two error tones. three direction indicator flashes with two audible error tones on the third direction indicator flash. seven direction indicator flashes. seven direction indicator flashes with two audible error tones. seven direction indicator flashes with two audible tones followed by two audible error tones.
    - three direction indicator flashes with two audible tones on the first two flashes followed by the third direction indicator flash with two error tones.
    - three direction indicator flashes with two audible error tones on the third direction indicator flash.
    - seven direction indicator flashes.
    - seven direction indicator flashes with two audible error tones.
    - seven direction indicator flashes with two audible tones followed by two audible error tones.

- EURO with error options are: three direction indicator flashes with two audible error tones on the third direction indicator flash. seven direction indicator flashes. seven direction indicator flashes with two audible error tones. Turning the drivers door key barrel to the unlock position again will unlock the remainder of the doors. No additional warnings will be given.
    - three direction indicator flashes with two audible error tones on the third direction indicator flash.
    - seven direction indicator flashes.
    - seven direction indicator flashes with two audible error tones.
    - Turning the drivers door key barrel to the unlock position again will unlock the remainder of the doors. No additional warnings will be given.

Disarming a Triggered System

Carrying out either of the following steps will deactivate a triggered alarm system.

17 . Driver door is unlocked with the ignition key (USA, Canada, Mexico, Dominican republic, ROW only). The directional indicators will flash twice and two audible disarm warnings will be emitted

(warnings are market dependant). If however a fault exists on the intrusion sensor or inclination sensor, then the system will disarm in one of a number of ways, depending upon the market configuration:

- USA, Canada, Mexico, Dominican republic, ROW only, the disarm warnings are: three direction indicator flashes with two audible tones on the first two flashes followed by the third direction indicator flash with two error tones. three direction indicator flashes with two audible error tones on the third direction indicator flash. seven direction indicator flashes. seven direction indicator flashes with two audible error tones. seven direction indicator flashes with two audible tones followed by two audible error tones.
    - three direction indicator flashes with two audible tones on the first two flashes followed by the third direction indicator flash with two error tones.
    - three direction indicator flashes with two audible error tones on the third direction indicator flash.
    - seven direction indicator flashes.
    - seven direction indicator flashes with two audible error tones.
    - seven direction indicator flashes with two audible tones followed by two audible error tones.

- EURO with error options are: three direction indicator flashes with two audible error tones on the third direction indicator flash. seven direction indicator flashes. seven direction indicator flashes with two audible error tones.
    - three direction indicator flashes with two audible error tones on the third direction indicator flash.
    - seven direction indicator flashes.
    - seven direction indicator flashes with two audible error tones.

18 . Driver door is unlocked by pressing the UNLOCK button on the remote entry transmitter. The directional indicators will flash twice and two audible disarm warnings will be emitted (warnings are market dependant). If however, a fault exists on the intrusion sensor or inclination sensor, then the system will disarm in one of a number of ways, depending upon the market configuration:

- USA, Canada, Mexico, Dominican republic, ROW only, the disarm warnings are: three direction indicator flashes with two audible tones on the first two flashes followed by the third direction indicator flash with two error tones. three direction indicator flashes with two audible error tones on the third direction indicator flash. seven direction indicator flashes. seven direction indicator flashes with two audible error tones. seven direction indicator flashes with two audible tones followed by two audible error tones.
    - three direction indicator flashes with two audible tones on the first two flashes followed by the third direction indicator flash with two error tones.
    - three direction indicator flashes with two audible error tones on the third direction indicator flash.
    - seven direction indicator flashes.
    - seven direction indicator flashes with two audible error tones.
    - seven direction indicator flashes with two audible tones followed by two audible error tones.

- EURO with error options are: three direction indicator flashes with two audible error tones on the third direction indicator flash. seven direction indicator flashes. seven direction indicator flashes with two audible error tones.

www.JagDocs.com

    - three direction indicator flashes with two audible error tones on the third direction indicator flash.
    - seven direction indicator flashes.
    - seven direction indicator flashes with two audible error tones.

19 . If a valid key is fitted in the ignition switch. The directional indicators will flash twice and two audible disarm warnings will be emitted (warnings are market dependant). If however a fault exists on the intrusion sensor or inclination sensor, then the system will disarm in one of a number of ways, depending upon the market configuration:

- USA, Canada, Mexico, Dominican republic, ROW only, the disarm warnings are: three direction indicator flashes with two audible tones on the first two flashes followed by the third direction indicator flash with two error tones. three direction indicator flashes with two audible error tones on the third direction indicator flash. seven direction indicator flashes. seven direction indicator flashes with two audible error tones. seven direction indicator flashes with two audible tones followed by two audible error tones.
    - three direction indicator flashes with two audible tones on the first two flashes followed by the third direction indicator flash with two error tones.
    - three direction indicator flashes with two audible error tones on the third direction indicator flash.
    - seven direction indicator flashes.
    - seven direction indicator flashes with two audible error tones.
    - seven direction indicator flashes with two audible tones followed by two audible error tones.

- EURO with error options are: three direction indicator flashes with two audible error tones on the third direction indicator flash. seven direction indicator flashes. seven direction indicator flashes with two audible error tones.
    - three direction indicator flashes with two audible error tones on the third direction indicator flash.
    - seven direction indicator flashes.
    - seven direction indicator flashes with two audible error tones.

20 . If 2-stage unlocking is enabled then when you press the remote key head unlock button once, this will unlock the drivers door only. The directional indicators will flash twice and two audible disarm warnings will be emitted (warnings are market dependant). If however a fault exists on the intrusion sensor or inclination sensor, then the system will disarm in one of a number of ways, depending upon the market configuration:

- USA, Canada, Mexico, Dominican republic, ROW only, the disarm warnings are: three direction indicator flashes with two audible tones on the first two flashes followed by the third direction indicator flash with two error tones. three direction indicator flashes with two audible error tones on the third direction indicator flash. seven direction indicator flashes. seven direction indicator flashes with two audible error tones. seven direction indicator flashes with two audible tones followed by two audible error tones.
    - three direction indicator flashes with two audible tones on the first two flashes followed by the third direction indicator flash with two error tones.
    - three direction indicator flashes with two audible error tones on the third direction indicator flash.
    - seven direction indicator flashes.

    - seven direction indicator flashes with two audible error tones.
    - seven direction indicator flashes with two audible tones followed by two audible error tones.

- EURO with error options are: three direction indicator flashes with two audible error tones on the third direction indicator flash. seven direction indicator flashes. seven direction indicator flashes with two audible error tones. Pressing the remote key head unlock button again will unlock the remainder of the doors. No additional warnings will be given.
    - three direction indicator flashes with two audible error tones on the third direction indicator flash.
    - seven direction indicator flashes.
    - seven direction indicator flashes with two audible error tones.
    - Pressing the remote key head unlock button again will unlock the remainder of the doors. No additional warnings will be given.

21 . If 2-stage unlocking is enabled when you turn the key in the drivers door key barrel to the unlock position, this will unlock the drivers door only (USA, Canada, Mexico, Dominican republic, ROW only). The directional indicators will flash twice and two audible disarm warnings will be emitted (warnings are market dependant). If however a fault exists on the intrusion sensor or inclination sensor, then the system will disarm in one of a number of ways, depending upon the market configuration:

- USA, Canada, Mexico, Dominican republic, ROW only, the disarm warnings are: three direction indicator flashes with two audible tones on the first two flashes followed by the third direction indicator flash with two error tones. three direction indicator flashes with two audible error tones on the third direction indicator flash. seven direction indicator flashes. seven direction indicator flashes with two audible error tones. seven direction indicator flashes with two audible tones followed by two audible error tones.
    - three direction indicator flashes with two audible tones on the first two flashes followed by the third direction indicator flash with two error tones.
    - three direction indicator flashes with two audible error tones on the third direction indicator flash.
    - seven direction indicator flashes.
    - seven direction indicator flashes with two audible error tones.
    - seven direction indicator flashes with two audible tones followed by two audible error tones.

- EURO with error options are: three direction indicator flashes with two audible error tones on the third direction indicator flash. seven direction indicator flashes. seven direction indicator flashes with two audible error tones. Turning the drivers door key barrel to the unlock position again will unlock the remainder of the doors. No additional warnings will be given.
    - three direction indicator flashes with two audible error tones on the third direction indicator flash.
    - seven direction indicator flashes.
    - seven direction indicator flashes with two audible error tones.
    - Turning the drivers door key barrel to the unlock position again will unlock the remainder of the doors. No additional warnings will be given.

Once the system has been triggered, the horns, siren or a combination of both (market dependant) and directional indicators (or turn on the front and rear lamps or flash the front and rear lamps or a

www.JagDocs.com

combination of front and rear lamp with directional indicators, these are market dependant) will shut off automatically after 30 seconds (60 seconds USA, Canada, Mexico, Dominican republic, Korean). The system will then reset to an armed state and will trigger again if another trigger occurs and in some markets the repeat triggers will be activated.

PANIC Alarm Activation (USA, Canada, Mexico, Dominican Republic and ROW)

Press the Headlamp convenience button on the keyless entry remote transmitter three times within three seconds. The directional indicators flash or turn on the front and rear lamps or flash the front and rear lamps or a combination of front and rear lamps with directional indicators, these are market dependant and the horns, siren or a combination of both (market dependant) sounds for approximately 30 or 60 seconds (USA, Canada, Mexico, Dominican republic, Korean) or until:

- The ignition switch lock cylinder is switched to position II with a valid key.

The panic feature is controlled by security system control modules and can be activated independent of the current security system state (e.g. armed, disarmed, pre-armed, locked, unlocked). Panic alarm will only activate if the key is in the ignition or if the security system is disabled.

Anti-Theft - Active

The complexity of the electronics involved with the anti-theft, of which the front electronic module (FEM), driver door module (DDM), rear electronic module (REM), and the instrument cluster are a part, and the multiplexed communication network which are connected to it preclude the use of workshop general electrical test equipment. Therefore, reference should be made to the Jaguar approved diagnostic system, for detailed instructions on testing the anti-theft.

The Jaguar approved diagnostic system systematically tests and analyses all functions and the various systems affected by it.

Where a fault is indicated, some basic diagnostic methods may be necessary to confirm that connections are good and that wiring is not damaged before installing a new component.

www.JagDocs.com

Anti-Theft Alarm Horn (86.52.03)

Removal

1 . Remove the wheel and tire assembly. <<204-04>>

2 . Remove the rear fender splash shield retaining screws.

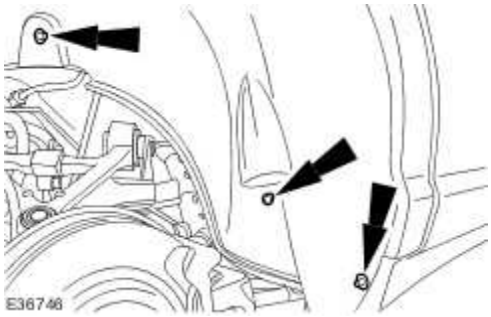

3 . Remove the rear fender splash shield.

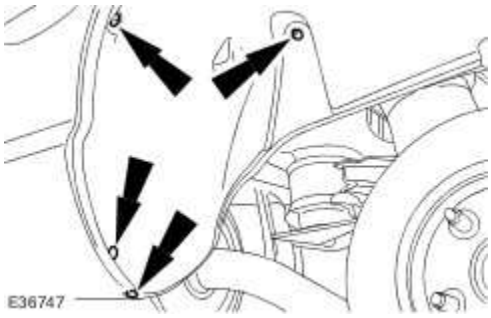

4 . Disconnect the electrical connector.

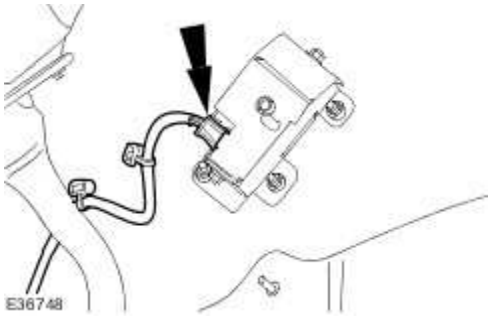

5 . Remove the anti-theft alarm horn.

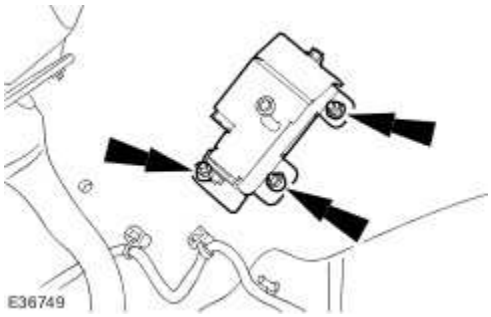

Installation

1 . To install, reverse the removal procedure.

www.JagDocs.com

Anti-Theft Security Access

1. The complexity of the electronics involved with the passive anti-theft system of which the security access is a part, and the multiplexed communication network which are connected to it preclude the use of workshop general electrical test equipment. Therefore, reference should be made to the Jaguar approved diagnostic system for detailed instructions on security access . The Jaguar approved diagnostic system systematically tests and analyses all functions and the various systems affected by it.

Key Programming Using Diagnostic Equipment

1. The complexity of the electronics involved with the anti-theft, of which the key programming is a part, and the multiplexed communication network which are connected to it preclude the use of workshop general electrical test equipment. Therefore, reference should be made to the Jaguar Approved Diagnostic System for detailed instructions on key programming . The Jaguar approved diagnostic system systematically tests and analyses all functions and the various systems affected by it.

www.JagDocs.com

Key Programming Using Two Programmed Keys

1. To program additional PATS keys, a minimum of two valid keys must be available(if only one key is available, it will be erased and reprogrammed with the new key).

2. Key programming using two programmed keys.
   - Insert the first valid key and turn to the run position for a maximum of five seconds, then turn to off and remove the key.
   - Within ten seconds of removing the first key, insert the second valid key and turn to the run position for a maximum of five seconds, then turn to off and remove the key.
   - To program the third (additional) key, insert the key and turn to the run position within twenty seconds of removing the second key, allow the PATS LED to prove out for three seconds to confirm storage of the additional key, then turn to off and remove the key.
   - This method can be used to store up to a maximum of 8 ignition keys.

Anti-Theft - Passive

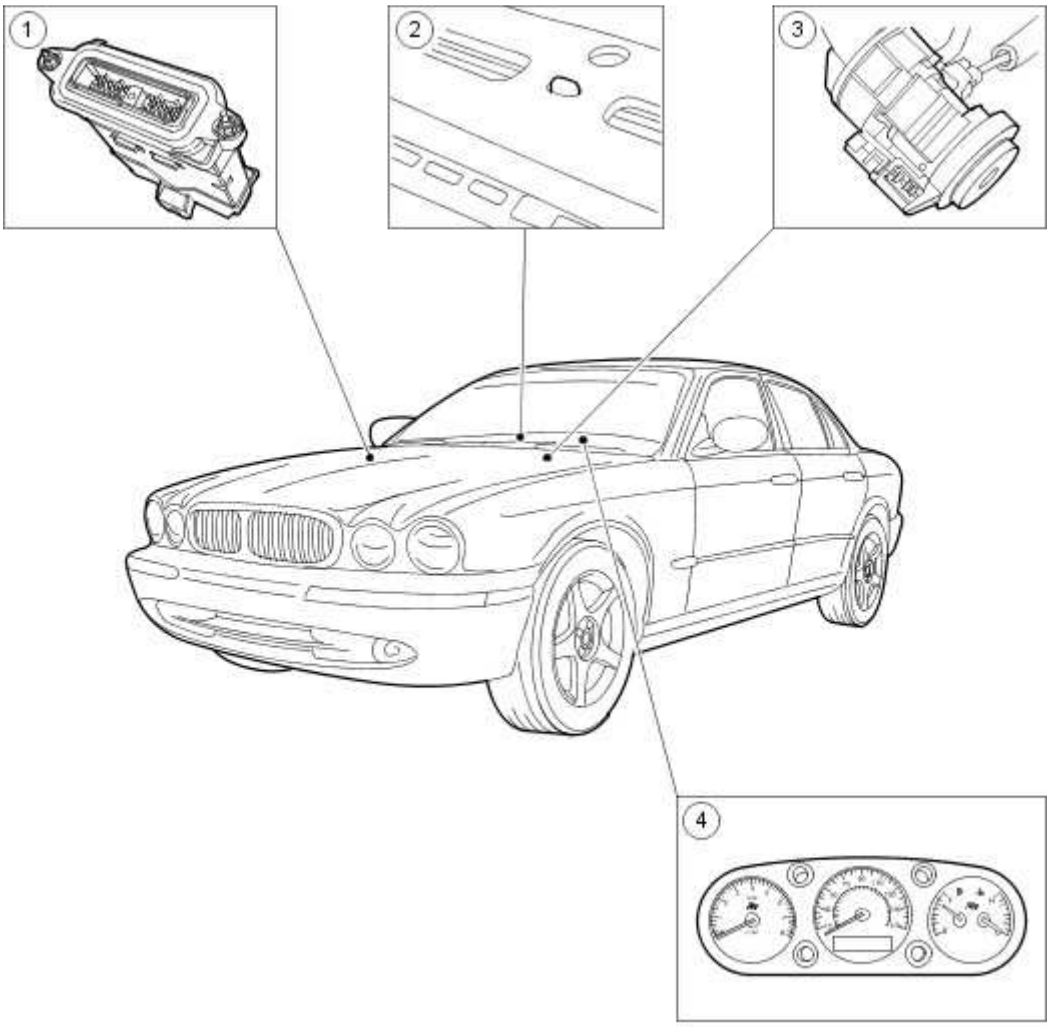

Item	Part Number	Description
1	—	Engine control module (ECM)
2	—	Passive anti-theft system (PATS) LED
3	—	Passive anti-theft system (PATS) transceiver
4	—	Instrument cluster

The passive anti-theft system (PATS) prevents the vehicle from being driven away by an unauthorized persons. The PATS system consists of encrypted electronically coded keys, a transceiver, instrument cluster (IC), and an engine control module (ECM). When the key is inserted into the ignition barrel, the IC uses a decoding process via the transceiver to validate the key transponder code. If the code matches one that is stored and the key is then turned to the run position, the IC will perform a data transfer with the ECM, if valid the ECM will

www.JagDocs.com

enable the fuel injectors, ignition coils, fuel pump drive and starter.

If the key is invalid the control function will send a theft status message to the ECM, which in turn, will disable the vehicle from starting. If the correct key is used without a transponder or used with a transponder with an incorrect code, the vehicle will be inhibited from starting. This will prevent vehicle theft even if a duplicate key is cut.

A PATS indicator LED (located on the instrument panel) provides the driver with the status of the PATS system. When the ignition is switched to the run position, the PATS indicator LED will illuminate for three seconds and extinguish. If there is a fault with the PATS system after 60 seconds of continuous flashing, the PATS indicator LED will flash an error code.

Anti-Theft - Passive

The best method to confirm the correct operation of PATS is to check the LED (located in the center of the instrument panel). The LED should illuminate solid for 3 seconds when the key is turned to the run position and then extinguish. This validates the PATS functions (the key transponder matches the key code stored, the challenge/response sequence between the instrument cluster (IC) and the engine control module (ECM) was successful resulting in the ECM being enabled).

The ECM will disable the fuel injectors, ignition coils, fuel pump drive and starter if any of the following conditions apply, a theft signal has been received from the IC (the key has not been authenticated), a challenge code has been transmitted to the IC but no response code has been received, a challenge code has been transmitted to the IC and an incorrect response received.

If any of the above cases apply, the ECM will log DTC P1260. This DTC is further defined by sub-codes. The sub-codes are accessed through mode 12 (freeze frame data). Additionally the IC will log DTC's if the failure was a result of the key read.

www.JagDocs.com

Engine fails to crank

If a PATS fault is detected, the LED will flash for 60 seconds at 4Hz with a 50% duty cycle. At the end of this period, the LED will flash a 2 digit code, this code is repeated 10 times. The meaning of this code along with the frequency of flashing is given in the accompanying table (as a general rule a fault code of 16 or less will cause the vehicle not to crank. Additionally, the Jaguar Approved Diagnostic System should be used to check the DTC stored in the IC.

The most regular occurrence for failing to crank is due to the park and neutral switches (gearshift not in park or neutral). The start circuit is as follows, low side of relay coil (Switched directly from the instrument cluster, if conditions correct), high side of relay of coil (from ignition start position through gearbox rotary start switches to relay).

Another likely cause maybe the CAN network is malfunctioning, (the CAN circuit is open/short). This means that the IC and ECM would be unable to communicate resulting in no challenge being performed to enable the ECM.

On US manual vehicles the addition of a clutch switch has been included in the starting circuit, this switch takes place of the park/neutral switch (auto transmission). The switch activates at end of travel (clutch fully depressed).

Engine cranks but will not start

If the engine is cranking it means that the ECM is enabled with respect to the PATS. If PATS was disabled the ECM would not engage the starter. This could be confirmed by verifying the PATS LED prove out (illuminated solid for 3 seconds) or by reading DTC's from the IC and ECM. In this case, the

fuel pump circuit should be verified. A fuel pump module, which is controlled by the ECM supplies the fuel pump. In all cases of suspected PATS non-start issues, the most logical failure modes should be eliminated first. Check all relevant supplies and grounds to the IC and ECM, check that the starter relay has a permanent 12v supply, check that the relay has a 12v supply and ground across the coil whilst the ignition is in the crank position.

PATS Fault Codes

For the various PATS modes/faults listed in the table , the IC will store a DTC and indicate this to the customer during the detection peroid defined in the 'when logged' column, by illuminating the indicator as described for 60 seconds and then flashing the LED 10 times as appropriate. The indication will stop immediately the ignition is turned to off any time during the fault indication sequence. Up to 4 DTC's could be stored per key read (1-!0 read attempts). No DTC's will be stored until all retry attempts are complete. Only the highest priority fault code will be flashed.

The PATS LED will be commanded on as shown under 'indication'. Normal PATS operations are complete within 400ms of the ignition switch transition from off to run or start, worst case for ECM communication problems will be less than 2 seconds. If PATS is not complete during the 2 seconds the ECM will terminate PATS and await the next ignition run/start event. PATS faults will be indicated via the LED as soon as possible and will terminate the LED prove out. At key off all previous flashing will cease and the perimeter anti theft system will control the LED when the vehicle is locked and armed.

Mode of Operation/Fault	When Logged	Ignition Switch Position	DTC	LED Fault Code	Indication
Prove out	N/A	Off to Run/Start	N/A	N/A	3 Seconds of steady illumination
Perimeter Anti theft Control	N/A	Off	N/A	N/A	Off or 0.5Hz, 5% duty cycle until off
Transceiver not connected	Key Read	Run/Start	B1681	11	60 seconds off 4Hz flashing at 50% duty cyle followed by fault code flashing 10 times
Key problem. No code received from Key	Key Read	Run/Start	B1600	13	60 seconds off 4Hz flashing at 50% duty cyle followed by fault code flashing 10 times
Key/Transceiver problem, partial code received,	Key Read	Run/Start	B1602	14	60 seconds off 4Hz flashing at 50% duty cyle followed by fault

checksum error					code flashing 10 times
Key code not stored in memory(also due to having 8 key codes already stored in memory)/ signature mismatch	Ke Read/Diagnostic Test	Run/Start	B1601	15	60 seconds off 4Hz flashing at 50% duty cyle followed by fault code flashing 10 times
Problem with CAN link - ECM disabled. ECM system status CAN message missing	ECM CAN Comm's	Run/Start	U2511 U1900	16	60 seconds off 4Hz flashing at 50% duty cyle followed by fault code flashing 10 times

Following part replacement the following codes maybe applicable, these are not normal customer mode fault codes.

Mode of Operation/Fault	When Logged	Ignition Switch Position	DTC	LED Fault Code	Indication
Following new key programming Jaguar Approved Diagnostic System application, 2 keys have not been cycled in the ignition	B and A/Dealer	Run/Start	B1213	21	60 seconds of steady indication followed by fault code flashing 10 times
PATS reset application not performed after part IPK replacement	B and A/Dealer	Run/Start	B2141	22	60 seconds of steady indication followed by fault code flashing 10 times
PATS reset application not performed after part ECM replacement	Challenge/Response	Run/Start	U2510	23	60 seconds of steady indication followed by fault code flashing 10 times

1 . If an obvious cause for an observed or reported concern is found, correct the cause (if possible) before proceeding to the next step.

2 . If the cause is not visually evident, verify the symptom and refer to the Jaguar Approved Diagnostic System.

www.JagDocs.com

Passive Anti-Theft System (PATS) Transceiver (86.52.30)

Removal

1 . Remove the ignition switch lock cylinder. <<211-04>>

2 . Remove the PATS transceiver.

1) Detach the PATS transceiver retaining tang.

2) Remove the PATS transceiver.

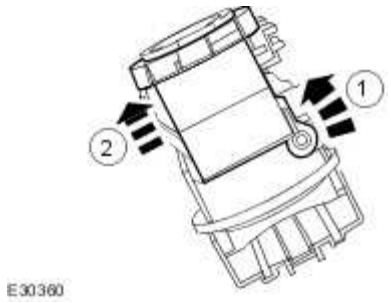

Installation

1 . To install, reverse the removal procedure.

Universal Transmitter Programming

WARNING: A garage door opening system that cannot stop or reverse itself after detecting an object in its path does not meet current federal safety standards. To decrease the risk of serious injury or death, do not use this HomeLink transmitter with a door opening system that lacks stop and reverse features as required by federal standards. This includes any garage door opening system manufactured before April 1, 1982. For more information, call HomeLink customer assistance at 1-800-355-3515.

1.

CAUTION: During this procedure, the system that you are programming will be made to operate. Make sure that people or objects are clear of the garage door or gate being programmed.

Verify the hand-held transmitter is operative.

2. Prepare for programming the universal transmitter by erasing all three channels by holding down the two outside buttons until the red light begins to flash (20-30 seconds). Release both buttons.

3. Select one of the three universal transmitter channels to be programmed by pressing the desired button.

4. Hold the end of the hand-held transmitter 50-150mm (2-6 in) from the front surface of the universal transmitter so that the red light can still be seen.

www.JagDocs.com

5. **NOTE:**

   During programming, the hand-held transmitter may automatically stop transmitting after two seconds, which may not be long enough to program the universal transmitter. If programming this type of hand-held transmitter, continue to hold the button on the universal transmitter while re-pressing the hand-held transmitter button every two seconds (Canada only).

Use both hands to press the hand-held transmitter button and the desired button on the universal transmitter. Do not release either button.

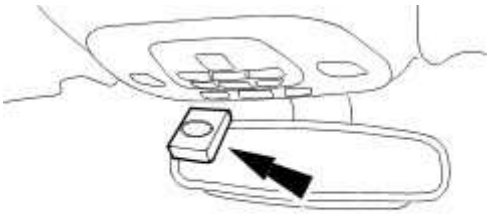

VUJ0004178

6. Hold down both buttons until the red light on the universal transmitter flashes, first slowly and then rapidly. Release both buttons when the rapid flashing begins. The universal transmitter has successfully learned the new frequency signal and can be used in place of the hand-held transmitter(s).

7. **NOTE:**

   If the hand-held transmitter appears to program the universal transmitter but does not open the garage door, the garage door opener may have a ' code protected' or ' rolling code' feature.

To operate, simply press the appropriate button on the universal transmitter. The red light is on while the signal is being transmitted.

Training a Garage Door Opener Equipped With ' Rolling Codes'

1. Program the hand-held transmitter to the universal transmitter.

2. Train the garage door opener receiver to recognize the universal transmitter.
   1. Remove the cover panel from the garage door opener receiver.
   2. Locate the training button on the garage door opener receiver. Location and color of the button may vary by garage door opener manufacturer. Refer to the garage door opener instruction manual or call HomeLink□customer assistance at 1-800-355-3515.
   3. Press the training button on the garage door opener receiver for 1-2 seconds.

4. Press the programmed universal transmitter button for as long as the universal transmitter red light flashes (1-2 seconds). Release the button and re-press the button to confirm that the universal transmitter is trained to the receiver.
5. The garage door opener should recognize the universal transmitter.

Erasing Channels

1. **NOTE:**
   Individual channels cannot be erased, but can be reprogrammed using the procedures for programming.

To erase all three programmed channels, hold down the two outside buttons until the red light begins to flash (20-30 seconds). Release both buttons.

www.JagDocs.com

Universal Transmitter

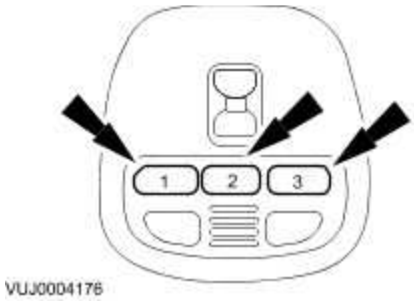

The HomeLink universal transmitter provides a convenient way to replace up to three hand-held transmitters with a single built-in device. The universal transmitter:

- will operate garage doors, gates and home/office lighting and security systems.
- will actually learn and transmit the radio frequency of up to three hand-held transmitters from any of the systems mentioned above.
- is an integral part of the roof console assembly and is powered by the vehicle battery and charging system.

Universal Transmitter

Inspection and Verification

1 . Verify the customer concern by operating the system.

2 . Visually inspect for obvious signs of mechanical damage.

Mechanical
• Damaged universal transmitter • Damaged receiver

3 . If an obvious cause for an observed or reported concern is found, correct the cause (if possible) before proceeding to the next step.

4 . If the concern is not visually evident, verify the concern and refer to the Symptom Chart. Refer to the electrical circuit diagrams for schematic and connector information.

Symptom Chart

Symptom	Possible Cause	Action
The universal transmitter is inoperative	• Universal transmitter • Receiver unit	GO to Pinpoint Test G92661p1.

Pinpoint Tests

PINPOINT TEST G92661p1 : THE UNIVERSAL TRANSMITTER IS INOPERATIVE

G92661t1 : CHECK THE ROOF CONSOLE ASSEMBLY OPERATION

1. Check the illumination of the interior lamp.

- **Does the interior lamp illuminate?**

www.JagDocs.com

-> Yes
GO to Pinpoint Test G92661t2.
.

-> No
Check and rectify fault with interior lamp circuit. TEST the system for normal operation.

G92661t2 : PROGRAM HAND-HELD TRANSMITTER INTO UNIVERSAL TRANSMITTER

1. **NOTE:**

    If the garage door is equipped with rolling codes, refer to Training a Garage Door Opener Equipped With "Rolling Codes."

Program the universal transmitter.
Universal Transmitter Programming

- **Did the universal transmitter program successfully?**

-> Yes
The universal transmitter is OK. VERIFY receiver operation.

-> No
REPLACE the roof console assembly. TEST the system for normal operation.

419-07 : Navigation System

Description and operation

Navigation System

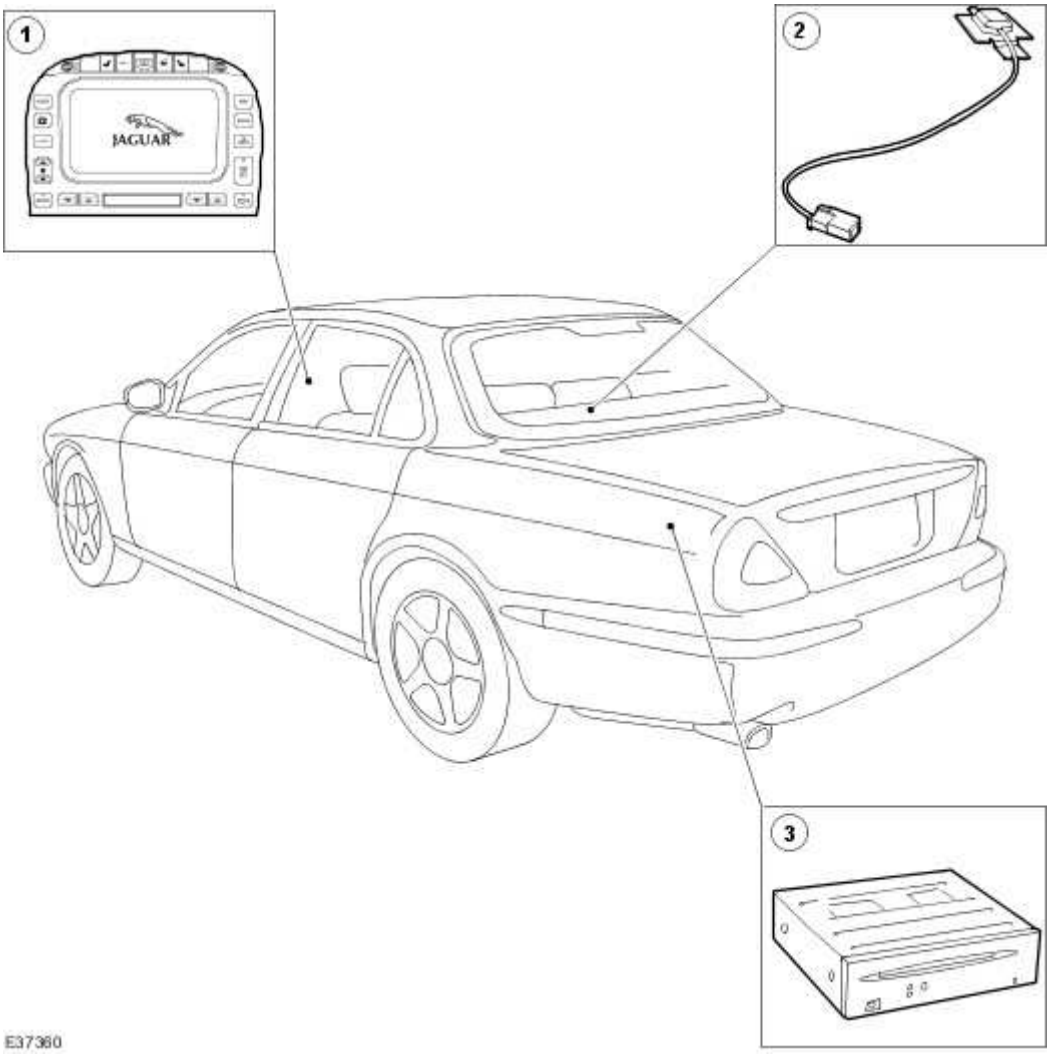

Item	Part Number	Description
1	—	Navigation system display module
2	—	Navigation system antenna
3	—	Navigation system module

The navigation system utilizes the following functions:

- Voice guidance volume controlled via audio head unit.
- Screen brightness controlled via on screen menus.

www.JagDocs.com

- Key illumination controlled via vehicle dimmer switch.
- Any key turns system "ON".
- Language choice controlled via on screen menus.

The navigation head unit comprises of a 7" full color screen which also provides control of the phone, audio system, climate control, vehicle emergency messaging system (VEMS), voice control, and TV. The navigation module is situated in the luggage compartment on the left-hand side and is covered by a protective trim panel. The Global Positioning System (GPS) antenna is located beneath the parcel shelf trim.

The system utilizes signals from the GPS antenna, the ABS unit and the GYRO sensor signals to enable the navigation module to calculate, with the aid of DVD map data, the position of the vehicle. After entering the required destination, the driver is guided along by both visual guidance and voice instructions. Even if the driver strays off the route, the system calculates a new route showing the easiest way back to the original destination. On route it can also point out useful landmarks such as petrol stations, restaurants, hotels, Jaguar dealers, and car parks.

The system also provides system interfaces such as TV and VEMS.

Japanese market vehicles only have a navigation module with integrated voice recognition for control of the navigation system. The Japanese system also has the addition of VICS which provides real time traffic information.

Navigation System

Principles of Operation

For a detailed description of the Navigation System refer to the relevant Description and Operation sections in the workshop manual.
Navigation System

Inspection and Verification

1 . Verify the customer concern.

2 . Visually inspect for obvious signs of mechanical or electrical damage.

Visual Inspection Chart

Electrical
• Fuses/relays • Damaged, Loose or Corroded Connector(s) • Damage to Wiring Loom/Incorrect Location, Stretched or Taught

1 . If an obvious cause for an observed or reported concern is found, correct the cause (if possible) before proceeding to the next step.

2 . If the cause is not visually evident, verify the symptom and refer to the Jaguar Approved Diagnostic System.

Navigation System Module

CAUTION: When probing connectors to take measurements in the course of the pinpoint tests, use the adaptor kit, part number 3548-1358-00

NOTE:

If the control module/component is suspect and the vehicle remains under manufacturer warranty, refer to the Warranty Policy and Procedures manual (section B1.2), or determine if any prior approval program is in operation, prior to the installation of a new module/component.

www.JagDocs.com

NOTE:

When performing voltage or resistance tests, always use a digital multimeter (DMM) accurate to three decimal places and with a current calibration certificate. When testing resistance, always take the resistance of the DMM leads into account.

NOTE:

Check and rectify basic faults before beginning diagnostic routines that involve pinpoint tests.

NOTE:

Inspect connectors for signs of water ingress, and pins for damage and/or corrosion.

NOTE:

If DTCs are recorded and, after performing the pinpoint tests, a fault is not present, an intermittent concern may be the cause. Always check for loose connections and corroded terminals.

DTC	Description	Possible Causes	Action
B1342	ECU is Defective	• Satellite navigation system module - internal ECU failure	Carry out any pinpoint tests associated with this DTC using the manufacturer approved diagnostic system. Check navigation system module for internal failure. Install a new module as required, refer to the new module installation note at the top of the DTC Index
B2197	TV Module Error	• Satellite navigation system display - module or switch fault	Carry out any pinpoint tests associated with this DTC using the manufacturer approved diagnostic system. Check satellite navigation system display module for failure. Install a new module as required, refer to the new module installation note at the top of the DTC Index
B2198	Traffic Master Module Error	• Satellite navigation system module - traffic master module fault	Refer to electrical circuit diagrams, notes and check navigation system module communication circuit to

			traffic master module for failure. Install a new module as required, refer to the new module installation note at the top of the DTC Index
B2199	VICS Module Error	• Satellite navigation system module - VICS (vehicle information control system) module fault	Refer to electrical circuit diagrams, notes and check navigation system module communication circuit to vehicle information control system module for fault. Install a new module as required, refer to the new module installation note at the top of the DTC Index
B2201	No Communication With Traffic Master Module	• Satellite navigation system module - traffic master communication fault This DTC is logged if the module is not fitted. It must be masked out by the tester when the module is not fitted to a particular vehicle	Refer to electrical circuit diagrams, notes and check navigation system module communication circuit to traffic master module for fault install a new module as required, refer to the new module installation note at the top of the DTC Index
B2202	No Communication to VICS Module	• Satellite navigation system module vehicle information control module - communication fault This DTC is logged if the module is not fitted. It must be masked out by the tester when the module is not fitted to a particular vehicle	Refer to electrical circuit diagrams, notes and check navigation system module communication circuit to vehicle information control module for fault
B2204	GPS Antenna Connection Open or Short	• Satellite navigation system module (GPS) antenna - open circuit or short circuit	Carry out any pinpoint tests associated with this DTC using the manufacturer approved diagnostic system. Refer to electrical circuit diagrams, notes and check navigation system module (GPS) antenna for open or short circuit
B2205	GPS Receiver Fault	• Satellite navigation system module - global position satellite receiver fault	Carry out any pinpoint tests associated with this DTC using the manufacturer approved diagnostic system. Refer to electrical circuit diagrams, notes and check navigation system module global

www.JagDocs.com

			position satellite (GPS) antenna circuit. Check circuit, and that the antenna is not obstructed (vehicle inside a building). Replace module if fault persists.
B2206	Gyroscope Fault	• Satellite navigation system module - gyroscope fault	Carry out any pinpoint tests associated with this DTC using the manufacturer approved diagnostic system. Refer to electrical circuit diagrams, notes and check navigation system module for fault. Install a new module as required, refer to the new module/component installation note at the top of the DTC Index
B2207	Internal ECU ROM Checksum Fault	• Satellite navigation system - module internal failure	Refer to electrical circuit diagrams, notes and check navigation system module for fault. Install a new module as required, refer to the new module/component installation note at the top of the DTC Index
B2208	Navigation Module to Display and Switch Module Communication Error	• Satellite navigation system module - communication to display and switch module fault	Refer to electrical circuit diagrams, notes and check navigation system, display and switch module communication circuit for fault
B2646	Antenna Circuit Open Circuit #1	• Satellite navigation system module navigation system antenna - open circuit	Refer to electrical circuit diagrams, notes and check navigation system antenna circuit for open circuit. To restore power the fault must be removed and the user will need to key off, and then key on
B2647	Antenna Circuit Open Circuit #2	• Satellite navigation system module navigation system antenna - open circuit	Refer to electrical circuit diagrams, notes and check navigation system antenna circuit for open circuit. To restore power the fault must be removed and the user will need to key off, and then key on
B2648	Antenna Circuit	• Satellite navigation system module	Refer to electrical circuit diagrams, notes and check navigation system

	Open Circuit #3	navigation system antenna - open circuit	antenna circuit for open circuit. To restore power the fault must be removed and the user will need to key off, and then key on
B2649	Antenna Circuit Open Circuit #4	• Satellite navigation system module navigation system antenna - open circuit	Refer to electrical circuit diagrams, notes and check navigation system antenna circuit for open circuit. To restore power the fault must be removed and the user will need to key off, and then key on
B2650	Antenna Circuit Short Circuit #1	• Satellite navigation system module navigation system antenna circuit - short to power or ground	Refer to electrical circuit diagrams, notes and check navigation system antenna circuit for short to power or ground. To restore power the fault must be removed and the user will need to key off, and then key on
B2651	Antenna Circuit Short Circuit #2	• Satellite navigation system module navigation system antenna circuit - short to power or ground	Refer to electrical circuit diagrams, notes and check navigation system antenna circuit for short to power or ground. To restore power the fault must be removed and the user will need to key off, and then key on
B2652	Antenna Circuit Short Circuit #3	• Satellite navigation system module navigation system antenna circuit - short to power or ground	Refer to electrical circuit diagrams, notes and check navigation system antenna circuit for short to power or ground. To restore power the fault must be removed and the user will need to key off, and then key on
B2653	Antenna Circuit Short Circuit #4	• Satellite navigation system module navigation system antenna circuit - short to power or ground	Refer to electrical circuit diagrams, notes and check navigation system antenna circuit for short to power or ground. To restore power the fault must be removed and the user will need to key off, and then key on
B2655	Switch and Display module is defective	• Satellite navigation system module - display faulty	Refer to electrical circuit diagrams, notes and check navigation system display and switch module for failure. Install a new display module as required, refer to the new

www.JagDocs.com

			module/component installation note at the top of the DTC Index
B2656	DVD (Digital Versatile Disk) Error	• Satellite navigation system module - DVD error (DVD is integral to navigation system module ECU)	Refer to electrical circuit diagrams, notes and check navigation system module for fault. Install a new module as required, refer to the new module/component installation note at the top of the DTC Index

Navigation System Antenna - VIN Range: G00442->H18679 (86.62.06)

Removal

1 . Remove the parcel shelf. <<501-05>>

2 . Disconnect the navigation system antenna electrical connector.

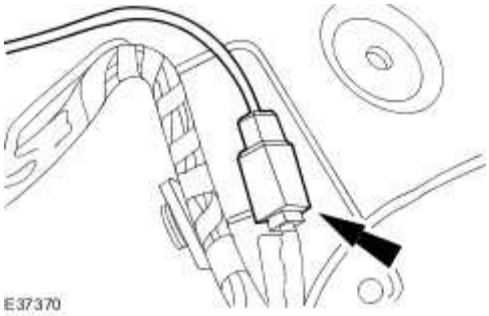

3 . Remove the navigation system antenna.

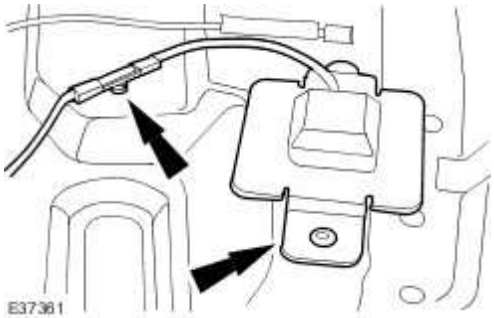

Installation

1 . To install, reverse the removal procedure.

www.JagDocs.com

Navigation System Antenna - VIN Range: H18680->H99999 (86.62.06)

Removal

1 . **NOTE:**

Right-hand shown, left-hand similar.

Detach both the front passenger assist handles screw covers.

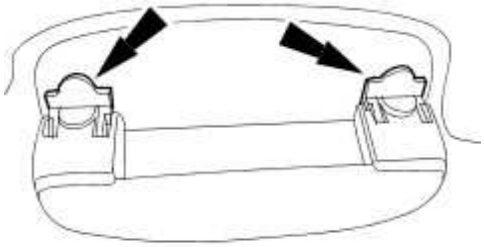

E38998

2 . **NOTE:**

Right-hand shown, left-hand similar.

Remove both the front passenger assist handles.

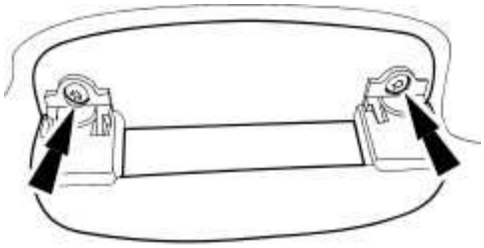

E38776

3 . **NOTE:**

Right-hand shown, left-hand similar.

Detach both the rear passenger assist handles screw covers.

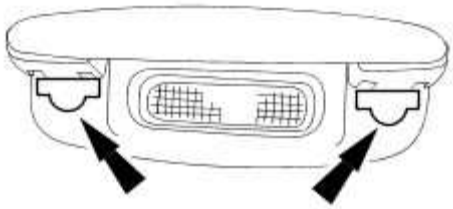

E36777

4 . **NOTE:**

Right-hand shown, left-hand similar.

Remove both the rear passenger assist handles.

Disconnect the electrical connectors.

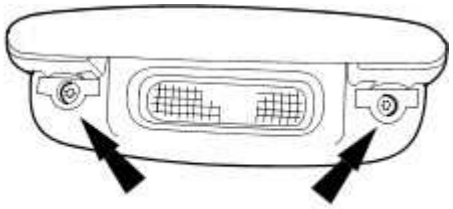

E36778

5 . Locally detach the top of all the door aperture weatherstrips.

6 . **NOTE:**

Right-hand shown, left-hand similar.

Remove both the rear safety belt trim covers.

www.JagDocs.com

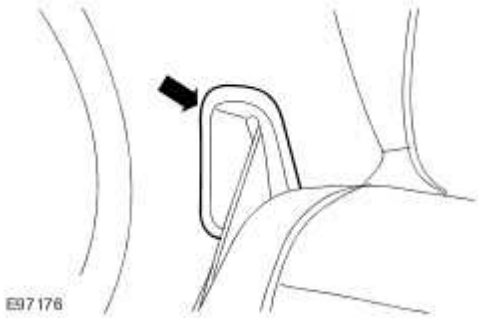

7 . **NOTE:**

Right-hand shown, left-hand similar.

Detach both the c-pillar upper trim panels.

8 . **NOTE:**

Right-hand shown, left-hand similar.

Detach both the c-pillar upper trim panel retaining straps.

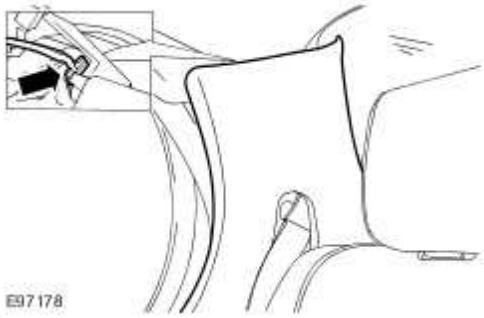

9 . Remove the high mounted stoplamp.
For additional information, refer to High Mounted Stoplamp (86.41.01)

10 . Detach the rear of the headliner.

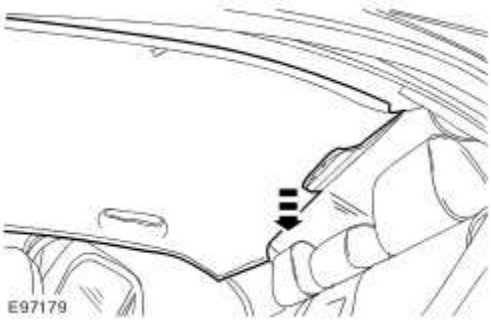

11 . Disconnect the navigation system antenna electrical connector.

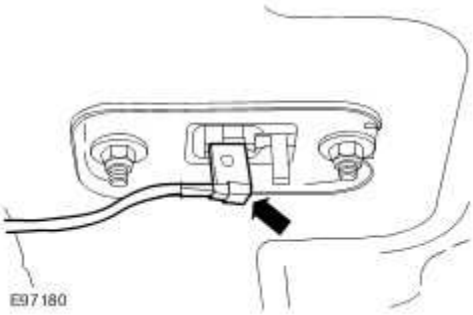

12 . Remove the navigation system antenna securing nuts.

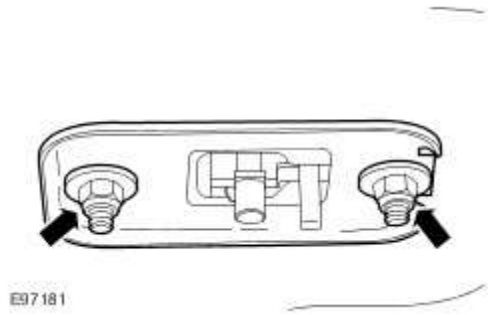

13 . Remove the navigation system antenna.

- Detach the retaining clip.

www.JagDocs.com

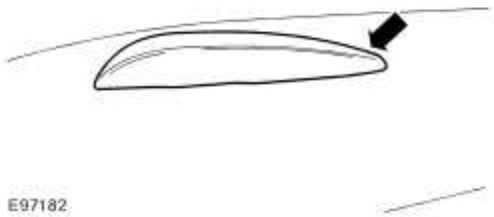

Installation

1 . To install, reverse the removal procedure.

Tighten to 10 Nm.

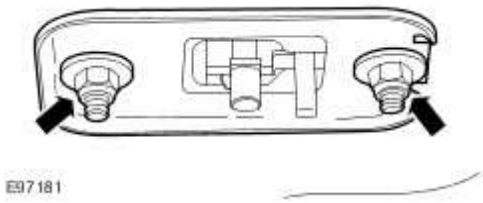

Navigation System Display Module (86.62.07)

Removal

1 . Remove the instrument panel console. <<501-12>>

2 . Remove the navigation system display module.

1) Remove the navigation system display module retaining bolts.

2) Remove the navigation system display module.

Installation

1 . To install, reverse the removal procedure.

www.JagDocs.com

Navigation System Module (86.62.05)

Removal

1 **NOTE:**

.

Make sure the mep DVD has been removed before disconnecting the battery ground cable.

Disconnect the battery ground cable. <<414-01>>

2 . Remove the luggage compartment trim panel lower retaining clips.

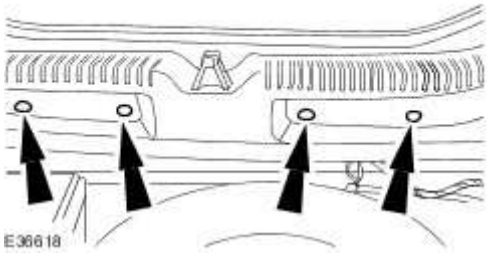

3 . Remove the luggage compartment trim panel.

4 . Detach the luggage compartment side trim panel.

1) Remove the luggage compartment side trim panel retaining clip.

2) Detach the luggage compartment side trim panel.

5 . Detach the air suspension pipe.

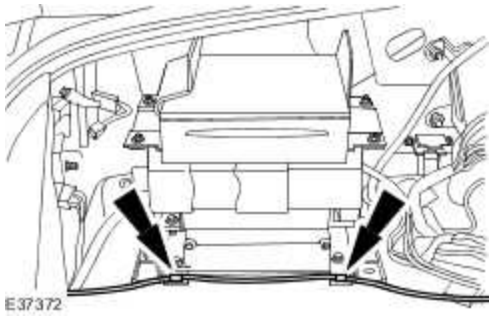

6 . Detach the module retaining bracket.

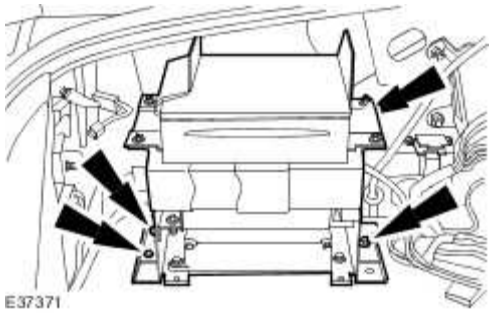

7 . Disconnect the navigation system module electrical connectors and fibre optic connector.

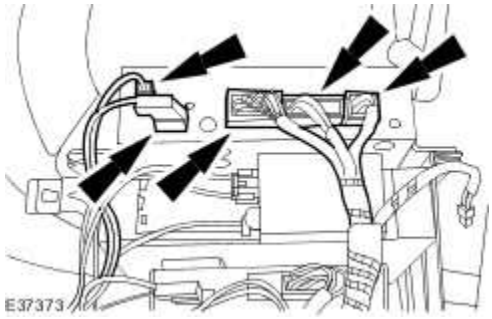

www.JagDocs.com

8 . **NOTE:**

Right-hand shown, left-hand similar.

Remove the navigation system module.

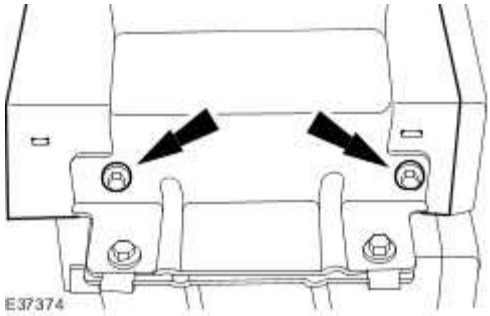

Installation

1 . To install, reverse the removal procedure.

419-08 : Cellurar Phone

Description and operation

Cellular Phone - VIN Range: G00442->G45703

The portable cellular phone system consists of:

- cellular phone handset (GSM).
- cradle (GSM).
- cellular portable (US only).
- handset battery (US only).
- hang up cup (US only).
- roof console mounted microphone.
- steering wheel switch controls.
- portable support electronics (PSE) module (US only).
- transceiver (GSM).
- in-bumper cellular phone antenna.
- parcel shelf antenna (US only).
- antenna cable.
- audio unit controls.

The cellular phone handset is located within the center console armrest. The audio control unit and the steering wheel controls are utilized to operate the system.

The vehicle utilizes two unique cellular phones systems:

- GSM
- US CDMA/TDMA digital and AMPS analogue systems

The voice activation control module provides the handsfree operation for cellular phone.

To activate the handsfree function:

1 . Switch the ignition to the RUN position. After 4-6 seconds the system will be initialized and "VOICE READY" will be displayed in the message center.

2 . Operate the VOICE/PHONE switch on the steering wheel.

3 . Clearly state the command when "LISTENING" is displayed in the message center.

4 . Operate the VOICE/PHONE switch on the steering wheel or remain silent for 1 second. If

www.JagDocs.com

speech is detected "PROCESSING" will be displayed in the message center. Operating the VOICE/PHONE switch again will cancel the voice session.

Refer to the Cellular Phone user guide for complete operating instructions.

For additional information on the voice activation control module, refer to <<419-10>>.

Cellular Phone - VIN Range: G45704->H18679

Component Location

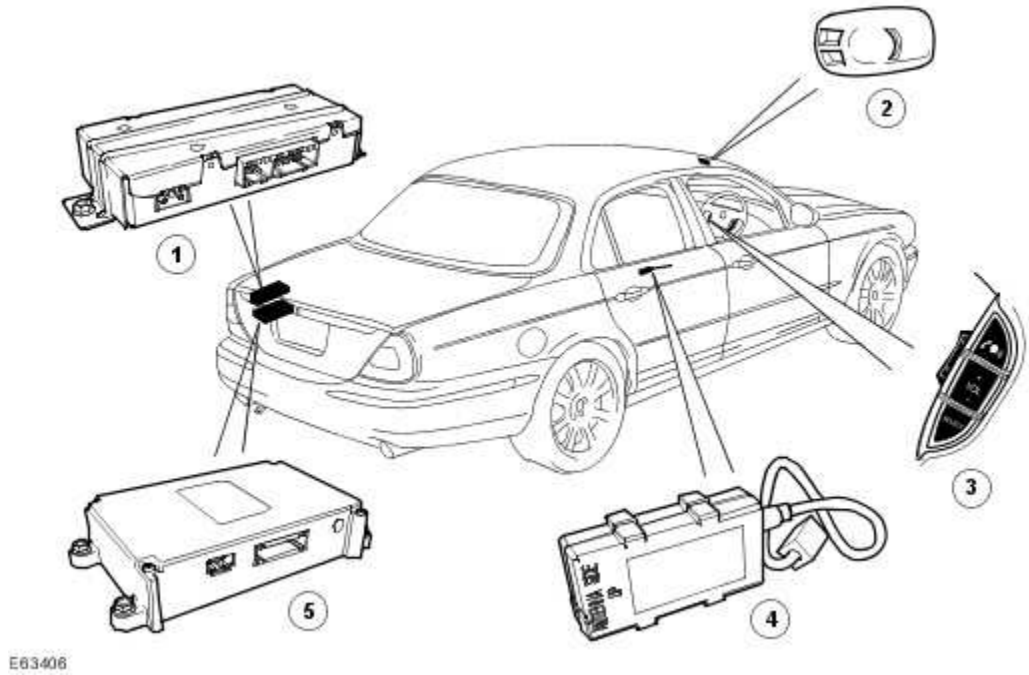

Item	Description
1	Voice activated control module
2	Microphone
3	Steering wheel telematics control switches
4	Bluetooth upgrade module
5	Portable Support Electronics (PSE)

Bluetooth

2006 model year (MY) sees the introduction of a Bluetooth® communications network system.

Note: In common with previous cellular phones it is the drivers responsibility to comply with local legislation regarding cellular phone use.

Bluetooth is a way of communicating with various electronic devices that are equipped with specialized chips using a short-range radio link. It allows most devices to communicate with one

www.JagDocs.com

another by creating a universal language. The devices then form a private network known as a 'personal area network'.

Interaction between Bluetooth devices can take place without direct human intervention whenever two or more Bluetooth devices are within each other's range. This enables the Bluetooth transceiver chip to trigger an automatic connection to deliver and accept a flow of data.

Bluetooth devices operate on a radio frequency band knows as the Industrial, Scientific, and Medical frequency. The Industrial, Scientific, and Medical radio frequency band is 2.40 GigaHertz (GHz) to 2.48 GHz which is divided into 79 channels, each carrying a bandwidth of 1 MegaHertz (MHz).

The devices use the 79 individual randomly chosen channels within the frequency band, changing from one to another on a regular basis. The Bluetooth transmitters change frequencies approximately 1,600 times every second, meaning that more devices can utilize the limited slice of the radio frequency.

Since every Bluetooth transmitter uses this technique automatically, it's most unlikely that two transmitters will be on the same frequency at the same time. This technique minimizes the risk of disruption to Bluetooth devices, as any interference on a particular frequency will last only a fraction of a second.

The Bluetooth system consists of:

- A Bluetooth upgrade module
- A Portable Support Electronics (PSE) module
- A voice activated control module
- A microphone
- Steering wheel telematics control switches
- An audio unit

The Bluetooth upgrade module allows the driver to integrate their personal cellular phone to the vehicle. When a cellular phone is paired to the vehicle, it allows the storage of up to 500 individual phone numbers and 40 related voice tags to the voice activated control module. These stored phone numbers can then be accessed using the audio unit control buttons, the audio unit touch screen (if equipped) or steering wheel telematics control switches. The voice tags can be accessed by using the steering wheel telematics control switches when utilizing the voice activation facility.

If a cellular phone has been matched/programmed to the vehicle and a second cellular phone is added, the stored phone numbers and voice tags from the second cellular phone will overwrite the original phones' stored data.

Phone numbers stored to the PSE and voice tags stored to the voice activated control module need to be manually updated should alterations be required. If a new phone number has been added to the cellular phone memory, it will need to be added manually to the vehicle memory.

Once stored to the vehicle, the phone numbers can be viewed on the audio unit screen. The audio

unit and touch-screen operate as previous models.

For vehicles fitted with a touch-screen controlled audio unit it is possible to redial the last 10 dialed phone numbers from the vehicle. For vehicles without a touch-screen controlled audio unit it is only possible to redial the last dialed phone number from the vehicle. These dialed phone numbers are stored in the PSE module memory and not from the cellular phone's memory.

The Bluetooth system does not include a phone cradle or it's own individual vehicle antenna. As a consequence of this, there is no cellular phone signal amplification and no in-car charging facilities.

In-car charging can be achieved using a suitable lead to the cigar lighter or auxiliary power socket.

Portable Support Electronics (PSE) Module

The Portable Support Electronics (PSE) module is located in the left-hand side of the luggage compartment.

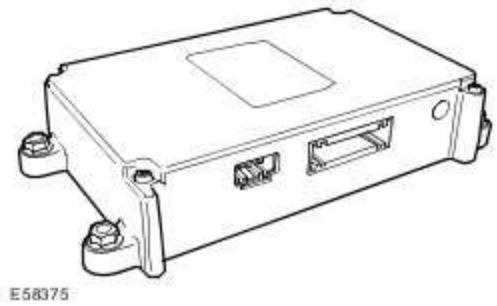

The PSE module is fixed to a bracket which also supports the Voice Activation Control Module (VACM) and the navigation control module.

The PSE module has one electrical connector and one optical connector. The module is unique to Jaguar, but utilizes carry over hardware.

The PSE module stores up to 500 phone numbers and the last 10 dialed phone numbers from the vehicle.

Bluetooth Upgrade Module

The Bluetooth upgrade module is located under the center console and is attached to the center console using velcro.

www.JagDocs.com

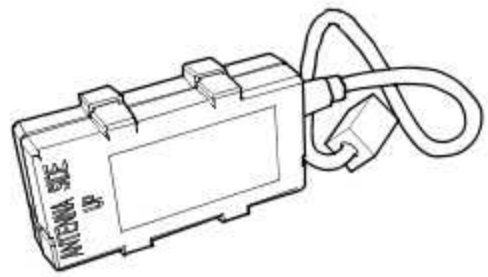

The Bluetooth upgrade module communicates with the drivers cellular phone and integrates it into the vehicle system transferring information such as call status and phonebook information to the PSE.

Voice Activated Control Module

The voice activated control module is located in the left-hand side of the luggage compartment.

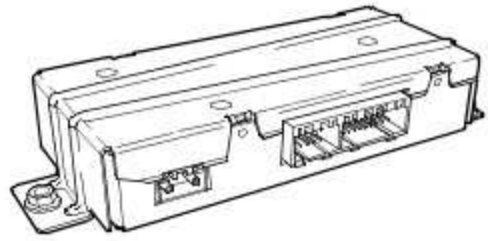

The voice activated control module is fixed to a bracket which also supports the PSE and the navigation control module.

The voice activated control module stores up to 40 voice tags.

Microphone

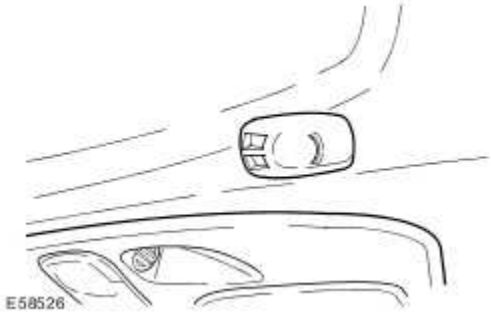

The microphone is located above the driver and is attached to the headliner.

Steering Wheel Telematics Control Switches

To ensure minimum disruption to concentration when driving, limited control of audio, telephone and voice activation systems is possible using the steering wheel telematics control switches.

The control switches provide the following phone functionality:

- Answer phone call/end handsfree calls.
- Increase or decrease volume.
- Cycle through phone memory.

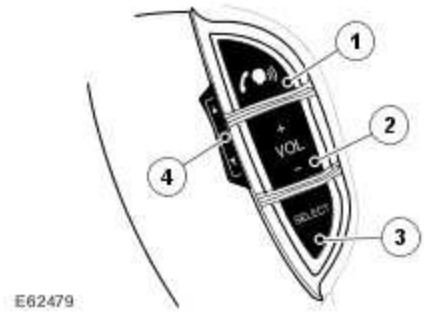

Item	Description
1	Press to start voice session, or mute when voice is not fitted. Answer phone call when ringing. Send/End when in phone mode.
2	Press as required to increase or decrease volume.
3	Press and hold for 2 seconds to select Phone Ready mode.
4	In phone mode main screen, press to scroll up or down through the numbers stored in the phone memory.

Refer to the Cellular Phone user guide for complete operating instructions.

www.JagDocs.com

Cellular Phone - VIN Range: H18680->H99999

COMPONENT LOCATION

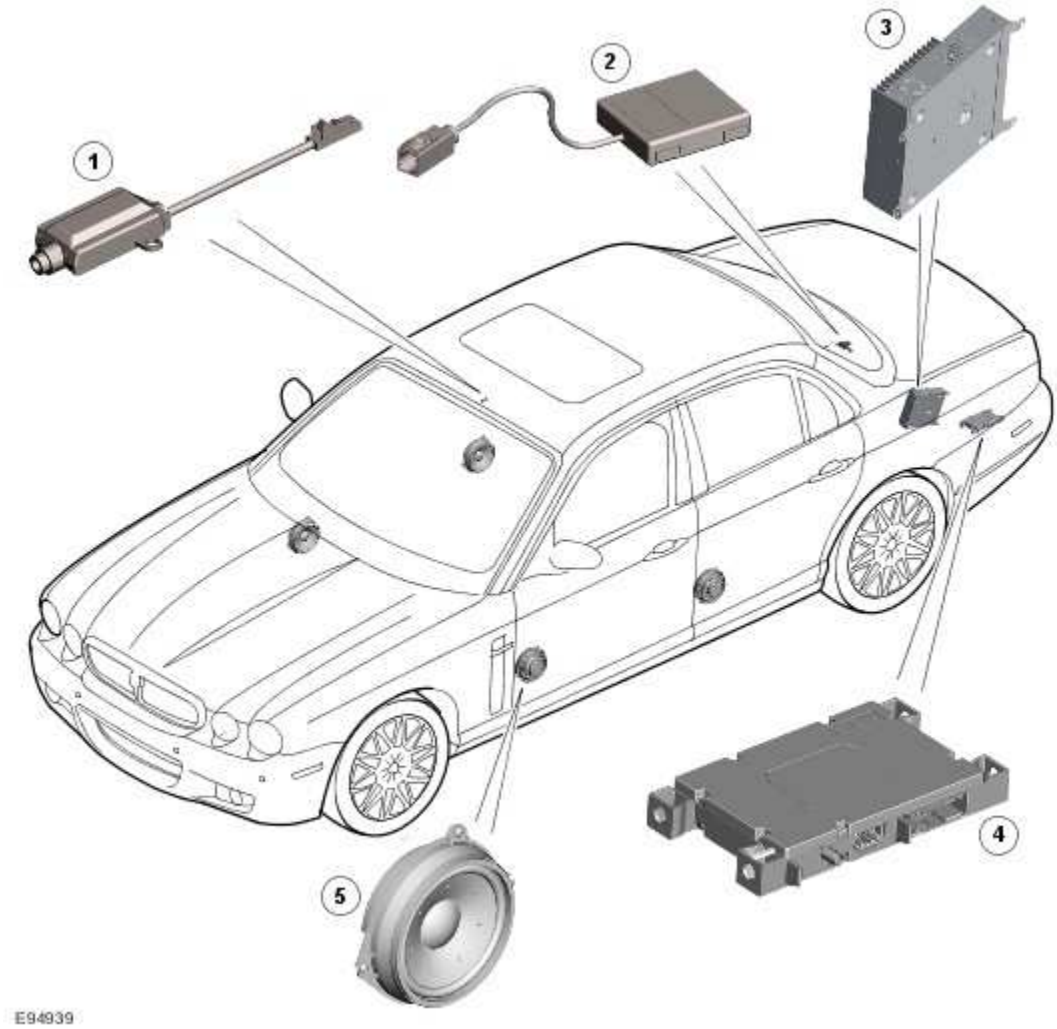

Item	Part Number	Description
1		Microphone
2		Bluetoth antenna
3		Audio amplifier
4		Telephone control module
5		Speakers

OVERVIEW

The system allows the driver to use a Bluetooth equipped cellular phone handset through the vehicles Information and Entertainment system.

NOTE:

> There is no physical connection (cradle) between the phone handset and the telephone control module. Communications between the 2 components are purely Bluetooth. This can limit the available functions dependant on the handset used.

The cellular phone system comprises the following components:

- Telephone control module
- Microphone
- Bluetooth antenna

Phone dialing is achieved using one of the following methods:

- Dialing a number using the ICP keypad
- Selecting a number from the handsets phonebook via the ICM
- Selecting from the handsets call register via the ICM

The Telephone control module is connected to the Information and Entertainment system on the D2B bus. This allows audio and control signals to be routed to and from the telephone control module. The telephone control module has a saperate integral Bluetooth antenna located on the LH (left-hand) side of the rear parcel shelf.

Telephone handsets must be paired with the telephone control module before they can be used with the vehicle system. Up to five telephone handsets can be paired with the vehicle, but only one telephone can used at a time.

PHONE MODULE

E88681

The telephone control module is located in the rear LH (left-hand) side of the luggage compartment. The phone module is connected on the D2B ring to the rest of the entertainment system. The D2B ring allows control instructions and audio to be transfered to the relevant modules.

www.JagDocs.com

MICROPHONE

E94940

The microphone is located in the overhead console which surrounds the front interior lamp. The microphone is hardwired to the IAM.

CONTROL SWITCHES

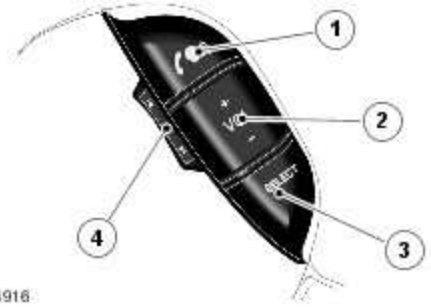

E94916

Item	Part Number	Description
1		Answer call or dial switch
2		Volume up/down
3		Mode select button
4		Menu previous/next button

The steering wheel mounted telephone control switches are located on the RH side of the steering wheel. The switches are a resistive ladder type which return a different voltage to the ICM in response to different switches being pressed.

BLUETOOTH ANTENNA

E94941

The bluetooth antenna is located on the LH (left-hand) side of the rear parcel shelf. The antenna is used to connect the telephone control module to a Bluetooth compatible phone.

TELEPHONE VOICE CONTROL

The vehicle system is able to use any voice tags which are stored in the mobile telephone. There is no voice dialing feature of the cellular telephone system.

Voice dialing is accessed via a long press of the RH rotary ENTER button. The ICM displays that Voice tag dialing is in progress and an audible prompt is generated from th e telephone control module. After the prompt the handset waits several seconds for the voice command.

PRINCIPLES OF OPERATION

The phone system is controlled from the ICM and/or the steering wheel mounted switches. Control signals from the steering wheel switches are sent via the clock spring and the steering wheel module to the ICM. The ICM sends control signals on the D2B ring to the telephone control module. Audio is sent on the D2B ring to the audio amplifier and is output on the vehicle speaker system.

www.JagDocs.com

CONTROL DIAGRAM

NOTE:

A = Hardwired; **Z** = D2B

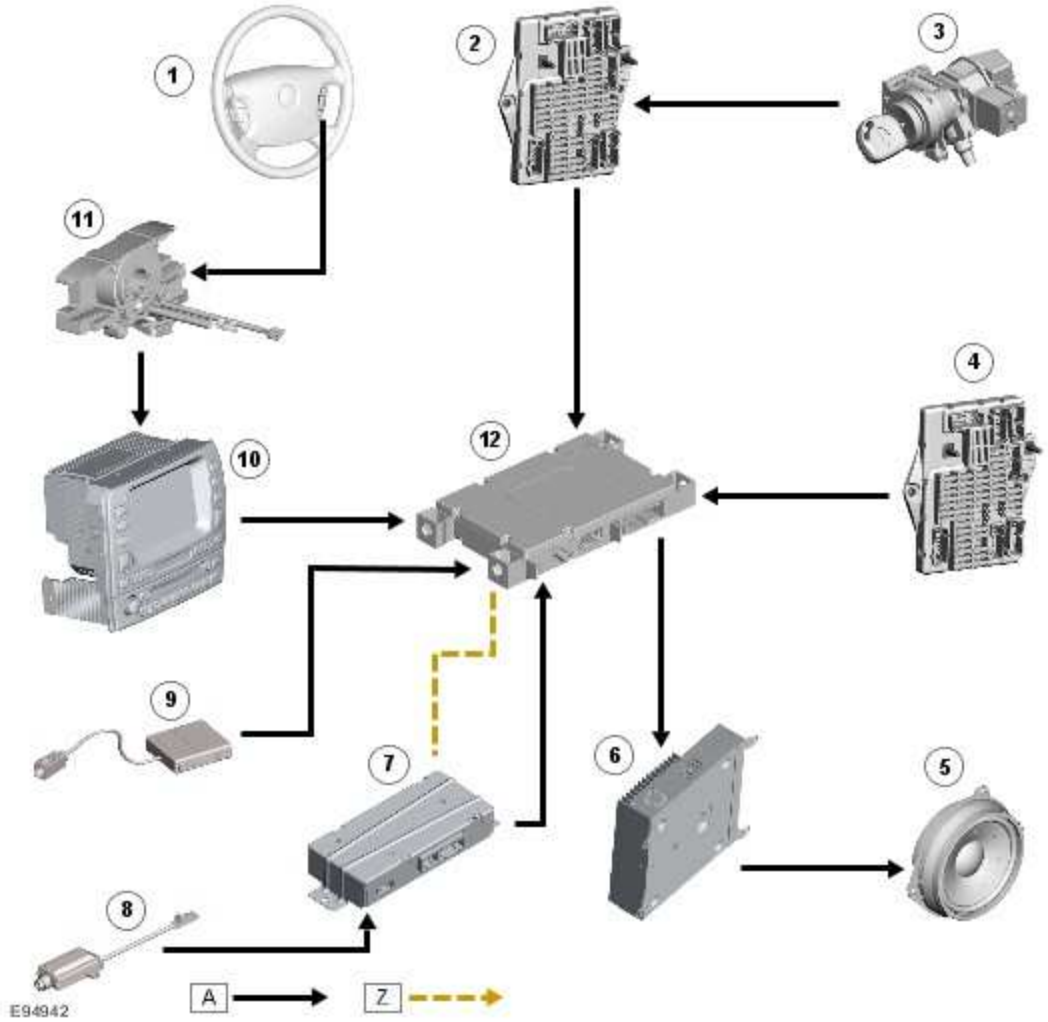

Item	Part Number	Description
1		Steering wheel mounted control switches
2		CJB (central junction box)
3		Ignition switch
4		BJB (battery junction box)
5		Speakers
6		Audio amplifier
7		Voice recognition control module

8		Microphone
9		Bluetooth antenna
10		Integrated audio module (IAM)
11		Clockspring
12		Telephone control module

www.JagDocs.com

Cellular Phone

Principles of Operation

For a detailed description of the Cellular Phone, refer to the relevant Description and Operation sections in the workshop manual.
Cellular Phone - VIN Range: G00442->G45703

Inspection and Verification

1 . Verify the customer concern.

2 . Visually inspect for obvious signs of mechanical or electrical damage.

Visual Inspection Chart

Electrical
• Fuses/relays • Wiring Harness For Damage And Corrosion • Electrical Connector(s) Loose, Damaged Or Corrosion

1 . If an obvious cause for an observed or reported concern is found, correct the cause (if possible) before proceeding to the next step.

2 . If the cause is not visually evident, check for Diagnostic Trouble Codes (DTCs) and refer to the DTC Index.

DTC Index

Telephone Control Module

CAUTION: When probing connectors to take measurements in the course of the pinpoint tests, use the adaptor kit, part number 3548-1358-00

NOTE:

If the control module/component is suspect and the vehicle remains under manufacturer warranty, refer to the Warranty Policy and Procedures manual (section B1.2), or determine if any prior approval program is in operation, prior to the installation of a new module/component.

NOTE:

When performing voltage or resistance tests, always use a digital multimeter (DMM) accurate to three decimal places and with a current calibration certificate. When testing resistance, always take the resistance of the DMM leads into account.

NOTE:

Check and rectify basic faults before beginning diagnostic routines that involve pinpoint tests.

NOTE:

Inspect connectors for signs of water ingress, and pins for damage and/or corrosion.

NOTE:

If DTCs are recorded and, after performing the pinpoint tests, a fault is not present, an intermittent concern may be the cause. Always check for loose connections and corroded terminals.

DTC	Description	Possible Causes	Action
B1342	Module Internal failure	• Telephone control module - internal failure	Suspect telephone control module replace as required, refer to the new module installation note at the top of the DTC Index
B2103	Antenna Not Connected	• Telephone control module - antenna not connected	Refer to electrical circuit diagrams, notes and check telephone control module to antenna circuit
B2633	Driver-Front Microphone Circuit Failure	• Telephone control module - microphone circuit open	Refer to electrical circuit diagrams, notes and check telephone control module to microphone for open circuit
B2638	Phone rechargeable battery fault	Incorrect battery fitted or poor charging	Suspect handset battery fault or poor circuit connection between handset and holder. Refer to electrical circuit diagrams, notes and check circuit between holder and telephone control module for fault, if no fault if present

www.JagDocs.com

			advise a new phone battery is required.
U2601	D2B (wake up line short to ground)	• Telephone control module - wake-up line short to ground	Refer to electrical circuit diagrams, notes and check telephone control module (D2B) wake-up Line for short to ground
U2609	D2B (wake-up line pulse width out of spec)	• Telephone control module - wake-up line fault (pulse< 50mS, pulse > 110mS)	Refer to electrical circuit diagrams, notes and check telephone control module - (D2B) wake-up Line circuit for fault
U2610	D2B (Slave ECU fails to receive a report position)	• During initialization no position status report is received from one or more slave modules	Refer to electrical circuit diagrams, notes and check (D2B) slave modules and circuit for fault, replace as required, refer to the new module installation note at the top of the DTC Index
U2611	D2B (Slave ECU fails to receive an alarm clear command)	• Telephone control module - on entering alarm state, slave ECU has failed to receive alarm clear command	Refer to electrical circuit diagrams, notes and check (D2B) slave modules and circuit for fault, replace as required, refer to the new module installation note at the top of the DTC Index

Cellular Phone - Vehicles With: Bluetooth

Overview

This section covers the components of the Bluetooth cellular phone system.

For information on the description and operation of the Bluetooth cellular phone system :
Cellular Phone - VIN Range: G45704->H18679

For additional information on the Bluetooth cellular phone system : REFER to owner information - Bluetooth telephone system handbook.

Inspection and Verification

NOTE:

> **Only cellular phones and software versions featured in the Jaguar Bluetooth approved phones and software list can be guaranteed to operate correctly. Check the D2B ring order and circuit integrity. Before pairing a handset to the Bluetooth phone system make sure that the handbook for the specific handset is available.**

1 . Verify the customer concern by operating the system using the customers cellular phone.

2 . Visually inspect for obvious signs of electrical damage.

Visual Inspection Chart

Electrical
• Fuse(s) • Wiring harness • Electrical connector(s) • Bluetooth cellular phone • Microphone • Steering wheel control • Bluetooth upgrade module • Portable support electronics (PSE) module • Voice module

1 . If an obvious cause for an observed or reported concern is found, correct the cause (if possible) before proceeding to the next step.

2 . Use the approved diagnostic system or a scan tool to retrieve any DTCs before moving onto the symptom chart.

Make sure that all DTCs are cleared following rectification.

www.JagDocs.com

Symptom Chart

Symptom	Action
"NO PHONE FITTED" (touch-screen) message displayed continuously or "NO PHONE" message displayed every time the phone mode button is pressed	GO to Pinpoint Test G970218p1.
"HANDSET IN USE" (touch-screen) message displayed for more than 2 minutes, or "HANDSET" message displayed every time the phone mode button is pressed and never changes to "SIG*"	GO to Pinpoint Test G970218p2.
Unable to pair the handset to telephone system	GO to Pinpoint Test G970218p3.
"PHONE OFF" message displayed (touch-screen only)	GO to Pinpoint Test G970218p4.
Cannot answer/reject/end call from the audio head unit/touch screen/steering wheel control	GO to Pinpoint Test G970218p5.
Unable to connect the handset to telephone system	GO to Pinpoint Test G970218p6.
Bluetooth connection is dropped	GO to Pinpoint Test G970218p7.
Incorrect or no phonebook entries	GO to Pinpoint Test G970218p8.
No third party audio	GO to Pinpoint Test G970218p9.
No in-vehicle audio	GO to Pinpoint Test G970218p10.
No ringing heard through the vehicle speakers	GO to Pinpoint Test G970218p11.
Low audio volume	GO to Pinpoint Test G970218p12.
Cannot dial out from audio head unit/touch-screen/steering wheel control	GO to Pinpoint Test G970218p13.

Voice activated phone functions inoperative	GO to Pinpoint Test G970218p14.
Call is dropped	GO to Pinpoint Test G970218p15.
Interference and distortion	GO to Pinpoint Test G970218p16.
Unable to transfer call between hands free and handset	GO to Pinpoint Test G970218p17.

Pinpoint Tests

NOTE:

When performing voltage or resistance tests, always use a digital multimeter (DMM) accurate to three decimal places, and with an up-to-date calibration certificate. When testing resistance always take the resistance of the DMM leads into account.

NOTE:

Inspect connectors for signs of water ingress, and pins for damage and/or corrosion.

NOTE:

If a control module or component is suspect and the vehicle remains under manufacturer warranty, refer to the Warranty Policy and Procedures manual (section B1.2), or determine if any prior approval program is in operation, before the replacement of a component.

PINPOINT TEST G970218p1 : "NO PHONE FITTED" (touch-screen) message displayed continuously or "NO PHONE" message displayed every time the phone mode button is pressed

G970218t1 :

1.

www.JagDocs.com

- **Is the car a USA/Mexico/Canada car?**

-> Yes
GO to Pinpoint Test G970218t3.

-> No
GO to Pinpoint Test G970218t2.

G970218t2 :

1.

- **Is the VIN of the car post VIN break for Bluetooth? (Refer to Technical Helpline for VIN break information).**

-> Yes
GO to Pinpoint Test G970218t3.

-> No
The Bluetooth system cannot be retrofitted to rest of world cars pre-VIN break or to those cars not fitted with the Bluetooth pre-wire due to a harness architecture change.

G970218t3 :

1.

- **Has the correct harness been fitted to the car?**

-> Yes
GO to Pinpoint Test G970218t4.

-> No
The Bluetooth system cannot be retrofitted to rest of world cars pre-VIN break or to those cars not fitted with the Bluetooth pre-wire due to a harness architecture change. (Refer to Technical Helpline for VIN break and pre-wire information).

G970218t4 :

1.

- **Does the display ever return to the main phone screen or ever display "PHONE"?**

-> Yes
GO to Pinpoint Test G970218t22.

-> No
GO to Pinpoint Test G970218t5.

G970218t5 :

1.

- **Check the part number of the portable support electronics (PSE) module. Has the correct part been fitted?**

-> Yes
Check power, ignition and ground circuits/connections at the PSE module. GO to Pinpoint Test G970218t7.

-> No
Refer to the warranty policy and procedures manual if the PSE module is suspect.

G970218t22 :

1.

- **Are any of the D2B connections loose or damaged?**

-> Yes
Reconnect/change/repair the D2B leads and check for normal operation.

-> No
GO to Pinpoint Test G970218t7.

G970218t7 :

1.

- **Are power, ignition and ground being supplied to the portable support electronics (PSE) module?**

-> Yes
Refer to the warranty policy and procedures manual if the PSE module is suspect.

-> No
Rectify as necessary. Refer to the electrical guides.

PINPOINT TEST G970218p2 : "HANDSET IN USE" (touch-screen)

www.JagDocs.com

message displayed for more than 2 minutes or "HANDSET" message displayed every time the phone mode button is pressed and never changes to "SIG*"

G970218t21 :

1.

- **Has the system been paired to a handset?**

-> Yes
Key off ignition and wait 6 minutes for the portable support electronics (PSE) module to shut down. The Bluetooth upgrade module remains active for 6 minutes after the ignition has been switched off. It is important to wait this 6 minutes so that a clean boot-up of the Bluetooth upgrade module is achieved and the correct information is stored. Switch off the paired handset; remove the battery from the back of the handset. Replace the battery into the handset and switch on, make sure the Bluetooth function is on and the handset is within range. Key on ignition. GO to Pinpoint Test G970218t8.

-> No
GO to Pinpoint Test G970218t9.

G970218t8 :

1.

- **Does the system still display "HANDSET IN USE" (touch-screen) message displayed for more than 2 minutes, or "HANDSET" message displayed every time the phone mode button is pressed and then drops out of phone mode?**

-> Yes
GO to Pinpoint Test G970218t9.

-> No
Problem may have been due to the Bluetooth link being disconnected.

G970218t9 :

1.

- **Is the connection between the Bluetooth upgrade module and the phone harness loose?**

-> Yes
Reconnect the Bluetooth upgrade module and check for normal operation.

-> No
GO to Pinpoint Test G970218t10.

G970218t6 :

1.

- **Are any of the Bluetooth upgrade module pins damaged?**

-> Yes
Refer to the warranty policy and procedures manual if the Bluetooth upgrade module is suspect.

-> No
Check harness to/from the Bluetooth upgrade module and the portable support electronics (PSE) module. GO to Pinpoint Test G970218t10.

G970218t10 :

1.

- **Is power being supplied to the Bluetooth upgrade module?**

-> Yes
Refer to the warranty policy and procedures manual if the Bluetooth upgrade module is suspect.

-> No
GO to Pinpoint Test G970218t11.

G970218t11 :

1.

- **Are power, ignition, and ground being supplied to the portable support electronics (PSE) module?**

-> Yes
Refer to the warranty policy and procedures manual if the PSE module is suspect.

-> No
Rectify as necessary. Refer to the electrical guides.

www.JagDocs.com

PINPOINT TEST G970218p3 : - Unable to pair the handset to telephone system

G970218t14 :

1.

- **Has another handset previously been paired to the system?**

-> Yes
GO to Pinpoint Test G970218t15.

-> No
GO to Pinpoint Test G970218t16.

G970218t15 :

1.

- **Is the "HANDSET IN USE" (touch-screen) or "HANDSET" message displayed, or does the system drop out of phone mode?**

-> Yes
Go to'"HANDSET IN USE" or "HANDSET"' message displayed - GO to Pinpoint Test G970218p2.

-> No
GO to Pinpoint Test G970218t16.

G970218t16 :

1.

- **Does the touch-screen display "Discover Me" with 4 or 5 bars (The 5th bar will flash slowly) or does the audio head unit display "SIG****" or "SIG*****" (The 5th '*' will flash slowly)?**

-> Yes
Retry the pairing process following the 'quick guide information' for the specific handset. GO to Pinpoint Test G970218t17.

-> No
Enter the ##3#*# pairing key sequence. GO to Pinpoint Test G970218t18.

G970218t17 :

1.

- **Has the handset paired with the system successfully? ("Phone connected" displayed (touch screen) or "SIG*" displayed (audio head unit display))?**

-> Yes
Problem may have been due to a faulty Bluetooth connection.

-> No
Key off ignition and wait 6 minutes for the portable support electronics (PSE) module to shut down. The Bluetooth upgrade module remains active for 6 minutes after the ignition has been switched off. It is important to wait this 6 minutes so that a clean boot-up of the Bluetooth upgrade module is achieved and the correct information is stored. Switch off the paired handset; remove the battery from the back of the handset. Replace the battery into the handset and switch on, make sure the Bluetooth function is on and the handset is within range. Key on ignition. GO to Pinpoint Test G970218t20.

G970218t18 :

1.

- **Does the touch-screen display "Discover Me" with 4 or 5 bars (The 5th bar will flash slowly) or does the audio head unit display "SIG****" or "SIG*****" (The 5th '*' will flash slowly)?**

-> Yes
Retry the pairing process following the 'quick guide information' for the specific handset.

-> No
Key off ignition and wait 6 minutes for the portable support electronics (PSE) module to shut down. Key on ignition. GO to Pinpoint Test G970218t19.

G970218t19 :

1.

- **Does the touch-screen display "Discover Me" with 4 or 5 bars (The 5th bar will flash slowly) or does the audio head unit display "SIG****" or "SIG*****" (The 5th '*' will flash slowly)?**

-> Yes
Retry the pairing process following the 'quick guide information' for the specific handset.

-> No
GO to Pinpoint Test G970218t196.

www.JagDocs.com

G970218t20 :

1.

- **Has the handset paired with the system successfully ("Phone connected" displayed (touch screen) or "SIG*" displayed (audio head unit display))?**

-> Yes
Problem may have been due to a faulty Bluetooth connection.

-> No
Pair and connect a different known 'good' handset to the vehicle phone system. GO to Pinpoint Test G970218t195.

G970218t195 :

1.

- **Has the handset paired with the system successfully ("Phone connected" displayed (touch screen) or "SIG*" displayed (audio head unit display))?**

-> Yes
Problem may be an issue with the user's handset, consult the handset supplier.

-> No
GO to Pinpoint Test G970218t196.

G970218t196 :

1.

- **Is the connection between the Bluetooth upgrade module and the phone harness loose?**

-> Yes
Reconnect the Bluetooth upgrade module and check for normal operation.

-> No
GO to Pinpoint Test G970218t197.

G970218t197 :

1.

- **Is power being supplied to the Bluetooth upgrade module?**

-> Yes
Refer to the warranty policy and procedures manual if the Bluetooth upgrade module is suspect.

-> No
GO to Pinpoint Test G970218t198.

G970218t198 :
1.

- **Are power, ignition, and ground being supplied to the portable support electronics (PSE) module?**

-> Yes
Refer to the warranty policy and procedures manual if the PSE module is suspect.

-> No
Rectify as necessary. Refer to the electrical guides.

PINPOINT TEST G970218p4 : "PHONE OFF" message displayed (touch-screen only)

G970218t23 :
1.

- **Is the Bluetooth system paired to a mobile phone handset?**

-> Yes
GO to Pinpoint Test G970218t24.

-> No
Key off ignition and wait 6 minutes for the portable support electronics (PSE) module to shut down. Key on ignition. GO to Pinpoint Test G970218t27.

G970218t24 :
1.

- **Is the paired phone handset within range and switched on?**

-> Yes
GO to Pinpoint Test G970218t25.

-> No

www.JagDocs.com

GO to Pinpoint Test G970218t26.

G970218t25 :

1.

- **Is the paired phone handset 'connected' to the vehicle phone system?**

-> Yes
GO to Pinpoint Test G970218t26.

-> No
Follow instructions to 'connect' specific handset with the vehicle phone system. GO to Pinpoint Test G970218t26.

G970218t26 :

1.

- **Has the user switched out of phone mode e.g. audio, and then back to phone mode?**

-> Yes
This is a system issue carried over from the previous phone system. Make sure that the last paired phone is on and within range, and test for normal operation.

-> No
Call Technical Helpline.

G970218t27 :

1.

- **Does the display still show the "PHONE OFF" message?**

-> Yes
GO to Pinpoint Test G970218t28.

-> No
Check for normal operation.

G970218t28 :

1.

- **Are the D2B connections loose or damaged?**

-> Yes
Reconnect/change/repair the D2B leads and check for normal operation.

-> No
GO to Pinpoint Test G970218t29.

G970218t29 :
1.

- **Check all connections/connectivity to and from the portable support electronics (PSE) module and the Bluetooth upgrade module. Are any of the harness connections loose or damaged?**

-> Yes
Rectify as necessary. Refer to the electrical guides.

-> No
Refer to the warranty policy and procedures manual if a module is suspect.

PINPOINT TEST G970218p5 : Cannot answer/reject/end call from the audio head unit/touch screen/steering wheel control

G970218t32 :
1.

- **Cannot answer call?**

-> Yes
Read DTCs from the portable support electronics (PSE) module using the approved diagnostic system and rectify as necessary. GO to Pinpoint Test G970218t47.

-> No
GO to Pinpoint Test G970218t33.

G970218t33 :
1.

- **Cannot reject/end call?**

www.JagDocs.com

-> Yes
This is a network dependant feature, consult the relevant mobile phone network before continuing. Read DTCs from the portable support electronics (PSE) module using the approved diagnostic system and rectify as necessary. GO to Pinpoint Test G970218t47.

-> No
GO to Pinpoint Test G970218t47.

G970218t47 :

1.

- **Can call be answered/rejected/ended from the handset (with Bluetooth link still connected)?**

-> Yes
GO to Pinpoint Test G970218t48.

-> No
Disconnect the Bluetooth link between the handset and vehicle phone system and re-try the call. GO to Pinpoint Test G970218t49.

G970218t48 :

1.

- **Is audio heard during call/call set up?**

-> Yes
Refer to audio head unit diagnostics using the approved diagnostic system.

-> No
Check D2B ring is complete. Rectify as necessary.

G970218t49 :

1.

- **Can call be answered/rejected/ended from the handset with Bluetooth link disconnected?**

-> Yes
Key off ignition and wait 6 minutes for the portable support electronics (PSE) module to shut down. Switch off the handset; remove the battery from the back of the handset. Replace the battery into the handset and switch on. Key on ignition. Make sure the Bluetooth link is reconnected and re-try the call. GO to Pinpoint Test G970218t50.

-> No
This may be a handset issue, consult the handset supplier.

G970218t50 :

1.

- **Can the call be answered/rejected/ended from the handset (with Bluetooth link connected)?**

-> Yes
Problem may have been due to the Bluetooth link being inoperative.

-> No
Pair and connect a different known 'good' handset to the vehicle phone system and make an incoming call. GO to Pinpoint Test G970218t51.

G970218t51 :

1.

- **Can the call be answered/rejected/ended from the handset (with Bluetooth link connected)?**

-> Yes
This may be a handset issue, consult the handset supplier.

-> No
GO to Pinpoint Test G970218t52.

G970218t52 :

1.

- **Check all connections/connectivity to and from the portable support electronics (PSE) module and the Bluetooth upgrade module. Are any of the harness connections loose or damaged?**

-> Yes
Rectify as necessary. Refer to the electrical guides.

-> No
Refer to the warranty policy and procedures manual if a module is suspect.

www.JagDocs.com

PINPOINT TEST G970218p6 : Unable to connect the handset to telephone system

G970218t34 :

1.

- **Was the handset the last device to be connected to the vehicle?**

-> Yes
GO to Pinpoint Test G970218t57.

-> No
In the handset Bluetooth menu, delete any existing "Jaguar" devices from the list. Enter the ##3#*# key sequence to initiate the pairing process. Follow pairing process for the specific handset. GO to Pinpoint Test G970218t61.

G970218t57 :

1.

- **In the handset Bluetooth menu, is "Jaguar" listed as a paired device?**

-> Yes
GO to Pinpoint Test G970218t58.

-> No
Follow pairing process for the specific handset. GO to Pinpoint Test G970218t61.

G970218t58 :

1.

- **Is the handset 'connected' to another Bluetooth device (i.e. not "Jaguar")?**

-> Yes
Check "Active Devices" in the handset's Bluetooth menu and disconnect the handset from the other Bluetooth device. Follow the instructions for the specific handset to allow the handset to 'connect' to the vehicle. GO to Pinpoint Test G970218t63.

-> No

GO to Pinpoint Test G970218t59.

G970218t59 :

1.

- **What message does the vehicle display show, "Connected" or "No BT Phone"?**

-> Yes
Follow the vehicle un-pairing process, delete "Jaguar" from the handset device list and key off ignition for 6 minutes. Key on ignition. Follow the pairing process for the specific handset. GO to Pinpoint Test G970218t61.

-> No
GO to Pinpoint Test G970218t60.

G970218t60 :

1.

- **Is the vehicle in "Discover Me" mode?**

-> Yes
Follow pairing process for the specific handset. GO to Pinpoint Test G970218t61.

-> No
Go to'"HANDSET IN USE" or "HANDSET"' message displayed - GO to Pinpoint Test G970218p2.

G970218t61 :

1.

- **Has the handset paired successfully with the vehicle?**

-> Yes
GO to Pinpoint Test G970218t62.

-> No
Go to 'Unable to pair' - GO to Pinpoint Test G970218p3.

G970218t62 :

1.

www.JagDocs.com

- **Has the handset automatically connected to the vehicle phone system?**

-> Yes
Following the instructions for the specific handset to make sure that the Bluetooth settings are set for automatic connection, connection should now be complete.

-> No
Follow the instructions for the specific handset to allow the handset to 'connect' to the vehicle. GO to Pinpoint Test G970218t63.

G970218t63 :

1.

- **Has the handset connected to the vehicle phone system?**

-> Yes
Following the instructions for the specific handset to make sure that the Bluetooth settings are set for automatic connection, connection should now be complete.

-> No
Key off ignition and wait 6 minutes for the portable support electronics (PSE) module to shut down. Switch off the handset; remove the battery from the back of the handset. Replace the battery into the handset and switch on. Key on ignition. Re-try pairing and connecting. GO to Pinpoint Test G970218t64.

G970218t64 :

1.

- **Has the handset connected to the vehicle phone system?**

-> Yes
Following the instructions for the specific handset to make sure that the Bluetooth settings are set for automatic connection, connection should now be complete.

-> No
Pair and connect a different known 'good' handset to the vehicle phone system. GO to Pinpoint Test G970218t65.

G970218t65 :

1.

- **Does the handset 'connect' OK?**

-> Yes
This is a handset issue, consult the handset supplier.

-> No
Refer to the warranty policy and procedures manual if the Bluetooth upgrade module is suspect.

PINPOINT TEST G970218p7 : Bluetooth connection is dropped

G970218t35 :

1.

- **Does the handset battery have a good level of charge?**

-> Yes
GO to Pinpoint Test G970218t67.

-> No
Recharge the handset battery. Bluetooth performance cannot be guaranteed with low battery power.

G970218t67 :

1.

- **Does the handset show good signal strength?**

-> Yes
GO to Pinpoint Test G970218t68.

-> No
Without good signal strength, the vehicle display will show "SIG_____" or "No BT Phone" or "No Service". Move into an area with good signal strength and check for normal operation.

G970218t68 :

1.

- **Check the handset menu. Has auto connect been turned on?**

-> Yes
GO to Pinpoint Test G970218t69.

www.JagDocs.com

-> No
Switch auto connect on and check for normal operation.

G970218t69 :

1.

- **Has the user tried to transfer a call from hands free to handset?**

-> Yes
Check the handset guide info, some handsets will not auto reconnect Bluetooth after a handset call.

-> No
GO to Pinpoint Test G970218t70.

G970218t70 :

1.

- **Does the handset display show that it is connected to the vehicle?**

-> Yes
GO to Pinpoint Test G970218t72.

-> No
GO to Pinpoint Test G970218t71.

G970218t71 :

1.

- **Does the vehicle display "SIG_____" or "No BT Phone"?**

-> Yes
Follow instructions for the specific handset to 'connect' the handset to vehicle. GO to Pinpoint Test G970218t75.

-> No
GO to Pinpoint Test G970218t72.

G970218t72 :

1.

- **Does the vehicle display "SIG*" or "Phone Connected"?**

-> Yes
Bluetooth connection has not been dropped, check for normal operation.

-> No
Key off ignition and wait 6 minutes for the portable support electronics (PSE) module to shut down. Switch off the handset; remove the battery from the back of the handset. Replace the battery into the handset and switch on. Key on ignition. GO to Pinpoint Test G970218t73.

G970218t73 :

1.

- **Does the vehicle display "SIG*" or "Phone Connected"?**

-> Yes
Check for normal operation.

-> No
Follow the vehicle un-pairing process, delete "Jaguar" from the handset device list and key off ignition for 6 minutes. Key on ignition. Follow pairing process for the specific handset. GO to Pinpoint Test G970218t74.

G970218t74 :

1.

- **Has the handset paired successfully with the vehicle?**

-> Yes
Follow instructions for the specific handset to 'connect' the handset to vehicle. GO to Pinpoint Test G970218t75.

-> No
Go to 'Unable to pair' - GO to Pinpoint Test G970218p3.

G970218t75 :

1.

- **Does the handset 'connect'?**

-> Yes
GO to Pinpoint Test G970218t13.

www.JagDocs.com

-> No
Go to 'Unable to connect' - GO to Pinpoint Test G970218p6.

G970218t13 :
1.

- **Does the vehicle display show that it is 'connected'?**

-> Yes
Check for normal operation.

-> No
Refer to the warranty policy and procedures manual if the Bluetooth upgrade module is suspect.

PINPOINT TEST G970218p8 : Incorrect or no phonebook entries

G970218t36 :
1.

- **Check the Jaguar Bluetooth approved phone list guide: Does the handset support phonebook download?**

-> Yes
GO to Pinpoint Test G970218t37.

-> No
Advise user that the handset does not support phonebook download.

G970218t37 :
1.

- **Is the Bluetooth system paired and connected to a phone handset?**

-> Yes
GO to Pinpoint Test G970218t76.

-> No
Pair and connect an approved handset to the vehicle phone system. GO to Pinpoint Test G970218t37.

G970218t76 :

1.

- **Has the user followed vehicle and handset instructions for downloading phonebook?**

-> Yes
GO to Pinpoint Test G970218t77.

-> No
Refer to the vehicle handbooks/handset 'quick guide information' regarding phonebook download. Check for normal operation.

G970218t77 :

1.

- **After "Downloading the phonebook" has the ignition been switched off for 6 minutes?**

-> Yes
GO to Pinpoint Test G970218t80.

-> No
Make sure that the ignition has been switched off for 6 minutes after following process for downloading phonebook. The Bluetooth upgrade module remains active for 6 minutes after the ignition has been switched off. It is important to wait this 6 minutes so that a clean boot-up of the Bluetooth upgrade module is achieved and the correct information is stored. Switch ignition on to prompt the portable support electronics (PSE) module to pull phonebook entries from the Bluetooth upgrade module. GO to Pinpoint Test G970218t78.

G970218t78 :

1.

- **Can the user view the phonebook entries on the vehicle display?**

-> Yes
End.

-> No
GO to Pinpoint Test G970218t79.

G970218t79 :

1.

www.JagDocs.com

- **Have two or more handsets been tried?**

-> Yes
GO to Pinpoint Test G970218t82.

-> No
Pair and connect a different known 'good' handset which will automatically download the phonebook to the vehicle phone system. GO to Pinpoint Test G970218t82.

G970218t80 :

1.

- **After switching the ignition back on, does the handset connect to the vehicle phone system?**

-> Yes
GO to Pinpoint Test G970218t81.

-> No
Reconnect the handset and make sure auto-reconnect is set to on. GO to Pinpoint Test G970218t80.

G970218t81 :

1.

- **Is the phonebook available on the vehicle display?**

-> Yes
End

-> No
Pair and connect a different known 'good' handset which will automatically download the phonebook to the vehicle phone system. GO to Pinpoint Test G970218t82.

G970218t82 :

1.

- **Is the phonebook available on the vehicle display?**

-> Yes
This is an issue with the user's handset, consult the handset supplier.

-> No
Refer to the warranty policy and procedures manual if a module is suspect.

PINPOINT TEST G970218p9 : No third party audio

G970218t38 :

1. Check the handset manual and the handset settings to make sure user's speech is routed through the vehicle microphone and not the handset microphone.

- **Does 3rd party call audio work with the call in 'handset' mode?**

-> Yes
Check for telephone related DTCs using the approved diagnostic system. Rectify as necessary. GO to Pinpoint Test G970218t88.

-> No
GO to Pinpoint Test G970218t85.

G970218t85 :

1.

- **Is there any 3rd party call audio with the handset disconnected from the Bluetooth system?**

-> Yes
Pair and connect a different known 'good' handset to the vehicle phone system and make a call to the 3rd party. GO to Pinpoint Test G970218t87.

-> No
Try calling another 3rd party from the handset. GO to Pinpoint Test G970218t86.

G970218t86 :

1.

- **Is there any 3rd party audio?**

-> Yes
Initial audio problem may be due to a fault at 3rd party end. Check by calling them on another number.

www.JagDocs.com

-> No
This may be a handset issue, consult the handset supplier.

G970218t87 :

1.

- **Does the 3rd party call audio work with the Bluetooth system?**

-> Yes
This may be a handset issue, consult the handset supplier.

-> No
Check for telephone related DTCs using the approved diagnostic system. Rectify as necessary. GO to Pinpoint Test G970218t88.

G970218t88 :

1.

- **Is there any 3rd party audio?**

-> Yes
End.

-> No
Disconnect the Bluetooth link between the handset and vehicle phone system and re-try the call. GO to Pinpoint Test G970218t90.

G970218t90 :

1.

- **Does the 3rd party call audio work with the mobile phone disconnected from the vehicle?**

-> Yes
Re-connect the Bluetooth link between the handset and the vehicle phone system and re-try the call. GO to Pinpoint Test G970218t92.

-> No
Switch off the handset, remove the battery from the back of the handset. Replace the battery into the handset and switch on. Make sure the Bluetooth link is disconnected and re-try the call. GO to Pinpoint Test G970218t91.

G970218t91 :

1.

- **Does the 3rd party call audio work with the mobile phone disconnected from the vehicle?**

-> Yes
Problem may be due to a faulty Bluetooth connection.

-> No
This may be a handset issue, consult the handset supplier.

G970218t92 :

1.

- **Does the 3rd party call audio work with the Bluetooth system?**

-> Yes
Problem may be due to a faulty Bluetooth connection.

-> No
GO to Pinpoint Test G970218t93.

G970218t93 :

1.

- **Does the 3rd party call audio work with the mobile phone in 'handset' mode?**

-> Yes
GO to Pinpoint Test G970218t94.

-> No
Key off ignition and wait 6 minutes for the portable support electronics (PSE) module to shut down. Key on ignition. Make sure the Bluetooth link is re-connected and re-try the call pairing and connecting. GO to Pinpoint Test G970218t98.

G970218t94 :

1.

- **Does the vehicle have voice control fitted?**

-> Yes
GO to Pinpoint Test G970218t95.

www.JagDocs.com

-> No
GO to Pinpoint Test G970218t96.

G970218t95 :

1.

- **Does the voice control pick up commands from the user?**

-> Yes
Check harness connections between the microphone and the portable support electronics (PSE) module are not loose or damaged. GO to Pinpoint Test G970218t100.

-> No
Refer to the warranty policy and procedures manual if the voice control module is suspect.

G970218t96 :

1.

- **Is the vehicle a USA/Canada/Mexico vehicle?**

-> Yes
GO to Pinpoint Test G970218t97.

-> No
Check harness connections between the microphone and the portable support electronics (PSE) module are not loose or damaged. GO to Pinpoint Test G970218t100.

G970218t97 :

1.

- **Does the vehicle have the voice control shorting loop fitted?**

-> Yes
Check harness connections between the microphone and the portable support electronics (PSE) module are not loose or damaged. GO to Pinpoint Test G970218t100.

-> No
Fit the voice control shorting loop and check for normal operation.

G970218t98 :

1.

- **Does the 3rd party call audio work with the Bluetooth system?**

-> Yes
Problem may be due to a faulty Bluetooth connection.

-> No
Pair and connect a different known 'good' handset to the vehicle phone system and make an incoming call. GO to Pinpoint Test G970218t99.

G970218t99 :

1.

- **Does the 3rd party call audio work with the Bluetooth system?**

-> Yes
This may be a handset issue, consult the handset supplier.

-> No
Check harness connections between the microphone and the portable support electronics (PSE) module are not loose or damaged. GO to Pinpoint Test G970218t100.

G970218t100 :

1.

- **Are the microphone harness connections damaged?**

-> Yes
Rectify as necessary. Refer to the electrical guides.

-> No
Replace the microphone and re-try the call. GO to Pinpoint Test G970218t101.

G970218t101 :

1.

- **Does the 3rd party call audio work with the Bluetooth system?**

-> Yes
Problem may have been due to a faulty microphone.

www.JagDocs.com

-> No
Refer to the warranty policy and procedures manual if a module is suspect.

PINPOINT TEST G970218p10 : No in-vehicle audio

G970218t39 :

1.

- **Can the audio sources be heard through the vehicle speakers e.g. radio?**

-> Yes
GO to Pinpoint Test G970218t103.

-> No
Check D2B connections are not loose or damaged. Reconnect/change/repair the D2B leads and check for normal operation.

G970218t103 :

1.

- **Can the call be heard when transferred to the handset?**

-> Yes
Key off ignition and wait 6 minutes for the portable support electronics (PSE) module to shut down. Key on ignition. Make sure the Bluetooth link is reconnected and re-try the call. GO to Pinpoint Test G970218t104.

-> No
Disconnect the Bluetooth link between the handset and vehicle phone system and re-try the call. GO to Pinpoint Test G970218t105.

G970218t104 :

1.

- **Can the audio be heard through the vehicle speakers?**

-> Yes
The audio problem may have been due to the Bluetooth link being disconnected.

-> No
Pair and connect a different known 'good' handset to the vehicle phone system and make a call to

the 3rd party. GO to Pinpoint Test G970218t108.

G970218t105 :

1.

- **Does the handset audio work with mobile phone disconnected from the vehicle?**

-> Yes
Key off ignition and wait 6 minutes for the portable support electronics (PSE) module to shut down. Key on ignition. Switch off the handset; remove the battery from the back of the handset. Replace the battery into the handset and switch on. Key on ignition. Make sure the Bluetooth link is reconnected and re-try the call. GO to Pinpoint Test G970218t107.

-> No
Try calling another 3rd party from the handset. GO to Pinpoint Test G970218t106.

G970218t106 :

1.

- **Is there any call audio on the handset?**

-> Yes
Initial audio problem may be due to a fault at the 3rd party end, check by calling them on another number.

-> No
This may be a handset issue, consult the handset supplier.

G970218t107 :

1.

- **Can the audio be heard through the vehicle speakers?**

-> Yes
The audio problem may have been due to the Bluetooth link being disconnected.

-> No
Pair and connect a different known 'good' handset to the vehicle phone system and make a call to the 3rd party. GO to Pinpoint Test G970218t108.

G970218t108 :

1.

www.JagDocs.com

- **Can the audio be heard through the vehicle speakers?**

-> Yes
This may be a handset issue, consult the handset supplier.

-> No
Check harness connections between the Bluetooth upgrade module and the portable support electronics (PSE) module. GO to Pinpoint Test G970218t109.

G970218t109 :

1.

- **Are any of the harness connections damaged?**

-> Yes
Rectify as necessary. Refer to the electrical guides.

-> No
Refer to the warranty policy and procedures manual if a module is suspect.

PINPOINT TEST G970218p11 : No ringing heard through the vehicle speakers

G970218t40 :

1.

- **When there is no call in progress, and the audio source is changed, is any audio heard e.g. from radio?**

-> Yes
GO to Pinpoint Test G970218t113.

-> No
Check D2B connections are not loose and that all nodes are connected on the D2B ring. Rectify as necessary. GO to Pinpoint Test G970218t112.

G970218t112 :

1.

- **Are any of the D2B connections damaged?**

-> Yes
Change/repair the D2B leads and check for normal operation.

-> No
Call Technical Helpline.

G970218t113 :

1.

- **Is the vehicle phone system volume set to more than 15?**

-> Yes
GO to Pinpoint Test G970218t114.

-> No
Make sure that the vehicle phone system is set to more than 15 and retry the call.

G970218t114 :

1.

- **Is the message "incoming call" displayed?**

-> Yes
GO to Pinpoint Test G970218t115.

-> No
GO to Pinpoint Test G970218t116.

G970218t115 :

1.

- **On answering the incoming call using the vehicle controls, can the 3rd party be heard through the vehicle speakers?**

-> Yes
GO to Pinpoint Test G970218t116.

-> No
Go to 'No in-vehicle audio' - GO to Pinpoint Test G970218p10.

www.JagDocs.com

G970218t116 :

1.

- **Is there any ringing heard on the handset with the Bluetooth link connected?**

-> Yes
GO to Pinpoint Test G970218t117.

-> No
GO to Pinpoint Test G970218t120.

G970218t117 :

1.

- **Does the handset support in-band ringing or send its ringing status to the Bluetooth upgrade module?**

-> Yes
Key off ignition and wait 6 minutes for the portable support electronics (PSE) module to shut down. Key on ignition. Make sure the Bluetooth link is re-connected and re-try the call. GO to Pinpoint Test G970218t118.

-> No
This is a handset issue, contact the handset supplier or replace with another handset from the approved list.

G970218t118 :

1.

- **Can any ringing be heard through the vehicle speakers?**

-> Yes
The audio problem may have been due to the Bluetooth link being disconnected.

-> No
Un-pair the current handset and pair/connect a known good handset with the vehicle. Make an incoming call. GO to Pinpoint Test G970218t119.

G970218t119 :

1.

- **Can any ringing be heard through the vehicle speakers?**

-> Yes
Contact the handset supplier, the handset may be faulty.

-> No
GO to Pinpoint Test G970218t120.

G970218t120 :

1.

- **Is the message "incoming call" displayed?**

-> Yes
Check the handset instructions to find "profile" settings. GO to Pinpoint Test G970218t124.

-> No
GO to Pinpoint Test G970218t121.

G970218t121 :

1.

- **Does the handset have good signal strength?**

-> Yes
Disconnect the Bluetooth connection. Make sure the handset is not set to silent. Then make an incoming call. GO to Pinpoint Test G970218t122.

-> No
Move into area where the handset receives good signal strength. Make an incoming call and check for normal operation.

G970218t122 :

1.

- **Is there any ringing heard on the handset with the Bluetooth link disconnected?**

-> Yes
Reconnect the Bluetooth connection, and then make an incoming call. GO to Pinpoint Test G970218t123.

-> No
Contact the handset supplier, the handset may be faulty.

www.JagDocs.com

G970218t123 :

1.

- **Can any ringing be heard through the vehicle speakers?**

-> Yes
Problem due to a faulty Bluetooth link.

-> No
GO to Pinpoint Test G970218t114.

G970218t124 :

1.

- **Has the handset "profile" been set to "silent"?**

-> Yes
Change settings within profile, make an incoming call and check for normal operation.

-> No
GO to Pinpoint Test G970218t125.

G970218t125 :

1.

- **Has the handset volume been set to minimum?**

-> Yes
Increase volume setting, make an incoming call and check for normal operation.

-> No
Check Bluetooth connection between the handset and vehicle is OK. GO to Pinpoint Test G970218t126.

G970218t126 :

1.

- **Is the Bluetooth connection OK?**

-> Yes
Disconnect the Bluetooth connection. Make sure that the handset is NOT set to silent, then make an incoming call. GO to Pinpoint Test G970218t127.

-> No
Follow the handset instructions for 'connecting' the Bluetooth link, then make an incoming call and check for normal operation.

G970218t127 :

1.

- **Is there any ringing heard on the handset?**

-> Yes
Reconnect Bluetooth link between the handset and vehicle. GO to Pinpoint Test G970218t128.

-> No
Un-pair the current handset and pair/connect a known good handset with the vehicle. Make an incoming call. GO to Pinpoint Test G970218t119.

G970218t128 :

1.

- **Can any ringing be heard through the vehicle speakers?**

-> Yes
Change settings within profile, make an incoming call and check for normal operation.

-> No
Check harness connections between the Bluetooth upgrade module and the portable support electronics (PSE) module. GO to Pinpoint Test G970218t129.

G970218t129 :

1.

- **Are any of the harness connections damaged?**

-> Yes
Rectify as necessary. Refer to the electrical guides.

-> No
Refer to the warranty policy and procedures manual if a module is suspect.

PINPOINT TEST G970218p12 : Low audio volume

www.JagDocs.com

G970218t41 :

1.

- **Low volume in vehicle (rather than at 3rd party)?**

-> Yes
GO to Pinpoint Test G970218t132.

-> No
If volume is low at 3rd party. GO to Pinpoint Test G970218t139.

G970218t132 :

1.

- **Is the vehicle phone volume set at 12 or above?**

-> Yes
Check fade & balance are both set at '0' or mid point on slider controls. GO to Pinpoint Test G970218t133.

-> No
Increase phone volume to above 12. GO to Pinpoint Test G970218t41.

G970218t133 :

1.

- **Is radio volume OK?**

-> Yes
GO to Pinpoint Test G970218t134.

-> No
Call Technical Helpline.

G970218t134 :

1.

- **Is Bluetooth link between the handset and vehicle still connected?**

-> Yes
GO to Pinpoint Test G970218t135.

-> No
Re-connect the Bluetooth link and re-try the call. GO to Pinpoint Test G970218t41.

G970218t135 :

1.

- **Is call volume still low when call transferred to 'handset' mode?**

-> Yes
GO to Pinpoint Test G970218t136.

-> No
Key off ignition and wait 6 minutes for the portable support electronics (PSE) module to shut down. Key on ignition and re-try the call. GO to Pinpoint Test G970218t146.

G970218t136 :

1.

- **Is the call volume still low with the handset disconnected from the Bluetooth system?**

-> Yes
GO to Pinpoint Test G970218t137.

-> No
Try calling another 3rd party from the handset. GO to Pinpoint Test G970218t138.

G970218t137 :

1.

- **Is the handset volume setting low?**

-> Yes
Increase the handset volume setting and re-try the call. GO to Pinpoint Test G970218t136.

-> No
Low audio issue due to the handset, consult the handset supplier.

www.JagDocs.com

G970218t138 :

1.

- **Is the call volume still low with the handset disconnected from the Bluetooth system?**

-> Yes
Low audio issue due to the handset, consult the handset supplier.

-> No
Initial audio problem may be due to a fault at the 3rd party end. Check by calling them on another number.

G970218t139 :

1.

- **Check that handset volume setting and signal strength are not low. Is call volume still low when call transferred to 'handset' mode?**

-> Yes
GO to Pinpoint Test G970218t144.

-> No
GO to Pinpoint Test G970218t140.

G970218t140 :

1.

- **Is the microphone fitted OK? Check DTCs using the approved diagnostic system.**

-> Yes
GO to Pinpoint Test G970218t142.

-> No
Rectify as necessary. GO to Pinpoint Test G970218t141.

G970218t141 :

1.

- **Is volume still low?**

-> Yes
GO to Pinpoint Test G970218t142.

-> No
Issue caused by faulty microphone or microphone circuit.

G970218t142 :

1.

- **Is voice control fitted to vehicle?**

-> Yes
Disconnect the voice control module and fit the voice control shorting loop to the wiring harness. GO to Pinpoint Test G970218t143.

-> No
GO to Pinpoint Test G970218t144.

G970218t143 :

1.

- **Is volume still low?**

-> Yes
GO to Pinpoint Test G970218t144.

-> No
Refer to voice control diagnostics.

G970218t144 :

1.

- **Is the 3rd party call audio still low with the handset disconnected from the Bluetooth system?**

-> Yes
Pair and connect a different known 'good' handset to the vehicle phone system and make a call to a 3rd party. GO to Pinpoint Test G970218t147.

-> No
Re-connect Bluetooth link and re-try the call. GO to Pinpoint Test G970218t145.

www.JagDocs.com

G970218t145 :

1.

- **Is volume still low?**

-> Yes
Key off ignition and wait 6 minutes for the portable support electronics (PSE) module to shut down. Key on ignition and re-try the call. GO to Pinpoint Test G970218t146.

-> No
Issue caused by a faulty Bluetooth connection.

G970218t146 :

1.

- **Is volume still low?**

-> Yes
Refer to the warranty policy and procedures manual if a module is suspect.

-> No
Issue caused by a faulty Bluetooth connection.

G970218t147 :

1.

- **Is volume still low?**

-> Yes
Refer to the warranty policy and procedures manual if a module is suspect.

-> No
Low audio issue caused by the handset, consult the handset supplier.

PINPOINT TEST G970218p13 : Cannot dial out from audio head unit/touch-screen/steering wheel control

G970218t42 :

1.

- **Is D2B ring complete?**

-> Yes
GO to Pinpoint Test G970218t149.

-> No
Reconnect/change/repair the D2B leads and check for normal operation.

G970218t149 :

1.

- **Does display show "NO SERVICE" or drop out of phone mode?**

-> Yes
GO to Pinpoint Test G970218t150.

-> No
GO to Pinpoint Test G970218t151.

G970218t150 :

1.

- **Signal strength on the handset greater than 1?**

-> Yes
GO to Pinpoint Test G970218t151.

-> No
Re-try call in a stronger signal strength area, low signal strength can cause interference and distortion in car and at 3rd party.

G970218t151 :

1.

- **Can user dial out from the handset?**

-> Yes
Key off ignition and wait 6 minutes for the portable support electronics (PSE) module to shut down. Key on ignition. Make sure the Bluetooth link is reconnected and re-try the call. GO to Pinpoint Test G970218t152.

-> No
Switch off the handset, remove the battery from the back of the handset. Replace the battery into

www.JagDocs.com

the handset and switch on. Make sure the Bluetooth link is reconnected and re-try the call. GO to Pinpoint Test G970218t152.

G970218t152 :

1.

- **Can user dial out from audio head unit or steering wheel control?**

-> Yes
Problem may have been caused by the Bluetooth link being disconnected.

-> No
Pair and connect a different known 'good' handset to the vehicle phone system and make an incoming call. GO to Pinpoint Test G970218t153.

G970218t153 :

1.

- **Can user dial out from audio head unit or steering wheel control?**

-> Yes
This may be a handset issue, consult the handset supplier.

-> No
Refer to the warranty policy and procedures manual if a module is suspect.

PINPOINT TEST G970218p14 : Voice activated phone functions inoperative

G970218t43 :

1. Make sure that the customer has completed voice recognition training.

- **Check audio head unit DTCs using the approved diagnostic system, are there any audio head unit DTCs stored?**

-> Yes
Carry out the pinpoint tests associated with the relevant DTCs using the manufacturer approved diagnostic system.

-> No
GO to Pinpoint Test G970218t158.

G970218t158 :

1.

- **Is there a dial problem?**

-> Yes
GO to Pinpoint Test G970218t159.

-> No
GO to Pinpoint Test G970218t161.

G970218t159 :

1.

- **Dials wrong number?**

-> Yes
GO to Pinpoint Test G970218t163.

-> No
GO to Pinpoint Test G970218t160.

G970218t160 :

1.

- **Will not dial?**

-> Yes
GO to Pinpoint Test G970218t165.

-> No
GO to Pinpoint Test G970218t161.

G970218t161 :

1.

- **Cannot dial using voice control?**

-> Yes
GO to Pinpoint Test G970218t164.

www.JagDocs.com

-> No
GO to Pinpoint Test G970218t162.

G970218t162 :

1.

- **Cannot turn phone on/off?**

-> Yes
GO to Pinpoint Test G970218t164.

-> No
GO to Pinpoint Test G970218t166.

G970218t163 :

1.

- **Is the handset on the approved phone list?**

-> Yes
Call Technical Helpline.

-> No
Only handsets specified in the approved list with the correct level of software can be guaranteed to work.

G970218t164 :

1.

- **Is voice control on the D2B ring?**

-> Yes
GO to Pinpoint Test G970218t165.

-> No
Not a phone issue.

G970218t165 :

1.

- **Does verbal communication confirm correct number?**

-> Yes
GO to Pinpoint Test G970218t166.

-> No
Not a phone issue.

G970218t166 :

1.

- **Does the audio head unit/touch-screen show "NO PHONE" or "PHONE NOT FITTED" (i.e. is phone off the D2B ring)?**

-> Yes
GO to Pinpoint Test G970218t12.

-> No
GO to Pinpoint Test G970218t167.

G970218t12 :

1. Are any of the D2B connections loose or damaged?

-

-> Yes
Reconnect/change/repair the D2B leads and check for normal operation.

-> No
Refer to the warranty policy and procedures manual if a module is suspect.

G970218t167 :

1.

- **Check all connections/connectivity to and from the portable support electronics (PSE) module and the Bluetooth upgrade module. Are any of the harness connections loose or damaged?**

-> Yes
Rectify as necessary. Refer to the electrical guides.

-> No
Refer to the warranty policy and procedures manual if a module is suspect.

www.JagDocs.com

PINPOINT TEST G970218p15 : Call is dropped

G970218t44 :

1.

- **Is the 3rd party call to another cellular phone?**

-> Yes
GO to Pinpoint Test G970218t173.

-> No
GO to Pinpoint Test G970218t172.

G970218t172 :

1.

- **Is the 3rd party call to a landline?**

-> Yes
Disconnect the Bluetooth link between the handset and vehicle phone system. Re-try the call in the vehicle, preferably with the handset in the same position as when connected via the Bluetooth link. GO to Pinpoint Test G970218t174.

-> No
GO to Pinpoint Test G970218t175.

G970218t173 :

1.

- **Is the signal strength on the 3rd party handset greater than 1?**

-> Yes
Disconnect the Bluetooth link between the handset and vehicle phone system. Re-try the call in the vehicle, preferably with the handset in the same position as when connected via the Bluetooth link. GO to Pinpoint Test G970218t174.

-> No
Re-try call in stronger signal strength area. Low signal strength can lead to calls being dropped.

G970218t174 :

1.

- **Is the call dropped again?**

-> Yes
Pair and connect a different known 'good' handset to the vehicle phone system and make an incoming call. GO to Pinpoint Test G970218t177.

-> No
Switch off the handset, remove the battery from the back of the handset. Replace the battery into the handset and switch on. Make sure the Bluetooth link is reconnected and re-try the call. GO to Pinpoint Test G970218t175.

G970218t175 :

1.

- **Is the call dropped again?**

-> Yes
Key off ignition and wait 6 minutes for the portable support electronics (PSE) module to shut down. Key on ignition. Make sure the Bluetooth link is reconnected and re-try the call. GO to Pinpoint Test G970218t176.

-> No
Problem may have been caused by the Bluetooth link being disconnected.

G970218t176 :

1.

- **Is the call dropped again?**

-> Yes
Pair and connect a different known 'good' handset to the vehicle phone system and make an incoming call. GO to Pinpoint Test G970218t177.

-> No
Problem may have been caused by the Bluetooth link being disconnected.

G970218t177 :

1.

www.JagDocs.com

- **Is the call dropped again?**

-> Yes
Refer to the warranty policy and procedures manual if a module is suspect.

-> No
This may be a handset issue, consult the handset supplier.

PINPOINT TEST G970218p16 : Interference and distortion

G970218t45 :

1.

- **Is interference present with Bluetooth link disconnected?**

-> Yes
GO to Pinpoint Test G970218t181.

-> No
Check for external sources of interference. Drive to where the customer has problems to identify if location dependant. Test in an area of known high signal strength. GO to Pinpoint Test G970218t183.

G970218t181 :

1.

- **Is it present with a different known 'good' handset paired/connected?**

-> Yes
GO to Pinpoint Test G970218t182.

-> No
This may be a handset issue, consult the handset supplier.

G970218t182 :

1.

- **Is it present with other network carriers?**

-> Yes
Check for external sources of interference. Drive to where the customer has problems to identify if

location dependant. Test in an area of known high signal strength. GO to Pinpoint Test G970218t183.

-> No
This may be a network or handset issue, consult the handset supplier/network provider.

G970218t183 :
1.

- **Are there any powered items/aftermarket accessories in the car?**

-> Yes
Switch off any powered items/aftermarket accessories in the car. GO to Pinpoint Test G970218t184.

-> No
Refer to the warranty policy and procedures manual if a module is suspect.

G970218t184 :
1.

- **Is interference still present?**

-> Yes
Refer to the warranty policy and procedures manual if a module is suspect.

-> No
User to be advised of interference from aftermarket accessories.

PINPOINT TEST G970218p17 : Unable to transfer call between hands free and handset

G970218t46 :
1.

- **Does the specific handset guide state that the handset does not support call transfer?**

-> Yes
Advise user that some software levels are not guaranteed to function correctly. Software to be changed to approved level or the handset to be changed.

-> No

www.JagDocs.com

Switch off the handset, remove the battery from the back of the handset. Replace the battery into the handset and switch on. Make sure the Bluetooth link is reconnected and re-try the call. GO to Pinpoint Test G970218t190.

G970218t190 :

1.

- **Can the call be transferred between hands free and handset?**

-> Yes
Problem may have been caused by the Bluetooth link being disconnected.

-> No
Key off ignition for 6 minutes for the portable support electronics (PSE) module to shut down. Key on ignition and re-try the call. GO to Pinpoint Test G970218t191.

G970218t191 :

1.

- **Can the call be transferred between hands free and handset?**

-> Yes
Problem may have been caused by the Bluetooth link being disconnected.

-> No
Pair and connect a different known 'good' handset to the vehicle phone system and make an incoming call. GO to Pinpoint Test G970218t192.

G970218t192 :

1.

- **Can the call be transferred between hands free and handset?**

-> Yes
This is a handset issue, consult the handset supplier.

-> No
Refer to the warranty policy and procedures manual if a module is suspect.

Bluetooth Module

Removal

1 Remove the floor console.

. For additional information, refer to Floor Console - Vehicles With: Auxiliary Climate Control (76.25.01)
For additional information, refer to Floor Console - Vehicles Without: Auxiliary Climate Control (76.25.01)

2 . Remove the Bluetooth module.

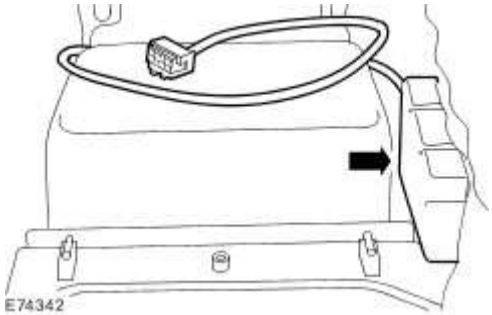

Installation

1 . To install, reverse the removal procedure.

www.JagDocs.com

Cellular Phone Antenna - Vehicles With: Corded Cellular Phone, VIN Range: G00442->H18679 (86.51.17)

Removal

1. **CAUTION: Electronic modules are sensitive to electrical charges. If exposed to these electrical charges, damage may result.**

   Disconnect the battery ground cable. <<414-01>>

2 . Remove the luggage compartment floor covering.

   1) Remove the luggage compartment floor covering screws.

   2) Remove the luggage compartment floor covering.

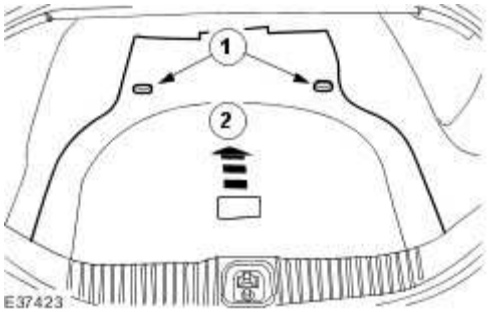

3 . Remove the luggage compartment side trim panel.

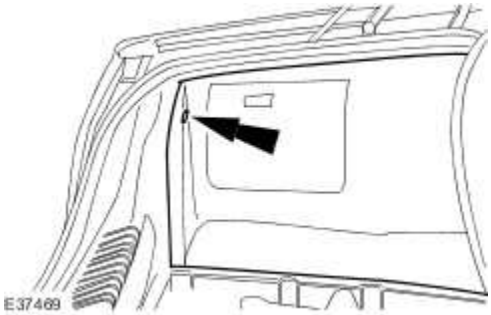

4 . Detach the air pipe.

5 . Detach the module retaining bracket.

6 . Disconnect the cellular phone antenna electrical connector.

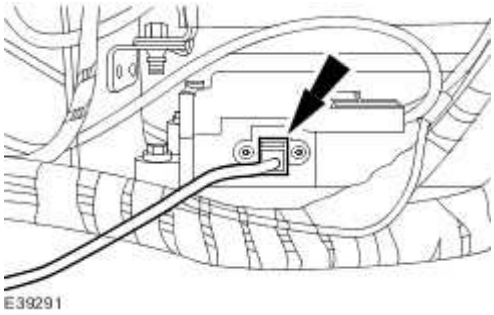

7 . Detach the grommet.

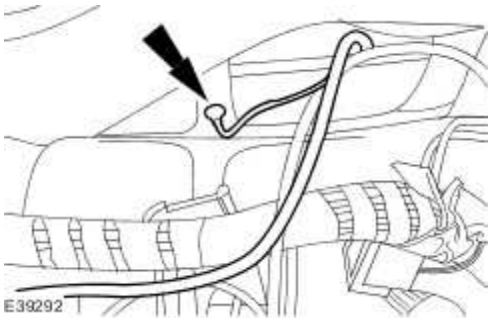

www.JagDocs.com

8 . Remove the cellular phone antenna.

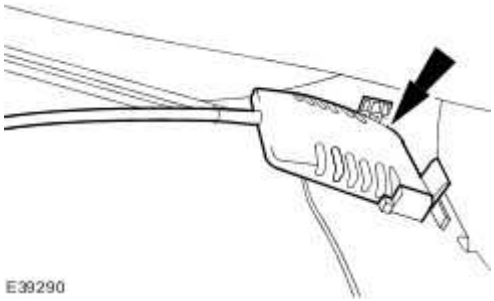

Installation

1 . To install, reverse the removal procedure.

Cellular Phone Antenna - Vehicles With: Cordless Cellular Phone, VIN Range: G00442->H18679 (86.51.17)

Removal

1 . Remove the parcel shelf. <<501-05>>

2 . Locally remove the insulation on the back of the parcel shelf to gain access to the cellular phone antenna.

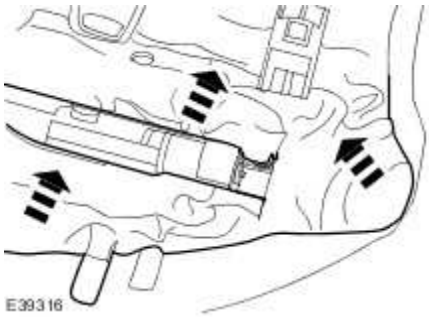

3 . Detach the cellular phone antenna harness.

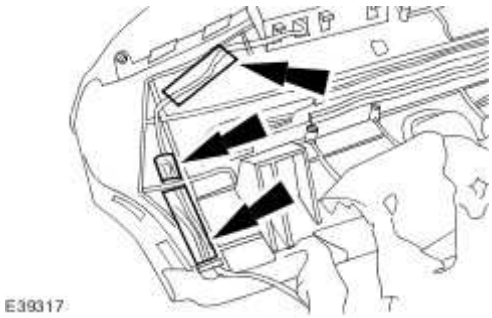

4 . Remove the cellular phone antenna.

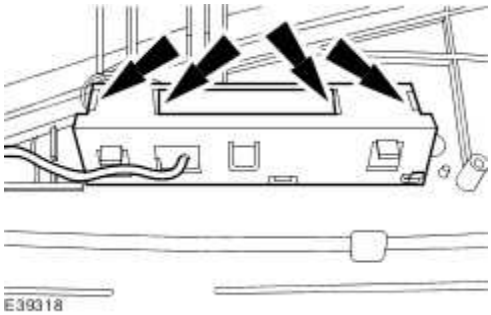

www.JagDocs.com

Installation

1 . To install, reverse the removal procedure.

Cellular Phone Antenna - VIN Range: H18680->H99999 (86.51.17)

Removal

1 . **NOTE:**

Right-hand shown, left-hand similar.

Detach both the front passenger assist handles screw covers.

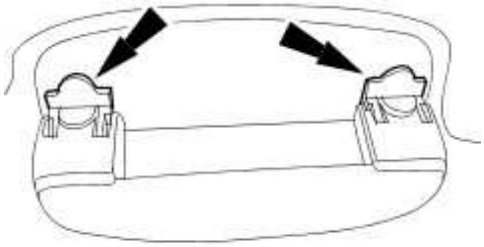

E38998

2 . **NOTE:**

Right-hand shown, left-hand similar.

Remove both the front passenger assist handles.

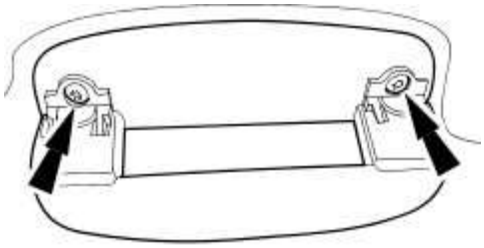

E38776

3 . **NOTE:**

Right-hand shown, left-hand similar.

Detach both the rear passenger assist handles screw covers.

www.JagDocs.com

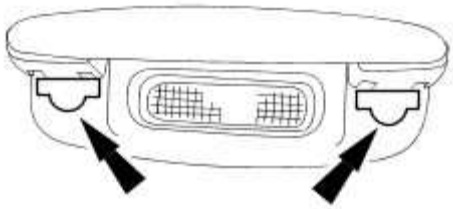

E36777

4 . **NOTE:**

Right-hand shown, left-hand similar.

Remove both the rear passenger assist handles.

Disconnect the electrical connectors.

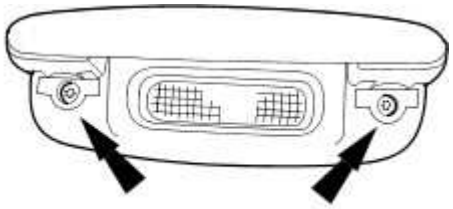

E36778

5 . Locally detach the top of all the door aperture weatherstrips.

6 . **NOTE:**

Right-hand shown, left-hand similar.

Remove both the rear safety belt trim covers.

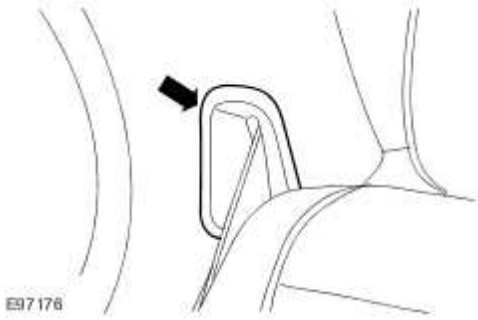

7 . **NOTE:**

Right-hand shown, left-hand similar.

Detach both the c-pillar upper trim panels.

8 . **NOTE:**

Right-hand shown, left-hand similar.

Detach both the c-pillar upper trim panel retaining straps.

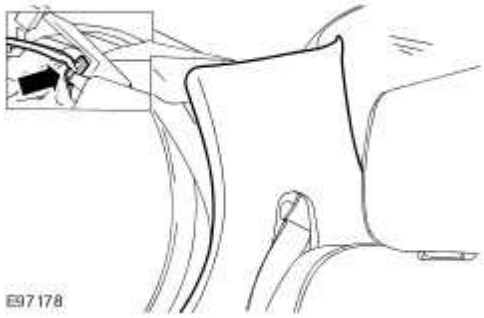

www.JagDocs.com

9 . Remove the high mounted stoplamp.
For additional information, refer to High Mounted Stoplamp (86.41.01)

10 . Detach the rear of the headliner.

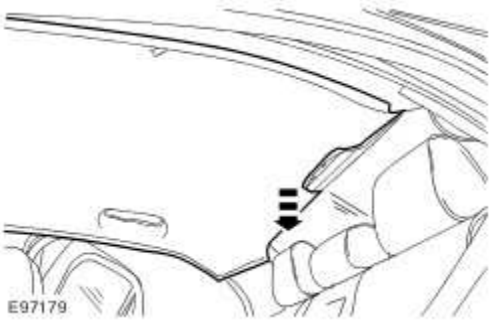

11 . Disconnect the cellular phone antenna electrical connector.

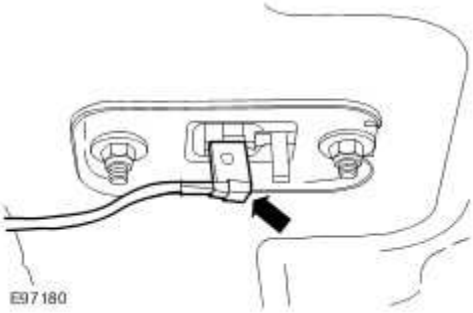

12 . Remove the cellular phone antenna securing nuts.

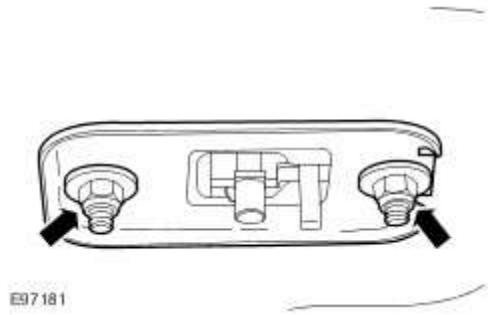

13 . Remove the cellular phone antenna.

- Detach the retaining clip.

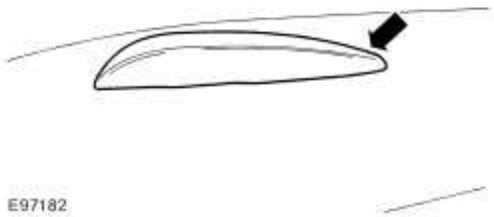

Installation

1 . To install, reverse the removal procedure.

Tighten to 10 Nm.

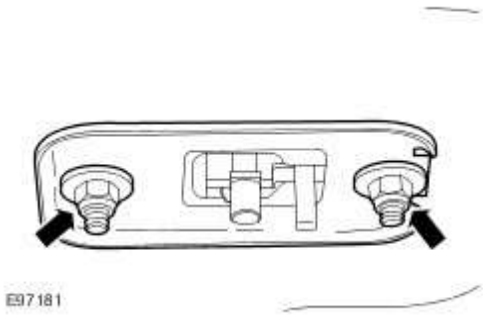

www.JagDocs.com

Front Handset Holder

Removal

1 . Detach the cellular phone.

2 . Remove the front handset retaining screw finisher trim.

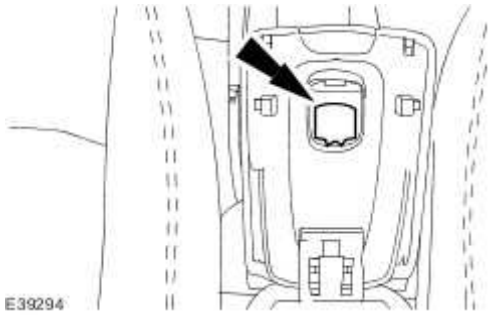

3 . Remove the front handset holder.

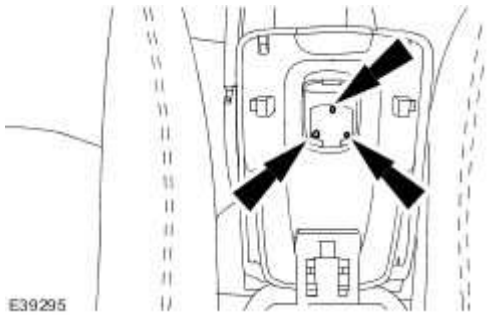

Installation

1 . To install, reverse the removal procedure.

Transceiver Module

Removal

1. **CAUTION: Electronic modules are sensitive to electrical charges. If exposed to these electrical charges, damage may result.**

Disconnect the battery ground cable. <<414-01>>

2 . Remove the luggage compartment floor covering.

1) Remove the luggage compartment floor covering screws.

2) Remove the luggage compartment floor covering.

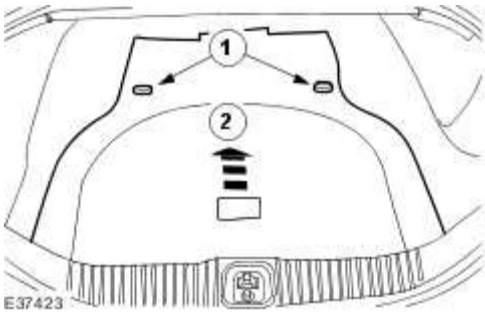

3 . Remove the luggage compartment side trim panel.

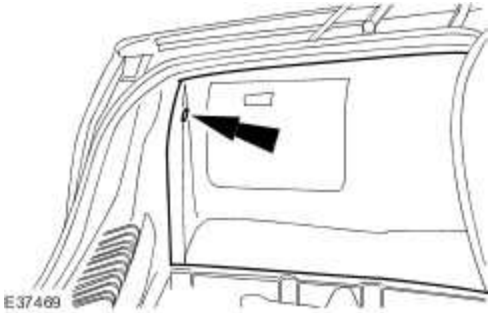

4 . Detach the air pipe.

www.JagDocs.com

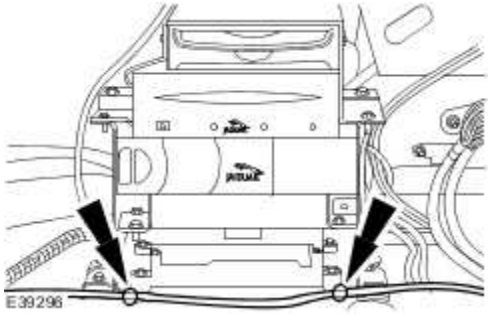

5 . Detach the module retaining bracket.

6 . Disconnect the digital versatile disc (DVD) electrical connectors.

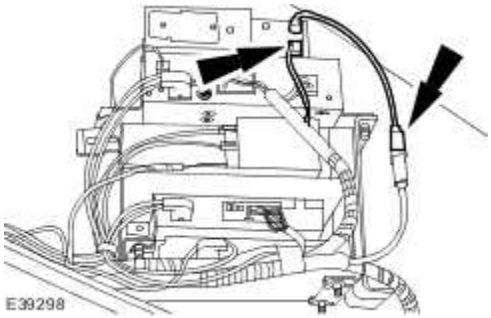

7 . Disconnect the navigation system module electrical connectors and fibre optic connector.

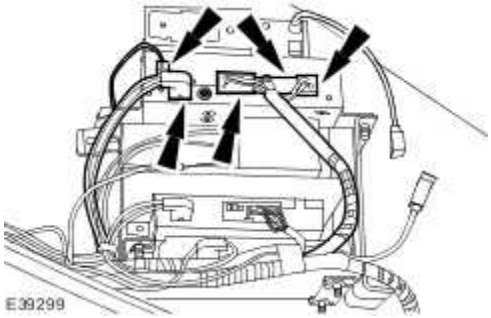

8 . Disconnect the compact disc changer electrical connectors.

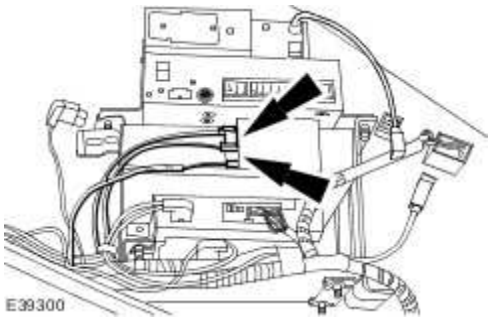

9 . Disconnect the electrical connectors.

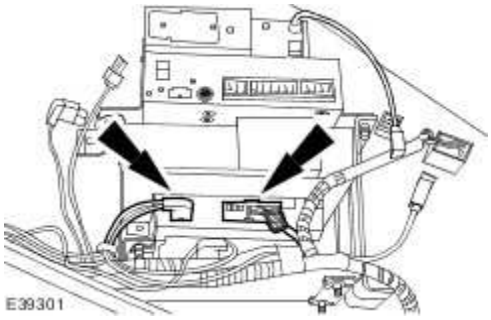

10 . Disconnect the transceiver module electrical connectors.

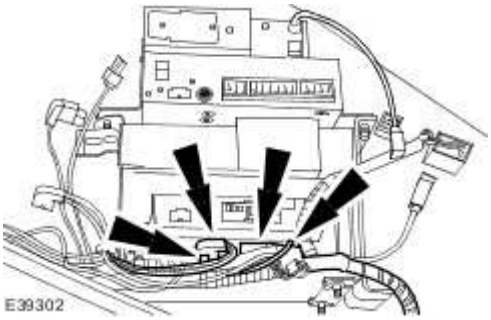

11 . Remove the transceiver module.

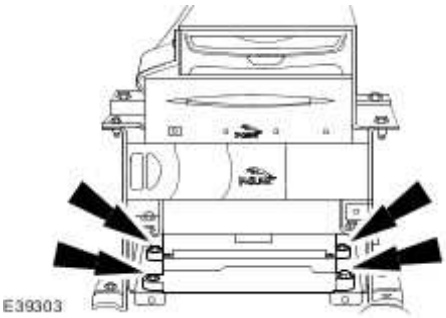

www.JagDocs.com

Installation

1 . To install, reverse the removal procedure.

Specifications

Torque Specifications

Description	Nm	lb-ft	lb-in
Rear electronic module (REM) retaining bolts	6	–	53
Multifunction voice activated module retaining bolts	8	–	71
Front electronic module (FEM) retaining bolts	6	–	53
Rear seat module retaining bolts	6	–	53
CD changer	6	–	53
Module mounting bracket	10	7	–

www.JagDocs.com

Module Controlled Functions

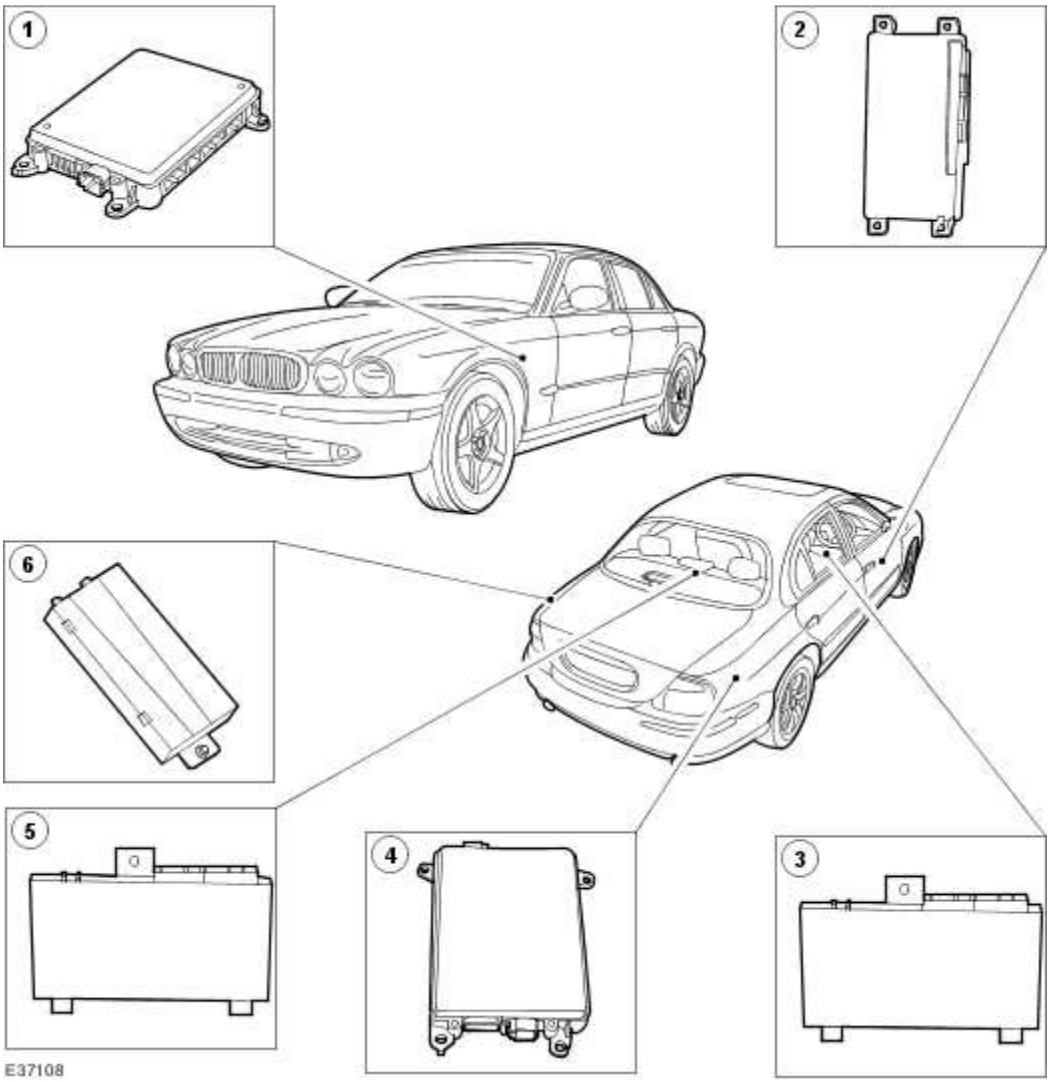

Item	Part Number	Description
1	—	Front electronic module (FEM)
2	—	Driver door module (DDM)
3	—	Driver seat module (DSM)
4	—	Rear electronic module (REM)
5	—	Rear seat module

6	—	Multifunction voice activated module

Driver Seat Module (DSM)

The DSM is located under the driver seat.

The DSM controls the seat memory recall positions and seat functionality. <<501-10>>

Driver Door Module (DDM)

The DDM is located in the driver door behind the trim panel.

The DDM is involved with the following operations:

- door window motor and regulator
- exterior rear view mirror movement
- keyless entry
- global closing
- drivers door locking/unlocking

Front Electronic Module (FEM)

The FEM is located behind the left-hand cowl side trim panel.

The FEM is involved with the following operations:

- front exterior lighting
- direction indicators
- adjustable pedals
- daytime running lamps
- courtesy lighting
- low brake fluid reservoir level
- low windshield washer reservoir fluid level
- low oil pressure
- windshield wipers
- rear view mirror electro-cromic function

Rear Electronic Module (REM)

The REM is located in the luggage compartment behind the right-hand luggage compartment side trim panel.

The REM is involved with the following operations:

- fuel pump
- heated rear windshield
- rear exterior lighting
- luggage compartment lid release
- inertia fuel cut off switch
- passenger door locks

www.JagDocs.com

Rear Seat Module

The rear seat module is fitted behind the rear seat, or on the ski hatch blanking plate when the rear entertainment module is fitted.

The rear seat module is involved with the following operation:

- manual and memory movement of electric rear seats

Multifunction Voice Activated Module

The multifunction voice activated module is located in the luggage compartment behind the left-hand luggage compartment side trim panel. The multifunction voice activated module controls and processes all the voice commands given by the driver, then delivers this information to the audio unit, cellular phone, navigation and the climate control modules which then carry out these commands.

Microphone

The microphone is used for the cellular phone and to receive voice commands for the audio unit and climate control functions. The microphone supplies the information to the multifunction voice control module which processes the commands and supplies the necessary information to the correct modules.

Visual Feedback Message Center Display

This display keeps the driver informed of the function which is being selected or processed.

Audible Feedback Instrument Cluster

This audible tone informs the driver when the system is able to receive commands for processing.

Verbal Feedback Speakers

These speakers are utilized to confirm to the driver that his verbal command has been accepted and is being processed.

Steering Wheel Control VOICE/PHONE Button

This button is automatically configured by the audio unit depending on which systems are equipped on the vehicle. For additional information, refer to the Owner Guide.

Multifunction Electronic Module

Principles of Operation

For a detailed description of the Multifunction Electronic Module's, refer to the relevant Description and Operation sections in the workshop manual.
Module Controlled Functions

Inspection and Verification

1 . Verify the customer concern.

2 . Visually inspect for obvious signs of electrical damage.

Visual Inspection Chart

Electrical
• Fuses/Relays • Damaged, Loose or Corroded Connector(s) • Damage to Wiring Loom/Incorrect Location, Stretched or Taught

1 . If an obvious cause for an observed or reported concern is found, correct the cause (if possible) before proceeding to the next step.

2 . If the cause is not visually evident, verify the symptom and refer to the Jaguar Approved Diagnostic System.

DTC Index

Voice Activated Control Module

CAUTION: When probing connectors to take measurements in the course of the pinpoint tests, use the adaptor kit, part number 3548-1358-00

NOTE:

If the control module/component is suspect and the vehicle remains under manufacturer warranty, refer to the Warranty Policy and Procedures manual (section B1.2), or determine if any prior approval program is in operation, prior to the installation of a new module/component.

www.JagDocs.com

NOTE:

When performing voltage or resistance tests, always use a digital multimeter (DMM) accurate to three decimal places and with a current calibration certificate. When testing resistance, always take the resistance of the DMM leads into account.

NOTE:

Check and rectify basic faults before beginning diagnostic routines that involve pinpoint tests.

NOTE:

Inspect connectors for signs of water ingress, and pins for damage and/or corrosion.

NOTE:

If DTCs are recorded and, after performing the pinpoint tests, a fault is not present, an intermittent concern may be the cause. Always check for loose connections and corroded terminals.

DTC	Description	Possible Causes	Action
U2601	D2B Wake up - Short to Ground	• Voice activated control module, wake-up line - circuit short to ground	Refer to electrical circuit diagrams, notes and check voice activated control module (D2B) wake-up line for short to ground
U2609	D2B Wake-up Pulsewidth - Out of spec	• Voice activated control module, wake-up line - circuit fault (pulse< 50ms, pulse > 110mS)	Refer to electrical circuit diagrams, notes and check voice activated control module (D2B) wake-up line circuit for fault
U2610	D2B Slave ECU - Fails to receive a report position	• During initialization no position status report is received from one or more slave modules	Carry out any pinpoint tests associated with this DTC using the manufacturer approved diagnostic system. Refer to electrical circuit diagrams, notes and check (D2B) slave modules and circuit for fault, replace as required, refer to the new module installation note at the top of the DTC Index

U2611	D2B Slave ECU - Fails to a receive an alarm clear command	• Voice activated control module - on entering alarm state, slave ECU has failed to receive alarm clear command	Refer to electrical circuit diagrams, notes and check (D2B) slave modules and circuit for fault, replace as required, refer to the new module installation note at the top of the DTC Index
B2477	Module Configuration Failure	• Voice activated control module - module configuration failure	The module can be configured using the new module procedure. Check and configure as required

Drivers Door Module

CAUTION: When probing connectors to take measurements in the course of the pinpoint tests, use the adaptor kit, part number 3548-1358-00

NOTE:

If the control module/component is suspect and the vehicle remains under manufacturer warranty, refer to the Warranty Policy and Procedures manual (section B1.2), or determine if any prior approval program is in operation, prior to the installation of a new module/component.

NOTE:

When performing voltage or resistance tests, always use a digital multimeter (DMM) accurate to three decimal places and with a current calibration certificate. When testing resistance, always take the resistance of the DMM leads into account.

NOTE:

Check and rectify basic faults before beginning diagnostic routines that involve pinpoint tests.

NOTE:

Inspect connectors for signs of water ingress, and pins for damage and/or corrosion.

www.JagDocs.com

NOTE:

If DTCs are recorded and, after performing the pinpoint tests, a fault is not present, an intermittent concern may be the cause. Always check for loose connections and corroded terminals.

DTC	Description	Possible Causes	Action
B1234	Mirror Switch Invalid	• Drivers door module, drivers door switch pack - mirror joystick circuit fault	Suspect switchpack. Refer to electrical circuit diagrams, notes and check driver door switch pack circuit for fault
B1529	Memory Set Switch Circuit - Short To Power	• Drivers door module, drivers memory switch pack circuit - short to power	Carry out any pinpoint tests associated with this DTC using the manufacturer approved diagnostic system. Refer to electrical circuit diagrams, notes and check driver memory switch pack circuit for short to power
B1530	Memory Set Switch Circuit - Short To Ground	• Drivers door module, drivers memory switch pack circuit - short to ground	Carry out any pinpoint tests associated with this DTC using the manufacturer approved diagnostic system. Refer to electrical circuit diagrams, notes and check driver memory switch pack circuit for short to ground
B1676	Battery Voltage Out Of Range	• Driver door module - Supply voltage above or below preset level	Refer to electrical circuit diagrams, notes and check driver door module power circuit
B1683	Mirror Driver/Passenger Switch Circuit Failure	• Drivers door module, driver door switch pack - right mirror select remained active when left mirror select became active	Carry out any pinpoint tests associated with this DTC using the manufacturer approved diagnostic system. Refer to electrical circuit diagrams, notes and check driver door switch pack circuit for fault
B1895	Driver's/Passenger's Door Ajar Output Circuit Failure	• Drivers door module, driver door puddle lamp circuit - short to power or ground	Refer to electrical circuit diagrams, notes and check driver door puddle lamp circuit for short to power or ground

B2082	Mirror Vertical Output Fault	• Drivers door module, door mirror circuit - output fault	Suspect mirror motor fault. Carry out any pinpoint tests associated with this DTC using the manufacturer approved diagnostic system. Refer to electrical circuit diagrams, notes and check driver door mirror motor circuit
B2083	Mirror Horizontal Output Fault	• Drivers door module, door mirror circuit - output fault	Suspect mirror motor fault. Carry out any pinpoint tests associated with this DTC using the manufacturer approved diagnostic system. Refer to electrical circuit diagrams, notes and check driver door mirror motor circuit
B2084	Memory Set Indicator Short To Ground	• Drivers door module, memory set LED circuit - short to ground	Carry out any pinpoint tests associated with this DTC using the manufacturer approved diagnostic system. Refer to electrical circuit diagrams, notes and check memory-set LED short to ground
B2085	Rear Window Lockout Indicator Short To Ground	• Drivers door module, window lockout LED circuit - short to ground	Carry out any pinpoint tests associated with this DTC using the manufacturer approved diagnostic system. Refer to electrical circuit diagrams, notes and check window lockout LED circuit for short to ground
B2086	Rear Window Lockout Indicator Short To Power	• Drivers door module, window lockout LED circuit - short to power	Carry out any pinpoint tests associated with this DTC using the manufacturer approved diagnostic system. Refer to electrical circuit diagrams, notes and check window lockout LED circuit for short to power
B2087	Security Line Short To Ground	• Security line from driver door module to (REM) rear electronic module	Refer to electrical circuit diagrams, notes and check driver door module to rear electronic

www.JagDocs.com

		circuit - short to ground	module security circuit for short to ground
B2112	Door Driver Set Switch Stuck Failure	• Drivers door module, lock switch circuit - lock switch stayed active when unlock became active	Carry out any pinpoint tests associated with this DTC using the manufacturer approved diagnostic system. Refer to electrical circuit diagrams, notes and check lock switch circuit
B2116	Door Driver Reset Switch Stuck Failure	• Drivers door module, lock switch circuit - unlock switch stayed active when lock became active	Carry out any pinpoint tests associated with this DTC using the manufacturer approved diagnostic system. Refer to electrical circuit diagrams, notes and check unlock switch circuit
B2141	NVM Configuration Failure	• Drivers door module swapped for virgin module while rear electronic module has ID transfer flag set or both front electronic module & rear electronic module swapped for virgin modules	The modules can be configured using the new module procedure. Check and configure as required
B2168	Unable to confirm Unlock Condition	• Drivers door module, lock switch circuit - unlock switch, unlock status became active but lock status did not become inactive	Carry out any pinpoint tests associated with this DTC using the manufacturer approved diagnostic system. Refer to electrical circuit diagrams, notes and check unlock status circuit
B2169	Unable to confirm Lock Condition	• Drivers door module, lock switch circuit - unlock switch, lock status became active but unlock status did not become inactive	Carry out any pinpoint tests associated with this DTC using the manufacturer approved diagnostic system. Refer to electrical circuit diagrams, notes and check lock status circuit
B2207	ECU ROM Checksum Error	• Drivers door module - CRC failure or EEPROM checksum failure	Suspect module internal fault replace as required, refer to the new module installation note at the top of the DTC Index

B2322	Mirror Driver Horizontal Feedback Potentiometer Circuit Short To Power	• Drivers door module, door mirror potentiometer - circuit voltage high this DTC will only log when operation of memory position recall	Carry out any pinpoint tests associated with this DTC using the manufacturer approved diagnostic system. Refer to electrical circuit diagrams, notes and check door mirror circuit for fault
B2323	Mirror Driver Horizontal Feedback Potentiometer Circuit Short to Ground	• Drivers door module, door mirror potentiometer - circuit voltage low this DTC will only log when operation of memory position recall	Carry out any pinpoint tests associated with this DTC using the manufacturer approved diagnostic system. Refer to electrical circuit diagrams, notes and check door mirror circuit for fault
B2326	Mirror Driver Vertical Feedback Potentiometer Circuit Short to Power	• Drivers door module, door mirror potentiometer - circuit short to power this DTC will only log when operation of memory position recall	Carry out any pinpoint tests associated with this DTC using the manufacturer approved diagnostic system. Refer to electrical circuit diagrams, notes and check door mirror circuit for short to power
B2327	Mirror Driver Vertical Feedback Potentiometer Circuit Short to Ground	• Drivers door module, door mirror potentiometer - circuit short to ground this DTC will only log when operation of memory position recall	Carry out any pinpoint tests associated with this DTC using the manufacturer approved diagnostic system. Refer to electrical circuit diagrams, notes and check door mirror circuit for short to ground
B2336	Mirror Switch Assembly Circuit Failure	• Drivers door module, door mirror switch - left mirror select remained active when right mirror select became active	Carry out any pinpoint tests associated with this DTC using the manufacturer approved diagnostic system. Refer to electrical circuit diagrams, notes and check door left/right mirror switch and circuit for fault
B2373	LED #1 Circuit Short to Battery	• Drivers door module, memory set LED circuit - short to power	Carry out any pinpoint tests associated with this DTC using the manufacturer approved diagnostic system. Refer to electrical circuit diagrams, notes

www.JagDocs.com

			and check memory-set LED circuit for short to power
B2477	Module Configuration Failure	• Drivers door module - configuration failure Default: Always present in new module.	The module can be configured using the new module procedure. Check and configure as required
B2499	Courtesy Lamp Output Failure	• Drivers door module, driver puddle lamp circuit - short to power or ground	Carry out any pinpoint tests associated with this DTC using the manufacturer approved diagnostic system. Refer to electrical circuit diagrams, notes and check puddle lamp circuit for short to power or ground
B2945	RF Receiver Enable Short to Ground	• Drivers door module, remote keyless entry module circuit - short to ground • Hardware detection only implemented on LP Japan drivers door module with external receiver	Carry out any pinpoint tests associated with this DTC using the manufacturer approved diagnostic system. Refer to electrical circuit diagrams, notes and check remote keyless entry module circuit for short to ground
B2946	RF Receiver Power Short To Ground	• Drivers door module, remote keyless entry module circuit - short to ground • Hardware detection only implemented on LP Japan drivers door module with external receiver	Carry out any pinpoint tests associated with this DTC using the manufacturer approved diagnostic system. Refer to electrical circuit diagrams, notes and check remote keyless entry module circuit for short to ground
U1147	SCP (J1850) Invalid or Missing Data for Vehicle Security	• Drivers door module - missing message Set when driver door module to rear electronic module challenge fails and security is not disarmed	Common DTC, only investigate if this is the only DTC stored or if dtc reoccurs after clearing. Refer to electrical circuit diagrams, notes and check driver door module to rear electronic module SCP circuit for fault
U1262	SCP (J1850) Communication Bus	• Drivers door module - SCP circuit fault Set when rear electronic module doesn't send a challenge	Common DTC, only investigate if this is the only DTC stored or if dtc reoccurs after clearing. Carry

	Fault	query	out any pinpoint tests associated with this DTC using the manufacturer approved diagnostic system. Refer to electrical circuit diagrams, notes and check driver door to rear electronic module SCP circuit for fault

Front Electronic Module

CAUTION: When probing connectors to take measurements in the course of the pinpoint tests, use the adaptor kit, part number 3548-1358-00

NOTE:

If the control module/component is suspect and the vehicle remains under manufacturer warranty, refer to the Warranty Policy and Procedures manual (section B1.2), or determine if any prior approval program is in operation, prior to the installation of a new module/component.

NOTE:

When performing voltage or resistance tests, always use a digital multimeter (DMM) accurate to three decimal places and with a current calibration certificate. When testing resistance, always take the resistance of the DMM leads into account.

NOTE:

Check and rectify basic faults before beginning diagnostic routines that involve pinpoint tests.

NOTE:

Inspect connectors for signs of water ingress, and pins for damage and/or corrosion.

NOTE:

If DTCs are recorded and, after performing the pinpoint tests, a fault is not present, an intermittent concern may be the cause. Always check for loose connections and corroded

www.JagDocs.com

terminals.

DTC	Description	Possible Causes	Action
B1221	Driver Seat Heater Output Fault	• Front electronic module, seat heater - power circuit fault	Refer to electrical circuit diagrams, notes and check front electronic module seat heater output for circuit fault
B1222	Passenger Seat Heater Output Fault	• Front electronic module, right seat heater - power circuit fault	Refer to electrical circuit diagrams, notes and check front electronic module seat heater power for circuit fault
B1313	Battery Saver Relay Coil Circuit Failure	• Front electronic module - self protected due to high circuit load	Refer to electrical circuit diagrams, notes and check front electronic module switched system power distribution circuit for non standard output loads
B1315	Battery Saver Relay Coil Circuit Short To Power	• Front electronic module, switched system power fault - circuit short to power	Refer to electrical circuit diagrams, notes and check front electronic module switched system power distribution circuit for short to power
B1432	Wiper Brake/Run Relay Circuit Short To Power	• Front electronic module ,wiper relay output circuit - short to power	Refer to electrical circuit diagrams, notes and check front electronic module to wiper relay circuit for short to power
B1433	Wiper Brake/Run Relay Circuit Short To Ground	• Front electronic module, wiper relay output circuit - short to ground	Refer to electrical circuit diagrams, notes and check front electronic module to wiper relay circuit for short to ground
B1436	Wiper Hi/Low Speed Relay Coil Circuit Short To Power	• Front electronic module, wiper relay output circuit - short to power	Refer to electrical circuit diagrams, notes and check front electronic module to wiper relay circuit for short to power
B1437	Wiper Hi/Low Speed Relay Coil Circuit Short To Ground	• Front electronic module, wiper relay output circuit - short to ground	Refer to electrical circuit diagrams, notes and check front electronic module to wiper relay circuit for short to ground

B1438	Wiper Mode Select Switch Circuit Failure	• Front electronic module, master wiper switch circuit - short to ground	Refer to electrical circuit diagrams, notes and check front electronic module wiper switch circuit for short to ground
B1439	Wiper Mode Select Switch Circuit Open	• Front electronic module, master wiper switch circuit - open or short to power	Refer to electrical circuit diagrams, notes and check front electronic module wiper switch line for short to power or open circuit
B1440	Wiper Mode Select Switch Circuit Short To Power	• Front electronic module, momentary wipe switch circuit - short to power or open	Refer to electrical circuit diagrams, notes and check front electronic module momentary wipe switch circuit for short to power or open
B1441	Wiper Mode Select Switch Circuit Short To Ground	• Front electronic module ,momentary wipe switch circuit - short to ground	Refer to electrical circuit diagrams, notes and check front electronic module momentary wipe switch circuit for short to ground
B1450	Wiper Wash/Delay Switch Circuit Failure	• Front electronic module, wash/wipe switch circuit - short to ground	Carry out any pinpoint tests associated with this DTC using the manufacturer approved diagnostic system. Refer to electrical circuit diagrams, notes and check front electronic module wash/wipe switch circuit for short to ground
B1451	Wiper Wash/Delay Switch Circuit Open	• Front electronic module, wash/wipe delay switch - circuit open	Refer to electrical circuit diagrams, notes and check front electronic module wash/wipe delay switch line for open circuit
B1452	Wiper Wash/Delay Switch Circuit Short To Power	• Front electronic module, wash/wipe delay switch circuit - short to power	Refer to electrical circuit diagrams, notes and check front electronic module wash/wipe delay switch circuit - short to power
B1453	Wiper Wash/Delay Switch Circuit Short To Ground	• Front electronic module, wash/wipe delay switch circuit - short to ground	Refer to electrical circuit diagrams, notes and check front electronic module wash/wipe delay switch circuit short to ground

www.JagDocs.com

B1458	Wiper Washer Pump Motor Relay Circuit Failure	• Front electronic module, screen-wash pump power circuit - self protection (high circuit load)	Carry out any pinpoint tests associated with this DTC using the manufacturer approved diagnostic system. Refer to electrical circuit diagrams, notes and check front electronic module screen-wash pump power circuit for fault
B1459	Wiper Washer Pump Motor Relay Coil Circuit Open	• Front electronic module, screen-wash pump power - circuit open	Refer to electrical circuit diagrams, notes and check front electronic module screen-wash pump power line for open circuit
B1460	Wiper Washer Pump Motor Relay Coil Circuit Short To Power	• Front electronic module, screen-wash pump power circuit - short to ground	Refer to electrical circuit diagrams, notes and check front electronic module screen-wash pump power circuit for short to ground
B1474	Battery Saver Power Relay Circuit Short To Power	• Front electronic module switched system power distribution circuit - short to power	Refer to electrical circuit diagrams, notes and check front electronic module switched system power distribution circuit for short to power
B1500	Lamp Turn Signal Left Circuit Open	• Front electronic module, left front direction indicator - circuit open	Refer to electrical circuit diagrams, notes and check front electronic module left front direction indicator line for open circuit
B1501	Lamp Turn Signal Left Circuit Short To Power	• Front electronic module, left front direction indicator circuit - short to power	Refer to electrical circuit diagrams, notes and check front electronic module left front direction indicator circuit for short to power
B1504	Lamp Turn Signal Right Circuit Open	• Front electronic module, right front direction indicator - circuit open	Refer to electrical circuit diagrams, notes and check front electronic module right front direction indicator for open circuit
B1505	Lamp Turn Signal Right Circuit Short To Power	• Front electronic module, right front direction indicator circuit - short to power	Refer to electrical circuit diagrams, notes and check front electronic module right front direction indicator circuit for short to power
B1569	Lamp Headlamp	• Front electronic module, main beam	Refer to electrical circuit diagrams, notes

	High-Beam Circuit Short To Power	relay circuit - short to power	and check front electronic module main beam relay circuit for short to power
B1570	Lamp Headlamp High-Beam Circuit Short To Ground	• Front electronic module, main beam relay circuit - short to ground	Refer to electrical circuit diagrams, notes and check front electronic module main beam relay circuit for short to ground
B1676	Battery Pack Voltage Out Of Range	• Front electronic module - Supply voltage above or below preset level	Carry out any pinpoint tests associated with this DTC using the manufacturer approved diagnostic system. Refer to electrical circuit diagrams, notes and check front electronic module power and ground circuit for fault
B1838	Battery Saver Power Relay Circuit Failure	• Front electronic module, switched system power distribution circuit - short to ground	Carry out any pinpoint tests associated with this DTC using the manufacturer approved diagnostic system. Refer to electrical circuit diagrams, notes and check front electronic module switched system power distribution circuit for short to ground
B1987	Pedal Forward / Rearward Motor Stalled	• Front electronic module, adjustable pedal motor output circuit - motor stall detected	Refer to electrical circuit diagrams, notes and check front electronic module, adjustable pedal motor and circuit for fault
B1990	Pedal Forward / Rearward Potentiometer Feedback Circuit Failure	• Front electronic module, adjustable pedal feedback potentiometer circuit - short to ground or open	Carry out any pinpoint tests associated with this DTC using the manufacturer approved diagnostic system. Refer to electrical circuit diagrams, notes and check front electronic module (adjustable pedal) feedback potentiometer circuit for short to ground or open
B1991	Pedal Forward / Rearward Potentiometer Feedback Circuit Short to power	• Front electronic module ,adjustable pedal feedback potentiometer circuit - short to power	Refer to electrical circuit diagrams, notes and check front electronic module (adjustable pedal)feedback potentiometer circuit for short to power
B2022	Rear Courtesy Lamp Output Circuit	• Front electronic module, front	Carry out any pinpoint tests associated with this DTC using the manufacturer

www.JagDocs.com

	Failure	courtesy lamp circuit - short to power	approved diagnostic system. Refer to electrical circuit diagrams, notes and check front electronic module (front courtesy lamp) circuit for short to power
B2023	Courtesy Lamp Output Circuit Short to Ground	• Front electronic module, front courtesy lamp circuit - short to ground	Refer to electrical circuit diagrams, notes and check front electronic module (front courtesy lamp) circuit for short to ground
B2026	Incandescent Backlighting Output Circuit Failure	• Front electronic module, (bulb/LED) back light circuit - short (self protection)	Carry out any pinpoint tests associated with this DTC using the manufacturer approved diagnostic system. Refer to electrical circuit diagrams, notes and check front electronic module (bulb/LED back light) line for short or abnormal output loads
B2030	Front Fog Lamp Relay Circuit Failure	• Front electronic module, front fog lamp relay circuit - short to ground	Carry out any pinpoint tests associated with this DTC using the manufacturer approved diagnostic system. Refer to electrical circuit diagrams, notes and check front electronic module front fog lamp relay output for short to ground
B2035	LF Side Repeater Lamp Output Circuit Failure	• Front electronic module, left direction indicator repeater circuit - open	Carry out any pinpoint tests associated with this DTC using the manufacturer approved diagnostic system. Refer to electrical circuit diagrams, notes and check front electronic module left direction indicator repeater for open circuit
B2037	RF Side Repeater Lamp Output Circuit Failure	• Front electronic module, right direction indicator repeater circuit - open	Carry out any pinpoint tests associated with this DTC using the manufacturer approved diagnostic system. Refer to electrical circuit diagrams, notes and check front electronic module right direction indicator repeater for open circuit
B2087	Security Line Short to Ground	• Front electronic module, security output circuit - short	Refer to electrical circuit diagrams, notes and check front electronic module front electronic module security line circuit for

		to ground	short to ground
B2170	Steering Column Lock Switch Circuit Failure	• Front electronic module, electronic steering column lock circuit - failure (high circuit load detected)	Carry out any pinpoint tests associated with this DTC using the manufacturer approved diagnostic system. Refer to electrical circuit diagrams, notes and check front electronic module electronic steering column lock circuit fault
B2196	Passenger Window Up / Down Power Circuit Short to Ground	• Front electronic module, front window enable circuit - short to ground	Refer to electrical circuit diagrams, notes and check front electronic module front window enable circuit for short to ground
B2207	ECU ROM Checksum Error	• Front electronic module - CRC failure or EEPROM checksum failure	Suspect module internal fault replace as required, refer to the new module installation note at the top of the DTC Index
B2249	Head Lamp Relay Coil Short to Power	• Front electronic module, dip beam relay circuit - short to power	Refer to electrical circuit diagrams, notes and check front electronic module dip beam relay circuit for short to power
B2258	Headlamp Washer Relay Circuit Short to Power	• Front electronic module, power wash relay circuit - short to power	Refer to electrical circuit diagrams, notes and check front electronic module power wash relay circuit for short to power
B2262	Wiper Park to Park Timeout	• Front electronic module, wiper motor park - circuit fault	Refer to electrical circuit diagrams, notes and check front electronic module wiper motor park circuit for fault
B2314	Mirror Passenger Horizontal Feedback Potentiometer Circuit Short to Power	• Front electronic module, passenger mirror horizontal feedback potentiometer circuit - short to power	Refer to electrical circuit diagrams, notes and check front electronic module passenger mirror horizontal feedback potentiometer circuit for short to power
B2315	Mirror Passenger Horizontal Feedback Potentiometer Circuit Short to	• Front electronic module, passenger mirror horizontal feedback potentiometer circuit - short to ground or	Refer to electrical circuit diagrams, notes and check front electronic module passenger mirror horizontal feedback potentiometer circuit for short to ground

www.JagDocs.com

	Ground	open	or open circuit
B2318	Mirror Passenger Vertical Feedback Potentiometer Circuit Short to Battery	• Front electronic module, passenger mirror vertical feedback potentiometer circuit - short to power	Refer to electrical circuit diagrams, notes and check front electronic module passenger mirror vertical feedback potentiometer circuit for short to power
B2319	Mirror Passenger Vertical Feedback Potentiometer Circuit Short to Ground	• Front electronic module, passenger mirror vertical feedback potentiometer circuit - short to ground or open	Refer to electrical circuit diagrams, notes and check front electronic module passenger mirror vertical feedback potentiometer circuit for short to ground or open
B2356	Driver Seat Heater Output Fault	• Front electronic module, left seat heater output circuit - over current	Carry out any pinpoint tests associated with this DTC using the manufacturer approved diagnostic system. Refer to electrical circuit diagrams, notes and check front electronic module seat heater power circuit for non standard output loads
B2360	Window Motor Control Output Circuit Failure	• Front electronic module, window global circuit - short to power	Carry out any pinpoint tests associated with this DTC using the manufacturer approved diagnostic system. Refer to electrical circuit diagrams, notes and check front electronic module window global circuit for short to power
B2361	Passenger Seat Heater Output Fault	• Front electronic module, right seat heater circuit - high circuit load	Refer to electrical circuit diagrams, notes and check front electronic module seat heater power circuit for fault
B2363	Optical Sensor System Failure	• Front electronic module, rain sensing module circuit - signal fault	Refer to electrical circuit diagrams, notes and check front electronic module rain sensing module circuit for signal fault
B2370	Seat Heater Power Shutdown	• Front electronic module, left seat heater - circuit fault (shutdown by power	This DTC has been stored for information only, advise customer that the demand for power has exceeded the vehicles capability at the time this DTC was

		management)	logged
B2371	Invalid Driver Temperature Set Point	• Front electronic module, seat heater temperature control - circuit fault	Refer to electrical circuit diagrams, notes and check front electronic module driver seat center console switchpack circuit for fault
B2372	Invalid Passenger Temperature Set Point	• Front electronic module, seat heater temperature control - circuit fault	Refer to electrical circuit diagrams, notes and check front electronic module passenger seat center console switchpack circuit for fault
B2414	Headlamp Washer Relay Circuit Short Circuit Ground	• Front electronic module, power wash relay circuit fault - short to ground	Refer to electrical circuit diagrams, notes and check front electronic module power wash relay circuit for short to ground
B2477	Module Configuration Failure	• Front electronic module, - configuration failure Default: Always present in new module.	The module can be configured using the new module procedure. Check and configure as required
B2491	RF Park Lamp Output Circuit Short To Power	• Front electronic module, front right side-lamp circuit - short to power or high circuit load	Refer to electrical circuit diagrams, notes and check front electronic module front right side-lamp circuit for short to power or high circuit load
B2493	LF PARK LAMP OUTPUT CIRCUIT Short To Power	• Front electronic module, front left side-lamp circuit - short to power or high circuit load	Refer to electrical circuit diagrams, notes and check front electronic module front left side-lamp circuit for short to power or high circuit load
B2494	Anti Theft Horn Output Circuit Short To Power	• Front electronic module, horn relay circuit - short to power or high circuit load	Refer to electrical circuit diagrams, notes and check front electronic module horn relay circuit for short to power or high circuit load
B2496	Anti Theft Horn Output Circuit Short To Ground	• Front electronic module, horn relay circuit - short to ground	Refer to electrical circuit diagrams, notes and check front electronic module horn relay circuit for short to ground

www.JagDocs.com

B2512	Front Fog Lamp Relay Circuit Short to Power	• Front electronic module, front fog lamp relay circuit - short to power	Refer to electrical circuit diagrams, notes and check front electronic module front fog lamp relay circuit for short to power
B2585	Anti Theft Input Signal Circuit Short To power	• Front electronic module, security line circuit - short to power	Refer to electrical circuit diagrams, notes and check front electronic module security line circuit for short to power
B2598	Headlamp Relay Circuit Failure	• Front electronic module, dip beam relay circuit - short to ground	Carry out any pinpoint tests associated with this DTC using the manufacturer approved diagnostic system. Refer to electrical circuit diagrams, notes and check front electronic module dip beam relay circuit for short to ground
B2704	Optical Sensor Power Short to Ground	• Front electronic module, rain sensing module power circuit - short to ground	Refer to electrical circuit diagrams, notes and check front electronic module rain sensing module power circuit for short to ground
B2789	Left or right latch release circuit failure	• Front electronic module, glove box motor circuit fault - short to power or high circuit load	Carry out any pinpoint tests associated with this DTC using the manufacturer approved diagnostic system. Refer to electrical circuit diagrams, notes and check front electronic module glove box motor circuit fault - short to power or high circuit load
C1712	Left Front Sensor Circuit Failure	• Front electronic module, left seat heater sensor circuit - short to power or open	Carry out any pinpoint tests associated with this DTC using the manufacturer approved diagnostic system. Refer to electrical circuit diagrams, notes and check front electronic module left seat heater sensor circuit for short to power or open
C1713	Left Front Sensor Circuit Fault	• Front electronic module, left seat heater sensor circuit - short to ground	Carry out any pinpoint tests associated with this DTC using the manufacturer approved diagnostic system. Refer to electrical circuit diagrams, notes and check front electronic module left seat heater sensor circuit for short to ground

C1715	Right Front Sensor Circuit Failure	• Front electronic module, right seat heater sensor circuit - short to power or open	Carry out any pinpoint tests associated with this DTC using the manufacturer approved diagnostic system. Refer to electrical circuit diagrams, notes and check front electronic module right seat heater sensor circuit for short to power or open
C1716	Right Front Sensor Circuit Fault	• Front electronic module, right seat heater sensor circuit - short to ground	Carry out any pinpoint tests associated with this DTC using the manufacturer approved diagnostic system. Refer to electrical circuit diagrams, notes and check front electronic module right seat heater sensor circuit for short to ground
C1755	Power Limit Shutdown Fault	• Front electronic module right seat heater - shutdown by power management	This DTC has been stored for information only, advise customer that the demand for power has exceeded the vehicles capability at the time this DTC was logged

Rear Electronic Module

CAUTION: When probing connectors to take measurements in the course of the pinpoint tests, use the adaptor kit, part number 3548-1358-00

NOTE:

If the control module/component is suspect and the vehicle remains under manufacturer warranty, refer to the Warranty Policy and Procedures manual (section B1.2), or determine if any prior approval program is in operation, prior to the installation of a new module/component.

NOTE:

When performing voltage or resistance tests, always use a digital multimeter (DMM) accurate to three decimal places and with a current calibration certificate. When testing resistance, always take the resistance of the DMM leads into account.

www.JagDocs.com

NOTE:

Check and rectify basic faults before beginning diagnostic routines that involve pinpoint tests.

NOTE:

Inspect connectors for signs of water ingress, and pins for damage and/or corrosion.

NOTE:

If DTCs are recorded and, after performing the pinpoint tests, a fault is not present, an intermittent concern may be the cause. Always check for loose connections and corroded terminals.

DTC	Description	Possible Causes	Action
B1221	Driver Seat Heater Output Fault	• Rear electronic module, left rear seat heater - circuit open	Carry out any pinpoint tests associated with this DTC using the manufacturer approved diagnostic system. Refer to electrical circuit diagrams, notes and check rear electronic module left rear seat heater line for open circuit
B1313	Battery Saver Relay Coil Circuit Failure	• Rear electronic module, switched system power fault - self protected (high circuit load)	Carry out any pinpoint tests associated with this DTC using the manufacturer approved diagnostic system. Refer to electrical circuit diagrams, notes and check rear electronic module switched system power distribution circuit for non standard output loads
B1314	Battery Saver Relay Coil Circuit Open	• Rear electronic module, switched system power fault - circuit open	Refer to electrical circuit diagrams, notes and check rear electronic module switched system power distribution line for open circuit
B1315	Battery Saver Relay Coil Circuit Short To Power	• Rear electronic module, switched system power fault - short to power	Refer to electrical circuit diagrams, notes and check rear electronic module switched system power distribution circuit for short to power

B1499	Lamp Turn Signal Left Circuit Failure	• Rear electronic module, left rear direction indicator circuit - high circuit load (self protected)	Carry out any pinpoint tests associated with this DTC using the manufacturer approved diagnostic system. Refer to electrical circuit diagrams, notes and check left rear direction indicator circuit for non standard output loads
B1500	Lamp Turn Signal Left Circuit Open	• Rear electronic module, left rear direction indicator - circuit open	Refer to electrical circuit diagrams, notes and check left rear direction indicator line for open circuit
B1501	Lamp Turn Signal Left Circuit Short To Power	• Rear electronic module, left rear direction indicator circuit - short to power	Refer to electrical circuit diagrams, notes and check left rear direction indicator circuit for short to power
B1503	Lamp Turn Signal Right Circuit Failure	• Rear electronic module, right rear direction indicator circuit - high circuit load (self protected)	Carry out any pinpoint tests associated with this DTC using the manufacturer approved diagnostic system. Refer to electrical circuit diagrams, notes and check right rear direction indicator circuit for non standard output loads
B1504	Lamp Turn Signal Right Circuit Open	• Rear electronic module, right rear direction indicator - circuit open	Refer to electrical circuit diagrams, notes and check right rear direction indicator for open circuit
B1505	Lamp Turn Signal Right Circuit Short To Battery	• Rear electronic module, right rear direction indicator circuit - short to power	Refer to electrical circuit diagrams, notes and check right rear direction indicator circuit for short to power
B1676	Battery Pack Voltage Out Of Range	• Rear electronic module - Supply voltage above or below preset level	Carry out any pinpoint tests associated with this DTC using the manufacturer approved diagnostic system. Refer to electrical circuit diagrams, notes and check rear electronic module power and ground circuit for fault
B2089	Puddle / Approach Lamp Fault	• Rear electronic module, puddle or approach lamp circuit - fault Set for any fault detected by rear	Carry out any pinpoint tests associated with this DTC using the manufacturer approved diagnostic

www.JagDocs.com

		puddle lamp output circuits	system. Refer to electrical circuit diagrams, notes and check rear puddle lamp circuit for fault
B2139	Data Mismatch (receive data does not match what was expected)	• Rear electronic module - challenge/response from drivers door module error on Unlock process	Rear electronic module data mismatch with drivers door module. The modules can be configured using the new module procedure. Check and configure as required, using the manufacturer approved diagnostic system
B2141	NVM Configuration Failure	• Rear electronic module, vehicle configuration not programmed or configuration write failure	The modules can be configured using the new module procedure. Check and configure as required, using the manufacturer approved diagnostic system
B2162	Data Mismatch #2 (receive data does not match what was expected)	• Rear electronic module - challenge/response with instrument cluster fails	Rear electronic module data mismatch with instrument cluster The modules can be configured using the new module procedure. Check and configure as required, using the manufacturer approved diagnostic system
B2168	Unable to confirm Unlock Condition	• Rear electronic module lock switch - lock status remained active when unlock status became active	Refer to electrical circuit diagrams, notes and check rear electronic module lock status circuit
B2169	Unable to confirm Lock Condition	• Rear electronic module, lock switch - unlock status remained active when lock status became active	Refer to electrical circuit diagrams, notes and check rear electronic module unlock status circuit
B2170	Steering Column Lock Switch Circuit Failure	• Rear electronic module, electronic steering column lock switch - circuit failure	Carry out any pinpoint tests associated with this DTC using the manufacturer approved diagnostic system. Refer to electrical circuit diagrams, notes and check rear electronic module electronic steering column lock switch circuit

			fault
B2177	Interior Scanning Sensor Circuit Failure	• Rear electronic module intrusion sensor power output - circuit failure No communication with intrusion sensors	Carry out any pinpoint tests associated with this DTC using the manufacturer approved diagnostic system. Refer to electrical circuit diagrams, notes and check rear electronic module intrusion sensor and power circuit for failure
B2207	ECU ROM Checksum Error	• Rear electronic module, CRC Failure or EEPROM checksum failure	Suspect module internal fault replace as required, refer to the new module installation note at the top of the DTC Index
B2287	Inclination Sensor Circuit Failure	• Rear electronic module, inclination sensor power output - circuit failure No communication with inclination sensors	Carry out any pinpoint tests associated with this DTC using the manufacturer approved diagnostic system. Refer to electrical circuit diagrams, notes and check rear electronic module inclination sensor and power output circuit for failure
B2356	Driver Seat Heater Output Fault	• Rear electronic module, rear seat heater circuit - short to ground or high circuit load protection activated	Carry out any pinpoint tests associated with this DTC using the manufacturer approved diagnostic system. Refer to electrical circuit diagrams, notes and check rear electronic module rear seat heater circuit for short to ground or non standard output loads
B2361	Passenger Seat Heater Output Fault	• Rear electronic module, rear seat heater circuit - short to ground or high circuit load protection activated	Carry out any pinpoint tests associated with this DTC using the manufacturer approved diagnostic system. Refer to electrical circuit diagrams, notes and check rear electronic module rear seat heater circuit for short to ground or non standard output loads
B2370	Seat Heater Power Shutdown	• Rear electronic module, left rear seat heater - shutdown by power	Refer to electrical circuit diagrams, notes and check rear electronic module left rear seat heater circuit

www.JagDocs.com

		management	for fault
B2371	Invalid Left Temperature Set Point	• Rear electronic module, left seat heater - temperature control input is invalid	Refer to electrical circuit diagrams, notes and check rear electronic module left rear center console switch pack circuit for fault
B2372	Invalid Right Temperature Set Point	• Rear electronic module, right seat heater - temperature control input is invalid	Refer to electrical circuit diagrams, notes and check rear electronic module right rear center console switch pack circuit for fault
B2477	Module Configuration Failure	• Rear electronic module - configuration failure Default: Always present in new module.	The module can be configured using the new module procedure. Check and configure as required
B2495	Anti Theft Horn Output Circuit Failure	• Rear electronic module, passive security sounder output - circuit fault	Carry out any pinpoint tests associated with this DTC using the manufacturer approved diagnostic system. Refer to electrical circuit diagrams, notes and check rear electronic module passive security sounder circuit for fault
B2525	Rear Backup Lamp Circuit Failure	• Rear electronic module, reverse lamp - circuit fault	Carry out any pinpoint tests associated with this DTC using the manufacturer approved diagnostic system. Refer to electrical circuit diagrams, notes and check rear electronic module, reverse lamp for circuit fault
B2526	Rear Backup Lamp Circuit Short To Power	• Rear electronic module, reverse lamp circuit - short to power	Refer to electrical circuit diagrams, notes and check rear electronic module reverse lamp circuit for short to power
B2533	Right Stop Lamp Circuit Failure	• Rear electronic module, right stop lamp - circuit open	Carry out any pinpoint tests associated with this DTC using the manufacturer approved diagnostic system. Refer to electrical circuit diagrams, notes and check rear electronic module right stop lamp

			for open circuit
B2534	Right Stop Lamp Circuit Short to power	• Rear electronic module, right stop lamp circuit - short to power or high circuit load	Refer to electrical circuit diagrams, notes and check rear electronic module right stop lamp circuit for short to power or non standard output loads
B2565	Right Tail Lamp Circuit Failure	• Rear electronic module, right tail lamp circuit fault	Carry out any pinpoint tests associated with this DTC using the manufacturer approved diagnostic system. Refer to electrical circuit diagrams, notes and check rear electronic module right tail lamp circuit for fault
B2577	Left Tail Lamp Circuit Failure	• Rear electronic module, left stop lamp circuit - short to power	Carry out any pinpoint tests associated with this DTC using the manufacturer approved diagnostic system. Refer to electrical circuit diagrams, notes and check rear electronic module left stop lamp circuit for short to power
B2915	Fuel Sender Circuit Failure #2	• Rear electronic module, critical fuel level switch - circuit fault	Refer to electrical circuit diagrams, notes and check rear electronic module critical fuel level switch circuit for fault
C1712	Left Front Sensor Circuit Failure	• Rear electronic module, left rear seat heater sensor circuit - short to power or open	Carry out any pinpoint tests associated with this DTC using the manufacturer approved diagnostic system. Refer to electrical circuit diagrams, notes and check rear electronic module left rear seat heater sensor for circuit short to power or open
C1713	Left Front Sensor Circuit Fault	• Rear electronic module, left seat heater sensor circuit - short to ground	Carry out any pinpoint tests associated with this DTC using the manufacturer approved diagnostic system. Refer to electrical circuit diagrams, notes and check rear electronic module left seat heater

www.JagDocs.com

			sensor for short to ground
C1715	Right Front Sensor Circuit Failure	• Rear electronic module, right rear seat heater temperature sensor circuit - short to power or open	Carry out any pinpoint tests associated with this DTC using the manufacturer approved diagnostic system. Refer to electrical circuit diagrams, notes and check rear electronic module right rear seat heater temperature sensor circuit for short to power or open
C1716	Right Front Sensor Circuit Fault	• Rear electronic module, right rear seat heater temperature sensor circuit - short to ground	Carry out any pinpoint tests associated with this DTC using the manufacturer approved diagnostic system. Refer to electrical circuit diagrams, notes and check rear electronic module right seat heater temperature sensor circuit for short to ground
C1755	Power Limit Shutdown Fault	• Rear electronic module, right rear seat heater shutdown by power management	Refer to electrical circuit diagrams, notes and check rear electronic module right seat heater circuit for non standard output loads
P0230	Fuel Pump Primary Circuit	• Rear electronic module, fuel pump control circuit - short to power	Carry out any pinpoint tests associated with this DTC using the manufacturer approved diagnostic system. Refer to electrical circuit diagrams, notes and check rear electronic module fuel pump control line for short to power
P0231	Fuel Pump Secondary Circuit Low	• Rear electronic module, fuel pump control circuit - open	Carry out any pinpoint tests associated with this DTC using the manufacturer approved diagnostic system. Refer to electrical circuit diagrams, notes and check rear electronic module fuel pump control line for open circuit
P0232	Fuel Pump Secondary Circuit High	• Rear electronic module, fuel pump control circuit - loss of ground	Carry out any pinpoint tests associated with this DTC using the manufacturer approved diagnostic system. Refer to electrical circuit

			diagrams, notes and check rear electronic module fuel pump control line for loss of ground
P1235	Fuel Pump Control Out Of Range	• Rear electronic module, fuel input (modulated pulsewidth) - out of range (low)	Carry out any pinpoint tests associated with this DTC using the manufacturer approved diagnostic system. Refer to electrical circuit diagrams, notes and check engine control module to rear electronic module fuel input (modulated pulsewidth) is out of range (low)
P1236	Fuel Pump Control Out Of Range	• Rear electronic module, fuel input (modulated pulsewidth) - out of range (high)	Carry out any pinpoint tests associated with this DTC using the manufacturer approved diagnostic system. Refer to electrical circuit diagrams, notes and check engine control module to rear electronic module fuel input (modulated pulsewidth) is out of range (high)
U1262	SCP Communication Bus Fault	• Rear electronic module (SCP) - communication circuit fault	Refer to electrical circuit diagrams, notes and check rear electronic module SCP circuit for fault

www.JagDocs.com

Driver Door Module (DDM) (86.80.29)

Removal

1 . **CAUTION: Electronic modules are sensitive to static electrical charges. If exposed to these charges, damage may result.**

Prior to removal of the module, upload module configuration information to the Jaguar approved diagnostic system. This information needs to be downloaded into the new module once installed. <<418-01>>

2 . Disconnect the battery ground cable. <<414-01>>

3 . Remove the front door trim panel. <<501-05>>

4 . Disconnect the driver door module (DDM) electrical connectors.

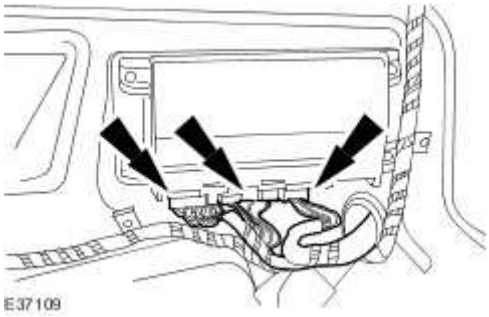

5 . Remove the DDM.

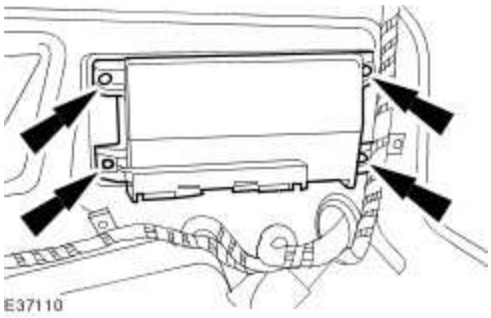

Installation

1 . To install, reverse the removal procedure.

2 . After installation of the module, download module configuration information to the new module. <<418-01>>

www.JagDocs.com

Driver Seat Module (DSM) (86.75.28)

Removal

CAUTION: Electronic modules are sensitive to static electrical charges. If exposed to these charges, damage may result.

1 . Remove the front seat. <<501-10>>

2 . Disconnect the electrical connectors.

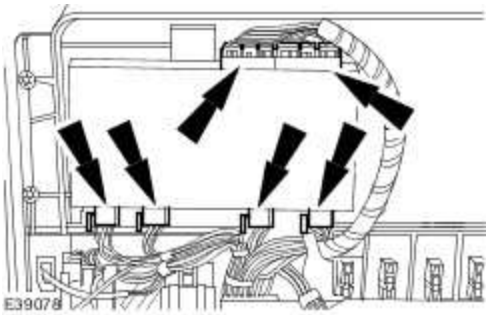

3 . Remove the driver seat module (DSM).

Release the retaining tang

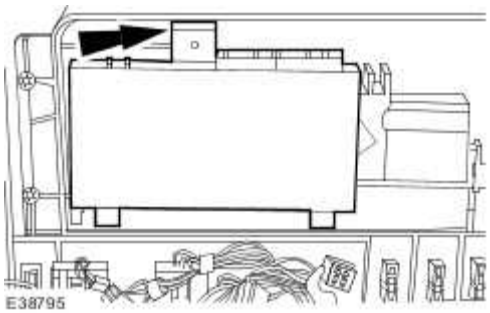

Installation

1 . To install, reverse the removal procedure.

Front Electronic Module (FEM) (86.80.41)

Removal

1 . **CAUTION: Electronic modules are sensitive to static electrical charges. If exposed to these charges, damage may result.**

Prior to removal of the module, upload module configuration information to the Jaguar approved diagnostic system. This information needs to be downloaded into the new module once installed. <<418-01>>

2 . Disconnect the battery ground cable. <<414-01>>

3 . Remove the left-hand cowl side trim panel. <<501-05>>

4 . Reposition the floor covering.

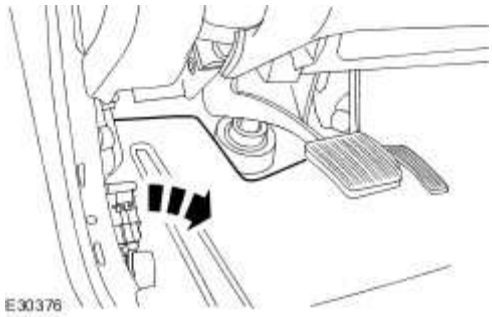

5 . Disconnect the electrical connectors.

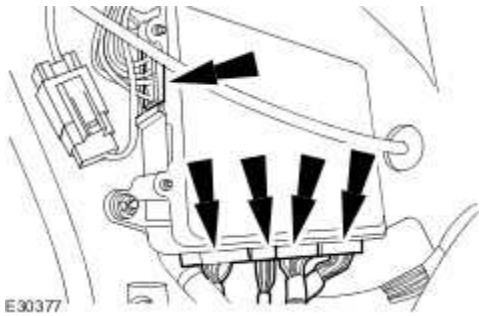

www.JagDocs.com

6 . Remove the front electronic module (FEM).

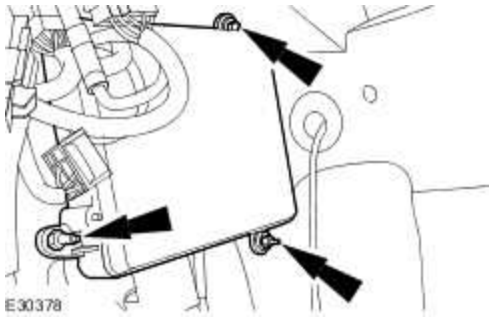

Installation

1 . To install, reverse the removal procedure.

Tighten to 6 Nm.

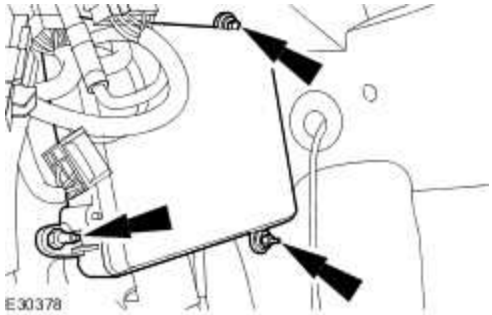

2 . After installation of the module, download module configuration information to the new module. <<418-01>>

Multifunction Voice Activated Module (86.53.13)

Removal

1. **CAUTION: Electronic modules are sensitive to static electrical charges. If exposed to these charges, damage may result.**

   Prior to removal of the module, upload module configuration information to the Jaguar approved diagnostic system. This information needs to be downloaded into the new module once installed. <<418-01>>

2. Disconnect the battery ground cable. <<414-01>>

3. Remove the left-hand luggage compartment side trim panel.

   1) Remove the luggage compartment side trim retaining clip.

   2) Remove the luggage compartment side trim panel.

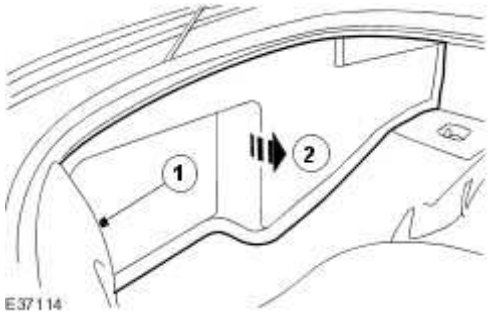

4. Detach the module mounting bracket.

www.JagDocs.com

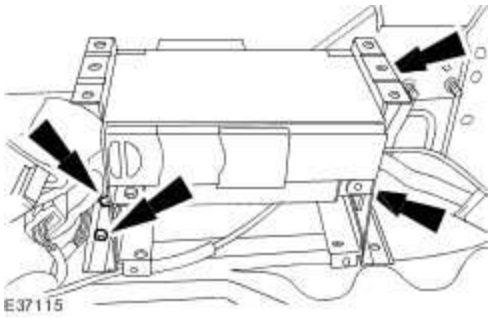

5 . Disconnect the CD changer electrical connectors.

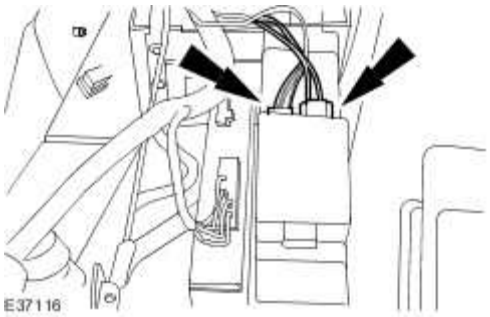

6 . Disconnect the multifunction voice activated module electrical connectors.

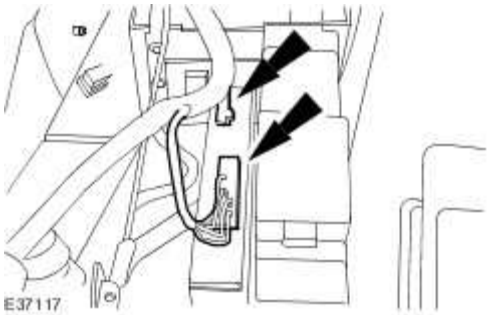

7 . **NOTE:**

Left-hand shown, right-hand similar.

Remove the CD changer.

- Remove the CD changer retaining bolts.

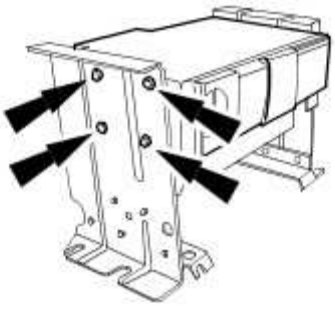

8 . **CAUTION:**

Remove the multifunction voice activated module.

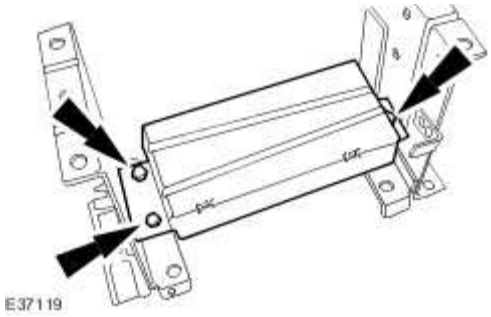

Installation

1 . To install, reverse the removal procedure.

Tighten to 8 Nm.

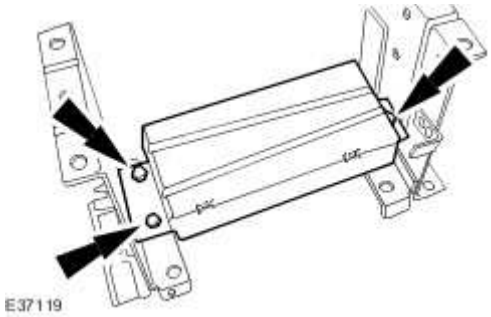

2 After installation of the module, download module configuration information to the new

www.JagDocs.com

. module. <<418-01>>

3 . **NOTE:**

Left-hand shown, right-hand similar.

Tighten to 6 Nm.

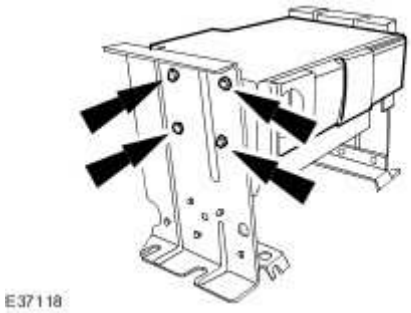

4 . Tighten to 10 Nm.

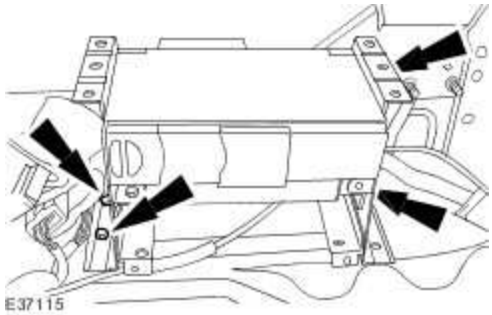

Rear Electronic Module (REM) (86.80.37)

Removal

1 . **CAUTION: Electronic modules are sensitive to static electrical charges. If exposed to these charges, damage may result.**

Prior to removal of the module, upload module configuration information to the Jaguar approved diagnostic system. This information needs to be downloaded into the new module once installed. <<418-01>>

2 . Disconnect the battery ground cable. <<414-01>>

3 . Remove the right-hand luggage compartment side trim panel.

1) Remove the luggage compartment side trim retaining clip.

2) Remove the luggage compartment side trim panel.

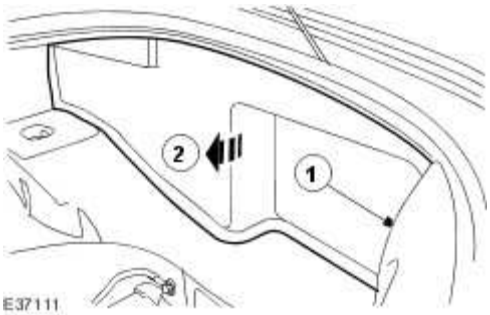

4 . Disconnect the REM electrical connectors.

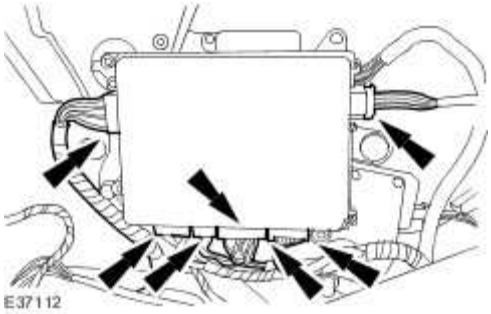

www.JagDocs.com

5 . Remove the REM.

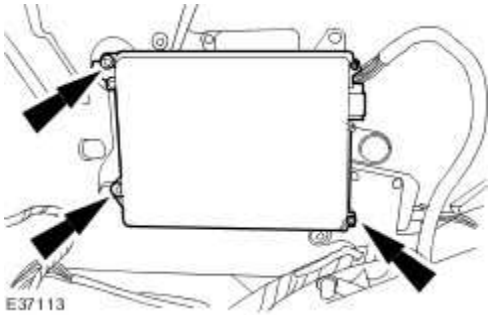

Installation

1 . To install, reverse the removal procedure.

Tighten to 6 Nm.

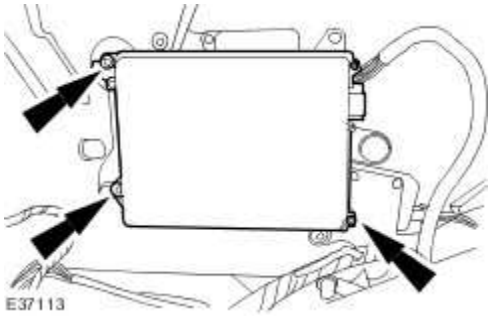

2 . After installation of the module, download module configuration information to the new module. <<418-01>>

Rear Seat Module (RSM) (86.75.40)

Removal

1 . **CAUTION: Electronic modules are sensitive to static electrical charges. If exposed to these charges, damage may result.**

Prior to removal of the module, upload module configuration information to the Jaguar approved diagnostic system. This information needs to be downloaded into the new module once installed.

2 . Disconnect the battery ground cable. <<414-01>>

3 . Remove the rear seat. <<501-10>>

4 . Reposition the rear seat backrest insulator.

Remove the retaining clips.

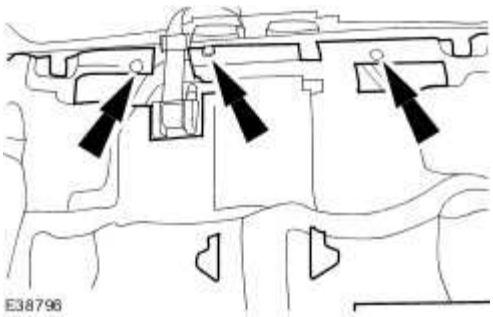

5 . Disconnect the RSM electrical connectors.

www.JagDocs.com

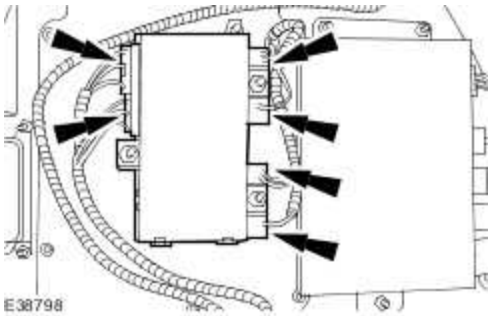

6 . Remove the RSM.

- Remove the securing nuts.

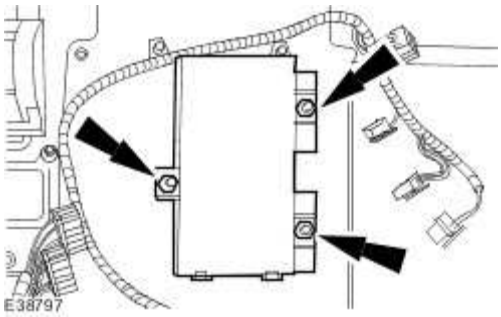

Installation

1 . To install, reverse the removal procedure.

- Tighten to 6 Nm.

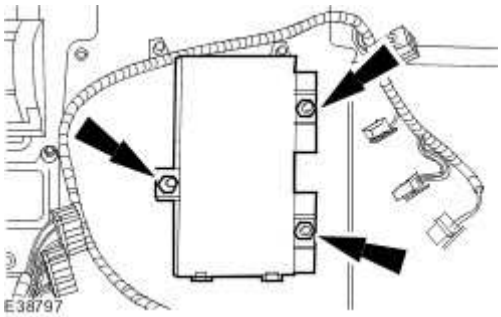

5. BODY AND PAINT

501 : Body and Paint

501-02 : Front End Body Panels

Description and operation

Front End Body Panels

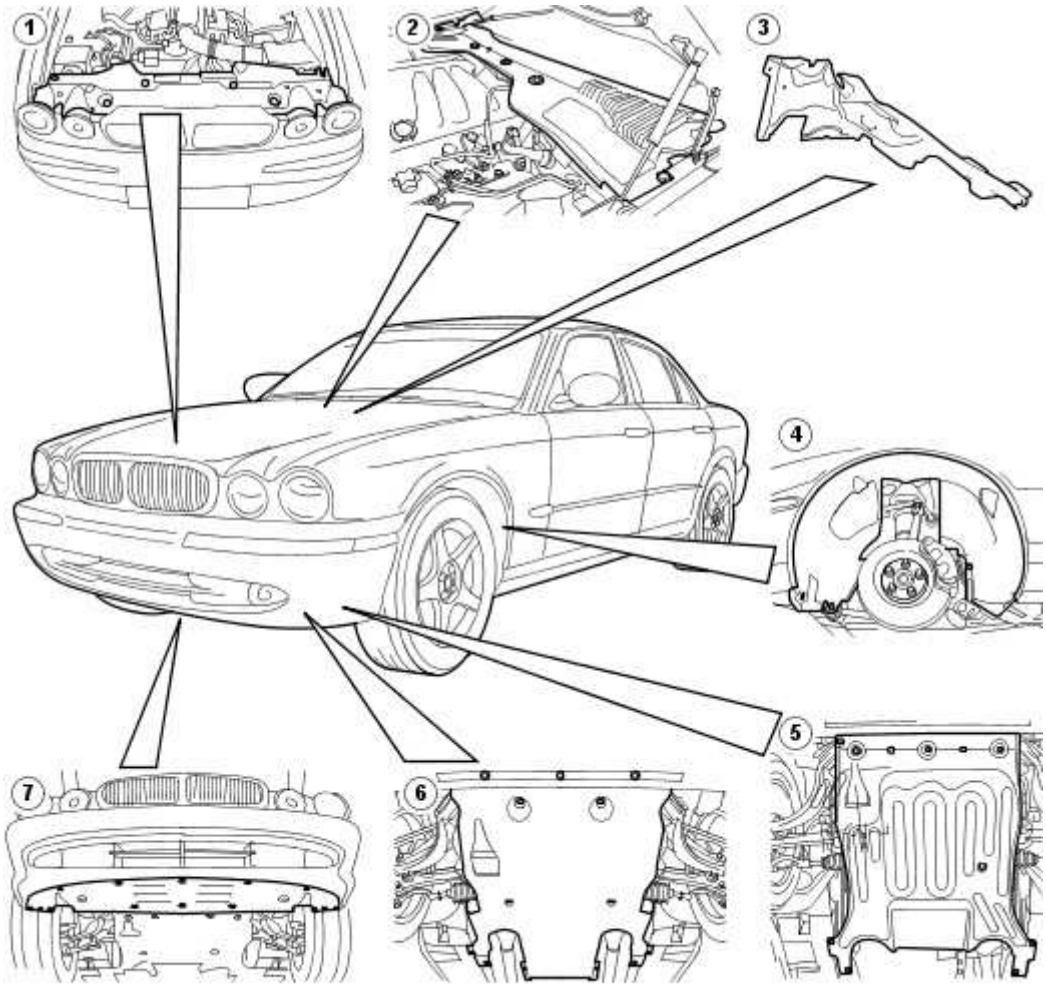

E87437

www.JagDocs.com

Item	Part Number	Description
1	-	Radiator closing panel
2	-	Cowl vent screen
3	-	Secondary bulkhead center panel
4	-	Fender splash shield
5	-	Air deflector (petrol variant)
6		Air deflector (diesel variant)
7		Radiator splash shield

Radiator Closing Panel

The radiator closing panel is fitted to the body by retaining clips and is easily removed to give access to the rear of the headlamps.

Cowl Vent Screen - Vehicles built up to G45170

An injection molded plastic cowl vent screen is retained to the bodywork by retaining clips. The cowl vent screen has two access panels and allows easy access to the brake fluid reservoir and the cabin air filter.

Cowl Vent Screen - Vehicles built from G45171

An injection molded plastic cowl vent screen is retained to the bodywork by retaining clips. The cowl vent screen has two access panels and allows easy access to the brake fluid reservoir, the windshield washer reservoir filler neck and the cabin air filter.

Secondary bulkhead center panel

The secondary bulkhead center panel is fitted to prevent engine noise from being transmitted through the bulkhead into the passenger compartment. It also retains the heat in the engine bay compartment to maintain engine bay temperatures and to prevent heat bleeding through into the passenger compartment.

Fender Splash Shield

Protective injection moulded plastic liners are fitted to the inside of the fenders, these help prevent dirt and water ingress into the vehicle body.

Air Deflector

An air deflector is retained to the front subframe. On the diesel variant the air deflector incorporates a transmission undertray. The air deflector assists the flow of air under the vehicle, it also gives protection to the engine bay from dirt and water ingress. On top of the air deflector an acoustic pad is fitted which is covered by a heat shield, this is designed to reduce engine, transmission and road noise.

Radiator Splash Shield

The radiator splash shield is fitted to assist air flow through the cooling pack. It is retained to the bottom of the front bumper cover, both front fender splash shields, and to the front subframe.

www.JagDocs.com

Air Deflector (76.11.41)

Removal

All vehicles

1 . Raise and support the vehicle.
For additional information, refer to Lifting

All except vehicles with diesel engine

2 . Remove the air deflector.

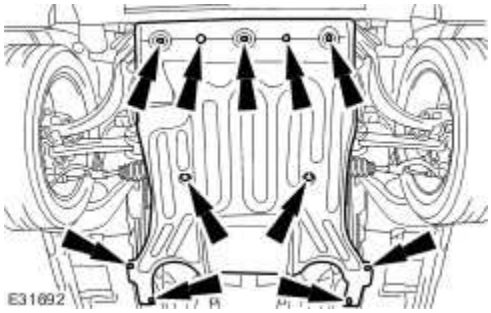

Vehicles with diesel engine

3 . Remove the air deflector.

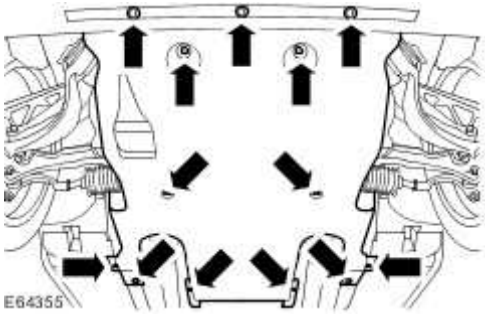

Installation

Vehicles with diesel engine

1 . To install, reverse the removal procedure.

Tighten the retaining bolts to 7 Nm.

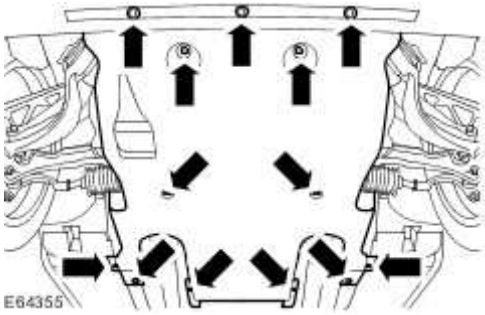

All except vehicles with diesel engine

2 . Tighten the retaining bolts to 7 Nm.

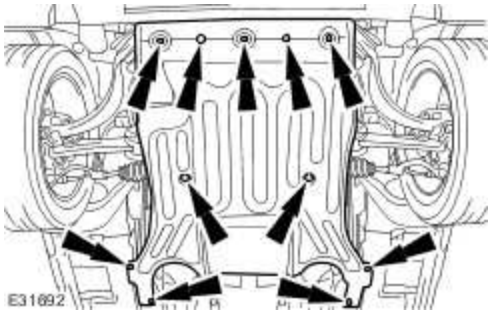

www.JagDocs.com

Cowl Vent Screen (76.10.01)

Removal

1 . Remove the cowl vent screen access panel.

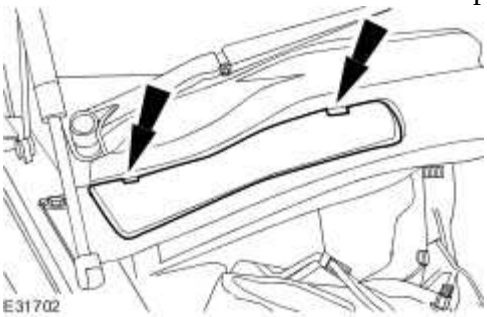

2 . Remove both wiper pivot arms. <<501-16>>

3 . Detach the windshield washer hose.

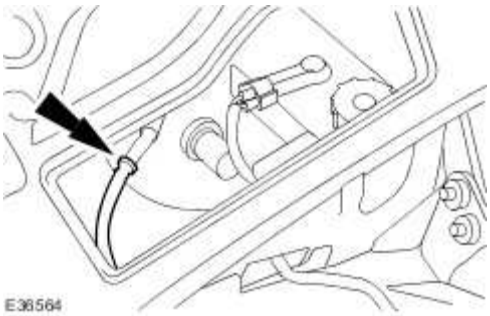

4 **NOTE:**

· Remove the cowl vent screen starting at one side and working to the opposite side.

Remove the cowl vent screen.

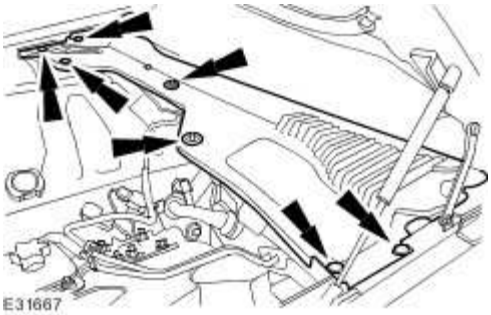

Installation

1 . To install, reverse the remove procedure.

Fender Splash Shield (76.10.90)

Removal

1 . Remove the front wheel and tire assembly. <<204-04>>

2 . Remove the fender splash shield.

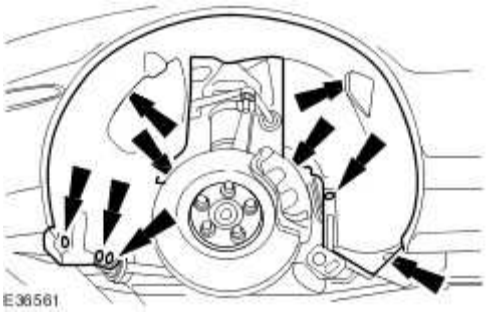

Installation

1 . To install, reverse the removal procedure.

www.JagDocs.com

Radiator Grille Opening Panel (76.10.06)

Removal

1 . Remove the radiator grille opening panel.

Installation

1 . To install, reverse the removal procedure.

Radiator Splash Shield (76.22.90)

Removal

All vehicles

1 . Raise and support the vehicle.
For additional information, refer to Lifting

Vehicles built up to VIN:H18679

2 . Remove the radiator splash shield.

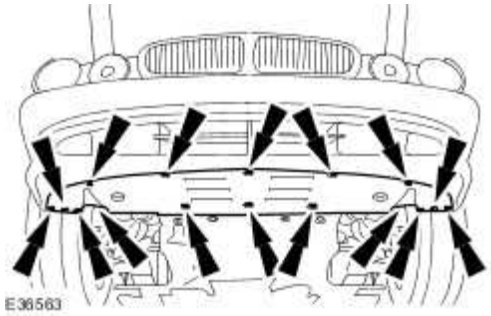

Vehicles built from VIN:H18680

3 . Remove the radiator splash shield.

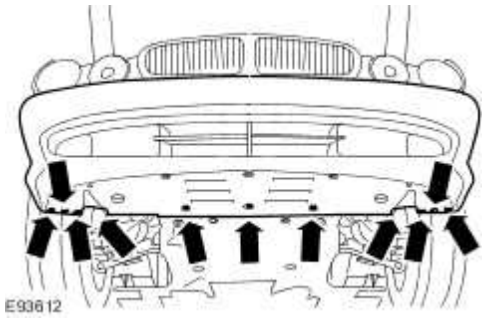

Installation

1 . To install, reverse the removal procedure.

www.JagDocs.com

Secondary Bulkhead Center Panel

Removal

All vehicles

1 . Remove the cowl vent screen.
For additional information, refer to Cowl Vent Screen (76.10.01)

2 . Carry out the air conditioning (A/C) system recovery procedure.
For additional information, refer to Air Conditioning (A/C) System Recovery, Evacuation and Charging (82.30.30)

Right-hand drive vehicles

3 . Drain the cooling system.
For additional information, refer to Cooling System Draining, Filling and Bleeding

4 . Remove the air deflector.
For additional information, refer to Air Deflector (76.11.41)

5 . Detach the transmission harness electrical connectors from the retaining bracket.

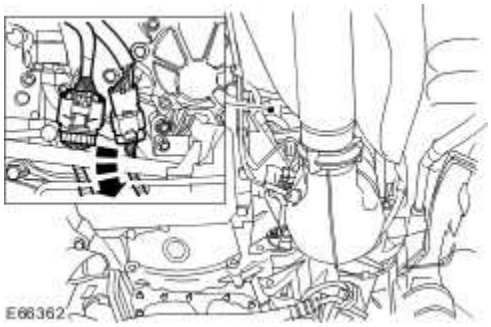

6 . Disconnect the transmission harness electrical connectors.

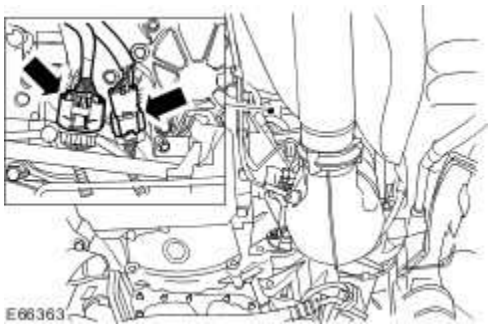

7 . Lower the vehicle.

8 . Detach the brake booster vacuum pipe from the vacuum pump.

9 . Detach the differential pressure sensor retaining bracket.

- Remove the retaining nut.

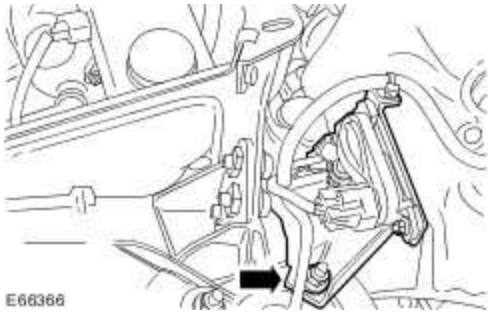

10 . Remove the engine compartment support brace.

- Remove the retaining bolts.

www.JagDocs.com

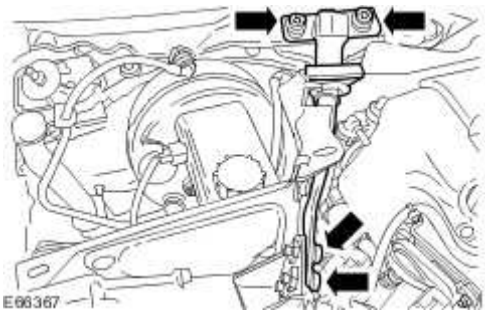

Left-hand drive vehicles

11 . Detach and reposition the brake booster vacuum pipe.

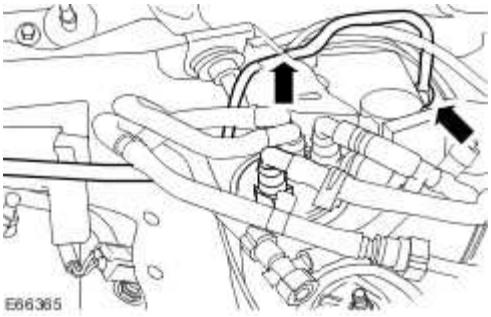

12 . **NOTE:**

Fit suitable blanking caps to the fuel filter unions, fuel supply lines and fuel return lines.

Detach the fuel filter supply and return lines.

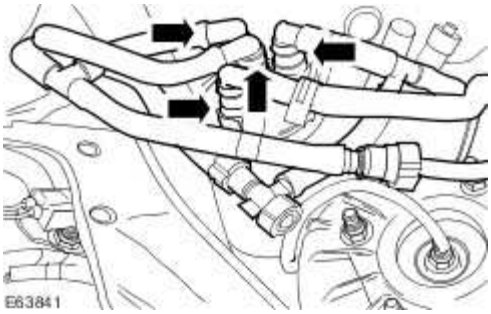

13 . Loosen the fuel filter retaining bolt.

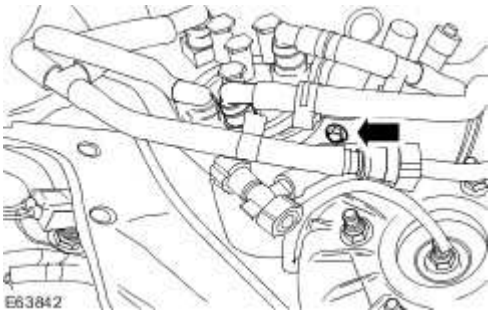

14 . Remove the fuel filter from the retaining bracket.

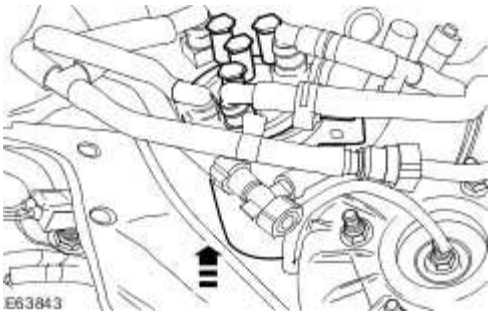

15 . Remove the fuel filter retaining bracket.

- Remove the retaining bolts.

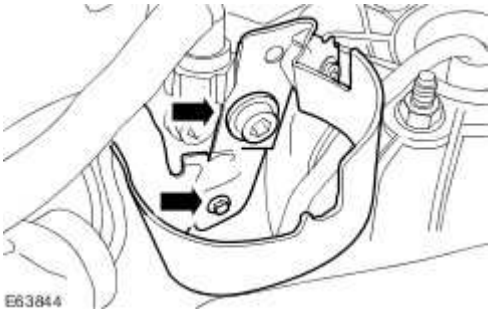

16 . Remove the engine compartment support brace.

- Remove the retaining bolts.

www.JagDocs.com

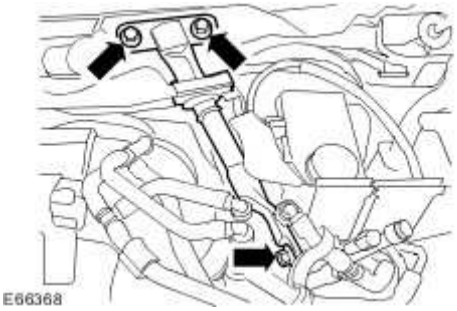

17 . Remove the secondary bulkhead center panel left-hand retaining scrivet.

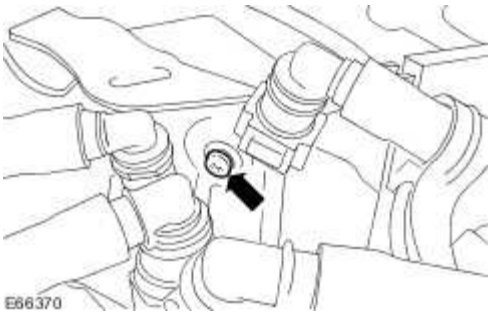

18 . Remove the secondary bulkhead center panel right-hand retaining scrivet.

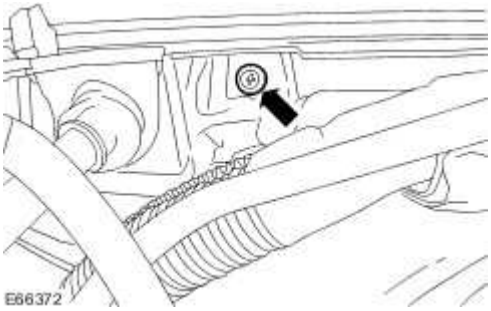

Right-hand drive vehicles

19 . Remove the secondary bulkhead center panel right-hand retaining scrivet.

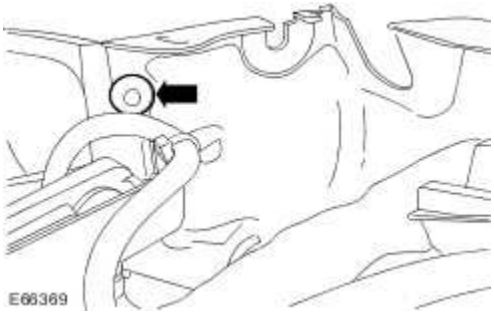

20 . Remove the secondary bulkhead center panel left-hand retaining scrivet.

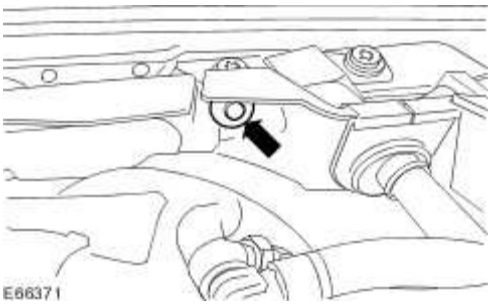

21 . Detach the heater hoses.

Reposition the heater hose retaining clips.

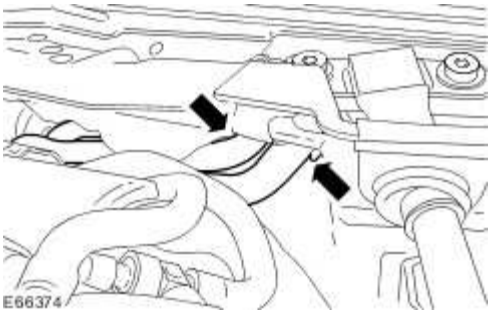

Left-hand drive vehicles

22 . **NOTE:**

Cap the heater hoses to prevent coolant loss.

Detach the heater hoses.

Reposition the heater hose retaining clips.

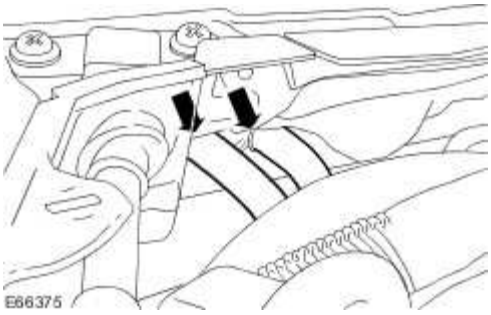

www.JagDocs.com

23 . Detach the transmission harness electrical connectors from the retaining bracket.

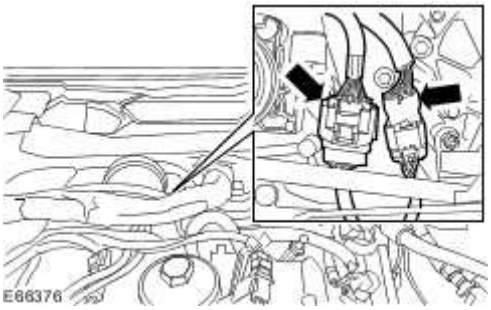

24 . Disconnect the transmission harness electrical connectors.

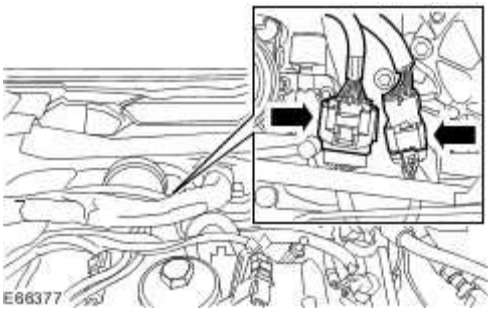

All vehicles

25 . **NOTE:**

Right-hand drive vehicle shown, left-hand drive vehicle similar.

Remove the secondary bulkhead center panel retaining bracket.

- Remove the retaining bolts.
- Remove the retaining scrivets.

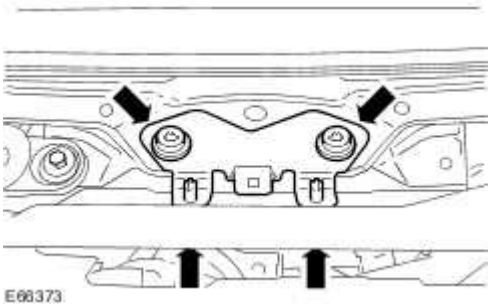

26 . **NOTE:**

Remove and discard the O-ring seals.

NOTE:

Cap the air conditioning ports.

Detach the evaporator core supply and return pipes.

- Remove the retaining nut.

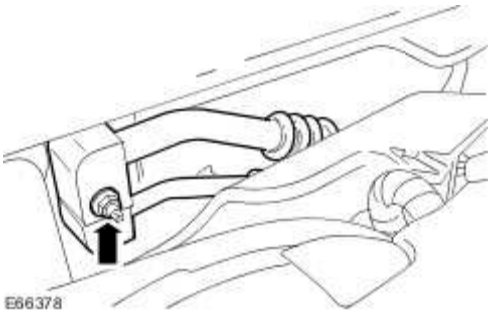

27 . Remove the engine harness cover.

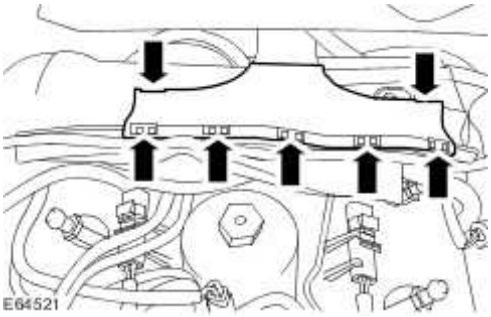

28 . Remove the engine harness casing.

- Remove the retaining bolts.

www.JagDocs.com

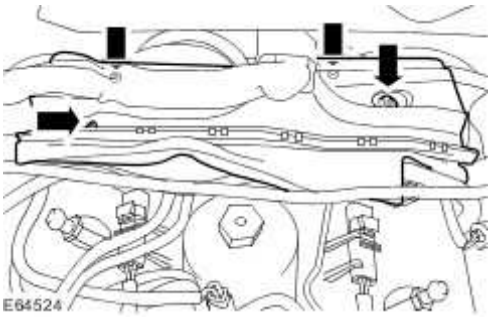

29 . **NOTE:**

Right-hand drive vehicle shown, left-hand drive vehicle similar.

Loosen the engine harness retaining nut.

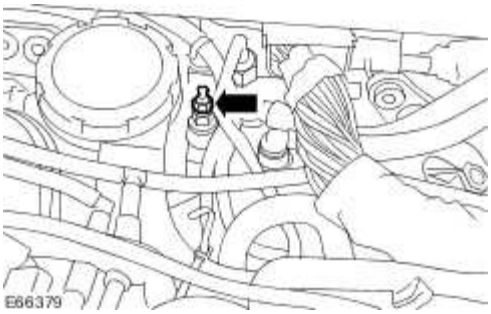

Right-hand drive vehicles

30 . Remove the injector sound proofing.

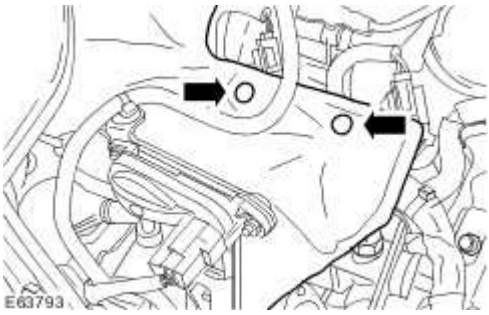

31 . Disconnect the port de-activation vacuum hose.

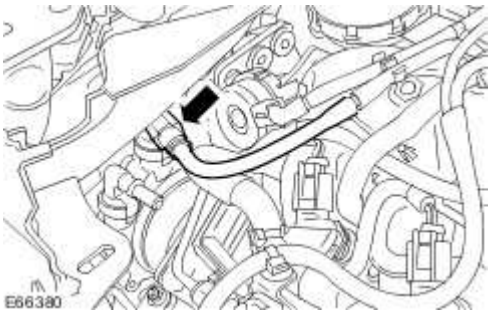

All vehicles

32 . **NOTE:**

Right-hand drive vehicle shown, left-hand drive vehicle similar.

Detach the engine harness.

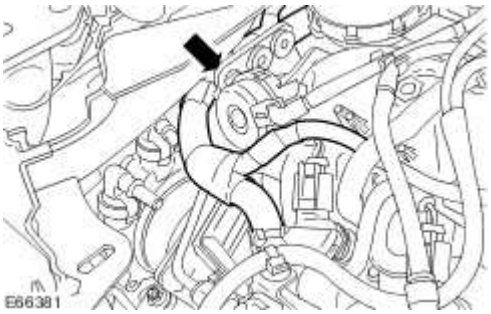

33 . **NOTE:**

Right-hand drive vehicle shown, left-hand drive vehicle similar.

Detach and reposition the engine harness towards the front of the vehicle.

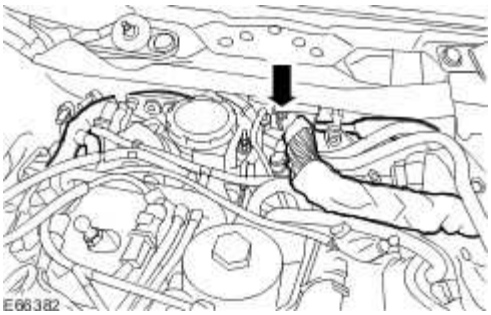

www.JagDocs.com

Right-hand drive vehicles

34 . Detach and reposition the secondary bulkhead center panel.

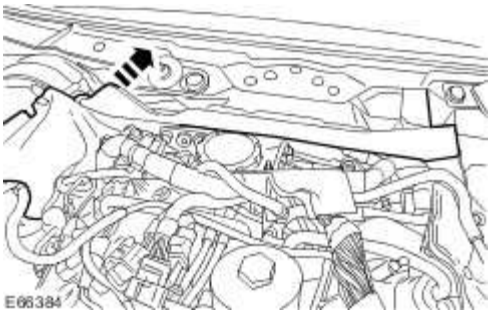

35 . Remove the secondary bulkhead center panel.

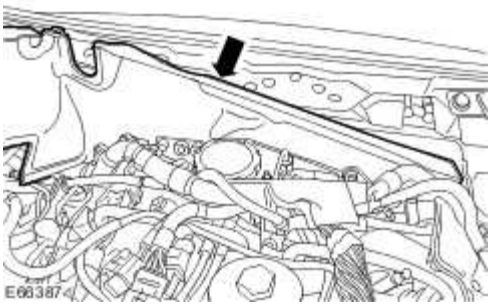

Left-hand drive vehicles

36 . Detach the brake line grommet.

37 . Detach and reposition the secondary bulkhead center panel.

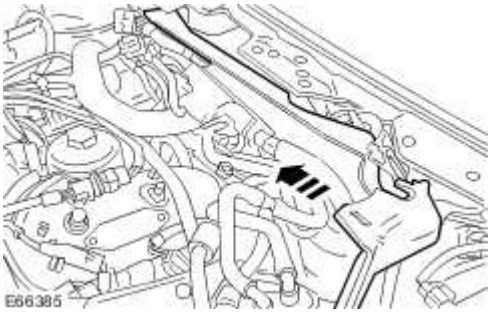

38 . Detach the bonnet release cable from the secondary bulkhead center panel.

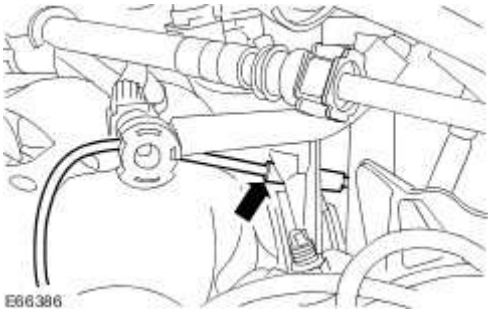

39 . Remove the secondary bulkhead center panel.

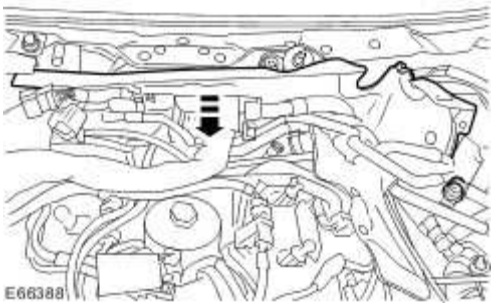

Installation

All vehicles

1 . To install, reverse the removal procedure.

Tighten to 7 Nm.

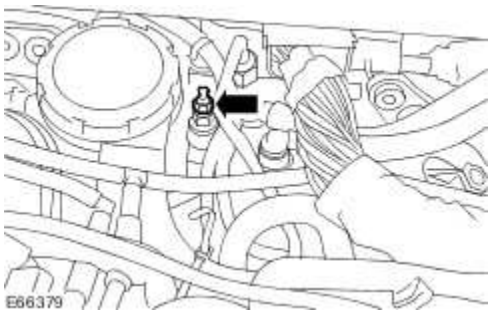

www.JagDocs.com

2 . Tighten to 4 Nm.

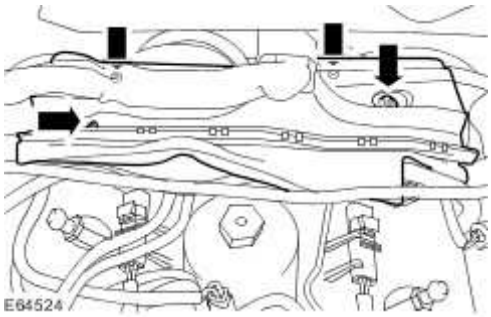

3 . Tighten to 8 Nm.

Fit new O-ring seals.

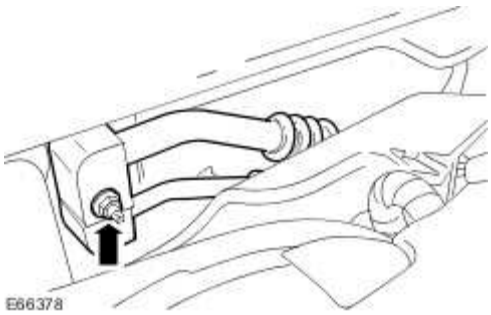

4 . Tighten to 25 Nm.

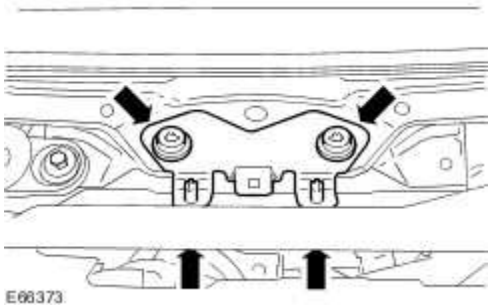

Left-hand drive vehicles

5 . Tighten to 25 Nm.

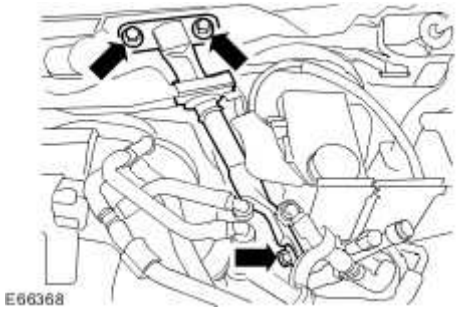

6 . Tighten 10 mm (0.394 inch's) bolt to 25 Nm.

- Tighten 6 mm (0.236 inch's) bolt to 8 Nm.

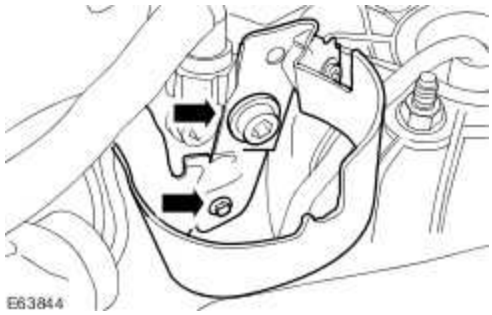

7 . Tighten to 7 Nm.

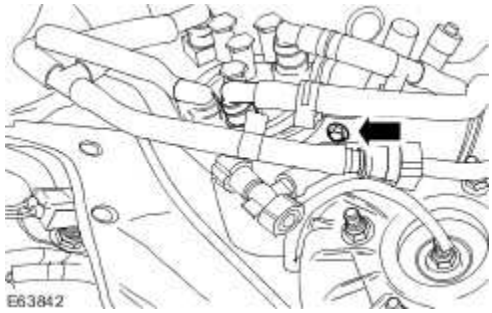

Right-hand drive vehicles

8 . Tighten to 25 Nm.

www.JagDocs.com

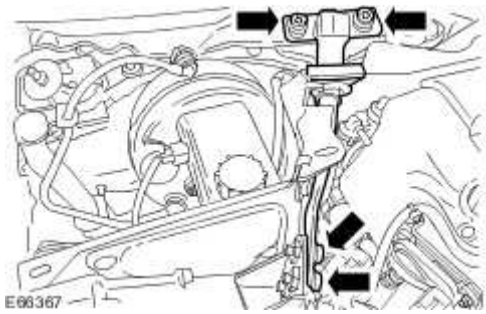

9 . Tighten to 25 Nm.

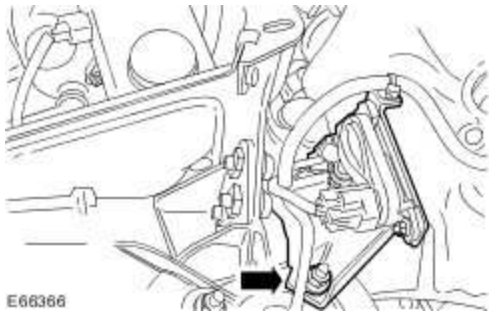

All vehicles

10 . Carry out coolant system filling and bleeding procedure.
For additional information, refer to Cooling System Draining, Filling and Bleeding

11 . Carry out the air conditioning system evacuation and charging procedure.
For additional information, refer to Air Conditioning (A/C) System Recovery, Evacuation and Charging (82.30.30)

Specifications

Torque Specifications

Description	Nm	lb-ft	lb-in
Door check arm to body retaining screws	10	7	89
Door striker retaining screws	28	21	-
Front safety belt retractor retaining bolt	35	26	-
Rear door hinge to body retaining nuts	30	22	-
Luggage compartment lid to hinge retaining bolts	18	13	-
Luggage compartment lid to body retaining bolts	18	13	-
Luggage compartment lid striker retaining bolts	9	-	80
Hood striker retaining bolts	11	8	-
Hood safety latch retaining bolts	11	8	-
Hood to hinge retaining bolts	25	18	-

www.JagDocs.com

Hood Alignment (76.16.02)

1. **NOTE:**
   Left-hand shown, right-hand similar.

Remove the hood striker plate.

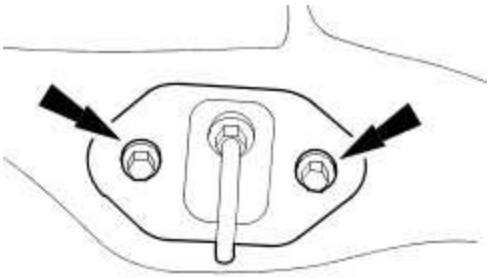

E37069

2. Remove the hood safety latch.

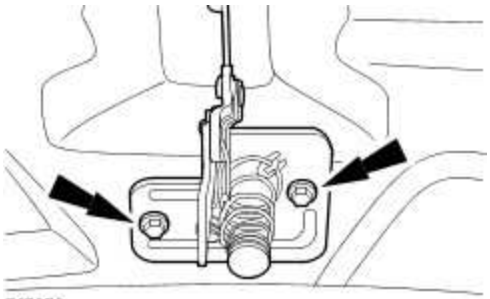

E37070

3. **NOTE:**
   Support the hood while the hood struts are remove.

NOTE:
Left-hand shown, right-hand similar.

Remove the hood strut.

E37068

4. **NOTE:**
   Left-hand shown, right-hand similar.

Loosen the hood hinge retaining bolts.

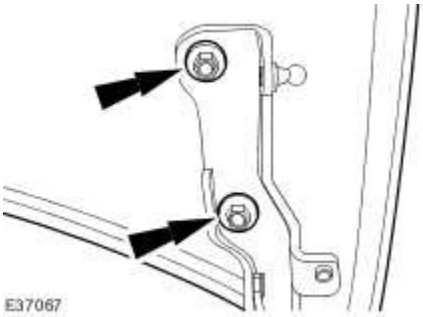

5. **NOTE:**
   Left-hand shown, right-hand similar.

Adjust the hood height.

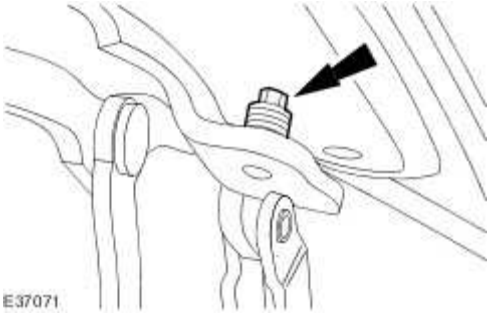

6. **NOTE:**
   Make sure the spacing between the grille to hood, headlamps to hood and fenders to hood are equal.

Set the hood alignment to 1 mm (0.04 in) lower than nominal at the middle edges of the hood.

7. **NOTE:**
   Left-hand shown, right-hand similar.

Tighten the hood hinge retaining bolts.

www.JagDocs.com

- Tighten to 25 Nm.

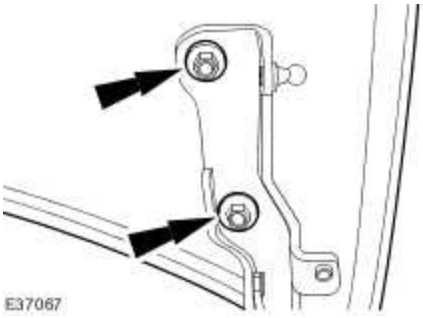

8. **NOTE:**
   Left-hand shown, right-hand similar.

Adjust the hood bump stops to obtain the correct profile between the hood and the headlamps.

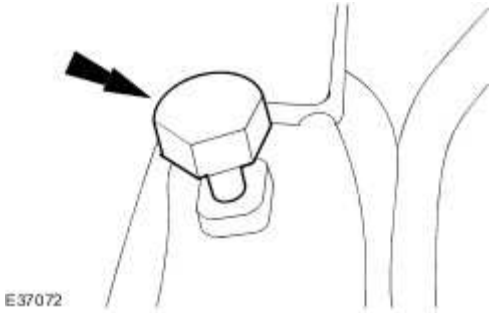

9. **NOTE:**
   Left-hand shown, right-hand similar.

Install the hood strut.

10. Install the hood safety latch.
    - Tighten to 11 Nm.

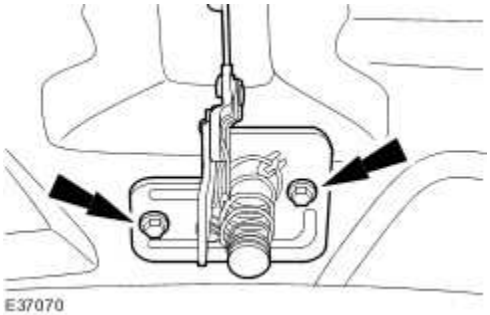

E37070

11. **NOTE:**
    Left-hand shown, right-hand similar.

Install the hood striker.

- Tighten to 11 Nm.

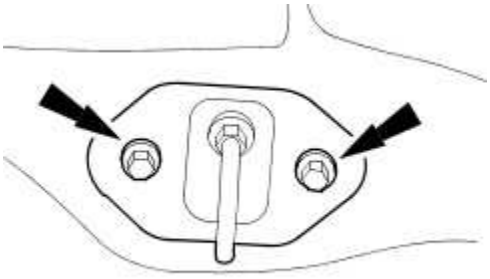

E37069

www.JagDocs.com

Luggage Compartment Lid Alignment (76.19.03)

1. Reposition the luggage compartment floor covering.

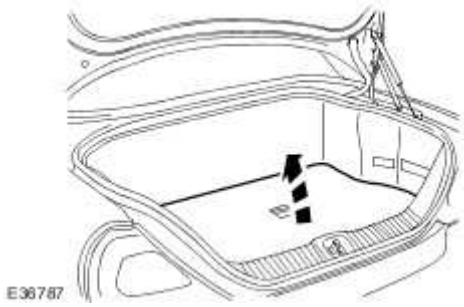

2. Remove the luggage compartment trim panel lower retaining clips.

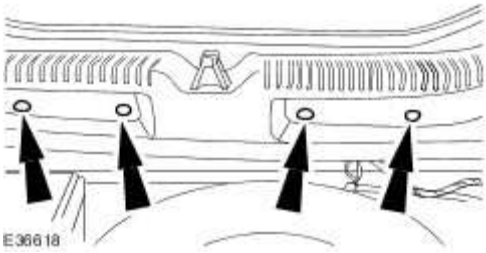

3. Remove the luggage compartment trim panel.

4. Remove the luggage compartment lid striker.

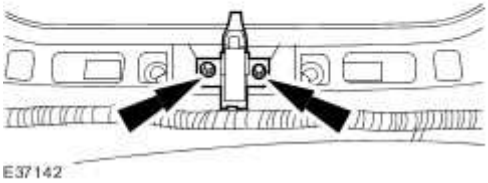

5. Remove the luggage compartment aperture seal.

6. **NOTE:**
   Left-hand shown, right-hand similar.

Remove both the luggage compartment lid gas struts

7. **NOTE:**
   Left-hand shown, right-hand similar.

Loosen the luggage compartment lid retaining bolts.

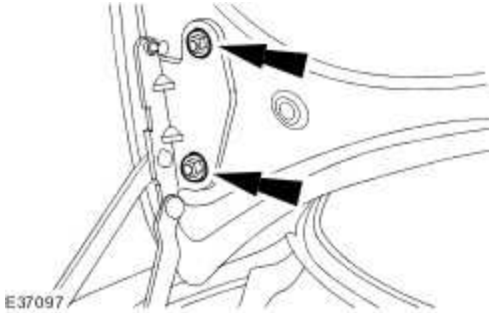

8. **NOTE:**
   Make sure the spacing between the bumper to luggage compartment lid, rear windshield to luggage compartment lid and rear fenders to luggage compartment lid are equal.

Set the luggage compartment lid to the middle of the luggage compartment aperture.

9. **NOTE:**
   Left-hand shown, right-hand similar.

www.JagDocs.com

Tighten the luggage compartment lid retaining bolts.

- Tighten to 18 Nm.

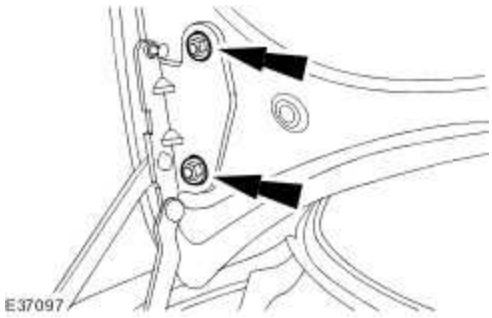

10. **NOTE:**
    Left-hand shown, right-hand similar.

Loosen the luggage compartment lid hinge retaining bolts.

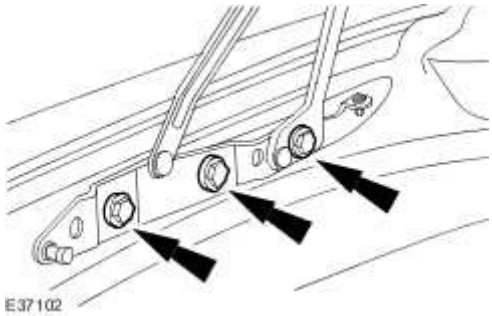

11. **NOTE:**
    Set the alignment to 1 mm (0.04 in) lower than nominal at the middle edges of the luggage compartment lid.

Set the luggage compartment lid alignment.

12. **NOTE:**
    Left-hand shown, right-hand similar.

Tighten the luggage compartment lid hinge retaining bolts.

- Tighten to 18 Nm.

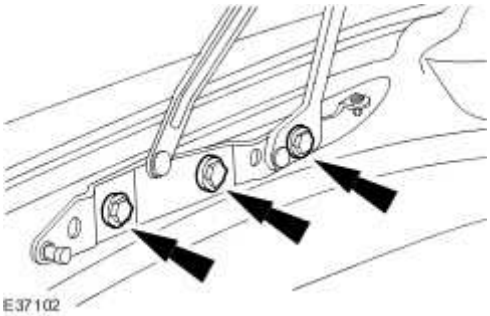

13. **NOTE:**
    Left-hand shown, right-hand similar.

Install both the luggage compartment lid gas struts.

14. **NOTE:**
    Left-hand shown, right-hand similar.

Adjust the luggage compartment lid hinge stops.

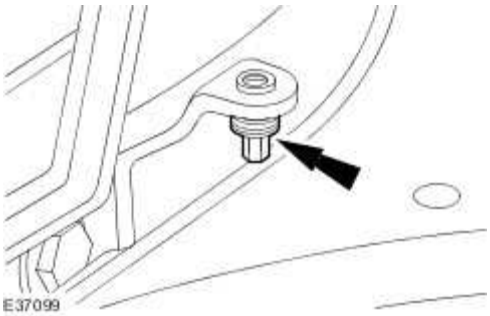

15. Install the luggage compartment aperture seal.

www.JagDocs.com

16. Install the luggage compartment lid striker.
    - Tighten to 9 Nm.

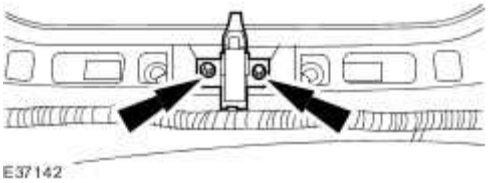

17. Install the luggage compartment trim panel.

18. Install the luggage compartment trim panel lower retaining clips.

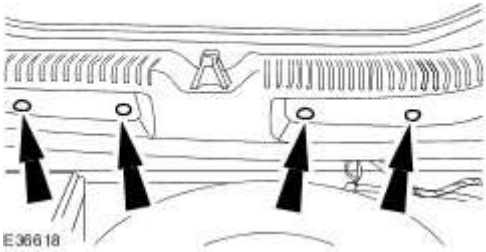

19. Reposition the luggage compartment floor covering.

Rear Door Alignment (76.28.08)

1. Remove the B-pillar trim panel. <<501-05>>

2. Remove the rear door aperture seal.

3. Remove the rear door striker.

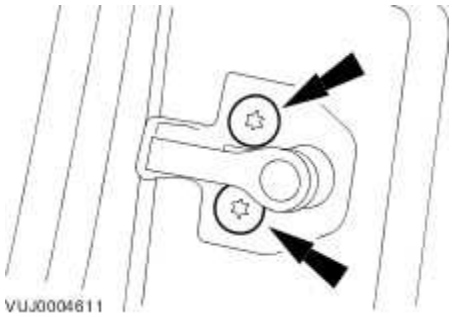

4. Detach the front safety belt retractor.

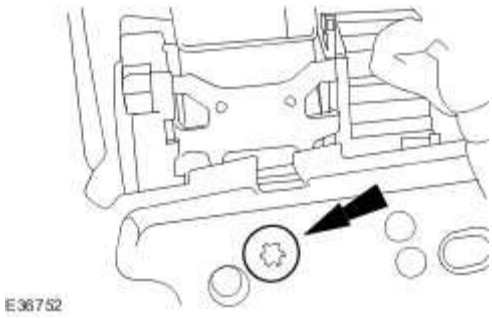

5. Loosen the rear door upper hinge retaining nuts.

www.JagDocs.com

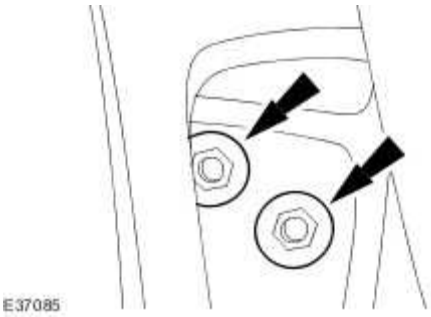

6. Loosen the rear door lower hinge retaining nuts.

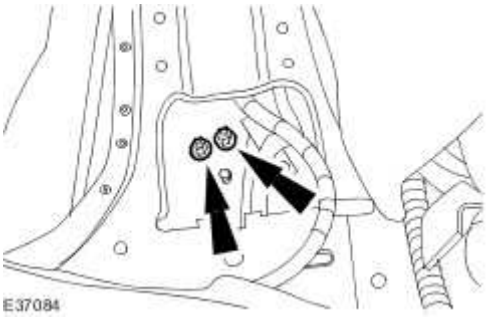

7. **NOTE:**
   Make sure the spacing between the rear door to front door, rear door to rear fender, rear door to roof panel and rear door to sill are equal.

Set the rear door to the correct alignment.

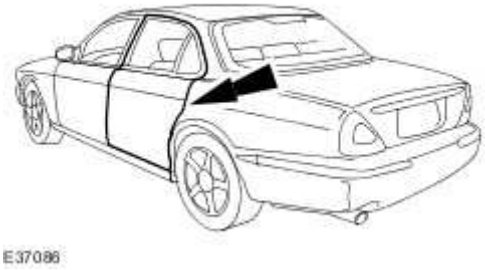

8. Tighten the rear door lower hinge retaining nuts.
   - Tighten to 30 Nm.

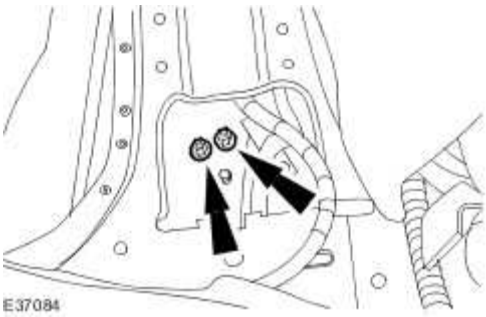

9. Tighten the rear door upper hinge retaining nuts.

- Tighten to 30 Nm.

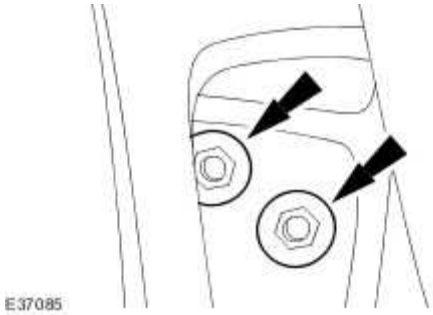

10. Attach the front safety belt retractor.
    - Tighten to 35 Nm.

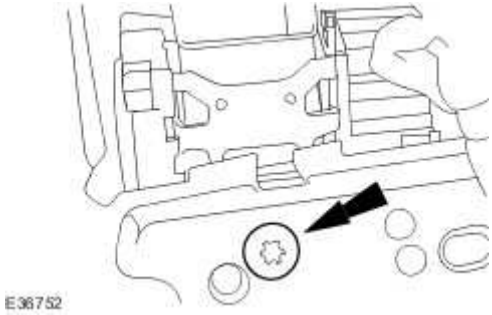

11. Install the rear door striker.
    - Tighten to 28 Nm.

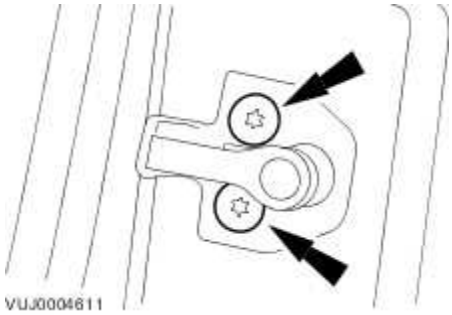

12. Install the rear door aperture seal.

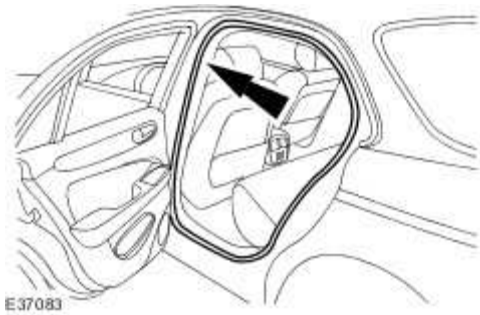

13. Install the B-pillar trim panel. <<501-05>>

www.JagDocs.com

Body Closures

Doors

All doors comprise of an inner and outer panel, spot clinched and bonded together to form a door assembly. Both panels incorporate extensions bonded together to form a cheater assembly and a sealant is applied in cosmetic bead form to all spot clinch joints.

The doors are conventional latch to striker plate design with the strikers located on the body pillars.

A joint-less single profile bulb seal is installed on each door together with a water shedder and separate vacuum formed speaker cup. Upper and lower door hinges and multi-stage check arms require no lubrication throughout the vehicle life.

Luggage Compartment Lid

The luggage compartment lid comprises of an inner and outer panel spot clinched and bonded together to form a complete assembly.

The luggage compartment lid is a conventional lock to striker plate design with the striker located centrally on the edge of the load space floor.

Hood

The hood assembly consists of a one piece inner and outer panel, spot clinched and bonded together with a bead of sealant applied to each clinch joint. The hood opens from the front and is secured by two hood latches and a secondary safety catch.

Front Door Opening Weatherstrip (76.40.01)

Removal

1 . **CAUTION: Make sure the door check arm cannot contact the A-piilar whilst it is detach. Failure to follow this instruction may result in damage to the vehicle.**

Detach the door check arm.

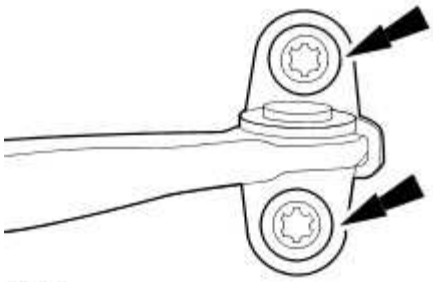

2 . Remove the front door opening weatherstrip.

- Remove the front door opening weatherstrip retaining clips from the door using suitable side cutters.

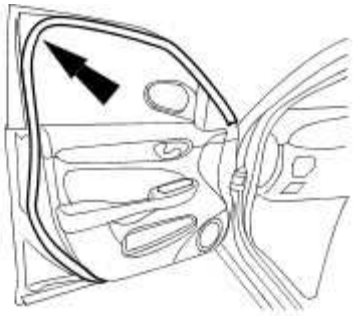

Installation

1 . Align the front door opening weatherstrip to the front door.

www.JagDocs.com

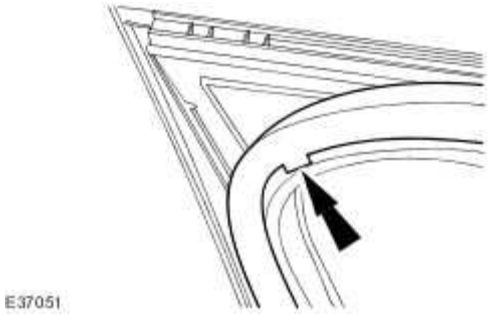

2 . Attach the top of the front door weatherstrip.

1) Attach the the front door opening weatherstrip two top retaining clips.
2) Attach the remaining front door opening weatherstrip retaining clips.
3) Attach the top of the front door weatherstrip.

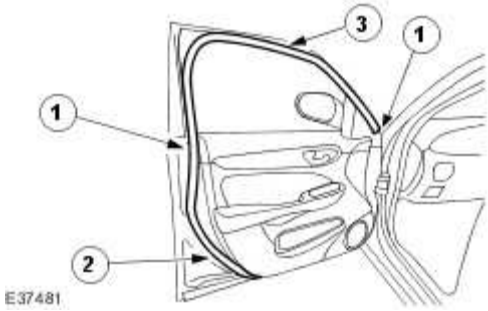

3 . Attach the door check arm.

Tighten to 10 Nm.

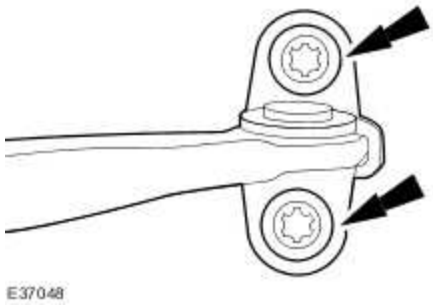

Hood (76.16.01)

Removal

1 . **NOTE:**

Support the hood while the hood struts are removed.

NOTE:

Left-hand shown, right-hand similar.

Remove the hood strut.

2 . **CAUTION: Make sure the hood does not contact the vehicle body while removing. Failure to carry out these instructions may cause damage to the vehicle.**

NOTE:

Left-hand shown, right-hand similar.

Remove the hood.

- Remove the hood retaining bolts.

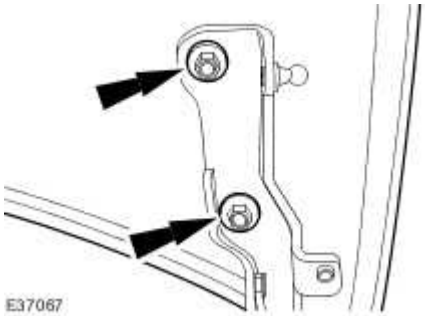

www.JagDocs.com

Installation

1 . **CAUTION: Make sure the hood does not contact the vehicle body while installing. Failure to carry out these instructions may cause damage to the vehicle.**

NOTE:

Left-hand shown, right-hand similar.

To install, reverse the removal procedure.

Tighten to 25 Nm.

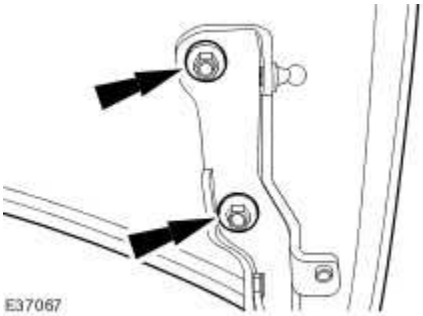

2 . Align the hood.

For additional information, refer to

Door Check Arm – Armoured Vehicles

Removal

NOTE:

Rear door check arm shown, front door check arm similar.

1 . Remove the rear door trim panel.
For additional information, refer to Rear Door Trim Panel (76.34.04)

2 . Remove the rear door inner weather strip.

3 . Remove the rear door latch trim panel.

Remove the retaining screw.

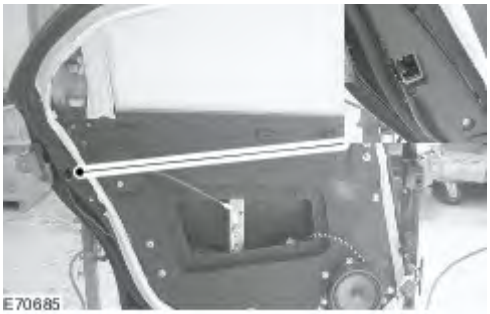

4 . Using a suitable tool, cut the rear door panel seal.

www.JagDocs.com

5 . Disconnect the rear door speaker electrical connector.

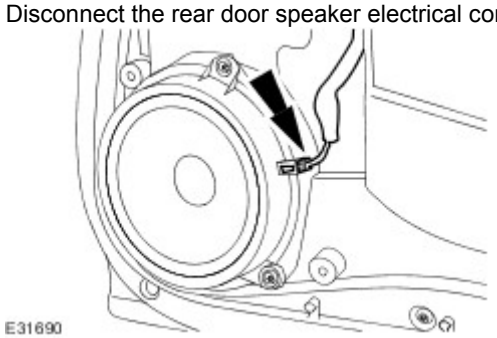

6 . Remove the rear door speaker.

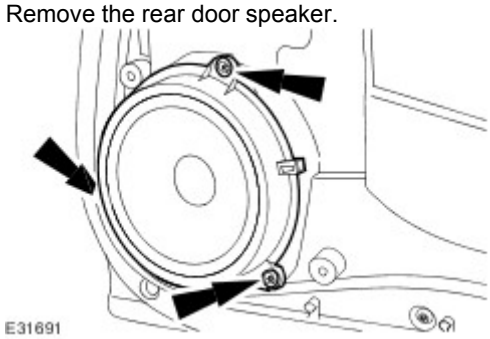

7 . Remove the rear door access panel.

- Remove the retaining bolts.

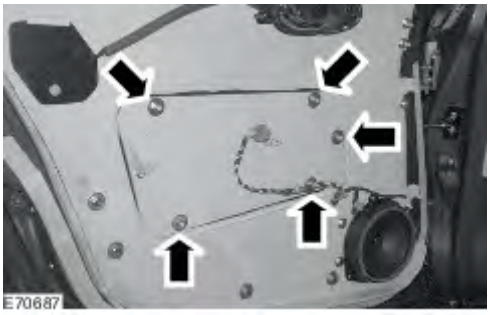

8 . Remove the rear door handle release cable access panel.

9 . Remove the rear door armour panel.

10 . Remove the door check arm retaining bolt.

11 . Remove the door check arm.

- Remove the retaining circlip and the retaining pin.

Installation

1 . Install the door check arm.

- Install the retaining circlip and the retaining pin.

2 . Install the door check arm retaining bolt.

www.JagDocs.com

3 . Install the rear door armour panel.

4 . Install the rear door handle release cable access panel.

- Tighten the retaining bolt.

5 . Install the rear door access panel.

- Tighten the retaining bolts.

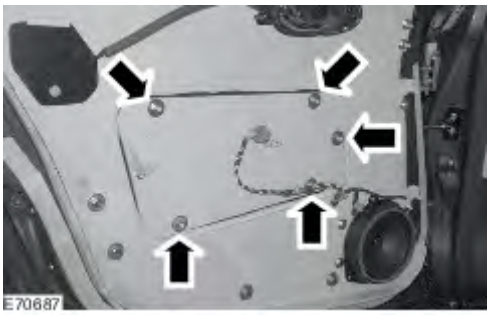

6 . Install the rear door speaker.

- Tighten the retaining bolts.

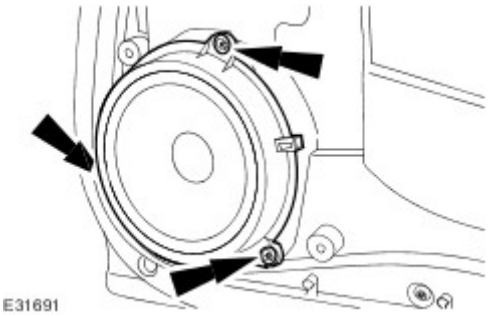

7 . Connect the rear door speaker electrical connector.

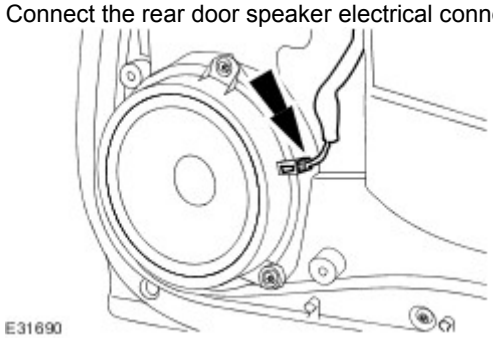

8 . Using a suitable sealant, seal the rear door panel seal.

9 . Install the rear door latch trim panel.

- Tighten the retaining screw.

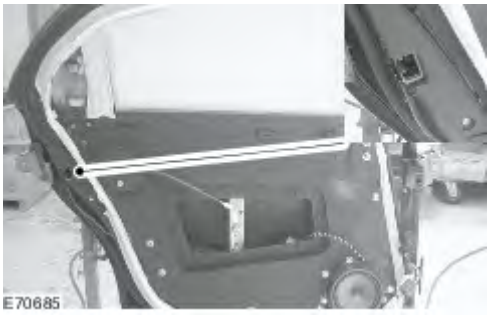

10 . Install the rear door inner weather strip.

11 . Install the rear door trim panel.
For additional information, refer to Rear Door Trim Panel (76.34.04)

www.JagDocs.com

Specifications

Torque Specifications

Description	Nm	lb-ft	lb-in
Front safety belt anchor retaining bolt	35	26	-
Rear safety belt upper mounting bracket retaining bolt	35	26	-
Rear safety belt anchor retaining bolt	40	30	-
Rear center safety belt anchor retaining nut	35	26	-
Folding tray to seat frame retaining bolts	5	-	44
Folding tray to finish panel retaining bolts	2	-	18
Folding tray work surface to finish panel retaining bolts	2	-	18
Folding tray striker to work surface retaining bolts	1	-	9

Interior Trim

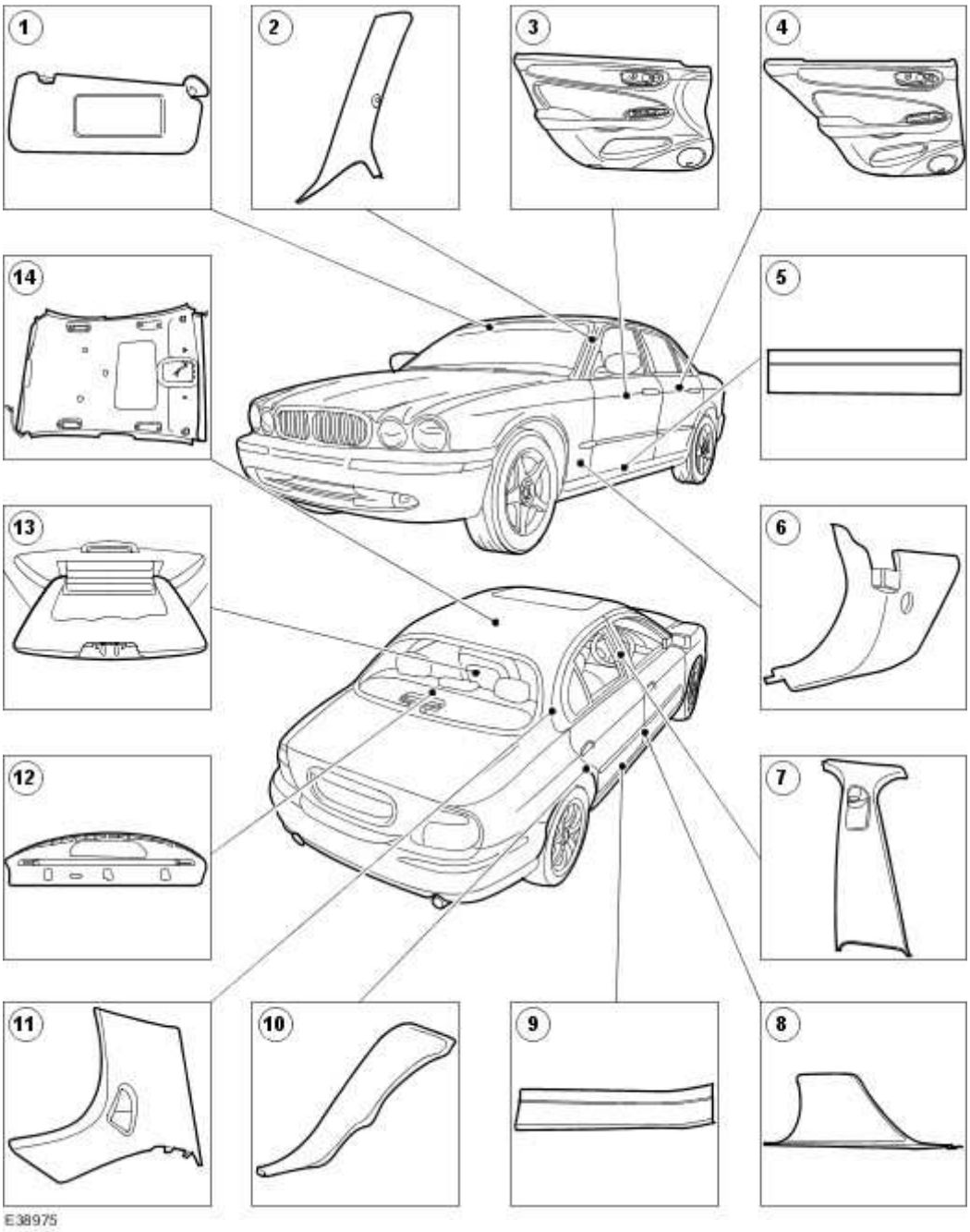

Item	Part Number	Description
1	—	Sun visor
2	—	A-pillar trim
3	—	Front door trim panel
4	—	Rear door trim panel

www.JagDocs.com

5	—	Front scuff plate trim panel
6	—	Cowl side trim panel
7	—	B-pillar upper trim panel
8	—	B-pillar lower trim panel
9	—	Rear scuff plate trim panel
10	—	Lower C-pillar trim panel
11	—	Upper C-pillar trim panel
12	—	Parcel shelf
13	—	Folding Tray
14		Headliner

This section covers removal and installation of the interior mouldings and trim panels. In many instances, one component overlaps another component. If this condition is found, it will be necessary to loosen or remove the overlapping component before removal, to prevent damage to either component. The pillar trims and the headliner are safety critical assemblies as they mount the occupant sensors and interface with the side airbag curtains (to make sure correct deployment is achieved), and as such, correct alignment and installation are necessary for safety reasons.

The headliner is a one-piece design covering the entire interior of the roof and is made of a moulded composite with cloth covering. Finger depressions give pull-down access for the sun visors and passenger assist handles are provided.

There is an interior lamp fitted into the front of the overhead console.

A-Pillar Trim Panel (76.13.31)

Removal

1 . **NOTE:**
Left-hand shown, right-hand similar.

Detach the door aperture weatherstrip.

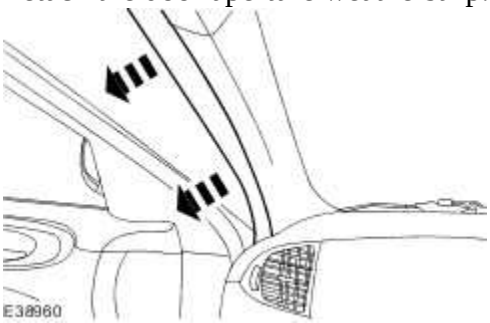

2 . **NOTE:**
Cut the C-pillar trim panel retaining strap.

NOTE:
Left-hand shown, right-hand similar.

Detach the A-pillar trim panel.

www.JagDocs.com

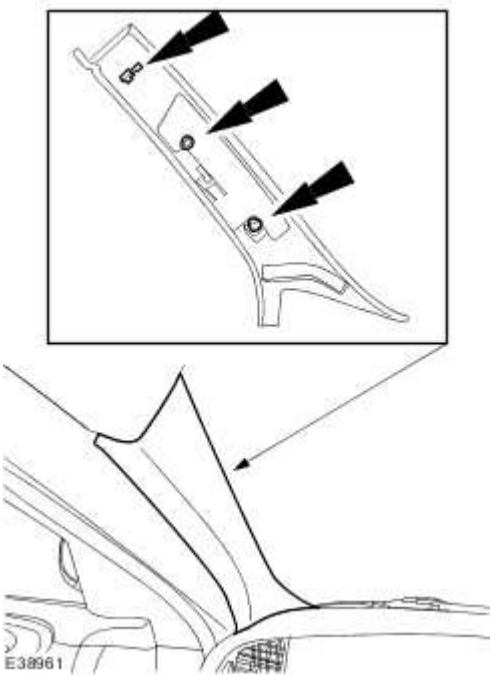

3 . Remove the A-pillar trim panel.

- Disconnect the occupancy position sensor electrical connector.

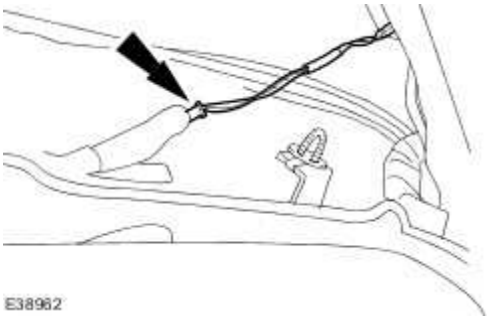

Installation

1 . **WARNING: The retaining strap is a safety critical item and must be replaced to prevent the trim detaching in the event of the side curtain airbag deployment.**

NOTE:

When installing the new retaining strap and rivet make sure the old clip has been removed from the body before pressing the trim into place.

To install, reverse the removal procedure.

B-Pillar Lower Trim Panel (76.13.29)

Removal

1 . Remove both front and rear scuff plate trim panels.
For additional information, refer to

2 . **NOTE:**
Left-hand shown, right-hand similar.

Detach the door aperture weatherstrip.

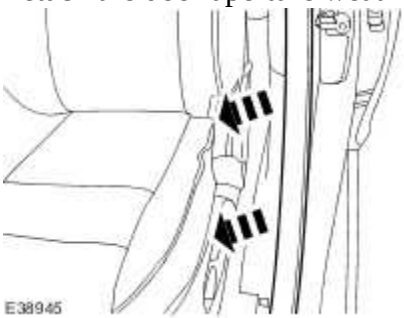

3 . **NOTE:**
Left-hand shown, right-hand similar.

Detach the door aperture weatherstrip.

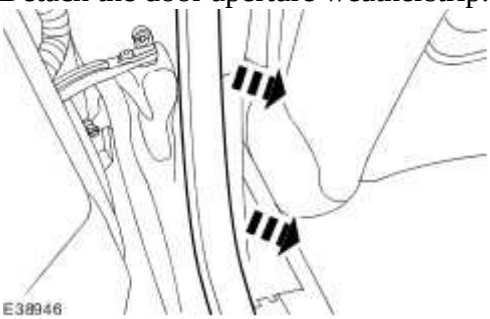

4 . **NOTE:**
Left-hand shown, right-hand similar.

Remove the B-pillar lower trim panel.

www.JagDocs.com

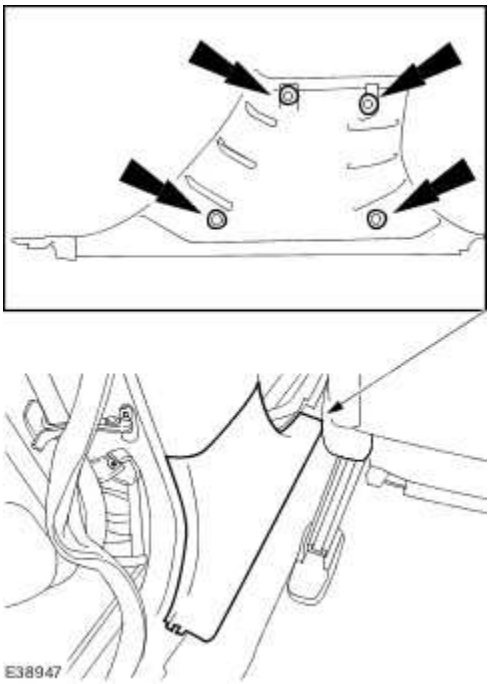

Installation

1 . To install, reverse the removal procedure.

B-Pillar Upper Trim Panel (76.13.28)

Removal

1 . Remove the B-pillar lower trim panel.
For additional information, refer to

2 . **NOTE:**
Left-hand shown, right-hand similar.

Locally detach the front door aperture weatherstrip.

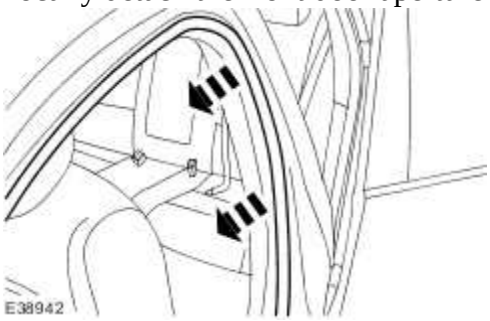

3 . **NOTE:**
Left-hand shown, right-hand similar.

Locally detach the rear door aperture weatherstrip.

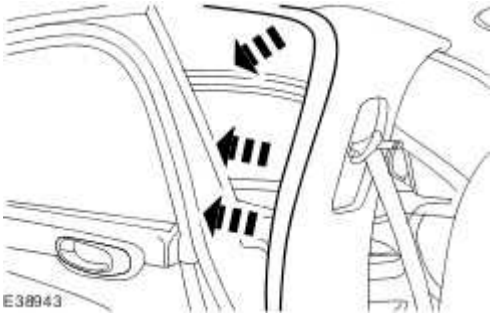

4 . **NOTE:**
Left-hand shown, right-hand similar.

Remove the front safety belt access cover.

www.JagDocs.com

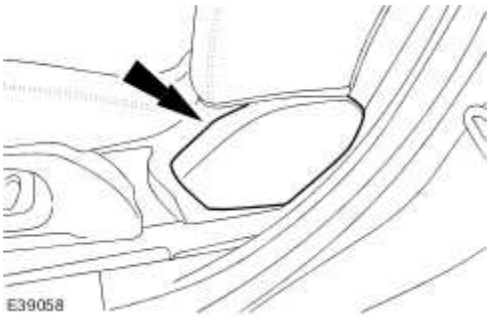

5 . **NOTE:**

Left-hand shown, right-hand similar.

Detach the front safety belt.

6 . **NOTE:**

Left-hand shown, right-hand similar.

Remove the B-pillar upper trim panel.

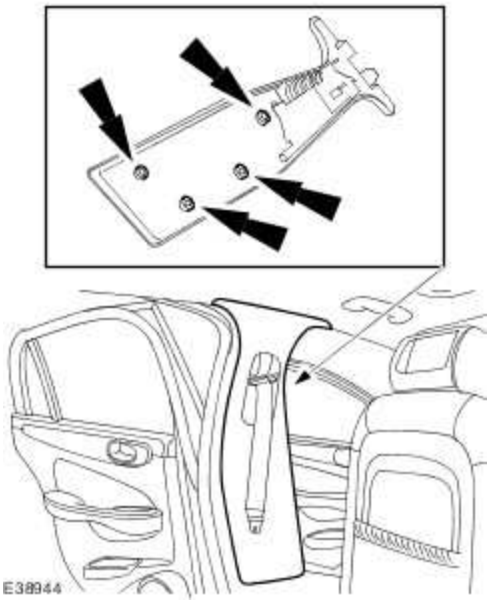

Installation

1. **WARNING: Make sure the B-pillar upper tangs are located into the slots in the body below the curtain airbag as this retains the trim in the event of side airbag deployment.**

NOTE:

To guarantee line up of the B-pillar trim and seat belt anchor bolt make sure that the seat belt slider plate and the B-pillar trim slider plate are at there lowest positions.

NOTE:

Left-hand shown, right-hand similar.

To install, reverse the removal procedure.

Tighten to 35 Nm.

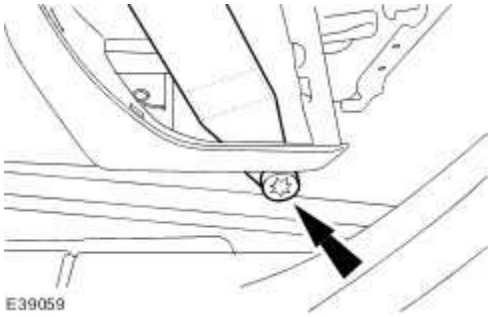

www.JagDocs.com

Cowl Side Trim Panel (76.13.30)

Removal

1 . Remove the scuff plate trim panel.
For additional information, refer to Scuff Plate Trim Panel (76.13.81)

2 . **NOTE:**
Left-hand shown, right-hand similar.

Detach the door aperture weatherstrip.

3 . **NOTE:**
Left-hand shown, right-hand similar.

Remove the cowl side trim panel.

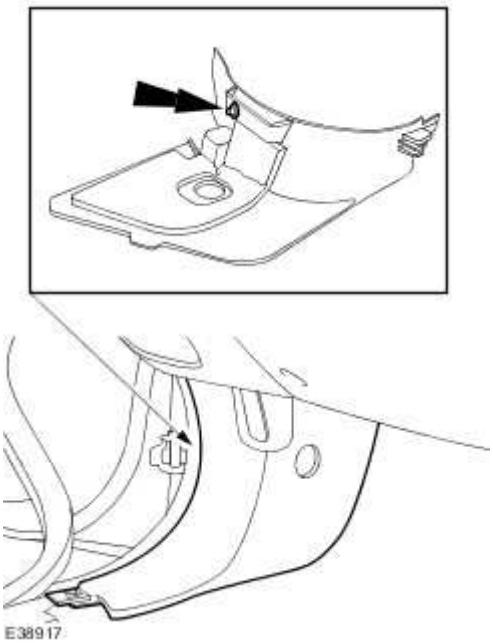

Installation

1 . To install reverse the removal procedure.

www.JagDocs.com

C-Pillar Lower Trim Panel

Removal

1 . Remove the rear seat back rest. <<501-10>>

2 . Locally detach the door aperture weatherstrip.

3 . **NOTE:**
Right-hand shown, left-hand similar.

Detach the upper C-pillar trim panel.

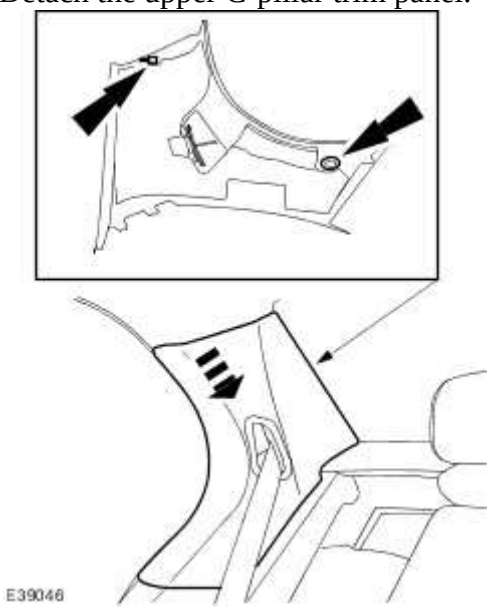

4 . **NOTE:**
Left-hand shown, right-hand similar.

Reposition the upper C-pillar trim panel.

- Cut the upper C-pillar trim panel retaining strap.

5 . **NOTE:**

Right-hand shown, left-hand similar.

Remove the lower C-pillar trim panel.

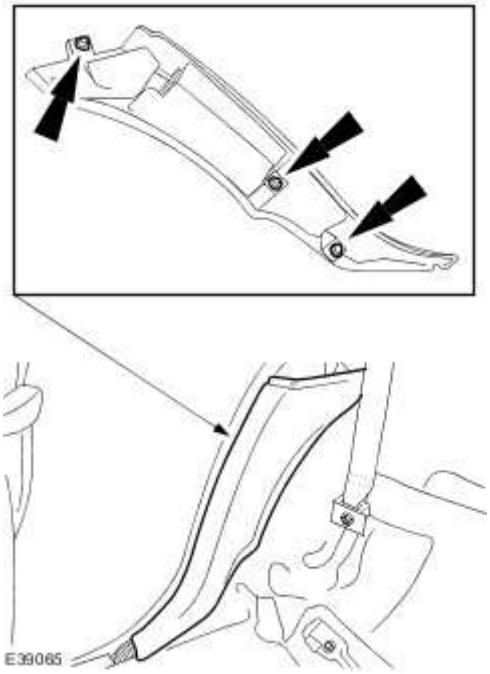

Installation

1 . **WARNING: The retaining strap is a safety critical item and must be replaced to prevent the trim detaching in the event of the side curtain airbag deployment.**

NOTE:

When installing the new retaining strap and rivet make sure the old clip has been removed from the body before pressing the trim into place.

To install, reverse the removal procedure.

www.JagDocs.com

C-Pillar Upper Trim Panel

Removal

1 . Remove the rear seat back rest. <<501-10>>

2 . **NOTE:**
Right-hand shown, left-hand similar.

Detach the rear safety belt.

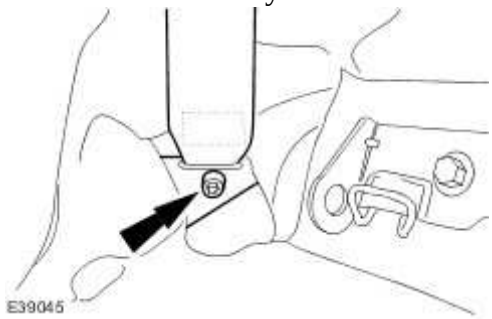

3 . **NOTE:**
Left-hand shown, right-hand similar.

Locally detach the door aperture weatherstrip.

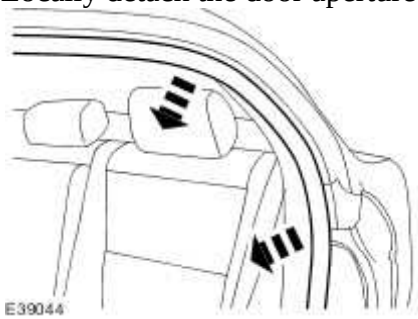

4 . **NOTE:**
Right-hand shown, left-hand similar.

Detach the C-pillar trim panel.

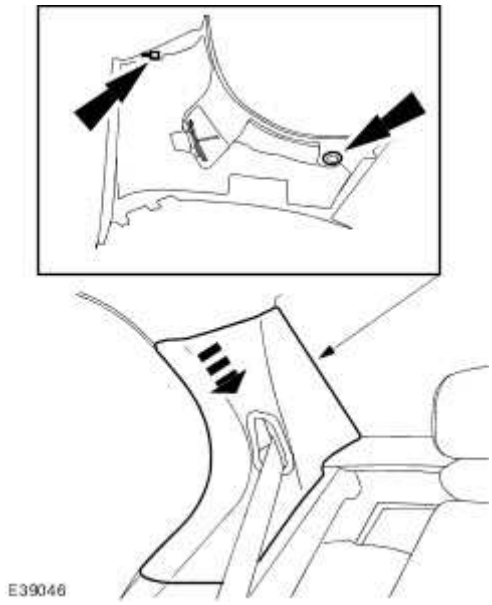

5 . **NOTE:**

Left-hand shown, right-hand similar.

Remove the C-pillar trim panel.

Cut the C-pillar trim panel retaining strap.

Installation

1 . **WARNING: The retaining strap is a safety critical item and must be replaced to prevent the trim detaching in the event of the side curtain airbag deployment.**

NOTE:

When installing the new retaining strap and rivet make sure the old clip has been removed from the body before pressing the trim into place.

www.JagDocs.com

To install, reverse the removal procedure.

- Tighten to 40 Nm.

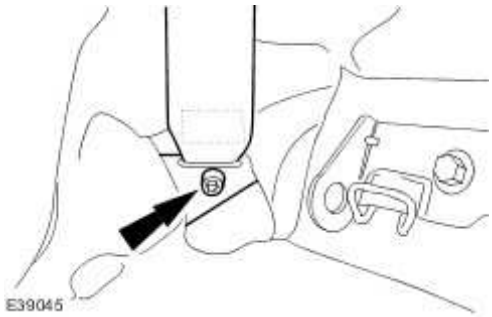

Folding Tray (76.47.31)

Removal

1 . Open the folding tray.

2 . Remove the folding tray latch assembly.

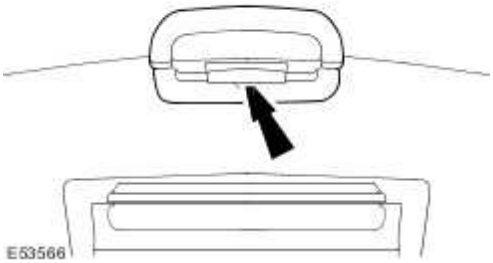

3 . Detach the front seat backrest trim panel.

1) Detach the front seat backrest trim panel retaining clips.

2) Detach the front seat backrest trim panel.

4 . Disconnect the rear passenger footwell courtesy lamp electrical connector.

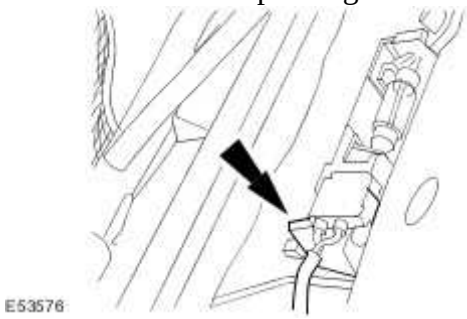

5 . Detach the front seat backrest trim panel retaining strap.

www.JagDocs.com

6 . Remove the front seat backrest trim panel.

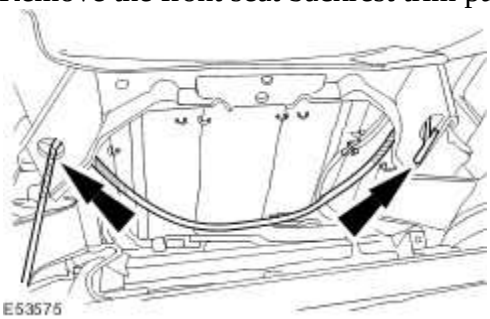

7 . Detach the front seat backrest cover.

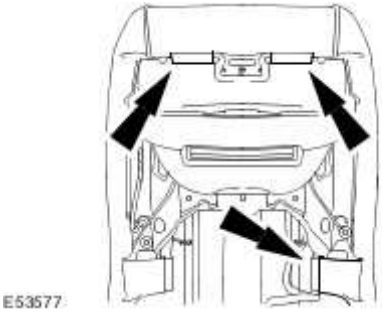

8 . Detach the lumbar motor.

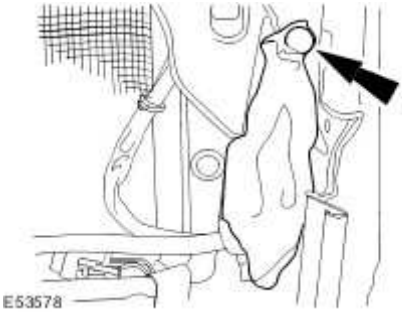

9 . Remove the folding tray.

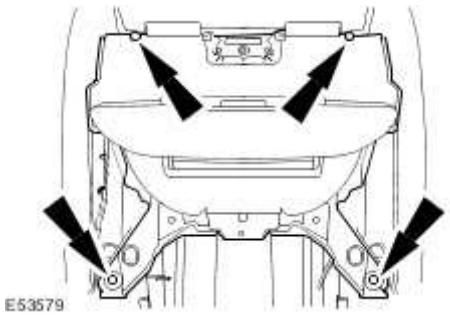

10 . Remove the folding tray striker retaining screw cover.

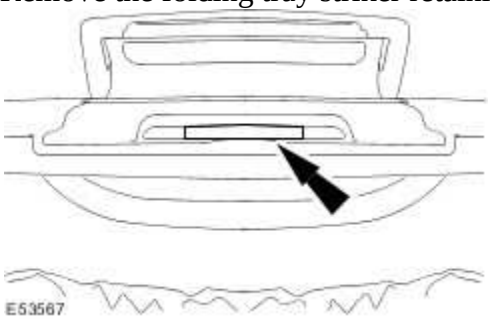

11 . Remove the folding tray striker.

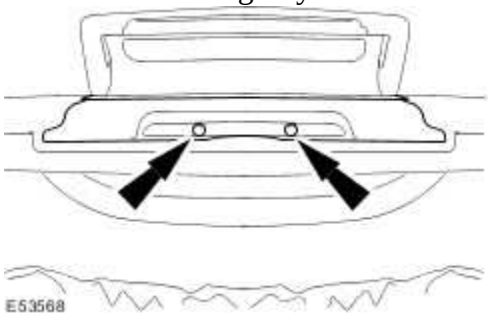

12 . **NOTE:**

Left-hand shown, right-hand similar.

Remove the retaining bolt.

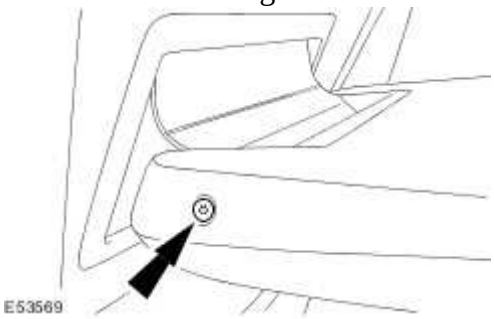

13 . Remove the folding tray work surface.

www.JagDocs.com

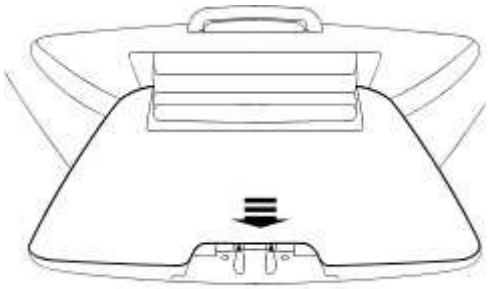

E53570

14 . Remove the folding tray finish panel.

- Remove the securing screws.

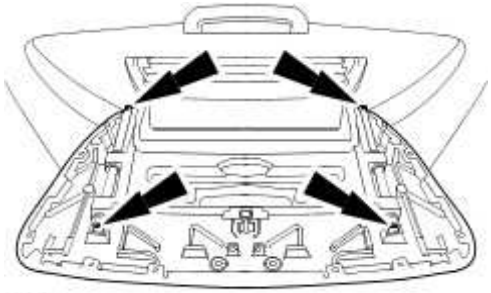

E53571

15 . **NOTE:**

The folding tray finish panel gaskets are handed.

Remove and discard the folding tray finish panel gasket.

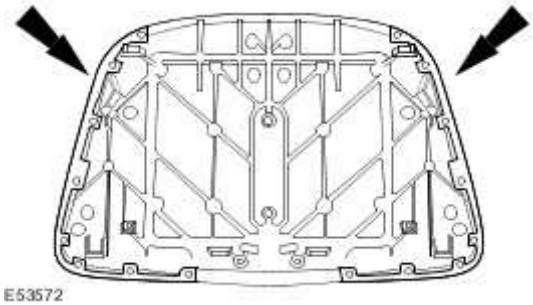

E53572

Installation

1 . **NOTE:**

Install new folding tray finish panel gaskets.

To install, reverse the removal procedure.

- Tighten to 5 Nm.

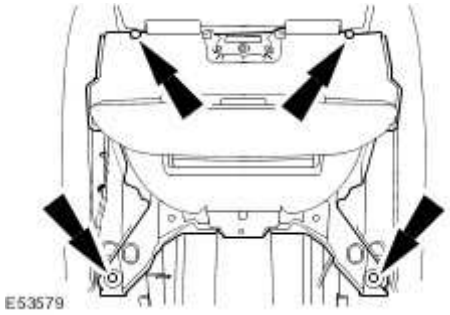

2 . Tighten to 2 Nm.

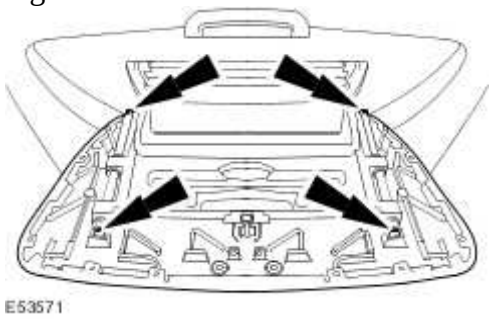

3 . Tighten to 2 Nm.

4 . Tighten to 1 Nm.

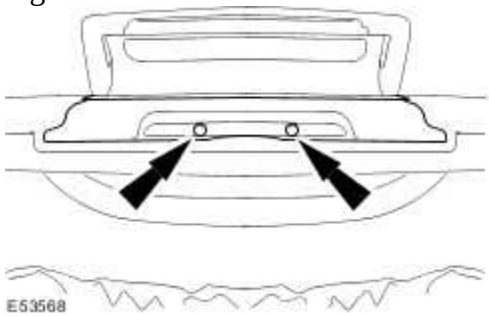

www.JagDocs.com

Front Door Trim Panel (76.34.01)

Removal

1 . Remove the front door interior handle retaining screw cover.

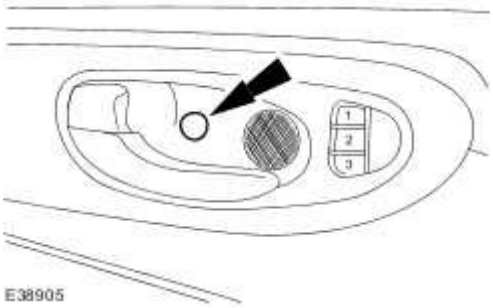

2 . Remove the front door interior handle retaining screw.

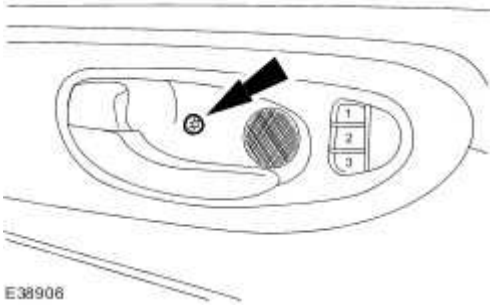

3 . Remove the front door trim panel retaining screws.

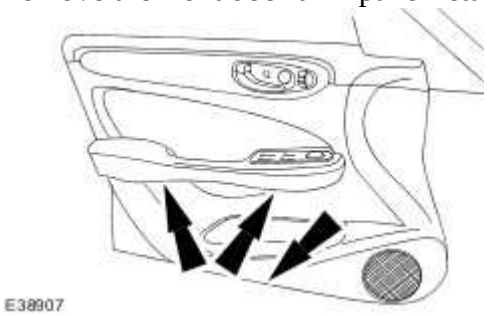

4 . Detach the front door door trim panel.

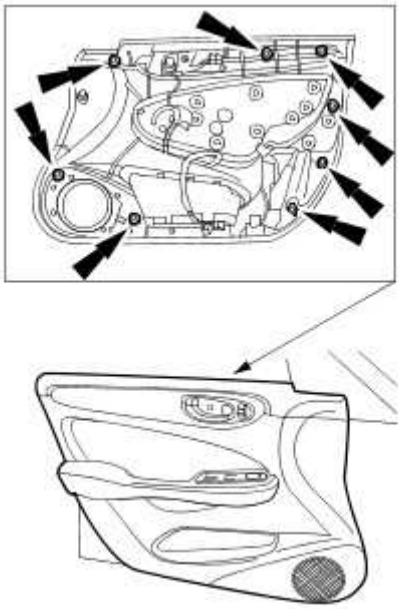

E38908

5 . Detach the front door interior handle cable.

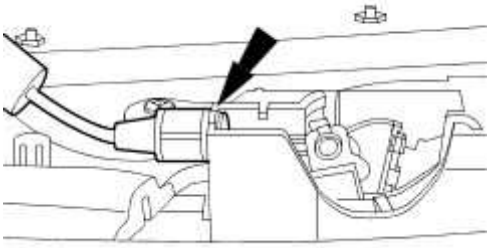

E38901

6 . Remove the front door interior handle cable.

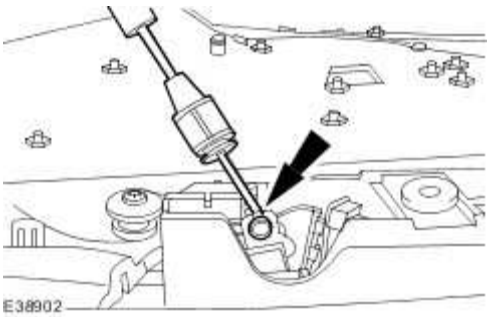

E38902

7 . Remove the front door trim panel.

- Disconnect the electrical connectors.

www.JagDocs.com

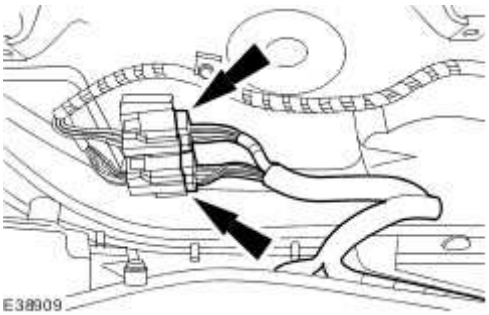

Installation

1 . To install, reverse the removal procedure.

Published: Mar 28, 2014

Front Door Trim Panel (76.34.01) – Armoured Vehicles

Removal

1 . Remove the exterior mirror access panel cover.

- Remove the retaining screw.

2 . Remove the exterior mirror access panel cover retaining bracket.

3 . Remove the front door interior handle retaining screw cover.

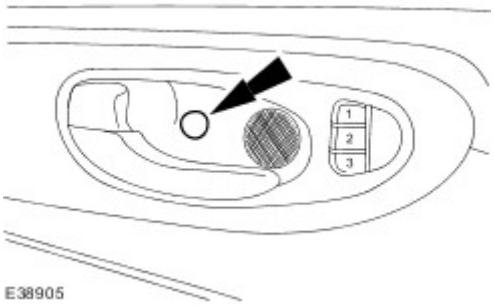

4 . Remove the front door interior handle retaining screw.

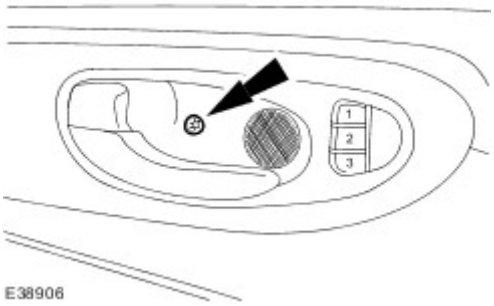

www.JagDocs.com

5 . **NOTE:**

Make a note of the position of the retaining bolts.

Detach the front door trim panel.

Remove the retaining screws.

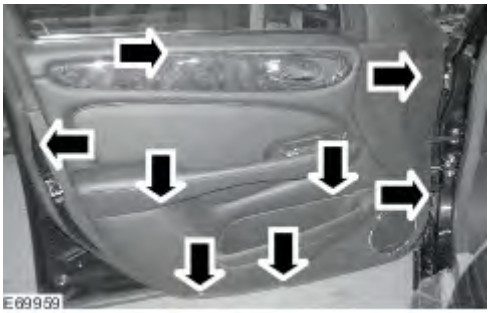

6 . Detach the front door door trim panel.

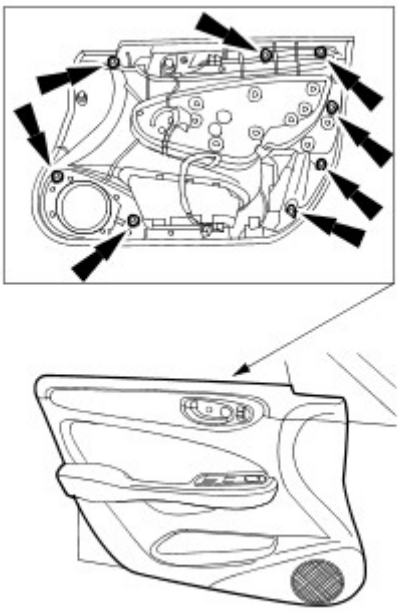

7 . Detach the front door interior handle cable.

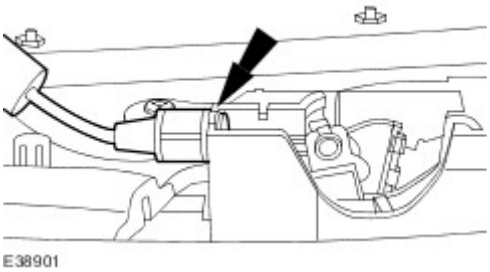

8 . Remove the front door interior handle cable.

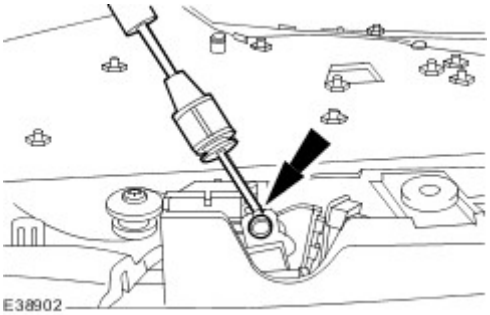

9 . Remove the front door trim panel.

Disconnect the electrical connectors.

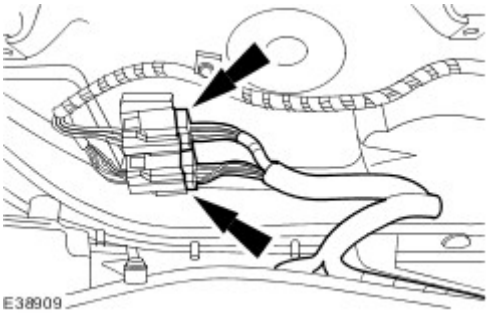

Installation

1 . To install, reverse the removal procedure.

www.JagDocs.com

Headliner (76.64.01)

Removal

All vehicles

1 . Remove the A-pillar upper trim panels.
For additional information, refer to

2 . Remove both upper B-pillar trim panels.
For additional information, refer to B-Pillar Upper Trim Panel (76.13.28)

3 . Remove both C-pillar upper trim panels.
For additional information, refer to C-Pillar Upper Trim Panel

4 . Remove the overhead console.
For additional information, refer to Overhead Console (76.13.69)

5 . Remove both sun visors.
For additional information, refer to Sun Visor (76.10.48)

6 . Remove the high mounted stoplamp.
For additional information, refer to High Mounted Stoplamp (86.41.01)

7 . **NOTE:**

Left-hand shown, right-hand similar.

Remove the sun visor retaining clip.

8 . **NOTE:**

Right-hand shown, left-hand similar.

NOTE:

Front shown, rear similar.

Rotate the front occupant assist handle screw covers.

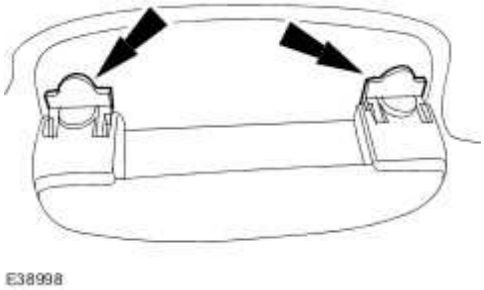

9 . **NOTE:**

Right-hand shown, left-hand similar.

NOTE:

Front shown, rear similar.

Remove the front occupant assist handle.

www.JagDocs.com

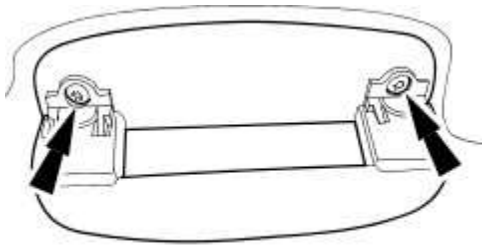

E36776

10 . **NOTE:**

Right-hand shown, left-hand similar.

Remove the rear occupant assist handle.

Disconnect the electrical connector.

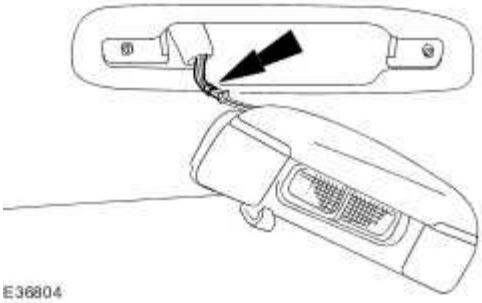

E36804

11 . Disconnect the rain sensor electrical connector.

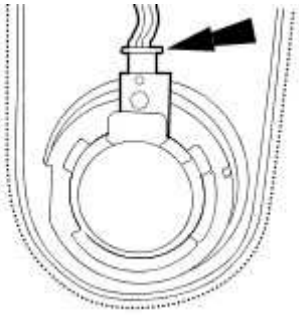

E37478

12 . **NOTE:**

Left-hand shown, right-hand similar.

Disconnect the headlining wiring harness front electrical connector.

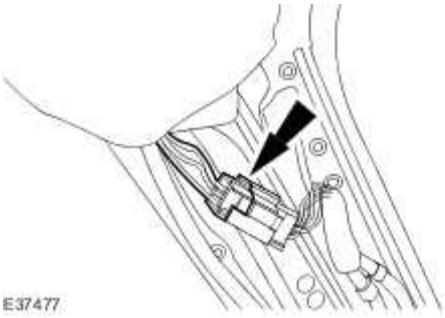

13 . **NOTE:**

Left-hand shown, right-hand similar.

Detach the cabin harness.

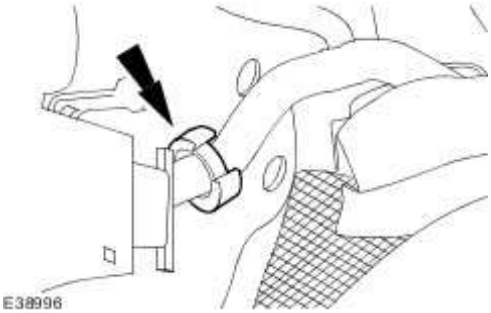

14 . Disconnect the cabin harness electrical connector.

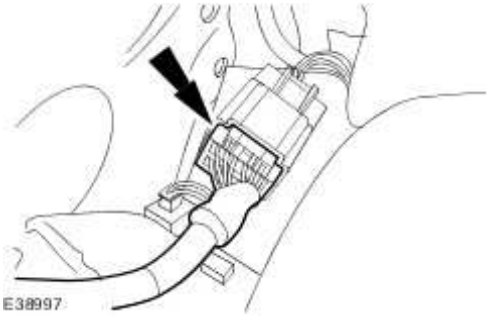

15 . Disconnect the electrical connectors.

www.JagDocs.com

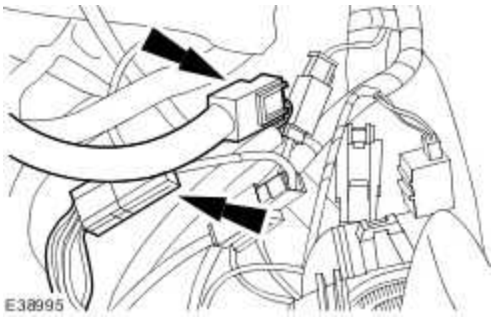

16 . **NOTE:**

Left-hand shown, right-hand similar.

Detach the rear seat belt.

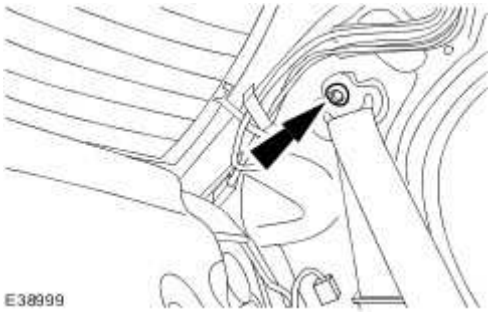

Long wheelbase

17 . Remove the rear scuff plate trim panel.
For additional information, refer to Scuff Plate Trim Panel (76.13.81)

18 . Remove the left-hand rear door aperture seal.

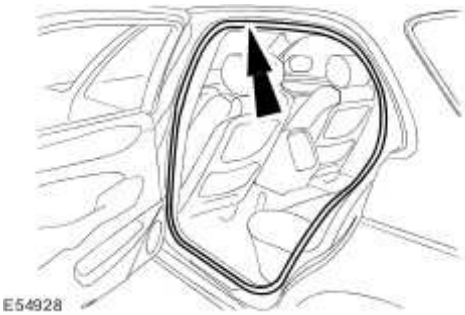

19 . Remove the front seat.

For additional information, refer to Front Seat (76.70.01)

All vehicles

20 . **NOTE:**

Remove and discard the five black securing clips in the roof opening panel cassette.

Detach the headliner.

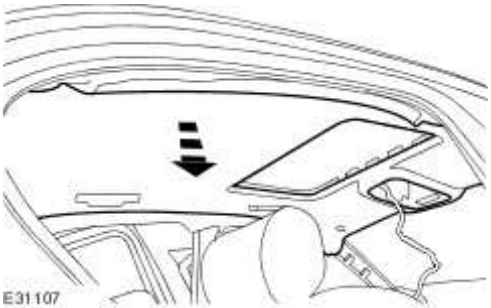

Long wheelbase

21 . **NOTE:**

Headliner shown removed for clarity.

Using a suitable adhesive tape, protect all of the corners and both sides of the headliner.

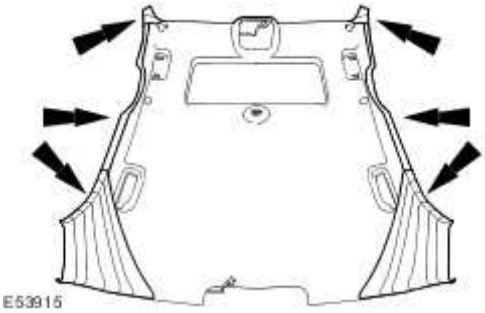

22 . Remove the headliner through the left-hand rear door aperture.

www.JagDocs.com

Short wheelbase

23 . Remove the rear window glass.
For additional information, refer to Rear Window Glass (76.81.11)

24 . Remove the headliner through the rear window glass aperture.

Installation

1 . **NOTE:**

Replace the five black securing clips in the roof opening panel cassette.

To install, reverse the removal procedure.

Tighten to 35 Nm.

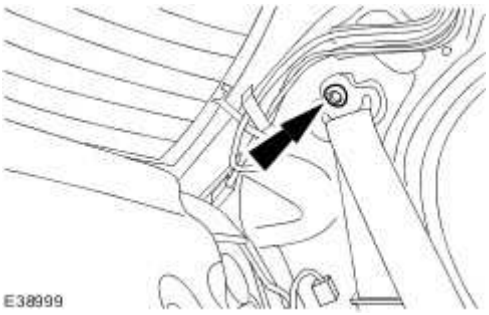

Parcel Shelf (76.67.06)

Removal

1 . Remove the rear seat back rest. <<501-10>>

2 . Remove both upper C-pillar trim panels.
For additional information, refer to

3 . **CAUTION: Lower the rear window blind to the rest position. Failure to carry out this procedure may result in damage to the vehicle.**

Lower the rear window blind to the rest position.

4 . **NOTE:**
Left-hand shown, right-hand similar.

Disconnect the electrical connector.

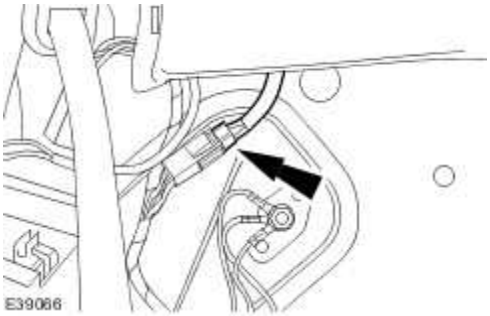

5 . Detach the center seat belt.

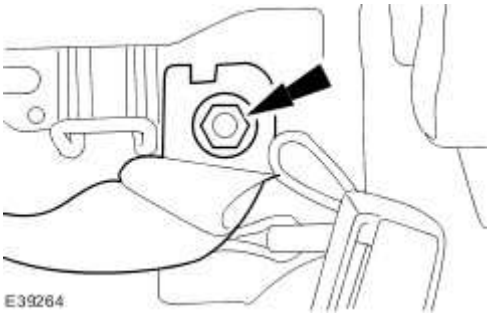

6 . Detach the center seat belt finisher trim.

www.JagDocs.com

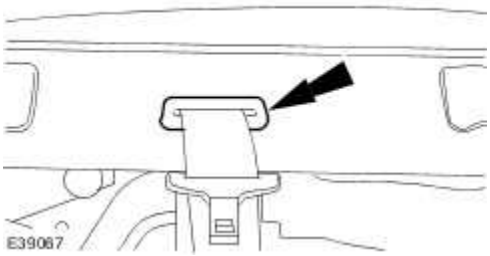

7 . Feed the center seat belt through the parcel shelf aperture.

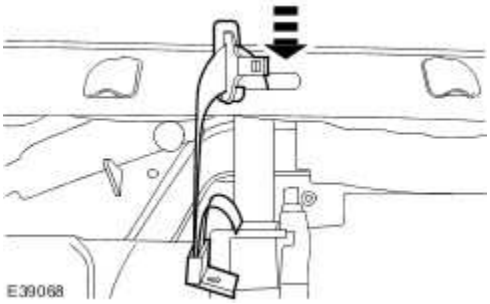

8 . Remove the child seat mounting finisher trims.

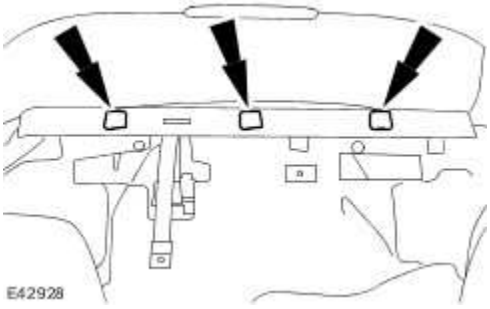

9 . Remove the parcel shelf.

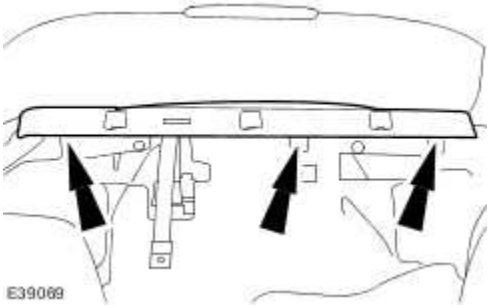

Installation

1 . **NOTE:**

Make sure on installation the parcel shelf is located correctly into the body.

To install, reverse the removal procedure.

- Tighten to 35 Nm.

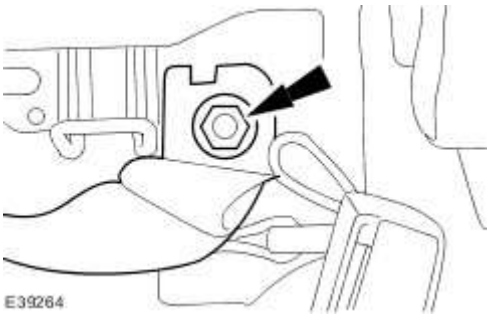

www.JagDocs.com

Rear Door Quarter Window Blind

Removal

1 . Remove the rear door trim panel.
For additional information, refer to Rear Door Trim Panel (76.34.04)

2 . Remove the rear door quarter window blind retaining bolt.

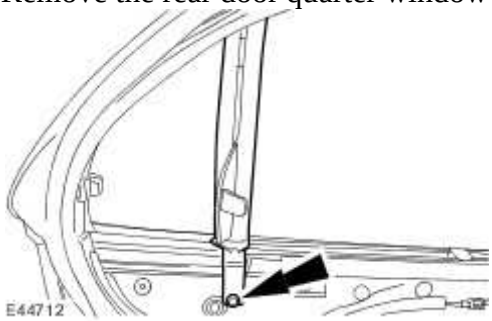

3 . **CAUTION: The rear door quarter window blind must be detached from the rear door as shown. Failure to follow this instruction may result in damage to the component.**

Detach the rear door quarter window blind.

- Using a suitable tool, release the lower securing clip.

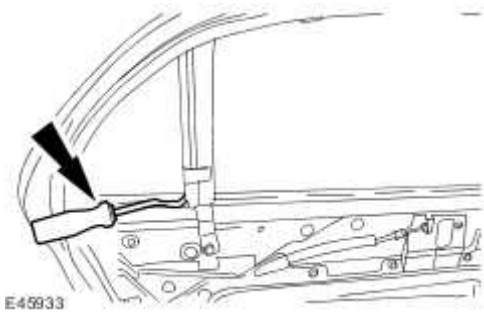

4 . **CAUTION: The rear door quarter window blind must be removed from the rear door as shown. Failure to follow this instruction may result in damage to the component.**

Remove the rear door quarter window blind.

- Using a suitable tool, release the upper securing clip.
- Remove the rear door quarter window blind.

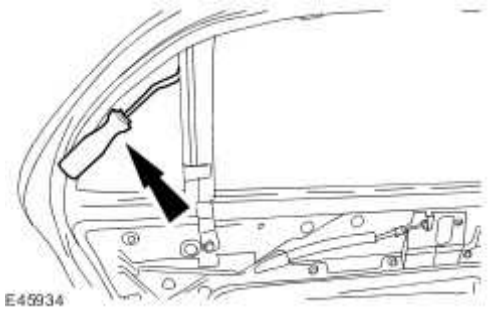

Installation

1 **NOTE:**

· Make sure the rear door quarter window blind is correctly attached to the front edge of the rear door divisional bar before securing the rear clips.

Install the rear door quarter window blind.

- Install the rear door quarter window blind retaining bolt.
- Tighten to 4 Nm.

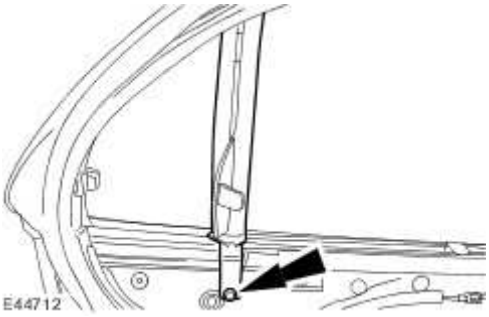

2 . Install the rear door trim panel.
For additional information, refer to Rear Door Trim Panel (76.34.04)

www.JagDocs.com

Rear Door Trim Panel (76.34.04)

Removal

All vehicles

1 . Remove the rear door quarter window blind lower seal.

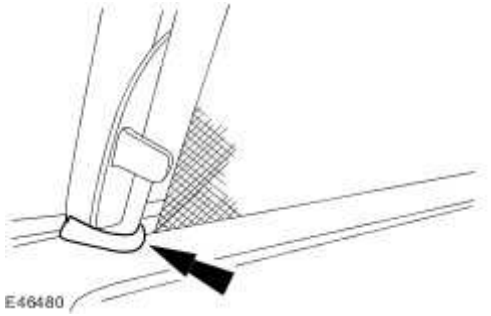

2 . Remove the rear door window blind finisher trim.

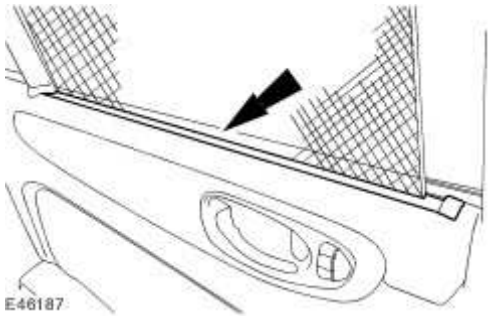

3 . Remove the rear door interior handle retaining screw cover.

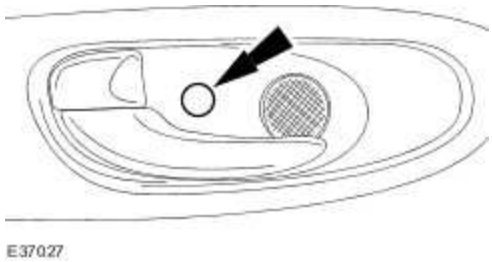

4 . Remove the rear door interior handle retaining screw.

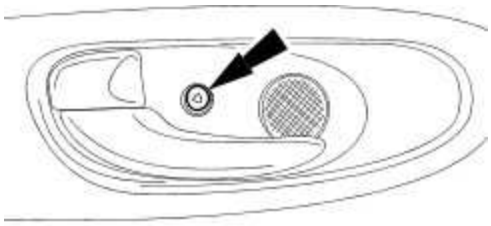

E37028

5 . Remove the rear door trim panel retaining screws.

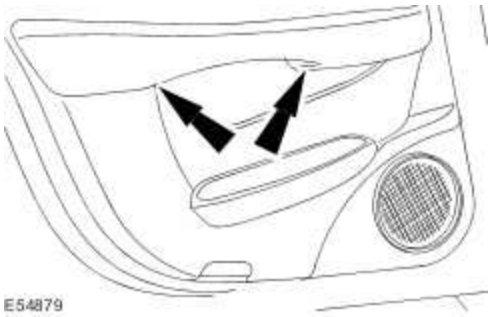

E54879

Short wheelbase

6 . Remove the rear door trim panel retaining screw.

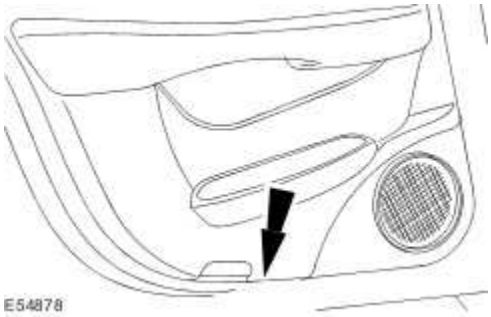

E54878

Long wheelbase

7 . Remove the rear door trim panel retaining screws.

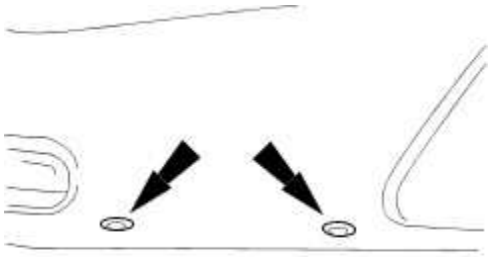

E53474

www.JagDocs.com

All vehicles

8 . Detach the rear door trim panel.

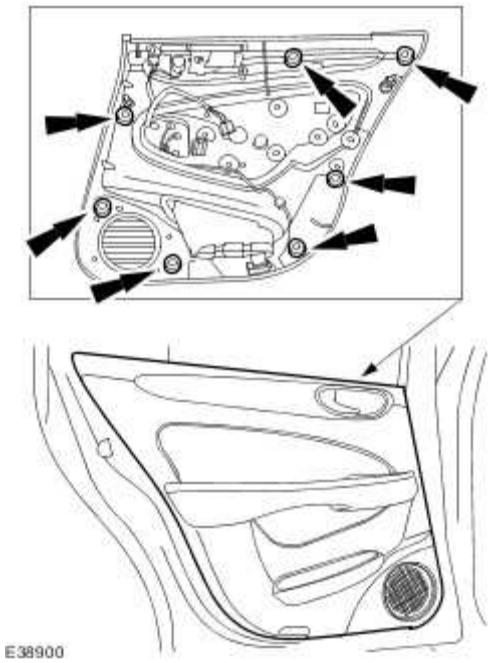

9 . Detach the rear door interior handle cable.

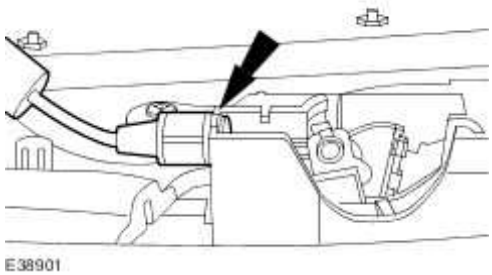

10 . Remove the rear door interior handle cable.

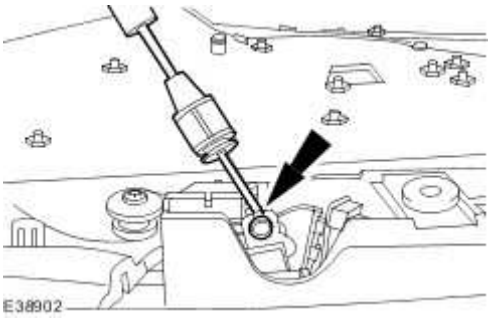

11 . Remove the rear door trim panel.

Disconnect the electrical connector.

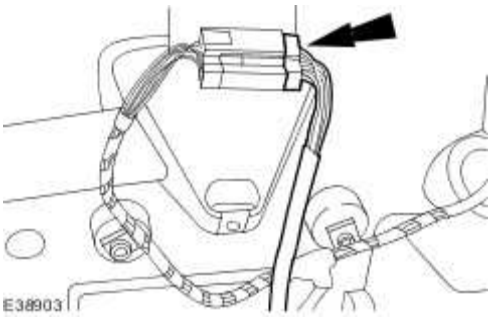

Installation

1 . To install, reverse the removal procedure.

www.JagDocs.com

Published: Mar 28, 2014

Rear Door Trim Panel (76.34.04) – Armoured Vehicles

Removal

1 . **NOTE:**
The rear door window glass trim is retained with velco.

Remove the rear door window glass trim.

2 . Remove the rear door interior handle retaining screw cover.

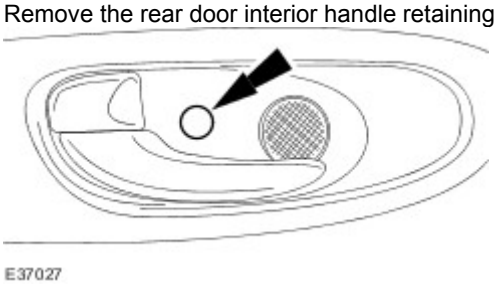

3 . Remove the rear door interior handle retaining screw.

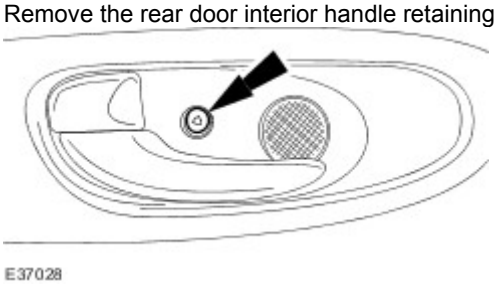

4 . Remove the rear door trim panel retaining screws.

5 . Detach the rear door trim panel.

1) Detach the lower part of the rear door trim panel.

2) Detach the rear door trim panel.

6 . Detach the rear door trim panel.

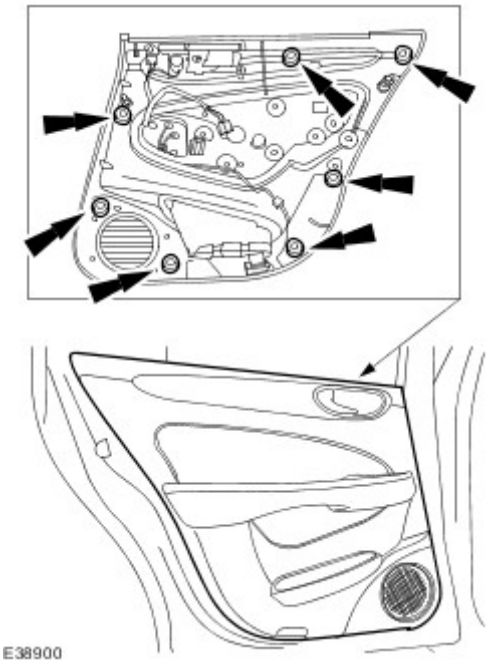

7 . Detach the rear door interior handle cable.

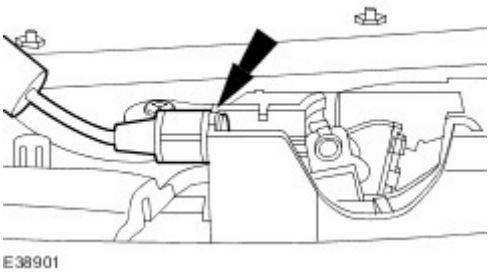

www.JagDocs.com

8 . Remove the rear door interior handle cable.

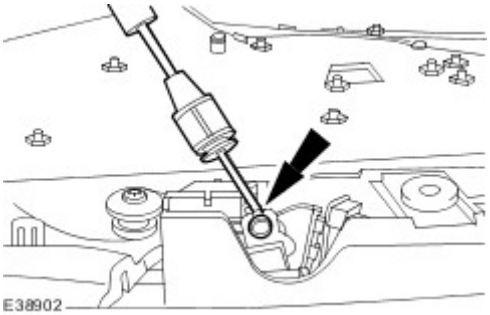

9 . Remove the rear door trim panel.

Disconnect the electrical connector.

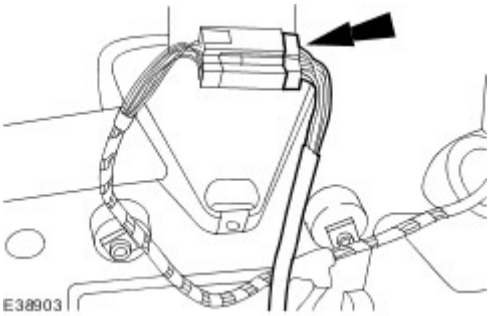

Installation

1 . To install, reverse the removal procedure.

Rear Door Window Blind

Removal

1 . Remove the rear door trim panel.
For additional information, refer to Rear Door Trim Panel (76.34.04)

2 . Open the Rear door window blind.

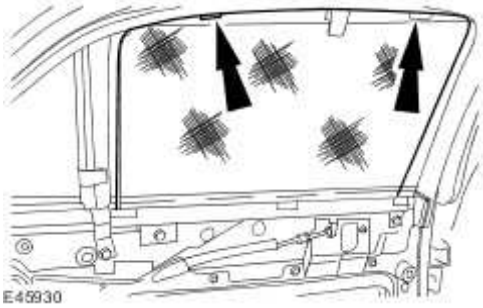

3 . Remove the rear door window blind.

1) Release the blind.

2) Remove the retaining bolts.

- Remove the rear door window blind.

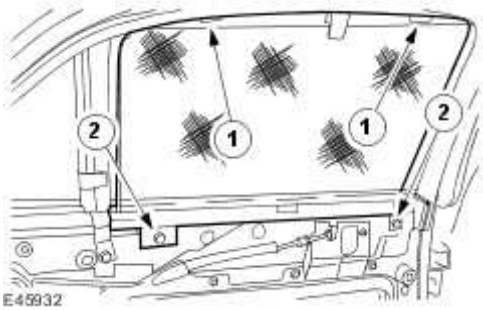

Installation

1 . Install the rear door window blind.

1) Install the rear door window blind retaining bolts.

- Tighten to 4 Nm.

2) Open the rear door window blind.

www.JagDocs.com

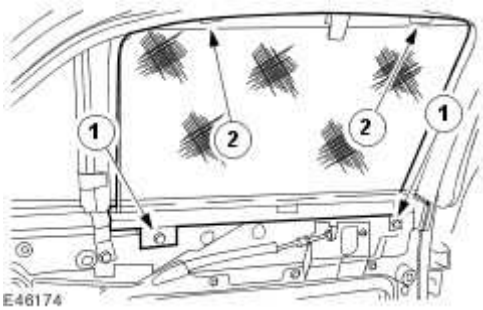

2 . Close the Rear door window blind.

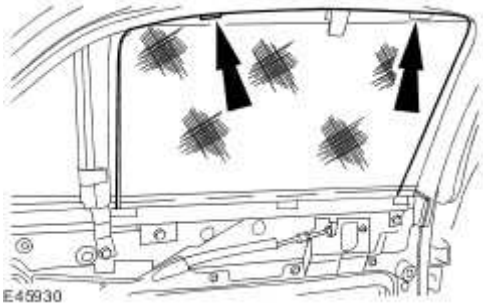

3 . Install the rear door trim panel.
For additional information, refer to Rear Door Trim Panel (76.34.04)

Rear Window Blind (76.14.04)

Removal

1 · **CAUTION: Lower the rear window blind to the rest position. Failure to carry out this procedure may result in damage to the vehicle.**

Lower the rear window blind to the rest position.

2 . Remove the parcel shelf.
For additional information, refer to

3 · **CAUTION: Do not extend the rear window blind more than 10 mm away from the rear window blind guide trim. Failure to follow this instruction may result in damage to the component.**

CAUTION: Do not extend the center of the rear window blind away from the parcel shelf. Failure to follow this instruction may result in damage to the component.

NOTE:
Left-hand shown, right-hand similar.

Remove the rear window blind guide trim.

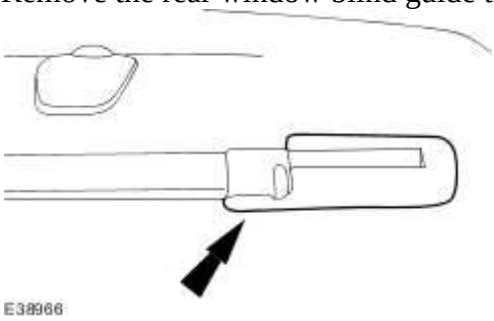

4 **NOTE:**
· Locally remove the insulation on the back of the parcel shelf to gain access to the rear window blind retaining screws.

Remove the rear window blind.

www.JagDocs.com

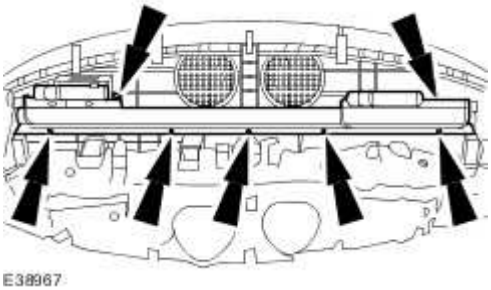

Installation

1 . To install, reverse the removal procedure.

Rear Window Blind Arm

Removal

1 · **CAUTION: Lower the rear window blind to the rest position. Failure to carry out this procedure may result in damage to the vehicle.**

Lower the rear window blind to the rest position.

2 . Remove the parcel shelf.
For additional information, refer to Parcel Shelf (76.67.06)

3 · **CAUTION: Do not extend the rear window blind more than 10 mm away from the rear window blind guide trim. Failure to follow this instruction may result in damage to the component.**

CAUTION: Do not extend the center of the rear window blind away from the parcel shelf. Failure to follow this instruction may result in damage to the component.

NOTE:
Left-hand shown, right-hand similar.

Remove the rear window blind guide trim.

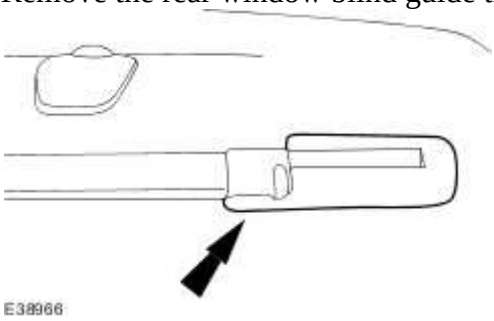

4 **NOTE:**
· Locally remove the insulation on the back of the parcel shelf to gain access to the rear window blind retaining screws.

NOTE:
Note the fitted position of the washers.

Remove the rear window blind.

www.JagDocs.com

Remove the eleven screws.

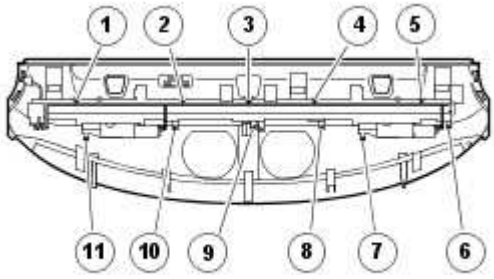

E103208

5 . **NOTE:**

Left-hand shown, right-hand similar.

Remove the rear window blind end caps.

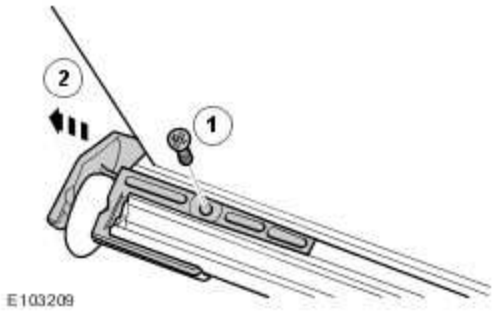

E103209

6 . **NOTE:**

Left-hand shown, right-hand similar.

Remove the rear window blind motor securing screws.

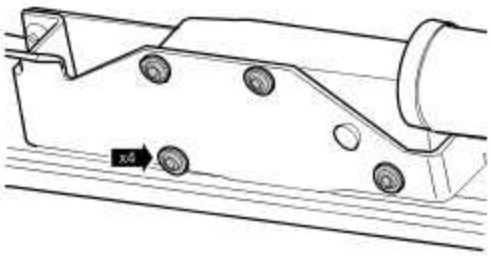

E103210

7 . **CAUTION: Make sure that the rear window blind arms are not twisted while removing the motors. Failure to follow this instruction may result in damage to the components.**

NOTE:

Left-hand shown, right-hand similar.

Remove the rear window blind motors.

- Extend the rear window blind fully by hand.
- The motors will rotate and release as the blind is extended.

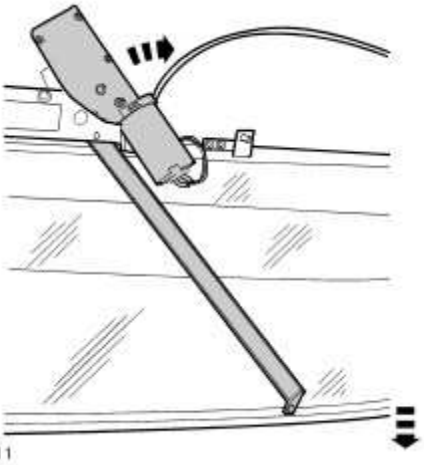

8 . **NOTE:**

Left-hand shown, right-hand similar.

Release the arm sliders from the rear window blind guide and remove the motors.

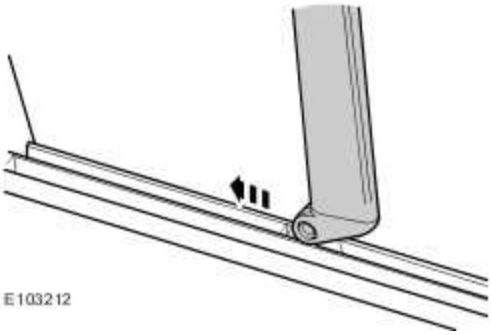

9 . **NOTE:**

Left-hand shown, right-hand similar.

Remove the arms from the motors

www.JagDocs.com

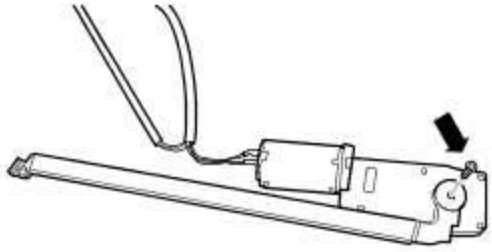

E103378

Installation

1 . To install, reverse the removal procedure.

2 . Tighten to 5 Nm.

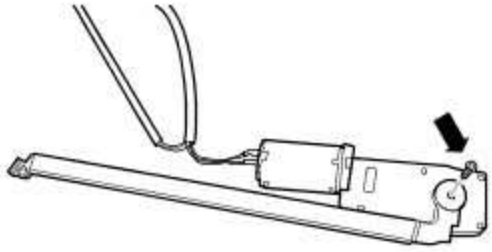

E103378

3 . Tighten to 5 Nm.

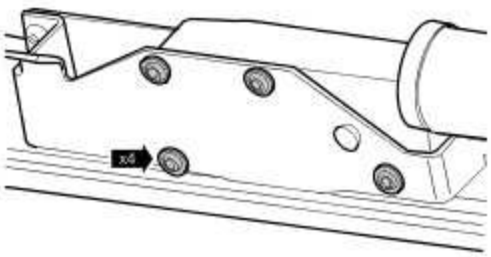

E103210

Rear Window Blind Motor

Removal

NOTE:

The rear window blind motors can not be serviced separately and must be renewed in pairs.

1 · **CAUTION: Lower the rear window blind to the rest position. Failure to carry out this procedure may result in damage to the vehicle.**

Lower the rear window blind to the rest position.

2 . Remove the parcel shelf.
For additional information, refer to Parcel Shelf (76.67.06)

3 · **CAUTION: Do not extend the rear window blind more than 10 mm away from the rear window blind guide trim. Failure to follow this instruction may result in damage to the component.**

CAUTION: Do not extend the center of the rear window blind away from the parcel shelf. Failure to follow this instruction may result in damage to the component.

NOTE:

Left-hand shown, right-hand similar.

Remove the rear window blind guide trim.

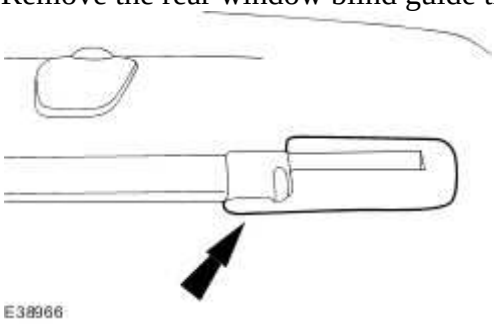

4 **NOTE:**

· Locally remove the insulation on the back of the parcel shelf to gain access to the rear window blind retaining screws.

www.JagDocs.com

Remove the rear window blind.

Remove the eleven screws.

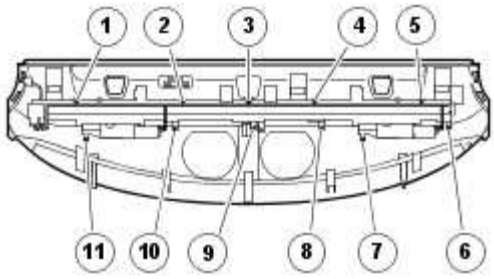

E103208

5 . **NOTE:**

Left-hand shown, right-hand similar.

Remove the rear window blind end caps.

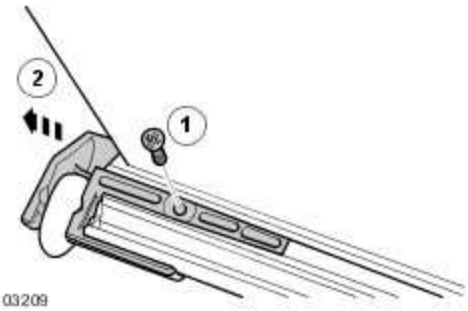

E103209

6 . **NOTE:**

Left-hand shown, right-hand similar.

Remove the rear window blind motor securing screws.

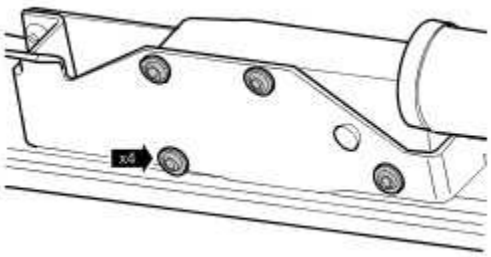

E103210

7 . **CAUTION: Make sure that the rear window blind arms are not twisted while removing the motors. Failure to follow this instruction may result in damage to the components.**

NOTE:

Left-hand shown, right-hand similar.

Remove the rear window blind motors.

- Extend the rear window blind fully by hand.
- The motors will rotate and release as the blind is extended.

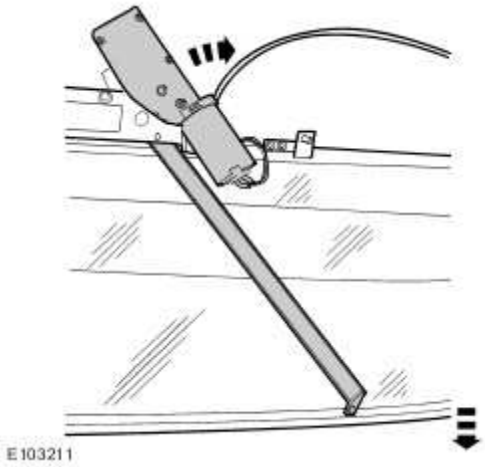

8 . **NOTE:**

Left-hand shown, right-hand similar.

Release the arm sliders from the rear window blind guide and remove the motors.

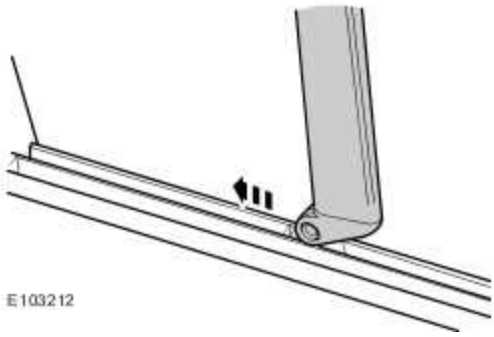

9 . **NOTE:**

Left-hand shown, right-hand similar.

Remove the arms from the motors

www.JagDocs.com

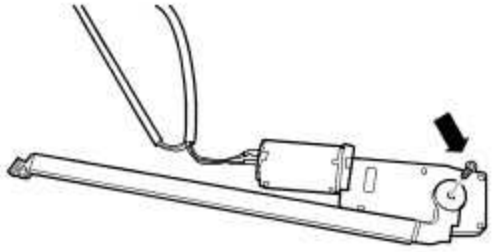

E103378

Installation

1 . To install, reverse the removal procedure.

2 . Tighten to 5 Nm.

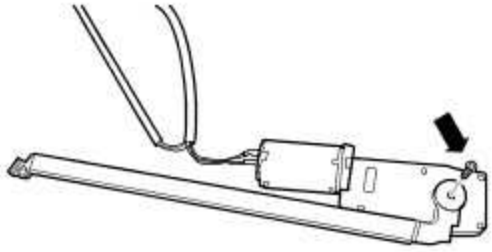

E103378

3 . Tighten to 5 Nm.

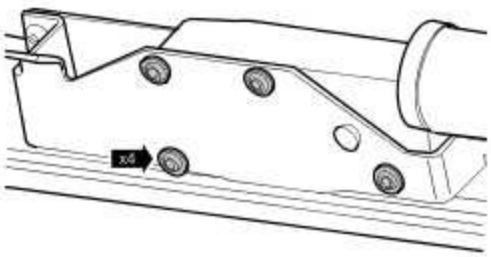

E103210

Scuff Plate Trim Panel (76.13.81)

Removal

1 . **NOTE:**
Front shown, rear similar.

Remove the scuff plate trim panel.

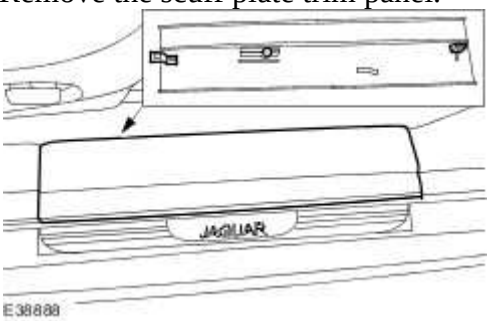

Installation

1 . To install, reverse the removal procedure.

www.JagDocs.com

Sun Visor (76.10.48)

Removal

1 . **NOTE:**
Left-hand shown, right-hand similar.

Remove the sun visor trim.

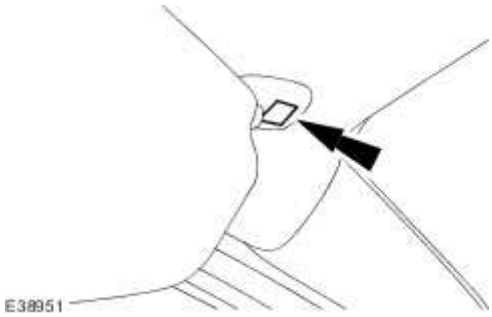

2 . **NOTE:**
Left-hand shown, right-hand similar.

Detach the sun visor.

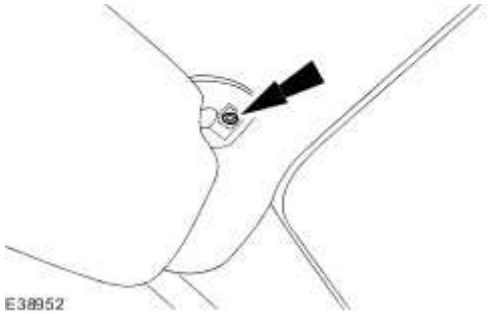

3 . **NOTE:**
Right-hand shown, left-hand similar.

Remove the sun visor.

- Disconnect the vanity mirror electrical connector.

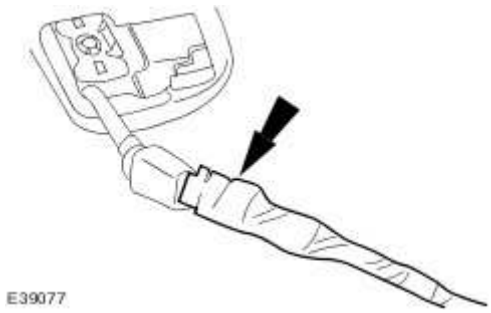

Installation

1 . To install, reverse the removal procedure.

www.JagDocs.com

501-08 : Exterior Trim and Ornementation

Description and operation

Exterior Trim

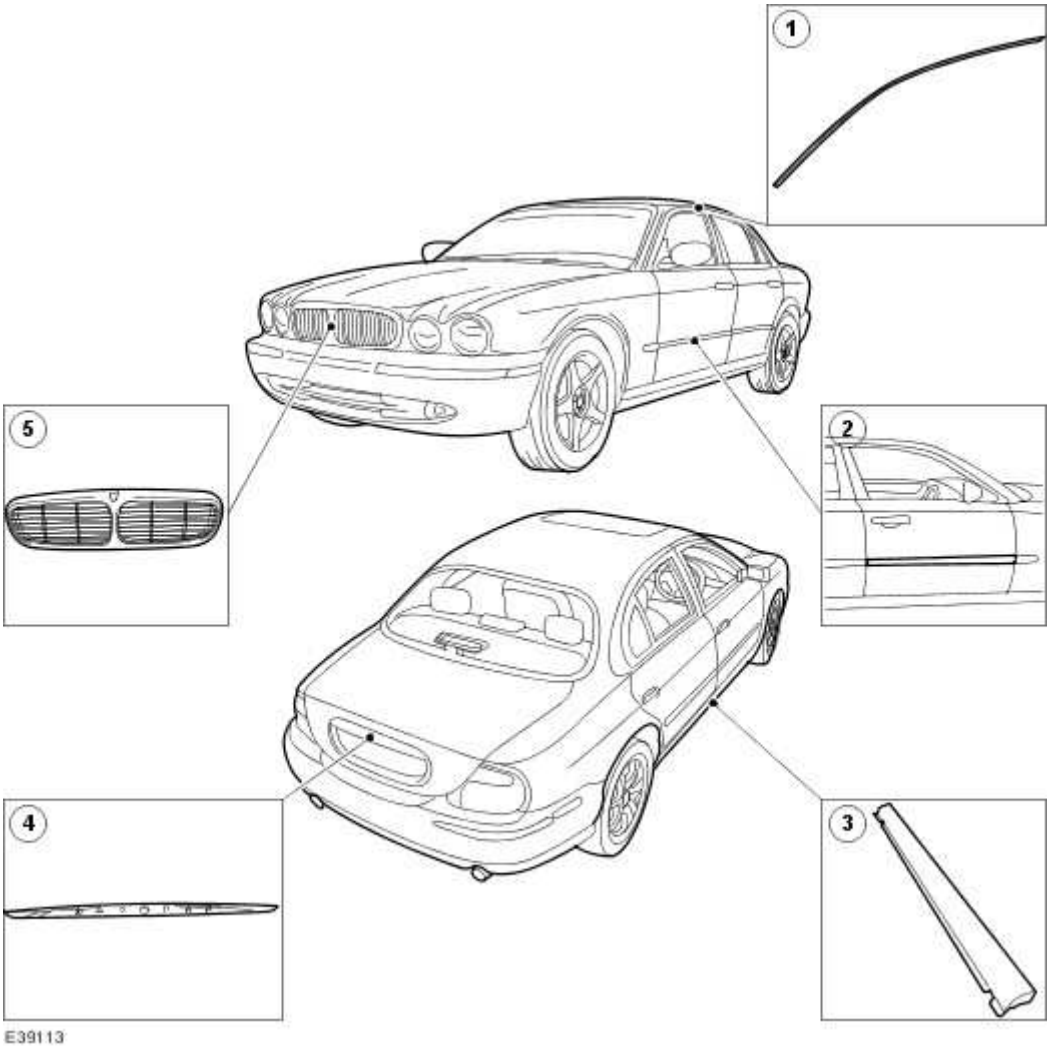

Item	Part Number	Description
1	—	Front door window moulding
2	—	Door moulding
3	—	Rocker panel
4	—	Luggage compartment lid moulding
5	—	Radiator Grille

Door Moulding (76.43.72)

Removal

1 . Apply suitable protective tape to adjacent areas of paintworks.

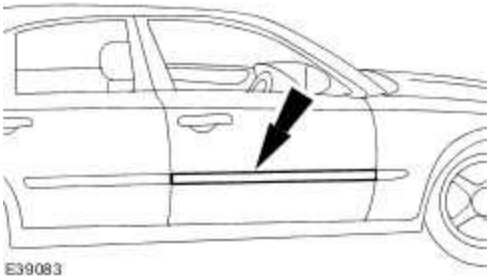

2 . Using a hand-held heat gun, apply heat uniformly along the moulding length.

3 . **CAUTION: Do not lever the door moulding away from the door panel. Faliure to follow this instruction may result in damage to the vehicle.**

Applying local heat at one end and using a suitable nylon banding tape or string progessively ease the door moulding away from the door panel.

4 . Discard the moulding and remove protective tape.

5 . Remove any residual adhesive and thoroughly clean area using white spirit.

Installation

1 **NOTE:**

- Optimum adhesion is achieved by warming body panel and moulding to 30°C (86°F)

Using white spirit make sure that mounting area is clean, dry and de-greased.

2 . Remove protective backing tape from the moulding.

www.JagDocs.com

3 **NOTE:**

- Do not allow the moulding to contact the body panel until it is correctly aligned.

  Aligning with adjacent mouldings or to match opposite side of vehicle, press the new moulding firmly onto the body panel.

4 . Apply hand pressure along the moulding length to make sure satisfactory adhesion.

5 . Allow the moulding and door panel to cool, then thoroughly clean both using white spirit.

6 . Apply a coat of suitable polish to the moulding and body panel.

Luggage Compartment Lid Moulding - VIN Range: G00442->H18679 (76.43.79)

Removal

1 . Remove the warning triangle.

2 . Remove the luggage compartment lid grab handles.

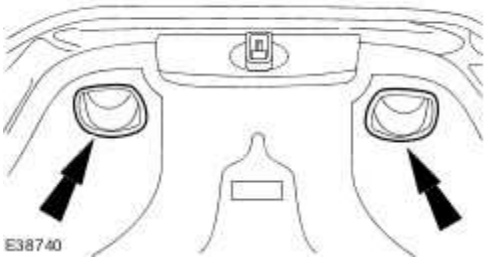

3 . Remove the luggage compartment lid latch trim cover.

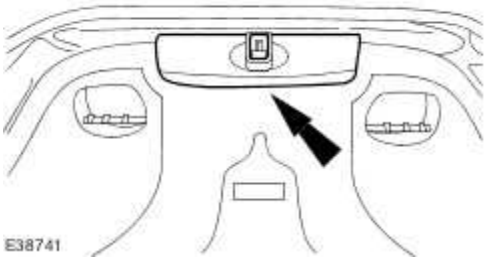

4 . Remove the luggage compartment lid liner.

- Remove the courtesy lamp.

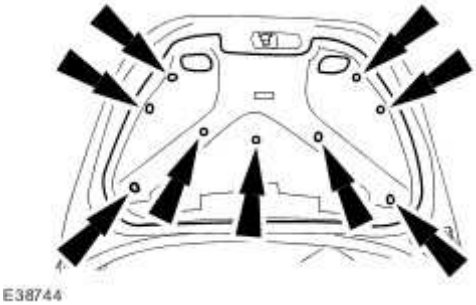

5 . Detach the luggage compartment lid moulding.

www.JagDocs.com

6 . Remove the luggage compartment lid moulding.

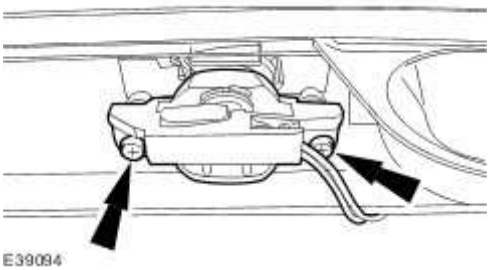

Installation

1 . To install, reverse the removal procedure.

Tighten to 2 Nm.

Luggage Compartment Lid Moulding - VIN Range: H18680->H99999 (76.43.79)

Removal

1 . Release the warning triangle retaining clip.

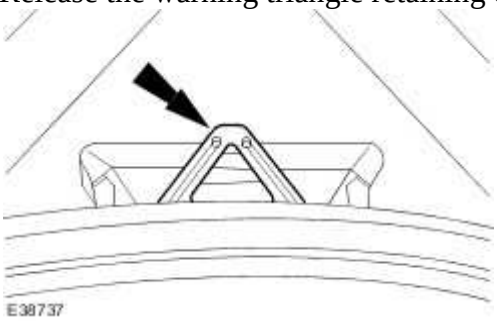

2 . Remove the warning triangle.

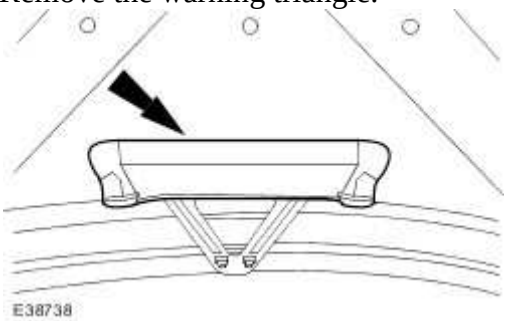

3 . Remove the warning triangle retaining bracket.

- Remove the retaining bolts.

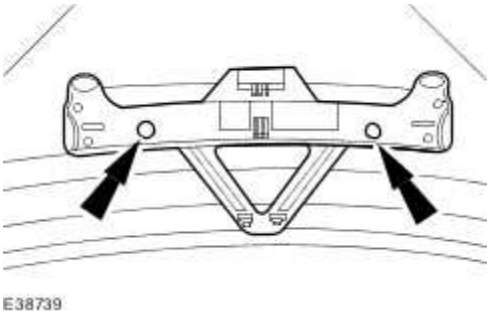

4 . **NOTE:**

Federal market vehicles only.

Detach the luggage compartment emergency release handle.

www.JagDocs.com

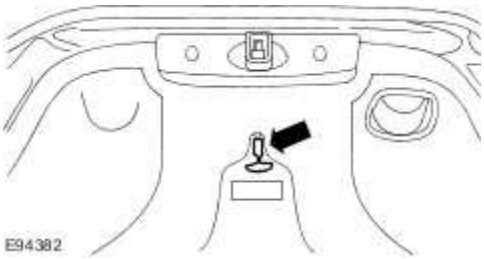

5 . Remove the luggage compartment lid grab handle.

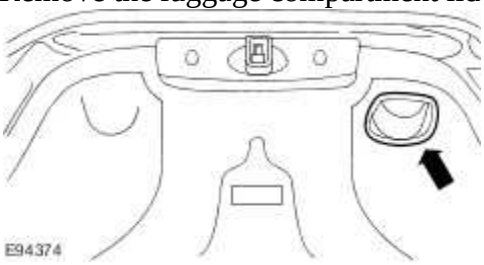

6 . Remove the luggage compartment lid latch trim cover.

- Remove the retaining clips.

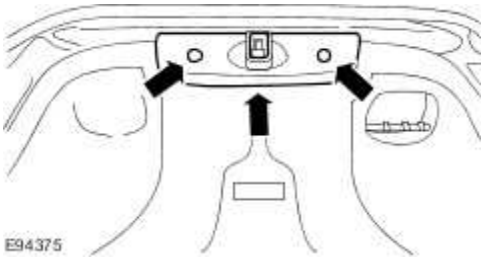

7 . Detach the luggage compartment lid courtesy lamp.

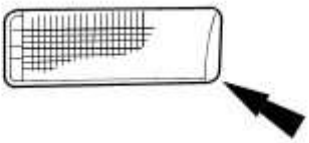

8 Remove the luggage compartment lid courtesy lamp.

·

- Disconnect the luggage compartment lid courtesy lamp electrical connector.

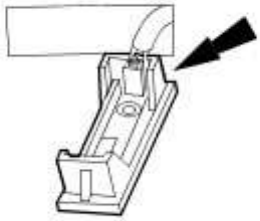

E38743

9 . Remove the luggage compartment lid liner.

- Remove the retaining clips.
- Disconnect the courtesy lamp electrical connector.

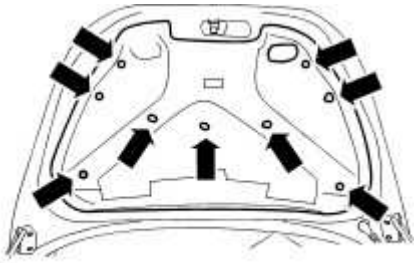

E94376

10 . **NOTE:**

Left-hand shown, right-hand similar.

Remove the licence plate lamp.

- Release the retaining tangs.

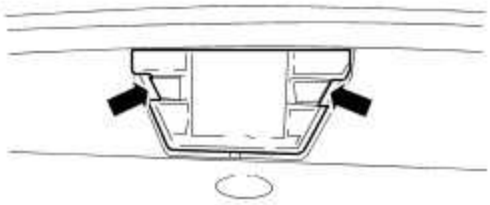

E94488

11 . Detach the luggage compartment lid moulding.

- Remove the retaining nuts.

www.JagDocs.com

Installation

1 . To install, reverse the removal procedure.

- Tighten to 2 Nm.

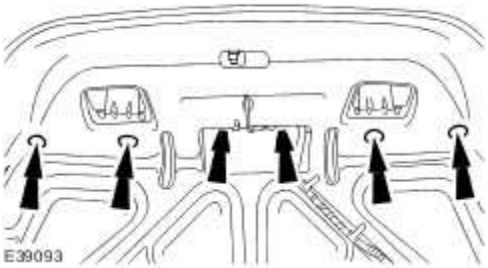

Radiator Grille (76.55.03)

Removal

1 . Remove the radiator grille retaining bolts.

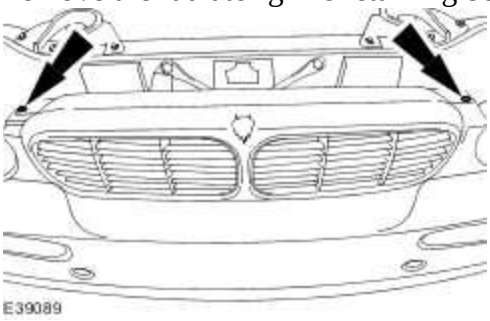

2 . **NOTE:**

Left-hand shown, right-hand similar.

Remove the air deflector.

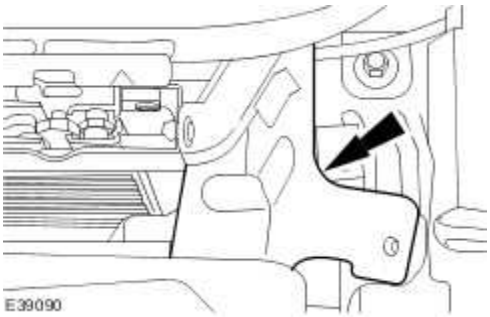

3 . **NOTE:**

Left-hand shown, right-hand similar.

Detach the radiator grille.

4 . Remove the radiator grille.

www.JagDocs.com

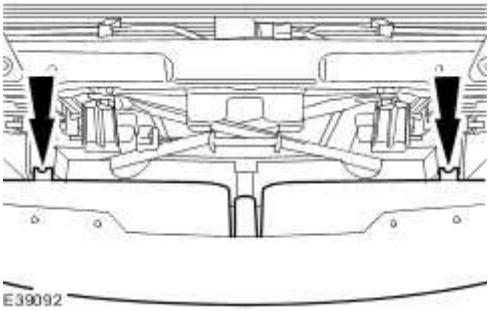

Installation

1 **NOTE:**

· Check the lower radiator grille retaining legs are fully seated by lifting the rubber skirts after installation.

To install, reverse the removal procedure.

Rocker Panel Moulding (76.11.36)

Removal

Short wheelbase

1 . **NOTE:**

Left-hand shown, right-hand similar.

Remove the rocker panel moulding front retaining screws.

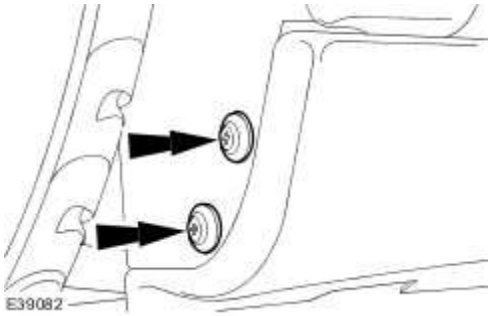

2 . **NOTE:**

Left-hand shown, right-hand similar.

Remove the rocker panel moulding rear retaining screw.

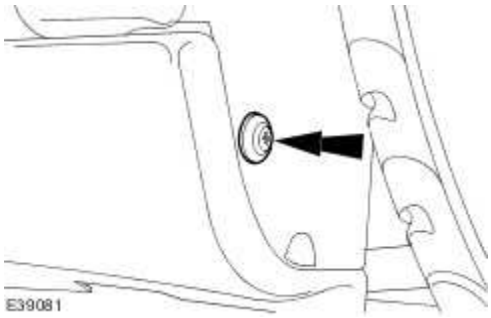

Long wheelbase

3 . **NOTE:**

Left-hand shown, right-hand similar.

Remove the rocker panel moulding front retaining clips.

www.JagDocs.com

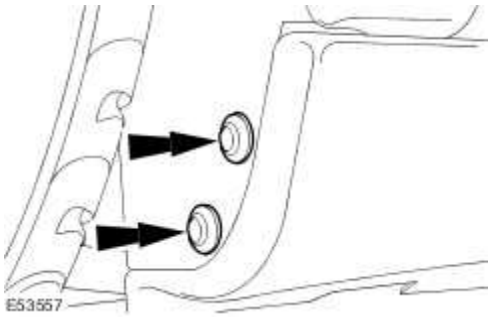

4 . **NOTE:**

Left-hand shown, right-hand similar.

Remove the rocker panel moulding rear retaining clip.

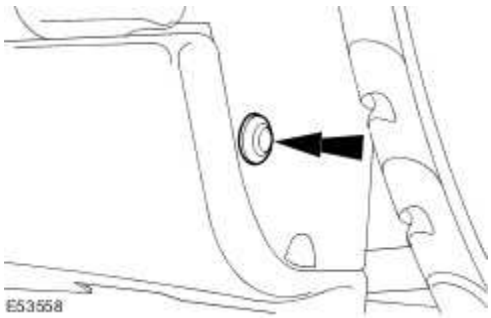

Short wheelbase

5 . **NOTE:**

Left-hand shown, right-hand similar.

Remove the rocker panel moulding lower retaining fixings.

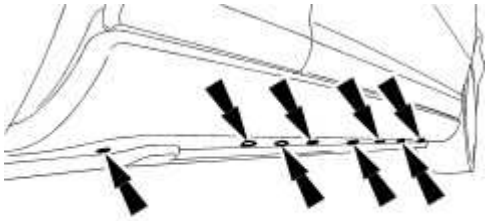

E39080

6 . **NOTE:**

Left-hand shown, right-hand similar.

Remove the rocker panel moulding.

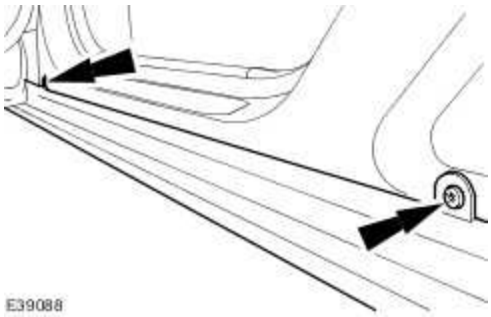

Long wheelbase

7 . **NOTE:**

Left-hand shown, right-hand similar.

Remove the rocker panel moulding lower retaining fixings.

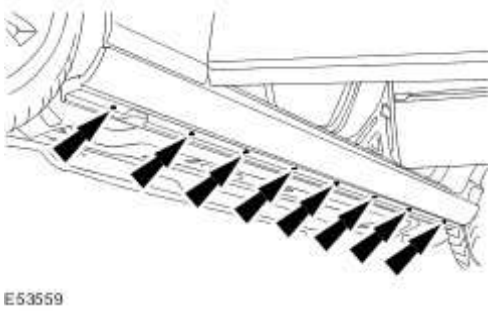

8 . **NOTE:**

Left-hand shown, right-hand similar.

Remove the rocker panel moulding.

www.JagDocs.com

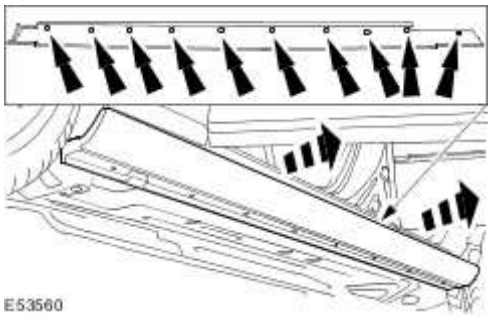

Installation

1 . To install, reverse the removal procedure.

Window Moulding (76.43.20)

Removal

1 . **NOTE:**
Right-hand shown, left-hand similar.

Detach the door margin seal to the waist of the door.
1) Remove the retaining peg.
2) Detach the door margin seal to the waist of the door.

2 . Remove the front door trim panel. <<501-05>>

3 . Remove the rear view mirror. <<501-09>>

4 . **NOTE:**
Right-hand shown, left-hand similar.

Detach the front door glass channeling.

5 **NOTE:**
· Right-hand shown, left-hand similar.

NOTE:
Starting at the upper outer corner and using a suitable trim tool remove the door

www.JagDocs.com

window moulding.

Remove the door window moulding.

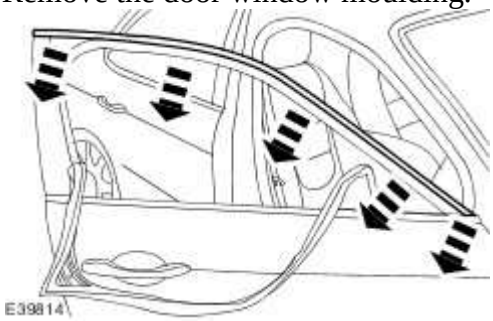

Installation

1 **NOTE:**

· Using a suitable tool, align the window moulding to the door at the upper outer corner using the aperture provided.

To install, reverse the removal procedure.

Specifications

Torque Specifications

Description	Nm	lb-ft	lb-in
Exterior mirror retaining bolts	8	—	53
Exterior mirror motor retaining screws	1	—	9

www.JagDocs.com

Rear View Mirrors

The manual dipping mirror is a prismatic unit with mirror dipping achieved by pulling the lever forward.

Where fitted, electrochromic mirrors automatically darken to prevent glare from following vehicle lights. The mirrors are equipped with a reflecting surface light sensor to enable this feature.

During daytime driving, the ambient light sensor will detect high ambient light levels and control the electrochromic rear view mirrors to provide a full, clear reflection. During night driving, the ambient light sensor will detect low ambient light levels and automatic glare reduction will occur.

A switch on the interior rear view mirror allows the driver to select the automatic glare reduction function "AUTO" or to de-select all automatic glare reduction functions "OFF".

The exterior mirrors are cheater mounted, color-coded, remote electrically adjustable and heated. Adjustment of both mirrors is carried out from the driver door switch pack. A rocker switch selects the mirror to be adjusted, and a toggle switch adjusts the selected mirror to the required position.

Automatic dipping of the exterior mirrors when reversing is fitted as part of the memory pack. With the ignition switch in position II and the reverse gear selected, automatic dipping will be initiated.

Where fitted, power fold back mirrors can be operated by the exterior mirror fold back switch incorporated in the window switch. The power fold back mirrors only operate when the mirror select switch is in the middle position, and the vehicle speed is below 19 km/h (12 mile/h).

The exterior mirrors incorporate ground illumination, which is activated when the vehicle is locked and unlocked under low ambient light conditions. The ground illumination is timed to stay on for the same amount of time as the interior light.

Rear View Mirrors - VIN Range: H18680->H99999

COMPONENT LOCATION

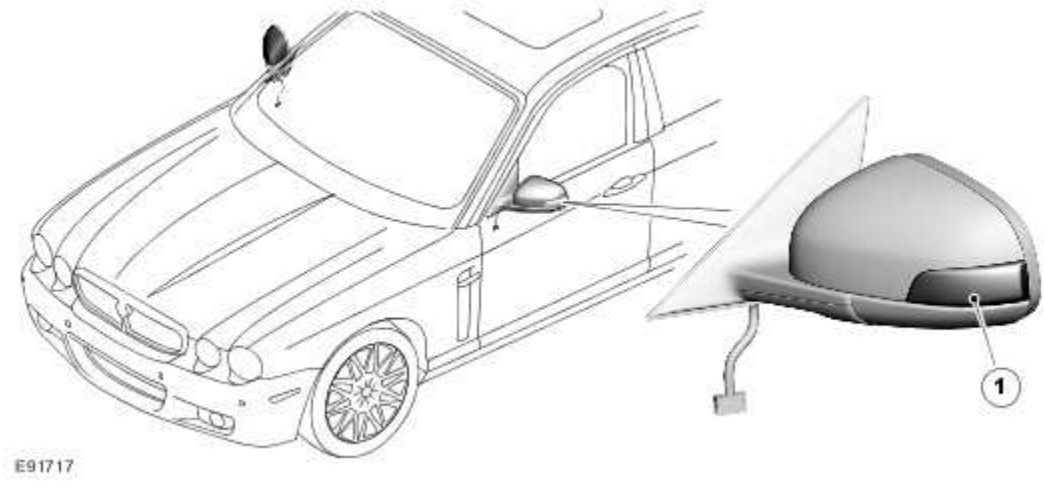

Item	Part Number	Description
1		Direction Indicator Repeaters

OVERVIEW

Vehicles built from June 2007 feature direction indicator repeaters located in the exterior rear view mirrors. The functionality and operation of the direction indicator repeaters remains the same as the previous fender mounted items. For additional information, refer to Exterior Lighting (417-01)

In the event of a bulb failure, the mirror glass will need to be removed. For more information, refer to the Owners Handbook.

www.JagDocs.com

Rear View Mirrors

1 . Verify the customer concern.

2 . Visually inspect for obvious signs of mechanical or electrical damage.

Visual Inspection Chart

Mechanical	Electrical
• Exterior mirror(s)	• Fuse(s) • Relay • Electrical connector(s) • Switch

1 . If an obvious cause for an observed or reported concern is found, correct the cause (if possible) before proceeding to the next step.

2 . If the cause is not visually evident, verify the symptom and refer to the Jaguar Approved Diagnostic System.

Auto-Dimming Interior Mirror (76.10.56)

Removal

1 . Remove the auto-dimming interior mirror trim panel.

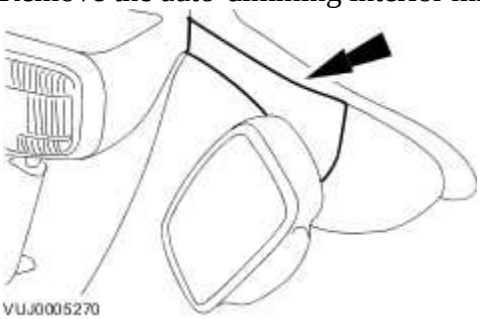

2 . Disconnect the electrical connector.

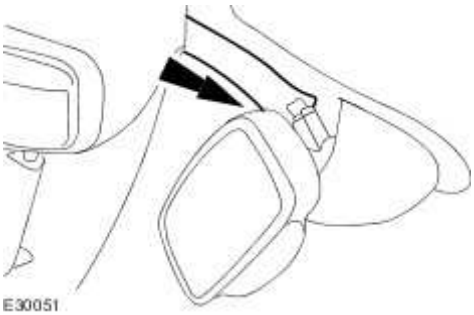

3 . Remove the auto-dimming interior mirror.

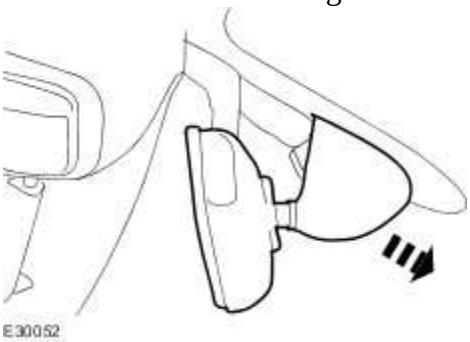

Installation

1 . To install, reverse the removal procedure.

www.JagDocs.com

Exterior Mirror (76.10.52)

Removal

1 . Remove the front door trim panel. <<501-05>>

2 . Disconnect the exterior mirror electrical connector.

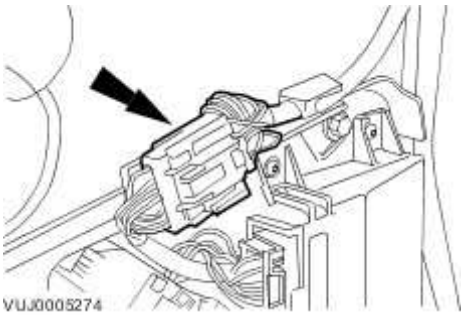

3 . Detach the front door window glass interior trim panel.

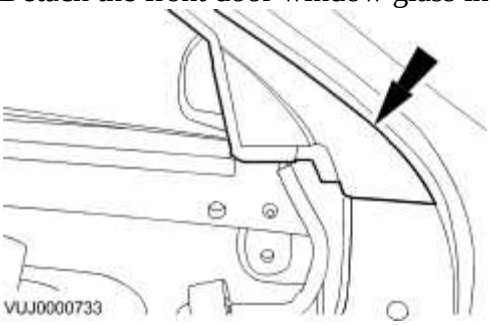

4 . **NOTE:**

Hold the exterior mirror while removing the retaining bolts.

Remove the exterior mirror.

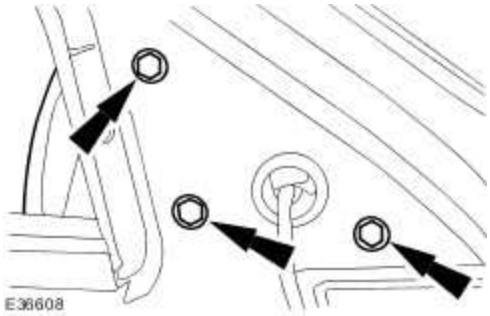

Installation

1 . To install, reverse the removal procedure.

- Tighten to 8 Nm.

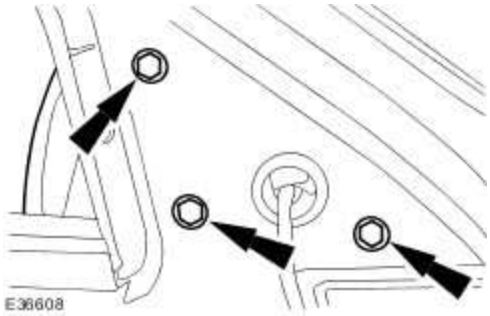

www.JagDocs.com

Exterior Mirror Cover (76.10.55)

Removal

1 . Remove the exterior mirror glass.
For additional information, refer to Exterior Mirror Glass (76.10.53)

2 . Detach the inner edge of the exterior mirror cover.

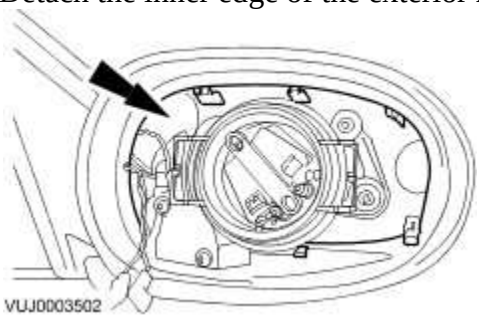

3 . Detach the outer edge of the exterior mirror cover.

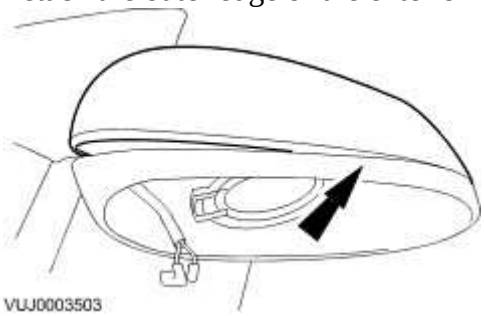

4 . Remove the exterior mirror cover.

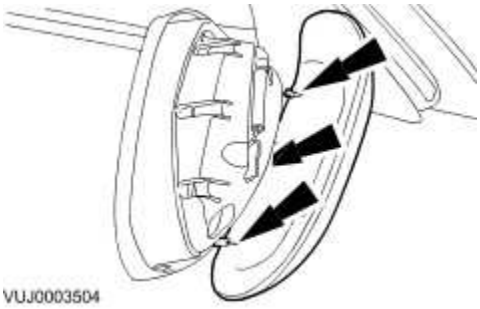

Installation

1 . To install, reverse the removal procedure.

Exterior Mirror Glass (76.10.53)

Removal

1 . Apply light pressure to the exterior mirror glass.

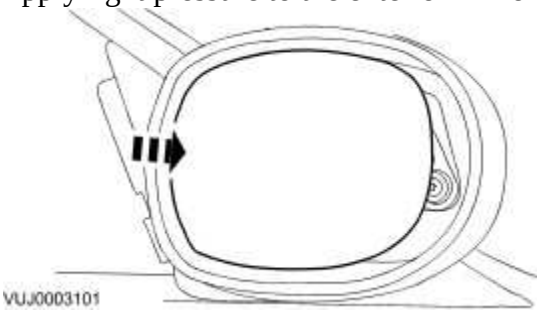

2 . Detach the mirror glass.

1) Apply light pressure to the inner edge of the mirror glass.

2) Pull the outer edge of the mirror glass to detach the mirror glass.

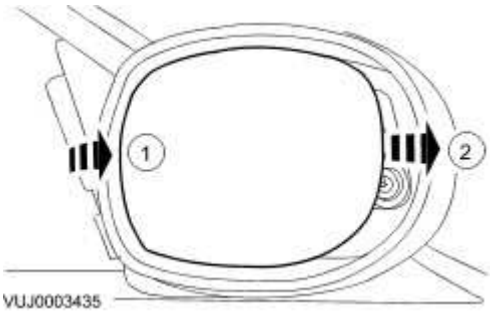

3 . Remove the exterior mirror glass.

Disconnect the electrical connectors.

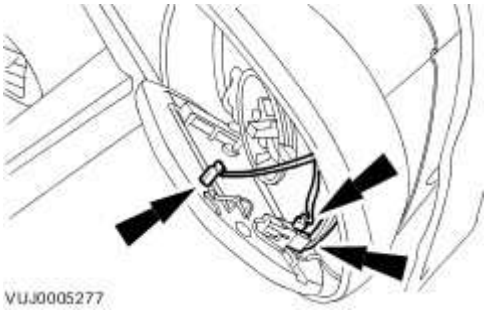

Installation

1 . To install, reverse the removal procedure.

www.JagDocs.com

Exterior Mirror Motor - VIN Range: G00442->H18679 (76.10.57)

Removal

1 . Remove the exterior mirror glass.
For additional information, refer to Exterior Mirror Glass (76.10.53)

2 . Detach the exterior mirror motor.

1) Remove the exterior mirror motor retaining screws.

2) Detach the exterior mirror motor.

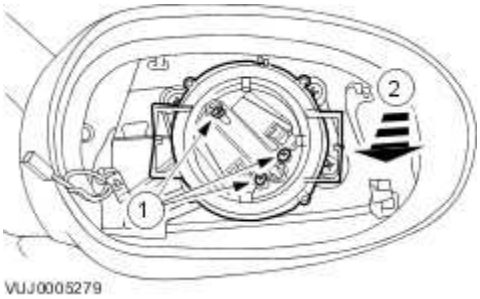

3 . Remove the exterior mirror motor.

- Disconnect the electrical connector.

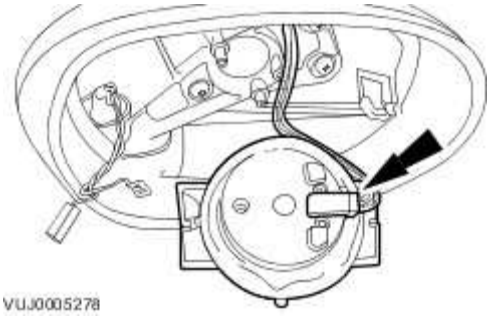

Installation

1 . To install, reverse the removal procedure.

- Tighten to 1 Nm.

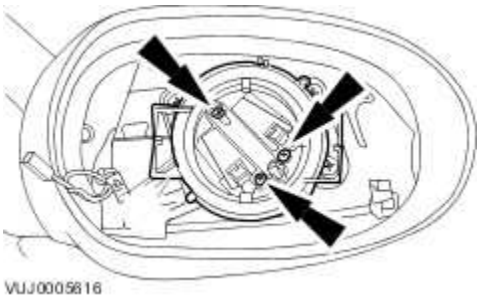

www.JagDocs.com

Exterior Mirror Motor - VIN Range: H18680->H99999 (76.10.57)

Removal

1 . Remove the exterior mirror glass.
For additional information, refer to Exterior Mirror Glass (76.10.53)

2 . Remove the exterior mirror motor retaining bolt.

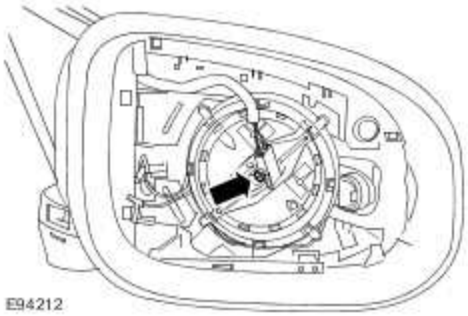

3 . Detach and reposition the exterior mirror motor.

- Release the retaining tangs.

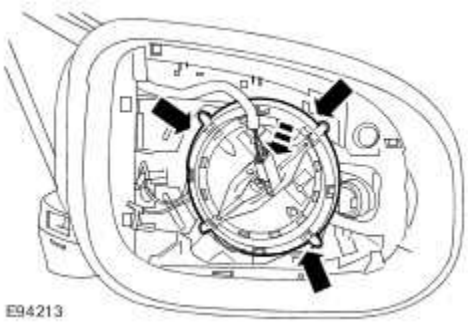

4 . Remove the exterior mirror motor.

- Disconnect the electrical connector.

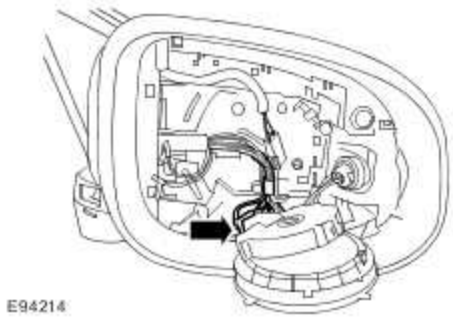

Installation

1 . To install, reverse the removal procedure.

www.JagDocs.com

Specifications

Torque Specifications

Description	Nm	lb-ft	lb-in
Front seat backrest retaining bolts	25	18	-
Front safety belt to seat base retaining bolt	35	26	-
Front seat rear retaining bolts	47	35	-
Front seat front retaining bolts	47	35	-
Front safety belt buckle retaining bolt	35	26	-
Side airbag module retaining nuts	7	-	62

Seats - VIN Range: G00442->H18679

Front Seats

E39529

Item	Part Number	Description
1		Front seat head restraint
2		Front seat backrest
3		Seat base
4		Front seat control switch
5		Front seat cushion

Each front seat has a handed seat cushion, a common backrest frame and seat adjuster mechanism. Switch packs are installed on the outer side of the driver and passenger seats. Both driver and passenger seats are retained to the vehicle floorpan at four points.

The driver and passenger seats, although almost identical, have some unique components fitted. The driver seat has a seat track position sensor and the passenger seat has an occupant weight sensing system, both the components form an integral part of the occupant restraints system.

The front seats have a side airbag module fitted to the outer side of the front seat backrest and the front seat backrest cover has an integral chute to aid in the deployment of the side air bag.

An anti-whiplash system is fitted to both front seats, the system has no serviceable

www.JagDocs.com

components and after it has been activated the complete front seat backrest must be replaced.

The standard front seat is equipped with electric height adjustment, forward and rearward adjustment, seat cushion tilt, head restraint and seat backrest recline motors. The standard front seat also incorporates a two way lumbar support assembly that is fitted to the seat backrest and inflates an air filled bladder to give the required support. The electrical functions can be utilized by operating the front seat control switch and then the driver seat position can be stored by the driver door module (DDM). The driver seat can be programmed for up to three different driver seat configurations and the seat memory switch located in the driver door switch pack, can be used to retrieve the programmed configurations.

In addition to the standard front seat functionality the 16 way high level front seat incorporates:

- a four way lumbar support assembly.
- an extendible seat cushion.
- head restraints incorporating video display (optional).

Seat Base Motors

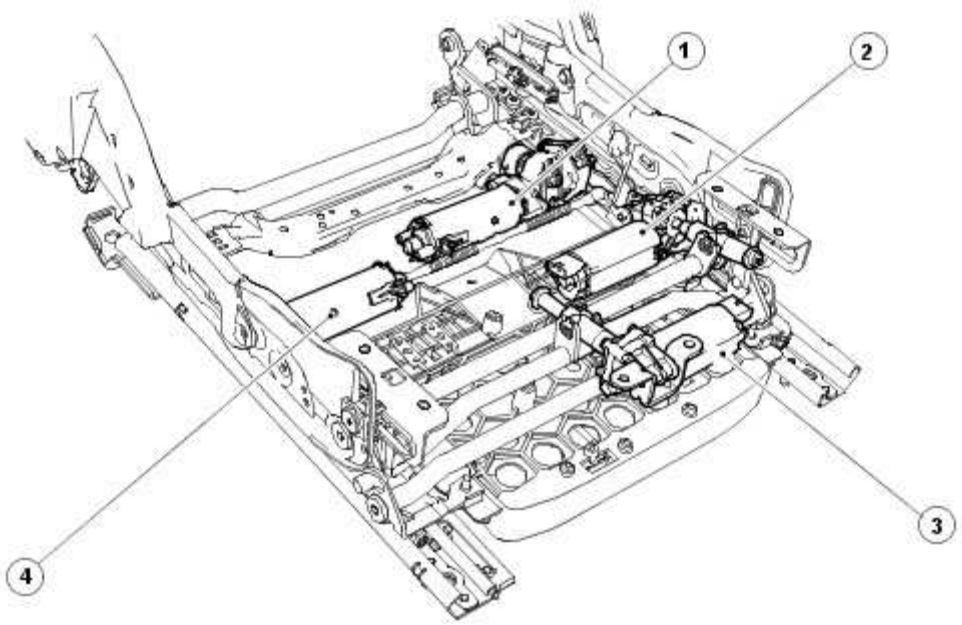

E39535

Item	Part Number	Description
1		Height adjustment motor
2		Seat cushion tilt motor
3		Seat cushion extend motor
4		Forward and rearward adjustment motor

Front Seat Backrest Motors

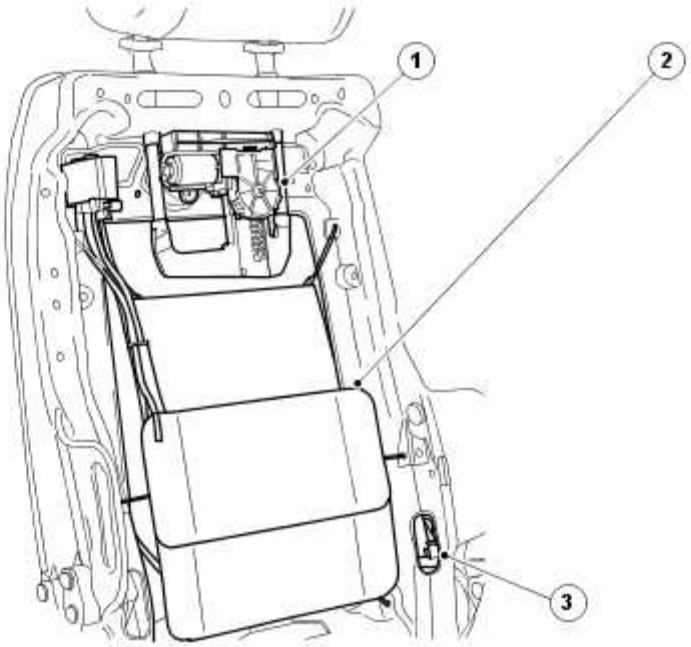

E39536

Item	Part Number	Description
1		Front seat head restraint motor
2		Front lumbar motor
3		Front seat recline motor

Rear Seats

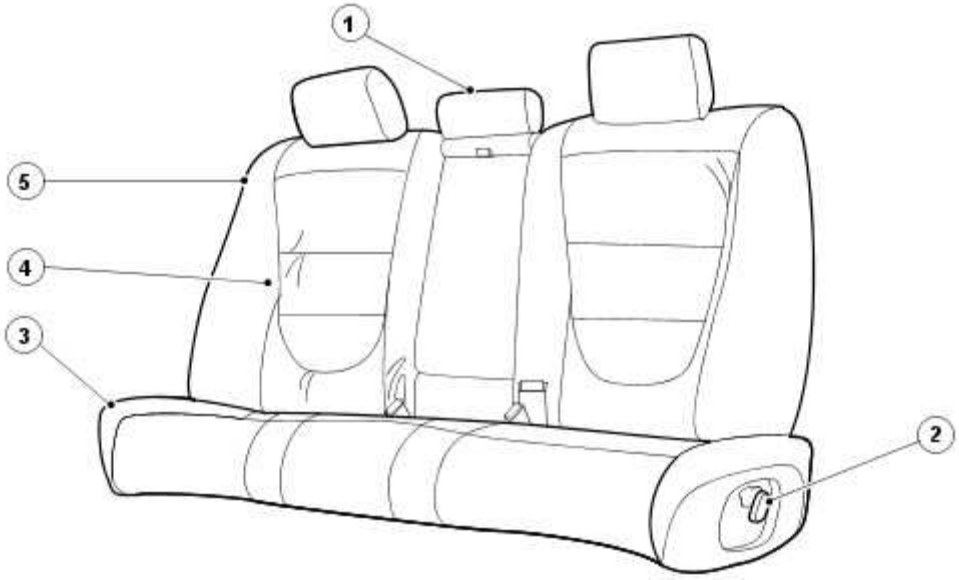

E39526

www.JagDocs.com

Item	Part Number	Description
1		Seat armrest
2		Rear seat control switch
3		Rear seat cushion
4		Rear outer seat backrest
5		Rear seat head restraint

Depending on the vehicle specification the rear seats will be one of the following:

- Fixed bench style with an integral armrest.
- Electrically adjustable outer seat backrests with a bench style cushion and separate armrest.
- Electrically adjustable twin rear seats with a full floor console.

The standard rear seat is of a bench type with full width removable cushion and integral armrest.

The electrically adjustable outer seat backrests can be fitted with either a bench style cushion that incorporates both the rear seat control switches or single rear seat cushions that incorporate the rear seat control switch for the corresponding side.

Rear Seat Backrest Motors

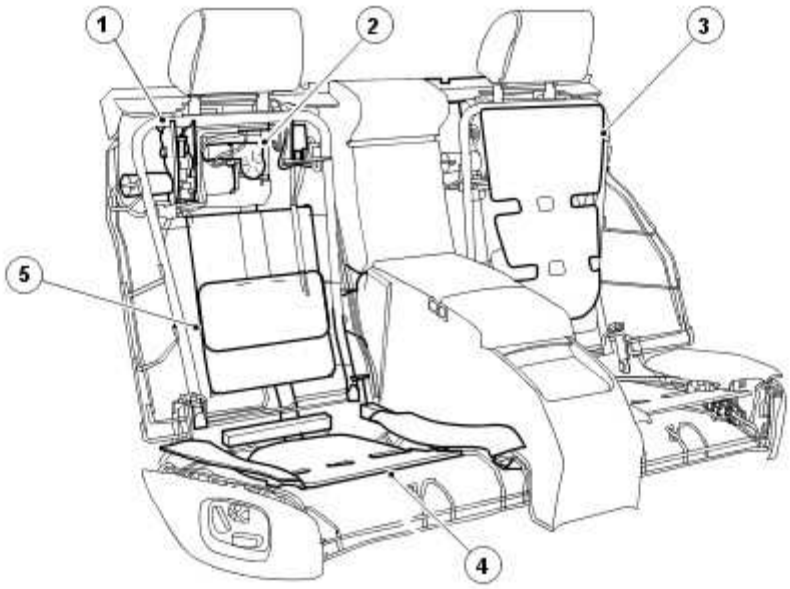

E39537

Item	Part Number	Description
1		Rear seat recline motor
2		Rear seat head restraint motor
3		Rear outer seat backrest heater pad (incorporated into the rear outer seat

		backrest cushion)
4		Rear outer seat backrest heater pad (incorporated into the rear outer seat cushion)
5		Rear lumbar motor

The rear outer seat backrests are equipped with electric four way lumbar adjustment, rear seat head restraint adjustment, and rear outer seat backrest recline adjustment motors. The electrical functions can be utilized by operating the rear seat control switches and then rear outer seat backrest positions can be stored by the rear seat module (RSM). The rear outer seat backrests can be programmed for up to three different seat configurations each. The seat memory switch located on the rear door trim panel can be used to retrieve the programmed configurations.

Lumbar Motors

The front and rear seats have a two or four way lumbar motor system depending on the specification of the vehicle. The system uses a single motor driven pump, which inflates or deflates air cells, as required, to provide upper and lower lumbar support. The lumbar motors are operated from the seat control switches. Depending on the direction the switch is operated in, one of four solenoids housed within the solenoid pack (integral component of the lumbar assembly) is connected to the pump, which provides lumbar support by adjusting the amount of air in the appropriate cell.

Heated Seats

The heated seat system is available on all the seats except the standard rear seat option.

The heated seat system comprises of:

- heated seat switches.
- backrest heater pad.
- cushion heater pad and thermostat.
- front electronic module (FEM).

The FEM controls the seat heating function by providing the appropriate response depending on the status of the heated seat switches. The heated seat functionality is constantly monitored by the electronic load management system (ELMS). The ELMS dictates that in circumstances where the generated electrical power is less than the electrical consumption, selected systems may be inhibited or operated using reduced power for as long as is necessary.

With the ignition in the `ON` position, pressing a heated seat switch will select the maximum heat setting for the chosen seat and is confirmed by three illuminated light emitting diodes (LED) next to the switch. A second press selects the intermediate heat setting and two LEDs are illuminated next to the switch. A third press selects the lowest heating setting, which is displayed by one LED illuminating and a fourth press will deactivate the heated seat.

If the heated seat function has been activated, it will continue to operate until one of the following conditions is met:

www.JagDocs.com

- a fixed period of time has expired (10 minutes)
- the function is deactivated by pressing the heated seat switch for a fourth time
- the ignition key is turned to the `ON` position
- a malfunction is detected by the FEM

The heated seat function is designed to operate at temperatures below a predetermined limit and the operation may be inhibited by a heated garage, body heat or warm ambient temperatures.

Seats - VIN Range: H18680->H99999

OVERVIEW

Two variants of driver and passenger seat are available; 12-way sports and 16-way luxury each availble in 3 trim styles; Comfort, R and VDP. The front seats are equipped with the following:

- Seat control switches (seat mounted)
- Front seat cushion front height adjustment
- Front seat cushion rear height adjustment
- Front seat backrest adjustment
- Front seat head restraint adjustment
- Lumbar adjustment
- Front seat forward and backward adjustment
- Side air bag module
- Front seat backrest heating
- Front seat cushion heating
- Extendible seat-cushion (luxury variant only)
- Seat memory switches (door mounted)
- Seat heating and cooling

WARNING: Prior to removal of the front seats and before disconnecting the front seat wiring harness electrical connectors (which includes the side air bag module electrical connectors), the battery ground cable should be disconnected and a period of at least 1 minute allowed to elapse. The same amount of care should be taken when handling and storing the front seats, as would be taken when handling and storing air bag modules.

The driver and passenger front seats, although almost identical, have some unique components. The front driver seat has a seat position sensor and the front passenger seat has a occupancy sensing system. In both instances the components form an integral part of the air bag Supplemental Restraint System (SRS).

www.JagDocs.com

FRONT SEATS

E39529

Item	Part Number	Description
1		Front seat head restraint
2		Front seat backrest
3		Seat base
4		Front seat control switch
5		Front seat cushion

Each front seat has a handed seat cushion, a common backrest frame and seat adjuster mechanism. Switch packs are installed on the outer side of the driver and passenger seats. Both driver and passenger seats are retained to the vehicle floorpan at four points.

The driver and passenger seats, although almost identical, have some unique components fitted. The driver seat has a seat track position sensor and the passenger seat has an occupant weight sensing system cupled with a track position sensor, both the components form an integral part of the occupant restraints system.

The front seats have a side airbag module fitted to the outer side of the front seat backrest and the front seat backrest cover has an integral chute to aid in the deployment of the side air bag.

The standard front seat is equipped with electric height adjustment, forward and rearward adjustment, seat cushion tilt, head restraint and seat backrest recline motors. The standard front seat also incorporates a two way lumbar support assembly that is fitted to the seat backrest and inflates an air filled bladder to give the required support. The electrical functions can be utilized by operating the front seat control switch and then the driver seat memory position is stored by the DDM (driver door module) using the memory switch pack mounted in the driver door trim. The driver seat can be programmed for up to three different driver seat memory configurations, the seat memory switch located in the driver door trim, can also be used to retrieve the programmed memory configurations.

In addition to the standard front seat functionality the 16 way high level front seat incorporates:

- A four way lumbar support assembly.
- An extendible seat cushion.
- Head restraints incorporating video display (optional).

Seat Base Motors

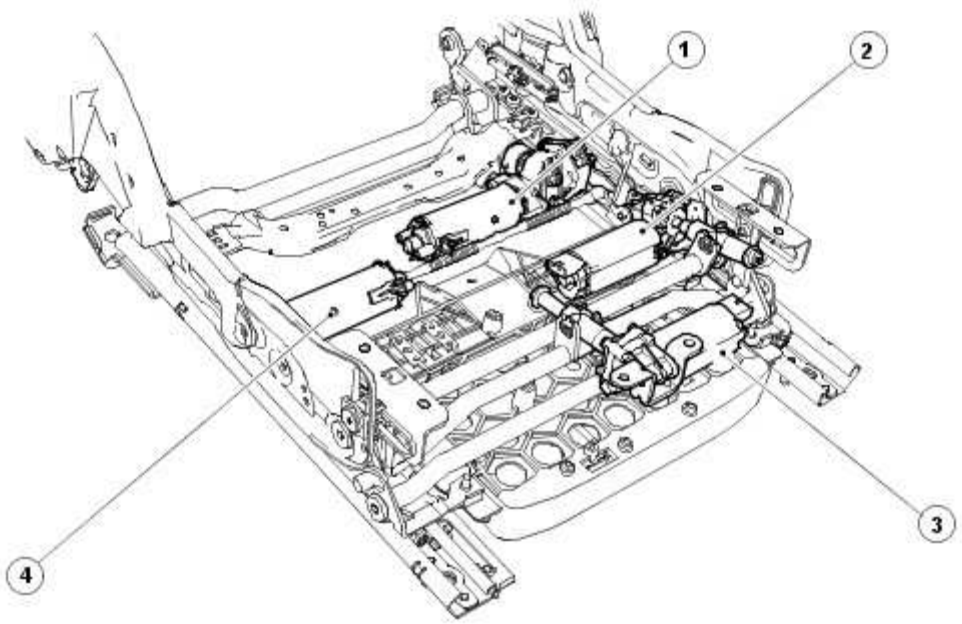

E39535

Item	Part Number	Description
1		Height adjustment motor
2		Seat cushion tilt motor
3		Seat cushion extend motor
4		Forward and rearward adjustment motor

www.JagDocs.com

Front Seat Backrest Motors

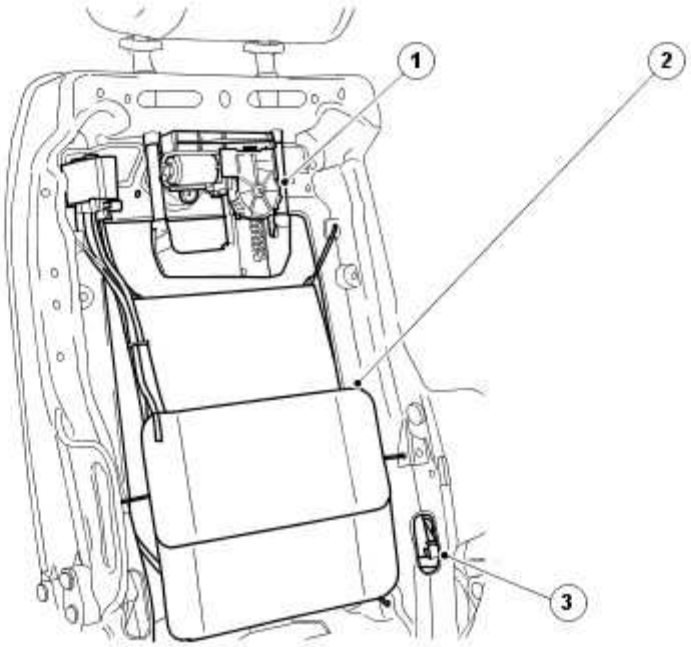

E39536

Item	Part Number	Description
1		Front seat head restraint motor
2		Front lumbar motor
3		Front seat recline motor

REAR SEATS

Rear Seats

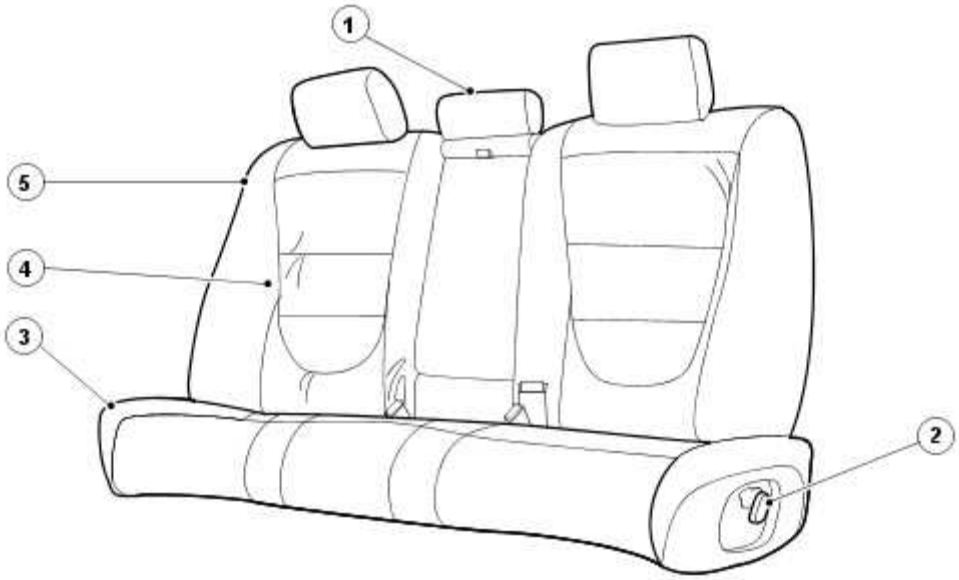

E39526

Item	Part Number	Description
1		Seat armrest
2		Rear seat control switch
3		Rear seat cushion
4		Rear outer seat backrest
5		Rear seat head restraint

Depending on the vehicle specification the rear seats will be one of the following:

- Fixed bench style with an integral armrest.
- Electrically adjustable outer seat backrests with a bench style cushion and separate armrest.
- Electrically adjustable twin rear seats with a full floor console.

The standard rear seat is of a bench type with full width removable cushion and integral armrest.

The electrically adjustable outer seat backrests can be fitted with either a bench style cushion that incorporates both the rear seat control switches or single rear seat cushions that incorporate the rear seat control switch for the corresponding side.

Rear Seat Backrest Motors

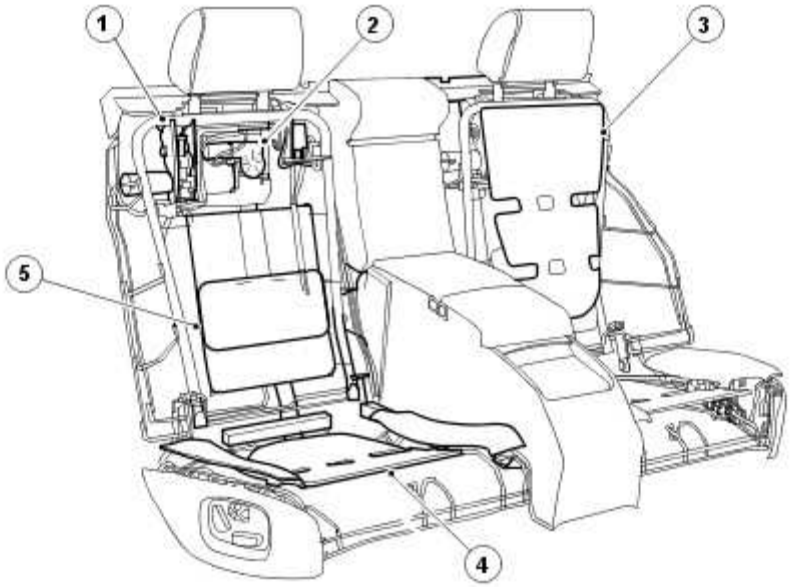

E39537

Item	Part Number	Description
1		Rear seat recline motor
2		Rear seat head restraint motor

www.JagDocs.com

3		Rear outer seat backrest heater pad (incorporated into the rear outer seat backrest cushion)
4		Rear outer seat backrest heater pad (incorporated into the rear outer seat cushion)
5		Rear lumbar motor

The rear outer seat backrests are equipped with electric four way lumbar adjustment, rear seat head restraint adjustment, and rear outer seat backrest recline adjustment motors. The electrical functions can be utilized by operating the rear seat control switches and then rear outer seat backrest memory positions can be stored by the RSM (rear seat module) . The rear outer seat backrest/headrest can be programmed for up to three different seat memory configurations. The seat memory switch located within the rear door trim panel can be used to retrieve the programmed memory configurations.

LUMBAR MOTORS

The front and rear seats have a two or four way lumbar motor system depending on the specification of the vehicle. The system uses a single motor driven pump, which inflates or deflates air cells, as required, to provide upper and lower lumbar support. The lumbar motors are operated from the seat control switches. Depending on the direction the switch is operated in, one of four solenoids (for 4 way lumbar) or one solenoid (for two way lumbar) housed within the solenoid pack (integral component of the lumbar assembly) is connected to the pump, which provides lumbar support by adjusting the amount of air in the appropriate cell.

SEAT MEMORY FUNCTION

he memory control module can store up to three different driver seating, mirror and steering column positions. The three, numbered memory and single memory store switches control memory storage and recall operations. Each switch is a momentary action push switch.

Memory Recall

Memory recall has three memory positions stored for the seats, steering column and exterior mirrors. The switches for this function are located within driver's door trim panel. Pressing the appropriate numbered memory switch allows the seat to start moving to the position appropriate to that memory.

The following procedure will store a memory position:

- Ensure the ignition key is in
- Ensure reverse gear is not engaged
- Manually adjust the seat to the desired position, using the seat switches
- Press and release the 'memory store' switch
- Press and release the desired numbered memory switch within 5 seconds

A single chime will be emitted from the instrument cluster to indicate that the store operation has been successful.

When a memory recall is initiated, to limit the overall current consumption, only two-seat axis will move towards their intended position at any one time. To minimize current load as the motors start, the initiation of each axis is phased with a 100ms delay between each motor starting. Memory recall occurs only when the park brake is ON for manual vehicles or the gear position is in the PARK position for automatic vehicles.

Steering Column Memory

The memory control module controls the electric adjustable steering column in a rake (up and down) and reach (in and out). The steering column can be adjusted for rake and reach by operating the rotary joystick control switch on the LH side of the steering column.

To adjust the steering column:

- Turn the switch to the 'Column' or 'Auto' position
- Move the switch forwards or backwards to adjust the reach
- Move the switch up or down to adjust the rake.

Entry/Exit Mode

Entry/Exit mode provides automatic movement of the steering column and driver's seat to allow easier entry to or exit from the vehicle.

Entry/Exit mode is selected by setting the steering column adjustment switch to the 'AUTO' position.

NOTE:

If the adjustment switch is moved away from 'AUTO' whilst the steering column is tilted away, the steering column will move back to it's memorized position when the key is next inserted in the ignition. Entry/Exit mode will then be cancelled. If the adjustment switch is moved during entry/exit operation, steering column movement will stop.

www.JagDocs.com

HEATED SEATS

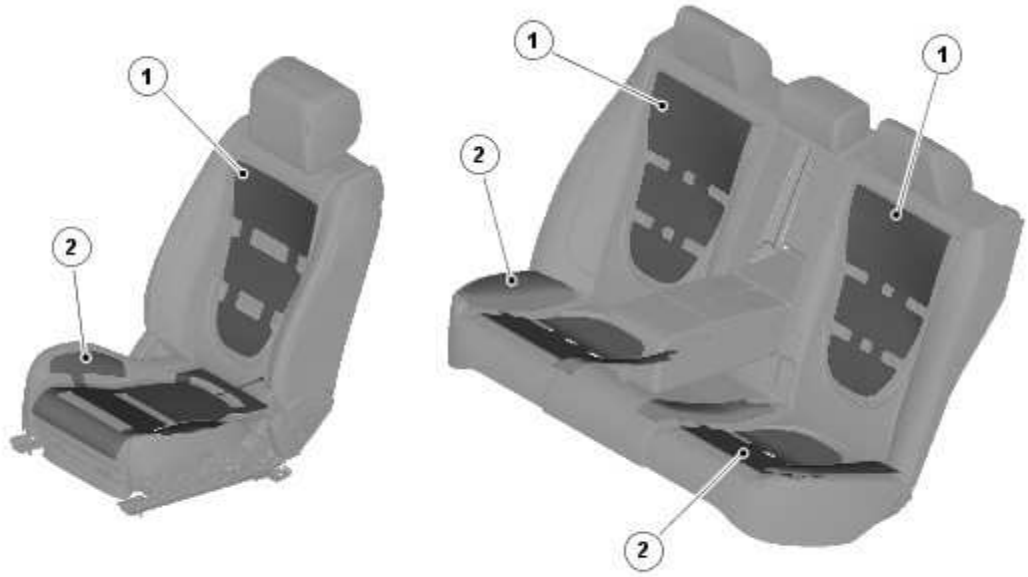

E93539

Item	Part Number	Description
1		Seat backrest heaters
2		Seat squab heater pads

The heated seat system is available on all the seats except the standard rear seat option.

The heated seat system comprises of:

- Heated seat switches
- Backrest heater pad
- Cushion heater pad and thermostat
- FEM (front electronic module)

The FEM (front electronic module) controls the seat heating function by providing the appropriate response depending on the status of the heated seat switches. The heated seat functionality is constantly monitored by the electronic load management system (ELMS). The ELMS dictates that in circumstances where the generated electrical power is less than the electrical consumption, selected systems may be inhibited or operated using reduced power for as long as is necessary.

With the ignition in the `ON` position, pressing a heated seat switch will select the maximum heat setting for the chosen seat and is confirmed by three illuminated light emitting diodes (LED) next to the switch. A second press selects the intermediate heat setting and two LEDs are illuminated next to the switch. A third press selects the lowest heating setting, which is displayed by one LED illuminating and a fourth press will deactivate the heated seat.

If the heated seat function has been activated, it will continue to operate until one of the following conditions is met:

- A fixed period of time has expired (10 minutes)
- The function is deactivated by pressing the heated seat switch for a fourth time
- The ignition key is turned to the `ON` position
- A malfunction is detected by the FEM (front electronic module) .

The heated seat function is designed to operate at temperatures below a predetermined limit and the operation may be inhibited by a heated garage, body heat or warm ambient temperatures.

CLIMATE SEATS

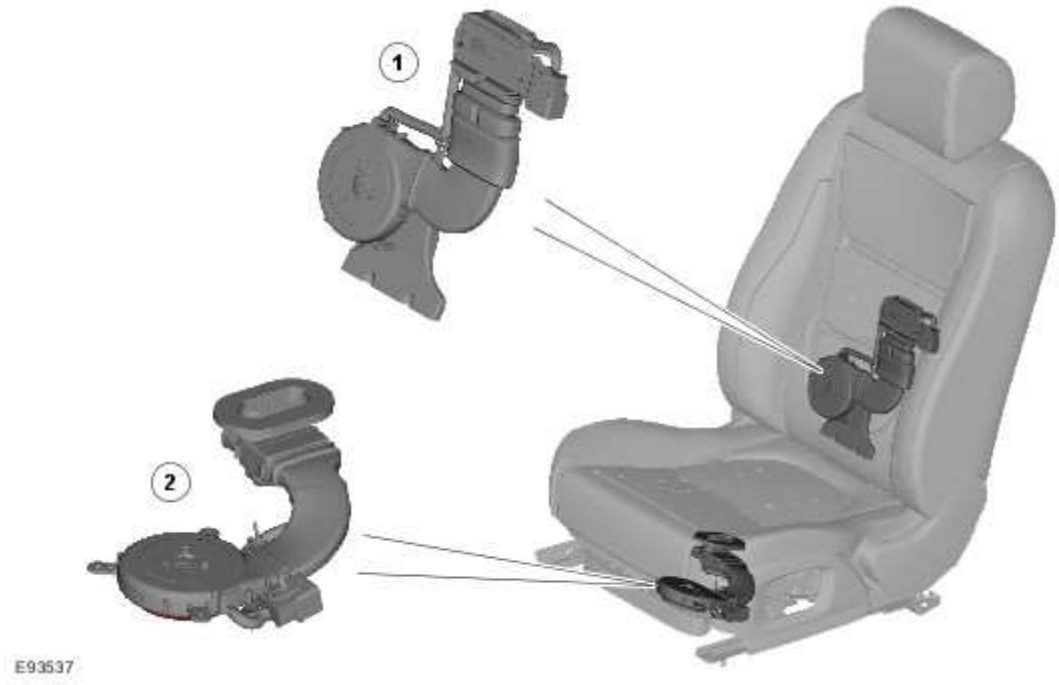

Item	Part Number	Description
1		Seat back climate unit
2		Seat squab climate unit

On vehicles fitted with climatic seats, cooling as well as heating can be delivered to the front seat occupants. Vehicles fitted with climatic seats feature 2 additional temperature switches located in the instrument panel switch pack, above the touch screen display (TSD) for operation of the front seats. The switches are momentary contact non latching switches that increase and decrease the temperature for the individual seats. The switches provide a PWM (pulse width modulation) signal to the control module.

www.JagDocs.com

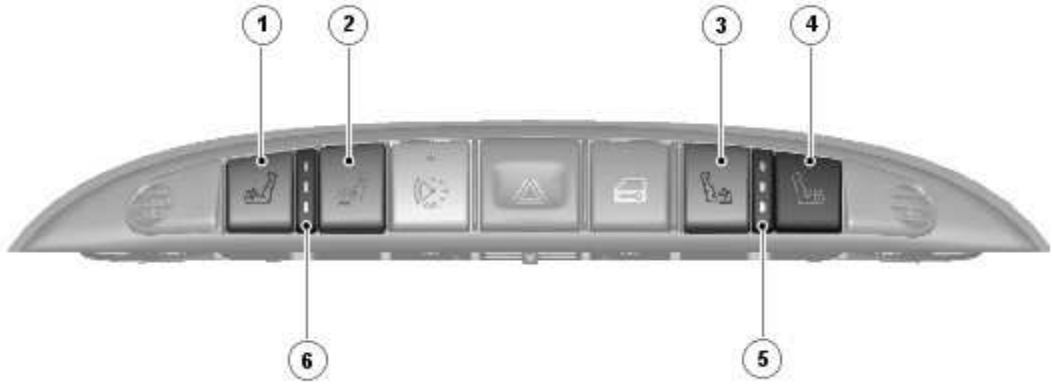

E93538

Item	Part Number	Description
1		LH (left-hand) Seat cool button
2		LH (left-hand) Seat heat button
3		RH (right-hand) Seat cool button
4		RH (right-hand) Seat heat button
5		RH (right-hand) Temperature level indicator
6		LH (left-hand) Temperature level indicator

NOTE:

The seat heating and cooling buttons will operate as folows for each press; OFF MAXIMUM, MEDIUM, MINIMUM OFF.

NOTE:

The ATC (automatic temperature control) module does not control any aspect of climatic seat operation.

The controlling software for the climatic seats is contained within a control module mounted behind the instument panel.

Each climatic seat contains 2 climate units. Each unit contains a fan, which blows air over Peltier cells to distribute heating or cooling throughout the seat.

The climatic seat control module monitors seat heating through a NTC (negative temperature coefficient) temperature sensor located in the unit. The temperature sensor is only used to monitor seat heating. Seat cooling is open loop, with no temperature signal provided back to the control module.

Although the switch LED (light emitting diode) will illuminate if a selection is made when the ignition is switched on, the Peltier cells will not operate until the engine is running.

ACTIVE HEAD RESTRAINTS

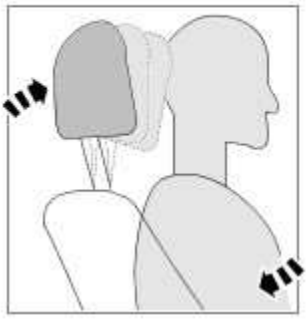

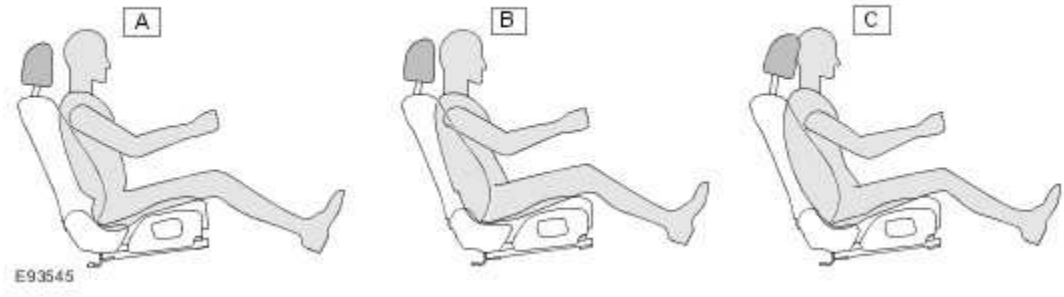

Item	Part Number	Description
A		Normal position.
B		Weight forced into seat head restraint moves forward.
C		Weight fully forced into seat head restraint fully forward.

Both front seats are fitted with mechanical active head restraints that reduce injuries to the spinal column and possible whiplash in the event of a rear collision. The 2 supports of the head restraints inside the seat backrest are attached to pressure plate in the seat back. In a collision from the rear, the occupant is pressed into the backrest, moving the pressure plate towards the rear. As the seat occupant’s back and body weight presses against the pressure plate the head restraint moves upwards and forwards mechanically by means of a pivot point. The movement of the headrest cushions the occupant’s head, altering the posture and reducing the relative motion between the body and the head. The head restraint then returns to it’s original position using a spring return mechanism. Precise activation of the system is determined by the force with which the occupant's back is pressed against the backrest, the magnitude of the collision, and the occupant's weight.

www.JagDocs.com

DRIVER MEMORY SEAT CONTROL DIAGRAM

NOTE:

A = Hardwired; **D** = High speed CAN bus

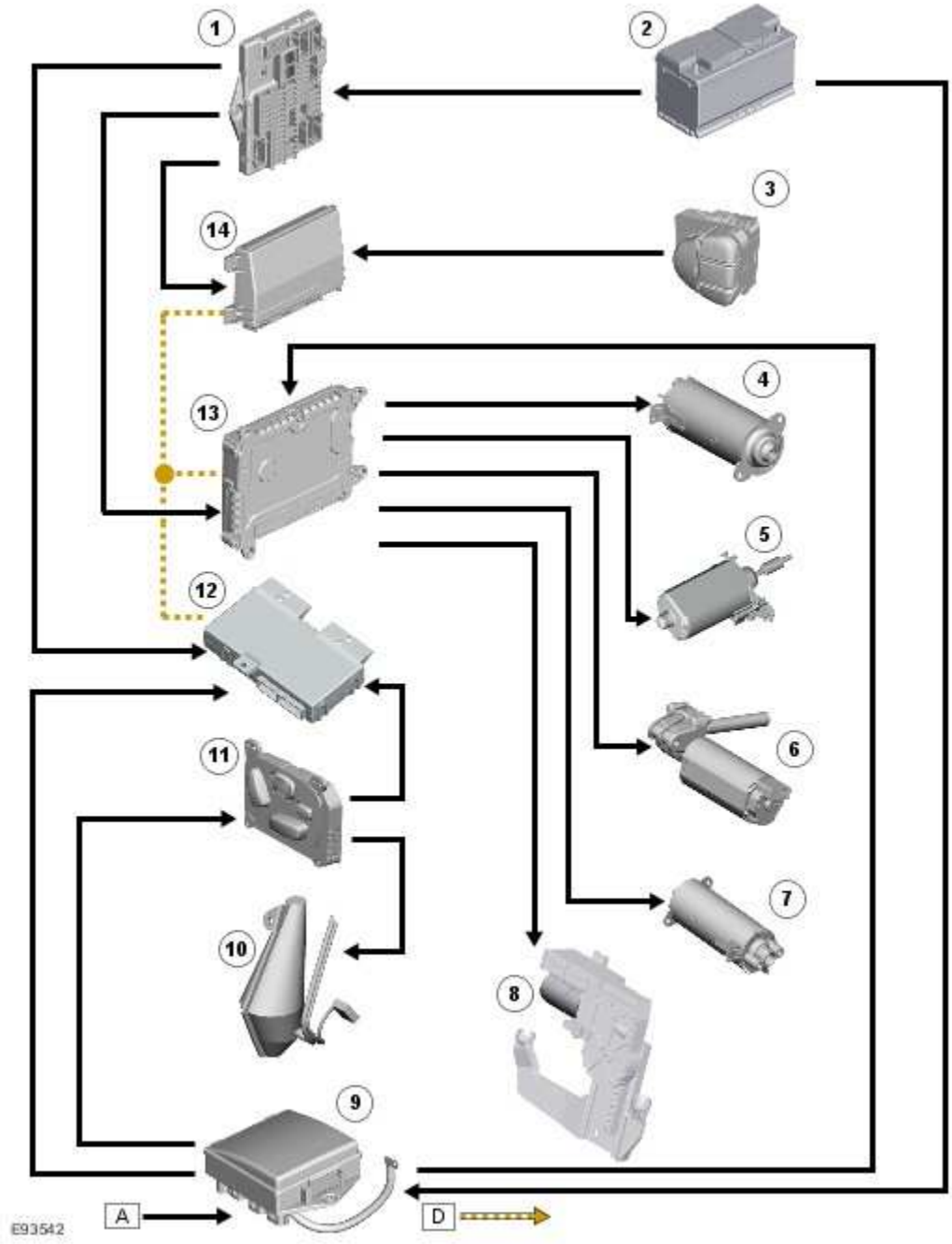

Item	Part Number	Description
1		CJB (central junction box)
2		Battery
3		Memory seat switches
4		Rear height motor
5		Front height motor
6		Squab recline motor
7		Seat fore/aft motor
8		Head restraint adjustment motor

9		RJB (rear junction box)
10		Lumbar pump motor
11		Drivers seat switch pack
12		Seat control module
13		Front electrical module
14		Driver door module

www.JagDocs.com

HEATED SEAT CONTROL DIAGRAM

NOTE:

A = Hardwired

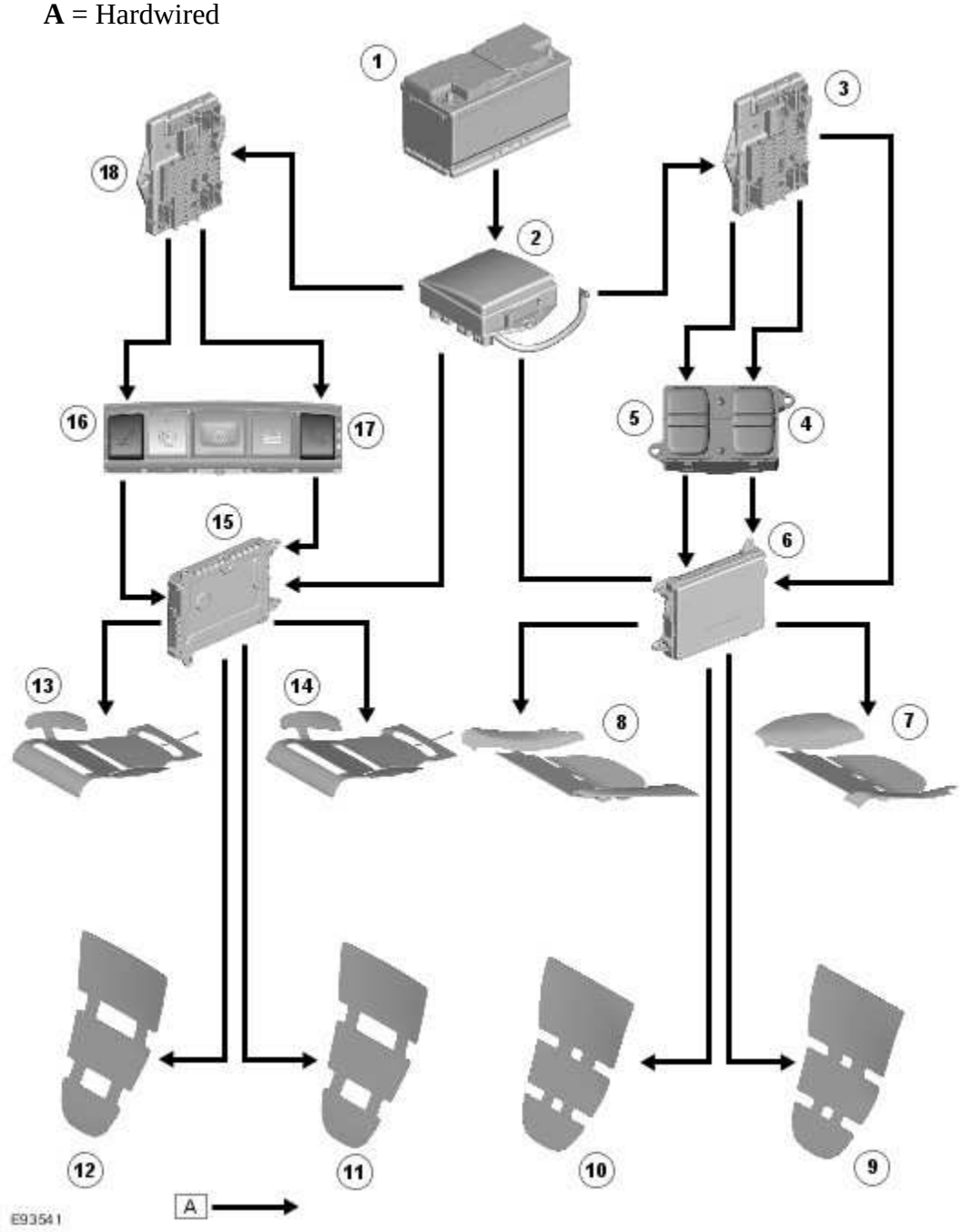

Item	Part Number	Description
1		Battery
2		RJB (rear junction box)
3		CJB (central junction box)
4		RH (right-hand) rear seat heater control switch
5		LH (left-hand) rear seat heater control switch
6		FEM (front electronic module)
7		RH (right-hand) rear seat heater
8		LH (left-hand) rear seat heater

9		RH (right-hand) rear seat back heater
10		LH (left-hand) rear seat back heater
11		RH (right-hand) front seat back heater
12		LH (left-hand) front seat back heater
13		LH (left-hand) front seat heater
14		RH (right-hand) front seat heater
15		REM (rear electronic module)
16		LH (left-hand) front seat heater control switch
17		RH (right-hand) front seat heater control switch
18		CJB (central junction box)

www.JagDocs.com

CLIMATE SEAT CONTROL DIAGRAM

NOTE:

A = Hardwired; **N** = Medium speed CAN bus

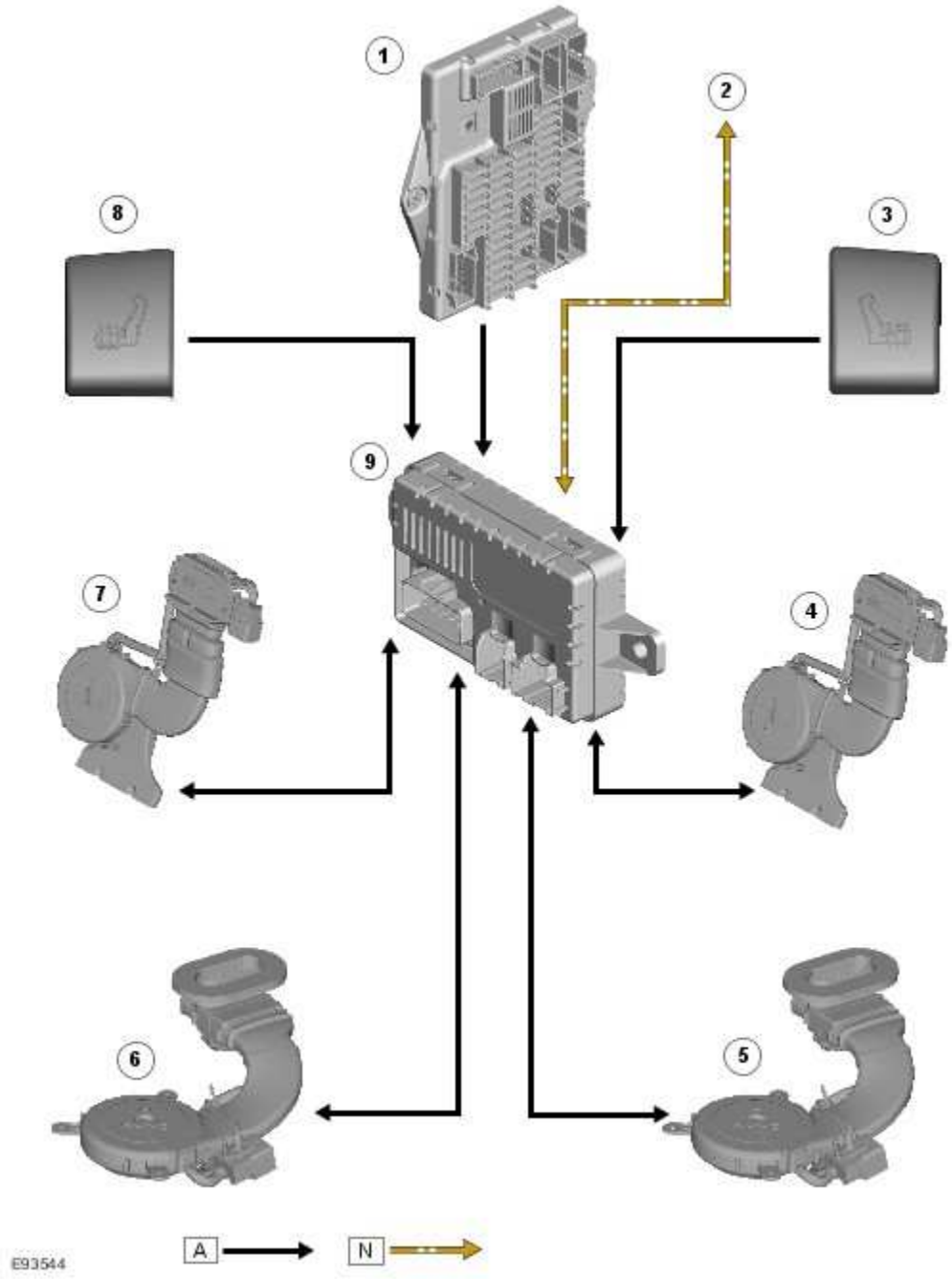

Item	Part Number	Description
1		CJB (central junction box)
2		Medium speed CAN (controller area network) to other vehicle systems
3		Front RH (right-hand) climate seat control switch
4		Front RH (right-hand) seat back climate unit
5		Front RH (right-hand) seat base climate unit
6		Front LH (left-hand) seat base climate unit
7		Front LH (left-hand) seat back climate unit
8		Front LH (left-hand) climate seat control switch
9		Climate seat control module

Seats - VIN Range: G00442->H18679

Principles of Operation

For a detailed description of the Seat Control System, refer to the relevant Description and Operation sections in the workshop manual.
Seats - VIN Range: G00442->H18679

Inspection and Verification

NOTE:

Prior to carrying out any diagnosis, ensure the vehicle battery is in a good serviceable condition, refer to the battery care manual.

1 . Verify the customer concern.

2 . Visually inspect for obvious signs of electrical damage.

Visual Inspection Chart

Mechanical	Electrical
• Seat Movement Mechanism • Seat Movement Motor • Center Console or Seat Control Switchpack	• Fuses/Relays • Damaged, Loose or Corroded Connector(s) • Damage to Wiring Loom/Incorrect Location, Stretched or Taught

1 . If an obvious cause for an observed or reported concern is found, correct the cause (if possible) before proceeding to the next step.

2 . If the cause is not visually evident, verify the symptom and refer to the Symptom Chart below, alternatively, check for Diagnostic Trouble Codes (DTC) and refer to DTC Index.

Symptom Chart

Symptom	Possible Cause	Action
No driver seat movement from driver switch-pack (including no memory recall).	• Driver Seat Module has gone into sleep mode.	Switch ignition ON. Check seat functions from switch packs.
No driver seat axis or driver	• No power or ground	Check fuse. Check power/ground

www.JagDocs.com

lumbar movement from driver switch-pack.	to driver seat switch-pack.	circuits.
No driver seat axis or driver lumbar movement from driver switch-pack.	• No power or ground to driver seat module.	Check DSM power fuses and power/ground circuits, refer to circuit diagram.
No individual driver seat axis movement (headrest/rear height/squab/front height/cushion extend/slide/lumbar) from driver seat switch-pack.	• Switch-pack open circuit.	Check switch-pack wiring. Refer to circuit diagram.
No individual driver seat axis movement (headrest/rear height/squab/front height/cushion extend/slide/lumbar) from driver seat switch-pack.	• Switch-pack short circuit to power.	Check for DSM DTC B2147, fault PID A103 indicates affected axis.
No memory recall function however driver seat axis and driver seat lumbar functions correctly.	• DDM (Driver Door Module).	With ignition in RUN press memory set button (M button, the red LED should light up for 5 seconds), during this 5 second period if a 1, 2 or 3 button is pressed to save a memory position a chime should be heard and the LED extinguished. If this does not happen check the following, Check for DDM DTC B1529 Memory Set Switch Circuit Short To Power. Check for DDM DTC B1530 Memory Set Switch Circuit Short To Ground. Check for DDM DTC B2084 Memory Set Indicator Short To Ground for switch-pack connectivity issues. Check the SCP connections between the DDM and the Instrument cluster and Driver Seat Module.
No memory recall or memory save operations at all however driver seat axis and driver seat lumbar functions correctly.	• DDM power/ground connectivity issue.	Check DDM logic/power/ground circuits. Refer to circuit diagram.
No seat memory recall or save function however	• DSM SCP	Check SCP bus is connected to DSM. Refer to circuit diagram.

driver seat axis and driver seat lumbar functions correctly.	connectivity issue.	
No seat memory recall function however memory save function appears to be ok and driver seat axis and driver seat lumbar functions correctly.	• A seat axis has gone out of calibration.	Check for DSM DTC A309. Fault PID A106 will indicate affected axis. If DTC A309 is present the affected axis has gone out of calibration. Therefore run the Driver Seat recalibration routine via IDS. Note, always ignore DSM DTC 9940 and do not recalibrate when this DTC is detected.
Easy Entry Exit does not function at all.	• Easy Entry Exit not enabled via column adjust switch.	Turn the column adjust switch to Auto position to enable Easy Entry Exit.
Easy Entry Exit does not function on the Driver Seat, either on the Height axis or the Fore/Aft axis (or both). But it does function on the Steering column.	• Either the Driver Seat Fore/Aft axis or the Driver Seat Height axis has gone out of calibration.	Check for DSM DTC A309. Fault PID A106 will indicate affected axis. If DTC A309 is present the affected axis has gone out of calibration. Therefore run the Driver Seat recalibration routine via IDS. Note, always ignore DSM DTC 9940 and do not recalibrate when this DTC is detected.
A Driver Seat axis repeatedly goes out of calibration even after an IDS Driver Seat re-calibration. The affected axis can be identified from DTC A309 in conjunction with fault PID A106.	• Incorrect Driver Seat Module fitted to the X358 vehicle. X358 XJ vehicles are fitted with new Driver Seat which has longer axis lengths. Therefore correct Driver Seat Module needs to be fitted to these new seats.	Ensure that the following Driver Seat Modules are fitted to X358 XJ Driver X358 DSM part numbers 8 way DSM 8W9F-14C708-DH 10 way DSM 8W9F-14C708-AH 12 way DSM 8W9F-14C708-CH DSM part number (pre- X358) 8 way DSM 2W9F-13C789-DH 10 way DSM 2W9F-13C789-AH 12 way DSM 2W9F-13C789-CH Note to Service, the X358 DSMs listed above can be fitted to pre X358 XJ Memory Driver Seats (X350) and S Type Memory Driver Seats (2002.5MY onwards). These later DSMs are therefore backward compatible however older DSMs part numbers listed above (pre-X358) can not be fitted to the new X358 XJ memory Driver Seats.

www.JagDocs.com

No driver seat movement from driver switch-pack (including no memory recall).	• Driver Seat Module has gone into sleep mode.	Switch ignition ON. Check seat functions from switch packs.
No driver seat axis or driver lumbar movement from driver switch-pack.	• No power or ground to driver seat switch-pack.	Check Rear Power Distribution Board (RPBD) fuse F16. Check power/ground circuits.
No driver seat axis or driver lumbar movement from driver switch-pack.	• No power or ground to driver seat module.	Check DSM power fuses and power/ground circuits, refer to circuit diagram.
No individual driver seat axis movement (headrest/rear height/squab/front height/cushion extend/slide/lumbar) from driver seat switch-pack.	• Switch-pack open circuit.	Check switch-pack wiring. Refer to circuit diagram.
No individual driver seat axis movement (headrest/rear height/squab/front height/cushion extend/slide/lumbar) from driver seat switch-pack.	• Switch-pack short circuit to power.	Check for DSM DTC B2147, fault PID A103 indicates affected axis.
No memory recall function however driver seat axis and driver seat lumbar functions correctly.	• DDM (Driver Door Module).	With ignition in RUN press memory set button (M button, the red LED should light up for 5 seconds), during this 5 second period if a 1, 2 or 3 button is pressed to save a memory position a chime should be heard and the LED extinguished. If this does not happen check the following, Check for DDM DTC B1529 Memory Set Switch Circuit Short To Battery. Check for DDM DTC B1530 Memory Set Switch Circuit Short To Ground. Check for DDM DTC B2084 Memory Set Indicator Short To Ground for switch-pack connectivity issues. Check the SCP connections between the DDM and the Instrument cluster and Driver Seat Module.
No memory recall or memory save operations at	• DDM power/ground	Check DDM logic/power/ground circuits. Refer to circuit diagram.

all however driver seat axis and driver seat lumbar functions correctly.	connectivity issue.	
No seat memory recall or save function however driver seat axis and driver seat lumbar functions correctly.	• DSM SCP connectivity issue.	Check SCP bus is connected to DSM. Refer to circuit diagram.
No seat memory recall function however memory save function appears to be ok and driver seat axis and driver seat lumbar functions correctly.	• A seat axis has gone out of calibration.	Check for DSM DTC A309. Fault PID A106 will indicate affected axis. If DTC A309 is present the affected axis has gone out of calibration. Therefore run the Driver Seat recalibration routine via IDS. Note, always ignore DSM DTC 9940 and do not recalibrate when this DTC is detected.
Easy Entry Exit does not function at all.	• Easy Entry Exit not enabled via column adjust switch.	Turn the column adjust switch to Auto position to enable Easy Entry Exit.
Easy Entry Exit does not function on the Driver Seat, either on the Height axis or the Fore/Aft axis (or both). But it does function on the Steering column.	• Either the Driver Seat Fore/Aft axis or the Driver Seat Height axis has gone out of calibration.	Check for DSM DTC A309. Fault PID A106 will indicate affected axis. If DTC A309 is present the affected axis has gone out of calibration. Therefore run the Driver Seat recalibration routine via IDS. Note, always ignore DSM DTC 9940 and do not recalibrate when this DTC is detected.
A Driver Seat axis repeatedly goes out of calibration even after an IDS Driver Seat re-calibration. The affected axis can be identified from DTC A309 in conjunction with fault PID A106.	• Incorrect Driver Seat Module fitted to the X358 vehicle. X358 XJ vehicles are fitted with new Driver Seat which has longer axis lengths. Therefore correct Driver Seat Module needs to be fitted to these new seats.	Ensure that the following Driver Seat Modules are fitted to X358 XJ Driver X358 DSM part numbers 8 way DSM 8W9F-14C708-DH 10 way DSM 8W9F-14C708-AH 12 way DSM 8W9F-14C708-CH DSM part number (pre- X358) 8 way DSM 2W9F-13C789-DH 10 way DSM 2W9F-13C789-AH 12 way DSM 2W9F-13C789-CH Note to Service, the X358 DSMs listed above can be fitted to pre X358 XJ Memory Driver Seats (X350) and S Type Memory Driver Seats (2002.5MY onwards). These later DSMs are

www.JagDocs.com

		therefore backward compatible however older DSMs part numbers listed above (pre-X358) can not be fitted to the new X358 XJ memory Driver Seats.
Front seat fore/aft movement not functioning	• Carry out the pinpoint test associated to this Symptom	GO to Pinpoint Test G1034557p1.
Front seat excessive fore/aft free play	• Carry out the pinpoint test associated to this Symptom	GO to Pinpoint Test G1034557p2.
Front seat fore/aft movement noisy	• Carry out the pinpoint test associated to this Symptom	GO to Pinpoint Test G1034557p3.
Front seat height, tilt and/or seat extension motor movement not functioning	• Carry out the pinpoint test associated to this Symptom	GO to Pinpoint Test G1034557p4.
Front seat height, tilt and/or extension movement noisy	• Carry out the pinpoint test associated to this Symptom	GO to Pinpoint Test G1034557p5.

Rear Memory Module failure modes Symptom Chart

Symptom	Possible Cause	Action
No rear seat movement from rear seat switch-pack (including no memory recall).	• Rear Memory Module has gone into sleep mode.	Switch ignition ON. Check seat functions from switch packs. Ensure rear passenger lock out button (on driver window switch pack) is off.
No rear seat axis or rear lumbar movement from rear switch-pack.	• No power or ground to rear seat switch-pack.	Check fuse. Check power/ground circuits.
No individual rear seat axis movement (headrest/squab/lumbar) from rear seat switch-pack.	• Switch-pack open circuit.	Check switch-pack wiring. Refer to circuit diagram.
No individual rear seat axis movement (headrest/squab)	• Switch-pack short circuit to	Check for Rear Memory Control Module (REAR MEMORY

from rear seat switch-pack.	power.	CONTROL MODULE (RMM) DTC B2171/B2173, fault PIDs A104/A105 indicates affected axis.
No rear memory recall or rear memory save operations at all however rear seat axis or rear seat lumbar functions correctly.	• Rear memory switchpack connectivity issue.	Monitor REAR MEMORY CONTROL MODULE (RMM) fault PID A501whilst pressing the appropriate rear memory switches to confirm connectivity.
No rear seat memory recall or save function.	• REAR MEMORY CONTROL MODULE (RMM) SCP connectivity issue.	Check SCP bus is connected to REAR MEMORY CONTROL MODULE (RMM). Refer to circuit diagram.
No rear seat memory recall function however memory save function appears to be ok and rear seat axis and rear seat lumbar functions correctly.	• A seat axis has gone out of calibration.	Check for REAR MEMORY CONTROL MODULE (RMM) DTC A309. Fault PID A106 will indicate affected axis. If DTC A309 is present the affected axis has gone out of calibration. Therefore run the Rear Seat recalibration routine via IDS. Note, always ignore REAR MEMORY CONTROL MODULE (RMM) DTC 9940 and do not recalibrate when this DTC is detected.

www.JagDocs.com

DTC Index

Drivers Seat/Rear Memory Control Module

CAUTION: When probing connectors to take measurements in the course of the pinpoint tests, use the adaptor kit, part number 3548-1358-00

NOTE:

If the control module/component is suspect and the vehicle remains under manufacturer warranty, refer to the Warranty Policy and Procedures manual (section B1.2), or determine if any prior approval program is in operation, prior to the installation of a new module/component.

NOTE:

When performing voltage or resistance tests, always use a digital multimeter (DMM) accurate to three decimal places and with a current calibration certificate. When testing

resistance, always take the resistance of the DMM leads into account.

NOTE:

Check and rectify basic faults before beginning diagnostic routines that involve pinpoint tests.

NOTE:

Inspect connectors for signs of water ingress, and pins for damage and/or corrosion.

NOTE:

If DTCs are recorded and, after performing the pinpoint tests, a fault is not present, an intermittent concern may be the cause. Always check for loose connections and corroded terminals.

DTC	Description	Possible Causes	Action
B1940	Seat Memory Position Out Of Range	• Seat movement motor has moved beyond expected limit	Ignore this DTC. Do not perform any action if this DTC is flagged. If this DTC is flagged within the DSM then no action is required within the DSM (Driver Seat Module). If this DTC is flagged within the Rear Memory Control Module (REAR MEMORY CONTROL MODULE (REAR MEMORY CONTROL MODULE (RMM) then no action is required the REAR MEMORY CONTROL MODULE (REAR MEMORY CONTROL MODULE (RMM).
B2147	Driver Seat Switch Fault	• Drivers seat module, driver seat switch - input short circuit to power or switch contact closed when opposite switch becomes closed	Refer to electrical circuit diagrams, notes and check driver seat switch and circuit for fault
B2171	LH Rear Seat Switch Fault	• Rear memory module, left rear seat switch - input short circuit to power or switch contact closed when opposite switch becomes closed	Refer to electrical circuit diagrams, notes and check left rear seat switch and circuit for fault
B2173	RH Rear Seat Switch Fault	• Rear memory module, right rear seat switch - input short circuit to	Refer to electrical circuit diagrams, notes and check right rear seat switch and circuit for fault

		power or switch contact closed when opposite switch becomes closed	
B2207	ECU ROM Checksum Error	• Program or EEPROM memory is corrupted	Suspect the drivers seat module if this DTC occurs within DSM or Rear Memory Module if this DTC occurs within REAR MEMORY CONTROL MODULE (REAR MEMORY CONTROL MODULE (RMM), check and install a new module as required, refer to the new module installation note at the top of the DTC Index
B2309	Seat Motor Out Of Range	• Drivers seat module or rear memory module, seat axis has moved beyond expected limits - too many hall pulses between end stops	Check seat movement for correct operation (DSM for driver seat movement, REAR MEMORY CONTROL MODULE (REAR MEMORY CONTROL MODULE (RMM) for Rear seat movement) if no mechanical cause is found. Refer to electrical circuit diagrams, notes and check seat position sensor circuit for fault. Recalibrate affected seats memory positions using the manufacturer approved process

www.JagDocs.com

Pinpoint Tests

PINPOINT TEST G1034557p1 : Front seat fore/aft movement not functioning

G1034557t1 : Check for front seat forward-rearward seat motor operation

1.

WARNING: Before work is carried out, make the air bag supplemental restraint system safe. For additional information, refer to Standard Workshop Practices section of workshop manual.

Set ignition status to ' ON'. 2. From the switch pack, operate the front seat forward-rearward seat motor switch and listen for evidence of the motor operating.

- **Does the motor operate?**

-> Yes
GO to Pinpoint Test G1034557t2.

-> No
GO to Pinpoint Test G1034557t3.

G1034557t2 : Check front seat forward-rearward seat motor drive bar

1. Check front seat drive bar for correct installation and condition

- **Is the front seat drive bar correctly installed and in a serviceable condition?**

-> Yes
Re-check for correct front seat forward-rearward movement. Remove seat to allow for further investigation if required.

-> No
Correctly install front seat forward-rearward seat motor drive bar, or replace if required.

G1034557t3 : Check front seat forward-rearward seat motor

1. Set ignition status to 'OFF'. 2. Disconnect front seat forward-rearward seat motor connector. 3. **NOTE:**

> It may be that the seat has been driven to the limit of travel along the relevant axis, and when the link harness is connected, the seat will remain in the same position. If this is the case, a jolt may be felt from the motor. To confirm the motor operation, swap the link harness to alternate motor pin connections and the seat should travel in the opposite direction.

Using a locally made fused link harness and power supply, connect power and ground to forward-rearward seat motor.

Battery positive terminal	Battery negative terminal
forward-rearward seat motor pin 1	forward-rearward seat motor pin 2

- **Does the motor operate?**

-> Yes
Using manufacturer approved diagnostic system, check for related Diagnostic Trouble Codes (DTCs) and carry out the repair operations specified. Alternatively, refer to the electrical circuit diagrams and check front seat forward-rearward seat motor circuits.

-> No
Replace front seat forward-rearward seat motor. Refer to relevant section of workshop manual.

PINPOINT TEST G1034557p2 : Front seat excessive forward-rearward free play

G1034557t4 : Check front seat for excessive forward-rearward free play

1.

WARNING: Before work is carried out, make the air bag supplemental restraint system safe. For additional information, refer to Standard Workshop Practices section of workshop manual.

Check all accessible front seat frame fixings are installed and to the correct torque.

- **Are all accessible front seat frame fixings installed and to the correct torque?**

-> Yes
GO to Pinpoint Test G1034557t5.

-> No
Install and tighten all accessible front seat frame fixings to correct torque and re-check for excessive free play.

G1034557t5 : Compare the front seat forward-rearward free play against a similar seat

1. Compare the front seat forward-rearward free play against a similar seat.

- **Is the front seat forward-rearward free play excessive when compared to a similar seat?**

-> Yes
GO to Pinpoint Test G1034557t6.

-> No
The front seat frame is operating correctly. Submit Electronic Product Quality Report (EPQR) with any further query.

www.JagDocs.com

G1034557t6 : Check remaining front seat frame fixings

1. Remove front seat and/or any seat covers/trim to allow access to check remaining front seat frame fixings are all installed and to the correct torque.

- **Are all remaining front seat frame fixings installed and to the correct torque?**

-> Yes
Replace front seat frame. Refer to the relevant section of the workshop manual.

-> No
Install and tighten all remaining front seat frame fixings to correct torque and re-check for excessive free play.

PINPOINT TEST G1034557p3 : Front seat forward-rearward movement noisy

G1034557t7 : Compare front seat forward-rearward movement noise to other front seat

1.

WARNING: Before work is carried out, make the air bag supplemental restraint system safe. For additional information, refer to Standard Workshop Practices section of workshop manual.

Compare the front seat forward-rearward movement noise to other front seat.

- **Is the front seat forward-rearward movement noise excessive when compared to other front seat?**

-> Yes
GO to Pinpoint Test G1034557t8.

-> No
GO to Pinpoint Test G1034557t9.

G1034557t8 : Compare front seat forward-rearward movement noise to front seat in other vehicle

1. Compare the front seat forward-rearward movement noise to front seat in other vehicle.

- **Is the front seat forward-rearward movement noise excessive when compared to front seat in other vehicle?**

-> Yes
GO to Pinpoint Test G1034557t9.

-> No
The front seat frame is operating correctly. Submit Electronic Product Quality Report (EPQR) with any further query.

G1034557t9 : Check for debris obstructing seat movement

1. Check for debris obstructing seat movement.

- **Is the front seat forward-rearward movement obstructed by debris?**

-> Yes
Remove obstruction and re-check for noisy forward-rearward seat movement.

-> No
GO to Pinpoint Test G1034557t10.

G1034557t10 : Re-align front seat frame

1. Loosen front seat frame fixings. 2. Set ignition status to 'ON'. 3. Using the front seat switch pack drive the front seat fully forward then fully rearward. 4. Tighten front seat frame fixings to the correct torque. 5. Re-check for noisy seat movement.

- **Is the front seat forward-rearward movement still noisy?**

-> Yes
GO to Pinpoint Test G1034557t11.

-> No
The front seat frame is now operating correctly.

G1034557t11 : Check front seat forward-rearward seat motor drive bar

1. Check front seat drive bar for correct installation and condition.

- **Is the front seat drive bar correctly installed and in a serviceable condition?**

-> Yes
Replace front seat forward-rearward seat motor. Refer to relevant section of workshop

www.JagDocs.com

manual.

-> No
Correctly install front seat forward-rearward seat motor drive bar, or replace if required.

PINPOINT TEST G1034557p4 : Front seat height, tilt and/or seat extension motor movement not functioning

G1034557t12 : Check front seat height, tilt or extension motor

1. Set ignition status to ' OFF'. 2. Disconnect front seat height, tilt or extension motor connector. 3. **NOTE:**

> It may be that the seat has been driven to the limit of travel along the relevant axis, and when the link harness is connected, the seat will remain in the same position. If this is the case, a jolt may be felt from the motor. To confirm the motor operation, swap the link harness to alternate motor pin connections and the seat should travel in the opposite direction.

Using a locally made fused link harness and power supply, connect power and ground to relevant motor.

Battery positive terminal	Battery negative terminal
motor pin 1	motor pin 2

- **Does the motor operate?**

-> Yes
Using manufacturer approved diagnostic system, check for related Diagnostic Trouble Codes (DTCs) and carry out the repair operations specified. Alternatively, refer to the electrical circuit diagrams and check relevant motor circuits.

-> No
Replace the relevant motor. Refer to relevant section of workshop manual.

PINPOINT TEST G1034557p5 : Front seat height, tilt and/or extension movement noisy

G1034557t13 : Compare the height, tilt or extension movement noise with the other front seat

1.

WARNING: Before work is carried out, make the air bag supplemental restraint system safe. For additional information, refer to Standard Workshop Practices section of workshop manual.

Compare the front seat movement noise to other front seat.

- **Is the front seat height, tilt or extension movement noise excessive when compared to other front seat?**

-> Yes
GO to Pinpoint Test G1034557t14.

-> No
GO to Pinpoint Test G1034557t15.

G1034557t14 : Compare front seat height, tilt or extension movement noise to front seat in other vehicle

1. Compare the front seat height, tilt or extension movement noise to front seat in other vehicle.

- **Is the front seat height, tilt or extension movement noise excessive when compared to front seat in other vehicle?**

-> Yes
GO to Pinpoint Test G1034557t15.

-> No
The front seat frame is operating correctly. Submit Electronic Product Quality Report (EPQR) with any further query.

G1034557t15 : Check for debris obstructing seat movement

1. Check for debris obstructing seat movement.

- **Is the front seat height, tilt or extension movement obstructed by debris?**

-> Yes
Remove obstruction and re-check for noisy height, tilt or extension seat movement. If still noisy GO to Pinpoint Test G1034557t16.

www.JagDocs.com

-> No
GO to Pinpoint Test G1034557t16.

G1034557t16 : Check for height, tilt or extension movement mechanism lubrication

1. Check and apply manufacturer approved lubrication to seat height, tilt or extension movement mechanism and re-test for noise.

- **Is the front seat height, tilt or extension noise still apparent?**

-> Yes
Replace the relevant motor. Refer to relevant section of workshop manual.

-> No
The front seat height, tilt or extension motor is operating correctly.

Seats - VIN Range: H18680->H99999

Principles of Operation

For a detailed description of the Climate Seat Control System, refer to the relevant Description and Operation sections in the workshop manual.
Seats - VIN Range: H18680->H99999

Inspection and Verification

NOTE:

Prior to carrying out any diagnosis, ensure the vehicle battery is in a good serviceable condition, refer to the battery care manual.

1 . Verify the customer concern.

2 . Visually inspect for obvious signs of electrical damage.

Visual Inspection Chart

Electrical
• Fuses/Relays • Damaged, Loose or Corroded Connector(s) • Damage to Wiring Loom/Incorrect Location, Stretched or Taught

1 . If an obvious cause for an observed or reported concern is found, correct the cause (if possible) before proceeding to the next step.

2 . If the cause is not visually evident, verify the symptom and refer to the Symptom Chart below, alternatively check for Diagnostic Trouble Codes (DTCs) and refer to the DTC Index.

Symptom Chart

Symptom	Possible Cause	Action
Front seat fore/aft movement not functioning	• Carry out the pinpoint test associated to this Symptom	GO to Pinpoint Test G1014305p1.
Front seat excessive fore/aft free play	• Carry out the pinpoint test associated to this Symptom	GO to Pinpoint Test G1014305p2.
Front seat fore/aft movement noisy	• Carry out the pinpoint test	GO to Pinpoint Test

www.JagDocs.com

	associated to this Symptom	G1014305p3.
Front seat height, tilt and/or seat extension motor movement not functioning	• Carry out the pinpoint test associated to this Symptom	GO to Pinpoint Test G1014305p4.
Front seat height, tilt and/or extension movement noisy	• Carry out the pinpoint test associated to this Symptom	GO to Pinpoint Test G1014305p5.
Heating And Cooling - Inoperative	• Carry out the pinpoint test associated to this Symptom	GO to Pinpoint Test G1014305p6.
Heating And Cooling - Noisy Operation	• Carry out the pinpoint test associated to this Symptom	GO to Pinpoint Test G1014305p7.
Heating And Cooling - Poor Heat Or Cool Efficiency	• Carry out the pinpoint test associated to this Symptom	GO to Pinpoint Test G1014305p8.
Heating And Cooling - Heat Or Cool Operation Slow	• Carry out the pinpoint test associated to this Symptom	GO to Pinpoint Test G1014305p9.
Heating And Cooling - Intermittent Operation	• Carry out the pinpoint test associated to this Symptom	GO to Pinpoint Test G1014305p10.

DTC Index

Climate Seat Control Module

CAUTION: When probing connectors to take measurements in the course of the pinpoint tests, use the adaptor kit, part number 3548-1358-00

NOTE:

If the control module/component is suspect and the vehicle remains under manufacturer warranty, refer to the Warranty Policy and Procedures manual (section B1.2), or determine if any prior approval program is in operation, prior to the installation of a new module/component.

NOTE:

When performing voltage or resistance tests, always use a digital multimeter (DMM) accurate to three decimal places and with a current calibration certificate. When testing resistance, always take the resistance of the DMM leads into account.

NOTE:

Check and rectify basic faults before beginning diagnostic routines that involve pinpoint tests.

NOTE:

Inspect connectors for signs of water ingress, and pins for damage and/or corrosion.

NOTE:

If DTCs are recorded and, after performing the pinpoint tests, a fault is not present, an intermittent concern may be the cause. Always check for loose connections and corroded terminals.

DTC	Description	Possible cause	Action
B10B913	Blower control	• The drivers seat cushion heater and blower assembly circuit open circuit. • The drivers seat backrest heater and blower assembly circuit open circuit. • Climate controlled seat module (CCS) failure.	Check the drivers seat heater and blower assembly for the cushion and backrest circuit. Refer to the electrical guides. Install a new heater and blower assembly if necessary. Clear the DTCs and test for normal operation. Check the CCS ground supply and relay circuits. Refer to the electrical guides. Rectify as necessary. Clear the DTC. Cycle the ignition and retest. If the DTC resets suspect the control module. Refer to the warranty policy and procedures manual if a module is suspect.
B10B94B	Blower control	• The drivers seat cushion heater and blower assembly circuit short circuit to ground. • The drivers seat backrest heater and blower assembly circuit short circuit to ground. • Mechanical restriction in the heater and	Check the drivers seat heater and blower assembly for the cushion and backrest circuit. Refer to the electrical guides. Install a new heater and blower assembly if necessary. Clear the DTCs and test for normal operation. Check the CCS ground supply and relay circuits. Refer to the electrical guides. Rectify as necessary. Clear the DTC. Cycle the

www.JagDocs.com

		blower assembly housing. • Climate controlled seat module (CCS) failure.	ignition and retest. If the DTC resets suspect the control module. Refer to the warranty policy and procedures manual if a module is suspect.
B114B13	Passenger thermal electric device control	• The passenger seat cushion heater and blower assembly circuit open. • The passenger seat backrest heater and blower assembly circuit open circuit. • Passenger seat heater and blower assembly failure. • Climate controlled seat module (CCS) failure.	Check the passenger seat heater and blower assembly for the cushion and backrest circuit. Refer to the electrical guides. Install a new heater and blower assembly if necessary. Clear the DTCs and test for normal operation. Check the CCS ground supply and relay circuits. Refer to the electrical guides. Rectify as necessary. Clear the DTC. Cycle the ignition and retest. If the DTC resets suspect the control module. Refer to the warranty policy and procedures manual if a module is suspect.
B114B19	Passenger thermal electric device control	• The passenger seat cushion heater and blower assembly circuit short circuit to ground. • The passenger seat backrest heater and blower assembly short circuit to ground. • Passenger seat heater and blower assembly failure. • Climate controlled seat module (CCS) failure.	Check the passenger seat heater and blower assembly for the cushion and backrest circuit. Refer to the electrical guides. Install a new heater and blower assembly if necessary. Clear the DTCs and test for normal operation. Check the CCS ground supply and relay circuits. Refer to the electrical guides. Rectify as necessary. Clear the DTC. Cycle the ignition and retest. If the DTC resets suspect the control module. Refer to the warranty policy and procedures manual if a module is suspect.
B114B4B	Passenger thermal electric device control	• Passenger seat cushion heater and blower assembly circuit short circuit to ground. • The passenger seat backrest heater and blower assembly short circuit to ground.	Check the passenger seat heater and blower assembly for the cushion and backrest circuit. Refer to the electrical guides. Install a new heater and blower assembly if necessary. Clear the DTCs and test for normal operation.

		• Passenger seat heater and blower assembly failure. • Climate controlled seat module (CCS) failure. • Possible restricted duct.	Check the passenger seat and make sure nothing is restricting the seat heater and blower assembly blower duct Rectify as necessary. Clear the DTCs and test for normal operation. Check the CCS ground supply and relay circuits. Refer to the electrical guides. Rectify as necessary. Clear the DTC. Cycle the ignition and retest. If the DTC resets suspect the control module. Refer to the warranty policy and procedures manual if a module is suspect.
B114C13	Driver thermal electric device control	• The drivers seat cushion heater and blower assembly circuit open circuit. • The drivers seat backrest heater and blower assembly circuit open circuit. • Climate controlled seat module (CCS) failure.	Check the drivers seat heater and blower assembly for the cushion and backrest circuit. Refer to the electrical guides. Install a new heater and blower assembly if necessary. Clear the DTCs and test for normal operation. Check the CCS ground supply and relay circuits. Refer to the electrical guides. Rectify as necessary. Clear the DTC. Cycle the ignition and retest. If the DTC resets suspect the control module. Refer to the warranty policy and procedures manual if a module is suspect.
B114C19	Driver thermal electric device control	• The drivers seat cushion heater and blower assembly circuit short circuit to ground. • The drivers seat backrest heater and blower assembly circuit short circuit to ground. • Mechanical restriction in the heater and blower assembly housing. • Climate controlled seat	Carry out any pinpoint tests associated with this DTC using the manufacturer approved diagnostic system. Check the drivers seat heater and blower assembly for the cushion and backrest circuit. Refer to the electrical guides. Install a new heater and blower assembly if necessary. Clear the DTCs and test for normal operation. Check the CCS ground supply and relay circuits. Refer to the electrical guides. Rectify as necessary. Clear the DTC. Cycle the

www.JagDocs.com

		module (CCS) failure.	ignition and retest. If the DTC resets suspect the control module. Refer to the warranty policy and procedures manual if a module is suspect.
B114C4B	Driver thermal electric device control	• The drivers seat cushion heater and blower assembly circuit short circuit to ground. • The drivers seat backrest heater and blower assembly circuit short circuit to ground. • Mechanical restriction in the heater and blower assembly housing. • Possible restricted duct. • Climate controlled seat module (CCS) failure.	Carry out any pinpoint tests associated with this DTC using the manufacturer approved diagnostic system. Check the drivers seat heater and blower assembly for the cushion and backrest circuit. Refer to the electrical guides. Install a new heater and blower assembly if necessary. Clear the DTCs and test for normal operation. Check the driver seat cushion and backrest, make sure nothing is restricting the seat heater and blower assembly blower duct. Rectify as necessary. Clear the DTCs and test for normal operation. Check the CCS ground supply and relay circuits. Refer to the electrical guides. Rectify as necessary. Clear the DTC. Cycle the ignition and retest. If the DTC resets suspect the control module. Refer to the warranty policy and procedures manual if a module is suspect.
B114D11	Passenger seat cushion blower speed sensor	• The passenger seat cushion seat heater and blower assembly circuit short circuit to ground. • Internal motor failure. • Climate controlled seat module (CCS) failure.	Check the passenger seat cushion heater and blower assembly circuit. Refer to the electrical guides. Install a new heater and blower assembly if necessary. Clear the DTCs and test for normal operation. Check the CCS ground supply and relay circuits. Refer to the electrical guides. Rectify as necessary. Clear the DTC. Cycle the ignition and retest. If the DTC resets suspect the control module. Refer to the warranty policy and procedures manual if a module

			is suspect.
B114D12	Passenger seat cushion blower speed sensor	• The passenger seat cushion seat heater and blower assembly circuit short circuit to ground. • Internal motor failure. • Climate controlled seat module (CCS) failure.	Check the passenger seat cushion heater and blower assembly circuit. Refer to the electrical guides. Install a new heater and blower assembly if necessary. Clear the DTCs and test for normal operation. Check the CCS ground supply and relay circuits. Refer to the electrical guides. Rectify as necessary. Clear the DTC. Cycle the ignition and retest. If the DTC resets suspect the control module. Refer to the warranty policy and procedures manual if a module is suspect.
B114E11	Passenger seat back blower speed sensor	• The passenger seat backrest seat heater and blower assembly circuit short circuit to ground. • Internal motor failure. • Climate controlled seat module (CCS) failure.	Check the passenger seat backrest heater and blower assembly circuit. Refer to the electrical guides. Install a new heater and blower assembly if necessary. Clear the DTCs and test for normal operation. Check the CCS ground supply and relay circuits. Refer to the electrical guides. Rectify as necessary. Clear the DTC. Cycle the ignition and retest. If the DTC resets suspect the control module. Refer to the warranty policy and procedures manual if a module is suspect.
B114E12	Passenger seat back blower speed sensor	• The passenger seat backrest seat heater and blower assembly circuit short circuit to ground. • Internal motor failure. • Climate controlled seat module (CCS) failure.	Check the passenger seat backrest heater and blower assembly circuit. Refer to the electrical guides. Install a new heater and blower assembly if necessary. Clear the DTCs and test for normal operation. Check the CCS ground supply and relay circuits. Refer to the electrical guides. Rectify as necessary. Clear the DTC. Cycle the ignition and retest. If the DTC resets suspect the control module. Refer to the

www.JagDocs.com

			warranty policy and procedures manual if a module is suspect.
B114F11	Driver seat cushion blower speed sensor	• The driver seat cushion seat heater and blower assembly circuit short circuit to ground. • Internal motor failure. • Climate controlled seat module (CCS) failure.	Check the driver seat cushion heater and blower assembly circuit. Refer to the electrical guides. Install a new heater and blower assembly if necessary. Clear the DTCs and test for normal operation. Check the CCS ground supply and relay circuits. Refer to the electrical guides. Rectify as necessary. Clear the DTC. Cycle the ignition and retest. If the DTC resets suspect the control module. Refer to the warranty policy and procedures manual if a module is suspect.
B114F12	Driver seat cushion blower speed sensor	• The driver seat cushion seat heater and blower assembly circuit short circuit to ground. • Internal motor failure. • Climate controlled seat module (CCS) failure.	Check the driver seat cushion heater and blower assembly circuit. Refer to the electrical guides. Install a new heater and blower assembly if necessary. Clear the DTCs and test for normal operation. Check the CCS ground supply and relay circuits. Refer to the electrical guides. Rectify as necessary. Clear the DTC. Cycle the ignition and retest. If the DTC resets suspect the control module. Refer to the warranty policy and procedures manual if a module is suspect.
B115011	Driver seat back blower speed sensor	• The driver seat backrest seat heater and blower assembly circuit short circuit to ground. • Internal motor failure. • Climate controlled seat module (CCS) failure.	Check the driver seat backrest heater and blower assembly circuit. Refer to the electrical guides. Install a new heater and blower assembly if necessary. Clear the DTCs and test for normal operation. Check the CCS ground supply and relay circuits. Refer to the electrical guides. Rectify as necessary. Clear the DTC. Cycle the ignition and retest. If

			the DTC resets suspect the control module. Refer to the warranty policy and procedures manual if a module is suspect.
B115012	Driver seat back blower speed sensor	• The driver seat backrest seat heater and blower assembly circuit short circuit to ground. • Internal motor failure. • Climate controlled seat module (CCS) failure.	Check the driver seat backrest heater and blower assembly circuit. Refer to the electrical guides. Install a new heater and blower assembly if necessary. Clear the DTCs and test for normal operation. Check the CCS ground supply and relay circuits. Refer to the electrical guides. Rectify as necessary. Clear the DTC. Cycle the ignition and retest. If the DTC resets suspect the control module. Refer to the warranty policy and procedures manual if a module is suspect.
B115113	Passenger seat cushion	• Passenger seat cushion temperature sensor - circuit open	Refer to electrical circuit diagrams, notes and check passenger seat cushion temperature sensor for circuit open
B115198	Passenger seat cushion	• Passenger seat cushion over temperature fault. • Possible restricted duct.	Carry out any pinpoint tests associated with this DTC using the manufacturer approved diagnostic system. Check the passenger seat cushion, make sure nothing is restricting the seat heater and blower assembly blower duct. Rectify as necessary. Clear the DTCs and test for normal operation.
B115213	Passenger seat back	• Passenger seat back temperature sensor - circuit open	Refer to electrical circuit diagrams, notes and check passenger seat back temperature sensor for circuit open
B115298	Passenger seat back	• Passenger seat back over temperature fault. • Possible restricted duct.	Carry out any pinpoint tests associated with this DTC using the manufacturer approved diagnostic system. Check the passenger seat

www.JagDocs.com

			backrest, make sure nothing is restricting the seat heater and blower assembly blower duct. Rectify as necessary. Clear the DTCs and test for normal operation.
B115313	Driver seat cushion	• Driver seat cushion temperature sensor - circuit open	Refer to electrical circuit diagrams, notes and check driver seat cushion temperature sensor for circuit open
B115398	Driver seat cushion	• Driver seat cushion over temperature fault. • Possible restricted duct.	Carry out any pinpoint tests associated with this DTC using the manufacturer approved diagnostic system. Check the driver seat cushion, make sure nothing is restricting the seat heater and blower assembly blower duct. Rectify as necessary. Clear the DTCs and test for normal operation.
B115413	Driver seat back	• Driver seat back temperature sensor - circuit open	Refer to electrical circuit diagrams, notes and check driver seat back temperature sensor for circuit open
B115498	Driver seat back	• Driver seat back over temperature fault. • Possible restricted duct.	Carry out any pinpoint tests associated with this DTC using the manufacturer approved diagnostic system. Check the driver seat backrest, make sure nothing is restricting the seat heater and blower assembly blower duct. Rectify as necessary. Clear the DTCs and test for normal operation.
B11557A	Passenger seat	• Possible restricted blower duct on the passenger cushion heater and blower assembly. • Possible restricted blower duct on the passenger backrest heater and blower assembly. • Possible blower duct	Check the passenger side front seat and make sure the blower duct is not adrift from the heater and blower assembly. Make sure nothing is restricting the seat heater and blower assembly blower duct check the exhaust outlet of each heater and blower assembly. Rectify as necessary. Clear the DTCs and

		adrift.	test for normal operation.
B11567A	Driver seat	• Possible restricted blower duct on the driver cushion heater and blower assembly. • Possible restricted blower duct on the driver backrest heater and blower assembly. • Possible blower duct adrift.	Check the driver side front seat and make sure the blower duct is not adrift from the heater and blower assembly. Make sure nothing is restricting the seat heater and blower assembly blower duct check the exhaust outlet of each heater and blower assembly. Rectify as necessary. Clear the DTCs and test for normal operation.
B115713	Blower control B	• The passenger seat cushion heater and blower assembly circuit open circuit. • The passenger seat backrest heater and blower assembly circuit open circuit. • Climate controlled seat module (CCS) failure.	Check the passenger seat heater and blower assembly for the cushion and backrest circuit. Refer to the electrical guides. Install a new heater and blower assembly if necessary. Clear the DTCs and test for normal operation. Check the CCS ground supply and relay circuits. Refer to the electrical guides. Rectify as necessary. Clear the DTC. Cycle the ignition and retest. If the DTC resets suspect the control module. Refer to the warranty policy and procedures manual if a module is suspect.
B11574B	Blower control B	• The passenger seat cushion heater and blower assembly circuit short circuit to ground. • The passenger seat backrest heater and blower assembly circuit short circuit to ground. • Mechanical restriction in the heater and blower assembly housing. • Climate controlled seat module (CCS) failure.	Carry out any pinpoint tests associated with this DTC using the manufacturer approved diagnostic system. Check the passenger seat heater and blower assembly for the cushion and backrest circuit. Refer to the electrical guides. Install a new heater and blower assembly if necessary. Clear the DTCs and test for normal operation. Check the CCS ground supply and relay circuits. Refer to the electrical guides. Rectify as necessary. Clear the DTC. Cycle the ignition and retest. If

www.JagDocs.com

			the DTC resets suspect the control module. Refer to the warranty policy and procedures manual if a module is suspect.
B120813	Driver seat cushion temperature sensor	• The driver seat cushion heater and blower assembly circuit open circuit. • Climate controlled seat module (CCS) failure.	Check the drivers seat cushion heater and blower assembly circuit. Refer to the electrical guides. Install a new drivers seat heater and blower assembly if necessary. Clear the DTCs and test for normal operation. Check the CCS ground supply and relay circuits. Refer to the electrical guides. Rectify as necessary. Clear the DTC. Cycle the ignition and retest. If the DTC resets suspect the control module. Refer to the warranty policy and procedures manual if a module is suspect.
B120913	Driver seat back temperature sensor	• The driver seat backrest heater and blower assembly circuit open circuit. • Climate controlled seat module (CCS) failure.	Check the drivers seat backrest heater and blower assembly circuit. Refer to the electrical guides. Install a new drivers seat heater and blower assembly if necessary. Clear the DTCs and test for normal operation. Check the CCS ground supply and relay circuits. Refer to the electrical guides. Rectify as necessary. Clear the DTC. Cycle the ignition and retest. If the DTC resets suspect the control module. Refer to the warranty policy and procedures manual if a module is suspect.
B120A13	Passenger seat cushion temperature sensor	• Passenger seat cushion seat heater and blower assembly circuit open circuit. • Climate controlled seat module (CCS) failure.	Check the passenger seat cushion heater and blower assembly circuit. Refer to the electrical guides. Install a new passenger seat heater and blower assembly if necessary. Clear the DTCs and test for normal operation. Check the CCS ground supply and relay circuits. Refer to the electrical

			guides. Rectify as necessary. Clear the DTC. Cycle the ignition and retest. If the DTC resets suspect the control module. Refer to the warranty policy and procedures manual if a module is suspect.
B120B13	Passenger seat back temperature sensor	• Passenger seat backrest front seat heater and blower assembly circuit open circuit. • Passenger seat backrest over temperature fault. • Climate controlled seat module (CCS) failure.	Check the passenger seat backrest heater and blower assembly circuit. Refer to the electrical guides. Install a new front seat heater and blower assembly if necessary. Clear the DTCs and test for normal operation. Check the CCS ground supply and relay circuits. Refer to the electrical guides. Rectify as necessary. Clear the DTC. Cycle the ignition and retest. If the DTC resets suspect the control module. Refer to the warranty policy and procedures manual if a module is suspect.
U000188	High speed controller area network (CAN) communication bus	• CAN signal fault. • Climate controlled seat module (CCS) failure.	Check the CAN circuits. Refer to the electrical guides. Rectify as necessary. Clear the DTCs and test for normal operation. Check the CCS ground supply and relay circuits. Refer to the electrical guides. Rectify as necessary. Clear the DTC. Cycle the ignition and retest. If the DTC resets suspect the control module. Refer to the warranty policy and procedures manual if a module is suspect.
U014000	Lost Communication With Body Control Module	• CAN Bus circuit fault - body control module (Front Smart Junction Box)	Check other modules for stored DTC's. Refer to electrical circuit diagrams, notes and check CAN Bus circuit to body control module (Front Smart Junction Box) for fault.
U014200	Lost Communication With Body Control Module "B"	• CAN Bus circuit fault - body control module (B) (Rear Smart	Check other modules for stored DTC's. Refer to electrical circuit diagrams, notes and check CAN Bus

www.JagDocs.com

		Junction Box)	circuit to body control module (B) (Rear Smart Junction Box) for fault.
U015500	Lost Communication With Instrument Panel Cluster (IPC) Control Module	• CAN Bus circuit fault - instrument panel cluster	Check other modules for stored DTC's. Refer to electrical circuit diagrams, notes and check CAN Bus circuit to instrument panel cluster for fault.
U015600	Lost Communication With Information Centre "A"	• CAN Bus circuit fault - Information Centre (Infotainment Control Module)	Check other modules for stored DTC's. Refer to electrical circuit diagrams, notes and check CAN Bus circuit to information centre "A" (Infotainment Control Module) for fault.
U030000	Internal Control Module Software Incompatibility	• Configuration fault	The module can be configured using the new module procedure.
U040100	Invalid Data Received From ECM/PCM	• CAN Bus circuit fault - engine control module	Check other modules for stored DTC's. Refer to electrical circuit diagrams, notes and check CAN Bus circuit to engine control module for fault.
U210100	Control module configuration incompatible	• Module not Configured. • Incorrect module fitted.	Check the control module power supply and relay circuits. Refer to the electrical guides. Rectify as necessary. Clear the DTC. Cycle the ignition and retest. If the DTC resets suspect the control module. Refer to the warranty policy and procedures manual if a module is suspect.
U210538	Switch pack signal A	• Possible open circuit. • Short circuit to power. • Pulse width modulated (PWM) signal from switchpack to climate controlled seat module (CCSM) is potentially corrupt.	Carry out any pinpoint tests associated with this DTC using the manufacturer approved diagnostic system. Check the driver PWM signals and circuits. Refer to the electrical guides. Rectify as necessary. Clear the DTCs and test for normal operation.
U210638	Switch pack signal B	• Possible open circuit. • Short circuit to power. • Pulse width modulated (PWM) signal from	Carry out any pinpoint tests associated with this DTC using the manufacturer approved diagnostic system.

		switchpack to climate controlled seat module (CCSM) is potentially corrupt.	Check the passenger PWM signals and circuits. Refer to the electrical guides. Rectify as necessary. Clear the DTCs and test for normal operation.
U300004	Control module	• Climate controlled seat module (CCSM) failure.	Check the control module power supply and relay circuits. Refer to the electrical guides. Rectify as necessary. Clear the DTC. Cycle the ignition and retest. If the DTC resets suspect the control module. Refer to the warranty policy and procedures manual if a module is suspect.
U300362	Battery Voltage	• Climate controlled seat module power supply circuit fault	Refer to electrical circuit diagrams, notes and check climate controlled seat module power and ground circuit for fault.

Pinpoint Tests

PINPOINT TEST G1014305p1 : Front seat fore/aft movement not functioning

G1014305t1 : Check for front seat forward-rearward seat motor operation

1.

WARNING: Before work is carried out, make the air bag supplemental restraint system safe. For additional information, refer to Standard Workshop Practices section of workshop manual.

Set ignition status to ' ON'. 2. From the switch pack, operate the front seat forward-rearward seat motor switch and listen for evidence of the motor operating.

- **Does the motor operate?**

-> Yes
GO to Pinpoint Test G1014305t2.

www.JagDocs.com

-> No
GO to Pinpoint Test G1014305t3.

G1014305t2 : Check front seat forward-rearward seat motor drive bar

1. Check front seat drive bar for correct installation and condition

- **Is the front seat drive bar correctly installed and in a serviceable condition?**

-> Yes
Re-check for correct front seat forward-rearward movement. Remove seat to allow for further investigation if required.

-> No
Correctly install front seat forward-rearward seat motor drive bar, or replace if required.

G1014305t3 : Check front seat forward-rearward seat motor

1. Set ignition status to 'OFF'. 2. Disconnect front seat forward-rearward seat motor connector. 3. **NOTE:**

> It may be that the seat has been driven to the limit of travel along the relevant axis, and when the link harness is connected, the seat will remain in the same position. If this is the case, a jolt may be felt from the motor. To confirm the motor operation, swap the link harness to alternate motor pin connections and the seat should travel in the opposite direction.

Using a locally made fused link harness and power supply, connect power and ground to forward-rearward seat motor.

Battery positive terminal	Battery negative terminal
forward-rearward seat motor pin 1	forward-rearward seat motor pin 2

- **Does the motor operate?**

-> Yes
Using manufacturer approved diagnostic system, check for related Diagnostic Trouble Codes (DTCs) and carry out the repair operations specified. Alternatively, refer to the electrical circuit diagrams and check front seat forward-rearward seat motor circuits.

-> No
Replace front seat forward-rearward seat motor. Refer to relevant section of workshop manual.

PINPOINT TEST G1014305p2 : Front seat excessive forward-rearward free play

G1014305t4 : Check front seat for excessive forward-rearward free play

1.

WARNING: Before work is carried out, make the air bag supplemental restraint system safe. For additional information, refer to Standard Workshop Practices section of workshop manual.

Check all accessible front seat frame fixings are installed and to the correct torque.

- **Are all accessible front seat frame fixings installed and to the correct torque?**

-> Yes
GO to Pinpoint Test G1014305t5.

-> No
Install and tighten all accessible front seat frame fixings to correct torque and re-check for excessive free play.

G1014305t5 : Compare the front seat forward-rearward free play against a similar seat

1. Compare the front seat forward-rearward free play against a similar seat.

- **Is the front seat forward-rearward free play excessive when compared to a similar seat?**

-> Yes
GO to Pinpoint Test G1014305t6.

-> No
The front seat frame is operating correctly. Submit Electronic Product Quality Report (EPQR) with any further query.

G1014305t6 : Check remaining front seat frame fixings

1. Remove front seat and/or any seat covers/trim to allow access to check remaining front seat frame fixings are all installed and to the correct torque.

www.JagDocs.com

- **Are all remaining front seat frame fixings installed and to the correct torque?**

-> Yes
Replace front seat frame. Refer to the relevant section of the workshop manual.

-> No
Install and tighten all remaining front seat frame fixings to correct torque and re-check for excessive free play.

PINPOINT TEST G1014305p3 : Front seat forward-rearward movement noisy

G1014305t7 : Compare front seat forward-rearward movement noise to other front seat

1.

WARNING: Before work is carried out, make the air bag supplemental restraint system safe. For additional information, refer to Standard Workshop Practices section of workshop manual.

Compare the front seat forward-rearward movement noise to other front seat.

- **Is the front seat forward-rearward movement noise excessive when compared to other front seat?**

-> Yes
GO to Pinpoint Test G1014305t8.

-> No
GO to Pinpoint Test G1014305t9.

G1014305t8 : Compare front seat forward-rearward movement noise to front seat in other vehicle

1. Compare the front seat forward-rearward movement noise to front seat in other vehicle.

- **Is the front seat forward-rearward movement noise excessive when compared to front seat in other vehicle?**

-> Yes
GO to Pinpoint Test G1014305t9.

-> No
The front seat frame is operating correctly. Submit Electronic Product Quality Report (EPQR) with any further query.

G1014305t9 : Check for debris obstructing seat movement

1. Check for debris obstructing seat movement.

- **Is the front seat forward-rearward movement obstructed by debris?**

-> Yes
Remove obstruction and re-check for noisy forward-rearward seat movement.

-> No
GO to Pinpoint Test G1014305t10.

G1014305t10 : Re-align front seat frame

1. Loosen front seat frame fixings. 2. Set ignition status to 'ON'. 3. Using the front seat switch pack drive the front seat fully forward then fully rearward. 4. Tighten front seat frame fixings to the correct torque. 5. Re-check for noisy seat movement.

- **Is the front seat forward-rearward movement still noisy?**

-> Yes
GO to Pinpoint Test G1014305t11.

-> No
The front seat frame is now operating correctly.

G1014305t11 : Check front seat forward-rearward seat motor drive bar

1. Check front seat drive bar for correct installation and condition.

- **Is the front seat drive bar correctly installed and in a serviceable condition?**

-> Yes
Replace front seat forward-rearward seat motor. Refer to relevant section of workshop manual.

-> No
Correctly install front seat forward-rearward seat motor drive bar, or replace if required.

www.JagDocs.com

PINPOINT TEST G1014305p4 : Front seat height, tilt and/or seat extension motor movement not functioning

G1014305t12 : Check front seat height, tilt or extension motor

1. Set ignition status to ' OFF'. 2. Disconnect front seat height, tilt or extension motor connector. 3. **NOTE:**

> It may be that the seat has been driven to the limit of travel along the relevant axis, and when the link harness is connected, the seat will remain in the same position. If this is the case, a jolt may be felt from the motor. To confirm the motor operation, swap the link harness to alternate motor pin connections and the seat should travel in the opposite direction.

Using a locally made fused link harness and power supply, connect power and ground to relevant motor.

Battery positive terminal	Battery negative terminal
motor pin 1	motor pin 2

- **Does the motor operate?**

-> Yes
Using manufacturer approved diagnostic system, check for related Diagnostic Trouble Codes (DTCs) and carry out the repair operations specified. Alternatively, refer to the electrical circuit diagrams and check relevant motor circuits.

-> No
Replace the relevant motor. Refer to relevant section of workshop manual.

PINPOINT TEST G1014305p5 : Front seat height, tilt and/or extension movement noisy

G1014305t13 : Compare the height, tilt or extension movement noise with the other front seat

1.

WARNING: Before work is carried out, make the air bag supplemental restraint system safe. For additional information, refer to Standard Workshop Practices section of workshop manual.

Compare the front seat movement noise to other front seat.

- **Is the front seat height, tilt or extension movement noise excessive when compared to other front seat?**

-> Yes
GO to Pinpoint Test G1014305t14.

-> No
GO to Pinpoint Test G1014305t15.

G1014305t14 : Compare front seat height, tilt or extension movement noise to front seat in other vehicle

1. Compare the front seat height, tilt or extension movement noise to front seat in other vehicle.

- **Is the front seat height, tilt or extension movement noise excessive when compared to front seat in other vehicle?**

-> Yes
GO to Pinpoint Test G1014305t15.

-> No
The front seat frame is operating correctly. Submit Electronic Product Quality Report (EPQR) with any further query.

G1014305t15 : Check for debris obstructing seat movement

1. Check for debris obstructing seat movement.

- **Is the front seat height, tilt or extension movement obstructed by debris?**

-> Yes
Remove obstruction and re-check for noisy height, tilt or extension seat movement. If still noisy GO to Pinpoint Test G1014305t16.

-> No
GO to Pinpoint Test G1014305t16.

www.JagDocs.com

G1014305t16 : Check for height, tilt or extension movement mechanism lubrication

1. Check and apply manufacturer approved lubrication to seat height, tilt or extension movement mechanism and re-test for noise.

- **Is the front seat height, tilt or extension noise still apparent?**

-> Yes
Replace the relevant motor. Refer to relevant section of workshop manual.

-> No
The front seat height, tilt or extension motor is operating correctly.

PINPOINT TEST G1014305p6 : Heater And Cooling - Inoperative

G1014305t17 : Check For Stored DTC

1. Check the Climate Controlled Seat Module for stored DTC's.

- **Are there any stored DTC's?**

-> Yes
For information on stored DTC's refer to the information in the Climate Controlled Seat Module DTC index.

-> No
GO to Pinpoint Test G1014305t18.

G1014305t18 : Driver Or Front Passenger Seat Backrest Climate Assembly - Functionality Check

1. Check the heat and cool function of the backrest.

- **Does the backrest heat and cool function operate correctly?**

-> Yes
GO to Pinpoint Test G1014305t19.

-> No
GO to Pinpoint Test G1014305t21.

G1014305t19 : Driver Or Front Passenger Seat Cushion Climate Assembly - Functionality Check

1. Check the heat and cool function at the cushion.

- **Does the cushion heat and cool function operate correctly?**

-> Yes
If there are no faults evident, verify the customer concern.

-> No
GO to Pinpoint Test G1014305t20.

G1014305t20 : Cushion Bellows

1. Check the condition of the bellows.

- **Are the bellows obstructed, have they collapsed?**

-> Yes
Remove the obstruction or replace collapsed bellows.

-> No
Suspect an internal fault with the Seat Climate Assembly. Replace as required, refer to the Warranty Policy and Procedures manual (section B1.2). Prior to installing a new component.

G1014305t21 : Backrest Bellows Duct

1. Check the security of the bellows duct.

- **Is the bellows duct correctly installed?**

-> Yes
GO to Pinpoint Test G1014305t22.

-> No
Securely reconnect the bellows duct.

G1014305t22 : Backrest Bellows

1. Check the security of the bellows.

- **Are the bellows obstructed, have they collapsed?**

-> Yes
Remove the obstruction or replace collapsed bellows.

www.JagDocs.com

-> No
Suspect an internal fault with the Seat Climate Assembly. Replace as required, refer to the Warranty Policy and Procedures manual (section B1.2). Prior to installing a new component. Follow the link below to check operation of the Driver or Front Passenger Seat Cushion Climate Assembly. GO to Pinpoint Test G1014305t18.

PINPOINT TEST G1014305p7 : Heating And Cooling - Noisy Operation

G1014305t23 : Check For Stored DTC

1. Check the Climate Controlled Seat Module for stored DTC's.

- **Are there any stored DTC's?**

-> Yes
For information on stored DTC's refer to the information in the Climate Controlled Seat Module DTC index.

-> No
GO to Pinpoint Test G1014305t24.

G1014305t24 : Driver Or Front Passenger Seat Backrest Climate Assembly - Noise

1. There is a known issue which effects a limited number of vehicles where under acceleration of the vehicle the occupant of seat can deform the suspension mat (snake wire) which then presses on the casing of the seat backrest climate assembly, this causes the casing to distort and the noise issue to occur. If contact has occurred there will be a witness mark on the casing. Carry out visual inspection of the seat backrest climate assembly that has been identified as noisy by the customer.

- **Is there a witness mark on the casing?**

-> Yes
Contact the local in market support for further information.

-> No
GO to Pinpoint Test G1014305t25.

G1014305t25 : Driver Or Front Passenger Seat Climate Assembly - Noise 2

1. Operate the heat and cool function of the seat. Listen for a 'WAH WAH' noise (the fan speeds up and slows down repeatedly).

- **Does the fan speeds up and slow down repeatedly?**

-> Yes
Confirm the latest Strategy and Calibration software is installed, using the manufacturer approved diagnostic system carry out the new Climate Controlled Seat Module application and update the Climate Controlled Seat Module software if required. If the noise is still evident after software update follow link below. GO to Pinpoint Test G1014305t26.

-> No
GO to Pinpoint Test G1014305t26.

G1014305t26 : Driver Or Front Passenger Seat Backrest Climate Assembly - Noise level Comparison

1. Compare the noise level of the suspect climate seat assembly to another climate seat assembly.

- **Is the noise level equal between the two seats?**

-> Yes
The noise level is standard and comparable to the design intent.

-> No
Suspect an internal fault with the Seat Climate Assembly. Replace as required, refer to the Warranty Policy and Procedures manual (section B1.2). Prior to installing a new component.

PINPOINT TEST G1014305p8 : Heating And Cooling - Poor Heat Or Cool Efficiency

G1014305t27 : Check For Stored DTC

1. Check the Climate Controlled Seat Module for stored DTC's.

- **Are there any stored DTC's?**

-> Yes
For information on stored DTC's refer to the information in the Climate Controlled Seat Module DTC index.

-> No
GO to Pinpoint Test G1014305t28.

www.JagDocs.com

G1014305t28 : Driver Or Front Passenger Seat Backrest Climate Assembly - Functionality Check

1. Check the heat and cool function of the backrest.

- **Does the backrest heat and cool function operate correctly?**

-> Yes
GO to Pinpoint Test G1014305t29.

-> No
GO to Pinpoint Test G1014305t31.

G1014305t29 : Driver Or Front Passenger Seat Cushion Climate Assembly - Functionality Check

1. Check the heat and cool function at the cushion.

- **Does the cushion heat and cool function operate correctly?**

-> Yes
If there are no faults evident, verify the customer concern.

-> No
GO to Pinpoint Test G1014305t30.

G1014305t30 : Cushion Bellows

1. Check the condition of the bellows.

- **Are the bellows obstructed, have they collapsed?**

-> Yes
Remove the obstruction or replace collapsed bellows.

-> No
GO to Pinpoint Test G1014305t33.

G1014305t31 : Backrest Bellows Duct

1. Check the security of the bellows duct.

- **Is the bellows duct correctly installed?**

-> Yes
GO to Pinpoint Test G1014305t32.

-> No
Securely reconnect the bellows duct.

G1014305t32 : Backrest Bellows

1. Check the security of the bellows.

- **Are the bellows obstructed, have they collapsed?**

-> Yes
Remove the obstruction or replace collapsed bellows.

-> No
Suspect an internal fault with the Seat Climate Assembly. Replace as required, refer to the Warranty Policy and Procedures manual (section B1.2). Prior to installing a new component. Follow the link below to check operation of the Driver or Front Passenger Seat Cushion Climate Assembly. GO to Pinpoint Test G1014305t28.

G1014305t33 : Driver Or Front Passenger Seat Backrest Climate Assembly -Efficiency Comparison

1. Compare the efficiency of the suspect climate seat assembly to another climate seat assembly.

- **Is the efficiency equal between the two seats?**

-> Yes
The efficiency is standard and comparable to the design intent.

-> No
Suspect an internal fault with the Seat Climate Assembly. Replace as required, refer to the Warranty Policy and Procedures manual (section B1.2). Prior to installing a new component.

PINPOINT TEST G1014305p9 : Heating And Cooling - Heat Or Cool Operation Slow

G1014305t34 : Check For Stored DTC

1. Check the Climate Controlled Seat Module for stored DTC's.

www.JagDocs.com

- **Are there any stored DTC's?**

-> Yes
For information on stored DTC's refer to the information in the Climate Controlled Seat Module DTC index.

-> No
GO to Pinpoint Test G1014305t35.

G1014305t35 : Driver Or Front Passenger Seat Backrest Climate Assembly - Functionality Check

1. Check the heat and cool function of the backrest?

- **Does the backrest heat and cool function operate correctly?**

-> Yes
GO to Pinpoint Test G1014305t36.

-> No
GO to Pinpoint Test G1014305t38.

G1014305t36 : Driver Or Front Passenger Seat Cushion Climate Assembly - Functionality Check

1. Check the heat and cool function at the cushion.

- **Does the cushion heat and cool function operate correctly?**

-> Yes
If there are no faults evident, verify the customer concern.

-> No
GO to Pinpoint Test G1014305t37.

G1014305t37 : Cushion Bellows

1. Check the condition of the bellows.

- **Are the bellows obstructed, have they collapsed?**

-> Yes
Remove the obstruction or replace collapsed bellows.

-> No
GO to Pinpoint Test G1014305t40.

G1014305t38 : Backrest Bellows Duct

1. Check the security of the bellows duct.

- **Is the bellows duct correctly installed?**

-> Yes
GO to Pinpoint Test G1014305t39.

-> No
Securely reconnect the bellows duct.

G1014305t39 : Backrest Bellows

1. Check the security of the bellows.

- **Are the bellows obstructed, have they collapsed?**

-> Yes
Remove the obstruction or replace collapsed bellows.

-> No
Suspect an internal fault with the Seat Climate Assembly. Replace as required, refer to the Warranty Policy and Procedures manual (section B1.2). Prior to installing a new component. Follow the link below to check operation of the Driver or Front Passenger Seat Cushion Climate Assembly. GO to Pinpoint Test G1014305t35.

G1014305t40 : Driver Or Front Passenger Seat Backrest Climate Assembly - Operation Comparison

1. Compare the operation of the suspect climate seat assembly to another climate seat assembly.

- **Is the operation equal between the two seats?**

-> Yes
The operation is standard and comparable to the design intent.

-> No
Suspect an internal fault with the Seat Climate Assembly. Replace as required, refer to the Warranty Policy and Procedures manual (section B1.2). Prior to installing a new component.

www.JagDocs.com

PINPOINT TEST G1014305p10 : Heating And Cooling - Intermittent Operation

G1014305t41 : Check For Stored DTC

1. Check the Climate Controlled Seat Module for stored DTC's.

- **Are there any stored DTC's?**

-> Yes
For information on stored DTC's refer to the information in the Climate Controlled Seat Module DTC index.

-> No
GO to Pinpoint Test G1014305t42.

G1014305t42 : Cable Connection Check

1. Identify from customer concern or stored DTC's which Seat Climate Assembly is operating intermittently and confirm the harness connector is fully connected.

- **Is the harness connector is fully connected?**

-> Yes
Suspect an internal fault with the Seat Climate Assembly. Replace as required, refer to the Warranty Policy and Procedures manual (section B1.2). Prior to installing a new component.

-> No
Disconnect the harness connector, inspect connector and terminals for damage. Repair or replace if required. Reconnect connector and check operation.

Front Seat (76.70.01)

Removal

1 . Remove the front safety belt access panel.

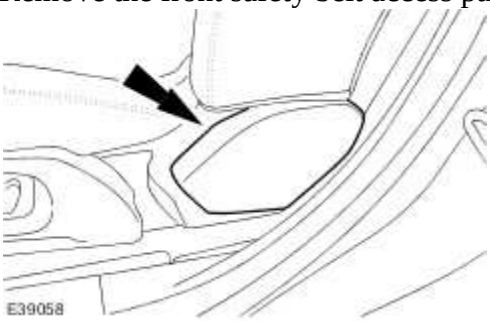

2 . Detach the front safety belt.

3 . Reposition the front seat fully forwards.

4 . Remove both seat runner trim covers.

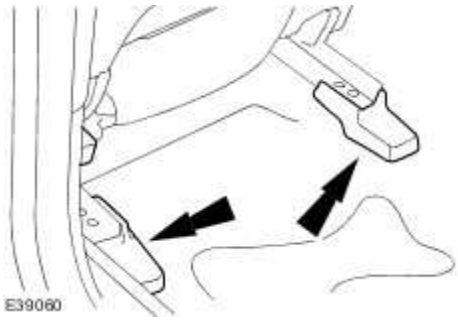

5 . Remove both seat runner rear retaining bolts.

www.JagDocs.com

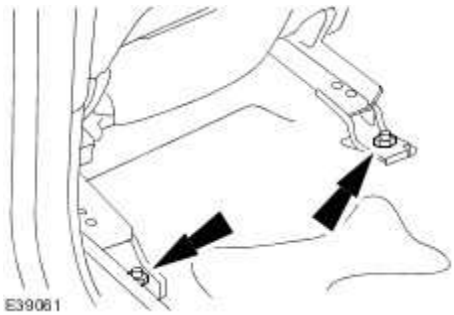

6 . Reposition the front seat fully rearwards.

7 . **NOTE:**

Left-hand shown, right-hand similar.

Remove the seat runner front retaining bolt.

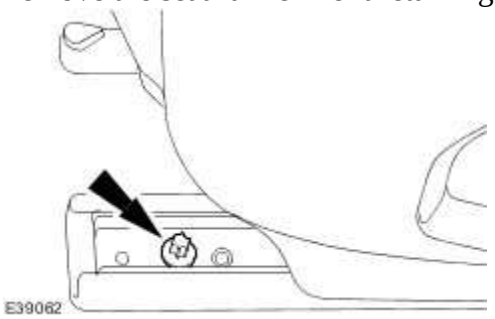

8 . Reposition the front seat 75 mm (2.95") forwards.

9 . Reposition the front seat head restraint and front seat base to the fully lowered position.

10 . Disconnect the battery ground cable. <<414-01>>

11 . Disconnect the front seat electrical connectors.

- Tilt the front seat rearwards to aid disconnecting the front seat electrical connectors.

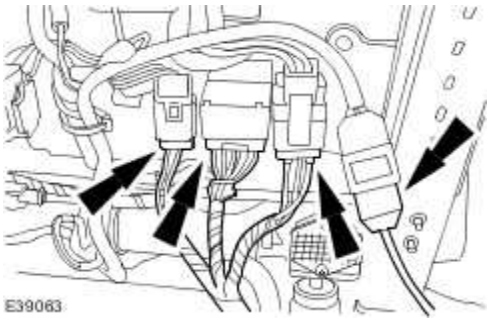

12 . **CAUTION: Care must be taken when removing the seat not to damage the seat or the trim panels. Failure to follow this instruction may result in damage to the vehicle.**

CAUTION: When lifting the seat care must be taken not to load or damage the seat runners located below the seat cushion. Failure to follow this instruction may result in damage to the vehicle.

Remove the front seat.

Installation

1 . **NOTE:**

Left-hand shown, right-hand similar.

To install, reverse the removal procedure.

Tighten to 47 Nm.

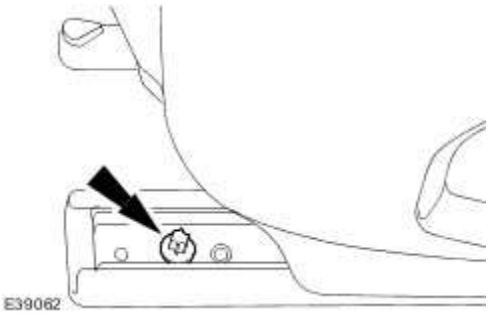

2 . Tighten to 47 Nm.

www.JagDocs.com

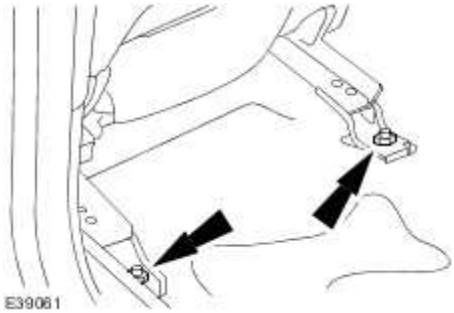

3 . Tighten to 35 Nm.

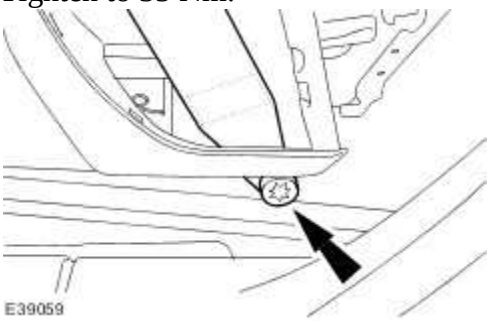

Front Seat Backrest - VIN Range: G00442->H18679 (76.70.06)

Removal

1. **WARNING: A restraints control module (RCM) only requires replacement if the system has incurred five separate deployments. At no time change the RCM for less than five separate deployments.**

   WARNING: Always wear safety glasses when repairing an air bag supplemental restraint system (SRS) vehicle and when handling an air bag module. Failure to follow this instruction may result in personal injury.

   WARNING: Carry a live air bag module with the air bag and trim cover pointed away from your body. This will reduce the risk of injury in the event of an accidental deployment. Failure to follow this instruction may result in personal injury.

   WARNING: Do not set a live air bag module down with the trim cover face down. Failure to follow this instruction may result in personal injury.

   WARNING: After deployment, the air bag surface can contain deposits of sodium hydroxide, a product of the gas generant combustion that is irritating to the skin. Wash your hands with soap and water afterwards. Failure to follow this instruction may result in personal injury.

   WARNING: Never probe the connectors on the air bag module. Doing so may result in air bag deployment. Failure to follow this instruction may result in personal injury.

   WARNING: Vehicle sensor orientation is critical for correct system operation. If a vehicle equipped with an air bag SRS is involved in a collision, inspect the sensor mounting bracket and wiring pigtail for deformation. If damaged, replace the sensor whether or not the air bag is deployed.

   WARNING: To avoid accidental deployment and possible personal injury,

www.JagDocs.com

the backup power supply must be depleted before repairing or replacing any air bag SRS components. To deplete the backup power supply energy, disconnect the battery ground cable and wait one minute. Failure to follow this instruction may result in personal injury.

NOTE:

When installing a new air bag module, a prepaid return postcard is provided with the replacement air bag module. The serial number for the new part and the vehicle identification number (VIN) must be recorded and sent to Jaguar Cars Ltd.

Remove the front seat head restraint.
For additional information, refer to Front Seat Head Restraint - Vehicles With: Head Restraint Video Display, VIN Range: G00442->H18679 (76.70.14)

2 . Remove the front seat head restraint retaining post.

1) Release the retaining tang.

2) Remove the front seat head restraint retaining post.

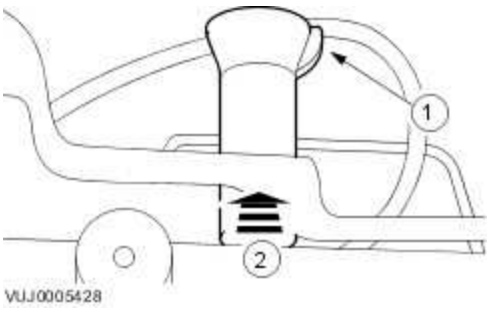

3 . Detach the front seat cushion cover.

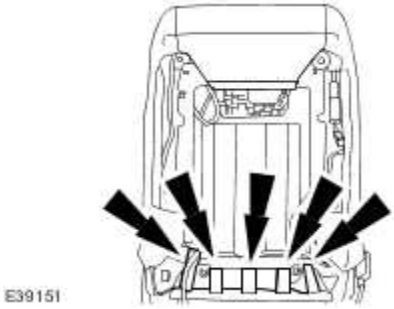

4 . Detach the front seat backrest cover.

5 . Remove the side air bag module retaining nuts.

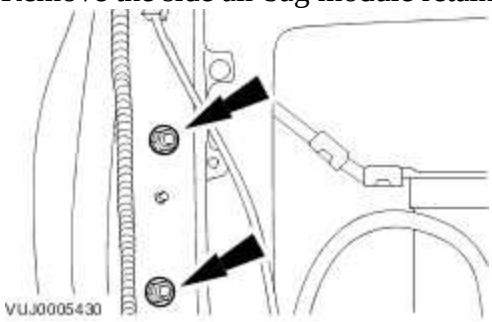

6 . Detach the front seat backrest cover and cushion.

1) Reposition the front seat backrest cover and cushion.

2) Detach the front seat backrest cover and cushion.

7 . Disconnect the side air bag module electrical connector.

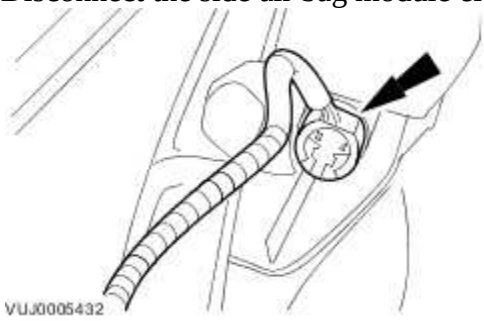

8 . Remove the side air bag module.

www.JagDocs.com

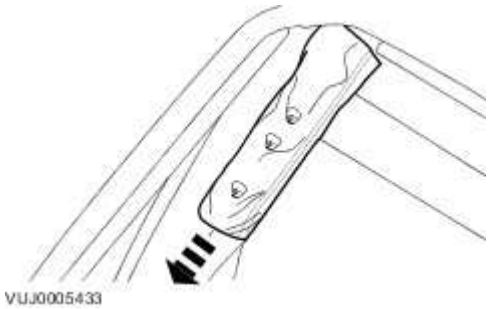

9 Remove the front seat backrest cover and cushion.

· Disconnect the front seat backrest cushion heater pad electrical connector.

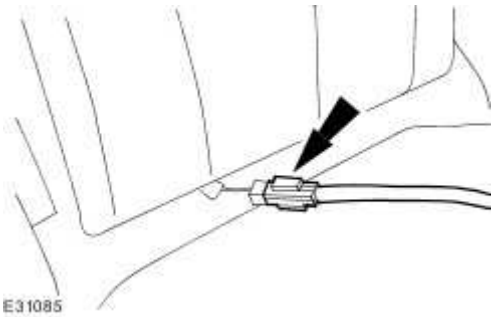

10 . Detach the front seat control switch and trim panel assembly.

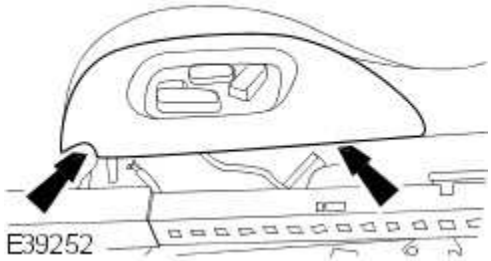

11 . Remove the front seat backrest outer trim panel.

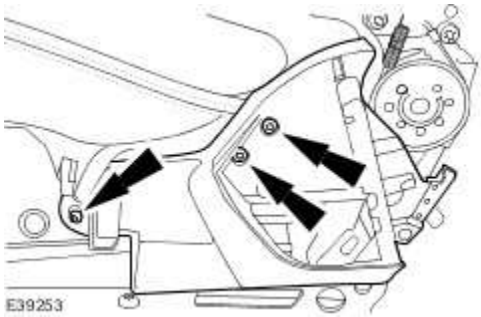

12 . **NOTE:**

Right-hand shown, left-hand similar.

Remove the front seat hinge front inner trim cover.

13 . Disconnect the front seat head restraint motor electrical connector.

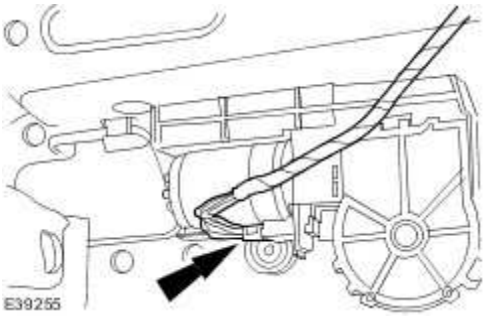

14 . Disconnect the front seat lumbar motor electrical connector.

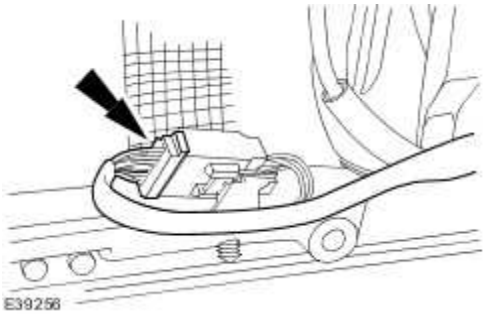

15 . Detach the front seat wiring harness.

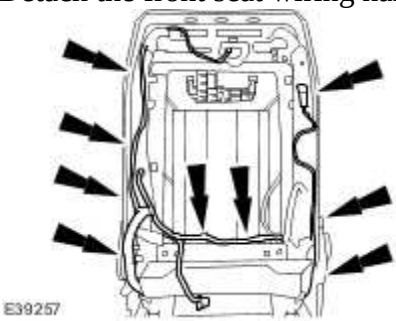

www.JagDocs.com

16 **NOTE:**

- Do not remove or carry out any repairs to the anti-whiplash system (AWS) on the front seat backrest. Left-hand shown, right-hand similar.

Remove the front seat backrest.

Remove the front seat backrest retaining bolts.

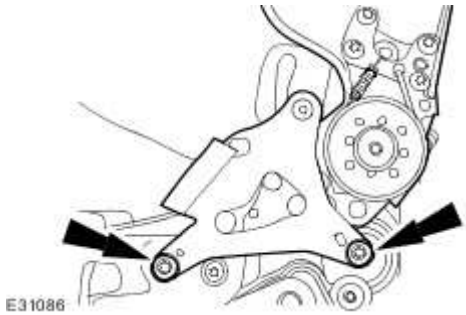

Installation

1 **NOTE:**

- Do not remove or carry out any repairs to the anti-whiplash system (AWS) on the front seat backrest.

NOTE:

In the event of the AWS operating, there are no serviceable components.

NOTE:

Left-hand shown, right-hand similar.

To install, reverse the removal procedure.

Tighten to 35 Nm.

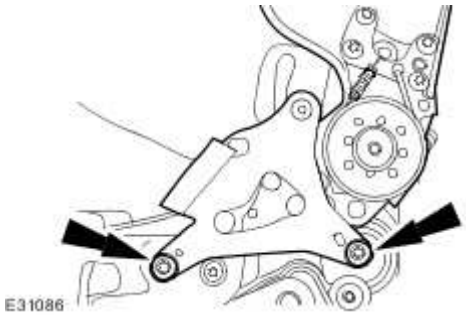

2 . Tighten to 7 Nm.

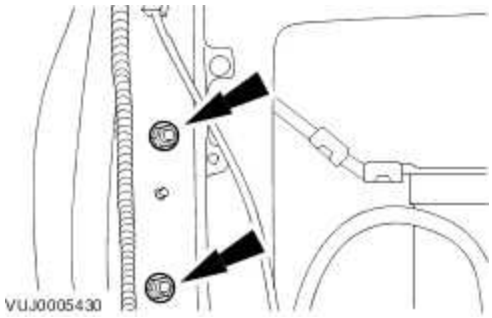

www.JagDocs.com

Front Seat Backrest - VIN Range: H18680->H99999 (76.70.06)

Removal

1. **WARNING: A restraints control module (RCM) only requires replacement if the system has incurred five separate deployments. At no time change the RCM for less than five separate deployments.**

   WARNING: Always wear safety glasses when repairing an air bag supplemental restraint system (SRS) vehicle and when handling an air bag module. Failure to follow this instruction may result in personal injury.

   WARNING: Carry a live air bag module with the air bag and trim cover pointed away from your body. This will reduce the risk of injury in the event of an accidental deployment. Failure to follow this instruction may result in personal injury.

   WARNING: Do not set a live air bag module down with the trim cover face down. Failure to follow this instruction may result in personal injury.

   WARNING: Never probe the connectors on the air bag module. Doing so may result in air bag deployment. Failure to follow this instruction may result in personal injury.

   WARNING: Vehicle sensor orientation is critical for correct system operation. If a vehicle equipped with an air bag SRS is involved in a collision, inspect the sensor mounting bracket and wiring pigtail for deformation. If damaged, replace the sensor whether or not the air bag is deployed.

   WARNING: To avoid accidental deployment and possible personal injury, the backup power supply must be depleted before repairing or replacing any air bag SRS components. To deplete the backup power supply energy, disconnect the battery ground cable and wait one minute. Failure to follow this instruction may result in personal injury.

NOTE:

When installing a new air bag module, a prepaid return postcard is provided with the replacement air bag module. The serial number for the new part and the vehicle identification number (VIN) must be recorded and sent to Jaguar Cars Ltd.

Remove the front seat head restraint.
For additional information, refer to Front Seat Head Restraint - Vehicles With: Head Restraint Video Display, VIN Range: H18680->H99999 (76.70.14)

2 . **NOTE:**

Apply suitable protective tape around the right-hand head restraint guide tube.

Using a suitable tool, remove the front seat head restraint guide sleeve.

3 . Detach the front seat backrest lower rear cover.

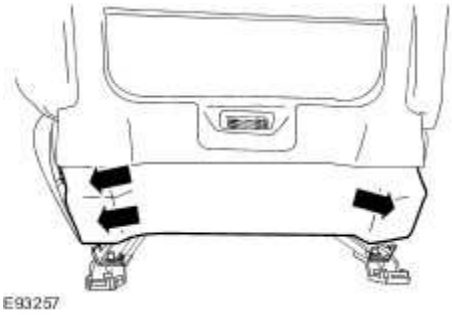

4 . Detach the front seat backrest cover from the front seat backrest frame.

5 . Release the wiring harness and the front seat backrest thermo-electric device duct.

www.JagDocs.com

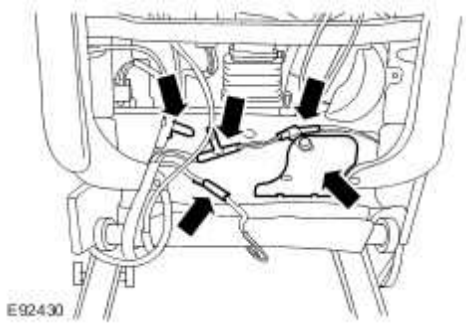

6 . Detach the front seat backrest cover velcro strap.

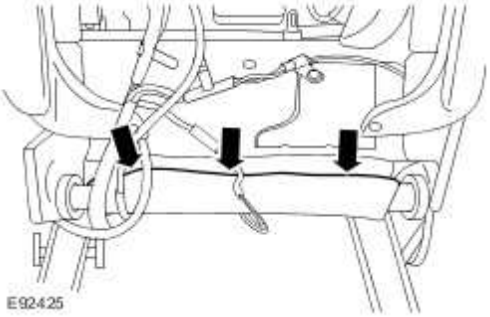

7 . Detach the tension straps from the front seat backrest.

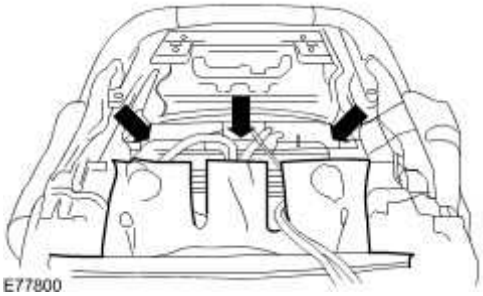

8 . Reposition the front seat backrest thermo-electric device.

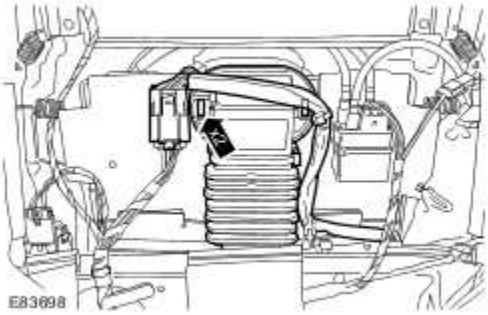

9 . Detach the front seat backrest thermo-electric device duct.

10 . Remove the front seat backrest thermo-electric device retaining bolts.

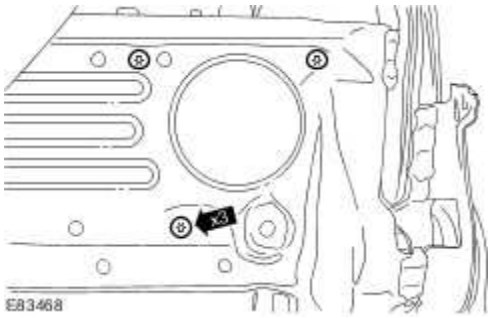

11 . Remove the front seat backrest thermo-electric device.

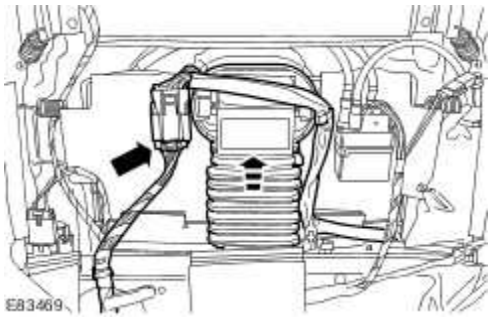

12 . Disconnect the side air bag module electrical connector.

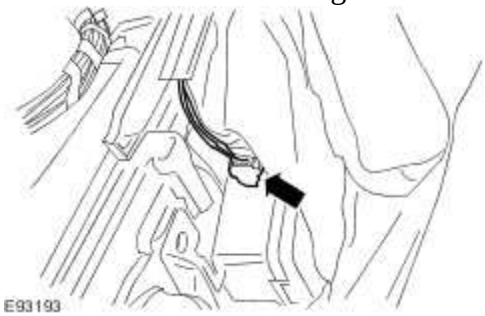

13 . Remove the side air bag module retaining nuts.

www.JagDocs.com

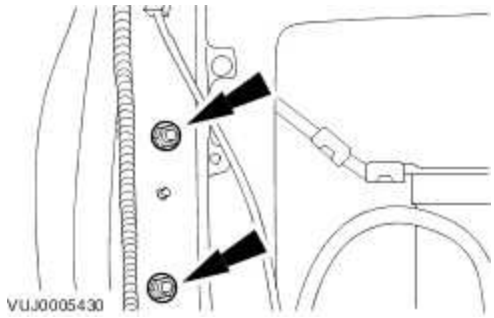

14 . Remove the side air bag module.

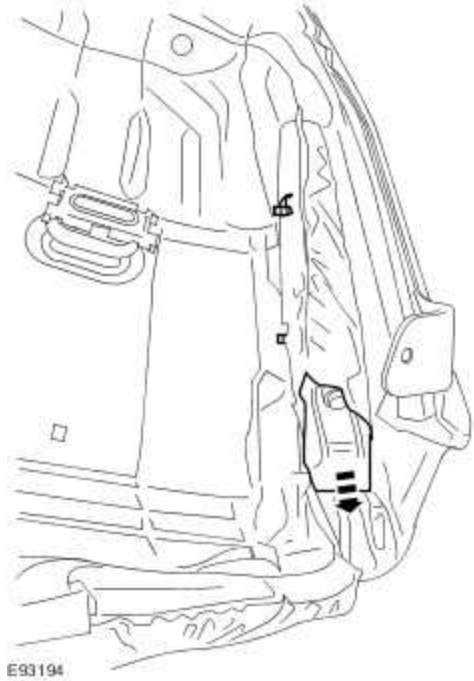

15 . Remove the front seat backrest cover and front seat backrest cushion.

16 . Disconnect the lumber assembly electrical connectors.

17 . Remove the lumbar assembly.

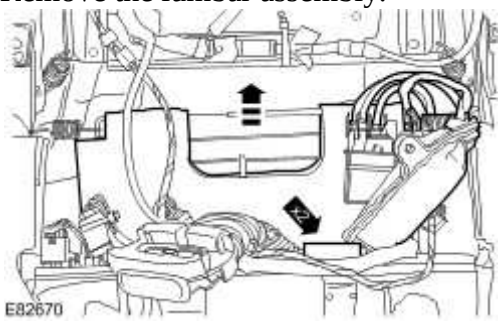

18 . Disconnect the front seat head restraint motor electrical connector.

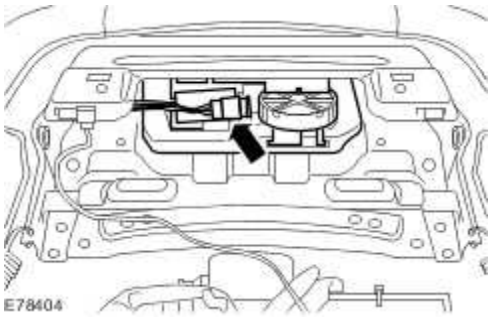

19 . Remove the front seat head restraint motor.

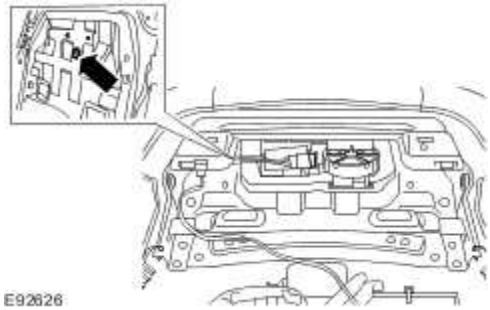

20 . Disconnect the front seat recliner motor electrical connector.

www.JagDocs.com

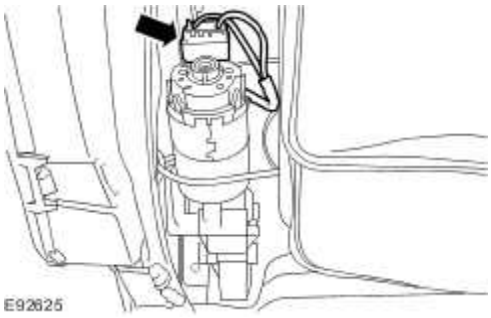

21 . Detach the wiring harness from the front seat backrest.

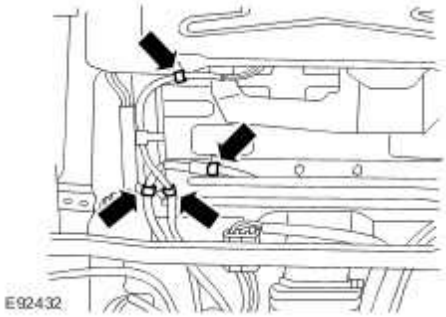

22 . Detach and reposition the front seat control switch and trim panel assembly.

- Remove the 2 retaining screws.

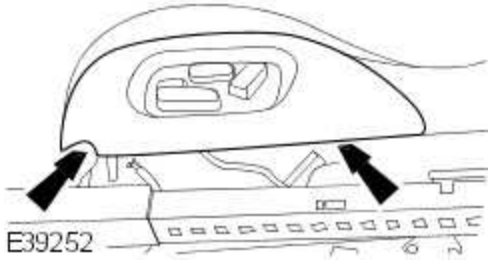

23 . Remove the front seat left-hand trim panel.

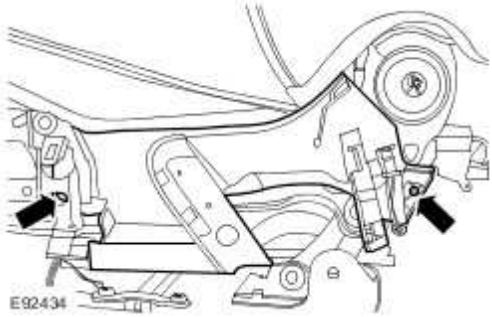

24 . **NOTE:**

Left-hand side shown, right-hand side similar.

Remove the front seat backrest.

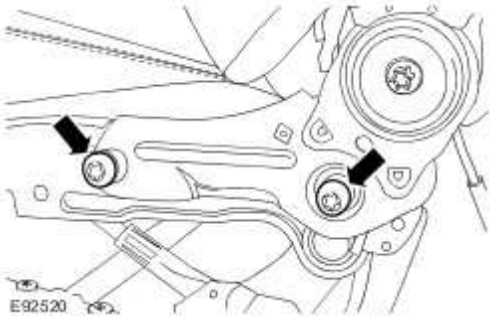

Installation

1 . **NOTE:**

Left-hand side shown, right-hand side similar.

To install, reverse the removal procedure.

Tighten to 35 Nm.

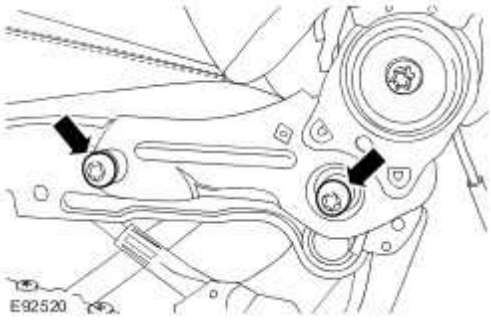

2 . Tighten to 7 Nm.

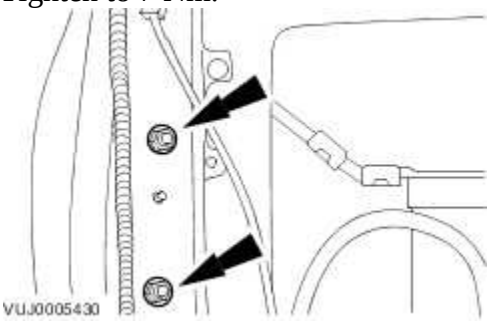

www.JagDocs.com

Front Seat Backrest Cover - VIN Range: G00442->H18679 (76.70.15)

Removal

1. **WARNING: A restraints control module (RCM) only requires replacement if the system has incurred five separate deployments. At no time change the RCM for less than five separate deployments.**

   WARNING: Always wear safety glasses when repairing an air bag supplemental restraint system (SRS) vehicle and when handling an air bag module. Failure to follow this instruction may result in personal injury.

   WARNING: Carry a live air bag module with the air bag and trim cover pointed away from your body. This will reduce the risk of injury in the event of an accidental deployment. Failure to follow this instruction may result in personal injury.

   WARNING: Do not set a live air bag module down with the trim cover face down. Failure to follow this instruction may result in personal injury.

   WARNING: After deployment, the air bag surface can contain deposits of sodium hydroxide, a product of the gas generant combustion that is irritating to the skin. Wash your hands with soap and water afterwards. Failure to follow this instruction may result in personal injury.

   WARNING: Never probe the connectors on the air bag module. Doing so may result in air bag deployment. Failure to follow this instruction may result in personal injury.

   WARNING: Vehicle sensor orientation is critical for correct system operation. If a vehicle equipped with an air bag SRS is involved in a collision, inspect the sensor mounting bracket and wiring pigtail for deformation. If damaged, replace the sensor whether or not the air bag is deployed.

   WARNING: To avoid accidental deployment and possible personal injury,

the backup power supply must be depleted before repairing or replacing any air bag SRS components. To deplete the backup power supply energy, disconnect the battery ground cable and wait one minute. Failure to follow this instruction may result in personal injury.

NOTE:

When installing a new air bag module, a prepaid return postcard is provided with the replacement air bag module. The serial number for the new part and the vehicle identification number (VIN) must be recorded and sent to Jaguar Cars Ltd.

Remove the front seat head restraint.
For additional information, refer to Front Seat Head Restraint - Vehicles With: Head Restraint Video Display, VIN Range: G00442->H18679 (76.70.14)

2 . Remove the front seat head restraint retaining post.

1) Release the retaining tang.

2) Remove the front seat head restraint retaining post.

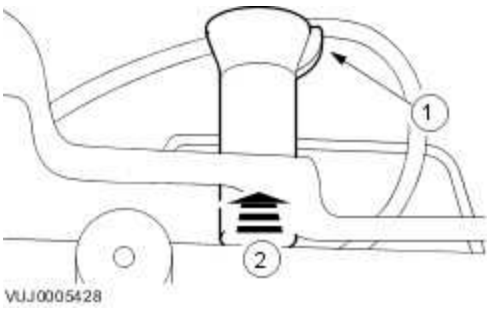

3 . Detach the front seat cushion cover.

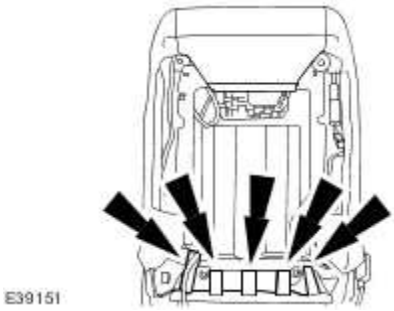

4 . Detach the front seat backrest cover.

www.JagDocs.com

5 . Remove the side air bag module retaining nuts.

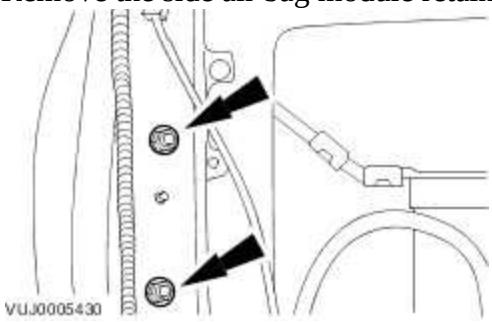

6 . Detach the seat backrest cover and cushion.

1) Reposition the seat backrest cover and cushion.

2) Detach the seat backrest cover and cushion.

7 . Disconnect the side air bag module electrical connector.

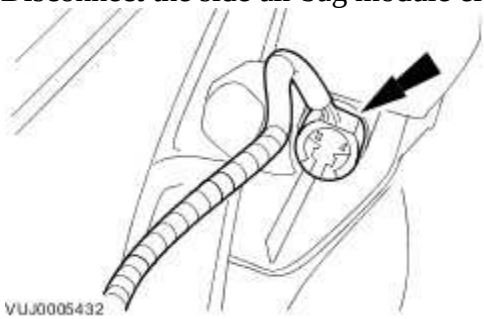

8 . Remove the side air bag module.

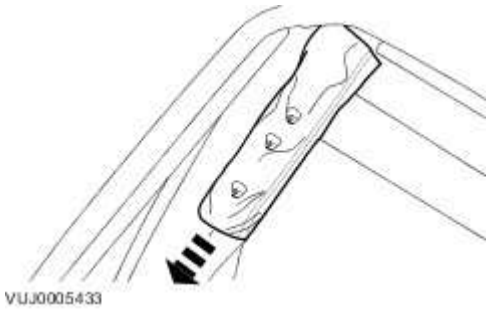

9 . Remove the front seat backrest cover and cushion.

- Disconnect the front seat cushion heater pad electrical connector.

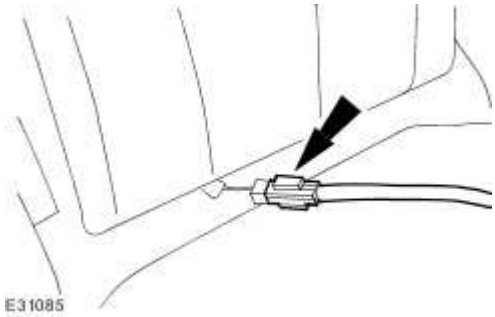

10 . Remove and discard the front seat backrest cover retaining clips.

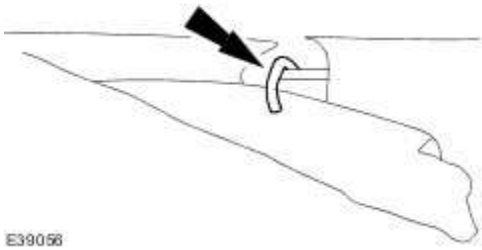

11 . Remove the front seat backrest cover.

www.JagDocs.com

Installation

1 . **NOTE:**

Install new front seat backrest cover retaining clips.

To install, reverse the removal procedure.

Tighten to 7 Nm.

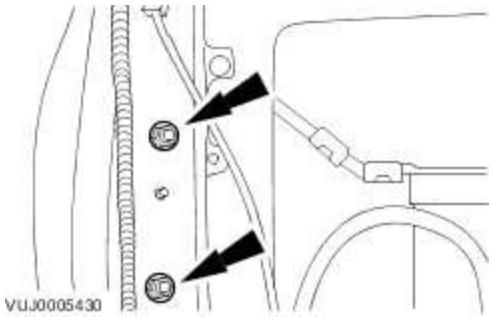

Front Seat Backrest Cover - VIN Range: H18680->H99999 (76.70.15)

Removal

1. **WARNING: A restraints control module (RCM) only requires replacement if the system has incurred five separate deployments. At no time change the RCM for less than five separate deployments.**

   WARNING: Always wear safety glasses when repairing an air bag supplemental restraint system (SRS) vehicle and when handling an air bag module. Failure to follow this instruction may result in personal injury.

   WARNING: Carry a live air bag module with the air bag and trim cover pointed away from your body. This will reduce the risk of injury in the event of an accidental deployment. Failure to follow this instruction may result in personal injury.

   WARNING: Do not set a live air bag module down with the trim cover face down. Failure to follow this instruction may result in personal injury.

   WARNING: After deployment, the air bag surface can contain deposits of sodium hydroxide, a product of the gas generant combustion that is irritating to the skin. Wash your hands with soap and water afterwards. Failure to follow this instruction may result in personal injury.

   WARNING: Never probe the connectors on the air bag module. Doing so may result in air bag deployment. Failure to follow this instruction may result in personal injury.

   WARNING: Vehicle sensor orientation is critical for correct system operation. If a vehicle equipped with an air bag SRS is involved in a collision, inspect the sensor mounting bracket and wiring pigtail for deformation. If damaged, replace the sensor whether or not the air bag is deployed.

   WARNING: To avoid accidental deployment and possible personal injury,

www.JagDocs.com

the backup power supply must be depleted before repairing or replacing any air bag SRS components. To deplete the backup power supply energy, disconnect the battery ground cable and wait one minute. Failure to follow this instruction may result in personal injury.

NOTE:

When installing a new air bag module, a prepaid return postcard is provided with the replacement air bag module. The serial number for the new part and the vehicle identification number (VIN) must be recorded and sent to Jaguar Cars Ltd.

Remove the front seat head restraint.
For additional information, refer to Front Seat Head Restraint - Vehicles With: Head Restraint Video Display, VIN Range: H18680->H99999 (76.70.14)

2 . **NOTE:**

Apply suitable protective tape around the right-hand head restraint guide tube.

Using a suitable tool, remove the restraint guide sleeve.

3 . Detach the front seat backrest lower rear cover.

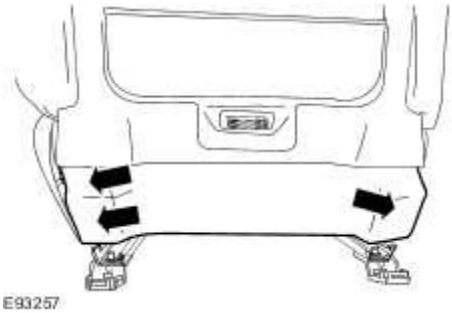

4 . Detach the front seat backrest cover from the front seat frame.

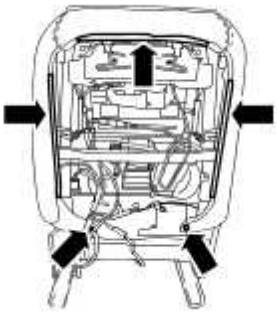

5 . Release the wiring harness and the front seat backrest thermo-electric device duct.

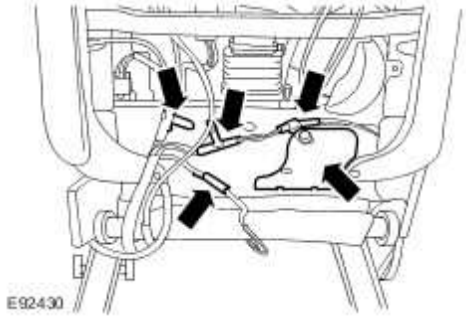

6 . Detach the seat backrest cover velcro strap.

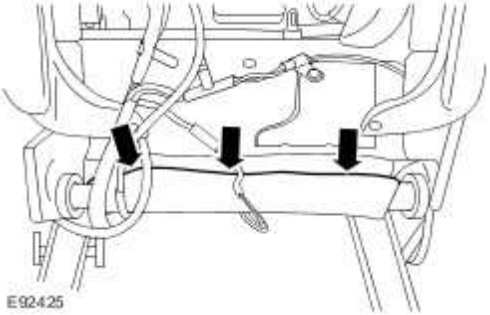

7 . Release the tension straps from the front seat backrest.

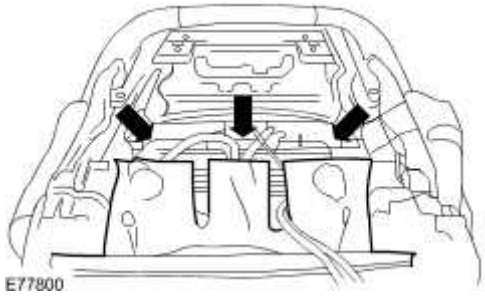

8 . Reposition the front seat backrest thermo-electric device.

www.JagDocs.com

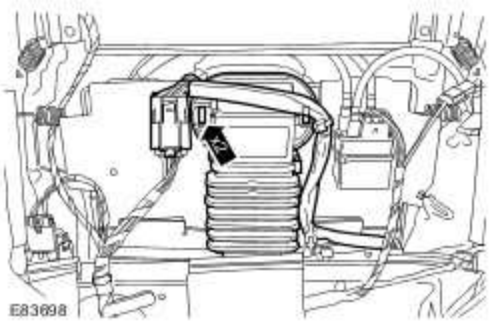

9 . Detach the front seat backrest thermo-electric device duct.

10 . Disconnect the side air bag module electrical connector.

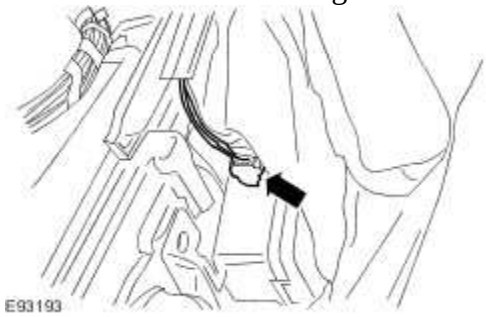

11 . Remove the side air bag module retaining nuts.

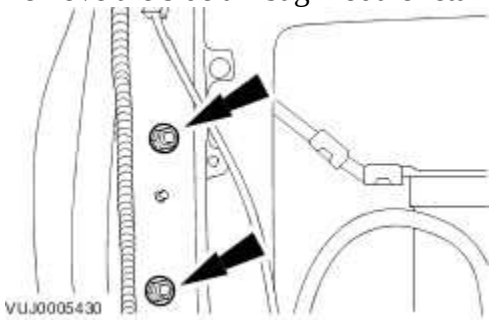

12 . Remove the side air bag module.

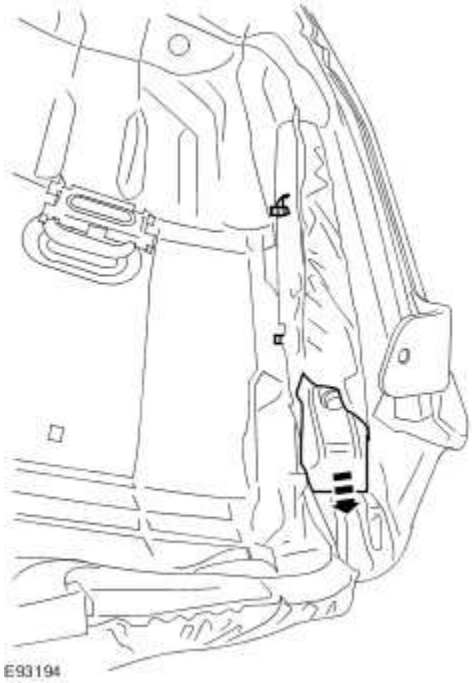

13 . Remove the front seat backrest cover and front seat backrest cushion.

14 . Remove and discard the front seat backrest cover hog rings.

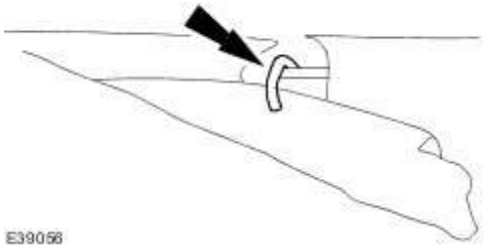

15 . Remove the front seat backrest cover.

www.JagDocs.com

Installation

1 . **NOTE:**

Install new front seat backrest cover hog rings.

To install, reverse the removal procedure.

Tighten to 7 Nm.

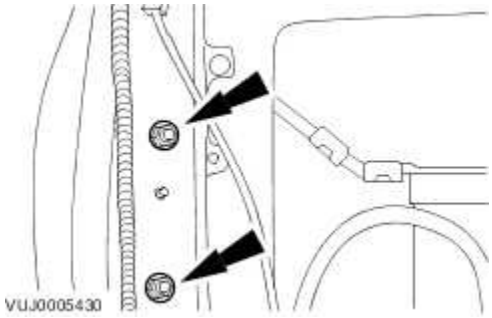

Front Seat Backrest Heater and Blower Assembly

Removal

1 Remove the front seat backrest rear cover.
. For additional information, refer to Front Seat Backrest Rear Cover - VIN Range: H18680->H99999 (76.70.03)

2 . Remove the front seat backrest thermo-electric device duct.

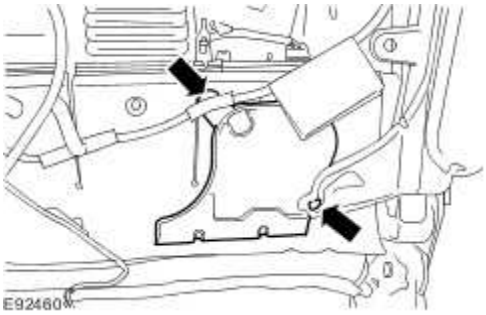

3 . Detach the front seat backrest cover tension strap.

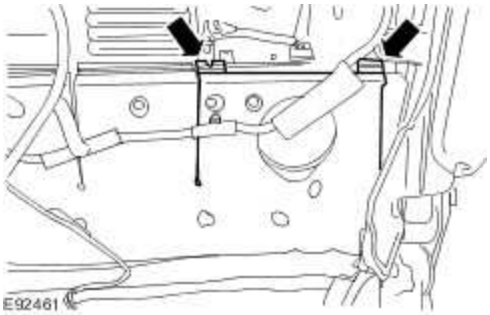

4 . Remove the front seat backrest thermo-electric device retaining bolts.

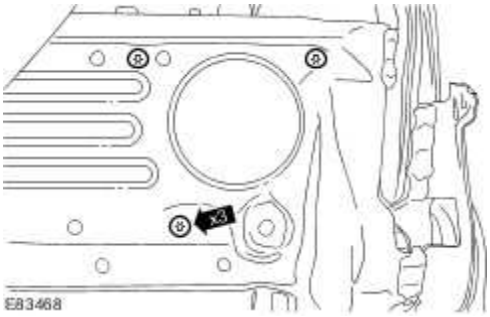

5 . Detach the front seat backrest thermo-electric device.

www.JagDocs.com

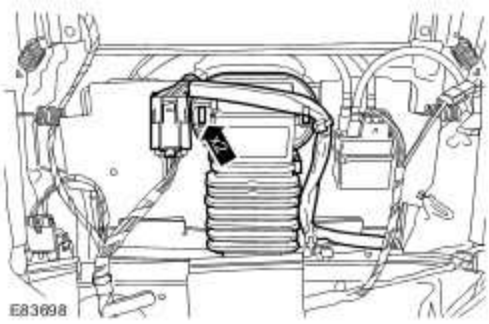

6 . Remove the front seat backrest thermo-electric device.

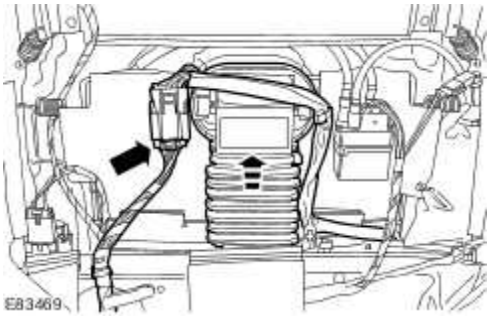

Installation

1 . To install, reverse the removal procedure.

Front Seat Backrest Rear Cover - VIN Range: G00442->H18679 (76.70.03)

Removal

All vehicles

1 . Place the seat in the upright position.

Vehicles with sports seats

2 . **CAUTION: After a finger width is attained between the front seat back and the backrest trim panel, do not pull the front seat backrest trim panel any further rearwards. Failure to follow this instruction may result in damage to the front seat backrest trim panel.**

Detach the front seat backrest trim panel from the front seat back.

1) Place your fingers between the front seat backrest trim panel and the front seat back at a point close to the seat cover piping.

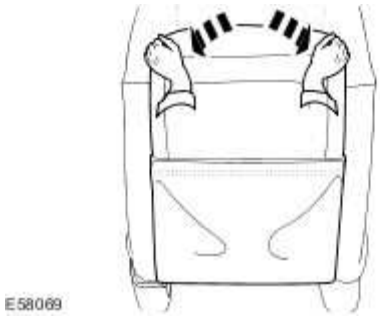

3 . **CAUTION: Take care not to damage the leather trim. Failure to follow this instruction may result in damage to the front seat.**

Detach the front seat backrest trim panel.

1) From the upper edge of the front seat backrest trim panel, slide the backrest trim panel to the left until the fir tree clips become detached.

www.JagDocs.com

2) Slide the front seat backrest trim panel upwards until the lower fir tree clips become detached.

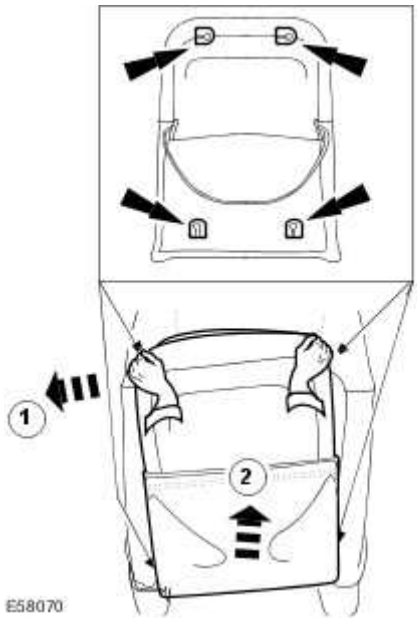

Vehicles with standard seats

4. **CAUTION: Do not pull the front seat backrest rear cover from the middle of the top edge. Failure to follow this instruction may result in damage to the front seat backrest rear cover.**

CAUTION: Do not use a snatching motion when detaching the the fir tree clips. Failure to follow this instruction may result in damage to the front seat.

Detach the front seat backrest trim panel from the front seat back.

1) Position yourself directly behind the seat.

2) Place one hand on top of the squab shoulder and grasp the top corner of the front seat backrest rear cover with the other hand.

3) Pull the front seat backrest rear cover evenly towards you until the fir tree clip is detached from the squab frame.

4) Repeat the same operation for the other side.

5 . Disconnect the rear passenger footwell courtesy lamp electrical connector.

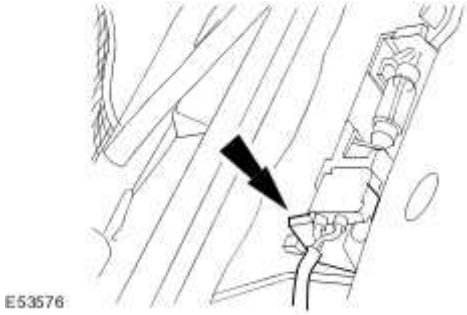

All vehicles

6 . Remove the front seat backrest trim panel.

1) Detach the front seat backrest trim panel retaining tether.

2) Remove the fir tree clips and discard.

www.JagDocs.com

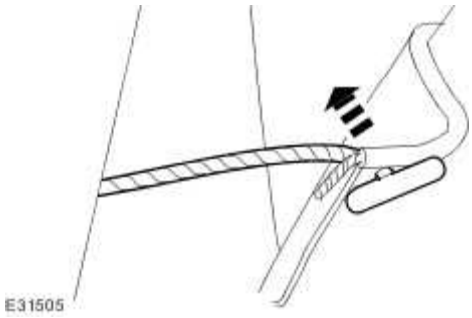

Installation

All vehicles

1 . **NOTE:**

To avoid damage to the leather trim fit suitable tape over the securing tether.

Attach the securing tether to the front seat backrest trim panel.

Vehicles with standard seats

2 . Connect the rear passenger footwell courtesy lamp electrical connector.

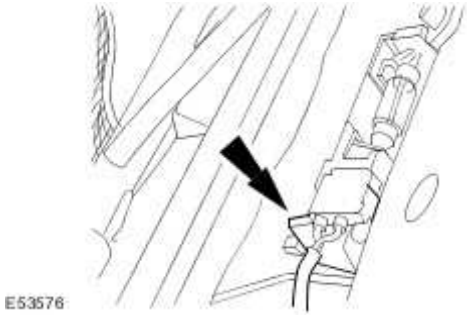

Vehicles with sports seats

3 . **NOTE:**

Make sure the fir tree clips are located fully into the carrier.

Install the new fir tree clips to the front seat backrest trim panel.

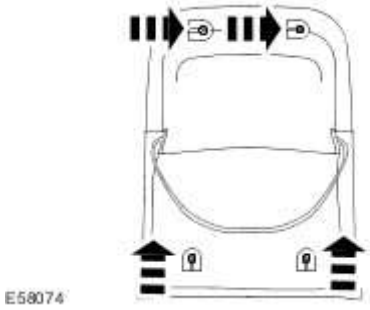

All vehicles

4 . **CAUTION: Do not strike the backrest trim panel to engage the fir tree clips. Failure to follow this instruction may result in damage to the front seat backrest rear cover.**

NOTE:

Vehicles with sports seats shown, vehicles with standard seats similar.

Install the front seat backrest rear cover.

1) Gently push on the backrest trim panel until the first barbs on the new fir tree clips are engaged into the frame.

2) Place one hand on the squab bolster.

3) Using even pressure firmly push the front seat backrest trim panel directly over the fir tree clips until fully seated.

www.JagDocs.com

E58071

Front Seat Backrest Rear Cover - VIN Range: H18680->H99999 (76.70.03)

Removal

1 . Remove the front seat.
For additional information, refer to Front Seat (76.70.01)

2 . Remove the front seat right-hand trim cover.

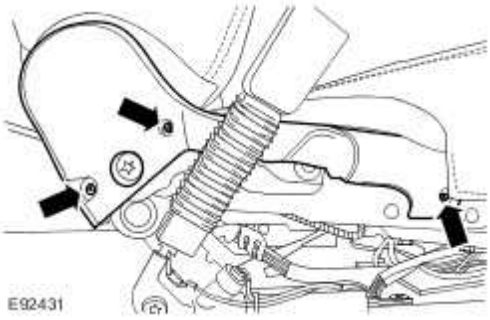

3 . **NOTE:**
Left-hand side shown, right-hand side similar.

Detach and reposition the front seat backrest rear cover.

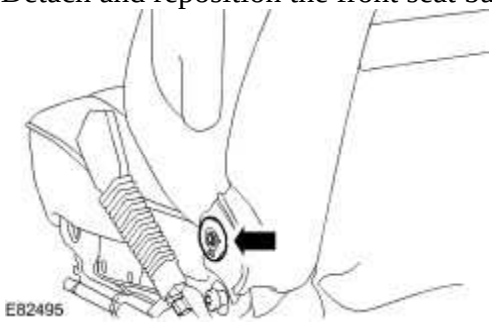

4 . Disconnect the passenger footwell courtesy lamp electrical connector.

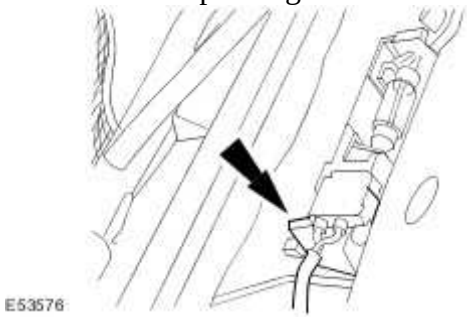

www.JagDocs.com

5 . Remove the business tray latch.

- Fully loosen the retaining screw.

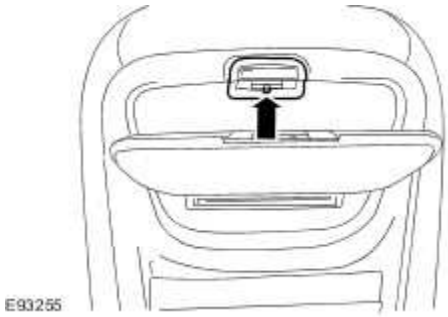

6 . Remove the front seat backrest rear cover.

- Release the 6 retaining clips.

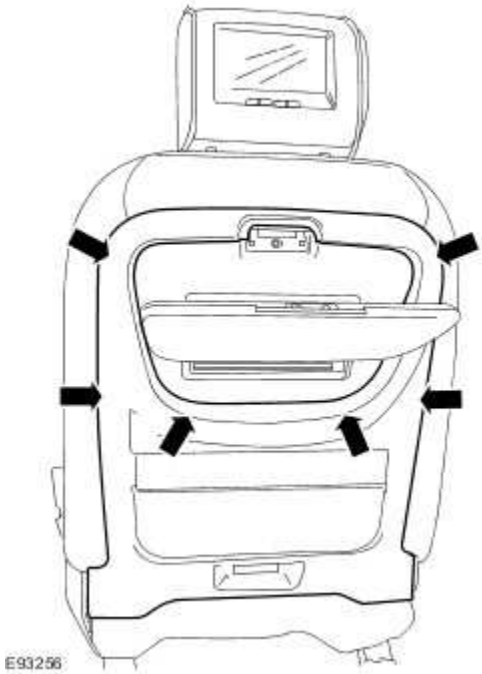

Installation

1 . To install, reverse the removal procedure.

Front Seat Control Switch (86.75.46)

Removal

1 . Remove the front seat.
For additional information, refer to Front Seat (76.70.01)

2 . Disconnect the front seat control switch electrical connectors.

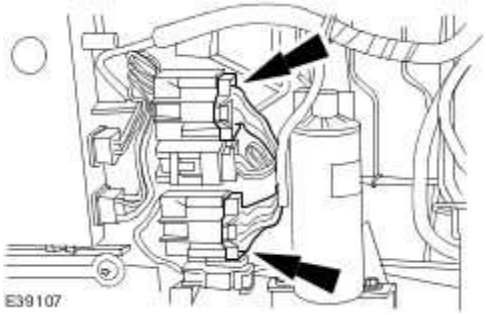

3 . Remove the front seat control switch and trim panel assembly.

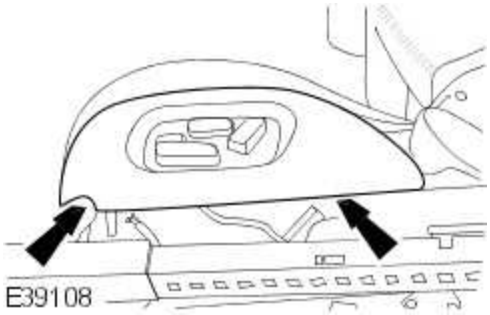

4 . Remove the front seat control switch.

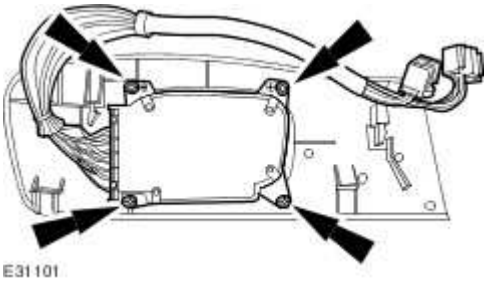

Installation

1 . To install, reverse the removal procedure.

www.JagDocs.com

Front Seat Cushion Cover - VIN Range: G00442->H18679 (76.70.33)

Removal

1 . Remove the front seat control switch.
For additional information, refer to Front Seat Control Switch (86.75.46)

2 . Remove the front seat backrest hinge inner trim panel.

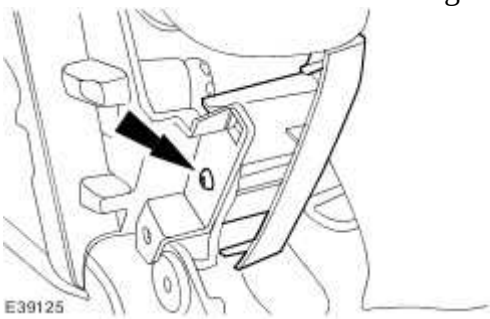

3 . Remove the front seat backrest inner trim panel.

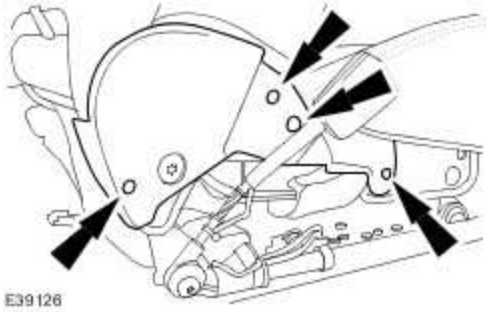

4 . Detach the front seat backrest trim panel.

1) Detach the front seat backrest trim panel retaining clips.

2) Detach the front seat backrest trim panel.

5 Remove the front seat backrest trim panel.

. Disconnect the rear passenger footwell courtesy lamp electrical connector.

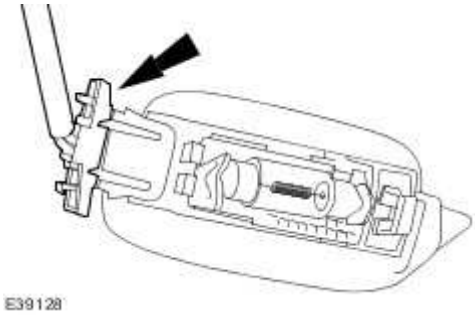

6 . Detach the front seat cushion cover.

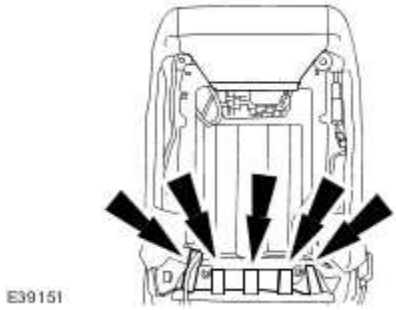

7 . Detach the front seat cushion cover retaining hooks.

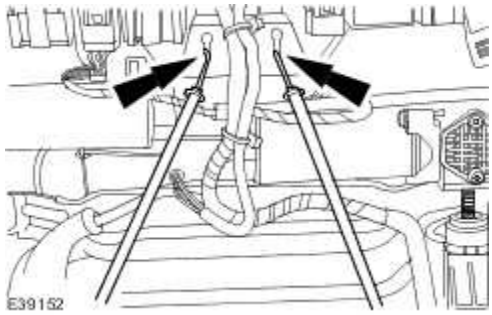

8 . Detach the front seat cushion cover retaining strap.

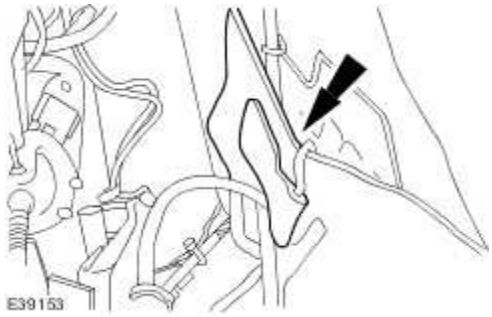

www.JagDocs.com

9 . Disconnect the front seat cushion heater pad electrical connector.

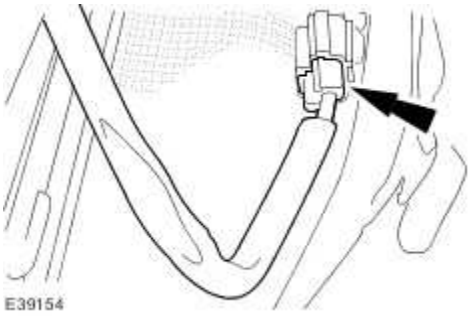

10 . Remove the front seat cushion cover and pad assembly.

11 . Remove the front seat cushion cover retaining clips.

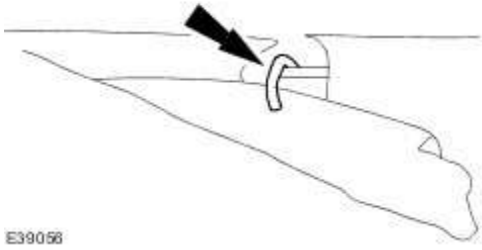

12 . Remove the front seat cushion cover.

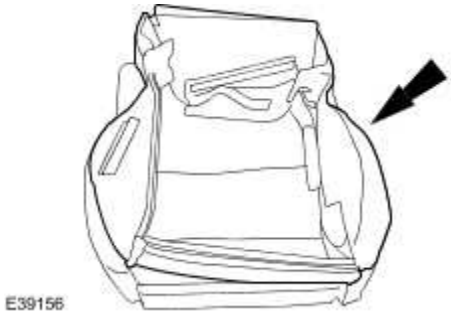

Installation

1 . **NOTE:**

Install new front seat cushion cover retaining clips.

To install, reverse the removal procedure.

www.JagDocs.com

Front Seat Cushion Cover - VIN Range: H18680->H99999 (76.70.33)

Removal

1 . Remove the front seat.
For additional information, refer to Front Seat (76.70.01)

2 . Detach and reposition the front seat control switch and trim panel assembly.
Remove the 2 retaining screws.

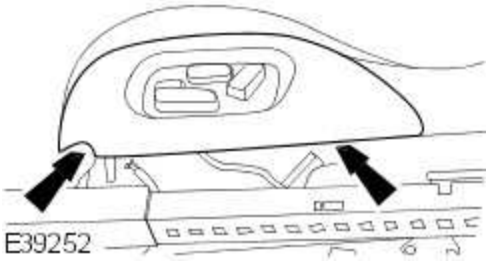

3 . Detach the front seat backrest lower rear cover.

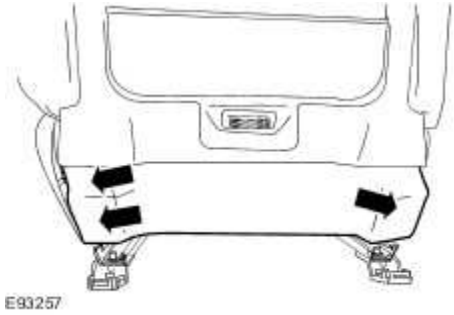

4 . Detach the front seat backrest cover velcro strap.

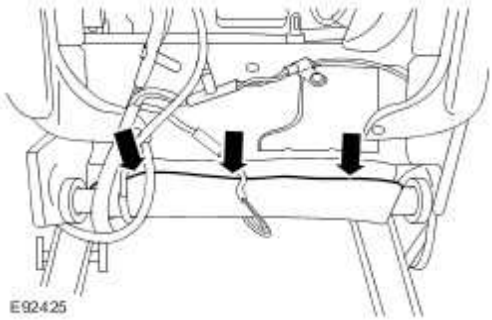

5 . Detach the front seat cushion cover.

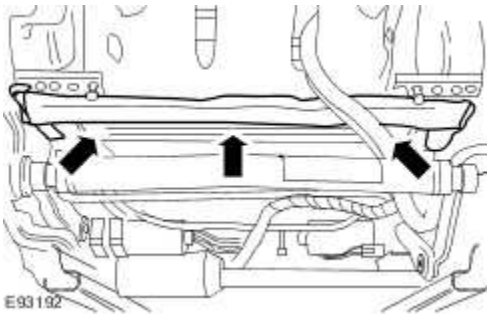

6 . Remove the front seat cushion cover and front seat cushion.

7 . Release the front seat cushion cover tension strap.

8 . Remove and discard the front seat cushion cover hog rings.

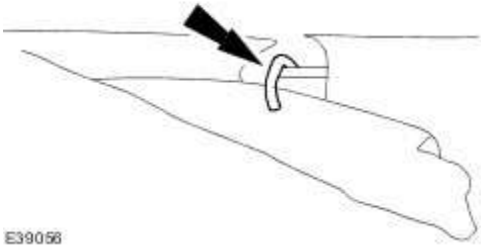

9 . Remove the front seat cushion cover.

www.JagDocs.com

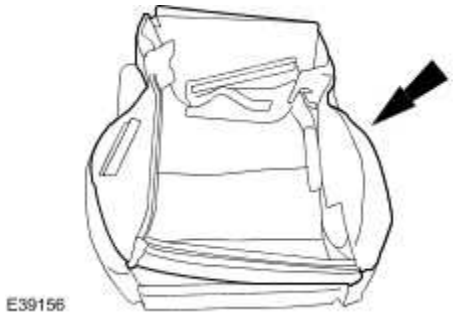

Installation

1 . **NOTE:**

Install new front seat cushion cover hog rings.

To install, reverse the removal procedure.

Front Seat Cushion Heater and Blower Assembly

Removal

1 . Remove the front seat.
For additional information, refer to Front Seat (76.70.01)

2 . Detach and reposition the front seat control switch and trim panel assembly.
- Remove the retaining screws.

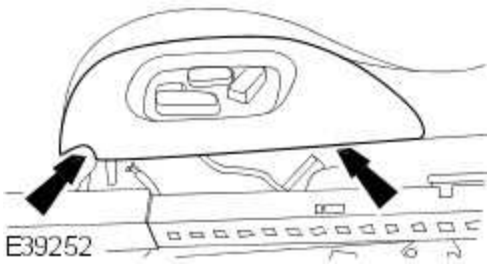

3 . Reposition the front seat cushion cover and front seat cushion.
- Detach the front seat cushion cover retaining strips.

4 . Detach the front seat base thermo-electric device duct.
- Remove the retaining screw.

www.JagDocs.com

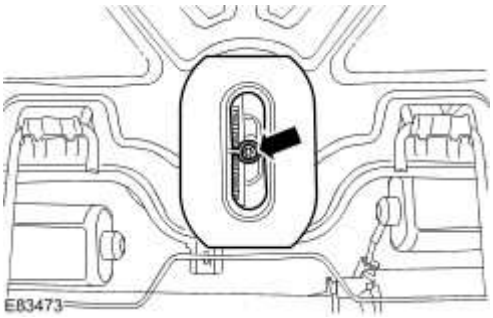

5 . Detach the front seat base thermo-electric device.

- Remove the retaining screws.

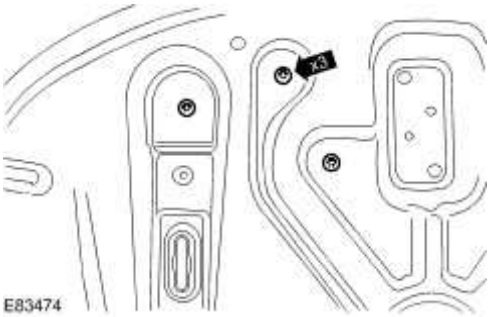

6 . Detach and reposition the front seat base wiring harness trim panel.

- Remove the retaining screws.

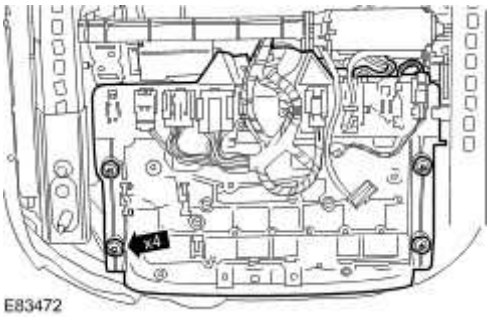

7 . Remove the front seat base thermo-electric device.

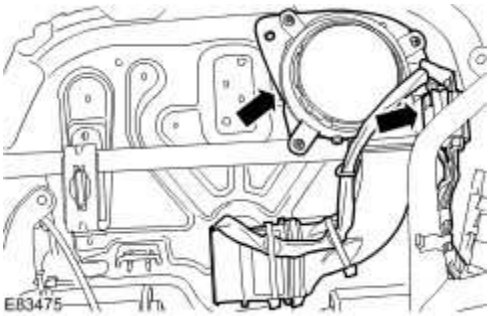

Installation

1 . To install, reverse the removal procedure.

www.JagDocs.com

Front Seat Head Restraint - Vehicles With: Head Restraint Video Display, VIN Range: G00442->H18679 (76.70.14)

Removal

1 . Remove the front seat.
For additional information, refer to Front Seat (76.70.01)

2 . Remove the front seat backrest hinge inner trim panel.

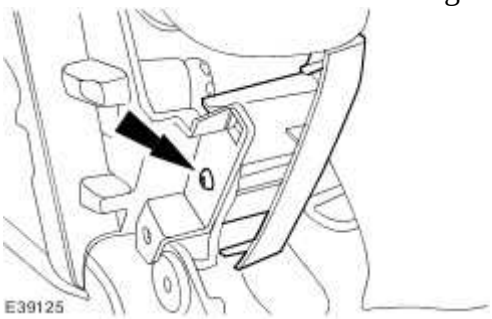

3 . Remove the front seat backrest inner trim panel.

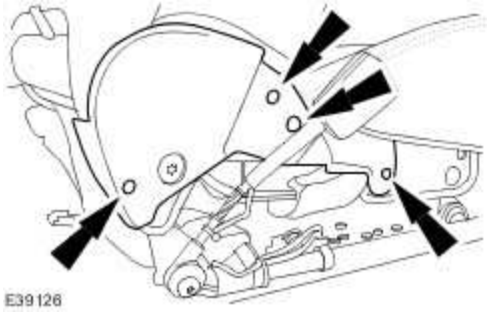

4 . Detach the front seat backrest trim panel.

1) Detach the front seat backrest trim panel retaining clips.

2) Detach the front seat backrest trim panel.

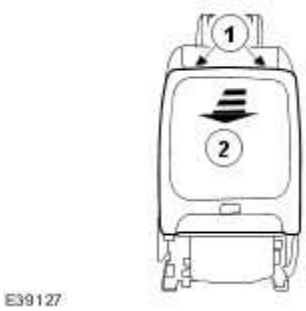

5 Remove the front seat backrest trim panel.

· Disconnect the rear passenger footwell courtesy lamp electrical connector.

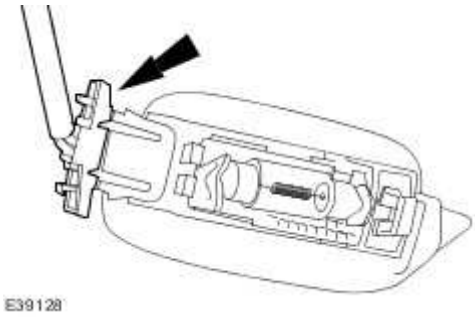

6 . Detach the front seat backrest cover.

7 . Disconnect the front seat head restraint electrical connector.

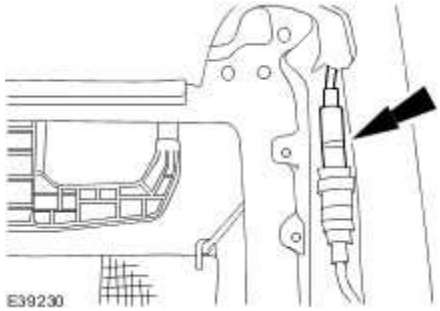

8 . Detach the front seat head restraint wiring harness.

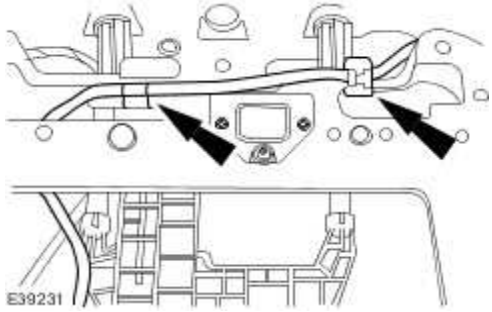

www.JagDocs.com

9 . **CAUTION: Make sure that the head restraint is not withdrawn further than 15 mm from the head restraint motor. Failure to follow this instruction may result in damage to the vehicle.**

Detach the front seat head restraint from the head restraint motor.

10 . Detach the front seat head restraint wiring harness retaining clip.

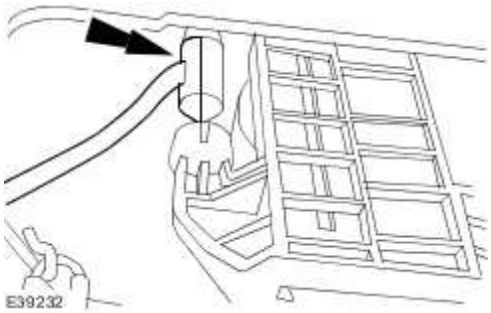

11 . **CAUTION: Make sure the cable is not trapped when the head restraint is detached. Failure to follow this instruction may result in damage to the vehicle.**

Detach the head restraint from the head restraint retaining post.

1) Align the head restraint wiring harness with the head restraint shaft.
2) Detach the head restraint from the head restraint retaining post.

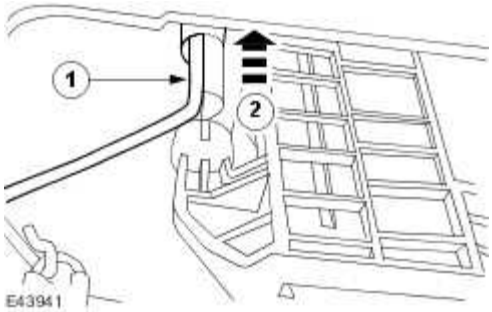

12 . Detach the front seat head restraint retaining post.

1) Release the retaining tang.
2) Detach the front seat head restraint retaining post.

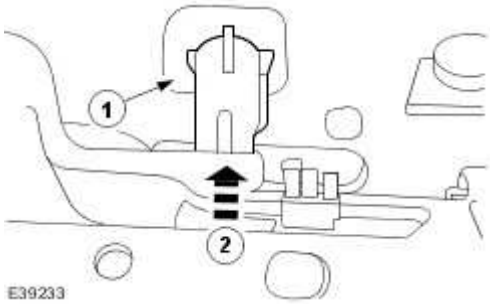

13 . Remove the front seat head restraint.

- Remove the front seat head restraint retaining post.
- Feed the head restraint wiring harness through the cover.

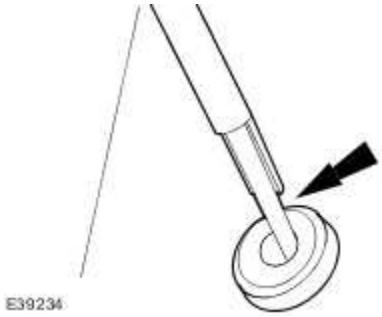

www.JagDocs.com

Installation

1 . To install, reverse the removal procedure.

Front Seat Head Restraint - Vehicles With: Head Restraint Video Display, VIN Range: H18680->H99999 (76.70.14)

Removal

1 . Remove the front seat backrest rear cover.
For additional information, refer to Front Seat Backrest Rear Cover - VIN Range: H18680->H99999 (76.70.03)

2 . Remove the business tray.

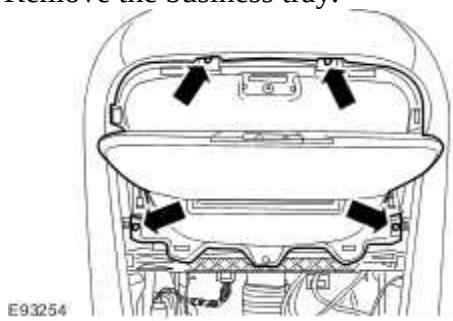

3 . Disconnect and the front seat head restraint wiring harness.

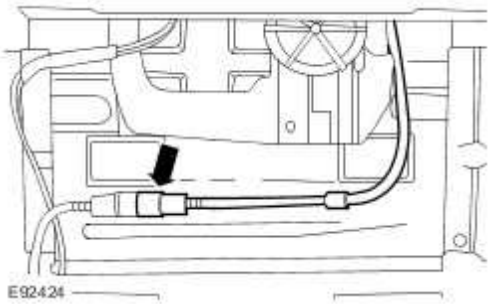

4 . **CAUTION: Make sure that the head restraint is not withdrawn further than 15 mm from the head restraint motor. Failure to follow this instruction may result in damage to the vehicle.**

Detach the front seat head restraint from the head restraint motor.

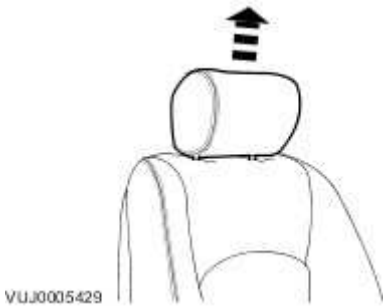

5 . Using a suitable tape secure the front seat head restraint post clip to the front seat head restraint wiring harness.

- Release the front seat head restraint post clip from the right-hand head restraint post.

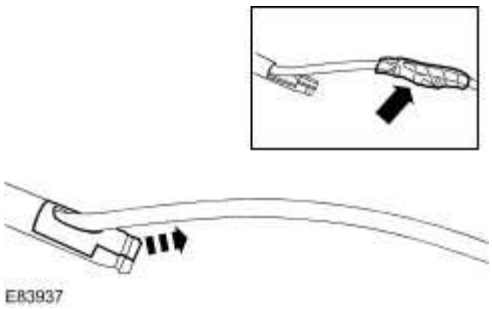

6 . **NOTE:**

Apply suitable protective tape around the right-hand head restraint guide tube.

Using a suitable tool, remove the front seat head restraint.

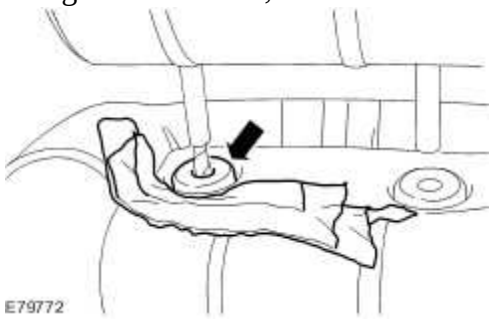

Installation

1 . To install, reverse the removal procedure.

www.JagDocs.com

Front Seat Head Restraint Motor - VIN Range: G00442->H18679 (86.75.17)

Removal

1 . Remove the front seat.
For additional information, refer to Front Seat (76.70.01)

2 . Remove the front seat backrest hinge inner trim panel.

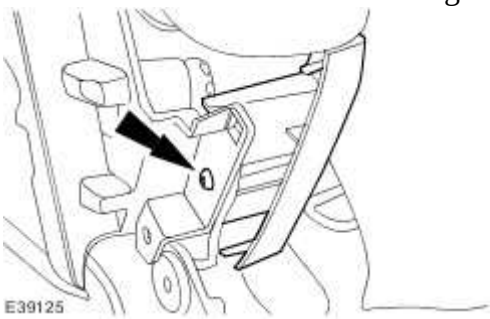

3 . Remove the front seat backrest inner trim panel.

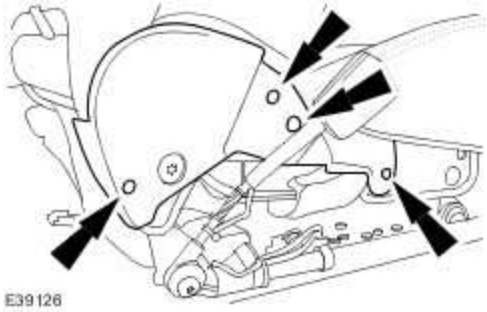

4 . Detach the front seat backrest trim panel.

1) Detach the front seat backrest trim panel retaining clips.

2) Detach the front seat backrest trim panel.

5 Remove the front seat backrest trim panel.

· Disconnect the rear passenger footwell courtesy lamp electrical connector.

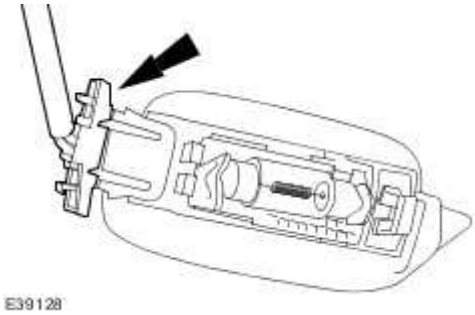

6

· **CAUTION: On vehicles with head restraint video display, make sure that the head restraint is not withdrawn further than 15 mm from the head restraint motor. Failure to follow this instruction may result in damage to the vehicle.**

Detach the front seat head restraint.

7 . Detach the front seat backrest cover.

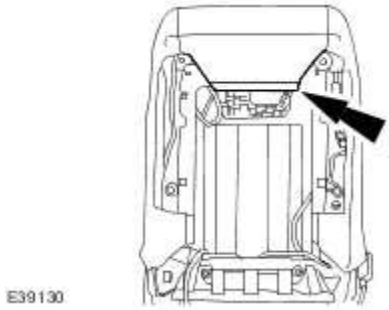

8 . Detach the front seat head restraint motor.

www.JagDocs.com

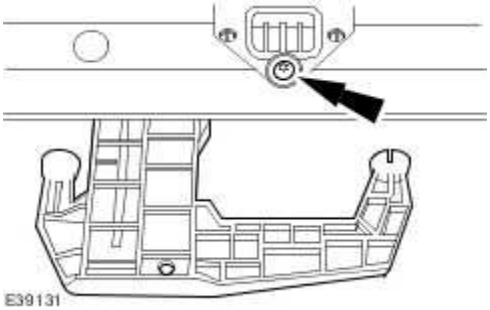

9 . Remove the front seat head restraint motor.

- Disconnect the front seat head restraint motor electrical connector.

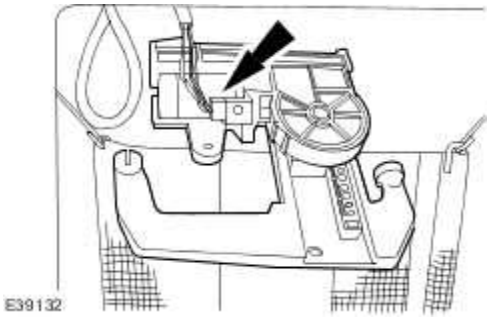

Installation

1 . To install, reverse the removal procedure.

Front Seat Head Restraint Motor - VIN Range: H18680->H99999 (86.75.17)

Removal

1 Remove the front seat head restraint.
. For additional information, refer to Front Seat Head Restraint - Vehicles With: Head Restraint Video Display, VIN Range: H18680->H99999 (76.70.14)

2 . **NOTE:**

Apply suitable protective tape around the right-hand head restraint guide tube.

Using a suitable tool, remove the front seat head restraint guide sleeve.

3 . Disconnect the front seat head restraint motor electrical connector.

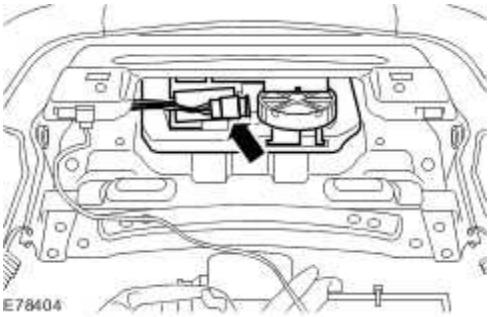

4 . Detach and the seat backrest cover from the front seat backrest frame.

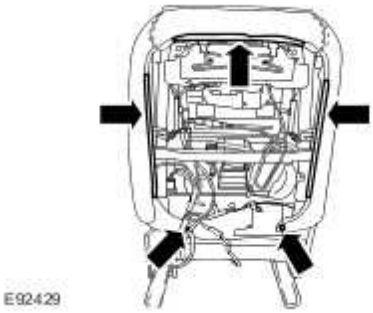

www.JagDocs.com

5 . Remove the front seat head restraint motor.

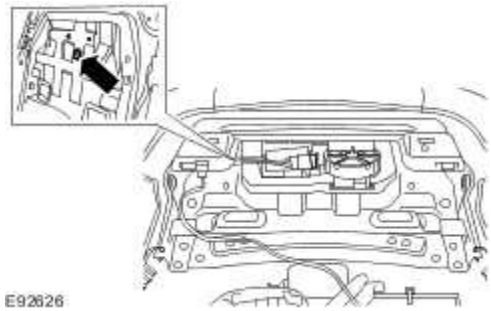

Installation

1 . To install, reverse the removal procedure.

Front Seat Height Adjustment Motor (86.75.29)

Removal

1 . Remove the front seat.
For additional information, refer to Front Seat (76.70.01)

2 . Detach the front seat cushion cover retaining hooks.

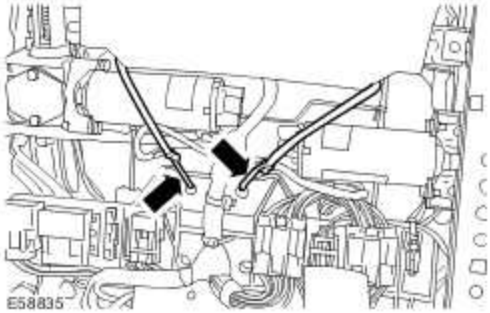

3 . Remove the retaining screws.

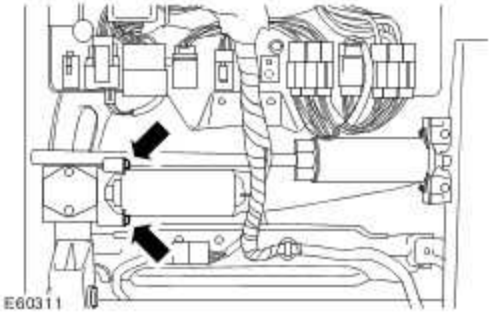

4 . Detach the front seat height adjustment motor.

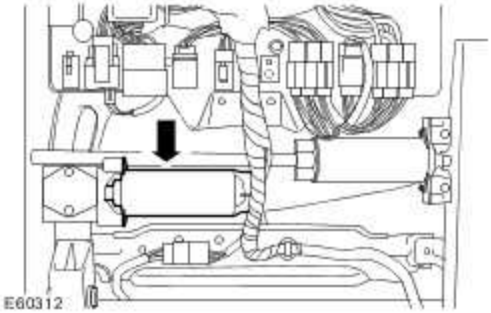

5 . Remove the front seat height adjustment motor.

- Disconnect the electrical connector.

www.JagDocs.com

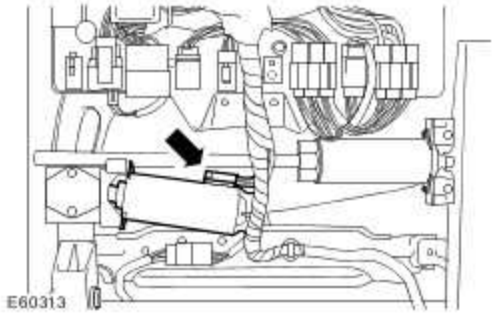

Installation

1 . To install, reverse the removal procedure.

Tighten to 5 Nm.

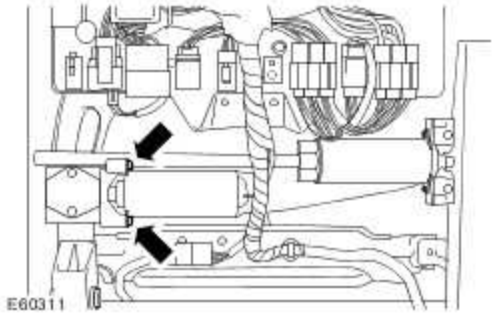

Front Seat Lumbar Motor (86.75.44)

Removal

1. **WARNING: A restraints control module (RCM) only requires replacement if the system has incurred five separate deployments. At no time change the RCM for less than five separate deployments.**

   WARNING: Always wear safety glasses when repairing an air bag supplemental restraint system (SRS) vehicle and when handling an air bag module. Failure to follow this instruction may result in personal injury.

   WARNING: Carry a live air bag module with the air bag and trim cover pointed away from your body. This will reduce the risk of injury in the event of an accidental deployment. Failure to follow this instruction may result in personal injury.

   WARNING: Do not set a live air bag module down with the trim cover face down. Failure to follow this instruction may result in personal injury.

   WARNING: After deployment, the air bag surface can contain deposits of sodium hydroxide, a product of the gas generant combustion that is irritating to the skin. Wash your hands with soap and water afterwards. Failure to follow this instruction may result in personal injury.

   WARNING: Never probe the connectors on the air bag module. Doing so may result in air bag deployment. Failure to follow this instruction may result in personal injury.

   WARNING: Vehicle sensor orientation is critical for correct system operation. If a vehicle equipped with an air bag SRS is involved in a collision, inspect the sensor mounting bracket and wiring pigtail for deformation. If damaged, replace the sensor whether or not the air bag is deployed.

   WARNING: To avoid accidental deployment and possible personal injury, the backup power supply must be depleted before repairing or replacing any air bag SRS components. To deplete the backup power supply energy, disconnect the

www.JagDocs.com

battery ground cable and wait one minute. Failure to follow this instruction may result in personal injury.

NOTE:

When installing a new air bag module, a prepaid return postcard is provided with the replacement air bag module. The serial number for the new part and the vehicle identification number (VIN) must be recorded and sent to Jaguar Cars Ltd.

Remove the front seat head restraint.
For additional information, refer to Front Seat Head Restraint - Vehicles With: Head Restraint Video Display, VIN Range: G00442->H18679 (76.70.14)

2 . Remove the front seat head restraint retaining post.

1) Release the retaining tang.

2) Remove the front seat head restraint retaining post.

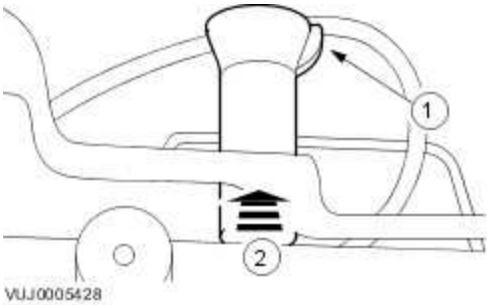

3 . Detach the front seat cushion cover.

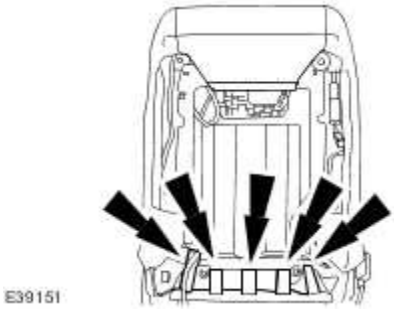

4 . Detach the front seat backrest cover.

5 . Remove the side air bag module retaining nuts.

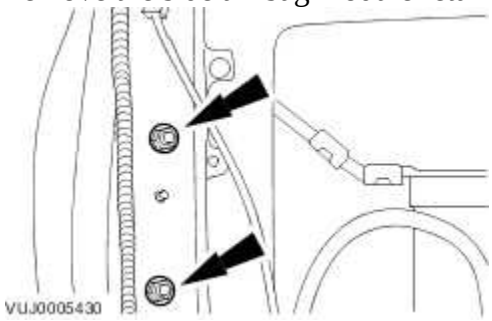

6 . Detach the front seat backrest cover and cushion.

1) Reposition the seat backrest cover and cushion.

2) Detach the seat backrest cover and cushion.

7 . Disconnect the side air bag module electrical connector.

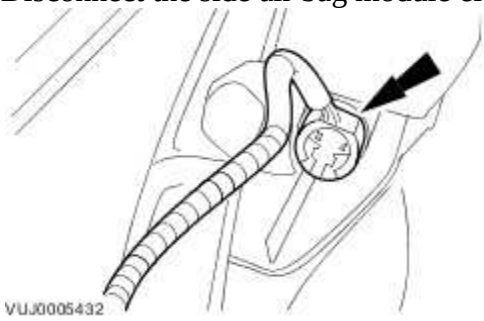

8 . Remove the side air bag module.

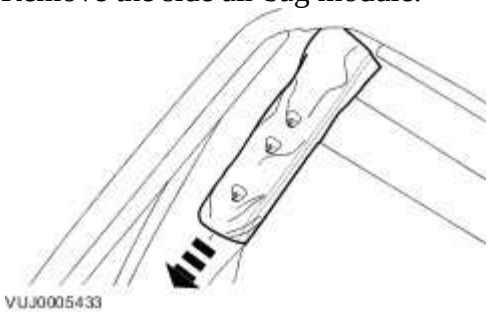

www.JagDocs.com

9 . Remove the front seat backrest cover and cushion.

Disconnect the front seat cushion heater pad electrical connector.

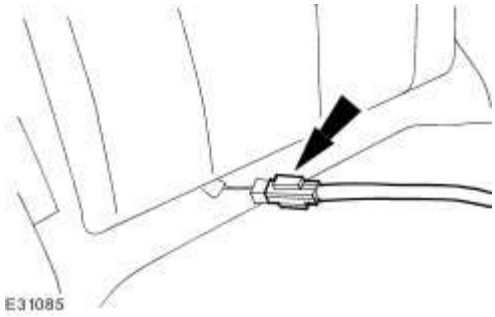

10 . Disconnect the front seat lumbar motor electrical connector.

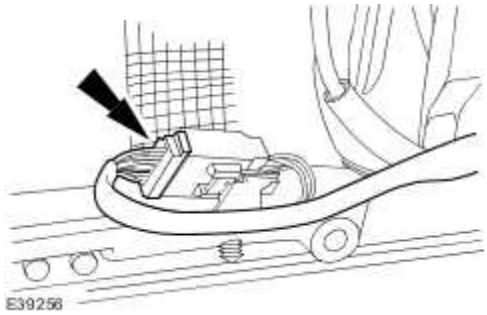

11 . Detach the front seat lumbar motor.

12 . Detach the front seat lumbar motor control valve.

13 . Remove the front seat lumbar motor.

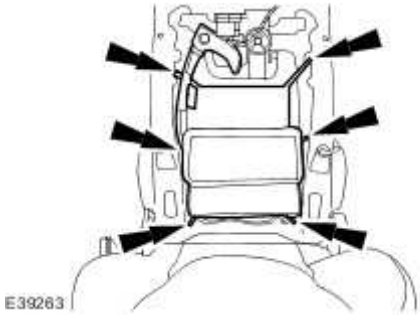

Installation

1 . To install, reverse the removal procedure.

Tighten to 7 Nm.

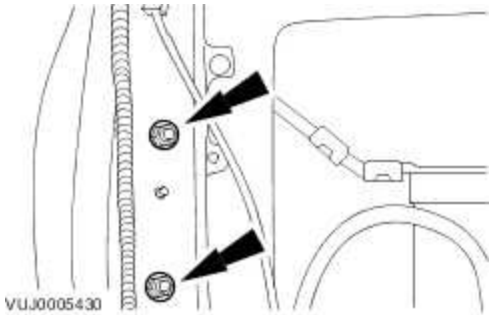

www.JagDocs.com

Front Seat Rear Height Adjustment Motor (86.75.32)

Removal

1 Remove the front seat backrest rear cover.
. For additional information, refer to Front Seat Backrest Rear Cover - VIN Range: H18680->H99999 (76.70.03)

2 . Detach and reposition the front seat control switch and trim panel assembly.

- Remove the retaining screws.

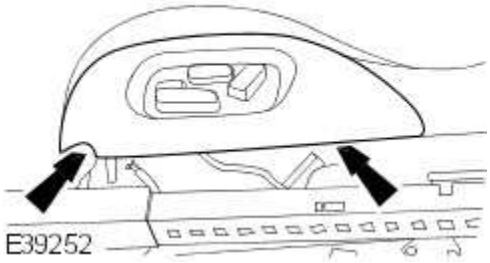

3 . Detach the front seat backrest lower rear cover.

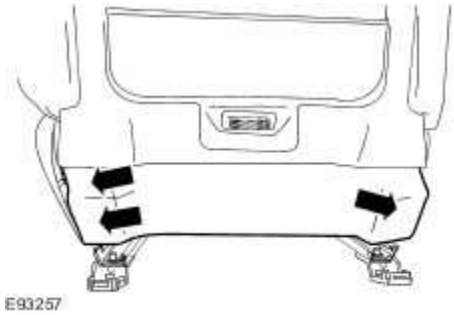

4 . Remove the front seat LH trim panel.

- Remove the retaining screws.

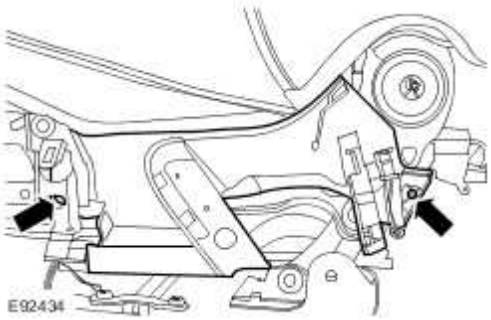

5 . Detach the front seat backrest cover velcro strap.

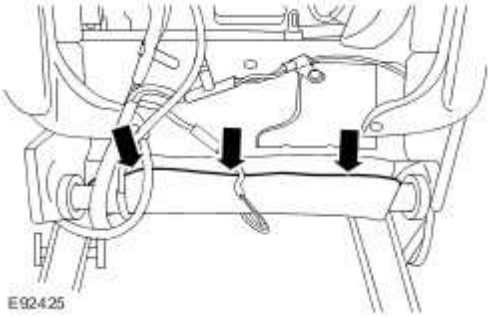

6 . **NOTE:**

Left-hand side shown, right-hand side similar.

Displace and reposition the front seat backrest.

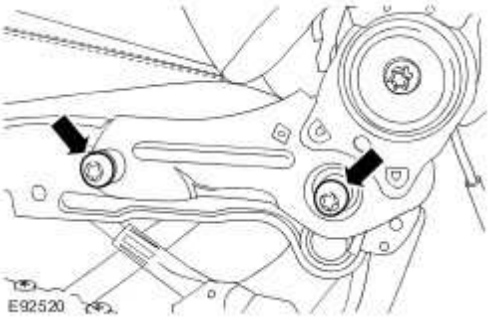

7 . **NOTE:**

Left-hand side shown, right-hand side similar.

Reposition the seat base.

www.JagDocs.com

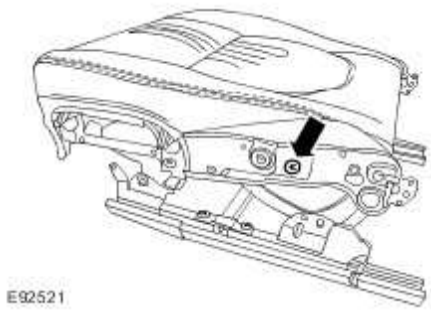

8 . Disconnect the front seat rear height adjustment motor electrical connector.

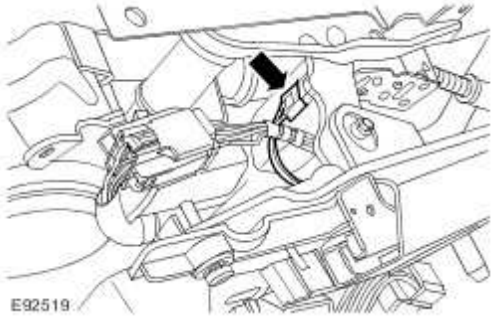

9 . Remove the front seat rear height adjustment motor.

- Remove the retaining screws.

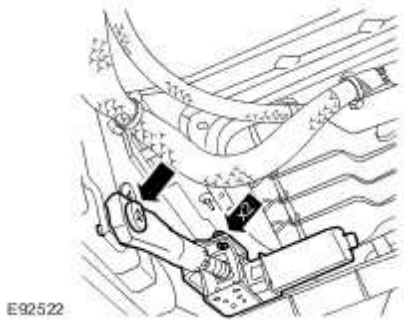

Installation

1 . To install, reverse the removal procedure.

Front Seat Recliner Motor - VIN Range: G00442->H18679 (86.75.04)

Removal

1 . Remove the front seat.
For additional information, refer to Front Seat (76.70.01)

2 . Remove the front seat backrest hinge inner trim panel.

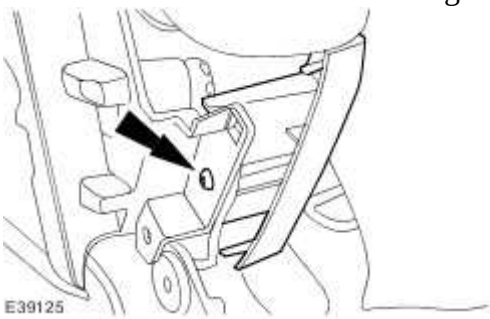

3 . Remove the front seat backrest inner trim panel.

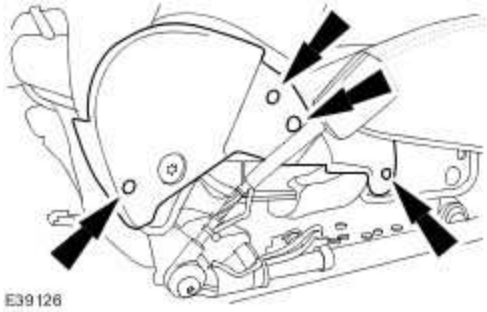

4 . Detach the front seat backrest trim panel.

1) Detach the front seat backrest trim panel retaining clips.

2) Detach the front seat backrest trim panel.

www.JagDocs.com

5 Remove the front seat backrest trim panel.

· Disconnect the rear passenger footwell courtesy lamp electrical connector.

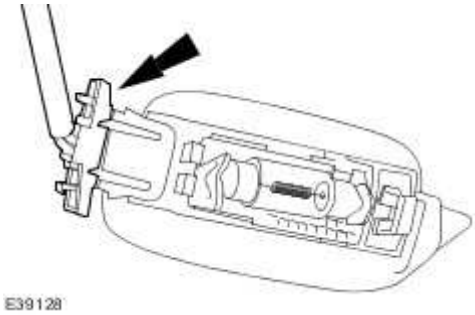

6 **NOTE:**

· Do not remove or carry out any repairs to the anti-whiplash system (AWS) on the front seat back.

Remove the front seat recliner motor shaft retaining nut.

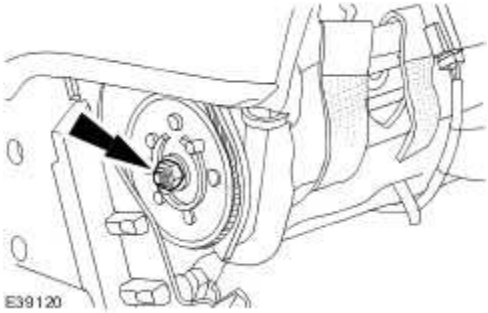

7 . Remove the front seat recliner motor shaft.

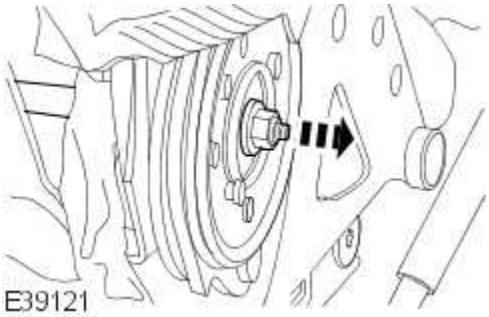

8 . Detach the front seat backrest cover.

9 . Detach the front seat recliner motor.

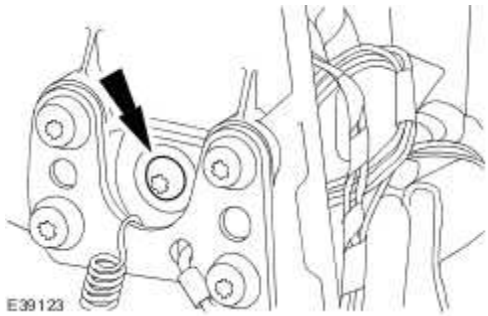

10 . Remove the front seat recliner motor.

- Disconnect the front seat recliner motor electrical connector.

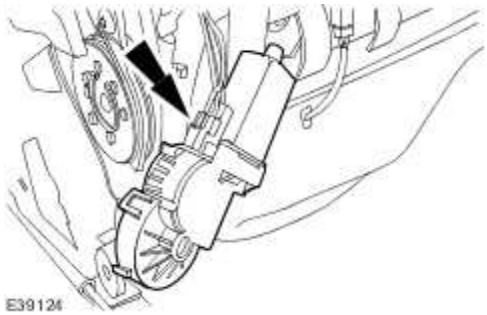

Installation

1 . To install, reverse the removal procedure.

www.JagDocs.com

Front Seat Recliner Motor - VIN Range: H18680->H99999 (86.75.04)

Removal

1 Remove the front seat backrest rear cover.
. For additional information, refer to Front Seat Backrest Rear Cover - VIN Range: H18680->H99999 (76.70.03)

2 . Detach the front seat backrest cover.

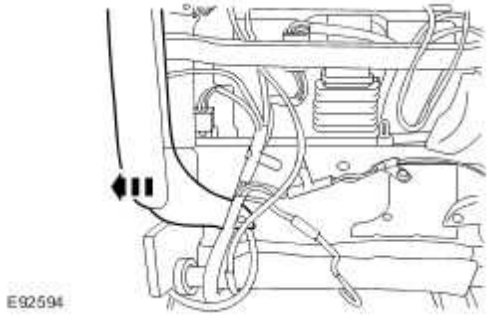

3 . Reposition the front seat backrest recliner motor shaft.

Remove the retaining clip.

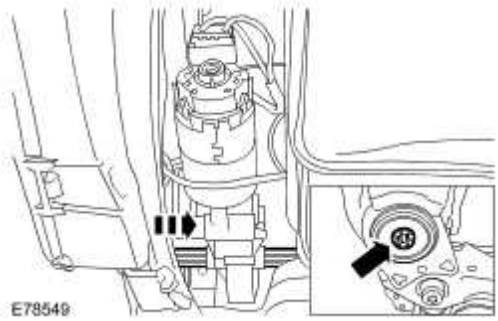

4 . Remove the front seat recliner motor.

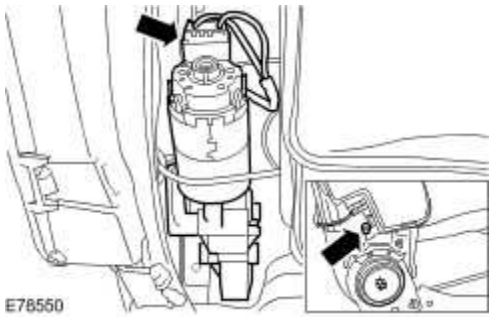

5 . Remove the front seat recliner motor bracket.

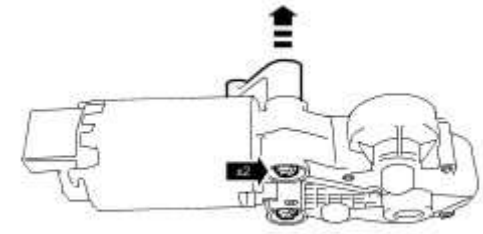

E80974

Installation

1 . To install, reverse the removal procedure.

www.JagDocs.com

Front Seat Track Motor (86.75.33)

Removal

1 . Remove the front seat.
For additional information, refer to Front Seat (76.70.01)

2 . Detach the front seat cusion cover retaining hooks.

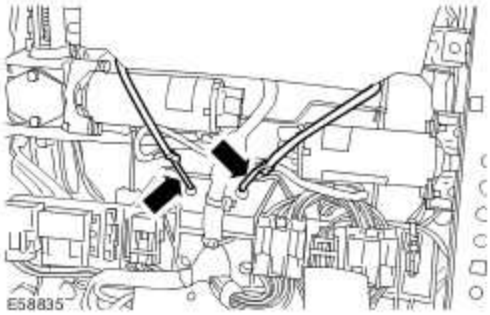

3 . Remove the retaining screws.

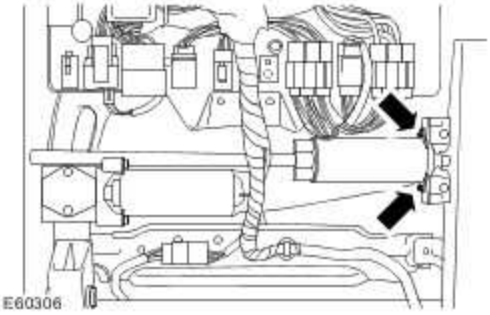

4 . Detach the front seat track motor.

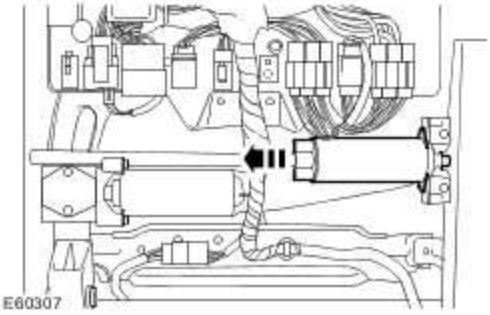

5 . Remove the front seat track motor.

1) Disconnect the electrical connector.

2) Remove the front seat track motor.

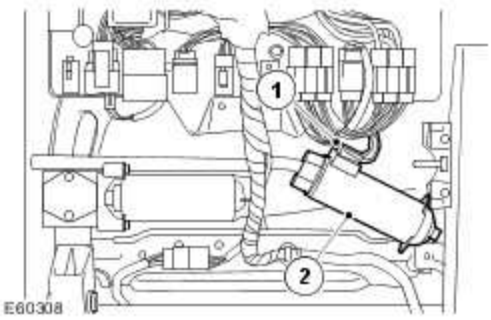

6 . Remove the front seat track motor drive bar.

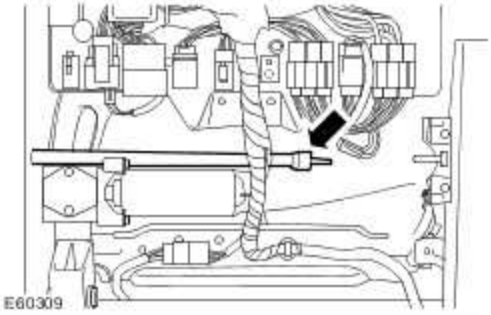

Installation

1 . Install the front seat track motor drive bar.

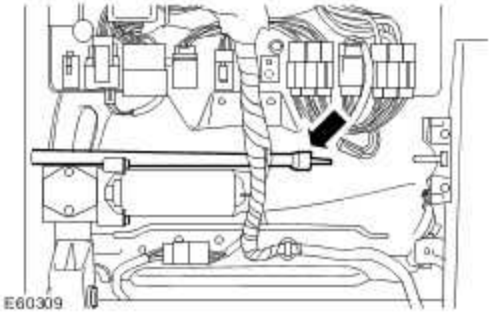

2 . Connect the electrical connector.

1) Install the front seat track motor.

2) Connect the electrical connector.

www.JagDocs.com

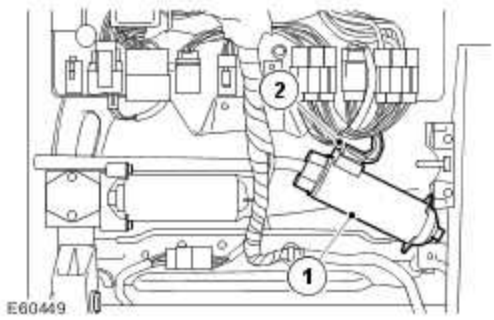

3
. **CAUTION: Make sure that the front seat track motor drive bar is correctly aligned.**

Attach the front seat track motor.

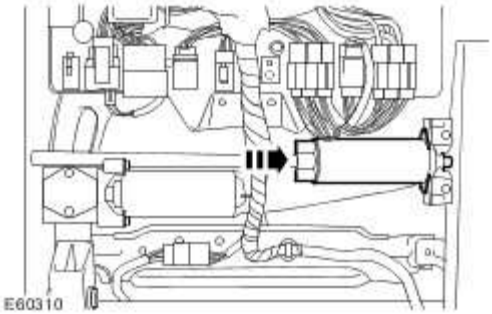

4 . Install the retaining screws.

Tighten to 5 Nm.

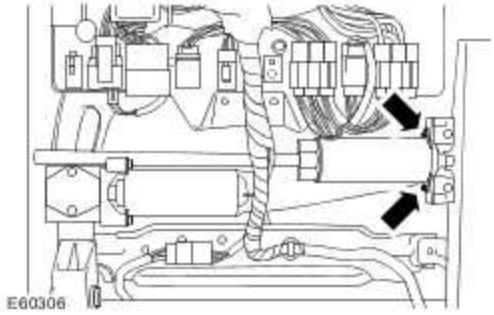

5 . Attach the front seat cusion cover retaining hooks.

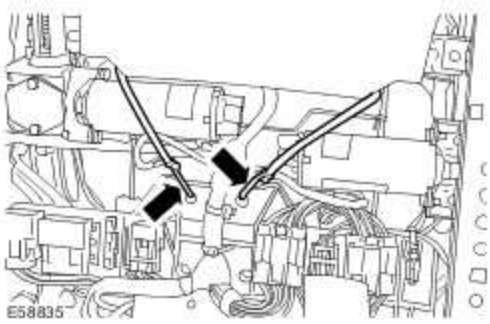

6 . Install the front seat.
For additional information, refer to Front Seat (76.70.01)

www.JagDocs.com

Lumbar Assembly (86.75.12)

Removal

1 Remove the front seat head restraint.
. For additional information, refer to Front Seat Head Restraint - Vehicles With: Head Restraint Video Display, VIN Range: H18680->H99999 (76.70.14)

2 . **NOTE:**

Apply suitable protective tape around the right-hand head restraint guide tube.

Using a suitable tool, remove the front seat head restraint guide sleeve.

3 . Detach and reposition the front seat backrest cover from the front seat backrest frame.

4 . Detach and reposition the front seat backrest thermo-electric device.

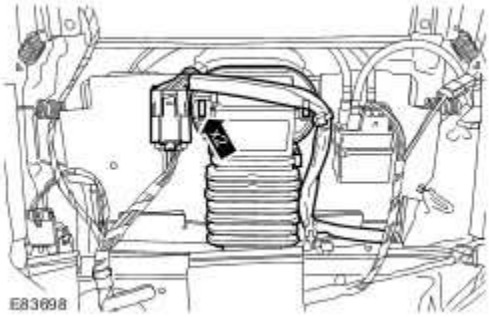

5 . Detach the front seat backrest thermo-electric device duct.

6 . Disconnect the 2 lumber assembly electrical connectors.

7 . Remove the lumbar assembly.

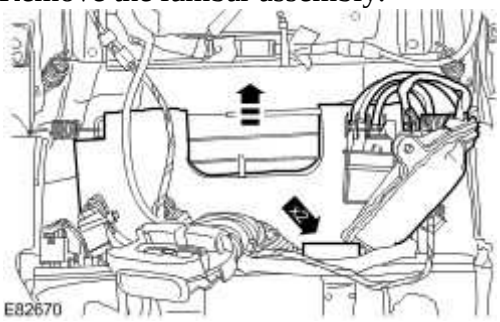

Installation

1 . To install, reverse the removal procedure.

www.JagDocs.com

Memory Seat Position Switch

Removal

1 . Remove the rear door trim panel.
For additional information, refer to Rear Door Trim Panel (76.34.04)

2 . Disconnect the electrical connector.

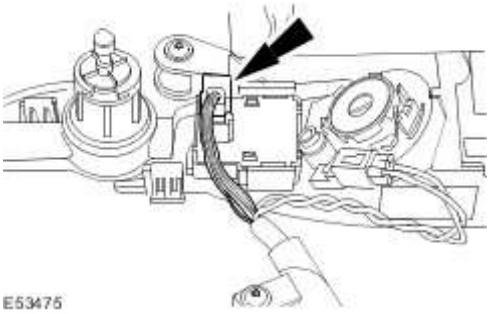

3 . Remove the rear memory seat switch.

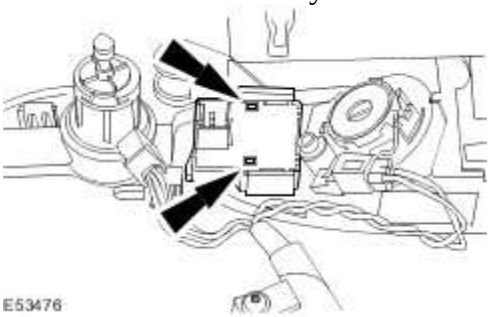

Installation

1 . To install, reverse the removal.

Rear Outer Seat Backrest (76.70.76)

Removal

1 **NOTE:**

· To aid installation make sure the rear outer seat backrest is in the fully reclined position before removal..

Remove the rear seat cushion. For additional information refer to
For additional information, refer to Rear Outer Seat Cushion (76.70.44) or
For additional information, refer to Rear Seat Cushion (76.70.37) in this section.

2 . Detach the rear outer seat backrest.

1) Release the rear outer seat backrest retaining clip.

2) Detach the rear outer seat backrest.

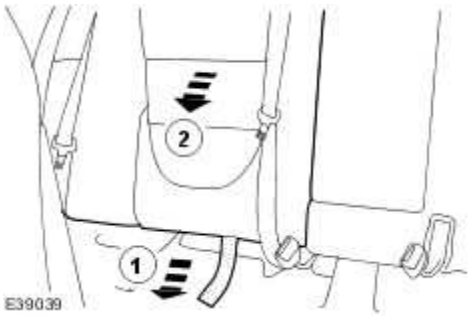

3 . Remove the rear outer seat backrest.

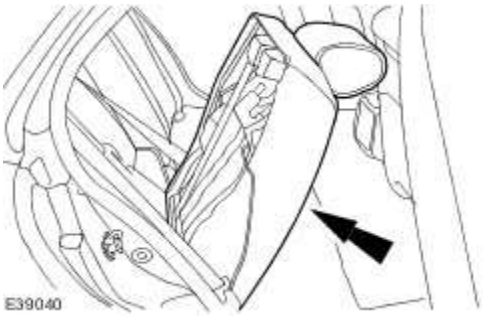

www.JagDocs.com

Installation

1 . **NOTE:**

Make sure the rear outer seat backrest pivot bracket inserts are correctly installed.

NOTE:

Install new rear outer seat backrest pivot bracket inserts if they are damaged.

To install, reverse the removal procedure.

Rear Outer Seat Backrest Cover (76.70.51)

Removal

1 . Remove the rear outer seat backrest.
For additional information, refer to Rear Outer Seat Backrest (76.70.76)

2 . Remove the rear seat head restraint.

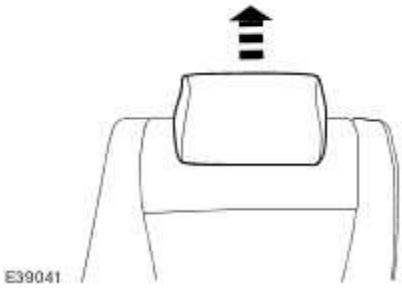

3 . **NOTE:**
Left-hand shown, right-hand similar.

Detach the rear outer seat head restraint retaining post.

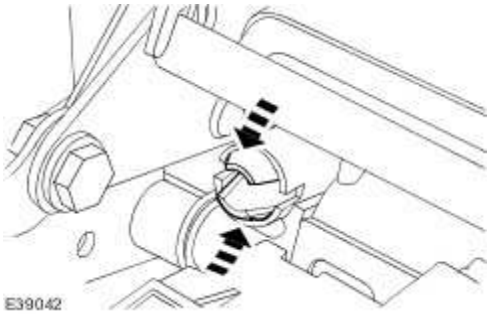

4 . **NOTE:**
Left-hand shown, right-hand similar.

Remove the rear outer seat head restraint retaining post.

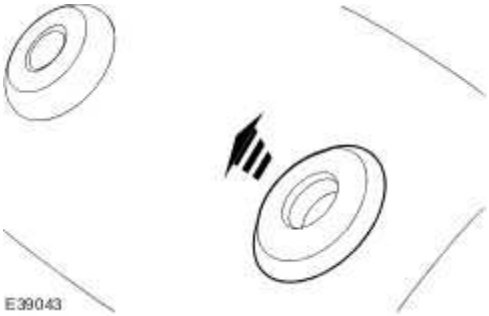

www.JagDocs.com

5 . Detach the rear outer seat backrest cover.

6 . Detach the rear outer seat backrest cover and cushion.

7 Remove the rear outer seat backrest cover and cushion.

· Disconnect the rear outer seat backrest heater pad electrical connector.

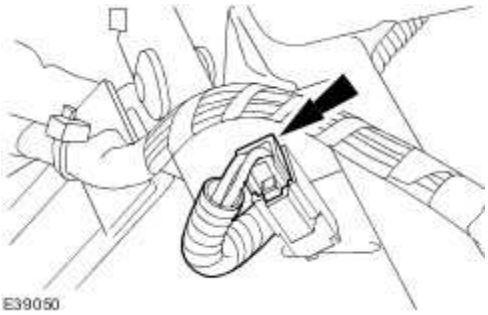

8 . Remove and discard the rear outer seat backrest cover retaining clips.

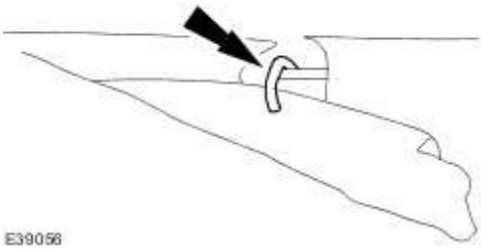

9 . Remove the rear outer seat backrest cover.

Installation

1 . **NOTE:**

Install new rear outer seat cover backrest retaining clips.

To install, reverse the removal procedure.

www.JagDocs.com

Rear Outer Seat Cushion (76.70.44)

Removal

1 . Detach the rear outer seat cushion.

- Release the rear outer seat cushion retaining clips.

2 . Disconnect the rear outer seat cushion electrical connectors.

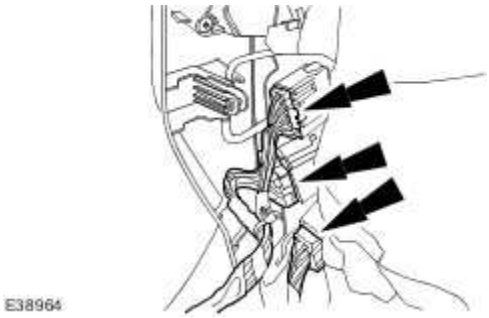

3 . Remove the rear outer seat cushion.

Installation

1 . To install, reverse the removal procedure.

Rear Seat Armrest (76.70.39)

Removal

1 . Remove the rear seat backrest.
For additional information, refer to Rear Seat Backrest (76.70.38)

2 . Detach the rear seat backrest cover.

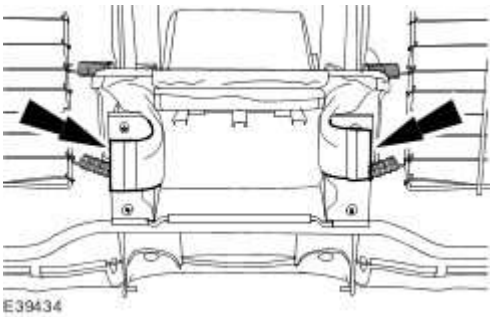

3 . Detach the rear seat armrest cover from the rear seat backrest.

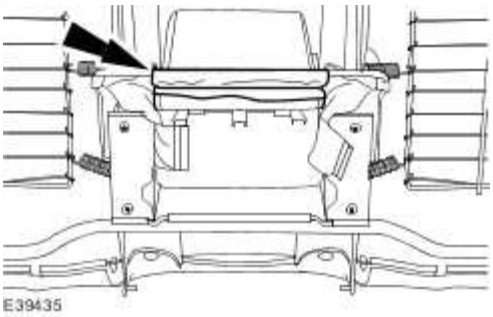

4 . Remove the rear seat armrest.

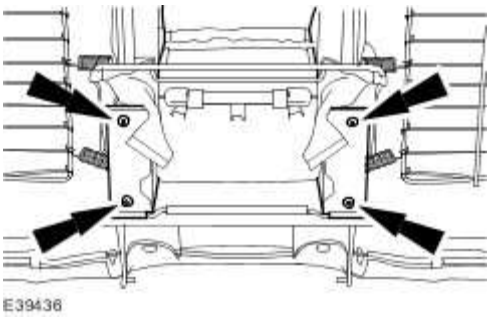

Installation

1 . To install, reverse the removal procedure.

www.JagDocs.com

Rear Seat Backrest (76.70.38)

Removal

1 . Remove the rear seat cushion.
For additional information, refer to Rear Seat Cushion (76.70.37)

2 . Fully extend the rear center safety belt.

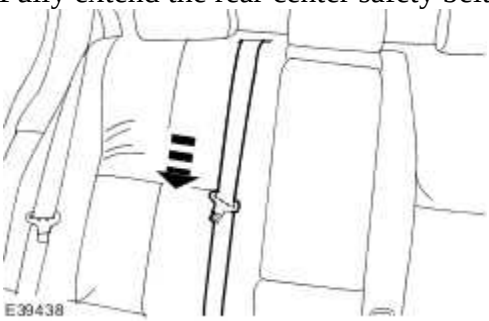

3 . **NOTE:**
Right-hand shown, left-hand similar.

Detach the rear seat backrest.

1) Release the rear seat backrest retaining clip.
2) Detach the rear seat backrest.

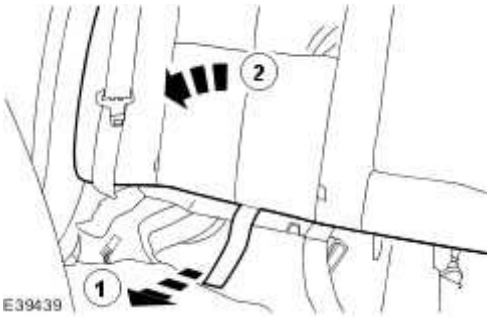

4 . Remove the rear seat backrest.

Installation

1 . **NOTE:**

Make sure the rear seat backrest pivot bracket inserts are correctly installed.

NOTE:
Install new rear seat backrest pivot bracket inserts if they are damaged.

To install, reverse the removal procedure.

www.JagDocs.com

Rear Seat Backrest Cover (76.70.48)

Removal

1 . Remove the rear seat armrest.
For additional information, refer to Rear Seat Armrest (76.70.39)

2 . Remove the rear seat head restraints.

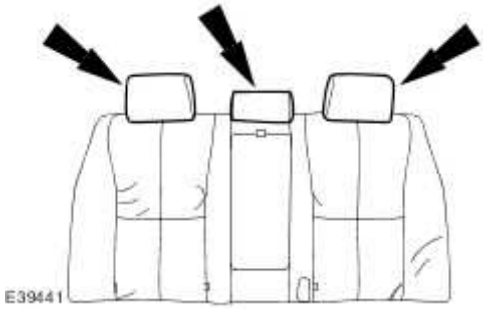

3 . **NOTE:**
Left-hand shown for clarity, others similar.

Detach the rear seat head restraint retaining post.

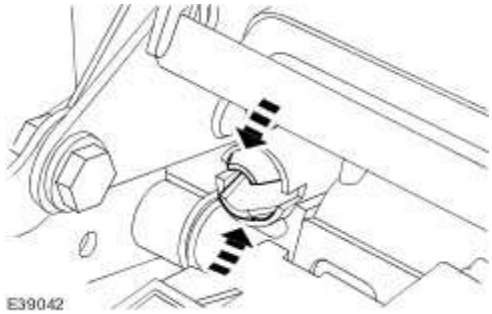

4 . **NOTE:**
Left-hand shown for clarity, others similar.

Remove the rear seat head restraint retaining post.

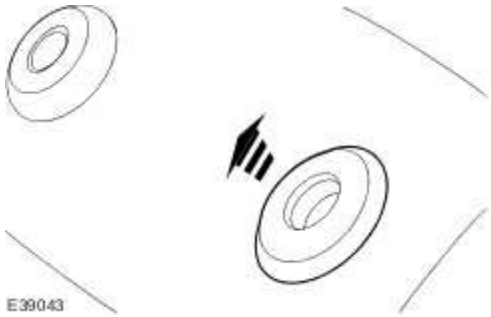

5 . Detach the rear seat backrest cover.

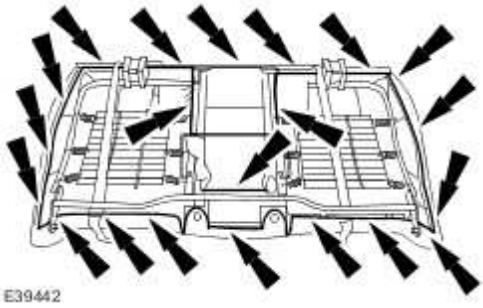

6 . Remove the rear seat backrest cover retaining clips.

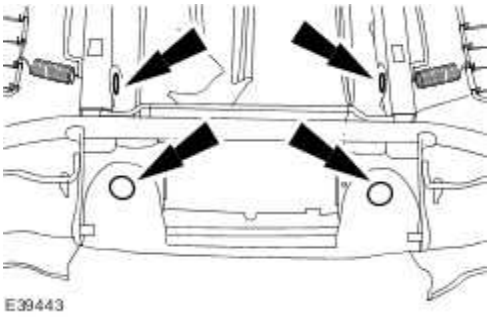

7 . Remove the rear seat backrest cover and cushion.

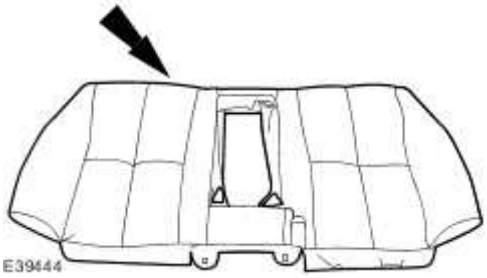

8 . Remove and discard the rear seat backrest cover retaining clips.

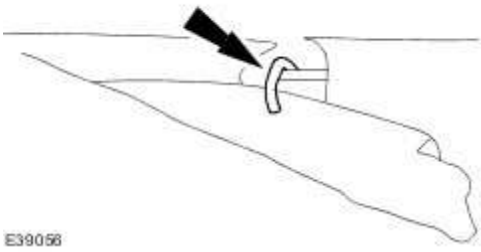

9 . Remove the rear seat backrest cover.

www.JagDocs.com

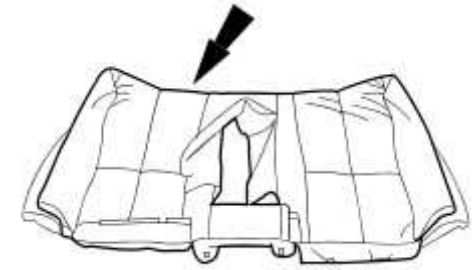

Installation

1 . **NOTE:**

Install new rear seat backrest cover retaining clips.

To install, reverse the removal procedure.

Rear Seat Control Switch (86.75.42)

Removal

1 . Remove the rear seat cushion. For additional information refer to
For additional information, refer to Rear Outer Seat Cushion (76.70.44) or
For additional information, refer to Rear Seat Cushion (76.70.37) in this section.

2 . Disconnect the rear seat control switch electrical connector.

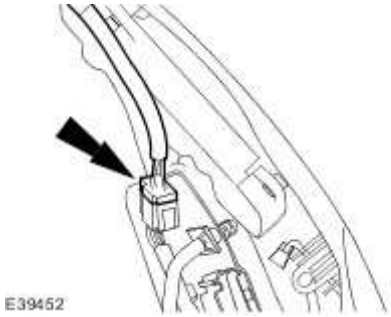

3 . Remove the rear seat control switch and trim panel assembly.

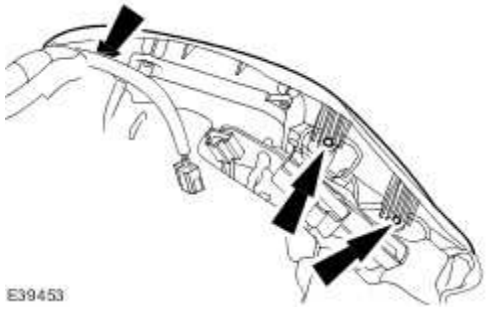

4 . Remove the rear seat control switch.

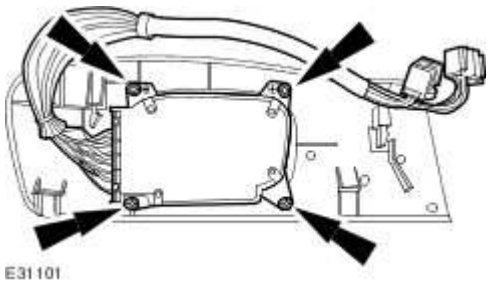

Installation

1 . To install, reverse the removal procedure.

www.JagDocs.com

Rear Seat Cushion (76.70.37)

Removal

1 . Detach the rear seat cushion.

Release the rear seat cushion retaining clips.

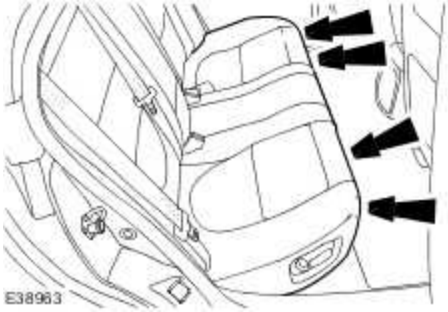

2 . **NOTE:**

Right-hand shown, left-hand similar.

Disconnect the rear seat cushion electrical connectors.

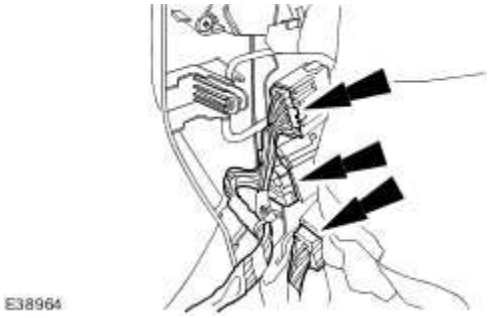

3 . Remove the rear seat cushion.

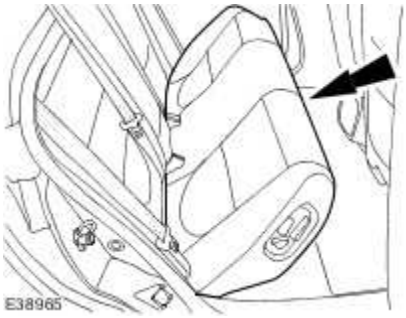

Installation

1 **NOTE:**

- Make sure the rear seat cushion is correctly located under the rear retaining brackets.

To install, reverse the removal procedure.

www.JagDocs.com

Rear Seat Cushion Cover (76.70.47)

Removal

1 . Remove the rear seat cushion.
For additional information, refer to Rear Seat Cushion (76.70.37)

2 . **NOTE:**
Right-hand shown, left-hand similar.

Disconnect the rear seat control switch electrical connector.

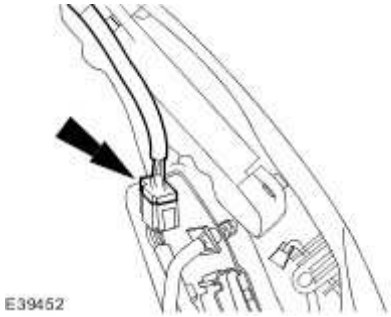

3 . **NOTE:**
Right-hand shown, left-hand similar.

Remove the rear seat control switch and trim panel assembly.

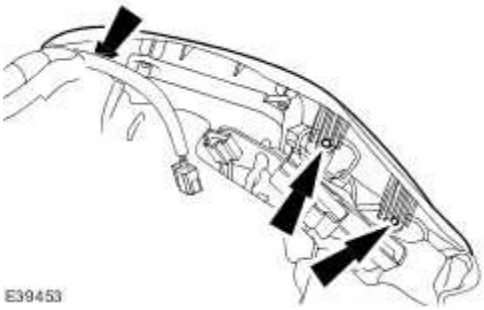

4 . Remove and discard the rear seat cushion cover retaining clips.

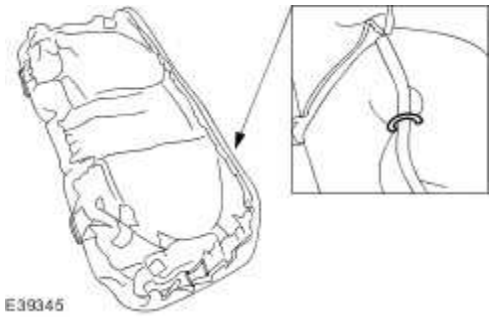

5 . Remove the rear seat cushion cover.

Installation

1 . **NOTE:**

Install new rear seat cushion cover retaining clips.

To install, reverse the removal procedure.

www.JagDocs.com

Rear Seat Head Restraint Motor (86.75.41)

Removal

1 . Remove the rear outer seat backrest.
For additional information, refer to Rear Outer Seat Backrest (76.70.76)

2 . Detach the rear seat head restraint.

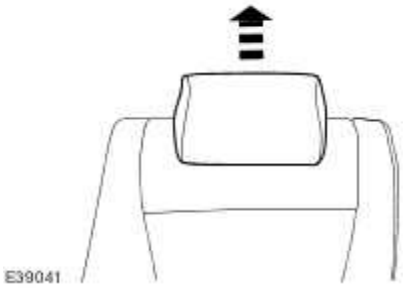

3 . Disconnect the rear seat head restraint motor electrical connector.

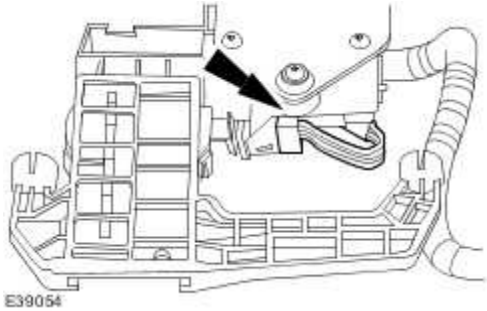

4 . Remove the rear seat head restraint motor.

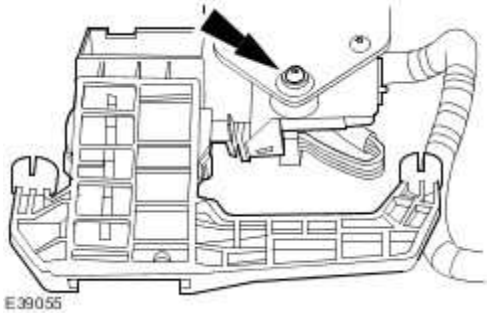

Installation

1 . To install, reverse the removal procedure.

www.JagDocs.com

Rear Seat Lumbar Motor (86.75.43)

Removal

1 . Remove the rear outer seat backrest.
For additional information, refer to Rear Outer Seat Backrest (76.70.76)

2 . Remove the rear seat head restraint.

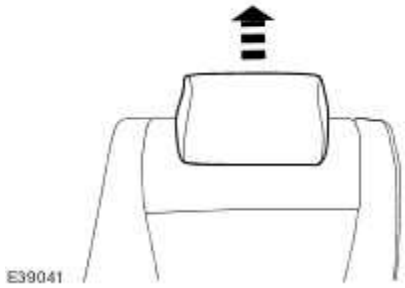

3 . **NOTE:**
Right-hand shown, left-hand similar.

Detach the rear seat head restraint retaining post.

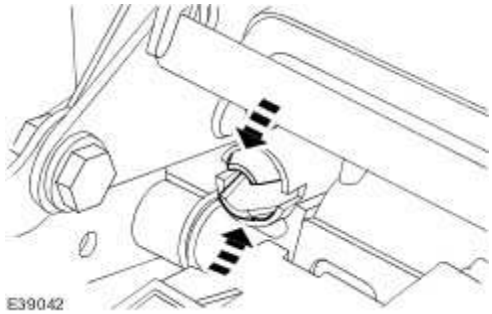

4 . **NOTE:**
Right-hand shown, left-hand similar.

Remove the rear seat head restraint retaining post.

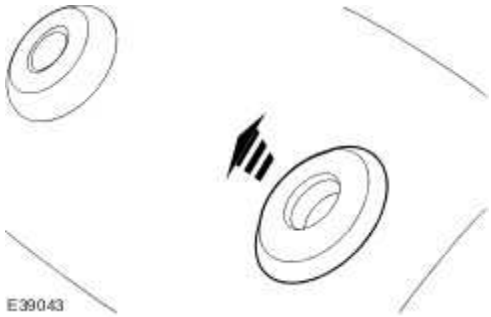

5 . Detach the rear outer seat backrest cover.

6 . Detach the rear outer seat backrest cover and cushion.

7 Remove the rear outer seat backrest cover and cushion.

· Disconnect the rear outer seat backrest heater pad electrical connector.

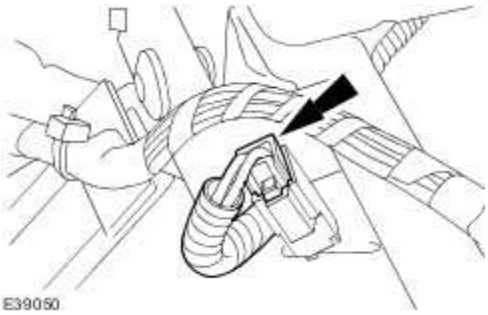

8 . Disconnect the rear seat lumbar motor electrical connector.

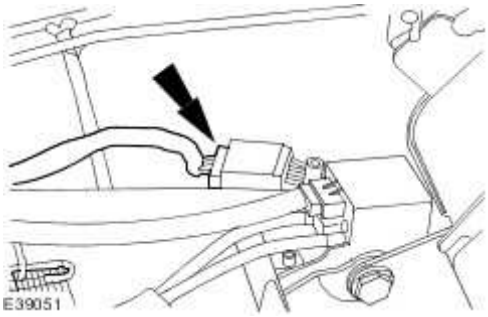

www.JagDocs.com

9 . Detach the rear seat lumbar motor.

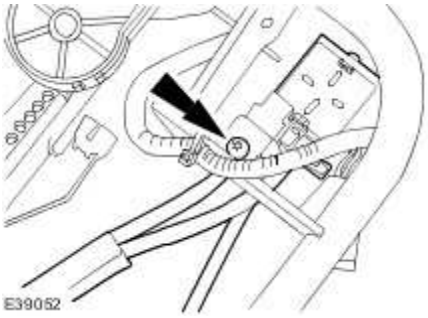

10 . Remove the rear seat lumbar motor.

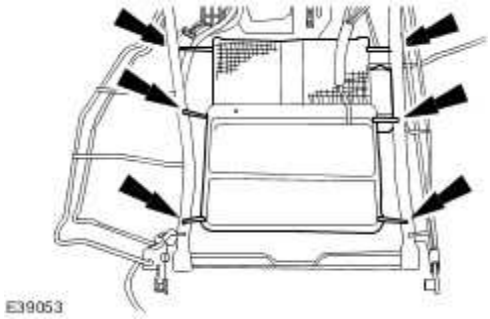

Installation

1 . To install, reverse the removal procedure.

Seat Armrest (76.70.97)

Removal

1 . Remove the rear seat outer backrests.
For additional information, refer to Rear Outer Seat Backrest (76.70.76)

2 . Detach the seat armrest.

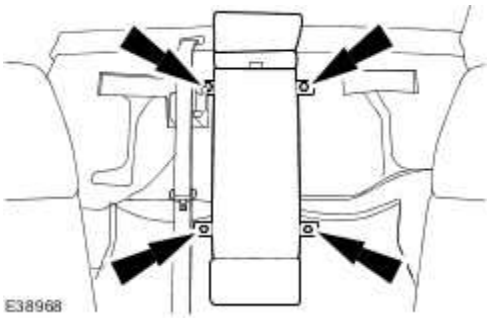

3 . Remove the seat armrest.

- Disconnect the seat armrest electrical connectors.

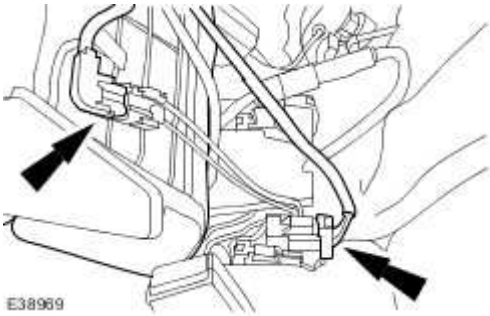

Installation

1 . To install, reverse the removal procedure.

www.JagDocs.com

Seat Base (76.70.08)

Removal

1 . Remove the front seat control switch.
For additional information, refer to Front Seat Control Switch (86.75.46)

2 . Remove the front seat backrest hinge inner trim panel.

3 . Remove the front seat backrest inner trim panel.

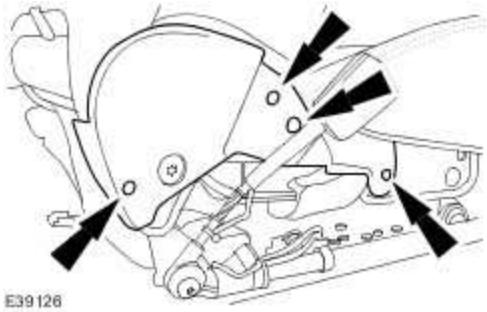

4 . Detach the front seat backrest trim panel.

1) Detach the front seat backrest trim panel retaining clips.

2) Detach the front seat backrest trim panel.

5 Remove the front seat backrest trim panel.

· Disconnect the rear passenger footwell courtesy lamp electrical

connector.

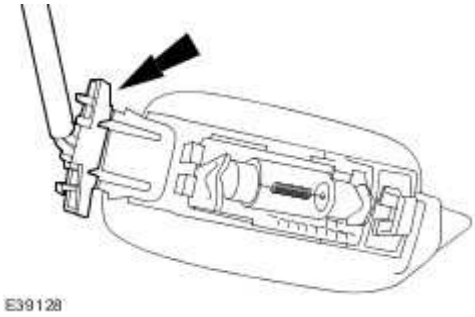

6 . Detach the front seat cushion cover.

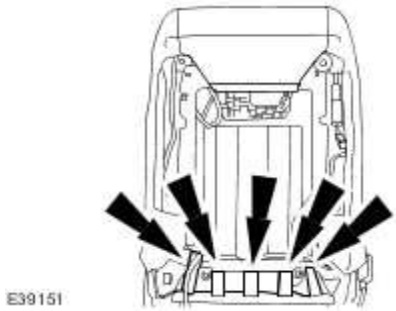

7 . Detach the front seat cushion cover retaining hooks.

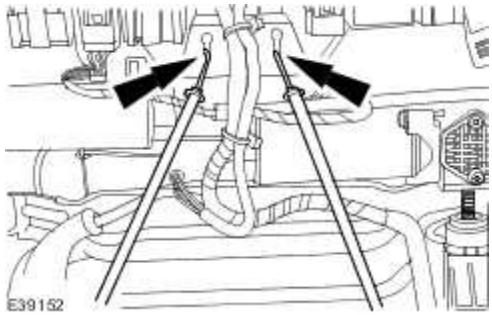

8 . Detach the front seat cushion cover retaining strap.

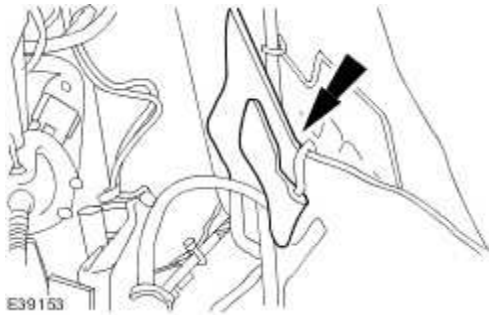

9 . Disconnect the front seat cushion heater pad electrical connector.

www.JagDocs.com

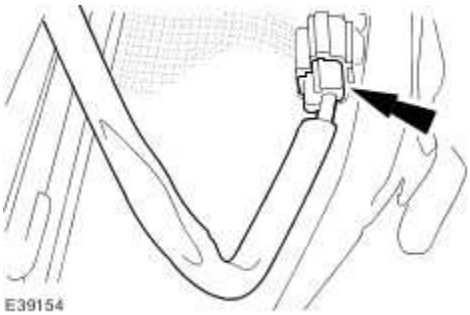

10 . Remove the front seat cushion and cushion cover assembly.

11 . Remove the front seat backrest outer trim panel.

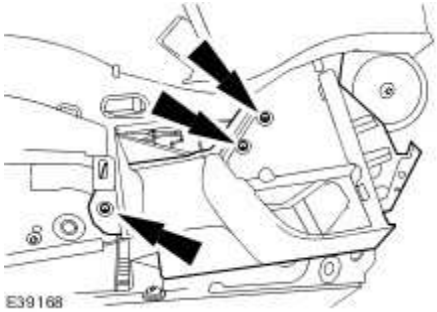

12 . Detach the seat base wiring harness.

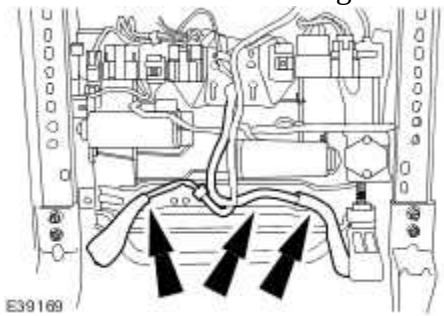

13 . Disconnect the electrical connectors.

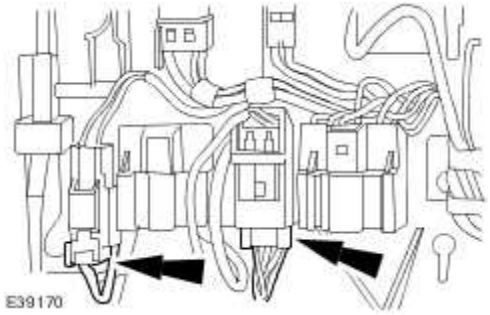

14 . Remove the front seat belt buckle.

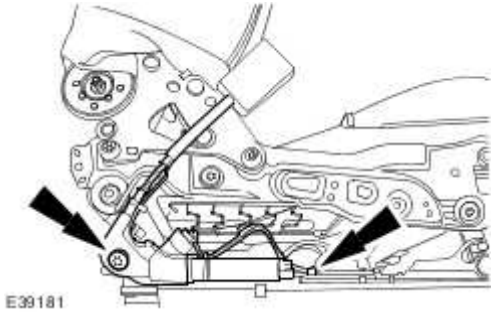

15 . Detach the front seat cushion heater pad electrical connector.

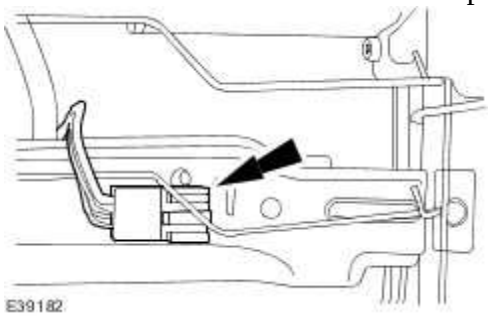

16 . Disconnect the seat base runner motors electrical connectors.

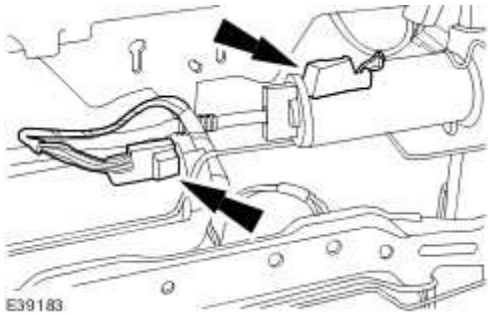

17 . Detach the driver seat module retaining bracket.

www.JagDocs.com

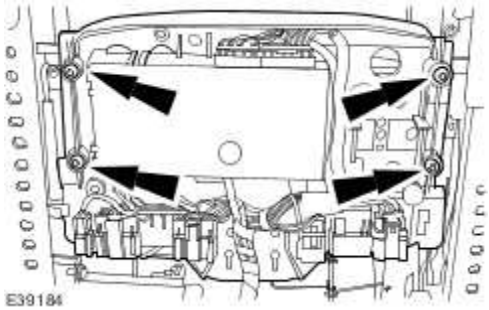

18. Disconnect the seat base height adjustment and cushion extend motors electrical connectors.

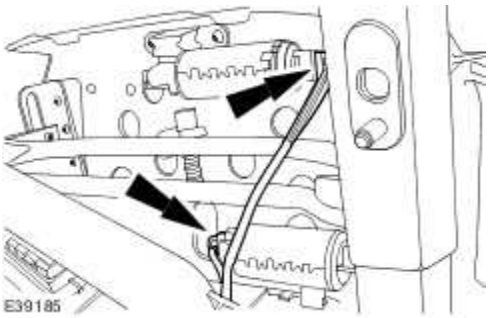

19. **NOTE:**

Do not remove or carry out any repairs to the anti-whiplash system (AWS) on the front seat back.

NOTE:

In the event of the AWS operating, there are no serviceable components.

NOTE:

Right-hand shown, left-hand similar.

Remove the seat base.

- Remove the front seat backrest retaining bolts.

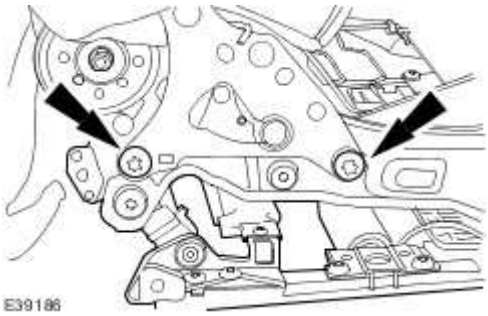

Installation

1 **NOTE:**

· Do not remove or carry out any repairs to the anti-whiplash system (AWS) on the front seat back.

NOTE:

In the event of the AWS operating, there are no serviceable components.

To install, reverse the removal procedure.

➤ Tighten to 25 Nm.

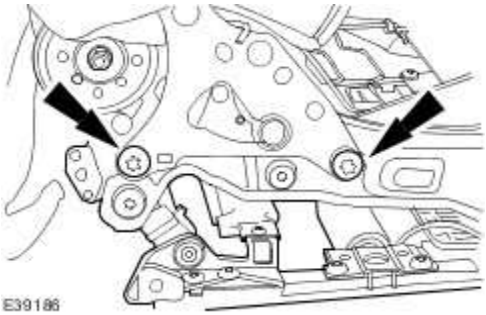

2 . Tighten to 35 Nm.

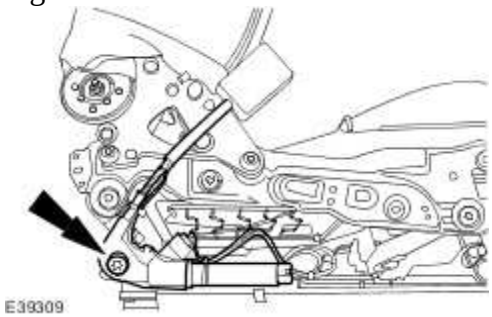

www.JagDocs.com

Rear Seat Backrest - Vehicles With: 40/20/40 Split Seat (76.70.48)

Disassembly

1 . Remove the rear outer seat backrest.
For additional information, refer to Rear Outer Seat Backrest (76.70.76)

2 . Remove the rear seat head restraint.

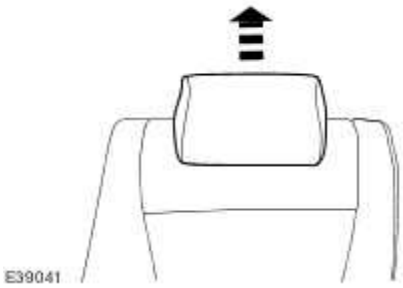

3 . **NOTE:**
Left-hand shown, right-hand similar.

Detach the rear seat head restraint retaining post.

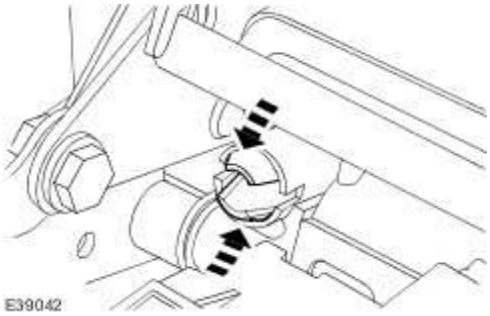

4 . **NOTE:**
Left-hand shown, right-hand similar.

Remove the rear seat head restraint retaining post.

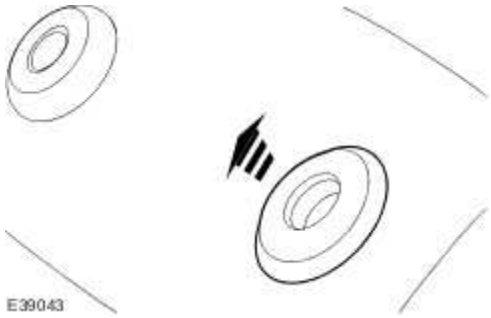

5 . Detach the rear seat outer backrest cover.

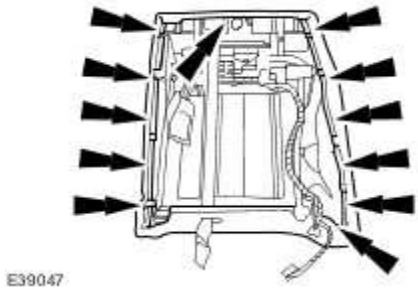

6 . Detach the rear seat backrest cover and cushion.

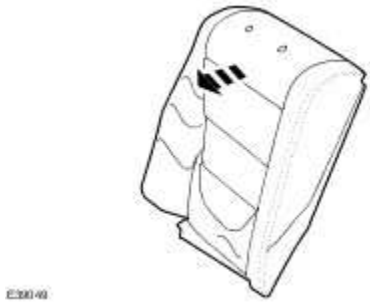

7 . Remove the rear seat backrest cover and cushion.

- Disconnect the rear seat backrest heater pad electrical connector.

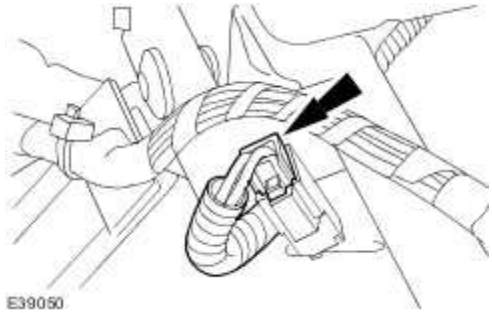

8 . Disconnect the rear seat lumbar support electrical connector.

www.JagDocs.com

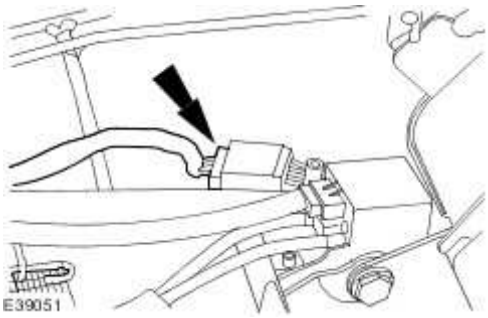

9 . Detach the rear seat lumbar support control valve.

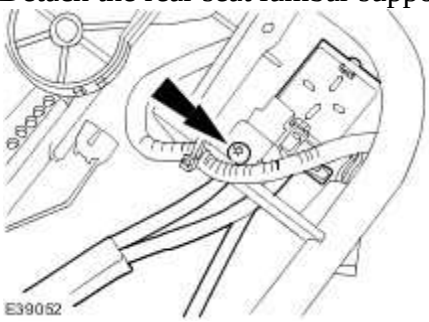

10 . Remove the rear seat lumbar support.

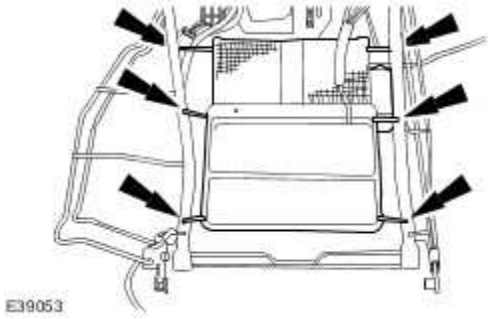

11 . Disconnect the rear seat head restraint motor electrical connector.

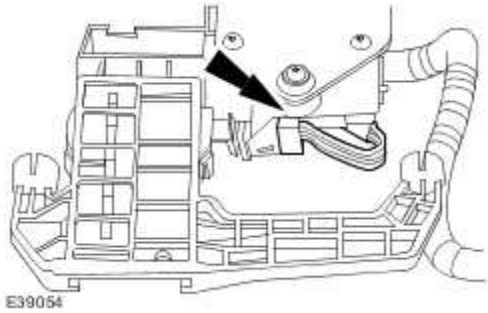

12 . Remove the rear seat head restraint motor.

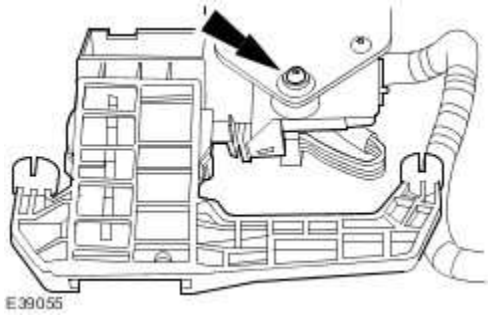

Assembly

1 . To install, reverse the removal procedure.

www.JagDocs.com

Specifications

Torque Specifications

Description	Nm	lb-ft	lb-in
Front door window glass regulator and motor retaining screws	7	-	62
Rear door window glass regulator and motor retaining screws	7	-	62
Rear quarter window glass retaining screws	3	-	27
Front door window glass retaining bolt	7	-	62
Rear door window glass retaining bolt	7	-	62
Rear door window glass regulator to window glass retaining bolt	7	-	62

Door Window Motor Initialization

1. **NOTE:**
   After the battery has been disconnected it is necessary to initialize each door window motor separately to operate the ' one-touch' up function.

Operate the window control switch until the door window glass is in the fully closed position, continue to operate the window control switch for a further two seconds.

2. Release the window control switch.

3. Operate the window control switch in the closed position and continue to operate the window control switch for a further two seconds.

4. Operate the window control switch until the door window glass is in the fully open position (' one-touch' down).

5. **NOTE:**
   If the door window motor initialization has been completed correctly, when the window control switch is operated, the door window glass should move to the fully closed position (' one-touch' up) automatically.

NOTE:
If the door window glass does not fully close automatically (' one-touch' up), repeat the complete procedure.

Operate the window control switch once to the close position.

6. Repeat the door window motor initialization for each door window motor.

www.JagDocs.com

Glass, Frames and Mechanisms

The vehicle has a fully bonded, laminated windshield glass bonded directly to the body. The windshield glass is available in two versions with a bright or black aluminium finisher. The two windshield glass options are:

- heated wiper park.
- fully heated.

The heated windshield glass is controlled by the dual automatic temperature control module when the ignition is in the RUN position and the heated windshield glass switch has been activated. Four minutes after activation, the heated windshield glass will automatically switch off. The function is also deactivated if the switch is operated before the defrost cycle has elapsed.

The rear window glass is available in two versions with a bright or black aluminium finisher. The two rear window glass options are:

- AM/FM
- AM/FM, TV and VICS

The rear window is a fully bonded toughened glass that combines the rear defrost grid, antenna for the audio unit, TV and VICS. The heated rear window is controlled by the dual automatic temperature control when the rear window defrost button is depressed. When the switch is depressed an indicator in the switch will illuminate indicating that the system is operative. Ten minutes after activation, the heated rear window will automatically deactivate. The function is also deactivated if the customer operates the switch again, before the defrost cycle has elapsed.

The front and rear door windows are electrically operated. All door windows can be operated individually, or by the driver window control switch. The operation of the windows is proportional to the switch activation. The windows can be controlled by "one touch" operation of the switch in the downwards direction. An anti-trap system is fitted to the front and rear door window mechanisms as standard. If a door window is activated in the upwards direction an anti-trap sensor is automatically checked prior to the window closing. If the anti-trap sensor is inoperative the window will not close. When the anti-trap sensor detects an obstacle in the door window path the upward travel of the door window will automatically cease and downward travel of the door window will begin.

Note: If the battery has been disconnected the "one touch" function will not operate until the system has been initialized. For additional information, refer to ()

Published: Mar 28, 2014

Glass, Frames and Mechanisms – Armoured Vehicles

WARNING: The front and rear glass fitted to the vehicle are extremely heavy. Repairs to the screens should only be carried out by qualified personnel using suitable equipment. Failure to follow this instruction may result in personal injury.

Glass

The composite glass fitted to the front and rear of the vehicle offer ballistic protection and are a minimum of 21 mm (0.82 in) thick.

Windshield Glass

The windshield glass offers ballistic protection whilst retaining the optical quality of the standard windshield glass. The windshield glass is bonded to the directly to the body and features the same heating function as the standard windshield glass. The windshield glass weighs approximately 100 kg (220 lb).

Rear Window Glass

The rear window glass is bonded to the upper tail door and features the heating element and radio antenna of the standard screen. The rear window weighs approximately 56 kg (125 lb).

Door Window Glass

The door window glass offers ballistic protection and are of a minimum thickness of 21 mm (0.82 in). The door window glasses are fixed in place. Electrically operated door window glasses are available as an option although there is only partial opening. One touch operation and anti-trap are not available on this vehicle.

www.JagDocs.com

Diagnosis and testing

Glass, Frames and Mechanisms

Inspection and Verification

1 . Verify the customer concern by operating the system.

2 . Visually inspect for obvious signs of mechanical and electrical damage.

Visual Inspection Chart

Mechanical	Electrical
• Window glass. • Window regulator.	• Fuse(s). • Window motor. • Loose or corroded electrical connector(s). • Switch. • Circuit(s).

1 . If an obvious cause for an observed or reported concern is found, correct the cause (if possible) before proceeding to the next step.

2 . If the concern is not visually evident, verify the symptom and refer to the Jaguar Approved Diagnostic System.

Removal and installation

Front Door Window Glass (76.31.01)

Removal

1 . Lower the front door window glass approximately 290 mm (11.4 in).

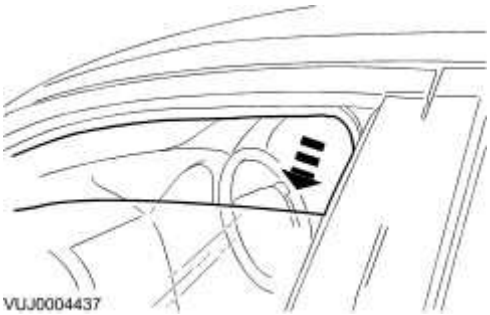

2 . Detach the front door wiring harness.

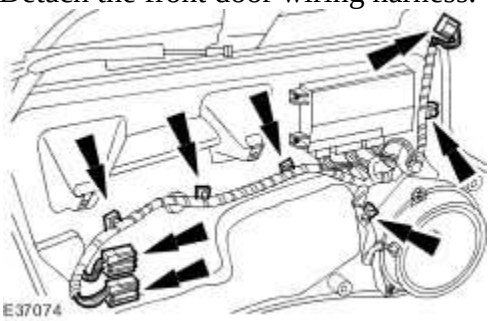

3 . Disconnect the electrical connectors.

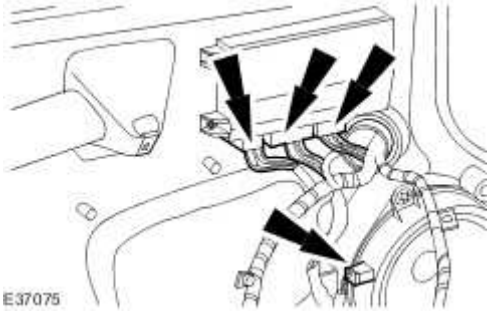

4 . Detach the front door wiring harness grommet.

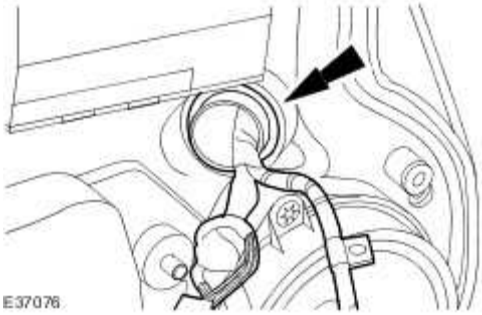

5 . Remove the front door inner weathershield.

www.JagDocs.com

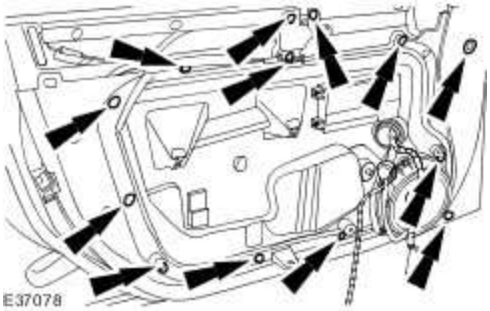

6 . Remove the front door window glass retaining bolt.

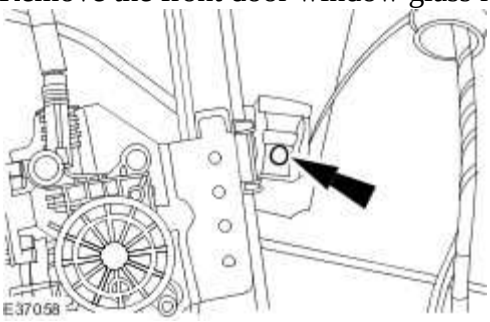

7 . Detach the front door window glass from the front door window regulator retaining clip.

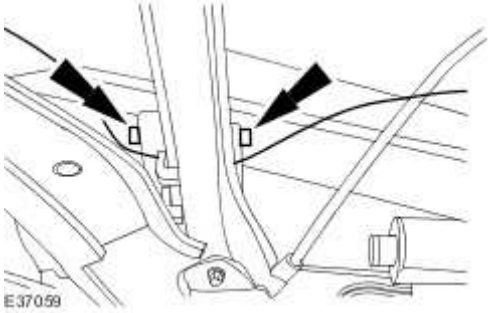

8 . Remove the front door window glass.

Installation

1 . **NOTE:**

- Make sure the front door window glass is correctly located to the front door window regulator.

To install reverse the removal procedure.

- Tighten to 7 Nm.

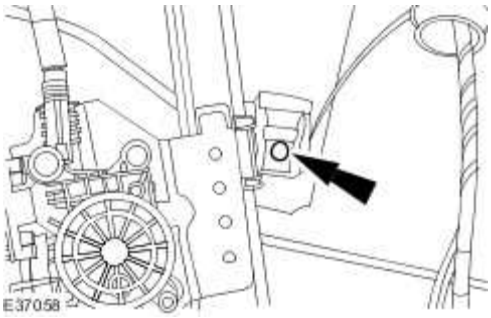

www.JagDocs.com

Published: Mar 28, 2014

Front Door Window Glass (76.31.01) – Armoured Vehicles

Removal

Vehicles with fixed windows

1 . Remove the front door trim panel.
For additional information, refer to Front Door Trim Panel (76.34.01)

2 . **CAUTION: Protect the front door window glass and the front door window frame. Failure to follow this instruction may result in damage to the vehicle.**

Using a suitable tool, cut the door trim seal.

3 . **CAUTION: Protect the front door window glass and the front door window frame. Failure to follow this instruction may result in damage to the vehicle.**

Remove the front door window glass seal.

4 . Disconnect the front door speaker electrical connector.

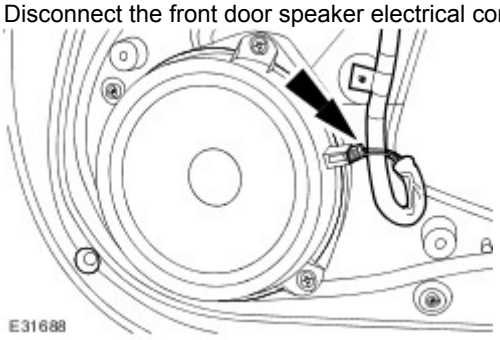

5 . Remove the front door speaker.

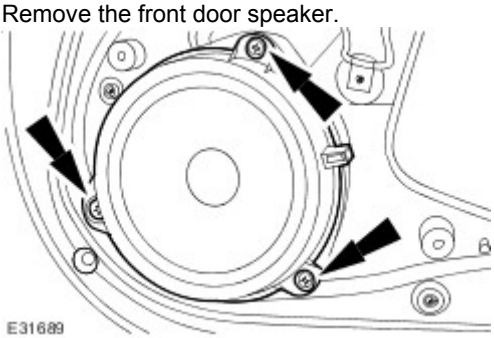

6 . Remove the front door access panel.

- Remove the retaining nuts.

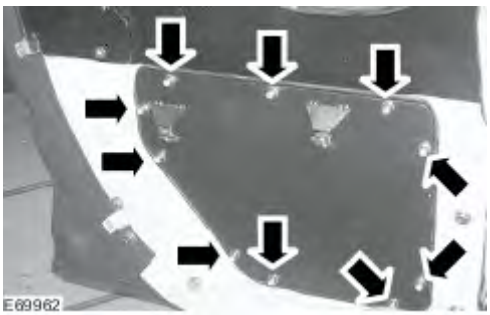

7 . Remove the exterior mirror access panel.

- Remove the retaining screws.

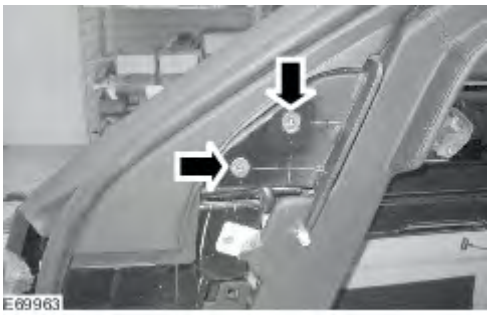

8 . Remove the front door handle release cable access panel.

- Remove the retaining screw.

www.JagDocs.com

9 . Remove the front door armoured panel.

- A: Remove the retaining nuts.
- B: Remove the 50mm (1.97 inch) long retaining bolts.
- C: Remove the 20mm (0.79 inch) long retaining bolts.
- D: Remove the 25mm (0.98 inch) long retaining bolts.

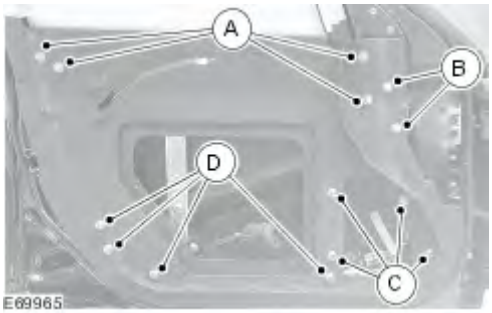

10 . Remove the front door inner weathershield.

11 . Using suitable tie straps support the front door fixed window glass.

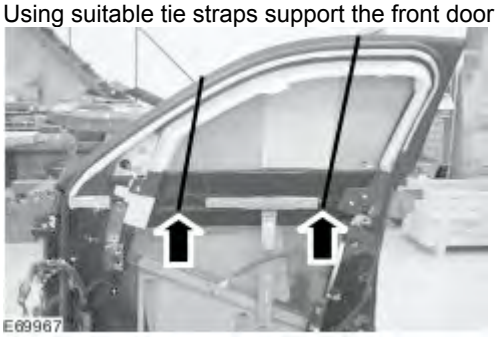

12 . Release the front door window glass support.

- Undo the retaining bolt.

13 . Remove the front door window glass support.

Remove the retaining nut.

Vehicles with power windows

14 . Remove the front door window regulator and motor.
For additional information, refer to Front Door Window Regulator and Motor (86.25.04)

All vehicles

15 .

CAUTION: Protect the front door window glass and the front door window frame. Failure to follow this instruction may result in damage to the vehicle.

NOTE:

Remove the front door window glass tie straps.

NOTE:

Remove the front door window glass from outside of the front door window glass frame.

Remove the front door window glass.

1) Reposition the front door window glass.
2) Remove the front door window glass.

www.JagDocs.com

Installation

All vehicles

1 . **CAUTION: Protect the front door window glass and the door window frame. Failure to follow this instruction may result in damage to the vehicle.**

NOTE:

Install the front door window glass from outside of the front door window glass frame.

Install the front door window glass.

1) Install the front door window glass.
2) Reposition the front door window glass.

2 . Using suitable tie straps support the front door window glass.

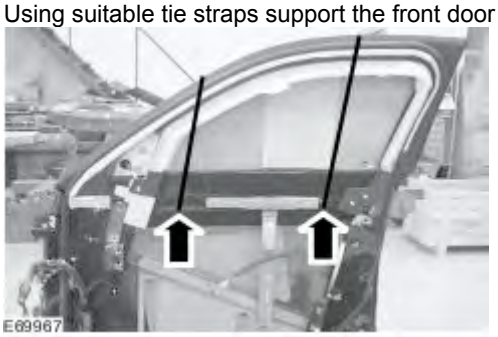

Vehicles with power windows

3 . Install the front door window regulator and motor.
For additional information, refer to Front Door Window Regulator and Motor (86.25.04)

Vehicles with fixed windows

4 . Install the front door window glass support.

Install the retaining nut.

5 . Attach the front door window glass support.

Install the retaining bolts.

6 . Remove the suitable tie straps from the front door fixed window glass.

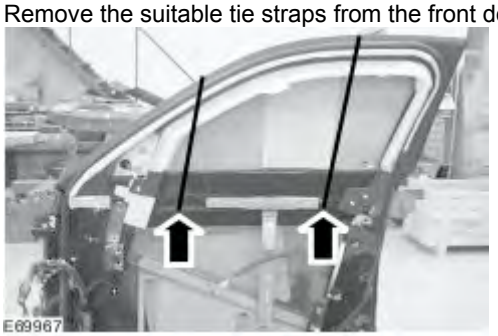

7 . Install the front door inner weathershield.

www.JagDocs.com

8 . Install the front door armoured panel.

- A: Install the retaining nuts.
- B: Install the 50mm (1.97 inch) long retaining bolts.
- C: Install the 20mm (0.79 inch) long retaining bolts.
- D: Install the 25mm (0.98 inch) long retaining bolts.

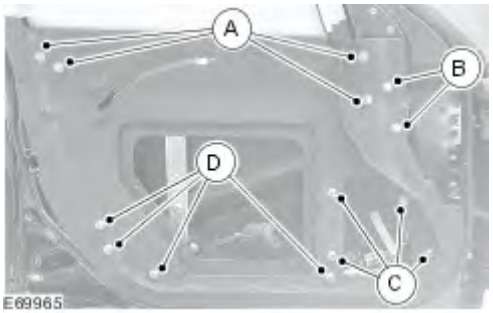

9 . Install the front door handle release cable access panel.

- Install the retaining screw.

10 . Install the exterior mirror access panel.

- Install the retaining screws.

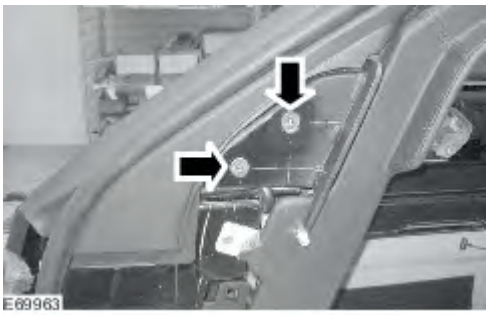

11 . Install the front door access panel.

Install the retaining nuts.

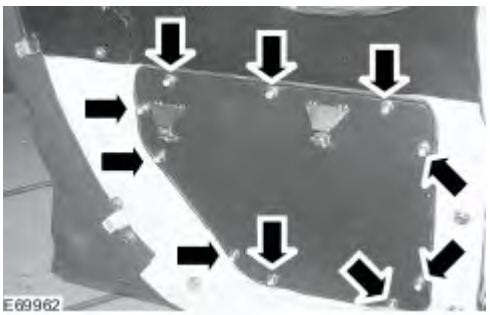

12 . Install the front door speaker.

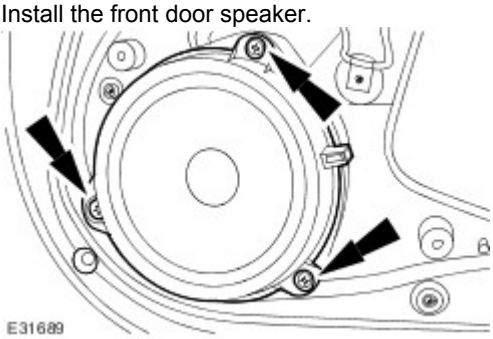

13 . Install the front door speaker electrical connector.

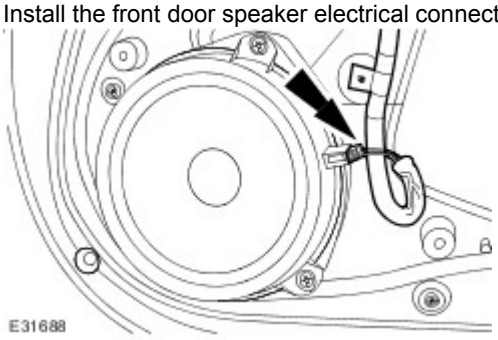

14 .

CAUTION: Protect the front door window glass and the front door window frame. Failure to follow this instruction may result in damage to the vehicle.

Install the front door window glass seal.

15 . Install the front door trim panel.
For additional information, refer to Front Door Trim Panel (76.34.01)

www.JagDocs.com

Front Door Window Regulator and Motor (86.25.04)

Removal

1 . Remove the front door window glass.
For additional information, refer to Front Door Window Glass (76.31.01)

2 . Disconnect the electrical connector.

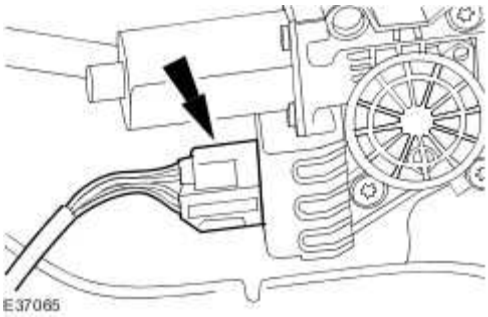

3 . Remove the front door window regulator and motor.

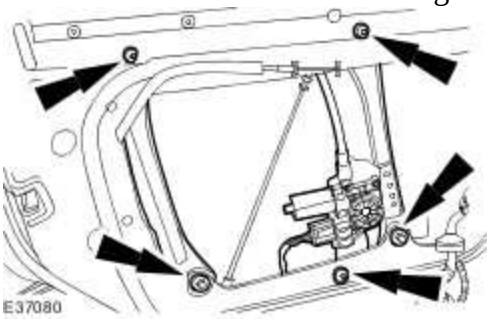

Installation

1 . To install, reverse the removal procedure.
Tighten to 7 Nm.

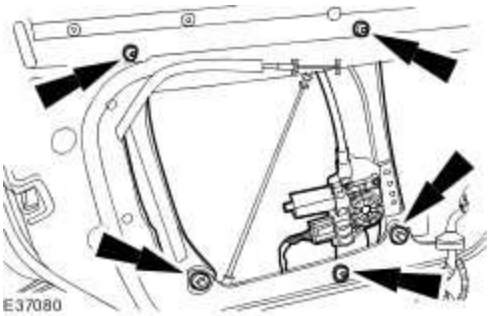

www.JagDocs.com

Published: Mar 30, 2014

Front Door Window Regulator and Motor (86.25.04) – Armoured Vehicles

Removal

1 . Remove the front door trim panel.
For additional information, refer to Front Door Trim Panel (76.34.01)

2 .

CAUTION: Protect the front door window glass and the front door window frame. Failure to follow this instruction may result in damage to the vehicle.

Using suitable tool, cut the front door trim seal.

3 .

CAUTION: Protect the front door window glass and the front door window frame. Failure to follow this instruction may result in damage to the vehicle.

Remove the front door window glass seal.

4 . Disconnect the front door speaker electrical connector.

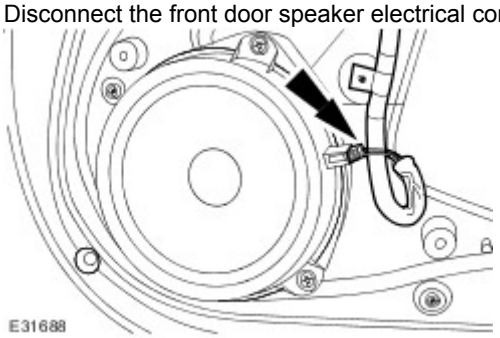

5 . Remove the front door speaker.

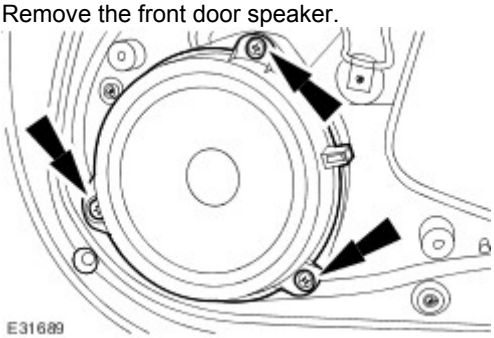

6 . Remove the front door access panel.

- Remove the retaining nuts.

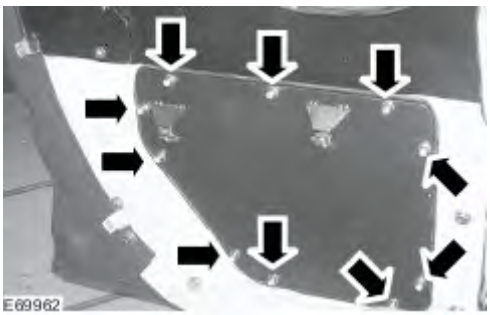

7 . Remove the exterior mirror access panel.

- Remove the retaining screws.

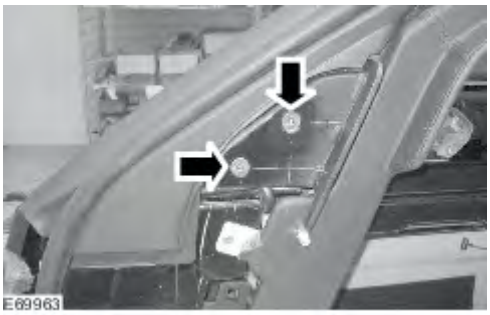

8 . Remove the front door handle release cable access panel.

- Remove the retaining screw.

www.JagDocs.com

9 . Remove the front door armour panel.

- A: Remove the retaining nuts.
- B: Remove the 50mm (1.97 inch) long retaining bolts.
- C: Remove the 20mm (0.79 inch) long retaining bolts.
- D: Remove the 25mm (0.98 inch) long retaining bolts.

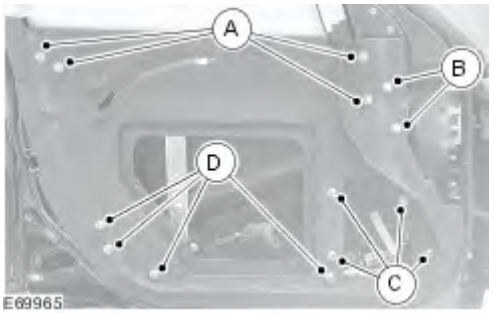

10 . Remove the front door inner weathershield.

11 . Using suitable tie straps support the front door window glass.

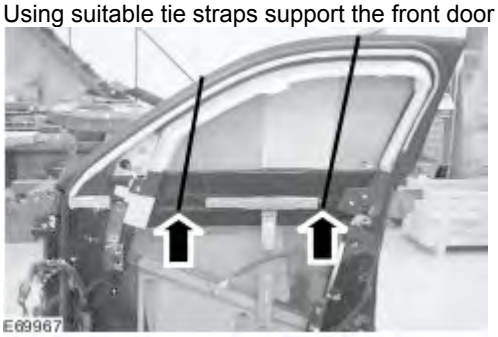

12 . Detach the front door window regulator and motor wiring harness.

- Remove the retaining nut.

13 . Detach the front door window regulator and motor wiring harness relays.

14 . Detach the front door window regulator and motor wiring harness.

15 . Disconnect the front door window regulator and motor electrical connector.

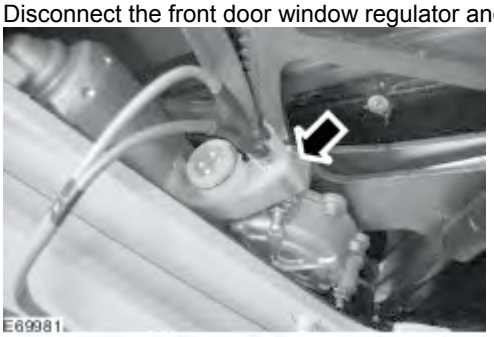

16 . Remove the front door window regulator and motor retaining bolts.

1) Remove the front retaining bolt.

2) Remove the rear retaining bolt.

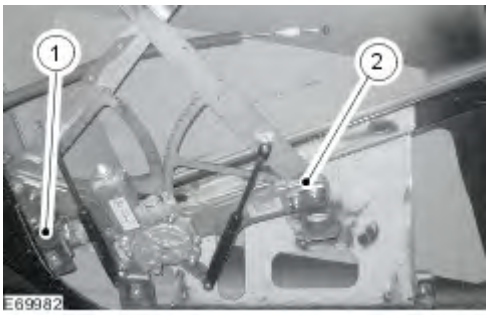

www.JagDocs.com

17 . **NOTE:**

Note the position of the front door window glass rollers.

NOTE:

Note the length of front door window regulator and motor.

Remove the front door window regulator and motor.

1) Remove the 20mm (0.79 inch) long retaining bolt.
2) Remove the 25mm (0.98 inch) long retaining bolt.

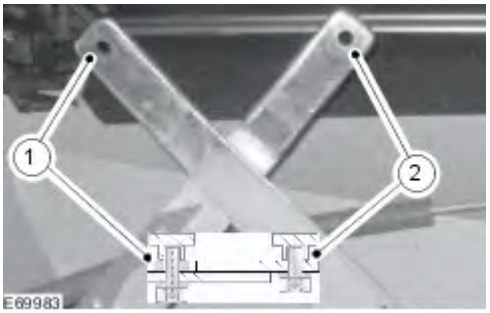

Installation

1 . **NOTE:**

Make sure the front door window glass rollers are correctly installed.

NOTE:

Apply suitable thread lock to the retaining bolts.

Install the front door window regulator and motor.

1) Install the 20mm (0.79 inch) long retaining bolt.
2) Install the 25mm (0.98 inch) long retaining bolt.

- Tighten to 35 Nm.
- Undo the retaining bolts 45 degrees.

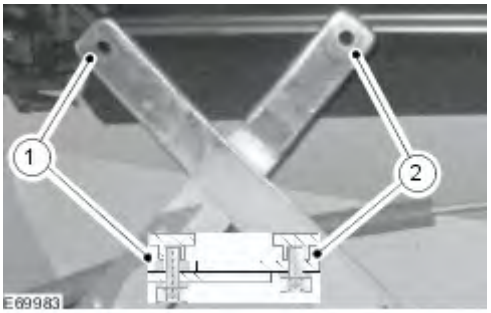

2 . **NOTE:**

It maybe necessary to install shims to align the front door window glass.

Install the front door window regulator and motor retaining bolts.

1) Install the front retaining bolt.
2) Install the rear retaining bolt.

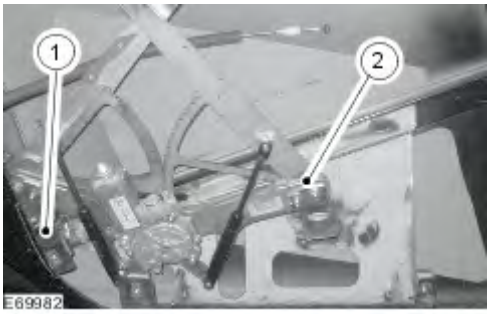

3 . Adjust the front door window glass and tighten the retaining nut.

Tighten the retaining bolts.

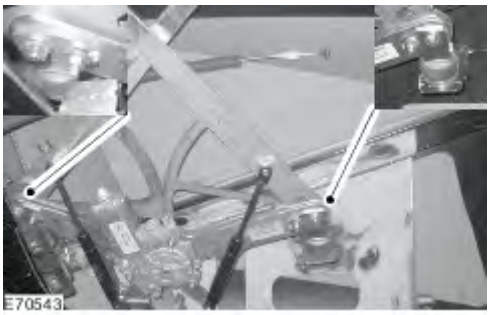

4 . Remove the suitable tie straps supporting the front door window glass.

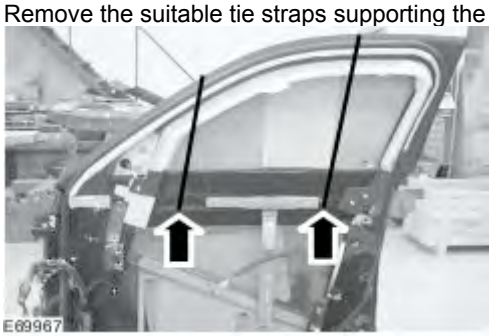

5 . Connect the front door window regulator and motor electrical connector.

www.JagDocs.com

6 . Attach the front door window regulator and motor wiring harness.

7 .

CAUTION: Before making the mechanism run, check the bend of the front door window glass is correctly aligned to its location to avoid any damage to the front door seal.

Fully raise and lower the front door window glass to make sure the front door window glass is correctly aligned to the front door window glass aperture.

8 . If necessary, install shims to correctly align the front door window glass.

9 . Tighten the support bracket retaining nuts.

10 . Attach the front door window regulator and motor wiring harness relays.

11 . Tighten the retaining nut.

12 . Install the front door inner weathershield.

13 . Install the front door armour panel.

- A: Install the retaining nuts.
- B: Install the 50mm (1.97 inch) long retaining bolts.
- C: Install the 20mm (0.79 inch) long retaining bolts.
- D: Install the 25mm (0.98 inch) long retaining bolts.

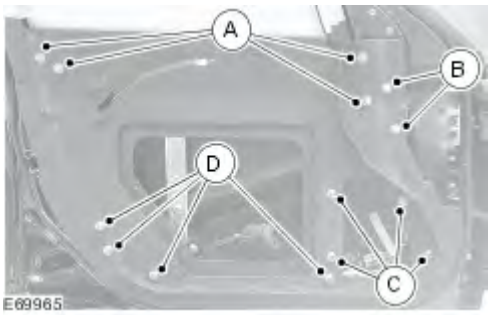

14 . Install the front door handle release cable access panel.

- Install the retaining screw.

www.JagDocs.com

15 . Install the exterior mirror access panel.

Install the retaining screws.

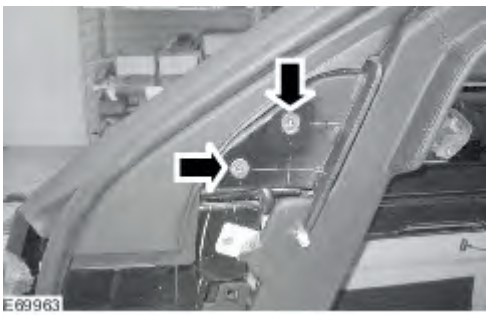

16 . Install the front door access panel.

Install the retaining nuts.

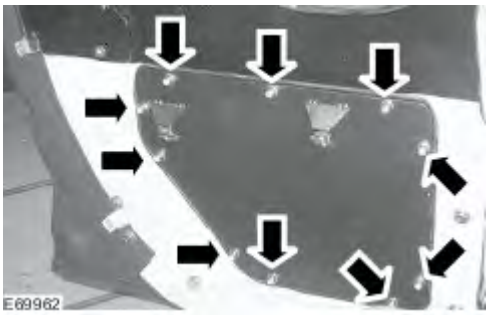

17 . Install the front door speaker.

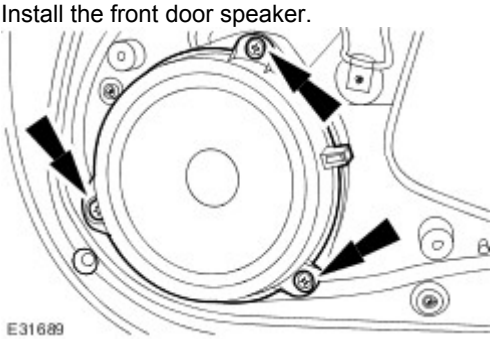

18 . Connect the front door speaker electrical connector.

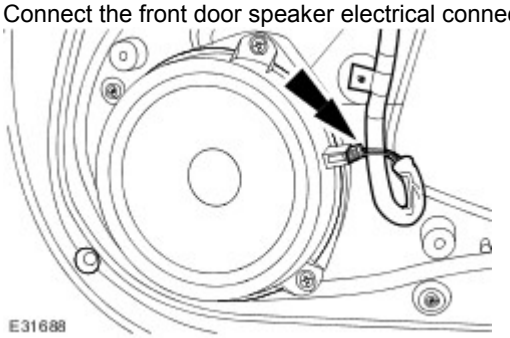

19 .

CAUTION: Protect the front door window glass and the front door window frame. Failure to follow this instruction may result in damage to the vehicle.

Install the front door window glass seal.

20 . Install the front door trim panel.
For additional information, refer to Front Door Trim Panel (76.34.01)

www.JagDocs.com

Rear Door Fixed Window Glass

Removal

1 . Power the rear door window glass to its fully open position.

2 . Remove the rear door trim panel.
For additional information, refer to Rear Door Trim Panel (76.34.04)

3 . Remove the rear door quarter window blind.
For additional information, refer to Rear Door Quarter Window Blind

4 . Detach the rear door wiring harness.
- Disconnect the rear door speaker electrical connector.

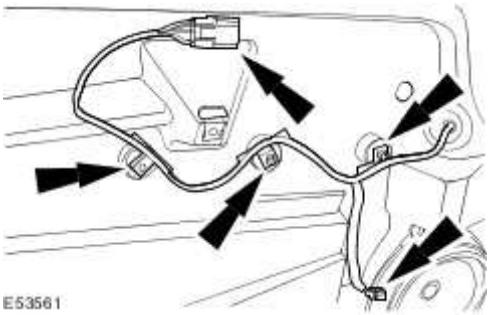

5 . Detach the rear door wiring harness grommet.

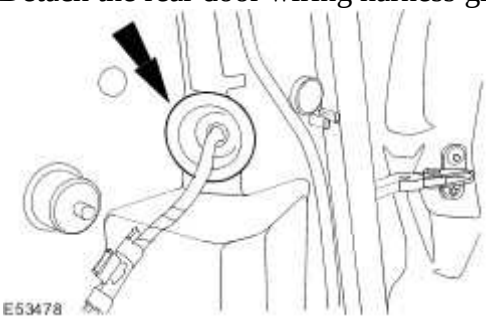

6 . Remove the rear door inner weather-shield retaining screw covers.

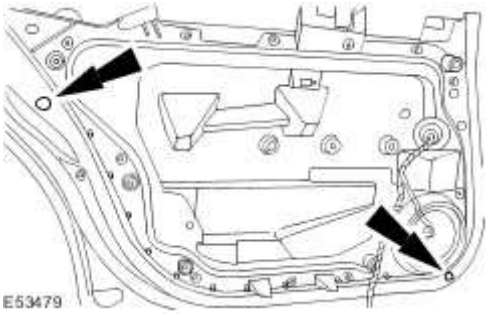

7 . Remove the rear door inner weather-shield.

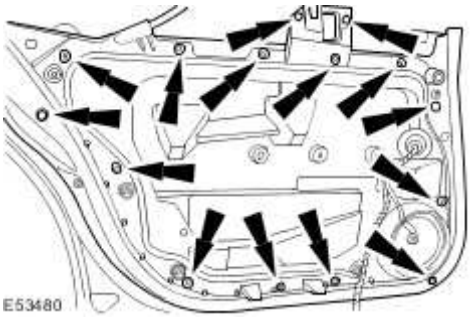

8 . Detach the rear door window glass interior weather-strip.

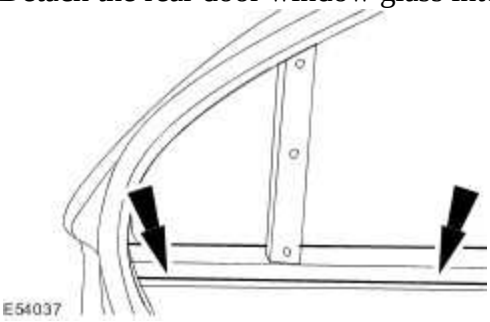

9 . Detach the rear door margin seal.

10 **NOTE:**

· Remove and discard the rear door window moulding and retaining clips.

www.JagDocs.com

NOTE:

Starting at the upper outer corner and using a suitable trim tool remove the door window moulding.

Remove the rear door window moulding.

11 **NOTE:**

· Lubricate the underside of the rear door window glass exterior weather-strip to aid removal.

NOTE:

Remove and discard the rear door window glass exterior weather-strip by detaching the rear edge and working forwards.

Remove the rear door window glass exterior weather-strip.

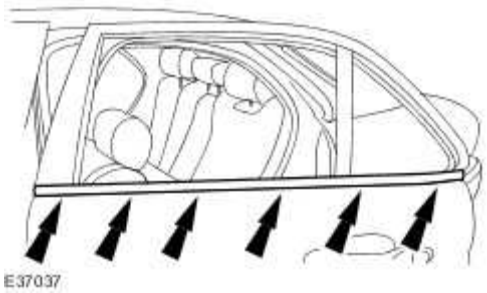

12 . Detach the rear door window glass run weather-strip.

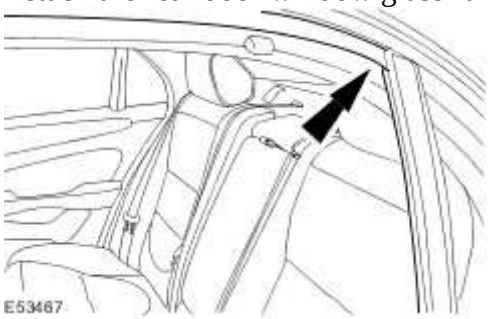

13 . Remove the rear door fixed window glass retaining bolts.

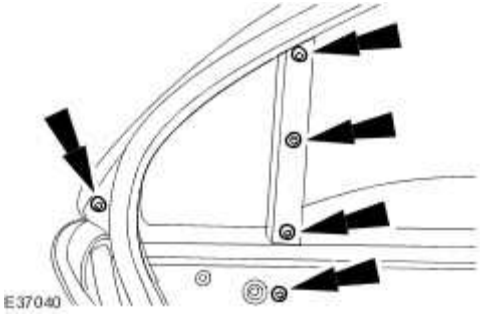

14 . Remove the rear door fixed window glass.

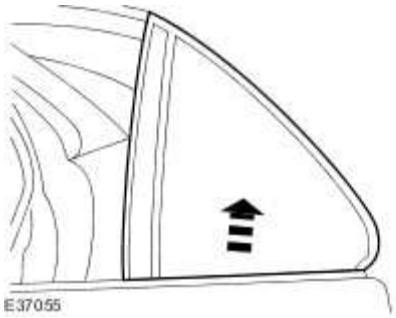

Installation

1 . Install the rear door fixed window glass.

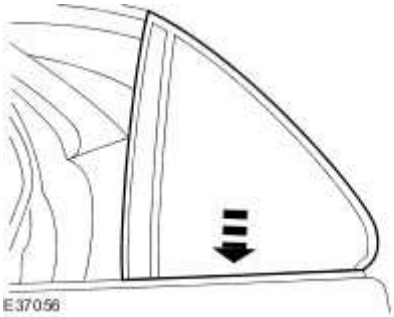

2 . **NOTE:**

Tighten the retaining bolts in the sequence shown.

Install the rear door fixed window glass retaining bolts.

- Tighten to 3 Nm.

www.JagDocs.com

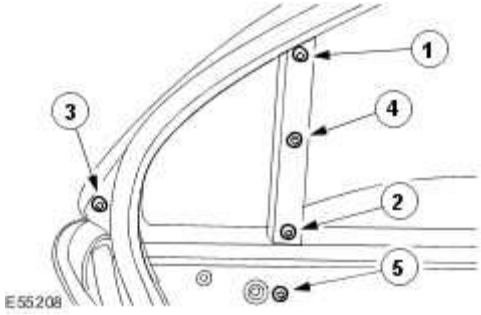

3 . Fully seat the rear door window glass run weather-strip.

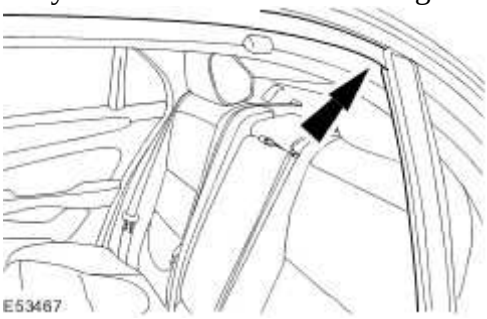

4 . **NOTE:**

Install a new rear door window glass exterior weather-strip.

Install the rear door window glass exterior weather-strip.

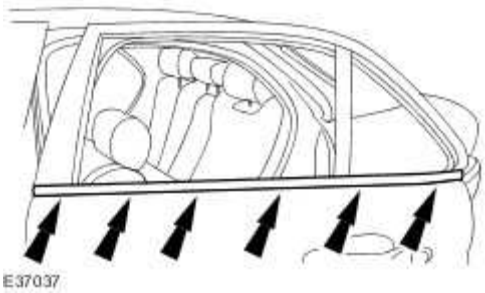

5 . **NOTE:**

Install a new rear door window moulding and retaining clips.

Install the rear door window moulding.

6 . Fully seat the rear door margin seal.

7 . Fully seat the rear door window glass interior weather-strip.

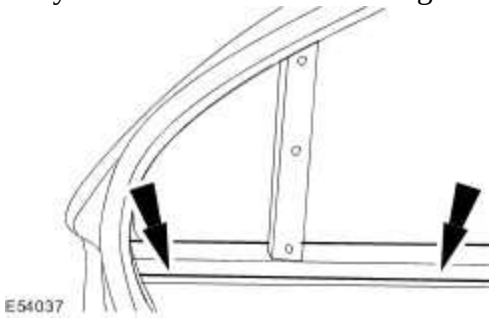

8 . Install the rear door inner weather-shield.

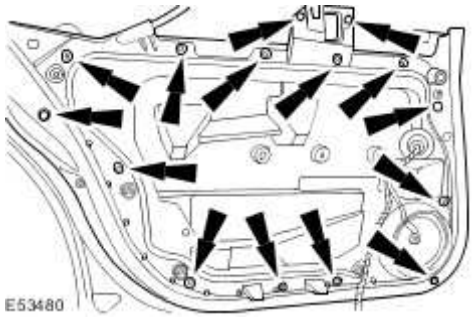

9 . Install the rear door inner weather-shield retaining screw covers.

www.JagDocs.com

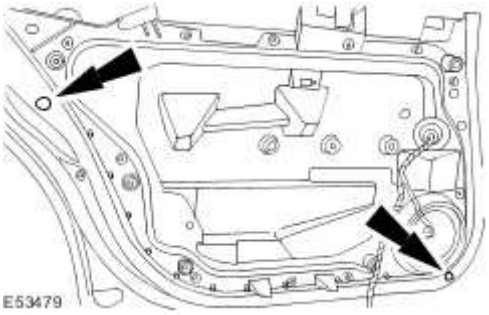

10 . Attach the rear door wiring harness grommet.

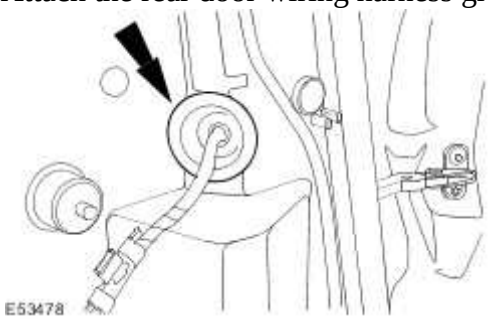

11 . Attach the rear door wiring harness.

Connect the rear door speaker electrical connector.

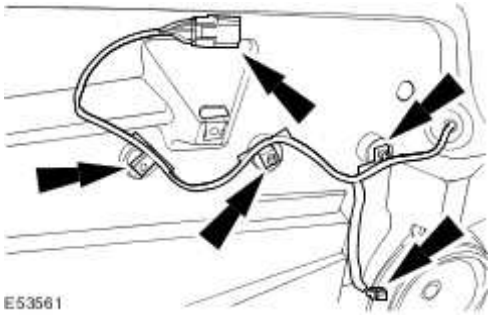

12 . Install the rear door quarter window blind.
For additional information, refer to Rear Door Quarter Window Blind

13 . Install the rear door trim panel.
For additional information, refer to Rear Door Trim Panel (76.34.04)

14 **NOTE:**

· When the battery has been disconnected and connected the settings for the windows one touch facility and the anti-trap facility will have been erased.

Initialize the door window motors.
For additional information, refer to Door Window Motor Initialization

Rear Door Window Glass (76.31.02)

Removal

1 . Remove the rear door fixed window glass.
For additional information, refer to Rear Door Fixed Window Glass

2 . Undo the rear door window glass retaining bolt.

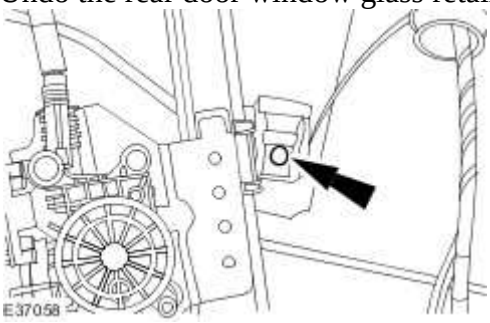

3 . Detach the rear door window glass from the window regulator.

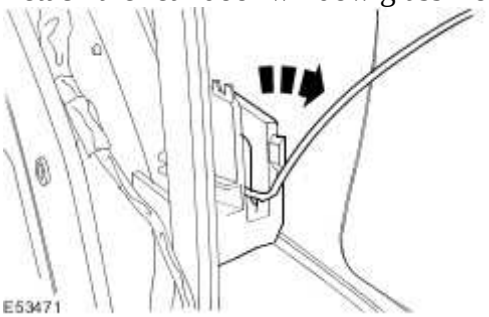

4 . Remove the rear door window glass.

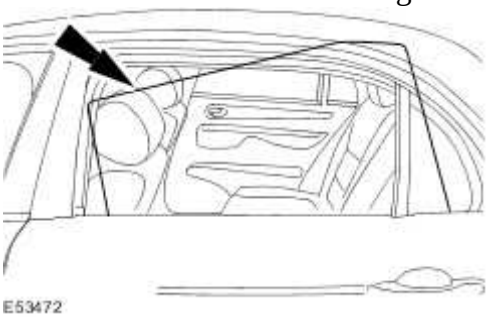

Installation

1 . Install the rear door window glass.

www.JagDocs.com

2 . Fully seat the rear door window glass into the window regulator.

3 . Fully tighten the rear door window glass retaining bolt.

Tighten to 7 Nm.

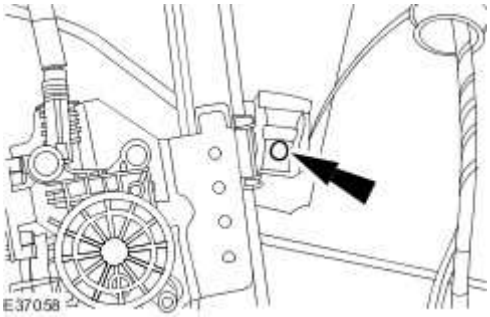

4 . Install the rear door fixed window glass.
For additional information, refer to Rear Door Fixed Window Glass

5 **NOTE:**

· When the battery has been disconnected and connected the settings for the windows one touch facility and the anti-trap facility will have been erased.

Initialize the door window motors.
For additional information, refer to Door Window Motor Initialization

Published: Mar 28, 2014

Rear Door Window Glass (76.31.02) – Armoured Vehicles

Removal

WARNING: The use of other products than Betawipe on poly carbonate involves a deterioration of the glass, an opacity effect and an early delamination of the shielding. The ballistic standards and the protection of customers would not be assured. Failure to follow this instruction may result personal injury.

CAUTION: The use of other products than Betawipe on poly carbonate involves a deterioration of the glass, an opacity effect and an early delamination of the shielding. The ballistic standards and the protection of customers would not be assured. Failure to follow this instruction may result in damage to the vehicle.

CAUTION: Make sure that only the recommended degreasing and cleaning fluids are used. Failure to follow this instruction may result in damage to the vehicle.

CAUTION: Make sure that only the recommended adhesive, sealant and primers are used. Failure to follow this instruction may result in damage to the vehicle.

1 . Remove the rear door trim panel.
For additional information, refer to Rear Door Trim Panel (76.34.04)

2 . Using a suitable tool, cut the rear door window glass trim panel.

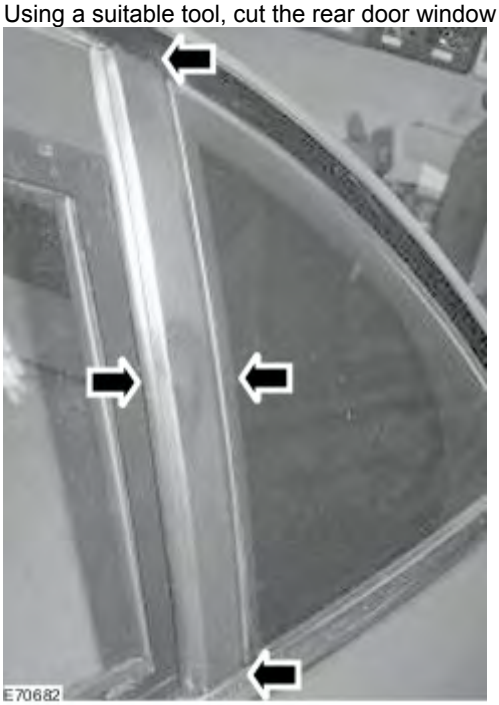

www.JagDocs.com

3 . Protect the rear door trim and rear door frame.

4 . Remove the rear door inner weather strip.

5 . Remove the rear door latch trim panel.

- Remove the retaining screw.

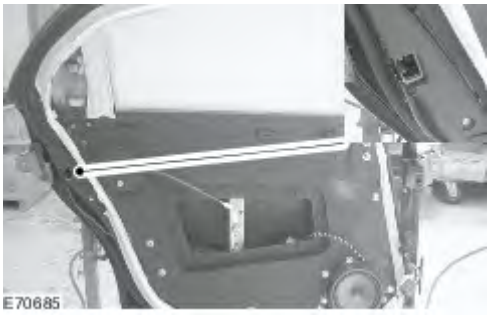

6 . Using a suitable tool, cut the rear door panel seal.

7 . Disconnect the rear door speaker electrical connector.

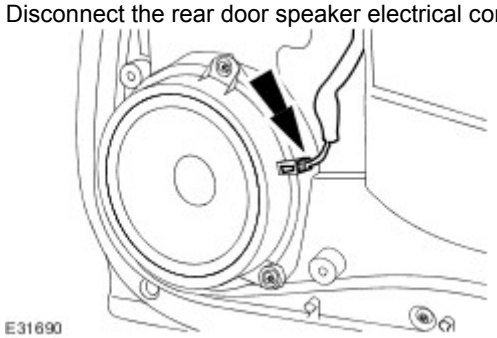

8 . Remove the rear door speaker.

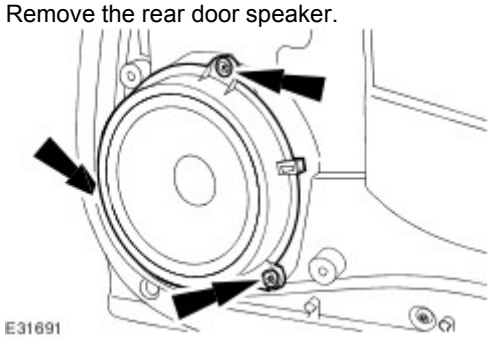

9 . Remove the rear door access panel.

- Remove the retaining bolts.

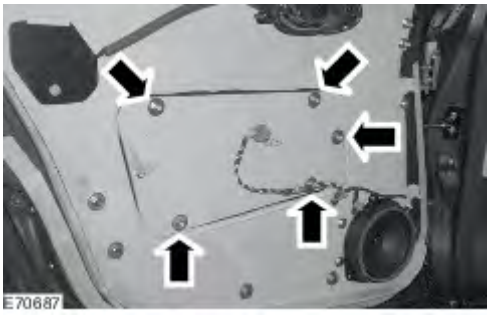

10 . Remove the rear door handle release cable access panel.

www.JagDocs.com

11 . Remove the rear door armour panel.

12 . Using suitable tie straps support the rear door window glass.

13 . Release the rear door glass support.

- Remove the retaining bolt.

14 . Remove the rear door glass support.

- Remove the retaining nut.

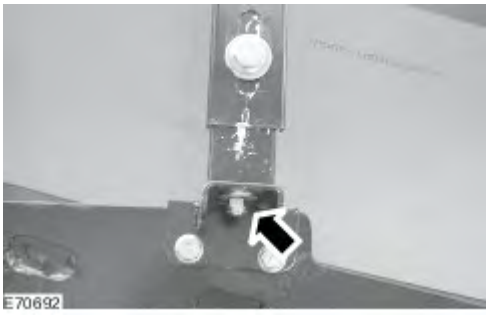

15 . **NOTE:**

Remove the rear door window glass tie straps.

NOTE:

Remove the rear door window glass from the outside of the rear door window glass frame.

Remove the rear door window glass.

1) Reposition the rear door window glass.
2) Remove the rear door window glass.

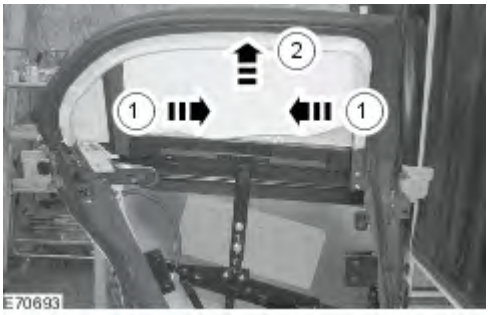

Installation

1 .

CAUTION: Make sure that only the recommended degreasing and cleaning fluids are used. Failure to follow this instruction may result in damage to the vehicle.

CAUTION: Make sure that only the recommended adhesive, sealant and primers are used. Failure to follow this instruction may result in damage to the vehicle.

When installing a rear door window glass make sure the products used are of the same specification as listed below.

PREPARATION	RUBBER AND PLASTIC GLUING	METAL GLUING	GLAZING GLUING
Degreasing	BETAWIPE Type Ref : 18022	STANDOX Type SILICON ENTFERNER Ref : 66012	BETAWIPE Type Ref : 18022
Primer	BETAWIPE Type Ref: 18031	-	BETAPRIME Type GURIT-ESSEX AG Ref: 18026
Adhesive	BETASEAL Type Ref:18016	SIKA 221 Type Ref:18040	BETASEAL Type Ref:18016

www.JagDocs.com

2 . **NOTE:**

Install the rear door window glass from the outside of the rear door window glass frame.

Install the rear door window glass.

1) Install the rear door window glass.
2) Reposition the rear door window glass.

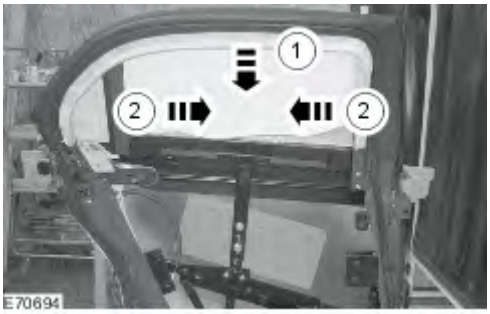

3 . Using suitable tie straps support the rear door window glass.

4 . Install the rear door fixed glass support.

Tighten the retaining nut.

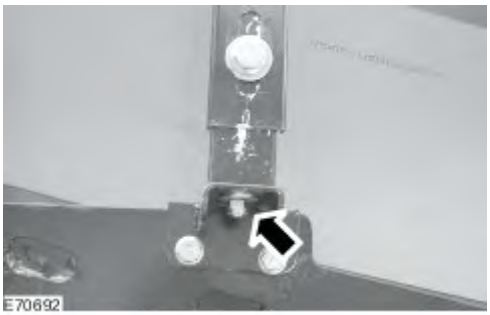

5 . Attach the rear door fixed glass support.

Tighten the retaining bolt.

6 . Remove the suitable tie straps from the rear door window glass.

7 . Install the rear door armour panel.

8 . Install the rear door handle release cable access panel.

- Tighten the retaining bolt.

9 . Install the rear door access panel.

- Tighten the retaining bolts.

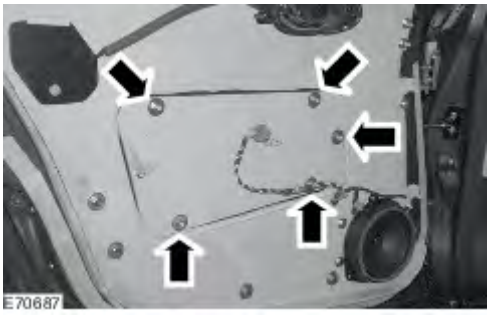

www.JagDocs.com

10 . Install the rear door speaker.

Tighten the retaining bolts.

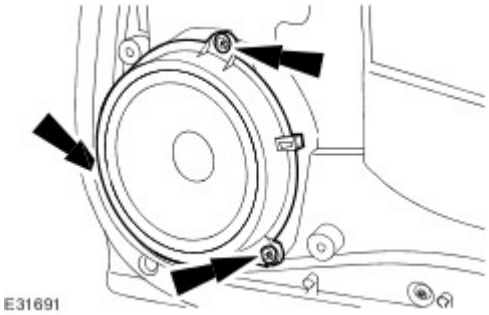

11 . Connect the rear door speaker electrical connector.

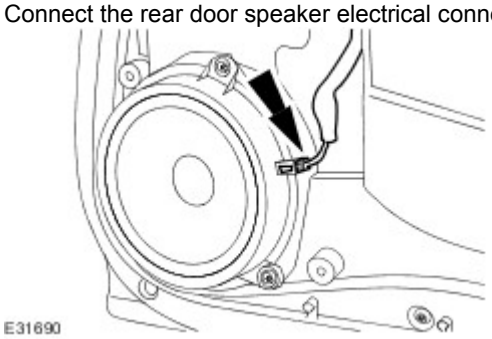

12 . Using a suitable sealant, seal the rear door panel seal.

13 . Install the rear door latch trim panel.

Tighten the retaining screw.

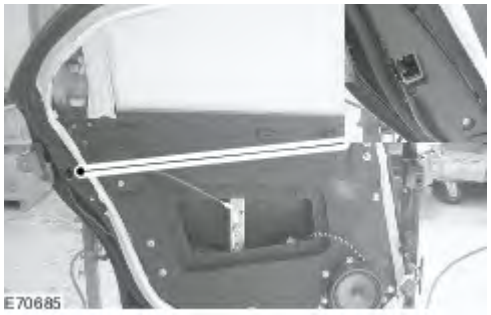

14 . Install the rear door inner weather strip.

15 . Remove the protection from the rear door trim and rear door frame.

16 . **NOTE:**

Make sure the area is clean and dry.

Apply a 10 mm bead of sealant to the rear door window glass seal and the rear door panel seal.

- Apply a suitable glass primer to the rear door glass.

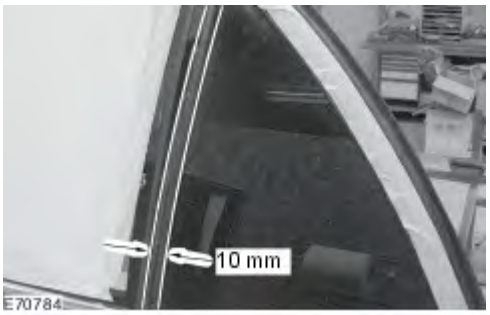

www.JagDocs.com

17 . Install the rear door glass trim panel.

- Apply a suitable metal primer to the inner edge of the rear door glass trim panel.
- Apply a suitable rubber primer to the inner edge of the rear door glass.

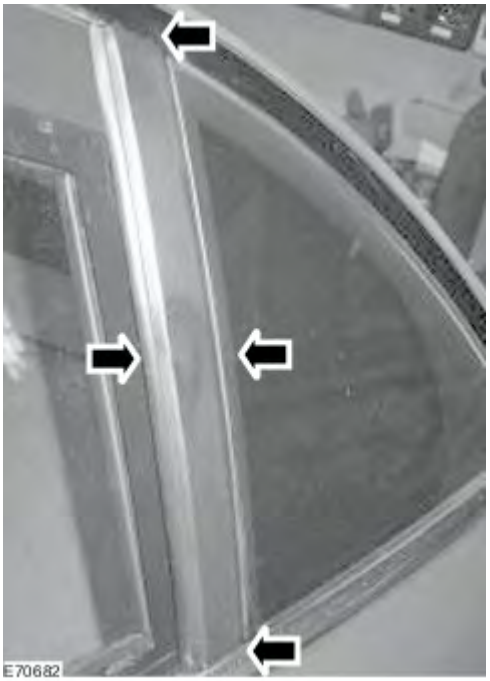

18 . Install the rear door trim panel.
For additional information, refer to Rear Door Trim Panel (76.34.04)

Rear Door Window Regulator and Motor (86.25.09)

Removal

1 . Remove the rear door trim panel.
For additional information, refer to Rear Door Trim Panel (76.34.04)

2 . Detach the rear door wiring harness.
Disconnect the rear door speaker electrical connector.

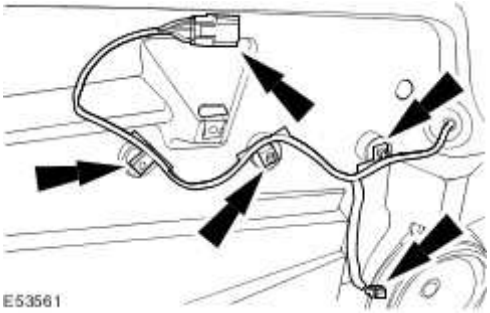

3 . Detach the rear door wiring harness grommet.

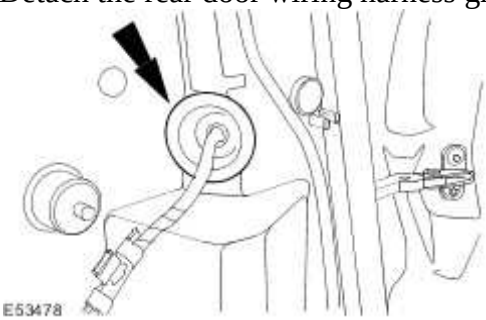

4 . Remove the rear door inner weather-shield retaining screw covers.

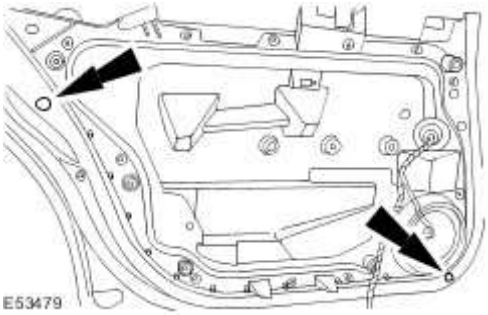

5 . Remove the rear door inner weather-shield.

www.JagDocs.com

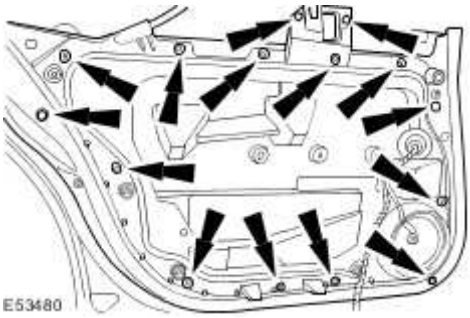

6 . Power the rear door window glass to its fully open position.

7 . Undo the rear door window glass retaining bolt.

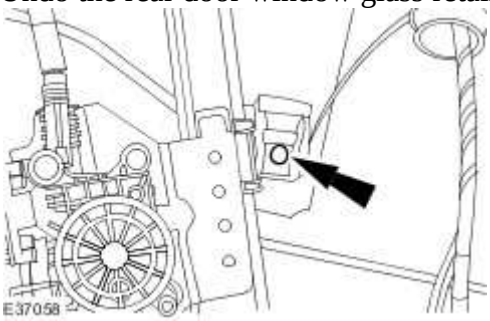

8 . Detach the rear door window glass from the window regulator.

9 . Using suitable tape secure the rear door window glass in the fully closed position.

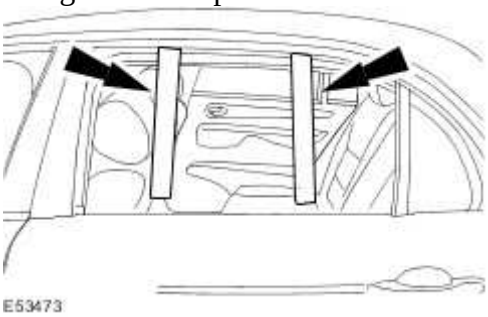

10 . Disconnect the rear door window regulator and motor electrical connector.

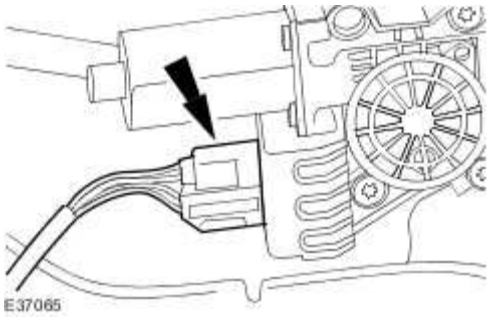

11 . Remove the rear door window regulator and motor.

- Remove the rear door window regulator and motor retaining bolts.

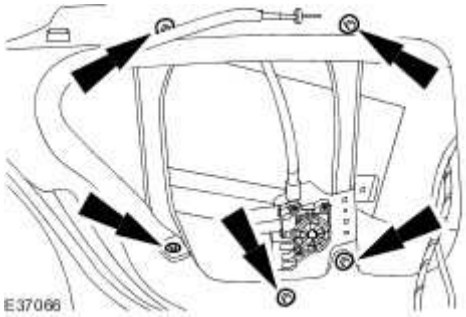

Installation

1 . To install, reverse the removal procedure.

- Tighten to 7 Nm.

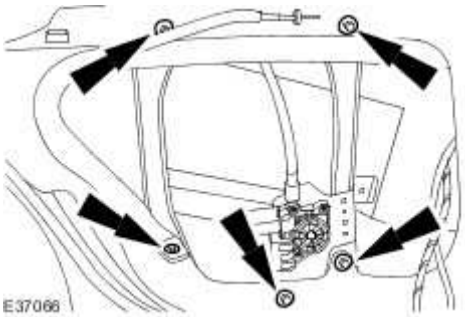

2 . Tighten to 7 Nm.

www.JagDocs.com

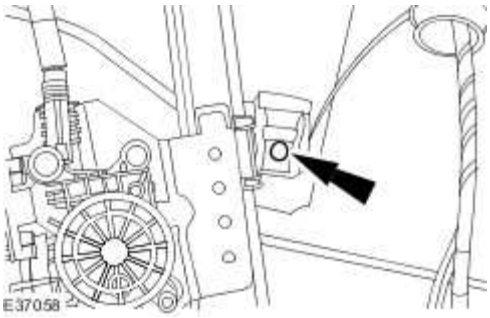

3 **NOTE:**

· When the battery has been disconnected and connected the settings for the windows one touch facility and the anti-trap facility will have been erased.

Initialize the door window motors.
For additional information, refer to Door Window Motor Initialization

Rear Window Glass (76.81.11)

Special Service Tools

Spray Bottle
WK9

Lubricant Concentrate
WK9L

Adhesive Removal Blade - Body
WK6

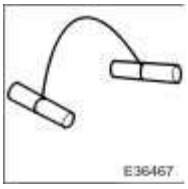

Cheese Wire Handles and Cheese Wire
42-001A and 42-001A-01

Removal

1 . Remove the parcel shelf. <<501-05>>

2 . Remove high mounted stoplamp. <<417-01>>

www.JagDocs.com

3 . **NOTE:**

Right-hand shown, left-hand similar.

Disconnect the electrical connectors.

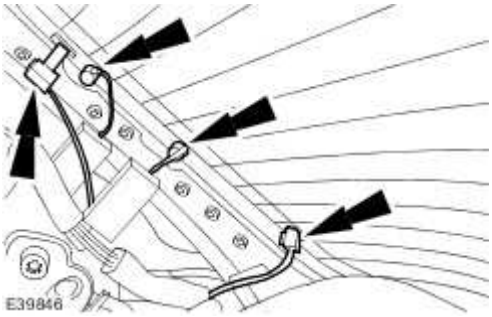

4 . **NOTE:**

Right-hand shown, left-hand similar.

Disconnect the electrical connector.

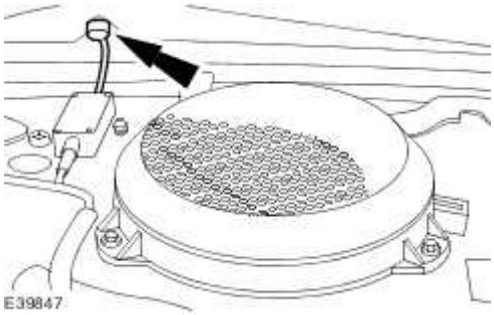

5 . **CAUTION: Make sure the rear window finisher insert is not bent on removal. Failure to follow this instruction may result in damage to the component.**

Remove the rear window finisher

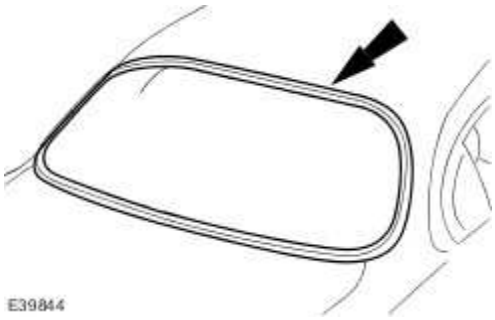

6 . Apply protective tape around the rear rear window glass aperture.

7 . Apply suitable protective tape to rear edge of the headliner.

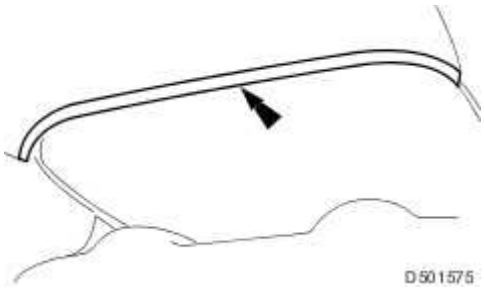

8 . Using a suitable long bladed tool, penetrate the windshield glass adhesive.

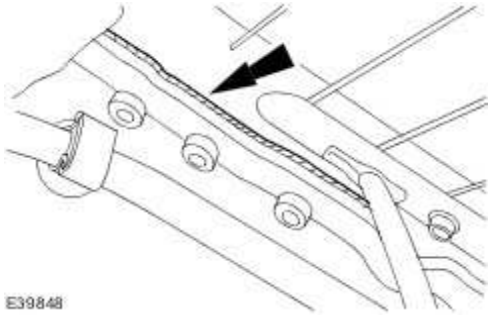

www.JagDocs.com

9 . Dispense 20 ml of WK9L lubricant into the WK9 spray bottle, fill the spray bottle with water and mix.

10 . Apply cutting lubricant to the windshield glass adhesive.

11 . Prepare the cheese wire and cutting handle.

- Cut a suitable length of cheese wire.
- Install one of the cutting handles to the cheese wire.

12 . Pass the free end of the cheese wire through the penetration and install the second cutting handle.

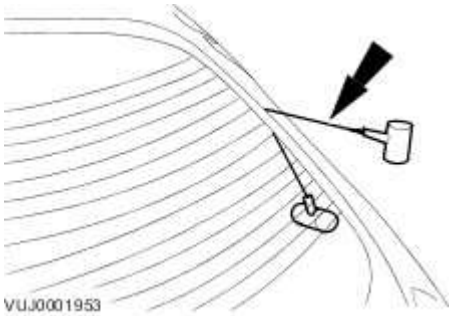

13 . **WARNING: When removing the rear window glass, personal protection must be worn. Failure to follow this instruction may result in personal injury.**

CAUTION: Make sure the cheese wire cannot contacted the paintwork while the the rear window glass adhesive is being cut. Failure to follow this instruction may result in damage to the vehicle.

NOTE:

Apply cutting lubricant to the cheese wire frequently through out the cutting process.

With assistance and exercising care to avoid damaging the paintwork, cut around the rear window glass commencing upwards and along the top.

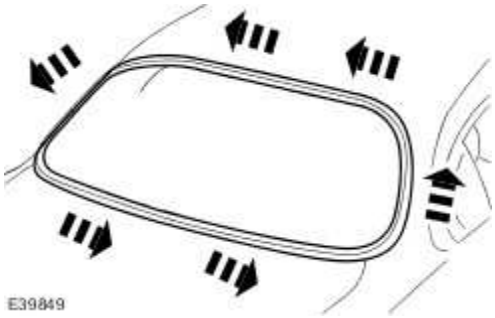

14. Install the lifting handles to the window glass, with assistance carefully remove the rear window glass from the vehicle.

15. Remove the lifting handles from the rear windshield glass.

www.JagDocs.com

Installation

1. **WARNING: If the rear window glass is being installed at a temperature of 23°C (73°F) or above make sure the vehicle is not driven for at least 1 hour after installation. Failure to follow this instruction may result in personal injury.**

WARNING: If the rear window glass is being installed at a temperature of 11°C (52°F) to 23°C (73°F), make sure the vehicle is not driven for at least 1.5 hours after installation. Failure to follow this instruction may result in personal injury.

WARNING: If the rear window glass is being installed at a temperature of 5°C (41°F) to 11°C (52°F), make sure the vehicle is not driven for at least 2 hours after installation. Failure to follow this instruction may result in personal injury.

WARNING: If the rear window glass is being installed at a temperature below 5°C (41°F), use heat and make sure the windshield glass adhesive has set before the vehicle is driven. Failure to follow this instruction may result in personal injury.

CAUTION: When installing the rear window glass, do not strike it in any way as this will crack the glass. Failure to follow this instruction may result in damage to the vehicle.

NOTE:

Make sure the rear window glass does not move out of position in the windshield glass aperture.

NOTE:

If the original rear window glass is to be installed remove the residual adhesive from windshield glass mating surface.

Using the special tool, remove any residual adhesive from the body.

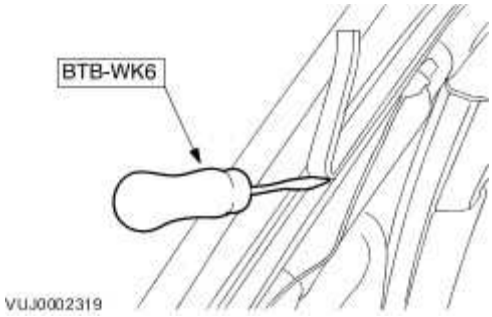

2 . Make sure the new rear window glass surface is clean using Betawipe spirit.

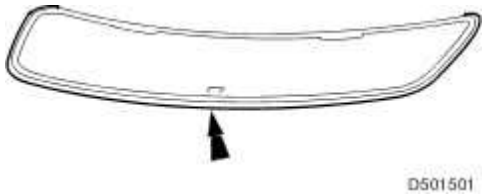

3 . Apply glass primer to the mating surface of the rear window glass.

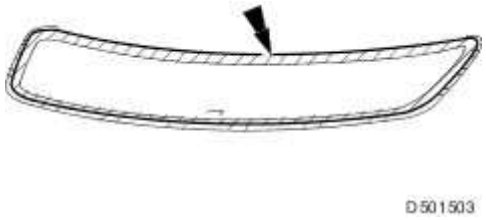

4 . Install the rear window finisher to the rear window glass.

- Install new rear window finisher retaining clips.

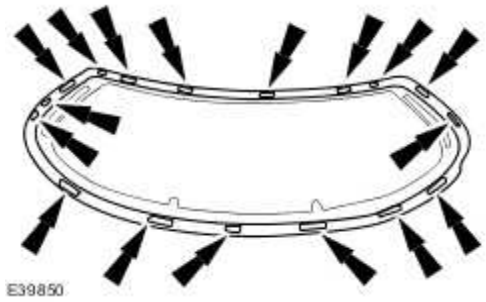

5 . Apply glass primer to the mating face of the body flange.

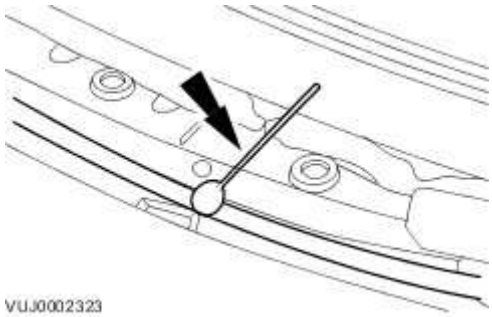

6 Cut adhesive nozzle to achieve a triangular section bead 7 mm (0.28 in) wide by 10 mm (0.39 in) high.

www.JagDocs.com

.

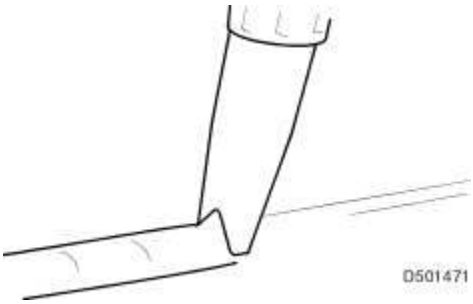

7 Using a suitable pneumatic application gun, apply a uniform bead of adhesive to the
. windshield glass edge commencing at the bottom center and overlapping the ends approximately 20 mm (0.79 in).

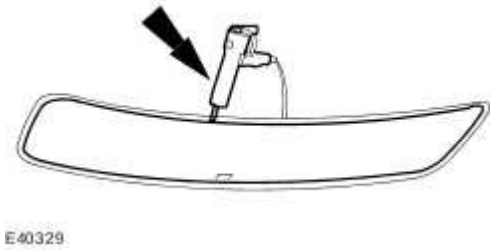

8
. **CAUTION: When installing the rear window glass, do not strike it in any way as this will crack the rear window glass. Failure to follow this instruction may result in damage to the component.**

With assistance carefully install the rear window glass into the aperture and press firmly into place.

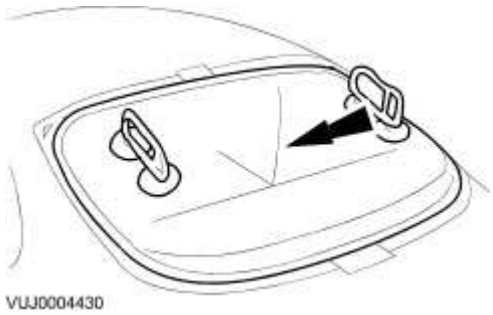

9 . Remove the lifting handles.

10 **NOTE:**

.

Make sure the windshield glass does not move out of position in the windshield glass aperture.

Apply suitable adhesive tape to the top of the rear window glass.

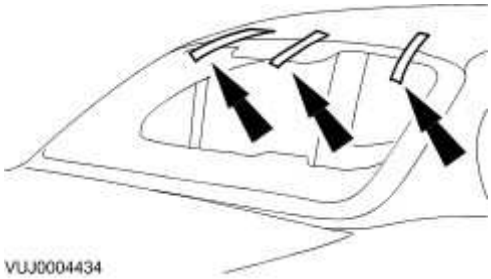

11 . Remove the protective tape around the rear rear window glass aperture.

12 . Remove protective tape from rear edge of headliner.

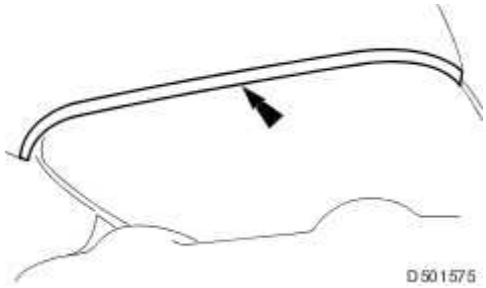

13

. **CAUTION: Do not connect the electrical connectors for at least 1 hour after installation of the windshield glass. Failure to follow these instructions may result in damage to the rear window glass adhesive.**

www.JagDocs.com

NOTE:

Right-hand shown, left-hand similar.

Connect the electrical connector.

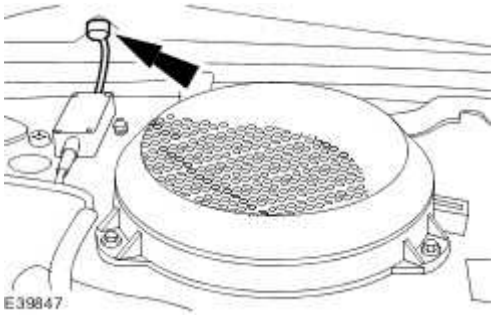

14 . **CAUTION: Do not connect the electrical connectors for at least 1 hour after installation of the windshield glass. Failure to follow these instructions may result in damage to the rear window glass adhesive.**

NOTE:

Right-hand shown, left-hand similar.

Connect the electrical connectors.

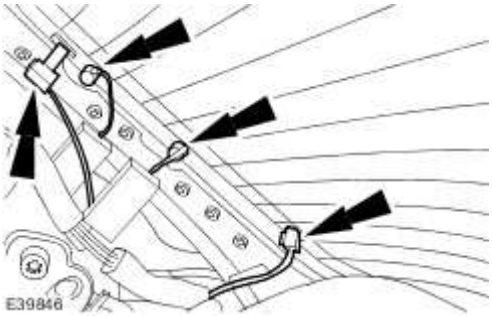

15 . Install the high mounted stoplamp. <<417-01>>

16 . Install the parcel shelf. <<501-05>>

Published: Mar 21, 2014

Rear Window Glass (76.81.11) – Armoured Vehicles

Special Service Tools

Spray bottle
WK9

Lubricant concentrate
WK9L

Adhesive removal blade - Body
WK6

Removal

WARNING: The use of products other than Betawipe on poly carbonate may cause a deterioration of the glass, an opacity effect and an early delamination of the shielding. The ballistic standards and the protection of the occupants would not be assured. Failure to follow this instruction may result personal injury.

CAUTION: The use of products other than Betawipe on poly carbonate may cause a deterioration of the glass, an opacity effect and an early delamination of the shielding. The ballistic standards and the protection of the occupants would not be assured. Failure to follow this instruction may result in damage to the vehicle.

CAUTION: Make sure that only the recommended degreasing and cleaning fluids are used. Failure to follow this instruction may result in damage to the vehicle.

CAUTION: Make sure that only the recommended adhesive, sealant and primers are used. Failure to follow this instruction may result in damage to the vehicle.

www.JagDocs.com

1 . Remove the parcel shelf.
For additional information, refer to

2 . Remove the high mounted stoplamp.
For additional information, refer to

3 . Remove the luggage compartment floor covering.

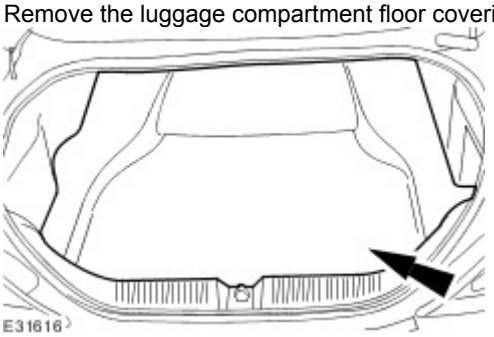

4 . Remove the luggage compartment side trim panel.

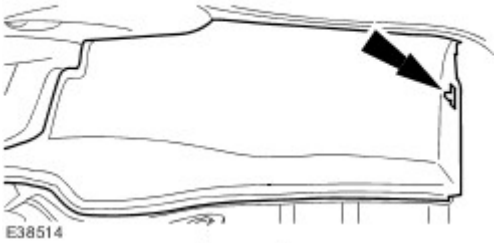

5 . Disconnect the luggage compartment wiring harness electrical connector.

6 . Detatch the luggage compartment wiring harness.

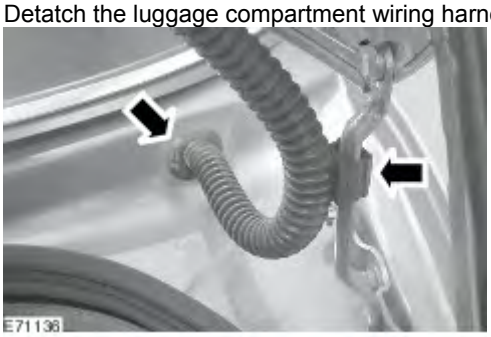

7 . **NOTE:**

Left-hand shown, right-hand similar.

With assistance, remove the luggage compartment lid.

Remove the retaining nuts.

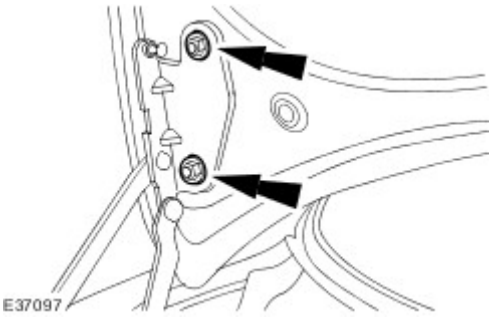

8 . **NOTE:**

Right-hand shown, left-hand similar.

Disconnect the antenna and heated rear window electrical connectors.

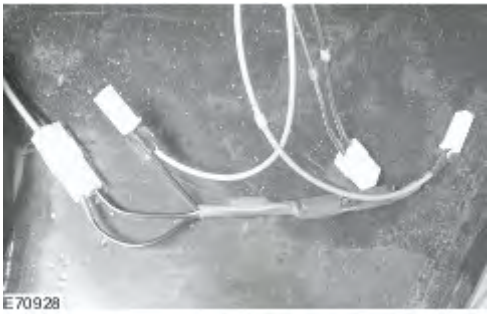

9 . **NOTE:**

Right-hand shown, left-hand similar.

Disconnect the amplifier electrical connectors.

1) Ground cable.
2) 12volt supply.
3) Coil.

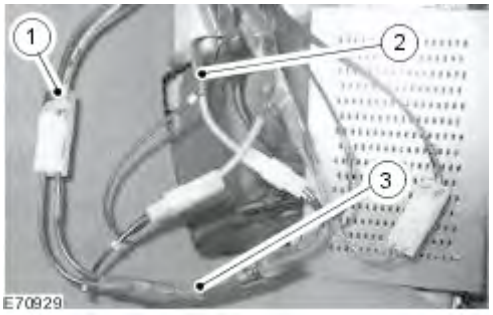

www.JagDocs.com

10 . Place a suitable protective sheet over the rear seats and place a protecting board over sheet.

11 . Remove and discard the rear window glass finisher.

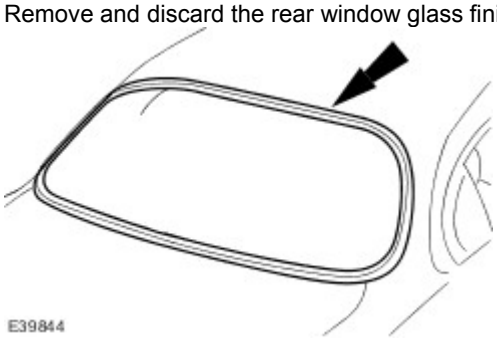

12 .

CAUTION: Make sure the vehicle is protected to prevent any damage to the vehicles paint work. Failure to follow this instruction may result in damage to the vehicle.

Apply protective tape around the rear window glass aperture.

13 .

WARNING: When removing the rear window glass, personal protection must be worn. Failure to follow this instruction may result in personal injury.

NOTE:

Refer to the next step for the correct measurement.

Using a suitable high speed diamond tipped cutting tool, remove area a from area b.

1) Rear window glass spacer.
2) Vehicle body.
3) Armoured frame.
4) Armoured rear window glass.

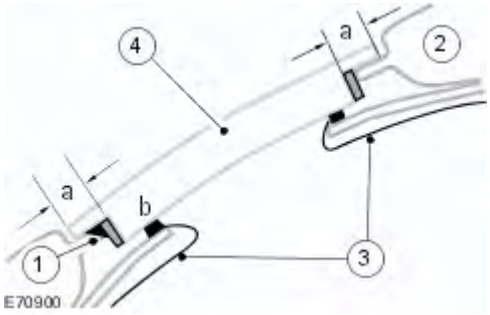

14 . Use the steps below to make sure the correct measurement is used to cut the rear window glass.

- A: Rear window glass upper.
  - 25 mm (0.98 inch).
- B: Rear window glass side.
  - 1: 52 mm (2.05 inches).
  - 2: 57 mm (2.24 inches).
- C: Rear window glass lower.
  - 97 mm (3.82 inch).

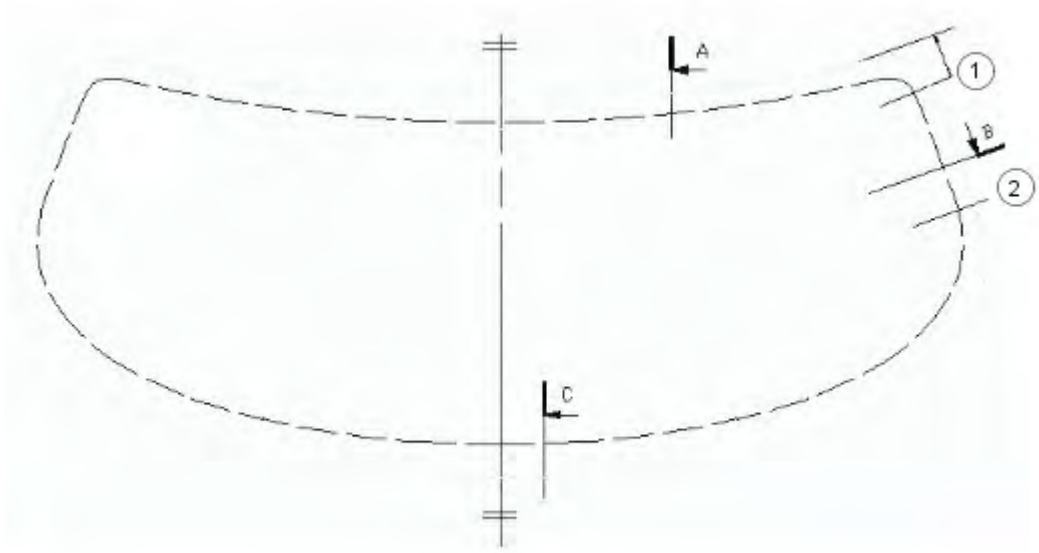

E70912

15 . Apply cutting lubricant to the rear window glass adhesive.

16 .

WARNING: When removing the rear window glass, personal protection must be worn. Failure to follow this instruction may result in personal injury.

Using a suitable cutting tool, cut the seal between the armoured rear window glass and the armoured frame.

1) Rear window glass spacer.
2) Vehicle body.
3) Armoured frame.
4) Armoured rear window glass.

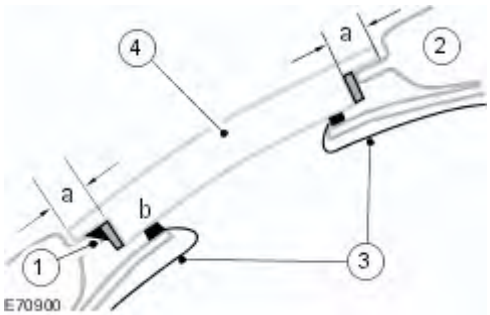

E70900

www.JagDocs.com

17. **WARNING: When removing the rear window glass, personal protection must be worn. Failure to follow this instruction may result in personal injury.**

NOTE:

The rear window glass must also be pushed out from the inside of the vehicle.

With the assistance of three people and exercising care, remove and discard the rear window glass.

Installation

1. **CAUTION: Do not use thinners to clean the the rear window glass. Failure to follow this instruction may result in damage to the vehicle.**

CAUTION: Make sure that only the recommended degreasing and cleaning fluids are used. Failure to follow this instruction may result in damage to the vehicle.

CAUTION: Make sure that only the recommended adhesive, sealant and primers are used. Failure to follow this instruction may result in damage to the vehicle.

When installing the rear window glass make sure the products used are of the same specification as listed below.

PREPARATION	RUBBER AND PLASTIC GLUING	METAL GLUING	GLAZING GLUING
Degreasing	BETAWIPE Type Ref : 18022	STANDOX Type SILICON ENTFERNER Ref : 66012	BETAWIPE Type Ref : 18022
Primer	BETAWIPE Type Ref: 18031	-	BETAPRIME Type GURIT-ESSEX AG Ref: 18026
Adhesive	BETASEAL Type Ref:18016	SIKA 221 Type Ref:18040	BETASEAL Type Ref:18016

2. **CAUTION: When installing the rear window glass, do not strike it in any way as this will crack the glass. Failure to follow this instruction may result in damage to the vehicle.**

NOTE:

Make sure the rear window glass does not move out of position in the windshield glass aperture.

Using the special tool, remove any residual adhesive from the body.

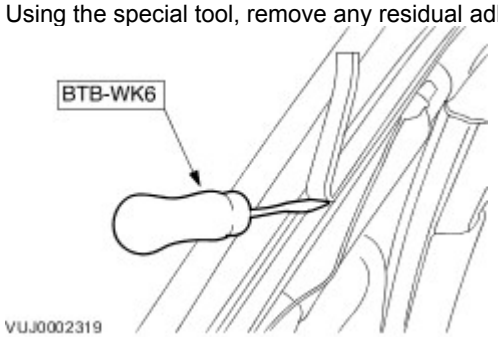

3 . Protect the inside of the rear window glass.

4 . Using suitable adhesive tape, tape the heated rear window glass wiring harness and antenna wiring harness to the rear window glass.

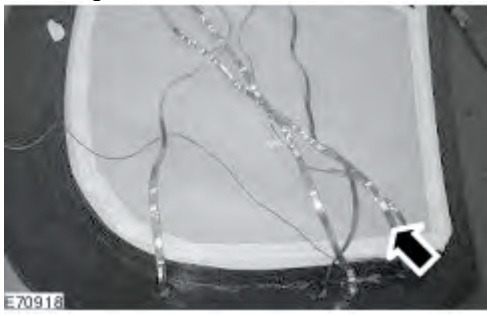

5 . Install the rear window glass spacers to the rear window glass frame to the same positions they where removed from.

6 . Install a 10mm (0.39 inch) long pieces of protective tape to each corner and 20 mm (0.79 inch) long pieces of protective tape along the rear window glass frame.

7 .

WARNING: When installing the rear window glass, personal protection must be worn. Failure to follow this instruction may result in personal injury.

CAUTION: When installing the rear window glass, do not strike it in any way as this will crack the glass. Failure to follow this instruction may result in damage to the component.

www.JagDocs.com

With the assistance of three people and exercising care, install the rear window glass.

1) Windshield glass spacer.
2) Windshield glass.
3) Vehicle body.
4) Armoured frame.

- Center the rear window glass to the rear window glass frame and mark the central position of the rear window glass.

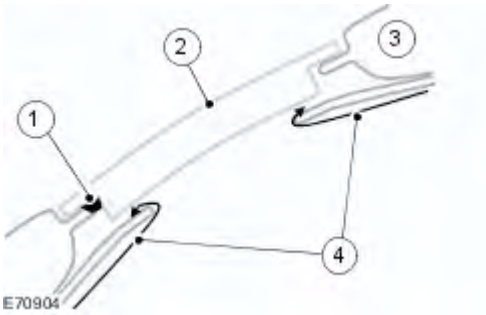

8 . **NOTE:**

Left-hand shown, right-hand similar.

With assistance, install the luggage compartment lid.

- Install the retaining nuts.

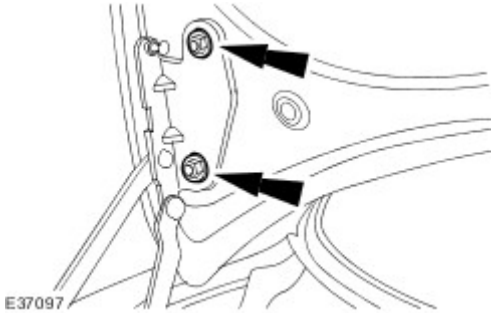

9 . Check the clearance between the luggage compartment lid and the rear window glass and make sure that the luggage compartment lid can open with the rear window glass seal in position.

10 . **NOTE:**

Left-hand shown, right-hand similar.

With assistance, remove the luggage compartment lid.

- Remove the retaining nuts.

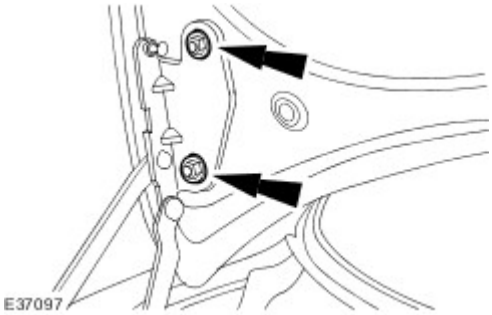

11.

WARNING: When removing the rear window glass, personal protection must be worn. Failure to follow this instruction may result in personal injury.

CAUTION: When removing the rear window glass, do not strike it in any way as this will crack the glass. Failure to follow this instruction may result in damage to the component.

With the assistance of three people and exercising care, remove the rear window glass.

12.

CAUTION: Make sure that only the recommended degreasing and cleaning fluids are used. Failure to follow this instruction may result in damage to the vehicle.

CAUTION: Make sure that only the recommended adhesive and primers are used. Failure to follow this instruction may result in damage to the vehicle.

Clean the rear window glass surface using clean Betawipe spirit.

13.

CAUTION: Make sure that only the recommended degreasing and cleaning fluids are used. Failure to follow this instruction may result in damage to the vehicle.

CAUTION: Make sure that only the recommended adhesive and primers are used. Failure to follow this instruction may result in damage to the vehicle.

Apply glass primer to the mating face of the body flange.

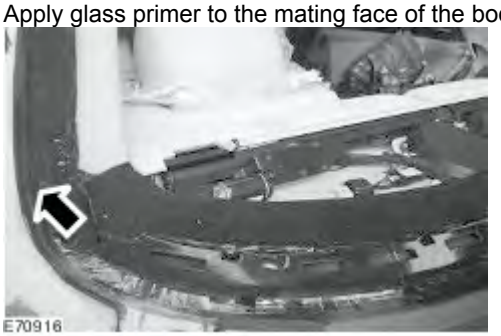

www.JagDocs.com

14 Apply Betaseal on the rear window glass frame.

- Around the edge of the armoured frame and also around the side of the rear window glass make a 15-20 mm wide (0.59-0.79 inch) seal using Betaseal.

15 .

WARNING: When installing the rear window glass, personal protection must be worn. Failure to follow this instruction may result in personal injury.

CAUTION: When installing the rear window glass, do not strike it in any way as this will crack the glass. Failure to follow this instruction may result in damage to the component.

CAUTION: When the rear window glass is correctly aligned, hold the rear window glass into position with strong adhesive tape for 24 hours. Failure to follow this instruction may result in damage to the vehicle.

With the assistance of three people and exercising care, install the rear window glass.

1) Windshield glass spacer.
2) Windshield glass.
3) Vehicle body.
4) Armoured frame.

- Align the rear window glass to the rear window glass frame and align with the marks previously made.

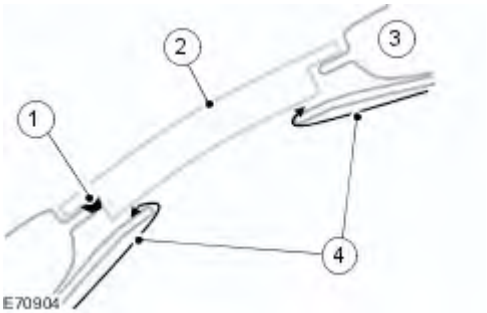

16 . Correctly route the wiring harness through the vehicle body.

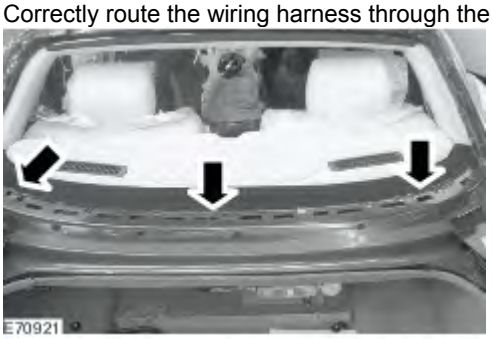

17 . **NOTE:**

Leave the Betaseal to dry.

Apply Betaseal around the rear window glass.

18 **NOTE:**

· When the Betaseal is dry, install the a new weather seal and mark the position.

Install the rear window finisher.

- Center the rear window finisher to the rear window glass frame and mark the central position of the rear window glass finisher.

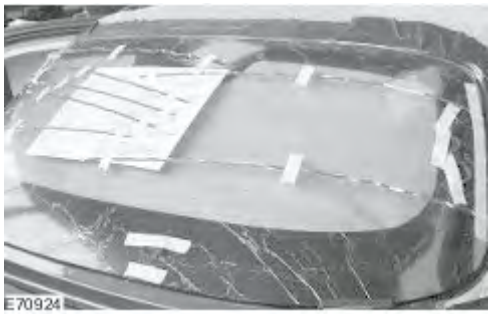

19 . Remove the rear window glass finisher.

20 . Apply primer on the rear window glass finisher to the surface to be glued.

21 . Apply glass primer on the rear window glass where the seal will be glued.

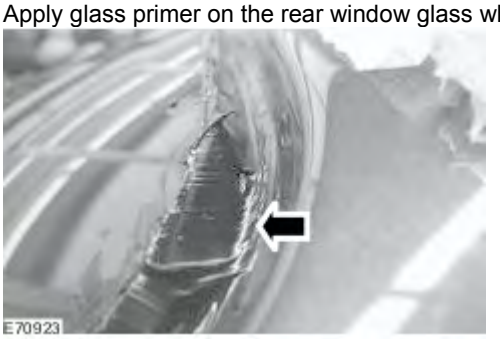

www.JagDocs.com

22 . Install the rear window finisher.

- Apply pressure to the rear window finisher to make betaseal overflow.
- Remove the surplus Betaseal.

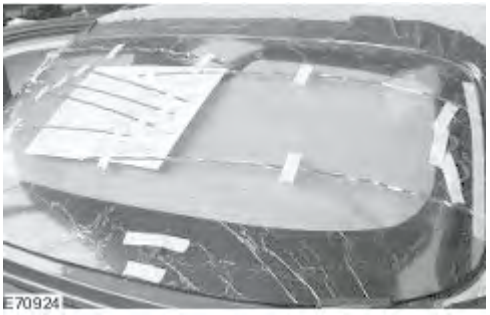

23 . **NOTE:**

Leave the Betaseal to dry.

Apply suitable adhesive tape to hold the rear window finisher into position.

24 . Connect the rear window glass electrical connectors.

1) Anttena 1.
2) Anttena 2.
3) Heated rear window glass.
4) Heated rear window glass.

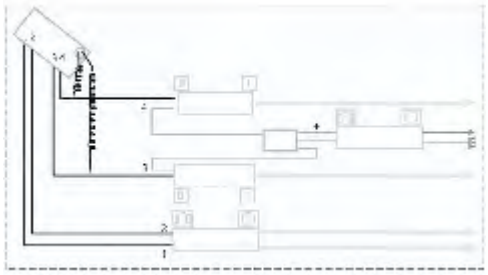

25 . Connect the rear window glass electrical connectors.

- B Heated rear window glass.
- H Heated rear window glass.

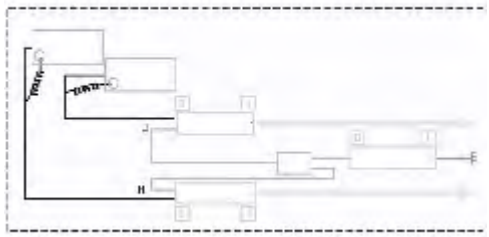

E70927

26 . Connect the rear window glass electrical connectors.

1) Anttena 1.
2) Anttena 2.
3) Heated rear window glass.
4) Heated rear window glass.

- H.
- L.

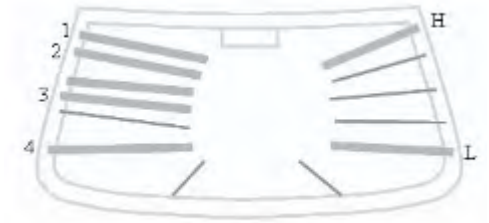

E70919

27 . Remove the suitable adhesive tape holding the rear window finisher into position.

E70925

www.JagDocs.com

28 . Remove the protective tape around the rear rear window glass aperture.

29 . Remove the suitable protective sheet and board from the rear seats.

30 . **NOTE:**

Left-hand shown, right-hand similar.

With assistance, install the luggage compartment lid.

Install the retaining nuts.

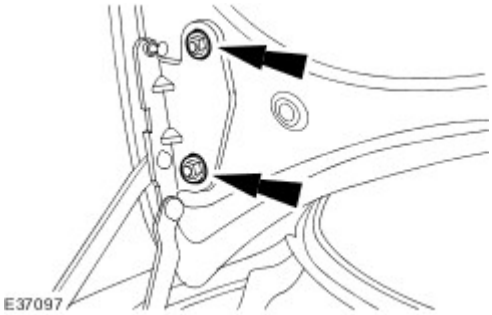

31 . Attatch the luggage compartment wiring harness.

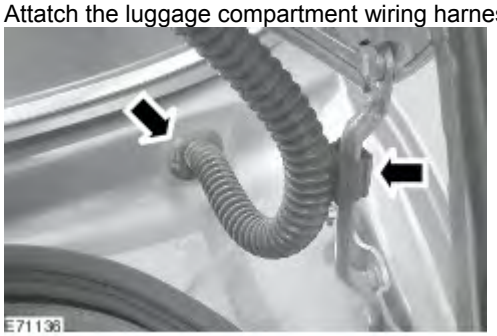

32 . Connect the luggage compartment wiring harness electrical connector.

33 . Install the luggage compartment side trim panel.

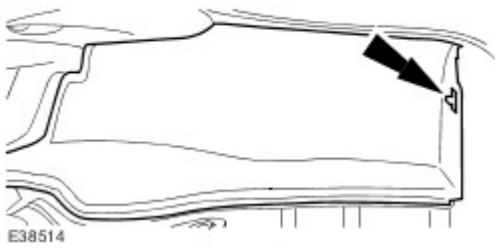

34 . Install the luggage compartment floor covering.

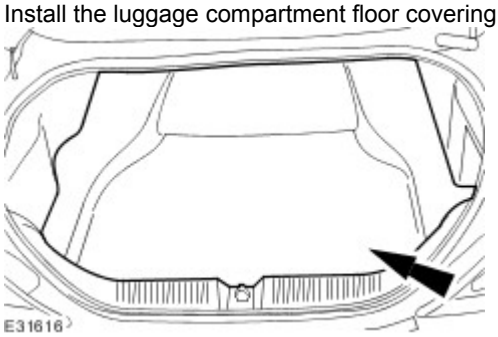

35 . Align the luggage compartment lid.
For additional information, refer to

36 . Install the high mounted stoplamp.
For additional information, refer to

37 . Install the parcel shelf.
For additional information, refer to

www.JagDocs.com

Window Control Switch (86.25.08)

Removal

1 . Detach the window control switch.

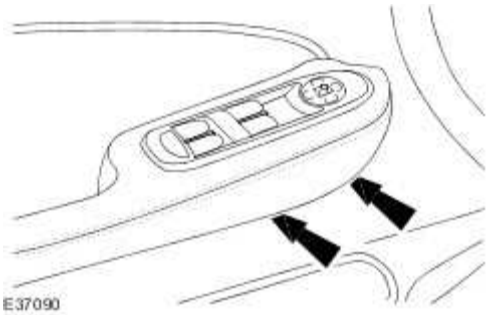

2 . Remove the window control switch.

- Disconnect the electrical connector.

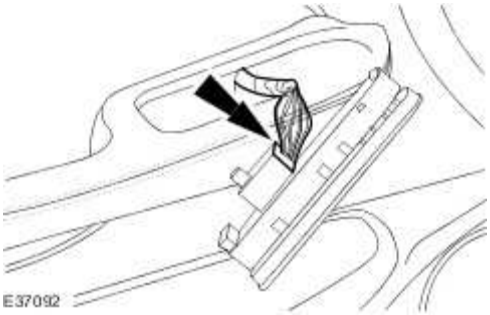

Installation

1 . To install, reverse the removal procedure.

Windshield Glass (76.81.40)

Special Service Tools

Spray Bottle
WK9

Lubricant Concentrate
WK9L

Adhesive Removal Blade - Body
WK6

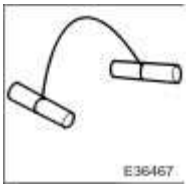

Cheese Wire Handles and Cheese Wire
42-001A and 42-001A-01

Removal

1 . Remove the interior mirror. <<501-09>>

2 . Remove both A-pillar trim panels. <<501-05>>

www.JagDocs.com

3 . Remove both sun visors. <<501-05>>

4 . Remove the overhead console. <<501-12>>

5 . Remove both sun visor retaining clips.

6 . **NOTE:**

Right-hand shown, left-hand similar.

Detach the front occupant assist handle screw covers.

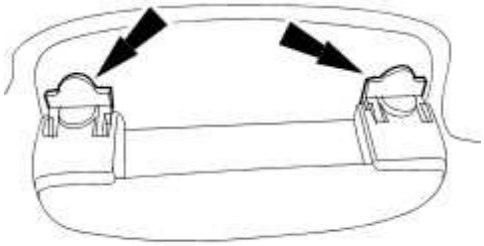

E38998

7 . **NOTE:**

Right-hand shown, left-hand similar.

Remove the front occupant assist handle.

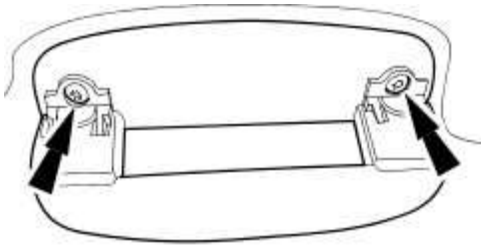

E36776

8 . Using a suitable adhesive tape, support the headliner.

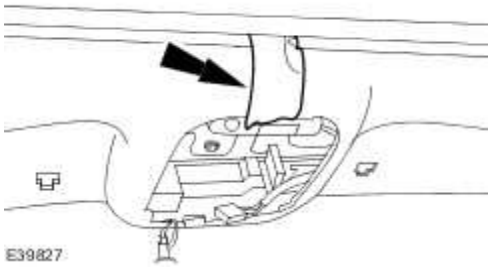

9 . Apply a suitable protective tape to the front edge of the headliner.

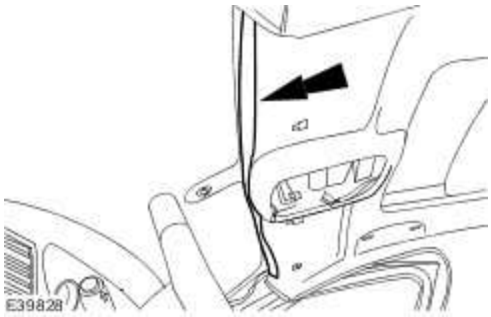

10 . **NOTE:**

Left-hand shown, right-hand similar.

Disconnect the heated windshield glass electrical connectors.

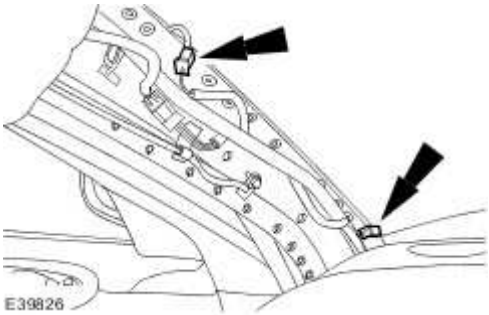

11 . **CAUTION: Make sure the windshield finisher insert is not bent on removal. Failure to follow this instruction may result in damage to the component.**

Remove the windshield finisher.

www.JagDocs.com

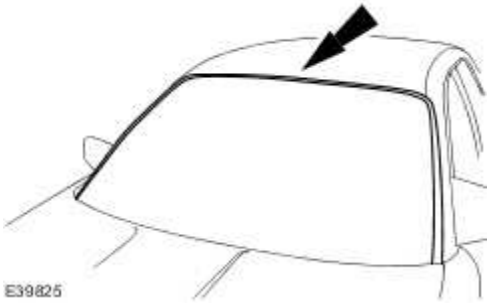

12 . Remove the cowl vent screen. <<501-02>>

13 . Apply a suitable protective tape around windshield glass aperture to protect the paintwork.

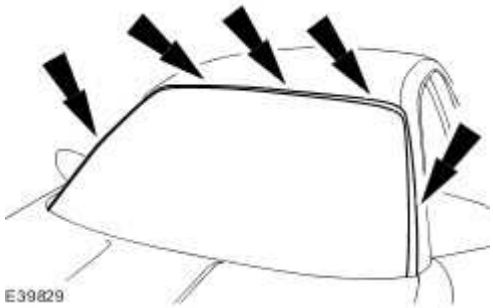

14 . Using a suitable long bladed tool, penetrate the windshield glass adhesive.

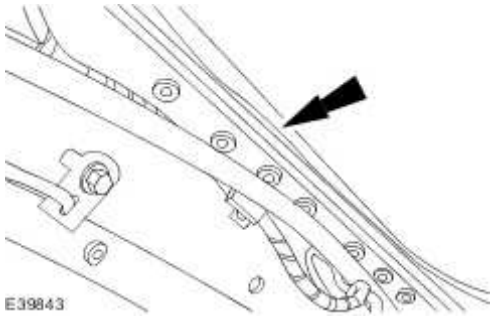

15 . Place a suitable protective sheet over fascia and place a protecting board over sheet.

16 . Dispense 20 ml of WK9L lubricant into the WK9 spray bottle, fill the spray bottle with water and mix.

17 . Apply cutting lubricant to the windshield glass adhesive.

18 . Prepare the cheese wire and cutting handle.

- Cut a suitable length of cheese wire.
- Install one of the cutting handles to the cheese wire.

19 . Pass the free end of the cheese wire through the penetration and install the second cutting handle.

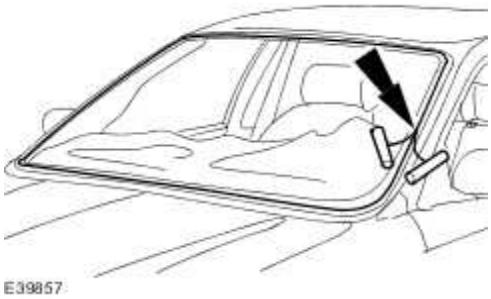

20 . **WARNING: When removing the windshield glass, personal protection must be worn. Failure to follow this instruction may result in personal injury.**

CAUTION: Make sure the cheese wire cannot contacted the paintwork while the the windshield adhesive is being cut. Failure to follow this instruction may result in damage to the vehicle.

CAUTION: Make sure the cheese wire cannot contacted the instrument panel while the the windshield adhesive is being cut. Failure to follow this instruction may result in damage to the vehicle.

CAUTION: Make sure the cheese wire passes the Vehicle Identification Number

www.JagDocs.com

(VIN) plate on the correct side. Failure to follow this instruction may result in damage to the component.

NOTE:

Apply cutting lubricant to the cheese wire frequently through out the cutting process.

With assistance and exercising care to avoid damaging the paintwork, cut around the windshield glass commencing upwards and along the top.

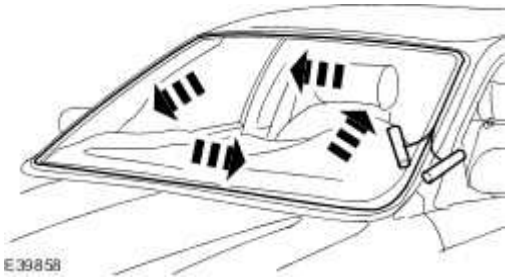

21 . With assistance and exercising care, remove the windshield glass.

1) Attach lifting handles to the windshield glass.

2) Remove the windshield glass.

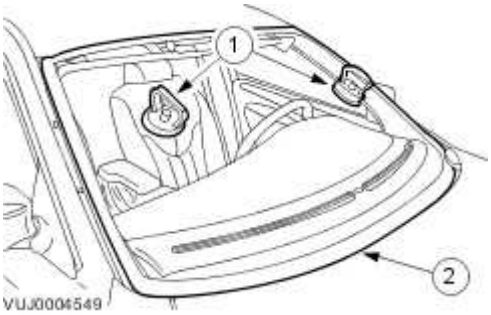

22 . Remove lifting handles from the windshield glass.

Installation

1. **WARNING: If the windshield glass is being installed at a temperature of 23°C (73°F) or above make sure the vehicle is not driven for at least 1 hour after installation. Failure to follow this instruction, may result in personal injury.**

WARNING: If the windshield glass is being installed at a temperature of 11°C (52°F) to 23°C (73°F), make sure the vehicle is not driven for at least 1.5 hours after installation. Failure to follow this instruction, may result in personal injury.

WARNING: If the windshield glass is being installed at a temperature of 5°C (41°F) to 11°C (52°F), make sure the vehicle is not driven for at least 2 hours after installation. Failure to follow this instruction, may result in personal injury.

WARNING: If the windshield glass is being installed at a temperature below 5°C (41°F), use heat and make sure the windshield glass adhesive has set before the vehicle is driven. Failure to follow this instruction, may result in personal injury.

CAUTION: When installing the windshield glass, do not strike it in any way as this will crack the glass. Failure to follow this instruction may result in damage to the component.

NOTE:

Make sure the windshield glass does not move out of position in the windshield glass aperture.

NOTE:

If the original windshield glass is to be installed remove the residual adhesive from windshield glass mating surface.

Using the special tool, remove any residual adhesive from the body.

www.JagDocs.com

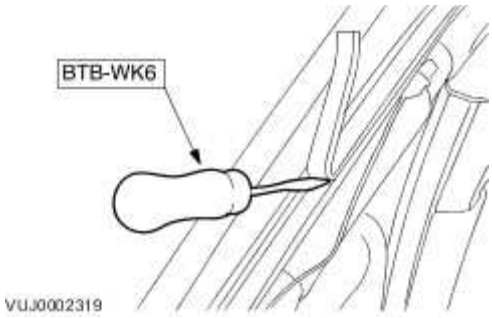

2 . Make sure the new windshield glass surface is clean using Betawipe spirit.

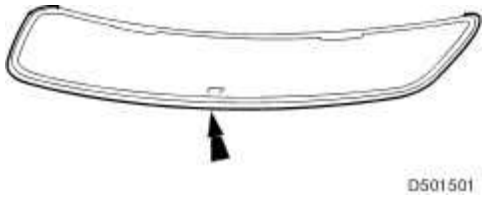

3 . Apply glass primer to the mating surface of the windshield glass.

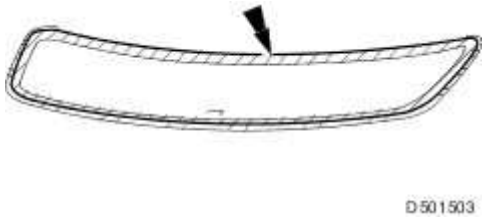

4 . Install the windshield finisher to the windshield glass.

- Install new windshield finisher retaining clips.

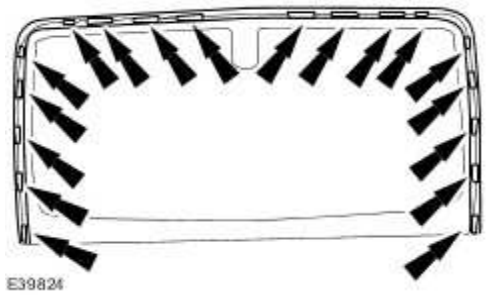

5 . Apply glass primer to the mating face of the body flange.

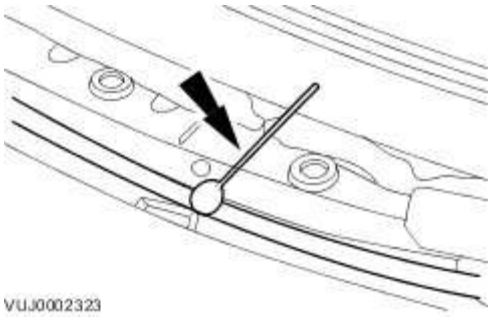

6. Cut adhesive nozzle to achieve a triangular section bead 7 mm (0.28 in) wide by 10 mm (0.39 in) high.

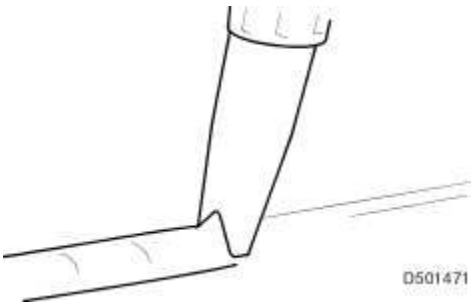

7. Using a suitable pneumatic application gun, apply a uniform bead of adhesive to the windshield glass edge commencing at the bottom center and overlapping the ends approximately 20 mm (0.79 in).

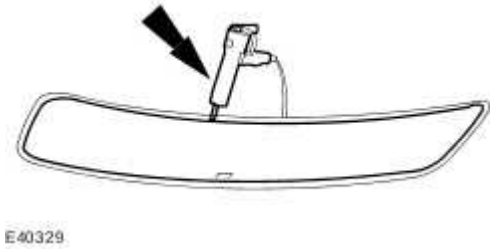

8. **CAUTION: When installing the windshield glass, do not strike it in any way as this will crack the windshield glass.**

With assistance carefully install the windshield glass into the aperture.

www.JagDocs.com

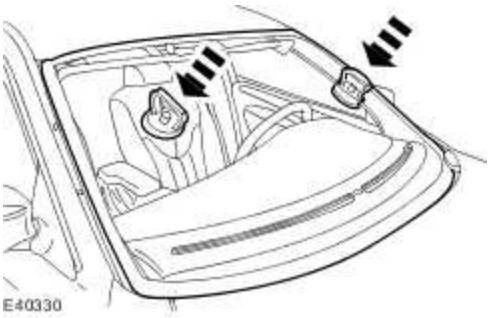

9 . Remove the lifting handles.

10 . **CAUTION: Make sure the windshield glass does not move out of position in the windshield glass aperture.**

Apply suitable adhesive tape to the top of the windshield glass.

11 . Install the cowl vent screen. <<501-02>>

12 . Remove the protective tape around windshield glass aperture.

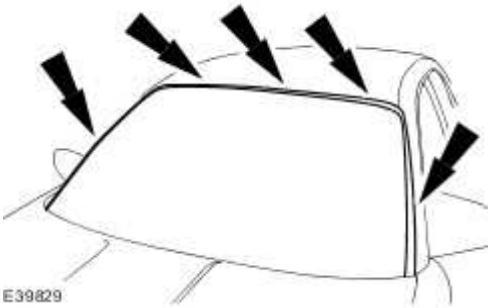

13 . Remove protective tape from the leading edge of the headliner.

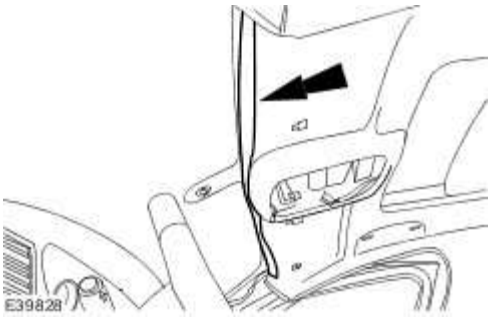

14 . Remove the protective sheet and the protective board from the fascia.

15 . **NOTE:**

Left-hand shown, right-hand similar.

Connect the heated windshield electrical connectors.

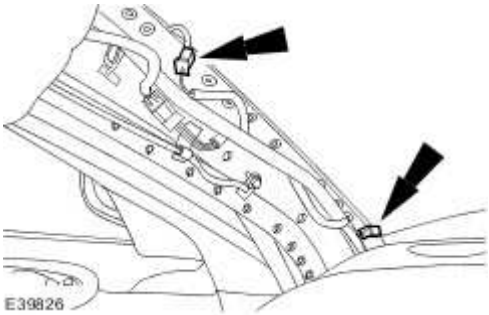

16 . Remove the adhesive tape supporting the headliner.

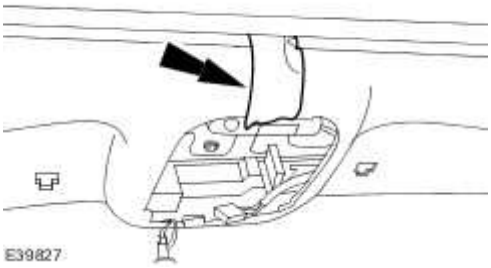

www.JagDocs.com

17 . **NOTE:**

Right-hand shown, left-hand similar.

Install the front occupant assist handle.

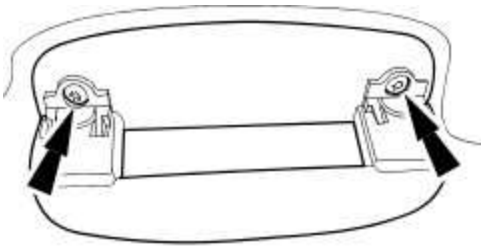

E38776

18 . **NOTE:**

Right-hand shown, left-hand similar.

Attach the front occupant assist handle screw covers.

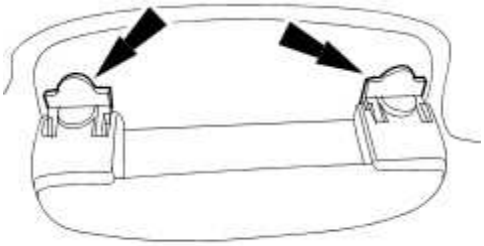

E38998

19 . Install the sun visor retaining clips.

20 . Install the overhead console. <<501-12>>

21 . Install both sun visors. <<501-05>>

22 . Install both A-pillar trim panels. <<501-12>>

23 . Install the interior mirror. <<501-09>>

Published: Mar 30, 2014

Windshield Glass (76.81.40) – Armoured Vehicles

Special Service Tools

Spray bottle
WK9

Lubricant concentrate
WK9L

Adhesive removal blade - body
WK6

Removal

WARNING: The use of products other than Betawipe on poly carbonate may cause a deterioration of the glass, an opacity effect and an early delamination of the shielding. The ballistic standards and the protection of the occupants would not be assured. Failure to follow this instruction may result personal injury.

CAUTION: The use of products other than Betawipe on poly carbonate may cause a deterioration of the glass, an opacity effect and an early delamination of the shielding. The ballistic standards and the protection of the occupants would not be assured. Failure to follow this instruction may result in damage to the vehicle.

CAUTION: Make sure that only the recommended degreasing and cleaning fluids are used. Failure to follow this instruction may result in damage to the vehicle.

CAUTION: Make sure that only the recommended adhesive, sealant and primers are used. Failure to follow this instruction may result in damage to the vehicle.

www.JagDocs.com

1 . Remove the cowl vent screen.
For additional information, refer to

2 . Remove the hood.
For additional information, refer to

3 . Place a suitable protective sheet over fascia and place a protecting board over sheet.

4 . Remove and discard the windshield glass finisher.

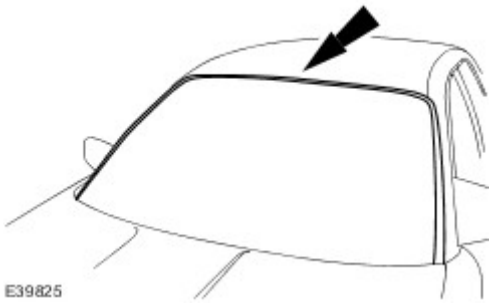

5 .

CAUTION: Make sure the vehicle is protected to prevent any damage to the vehicles paint work. Failure to follow this instruction may result in damage to the vehicle.

Apply a suitable protective tape around windshield glass aperture to protect the paintwork.

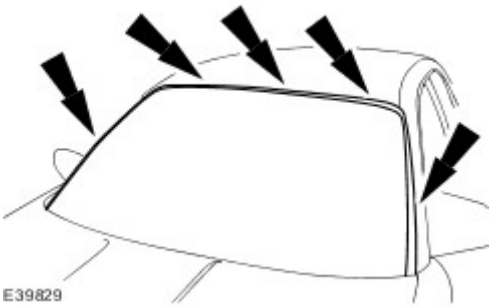

6 .

WARNING: When removing the windshield glass, personal protection must be worn. Failure to follow this instruction may result in personal injury.

NOTE:

Refer to the next step for the correct measurement.

Using a suitable high speed diamond tipped cutting tool, remove area a from area b.

1) Windshield glass spacer.
2) Vehicle body.
3) Armoured frame.
4) Armoured windshield glass.

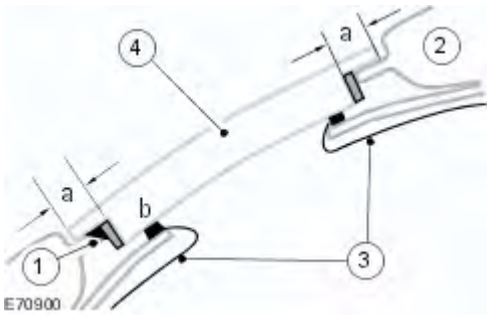

7 . Use the steps below to make sure the correct measurement is used to cut the windshield glass.

- A: Windshield glass upper.
  - 25 mm (0.98 inch).
- B: Windshield glass side.
  - 27 mm (1.06 inch).
- C: Windshield glass lower.
  - 1: 117 mm (4.61 inches).
  - 2: 127 mm (5.00 inches).

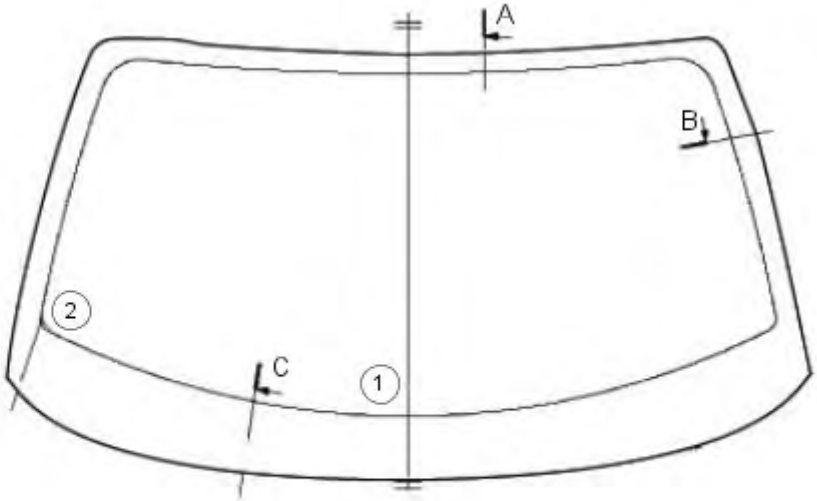

E70901

www.JagDocs.com

8 . Apply cutting lubricant to the windshield glass adhesive.

9 . **WARNING: When removing the windshield glass, personal protection must be worn. Failure to follow this instruction may result in personal injury.**

Using a suitable cutting tool, cut the seal between the armoured windshield glass and the armoured frame.

1) Windshield glass spacer.
2) Vehicle body.
3) Armoured frame.
4) Armoured windshield glass.

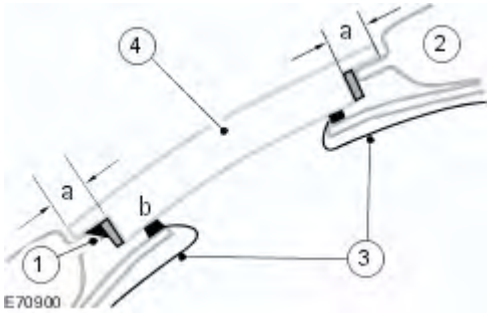

10 . **WARNING: When removing the windshield glass, personal protection must be worn. Failure to follow this instruction may result in personal injury.**

NOTE:

The windshield glass must also be pushed out from the inside of the vehicle.

With the assistance of three people and exercising care, remove and discard the windshield glass.

Installation

1 . **CAUTION: Do not use thinners to clean the the windshield glass. Failure to follow this instruction may result in damage to the vehicle.**

CAUTION: Make sure that only the recommended degreasing and cleaning fluids are used. Failure to follow this instruction may result in damage to the vehicle.

CAUTION: Make sure that only the recommended adhesive, sealant and primers are used. Failure to follow this instruction may result in damage to the vehicle.

When installing the windshield glass make sure the products used are of the same specification as listed below.

PREPARATION	RUBBER AND PLASTIC GLUING	METAL GLUING	GLAZING GLUING
Degreasing	BETAWIPE Type Ref : 18022	STANDOX Type SILICON ENTFERNER Ref : 66012	BETAWIPE Type Ref : 18022
Primer	BETAWIPE Type Ref: 18031	-	BETAPRIME Type GURIT-ESSEX AG Ref: 18026
Adhesive	BETASEAL Type Ref:18016	SIKA 221 Type Ref:18040	BETASEAL Type Ref:18016

2 .

CAUTION: When installing the windshield glass, do not strike it in any way as this will crack the glass. Failure to follow this instruction may result in damage to the component.

NOTE:

Make sure the windshield glass does not move out of position in the windshield glass aperture.

Using the special tool, remove any residual adhesive from the body.

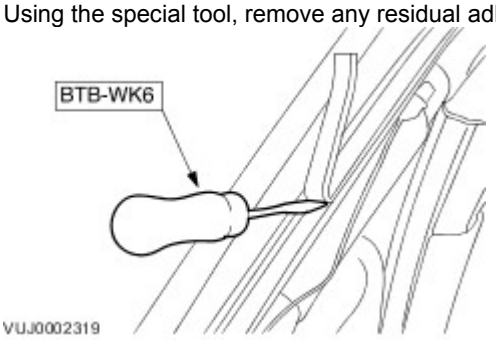

3 . Protect the inside of the windshield glass.

4 . Install the windshield glass spacers to the frame to the same positions they were removed from.

5 . Tape the heated front windshield glass wiring harness aside.

www.JagDocs.com

6 . **WARNING: When installing the windshield glass, personal protection must be worn. Failure to follow this instruction may result in personal injury.**

CAUTION: When installing the windshield glass, do not strike it in any way as this will crack the glass. Failure to follow this instruction may result in damage to the component.

With the assistance of three people and exercising care, install the windshield glass.

1) Windshield glass spacer.
2) Windshield glass.
3) Vehicle body.
4) Armoured frame.

- Center the windshield glass to the windshield glass frame and mark the central position of the windshield glass.

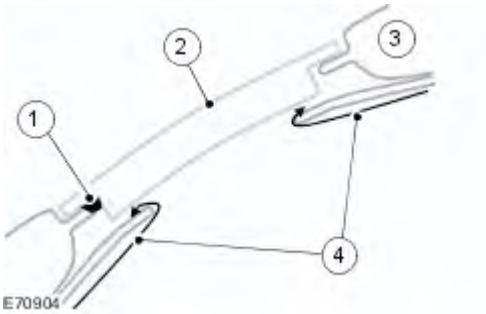

7 . **WARNING: When removing the windshield glass, personal protection must be worn. Failure to follow this instruction may result in personal injury.**

CAUTION: When removing the windshield glass, do not strike it in any way as this will crack the glass. Failure to follow this instruction may result in damage to the component.

With the assistance of three people and exercising care, remove the windshield glass.

8 . Clean the windshield glass surface using clean Betawipe spirit.

9 . The new windshield glass will be supplied with a new modified lower weather strip.

10 .

CAUTION: Make sure that the windshield glass is primed on the side, the frame as well as the windshield glass edge. Failure to follow this instruction may result in damage to the vehicle.

Apply a suitable glass primer to the mating surfaces of the windshield glass.

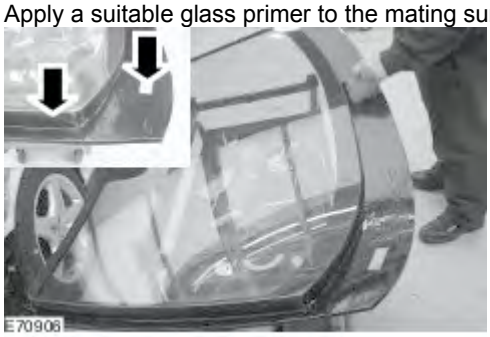

11 . Apply glass primer to the mating face of the body flange.

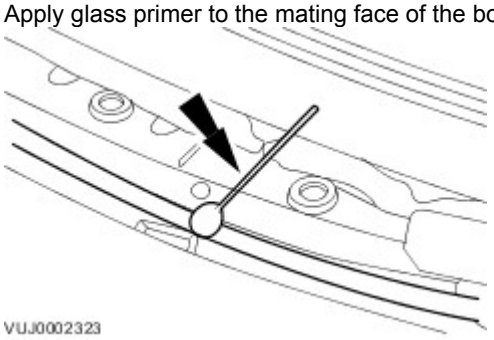

12 . Apply Betaseal on the windshield glass.

- Around the edge of the armoured frame and also around the side of the windshield glass make a 15-20 mm wide (0.59-0.79 inch) seal using Betaseal.

www.JagDocs.com

13 .

WARNING: When installing the windshield glass, personal protection must be worn. Failure to follow this instruction may result in personal injury.

CAUTION: When installing the windshield glass, do not strike it in any way as this will crack the glass. Failure to follow this instruction may result in damage to the vehicle.

CAUTION: When the windshield glass is correctly aligned, hold the windshield glass into position with strong adhesive tape for 24 hours. Failure to follow this instruction may result in damage to the vehicle.

With the assistance of three people and exercising care, install the windshield glass.

1) Windshield glass spacer.
2) Windshield glass.
3) Vehicle body.
4) Armoured frame.

Align the windshield glass to the windshield glass frame and align with the marks previously made.

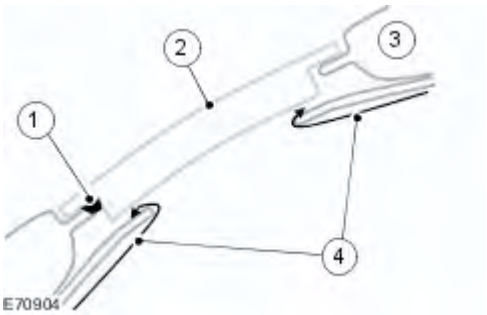

14 . **NOTE:**

Leave the Betaseal to dry.

Apply betaseal seal around the windshield glass.

15 **NOTE:**

· When the Betaseal seal is dry, install the new weather seal and mark the position.

Install the windshield finisher.

- Center the windshield finisher to the windshield glass frame and mark the central position of the windshield glass finisher.

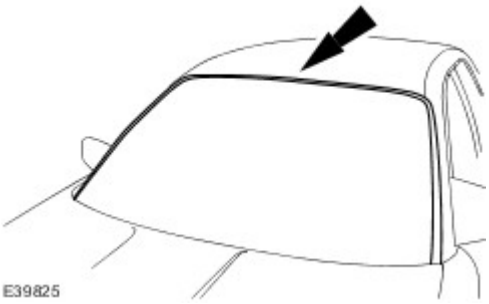

16 . Apply primer on the seal on the surface to be glued.

17 . Apply glass primer on the glass where the seal will be glued.

18 Make a 4 mm (0.16 inch) Betaseal seal on the windshield glass and fit the windshield glass finisher into position.

·

- Press the windshield glass finisher to make the betaseal overflow.
- Remove the surplus Betaseal.
- Apply rubber shims on the windshield finisher and apply suitable adhesive tape to the top of the windshield glass.
- Let the Betaseal dry.

19 . Remove the protective tape around windshield glass aperture.

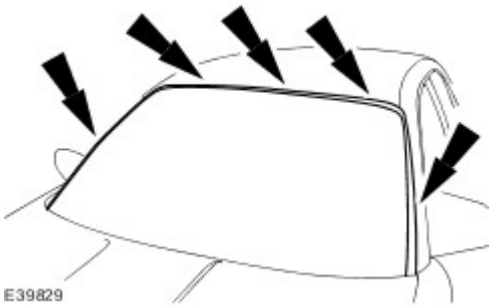

20 . Remove the protective sheet and the protective board from the fascia.

21 . Install the cowl vent screen.
For additional information, refer to

www.JagDocs.com

22 . Install the hood.
For additional information, refer to

Specifications

Torque Specifications

Description	Nm	lb-ft	lb-in
Instrument panel retaining bolts	20	15	-
Floor console retaining bolts	9	-	80
Instrument panel support brackets retaining bolts	9	-	80
Instrument panel support brackets retaining nuts	9	-	80
Instrument panel center retaining screw	3	-	27

www.JagDocs.com

Instrument Panel

The instrument panel assembly houses the instrument cluster, passenger air bag module, glove compartment, message center/headlamp leveling switch, luggage compartment lid/fuel flap release switch, in-vehicle temperature sensor, ignition switch, driver stowage box, remote climate control module (vehicles fitted with telematics), instrument panel lower trim panel, instrument panel finish panel and air distribution registers, all of which can be removed without removing the instrument panel. The instrument panel wiring harness is attached to the instrument panel to assist in easy removal and installation of the instrument panel. The instrument panel must be removed from the vehicle to gain access to the heater and evaporator unit and the wiring harness.

Floor Console

The floor console is located between the front seats and consists of the ashtray, cigar lighter and armrest. The optional telephone is incorporated within the floor console if the vehicle is equipped with satellite navigation. Alternatively the center section of the floor console forms a deep stowage box with a secondary cupholder. In both cases the floor console utilizes a rear hinged lid which is padded to form a central arm rest. Situated in the rear of the floor console are further air distribution registers, cigar lighter, 12 volt power point and rear heated seat switch.

Roof Console

The roof console is located between the sun visors and, depending upon the vehicle options, consists of the front overhead courtesy light, two reading/map lights, remote convenience buttons, sun glasses holder, intrusion sensors, front parking aid disable switch and rear sunblind switch.

Instrument Panel console

The instrument panel console is located in the center of the instrument panel. The instrument panel console consists of:

- the climate control assembly (vehicles without telematics). <<412-04>>
- the touch-screen telematics control module (vehicles fitted with telematics). This takes place of the climate control assembly. <<419-05>>
- the occupancy sensor. <<501-20B>>
- the audio system. <<415-01>>
- the multi-switch pack consisting of, depending upon the vehicle options, heated seat switches, single point door locking switch, hazard warning switch and valet switch.

Floor Console - Vehicles With: Auxiliary Climate Control (76.25.01)

Removal

All vehicles

1 . Remove the transmission selector lever surround.

2 . Remove the floor console front retaining bolts.

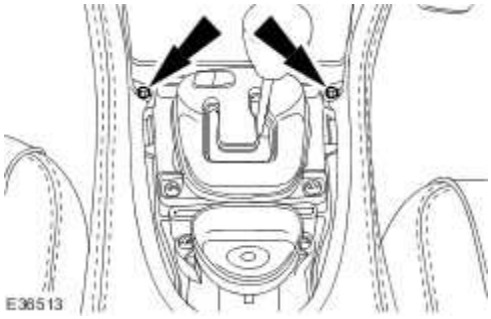

3 . Remove the floor console register.
For additional information, refer to Register

Vehicles with cordless cellular phone

4 . Disconnect the Bluetooth module electrical connector.

www.JagDocs.com

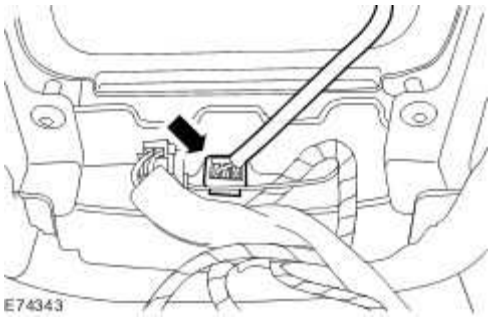

All vehicles

5 . **NOTE:**

Right-hand shown, left-hand similar.

Remove the rear floor register.

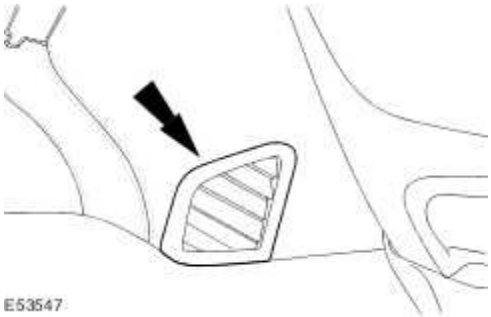

6 . **NOTE:**

Right-hand shown, left-hand similar.

Remove the floor console rear retaining bolts.

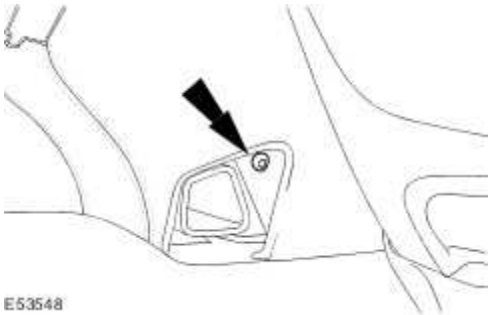

7 . Raise the rear of the floor console.

8 . Remove the floor console.

Installation

All vehicles

1 . **CAUTION: Make sure the seat belt buckles are not trapped when installing the floor console.**

CAUTION: Make sure the floor console locating tangs are correctly located into the instrument panel clips. Failure to follow this instruction my result in damage to the vehicle.

Install the floor console.

www.JagDocs.com

2. **CAUTION: Make sure the seat belt buckles are not trapped when installing the floor console.**

Lower the rear of the floor console.

3 . **NOTE:**

Right-hand shown, left-hand similar.

Install the floor console rear retaining bolts.

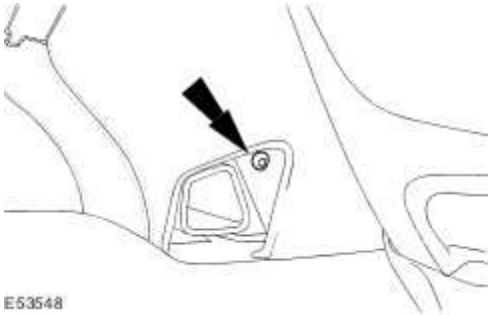

4 . **NOTE:**

Right-hand shown, left-hand similar.

Install the rear floor register.

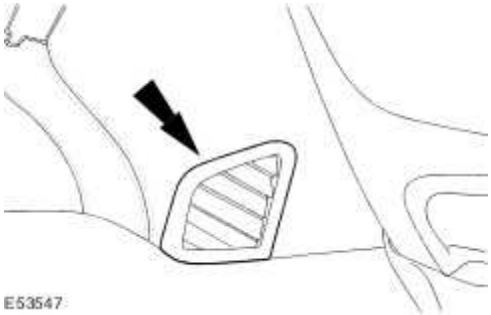

Vehicles with cordless cellular phone

5 . Connect the Bluetooth module electrical connector.

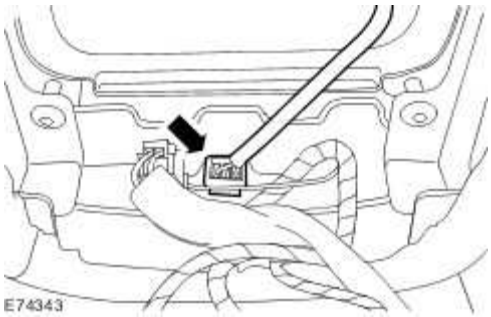

All vehicles

6 . Install the floor console register.
For additional information, refer to Register

7 . Install the floor console front retaining bolts.

Tighten to 7 Nm.

www.JagDocs.com

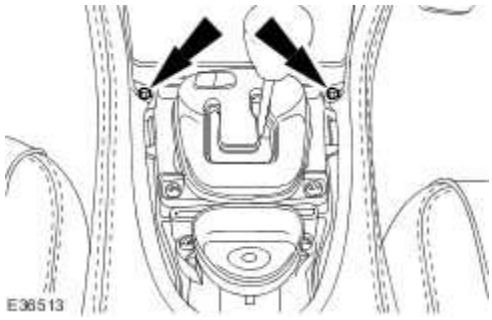

8 . Install the transmission selector lever surround.

Floor Console - Vehicles Without: Auxiliary Climate Control (76.25.01)

Removal

All vehicles

1 . Remove the transmission selector lever surround.

2 . Remove the floor console front retaining bolts.

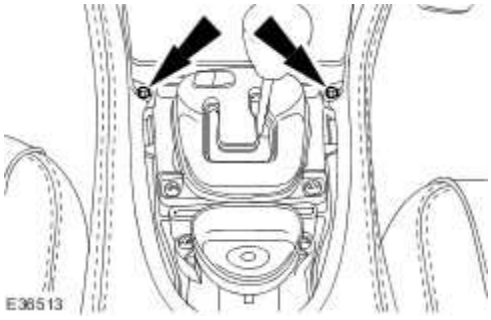

Vehicles fitted without heated rear seat

3 . Detach the floor console register.

4 . Disconnect the electrical connector.

www.JagDocs.com

Detach the wiring harness retaining clip.

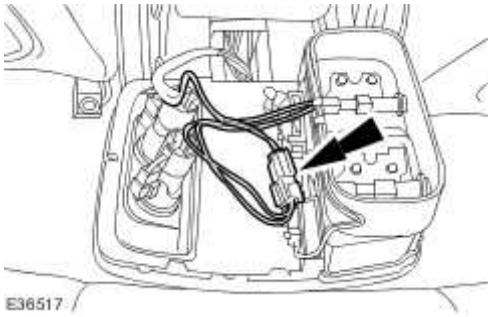

Vehicles fitted with heated rear seat

5 . Detach the floor console register.

6 . Disconnect the electrical connector.

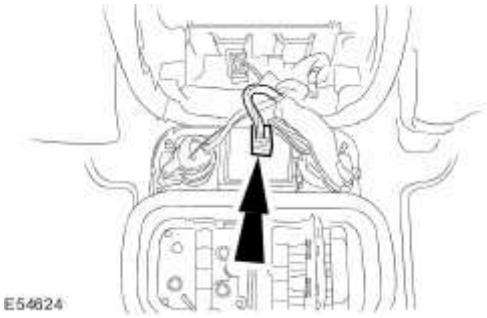

All vehicles

7 . Disconnect the electrical connector.

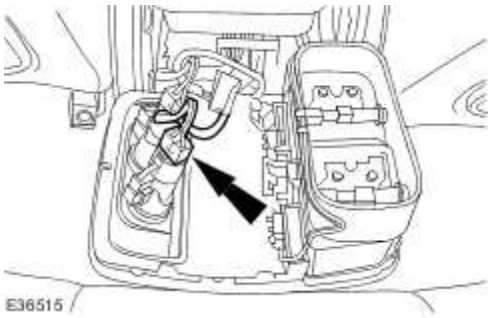

8 . Remove the floor console register.

- Disconnect the electrical connector.

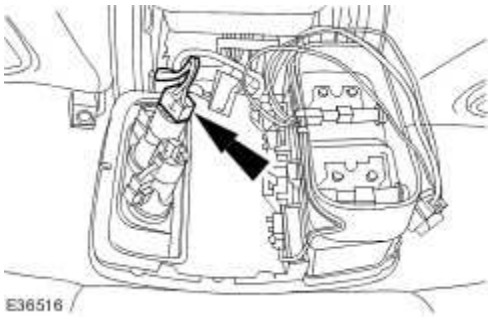

Vehicles fitted with heated rear seat

9 . Remove the floor console register.

- Disconnect the electrical connector.

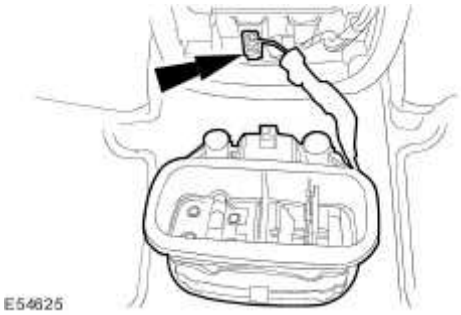

Vehicles with cordless cellular phone

10 . Disconnect the Bluetooth module electrical connector.

www.JagDocs.com

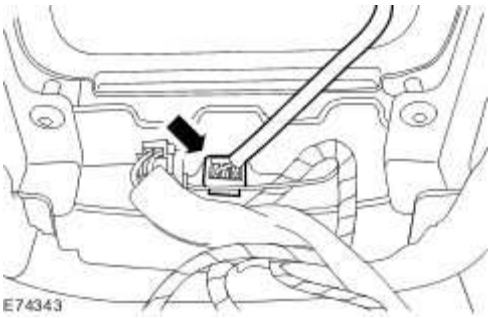

All vehicles

11 . Remove the floor console rear retaining bolts.

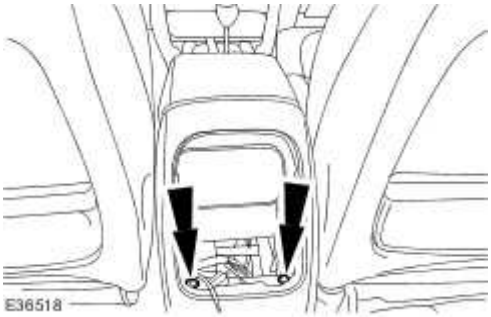

12 . Raise the rear of the floor console.

13 . Remove the floor console.

Installation

All vehicles

1. **CAUTION: Make sure the seat belt buckles are not trapped when installing the floor console.**

CAUTION: Make sure the floor console locating tangs are correctly located into the instrument panel clips. Failure to follow this instruction my result in damage to the vehicle.

Install the floor console.

2. **CAUTION: Make sure the seat belt buckles are not trapped when installing the floor console.**

Lower the rear of the floor console.

www.JagDocs.com

3 . Install the floor console retaining bolts.

Tighten to 7 Nm.

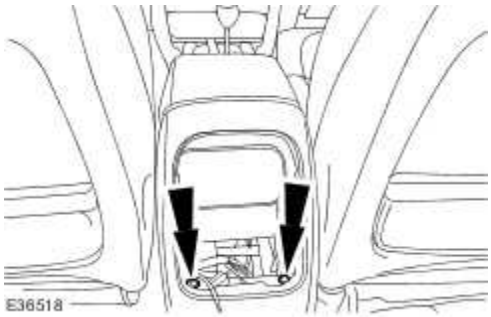

Vehicles with cordless cellular phone

4 . Connect the Bluetooth module electrical connector.

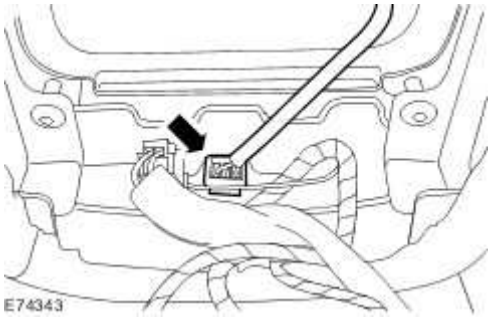

Vehicles fitted with heated rear seat

5 . Install the floor console register.

Connect the electrical connector.

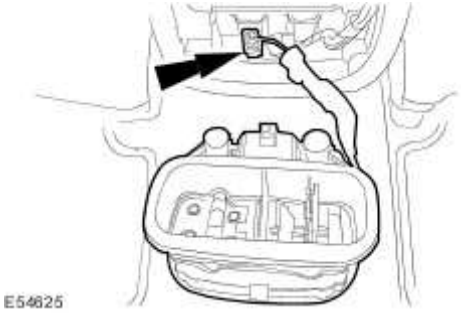

All vehicles

6 . Install the floor console register.

Connect the electrical connector.

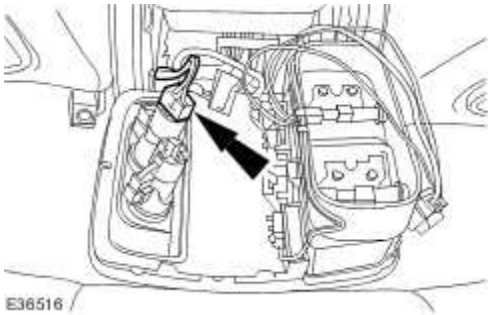

7 . Connect the electrical connector.

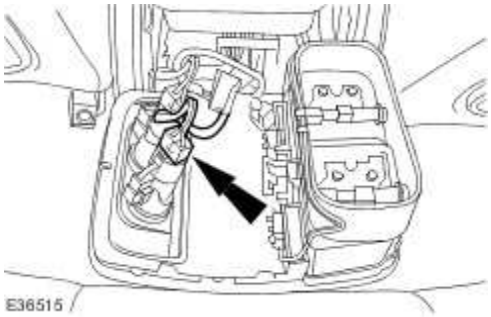

Vehicles fitted with heated rear seat

8 . Connect the electrical connector.

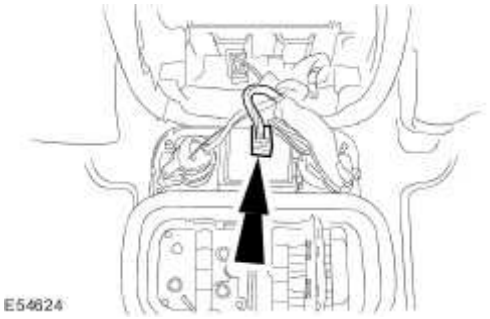

9 . Install the floor console register.

www.JagDocs.com

E54626

Vehicles fitted without heated rear seat

10 . Connect the electrical connector.

Attach the wiring harness retaining clip.

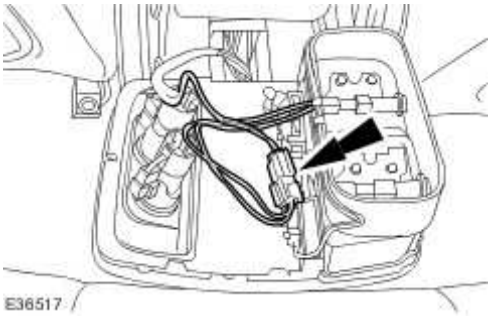

E36517

11 . Install the floor console register.

E36514

All vehicles

12 . Install the floor console front retaining bolts.

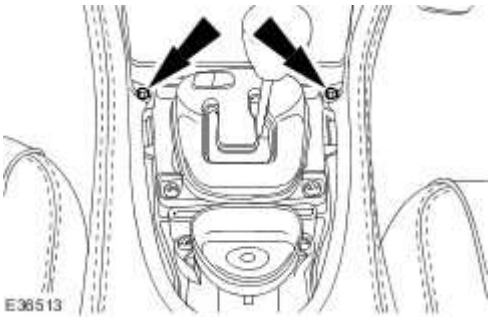

13 . Install the transmission selector lever surround.

www.JagDocs.com

Glove Compartment (76.52.03)

Removal

1 . Remove the instrument panel lower trim panel.

1) Remove the retaining scrivets.

2) Remove the instrument panel lower trim panel.

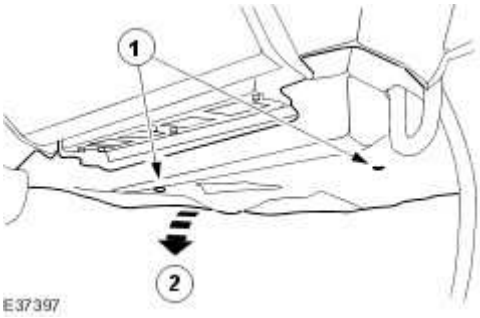

2 . Reposition the glove compartment shelf.

- Remove the securing screws.

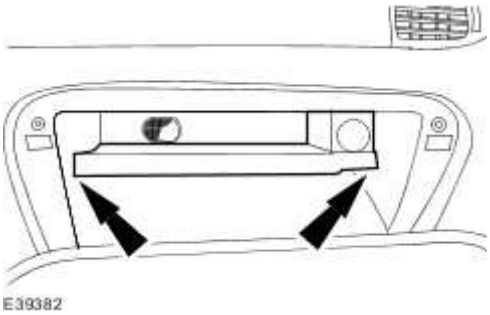

3 . Remove the glove compartment shelf.

- Disconnect the glove compartment power socket electrical connector.

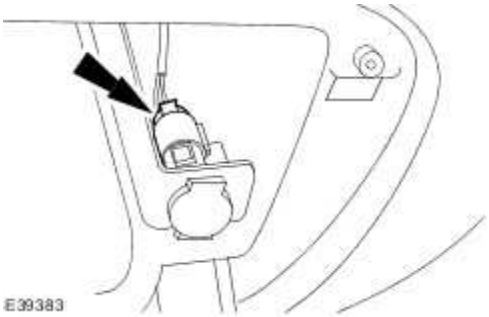

4 . **NOTE:**

Right-hand shown, left-hand similar.

Remove the glove compartment lower securing screws.

1) Remove the glove compartment lower securing bolts.
2) Remove the glove compartment lower securing nuts.
3) Remove the glove compartment lower securing screws.

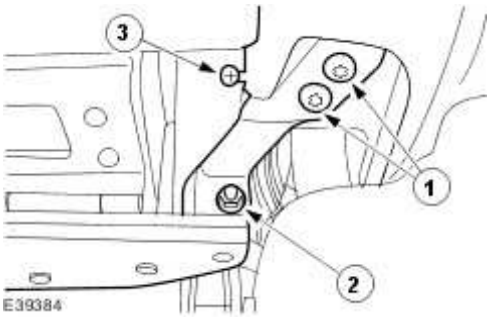

5 . Remove the glove compartment upper securing screws.

1) Remove the screws.
2) Remove the bolts.

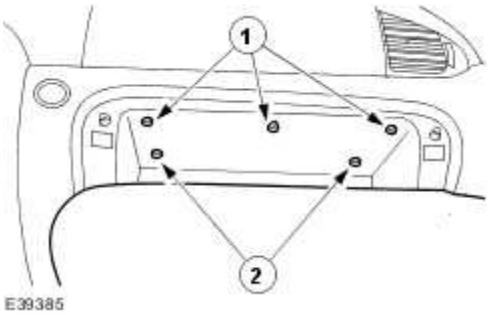

6 . Disconnect the glove compartment lamps.

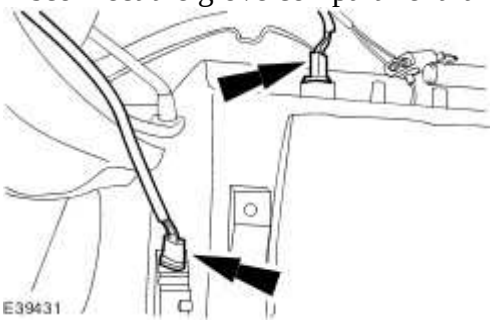

7 . Remove the glove compartment.

1) Disconnect the glove compartment electrical connector.
2) Remove the glove compartment power socket harness.

www.JagDocs.com

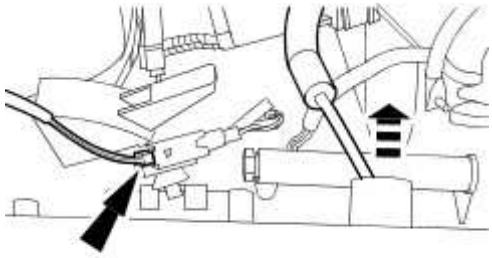

E39432

Installation

1 . To install, reverse the removal procedure.

Instrument Panel (76.46.01)

Removal

1 . Disconnect the battery ground cable. <<414-01>>

2 . Remove the steering column. <<211-04>>

3 . Disconnect the in-vehicle temperature sensor hose.
1) Remove the hose.
2) Remove the securing clip.

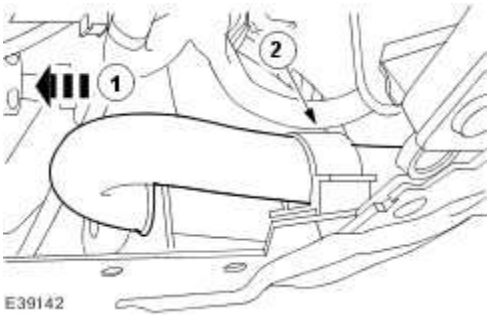

4 . Remove the instrument panel console.
For additional information, refer to Instrument Panel Console (88.20.34)

5 . Remove the ashtray retaining screw covers.

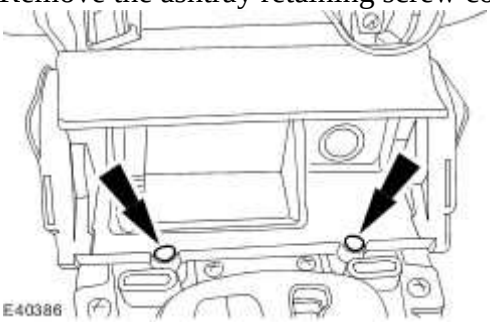

6 . Detach the ashtray.
- Remove the ashtray retaining screws.

www.JagDocs.com

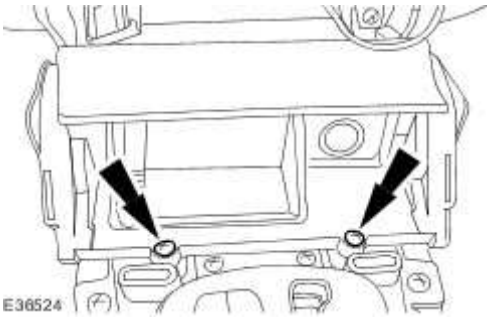

7 . Remove the ashtray.

Disconnect the electrical connector.

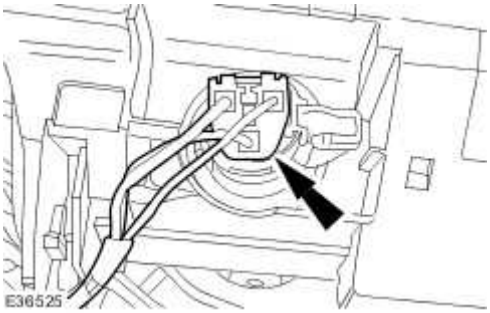

8 . Remove the floor console register duct.

1) Remove the retaining nut.

2) Remove the floor console register duct.

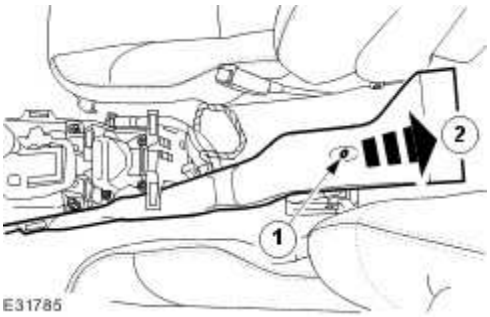

9 . Detach the floor console wiring harness retaining bracket.

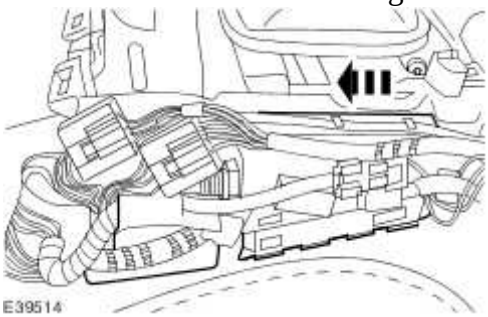

10 . **CAUTION: Make sure damage does not occur to the interior trim.**

Reposition the floor console retaining bracket.

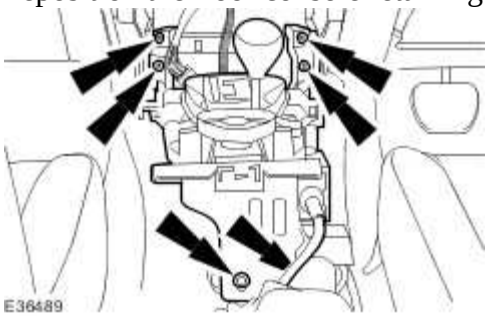

11 . **CAUTION: Make sure damage does not occur to the interior trim.**

NOTE:

Reposition the floor console bracket.

Disconnect the transmission selector switch electrical connector.

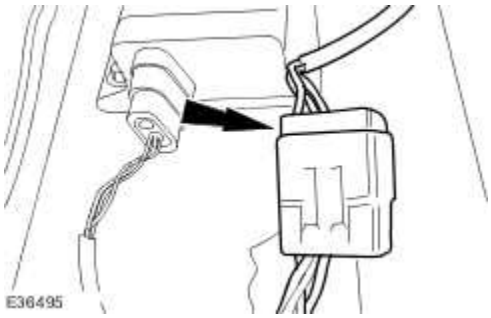

12 . Disconnect the lateral/yaw rate sensor electrical connector.

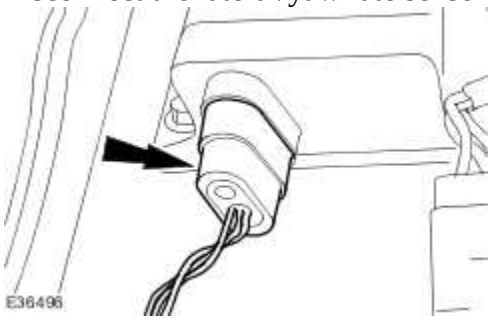

13 . **NOTE:**

Reposition the floor carpet.

Detach the wiring harness ground connector.

www.JagDocs.com

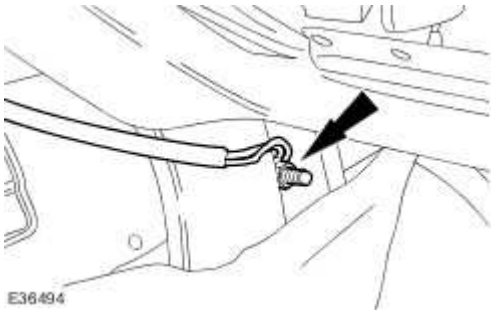

14 . Detach the wiring harness from the instrument panel retaining bracket.

15 . Disconnect the electrical connector.

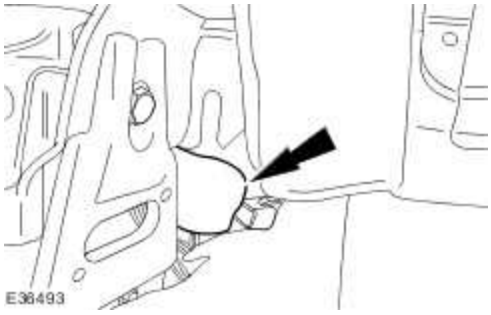

16 . Remove the retaining bolt.

17 . Remove the instrument panel retaining bracket.

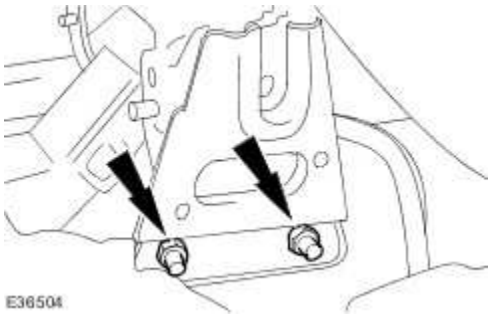

18 . Remove the retaining bolt.

19 . Remove the instrument panel retaining bracket.

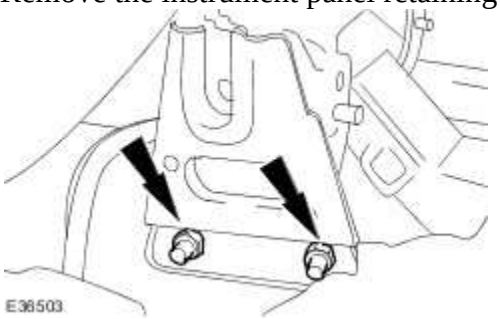

20 . Remove the floor console adaptor duct retaining clip.

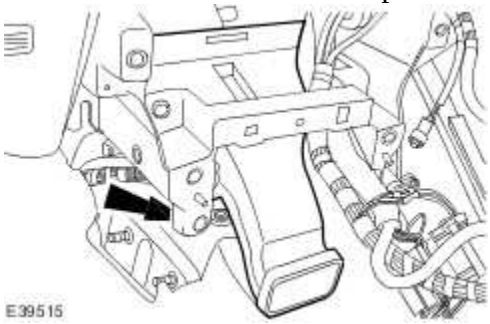

21 . **NOTE:**

Left-hand shown, right-hand similar.

Remove the cowl side trim panels.

www.JagDocs.com

1) Detach the front door opening weather strip.
2) Detach the scuff plate trim panel.
3) Remove the cowl side trim panel.

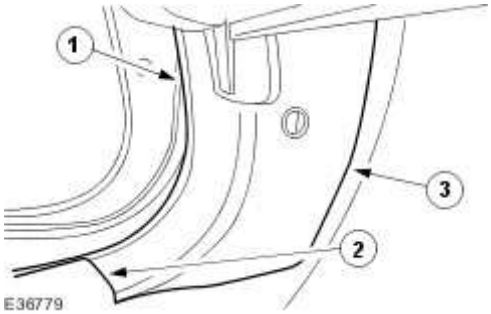

22 . **NOTE:**

From the left-hand footwell.

Disconnect the electrical connector.

23 . **NOTE:**

From the left-hand footwell.

Disconnect the electrical connector.

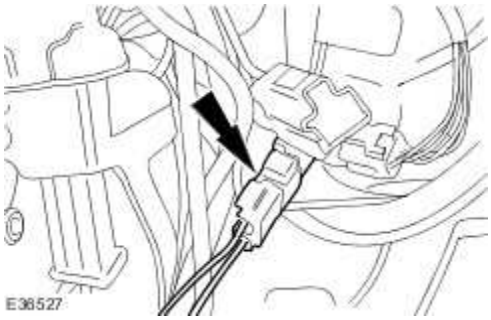

24 . **NOTE:**

From the right-hand footwell.

Disconnect the electrical connectors.

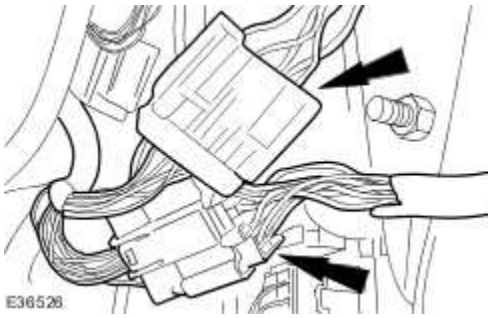

25 . **NOTE:**

Left-hand shown, right-hand similar.

Disconnect the climate control electrical connector.

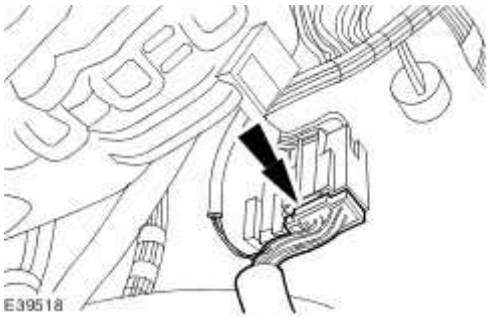

26 . **NOTE:**

Left-hand shown, right-hand similar.

Disconnect the climate control electrical connector.

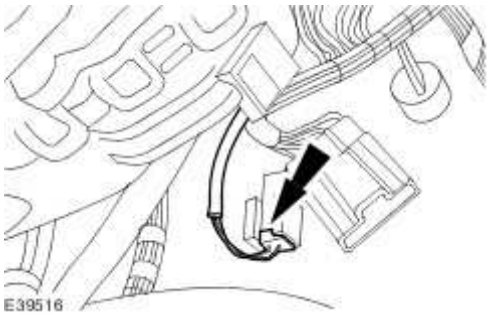

27 . **NOTE:**

Right-hand shown, left-hand similar.

Detach the front door opening weather strip.

www.JagDocs.com

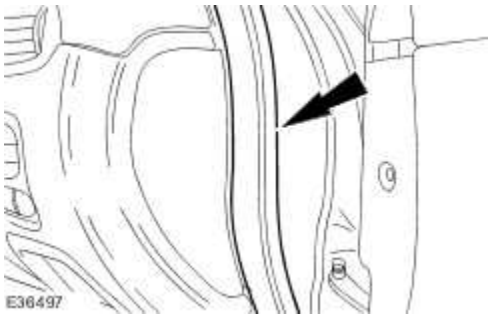

28 . **NOTE:**

Right-hand shown, left-hand similar.

Remove the instrument panel end panel.

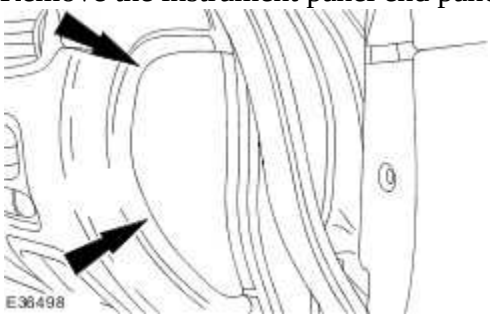

29 . Disconnect the electrical connectors.

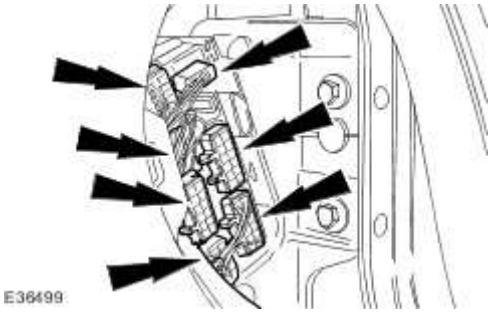

30 . Disconnect the electrical connectors.

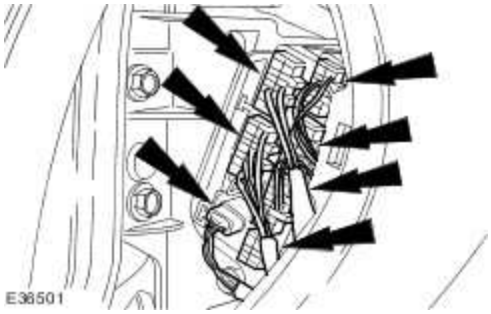

31 . Remove the sunload sensor. <<412-04>>

32 . **NOTE:**

Right-hand shown, left-hand similar.

Detach the defogger duct.

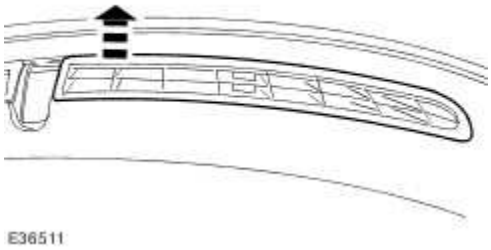

33 . **NOTE:**

Right-hand shown, left-hand similar.

Remove the defogger duct.

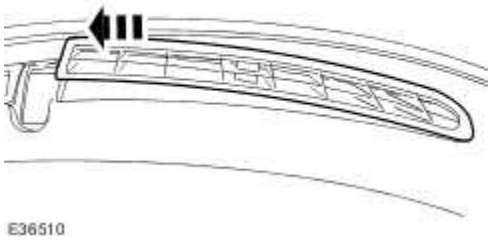

34 . Remove the retaining bolt.

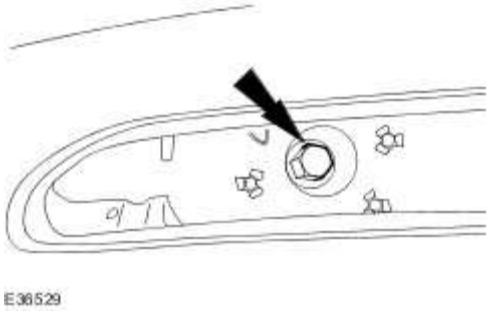

35 . Remove the retaining bolt.

www.JagDocs.com

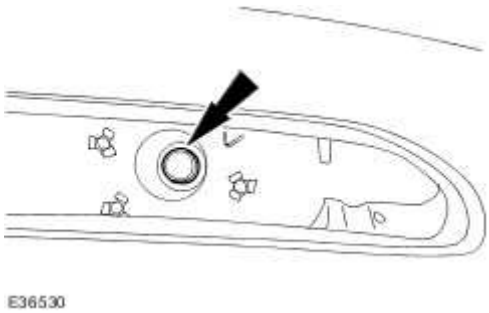

36 . Remove the retaining bolts.

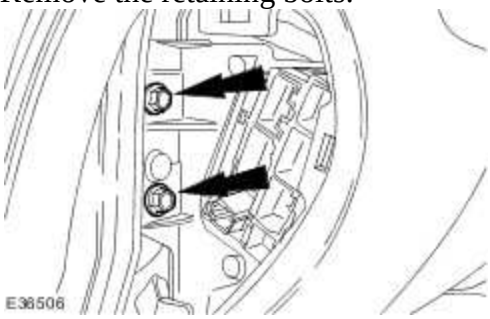

37 . Remove the retaining bolts.

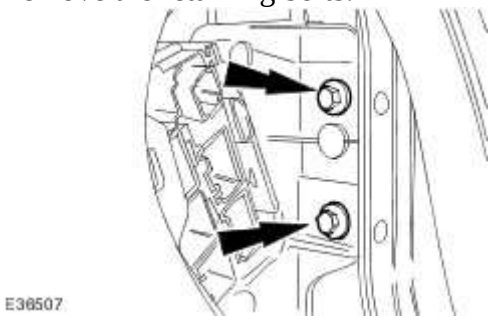

38 . **CAUTION: Make sure damage does not occur to the instrument panel and interior trim on removal of the instrument panel.**

Remove the instrument panel.

Installation

CAUTION: Make sure damage does not occur to the instrument panel and interior trim on installation of the instrument panel.

1 . To install, reverse the removal procedure.

2 . Tighten to 20 Nm.

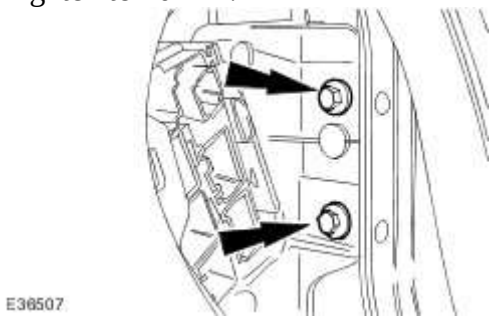

3 . Tighten to 20 Nm.

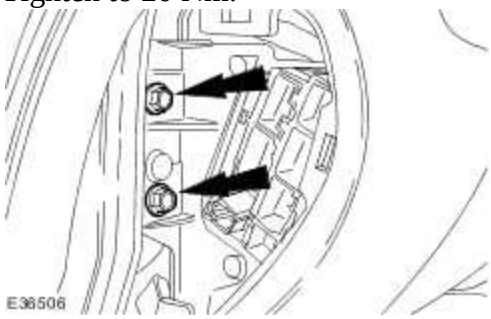

4 . Tighten to 20 Nm.

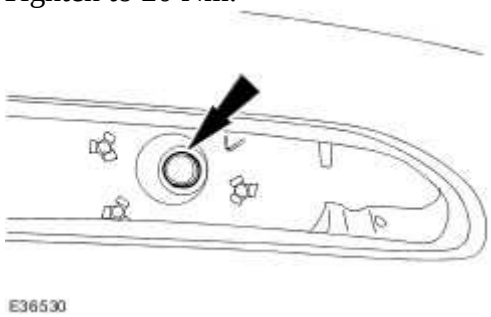

5 . Tighten to 20 Nm.

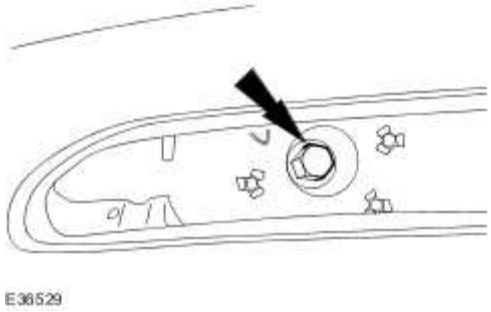

6 . Tighten to 9 Nm.

www.JagDocs.com

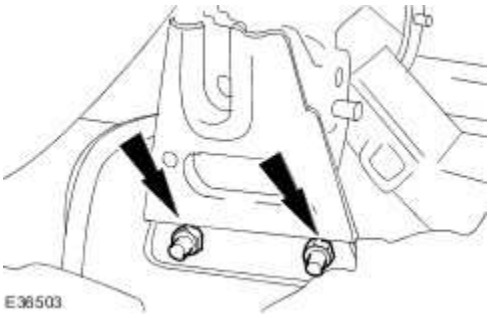

7 . Tighten to 9 Nm.

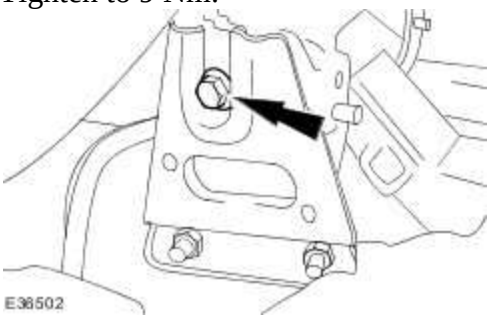

8 . Tighten to 9 Nm.

9 . Tighten to 9 Nm.

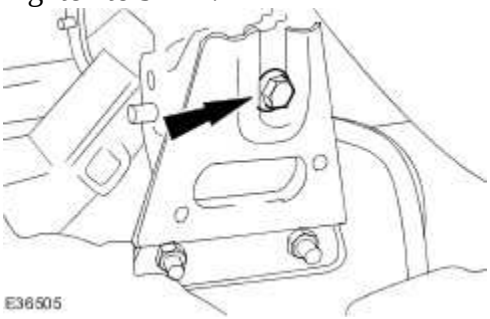

10 . Tighten to 3 Nm.

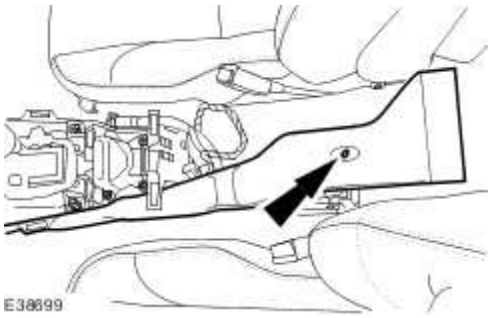

www.JagDocs.com

Instrument Panel Console (88.20.34)

Removal

1 Remove the floor console.
. For additional information, refer to Floor Console - Vehicles Without: Auxiliary Climate Control (76.25.01)

2 . Detach the instrument panel console.

- Remove the retaining screws.

3 . Disconnect the electrical connectors.

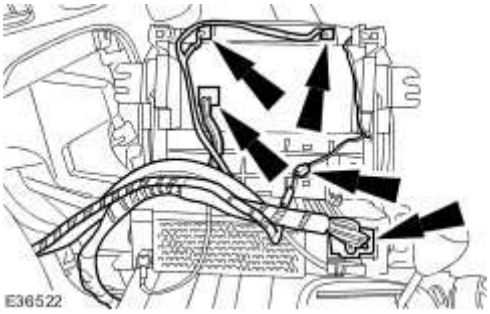

4 . Remove the instrument panel console.

- Disconnect the antenna connectors.

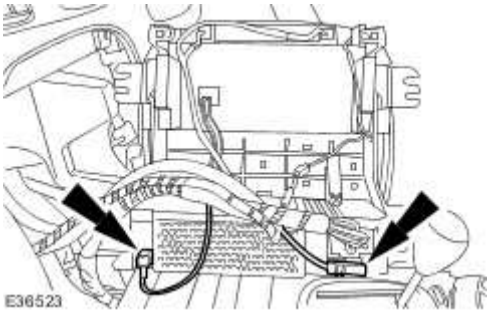

Installation

1 . To install, reverse the removal procedure.

www.JagDocs.com

Overhead Console (76.13.69)

Removal

Vehicles without roof opening panel

1 . Remove the retaining screw.

- Open the sunglasses compartment.

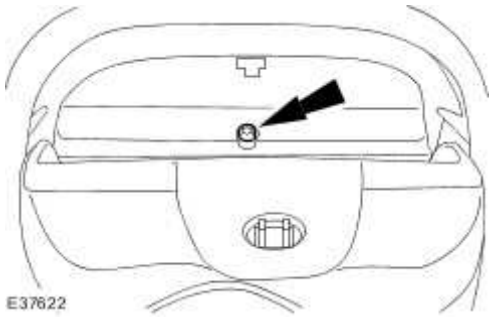

All vehicles

2 . Detach the overhead console from bulb carrier retaining clips.

1) Release the overhead console to bulb carrier front retaining clips.

2) Release the overhead console to bulb carrier side retaining clips.

- Lower the overhead console.

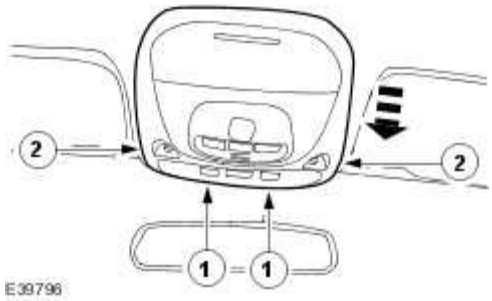

3 . Remove the overhead console.

- Disconnect the electrical connector.

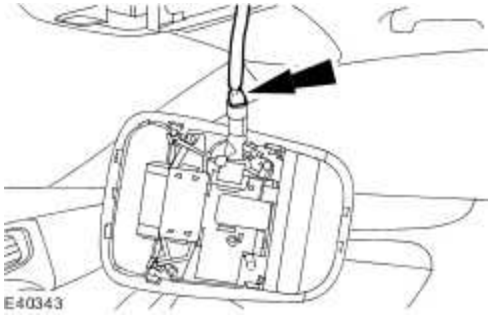

Installation

All vehicles

1 **NOTE:**

.

Do not remove the sunglasses housing from the overhead console.

Release the overhead console clips to aid correct installation of the overhead console to the headlining.

2 . Connect the electrical connector.

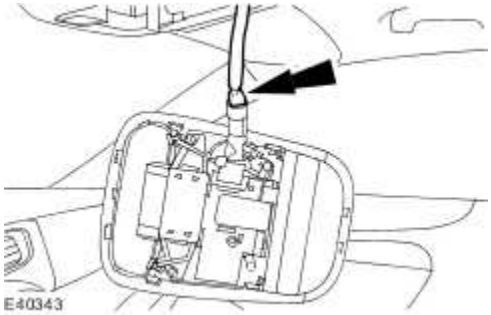

www.JagDocs.com

3 . **NOTE:**

Make sure the headlining is correctly located in to the overhead console.

NOTE:

Make sure the overhead console clips engage in the sunglasses housing.

Install the overhead console.

Vehicles without roof opening panel

4 . Fit the retaining screw.

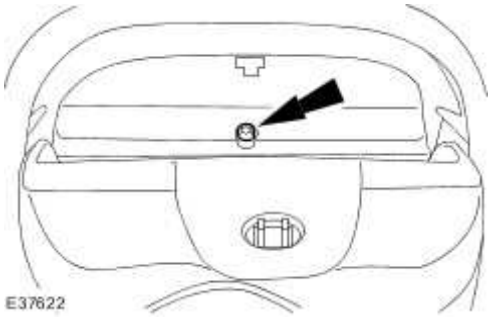

Specifications

Torque Specifications

Description	Nm	lb-ft	lb-in
Front door lock actuator retaining screws	7	—	62
Rear door lock actuator retaining screws	7	—	62
Exterior door handle mechanism retaining screws	7	—	62
Exterior door handle retaining screws	7	—	62
Luggage compartment lid latch actuator retaining screws	15	11	—
Luggage compartment lid lock cylinder retaining bolt	7	—	62
Front door lower security shield retaining screws	7	—	62
Front door upper security shield retaining screw	7	—	62
Front door lock cylinder retaining screw	7	—	62

www.JagDocs.com

Remote Transmitter Programming

NOTE:

All remote transmitters are programmable and must be set at the same time.

NOTE:

If an attempt is made to program a sixth remote transmitter after five remote transmitters have already been programmed, the sixth attempt will over write the first remote transmitter programmed.

NOTE:

If two audible chimes are heard at any stage of the programming sequence an error has occurred and the process must be repeated.

1. Open the driver door.

2. Pull the multifunction switch to the headlamp main beam flash position and hold.

3. Insert the ignition key to the ignition lock cylinder and turn to the ACCESSORY position.

4. **NOTE:**

   On completion of this step an audible chime will be heard and the alarm Light Emitting Diode (LED) will flash once.

Operate the multifunction switch to flash the headlamp main beam five times.

5. **NOTE:**

   On completion of this step an audible chime will be heard and the alarm LED will flash once.

NOTE:

If more than one remote transmitter is to be programmed, operate the additional remote transmitter(s) button once the first remote transmitter has been acknowledged by the audible chime and alarm LED flash.

Operate any of the remote transmitter buttons.

6. **NOTE:**

   On completion of this step an audible chime will be heard and the alarm LED will flash once.

Remove the ignition key.

7. Close the driver door and check operation of the remote transmitter(s).

www.JagDocs.com

Handles, Locks, Latches and Entry Systems

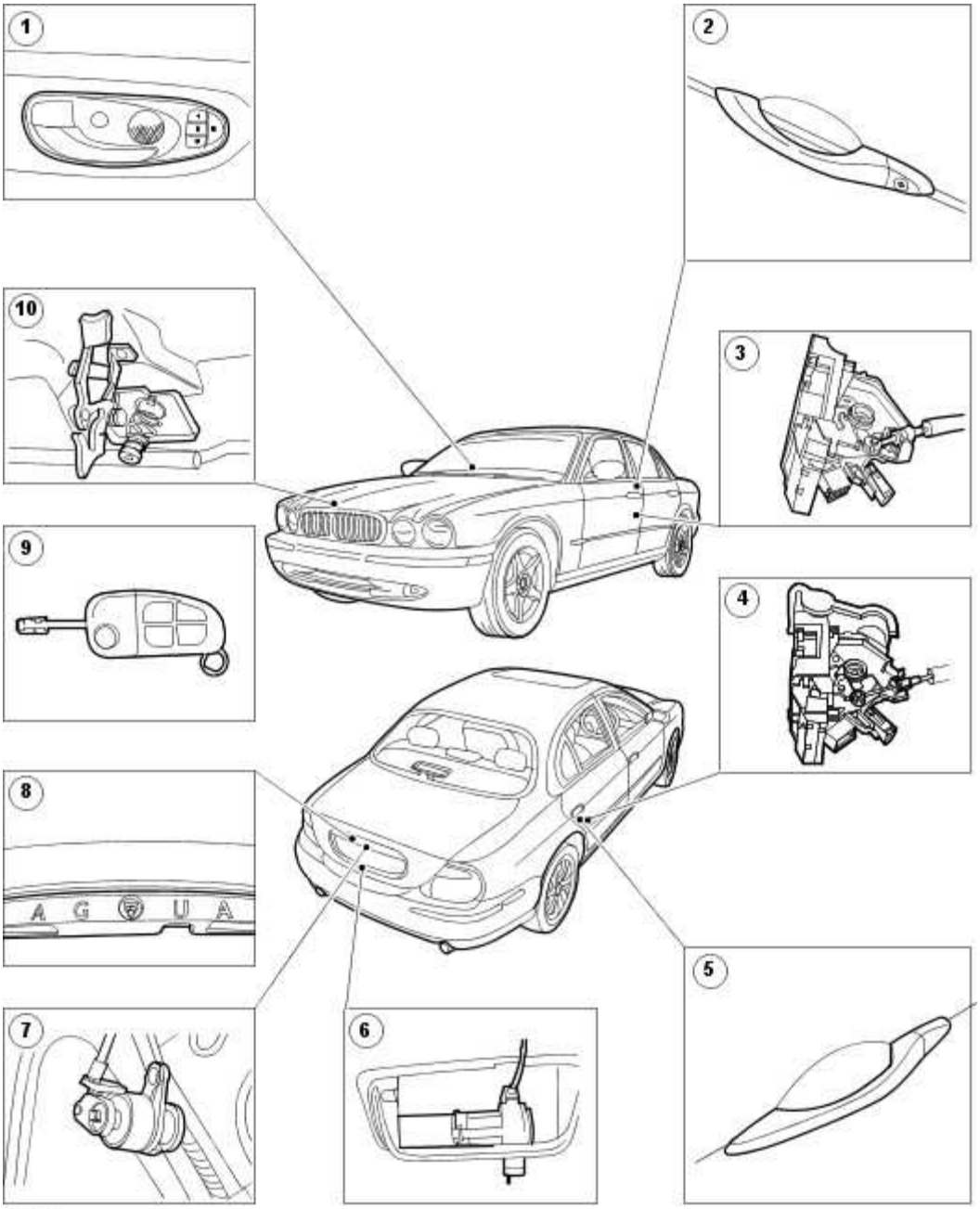

E38844

Item	Part Number	Description
1	—	Interior door handle
2	—	Exterior front door handle

3	—	Front door lock actuator
4	—	Rear door lock actuator
5	—	Exterior rear door handle
6	—	Luggage compartment lid latch actuator
7	—	Luggage compartment lid lock cylinder
8	—	Luggage compartment release switch
9	—	Integrated key remote entry transmitter
10	—	Hood latch release handle

For most markets excluding North America and Japan, the remote central locking system incorporates a double locking facility for optimum security. All locks use the Tibbe key system, using 6 elements and 4 cuts. The keys include 'in-key' transponders which are programmed to the vehicle engine immobilization system by using the Jaguar approved diagnostic system.

The central locking system employs single key access to the driver door, luggage compartment and ignition switch/steering column lock with the exception of the valet key which gives no access to the luggage compartment.

When the vehicle is not locked, each door catch can be externally released by the corresponding exterior door handle which is operated by a single rod. When unlocked, or central locked, the door latches can also be released by the interior handles, each of which are operated by a single cable. Operation of the front door interior handles will also unlock the rear doors. Use of the key in the driver door lock cylinder operates the lock by a short rod to provide locking of the door latch. This in turn locks all other doors and the luggage compartment through the central locking system. These locking functions can also be achieved by use of the remote transmitter.

NOTE:

To unlock the rear doors on a North American specification vehicle from within the vehicle the locking lever has to be moved to the unlocked position first and then the opening lever pulled to open the door.

All markets (except Japan), have a 'drive-away door locking' feature incorporated into the central locking system, the system is installed during manufacturing and disabled or reinstated with the Jaguar approved diagnostic system. The 'drive-away door locking' operates when the ignition is in the 'on' position and all the doors are closed, all the doors will lock when the gear selector lever is moved from the park (P) or neutral (N) position. The gear selector lever has to be moved out of the P or N position and to a different gear position for more than one second to trigger the system.

If the vehicle is stopped and a door is opened and closed, the doors will lock again when the gear selector lever is moved from the P or N position to a different gear position for more than one second. If the vehicle is stopped and a door is opened and closed, but the gear selector lever is not moved the the P or N position, the doors will remain unlocked.

www.JagDocs.com

Key operation

To central lock or unlock the vehicle, the key is inserted in the driver door lock cylinder, turned clockwise or counter clockwise respectively, and released. Holding the key in the lock position for 1.5 seconds will close all windows. Releasing the key stops all operations. Central locking of the vehicle locks all the doors, the luggage compartment, and sets the alarm system. In addition to all of the above functions, double locking prevents the doors opening from the interior. To 'double lock' the vehicle, the key is inserted in the driver door lock cylinder and turned to the unlock position, then within three seconds, turned to the lock position and released. The same procedure is required to unlock a 'double locked' vehicle as with a central locked vehicle. The key is inserted in the driver door lock cylinder and turned to the unlock position. This function can also be activated using the remote transmitter.

If an attempt is made to lock the doors through either the driver or front passenger door interior handle, when a door is ajar, all doors will lock temporarily and then centrally unlock.

The fuel filler flap switch is used to allow the driver to release the fuel filler flap from inside the vehicle. This function can be used at all times providing the vehicle is not locked by the remote transmitter or the drivers door lock cylinder.

Keyless Entry

The Integrated key remote transmitter operates the following functions:

- unlocking the driver door (market dependent)
- unlocking/locking all doors (market dependent)
- releasing the luggage compartment lid.
- activate/deactivate the double locking (market dependent)
- arms/disarms the anti-theft alarm system, interior scanning system and the inclination sensor (if equipped)
- activates global closing (market dependent)
- deactivates a triggered alarm (market dependent)

Inputs and Outputs

Rear Electronics Module (REM)

The REM controls all locking functions for the passenger doors and controls the luggage compartment release operation. The REM also has the sense inputs from the front electronic module (FEM), driver door module (DDM), and the fuel filler flap actuator.

Driver Door Module (DDM)

The DDM controls all the locking functions for the driver door and stores the configurations for the central locking and global opening systems.

Front Electronics Module (FEM)

The FEM controls the inputs to the system from the:

- valet switch
- interior luggage compartment release
- fuel filler flap switch
- hood latch switch
- glove compartment lid

Transmitter, Keyless Entry Remote

The keyless entry/remote operated lock system is completely independent in function but fully integrated within the DDM (except for Japan and Korea). The remote control system consists of a transmitter and an antenna (radio frequency system).

The remote control transmitter for the radio frequency system will operate without the transmitter being directed at the vehicle. The normal range between the transmitter and the antenna will be up to 10 meters for the USA, Canada and the rest of the world. The normal range between transmitter and antenna will be up to 10 meters for the UK and Europe and five meters for Japan (dependent on the surrounding environment).

Before the remote control system can be used, each transmitter must be initialized to the vehicle. A maximum number of five transmitters can be initialized to any vehicle. All remote transmitters must be initialized at the same time.

The keyless entry/remote operated locks will not operate (lock button only) when the door is ajar, the luggage compartment lid is ajar or if the hood is ajar. All the keyless entry/remote operated functions are inhibited if the ignition key is in the ignition lock.

Locking and Unlocking

The remote transmitter is integrated into the key and contains four buttons (lock, unlock, trunk release, headlamp convenience). To operate the system:

- press the lock button once to activate the central locking system and the alarm system
- press the lock button twice within three seconds to activate the central locking system, double locking system, alarm system and the interior scanning system (if equipped)
- press the unlock button once to deactivate the central or double locking, the alarm system is deactivated and only the driver door is fully unlocked (this is programmable using the Jaguar approved diagnostic system or via the key fob (press and hold the lock and unlock buttons for four seconds)) (market dependent)
- press the unlock button twice within three seconds, will unlock the remaining doors (this is programmable using the Jaguar approved diagnostic system) (market dependent)
- press the luggage compartment release button once releases the luggage compartment lid. The vehicles gear selector lever must be in the park position
- press the headlamp convenience button once to activate the headlamp main beam function, press the headlamp convenience button again to deactivate the headlamp main beam function. This function will automatically deactivate after 25 seconds

www.JagDocs.com

- press the headlamp convenience button three times with in three seconds to activate the panic alarm, to deactivate the panic alarm insert a valid ignition key into the ignition lock and turn to the 'ON' position

Double Locking

Double locking prevents the interior door handles from unlocking the doors.

Double locking is activated by turning the key, using the driver door lock cylinder to the unlock position and then to the lock position within three seconds or by pressing the lock button twice within three seconds on the remote transmitter.

Successful double locking is indicated by the turn signals flashing twice, one short flash followed by a long flash and a chirp (if enabled).

Double locking will be inhibited if the REM or FEM senses the hood, a door or the luggage compartment is ajar or open. The REM/FEM receives its input from the door ajar switches.

If the vehicle battery becomes discharged after the double locking or central locking has been activated, opening the driver door with the key will mechanically deactivate the double locking on the driver door only.

Master Lock Switch

NOTE:

Operating the locks more than 15 times in 20 seconds will cause the central locking to be inhibited for 20 seconds. If the locks are required to be operated in the 20 second waiting period they can be operated individually.

The master lock switch will only operate the central locking if the ignition key is in the 'accessory' or 'on' positions. If any door is open and the master lock switch is pressed to centrally lock the vehicle, no doors will lock. If the hood or luggage compartment lid is open and the master lock switch is pressed to centrally lock the vehicle all doors will lock.

Glove Compartment Lid

The glove compartment lid has no release handle. It is opened automatically when the release switch is operated. The release switch is located in the instrument panel between the glove compartment lid and the floor console.

The glove compartment lid latch is released by a 12 volt electric motor which is operated by the glove compartment lid release switch.

The glove compartment lid cannot be opened when the following occurs:

- the vehicle is being driven using the green valet key and the vehicle is in the valet mode
- the vehicle is centrally or double locked

- the vehicle is locked with the front door lock cylinder, when in the valet mode

The glove compartment lid opening will also be inhibited if:

- the ignition key has been removed from the ignition lock for 40 minutes and the driver door has not been opened or closed
- the ignition key has been removed from the ignition lock for 30 minutes and the drive door has been opened and closed

www.JagDocs.com

Locks, Latches and Entry Systems

Inspection and Verification

1 . Verify the customer concern.

2 . Visually inspect for obvious signs of mechanical or electrical damage.

Visual Inspection Chart

Mechanical	Electrical
• Misaligned door(s), hood or luggage compartment lid • Door latch(es) • Actuating rod(s) • Exterior door handle(s) • Interior door handle(s) • Door lock cylinder • Cable(s) • Luggage compartment lid exterior release switch	• Fuse(s) • Wiring harness • Electrical connector(s) • Door lock actuator(s) • Remote transmitter batteries • Vehicle battery • Remote transmitter • Door lock switch(es) • Front electronic module (FEM)

1 . If an obvious cause for an observed or reported concern is found, correct the cause (if possible) before proceeding to the next step.

2 . If the cause is not visually evident, verify the symptom and refer to the Jaguar Approved Diagnostic System.

Exterior Door Handle (76.58.07)

Removal

1 . Remove the interior front door trim panel. <<501-05>>

2 . Detach the door wiring harness.

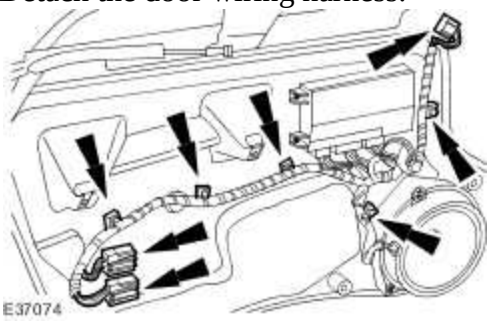

3 . Disconnect the electrical connectors.

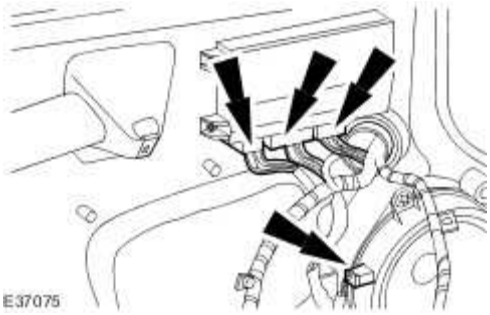

4 . Detach the door wiring harness grommet.

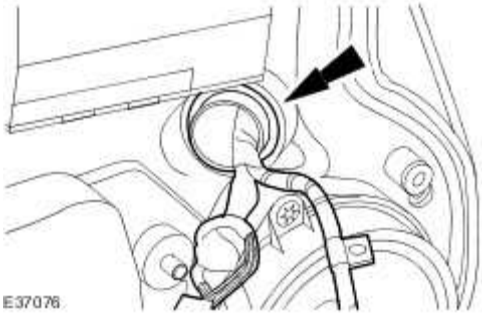

5 . Remove the door inner weathershield.

www.JagDocs.com

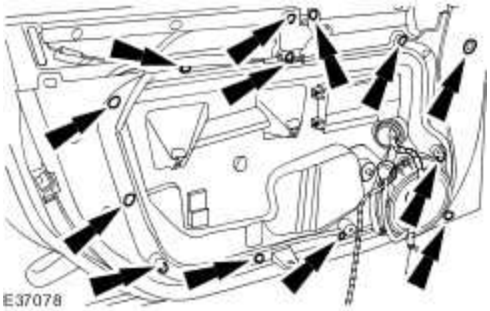

6 . Remove the front door lock bezel.

1) Hold the exterior door handle in the open position.

2) Remove the front door lock bezel.

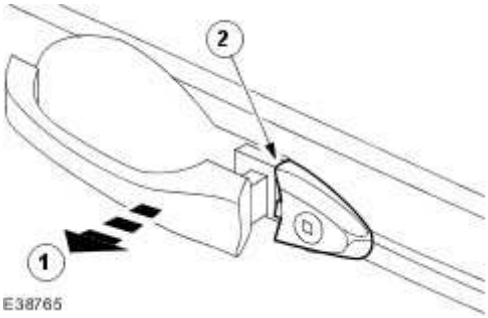

7 . Release and hold the exterior door handle retaining clip.

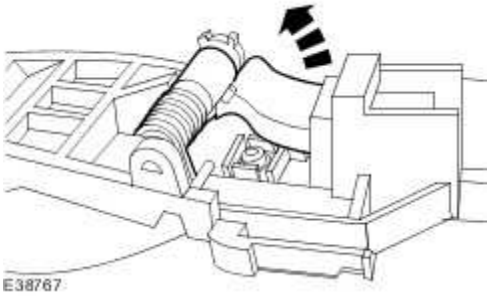

8 . Remove the exterior door handle.

1) Release the exterior door handle.

2) Remove the exterior door handle.

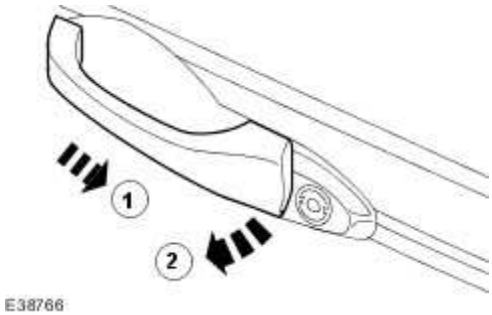

Installation

1 . To install, reverse the removal procedure.

www.JagDocs.com

Front Door Lock Actuator (76.37.74)

Removal

1 . Remove the front door trim panel. <<501-05>>

2 . Detach the door wiring harness.

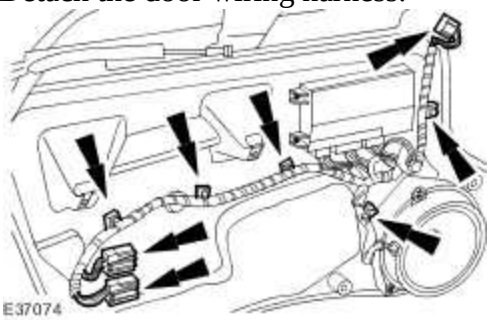

3 . Disconnect the electrical connectors.

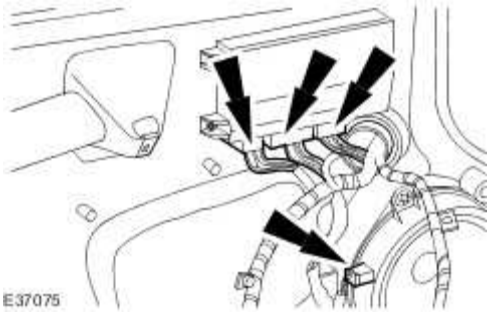

4 . Detach the door wiring harness grommet.

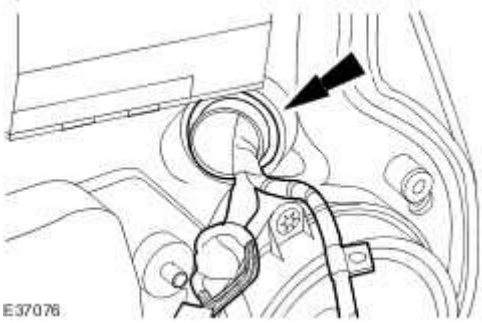

5 . Remove the door inner weathershield.

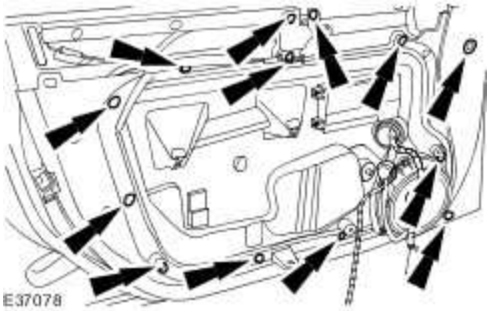

6 . Remove the front door lower security shield.

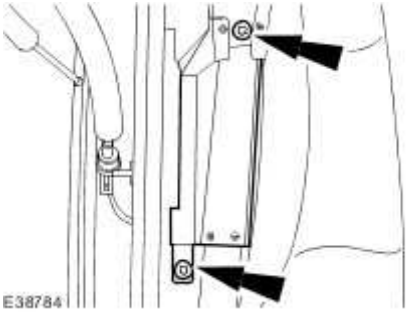

7 . Detach the front door lock cylinder connecting rod from the front door lock actuator.

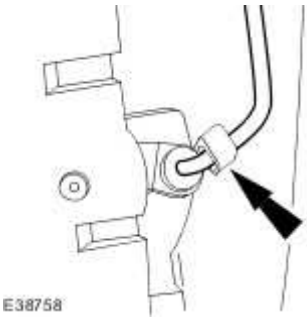

8 . Remove the exterior door handle connecting rod retaining clip.

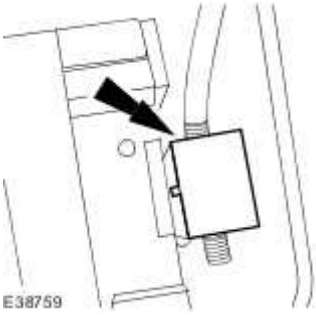

9 . Detach the exterior door handle connecting rod from the front door lock actuator.

www.JagDocs.com

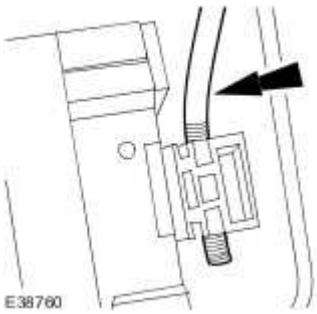

10 . Remove the front door lock actuator retaining screws.

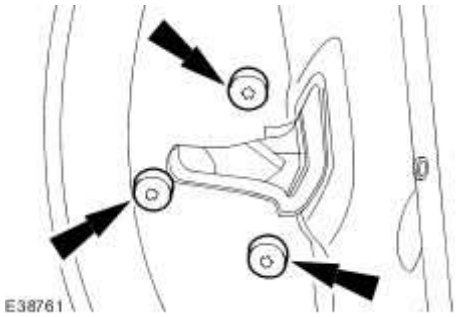

11 . Reposition the front door lock actuator and actuator remote cable assembly.

12 . Remove the front door lock actuator and actuator remote cable assembly.

Disconnect the electrical connectors.

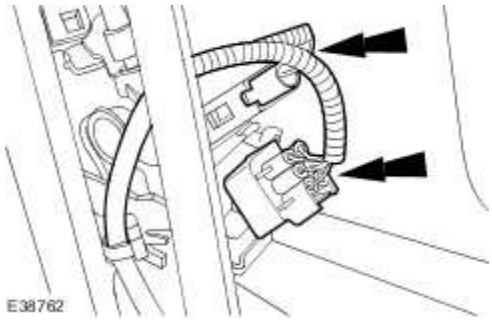

13 . Remove the actuator remote cable from the front door lock actuator.

1) Detach the actuator remote outer cable.

2) Remove the actuator remote cable from the front door lock actuator.

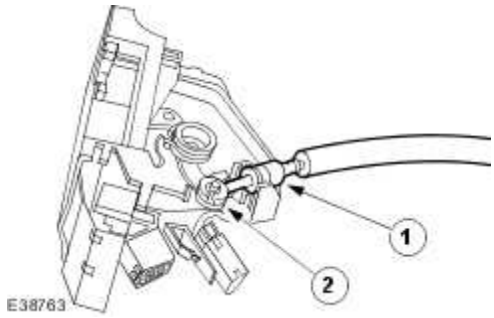

Installation

1 . To install, reverse the removal procedure.

Tighten to 7 Nm.

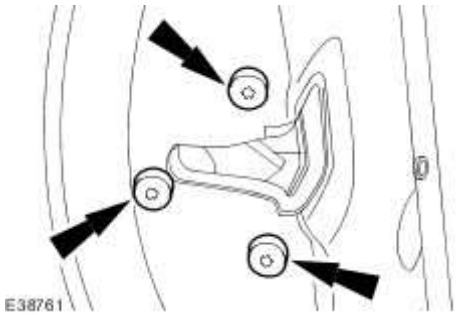

2 . Tighten to 7 Nm.

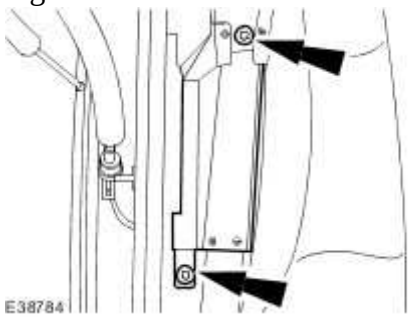

www.JagDocs.com

Front Door Lock Cylinder (76.37.71)

Special Service Tools

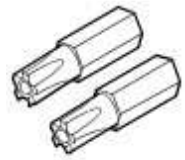

5 point security torx bit
418-535

Removal

1 . Remove the front door exterior door handle.
For additional information, refer to Exterior Door Handle (76.58.07)

2 . Remove the front door lower security shield.

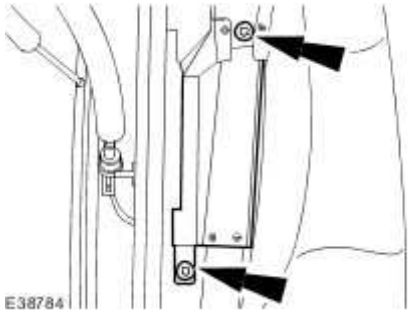

3 . Detach the front door lock cylinder connecting rod from the front door lock actuator.

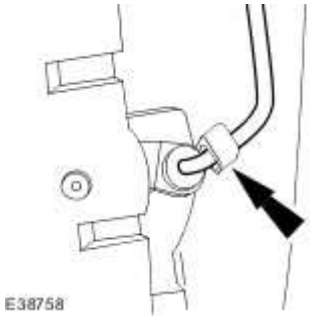

4 . Remove the exterior door handle connecting rod retaining clip.

5 . Detach the exterior door handle connecting rod from the front door lock actuator.

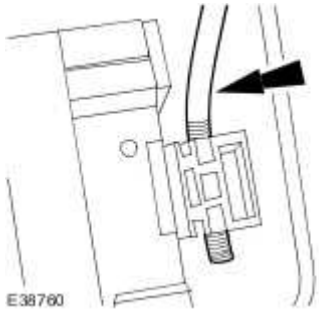

6 . Remove the front door lock cylinder retaining screw.

7 . Remove the exterior door handle gasket.

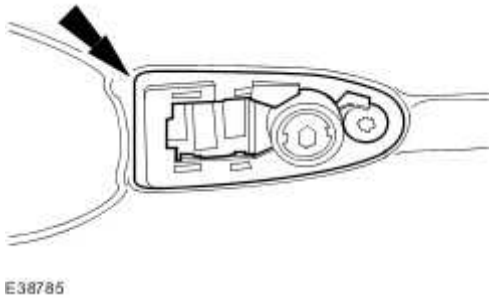

www.JagDocs.com

8 . Using the special tool, remove the exterior door handle mechanism retaining screws.

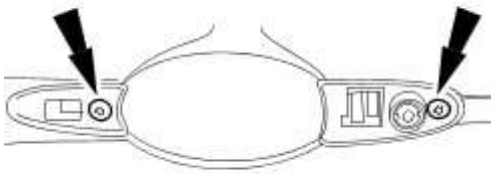

E38786

9 . Remove the exterior door handle mechanism.

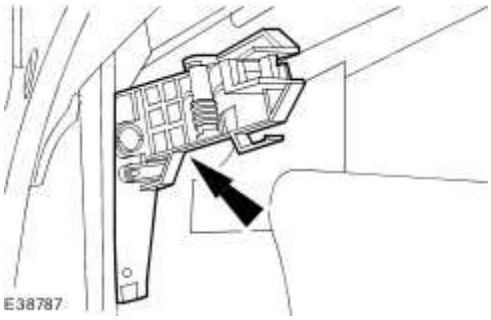

E38787

10 . Remove the front door upper security shield.

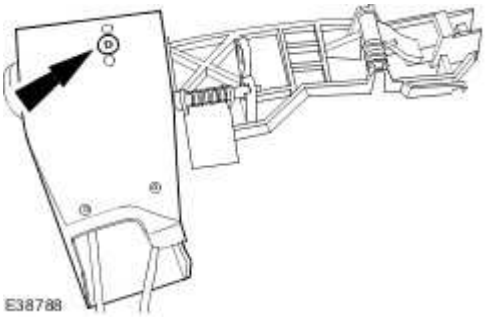

E38788

11 . Remove the front door lock cylinder connecting rod.

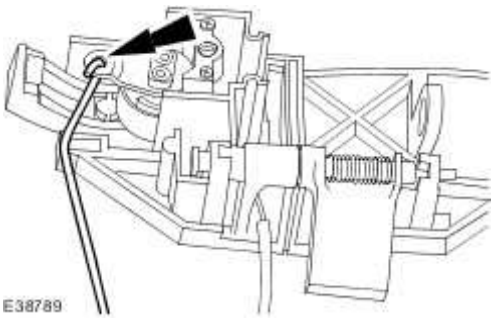

E38789

12 . Remove the front door lock cylinder.

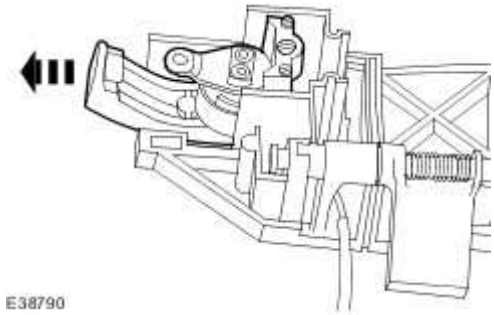

Installation

1 . To install, reverse the removal procedure.

1) Tighten to 7 Nm.

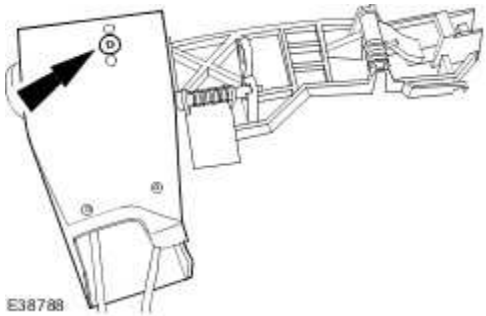

2 . Using the special tool, tighten to 7 Nm.

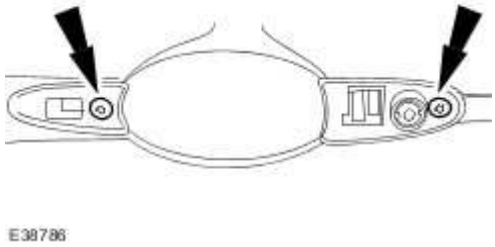

3 . Tighten to 7 Nm.

www.JagDocs.com

4 . Tighten to 7 Nm.

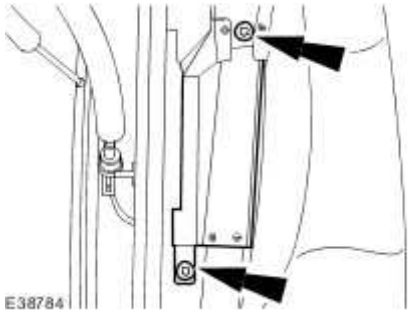

Interior Door Handle (76.37.31)

Removal

1 . Remove the interior front door trim panel. <<501-05>>

2 . Disconnect the electrical connectors.

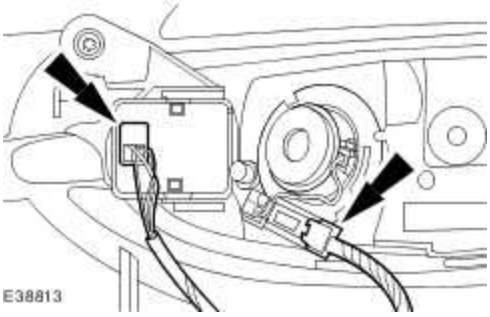

3 . Remove the interior door handle.

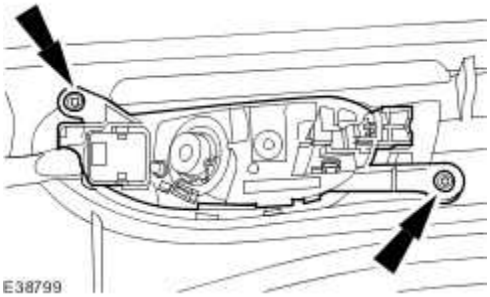

Installation

1 . To install, reverse the removal procedure.

www.JagDocs.com

Luggage Compartment Lid Latch Actuator - VIN Range: G00442->H18679 (76.19.25)

Removal

1 . Release the warning triangle retaining clip.

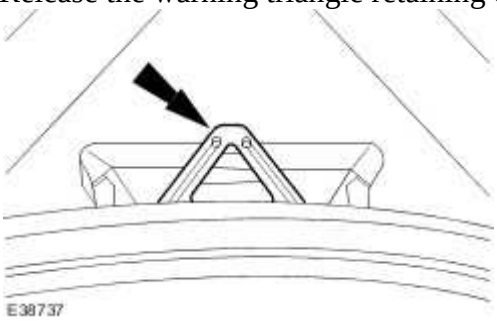

2 . Remove the warning triangle.

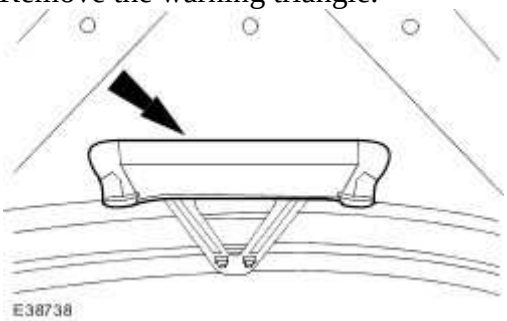

3 . Remove the warning triangle retaining bracket.

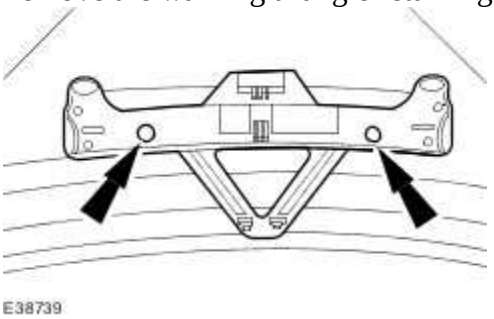

4 . Remove the luggage compartment lid grab handles.

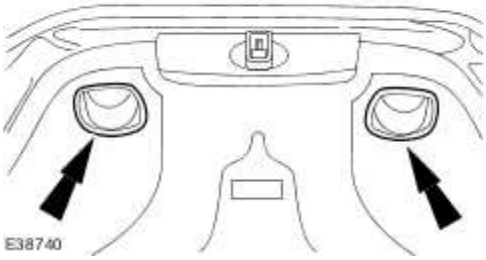

5 . Remove the luggage compartment lid latch trim cover.

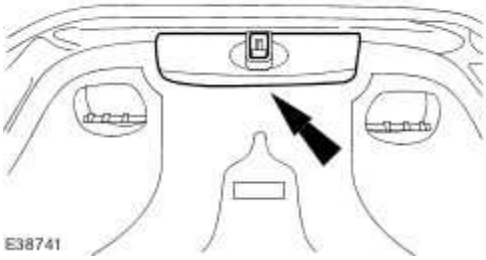

6 . Detach the luggage compartment lid courtesy lamp.

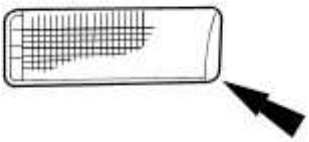

7 Remove the luggage compartment lid courtesy lamp.

· Disconnect the luggage compartment lid courtesy lamp electrical connector.

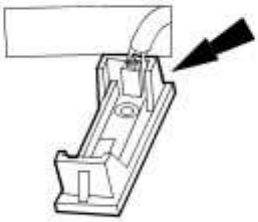

8 . Remove the luggage compartment lid liner.

www.JagDocs.com

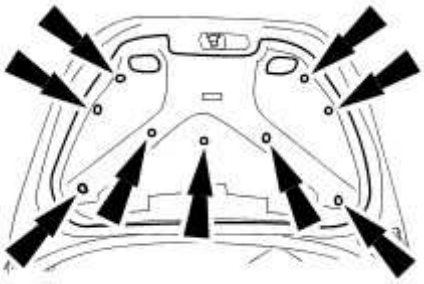

E38744

9 . Detach the luggage compartment lid latch actuator electrical connector.

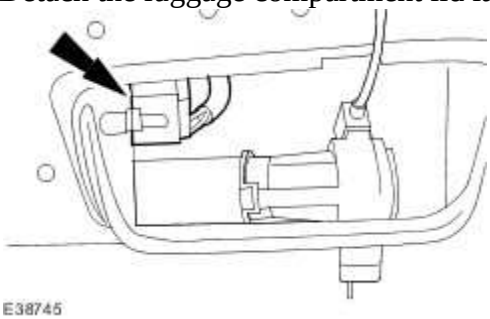

E38745

10 . Disconnect the luggage compartment lid latch actuator electrical connector.

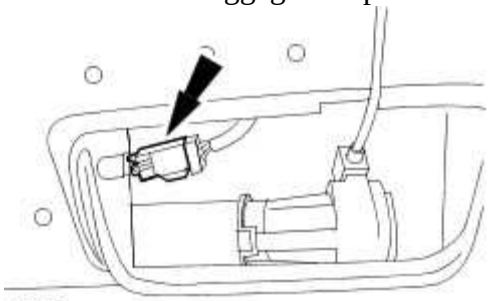

E38746

11 . Remove the luggage compartment lid latch actuator retaining bolts.

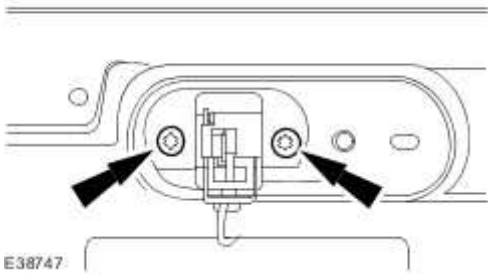

E38747

12 . Detach the luggage compartment lid latch actuator.

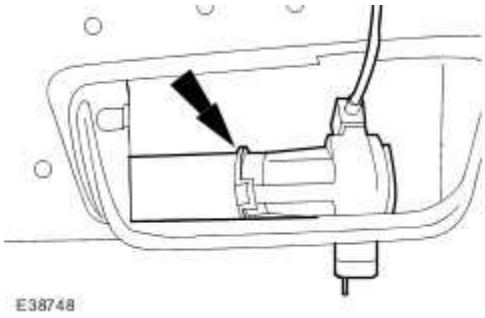

13 . Remove the luggage compartment lid latch actuator.

1) Detach the luggage compartment lid latch actuator release cable.

2) Remove the luggage compartment lid latch actuator release cable.

3) Remove the luggage compartment lid latch actuator.

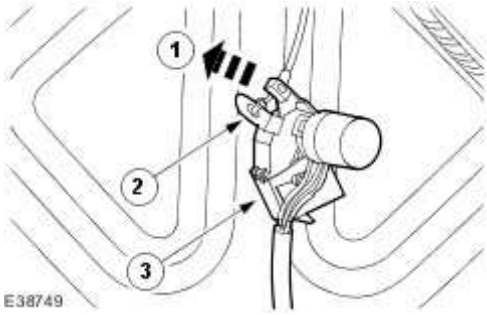

Installation

1 . To install, reverse the removal procedure.

Tighten to 15 Nm.

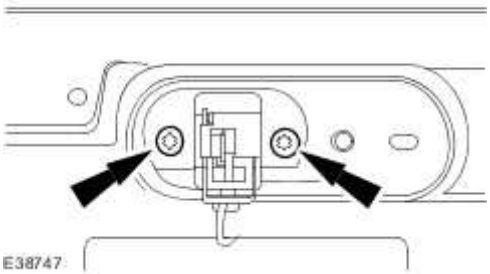

www.JagDocs.com

Luggage Compartment Lid Latch Actuator - VIN Range: H18680->H99999 (76.19.25)

Removal

1 . Release the warning triangle retaining clip.

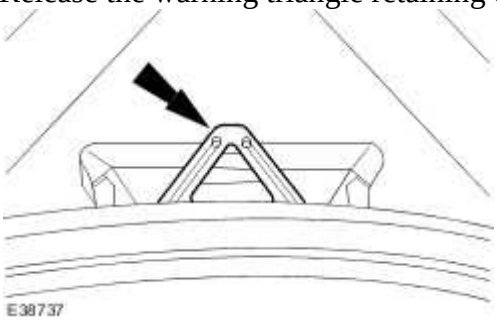

2 . Remove the warning triangle.

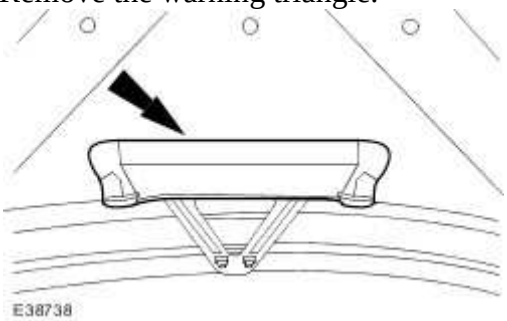

3 . Remove the warning triangle retaining bracket.

- Remove the retaining bolts.

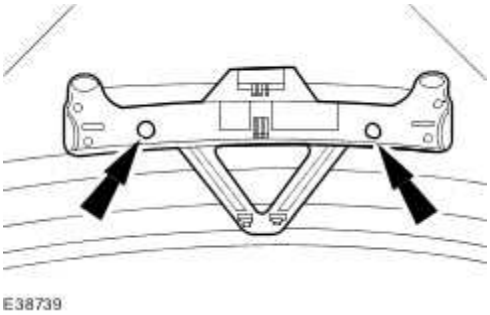

4 . **NOTE:**

Federal market vehicles only.

Detach the luggage compartment emergency release handle.

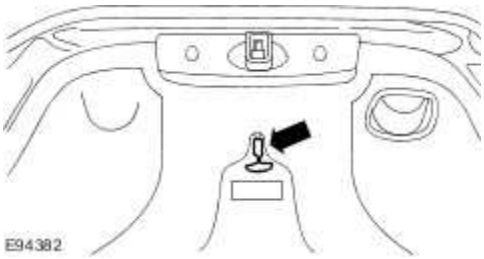

5 . Remove the luggage compartment lid grab handle.

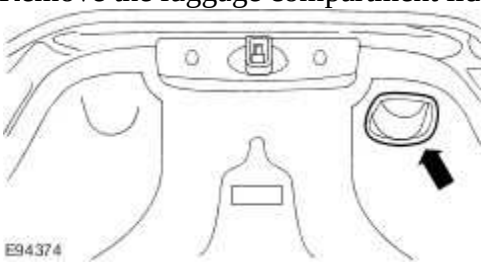

6 . Remove the luggage compartment lid latch trim cover.

- Remove the retaining clips.

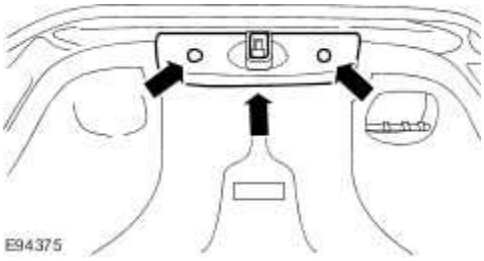

7 . Detach the luggage compartment lid courtesy lamp.

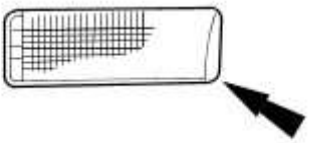

8 . Remove the luggage compartment lid courtesy lamp.

- Disconnect the electrical connector.

www.JagDocs.com

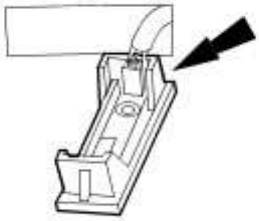

E38743

9 . Remove the luggage compartment lid liner.

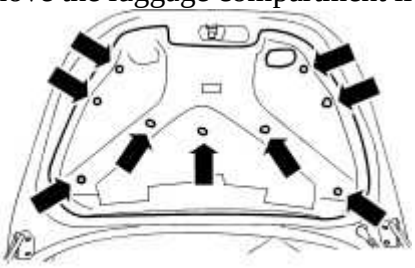

E94376

10 . Detach the luggage compartment lid latch actuator electrical connector.

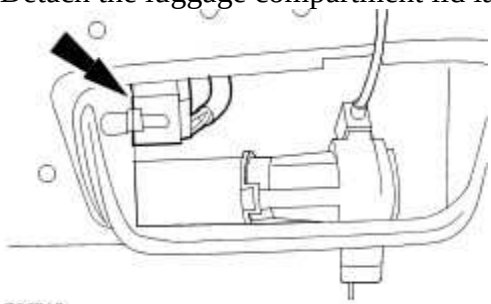

E38745

11 . Disconnect the luggage compartment lid latch actuator electrical connector.

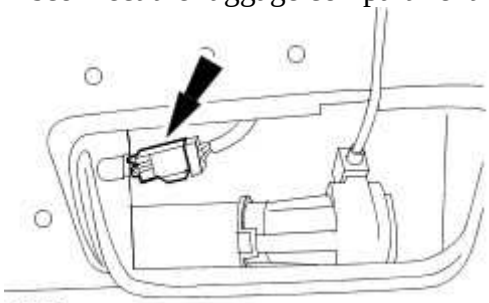

E38746

12 . Remove the luggage compartment lid plastic facia trim.

- Release the retaining clips.

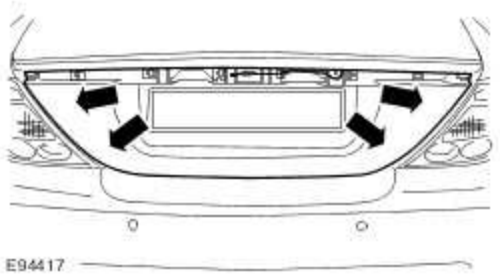

13 . Remove the luggage compartment lid latch actuator.

- Remove the retaining bolts.

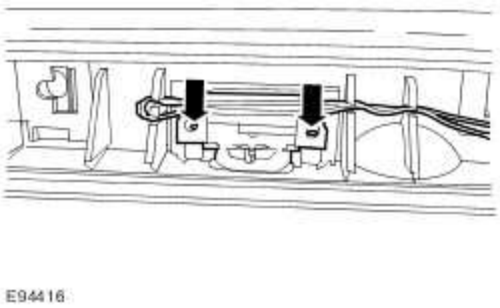

Installation

1 . To install, reverse the removal procedure.

www.JagDocs.com

Luggage Compartment Lid Lock Cylinder - VIN Range: G00442->H18679 (76.19.19)

Removal

1 . Release the warning triangle retaining clip.

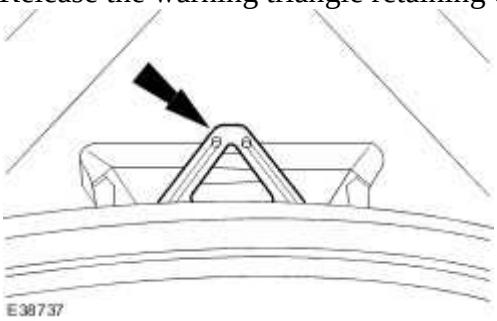

2 . Remove the warning triangle.

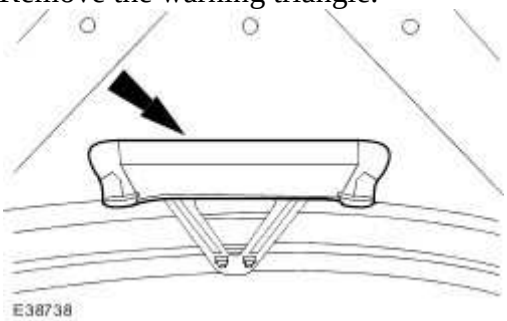

3 . Remove the warning triangle retaining bracket.

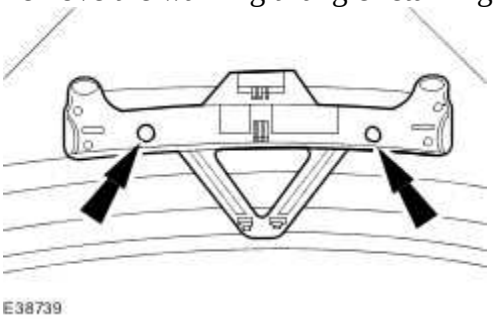

4 . Remove the luggage compartment lid grab handles.

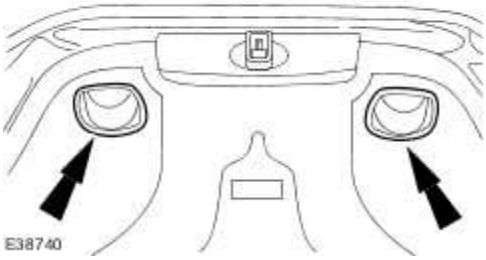

5 . Remove the luggage compartment lid latch trim cover.

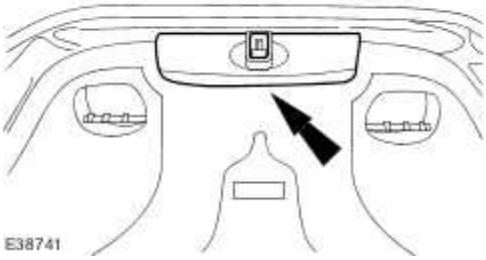

6 . Detach the luggage compartment lid courtesy lamp.

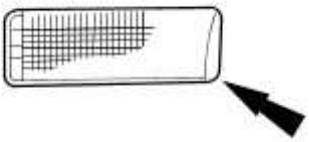

7 Remove the luggage compartment lid courtesy lamp.

· Disconnect the luggage compartment lid courtesy lamp electrical connector.

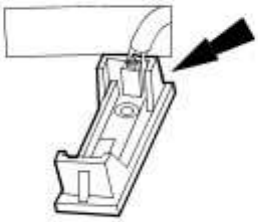

8 . Remove the luggage compartment lid liner.

www.JagDocs.com

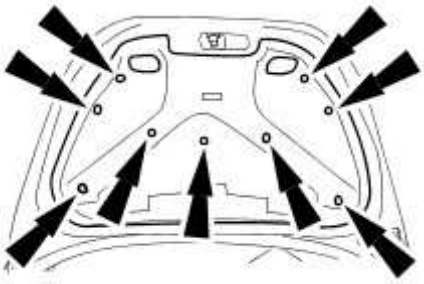

9 . Remove the luggage compartment lid lock cylinder retaining bolt.

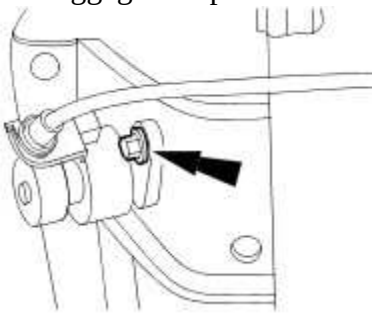

10 . Detach the luggage compartment lid lock cylinder

1) Rotate the luggage compartment lid lock cylinder clockwise.

2) Detach the luggage compartment lid lock cylinder

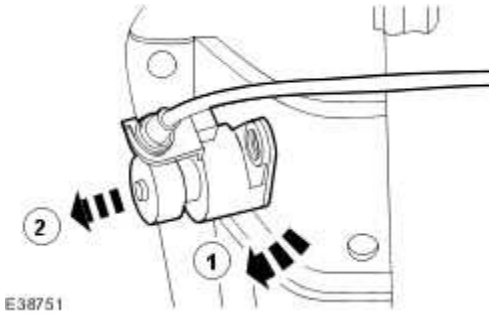

11 . Remove the luggage compartment lid lock cylinder.

1) Detach the luggage compartment lid latch actuator release cable.

2) Remove the luggage compartment lid latch actuator release cable.

3) Remove the luggage compartment lid lock cylinder.

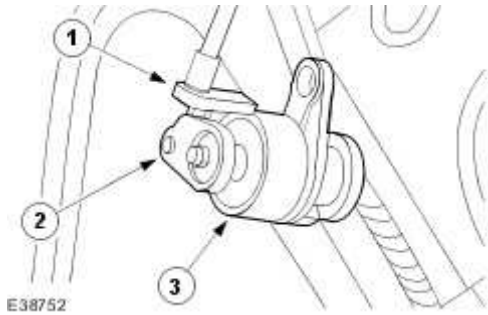

Installation

1 . To install, reverse the removal procedure.

Tighten to 7 Nm.

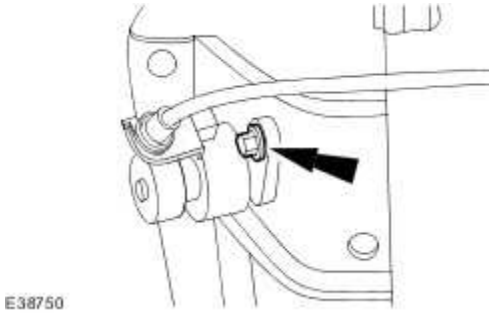

www.JagDocs.com

Luggage Compartment Lid Lock Cylinder - VIN Range: H18680->H99999 (76.19.19)

Removal

1 . Release the warning triangle retaining clip.

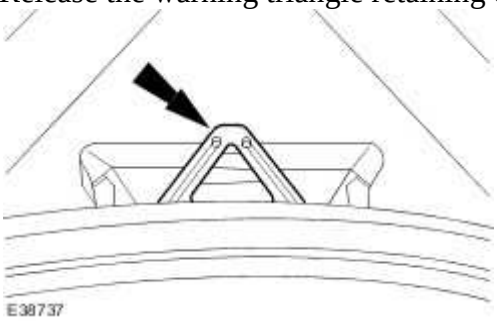

2 . Remove the warning triangle.

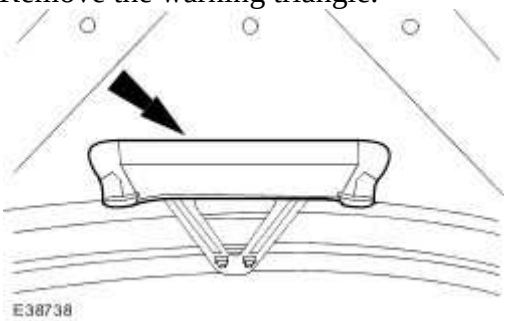

3 . Remove the warning triangle retaining bracket.

- Remove the retaining bolts.

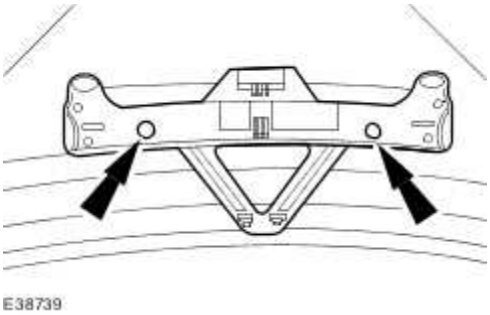

4 . **NOTE:**

Federal market vehicles only.

Detach the luggage compartment emergency release handle.

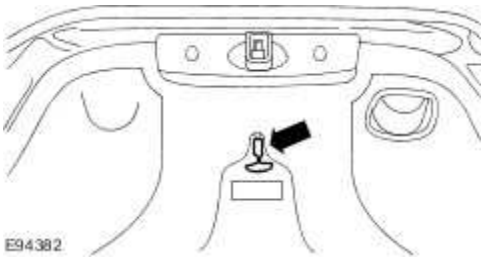

5 . Remove the luggage compartment lid grab handle.

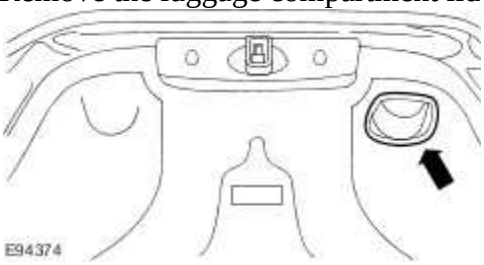

6 . Remove the luggage compartment lid latch trim cover.

- Remove the retaining clips.

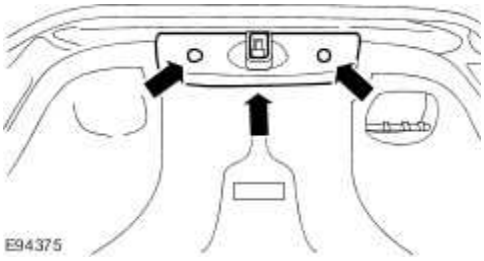

7 . Detach the luggage compartment lid courtesy lamp.

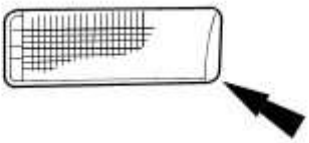

8 . Remove the luggage compartment lid courtesy lamp.

- Disconnect the electrical connector.

www.JagDocs.com

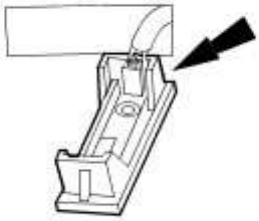

E38743

9 . Remove the luggage compartment lid liner.

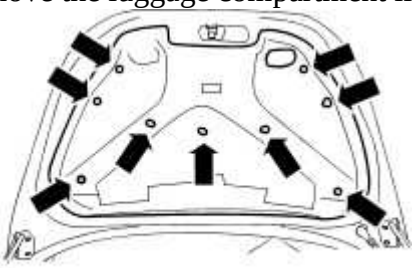

E94376

10 . Remove the luggage compartment lid lock cylinder retaining bolt.

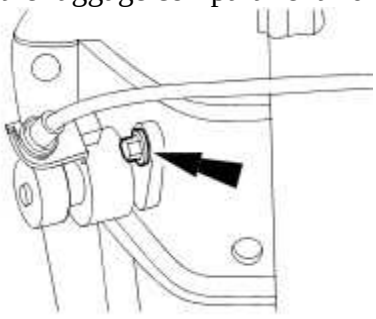

E38750

11 . **NOTE:**

Note the position of the sealing washer.

Detach the luggage compartment lid lock cylinder

1) Rotate the luggage compartment lid lock cylinder clockwise.

2) Detach the luggage compartment lid lock cylinder

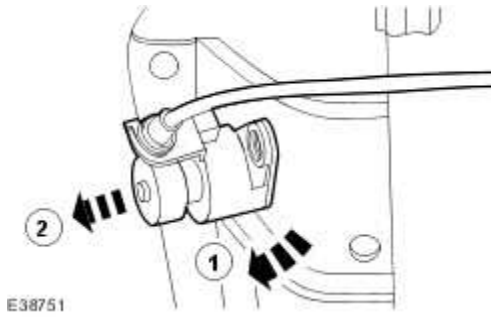

12 . Remove the luggage compartment lid lock cylinder.

1) Detach the luggage compartment lid latch actuator release cable.

2) Remove the luggage compartment lid latch actuator release cable.

3) Remove the luggage compartment lid lock cylinder.

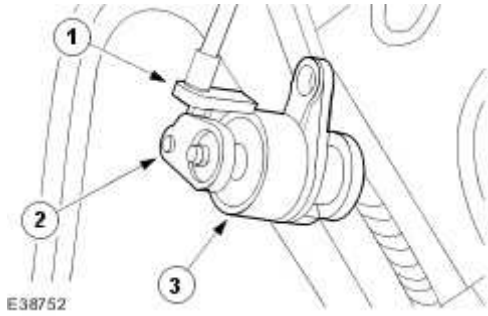

Installation

1 . **NOTE:**

Make sure that the sealing washer is installed correctly.

To install, reverse the removal procedure.

Tighten to 7 Nm.

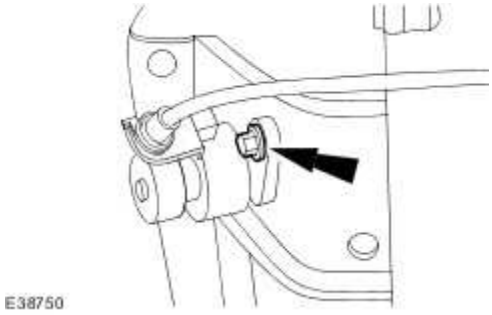

www.JagDocs.com

Rear Door Lock Actuator (76.37.09)

Removal

1 . Remove the rear door trim panel. <<501-05>>

2 . Disconnect the door speaker electrical connector.

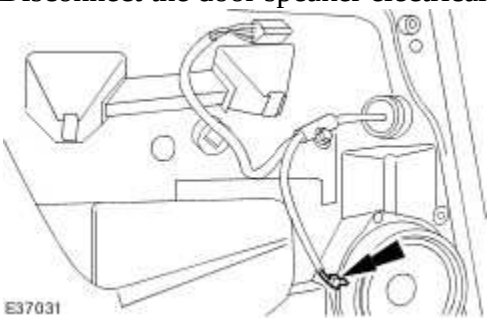

3 . Detach the door wiring harness.

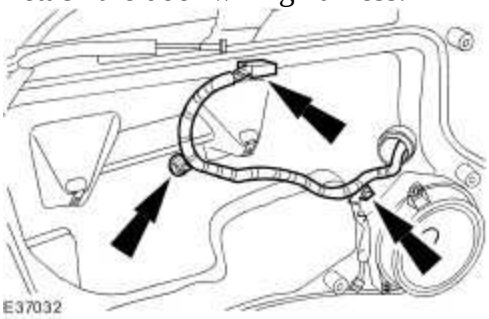

4 . Detach the door wiring harness grommet.

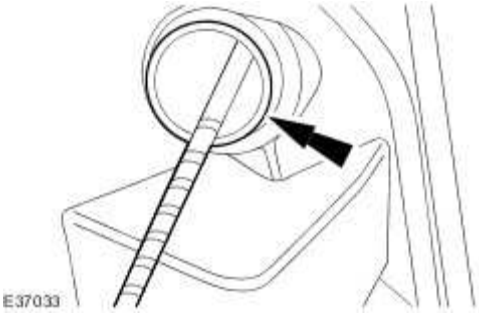

5 . Remove the door inner weathershield.

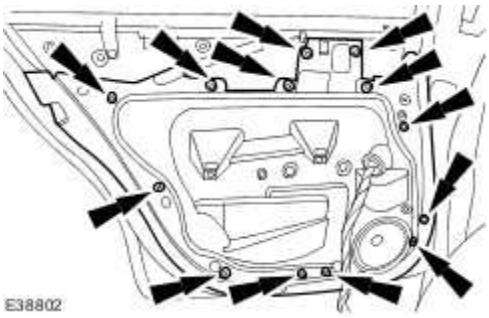

6 . Remove the exterior door handle connecting rod retaining clip.

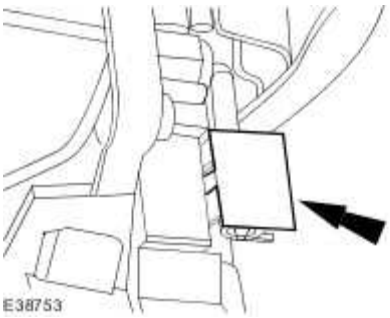

7 . Detach the exterior door handle connecting rod from the front door lock actuator.

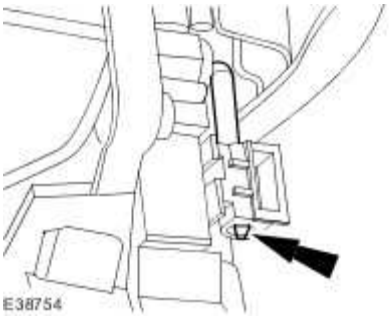

8 . Remove the rear door lock actuator retaining screws.

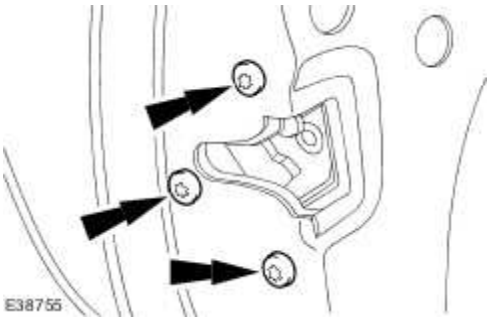

9 . Reposition the rear door lock actuator and actuator remote cable assembly.

10 . Remove the rear door lock actuator and actuator remote cable assembly.

- Disconnect the electrical connectors.

www.JagDocs.com

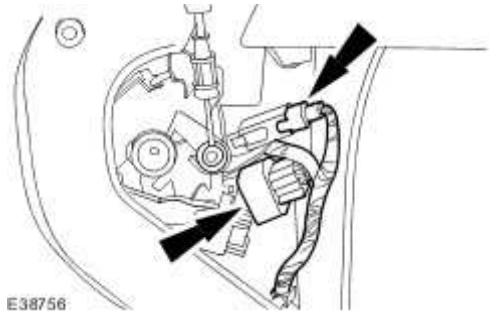

11 . Remove the actuator remote cable from the rear door lock actuator.

1) Detach the actuator remote outer cable.

2) Remove the actuator remote cable from the rear door lock actuator.

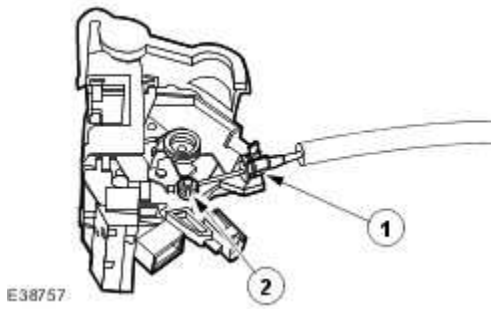

Installation

1 . To install, reverse the removal procedure.

Tighten to 7 Nm.

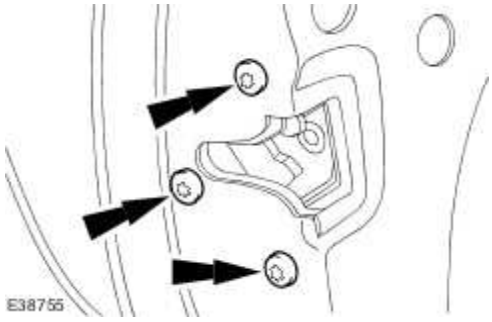

Specifications

Torque Specifications

Description	Nm	lb-ft	lb-in
Mounting arm and pivot shaft retaing bolts	12	9	—
Wiper arm retaining nuts	17	13	—
Wiper motor retaining retaining screws	15	11	—
Wiper motor shaft retaining nut	17	13	—

www.JagDocs.com

Specifications

Torque Specifications

Description	Nm	lb-ft	lb-in
Wiper linkage assembly retaining bolts	12	9	—
Wiper arm retaining nuts	17	13	—
Windshield washer reservoir retaining bolts	9	-	80

Wipers and Washers - VIN Range: G00442->G45703

E36658

Item	Part Number	Description
1	—	Windshield washer pump
2	—	Headlamp washer pump
3	—	Wiper arm / blade assembly
4	—	Rain sensor
5	—	Wiper arm and pivot assembly
6	—	Headlamp washer jet
7	—	Windshield washer reservoir

www.JagDocs.com

The wipers and washers system consists of the following components: wipers and washers, mounting arm and pivot shaft, wiper motor, washer reservoir and washer pump, a headlamp washing system is available as an additional option.

The wipers have two speed control, low and high, and an intermittent wipe mode. The wipers will park automatically irrespective of their position when the OFF position of the ignition or control switch is selected.

Within the wiper and washer system the following features can be attained, adjustable interval intermittent wiping, programmable wash and wipe sequencing, autolamp activation and moisture sensitive wiping. The system and features are centrally controlled by the Front electronic module (FEM).

The intermittent wiping has seven speed settings, 3, 6, 9, 12, 15, 18 seconds and speed dependant. The driver also has the capacity to select these via a switch with seven settings.

The programmed wash and wipe sequence is driver controlled. With a depression of the wash/wipe switch between 40 milliseconds and 1.2 seconds the wash pump will be activated for a duration of 1.2 seconds. When the wash/wipe switch is depressed for longer than 1.2 seconds the wash pump will be activated for the duration of switch depression, a 10 second duration is the maximum available. The wiping system is automatically activated with the depression of the wash switch.

The moisture sensitive wiping will be initiated when the vehicle is running and not in the PARK or NEUTRAL gear selection. The wiper switch must be in the AUTO position.

Wipers and Washers - VIN Range: G45704->G99999

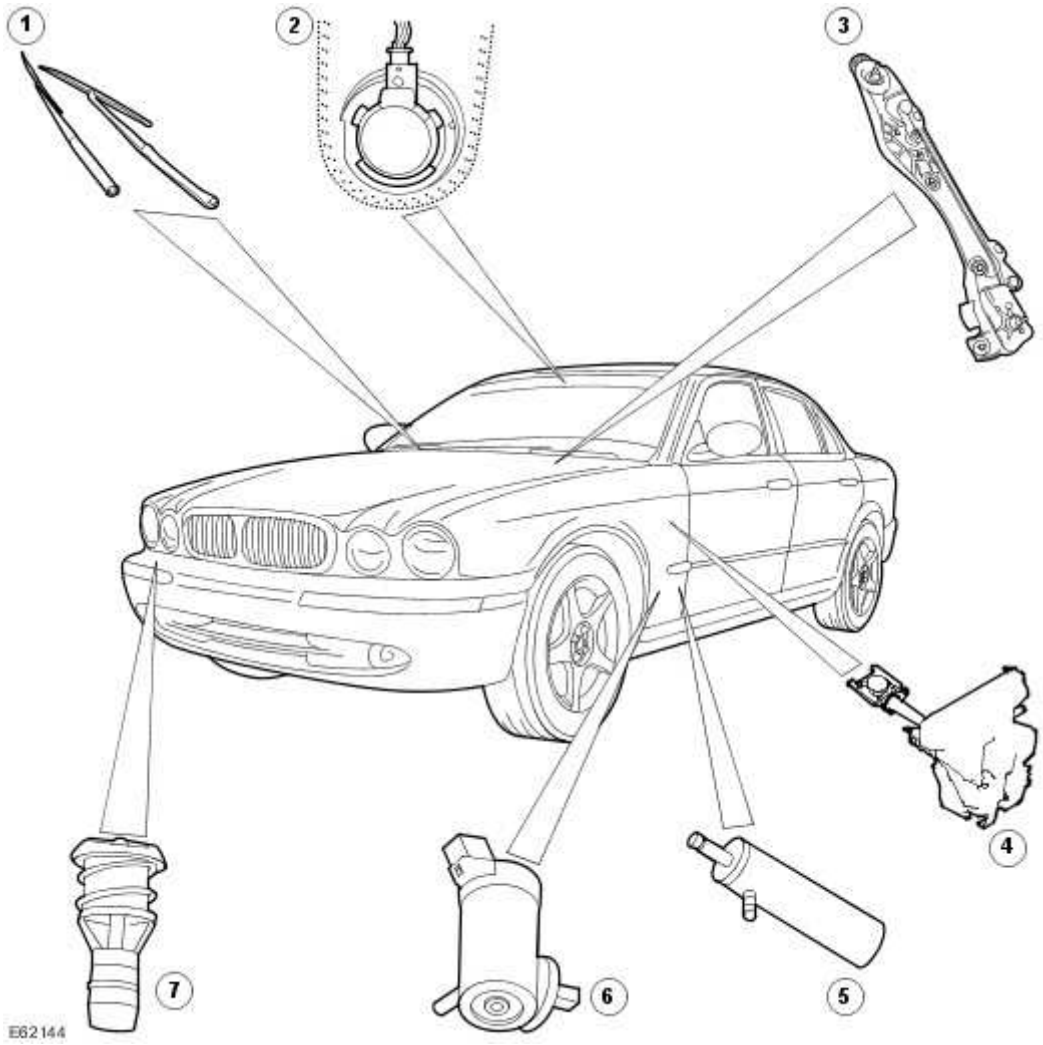

Item	Part Number	Description
1	—	Wiper arm / blade assembly
2	—	Rain sensor
3	—	Wiper linkage assembly
4	—	Windshield washer reservoir
5	—	Headlamp washer pump
6	—	Windshield washer pump
7	—	Headlamp washer jet

The wipers and washers system consists of the following components: wipers and washers, wiper linkage assembly, wiper motor, washer reservoir and washer pump, a headlamp washing system is available as an additional option.

www.JagDocs.com

The wipers have two speed controls, low and high, and an intermittent wipe mode. The wipers will park automatically irrespective of their position when the OFF position of the ignition or control switch is selected.

Within the wiper and washer system the following features can be attained, adjustable interval intermittent wiping, programmable wash and wipe sequencing, autolamp activation and moisture sensitive wiping. The system and features are centrally controlled by the front electronic module (FEM).

The intermittent wiping has seven speed settings, 3, 6, 9, 12, 15, 18 seconds and speed dependant. The driver also has the ability to select these through a switch with seven settings.

The programmed wash and wipe sequence is driver controlled. With a depression of the wash/wipe switch between 40 milliseconds and 1.2 seconds the wash pump will be activated for a duration of 1.2 seconds. When the wash/wipe switch is depressed for longer than 1.2 seconds the wash pump will be activated for the duration of switch depression, a 10 second duration is the maximum available. The wiper system is automatically activated with the depression of the wash switch.

The moisture sensitive wiping will be initiated when the vehicle is running and not in the PARK or NEUTRAL gear selection. The wiper switch must be in the AUTO position.

Wipers and Washers

Inspection and Verification

1 . Verify the customer concern.

2 . Visually inspect for obvious signs of mechanical or electrical damage.

Visual Inspection Chart

Mechanical	Electrical
• Wiper blade(s) • Wiper pivot arm shaft • Washer reservoir • Hose(s) • Washer jet(s)	• Fuse(s) • Wiring harness • Electrical connector(s) • Washer pump(s) • Wiper motor

1 . If an obvious cause for an observed or reported concern is found, correct the cause (if possible) before proceeding to the next step.

2 . If the cause is not visually evident, verify the symptom and refer to the Jaguar Approved Diagnostic System.

www.JagDocs.com

Headlamp Washer Jet (84.20.08)

Removal

1 . Remove the radiator grille assembly. <<501-08>>

2 . Remove the front bumper cover. <<501-19>>

3 . Disconnect the headlamp washer jet supply hose.

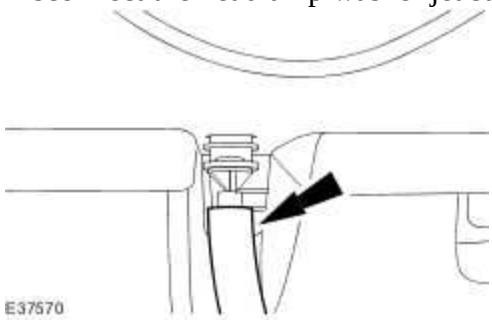

4 . Remove the headlamp washer jet.

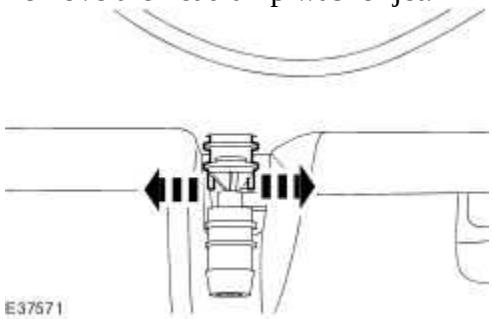

Installation

1 . To install, reverse the removal procedure.

Headlamp Washer Pump - VIN Range: G00442->G45703 (84.20.21)

Removal

1 . Remove the radiator splash shield. <<501-02>>

2 . Remove the right-hand front wheel and tire. <<204-04>>

3 . Remove the right-hand front fender splash shield. <<501-02>>

4 . Disconnect the headlamp washer pump supply hose.

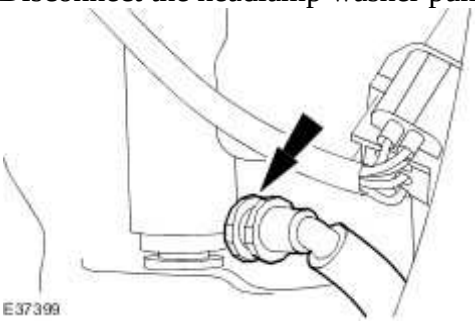

5 . Disconnect the headlamp washer pump electrical connector.

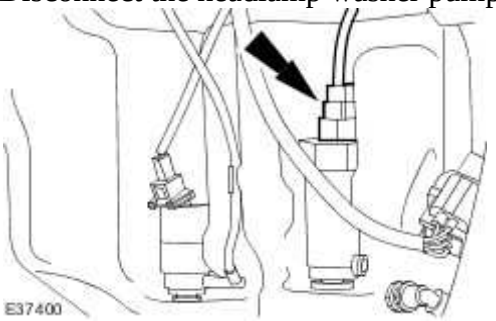

6 . Remove the headlamp washer pump.

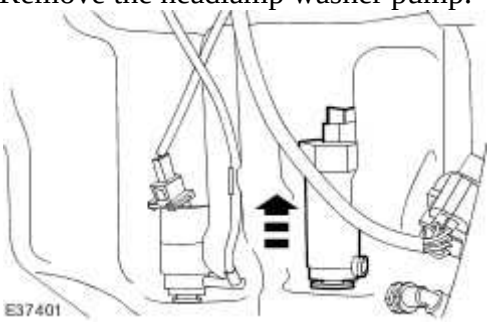

www.JagDocs.com

Installation

1 . To install, reverse the removal procedure.

Headlamp Washer Pump - VIN Range: G45704->G99999 (84.20.21)

Removal

1 . Remove the cowl vent screen access panel.

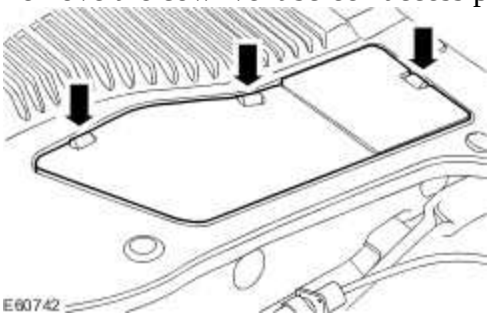

2 . Remove the windshield washer reservoir upper filler neck.

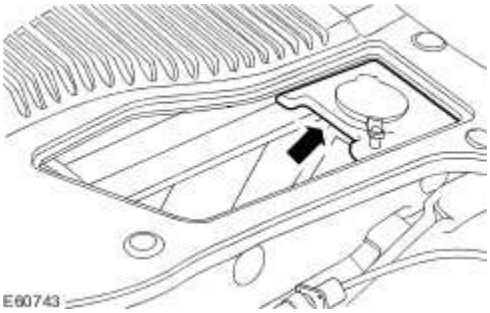

3 . Remove the windshield washer reservoir lower filler neck.

- Remove the retaining scrivet.

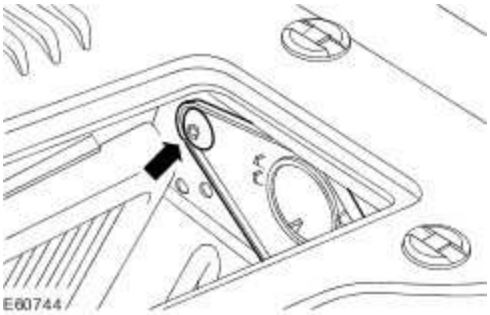

4 . Remove the left-hand front wheel and tire.
For additional information, refer to Wheel and Tire (74.20.05)

5 . Remove the left-hand front fender splash shield.
For additional information, refer to Fender Splash Shield (76.10.90)

www.JagDocs.com

6 . Disconnect the windshield washer reservoir electrical connector.

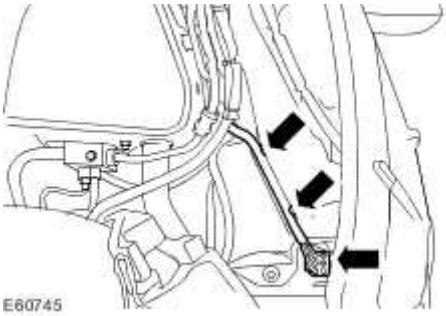

7 . Detach the air suspension hose.

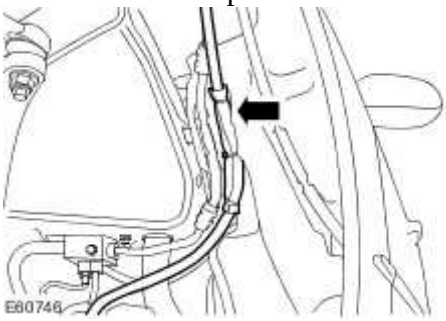

8 . Detach the air conditioning (A/C) refridgerent line.

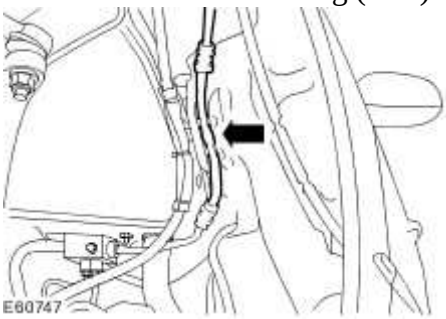

9 . Detach the headlamp washer pump supply hose.

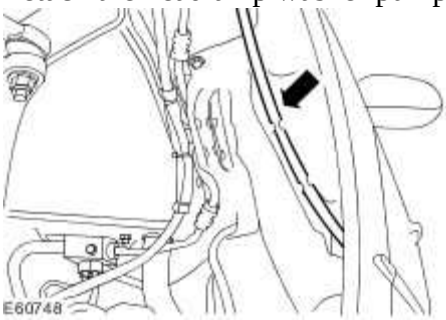

10 . Remove the windshield washer reservoir retaining bolts.

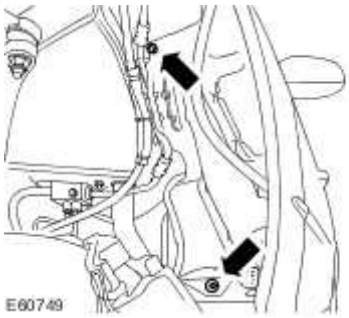

11 . Disconnect the headlamp washer pump outlet hose.

12 . Remove the headlamp washer pump.

1) Disconnect the headlamp washer pump electrical connector.

2) Remove the headlamp washer pump.

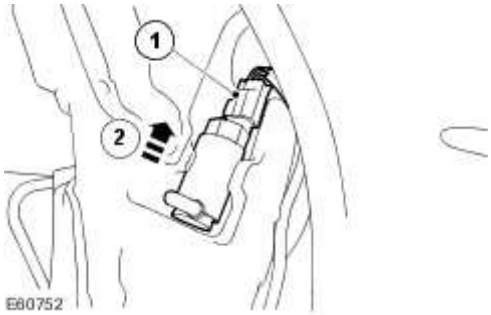

Installation

1 . To install, reverse the removal procedure.

Tighten to 9 Nm.

www.JagDocs.com

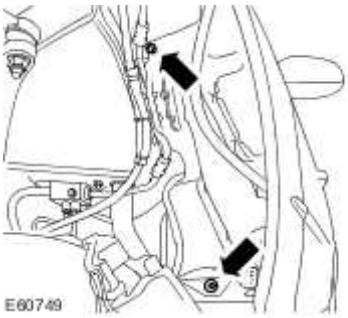
E60749

Rain Sensor (84.12.10)

Removal

1 . Remove the interior rear view mirror. <<501-09>>

2 . Remove the rain sensor.

1) Disconnect the rain sensor electrical connector.

2) Remove the rain sensor.

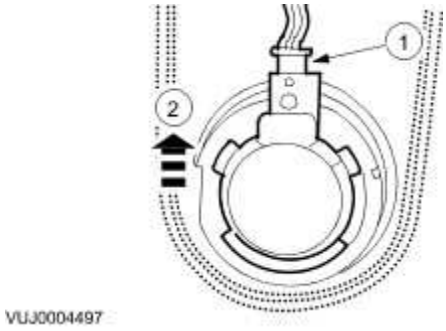

Installation

1 . To install, reverse the removal procedure.

www.JagDocs.com

Windshield Washer Pump - VIN Range: G00442->G45703 (84.10.21)

Removal

1 . Remove the right-hand front wheel and tire. <<204-04>>

2 . Remove the right-hand front fender splash shield. <<501-02>>

3 . Disconnect the windshield washer pump electrical connector.

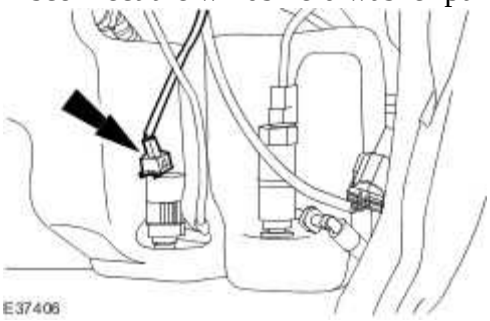

4 . Disconnect the windshield washer pump supply hose.

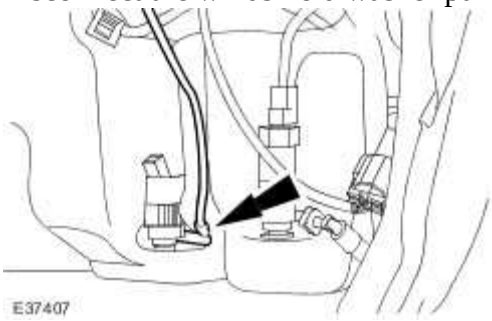

5 . Remove the windshield washer pump.

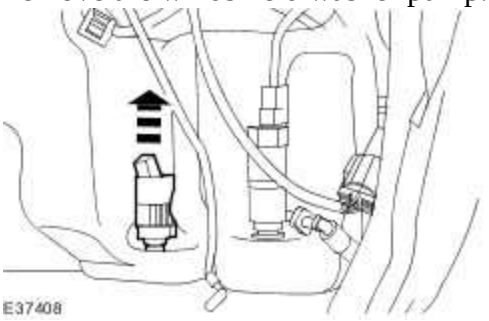

Installation

1 . To install, reverse the removal procedure.

Windshield Washer Pump - VIN Range: G45704->G99999 (84.10.21)

Removal

All vehicles

1 . Remove the cowl vent screen access panel.

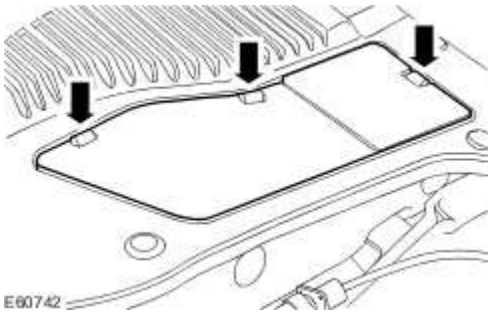

2 . Remove the windshield washer reservoir upper filler neck.

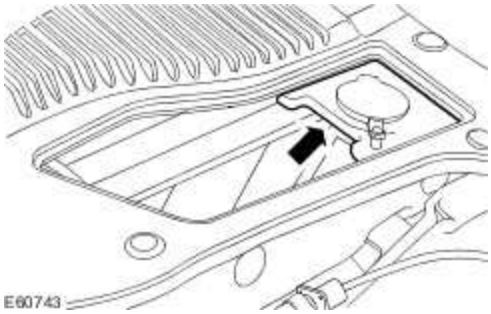

3 . Remove the windshield washer reservoir lower filler neck.

- Remove the retaining scrivet.

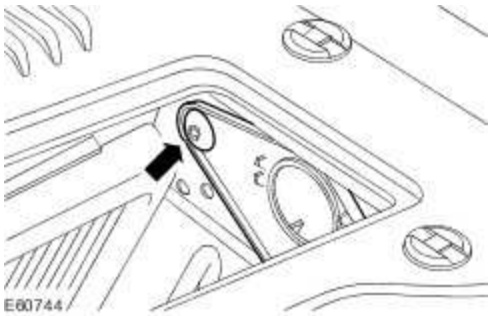

www.JagDocs.com

4 . Remove the left-hand front wheel and tire.
For additional information, refer to Wheel and Tire (74.20.05)

5 . Remove the left-hand front fender splash shield.
For additional information, refer to Fender Splash Shield (76.10.90)

6 . Disconnect the windshield washer reservoir electrical connector.

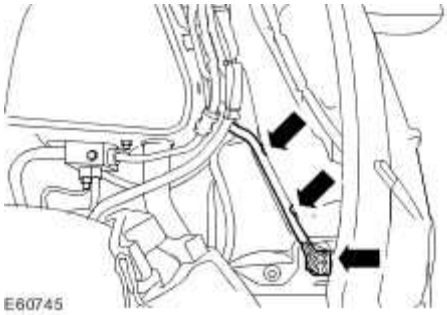

7 . Detach the air suspension hose.

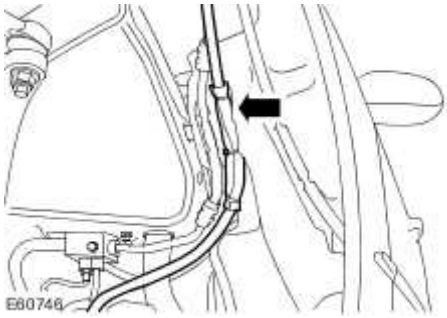

8 . Detach the air conditioning (A/C) refridgerent line.

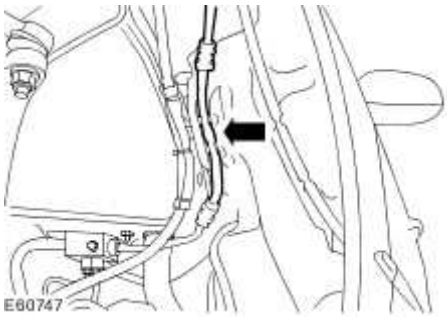

Vehicles with headlamp washers

9 . Detach the headlamp washer pump supply hose.

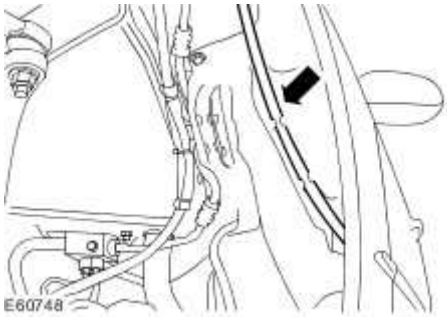

All vehicles

10 . Remove the windshield washer reservoir retaining bolts.

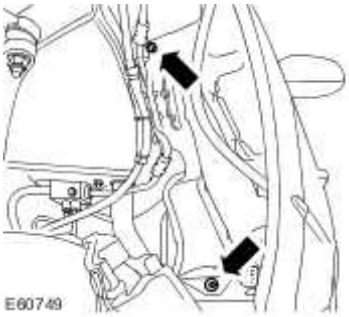

11 . Disconnect the windshield washer pump outlet hose.

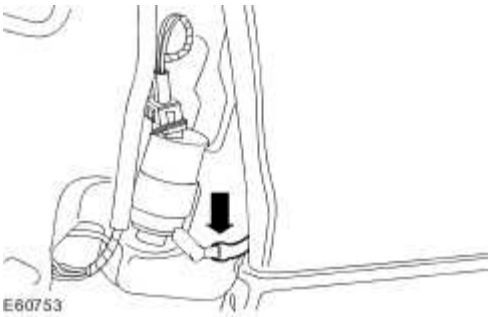

12 . Remove the windshield washer pump.

1) Disconnect the windscreen washer pump electrical connector.

2) Remove the windshield washer pump.

www.JagDocs.com

Installation

1 . To install, reverse the removal procedure.

Tighten to 9 Nm.

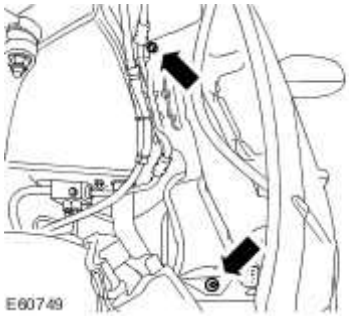

Windshield Washer Reservoir - VIN Range: G00442->G45703 (84.10.01)

Removal

1 . Remove the radiator splash shield. <<501-02>>

2 . Remove the right-hand front wheel and tire. <<204-04>>

3 . Remove the right-hand front fender splash shield. <<501-02>>

4 . Detach the washer fluid level warning indicator electrical connector.

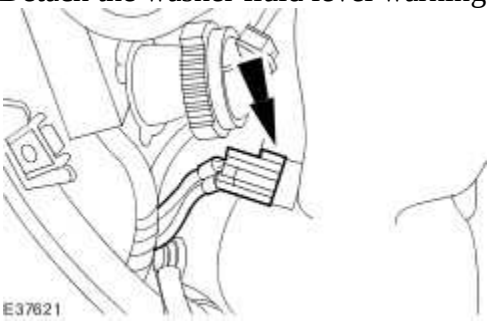

5 . Disconnect the windshield washer pump electrical connector.

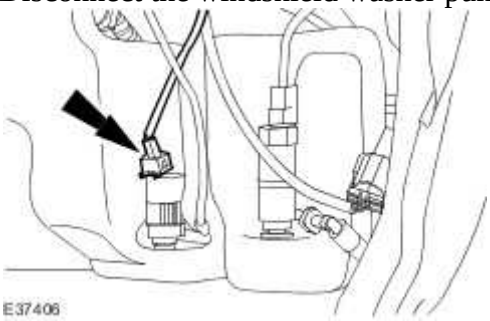

6 . Disconnect the windshield washer pump supply hose.

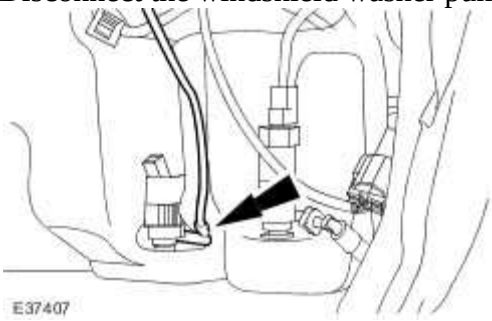

www.JagDocs.com

7 . Disconnect the headlamp washer pump supply hose.

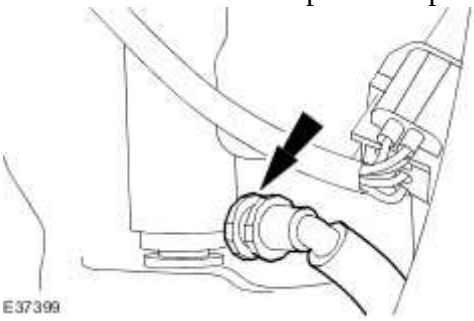

8 . Disconnect the headlamp washer pump electrical connector.

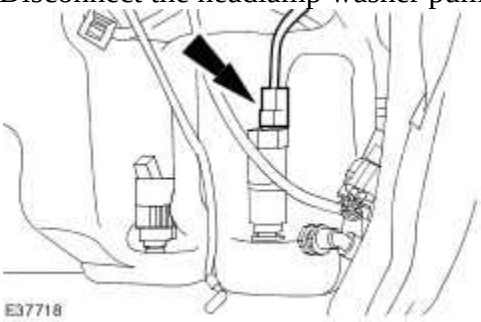

9 . Detach the fog lamp cover.

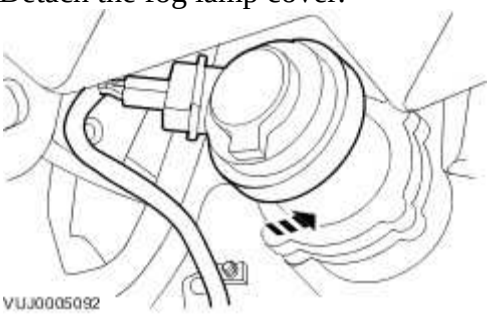

10 . Detach the wiring harness.

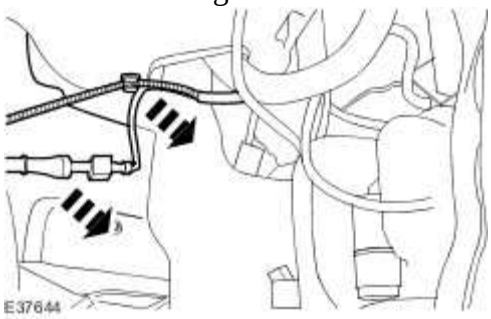

11 . Remove the windshield washer reservoir.

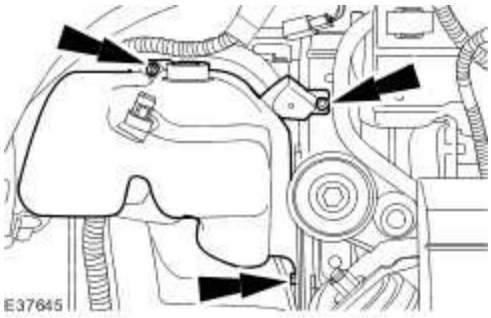

Installation

1 . To install, reverse the removal procedure.

www.JagDocs.com

Windshield Washer Reservoir - VIN Range: G45704->G99999 (84.10.01)

Removal

All vehicles

1 . Remove the cowl vent screen access panel.

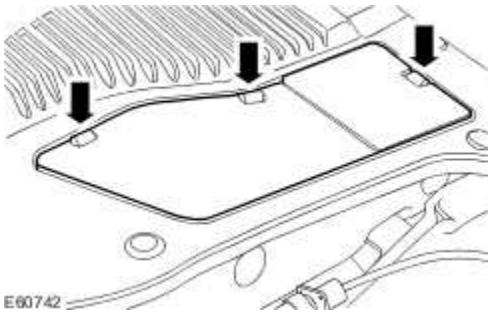

2 . Remove the windshield washer reservoir upper filler neck.

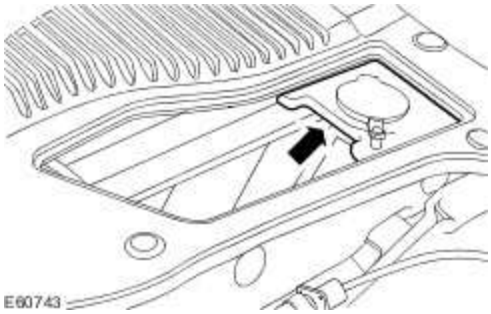

3 . Remove the windshield washer reservoir lower filler neck.

- Remove the retaining scrivet.

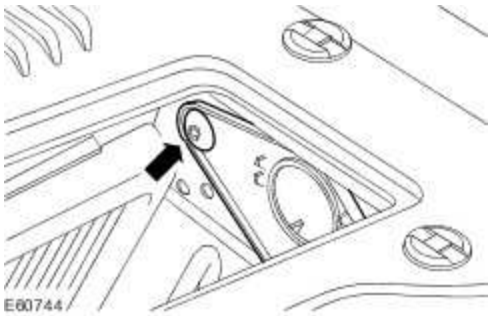

4 . Remove the left-hand front wheel and tire.
For additional information, refer to Wheel and Tire (74.20.05)

5 . Remove the left-hand front fender splash shield.
For additional information, refer to Fender Splash Shield (76.10.90)

6 . Disconnect the windshield washer reservoir electrical connector.

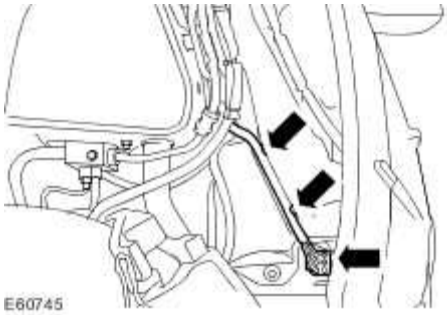

7 . Detach the air suspension hose.

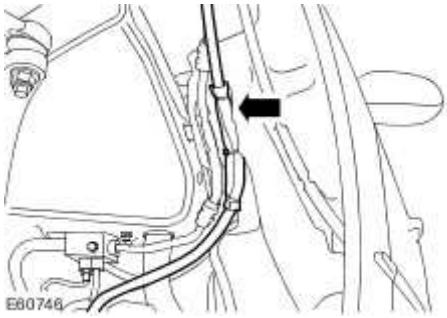

8 . Detach the air conditioning (A/C) refridgerent line.

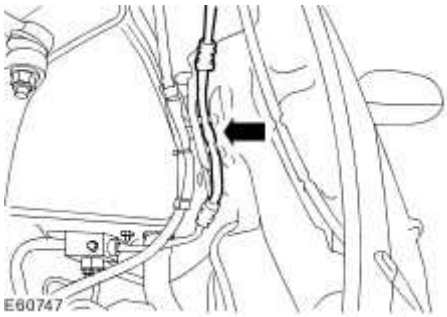

www.JagDocs.com

Vehicles with headlamp washers

9 . Detach the headlamp washer pump supply hose.

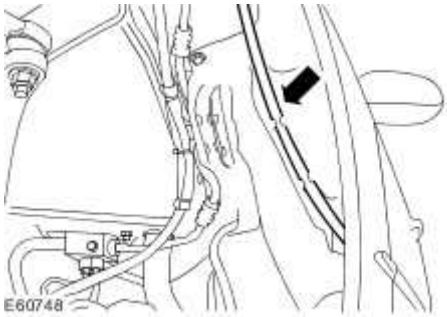

All vehicles

10 . Remove the windshield washer reservoir retaining bolts.

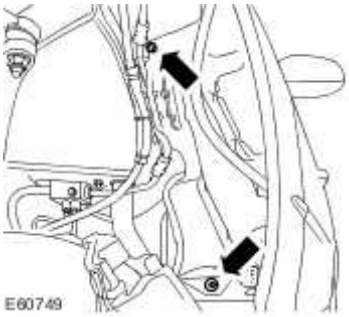

Vehicles with headlamp washers

11 . Disconnect the headlamp washer pump supply hose.

All vehicles

12 . Remove the windshield washer reservoir.

Disconnect the windscreen washer pump supply hose.

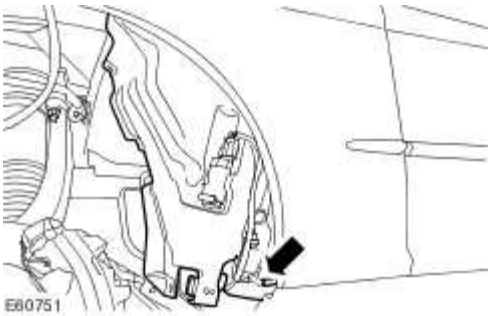

Installation

1 . To install, reverse the removal procedure.

Tighten to 9 Nm.

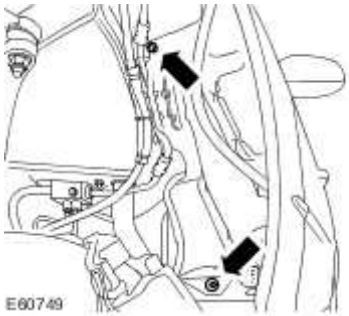

www.JagDocs.com

Windshield Wiper Motor (84.15.13)

Removal

1 . Remove the wiper mounting arm and pivot shaft.
For additional information, refer to

2 . Remove the windshield wiper motor.

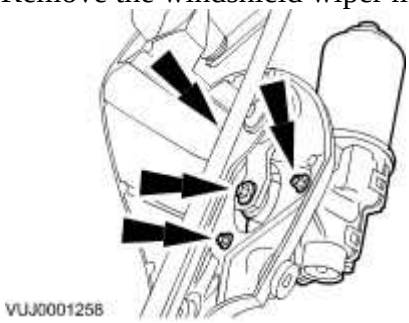

Installation

1 . To install, reverse the removal procedure.

Tighten to 15 Nm.

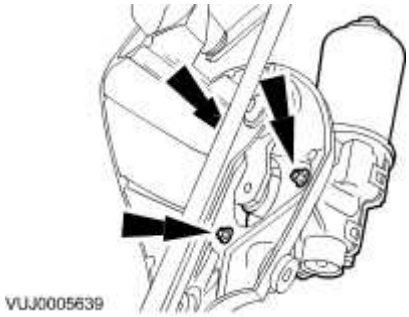

2 . Tighten to 17 Nm.

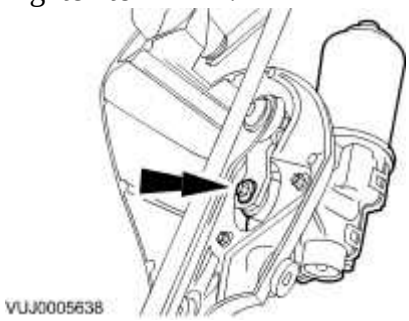

Wiper Mounting Arm and Pivot Shaft (84.15.24)

Removal

All vehicles

1 . Remove the wiper pivot arms.
For additional information, refer to Wiper Pivot Arm (84.15.03)

2 . Remove the cowl vent screen.
For additional information, refer to Cowl Vent Screen (76.10.01)

Vehicles with diesel engine

3 . Remove the secondary bulkhead center panel.
For additional information, refer to Secondary Bulkhead Center Panel

Vehicles with 3.5L or 4.2L engine

4 . Remove the engine compartment support .

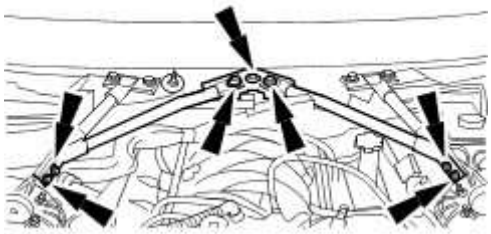

5 . **NOTE:**

Right-hand shown, left-hand similar.

Remove the engine compartment support.

www.JagDocs.com

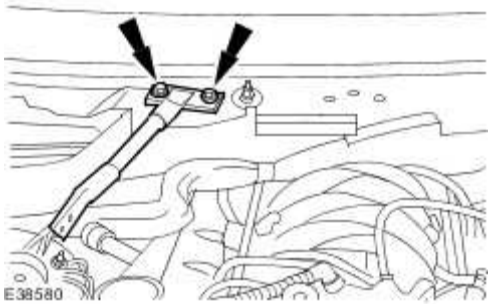

Vehicles with 3.0L engine

6 . **NOTE:**

Right-hand shown, left-hand similar.

Remove the engine compartment support.

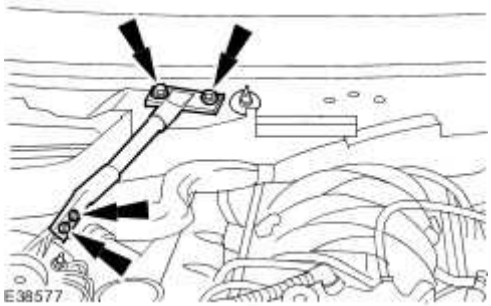

All except vehicles with diesel engine

7 . Remove the outer bulkhead panel insulation.

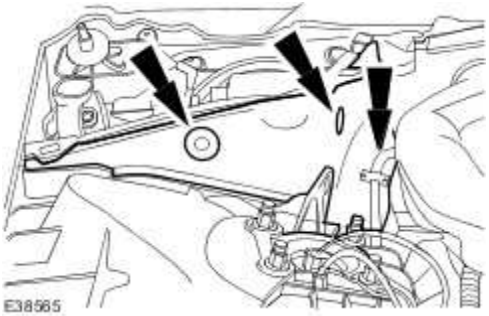

8 . Remove the outer bulkhead panel.

- Remove the securing bolts.

Remove the retaining clip.

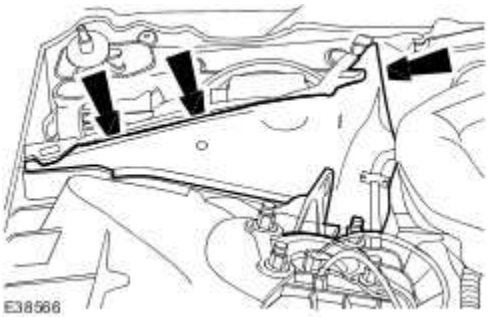

9 . Detach the inner bulkhead panel insulation.

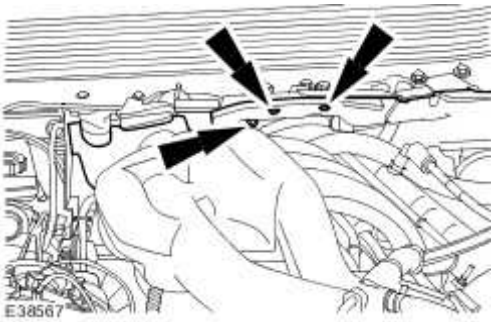

10 . Reposition the inner bulkhead panel.

All vehicles

11 . Disconnect the wiper motor electrical connector.

www.JagDocs.com

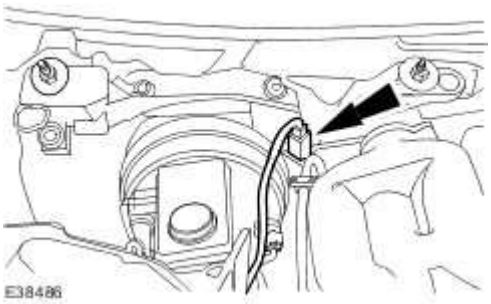

12 Remove the brake master cylinder.

. For additional information, refer to Brake Master Cylinder - 4.2L NA V8 - AJV8/4.2L SC V8 - AJV8/3.0L NA V6 - AJ27/3.5L NA V8 - AJV8 (70.30.08)

For additional information, refer to Brake Master Cylinder - 2.7L V6 - TdV6 (70.30.08)

13 . Remove the brake booster.

For additional information, refer to Brake Booster (70.50.17)

14 . Detach the wiper mounting arm and pivot shaft assembly.

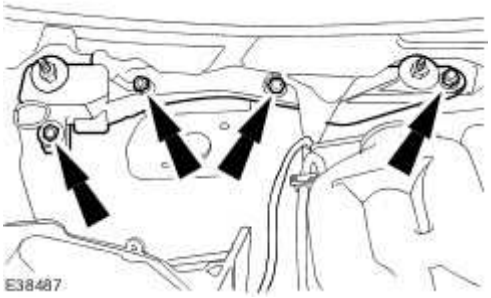

15 . Remove the windshield wiper motor.

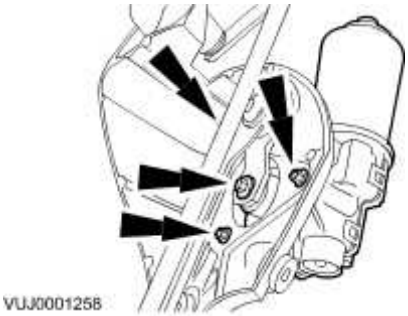

Installation

All vehicles

1 . To install, reverse the removal procedure.

Tighten to 15 Nm.

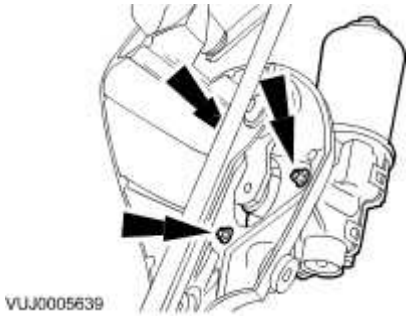

2 . Tighten to 17 Nm.

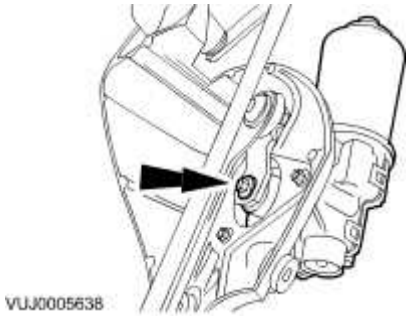

3 . Tighten to 12 Nm.

Tighten in the sequence shown.

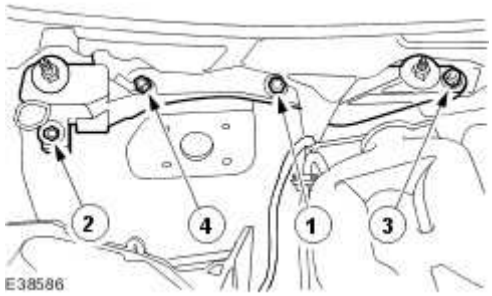

www.JagDocs.com

4 Bleed the ABS Brake system.

. For additional information, refer to Brake System Bleeding - VIN Range: G00442->G45703 (70.25.03)

For additional information, refer to Brake System Bleeding - VIN Range: G45704->H99999 (70.25.03)

Vehicles with 3.0L engine

5 . Tighten to 25 Nm.

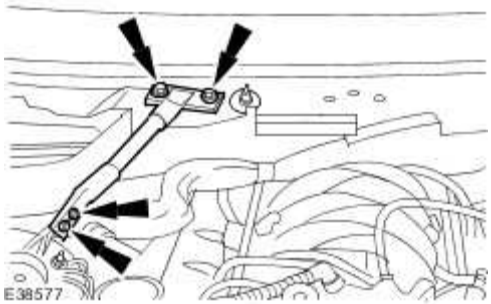

Vehicles with 3.5L or 4.2L engine

6 . Tighten to 25 Nm.

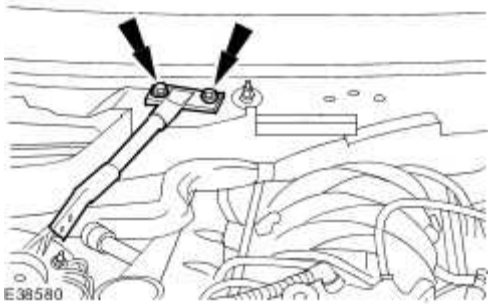

7 . Tighten to 25 Nm.

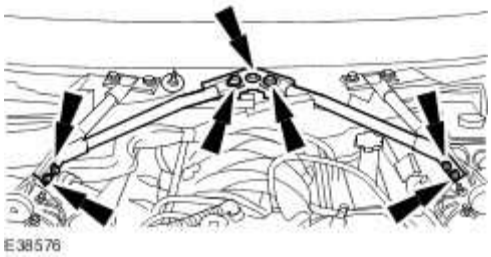

Wiper Pivot Arm (84.15.03)

Special Service Tools

Remover - Windshield Wiper Pivot Arm
501-065

Removal

1 . **NOTE:**

Left-hand shown, right-hand similar.

Disconnect the washer pipe.

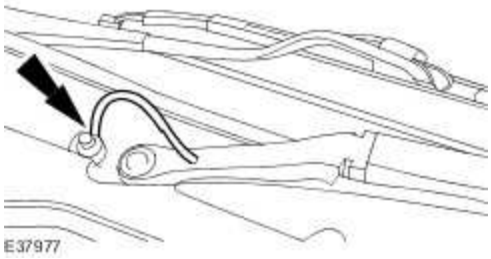

2 . **NOTE:**

Left-hand shown, right-hand similar.

Remove the wiper pivot arm retaining nut cover.

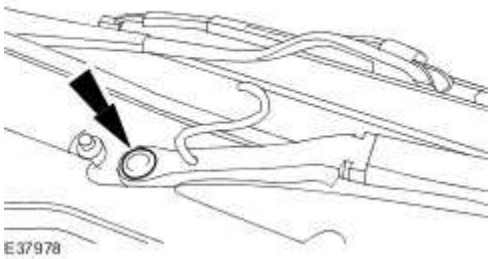

www.JagDocs.com

3 . **NOTE:**

Left-hand shown, right-hand similar.

Remove the wiper pivot arm retaining nut.

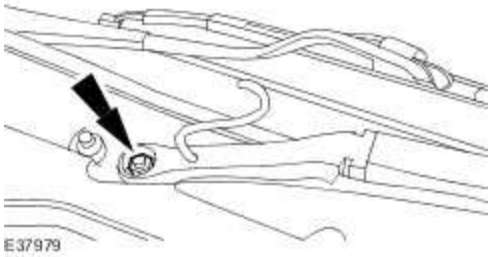

4 . **NOTE:**

Left-hand shown, right-hand similar.

Using the special tool, remove the wiper pivot arm.

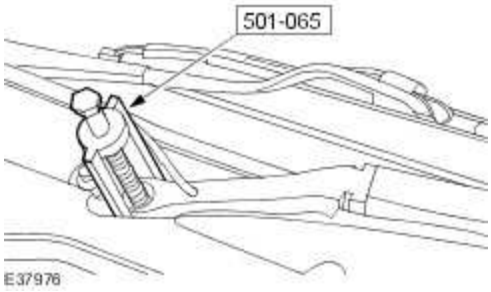

Installation

1 **NOTE:**
.

Measure the distance between the tip of the wiper blade and the upper edge of the cowl vent screen.

Install the driver side wiper pivot arm.

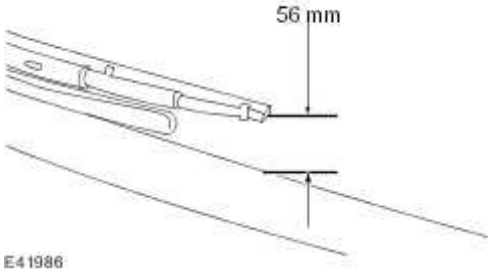

2 **NOTE:**

.

Measure the distance between the tip of the wiper blade and the upper edge of the cowl vent screen.

Install the passenger side wiper pivot arm.

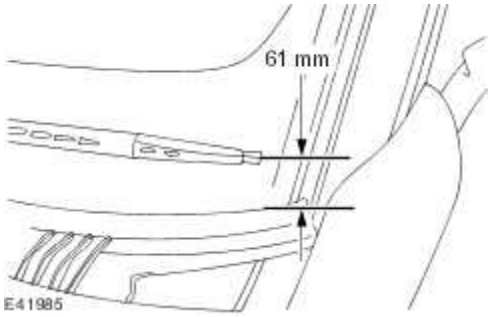

3 . **NOTE:**

Left-hand shown, right-hand similar.

Install the wiper pivot arm retaining nut.

- Tighten to 17 Nm.

www.JagDocs.com

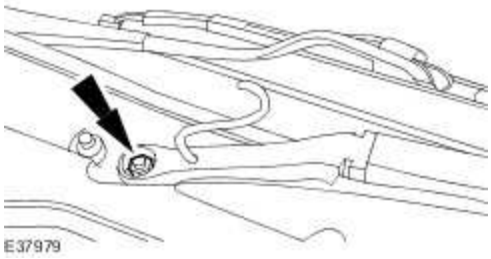

4 . **NOTE:**

Left-hand shown, right-hand similar.

Install the wiper pivot arm retaining nut cover.

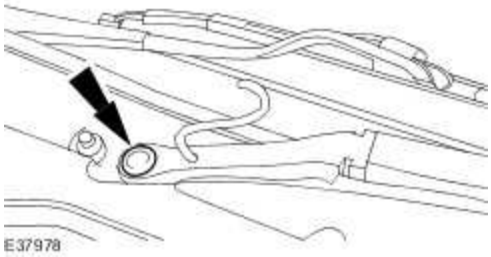

5 . **NOTE:**

Left-hand shown, right-hand similar.

Connect the washer pipe.

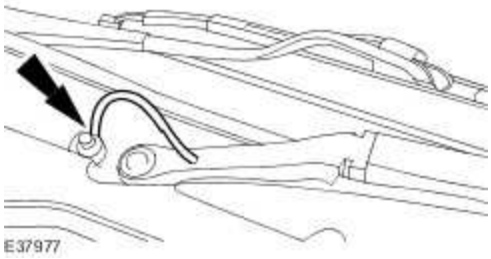

Specifications

Torque Specifications

Description	Nm	lb-ft	lb-in
Roof opening panel frame retaining bolts	9	—	80
Roof opening panel motor retaining bolts	3	—	27
Roof opening panel glass retaining screws	4	—	35

www.JagDocs.com

Motor Synchronization (76.82.48)

Roof Opening Panel Motor Synchronization Procedure

1. **NOTE:**
   If the is battery is disconnected when the roof opening panel is not operating, the roof opening panel will retain its memory and the synchronization procedure will not be required.

Operate the roof opening panel switch in the tilt position until the roof opening panel is in the fully tilted position.

2. Release the roof opening panel switch.

3. **NOTE:**
   This operation must be done within five seconds of the previous step.

Operate the roof opening panel switch in the tilt position and hold.

4. Release the roof opening panel switch after the roof opening panel has reached the fully closed position.

5. **NOTE:**
   If the roof opening panel motor synchronization has been completed correctly, when the roof opening panel switch is operated in the fully open position the roof opening panel should move to the fully open position automatically.

NOTE:
If the roof opening panel does not move to the fully open position, repeat the roof opening panel motor synchronization procedure.

Operate the roof opening panel switch to check the roof opening panel motor operation.

Roof Opening Panel Motor Synchronization De-activation Procedure.

1. Operate the roof opening panel control switch in the tilt position until the roof opening panel is in the fully tilted position and release. Then hold the roof opening panel control switch in the tilt position for at least twenty seconds, there will be a small movement from the roof opening panel to indicate it has been de-activated.

www.JagDocs.com

Roof Opening Panel Alignment

1. **NOTE:**
   Left-hand shown, right-hand similar.

Detach the sight shield at the front of the roof and swing inwards towards the rear of vehicle.

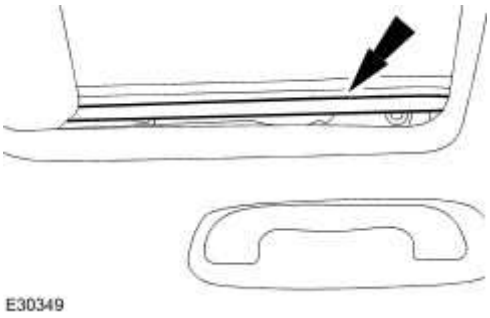

2.

CAUTION: Make sure the air deflector is only detached from the roof opening panel using the 20mm (0.78 inches) area at the end of the air deflector as defined in step 1 of the ilustration and text below. Failure to follow this instruction will result in damage to the component.

CAUTION: Do not pull on the air deflector rubber pleat. Failure to follow this instruction will result in damage to the component.

NOTE:
Right-hand shown, left-hand similar.

Detach the air deflector.

- Detach the rear of the air deflector.
- Detach the air deflector upper retainer.
- Swing the front of the air deflector inwards towards the rear of the vehicle.

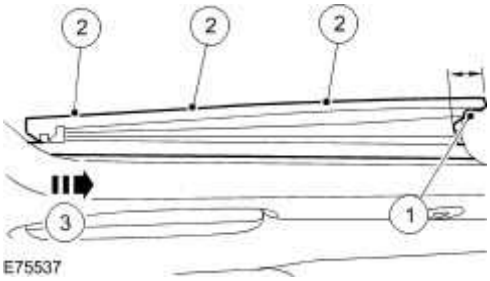

3. **NOTE:**
   Left-hand shown, right-hand similar.

Loosen the roof opening panel glass retaining screws.

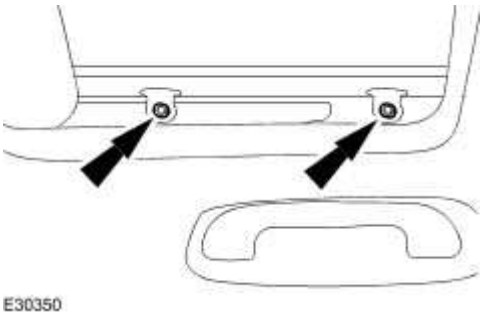

4. Adjust the front edge of the roof opening panel glass to between flush and 1 mm (0.04 in) low.

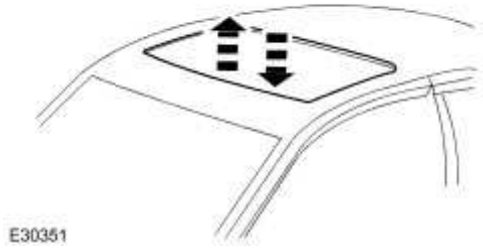

5. Adjust the rear glass edge to between flush and 1 mm (0.04 in) low.

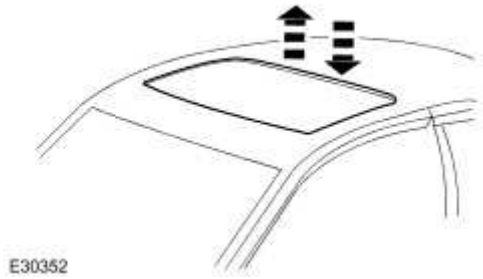

6. **NOTE:**
   Left-hand shown, right-hand similar.

Tighten to 4 Nm.

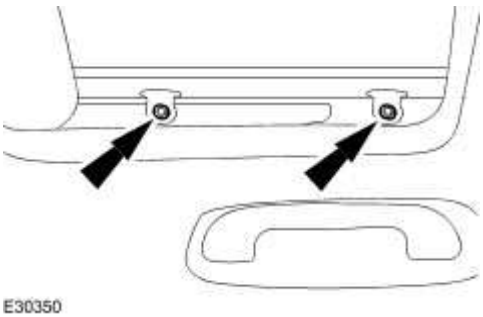

www.JagDocs.com

7. **NOTE:**
   Right-hand shown, left-hand similar.

Reposition the air deflector to the roof opening panel runner.

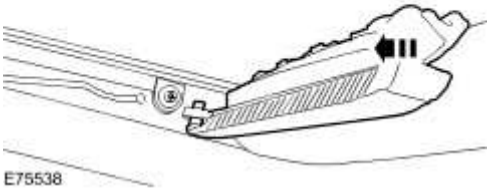

8. **NOTE:**
   Right-hand shown, left-hand similar.

Install the air deflector.

- Make sure the air deflector is fully seated to the rear retaining clip.
- Attach the air deflector upper retainer.

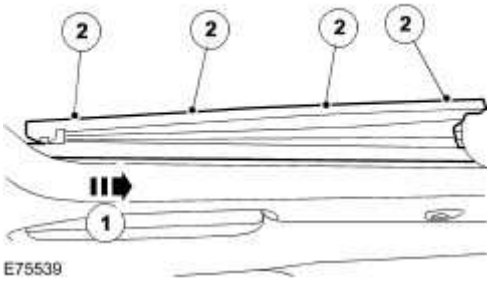

9. **NOTE:**
   Left-hand shown, right-hand similar.

Install the sight shields.

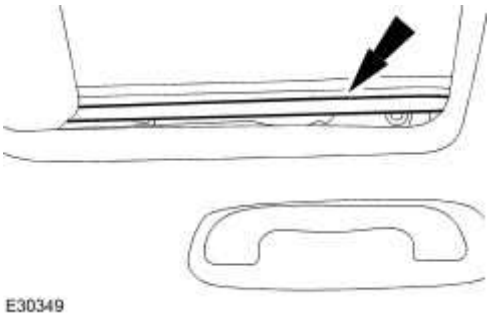

Roof Opening Panel

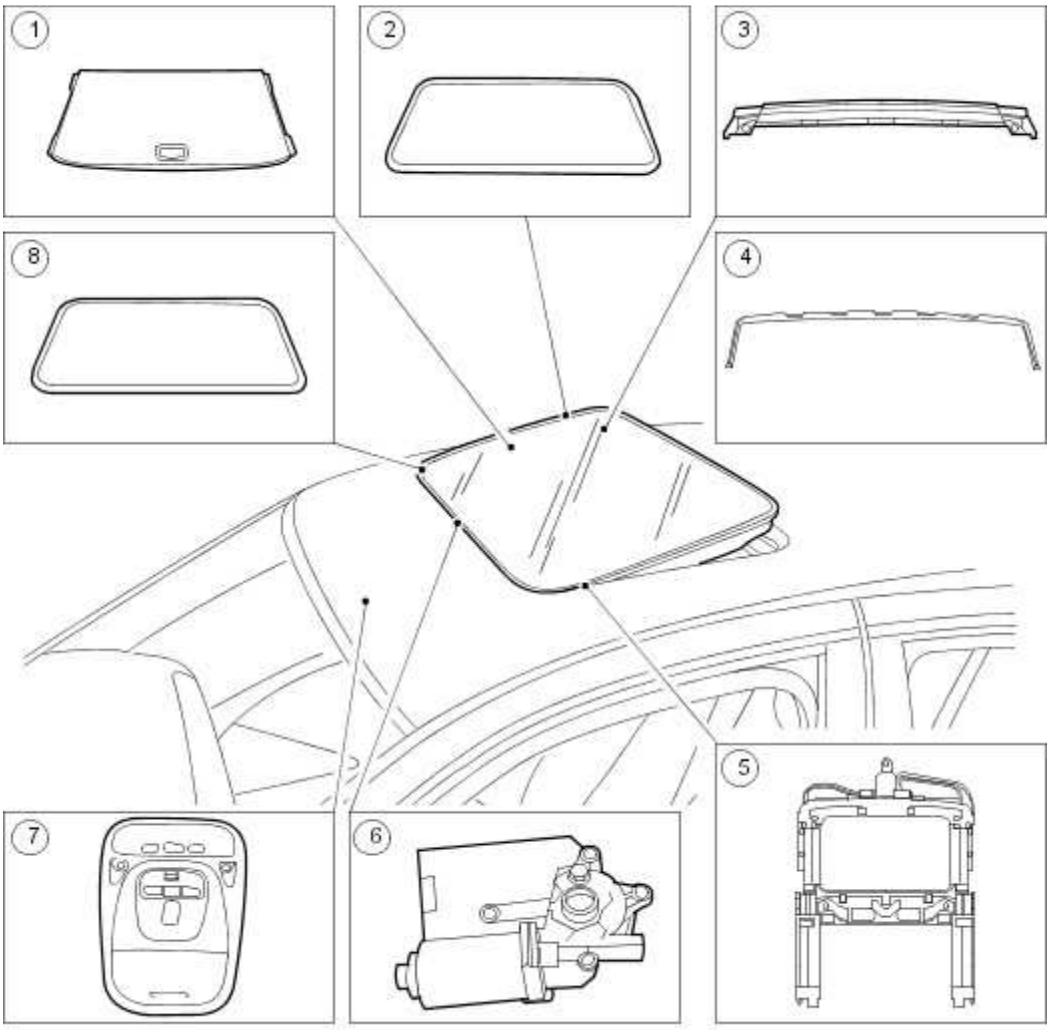

VUJ0005068

Item	Part Number	Description
1	—	Roof opening panel shield
2	—	Roof opening panel glass
3	—	Trough assembly
4	—	Air deflector
5	—	Roof opening panel frame
6	—	Roof opening panel motor
7	—	Roof opening panel control switch
8	—	Roof opening panel weatherstrip

The roof opening panel is available as an option. The roof opening panel control module

www.JagDocs.com

controls the roof opening panel. The roof opening panel motor and module are not available separately. The roof opening panel may be operated from the roof opening panel switch or the global close function.

Roof Opening Panel Control Switch Operation

The system operates as follows from the roof opening panel switch:

- Press the rear of the switch to the first detent with the roof opening glass in the closed position. The roof opening panel glass opens rearward until the roof opening panel switch is released or the roof opening panel glass reaches the fully open position.
    - The roof opening panel glass opens rearward until the roof opening panel switch is released or the roof opening panel glass reaches the fully open position.
- Press the rear of the switch to the second detent with the roof opening panel glass in the closed position. Activates the 'one touch' open feature. The roof opening panel glass will slide rearward until the roof opening panel switch is pressed in any direction or the roof opening panel glass reaches the fully open position.
    - Activates the 'one touch' open feature.
    - The roof opening panel glass will slide rearward until the roof opening panel switch is pressed in any direction or the roof opening panel glass reaches the fully open position.
- Press the front of the switch to the first detent with the roof opening panel glass in the closed position. The roof opening panel glass will vent up until the roof opening panel switch is released or the roof opening panel glass reaches the full vent up position.
    - The roof opening panel glass will vent up until the roof opening panel switch is released or the roof opening panel glass reaches the full vent up position.
- Press the front of the switch to the second detent with the roof opening panel glass in the closed position. The roof opening glass will vent up until the roof opening glass reaches the full vent up position or the switch is pressed in any direction.
    - The roof opening glass will vent up until the roof opening glass reaches the full vent up position or the switch is pressed in any direction.
- Press the front of the switch to the first detent with the roof opening panel glass in the fully open position. The roof opening panel glass will slide forward until the roof opening panel glass reaches the fully closed position or the switch is released.
    - The roof opening panel glass will slide forward until the roof opening panel glass reaches the fully closed position or the switch is released.
- Press the front of the switch to the second detent with the roof opening glass in the fully open position. The roof opening panel glass will close until the roof opening panel switch is pressed in any direction or the roof opening panel glass reaches the fully closed position.
    - The roof opening panel glass will close until the roof opening panel switch is pressed in any direction or the roof opening panel glass reaches the fully closed position.
- Press the rear of the switch to the first detent with the roof opening panel glass in the vent up position. The roof opening panel glass will close until the roof opening panel switch is released or the roof opening panel glass reaches the full closed position.
    - The roof opening panel glass will close until the roof opening panel switch is released or the roof opening panel glass reaches the full closed position.

- Press the rear of the switch to the second detent with the roof opening panel glass in the vent up position. The roof opening panel glass will close until the roof opening panel switch is pressed in any direction or the roof opening panel glass reaches the fully closed position.
    - The roof opening panel glass will close until the roof opening panel switch is pressed in any direction or the roof opening panel glass reaches the fully closed position.

Global Opening And Closing Operation

The roof opening panel is included in the global open and close operation. This function opens or closes the power windows and the roof opening panel automatically. For additional information on the global open and close feature for the power windows, refer to <<501-11>>. The global open function is activated by:

- unlocking the drivers door using the remote keyless entry transmitter. Within five seconds, press and hold the unlock button.
- unlocking the drivers door using the driver door lock cylinder and the key. Hold the key in the unlock position.

The global close function is activated by:

- turning the driver door lock cylinder to the lock position and holding.

Global open and close operation is only available with the ignition in the OFF position and the ignition key removed.

When the global open or close operation is selected, the roof opening panel switch is not recognized by the roof opening panel control module throughout the operation and five seconds after the operation is completed.

Global open and close will operate as follows:

- With the roof opening glass in the closed position, activating global open will operate the roof opening panel glass to the fully open position.
- With the roof opening panel glass in the fully open position, activating global close will operate the roof opening panel glass to the closed position.
- If a global open is commanded within five seconds of a completed global operation, the roof opening panel glass will reverse the previous completed global operation. If the roof opening glass was globally closed from the vent position, a global open within five seconds would tilt the roof opening panel glass back to the vent position.
- If the roof opening panel glass was globally closed from the fully open position, a global open within five seconds would slide the roof opening glass back to the fully open position.

www.JagDocs.com

Roof Opening Panel

Principles of operation

Roof Opening Panel Control Module

Battery power is continuously supplied to the roof opening panel control module. However, the roof opening panel will only operate from the roof opening panel switch with the ignition switch with the ignition a switch in the RUN or ACC position. The global open and close feature is controlled by two circuits from the REM. The two circuits must be at ground potential before the roof opening panel control module will acknowledge the roof opening panel switch. When the ignition switch is turned to RUN or ACC, the REM provides ground to these circuits.

The roof opening panel control module incorporates soft stops at the end of all travel positions. The roof opening panel control module monitors the internal switches to determine the roof opening glass position and the soft stops. The internal switches are activated by the roof opening panel motor rotation.

The roof opening panel control module supplies the power and ground to the roof opening panel motor depending on the ordered function. Power is supplied to the roof opening panel for a maximum of 12 seconds. Under normal operation, position is monitored by the roof opening panel control module and power is removed from the roof opening panel motor as soon as the roof opening panel reaches the commanded position.

Roof Opening Panel Switch

Four circuits connect the roof opening panel switch to the roof opening panel control module. One circuit is the common return. The other three are control circuits open, close and tilt. The roof opening panel control module monitors these lines for voltage fluctuation to determine which function was selected.

With the ignition switch in the RUN or ACC position, the roof opening panel supplies a five volt reference voltage to three control lines. Activation of the roof opening panel switch connects one or more of these lines to the common return which pulls the line low. The roof opening panel control module will sense the line or lines being connected to the common line and carry out the appropriate function.

The express open function connects the open and tilt circuits to the common return when the roof opening panel switch is moved rearward to the second detent position. The operator-controlled open function connects the open circuit to the common return. The close function connects the close circuit to the common causing the roof opening panel to close from a slide or vent position.

Global Open and Close

Two circuits connect the rear electronics module (REM) to the roof opening panel control module for these functions. Global open and close operation for the roof opening panel is controlled by one of these two circuits being grounded by the REM.

When the ignition switch is in the RUN or ACC position, the REM grounds both of these circuits allowing normal operation of the roof opening panel from the roof opening panel switch. Global open and close operation is only available with the ignition in the OFF position and the ignition key removed.

When global open or close operation is selected, the roof opening panel switch is not recognized by the roof opening panel control module throughout the operation and five seconds after the operation is completed.

With the ignition switch in the OFF position, the roof opening panel control module supplies a constant voltage to these two circuits. The roof opening panel control module monitors these lines for a low state, caused by the REM grounding the line, to determine the ordered global function by the REM.

Global open is commanded by the REM grounding control line two. Line one will remain at previous voltage.

Global close is commanded by the REM grounding control line one. Line two will remain at previous voltage.

If both lines have voltage, the roof opening panel will be inoperative.

Inspection and Verification

1 . Verify the customer concern by operating the system.

2 . Visually inspect for obvious signs of mechanical and electrical damage.

Visual Inspection Chart

Mechanical	Electrical
• Roof opening panel frame • Roof opening panel glass weatherstrip • Roof opening panel alignment • Motor synchronization	• Fuse(s) • Roof opening panel switch • Roof opening panel motor • Wiring harness • Electrical connector(s)

1 . If an obvious cause for an observed or reported concern is found, correct the cause (if possible) before proceeding to the next step.

2 . If the concern is not visually evident, verify the Symptom Chart.

www.JagDocs.com

Symptom Chart

Refer to the Wiring Diagram manual for the connectors cited in the pinpoint tests.

Symptom Chart

The roof opening panel has excessive wind noise

Possible Source(s):

- Incorrect alignment.
- Roof opening panel weatherstrip.

Action(s) to take:

- GO to Pinpoint Test A.

The roof opening panel leaks

Possible Source(s):

- Incorrect alignment.
- Roof opening panel drain hoses.
- Roof opening panel weatherstrip.

Action(s) to take:

- GO to Pinpoint Test B.

The roof opening panel is noisy during operation

Possible Source(s):

- Roof opening panel glass.
- Roof opening panel frame.
- Roof opening panel motor.

Action(s) to take:

- GO to Pinpoint Test C.

The roof opening panel does not open or close

Possible Source(s):

- Roof opening panel frame.

- Roof opening panel motor.
- Rear electronics module (REM).
- Roof opening panel switch.
- Wiring harness.

Action(s) to take:

- GO to the Jaguar approved diagnostic system.

The roof opening panel does not open or close in vent position

Possible Source(s):

- Roof opening panel control module.
- Roof opening panel switch.
- Wiring harness.

Action(s) to take:

- GO to the Jaguar approved diagnostic system.

The roof opening panel does not stop flush from any position.

Possible Source(s):

- Roof opening panel alignment.
- Roof opening weatherstrip.
- Roof opening panel control module.

Action(s) to take:

- GO to Pinpoint Test D.

The 'one touch' open is inoperative

Possible Source(s):

- Roof opening panel control module.
- Roof opening panel switch.
- Motor synchronization.

Action(s) to take:

www.JagDocs.com

- GO to the Jaguar approved diagnostic system.

Pinpoint Tests

PINPOINT TEST G189148p1 : THE ROOF OPENING PANEL HAS EXCESSIVE WIND NOISE

G189148t1 : CHECK THE ROOF OPENING PANEL GLASS FIT

1. Cycle the roof opening glass from the fully open to the fully closed position. 2. Inspect the roof opening panel weatherstrip for proper fit or damage.

- **Is the roof opening panel weatherstrip OK?**

-> Yes
GO to Pinpoint Test G189148t2.

-> No
INSTALL a new roof opening panel weatherstrip.
Test the system for normal operation.

G189148t2 : CHECK THE ROOF OPENING PANEL GLASS OPERATION

1. Cycle the roof opening panel glass from the fully open to the fully closed position.

- **Does the roof opening panel glass travel to the fully open and the fully closed position?**

-> Yes
ADJUST the roof opening panel glass.
Test the system for normal operation.

-> No
CHECK the roof opening panel weatherstrip. If necessary, INSTALL a new roof opening panel weatherstrip.
TEST the system for normal operation.

PINPOINT TEST G189148p2 : THE ROOF OPENING PANEL LEAKS

G189148t3 : CHECK THE ROOF OPENING PANEL OPERATION

1. Cycle the roof opening panel glass from the fully open position to the fully closed position.

- **Does the roof opening panel glass operate smoothly and close tightly?**

-> Yes
GO to Pinpoint Test G189148t4.

-> No
CHECK the roof opening panel alignment.
Test the system for normal operation.

G189148t4 : CHECK THE ROOF OPENING PANEL FRAME DRAIN TUBES

1. Gain access to the roof opening panel frame drain tubes.

- **Is there blockage or damage to the roof opening panel frame drain tubes?**

-> Yes
Clear the blockage or if necessary, INSTALL a new drain tube. TEST the system for normal operation.

-> No
GO to Pinpoint Test G189148t5.

G189148t5 : CHECK THE ROOF OPENING PANEL WEATHERSTRIP

1. Actuate the roof opening panel glass to the fully open position.

- **Is the roof opening panel weatherstrip damaged?**

-> Yes
INSTALL a new roof opening panel weatherstrip.
TEST the system for normal operation.

www.JagDocs.com

-> No
REPAIR as necessary. TEST the system for normal operation.

PINPOINT TEST G189148p3 : THE ROOF OPENING PANEL IS NOISY DURING OPERATION

G189148t6 : CHECK THE OPERATION OF THE ROOF OPENING PANEL GLASS

1. Cycle the roof opening glass from the fully open to the fully closed position.

- **Is the roof opening panel glass loose?**

-> Yes
ADJUST the roof opening glass.
TEST the system for normal operation.

-> No
GO to Pinpoint Test G189148t7.

G189148t7 : CHECK FOR OBSTRUCTIONS

1. Check the roof opening panel frame for foreign material, damage or looseness.

- **Is the roof opening panel obstructed or damaged?**

-> Yes
REMOVE the obstruction. If necessary, INSTALL a new roof opening panel track and rail assembly.
TEST the system for normal operation.

-> No
GO to Pinpoint Test G189148t8.

G189148t8 : CHECK THE ROOF OPENING PANEL MOTOR

1. Cycle the roof opening panel glass from the fully open to the fully closed position.

- **Does the roof opening panel motor make excessive noise?**

-> Yes
CHECK the roof opening panel motor for correct mounting. If necessary, INSTALL a new roof opening panel motor.
TEST the system for normal operation.

-> No

ADJUST the roof opening panel glass as necessary. TEST the system for normal operation.

PINPOINT TEST G189148p4 : THE ROOF OPENING PANEL DOES NOT STOP FLUSH FROM ANY POSITION

G189148t9 : CHECK THE ROOF OPENING PANEL ALIGNMENT

1. Check the roof opening panel alignment.

- **Is the roof opening glass adjusted correctly?**

-> Yes
GO to Pinpoint Test G189148t10.

-> No
ADJUST the roof opening glass as necessary. TEST the system for normal operation.

G189148t10 : CHECK THE ROOF OPENING PANEL WEATHERSTRIP

1. Inspect the roof opening panel weatherstrip for looseness, damage and correct installation.

- **Is the roof opening panel weatherstrip OK and installed correctly?**

-> Yes
GO to Pinpoint Test G189148t11.

-> No
REPAIR or INSTALL a new roof opening panel weatherstrip as necessary.
TEST the system for normal operation.

www.JagDocs.com

G189148t11 : CHECK FOR OBSTRUCTION IN THE ROOF OPENING PANEL

1. Inspect the roof opening panel assembly for obstructions in the frame.

- **Are any obstructions found?**

-> Yes
REMOVE the obstruction. If necessary, INSTALL a new roof opening panel frame.
TEST the system for normal operation.

-> No
INSTALL a new roof opening panel control module.
TEST the system for normal operation.

Air Deflector (76.82.07)

Removal

1 . Reposition the roof opening glass fully rearward.

2 . **NOTE:**
Right-hand shown, left-hand similar.

Remove the air deflector retaining screws.

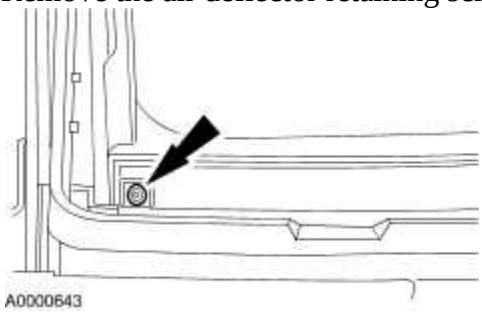

3 . Remove the air deflector.

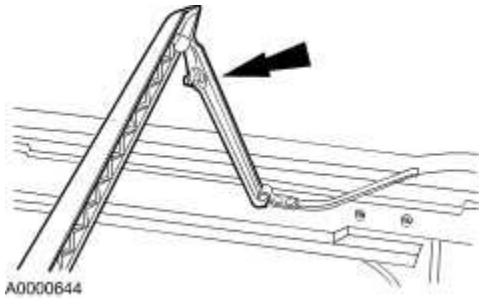

Installation

1 . **CAUTION: Do not over tighten the air deflector retaining screws when installing.**

To install, reverse the removal procedure.

www.JagDocs.com

Roof Opening Panel Frame (76.82.01)

Removal

All vehicles

1 . Remove both A-pillar trim panels.
For additional information, refer to A-Pillar Trim Panel (76.13.31)

2 . Remove both upper B-pillar trim panels.
For additional information, refer to B-Pillar Upper Trim Panel (76.13.28)

3 . Remove both C-pillar upper trim panels.
For additional information, refer to C-Pillar Upper Trim Panel

4 . Remove both sun visors.
For additional information, refer to Sun Visor (76.10.48)

5 . **NOTE:**

Left-hand shown, right-hand similar.

Remove the sun visor retaining clip.

6 . Remove the auto dimming interior mirror.
For additional information, refer to Auto-Dimming Interior Mirror (76.10.56)

7 . Remove the overhead console.
For additional information, refer to Overhead Console (76.13.69)

8 . Disconnect the rain sensor electrical connector.

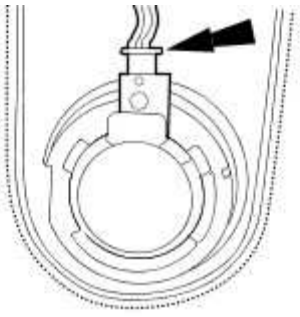

9 . **NOTE:**

Left-hand shown, right-hand similar.

Disconnect the headlining wiring harness front electrical connector.

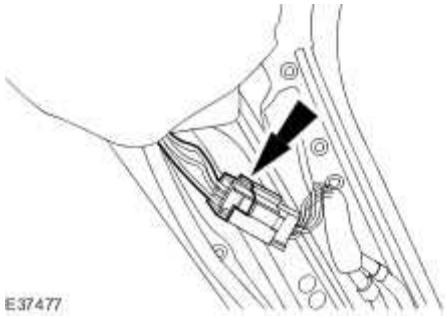

10 . **NOTE:**

Left-hand shown, right-hand similar.

Detach the front passenger assist handle retaining screw covers.

www.JagDocs.com

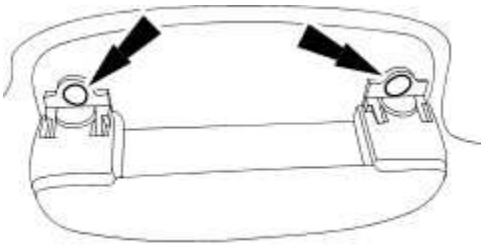

E36775

11 . **NOTE:**

Left-hand shown, right-hand similar.

Remove the front passenger assist handle.

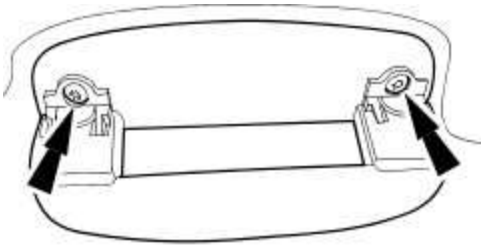

E36776

12 . **NOTE:**

Left-hand shown, right-hand similar.

Detach the rear passenger assist handle retaining screw covers.

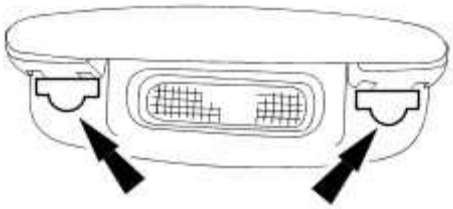

E36777

13 . **NOTE:**

Left-hand shown, right-hand similar.

Detach the rear passenger assist handle.

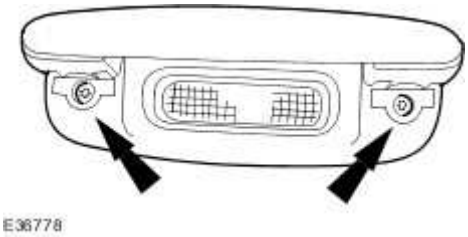

14 . **NOTE:**

Left-hand shown, right-hand similar.

Remove the rear passenger assist handle.

- Disconnect the electrical connector.

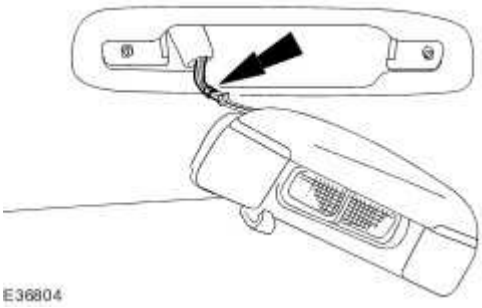

15 . Detach the headliner.

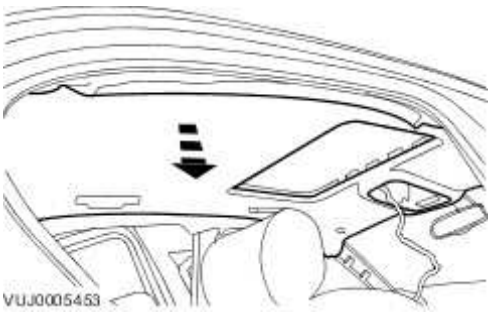

16 . Remove the roof opening panel glass.
For additional information, refer to

www.JagDocs.com

Long wheelbase

17 . Remove the strengthening bar.

Remove the securing bolts.

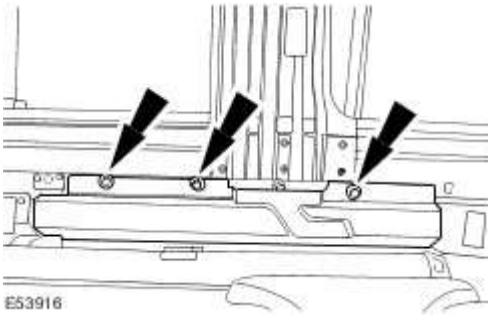

All vehicles

18 . Disconnect the electrical connector

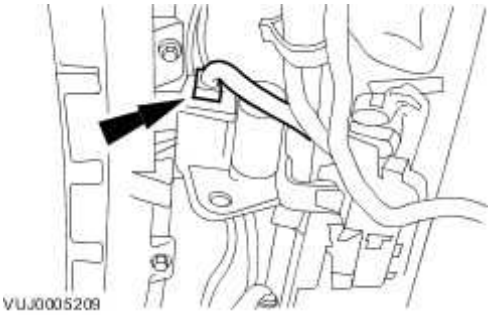

19 . **NOTE:**

Right-hand shown, left-hand similar.

Detach the front drain hose.

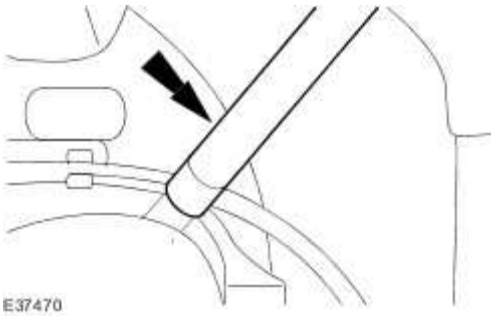

20 . **NOTE:**

Left-hand shown, right-hand similar.

Detach the rear drain hose.

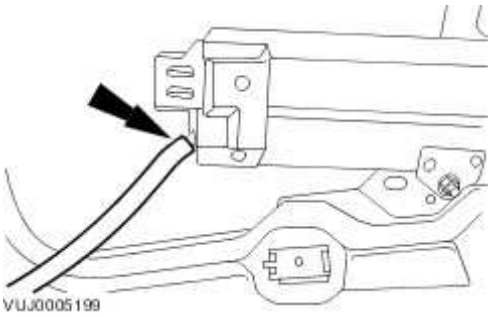

21 . Remove the roof opening panel frame front retaining bolts.

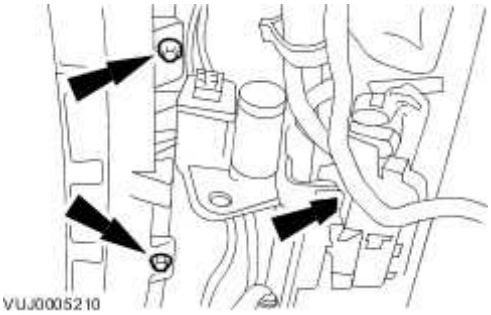

22 . **NOTE:**

Left-hand shown, right-hand similar.

Remove the roof opening panel frame retaining bolts.

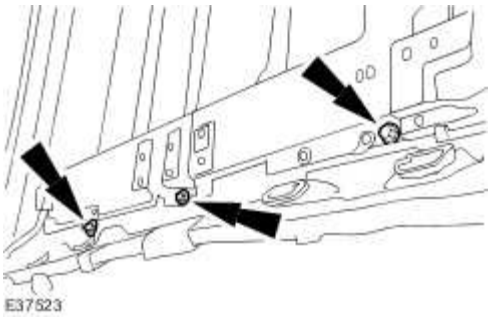

www.JagDocs.com

23 . Remove the roof opening panel frame.

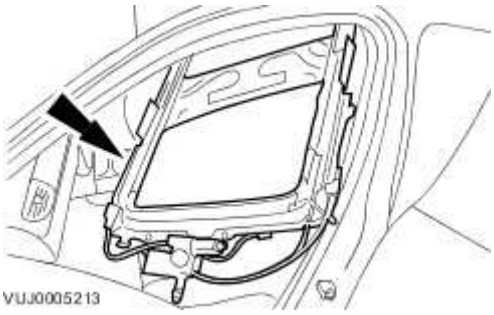

Installation

All vehicles

1 . Install the roof opening panel frame.

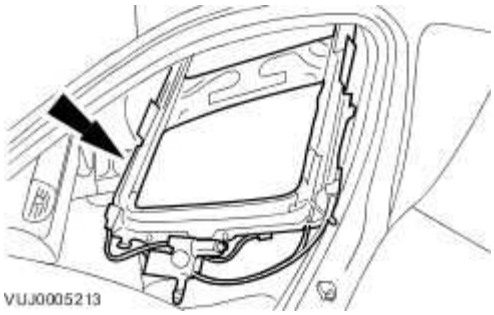

2 . **NOTE:**

Left-hand shown, right-hand similar.

Loosely install the roof opening panel frame bolts.

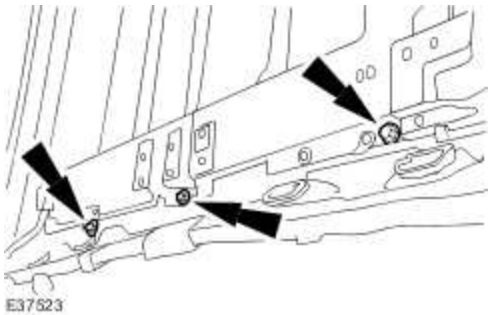

3 . Loosely install the roof opening panel front frame bolts.

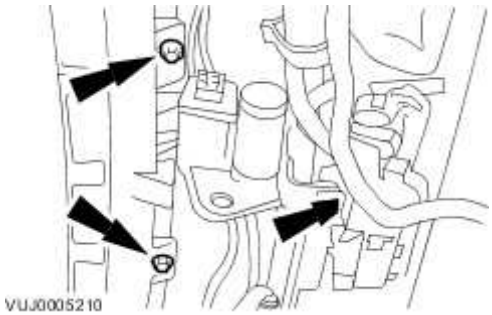

4 . Align the roof opening panel frame using a 12 mm drill bit.

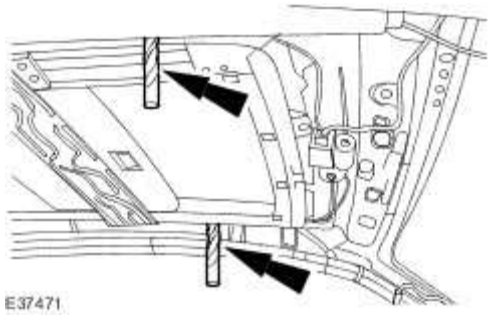

5 . **NOTE:**

Left-hand shown, right-hand similar.

Tighten to 9 Nm.

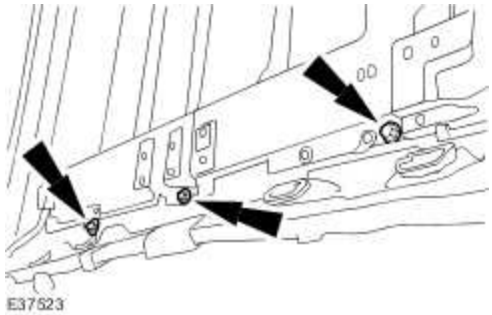

6 . **NOTE:**

Left-hand shown, right-hand similar.

Install the rear drain hose.

www.JagDocs.com

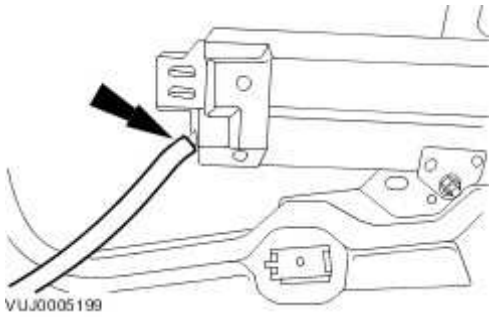

7 . **NOTE:**

Right-hand shown, left-hand similar.

Install the front drain hose.

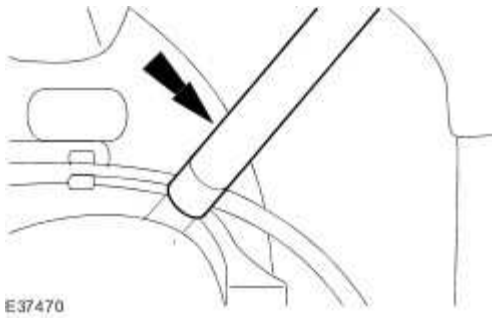

8 . Connect the electrical connector.

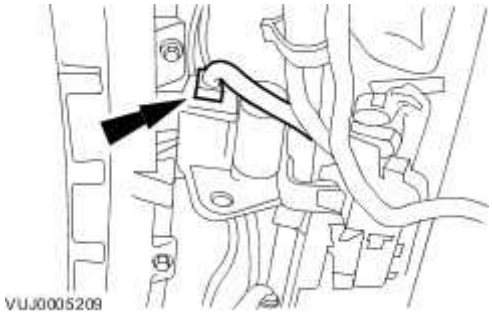

Long wheelbase

9 . Install the strengthening bar.

Tighten to 9 Nm.

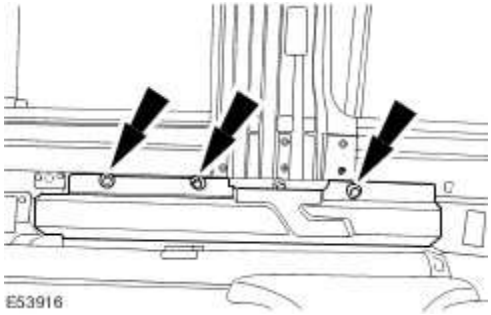

All vehicles

10 . Install the roof opening panel glass.
For additional information, refer to

11 . Install the headliner.

12 . **NOTE:**

Left-hand shown, right-hand similar.

Install the front passenger assist handle.

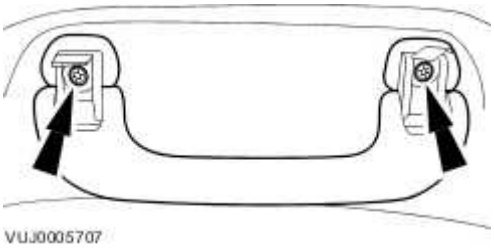

www.JagDocs.com

13 . **NOTE:**

Left-hand shown, right-hand similar.

Install the front passenger assist handle retaining screw covers.

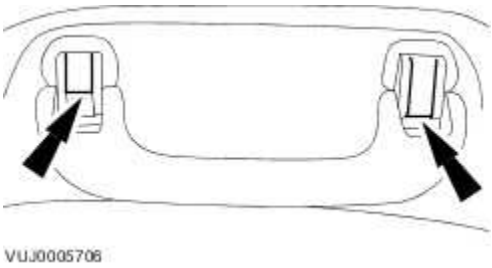

14 . **NOTE:**

Left-hand shown, right-hand similar.

Install the rear passenger assist handle.

- Connect the electrical connector.

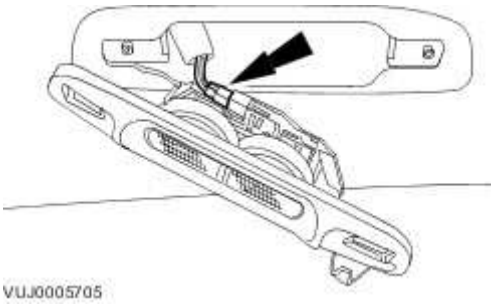

15 . **NOTE:**

Left-hand shown, right-hand similar.

Install the rear passenger assist handle retaining screws.

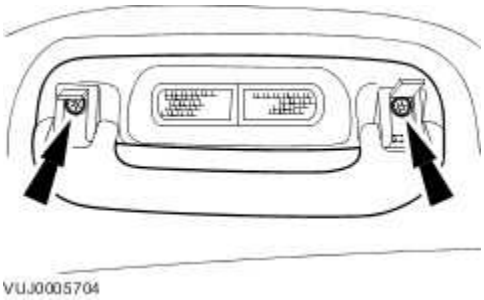

16 . **NOTE:**

Left-hand shown, right-hand similar.

Install the rear passenger assist handle retaining screw covers.

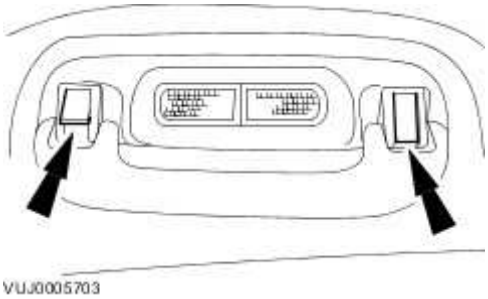

17 . **NOTE:**

Left-hand shown, right-hand similar.

Connect the headlining wiring harness front electrical connector.

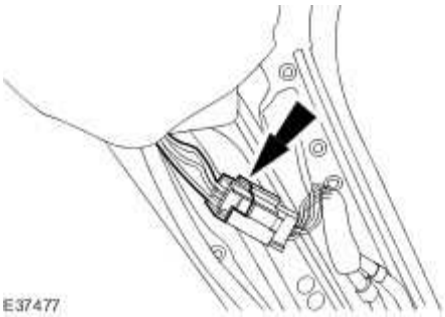

18 . Connect the rain sensor electrical connector.

www.JagDocs.com

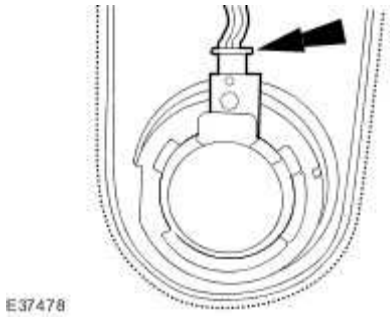

19 . Install the overhead console.
For additional information, refer to Overhead Console (76.13.69)

20 . Install the auto dimming interior mirror.
For additional information, refer to Auto-Dimming Interior Mirror (76.10.56)

21 . **NOTE:**

Left-hand shown, right-hand similar.

Install the sun visor retaining clip.

22 . Install both sun visors.
For additional information, refer to Sun Visor (76.10.48)

23 . Install both C-pillar upper trims panels.
For additional information, refer to C-Pillar Upper Trim Panel

24 . Install both B-pillar trim panels.

For additional information, refer to B-Pillar Upper Trim Panel (76.13.28)

25 . Install both A-pillar trim panels.
For additional information, refer to A-Pillar Trim Panel (76.13.31)

www.JagDocs.com

Roof Opening Panel Front Drain Hose (76.82.21)

Removal

1 . Remove the fender splash shield. <<501-02>>

2 . Remove the roof opening panel front drain hose lower grommet.

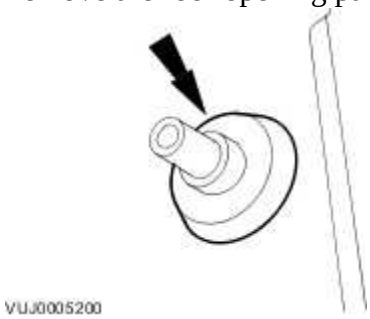

3 . Remove both A-pillar trim panels. <<501-05>>

4 . Remove both B-pillar trim panels. <<501-05>>

5 . Remove both C-pillar upper trim panels. <<501-05>>

6 . Remove both sun visors. <<501-05>>

7 . Remove the auto dimming interior mirror. <<501-09>>

8 . Disconnect the rain sensor electrical connector.

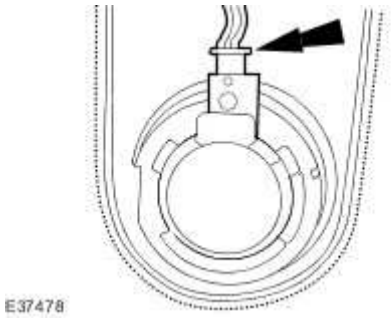

9 . **NOTE:**

Left-hand shown, right-hand similar.

Disconnect the headlining wiring harness front electrical connector.

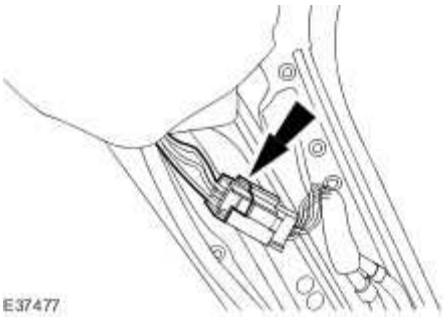

10 . **NOTE:**

Left-hand shown, right-hand similar.

Remove the sun visor retaining clip.

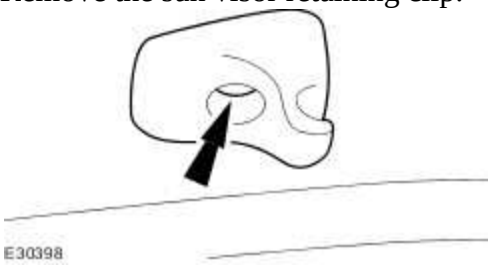

11 . Remove the overhead console. <<501-12>>

12 . **NOTE:**

Left-hand shown, right-hand similar.

Detach the front passenger assist handle retaining screw covers.

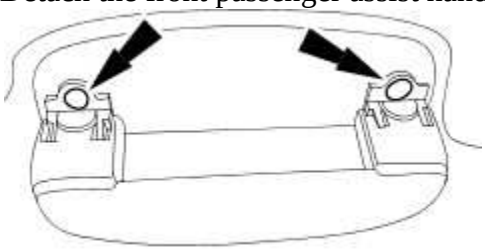

13 . **NOTE:**

Left-hand shown, right-hand similar.

Remove the front passenger assist handle.

www.JagDocs.com

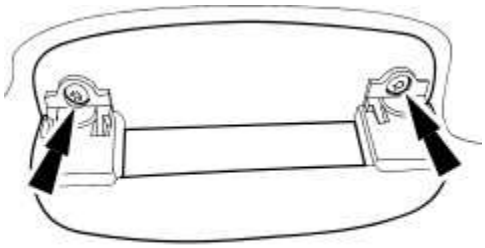

E36776

14 . **NOTE:**

Left-hand shown, right-hand similar.

Detach the rear passenger assist handle retaining screw covers.

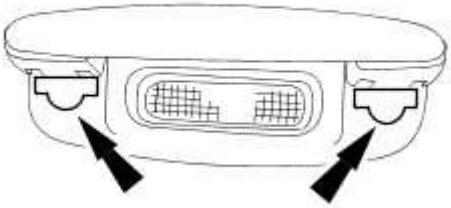

E36777

15 . **NOTE:**

Left-hand shown, right-hand similar.

Detach the rear passenger assist handle.

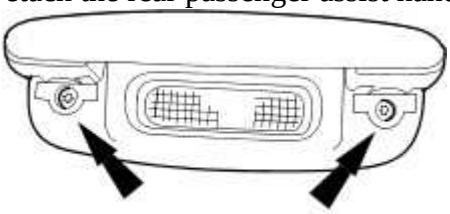

E36778

16 . **NOTE:**

Left-hand shown, right-hand similar.

Remove the rear passenger assist handle.

- Disconnect the electrical connector.

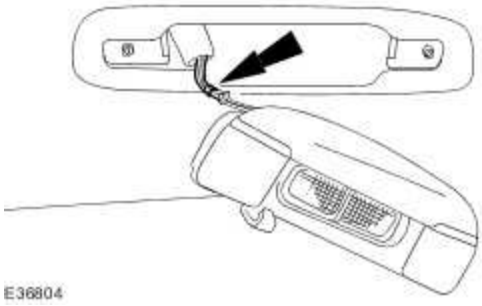

17 . Detach the headliner.

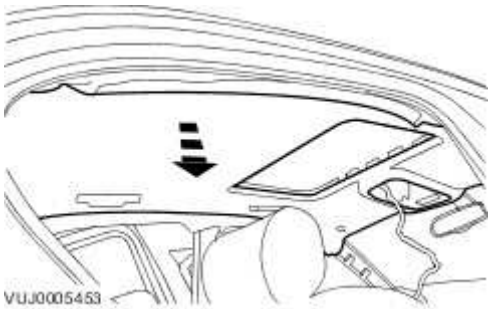

18 . Detach the roof opening panel front drain hose.

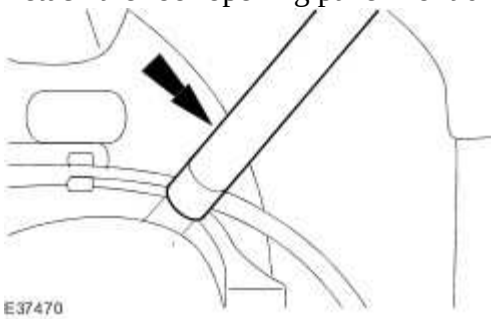

19 . Detach the roof opening panel front drain hose upper retaining clip.

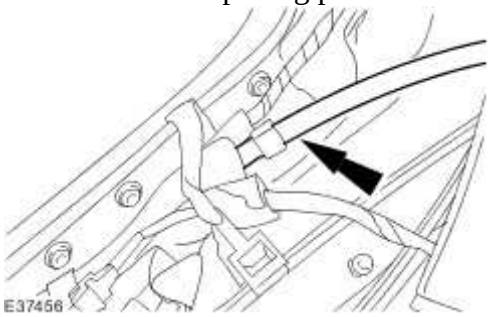

20 . Detach the roof opening panel front drain hose lower retaining clip.

www.JagDocs.com

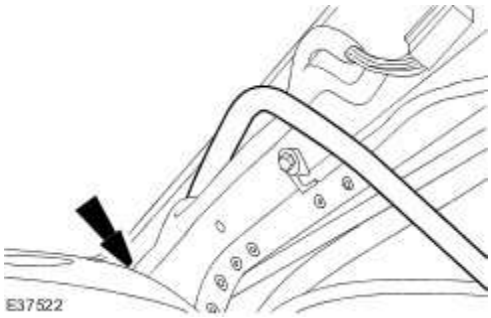

21 . Remove the roof opening panel front drain hose.

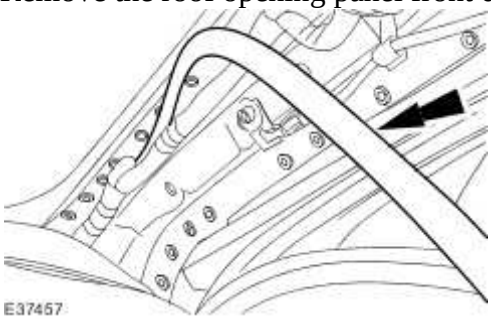

Installation

1 . To install, reverse the removal procedure.

Roof Opening Panel Glass (76.82.05)

Removal

Short wheelbase

1 . **NOTE:**

Make sure the roof opening glass assembly is in the closed position.

NOTE:

Left-hand shown, right-hand similar.

Detach the sight shield at the front of the roof and swing inwards towards the rear of vehicle.

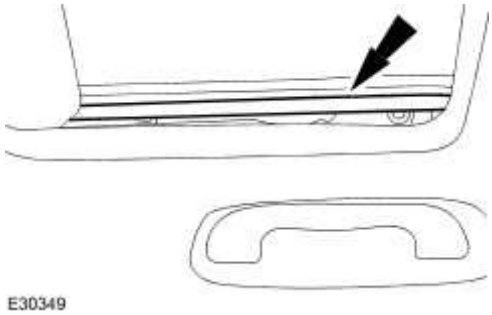

Long wheelbase

2 . **CAUTION: Make sure the air deflector is only detached from the roof opening panel using the 20mm (0.78 inches) area at the end of the air deflector as defined in step 1 of the ilustration and text below. Failure to follow this instruction will result in damage to the component.**

CAUTION: Do not pull on the air deflector rubber pleat. Failure to follow this instruction will result in damage to the component.

NOTE:

Right-hand shown, left-hand similar.

www.JagDocs.com

Detach the air deflector.

1) Detach the rear of the air deflector.

2) Detach the air deflector upper retainer.

3) Swing the front of the air deflector inwards towards the rear of the vehicle.

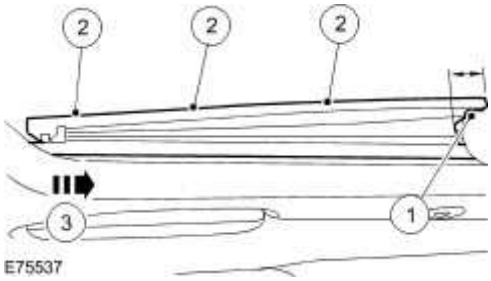

All vehicles

3 . **NOTE:**

Left-hand shown, right-hand similar.

Remove the roof opening panel glass retaining screws.

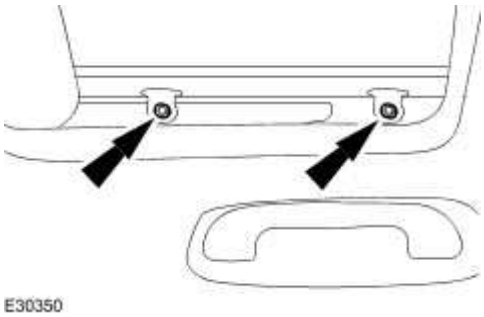

4 . **CAUTION: Do not operate the roof opening panel when the roof opening glass is removed.**

Remove the roof opening panel glass.

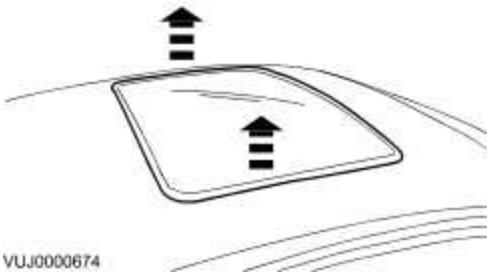

Installation

All vehicles

1 . To install, reverse the removal procedure.

Tighten to 4 Nm.

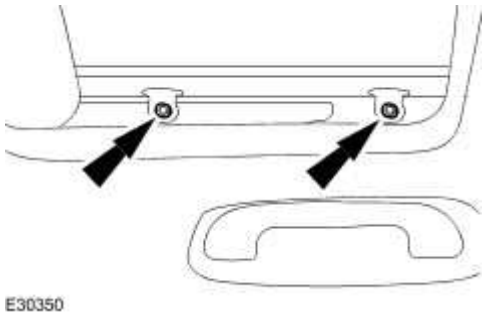

Long wheelbase

2 . **NOTE:**

Right-hand shown, left-hand similar.

Reposition the air deflector to the roof opening panel runner.

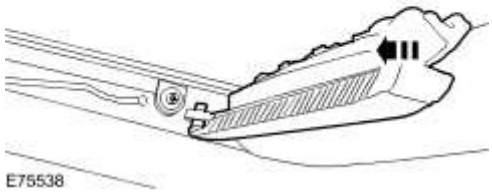

www.JagDocs.com

3 . **NOTE:**

Right-hand shown, left-hand similar.

Install the air deflector.

1) Make sure the air deflector is fully seated to the rear retaining clip.

2) Attach the air deflector upper retainer.

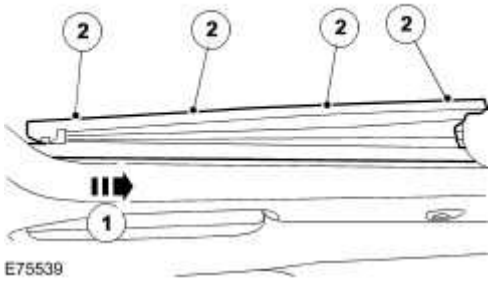

Short wheelbase

4 . **NOTE:**

Left-hand shown, right-hand similar.

Install the sight shields.

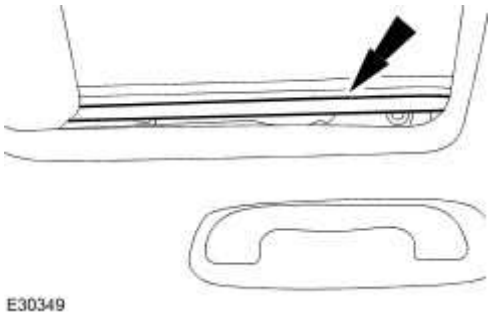

All vehicles

5 . Align the roof opening panel glass.
For additional information, refer to Roof Opening Panel Glass (76.82.05)

Roof Opening Panel Motor (86.76.01)

Removal

1 . **NOTE:**
Make sure the roof opening panel is in the closed position.

Remove the overhead console. <<501-12>>

2 . Detach the roof open panel motor.

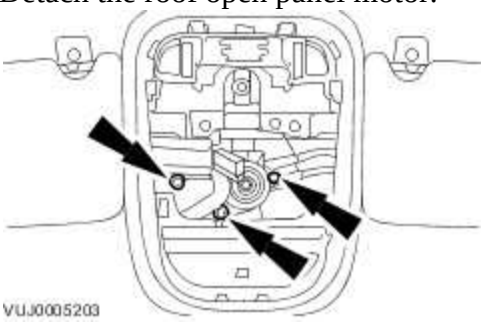

3 . Remove the roof opening panel motor.

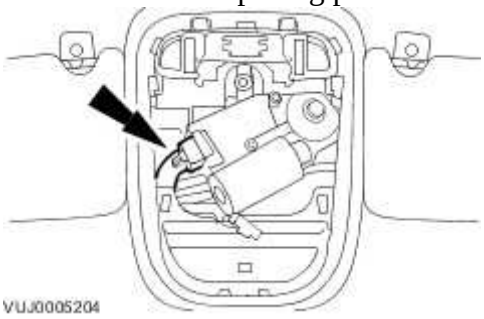

Installation

1 . To install, reverse the removal procedure.
- Tighten to 3 Nm.

www.JagDocs.com

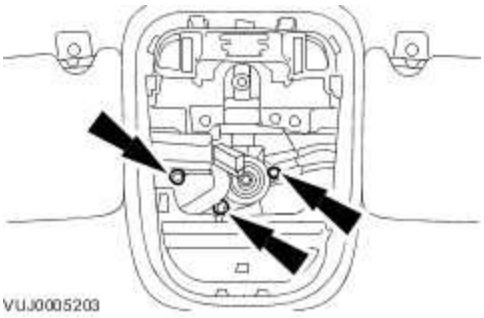
VUJ0005203

Roof Opening Panel Weatherstrip (76.82.15)

Removal

1 . **CAUTION: Do not operate the roof opening panel when the roof opening panel glass is removed.**

Remove the roof opening panel glass.
For additional information, refer to Roof Opening Panel Glass (76.82.05)

2 . Remove the roof opening panel weatherstrip.

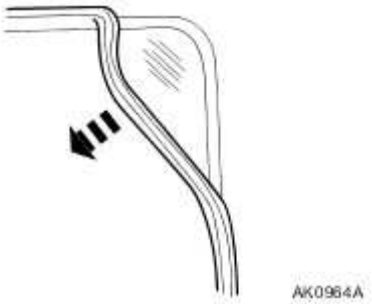

Installation

1 **NOTE:**
. Make sure that this component is installed to the noted removal position.

To install, reverse the removal procedure.

- Position the roof opening glass seal seam in the center of the rear facing side of the roof opening panel glass.

www.JagDocs.com

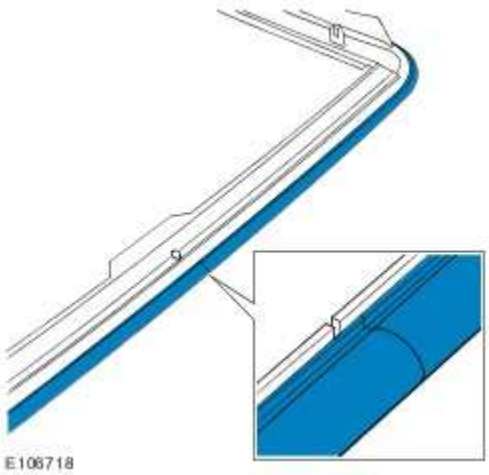
10
9
11
E106718

Trough Assembly (76.82.58)

Removal

1 . **CAUTION: Do not operate the roof opening panel when the roof opening glass is removed.**

Remove the roof opening panel glass.
For additional information, refer to

2 . **NOTE:**
Right-shown, left-hand similar.

Remove the trough retaining screws.

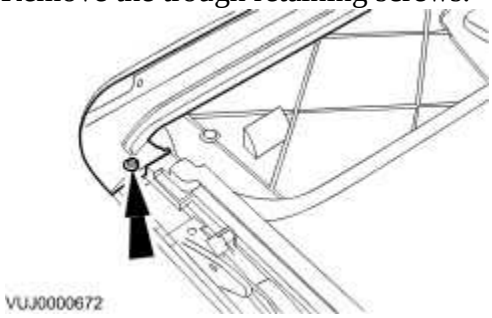

3 . Remove the trough assembly.

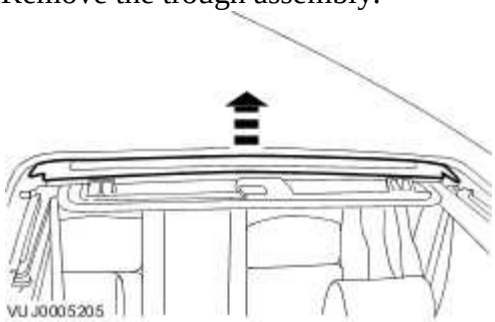

Installation

1 . **CAUTION: Do not overtighten the trough assembly screws.**

NOTE:
Make sure the trough assembly is correctly seated in the guide clip.

www.JagDocs.com

To install, reverse the removal procedure.

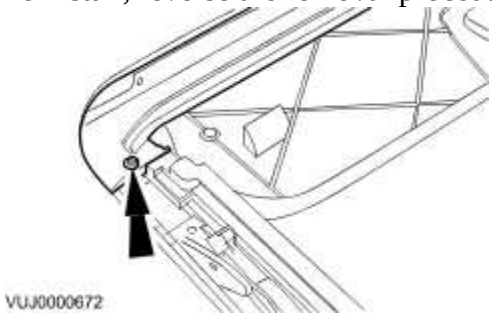

Specifications

Torque Specifications

Description	Nm	lb-ft	lb-in
Front bumper retaining bolts	23	17	-
Rear bumper retaining bolts	17	13	-
Rear bumper cover retaining bolts	6	-	53

www.JagDocs.com

Bumpers

The vehicle is fitted with a chassis mounted aluminium beam and is covered by a one piece color co-ordinated front bumper cover. the fitment of the front fog lights is standard, which are mounted via brackets to the bumper covers. Inserts, side marker lamps/reflectors, and a dorchester grey splitter vane are fitted as standard. The parking aid sensors are mounted in the bumper cover and are fitted if the vehicle is equipped with a parking aid system. Headlamp washers are optional.

The rear bumper beam is of aluminium construction and is covered by a one piece color co-ordinated rear bumper cover. Inserts and side marker lamps/reflectors are fitted as standard. The parking aid sensors are mounted in the bumper cover and are fitted if the vehicle is equipped with a parking aid system.

Front Bumper (76.22.08)

Removal

1 Remove the front bumper cover.
. For additional information, refer to Front Bumper Cover - VIN Range: G00442->H18679 (76.22.78)

2 . Remove the front bumper.

1) Remove the retaining bolts.

2) Remove and discard the retaining rivets.

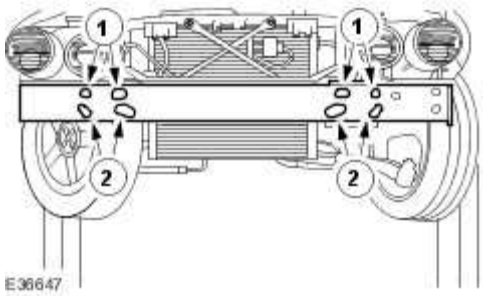

Installation

1 . **NOTE:**

The front bumper lower retaining rivets do not need to be fitted.

Tighten to 23 Nm.

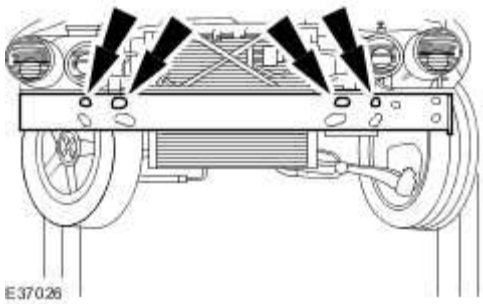

www.JagDocs.com

Front Bumper Cover - VIN Range: G00442->H18679 (76.22.78)

Removal

All vehicles

1 . Remove the radiator grille. <<501-08>>

2 . Remove the side marker lamps. <<417-01>>

3 . Detach the front bumper cover retaining clips.

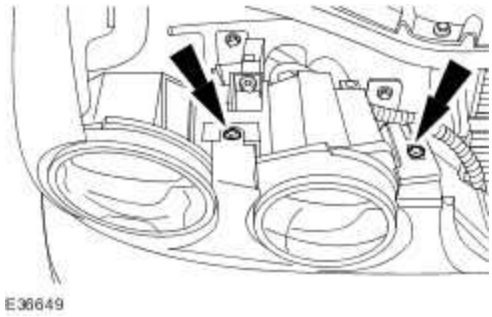

4 . Remove the radiator splash shield. <<501-02>>

5 . **NOTE:**

Right-hand shown, left-hand similar.

Detach the front fender splash shield.

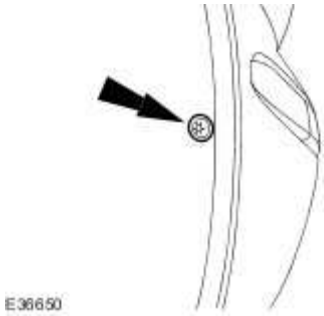

6 . Disconnect the lighting electrical connector.

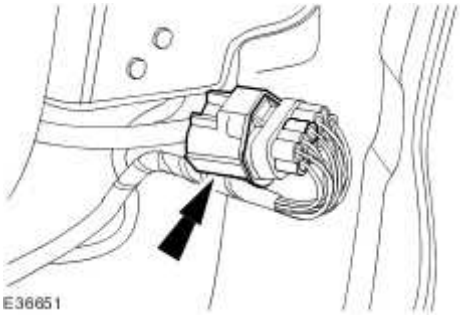

Vehicles with headlamp washers

7 . Detach the headlamp washer hose from the reservoir.

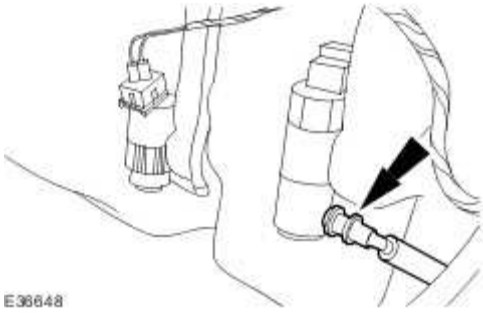

All vehicles

8 . **NOTE:**

Right-hand shown, left-hand similar.

Remove the front bumper cover.

- Detach the front bumper cover from the retaining clips.

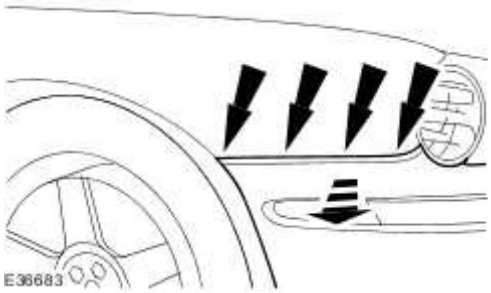

www.JagDocs.com

Vehicles with parking aid

9 . Disconnect the parking aid sensor electrical connectors.

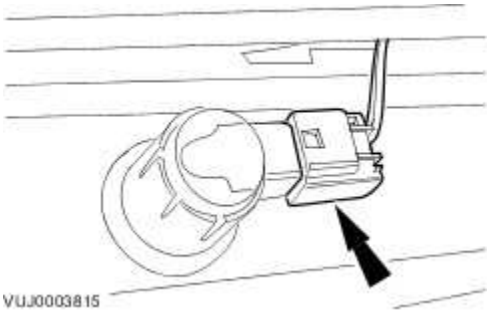

Installation

All vehicles

1 . To install, reverse the removal procedure.

Vehicles with parking aid

2 . Carry out the following procedure if a new bumper cover or a new parking aid sensor holder is to be fitted.

WARNING: 3M VHB surface cleaner is highly flammable. Do not smoke or carry lighted tobacco or open flame of any type. Highly flammable vapors are always present and may ignite. Failure to follow these instructions may result in personal injury.

WARNING: 3M VHB surface cleaner is harmful. Avoid contact with the eyes. Avoid ingestion or inhalation. Avoid contact with the skin. If the cleaner contacts the eyes, flush the eyes with cold water for at least 15 minutes and seek immediate medical attention. If taken internally do not induce vomiting, seek immediate medical attention. If the vapors are inhaled, remove the person to fresh air. If the signs/symptoms of inhalation persist, seek medical attention. If the cleaner contacts the skin, immediately flush the skin with large amounts of water. Remove contaminated clothing. If the irritation persists seek medical attention. Failure to follow these instructions may result in personal injury.

3 **NOTE:**

.

New parking aid sensor holders should be painted before assembly. Do not paint the bonding surface.

NOTE:

Wipe in one direction only.

Wipe the bonding surface of the parking aid sensor holder with 3M VHB surface cleaner.

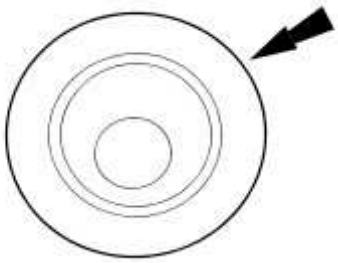

E39470

4 **NOTE:**

.

New bumper covers should be painted before assembly. Do not paint the bonding surface.

NOTE:

Wipe in one direction only.

NOTE:

Front bumper cover shown, rear similar.

Wipe the area around the front bumper cover holder aperture with 3M VHB surface cleaner.

www.JagDocs.com

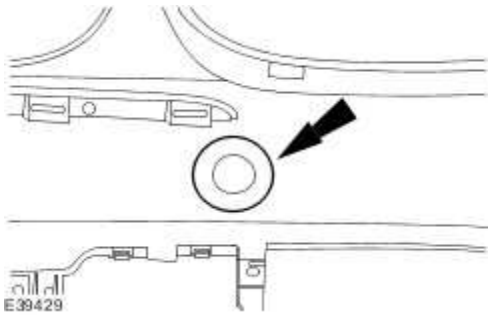

WARNING: 3M adhesive DP8005 is highly flammable. Do not smoke or carry lighted tobacco or open flame of any type. Highly flammable vapors are always present and may ignite. Failure to follow these instructions may result in personal injury.

WARNING: 3M adhesive DP8005 is harmful. Avoid contact with the eyes. Avoid ingestion or inhalation. Avoid contact with the skin. If the adhesive contacts the eyes, flush the eyes with cold water for at least 15 minutes and seek immediate medical attention. If taken internally do not induce vomiting, drink two glasses of water and seek immediate medical attention. If the adhesive vapors are inhaled, remove the person to fresh air. If the signs/symptoms of inhalation persist, seek medical attention. If the adhesive contacts the skin, immediately flush the skin with large amounts of water. Remove contaminated clothing. If the irritation persists seek medical attention. Failure to follow these instructions may result in personal injury.

5. **CAUTION: 3M adhesive DP8005 must only be applied using a 3M EPX applicator and an orange 10:1 ratio applicator nozzle.**

Make sure the applicator nozzle is correctly aligned on to the EPX applicator.

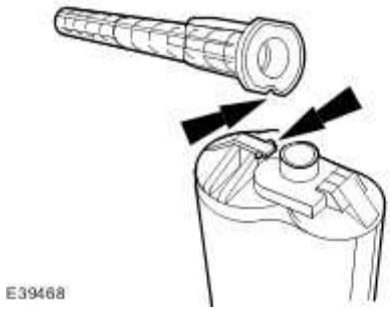

6. **CAUTION: 3M adhesive DP8005 has a work life of three minutes. Do not apply the adhesive to more than one parking aid sensor holder at a time.**

NOTE:

Make sure the adhesive is correctly mixed.

NOTE:

Apply enough adhesive to fill the joint.

NOTE:

Apply adhesive to one surface only.

Apply the adhesive to the parking aid sensor holder bonding surface.

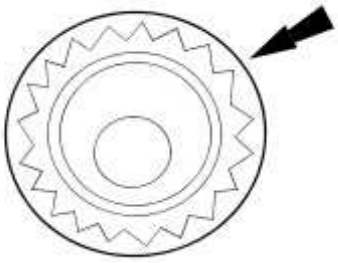

E39467

7. **NOTE:**

Excess adhesive should be removed from the painted surface within ten minutes of application.

NOTE:

Using a suitable tool, remove excess adhesive.

Fit the parking aid sensor holder immediately.

- Apply pressure to the parking aid sensor holder until the adhesive sets.

www.JagDocs.com

- Secure the parking aid sensor holder to the bumper with a suitable adhesive tape.

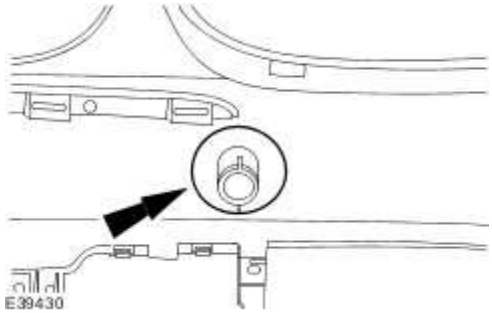

8 **NOTE:**

.

Allow the adhesive to cure for 24 hours at room temperature before fitting the parking aid sensor.

To install, reverse the removal procedure.

Front Bumper Cover - VIN Range: H18680->H99999 (76.22.78)

Removal

All vehicles

1 . Remove the radiator grille.
For additional information, refer to Radiator Grille (76.55.03)

2 . **NOTE:**

Right-hand shown, left-hand similar.

Detach the front bumper cover retaining clips.

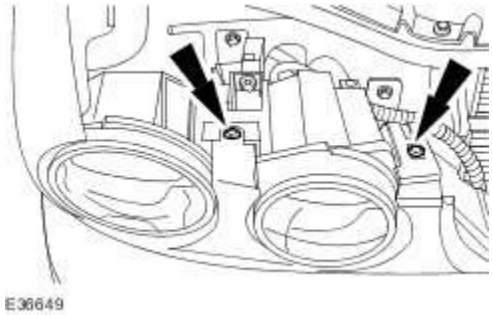

3 . Detach the radiator splash shield.

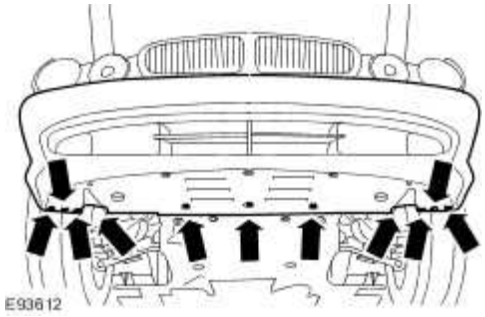

4 . **NOTE:**

Right-hand shown, left-hand similar.

www.JagDocs.com

Detach the front fender splash shield.

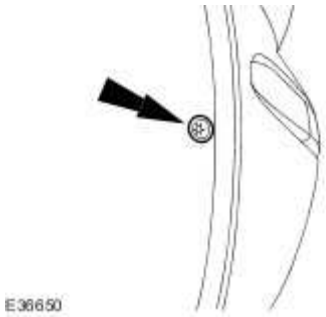

5 . Disconnect the lighting electrical connector.

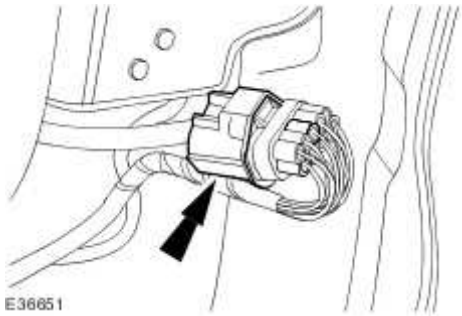

Vehicles with headlamp washers

6 . Detach the headlamp washer hose from the reservoir.

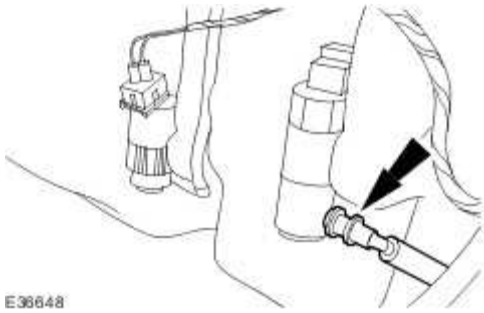

All vehicles

7 . **NOTE:**

Right-hand shown, left-hand similar.

Remove the front bumper cover.

- Detach the front bumper cover from the retaining clips.

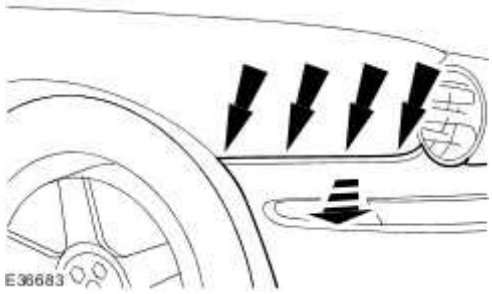

Installation

All vehicles

1 . To install, reverse the removal procedure.

Vehicles with parking aid

2 . Carry out the following procedure if a new bumper cover or a new parking aid sensor holder is to be fitted.

WARNING: 3M VHB surface cleaner is highly flammable. Do not smoke or carry lighted tobacco or open flame of any type. Highly flammable vapors are always present and may ignite. Failure to follow these instructions may result in personal injury.

WARNING: 3M VHB surface cleaner is harmful. Avoid contact with the eyes. Avoid ingestion or inhalation. Avoid contact with the skin. If the cleaner contacts the eyes, flush the eyes with cold water for at least 15 minutes and seek immediate medical attention. If taken internally do not induce vomiting, seek immediate medical attention. If the vapors are inhaled, remove the person to fresh air. If the signs/symptoms of inhalation persist, seek medical attention. If the cleaner contacts the skin, immediately flush the skin with large amounts of water. Remove contaminated clothing. If the irritation persists seek medical attention. Failure to follow these instructions may result in personal injury.

www.JagDocs.com

3 **NOTE:**

· New parking aid sensor holders should be painted before assembly. Do not paint the bonding surface.

NOTE:

Wipe in one direction only.

Wipe the bonding surface of the parking aid sensor holder with 3M VHB surface cleaner.

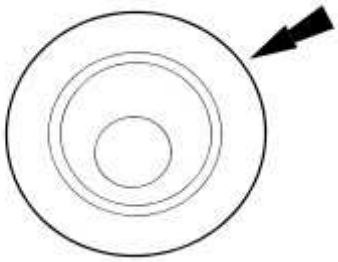

4 **NOTE:**

·

New bumper covers should be painted before assembly. Do not paint the bonding surface.

NOTE:

Wipe in one direction only.

NOTE:

Front bumper cover shown, rear similar.

Wipe the area around the front bumper cover holder aperture with 3M VHB surface cleaner.

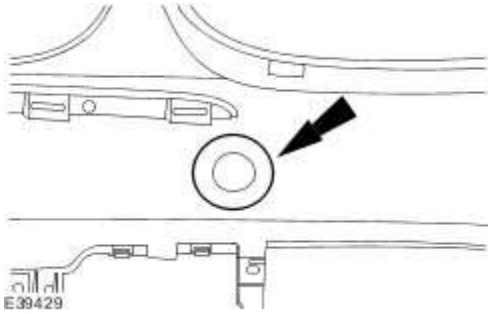

WARNING: 3M adhesive DP8005 is highly flammable. Do not smoke or carry lighted tobacco or open flame of any type. Highly flammable vapors are always present and may ignite. Failure to follow these instructions may result in personal injury.

WARNING: 3M adhesive DP8005 is harmful. Avoid contact with the eyes. Avoid ingestion or inhalation. Avoid contact with the skin. If the adhesive contacts the eyes, flush the eyes with cold water for at least 15 minutes and seek immediate medical attention. If taken internally do not induce vomiting, drink two glasses of water and seek immediate medical attention. If the adhesive vapors are inhaled, remove the person to fresh air. If the signs/symptoms of inhalation persist, seek medical attention. If the adhesive contacts the skin, immediately flush the skin with large amounts of water. Remove contaminated clothing. If the irritation persists seek medical attention. Failure to follow these instructions may result in personal injury.

5. **CAUTION: 3M adhesive DP8005 must only be applied using a 3M EPX applicator and an orange 10:1 ratio applicator nozzle.**

Make sure the applicator nozzle is correctly aligned on to the EPX applicator.

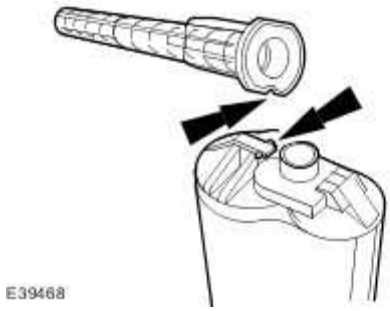

6. **CAUTION: 3M adhesive DP8005 has a work life of three minutes. Do not apply the adhesive to more than one parking aid sensor holder at a time.**

NOTE:

Make sure the adhesive is correctly mixed.

www.JagDocs.com

NOTE:

Apply enough adhesive to fill the joint.

NOTE:

Apply adhesive to one surface only.

Apply the adhesive to the parking aid sensor holder bonding surface.

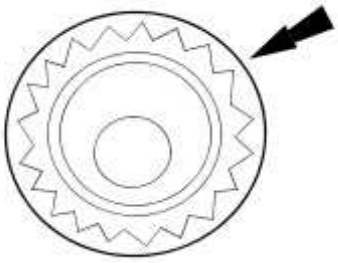

E39467

7 **NOTE:**

.

Excess adhesive should be removed from the painted surface within ten minutes of application.

NOTE:

Using a suitable tool, remove excess adhesive.

Fit the parking aid sensor holder immediately.

- Apply pressure to the parking aid sensor holder until the adhesive sets.
- Secure the parking aid sensor holder to the bumper with a suitable adhesive tape.

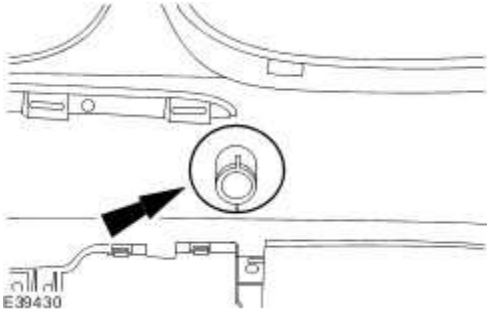

8 **NOTE:**

.

Allow the adhesive to cure for 24 hours at room temperature before fitting the parking aid sensor.

To install, reverse the removal procedure.

www.JagDocs.com

Front Bumper Cover Insert (76.22.73)

Removal

All vehicles

1 . Remove the front bumper cover.
For additional information, refer to

Vehicles with headlamp washers

2 . Remove the headlamp washer lower jet from the upper housing cup.

All vehicles

3 . Remove the front bumper cover insulation foam.

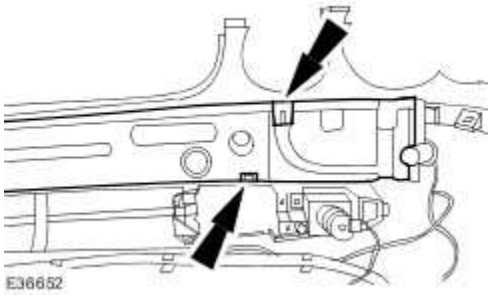

4 . Remove the bumper cover insert.

- Remove the retaining clips.

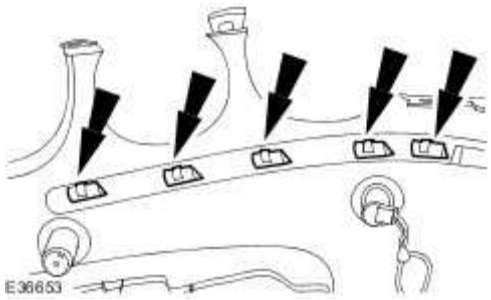

Installation

1 . To install, reverse the removal procedure.

www.JagDocs.com

Rear Bumper (76.22.27)

Removal

1 . Remove the rear bumper cover.
For additional information, refer to

2 . **NOTE:**
Left-hand shown, right-hand similar.

Remove the exhaust hanger.

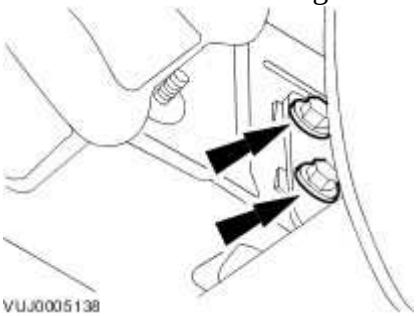

3 . Remove the rear bumper.

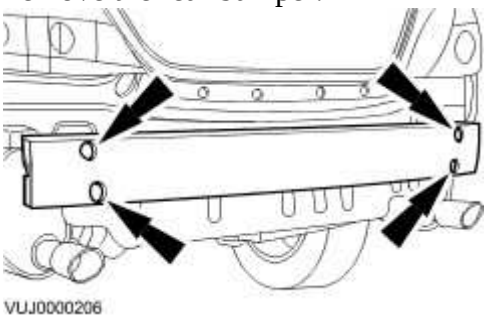

Installation

1 . To install, reverse the removal procedure.
Tighten to 17 Nm.

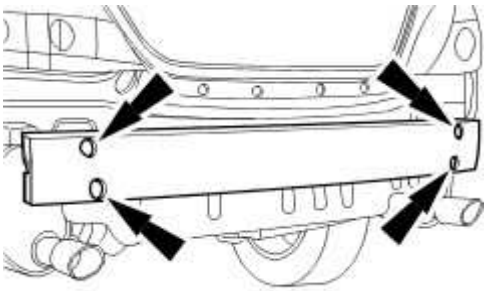

VUJ0000206

www.JagDocs.com

Rear Bumper Cover - VIN Range: G00442->H18679 (76.22.74)

Removal

1 . Raise and support the vehicle. <<100-02>>

2 . Remove the side marker lamps. <<417-01>>

3 . Remove the luggage compartment floor covering.

1) Remove the luggage compartment floor covering securing screws.

2) Remove the luggage compartment floor covering.

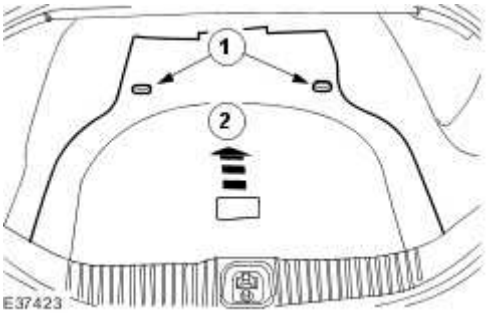

4 . Remove the luggage compartment side trim panel.

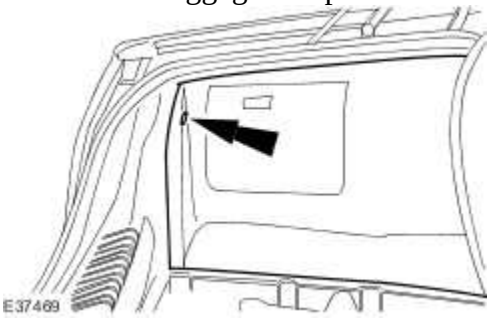

5 . Remove the rear luggage compartment trim retaining screws.

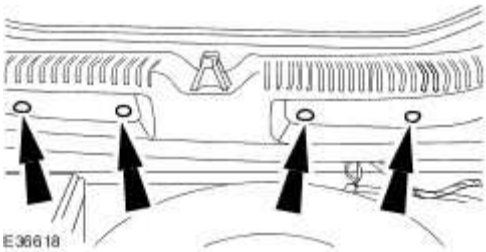

6 . Remove the rear luggage compartment trim.

- Remove the rear luggage compartment trim retaining clips.

7 . Disconnect the side marker and parking aid electrical connector.

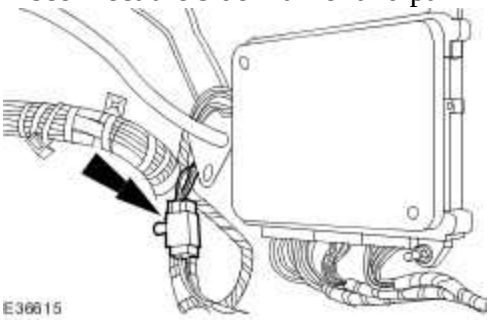

8 . Remove the rear bumper cover retaining bolts.

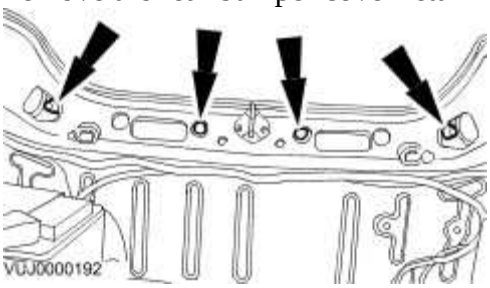

9 . **NOTE:**

Left-hand shown, right-hand similar.

Remove the rear fender splash shield retaining screw.

www.JagDocs.com

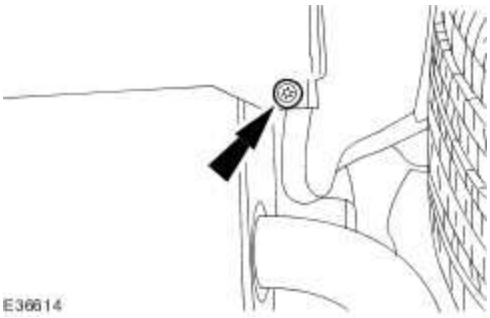

10 . Remove the bumper cover lower retaining screws.

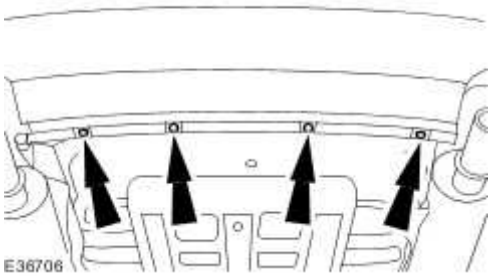

11 . **NOTE:**

Left-hand shown, right-hand similar.

Detach the rear bumper cover.

- Detach the bumper cover from the retaining clips.

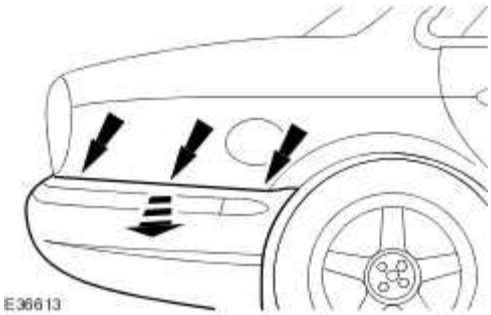

12 . Remove the rear bumper.

- Detach the wiring harness grommet from the rear quarter panel.

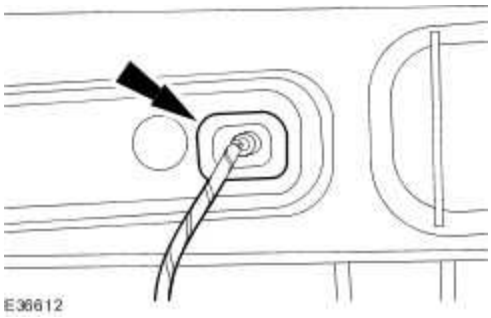

Installation

1 . To install, reverse the removal procedure.
- Tighten to 6 Nm.

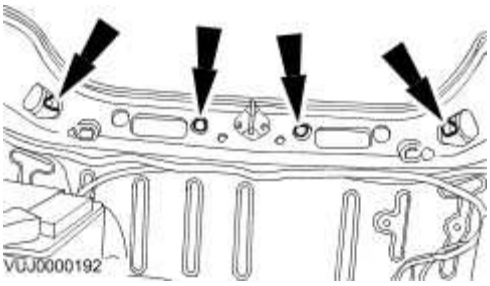

www.JagDocs.com

Rear Bumper Cover - VIN Range: H18680->H99999 (76.22.74)

Removal

1 . Raise and support the vehicle.
For additional information, refer to Lifting

2 . Remove the luggage compartment floor covering.

1) Remove the luggage compartment floor covering securing screws.

2) Remove the luggage compartment floor covering.

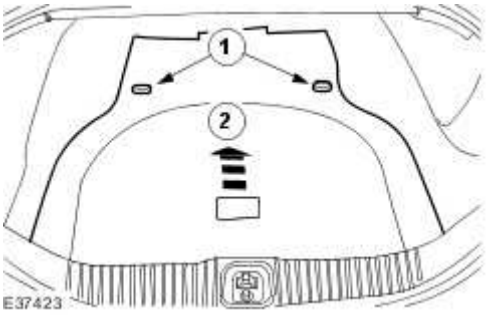

3 . **NOTE:**
Left-hand shown, right-hand similar.

Remove the luggage compartment side trim panel.

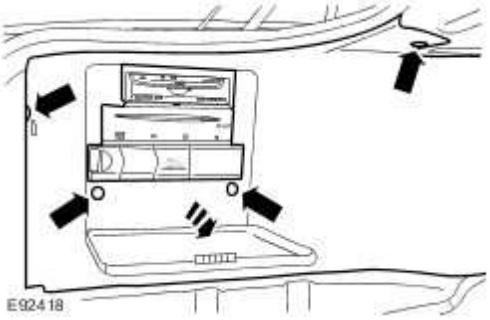

4 . Remove the rear luggage compartment trim panel covers.

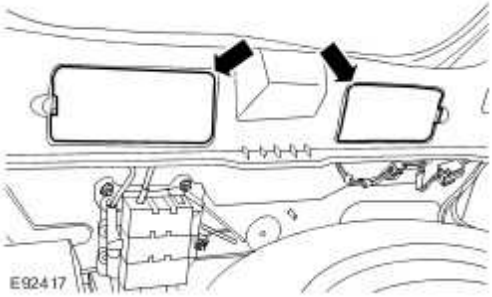

5 . Remove the rear luggage compartment trim.

- Remove the rear luggage compartment trim retaining clips.

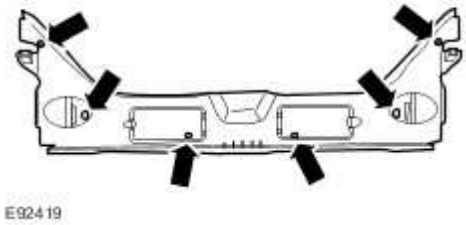

6 . Disconnect the side marker and parking aid electrical connector.

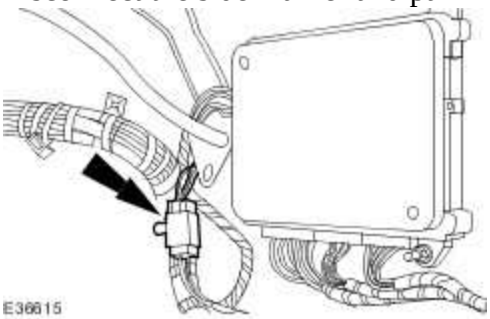

7 . Remove the rear bumper cover retaining bolts.

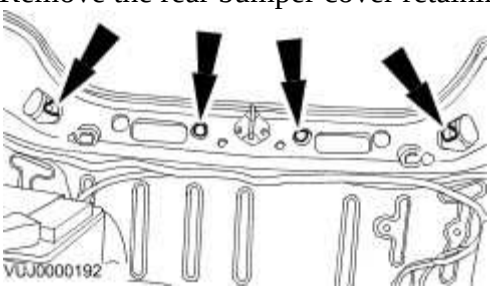

8 . **NOTE:**

Left-hand shown, right-hand similar.

www.JagDocs.com

Remove the rear fender splash shield retaining screw.

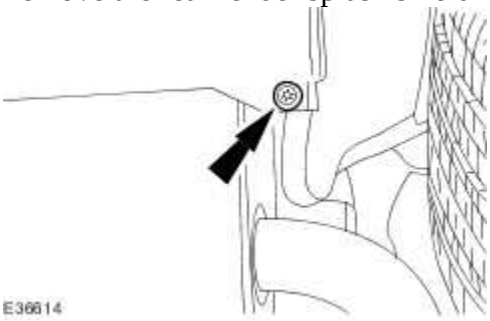

9 . **NOTE:**

Right-hand shown, left-hand similar.

Detach the fender splash shield.

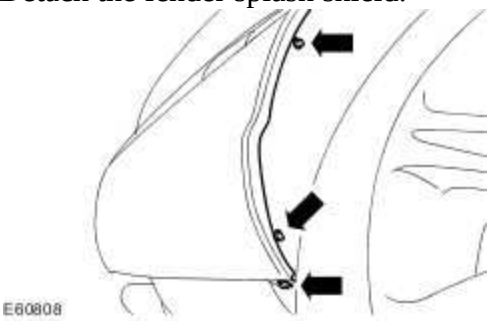

10 . Remove the bumper cover lower retaining screws.

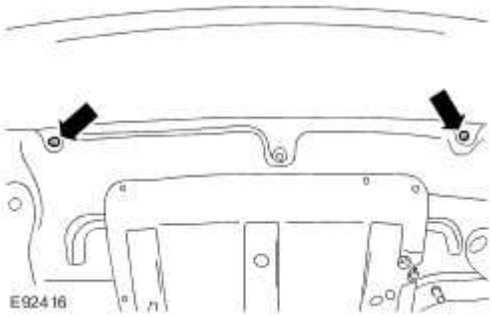

11 . **NOTE:**

Right-hand shown, left-hand similar.

Disconnect the tire pressure monitoring system rear antenna electrical connector.

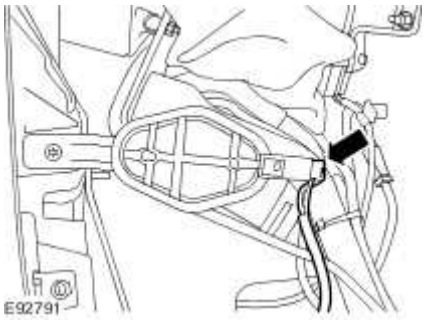

12 . **NOTE:**

Left-hand shown, right-hand similar.

Detach the rear bumper cover.

- Detach the bumper cover from the retaining clips.

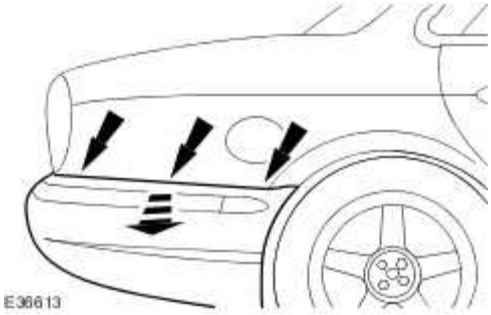

13 . Remove the rear bumper.

- Detach the wiring harness grommet from the rear quarter panel.

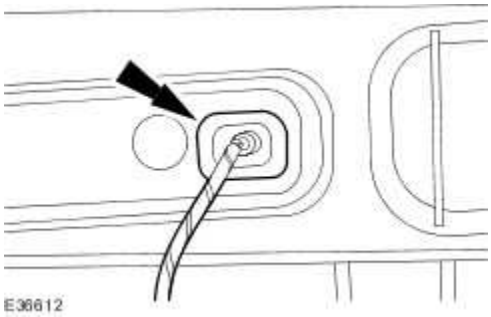

Installation

1 . To install, reverse the removal procedure.

- Tighten to 6 Nm.

www.JagDocs.com

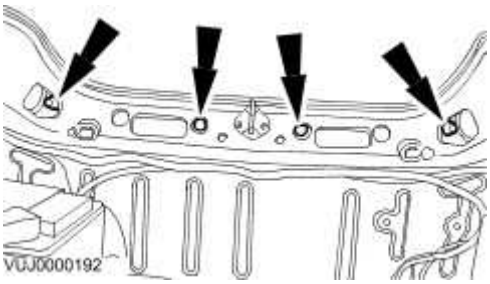
VGJ0000192

Rear Bumper Cover Insert (76.22.75)

Removal

1 Remove the rear bumper cover.
. For additional information, refer to Rear Bumper Cover - VIN Range: G00442->H18679 (76.22.74)

2 . Remove the bumper cover insert.

- Remove the bumper cover insert retaining clips.

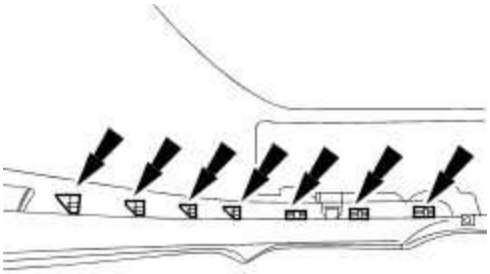

E36611

Installation

1 . To install, reverse the removal procedure.

www.JagDocs.com

Specifications

Torque Specifications

Description	Nm	lb-ft	lb-in
Front safety belt retractor retaining bolt	35	26	-
Front safety belt buckle retaining bolt	35	26	-
Front safety belt shoulder height adjuster retaining bolts	25	18	-
Front safety belt retractor to height adjuster retaining nut	35	26	-
Front safety belt retractor webbing guide retaining bolts	9	-	80
Front safety belt anchor to seat frame retaining bolt	35	26	-
Rear center safety belt retractor retaining bolt	35	26	-
Rear center safety belt upper mounting bracket retaining bolt	35	26	-
Rear safety belt retractor retaining bolt	35	26	-
Rear safety belt upper mounting bracket retaining bolt	35	26	-
Rear safety belt buckle retaining nut	35	26	-
Rear outer safety belt anchor to floor retaining bolt	35	26	-
Rear center safety belt anchor to floor retaining bolt	35	26	-

Safety Belt System

WARNING: To avoid accidental deployment and possible personal injury, the backup power supply must be depleted before repairing or replacing any air bag occupant restraints system (ORS) components. To deplete the backup power supply energy, disconnect the battery ground cable and wait one minute. Failure to follow this instructions may result in personal injury.

WARNING: Never probe the connectors on the air bag module or pretensioners. Doing so may result in deployment. Failure to follow this instructions may result in personal injury.

WARNING: All safety belt assemblies including retractors, buckles, child safety seat tether brackets and attaching hardware should be inspected after any collision. New safety belt assemblies should be fitted unless a qualified technician finds that the assemblies show no damage and operate correctly. New safety belt assemblies should also be fitted where safety belt assemblies not in use during a collision, are inspected and damage or incorrect operation is noted. Failure to follow these instructions may result in personal injury.

CAUTION: Electronic modules are sensitive to static electrical charges. If exposed to these charges, damage may result.

NOTE:

Repair is made by replacement only. If a part is replaced and the new part does not correct the condition, install the original part and carry out the diagnostic procedure again.

VUJ0002037

WARNING: All vehicles fitted with the passenger air bag from the factory have a WARNING sticker attached to the instrument panel, PROHIBITING the use of rear

www.JagDocs.com

facing child seats in the front seating position. Failure to follow this instruction may result in personal injury.

NOTE:

The front seat belts, which incorporate the seat belt retractors and pretensioners are supplied as an assembly and not serviceable components.

The safety belt system fitted to the vehicle utilizes the conventional lap and diagonal three point fixing. The front and rear safety belts use a conventional static type buckle which is attached to the seat frame of each front seat and directly to the floor pan underneath the rear seats.

The front safety belt buckles and rear safety belt retractors incorporate pretensioners.

Each front safety belt buckle is fitted with a switch, which is connected through a wiring harness to a warning indicator which is housed within the instrument cluster. The safety belt retractors which are mounted within the base of the B pillars, incorporate a torsion bar load limiting device. This device consists of a retractor reel which is mounted onto a spindle (torsion bar) which once the sensor has locked the retractor reel and a predetermined load is applied, twists and allows additional webbing into the system. It should be considered that during any event that utilizes the full capability of the safety belts, the webbing may have been elongated and the torsion bar may have twisted. For this reason, if a vehicle is involved in an accident which results in the deployment of the airbag(s), all the safety belts that were in use at the time of the accident MUST NOT be reused, NEW safety belts MUST be installed.

Seat Belt Warning Reminder

The seat belt warning reminder will allow the seat belt warning lamp constantly to illuminate if either or both of the front occupants are unbuckled. If only the driver is present the seat belt warning reminder will pertain only to the driver and extinguish when the driver seat buckle becomes fastened. If the front passenger is present also, the warning will pertain to both front occupants and the warning will extinguish when both the driver and front passenger seat belt buckles become fastened. The passenger seat weight sensor will be used to determine whether a front passenger is present or not.

European Beltminder

The beltminder function is an incremental warning to seat belt warning reminder. Under the conditions where a front occupant is present and unbelted or becomes unbelted and the vehicle is moving above 16 km/h (10 mile/h) then an incremental warning of an intermittent tone will start or resume accompanied by the seat belt warning lamp flashing. The intermittent tone and flashing lamp will last for 10 seconds and repeat every 30 seconds for 5 minutes. The incremental warnings will stop when conditions are satisfied such that all occupants seated in the front of the vehicle have their seat buckles fastened or if the vehicle is halted.

Beltminder Disconnection Procedure.

1 . Make sure the front passenger seat is unoccupied. Steps 2 - 5 must be completed within 60 seconds.

2 . Turn on the ignition to the RUN position (do not start the engine).

3 . Buckle the driver seat belt buckle until the seat belt warning lamp extinguishes.

4 . Unbuckle the drivers seat belt buckle until the seat belt warning lamp illuminates.

5 . Repeat 3 and 4 a further eight times.

6 . Upon the action that will result in the driver seat belt buckle being unbuckled for the ninth time, the cluster will exhibit a single chime. The single chime is acknowledgment that the beltminder feature has been disabled.

The beltminder feature will be disabled until the aforementioned process (steps 1 - 6 are repeated). Upon repeating the process, the beltminder feature will be reactivated.

Emergency Locking Retractor (ELR)

The retractors in all seat positions feature ELR. During any period of sudden deceleration, or under torsional load when cornering at speed, a sensor weight within the safety belt retractor moves a locking pawl against the teeth on the retractor reel, which then locks the retractor preventing any further release of webbing. As soon as the load applied onto the retractor through the safety belt webbing is removed the locking pawl releases the retractor reel and normal movement is returned to the retractor.

Automatic Locking Retractor (ALR)

Automatic locking retractors (ALR) are installed in all passenger seat positions. The safety belt webbing on these are clearly marked with a label to show their operating feature. The ALR feature is initiated by pulling all of the webbing from the retractor with the buckle fastened, when the webbing is then released as it retracts the retractor locks allowing travel only back into the retractor preventing the safety belt from introducing slack, and making any child seat it may be restraining more secure. The ALR mode of the retractor is disengaged by allowing the unfastened webbing to fully retract on to the reel.

Safety Belt System - Armoured Vehicles

The safety belt system consist of seat belts at each seating position. The safety belts are of the non-stretch type and are designed to be used without any supplementary restraint systems. All supplementary restraint systems including airbags and safety belt pre-tensioners have either been removed or deactivated.

www.JagDocs.com

Safety Belt System

Inspection and Verification

1 . Verify the customer concern by operating the safety belt.

2 . Visually inspect for obvious signs of mechanical and electrical damage.

Visual Inspection Chart

Mechanical	Electrical
Loose webbing	Warning indicator bulb
Damaged/frayed webbing	
Safety belt retractor	

1 . If the fault is not visually evident determine the symptom(s) and proceed to the Symptom Chart.

Normal Mode - Occupant Restraint System inoperative

Possible Source(s):

- Broken tooth on retractor sensor gear.
- Loose webbing.

Action(s) to take:

- REFER to the Functional Test in this section.

Automatic Locking Retraction System (ALR)
Inoperative.

Possible Source(s):

- Broken tooth on retractor sensor gear.
- Loose webbing.

Action(s) to take:

- REFER to the Functional Test in this section.

Poor Retraction

WARNING: In the event of an accident in which the air bags have been deployed, the front safety belts that were in use and the rear whether in use or not at the time of the accident must be removed and NEW safety belts MUST be installed. Failure to follow this instruction will result in personal injury and component failure.

If a safety belt does not retract correctly, check that the anchor covers and trim bezels are correctly installed and not rubbing against the safety belt webbing. Where necessary, check the safety belt webbing is not rubbing at one end of the retractor cover slot and if so, correct by loosening the retaining bolt, aligning the retractor to centralize the safety belt webbing and retighten the bolt.

The vehicle is equipped with two front and three rear inertia reel safety belts. These safety belts are "dual sensitive" which means that they have:

- a vehicle motion sensor, which locks the safety belt webbing under braking, cornering, on steep hills and in adverse camber conditions.
- a webbing motion sensor, which locks when the safety belt webbing is quickly extracted.

Both systems should be fully operational and can be checked by the tests below:

Vehicle Motion Sensor Test

Either of the following two procedures may be used to check correct operation of the vehicle motion sensor. Both methods require two people but note that people of larger than normal should not be asked to conduct these tests. This is to avoid the possibility of a fully unrolled safety belt webbing being mistaken for a correctly locked safety belt retractor.

Test Method 1 (braking)

WARNING: It is important that during this test, the wearer allows the safety belt to provide the restraint, the wearer should not attempt to anticipate the sudden deceleration and the driver should not brace themselves against the steering wheel. However, both the driver and the passenger must prepare themselves for the possibility that the safety belt will not lock. The passenger should hold their hands in front of him, just clear of the instrument panel or front seat backrest. Depending on which belt is being tested. Failure to follow these procedures will result in personal injury.

- Select for this test a quiet or private stretch of road. Make sure that the road is clear and that full visibility is maintained at all times.
- Both driver and passenger should adopt normal, comfortable seating position. Both occupants should wear the safety belts and the safety belt webbing must be correctly adjusted, with no slack.
- Proceed at a speed of approximately 10 km/h (6 miles/hour), do not exceed 10 km/h (6 miles/hour) for this test.

www.JagDocs.com

- Apply the foot brake sharply to stop the vehicle. If the vehicle motion sensitive lock mechanism is operating correctly, the safety belt webbing will lock and restrain the wearer.
- Conduct the test twice in each front and rear passenger seat position.
- Any safety belt retractor which does not restrain the wearer during this test must not be reused. A NEW safety belt must be installed.

Test Method 2 (Turning circle)

This method requires a flat open area of private road, sufficient for the vehicle to be driven in a continuous circle on full lock.

- The driver should wear the safety belt provided and the belt webbing must be correctly adjusted, with no slack.
- The passenger should occupy a rear seat with the safety belt correctly adjusted.
- Start the engine and, with the steering on full right-hand lock, drive the vehicle in a continuous circle at 16 km/h (10 miles/hour), do not exceed 16 km/h (10 miles/hour).
- When the speed is stable, the passenger should attempt to slowly extract the safety belt webbing from each safety belt retractor in turn. If the vehicle motion sensitive lock mechanism is operating correctly, it will not be possible to extract the webbing.
- Any safety belt retractor from which it is possible to extract the webbing during this test must not be used. A NEW safety belt must be installed.

Safety Belt Webbing Sensor Test

With the vehicle stationary and on level ground take firm hold of the safety belt webbing (on the tongue side of the upper safety belt anchor) and pull out quickly. The retractor should lock within 0.25 metre (10 inches), preventing further webbing payout. Any safety belt retractor from which it is possible to extract further webbing must not be used. A new safety belt must be installed.

Component Test

Service installation of Safety belts

It is possible that the safety belt assemblies installed in service may have been damaged during handling or installation to the vehicle. The damage is contained within the inner workings of the retractor and is therefore, not visible. However, the damage usually causes the retractor to stick or jam. The damage can only occur before installation is completed and is usually in one of the following ways:

- The safety belt webbing is allowed to retract onto the spindle until it jams the locking mechanism in a way that cannot occur when the safety belt is installed in the car. The safety belt webbing prevents the correct locking action and if the safety belt webbing is snatched or jerked out of the retractor, the loads are not taken on this high strength locking mechanism.

- The webbing is snatch loaded by attempted fast extraction or manual testing with the safety belt held in the hand. This can result in deceleration which are much higher than those occurring in accident situations and there is a risk of damage to the mechanism.

When handling safety belt assemblies, adopt the following procedures:

WARNING: If the following procedures are not successful, reject the safety belt assembly. Do not try to jerk or snatch the webbing out of the retractor as this may cause damage. Failure to follow these procedures could and may cause damage or personal injury.

- If the safety belt webbing retracts and will not extract under low webbing tension, install the retractor onto its mounting in the car , which will set it at its correct angle, and the safety belt webbing should extract easily.
- If it does not, feed 5-10 mm (3/16 - 3/8 inch) more safety belt webbing onto the spindle (rotate the spindle using finger pressure if necessary) and the safety belt webbing should then extract.

www.JagDocs.com

Front Safety Belt Buckle (76.73.49)

Removal

1 . Remove the front seat. For additional information, refer to <<501-10>>.

2 . Disconnect the front safety belt buckle electrical connector.

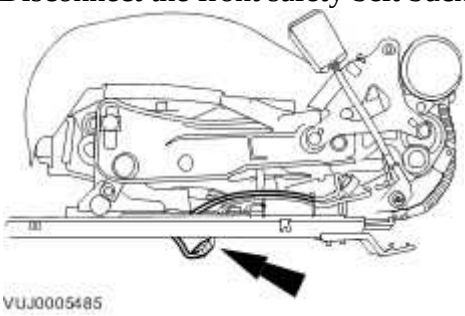

3 **NOTE:**

· The front safety belt buckle retaining bolt is part of the safety belt buckle and should not be separated.

Remove the front safety belt buckle.

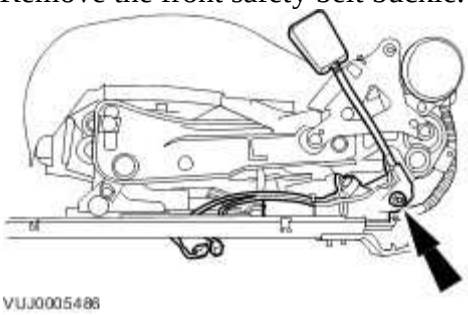

Installation

1

· **CAUTION: Make sure all retaining bolts and retaining nuts are hand started and hand tightened prior to final tightening. Failure to follow this instruction may result in component damage.**

To install, reverse the removal procedure.

- Tighten to 35 Nm.

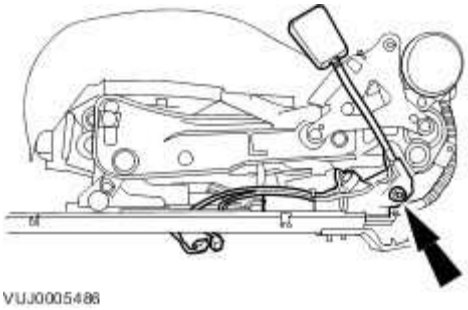

www.JagDocs.com

Front Safety Belt Retractor (76.73.10)

Removal

1 . Remove the B-pillar trim panel. For additional information, refer to <<501-05>>

2 . **NOTE:**
Left-hand shown, right-hand similar.

Remove the front safety belt access panel.

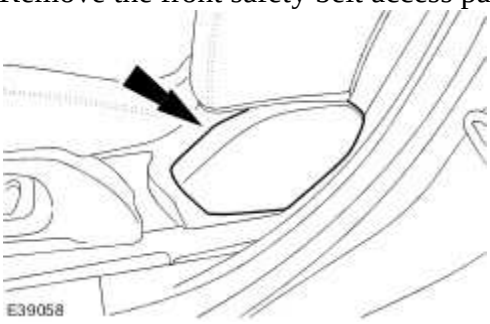

3 . **NOTE:**
Left-hand shown, right-hand similar.

Detach the front safety belt.

4 . Detach the front safety belt retractor webbing guide.

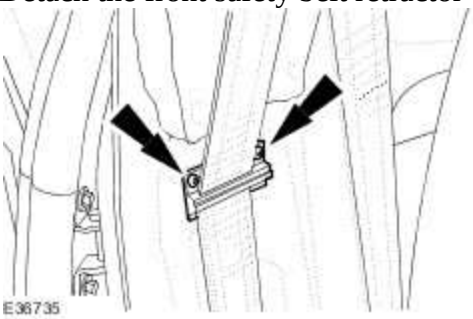

5 . Detach the front safety belt upper mounting bracket.

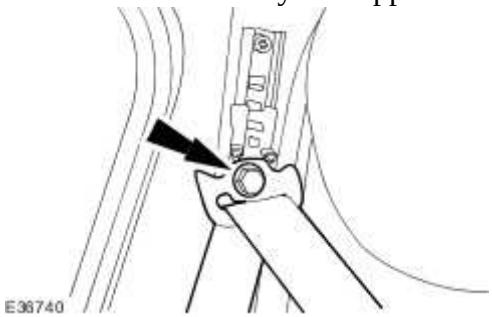

6 . Remove the front safety belt retractor.

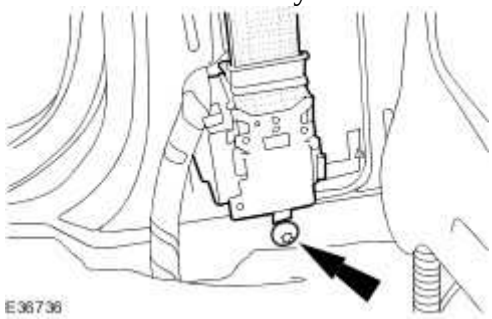

Installation

1 . **CAUTION: Make sure all retaining bolts and retaining nuts are hand started and hand tightened prior to final tightening. Failure to follow this instruction may result in component damage.**

To install, reverse the removal procedure.

Tighten to 35 Nm.

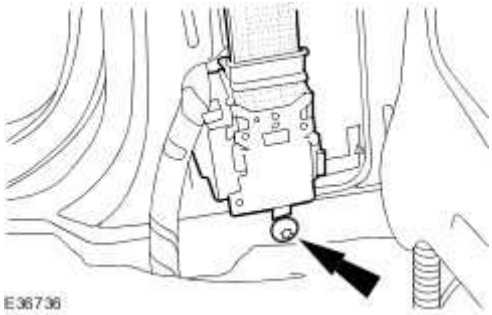

2 . Tighten to 35 Nm.

www.JagDocs.com

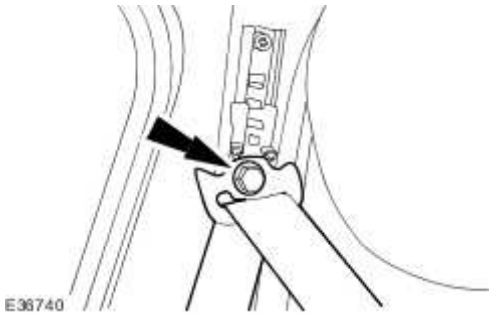

3 . Tighten to 9 Nm.

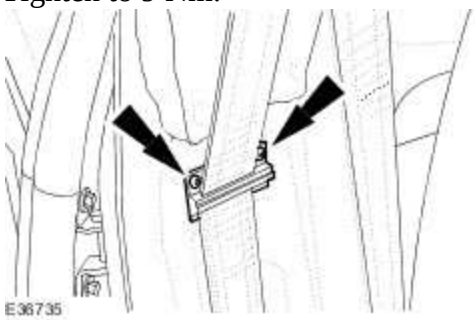

4 . Tighten to 35 Nm.

Front Safety Belt Shoulder Height Adjuster (76.73.12)

Removal

1 . Remove the B-pillar trim panel. For additional information, refer to <<501-05>>.

2 . Detach the front safety belt upper mounting bracket.

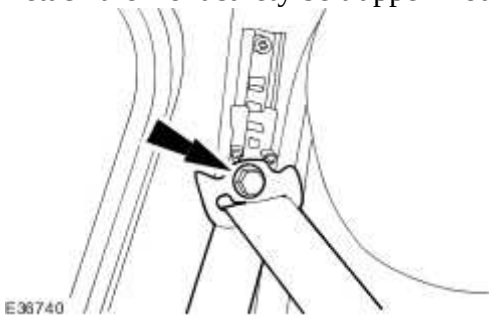

3 . Remove the front safety belt shoulder height adjuster.

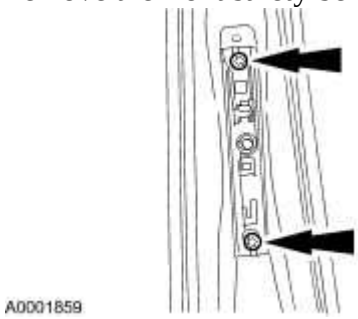

Installation

1 . **CAUTION: Make sure all retaining bolts and retaining nuts are hand started and hand tightened prior to final tightening. Failure to follow this instruction may result in component damage.**

To install, reverse the removal procedure.

- Tighten to 25 Nm.

www.JagDocs.com

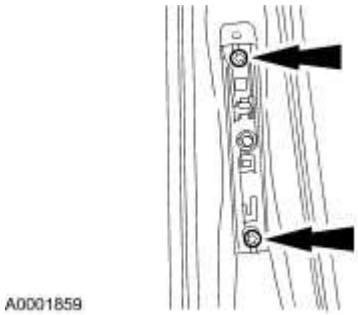

2 . Tighten to 35 Nm.

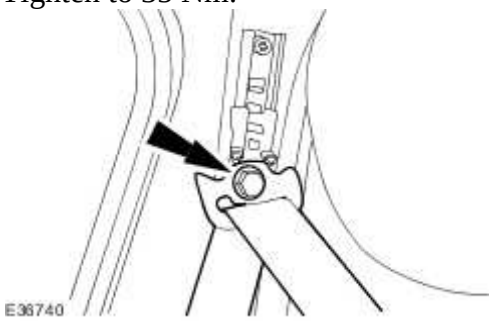

Rear Center Safety Belt Retractor (76.73.20)

Removal

1 . **WARNING: To avoid accidental deployment and possible personal injury, the backup power supply must be depleted before repairing or replacing any air bag supplemental restraint system (SRS) components. To deplete the backup power supply energy, disconnect the battery ground cable and wait for one minute. Failure to follow this instruction may result in personal injury.**

Disconnect the battery ground cable. <<414-01>>

2 . Remove the rear parcel shelf. <<501-05>>

3 . Disconnect the rear center safety belt retractor electrical connector.

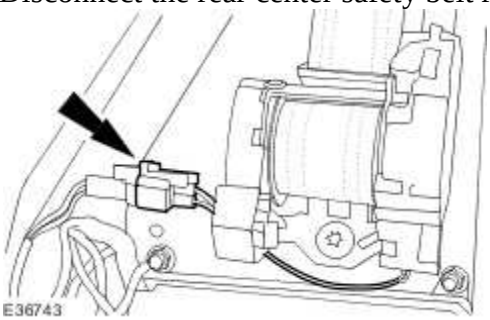

4 . Detach the rear center safety belt upper mounting bracket.

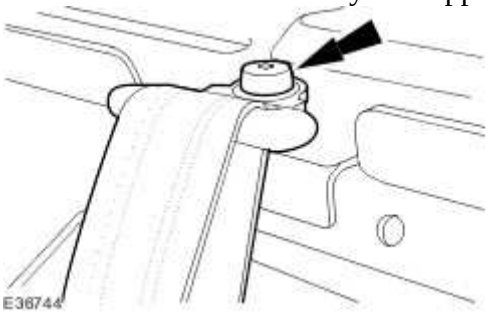

5 . Detach the rear center safety belt.

www.JagDocs.com

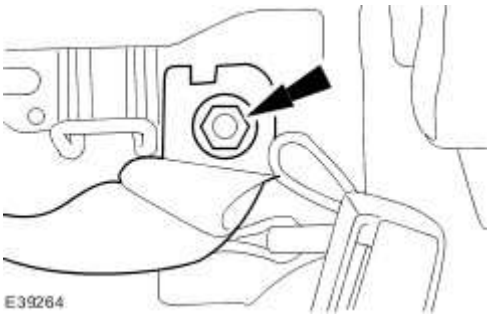

6 . Remove the rear center safety belt retractor.

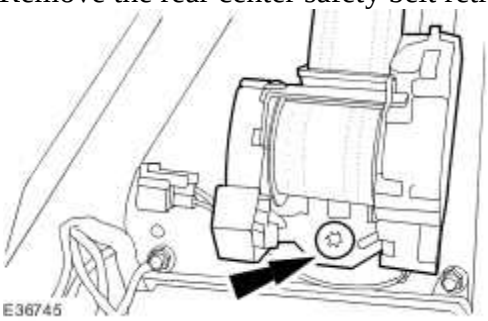

Installation

1 . **CAUTION: Make sure all retaining bolts and retaining nuts are hand started and hand tightened prior to final tightening. Failure to follow this instruction may result in component damage.**

To install, reverse the removal procedure.

Tighten to 35 Nm.

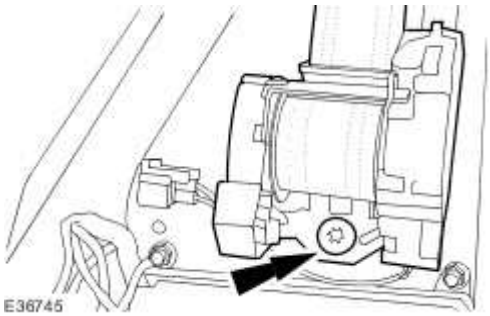

2 . Tighten to 35 Nm.

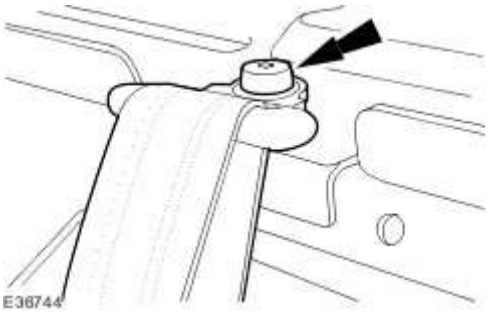

3 . Tighten to 35 Nm.

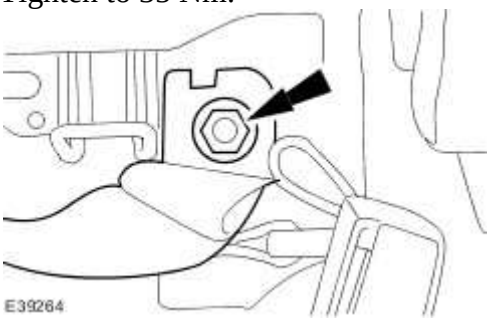

www.JagDocs.com

Rear Safety Belt Buckle (76.73.50)

Removal

1 . Remove the rear seat cushion. <<501-10>>

2 . **NOTE:**

Double rear safety belt buckle shown, single similar.

Disconnect the rear safety belt buckle electrical connectors.

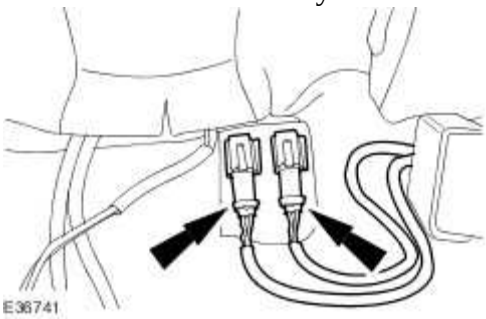

3 . **NOTE:**

Double rear safety belt buckle shown, single similar.

Remove the rear safety belt buckle.

Installation

1 . **CAUTION: Make sure all retaining bolts and retaining nuts are hand started and hand tightened prior to final tightening. Failure to follow this instruction may result in component damage.**

NOTE:

Double rear safety belt buckle shown, single similar.

To install, reverse the removal procedure.

- Tighten to 35 Nm.

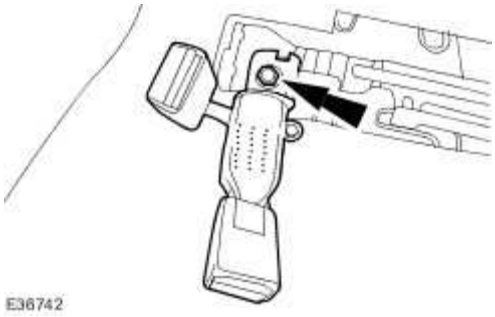

www.JagDocs.com

Rear Safety Belt Retractor (76.73.18)

Removal

1 . **WARNING: To avoid accidental deployment and possible personal injury, the backup power supply must be depleted before repairing or replacing any air bag supplemental restraint system (SRS) components. To deplete the backup power supply energy, disconnect the battery ground cable and wait for one minute. Failure to follow this instruction may result in personal injury.**

Disconnect the battery ground cable. <<414-01>>

2 . Remove the rear seat backrest. <<501-10>>

3 . Remove the upper C-pillar interior trim panel. <<501-05>>

4 . Detach the rear safety belt.

5 . Disconnect the rear safety belt retractor electrical connectors.

6 . Remove the rear safety belt retractor.

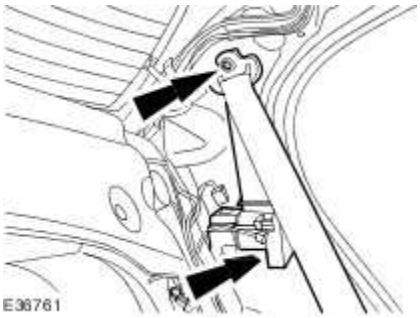

Installation

1 . **CAUTION: Make sure all retaining bolts and retaining nuts are hand started and hand tightened prior to final tightening. Failure to follow this instruction may result in component damage.**

To install, reverse the removal procedure.

- Tighten to 35 Nm.

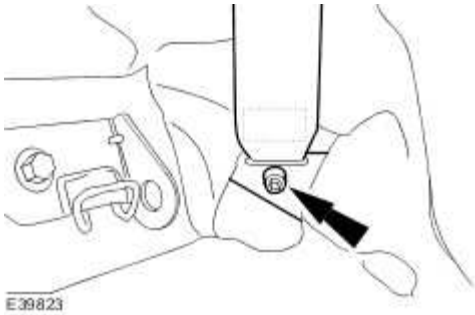

2 . Tighten to 35 Nm.

www.JagDocs.com

Specifications

Torque Specifications

Description	Nm	Lb/Ft	Lb/In
Passenger Air Bag Module Retaining Nuts	12	9	—
Passenger Air Bag Module Retaining Bolts	9	—	80
Restraints Control Module (RCM) Retaining Nuts	12	9	—
Seat Position Sensor Retaining Bolt	5	—	44
Side Air Curtain Module Inflator Retaining Bolts	8	—	71
Side Air Curtain Module Tether Straps Retaining bolts	9	—	80
Side Air Bag Module Retaining Nuts	7	—	62
Side Impact Sensor Retaining Bolt	12	9	—
Crash Sensor Retaining bolt	12	9	—
Driver Air Bag Module Retaining Screws	7	—	62
Clockspring retaining screws	5	—	44
Seat belt anchor retaining bolts M10 and M12	35	26	—
Front seat belt retractor retaining bolts	40	30	—

Air Bag Disposal

Deployed Air Bag

1.

WARNING: Always wear safety glasses when repairing an air bag supplemental restraint system (SRS) vehicle and when handling an air bag module. Failure to follow this instruction may result in personal injury.

Deployed air bag modules are to be disposed of as special waste and must comply with local environmental requirements, if in doubt, contact Authority for disposal requirements.

2. **NOTE:**

   The storage, transportation, disposal, and/or recycling of air bag module components must be carried out in accordance with all applicable federal, state and local regulations including, but not limited to, those governing building and fire codes, environmental protection, occupational health and safety, and transportation.

Modules removed and deployed by Jaguar service are to be returned to the importer for disposal.

Undeployed Air Bag — Inoperative

1.

WARNING: Carry a live air bag module with the air bag and trim cover or deployment door pointed away from your body. This will reduce the risk of injury in the event of an accidental deployment. Failure to follow this instruction may result in personal injury.

WARNING: All inoperative air bag modules have been placed on the Mandatory Return List. All discolored or damaged air bag modules must be treated the same as any inoperative live air bag being returned. Failure to follow this instruction may result in personal injury.

Remove the inoperative driver air bag module or passenger air bag module. For additional information see or in this section.

www.JagDocs.com

Passenger Air Bag Module (76.73.37)

Undeployed Air Bag — Scrapped Vehicle

1.

WARNING: Always wear safety glasses when repairing an air bag supplemental restraint system (SRS) vehicle and when handling an air bag module. Failure to follow this instruction may result in personal injury.

WARNING: Carry a live air bag module with the air bag and trim cover or deployment door pointed away from your body. This will reduce the risk of injury in the event of an accidental deployment. Failure to follow this instruction may result in personal injury.

WARNING: Remote deployment is to be carried out outdoors with all personnel at least 6.1 meters (20 feet) away to ensure personal safety. Due to the loud report which occurs when the air bag is deployed, hearing protection is required. Failure to follow this instruction may result in personal injury.

WARNING: Do not place the driver or passenger air bag module with the trim cover or deployment door facing down, as the forces of the deploying air bag can cause it to ricochet and cause personal injury. Failure to follow this instruction may result in personal injury.

Equipment required: Universal deployment tool-Part N° 418-S135 and 12V Battery.

2. The deployment procedure should be carried out outdoors away from other personnel.

3. Remove any loose debris from around air bag. Make sure that no flammable liquids are present.

4. Disconnect the battery ground and positive cables.

5. Disconnect the relevant air bag module electrical connector.

6. Connect the appropriate adaptor lead to the restraint device.

7. Connect the deployment lead to the adaptor lead. Pass wire of the deployment tool through window, close all doors, leave window with lead for deployment tool open.

8.

WARNING: Before proceeding, make sure precautions have been taken to warn personnel of a possible loud noise upon activation. Do not allow anybody to approach closer to restraint device than six meters. Failure to follow this instruction may result in personal injury.

Move as far from restraint device as possible and connect the tool clips to a 12V vehicle battery.

9.

WARNING: Do not handle the deployed device immediately after activation - it may be hot. Allow the unit to cool for at least 20 minutes. Cooling modules should be continuously monitored to make sure heat does not create a fire with spilled liquids or other debris. Failure to follow this instruction may result in personal injury.

Deploy the module by depressing both switches on the tool. If activation does not occur, disconnect battery from tool and seek advise from Jaguar Engineering and wait for further instructions.

10. Repeat procedure for all air bags in vehicle.

11. The vehicle is now to be scrapped in the normal manner with modules installed.

Disposal of live air bag modules for driver air bag module, passenger air bag module and side air bag module, using tyres

1. Equipment required: Deployment tool 418-S135, Battery (12V), Safety goggles to BS2092 grade 2, Rubber gloves to PrEN 374 class 2, Ear protectors that have been measured to BS.EN 24869, Particulate respirator to EN 149 grade FFP2S.

2. The deployment procedure should be carried out outdoors, away from other personnel.

3. Stack four scrap tyres, securing together with heavy gauge wire or cable. While

www.JagDocs.com

disconnected from any electrical power source, connect deployment harness and place air bag adaptor portion under tyre stack, ready for connection to air bag.

4.

WARNING: Power must not be connected during this step. Failure to follow this instruction may result in personal injury.

CAUTION: Make sure the connector is not in contact with the inflator or it will be damaged during the test.

Connect air bag to air bag connector, make sure the locking sleeve is fully engaged. Position the air bag with the cover facing upwards.

5. Make sure battery connections of deployment harness are ten meters away from the tyre stack

6. Remove any loose parts from around the air bag. Make sure that no flammable liquids are present.

7.

WARNING: Before proceeding, make sure precautions have been taken to warn personnel of a possible loud noise upon activation. Do not allow anybody to approach closer to restraint device than six meters. Failure to follow this instruction may result in personal injury.

Move as far from restraint device as possible and connect the tool clips to a 12V vehicle battery.

8.

WARNING: Do not handle the deployed device immediately after activation - it may be hot. Allow the unit to cool for at least 20 minutes. Cooling modules should be continuously monitored to make sure heat does not create a fire with spilled liquids or other debris. Failure to follow this instruction may result in personal injury.

Deploy the module by depressing both switches on the tool. If activation does not occur, disconnect battery from tool and seek advise from Jaguar Engineering and wait for further instructions.

9. Allow the air bag to cool for at least 20 minutes. Cooling modules should be continuously

monitored to make sure heat does not generate a fire with spilled liquids or other debris.

10. Remove the air bag from the tyre stack and seal in a plastic bag, ready for disposal.

11. In the event of any problems or queries arising from this procedure, contact Jaguar Engineering.

Disposal of side curtain air bag module using tyres

1. Equipment required: Deployment tool 418-S135, Battery (12V), Safety goggles to BS2092 grade 2, Rubber gloves to PrEN 374 class 2, Ear protectors that have been measured to BS.EN 24869, Particulate respirator to EN 149 grade FFP2S.

2. The deployment procedure should be carried out outdoors, away from other personnel.

3.

WARNING: Make sure that the tyre stack is stable before and after deployment. Failure to follow this instruction my result in personal injury.

Stack scrap tyres of a sufficient height to mask the side curtain air bag module, securing together with heavy gauge wire or cable. While disconnected from any electrical power source, connect deployment harness and place air bag adaptor portion under tyre stack, ready for connection to air bag.

4.

WARNING: Power must not be connected during this step. Failure to follow this instruction may result in personal injury.

CAUTION: Make sure the connector is not in contact with the inflator or it will be damaged during the test.

Connect air bag to air bag connector, make sure the locking sleeve is fully engaged. Position the air bag into the tyres with the inflator canister at the lowest point.

5. Make sure battery connections of deployment harness are ten meters away from the tyre stack

www.JagDocs.com

6. Remove any loose parts from around the air bag. Make sure that no flammable liquids are present.

7.

WARNING: Before proceeding, make sure precautions have been taken to warn personnel of a possible loud noise upon activation. Do not allow anybody to approach closer to restraint device than six meters. Failure to follow this instruction may result in personal injury.

Move as far from restraint device as possible and connect the tool clips to a 12V vehicle battery.

8.

WARNING: Do not handle the deployed device immediately after activation - it may be hot. Allow the unit to cool for at least 20 minutes. Cooling modules should be continuously monitored to make sure heat does not create a fire with spilled liquids or other debris. Failure to follow this instruction may result in personal injury.

Deploy the module by depressing both switches on the tool. If activation does not occur, disconnect battery from tool and seek advise from Jaguar Engineering and wait for further instructions.

9. Allow the air bag to cool for at least 20 minutes. Cooling modules should be continuously monitored to make sure heat does not generate a fire with spilled liquids or other debris.

10. Remove the air bag from the tyre stack and seal in a plastic bag, ready for disposal.

11. In the event of any problems or queries arising from this procedure, contact Jaguar Engineering.

Air Bag Supplemental Restraint System (SRS)

WARNING: All pyrotechnic devices are dangerous. Before performing any procedures on any pyrotechnic device, read all information contained within the Standard Workshop Practices section of this manual.

For additional information, refer to Driver Air Bag Module (501-20B)
For additional information, refer to Passenger Air Bag Module (501-20B)
For additional information, refer to Side Air Bag Module (501-20B)
For additional information, refer to Side Air Curtain Module (501-20B)

The air bag supplemental restraint system (SRS) is designed to provide increased collision protection for vehicle occupants in addition to that provided by the three-point safety belt system. Safety belt use is necessary to obtain the best occupant protection and to receive the full advantages of the SRS.

The air bag supplemental restraint system (SRS) components are shown in the following illustrations.

www.JagDocs.com

Air Bag Supplemental Restraint System (SRS) Components

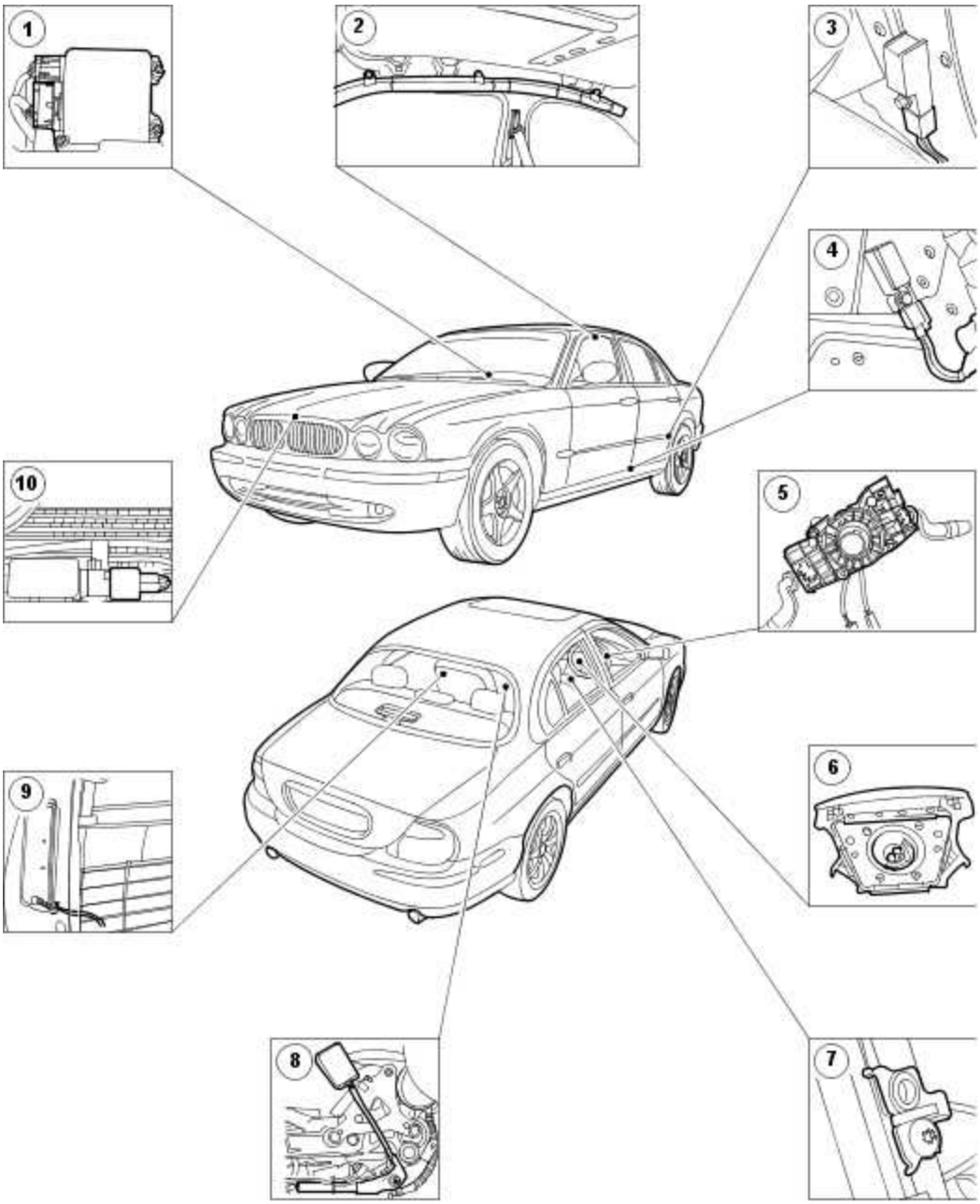

E36995

Item	Part Number	Description
1	—	Restraints control module (RCM)
2	—	Side air curtain module
3	—	C-Pillar side impact sensor
4	—	B-Pillar side impact sensor
5	—	Clockspring
6	—	Driver air bag module
7	—	Driver seat position sensor
8	—	Safety belt pretensioner
9	—	Side airbag module

10	—	Front crash sensor

Air Bag Supplemental Restraint System (SRS) Components

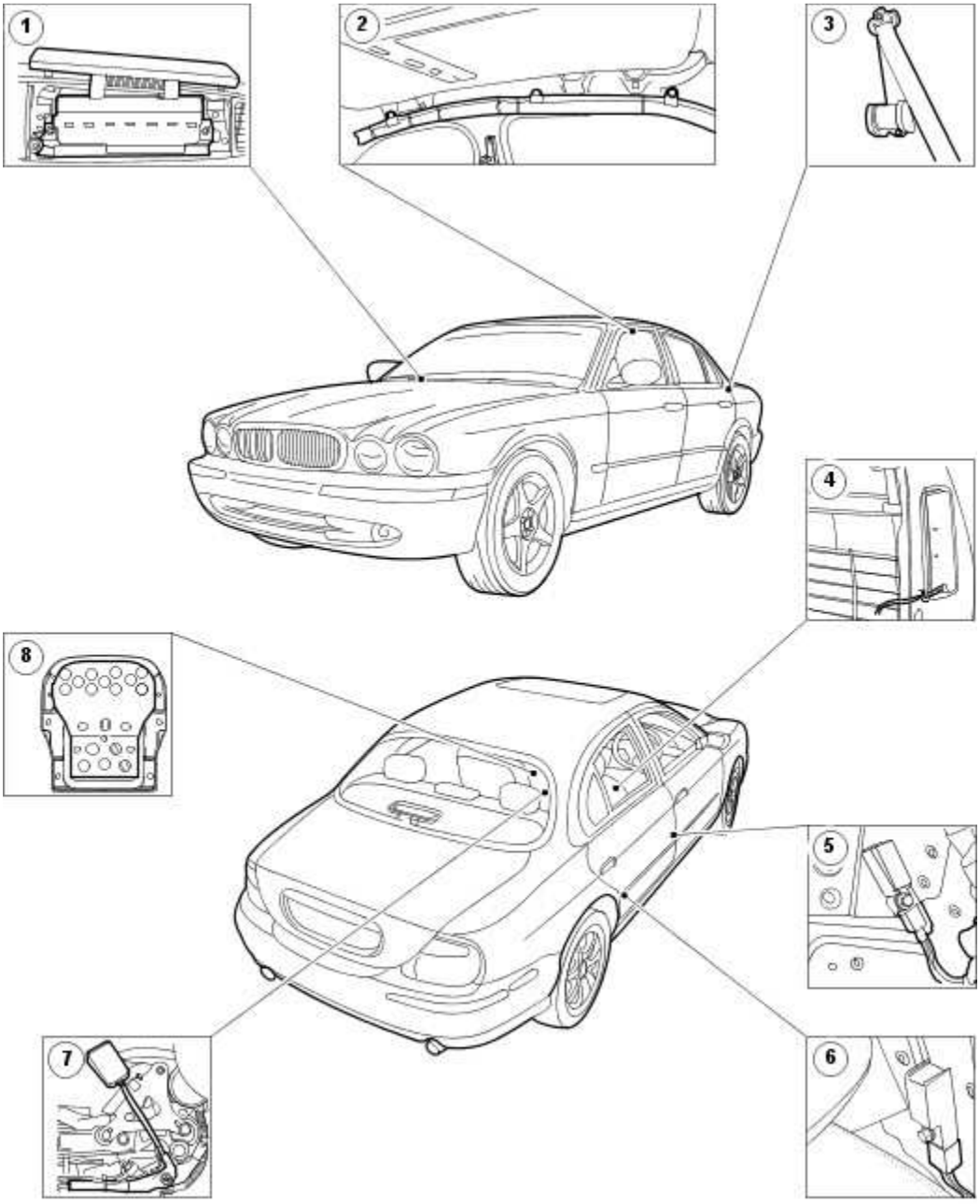

Item	Part Number	Description
1	—	Passenger air bag module
2	—	Side air curtain module
3	—	Rear safety belt retractor and pretensioner

www.JagDocs.com

4	—	Side airbag module
5	—	B-Pillar side impact sensor
6	—	C-Pillar side impact sensor
7	—	Front safety belt pretensioner
8	—	Front passenger seat occupant classification sensor

Sensors

WARNING: Prior to the removal of any SRS sensors and before disconnecting any SRS sensor electrical connectors, the battery ground cable must be disconnected and a period of one minute allowed to elapse.

NOTE:

The SRS sensors do not contain any serviceable components.

The SRS consists of the following sensors:

Occupant Position Sensors

The four sensors are strategically placed to detect the presence and movement of the passenger front seat occupant.

The occupant position sensor system uses ultrasound at an operating frequency of 40 kilohertz to monitor the passenger front seat occupant. The SRS uses four ultrasonic sensors, one in the A-pillar, one at the top of the instrument panel console and two in the headliner. The sensors determine the presence and position of the passenger front seat occupant with respect to the passenger air bag deployment door. The sensors determine passenger air bag module deployment decisions by classifying occupants as either 'in position' or 'out of position' according to the predetermined 'keep out zone'. The sensors are part of a system that is sophisticated enough to be unaffected by body extremities (hands and feet) and respond only to head or body movements.

Front Crash Sensor

The crash sensor is attached to the body behind the radiator grille. The restraints control module (RCM) processes the crash data sent by the crash sensor against stored data, and deploys the front air bags and pretensioners.

Side Impact Sensors

The side impact sensors are mounted at the base of the B-pillars and C-pillars to facilitate lateral impact sensing. In the event of a side impact, the RCM processes the crash data against the stored data. The RCM will deploy the side air bag module and side air curtain module on the side the deployment request was initiated.

Seat Position Sensor

The seat position sensor is located on the driver seat track. The seat position sensor determines the position of the driver seat, which is then communicated to the RCM. If the driver seat is in the forward position, the driver air bag module second stage is disabled.

Front Passenger Seat Occupant Classification Sensor

NOTE:

The front seat occupant classification sensor is serviced as a calibrated assembly.

Individual components of the front seat passenger weight sensing system are not serviceable. The system must be replaced as a complete unit and due to its sophistication, each replacement system requires calibration. To avoid the need to provide calibration equipment to each dealer, a pre-calibrated service kit is available. The following components are combined and calibrated during manufacture to form the front seat passenger weight sensing system:

- Passenger seat cushion
- Silicone filled bladder
- Weight sensing control module
- Pressure sensor

The weight sensing control module is mounted under the passenger front seat. The silicone filled bladder is integrated into the seat cushion and the pressure sensor, which is attached to the bladder, is mounted under the seat.

The silicone filled bladder responds to weight changes on the passenger front seat. The pressure sensor responds to these pressure changes and provides an appropriate signal to the weight sensing control module. The weight sensing control module processes the input signal received from the pressure sensor and makes it available to the RCM via the controller area network (CAN). In addition, the weight sensing control module performs self-diagnostic functions on the system, with any malfunctions being notified to the RCM accordingly.

The front seat passenger weight sensing system responds to the occupancy of the passenger front seat in accordance with the following:

- Passenger front seat status 'EMPTY' — Passenger air bag status 'OFF' — Passenger Air Bag Deactivation (PAD) indicator 'OFF'
- Passenger front seat status 'OCCUPIED' (small occupant) — Passenger air bag status 'OFF' — PAD indicator 'ON'
- Passenger front seat status 'OCCUPIED' (large occupant) — Passenger air bag status 'ON' — PAD indicator 'OFF'. PAD indicator 'ON' if the occupant position sensor detects an occupant out of position

The SRS via the RCM, monitors and processes data from the front seat passenger weight sensing system and several other sensors before making a deployment decision. Malfunction of the sensing system or associated circuits will cause the SRS indicator to illuminate.

www.JagDocs.com

Front Safety Belt Buckle Sensors

The safety belt buckle sensor is a 'hall effect' type sensor which provides an output signal in response to the magnetic field disturbance caused by the insertion of the safety belt tongue into the buckle. The output signal from the sensor is used by the RCM to determine whether the front seat occupants are correctly restrained. It is used in conjunction with other components of the SRS to ensure that air bag module and safety belt pretensioner deployment only occurs where necessary. For additional information, refer to Safety Belt System (501-20A)
Malfunction of the sensor or associated circuits will cause the SRS indicator to illuminate.

Modules

WARNING: Prior to the removal of any SRS module and before disconnecting any SRS module electrical connectors, the battery ground cable must be disconnected and a period of one minute allowed to elapse.

NOTE:

The SRS modules do not contain any serviceable components.

The SRS consists of the following modules:

Restraints Control Module (RCM)

The RCM is mounted on the top of the drive shaft tunnel below the instrument panel console. It identifies crash severity, the direction of impact and makes decisions on deployment of air bag modules and safety belt pretensioners. It also provides firing signals to all air bag modules and safety belt pretensioners.

The RCM controls air bag deployment decisions by using signals from its internal accelerometer and the following:

- Crash sensor
- Side impact sensors
- Occupant position sensors
- Front safety belt buckle sensor
- Seat position sensor
- Front passenger seat occupant classification system

Internally, the RCM has two areas that determine which elements of the SRS are to be deployed:

- Crash severity evaluation — This area evaluates crash severity by using data from the RCM internal accelerometer, the front crash sensor and the safety belt buckle sensor. Based on this data, the RCM decides which level of air bag module deployment is required and forwards the information to the second area, the deployment handler.

- Deployment handler — The status of the seat track position sensor, occupant position sensors, front passenger seat occupant classification sensor and safety belt buckle sensors are examined before a decision is made about which restraints should finally be deployed. For instance, if the occupant position sensors and front passenger seat occupant classification sensor indicate that the front passenger seat is empty, then no restraint deployment will take place on the passenger side, even if full deployment takes place on the driver side.

Data from the side crash sensors is used by the RCM in conjunction with acceleration data from the RCM internal accelerometer to make a deployment decision. The RCM processes the acceleration data and subject to an impact being of high enough severity, decides whether the side air bag module should be deployed. The decision is forwarded to the deployment handler (within the RCM) which responds appropriately. For example, in the case that the front passenger seat occupant classification sensor calculates that the seat is empty, or occupied by a small person, the front or passenger side air bag module will be disabled.

On board testing of the air bag modules, front safety belt pretensioner firing circuits, warning indicator circuits and module status (the crash and side impact sensors perform basic self-tests) is performed by the RCM together with the storing of fault codes.

The RCM drives the SRS indicator on the instrument pack. If the warning lamp fails, a fault code is recorded and a warning tone is sounded. It also provides a temporary back-up power supply to operate the air bag modules in the event that in crash conditions, the battery supply is lost. In the event of a crash, it records certain data which can be accessed via the diagnostic connector.

www.JagDocs.com

Driver Air Bag Module

NOTE:

Variation in the driver air bag module deployment is determined by the timing of the first and second stage ignition signals. This facilitates adaptation of the stiffness and timing of the air bag module to optimize occupant protection.

The driver air bag module is controlled by the RCM which chooses between first or second stage deployment, depending on the occupant position and the crash severity. To reduce the risk of an air bag module induced injury to a driver that is positioned close to the steering wheel, the air bag module deploys radially. It has a non-azide propellant that reduces particulates and effluents. It consists of a two stage inflator with separate chambers for the two inflation stages, each being independently activated by the RCM. It has two electrical connectors that are color coded to the respective connector on the inflator.

Passenger Air Bag Module

NOTE:

Variation in the passenger air bag module deployment is determined by the timing of the first and second stage ignition signals. This facilitates adaptation of the stiffness and timing of the air bag module to optimize occupant protection.

The passenger air bag module is controlled by the RCM which chooses between first or

second stage deployment, depending on the occupant status and the crash severity. It consists of a two stage inflator with two air bag electrical connectors to accommodate the two stage inflation.

The heated gas inflator consists of a high-pressure mix of clean air and hydrogen gas, triggered by two separate ignition squibs. It produces a controlled generation of clean gas to rapidly fill the air bag. It is classified as a stored flammable gas (not as an explosive) and as such, has less restrictive storage and transportation requirements. It produces a very clean burn and almost no particulates and is almost free of any toxins, making disposal or recycling much easier.

Side Air Bag Module

NOTE:

In the event of a side impact that is sufficient to deploy the side air bag system, it will be necessary to replace the complete seat. The side air bag module does not contain any serviceable components.

The side air bag module is mounted in the outboard bolster of each front seat and uses compressed gas to inflate. It provides protection for the thorax (the part of the trunk between the neck and the abdomen). In an air bag deployment situation, it deploys through the stitch seam in the side bolster. To ensure the air bag always emerges at the same point, a chute is attached to the inside of the trim cover and wrapped around the air bag module.

Side Air Curtain Module

NOTE:

In the event of a side impact that is sufficient to deploy the side air curtain module, it will be necessary to replace the headliner, A-pillar and C-pillar trim panels and the B-pillar upper trim panel will require thorough examination for visible damage or deformation before it can be used again on the vehicle.

NOTE:

The side air curtain module does not contain any serviceable components.

The side air curtain modules are located under the headliner between the A and C-pillar and deploy at the same time as the corresponding side air bag module. If the passenger air bag module is deactivated the corresponding side air bag module is also deactivated, however the side air curtain module will still deploy to afford protection to any corresponding rear occupant. When deployed, the side air curtain extends down to approximately shoulder height to protect both the front and rear occupants heads. Both the front and rear of the side air curtain modules are retained to the A and C-pillar respectively by tethers.

Pretensioners

WARNING: Prior to the removal of any SRS pretensioners and before

disconnecting any SRS pretensioer electrical connectors, the battery ground cable must be disconnected and a period of one minute allowed to elapse.

NOTE:

The SRS pretensioners do not contain any serviceable components.

The SRS consists of the following pretensioners:

Safety Belt Buckle Pretensioners

The front safety belt buckle and pretensioners are seat mounted and incorporate a safety buckle switch. In the event of a front impact the RCM will deploy the pretensioners provided the safety belt buckles are fastened. The safety belt buckle pretensioners have a lower deployment threshold than that required by the air bags. Hence it is possible during a minor collision, which exceeds the deployment threshold, that only the safety belt buckle pretensioners will deploy. The RCM receives information on the status of the safety belt buckles from a switch contained in the buckle. For additional information, refer to Safety Belt System (501-20A)

Rear Safety Belt Pretensioners

Each rear safety belt incorporates a pretensioner device. In the event of low/high speed frontal impact, these provide additional occupant protection by removing any excess slack from the safety belts. Safety belt pretensioners activate when a frontal impact of sufficient force occurs. Under such an impact, the RCM installed on the transmission tunnel sends a firing signal to each pretensioner. Receipt of this signal by each pretensioner directly triggers a pyrotechnic igniter unit. The seat belt retractors and pretensioners are not serviceable components and dismantling must not be attempted as active pretensioning components contain a solid, flammable material. For additional information, refer to Safety Belt System (501-20A)

Indicators

WARNING: Prior to the removal of any SRS Indicators and before disconnecting any SRS indicator electrical connectors, the battery ground cable must be disconnected and a period of one minute allowed to elapse.

NOTE:

The SRS indicators do not contain any serviceable components.

The SRS consists of the following indicators:

www.JagDocs.com

SRS Indicator

The SRS indicator is located in the instrument cluster and is driven by the RCM. Malfunction of SRS components or associated circuits will cause the SRS indicator to illuminate. If the warning lamp fails, a fault code is recorded and a warning tone is sounded.

Passenger Air Bag Module Deactivation (PAD) Indicator

The passenger air bag deployment door has a built in lens that displays the passenger air bag module deactivated symbol. The symbol is backlit by the PAD indicator, which is attached to the instrument panel. The illumination of the symbol informs the front seat occupants whether or not the passenger air bag module has been deactivated by the occupancy sensing system.

Clockspring

WARNING: Prior to the removal of the SRS clockspring and before disconnecting any SRS clockspring electrical connectors, the battery ground cable must be disconnected and a period of one minute allowed to elapse.

NOTE:

The SRS clockspring does not contain any serviceable components.

The clockspring is designed to carry signals between the RCM and the driver air bag module. The clockspring is fitted to the steering column, and consists of fixed and moving parts connected by a coiled tape with integral conducting tracks. The tape is able to 'wind up' and 'unwind' as the steering wheel (to which the moving part is attached) is turned, maintaining electrical contact at all times between the RCM and the driver air bag module.

Air Bag Supplemental Restraint System (SRS)

Principles of Operation

For a detailed description of the Air Bag Supplemental Restraint System (SRS), refer to the relevant Description and Operation sections in the workshop manual.
Air Bag Supplemental Restraint System (SRS)

Inspection and Verification

WARNING: TO AVOID ACCIDENTAL DEPLOYMENT AND POSSIBLE PERSONAL INJURY, THE BACKUP POWER SUPPLY MUST BE DEPLETED BEFORE REPAIRING OR REPLACING ANY AIR BAG SUPPLEMENTAL RESTRAINT SYSTEM (SRS) COMPONENTS. TO DEPLETE THE BACKUP POWER SUPPLY ENERGY, DISCONNECT THE BATTERY GROUND CABLE AND WAIT ONE MINUTE. FAILURE TO FOLLOW THIS INSTRUCTION MAY RESULT IN PERSONAL INJURY.

NOTE:

Given the legal implications of a restraints system failure, harness repairs to airbag module circuits are not acceptable. Where the text refers to "REPAIR the circuit", this will normally mean the replacement of a harness.

If the Jaguar approved diagnostic system is not available, use a scan tool to extract DTCs and follow the pinpoint diagnostics in this section.

1 . Verify the customer concern by operating the system.

2 . Confirm the function of the warning lamp (if the warning lamp is inoperative, system faults will be signalled by an audible chime).

3 . Visually inspect for obvious signs of damage and system integrity.

Electrical
• Fuses/Relays • Damaged, Loose or Corroded Connector(s) • Damage to Wiring Loom/Incorrect Location, Stretched or Taught

4 . If an obvious cause for an observed or reported concern is found, correct the cause before

www.JagDocs.com

proceeding to the next step.

5 . If the cause is not visually evident, check for Diagnostic Trouble Codes (DTCs) and refer to the DTC Index.

Symptom Chart

Warning Lamp Flash/Audible Tone	DTC	Symptom	Possible Cause	Action
Unlit	N/A	No communication with RCM	• Data link connector (DLC) fault • RCM supply circuits - open circuit, short circuit to ground, short circuit to power • SCP circuit - open circuit, short circuit to ground, short circuit to power	Refer to the electrical circuit diagrams and check DLC, RCM, and SCP circuits for short, open circuit
Unlit	N/A	Air bag warning lamp inoperative	• Warning lamp circuit - short circuit to ground • Warning lamp failure	Refer to electrical circuit diagrams, notes and check restraint control module, power circuit for fault, for additional information, GO to Pinpoint Test G1043827p1.
Unlit	DTC B2477	No communication with RCM	• Module software option content not programmed or incorrectly programmed	The module can be configured using the new module procedure. Check and configure as required

DTC Index

Supplemental Restraint System

CAUTION: When probing connectors to take measurements in the course of the

pinpoint tests, use the adaptor kit, part number 3548-1358-00

NOTE:

If the control module/component is suspect and the vehicle remains under manufacturer warranty, refer to the Warranty Policy and Procedures manual (section B1.2), or determine if any prior approval program is in operation, prior to the installation of a new module/component.

NOTE:

When performing voltage or resistance tests, always use a digital multimeter (DMM) accurate to three decimal places and with a current calibration certificate. When testing resistance, always take the resistance of the DMM leads into account.

NOTE:

Check and rectify basic faults before beginning diagnostic routines that involve pinpoint tests.

NOTE:

Inspect connectors for signs of water ingress, and pins for damage and/or corrosion.

NOTE:

If DTCs are recorded and, after performing the pinpoint tests, a fault is not present, an intermittent concern may be the cause. Always check for loose connections and corroded terminals.

www.JagDocs.com

Reading restraints flash codes

Self-check

Turn the ignition switch to the **ON** position

- Warning light **ON** solid for 6 seconds
- Warning light **OFF**

Fault on system

Turn the ignition switch to the **ON** position.

Warning light **ON** solid for 6 seconds

Warning light **OFF** for 2 seconds

Warning light flashes the appropriate number of times for the fault logged (see table)

Warning light **OFF** for 2 seconds

The sequence is repeated 5 times

Warning light **ON** until the ignition is turned **OFF**

Example:- Flash code 16 would be shown as lamp **ON** for one occurrence of 0.5 second then lamp **OFF** for one second, then six occurrences of lamp **ON** for 0.5 seconds each (1-6).

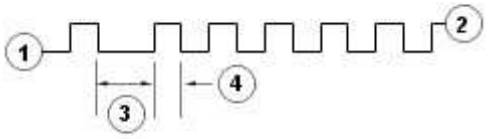

E40356

- 1. Lamp **OFF**
- 2. Lamp **ON**
- 3. Time between first digit and second digit (1 second)
- 4. Time **ON** of each flash of the second digit (0.5 second)

Priority

Priority is not assigned to any of the flash codes. They are displayed depending on which code is identified first. If multiple faults are present only one will be flashed. That fault will need to be rectified before the next code will be made available.

If the driver warning lamp is inoperative and a fault occurs, an audible chime will be sounded 90 seconds after the ignition is turned **ON**.

Warning Lamp Flash/Audible Tone	DTC	Description	Possible Causes	Action
Lamp fault code = 13	B1231	Longitudinal Acceleration Threshold Exceeded	• Restraint control module, crash data memory full	Suspect restraint control module, fault. Check and install as required, refer to the new module installation note at the top of the DTC Index
Continuous lamp	B1317	Battery Voltage High	• Restraint control module, power supply voltage - high (above 15 V +/- 8%) • Battery voltage is regulated by engine control	Refer to electrical circuit diagrams, notes and check restraint control module, power circuit for fault

			module	
Continuous lamp	B1318	Battery Voltage Low	• Restraint control module, power supply voltage - low (below 10.4 V +/- 8%)	Refer to electrical circuit diagrams, notes and check restraint control module, power and ground circuit for fault
Lamp fault code = 12	B1342	ECU Fault	• Restraint control module, internal fault	Suspect restraint control module, fault. Check and install as required, refer to the new module installation note at the top of the DTC Index
Tone sounds if fault present	B1869	Lamp Air Bag Warning Indicator Circuit Open	• Restraint control module, instrument cluster airbag warning indicator circuit - short to ground or open circuit	Carry out any pinpoint tests associated with this DTC using the manufacturer approved diagnostic system. Refer to electrical circuit diagrams, notes and check instrument cluster airbag warning indicator circuit for short to ground or open circuit, for additional information, GO to Pinpoint Test G1043827p2.
Tone sounds if fault present	B1870	Lamp Air Bag Warning Indicator Circuit Short To Power	• Restraint control module, instrument cluster airbag warning indicator circuit - short to power	Carry out any pinpoint tests associated with this DTC using the manufacturer approved diagnostic system. Refer to electrical circuit diagrams, notes and check instrument cluster airbag warning indicator circuit for short to power, for additional information, GO to Pinpoint Test G1043827p2.
Lamp fault code = 18	B1884	PAD Warning Lamp Circuit Failure	• Restraint control module, passenger airbag deactivation indicator circuit - open circuit or	Carry out any pinpoint tests associated with this DTC using the manufacturer approved diagnostic system. Refer to electrical circuit diagrams, notes and check

www.JagDocs.com

			short to ground	passenger airbag deactivation indicator circuit for open circuit or short to ground, for additional information, GO to Pinpoint Test G1043827p5.
Lamp fault code = 18	B1890	PAD Warning Lamp Circuit Short To Power	• Restraint control module, passenger airbag deactivation indicator circuit - short to power	Carry out any pinpoint tests associated with this DTC using the manufacturer approved diagnostic system. Refer to electrical circuit diagrams, notes and check passenger airbag deactivation indicator circuit for short to power, for additional information, GO to Pinpoint Test G1043827p5.
Lamp fault code = 53	B1891	Air Bag Tone Warning Indicator Circuit Short to Power	• Restraint control module, instrument cluster seat belt audible warning circuit - short to power	Refer to electrical circuit diagrams, notes and check instrument cluster seat belt audible warning circuit for short to power, for additional information, GO to Pinpoint Test G1043827p25.
Lamp fault code = 53	B1892	Air Bag Tone Warning Indicator Circuit Failure	• Restraint control module, instrument cluster seat belt audible warning circuit - short to ground or open circuit	Refer to electrical circuit diagrams, notes and check instrument cluster seat belt audible warning circuit for short to ground or open circuit, for additional information, GO to Pinpoint Test G1043827p25.
Lamp fault code = 14	B1921	Air Bag Diagnostic Monitor Ground Circuit Open	• Restraint control module, faulty or insecure module	Refer to electrical circuit diagrams, notes and check restraint control module for fitment (module grounds through fixings)
Lamp fault code = 16	B2290	Occupant Classification System fault (front	• Restraint control module reports, occupancy sensing module,	Refer to electrical circuit diagrams, notes and check occupancy sensing module, passenger weight

		passenger)	passenger weight pressure sensor - circuit fault	pressure sensor for circuit fault, for additional information, GO to Pinpoint Test G1043827p3. GO to Pinpoint Test G1043827p4.
Lamp fault code = 17	B2291	Occupant Position System fault, (front passenger)	• Restraint control module reports, occupancy sensing module, passenger position sensor - circuit fault	Carry out any pinpoint tests associated with this DTC using the manufacturer approved diagnostic system. Refer to electrical circuit diagrams, notes and check occupancy sensing module, passenger position sensor's for circuit fault
Lamp fault code = 33	B2292	Restraint System - Seatbelt Pretensioner fault	• Restraint control module, driver seatbelt pretensioner - circuit fault	Carry out any pinpoint tests associated with this DTC using the manufacturer approved diagnostic system. Refer to electrical circuit diagrams, notes and check driver seatbelt pretensioner for circuit fault, for additional information, GO to Pinpoint Test G1043827p12.
Lamp fault code = 34	B2292	Restraint System - Seatbelt Pretensioner fault	• Restraint control module, passenger seatbelt pretensioner - circuit fault	Carry out any pinpoint tests associated with this DTC using the manufacturer approved diagnostic system. Refer to electrical circuit diagrams, notes and check passenger seatbelt pretensioner for circuit fault, for additional information, GO to Pinpoint Test G1043827p13.
Lamp fault code = 35	B2292	Restraint System - Seatbelt Pretensioner fault	• Restraint control module, driver side rear seatbelt pretensioner -	Carry out any pinpoint tests associated with this DTC using the manufacturer approved diagnostic system. Refer

www.JagDocs.com

			circuit fault	to electrical circuit diagrams, notes and check driver side rear seatbelt pretensioner for circuit fault, for additional information, GO to Pinpoint Test G1043827p14.
Lamp fault code = 36	B2292	Restraint System - Seatbelt Pretensioner fault	• Restraint control module, center rear seatbelt pretensioner - circuit fault	Carry out any pinpoint tests associated with this DTC using the manufacturer approved diagnostic system. Refer to electrical circuit diagrams, notes and check center rear seatbelt pretensioner for circuit fault, for additional information, GO to Pinpoint Test G1043827p16.
Lamp fault code = 37	B2292	Restraint System - Seatbelt Pretensioner fault	• Restraint control module, passenger rear seatbelt pretensioner - circuit fault	Carry out any pinpoint tests associated with this DTC using the manufacturer approved diagnostic system. Refer to electrical circuit diagrams, notes and check passenger rear seatbelt pretensioner for circuit fault, for additional information, GO to Pinpoint Test G1043827p15.
Lamp fault code = 19	B2293	Restraint System - Airbag fault	• Restraint control module, driver airbag module - circuit fault	Carry out any pinpoint tests associated with this DTC using the manufacturer approved diagnostic system. Refer to electrical circuit diagrams, notes and check restraint control module, driver airbag module for circuit fault, for additional information, GO to Pinpoint Test G1043827p6.
Lamp fault code = 21	B2293	Restraint System - Airbag	• Restraint control module,	Carry out any pinpoint tests associated with this

		fault	passenger airbag module - circuit fault	DTC using the manufacturer approved diagnostic system. Refer to electrical circuit diagrams, notes and check restraint control module, passenger airbag module for circuit fault, for additional information, GO to Pinpoint Test G1043827p7.
Lamp fault code = 24	B2294	Restraint System - Curtain fault	• Restraint control module, driver side curtain airbag - circuit fault	Carry out any pinpoint tests associated with this DTC using the manufacturer approved diagnostic system. Refer to electrical circuit diagrams, notes and check restraint control module, driver side curtain airbag for circuit fault, for additional information, GO to Pinpoint Test G1043827p10.
Lamp fault code = 25	B2294	Restraint System - Curtain fault	• Restraint control module, passenger side curtain airbag - circuit fault	Carry out any pinpoint tests associated with this DTC using the manufacturer approved diagnostic system. Refer to electrical circuit diagrams, notes and check restraint control module, passenger side curtain airbag for circuit fault, for additional information, GO to Pinpoint Test G1043827p11.
Lamp fault code = 22	B2295	Restraint System - Side Airbag fault	• Restraint control module, driver side airbag igniter - circuit fault	Carry out any pinpoint tests associated with this DTC using the manufacturer approved diagnostic system. Refer to electrical circuit diagrams, notes and check restraint control module, driver side airbag igniter for circuit fault, for additional information, GO to Pinpoint Test

www.JagDocs.com

				G1043827p8.
Lamp fault code = 23	B2295	Restraint System - Side Airbag fault	• Restraint control module, passenger side airbag igniter - circuit fault	Carry out any pinpoint tests associated with this DTC using the manufacturer approved diagnostic system. Refer to electrical circuit diagrams, notes and check restraint control module, passenger side airbag igniter for circuit fault, for additional information, GO to Pinpoint Test G1043827p9.
Lamp fault code = 42	B2296	Restraint System - Impact sensor fault	• Restraint control module, front crash sensor - circuit fault	Carry out any pinpoint tests associated with this DTC using the manufacturer approved diagnostic system. Refer to electrical circuit diagrams, notes and check restraint control module, front crash sensor for circuit fault, for additional information, GO to Pinpoint Test G1043827p17.
Lamp fault code = 43	B2296	Restraint System - Impact sensor fault	• Restraint control module, driver side crash sensor - circuit fault	Carry out any pinpoint tests associated with this DTC using the manufacturer approved diagnostic system. Refer to electrical circuit diagrams, notes and check restraint control module, driver side crash sensor for circuit fault, for additional information, GO to Pinpoint Test G1043827p18.
Lamp fault code = 44	B2296	Restraint System - Impact sensor fault	• Restraint control module, passenger side crash sensor - circuit fault	Carry out any pinpoint tests associated with this DTC using the manufacturer approved diagnostic system. Refer to electrical circuit diagrams, notes and check restraint control module, passenger side crash

				sensor for circuit fault, for additional information, GO to Pinpoint Test G1043827p19.
Lamp fault code = 45	B2296	Restraint System - Impact sensor fault	• Restraint control module, driver side rear crash sensor - circuit fault	Carry out any pinpoint tests associated with this DTC using the manufacturer approved diagnostic system. Refer to electrical circuit diagrams, notes and check restraint control module, driver side rear crash sensor for circuit fault, for additional information, GO to Pinpoint Test G1043827p20.
Lamp fault code = 46	B2296	Restraint System - Impact sensor fault	• Restraint control module, passenger side rear crash sensor - circuit fault	Carry out any pinpoint tests associated with this DTC using the manufacturer approved diagnostic system. Refer to electrical circuit diagrams, notes and check restraint control module, passenger side rear crash sensor for circuit fault, for additional information, GO to Pinpoint Test G1043827p21.
Lamp fault code = 51	B2434	Drivers Seat Belt Buckle Switch Circuit Short to Ground	• Restraint control module, drivers seat belt switch circuit - short to ground	Carry out any pinpoint tests associated with this DTC using the manufacturer approved diagnostic system. Refer to electrical circuit diagrams, notes and check restraint control module, drivers seat belt switch circuit for short to ground, for additional information, GO to Pinpoint Test G1043827p23.
Lamp fault code = 51	B2435	Drivers Seat Belt Buckle Switch Resistance out of range	• Restraint control module, drivers seat belt switch -	Carry out any pinpoint tests associated with this DTC using the manufacturer approved diagnostic system. Refer

www.JagDocs.com

			circuit fault	to electrical circuit diagrams, notes and check restraint control module, drivers seat belt switch for circuit fault, for additional information, GO to Pinpoint Test G1043827p23.
Lamp fault code = 52	B2438	Passengers Seat Belt Buckle Switch Circuit Short to Ground	• Restraint control module, passenger seat belt switch circuit - short to ground	Carry out any pinpoint tests associated with this DTC using the manufacturer approved diagnostic system. Refer to electrical circuit diagrams, notes and check restraint control module, passenger seat belt switch circuit for short to ground, for additional information, GO to Pinpoint Test G1043827p24.
Lamp fault code = 52	B2439	Passengers Seat Belt Buckle Switch Resistance out of range	• Restraint control module, passenger seat belt switch circuit - fault	Carry out any pinpoint tests associated with this DTC using the manufacturer approved diagnostic system. Refer to electrical circuit diagrams, notes and check restraint control module, passenger seat belt switch circuit for fault, for additional information, GO to Pinpoint Test G1043827p24.
Continuous lamp	B2477	Module Configuration Failure (unconfigured, incorrect, or rejected)	• Restraint control module - configuration fault	The module can be configured using the new module procedure. Check and configure as required
Lamp fault code = 51	B2691	Seat Belt Buckle Switch Circuit Fault, Front Driver's side	• Restraint control module, driver seat belt switch circuit - open circuit or short to power	Carry out any pinpoint tests associated with this DTC using the manufacturer approved diagnostic system. Refer to electrical circuit diagrams, notes and check restraint control module,

				driver seat belt switch circuit for open circuit or short to power, for additional information, GO to Pinpoint Test G1043827p23.
Lamp fault code = 52	B2692	Front Passenger Seat Belt Buckle Switch Circuit Fault	• Restraint control module, passenger seat belt switch circuit - open circuit or short to power	Carry out any pinpoint tests associated with this DTC using the manufacturer approved diagnostic system. Refer to electrical circuit diagrams, notes and check restraint control module, passenger seat belt switch circuit for open circuit or short to power, for additional information, GO to Pinpoint Test G1043827p24.
Lamp fault code = 16	B2909	Belt Tension Sensor Fault	• Passenger seat weight sensing module, passenger seat belt tension sensor - circuit fault	Carry out any pinpoint tests associated with this DTC using the manufacturer approved diagnostic system. Refer to electrical circuit diagrams, notes and check Passenger seat weight sensing module, passenger seat belt tension sensor for circuit fault, for additional information, GO to Pinpoint Test G1043827p4. for additional information, GO to Pinpoint Test G1043827p3.
Lamp fault code = 15	C1414	Incorrect Module Design Level	• Restraint control module, incorrect module	Restraint control module, incorrect module - check for correct part number
Lamp fault code = 49	C1947	Driver Seat Track Position Switch Circuit Short to Ground	• Restraint control module, driver seat track position switch circuit - short to	Refer to electrical circuit diagrams, notes and check restraint control module, driver seat track position switch circuit for short to

www.JagDocs.com

			power or ground	power or ground, for additional information on vehicles with passenger seat position switch installed carry out any pinpoint tests associated with this DTC using the manufacturer approved diagnostic system, for additional information, GO to Pinpoint Test G1043827p22. For early vehicles without passenger seat position switch installed GO to Pinpoint Test G1043827p26.
Lamp fault code = 49	C1948	Driver Seat Track Position Switch Circuit Resistance out of range	• Restraint control module, driver seat track position switch - circuit fault	Refer to electrical circuit diagrams, notes and check restraint control module, driver seat track position switch for circuit fault, for additional information on vehicles with passenger seat position switch installed carry out any pinpoint tests associated with this DTC using the manufacturer approved diagnostic system, for additional information, GO to Pinpoint Test G1043827p22. For early vehicles without passenger seat position switch installed GO to Pinpoint Test G1043827p26.
Lamp fault code = 49	C1981	Driver Front Driver's Seat Track Position Switch Circuit Fault	• Restraint control module, driver seat track position switch circuit - short to power or open circuit	Refer to electrical circuit diagrams, notes and check restraint control module, driver seat track position switch circuit for short to power or open circuit, for additional information, GO to Pinpoint Test G1043827p22. For early vehicles without passenger seat position

				switch installed GO to Pinpoint Test G1043827p26.
Lamp fault code = 48	C2200	Front Passenger's Seat Track Position Switch Circuit Fault	• Restraint control module, passenger seat track position switch circuit - short to power or open circuit	Carry out any pinpoint tests associated with this DTC using the manufacturer approved diagnostic system. Refer to electrical circuit diagrams, notes and check restraint control module, passenger seat track position switch circuit for short to power or open circuit
Lamp fault code = 48	C2202	Passenger's Seat Track Position Switch Circuit Short to Ground	• Restraint control module, passenger seat track position switch circuit - short to ground	Carry out any pinpoint tests associated with this DTC using the manufacturer approved diagnostic system. Refer to electrical circuit diagrams, notes and check restraint control module, passenger seat track position switch circuit for short to ground
Lamp fault code = 48	C2204	Passenger's Seat Track Position Switch Circuit Resistance out of range	• Restraint control module, passenger seat track position switch - circuit fault	Carry out any pinpoint tests associated with this DTC using the manufacturer approved diagnostic system. Refer to electrical circuit diagrams, notes and check Restraint control module, passenger seat track position switch for circuit fault

Pinpoint tests

PINPOINT TEST G1043827p1 : AIR BAG WARNING LAMP INOPERATIVE

www.JagDocs.com

G1043827t1 : CHECK THE WARNING LAMP CIRCUIT FOR SHORT TO GROUND

1. Disconnect the battery negative terminal. 2. Wait one minute for the system to become safe. 3. Disconnect the restraints control module electrical connector, CR86. 4. Disconnect the instrument cluster electrical connector, IP05. 5. Measure the resistance between CR86, pin 019 (YU) and GROUND.

- **Is the resistance less than 10,000 ohms?**

-> Yes
REPAIR the short circuit. For additional information, refer to the wiring diagrams. CLEAR the DTC. TEST the system for normal operation.

-> No
CHECK the warning lamp LED, replace as necessary. If the LED is good, contact dealer technical support for advice on possible RCM failure.

PINPOINT TEST G1043827p2 : B1869, B1870: WARNING LAMP ON CONSTANTLY

G1043827t2 : CHECK THE WARNING LAMP CIRCUIT FOR SHORT TO POWER

1. Disconnect the battery negative terminal. 2. Wait one minute for the system to become safe. 3. Disconnect the restraints control module electrical connector, CR86. 4. Disconnect the instrument cluster electrical connector, IP05. 5. Reconnect the battery negative terminal. 6. Measure the voltage between IP05, pin 01 (YU) and GROUND.

- **Is the voltage greater than 3 volts?**

-> Yes
REPAIR the short circuit. For additional information, refer to the wiring diagrams. CLEAR the DTC. TEST the system for normal operation.

-> No
GO to Pinpoint Test G1043827t3.

G1043827t3 : CHECK THE WARNING LAMP CIRCUIT FOR OPEN CIRCUIT

1. Measure the resistance between IP05, pin 01 (YU) and CR86, pin 19 (YU).

- **Is the resistance greater than 5 ohms?**

-> Yes
REPAIR the open circuit. For additional information, refer to the wiring diagrams. CLEAR the DTC. TEST the system for normal operation.

-> No
CONTACT dealer technical support for advice on possible IC failure.

PINPOINT TEST G1043827p3 : DTC B2290, B2909: FLASH CODE 16: OCCUPANT CLASSIFICATION SENSOR (OCM)/PASSENGER WEIGHT SENSOR (PWS)/ BELT TENSION SENSOR MALFUNCTION

G1043827t4 : CHECK THE POWER SUPPLY TO THE OCM

1. Disconnect the battery negative terminal. 2. Wait one minute for the system to become safe. 3. Disconnect the OCM electrical connector, SP30. 4. Reconnect the battery negative terminal. 5. Turn the ignition switch to the **ON** position. 6. Measure the voltage between SP30, pin 22 (WU) and GROUND.

- **Is the voltage greater than 10 volts?**

-> Yes
GO to Pinpoint Test G1043827t5.

-> No
REPAIR the circuit between the OCM and battery. This circuit includes the primary junction box (fuse 29). For additional information, refer to the wiring diagrams. CLEAR the DTC. TEST the system for normal operation.

G1043827t5 : CHECK THE GROUND TO THE OCM

1. Turn the ignition switch to the **OFF** position. 2. Measure the resistance between SP30, pin 23 (BK) and GROUND.

- **Is the resistance greater than 5 ohms?**

www.JagDocs.com

-> Yes
REPAIR the high resistance circuit. For additional information, refer to the wiring diagrams. CLEAR the DTC. TEST the system for normal operation.

-> No
CHECK the CAN circuits,
Communications Network GO to Pinpoint Test G1043827t6.

G1043827t6 : CHECK THE POWER SUPPLY TO THE PWS

1. Disconnect the PWS electrical connector, SP02. 2. Turn the ignition switch to the **ON** position. 3. Measure the voltage between SP02, pin G ®) and GROUND.

- **Is the voltage greater than 10 volts?**

-> Yes
REPAIR the circuit between SP02, pin G and SP30, pin 09 ®). For additional information, refer to the wiring diagrams. CLEAR the DTC. TEST the system for normal operation.

-> No
GO to Pinpoint Test G1043827t7.

G1043827t7 : CHECK THE PWS GROUND CIRCUIT FROM THE OCM FOR HIGH RESISTANCE

1. Disconnect the battery negative terminal. 2. Disconnect the OCM electrical connector, SP30. 3. Measure the resistance between SP02, pin D (BW) and SP30, pin 10.

- **Is the resistance greater than 5 ohms?**

-> Yes
REPAIR the high resistance circuit. For additional information, refer to the wiring diagrams. CLEAR the DTC. TEST the system for normal operation.

-> No
GO to Pinpoint Test G1043827t8.

G1043827t8 : CHECK THE CAN + CIRCUIT BETWEEN THE OPM AND THE PWS FOR HIGH RESISTANCE

1. Measure the resistance between SP02, pin E (OY) and SP30, pin 12 (OY).

- **Is the resistance greater than 5 ohms?**

-> Yes
REPAIR the high resistance circuit. For additional information, refer to the wiring diagrams. CLEAR the DTC. TEST the system for normal operation.

-> No
GO to Pinpoint Test G1043827t9.

G1043827t9 : CHECK THE CAN - CIRCUIT BETWEEN THE OPM AND THE PWS FOR HIGH RESISTANCE

1. Measure the resistance between SP02, pin F (UY) and SP30, pin 11 (UY).

- **Is the resistance greater than 5 ohms?**

-> Yes
REPAIR the high resistance circuit. For additional information, refer to the wiring diagrams. CLEAR the DTC. TEST the system for normal operation.

-> No
GO to Pinpoint Test G1043827t10.

G1043827t10 : CHECK THE BELT TENSION SENSOR SIGNAL CIRCUIT TO THE PWS FOR HIGH RESISTANCE

1. Disconnect the belt tension sensor electrical connector, SP33. 2. Measure the resistance between SP33, pin 02 (B) and SP02, pin A (B).

- **Is the resistance greater than 5 ohms?**

-> Yes
REPAIR the high resistance circuit. For additional information, refer to the wiring diagrams. CLEAR the DTC. TEST the system for normal operation.

-> No
GO to Pinpoint Test G1043827t11.

G1043827t11 : CHECK THE BELT TENSION SENSOR SIGNAL CIRCUIT TO THE PWS FOR SHORT TO GROUND

1. Reconnect the battery negative terminal. 2. Measure the resistance between SP33, pin 02 (B) and GROUND.

www.JagDocs.com

- **Is the resistance less than 10,000 ohms?**

-> Yes
REPAIR the short circuit. For additional information, refer to the wiring diagrams. CLEAR the DTC. TEST the system for normal operation.

-> No
GO to Pinpoint Test G1043827t12.

G1043827t12 : CHECK THE BELT TENSION SENSOR SIGNAL CIRCUIT TO THE PWS FOR SHORT TO POWER

1. Measure the voltage between SP33, pin 02 (B) and GROUND.

- **Is the voltage greater than 3 volts?**

-> Yes
REPAIR the short circuit. For additional information, refer to the wiring diagrams. CLEAR the DTC. TEST the system for normal operation.

-> No
GO to Pinpoint Test G1043827t13.

G1043827t13 : CHECK THE BELT TENSION SENSOR GROUND CIRCUIT TO THE PWS FOR HIGH RESISTANCE

1. Measure the resistance between SP33, pin 03 ®) and SP02, pin C ®).

- **Is the resistance greater than 5 ohms?**

-> Yes
REPAIR the high resistance circuit. For additional information, refer to the wiring diagrams. CLEAR the DTC. TEST the system for normal operation.

-> No
GO to Pinpoint Test G1043827t14.

G1043827t14 : CHECK THE BELT TENSION SENSOR GROUND CIRCUIT TO THE PWS FOR SHORT TO GROUND

1. Measure the resistance between SP33, pin 03 ®) and GROUND.

- **Is the resistance less than 10,000 ohms?**

-> Yes
REPAIR the short circuit. For additional information, refer to the wiring diagrams. CLEAR the DTC. TEST the system for normal operation.

-> No
GO to Pinpoint Test G1043827t15.

G1043827t15 : CHECK THE BELT TENSION SENSOR GROUND CIRCUIT TO THE PWS FOR SHORT TO POWER

1. Measure the voltage between SP33, pin 03 ®) and GROUND.

- **Is the voltage greater than 3 volts?**

-> Yes
REPAIR the short circuit. For additional information, refer to the wiring diagrams. CLEAR the DTC. TEST the system for normal operation.

-> No
GO to Pinpoint Test G1043827t16.

G1043827t16 : CHECK THE BELT TENSION SENSOR SUPPLY CIRCUIT TO THE PWS FOR HIGH RESISTANCE

1. Measure the resistance between SP33, pin 01 (Y) and SP02, pin B (Y).

- **Is the resistance greater than 5 ohms?**

-> Yes
REPAIR the high resistance circuit. For additional information, refer to the wiring diagrams. CLEAR the DTC. TEST the system for normal operation.

-> No
GO to Pinpoint Test G1043827t17.

www.JagDocs.com

G1043827t17 : CHECK THE BELT TENSION SENSOR SUPPLY CIRCUIT TO THE PWS FOR SHORT TO GROUND

1. Measure the resistance between SP33, pin 01 (Y) and GROUND.

- **Is the resistance less than 10,000 ohms?**

-> Yes
REPAIR the short circuit. For additional information, refer to the wiring diagrams. CLEAR the DTC. TEST the system for normal operation.

-> No
GO to Pinpoint Test G1043827t18.

G1043827t18 : CHECK THE BELT TENSION SENSOR SUPPLY CIRCUIT TO THE PWS FOR SHORT TO POWER

1. Measure the voltage between SP33, pin 01 (Y) and GROUND.

- **Is the voltage greater than 3 volts?**

-> Yes
REPAIR the short circuit. For additional information, refer to the wiring diagrams. CLEAR the DTC. TEST the system for normal operation.

-> No
INSTALL a new belt tension sensor. CLEAR the DTC. Allow a self-test to complete. TEST the system for normal operation. if the fault reoccurs, contact dealer technical support for advice on possible weight sensor failure.

PINPOINT TEST G1043827p4 : DTC B2290, B2909: FLASH CODE 17: TRANSDUCER AND/OR CIRCUIT MALFUNCTION, OCM AND/OR CIRCUIT MALFUNCTION

G1043827t19 : CHECK THE A PILLAR TRANSDUCER CIRCUIT FOR SHORT CIRCUIT

1. Disconnect the battery negative terminal. 2. Wait one minute for the system to become safe. 3. Disconnect the OCM electrical connector, SP30. 4. Disconnect the A pillar transducer electrical connector, CR105. 5. Measure the resistance between SP30, pin 05 (BR) and SP30, pin 06 (GW).

- **Is the resistance less than 10,000 ohms?**

-> Yes
REPAIR the short circuit. For additional information, refer to the wiring diagrams. CLEAR the DTC. TEST the system for normal operation.

-> No
GO to Pinpoint Test G1043827t20.

G1043827t20 : CHECK THE A PILLAR TRANSDUCER CAN - CIRCUIT FOR HIGH RESISTANCE

1. Measure the resistance between SP30, pin 05 (BR) and CR105, pin 01 (BR).

- **Is the resistance greater than 5 ohms?**

-> Yes
REPAIR the high resistance circuit. For additional information, refer to the wiring diagrams. CLEAR the DTC. TEST the system for normal operation.

-> No
GO to Pinpoint Test G1043827t21.

G1043827t21 : CHECK THE A PILLAR TRANSDUCER CAN - CIRCUIT FOR SHORT TO GROUND

1. Measure the resistance between SP30, pin 05 (BR) and GROUND.

- **Is the resistance less than 10,000 ohms?**

-> Yes
REPAIR the short circuit. For additional information, refer to the wiring diagrams. CLEAR the DTC. TEST the system for normal operation.

-> No
GO to Pinpoint Test G1043827t22.

G1043827t22 : CHECK THE A PILLAR TRANSDUCER CAN - CIRCUIT FOR SHORT TO POWER

www.JagDocs.com

1. Reconnect the battery negative terminal. 2. Measure the voltage between SP30, pin 05 (BR) and GROUND.

- **Is the voltage greater than 3 volts?**

-> Yes
REPAIR the short circuit. For additional information, refer to the wiring diagrams. CLEAR the DTC. TEST the system for normal operation.

-> No
GO to Pinpoint Test G1043827t23.

G1043827t23 : CHECK THE A PILLAR TRANSDUCER CAN + CIRCUIT FOR HIGH RESISTANCE

1. Measure the resistance between SP30, pin 06 (GW) and CR105, pin 02 (GW).

- **Is the resistance greater than 5 ohms?**

-> Yes
REPAIR the high resistance circuit. For additional information, refer to the wiring diagrams. CLEAR the DTC. TEST the system for normal operation.

-> No
GO to Pinpoint Test G1043827t24.

G1043827t24 : CHECK THE A PILLAR TRANSDUCER CAN + CIRCUIT FOR SHORT TO GROUND

1. Measure the resistance between SP30, pin 06 (GW) and GROUND.

- **Is the resistance less than 10,000 ohms?**

-> Yes
REPAIR the short circuit. For additional information, refer to the wiring diagrams. CLEAR the DTC. TEST the system for normal operation.

-> No
GO to Pinpoint Test G1043827t25.

G1043827t25 : CHECK THE A PILLAR TRANSDUCER CAN + CIRCUIT FOR SHORT TO POWER

1. Measure the voltage between SP30, pin 06 (GW) and GROUND.

- **Is the voltage greater than 3 volts?**

-> Yes
REPAIR the short circuit. For additional information, refer to the wiring diagrams. CLEAR the DTC. TEST the system for normal operation.

-> No
GO to Pinpoint Test G1043827t26.

G1043827t26 : CHECK THE ROOF REAR OUTER TRANSDUCER CIRCUIT FOR SHORT CIRCUIT

1. Disconnect the roof rear outer transducer electrical connector, RF18. 2. Measure the resistance between SP30, pin 07 (BO) and SP30, pin 08 (GU).

- **Is the resistance less than 10,000 ohms?**

-> Yes
REPAIR the short circuit. For additional information, refer to the wiring diagrams. CLEAR the DTC. TEST the system for normal operation.

-> No
GO to Pinpoint Test G1043827t27.

G1043827t27 : CHECK THE ROOF REAR OUTER TRANSDUCER CAN - CIRCUIT FOR HIGH RESISTANCE

1. Measure the resistance between SP30, pin 07 (BO) and RF18, pin 01 (BO).

- **Is the resistance greater than 5 ohms?**

-> Yes
REPAIR the high resistance circuit. For additional information, refer to the wiring diagrams. CLEAR the DTC. TEST the system for normal operation.

-> No
GO to Pinpoint Test G1043827t28.

G1043827t28 : CHECK THE ROOF REAR OUTER TRANSDUCER CAN - CIRCUIT FOR SHORT TO GROUND

www.JagDocs.com

1. Measure the resistance between SP30, pin 07 (BO) and GROUND.

- **Is the resistance less than 10,000 ohms?**

-> Yes
REPAIR the short circuit. For additional information, refer to the wiring diagrams. CLEAR the DTC. TEST the system for normal operation.

-> No
GO to Pinpoint Test G1043827t29.

G1043827t29 : CHECK THE ROOF REAR OUTER TRANSDUCER CAN - CIRCUIT FOR SHORT TO POWER

1. Measure the voltage between SP30, pin 07 (BO) and GROUND.

- **Is the voltage greater than 3 volts?**

-> Yes
REPAIR the short circuit. For additional information, refer to the wiring diagrams. CLEAR the DTC. TEST the system for normal operation.

-> No
GO to Pinpoint Test G1043827t30.

G1043827t30 : CHECK THE ROOF REAR OUTER TRANSDUCER CAN + CIRCUIT FOR HIGH RESISTANCE

1. Measure the resistance between SP30, pin 08 (GU) and RF18, pin 02 (GU).

- **Is the resistance greater than 5 ohms?**

-> Yes
REPAIR the high resistance circuit. For additional information, refer to the wiring diagrams. CLEAR the DTC. TEST the system for normal operation.

-> No
GO to Pinpoint Test G1043827t31.

G1043827t31 : CHECK THE ROOF REAR OUTER TRANSDUCER CAN + CIRCUIT FOR SHORT TO GROUND

1. Measure the resistance between SP30, pin 08 (GU) and GROUND.

- **Is the resistance less than 10,000 ohms?**

-> Yes
REPAIR the short circuit. For additional information, refer to the wiring diagrams. CLEAR the DTC. TEST the system for normal operation.

-> No
GO to Pinpoint Test G1043827t32.

G1043827t32 : CHECK THE ROOF REAR OUTER TRANSDUCER CAN + CIRCUIT FOR SHORT TO POWER

1. Measure the voltage between SP30, pin 08 (GU) and GROUND.

- **Is the voltage greater than 3 volts?**

-> Yes
REPAIR the short circuit. For additional information, refer to the wiring diagrams. CLEAR the DTC. TEST the system for normal operation.

-> No
GO to Pinpoint Test G1043827t33.

G1043827t33 : CHECK THE ROOF REAR CENTER TRANSDUCER CIRCUIT FOR SHORT CIRCUIT

1. Disconnect the roof rear center transducer electrical connector, RF16. 2. Measure the resistance between SP30, pin 01 (BG) and SP30, pin 02 (OG).

- **Is the resistance less than 10,000 ohms?**

-> Yes
REPAIR the short circuit. For additional information, refer to the wiring diagrams. CLEAR the DTC. TEST the system for normal operation.

-> No

www.JagDocs.com

GO to Pinpoint Test G1043827t34.

G1043827t34 : CHECK THE ROOF REAR CENTER TRANSDUCER CAN - CIRCUIT FOR HIGH RESISTANCE

1. Measure the resistance between SP30, pin 01 (BG) and RF16, pin 01 (BG).

- **Is the resistance greater than 5 ohms?**

-> Yes
REPAIR the high resistance circuit. For additional information, refer to the wiring diagrams. CLEAR the DTC. TEST the system for normal operation.

-> No
GO to Pinpoint Test G1043827t35.

G1043827t35 : CHECK THE ROOF REAR CENTER TRANSDUCER CAN - CIRCUIT FOR SHORT TO GROUND

1. Measure the resistance between SP30, pin 01 (BG) and GROUND.

- **Is the resistance less than 10,000 ohms?**

-> Yes
REPAIR the short circuit. For additional information, refer to the wiring diagrams. CLEAR the DTC. TEST the system for normal operation.

-> No
GO to Pinpoint Test G1043827t36.

G1043827t36 : CHECK THE ROOF REAR CENTER TRANSDUCER CAN - CIRCUIT FOR SHORT TO POWER

1. Measure the voltage between SP30, pin 01 (BG) and GROUND.

- **Is the voltage greater than 3 volts?**

-> Yes
REPAIR the short circuit. For additional information, refer to the wiring diagrams. CLEAR the DTC. TEST the system for normal operation.

-> No
GO to Pinpoint Test G1043827t37.

G1043827t37 : CHECK THE ROOF REAR CENTER TRANSDUCER CAN + CIRCUIT FOR HIGH RESISTANCE

1. Measure the resistance between SP30, pin 01 (BG) and RF16, pin 01 (BG).

- **Is the resistance greater than 5 ohms?**

-> Yes
REPAIR the high resistance circuit. For additional information, refer to the wiring diagrams. CLEAR the DTC. TEST the system for normal operation.

-> No
GO to Pinpoint Test G1043827t38.

G1043827t38 : CHECK THE ROOF REAR CENTER TRANSDUCER CAN + CIRCUIT FOR SHORT TO GROUND

1. Measure the resistance between SP30, pin 01 (BG) and GROUND.

- **Is the resistance less than 10,000 ohms?**

-> Yes
REPAIR the short circuit. For additional information, refer to the wiring diagrams. CLEAR the DTC. TEST the system for normal operation.

-> No
GO to Pinpoint Test G1043827t39.

G1043827t39 : CHECK THE ROOF REAR CENTER TRANSDUCER CAN + CIRCUIT FOR SHORT TO POWER

1. Measure the voltage between SP30, pin 01 (BG) and GROUND.

- **Is the voltage greater than 3 volts?**

www.JagDocs.com

-> Yes
REPAIR the short circuit. For additional information, refer to the wiring diagrams. CLEAR the DTC. TEST the system for normal operation.

-> No
GO to Pinpoint Test G1043827t40.

G1043827t40 : CHECK THE LOWER STACK TRANSDUCER CIRCUIT FOR SHORT CIRCUIT

1. Disconnect the lower stack transducer electrical connector, CL06. 2. Measure the resistance between SP30, pin 03 (NW) and SP30, pin 04 (Y).

- **Is the resistance less than 10,000 ohms?**

-> Yes
REPAIR the short circuit. For additional information, refer to the wiring diagrams. CLEAR the DTC. TEST the system for normal operation.

-> No
GO to Pinpoint Test G1043827t41.

G1043827t41 : CHECK THE ROOF REAR CENTER TRANSDUCER CAN - CIRCUIT FOR HIGH RESISTANCE

1. Measure the resistance between SP30, pin 03 (NW) and CL06, pin 01 (NW).

- **Is the resistance greater than 5 ohms?**

-> Yes
REPAIR the high resistance circuit. For additional information, refer to the wiring diagrams. CLEAR the DTC. TEST the system for normal operation.

-> No
GO to Pinpoint Test G1043827t42.

G1043827t42 : CHECK THE ROOF REAR CENTER TRANSDUCER CAN - CIRCUIT FOR SHORT TO GROUND

1. Measure the resistance between SP30, pin 03 (NW) and GROUND.

- **Is the resistance less than 10,000 ohms?**

-> Yes
REPAIR the short circuit. For additional information, refer to the wiring diagrams. CLEAR the DTC. TEST the system for normal operation.

-> No
GO to Pinpoint Test G1043827t43.

G1043827t43 : CHECK THE ROOF REAR CENTER TRANSDUCER CAN - CIRCUIT FOR SHORT TO POWER

1. Measure the voltage between SP30, pin 03 (NW) and GROUND.

- **Is the voltage greater than 3 volts?**

-> Yes
REPAIR the short circuit. For additional information, refer to the wiring diagrams. CLEAR the DTC. TEST the system for normal operation.

-> No
GO to Pinpoint Test G1043827t44.

G1043827t44 : CHECK THE ROOF REAR CENTER TRANSDUCER CAN + CIRCUIT FOR HIGH RESISTANCE

1. Measure the resistance between SP30, pin 01 (BG) and RF16, pin 01 (BG).

- **Is the resistance greater than 5 ohms?**

-> Yes
REPAIR the high resistance circuit. For additional information, refer to the wiring diagrams. CLEAR the DTC. TEST the system for normal operation.

-> No
GO to Pinpoint Test G1043827t45.

G1043827t45 : CHECK THE ROOF REAR CENTER TRANSDUCER CAN + CIRCUIT FOR SHORT TO GROUND

www.JagDocs.com

1. Measure the resistance between SP30, pin 01 (BG) and GROUND.

- **Is the resistance less than 10,000 ohms?**

-> Yes
REPAIR the short circuit. For additional information, refer to the wiring diagrams. CLEAR the DTC. TEST the system for normal operation.

-> No
GO to Pinpoint Test G1043827t46.

G1043827t46 : CHECK THE ROOF REAR CENTER TRANSDUCER CAN + CIRCUIT FOR SHORT TO POWER

1. Measure the voltage between SP30, pin 01 (BG) and GROUND.

- **Is the voltage greater than 3 volts?**

-> Yes
REPAIR the short circuit. For additional information, refer to the wiring diagrams. CLEAR the DTC. TEST the system for normal operation.

-> No
INSTALL a new occupant classification module
Driver Air Bag Module (76.73.39) CLEAR the DTC, allow a self-test to complete. TEST the system for normal operation. If the DTC reoccurs, contact dealer technical support for advice on possible transducer failure.

PINPOINT TEST G1043827p5 : DTC B1884, B1890: FLASH CODE 18: PASSENGER AIRBAG DEACTIVATION (PAD) WARNING LAMP CIRCUIT MALFUNCTION

G1043827t47 : CHECK THE PAD WARNING LAMP BULB FOR CONTINUITY

1. Disconnect the battery negative terminal. 2. Wait one minute for the system to become safe. 3. Disconnect the PAD lamp electrical connector, IP68. 4. Check for continuity between IP68, pins 01 (WU) and 03 (BR).

- **Is the circuit continuous?**

-> Yes
GO to Pinpoint Test G1043827t48.

-> No
INSTALL a new bulb. CLEAR the DTC. TEST the system for normal operation.

G1043827t48 : CHECK THE POWER SUPPLY TO THE PAD WARNING LAMP

1. Reconnect the battery negative terminal. 2. Turn the ignition switch to the **ON** position. 3. Measure the voltage between IP68, pin 01 (WU) and GROUND.

- **Is the voltage greater than 10 volts?**

-> Yes
REPAIR the circuit between the PAD warning lamp and battery. This circuit includes the primary junction box (fuse 29). For additional information, refer to the wiring diagrams. CLEAR the DTC. TEST the system for normal operation.

-> No
GO to Pinpoint Test G1043827t49.

G1043827t49 : CHECK THE POWER SUPPLY TO THE PAD WARNING LAMP FOR HIGH RESISTANCE

1. Disconnect the battery negative terminal. 2. Wait one minute for the system to become safe. 3. Disconnect the RCM electrical connector, CR86. 4. Measure the resistance between IP68, pin 03 (BR) and CR86, pin 15 (BR).

- **Is the resistance greater than 5 ohms?**

-> Yes
REPAIR the high resistance circuit. For additional information, refer to the wiring diagrams. CLEAR the DTC. TEST the system for normal operation.

-> No
GO to Pinpoint Test G1043827t50.

G1043827t50 : CHECK THE POWER SUPPLY TO THE PAD WARNING LAMP FOR SHORT TO GROUND

www.JagDocs.com

1. Reconnect the battery negative terminal. 2. Measure the resistance between IP68, pin 03 (BR) and GROUND.

- **Is the resistance less than 10,000 ohms?**

-> Yes
REPAIR the short circuit. For additional information, refer to the wiring diagrams. CLEAR the DTC. TEST the system for normal operation.

-> No
GO to Pinpoint Test G1043827t51.

G1043827t51 : CHECK THE POWER SUPPLY TO THE PAD WARNING LAMP FOR SHORT TO POWER

1. Measure the voltage between IP68, pin 03 (BR) and GROUND.

- **Is the voltage greater than 3 volts?**

-> Yes
REPAIR the short circuit. For additional information, refer to the wiring diagrams. CLEAR the DTC. TEST the system for normal operation.

-> No
Contact dealer technical support for advice on possible RCM failure.

PINPOINT TEST G1043827p6 : DTC B2293: FLASH CODE 19: DRIVER AIR BAG/CLOCKSPRING MALFUNCTION

G1043827t52 : CHECK THE DRIVER AIRBAG MODULE AND CIRCUIT USING SIMULATORS

1. Disconnect the battery negative terminal. 2. Wait one minute for the system to become safe. 3. Disconnect the driver airbag electrical connectors, SW11 and SW12. 4. Connect a simulator to each connector. 5. Reconnect the battery negative terminal. 6. Turn the ignition switch to the **ON** position. 7. Allow the self-test to complete with the simulators installed.

- **Does the self-test pass?**

-> Yes
INSTALL a new driver air bag module,
Driver Air Bag Module (76.73.39) CLEAR the DTC. TEST the system for normal operation.

-> No
GO to Pinpoint Test G1043827t53.

G1043827t53 : CHECK THE DRIVER AIRBAG FIRST STAGE SIGNAL CIRCUIT THROUGH THE CLOCKSPRING FOR HIGH RESISTANCE

1. Disconnect the battery negative terminal. 2. Wait one minute for the system to become safe. 3. Disconnect the clockspring electrical connector, SW08. 4. Measure the resistance between SW11, pin 01 (SB) and SW08, pin 10.

- **Is the resistance greater than 5 ohms?**

-> Yes
INSTALL a new clockspring.
Clockspring (86.65.92) CLEAR the DTC. TEST the system for normal operation.

-> No
GO to Pinpoint Test G1043827t54.

G1043827t54 : CHECK THE DRIVER AIRBAG FIRST STAGE SIGNAL CIRCUIT THROUGH THE CLOCKSPRING FOR SHORT TO GROUND

1. Reconnect the battery negative terminal. 2. Measure the resistance between SW11, pin 01 (SB) and GROUND.

- **Is the resistance less than 10,000 ohms?**

-> Yes
INSTALL a new clockspring.
Clockspring (86.65.92) CLEAR the DTC. TEST the system for normal operation.

-> No
GO to Pinpoint Test G1043827t55.

G1043827t55 : CHECK THE DRIVER AIRBAG FIRST STAGE SIGNAL CIRCUIT THROUGH THE CLOCKSPRING FOR SHORT TO POWER

1. Measure the voltage between SW11, pin 01 (SB) and GROUND.

- **Is the voltage greater than 3 volts?**

www.JagDocs.com

-> Yes
INSTALL a new clockspring.
Clockspring (86.65.92) CLEAR the DTC. TEST the system for normal operation.

-> No
GO to Pinpoint Test G1043827t56.

G1043827t56 : CHECK THE DRIVER AIRBAG FIRST STAGE RETURN CIRCUIT THROUGH THE CLOCKSPRING FOR HIGH RESISTANCE

1. Disconnect the battery negative terminal. 2. Wait one minute for the system to become safe. 3. Measure the resistance between SW11, pin 02 (NR) and SW08, pin 09.

- **Is the resistance greater than 5 ohms?**

-> Yes
INSTALL a new clockspring.
Clockspring (86.65.92) CLEAR the DTC. TEST the system for normal operation.

-> No
GO to Pinpoint Test G1043827t57.

G1043827t57 : CHECK THE DRIVER AIRBAG FIRST STAGE RETURN CIRCUIT THROUGH THE CLOCKSPRING FOR SHORT TO GROUND

1. Reconnect the battery negative terminal. 2. Measure the resistance between SW11, pin 02 (NR) and GROUND.

- **Is the resistance less than 10,000 ohms?**

-> Yes
INSTALL a new clockspring.
Clockspring (86.65.92) CLEAR the DTC. TEST the system for normal operation.

-> No
GO to Pinpoint Test G1043827t58.

G1043827t58 : CHECK THE DRIVER AIRBAG FIRST STAGE RETURN CIRCUIT THROUGH THE CLOCKSPRING FOR SHORT TO POWER

1. Measure the voltage between SW11, pin 02 (NR) and GROUND.

- **Is the voltage greater than 3 volts?**

-> Yes
INSTALL a new clockspring.
Clockspring (86.65.92) CLEAR the DTC. TEST the system for normal operation.

-> No
GO to Pinpoint Test G1043827t59.

G1043827t59 : CHECK THE DRIVER AIRBAG SECOND STAGE SIGNAL CIRCUIT THROUGH THE CLOCKSPRING FOR HIGH RESISTANCE

1. Disconnect the battery negative terminal. 2. Wait one minute for the system to become safe. 3. Measure the resistance between SW12, pin 01 (NB) and SW08, pin 02.

- **Is the resistance greater than 5 ohms?**

-> Yes
INSTALL a new clockspring.
Clockspring (86.65.92) CLEAR the DTC. TEST the system for normal operation.

-> No
GO to Pinpoint Test G1043827t60.

G1043827t60 : CHECK THE DRIVER AIRBAG SECOND STAGE SIGNAL CIRCUIT THROUGH THE CLOCKSPRING FOR SHORT TO GROUND

1. Reconnect the battery negative terminal. 2. Measure the resistance between SW12, pin 01 (NB) and GROUND.

- **Is the resistance less than 10,000 ohms?**

-> Yes
INSTALL a new clockspring.
Clockspring (86.65.92) CLEAR the DTC. TEST the system for normal operation.

-> No
GO to Pinpoint Test G1043827t61.

www.JagDocs.com

G1043827t61 : CHECK THE DRIVER AIRBAG SECOND STAGE SIGNAL CIRCUIT THROUGH THE CLOCKSPRING FOR SHORT TO POWER

1. Measure the voltage between SW12, pin 01 (NB) and GROUND.

- **Is the voltage greater than 3 volts?**

-> Yes
INSTALL a new clockspring.
Clockspring (86.65.92) CLEAR the DTC. TEST the system for normal operation.

-> No
GO to Pinpoint Test G1043827t62.

G1043827t62 : CHECK THE DRIVER AIRBAG SECOND STAGE RETURN CIRCUIT THROUGH THE CLOCKSPRING FOR HIGH RESISTANCE

1. Disconnect the battery negative terminal. 2. Wait one minute for the system to become safe. 3. Measure the resistance between SW12, pin 02 (SW) and SW08, pin 01.

- **Is the resistance greater than 5 ohms?**

-> Yes
INSTALL a new clockspring.
Clockspring (86.65.92) CLEAR the DTC. TEST the system for normal operation.

-> No
GO to Pinpoint Test G1043827t63.

G1043827t63 : CHECK THE DRIVER AIRBAG SECOND STAGE RETURN CIRCUIT THROUGH THE CLOCKSPRING FOR SHORT TO GROUND

1. Reconnect the battery negative terminal. 2. Measure the resistance between SW12, pin 02 (SW) and GROUND.

- **Is the resistance less than 10,000 ohms?**

-> Yes
INSTALL a new clockspring.
Clockspring (86.65.92) CLEAR the DTC. TEST the system for normal operation.

-> No
GO to Pinpoint Test G1043827t64.

G1043827t64 : CHECK THE DRIVER AIRBAG SECOND STAGE RETURN CIRCUIT THROUGH THE CLOCKSPRING FOR SHORT TO POWER

1. Measure the voltage between SW12, pin 02 (SW) and GROUND.

- **Is the voltage greater than 3 volts?**

-> Yes
INSTALL a new clockspring.
Clockspring (86.65.92) CLEAR the DTC. TEST the system for normal operation.

-> No
Contact dealer technical support for advice on possible RCM failure.

PINPOINT TEST G1043827p7 : DTC B2293: FLASH CODE 21: PASSENGER AIR BAG MALFUNCTION

G1043827t65 : CHECK THE PASSENGER AIRBAG MODULE AND CIRCUIT USING SIMULATORS

1. Disconnect the battery negative terminal. 2. Wait one minute for the system to become safe. 3. Disconnect the passenger airbag electrical connectors, sp17 4. Connect a simulator to the connector. 5. Reconnect the battery negative terminal. 6. Turn the ignition switch to the **ON** position. 7. Allow the self-test to complete with the simulators installed.

- **Does the self-test pass?**

-> Yes
INSTALL a new passenger air bag module,
Passenger Air Bag Module (76.73.37) CLEAR the DTC. TEST the system for normal operation.

-> No
INSTALL a new passenger airbag harness. CLEAR the DTC. TEST the system for normal operation.

www.JagDocs.com

PINPOINT TEST G1043827p8 : DTC B2295: FLASH CODE 22: DRIVER SIDE AIRBAG MALFUNCTION

G1043827t66 : CHECK THE DRIVER SIDE AIRBAG MODULE AND CIRCUIT USING A SIMULATOR

1. Disconnect the battery negative terminal. 2. Wait one minute for the system to become safe. 3. Disconnect the driver side airbag electrical connector, SD17. 4. Connect a simulator to the connector. 5. Reconnect the battery negative terminal. 6. Turn the ignition switch to the **ON** position. 7. Allow the self-test to complete with the simulators installed.

- **Does the self-test pass?**

-> Yes
INSTALL a new driver side airbag module,
Side Air Bag Module (76.73.47) CLEAR the DTC. TEST the system for normal operation.

-> No
INSTALL a new driver side airbag harness. CLEAR the DTC. TEST the system for normal operation.

PINPOINT TEST G1043827p9 : DTC B2295: FLASH CODE 23: PASSENGER SIDE AIRBAG MALFUNCTION

G1043827t67 : CHECK THE PASSENGER SIDE AIRBAG MODULE AND CIRCUIT USING A SIMULATOR

1. Disconnect the battery negative terminal. 2. Wait one minute for the system to become safe. 3. Disconnect the passenger side airbag electrical connector, SP17. 4. Connect a simulator to the connector. 5. Reconnect the battery negative terminal. 6. Turn the ignition switch to the **ON** position. 7. Allow the self-test to complete with the simulators installed.

- **Does the self-test pass?**

-> Yes
INSTALL a new passenger side airbag module,
Side Air Bag Module (76.73.47) CLEAR the DTC. TEST the system for normal operation.

-> No

INSTALL a new passenger side airbag harness. CLEAR the DTC. TEST the system for normal operation.

PINPOINT TEST G1043827p10 : DTC B2295: FLASH CODE 24: DRIVER CURTAIN AIRBAG MALFUNCTION

G1043827t68 : CHECK THE DRIVER CURTAIN AIRBAG MODULE AND CIRCUIT USING A SIMULATOR

1. Disconnect the battery negative terminal. 2. Wait one minute for the system to become safe. 3. Disconnect the driver curtain airbag electrical connector, CR62. 4. Connect a simulator to the connector. 5. Reconnect the battery negative terminal. 6. Turn the ignition switch to the **ON** position. 7. Allow the self-test to complete with the simulators installed.

- **Does the self-test pass?**

-> Yes
INSTALL a new driver curtain airbag module,
Side Air Curtain Module (76.73.64) CLEAR the DTC. TEST the system for normal operation.

-> No
INSTALL a new driver curtain airbag harness. CLEAR the DTC. TEST the system for normal operation.

PINPOINT TEST G1043827p11 : DTC B2295: FLASH CODE 25: PASSENGER CURTAIN AIRBAG MALFUNCTION

G1043827t69 : CHECK THE PASSENGER CURTAIN AIRBAG MODULE AND CIRCUIT USING A SIMULATOR

1. Disconnect the battery negative terminal. 2. Wait one minute for the system to become safe. 3. Disconnect the passenger curtain airbag electrical connector, CR33. 4. Connect a simulator to the connector. 5. Reconnect the battery negative terminal. 6. Turn the ignition switch to the **ON** position. 7. Allow the self-test to complete with the simulators installed.

- **Does the self-test pass?**

www.JagDocs.com

-> Yes
INSTALL a new passenger curtain airbag module,
Side Air Curtain Module (76.73.64) CLEAR the DTC. TEST the system for normal operation.

-> No
INSTALL a new passenger curtain airbag harness. CLEAR the DTC. TEST the system for normal operation.

PINPOINT TEST G1043827p12 : DTC B2292: FLASH CODE 33: DRIVER SIDE SEAT BELT PRETENSIONER MALFUNCTION

G1043827t70 : CHECK THE DRIVER SIDE SEAT BELT PRETENSIONER CIRCUIT FOR HIGH RESISTANCE

1. Disconnect the battery negative terminal. 2. Wait one minute for the system to become safe. 3. Disconnect the driver seat belt pretensioner electrical connector, SD19. 4. Disconnect the RCM electrical connector, CR87. 5. Measure the resistance between SD19, pin 02 (GR) and CR87, pin 31 (GR).

- **Is the resistance greater than 5 ohms?**

-> Yes
INSTALL a new driver side seat belt pretensioner harness. CLEAR the DTC. TEST the system for normal operation.

-> No
GO to Pinpoint Test G1043827t71.

G1043827t71 : CHECK THE DRIVER SIDE SEAT BELT PRETENSIONER CIRCUIT FOR SHORT TO GROUND

1. Reconnect the battery negative terminal. 2. Measure the resistance between SD19, pin 02 (GR) and GROUND.

- **Is the resistance less than 10,000 ohms?**

-> Yes
REPAIR the short circuit. For additional information, refer to the wiring diagrams. CLEAR the DTC. TEST the system for normal operation.

-> No
GO to Pinpoint Test G1043827t72.

G1043827t72 : CHECK THE DRIVER SIDE SEAT BELT PRETENSIONER CIRCUIT FOR SHORT TO POWER

1. Measure the voltage between SD19, pin 02 (GR) and GROUND.

- **Is the voltage greater than 3 volts?**

-> Yes
REPAIR the short circuit. For additional information, refer to the wiring diagrams. CLEAR the DTC. TEST the system for normal operation.

-> No
GO to Pinpoint Test G1043827t73.

G1043827t73 : CHECK THE DRIVER SIDE SEAT BELT PRETENSIONER RETURN CIRCUIT FOR HIGH RESISTANCE

1. Measure the resistance between SD19, pin 01 (GU) and CR87, pin 32 (GU).

- **Is the resistance greater than 5 ohms?**

-> Yes
INSTALL a new driver side seat belt pretensioner harness. CLEAR the DTC. TEST the system for normal operation.

-> No
GO to Pinpoint Test G1043827t74.

G1043827t74 : CHECK THE DRIVER SIDE SEAT BELT PRETENSIONER RETURN CIRCUIT FOR SHORT TO GROUND

1. Reconnect the battery negative terminal. 2. Measure the resistance between SD19, pin 01 (GU) and GROUND.

- **Is the resistance less than 10,000 ohms?**

-> Yes
REPAIR the short circuit. For additional information, refer to the wiring diagrams. CLEAR

www.JagDocs.com

the DTC. TEST the system for normal operation.

-> No
GO to Pinpoint Test G1043827t75.

G1043827t75 : CHECK THE DRIVER SIDE SEAT BELT PRETENSIONER RETURN CIRCUIT FOR SHORT TO POWER

1. Measure the voltage between SD19, pin 01 (GU) and GROUND.

- **Is the voltage greater than 3 volts?**

-> Yes
REPAIR the short circuit. For additional information, refer to the wiring diagrams. CLEAR the DTC. TEST the system for normal operation.

-> No
INSTALL a new driver side seat belt pretensioner,
Front Safety Belt Buckle (76.73.49)

PINPOINT TEST G1043827p13 : DTC B2292: FLASH CODE 34: PASSENGER SIDE SEAT BELT PRETENSIONER MALFUNCTION

G1043827t76 : CHECK THE PASSENGER SIDE SEAT BELT PRETENSIONER CIRCUIT FOR HIGH RESISTANCE

1. Disconnect the battery negative terminal. 2. Wait one minute for the system to become safe. 3. Disconnect the passenger seat belt pretensioner electrical connector, SP19. 4. Disconnect the RCM electrical connector, CR87. 5. Measure the resistance between SP19, pin 02 (WR) and CR87, pin 33 (WR).

- **Is the resistance greater than 5 ohms?**

-> Yes
INSTALL a new passenger side seat belt pretensioner harness. CLEAR the DTC. TEST the system for normal operation.

-> No

GO to Pinpoint Test G1043827t77.

G1043827t77 : CHECK THE PASSENGER SIDE SEAT BELT PRETENSIONER CIRCUIT FOR SHORT TO GROUND

1. Reconnect the battery negative terminal. 2. Measure the resistance between SP19, pin 02 (WR) and GROUND.

- **Is the resistance less than 10,000 ohms?**

-> Yes
REPAIR the short circuit. For additional information, refer to the wiring diagrams. CLEAR the DTC. TEST the system for normal operation.

-> No
GO to Pinpoint Test G1043827t78.

G1043827t78 : CHECK THE PASSENGER SIDE SEAT BELT PRETENSIONER CIRCUIT FOR SHORT TO POWER

1. Measure the voltage between SP19, pin 02 (WR) and GROUND.

- **Is the voltage greater than 3 volts?**

-> Yes
REPAIR the short circuit. For additional information, refer to the wiring diagrams. CLEAR the DTC. TEST the system for normal operation.

-> No
GO to Pinpoint Test G1043827t79.

G1043827t79 : CHECK THE PASSENGER SIDE SEAT BELT PRETENSIONER RETURN CIRCUIT FOR HIGH RESISTANCE

1. Measure the resistance between SP19, pin 01 (WU) and CR87, pin 34 (WU).

- **Is the resistance greater than 5 ohms?**

-> Yes
INSTALL a new passenger side seat belt pretensioner harness. CLEAR the DTC. TEST the

www.JagDocs.com

system for normal operation.

-> No
GO to Pinpoint Test G1043827t80.

G1043827t80 : CHECK THE PASSENGER SIDE SEAT BELT PRETENSIONER RETURN CIRCUIT FOR SHORT TO GROUND

1. Reconnect the battery negative terminal. 2. Measure the resistance between SP19, pin 01 (WU) and GROUND.

- **Is the resistance less than 10,000 ohms?**

-> Yes
REPAIR the short circuit. For additional information, refer to the wiring diagrams. CLEAR the DTC. TEST the system for normal operation.

-> No
GO to Pinpoint Test G1043827t81.

G1043827t81 : CHECK THE PASSENGER SIDE SEAT BELT PRETENSIONER RETURN CIRCUIT FOR SHORT TO POWER

1. Measure the voltage between SP19, pin 01 (WU) and GROUND.

- **Is the voltage greater than 3 volts?**

-> Yes
REPAIR the short circuit. For additional information, refer to the wiring diagrams. CLEAR the DTC. TEST the system for normal operation.

-> No
INSTALL a new passenger side seat belt pretensioner,
Front Safety Belt Buckle (76.73.49)

PINPOINT TEST G1043827p14 : DTC B2292: FLASH CODE 35: DRIVER SIDE REAR SEAT BELT PRETENSIONER MALFUNCTION

G1043827t82 : CHECK THE DRIVER SIDE REAR SEAT BELT PRETENSIONER CIRCUIT FOR HIGH RESISTANCE

1. Disconnect the battery negative terminal. 2. Wait one minute for the system to become safe. 3. Disconnect the driver side rear seat belt pretensioner electrical connector, CR64. 4. Disconnect the RCM electrical connector, CR87. 5. Measure the resistance between CR64, pin 02 (Y) and CR87, pin 35 (Y).

- **Is the resistance greater than 5 ohms?**

-> Yes
INSTALL a new driver side rear seat belt pretensioner harness. CLEAR the DTC. TEST the system for normal operation.

-> No
GO to Pinpoint Test G1043827t83.

G1043827t83 : CHECK THE DRIVER SIDE REAR SEAT BELT PRETENSIONER CIRCUIT FOR SHORT TO GROUND

1. Reconnect the battery negative terminal. 2. Measure the resistance between CR64, pin 02 (Y) and GROUND.

- **Is the resistance less than 10,000 ohms?**

-> Yes
REPAIR the short circuit. For additional information, refer to the wiring diagrams. CLEAR the DTC. TEST the system for normal operation.

-> No
GO to Pinpoint Test G1043827t84.

G1043827t84 : CHECK THE DRIVER SIDE REAR SEAT BELT PRETENSIONER CIRCUIT FOR SHORT TO POWER

1. Measure the voltage between CR64, pin 02 (Y) and GROUND.

- **Is the voltage greater than 3 volts?**

-> Yes
REPAIR the short circuit. For additional information, refer to the wiring diagrams. CLEAR

www.JagDocs.com

the DTC. TEST the system for normal operation.

-> No
GO to Pinpoint Test G1043827t85.

G1043827t85 : CHECK THE DRIVER SIDE REAR SEAT BELT PRETENSIONER RETURN CIRCUIT FOR HIGH RESISTANCE

1. Measure the resistance between CR64, pin 01 (Y) and CR87, pin 36 (Y).

- **Is the resistance greater than 5 ohms?**

-> Yes
INSTALL a new driver side rear seat belt pretensioner harness. CLEAR the DTC. TEST the system for normal operation.

-> No
GO to Pinpoint Test G1043827t86.

G1043827t86 : CHECK THE DRIVER SIDE REAR SEAT BELT PRETENSIONER RETURN CIRCUIT FOR SHORT TO GROUND

1. Reconnect the battery negative terminal. 2. Measure the resistance between CR64, pin 01 (Y) and GROUND.

- **Is the resistance less than 10,000 ohms?**

-> Yes
REPAIR the short circuit. For additional information, refer to the wiring diagrams. CLEAR the DTC. TEST the system for normal operation.

-> No
GO to Pinpoint Test G1043827t87.

G1043827t87 : CHECK THE DRIVER SIDE REAR SEAT BELT PRETENSIONER RETURN CIRCUIT FOR SHORT TO POWER

1. Measure the voltage between CR64, pin 01 (Y) and GROUND.

- **Is the voltage greater than 3 volts?**

-> Yes
REPAIR the short circuit. For additional information, refer to the wiring diagrams. CLEAR the DTC. TEST the system for normal operation.

-> No
INSTALL a new driver side rear seat belt pretensioner,
Rear Safety Belt Buckle (76.73.50)

PINPOINT TEST G1043827p15 : DTC B2292: FLASH CODE 37: PASSENGER SIDE REAR SEAT BELT PRETENSIONER MALFUNCTION

G1043827t88 : CHECK THE PASSENGER SIDE REAR SEAT BELT PRETENSIONER CIRCUIT FOR HIGH RESISTANCE

1. Disconnect the battery negative terminal. 2. Wait one minute for the system to become safe. 3. Disconnect the passenger side rear seat belt pretensioner electrical connector, CR66. 4. Disconnect the RCM electrical connector, CR87. 5. Measure the resistance between CR66, pin 02 (YU) and CR87, pin 37 (YU).

- **Is the resistance greater than 5 ohms?**

-> Yes
INSTALL a new passenger side rear seat belt pretensioner harness. CLEAR the DTC. TEST the system for normal operation.

-> No
GO to Pinpoint Test G1043827t89.

G1043827t89 : CHECK THE PASSENGER SIDE REAR SEAT BELT PRETENSIONER CIRCUIT FOR SHORT TO GROUND

1. Reconnect the battery negative terminal. 2. Measure the resistance between CR66, pin 02 (YU) and GROUND.

- **Is the resistance less than 10,000 ohms?**

-> Yes
REPAIR the short circuit. For additional information, refer to the wiring diagrams. CLEAR

www.JagDocs.com

the DTC. TEST the system for normal operation.

-> No
GO to Pinpoint Test G1043827t90.

G1043827t90 : CHECK THE PASSENGER SIDE REAR SEAT BELT PRETENSIONER CIRCUIT FOR SHORT TO POWER

1. Measure the voltage between CR66, pin 02 (YU) and GROUND.

- **Is the voltage greater than 3 volts?**

-> Yes
REPAIR the short circuit. For additional information, refer to the wiring diagrams. CLEAR the DTC. TEST the system for normal operation.

-> No
GO to Pinpoint Test G1043827t91.

G1043827t91 : CHECK THE PASSENGER SIDE REAR SEAT BELT PRETENSIONER RETURN CIRCUIT FOR HIGH RESISTANCE

1. Measure the resistance between CR66, pin 01 (YU) and CR87, pin 38 (YU).

- **Is the resistance greater than 5 ohms?**

-> Yes
INSTALL a new passenger side rear seat belt pretensioner harness. CLEAR the DTC. TEST the system for normal operation.

-> No
GO to Pinpoint Test G1043827t92.

G1043827t92 : CHECK THE PASSENGER SIDE REAR SEAT BELT PRETENSIONER RETURN CIRCUIT FOR SHORT TO GROUND

1. Reconnect the battery negative terminal. 2. Measure the resistance between CR66, pin 01 (YU) and GROUND.

- **Is the resistance less than 10,000 ohms?**

-> Yes
REPAIR the short circuit. For additional information, refer to the wiring diagrams. CLEAR the DTC. TEST the system for normal operation.

-> No
GO to Pinpoint Test G1043827t93.

G1043827t93 : CHECK THE PASSENGER SIDE REAR SEAT BELT PRETENSIONER RETURN CIRCUIT FOR SHORT TO POWER

1. Measure the voltage between CR66, pin 01 (YU) and GROUND.

- **Is the voltage greater than 3 volts?**

-> Yes
REPAIR the short circuit. For additional information, refer to the wiring diagrams. CLEAR the DTC. TEST the system for normal operation.

-> No
INSTALL a new passenger side rear seat belt pretensioner,
Rear Safety Belt Buckle (76.73.50)

PINPOINT TEST G1043827p16 : DTC B2294: FLASH CODE 36: CENTER REAR SEAT BELT PRETENSIONER MALFUNCTION

G1043827t94 : CHECK THE CENTER REAR SEAT BELT PRETENSIONER CIRCUIT FOR HIGH RESISTANCE

1. Disconnect the battery negative terminal. 2. Wait one minute for the system to become safe. 3. Disconnect the center rear seat belt pretensioner electrical connector, CR65. 4. Disconnect the RCM electrical connector, CR87. 5. Measure the resistance between CR65, pin 02 (YR) and CR87, pin 39 (YR).

- **Is the resistance greater than 5 ohms?**

-> Yes
INSTALL a new center rear seat belt pretensioner harness. CLEAR the DTC. TEST the system for normal operation.

www.JagDocs.com

-> No
GO to Pinpoint Test G1043827t95.

G1043827t95 : CHECK THE CENTER REAR SEAT BELT PRETENSIONER CIRCUIT FOR SHORT TO GROUND

1. Reconnect the battery negative terminal. 2. Measure the resistance between CR65, pin 02 (YR) and GROUND.

- **Is the resistance less than 10,000 ohms?**

-> Yes
REPAIR the short circuit. For additional information, refer to the wiring diagrams. CLEAR the DTC. TEST the system for normal operation.

-> No
GO to Pinpoint Test G1043827t96.

G1043827t96 : CHECK THE CENTER REAR SEAT BELT PRETENSIONER CIRCUIT FOR SHORT TO POWER

1. Measure the voltage between CR65, pin 02 (YR) and GROUND.

- **Is the voltage greater than 3 volts?**

-> Yes
REPAIR the short circuit. For additional information, refer to the wiring diagrams. CLEAR the DTC. TEST the system for normal operation.

-> No
GO to Pinpoint Test G1043827t97.

G1043827t97 : CHECK THE CENTER REAR SEAT BELT PRETENSIONER RETURN CIRCUIT FOR HIGH RESISTANCE

1. Measure the resistance between CR65, pin 01 (YR) and CR87, pin 40 (YR).

- **Is the resistance greater than 5 ohms?**

-> Yes
INSTALL a new center rear seat belt pretensioner harness. CLEAR the DTC. TEST the system for normal operation.

-> No
GO to Pinpoint Test G1043827t98.

G1043827t98 : CHECK THE CENTER REAR SEAT BELT PRETENSIONER RETURN CIRCUIT FOR SHORT TO GROUND

1. Reconnect the battery negative terminal. 2. Measure the resistance between CR65, pin 01 (YR) and GROUND.

- **Is the resistance less than 10,000 ohms?**

-> Yes
REPAIR the short circuit. For additional information, refer to the wiring diagrams. CLEAR the DTC. TEST the system for normal operation.

-> No
GO to Pinpoint Test G1043827t99.

G1043827t99 : CHECK THE CENTER REAR SEAT BELT PRETENSIONER RETURN CIRCUIT FOR SHORT TO POWER

1. Measure the voltage between CR65, pin 01 (YR) and GROUND.

- **Is the voltage greater than 3 volts?**

-> Yes
REPAIR the short circuit. For additional information, refer to the wiring diagrams. CLEAR the DTC. TEST the system for normal operation.

-> No
INSTALL a new center rear seat belt pretensioner,
Rear Safety Belt Buckle (76.73.50)

PINPOINT TEST G1043827p17 : DTC B2296: FLASH CODE 42: FRONT CRASH SENSOR CIRCUIT MALFUNCTION

www.JagDocs.com

G1043827t100 : CHECK THE FRONT CRASH SENSOR SIGNAL RETURN CIRCUIT FOR HIGH RESISTANCE

1. Disconnect the battery negative terminal. 2. Wait one minute for the system to become safe. 3. Disconnect the RCM electrical connector, CR87. 4. Disconnect the front crash sensor electrical connector, EC50. 5. Measure the resistance between CR87, pin 20 (W) and EC50, pin 01 (W).

- **Is the resistance greater than 5 ohms?**

-> Yes
REPAIR the high resistance circuit. For additional information, refer to the wiring diagrams. CLEAR the DTC. TEST the system for normal operation.

-> No
GO to Pinpoint Test G1043827t101.

G1043827t101 : CHECK THE FRONT CRASH SENSOR SIGNAL RETURN CIRCUIT FOR SHORT TO GROUND

1. Reconnect the battery negative terminal. 2. Measure the resistance between CR87, pin 20 (W) and GROUND.

- **Is the resistance less than 10,000 ohms?**

-> Yes
REPAIR the short circuit. For additional information, refer to the wiring diagrams. CLEAR the DTC. TEST the system for normal operation.

-> No
GO to Pinpoint Test G1043827t102.

G1043827t102 : CHECK THE FRONT CRASH SENSOR SIGNAL RETURN CIRCUIT FOR SHORT TO POWER

1. Measure the voltage between CR87, pin 20 (W) and GROUND.

- **Is the voltage greater than 3 volts?**

-> Yes
REPAIR the short circuit. For additional information, refer to the wiring diagrams. CLEAR the DTC. TEST the system for normal operation.

-> No

GO to Pinpoint Test G1043827t103.

G1043827t103 : CHECK THE FRONT CRASH SENSOR SIGNAL POWER CIRCUIT FOR HIGH RESISTANCE

1. Disconnect the battery negative terminal. 2. Wait one minute for the system to become safe. 3. Measure the resistance between CR87, pin 19 (N) and EC50, pin 02 (N).

- **Is the resistance greater than 5 ohms?**

-> Yes
REPAIR the high resistance circuit. For additional information, refer to the wiring diagrams. CLEAR the DTC. TEST the system for normal operation.

-> No
GO to Pinpoint Test G1043827t104.

G1043827t104 : CHECK THE FRONT CRASH SENSOR SIGNAL POWER CIRCUIT FOR SHORT TO GROUND

1. Reconnect the battery negative terminal. 2. Measure the resistance between CR87, pin 19 (N) and GROUND.

- **Is the resistance less than 10,000 ohms?**

-> Yes
REPAIR the short circuit. For additional information, refer to the wiring diagrams. CLEAR the DTC. TEST the system for normal operation.

-> No
GO to Pinpoint Test G1043827t105.

G1043827t105 : CHECK THE FRONT CRASH SENSOR SIGNAL POWER CIRCUIT FOR SHORT TO POWER

1. Measure the voltage between CR87, pin 19 (N) and GROUND.

- **Is the voltage greater than 3 volts?**

-> Yes
REPAIR the short circuit. For additional information, refer to the wiring diagrams. CLEAR the DTC. TEST the system for normal operation.

-> No

www.JagDocs.com

INSTALL a new front crash sensor,
Crash Sensor (76.73.55)

PINPOINT TEST G1043827p18 : DTC B2296: FLASH CODE 43: DRIVER SIDE FRONT CRASH SENSOR CIRCUIT MALFUNCTION

G1043827t106 : CHECK THE DRIVER SIDE FRONT CRASH SENSOR SIGNAL POWER CIRCUIT FOR HIGH RESISTANCE

1. Disconnect the battery negative terminal. 2. Wait one minute for the system to become safe. 3. Disconnect the RCM electrical connector, CR87. 4. Disconnect the driver side front crash sensor electrical connector, CR60. 5. Measure the resistance between CR87, pin 27 (NG) and CR60, pin 02 (NG).

- **Is the resistance greater than 5 ohms?**

-> Yes
REPAIR the high resistance circuit. For additional information, refer to the wiring diagrams. CLEAR the DTC. TEST the system for normal operation.

-> No
GO to Pinpoint Test G1043827t107.

G1043827t107 : CHECK THE DRIVER SIDE FRONT CRASH SENSOR SIGNAL POWER CIRCUIT FOR SHORT TO GROUND

1. Reconnect the battery negative terminal. 2. Measure the resistance between CR87, pin 27 (NG) and GROUND.

- **Is the resistance less than 10,000 ohms?**

-> Yes
REPAIR the short circuit. For additional information, refer to the wiring diagrams. CLEAR the DTC. TEST the system for normal operation.

-> No
GO to Pinpoint Test G1043827t108.

G1043827t108 : CHECK THE DRIVER SIDE FRONT CRASH SENSOR SIGNAL POWER CIRCUIT FOR SHORT TO POWER

1. Measure the voltage between CR87, pin 27 (NG) and GROUND.

- **Is the voltage greater than 3 volts?**

-> Yes
REPAIR the short circuit. For additional information, refer to the wiring diagrams. CLEAR the DTC. TEST the system for normal operation.

-> No
GO to Pinpoint Test G1043827t109.

G1043827t109 : CHECK THE DRIVER SIDE FRONT CRASH SENSOR SIGNAL RETURN CIRCUIT FOR HIGH RESISTANCE

1. Disconnect the battery negative terminal. 2. Wait one minute for the system to become safe. 3. Measure the resistance between CR87, pin 28 (WU) and CR60, pin 01 (WU).

- **Is the resistance greater than 5 ohms?**

-> Yes
REPAIR the high resistance circuit. For additional information, refer to the wiring diagrams. CLEAR the DTC. TEST the system for normal operation.

-> No
GO to Pinpoint Test G1043827t110.

G1043827t110 : CHECK THE DRIVER SIDE FRONT CRASH SENSOR SIGNAL RETURN CIRCUIT FOR SHORT TO GROUND

1. Reconnect the battery negative terminal. 2. Measure the resistance between CR87, pin 28 (WU) and GROUND.

- **Is the resistance less than 10,000 ohms?**

-> Yes
REPAIR the short circuit. For additional information, refer to the wiring diagrams. CLEAR the DTC. TEST the system for normal operation.

www.JagDocs.com

-> No
GO to Pinpoint Test G1043827t111.

G1043827t111 : CHECK THE DRIVER SIDE FRONT CRASH SENSOR SIGNAL RETURN CIRCUIT FOR SHORT TO POWER

1. Measure the resistance between CR87, pin 28 (WU) and GROUND.

- **Is the voltage greater than 3 volts?**

-> Yes
REPAIR the short circuit. For additional information, refer to the wiring diagrams. CLEAR the DTC. TEST the system for normal operation.

-> No
INSTALL a new driver side front crash sensor,
B-Pillar Side Impact Sensor (76.73.68)

PINPOINT TEST G1043827p19 : DTC B2296: FLASH CODE 44: PASSENGER SIDE FRONT CRASH SENSOR CIRCUIT

G1043827t112 : CHECK THE PASSENGER SIDE FRONT CRASH SENSOR SIGNAL POWER CIRCUIT FOR HIGH RESISTANCE

1. Disconnect the battery negative terminal. 2. Wait one minute for the system to become safe. 3. Disconnect the RCM electrical connector, CR87. 4. Disconnect the passenger side front crash sensor electrical connector, CR35. 5. Measure the resistance between CR87, pin 29 (NR) and CR35, pin 02 (NR).

- **Is the resistance greater than 5 ohms?**

-> Yes
REPAIR the high resistance circuit. For additional information, refer to the wiring diagrams. CLEAR the DTC. TEST the system for normal operation.

-> No
GO to Pinpoint Test G1043827t113.

G1043827t113 : CHECK THE PASSENGER SIDE FRONT CRASH SENSOR SIGNAL POWER CIRCUIT FOR SHORT TO GROUND

1. Reconnect the battery negative terminal. 2. Measure the resistance between CR87, pin 29 (NR) and GROUND.

- **Is the resistance less than 10,000 ohms?**

-> Yes
REPAIR the short circuit. For additional information, refer to the wiring diagrams. CLEAR the DTC. TEST the system for normal operation.

-> No
GO to Pinpoint Test G1043827t114.

G1043827t114 : CHECK THE PASSENGER SIDE FRONT CRASH SENSOR SIGNAL POWER CIRCUIT FOR SHORT TO POWER

1. Measure the voltage between CR87, pin 29 (NR) and GROUND.

- **Is the voltage greater than 3 volts?**

-> Yes
REPAIR the short circuit. For additional information, refer to the wiring diagrams. CLEAR the DTC. TEST the system for normal operation.

-> No
GO to Pinpoint Test G1043827t115.

G1043827t115 : CHECK THE PASSENGER SIDE FRONT CRASH SENSOR SIGNAL RETURN CIRCUIT FOR HIGH RESISTANCE

1. Disconnect the battery negative terminal. 2. Wait one minute for the system to become safe. 3. Measure the resistance between CR87, pin 30 (WR) and CR35, pin 01 (WR).

- **Is the resistance greater than 5 ohms?**

-> Yes
REPAIR the high resistance circuit. For additional information, refer to the wiring diagrams. CLEAR the DTC. TEST the system for normal operation.

www.JagDocs.com

-> No
GO to Pinpoint Test G1043827t116.

G1043827t116 : CHECK THE PASSENGER SIDE FRONT CRASH SENSOR SIGNAL RETURN CIRCUIT FOR SHORT TO GROUND

1. Reconnect the battery negative terminal. 2. Measure the resistance between CR87, pin 30 (WR) and GROUND.

- **Is the resistance less than 10,000 ohms?**

-> Yes
REPAIR the short circuit. For additional information, refer to the wiring diagrams. CLEAR the DTC. TEST the system for normal operation.

-> No
GO to Pinpoint Test G1043827t117.

G1043827t117 : CHECK THE PASSENGER SIDE FRONT CRASH SENSOR SIGNAL RETURN CIRCUIT FOR SHORT TO POWER

1. Measure the voltage between CR87, pin 30 (WR) and GROUND.

- **Is the voltage greater than 3 volts?**

-> Yes
REPAIR the short circuit. For additional information, refer to the wiring diagrams. CLEAR the DTC. TEST the system for normal operation.

-> No
INSTALL a new passenger side front crash sensor,
B-Pillar Side Impact Sensor (76.73.68)

PINPOINT TEST G1043827p20 : DTC B2296: FLASH CODE 45: DRIVER SIDE REAR CRASH SENSOR CIRCUIT

G1043827t118 : CHECK THE DRIVER SIDE REAR CRASH SENSOR SIGNAL POWER CIRCUIT FOR HIGH RESISTANCE

1. Disconnect the battery negative terminal. 2. Wait one minute for the system to become safe. 3. Disconnect the RCM electrical connector, CR87. 4. Disconnect the driver side rear crash sensor electrical connector, CR61. 5. Measure the resistance between CR87, pin 13 (BO) and CR61, pin 02 (BO).

- **Is the resistance greater than 5 ohms?**

-> Yes
REPAIR the high resistance circuit. For additional information, refer to the wiring diagrams. CLEAR the DTC. TEST the system for normal operation.

-> No
GO to Pinpoint Test G1043827t119.

G1043827t119 : CHECK THE DRIVER SIDE REAR CRASH SENSOR SIGNAL POWER CIRCUIT FOR SHORT TO GROUND

1. Reconnect the battery negative terminal. 2. Measure the resistance between CR87, pin 13 (BO) and GROUND.

- **Is the resistance less than 10,000 ohms?**

-> Yes
REPAIR the short circuit. For additional information, refer to the wiring diagrams. CLEAR the DTC. TEST the system for normal operation.

-> No
GO to Pinpoint Test G1043827t120.

G1043827t120 : CHECK THE DRIVER SIDE REAR CRASH SENSOR SIGNAL POWER CIRCUIT FOR SHORT TO POWER

1. Measure the voltage between CR87, pin 13 (BO) and GROUND.

- **Is the voltage greater than 3 volts?**

-> Yes
REPAIR the short circuit. For additional information, refer to the wiring diagrams. CLEAR

www.JagDocs.com

the DTC. TEST the system for normal operation.

-> No
GO to Pinpoint Test G1043827t121.

G1043827t121 : CHECK THE DRIVER SIDE REAR CRASH SENSOR SIGNAL RETURN CIRCUIT FOR HIGH RESISTANCE

1. Disconnect the battery negative terminal. 2. Wait one minute for the system to become safe. 3. Measure the resistance between CR87, pin 14 (WU) and CR61, pin 01 (U).

- **Is the resistance greater than 5 ohms?**

-> Yes
REPAIR the high resistance circuit. For additional information, refer to the wiring diagrams. CLEAR the DTC. TEST the system for normal operation.

-> No
GO to Pinpoint Test G1043827t122.

G1043827t122 : CHECK THE DRIVER SIDE REAR CRASH SENSOR SIGNAL RETURN CIRCUIT FOR SHORT TO GROUND

1. Reconnect the battery negative terminal. 2. Measure the resistance between CR87, pin 14 (WU) and GROUND.

- **Is the resistance less than 10,000 ohms?**

-> Yes
REPAIR the short circuit. For additional information, refer to the wiring diagrams. CLEAR the DTC. TEST the system for normal operation.

-> No
GO to Pinpoint Test G1043827t123.

G1043827t123 : CHECK THE DRIVER SIDE REAR CRASH SENSOR SIGNAL RETURN CIRCUIT FOR SHORT TO POWER

1. Measure the voltage between CR87, pin 14 (WU) and GROUND.

- **Is the voltage greater than 3 volts?**

-> Yes
REPAIR the short circuit. For additional information, refer to the wiring diagrams. CLEAR the DTC. TEST the system for normal operation.

-> No
INSTALL a new driver side rear crash sensor,
C-Pillar Side Impact Sensor (76.73.69)

PINPOINT TEST G1043827p21 : DTC 2296: FLASH CODE 46: PASSENGER SIDE REAR CRASH SENSOR CIRCUIT MALFUNCTION

G1043827t124 : CHECK THE PASSENGER SIDE REAR CRASH SENSOR SIGNAL POWER CIRCUIT FOR HIGH RESISTANCE

1. Disconnect the battery negative terminal. 2. Wait one minute for the system to become safe. 3. Disconnect the RCM electrical connector, CR87. 4. Disconnect the passenger side rear crash sensor electrical connector, CR51. 5. Measure the resistance between CR87, pin 15 (YR) and CR51, pin 02 (YR).

- **Is the resistance greater than 5 ohms?**

-> Yes
REPAIR the high resistance circuit. For additional information, refer to the wiring diagrams. CLEAR the DTC. TEST the system for normal operation.

-> No
GO to Pinpoint Test G1043827t125.

G1043827t125 : CHECK THE PASSENGER SIDE REAR CRASH SENSOR SIGNAL POWER CIRCUIT FOR SHORT TO GROUND

1. Reconnect the battery negative terminal. 2. Measure the resistance between CR87, pin 15 (YR) and GROUND.

- **Is the resistance less than 10,000 ohms?**

www.JagDocs.com

-> Yes
REPAIR the short circuit. For additional information, refer to the wiring diagrams. CLEAR the DTC. TEST the system for normal operation.

-> No
GO to Pinpoint Test G1043827t126.

G1043827t126 : CHECK THE PASSENGER SIDE REAR CRASH SENSOR SIGNAL POWER CIRCUIT FOR SHORT TO POWER

1. Measure the voltage between CR87, pin 15 (YR) and GROUND.

- **Is the voltage greater than 3 volts?**

-> Yes
REPAIR the short circuit. For additional information, refer to the wiring diagrams. CLEAR the DTC. TEST the system for normal operation.

-> No
GO to Pinpoint Test G1043827t127.

G1043827t127 : CHECK THE PASSENGER SIDE REAR CRASH SENSOR SIGNAL RETURN CIRCUIT FOR HIGH RESISTANCE

1. Disconnect the battery negative terminal. 2. Wait one minute for the system to become safe. 3. Disconnect the RCM electrical connector, CR87. 4. Measure the resistance between CR87, pin 16 (O) and CR51, pin 01 (O).

- **Is the resistance greater than 5 ohms?**

-> Yes
REPAIR the high resistance circuit. For additional information, refer to the wiring diagrams. CLEAR the DTC. TEST the system for normal operation.

-> No
GO to Pinpoint Test G1043827t128.

G1043827t128 : CHECK THE PASSENGER SIDE REAR CRASH SENSOR SIGNAL RETURN CIRCUIT FOR SHORT TO GROUND

1. Reconnect the battery negative terminal. 2. Measure the resistance between CR87, pin 16 (O) and GROUND.

- **Is the resistance less than 10,000 ohms?**

-> Yes
REPAIR the short circuit. For additional information, refer to the wiring diagrams. CLEAR the DTC. TEST the system for normal operation.

-> No
GO to Pinpoint Test G1043827t129.

G1043827t129 : CHECK THE PASSENGER SIDE REAR CRASH SENSOR SIGNAL RETURN CIRCUIT FOR SHORT TO POWER

1. Measure the voltage between CR87, pin 16 (O) and GROUND.

- **Is the voltage greater than 3 volts?**

-> Yes
REPAIR the short circuit. For additional information, refer to the wiring diagrams. CLEAR the DTC. TEST the system for normal operation.

-> No
INSTALL a new passenger side rear crash sensor,
C-Pillar Side Impact Sensor (76.73.69)

PINPOINT TEST G1043827p22 : DTC C1947, C1948, C1981: FLASH CODE 49: DRIVER SEAT POSITION SWITCH MALFUNCTION (VEHICLES WITH PASSENGER SEAT POSITION SWITCH)

G1043827t130 : CHECK THE DRIVER SEAT POSITION SWITCH SIGNAL CIRCUIT FOR HIGH RESISTANCE

1. Disconnect the battery negative terminal. 2. Wait one minute for the system to become safe. 3. Disconnect the RCM electrical connector, CR87. 4. Disconnect the driver seat position switch electrical connector, SD20. 5. Measure the resistance between CR87, pin 23 (UY) and SD20, pin 02 (UY).

www.JagDocs.com

- **Is the resistance greater than 5 ohms?**

-> Yes
REPAIR the high resistance circuit. For additional information, refer to the wiring diagrams. CLEAR the DTC. TEST the system for normal operation.

-> No
GO to Pinpoint Test G1043827t131.

G1043827t131 : CHECK THE DRIVER SEAT POSITION SWITCH SIGNAL CIRCUIT FOR SHORT TO GROUND

1. Reconnect the battery negative terminal. 2. Measure the resistance between CR87, pin 23 (UY) and GROUND.

- **Is the resistance less than 10,000 ohms?**

-> Yes
REPAIR the short circuit. For additional information, refer to the wiring diagrams. CLEAR the DTC. TEST the system for normal operation.

-> No
GO to Pinpoint Test G1043827t132.

G1043827t132 : CHECK THE DRIVER SEAT POSITION SWITCH SIGNAL CIRCUIT FOR SHORT TO POWER

1. Measure the voltage between CR87, pin 23 (UY) and GROUND.

- **Is the voltage greater than 3 volts?**

-> Yes
REPAIR the short circuit. For additional information, refer to the wiring diagrams. CLEAR the DTC. TEST the system for normal operation.

-> No
GO to Pinpoint Test G1043827t133.

G1043827t133 : CHECK THE DRIVER SEAT POSITION SWITCH GROUND CIRCUIT FOR HIGH RESISTANCE

1. Disconnect the battery negative terminal. 2. Wait one minute for the system to become safe. 3. Measure the resistance between GROUND (B) and SD20, pin 01 (B).

- **Is the resistance greater than 5 ohms?**

-> Yes
REPAIR the high resistance circuit. For additional information, refer to the wiring diagrams. CLEAR the DTC. TEST the system for normal operation.

-> No
INSTALL a new driver seat position switch.

PINPOINT TEST G1043827p23 : DTC B2434, B2435, B2691: FLASH CODE 51: DRIVER SEAT BELT BUCKLE SWITCH CIRCUIT MALFUNCTION

G1043827t136 : CHECK THE DRIVER SEAT BELT BUCKLE SWITCH CIRCUIT FOR HIGH RESISTANCE

1. Disconnect the battery negative terminal. 2. Wait one minute for the system to become safe. 3. Disconnect the RCM electrical connector, CR87. 4. Disconnect the driver seat belt buckle switch electrical connector, SD19. 5. Measure the resistance between CR87, pin 25 (RW) and SD19, pin 03 (RW).

- **Is the resistance greater than 5 ohms?**

-> Yes
REPAIR the high resistance circuit. For additional information, refer to the wiring diagrams. CLEAR the DTC. TEST the system for normal operation.

-> No
GO to Pinpoint Test G1043827t137.

G1043827t137 : CHECK THE DRIVER SEAT BELT BUCKLE SWITCH CIRCUIT FOR SHORT TO GROUND

1. Reconnect the battery negative terminal. 2. Measure the resistance between CR87, pin 25 (RW) and GROUND.

- **Is the resistance less than 10,000 ohms?**

www.JagDocs.com

-> Yes
REPAIR the short circuit. For additional information, refer to the wiring diagrams. CLEAR the DTC. TEST the system for normal operation.

-> No
GO to Pinpoint Test G1043827t138.

G1043827t138 : CHECK THE DRIVER SEAT BELT BUCKLE SWITCH CIRCUIT FOR SHORT TO POWER

1. Measure the voltage between CR87, pin 25 (RW) and GROUND.

- **Is the voltage greater than 3 volts?**

-> Yes
REPAIR the short circuit. For additional information, refer to the wiring diagrams. CLEAR the DTC. TEST the system for normal operation.

-> No
GO to Pinpoint Test G1043827t139.

G1043827t139 : CHECK THE DRIVER SEAT BELT BUCKLE SWITCH GROUND CIRCUIT FOR HIGH RESISTANCE

1. Measure the resistance between SD19, pin 04 (BK) and GROUND.

- **Is the resistance greater than 5 ohms?**

-> Yes
REPAIR the high resistance circuit. For additional information, refer to the wiring diagrams. CLEAR the DTC. TEST the system for normal operation.

-> No
GO to Pinpoint Test G1043827t140.

G1043827t140 : CHECK THE DRIVER SEAT BELT BUCKLE SWITCH GROUND CIRCUIT FOR SHORT TO POWER

1. Measure the voltage between SD19, pin 04 (BK) and GROUND.

- **Is the voltage greater than 3 volts?**

-> Yes
REPAIR the short circuit. For additional information, refer to the wiring diagrams. CLEAR the DTC. TEST the system for normal operation.

-> No
INSTALL a new driver seat belt buckle switch,
Front Safety Belt Buckle (76.73.49)

PINPOINT TEST G1043827p24 : DTC B2438, B2439, B2692: FLASH CODE 52: PASSENGER SEAT BELT BUCKLE SWITCH CIRCUIT MALFUNCTION

G1043827t141 : CHECK THE PASSENGER SEAT BELT BUCKLE SWITCH CIRCUIT FOR HIGH RESISTANCE

1. Disconnect the battery negative terminal. 2. Wait one minute for the system to become safe. 3. Disconnect the RCM electrical connector, CR87. 4. Disconnect the passenger seat belt buckle switch electrical connector, SP19. 5. Measure the resistance between CR87, pin 26 (RU) and SP19, pin 03 (RU).

- **Is the resistance greater than 5 ohms?**

-> Yes
REPAIR the high resistance circuit. For additional information, refer to the wiring diagrams. CLEAR the DTC. TEST the system for normal operation.

-> No
GO to Pinpoint Test G1043827t142.

G1043827t142 : CHECK THE PASSENGER SEAT BELT BUCKLE SWITCH CIRCUIT FOR SHORT TO GROUND

1. Reconnect the battery negative terminal. 2. Measure the resistance between CR87, pin 26 (RU) and GROUND.

- **Is the resistance less than 10,000 ohms?**

-> Yes
REPAIR the short circuit. For additional information, refer to the wiring diagrams. CLEAR the DTC. TEST the system for normal operation.

www.JagDocs.com

-> No
GO to Pinpoint Test G1043827t143.

G1043827t143 : CHECK THE PASSENGER SEAT BELT BUCKLE SWITCH CIRCUIT FOR SHORT TO POWER

1. Measure the voltage between CR87, pin 26 (RU) and GROUND.

- **Is the voltage greater than 3 volts?**

-> Yes
REPAIR the short circuit. For additional information, refer to the wiring diagrams. CLEAR the DTC. TEST the system for normal operation.

-> No
GO to Pinpoint Test G1043827t144.

G1043827t144 : CHECK THE PASSENGER SEAT BELT BUCKLE SWITCH GROUND CIRCUIT FOR HIGH RESISTANCE

1. Measure the resistance between SP19, pin 04 (BK) and GROUND.

- **Is the resistance greater than 5 ohms?**

-> Yes
REPAIR the high resistance circuit. For additional information, refer to the wiring diagrams. CLEAR the DTC. TEST the system for normal operation.

-> No
GO to Pinpoint Test G1043827t145.

G1043827t145 : CHECK THE PASSENGER SEAT BELT BUCKLE SWITCH GROUND CIRCUIT FOR SHORT TO POWER

1. Measure the voltage between SP19, pin 04 (BK) and GROUND.

- **Is the voltage greater than 3 volts?**

-> Yes
REPAIR the short circuit. For additional information, refer to the wiring diagrams. CLEAR the DTC. TEST the system for normal operation.

-> No
INSTALL a new passenger seat belt buckle switch,
Front Safety Belt Buckle (76.73.49)

PINPOINT TEST G1043827p25 : DTC B1891, B1892: FLASH CODE 53: AUDIBLE WARNING CIRCUIT MALFUNCTION

G1043827t146 : CHECK THE AUDIBLE WARNING CIRCUIT FOR HIGH RESISTANCE

1. Disconnect the battery negative terminal. 2. Wait one minute for the system to become safe. 3. Disconnect the RCM electrical connector, CR86. 4. Disconnect the instrument cluster electrical connector, IP05. 5. Measure the resistance between CR86, pin 22 (YR) and IP05, pin 08 (YR).

- **Is the resistance greater than 5 ohms?**

-> Yes
REPAIR the high resistance circuit. For additional information, refer to the wiring diagrams. CLEAR the DTC. TEST the system for normal operation.

-> No
GO to Pinpoint Test G1043827t147.

G1043827t147 : CHECK THE AUDIBLE WARNING CIRCUIT FOR SHORT TO GROUND

1. Reconnect the battery negative terminal. 2. Measure the resistance between CR86, pin 22 (YR) and GROUND.

- **Is the resistance less than 10,000 ohms?**

-> Yes
REPAIR the short circuit. For additional information, refer to the wiring diagrams. CLEAR the DTC. TEST the system for normal operation.

-> No
GO to Pinpoint Test G1043827t148.

www.JagDocs.com

G1043827t148 : CHECK THE AUDIBLE WARNING CIRCUIT FOR SHORT TO POWER

1. Measure the voltage between CR86, pin 22 (YR) and GROUND.

- **Is the voltage greater than 3 volts?**

-> Yes
REPAIR the short circuit. For additional information, refer to the wiring diagrams. CLEAR the DTC. TEST the system for normal operation.

-> No
Contact dealer technical support for advice on possible RCM failure.

PINPOINT TEST G1043827p26 : DTC C1947, C1948, C1981: FLASH CODE 49: DRIVER SEAT POSITION SWITCH MALFUNCTION (VEHICLES WITHOUT PASSENGER SEAT POSITION SWITCH)

G1043827t134 : CHECK THE DRIVER SEAT POSITION SWITCH SIGNAL CIRCUIT FOR HIGH RESISTANCE

1. Disconnect the battery negative terminal. 2. Wait one minute for the system to become safe. 3. Disconnect the RCM electrical connector, CR87. 4. Disconnect the driver seat position switch electrical connector, SD20. 5. Measure the resistance between CR87, pin 23 (UY) and SD20, pin 02 (UY).

- **Is the resistance greater than 5 ohms?**

-> Yes
REPAIR the high resistance circuit. For additional information, refer to the wiring diagrams. CLEAR the DTC. TEST the system for normal operation.

-> No
GO to Pinpoint Test G1043827t135.

G1043827t135 : CHECK THE DRIVER SEAT POSITION SWITCH SIGNAL CIRCUIT FOR SHORT TO GROUND

1. Reconnect the battery negative terminal. 2. Measure the resistance between CR87, pin 23 (UY) and GROUND.

- **Is the resistance less than 10,000 ohms?**

-> Yes
REPAIR the short circuit. For additional information, refer to the wiring diagrams. CLEAR the DTC. TEST the system for normal operation.

-> No
GO to Pinpoint Test G1043827t149.

G1043827t149 : CHECK THE DRIVER SEAT POSITION SWITCH SIGNAL CIRCUIT FOR SHORT TO HIGH VOLTAGE

1. Measure the voltage between CR87, pin 23 (UY) and GROUND.

- **Is the voltage greater than 3 volts?**

-> Yes
REPAIR the short circuit. For additional information, refer to the wiring diagrams. CLEAR the DTC. TEST the system for normal operation.

-> No
GO to Pinpoint Test G1043827t150.

G1043827t150 : CHECK THE DRIVER SEAT POSITION SWITCH RETURN CIRCUIT FOR HIGH RESISTANCE

1. Disconnect the battery negative terminal. 2. Wait one minute for the system to become safe. 3. Measure the resistance between CR87, pin 24 (U) and SD20, pin 01 (U).

- **Is the resistance greater than 5 ohms?**

-> Yes
REPAIR the high resistance circuit. For additional information, refer to the wiring diagrams. CLEAR the DTC. TEST the system for normal operation.

-> No
GO to Pinpoint Test G1043827t151.

www.JagDocs.com

G1043827t151 : CHECK THE DRIVER SEAT POSITION SWITCH RETURN CIRCUIT FOR SHORT TO GROUND

1. Reconnect the battery negative terminal. 2. Measure the resistance between CR87, pin 24 (U) and GROUND.

- **Is the resistance less than 10,000 ohms?**

-> Yes
REPAIR the short circuit. For additional information, refer to the wiring diagrams. CLEAR the DTC. TEST the system for normal operation.

-> No
GO to Pinpoint Test G1043827t152.

G1043827t152 : CHECK THE DRIVER SEAT POSITION SWITCH RETURN CIRCUIT FOR SHORT TO HIGH VOLTAGE

1. Measure the voltage between CR87, pin 24 (U) and GROUND.

- **Is the voltage greater than 3 volts?**

-> Yes
REPAIR the short circuit. For additional information, refer to the wiring diagrams. CLEAR the DTC. TEST the system for normal operation.

-> No
INSTALL a new driver seat position switch.

B-Pillar Side Impact Sensor (76.73.68)

Removal

1 . **WARNING: To avoid accidental deployment and possible personal injury, the backup power supply must be depleted before repairing or replacing any air bag supplementary restraints system (SRS) components. To deplete the backup power supply energy, disconnect the battery ground cable and wait for one minute. Failure to follow this instruction may result in personal injury.**

WARNING: Never probe the electrical connectors of the air bag modules or any other SRS component. Failure to follow this instruction may result in personal injury.

Reposition the front seat to the maximum forward position.

2 . Disconnect the battery ground cable. <<414-01>>

3 . Remove the B-pillar lower trim panel. <<501-05>>

4 . Detach the front seat belt retractor.

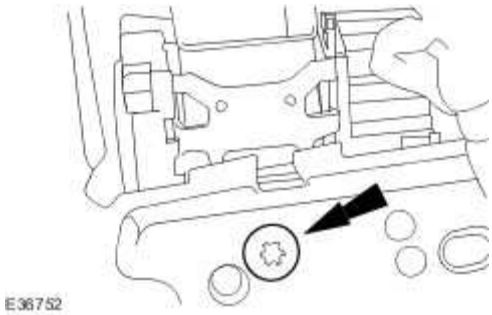

5 . Disconnect the B-pillar side impact sensor electrical connector.

www.JagDocs.com

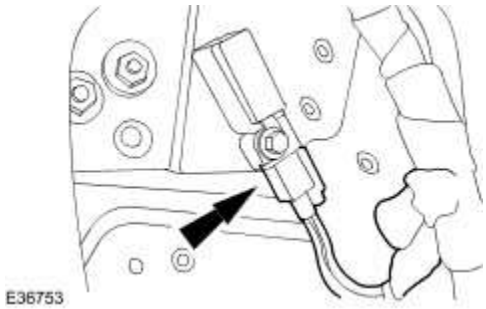

6 . Remove the B-pillar side impact sensor.

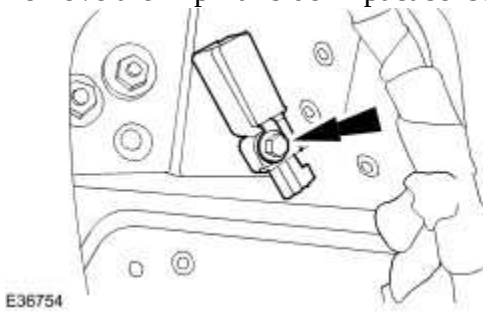

Installation

1 . **WARNING: To avoid accidental deployment and possible personal injury, the backup power supply must be depleted before repairing or replacing any air bag SRS components. To deplete the backup power supply energy, disconnect the battery ground cable and wait for one minute. Failure to follow this instruction may result in personal injury.**

WARNING: Make sure the side impact sensor locating tangs are correctly located into the B-pillar. Failure to follow this instruction may result in personal injury.

WARNING: Never probe the electrical connectors of the air bag modules or any other SRS component. Failure to follow this instruction may result in personal injury.

To install, reverse the removal procedure.

Tighten to 12 Nm.

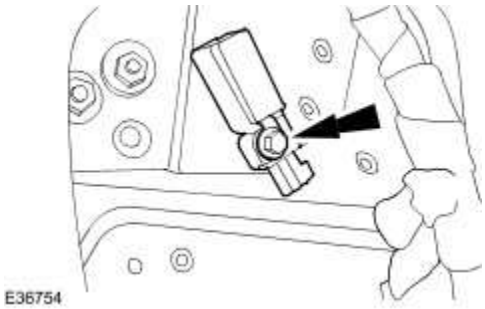

2 . Tighten to 40 Nm.

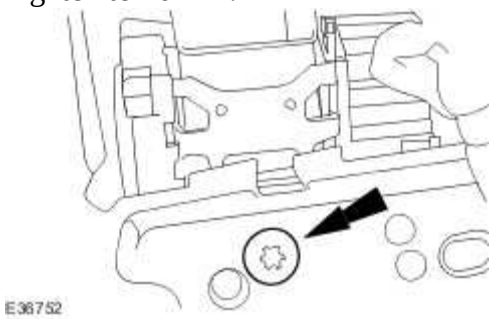

www.JagDocs.com

Clockspring (86.65.92)

Removal

WARNING: Always wear safety glasses when repairing an air bag supplemental restraint system (SRS) vehicle and when handling an air bag module.

WARNING: Carry a live air bag module with the air bag and trim cover pointed away from your body. This will reduce the risk of injury in the event of an accidental deployment. Failure to follow this instruction may result in personal injury.

WARNING: Do not set a live air bag module down with the trim cover face down. Failure to follow this instruction may result in personal injury.

WARNING: After deployment, the air bag surface can contain deposits of sodium hydroxide, a product of the gas generant combustion that is irritating to the skin. Wash your hands with soap and water afterwards. Failure to follow this instruction may result in personal injury.

WARNING: Never probe the connectors on the air bag module. Doing so may result in air bag deployment, which may result in personal injury. Failure to follow this instruction may result in personal injury.

WARNING: Air bag modules with discolored or damaged trim covers must be replaced, not repainted.

WARNING: Vehicle sensor orientation is critical for correct system operation. If a vehicle equipped with an air bag supplemental restraint system (SRS) is involved in a collision, inspect the sensor mounting bracket and wiring pigtail for deformation. If damaged, replace the sensor whether or not the air bag is deployed.

WARNING: To avoid accidental deployment and possible personal injury, the backup power supply must be depleted before repairing or replacing any air bag supplemental restraint system (SRS) components. To deplete the backup power supply energy, disconnect the battery ground cable and wait one minute. Failure to follow this instruction may result in personal injury.

CAUTION: Make sure the wheels are in the straight-ahead position. Failure to follow this instruction may result in damage to the component.

NOTE:

Repair is made by replacement only. If a part is replaced and the new part does not correct the condition, install the original part and carry out the diagnostic procedure again.

1. **CAUTION: Make sure that special tool 211-326 is installed to the clockspring.**

   CAUTION: Failing to install the special tool to the clockspring may result in damage to the vehicle.

   CAUTION: Make sure that the road wheels are in the straight ahead position, failure to follow this instruction may result in damage to the vehicle.

   Remove the steering wheel.
   For additional information, refer to Steering Wheel (57.60.01) .

2. Remove the steering column multifunction switch left-hand.
   For additional information, refer to Steering Column Multifunction Switch LH (86.65.78)

3. Remove the steering column multifunction switch right-hand.
   For additional information, refer to Steering Column Multifunction Switch RH (86.65.41)

4. **CAUTION: Make sure no damage is occured to the electrical connectors. Failure to follow this instruction may result in damage to the vehicle.**

   Disconnect the electrical connector.

www.JagDocs.com

5. **CAUTION: Make sure no damage is occured to the electrical connectors. Failure to follow this instruction may result in damage to the vehicle.**

NOTE:

For vehicles fitted with a heated steering wheel only.

Disconnect the electrical connector.

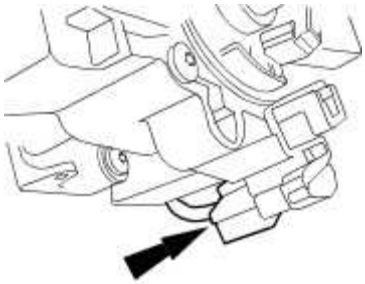

E36757

6. **CAUTION: Failing to install the special tool to the clockspring may result in damage to the vehicle.**

Remove the clockspring.

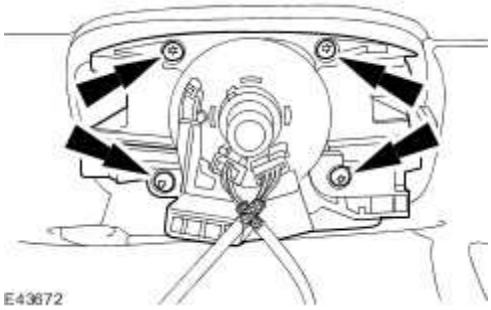

E43672

Installation

1. **CAUTION: Make sure the locking tool is correctly installed to the clockspring. Failure to follow this instruction may result in damage to the component.**

CAUTION: Make sure the wheels are in the straight-ahead position. Failure to follow this instruction may result in damage to the component.

To install, reverse the removal procedure.

- Tighten to 5 Nm.

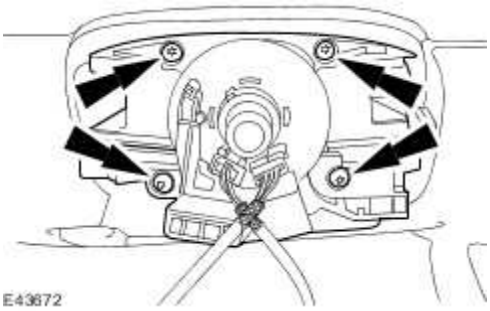

2. **CAUTION: Make sure that the arrow on the cassette is centered and pointing vertically prior to the steering wheel installation. On removal of the special tool, keep the clockspring cables taught to prevent the cassette moving from the set position. Failure to follow this instruction may result in damage to the component.**

Install the steering wheel.

www.JagDocs.com

C-Pillar Side Impact Sensor (76.73.69)

Removal

1 . **WARNING: To avoid accidental deployment and possible personal injury, the backup power supply must be depleted before repairing or replacing any air bag supplementary restraints system (SRS) components. To deplete the backup power supply energy, disconnect the battery ground cable and wait for one minute. Failure to follow this instruction may result in personal injury.**

WARNING: Never probe the electrical connectors of the air bag modules or any other SRS component. Failure to follow this instruction may result in personal injury.

Disconnect the battery ground cable. <<414-01>>

2 . Remove the C-pillar lower trim. <<501-05>>

3 . Disconnect the electrical connector.

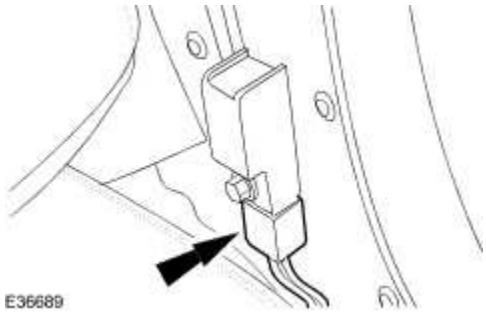

4 . Remove the C-pillar side impact sensor.

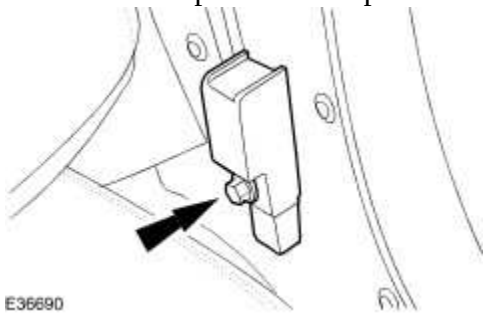

Installation

1. **WARNING: To avoid accidental deployment and possible personal injury, the backup power supply must be depleted before repairing or replacing any air bag SRS components. To deplete the backup power supply energy, disconnect the battery ground cable and wait for one minute. Failure to follow this instruction may result in personal injury.**

   WARNING: Make sure the side impact sensor locating tangs are correctly located into the C-pillar. Failure to follow this instruction may result in personal injury.

   WARNING: Never probe the electrical connectors of the air bag modules or any other SRS component. Failure to follow this instruction may result in personal injury.

   To install, reverse the removal procedure.

   - Tighten to 12 Nm.

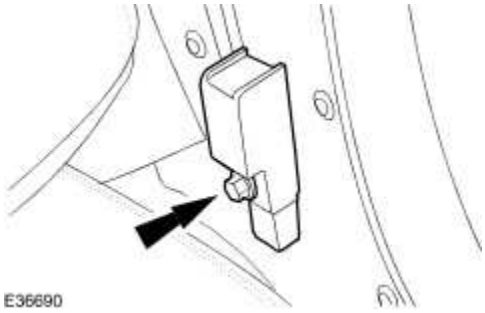

www.JagDocs.com

Crash Sensor (76.73.55)

Removal

1 . **WARNING: To avoid accidental deployment and possible personal injury, the backup power supply must be depleted before repairing or replacing any air bag supplementary restraints system (SRS) components. To deplete the backup power supply energy, disconnect the battery ground cable and wait for one minute. Failure to follow this instruction may result in personal injury.**

WARNING: Never probe the electrical connectors of the air bag modules or any other SRS component. Failure to follow this instruction may result in personal injury.

Disconnect the battery ground cable. <<414-01>>

2 . Remove the radiator opening panel. <<501-02>>

3 . Disconnect the crash sensor electrical connector.

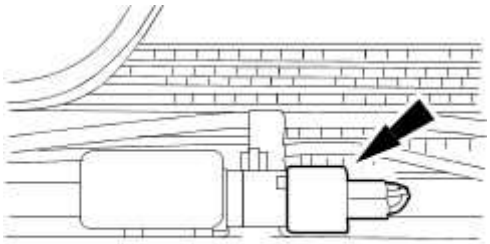

E36755

4 . Remove the crash sensor.

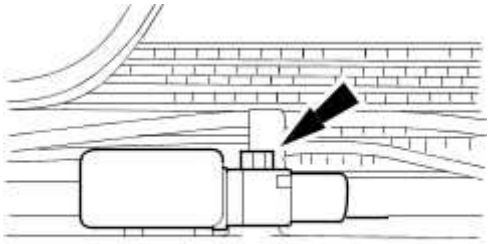

E36756

Installation

1. **WARNING: To avoid accidental deployment and possible personal injury, the backup power supply must be depleted before repairing or replacing any air bag SRS components. To deplete the backup power supply energy, disconnect the battery ground cable and wait for one minute. Failure to follow this instruction may result in personal injury.**

   WARNING: Make sure the crash sensor locating tangs are correctly located into the mounting bracket. Failure to follow this instruction may result in personal injury.

   WARNING: Never probe the electrical connectors of the air bag modules or any other SRS component. Failure to follow this instruction may result in personal injury.

   To install, reverse the removal procedure.

   - Tighten to 12 Nm.

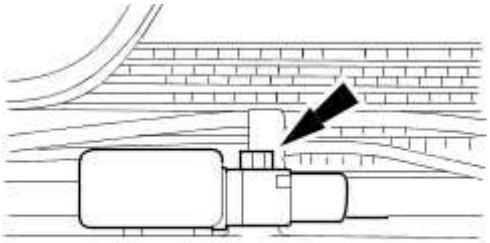

E36756

www.JagDocs.com

Driver Air Bag Module (76.73.39)

Removal

1. **WARNING: A restraints control module (RCM) only requires replacement if the system has incurred five separate deployments. At no time change the RCM for less than five separate deployments.**

   WARNING: Always wear safety glasses when repairing an air bag supplemental restraint system (SRS) vehicle and when handling an air bag module. Failure to follow this instruction may result in personal injury.

   WARNING: Carry a live air bag module with the air bag and trim cover pointed away from your body. This will reduce the risk of injury in the event of an accidental deployment. Failure to follow this instruction may result in personal injury.

   WARNING: Do not set a live air bag module down with the trim cover face down. Failure to follow this instruction may result in personal injury.

   WARNING: After deployment, the air bag surface can contain deposits of sodium hydroxide, a product of the gas generant combustion that is irritating to the skin. Wash your hands with soap and water afterwards. Failure to follow this instruction may result in personal injury.

   WARNING: Never probe the connectors on the air bag module. Doing so may result in air bag deployment. Failure to follow this instruction may result in personal injury.

   WARNING: Vehicle sensor orientation is critical for correct system operation. If a vehicle equipped with an air bag SRS is involved in a collision, inspect the sensor mounting bracket and wiring pigtail for deformation. If damaged, replace the sensor whether or not the air bag is deployed.

   WARNING: To avoid accidental deployment and possible personal injury, the backup power supply must be depleted before repairing or replacing any air bag SRS components. To deplete the backup power supply energy, disconnect the

battery ground cable and wait one minute. Failure to follow this instruction may result in personal injury.

NOTE:

Repair is made by replacement only. If a part is replaced and the new part does not correct the condition, install the original part and carry out the diagnostic procedure again.

NOTE:

When installing a new air bag module, a prepaid return postcard is provided with the replacement air bag module. The serial number for the new part and the vehicle identification number (VIN) must be recorded and sent to Jaguar Cars Ltd.

Disconnect the battery ground cable. <<414-01>>

2 . **NOTE:**

Left-hand shown, right-hand similar.

Remove the driver air bag module retaining bolts.

3 . Detach the driver air bag module.

4 . **NOTE:**

Note the correct routing of the driver airbag module electrical wiring harnesses.

Remove the driver air bag module.

www.JagDocs.com

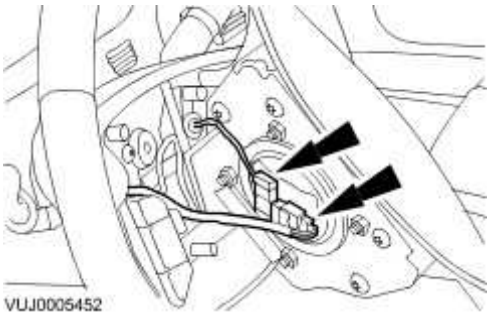

Installation

1. **WARNING: A restraints control module (RCM) only requires replacement if the system has incurred five separate deployments. At no time change the RCM for less than five separate deployments.**

   WARNING: Always wear safety glasses when repairing an air bag supplemental restraint system (SRS) vehicle and when handling an air bag module. Failure to follow this instruction may result in personal injury.

   WARNING: Carry a live air bag module with the air bag and trim cover pointed away from your body. This will reduce the risk of injury in the event of an accidental deployment. Failure to follow this instruction may result in personal injury.

   WARNING: Do not set a live air bag module down with the trim cover face down. Failure to follow this instruction may result in personal injury.

   WARNING: After deployment, the air bag surface can contain deposits of sodium hydroxide, a product of the gas generant combustion that is irritating to the skin. Wash your hands with soap and water afterwards. Failure to follow this instruction may result in personal injury.

   WARNING: Never probe the connectors on the air bag module. Doing so may result in air bag deployment. Failure to follow this instruction may result in personal injury.

WARNING: Vehicle sensor orientation is critical for correct system operation. If a vehicle equipped with an air bag SRS is involved in a collision, inspect the sensor mounting bracket and wiring pigtail for deformation. If damaged, replace the sensor whether or not the air bag is deployed.

WARNING: To avoid accidental deployment and possible personal injury, the backup power supply must be depleted before repairing or replacing any air bag SRS components. To deplete the backup power supply energy, disconnect the battery ground cable and wait one minute. Failure to follow this instruction may result in personal injury.

NOTE:

Repair is made by replacement only. If a part is replaced and the new part does not correct the condition, install the original part and carry out the diagnostic procedure again.

NOTE:

When installing a new air bag module, a prepaid return postcard is provided with the replacement air bag module. The serial number for the new part and the vehicle identification number (VIN) must be recorded and sent to Jaguar Cars Ltd.

NOTE:

Left-hand shown, right-hand similar.

To install, reverse the removal procedure.

- Tighten to 7 Nm.

www.JagDocs.com

Front Passenger Seat Occupant Classification Sensor (76.73.60)

Removal

WARNING: To avoid accidental deployment and possible personal injury, the back up power supply must be depleted before repairing or replacing any air bag supplemental restraint system (SRS) component. To deplete the back up power supply energy, disconnect the battery ground cable and wait one minute. Failure to follow this instruction may result in personal injury.

WARNING: Never probe the electrical connectors of the air bag modules or any other SRS component. Failure to follow this instruction may result in personal injury.

WARNING: The front passenger seat occupant classification sensor is available only as a service kit. No attempt should be made to replace individual components. Failure to follow this instruction may result in personal injury.

CAUTION: Electronic components in the seats are sensitive to impact. Handle seat with care or damage may result.

NOTE:

Repair is made by replacement only. If a part is replaced and the new part does not correct the condition, install the original part and carry out the diagnostic procedure again.

1 . Remove the front seat cushion cover. <<501-10>>

2 . Detach the front passenger seat occupant classification sensor bladder.

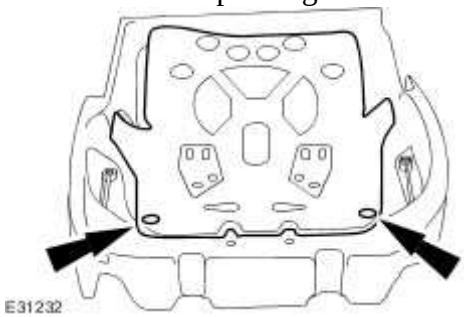

3 . Detach the front passenger seat occupant classification sensor transducer.

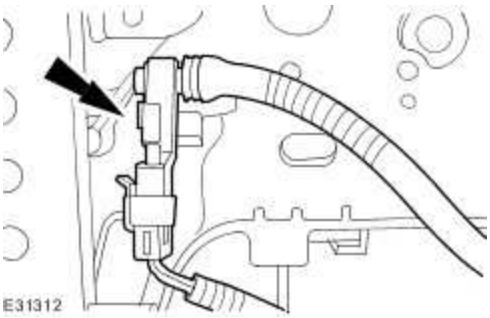

4 . **NOTE:**

Make sure the unused electrical connector is secured to the seat base.

Remove the front passenger seat occupant classification sensor bladder.

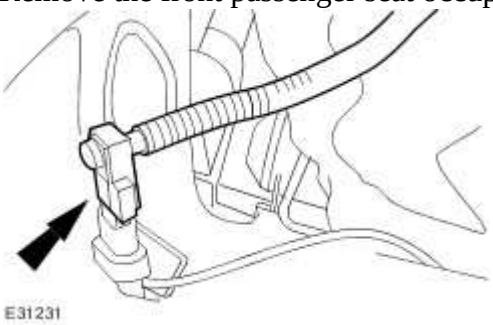

5 . Remove the front passenger seat occupant classification sensor module shield.

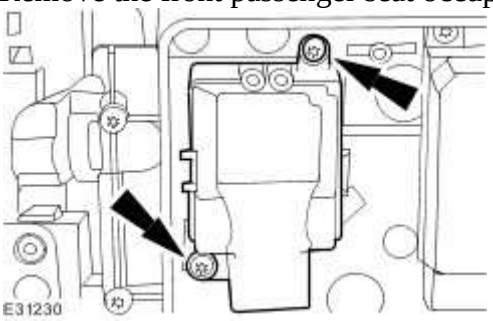

6 . Remove the front passenger seat occupant classification sensor module.

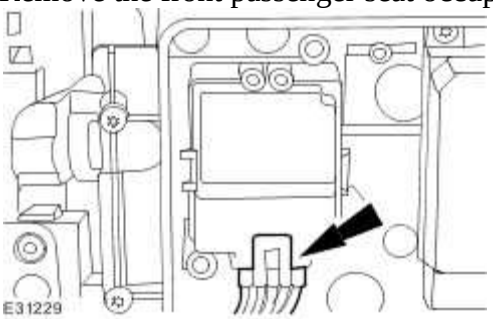

www.JagDocs.com

Installation

1 **NOTE:**

· The front passenger seat occupant classification sensor module must pass between the seat base and the first wire of the front seat suspension mat.

Reposition the front passenger seat occupant classification sensor module through the seat base.

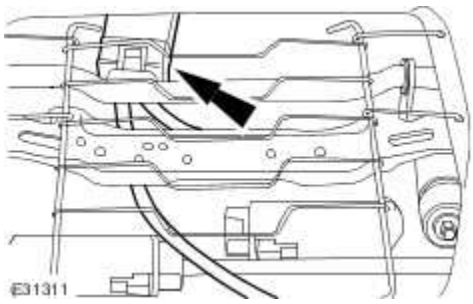

2 . Install the front passenger seat occupant classification sensor bladder.

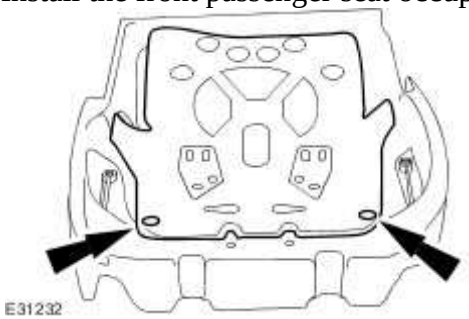

3 . Attach the front passenger seat occupant classification sensor transducer.

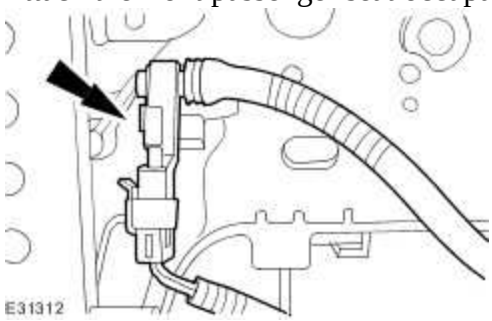

4 . Install the front passenger seat occupant classification sensor module and shield.

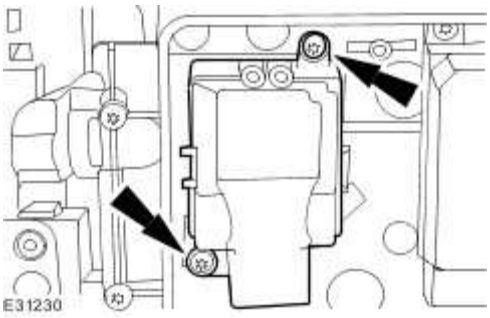

5 . **CAUTION: Make sure the front passenger seat occupant classification sensor wiring harness is loose enough to allow for the seat height adjustment. Failure to follow this instruction may result in damage to the component.**

Connect the front passenger seat occupant classification sensor module electrical connector.

- Secure the front passenger seat occupant classification sensor wiring harness to the original seat wiring harness.

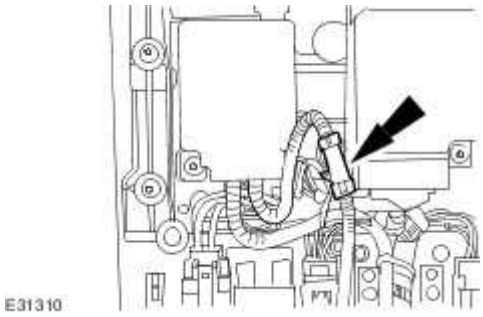

6 . Install the front seat cushion cover. <<501-10>>

7 . Initialize the system. For additional information, refer to the Jaguar approved diagnostic system.

www.JagDocs.com

Passenger Air Bag Deactivation (PAD) Indicator (76.73.58)

Removal

1 . Detach the passenger air bag module finish panel.

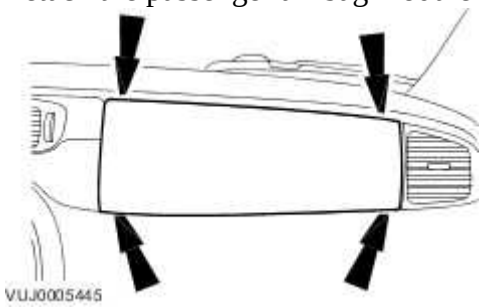

2 . Remove the floor console. <<501-12>>

3 . Remove the instrument panel finish panel.

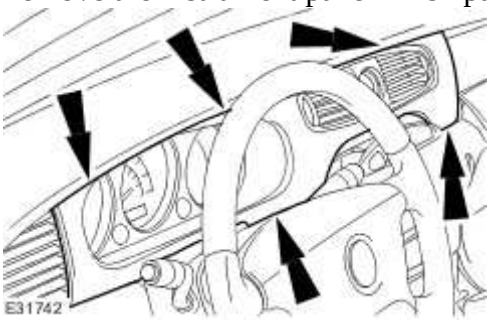

4 . Detach the passenger air bag deactivation (PAD) indicator.

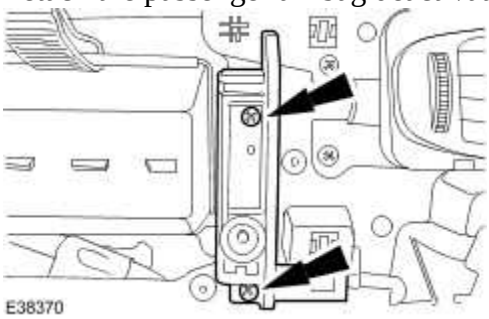

5 . Remove the PAD indicator.

- Disconnect the electrical connector.

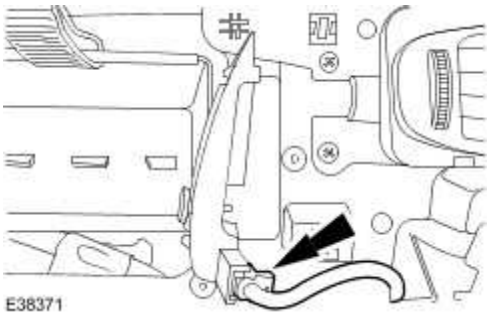

Installation

1 . To install, reverse the removal procedure.

www.JagDocs.com

Passenger Air Bag Module (76.73.37)

Removal

1. **WARNING: A restraints control module (RCM) only requires replacement if the system has incurred five separate deployments. At no time change the RCM for less than five separate deployments.**

   WARNING: Always wear safety glasses when repairing an air bag supplemental restraint system (SRS) vehicle and when handling an air bag module. Failure to follow this instruction may result in personal injury.

   WARNING: Carry a live air bag module with the air bag and trim cover pointed away from your body. This will reduce the risk of injury in the event of an accidental deployment. Failure to follow this instruction may result in personal injury.

   WARNING: Do not set a live air bag module down with the trim cover face down. Failure to follow this instruction may result in personal injury.

   WARNING: After deployment, the air bag surface can contain deposits of sodium hydroxide, a product of the gas generant combustion that is irritating to the skin. Wash your hands with soap and water afterwards. Failure to follow this instruction may result in personal injury.

   WARNING: Never probe the connectors on the air bag module. Doing so may result in air bag deployment. Failure to follow this instruction may result in personal injury.

   WARNING: Vehicle sensor orientation is critical for correct system operation. If a vehicle equipped with an air bag SRS is involved in a collision, inspect the sensor mounting bracket and wiring pigtail for deformation. If damaged, replace the sensor whether or not the air bag is deployed.

   WARNING: To avoid accidental deployment and possible personal injury, the backup power supply must be depleted before repairing or replacing any air bag SRS components. To deplete the backup power supply energy, disconnect the

battery ground cable and wait one minute. Failure to follow this instruction may result in personal injury.

NOTE:

Repair is made by replacement only. If a part is replaced and the new part does not correct the condition, install the original part and carry out the diagnostic procedure again.

NOTE:

When installing a new air bag module, a prepaid return postcard is provided with the replacement air bag module. The serial number for the new part and the vehicle identification number (VIN) must be recorded and sent to Jaguar Cars Ltd.

Disconnect the battery ground cable. <<414-01>>

2 . Detach the passenger air bag module finish panel.

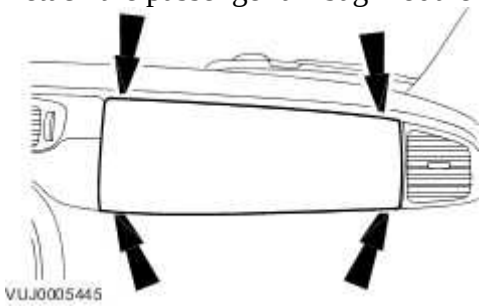

3 . Remove the glove compartment assembly. <<501-12>>

4 . Remove the air bag chute lower retaining bolts.

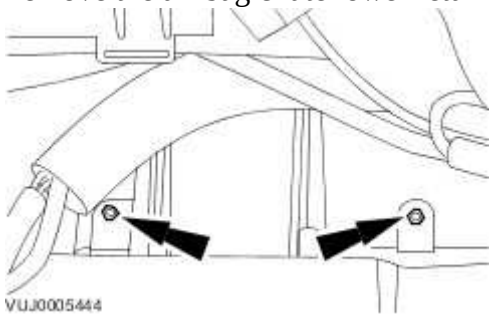

5 . Detach the air bag and chute assembly from the instrument panel.

1) Remove the air bag chute retaining bolts.

2) Detach the air bag and chute assembly from the instrument panel.

www.JagDocs.com

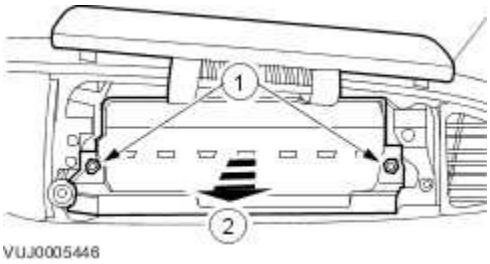

6 . Detach the wiring harness.

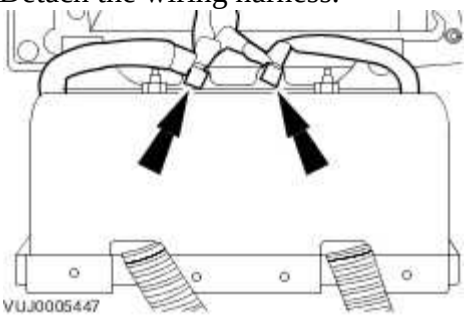

7 . **NOTE:**

Right-hand shown, left-hand similar.

Remove the passenger air bag and chute assembly.

- Disconnect the passenger air bag electrical connectors.

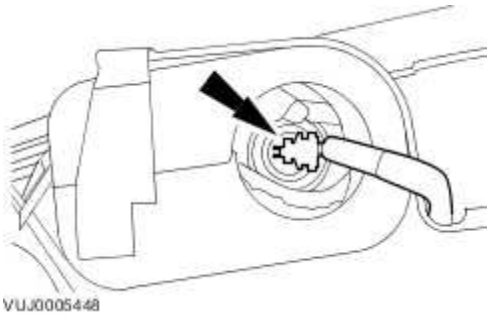

8 . Remove the passenger air bag from the chute.

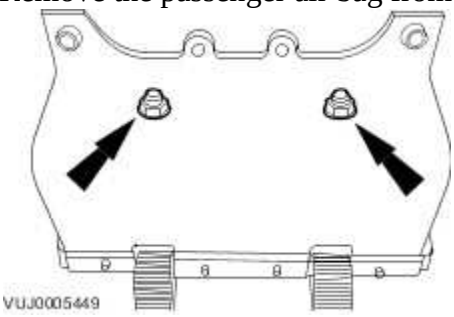

Installation

1 . **WARNING: An RCM module only requires replacement if the system has incurred five separate deployments. At no time change an RCM for less than five separate deployments.**

WARNING: Always wear safety glasses when repairing an air bag SRS vehicle and when handling an air bag module. Failure to follow this instruction may result in personal injury.

WARNING: Carry a live air bag module with the air bag and deployment door pointed away from your body. This will reduce the risk of injury in the event of an accidental deployment.

WARNING: Never probe the connectors on the air bag module. Doing so may result in air bag deployment. Failure to follow this instruction may result in personal injury.

NOTE:

Repair is made by replacement only. If a part is replaced and the new part does not correct the condition, install the original part and carry out the diagnostic procedure again.

NOTE:

Make sure to tighten the retaining bolts to the correct specification.

To install, reverse the removal procedure.

Tighten to 12 Nm.

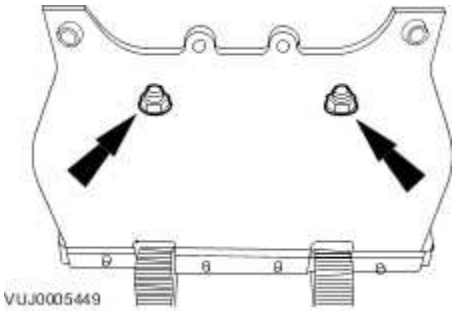

2 . Tighten to 9 Nm.

www.JagDocs.com

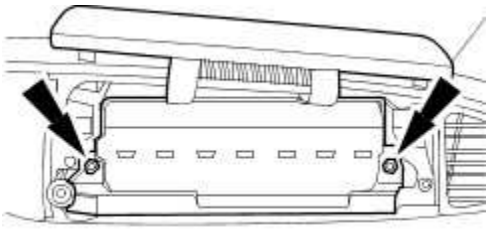

E30311

3 . Tighten to 9 Nm.

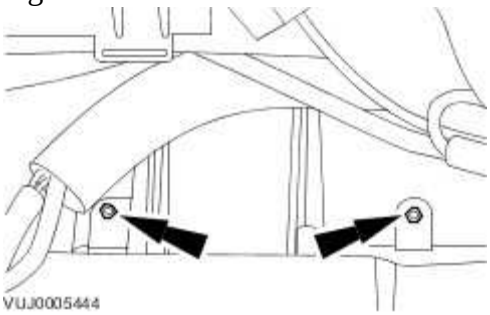

VUJ0005444

Restraints Control Module (RCM) (76.73.48)

Removal

1. **WARNING: To avoid accidental deployment and possible personal injury, the backup power supply must be depleted before repairing or replacing any air bag supplemental restraint system (SRS) components. To deplete the backup power supply energy, disconnect the battery ground cable and wait one minute. Failure to follow this instruction may result in personal injury.**

   WARNING: A restraints control module (RCM) only requires replacement if the system has incurred five separate deployments. At no time change the RCM for less than five separate deployments.

   CAUTION: Electronic modules are sensitive to static electrical charges. If exposed to these charges, damage may result.

   NOTE:
   Repair is made by replacement only. If a part is replaced and the new part does not correct the condition, install the original part and carry out the diagnostic procedure again.

   Disconnect the battery ground cable.
   For additional information, refer to Battery Ground Cable (86.15.19)

2. Remove the floor console.
   For additional information, refer to Floor Console - Vehicles Without: Auxiliary Climate Control (76.25.01)
   For additional information, refer to Floor Console - Vehicles With: Auxiliary Climate Control (76.25.01)

3. Remove the instrument panel bracket retaining bolt.

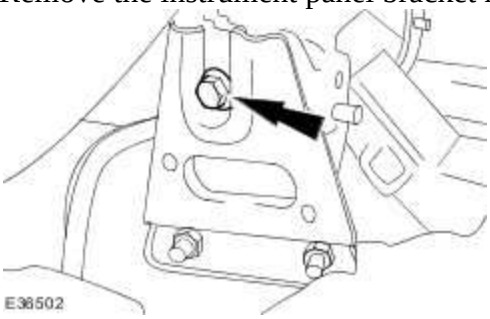

www.JagDocs.com

4 . Remove the instrument panel bracket retaining nuts.

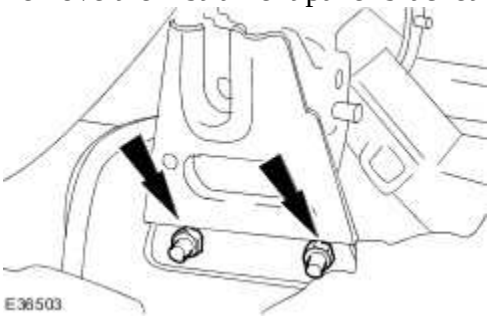

5 . Disconnect the electrical connector.

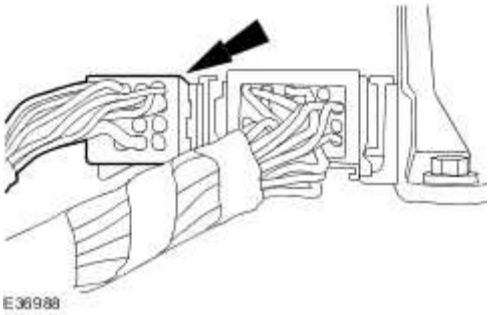

6 . Disconnect the electrical connector.

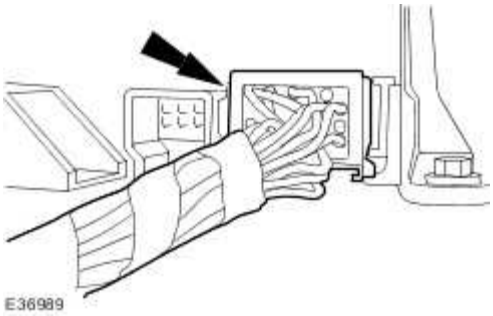

7 . Remove the RCM retaining bolt.

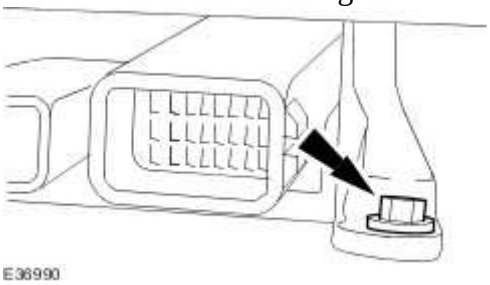

8 . Remove the instrument panel bracket retaining bolt.

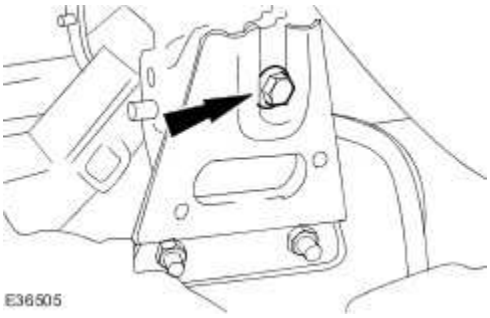

9 . Remove the instrument panel bracket retaining nuts.

10 . Displace the multiplugs to gain access to the RCM retaining bolts.

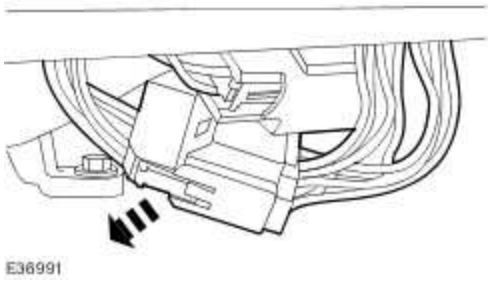

11 . Remove the RCM.

1) Remove the RCM retaining bolts.

2) Remove the RCM.

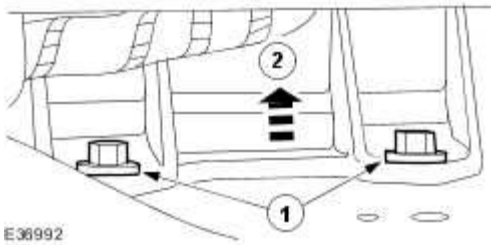

www.JagDocs.com

Installation

1 . **WARNING: To avoid accidental deployment and possible personal injury, the backup power supply must be depleted before repairing or replacing any air bag supplemental restraint system (SRS) components. To deplete the backup power supply energy, disconnect the battery ground cable and wait one minute. Failure to follow this instruction may result in personal injury.**

WARNING: A restraints control module (RCM) only requires replacement if the system has incurred five separate deployments. At no time change the RCM for less than five separate deployments.

CAUTION: Electronic modules are sensitive to static electrical charges. If exposed to these charges, damage may result.

NOTE:

Repair is made by replacement only. If a part is replaced and the new part does not correct the condition, install the original part and carry out the diagnostic procedure again.

To install, reverse the removal procedure.

Tighten to 12 Nm.

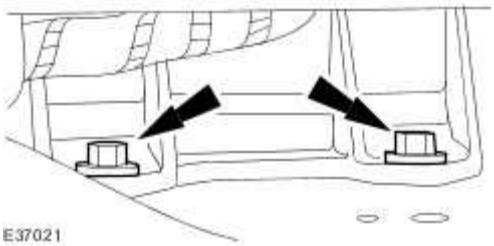

2 . Tighten to 12 Nm.

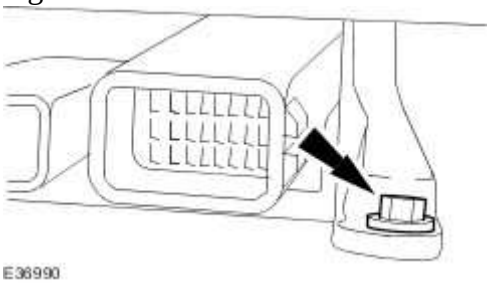

3 . **NOTE:**

Left-hand shown, right-hand similar.

Tighten to 9 Nm.

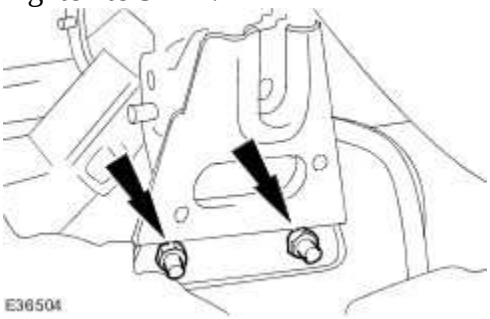

4 . **NOTE:**

Left-hand shown, right-hand similar.

Tighten to 9 Nm.

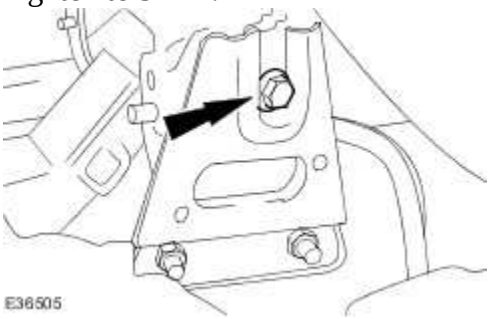

www.JagDocs.com

Seat Position Sensor (76.73.62)

Removal

1 . **WARNING: To avoid accidental deployment and possible personal injury, the backup power supply must be depleted before repairing or replacing any air bag supplementary restraints system (SRS) components. To deplete the backup power supply energy, disconnect the battery ground cable and wait for one minute. Failure to follow this instruction may result in personal injury.**

WARNING: Never probe the electrical connectors of the air bag modules or any other SRS component. Failure to follow this instruction may result in personal injury.

NOTE:

Make sure the driver seat is adjusted to its maximum height before removal.

Remove the driver seat. <<501-10>>

2 . Disconnect the seat position sensor electrical connector.

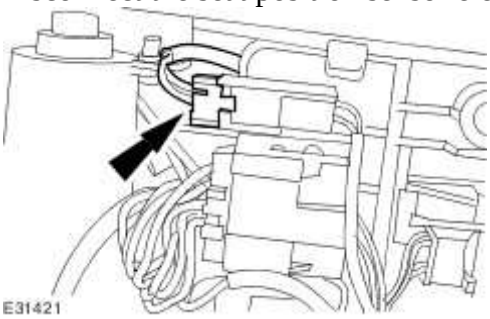

3 . Remove the seat position sensor.

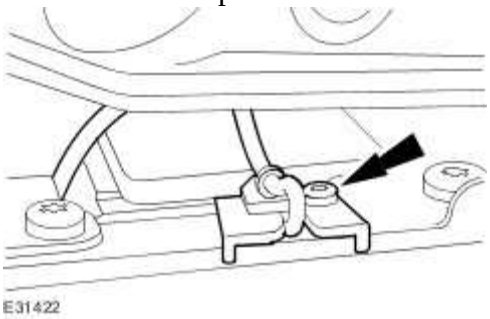

Installation

1. **WARNING: To avoid accidental deployment and possible personal injury, the backup power supply must be depleted before repairing or replacing any air bag SRS components. To deplete the backup power supply energy, disconnect the battery ground cable and wait for one minute. Failure to follow this instruction may result in personal injury.**

   WARNING: Never probe the electrical connectors of the air bag modules or any other SRS component. Failure to follow this instruction may result in personal injury.

   WARNING: Make sure the sensor is correctly located into the seat track. Failure to follow this instruction may result in personal injury.

   To install, reverse the removal procedure.

   - Tighten to 5 Nm.

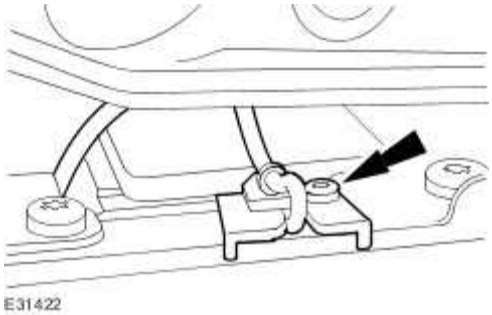

www.JagDocs.com

Side Air Bag Module (76.73.47)

Removal

1. **WARNING: A restraints control module (RCM) only requires replacement if the system has incurred five separate deployments. At no time change the RCM for less than five separate deployments.**

   WARNING: Always wear safety glasses when repairing an air bag supplemental restraint system (SRS) vehicle and when handling an air bag module. Failure to follow this instruction may result in personal injury.

   WARNING: Carry a live air bag module with the air bag and trim cover pointed away from your body. This will reduce the risk of injury in the event of an accidental deployment. Failure to follow this instruction may result in personal injury.

   WARNING: Do not set a live air bag module down with the trim cover face down. Failure to follow this instruction may result in personal injury.

   WARNING: After deployment, the air bag surface can contain deposits of sodium hydroxide, a product of the gas generant combustion that is irritating to the skin. Wash your hands with soap and water afterwards. Failure to follow this instruction may result in personal injury.

   WARNING: Never probe the connectors on the air bag module. Doing so may result in air bag deployment. Failure to follow this instruction may result in personal injury.

   WARNING: Vehicle sensor orientation is critical for correct system operation. If a vehicle equipped with an air bag SRS is involved in a collision, inspect the sensor mounting bracket and wiring pigtail for deformation. If damaged, replace the sensor whether or not the air bag is deployed.

   WARNING: To avoid accidental deployment and possible personal injury, the backup power supply must be depleted before repairing or replacing any air bag SRS components. To deplete the backup power supply energy, disconnect the

battery ground cable and wait one minute. Failure to follow this instruction may result in personal injury.

NOTE:

Repair is made by replacement only. If a part is replaced and the new part does not correct the condition, install the original part and carry out the diagnostic procedure again.

NOTE:

When installing a new air bag module, a prepaid return postcard is provided with the replacement air bag module. The serial number for the new part and the vehicle identification number (VIN) must be recorded and sent to Jaguar Cars Ltd.

Remove the front seat. <<501-10>>

2 . Remove the head restraint.

3 . Remove the front seat backrest trim panel.

1) Detach the front seat backrest trim panel retaining clips.

2) Remove the front seat backrest trim panel.

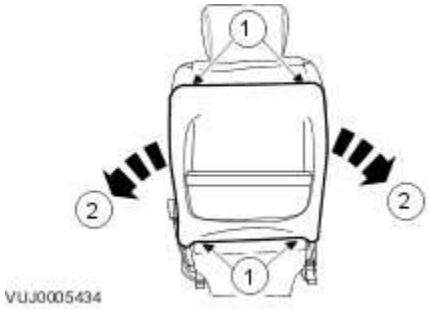

4 . Detach the seat backrest cover.

www.JagDocs.com

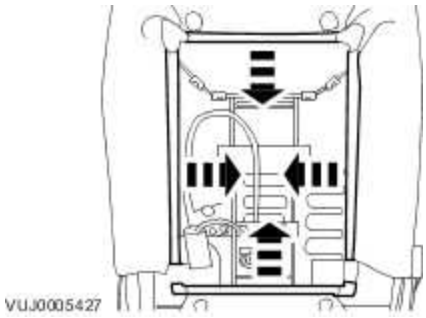

5 . Remove the side air bag module retaining nuts.

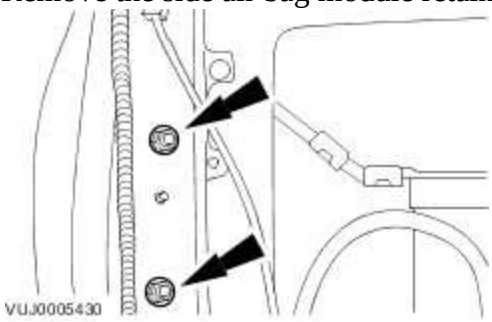

6 . **NOTE:**

Left-hand shown, right-hand similar.

Remove the head restraint retaining post.

1) Release the retaining tang.

2) Remove the head restraint retaining post.

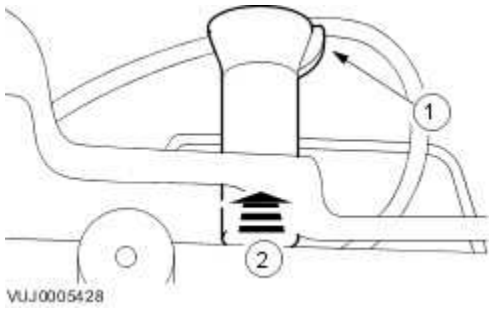

7 . Detach the seat backrest cover and cushion.

1) Reposition the seat backrest cover and cushion.

2) Detach the seat backrest cover and cushion.

8 . Disconnect the side air bag module electrical connector.

9 . Remove the side air bag module.

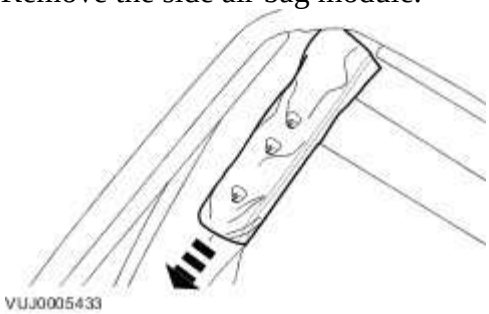

Installation

1 . **WARNING: A restraints control module (RCM) only requires replacement if the system has incurred five separate deployments. At no time change the RCM for less than five separate deployments.**

WARNING: Always wear safety glasses when repairing an air bag supplemental restraint system (SRS) vehicle and when handling an air bag module. Failure to follow this instruction may result in personal injury.

www.JagDocs.com

WARNING: Carry a live air bag module with the air bag and trim cover pointed away from your body. This will reduce the risk of injury in the event of an accidental deployment. Failure to follow this instruction may result in personal injury.

WARNING: Do not set a live air bag module down with the trim cover face down. Failure to follow this instruction may result in personal injury.

WARNING: After deployment, the air bag surface can contain deposits of sodium hydroxide, a product of the gas generant combustion that is irritating to the skin. Wash your hands with soap and water afterwards. Failure to follow this instruction may result in personal injury.

WARNING: Never probe the connectors on the air bag module. Doing so may result in air bag deployment. Failure to follow this instruction may result in personal injury.

WARNING: Vehicle sensor orientation is critical for correct system operation. If a vehicle equipped with an air bag SRS is involved in a collision, inspect the sensor mounting bracket and wiring pigtail for deformation. If damaged, replace the sensor whether or not the air bag is deployed.

WARNING: To avoid accidental deployment and possible personal injury, the backup power supply must be depleted before repairing or replacing any air bag SRS components. To deplete the backup power supply energy, disconnect the battery ground cable and wait one minute. Failure to follow this instruction may result in personal injury.

WARNING: Make sure the side air bag module is correctly aligned in the deployment chute and the chute is correctly aligned within the seat assembly. Failure to follow this instruction may result in personal injury.

NOTE:

Repair is made by replacement only. If a part is replaced and the new part does not correct the condition, install the original part and carry out the diagnostic procedure again.

To install, reverse the removal procedure.

- Tighten to 7 Nm.

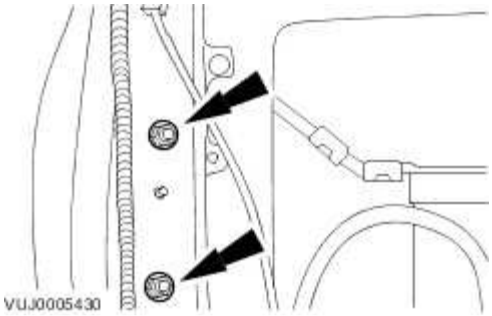

www.JagDocs.com

Side Air Curtain Module (76.73.64)

Removal

1. **WARNING: Always wear safety glasses when repairing an air bag supplemental restraint system (SRS) vehicle and when handling an air bag module. Failure to follow this instruction may result in personal injury.**

   WARNING: Carry a live side air curtain module with the air bag and trim cover pointed down. This will reduce the risk of injury in the event of an accidental deployment. Failure to follow this instruction may result in personal injury.

   WARNING: Do not set a live air bag module down with the trim cover face down. Failure to follow this instruction may result in personal injury.

   WARNING: After deployment, the air bag surface can contain deposits of sodium hydroxide, a product of the gas generant combustion that is irritating to the skin. Wash your hands with soap and water afterwards. Failure to follow this instruction may result in personal injury.

   WARNING: Never probe the connectors on the air bag module. Doing so may result in air bag deployment. Failure to follow this instruction may result in personal injury.

   WARNING: Air bags modules with damaged trim covers must be replaced. Failure to follow this instruction may result in personal injury.

   WARNING: Vehicle sensor orientation is critical for correct system operation. If a vehicle equipped with an air bag SRS is involved in a collision, inspect the sensor mounting bracket and wiring pigtail for deformation. If damaged, replace the sensor whether or not the air bag is deployed. Failure to follow this instruction may result in personal injury.

   WARNING: To avoid accidental deployment and possible personal injury, the backup power supply must be depleted before repairing or replacing any air bag SRS components. To deplete the backup power supply energy, disconnect the

battery ground cable and wait one minute. Failure to follow this instruction may result in personal injury.

WARNING: Only carry out a system test with the air bag modules fully installed. Failure to follow this instruction may result in personal injury.

NOTE:

Repair is made by replacement only.

Reposition the front seat backs to the maximum reclined position.

2 . Disconnect the battery ground cable.
For additional information, refer to Battery Disconnect and Connect

3 . Remove both A-pillar trim panels.
For additional information, refer to A-Pillar Trim Panel (76.13.31)

4 . Remove both B-pillar lower trim panels.
For additional information, refer to B-Pillar Lower Trim Panel (76.13.29)

5 . Remove both B-pillar upper trim panels.
For additional information, refer to B-Pillar Upper Trim Panel (76.13.28)

6 . Remove both C-pillar upper trims.
For additional information, refer to C-Pillar Upper Trim Panel

7 . Remove both sun visors.
For additional information, refer to Sun Visor (76.10.48)

8 . **NOTE:**

Left-hand shown, right-hand similar.

Remove the sun visor retaining clip.

9 . Remove the overhead console.
For additional information, refer to Overhead Console (76.13.69)

www.JagDocs.com

10 . **NOTE:**

Left-hand shown, right-hand similar.

Detach the front passenger assist handle retaining screw covers.

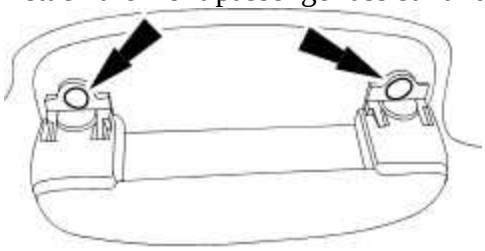

E36775

11 . **NOTE:**

Left-hand shown, right-hand similar.

Remove the front passenger assist handle.

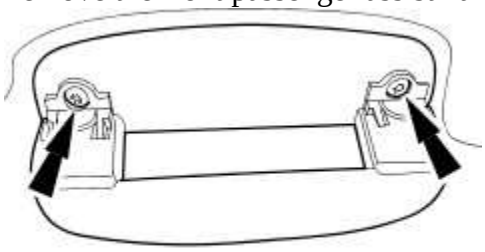

E36776

12 . **NOTE:**

Left-hand shown, right-hand similar.

Detach the rear passenger assist handle retaining screw covers.

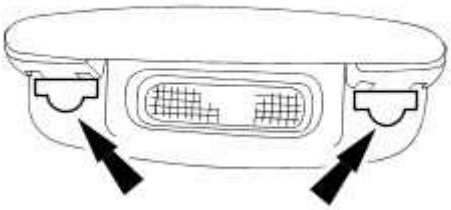

E36777

13 . **NOTE:**

Left-hand shown, right-hand similar.

Detach the rear passenger assist handle.

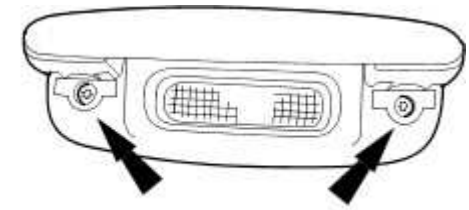

14 . Remove the rear passenger assist handle.

- Disconnect the electrical connector.

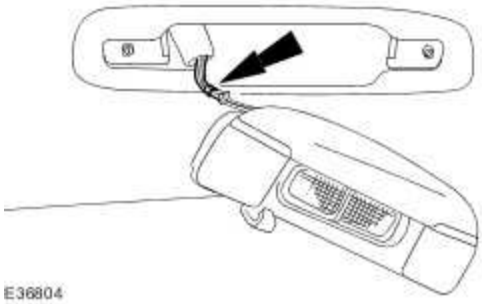

15 . Detach the head liner.

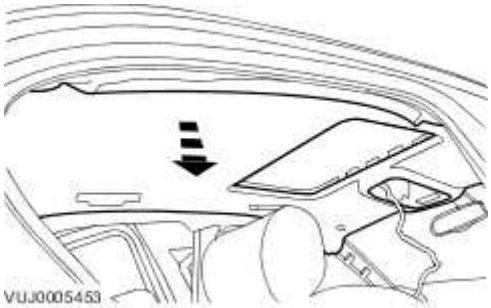

16 . **NOTE:**

Left-hand shown, right-hand similar.

Detach the rear seat belt retractor.

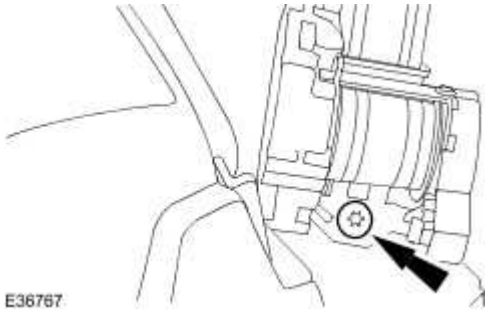

www.JagDocs.com

17 . **NOTE:**

Left-hand shown, right-hand similar.

Disconnect the side air curtain module electrical connector.

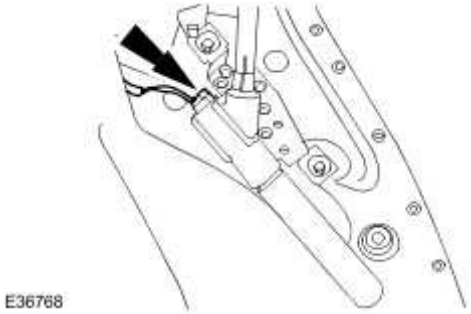

18 . **NOTE:**

Left-hand shown, right-hand similar.

Remove the side air curtain canister retaining bolts.

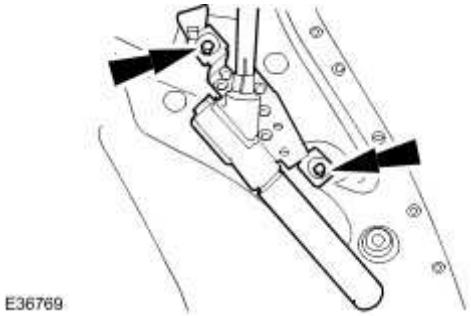

19 . **NOTE:**

Left-hand shown, right-hand similar.

NOTE:

Make sure the retaining strap routing is noted before removal.

Remove the rear retaining strap retaining bolt.

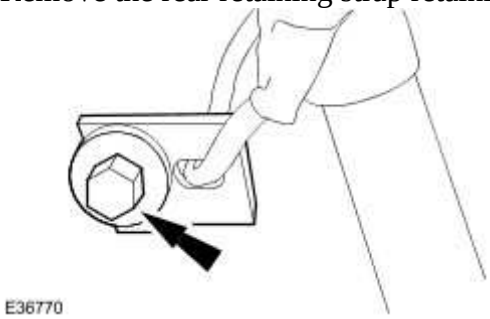

20 . **NOTE:**

Left-hand shown, right-hand similar.

Detach the retaining strap from the retaining clip.

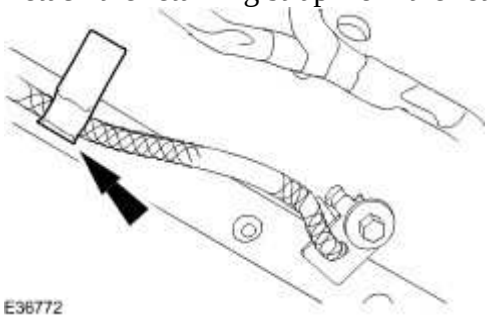

21 . **NOTE:**

Left-hand shown, right-hand similar.

NOTE:

Make sure the retaining strap routing is noted before removal.

Remove the front retaining strap retaining bolt.

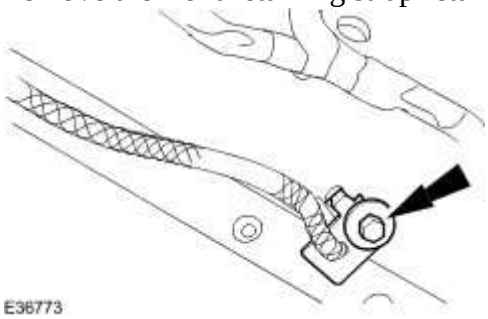

22 . **NOTE:**

Left-hand shown, right-hand similar.

Remove the side air curtain module.

- Remove the side air curtain module retaining bolts.

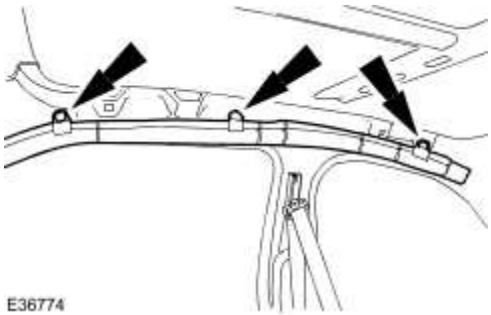

www.JagDocs.com

Installation

1. **WARNING: A restraints control module (RCM) only requires replacement if the system has incurred five separate deployments. At no time change the RCM for less than five separate deployments.**

   WARNING: Always wear safety glasses when repairing an air bag supplemental restraint system (SRS) vehicle and when handling an air bag module. Failure to follow this instruction may result in personal injury.

   WARNING: To avoid accidental deployment and possible personal injury, the backup power supply must be depleted before repairing or replacing any air bag SRS components. To deplete the backup power supply energy, disconnect the battery ground cable and wait one minute. Failure to follow this instruction may result in personal injury.

   WARNING: Carry a live air bag module with the air bag and trim cover pointed away from your body. This will reduce the risk of injury in the event of an accidental deployment. Failure to follow this instruction may result in personal injury.

   WARNING: Never probe the connectors on the air bag module. Doing so may result in air bag deployment. Failure to follow this instruction may result in personal injury.

   WARNING: New nylon thread forming inserts must be used ever time the screws are removed from the side air curtain. Failure to follow this instruction may result in personal injury.

   WARNING: Only carry out a system test with the air bag modules fully installed. Failure to follow this instruction may result in personal injury.

NOTE:

Repair is made by replacement only.

NOTE:

When installing a new air bag module, a prepaid return postcard is provided with the replacement air bag module. The serial number for the new part and the vehicle identification number (VIN) must be recorded and sent to Jaguar Cars

Limited.

NOTE:

Once the side air curtain module retaining straps have been detached the side air curtain module must be replaced.

NOTE:

Make sure the side air curtain module is correctly located.

NOTE:

Ensure the fill tube between the canister and the side air curtain is not twisted.

NOTE:

Make sure the tethers are correctly routed.

NOTE:

Left-hand shown, right-hand similar.

To install, reverse the removal procedure.

Tighten to7 Nm.

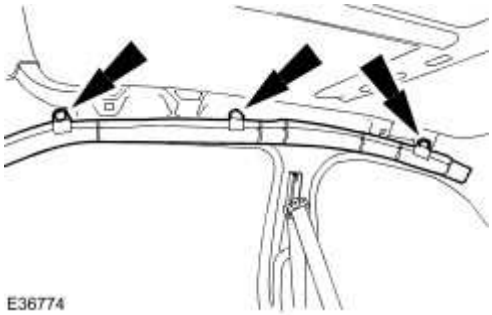

2 . **NOTE:**

Left-hand shown, right-hand similar.

Tighten to 8 Nm.

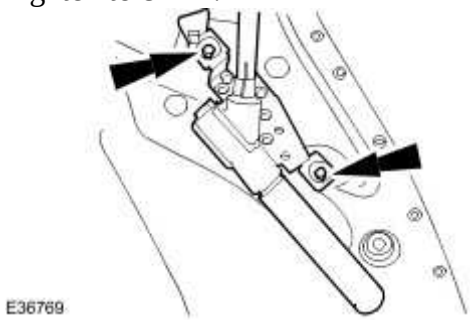

www.JagDocs.com

3 . **NOTE:**

Left-hand shown, right-hand similar.

Tighten to 9 Nm.

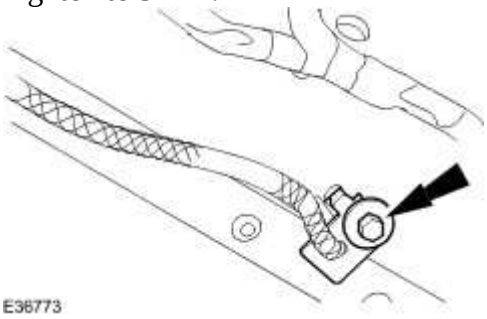

4 . **NOTE:**

Left-hand shown, right-hand similar.

Tighten to 9 Nm.

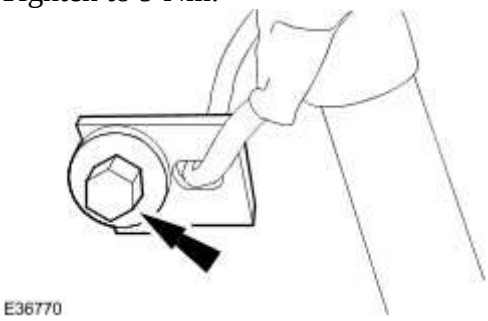

5 . **NOTE:**

Left-hand shown, right-hand similar.

Tighten to 35 Nm.

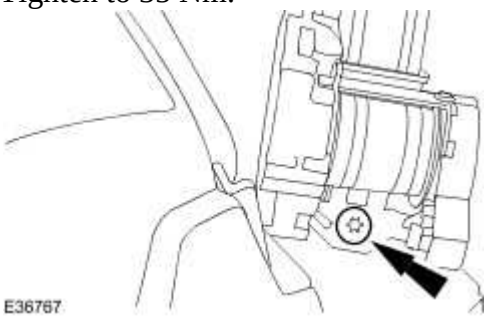

502 : Frame and Mounting

502-00 : Uni-Body and Mounting System

Specifications

Specifications

Torque Specifications

Description	Nm	lb-ft	lb-in
Front lower arm to front subframe retaining nut and bolt	175	129	—
Rear lower arm to front subframe retaining nut and bolt	175	129	—
Engine mount lower retaining nut	63	46	—
Steering gear retaining bolts	100	74	—
Front air spring assembly retaining bolt	175	129	—
Front subframe to body front retaining bolt	A	—	—
Front subframe to body rear retaining bolt	115	85	—
Rear air spring assembly retaining bolt	133	98	—
Rear subframe reinforcement plate retaining bolts	48	35	—
Rear subframe to body retaining bolts	125	92	—
Front suspension stabilizer bar link retaining nut	43	32	—
Front suspension stabilizer bar link retaining nut and bolt	70	52	—
Exhaust manifold retaining nut (vehicles with 3.0L engine)	20	15	—
Dipstick tube retaining bolt (vehicles with 3.0L engine)	10	—	89
Wheel and tire retaining nuts	125	92	—
Rear suspension upper arm retaining nut and bolt	98	72	—
A = refer to the procedure for correct torque sequence	—	—	—

www.JagDocs.com

Frame Assembly

Front Subframe

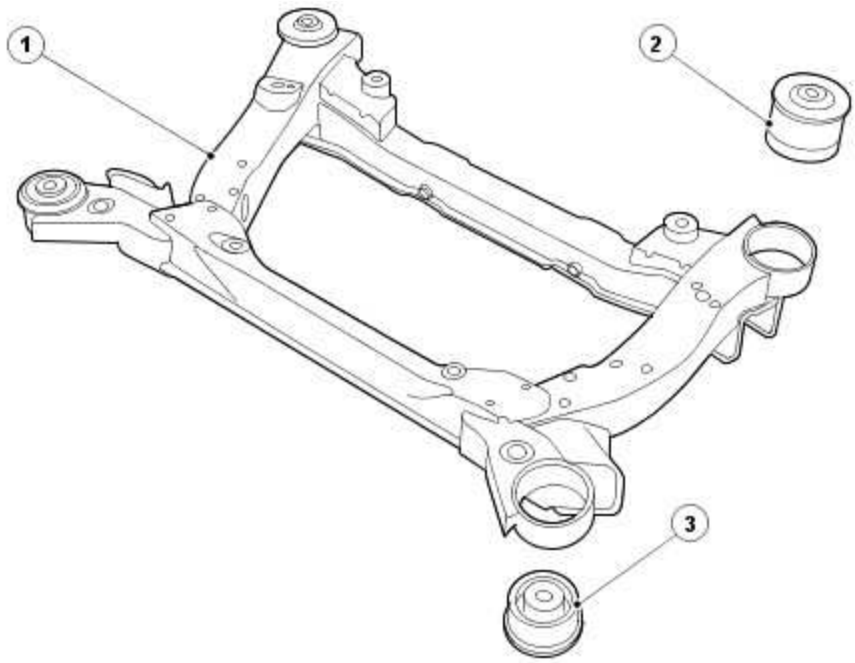

E39811

Item	Part Number	Description
1		Front subframe
2		Front subframe rear bushing
3		Front subframe front bushing

The front subframe is bolted to the body and aids in structural support. The subframe provides the mounting surface for the steering gear, the front suspension lower arms, the stabilizer bar and the engine mounts.

Rear Subframe

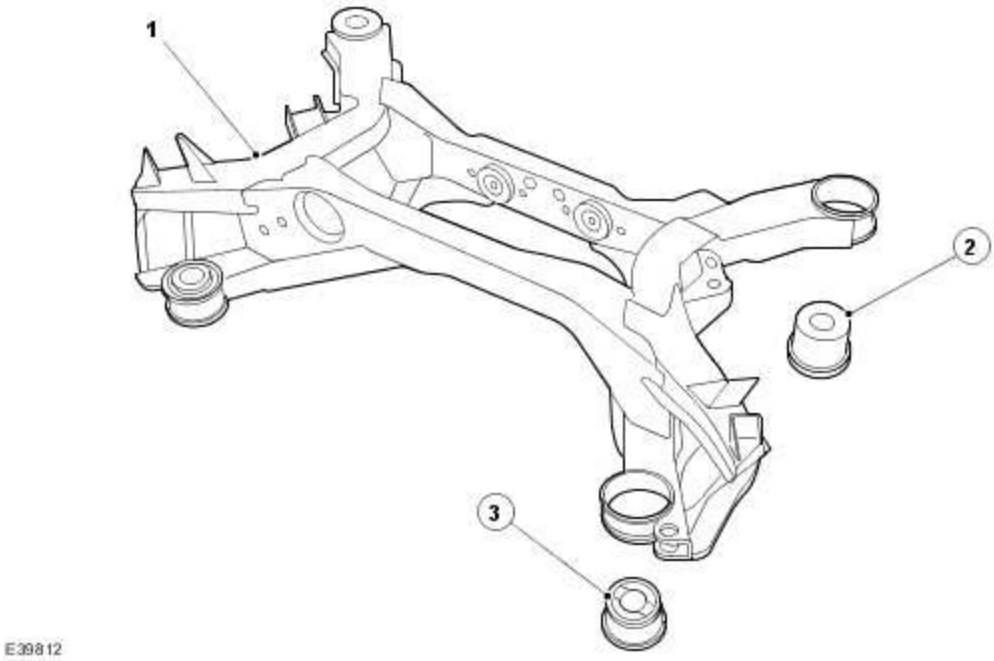

Item	Part Number	Description
1		Rear subframe
2		Rear subframe rear bushing
3		Rear subframe front bushing

The rear subframe is bolted to the body and aids in structural support. The subframe provides the mounting surface for the rear suspension components, the exhaust hanger insulators and the rear drive differential.

www.JagDocs.com

Front Subframe - 3.0L NA V6 - AJ27 (76.10.05)

Special Service Tools

Powertrain Assembly Jack
HTJ1200-02

Engine lifting Bracket
303-661

Engine Support Bracket
303-021

Subframe Alignment Bolt
502-007

Removal

1 . Remove the cowl vent screen.
For additional information, refer to Cowl Vent Screen (76.10.01)

2 . Remove the cabin air filter.

1) Detach the cabin air filter.

2) Remove the cabin air filter.

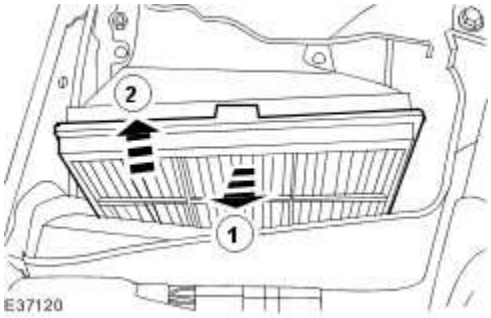

3 . Remove the cabin air filter housing.

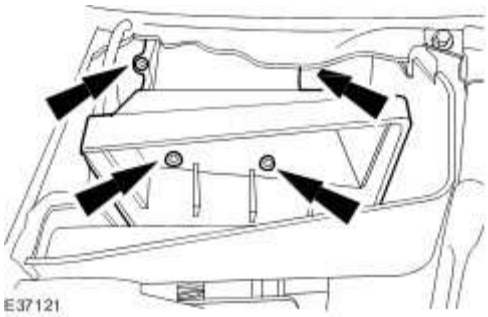

4 . Remove the right-hand engine compartment panel.

1) Remove the retaining bolt.

2) Remove the right-hand engine compartment panel.

www.JagDocs.com

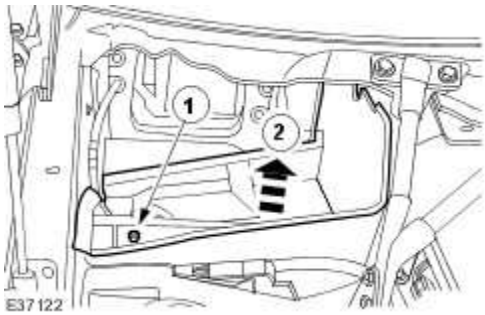

5 . Remove the left-hand engine compartment access panel.

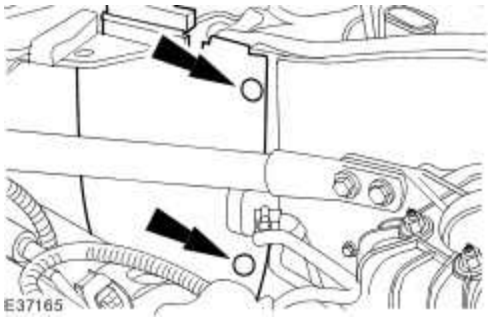

6 . Detach the dipstick tube.

- Remove the dipstick tube retaining bolt.

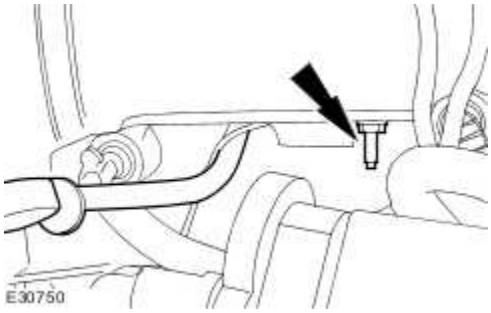

7 . **NOTE:**

Left-hand shown, right-hand similar.

Loosen the exhaust manifold retaining nut.

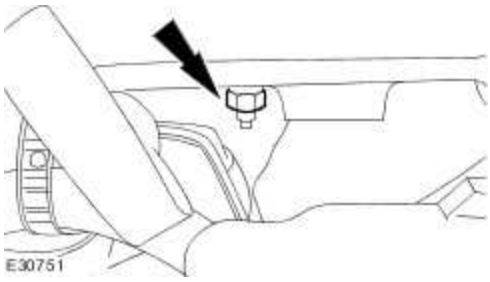

8 . **NOTE:**

Left-hand shown, right-hand similar.

Install the special tool to the exhaust manifold.

- Install the retaining bolt.

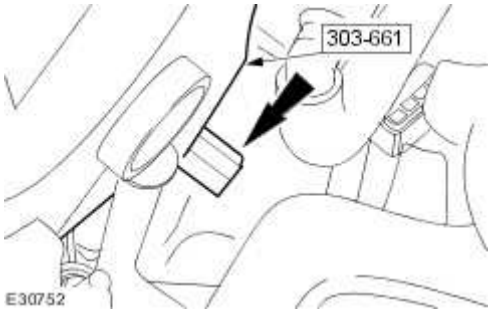

9 . **NOTE:**

Left-hand shown, right-hand similar.

Install the retaining bolt.

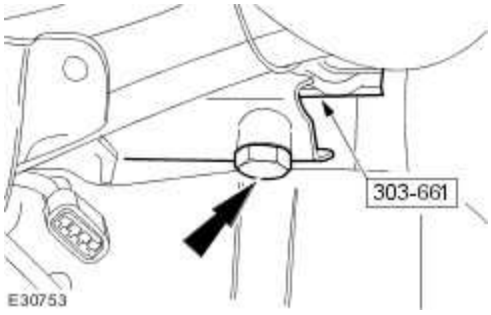

www.JagDocs.com

10 . Install the special tool support bars to the special tool.

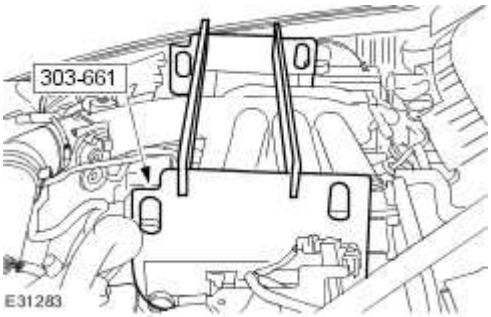

11 . Install the special tool.

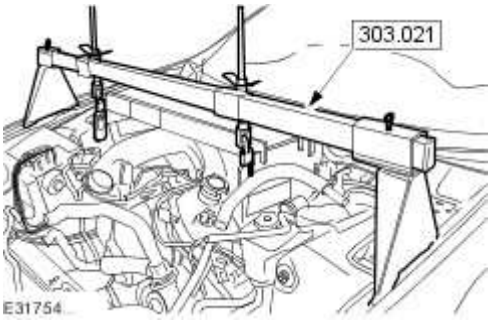

12 . **NOTE:**

Right-hand shown, left-hand similar.

Support the radiator.

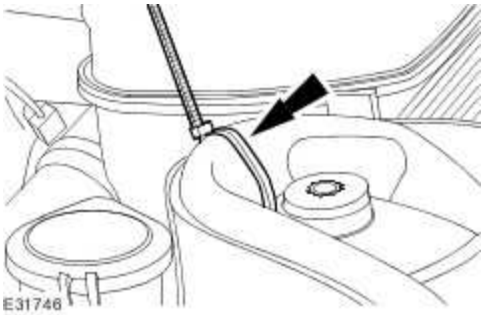

13 . Remove the radiator splash shield.
For additional information, refer to Radiator Splash Shield (76.22.90)

14 . Remove the air deflector.
For additional information, refer to Air Deflector (76.11.41)

15 . Remove both front wheel and tires.
For additional information, refer to Wheel and Tire (74.20.05)

16 . **NOTE:**

Left-hand shown, right-hand similar.

Remove the stabilizer bar link retaining nut.

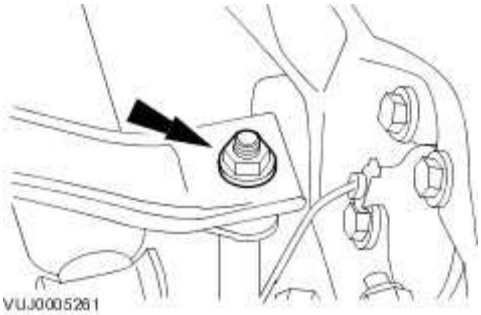

17 . **NOTE:**

Left-hand shown, right-hand similar.

Remove the stabilizer bar link.

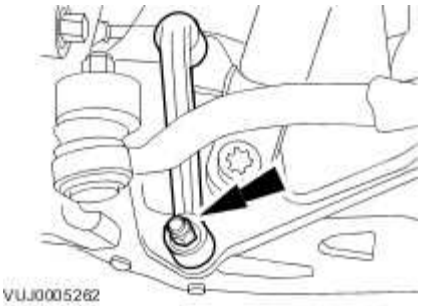

18 . **CAUTION: Make sure the steering gear is supported. Failure to follow this instruction may result in damage to the vehicle.**

www.JagDocs.com

Detach the steering gear.

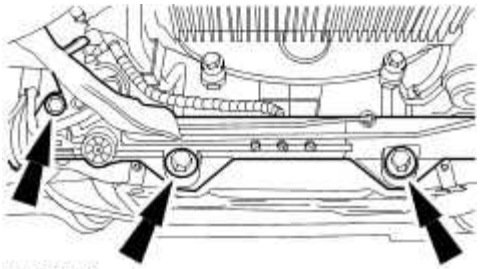

19 . **NOTE:**

Left-hand shown, right-hand similar.

Detach the headlamp leveling sensor retaining clip.

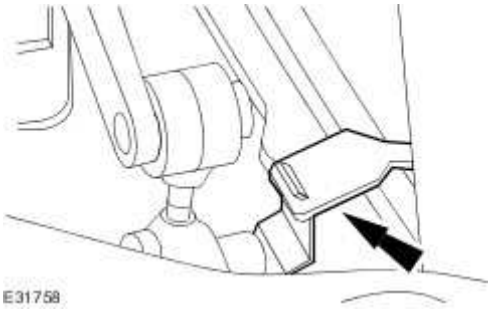

20 . **NOTE:**

Left-hand shown, right-hand similar.

Disconnect the headlamp leveling sensor electrical connector.

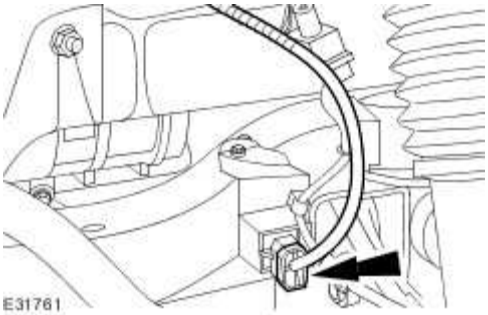

21 . **CAUTION: Make sure the full weight of the suspension components are supported. Failure to follow this instruction may result in damage to the vehicle.**

NOTE:

Left-hand shown, right-hand similar.

Secure the upper arm.

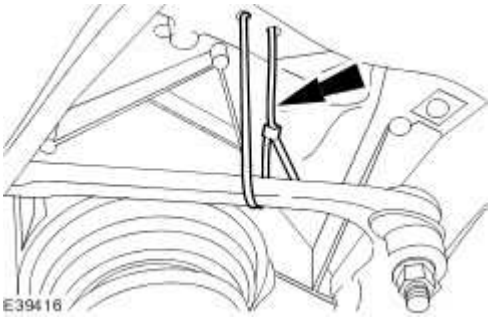

22 . **NOTE:**

Left-hand shown, right-hand similar.

Detach the air spring assembly.

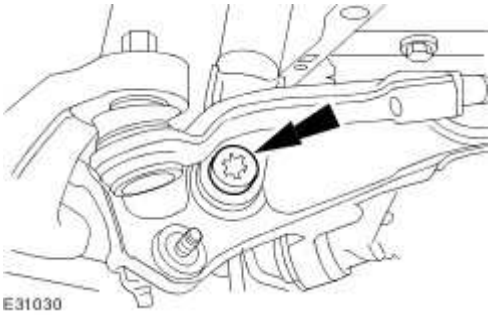

23 . **NOTE:**

Left-hand shown, right-hand similar.

Detach the front lower arm.

www.JagDocs.com

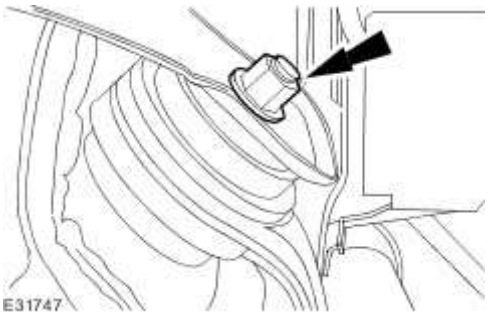

24 . **NOTE:**

Left-hand shown, right-hand similar.

Detach the rear lower arm.

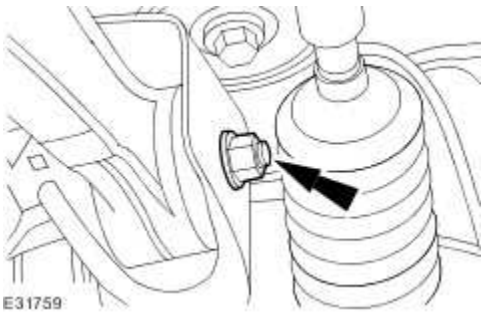

25 . **NOTE:**

Left-hand shown, right-hand similar.

Detach the engine mount.

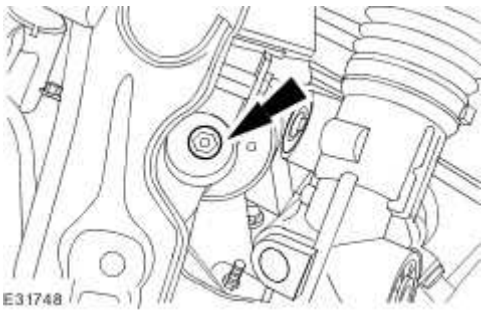

26 . Install the special tool.

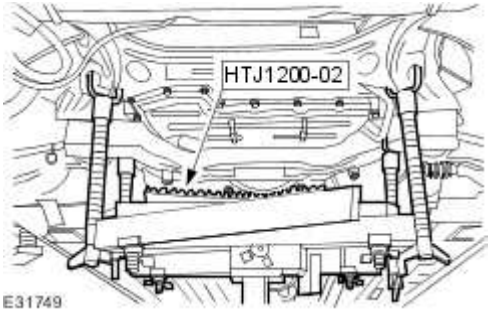

27 . **NOTE:**

Left-hand shown, right-hand similar.

Remove and discard the front subframe front retaining bolt.

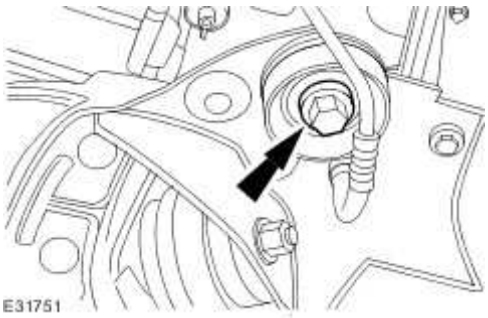

28 . **NOTE:**

Left-hand shown, right-hand similar.

Remove and discard the front subframe rear retaining bolt.

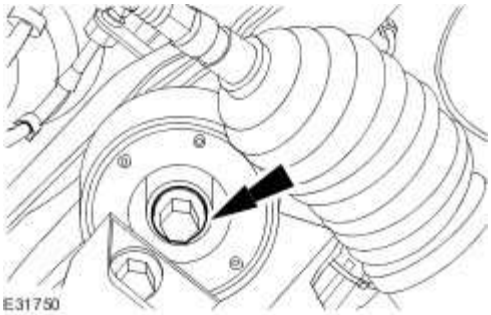

29 . Using the special tool remove the front subframe.

www.JagDocs.com

Remove the front subframe spacer.

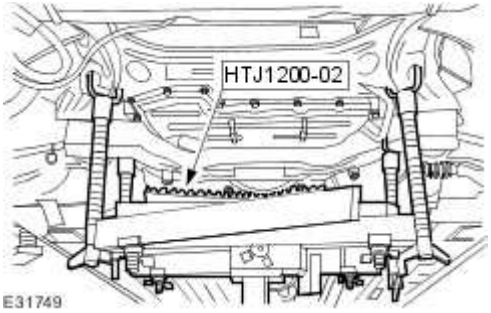

Installation

1 . Using the special tool, install the front subframe.

Install the front subframe spacer.

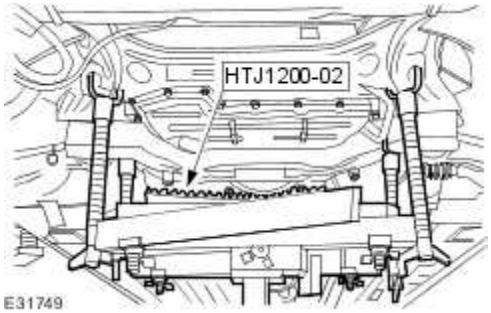

2 . Install the special tool.

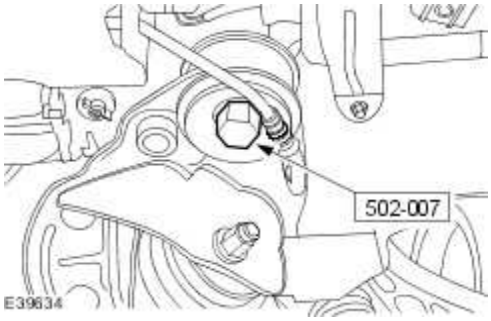

3 . Install the special tool.

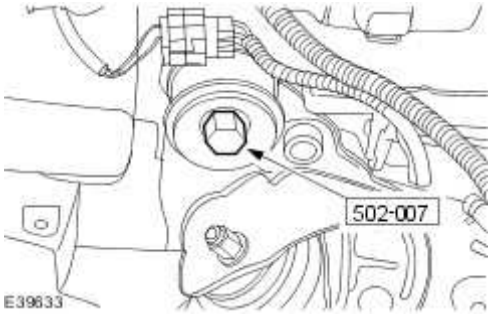

4 . **NOTE:**

Left-hand shown, right-hand similar.

Install a new front subframe rear retaining bolt.

- Tighten to 115 Nm.

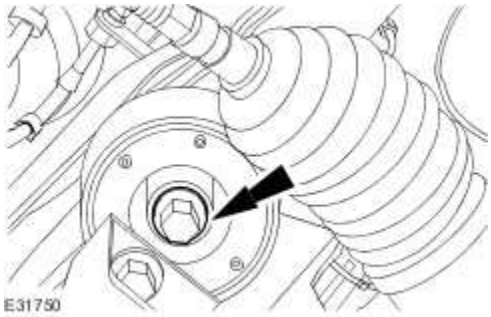

5 . Remove the special tool.

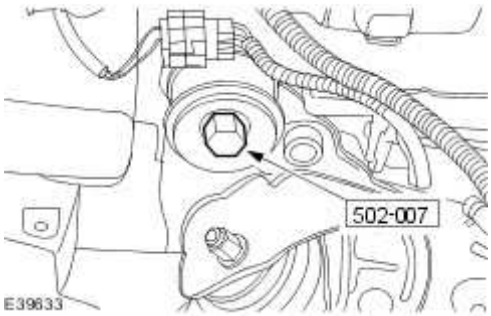

6 . Install a new front subframe front retaining bolt.

- Stage 1: Tighten to 100 Nm.

www.JagDocs.com

- Stage 2: Tighten 270°.

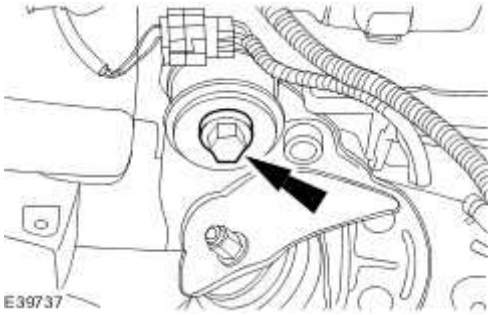

7 . Remove the special tool.

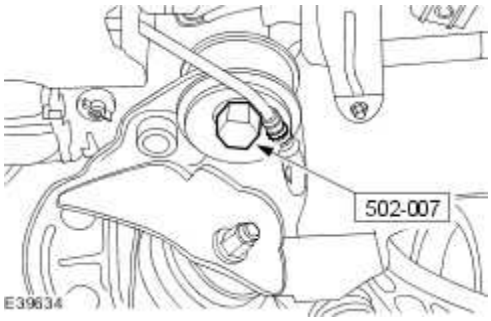

8 . Install a new front subframe front retaining bolt.

- Stage 1: Tighten to 100 Nm.
- Stage 2: Tighten 270°.

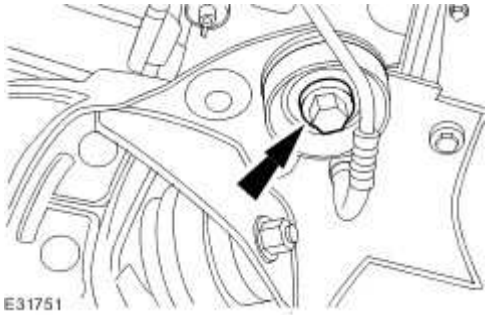

9 . Remove the special tool.

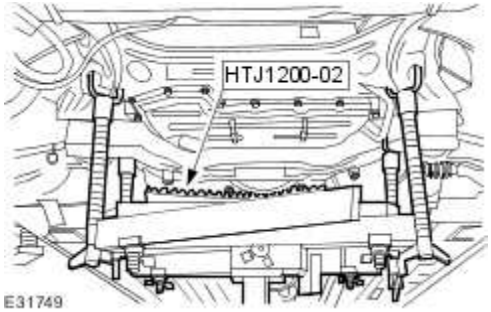

10 . **NOTE:**

Left-hand shown, right-hand similar.

Attach the engine mount.

Tighten to 63 Nm.

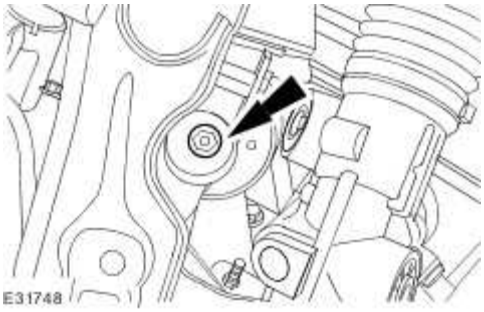

11 . **NOTE:**

Left-hand shown, right-hand similar.

Attach the rear lower arm.

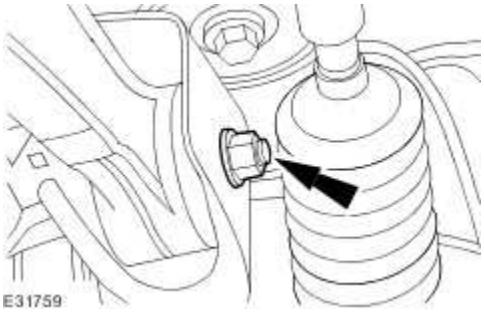

www.JagDocs.com

12 . **NOTE:**

Left-hand shown, right-hand similar.

Attach the front lower arm.

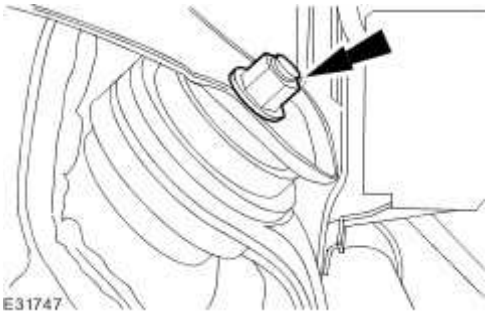

13 . **NOTE:**

Left-hand shown, right-hand similar.

Attach the air spring assembly.

Tighten to 175 Nm.

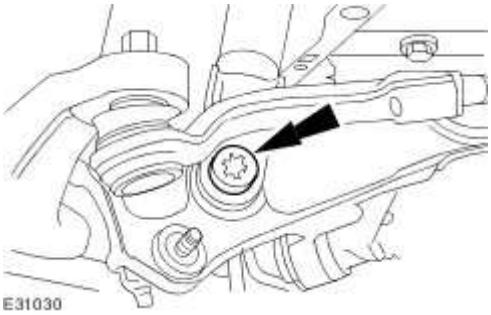

14 . **NOTE:**

Left-hand shown, right-hand similar.

Release the upper arm.

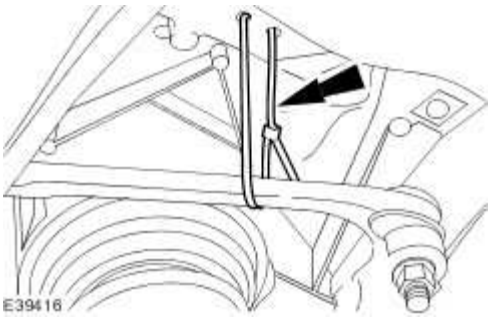

15 . Install the steering gear.

Tighten to 100 Nm.

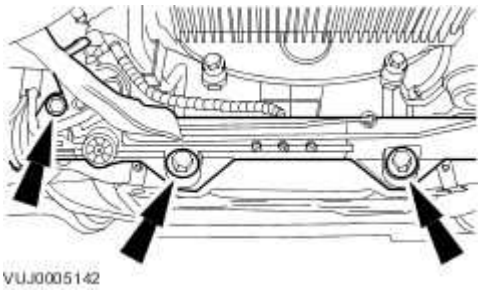

16 . **NOTE:**

Left-hand shown, right-hand similar.

Connect the headlamp leveling sensor electrical connector.

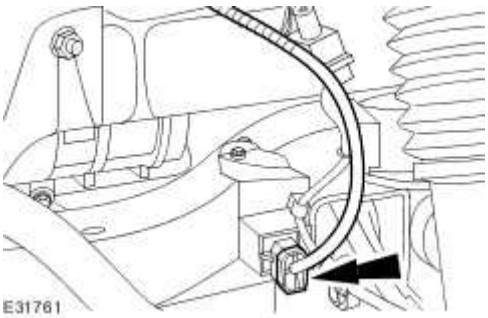

17 . **NOTE:**

Left-hand shown, right-hand similar.

www.JagDocs.com

Attach the headlamp leveling sensor retaining clip.

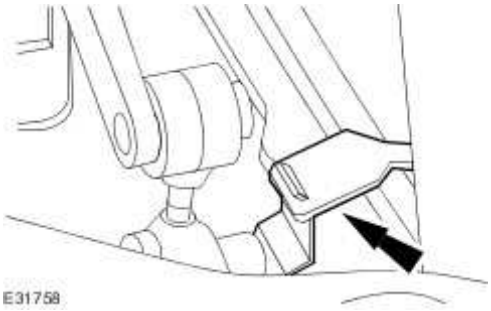

18 . **NOTE:**

Left-hand shown, right-hand similar.

Install the stabilizer bar link.

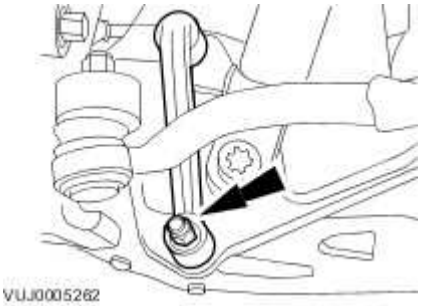

19 . **NOTE:**

Left-hand shown, right-hand similar.

Attach the stabilizer bar link.

- Tighten to 43 Nm.

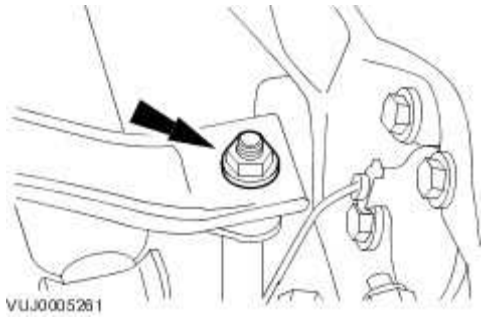

20 . Install both front wheel and tires.
For additional information, refer to Wheel and Tire (74.20.05)

21 . Install the air deflector.
For additional information, refer to Air Deflector (76.11.41)

22 . Install the radiator splash shield.
For additional information, refer to Radiator Splash Shield (76.22.90)

23 . **CAUTION: The final tightening of the rear lower arm inner retaining nut and bolt must be carried out with the vehicle on its wheels. Failure to follow this instruction may result in damage to the component.**

NOTE:

Left-hand shown, right-hand similar.

Tighten to 175 Nm.

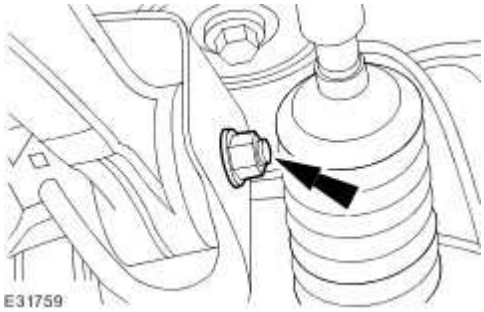

www.JagDocs.com

24 . **CAUTION: The final tightening of the front lower arm inner retaining nut and bolt must be carried out with the vehicle on its wheels. Failure to follow this instruction may result in damage to the component.**

NOTE:

Left-hand shown, right-hand similar.

Tighten to 175 Nm.

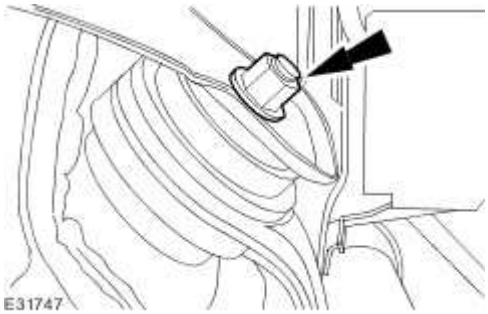

25 . **NOTE:**

Left-hand shown, right-hand similar.

Tighten to 70 Nm.

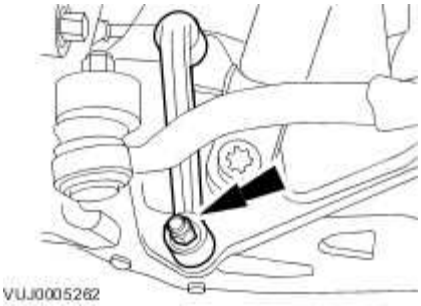

26 . **NOTE:**

Right-hand shown, left-hand similar.

Remove the radiator support.

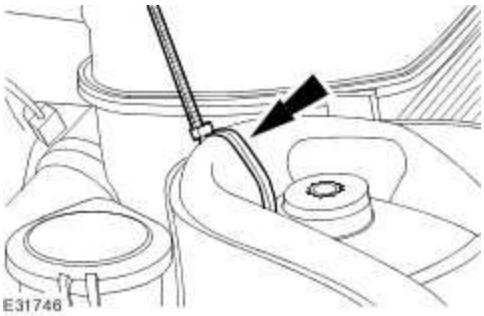

27 . Remove the special tool.

- Loosen the special tool adjustment bolts.

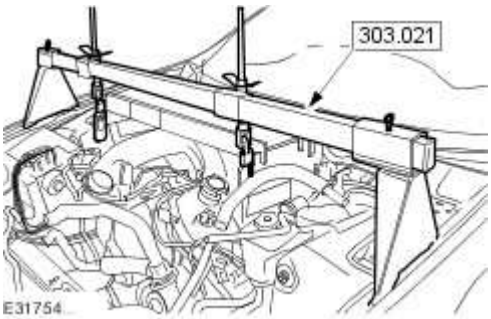

28 . Remove the special tool support bars from the special tool.

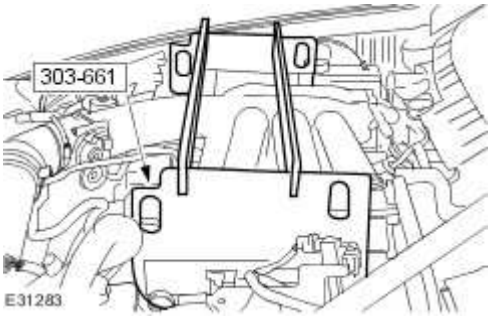

29 . **NOTE:**

Left-hand shown, right-hand similar.

Remove the retaining bolt.

www.JagDocs.com

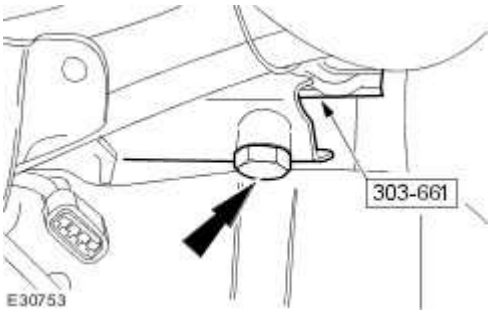

30 . **NOTE:**

Left-hand shown, right-hand similar.

Remove the special tool from the exhaust manifold.

- Remove the retaining bolt.

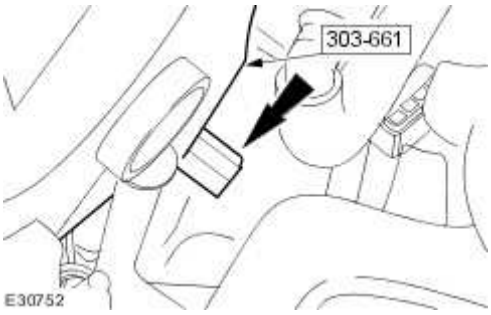

31 . **NOTE:**

Left-hand shown, right-hand similar.

Install the exhaust manifold retaining nut.

- Tighten to 20 Nm.

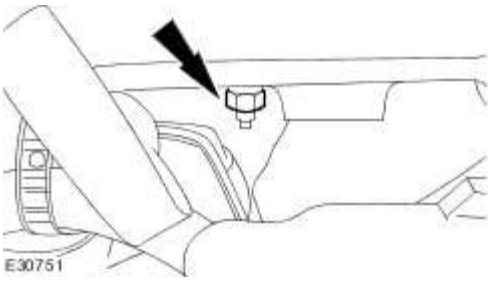

32 . Attach the dipstick tube.

- Install the dipstick tube retaining bolt.
- Tighten to 10 Nm.

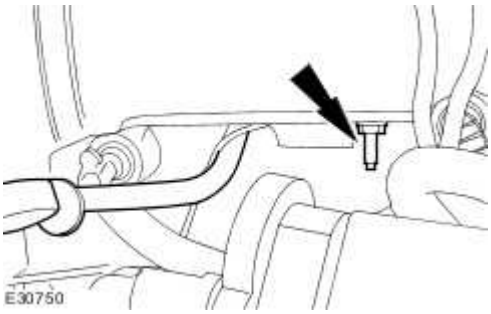

33 . Install the left-hand engine compartment access panel.

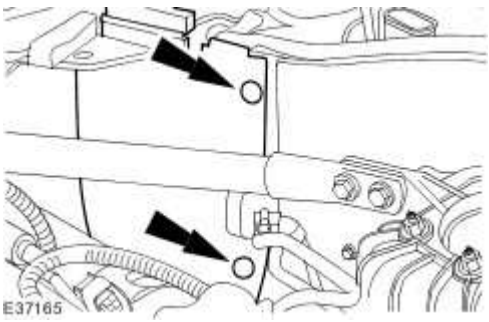

34 . Install the right-hand engine compartment panel retaining bolt.

1) Install the right-hand engine compartment panel.

2) Install the right-hand engine compartment panel retaining bolt.

www.JagDocs.com

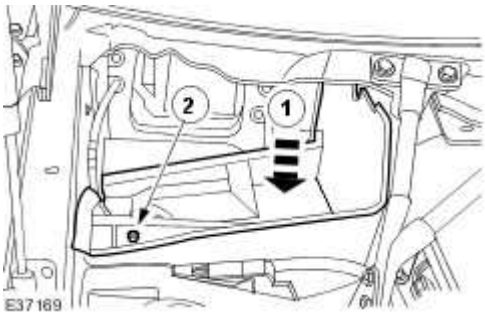

35 . Install the cabin air filter housing.

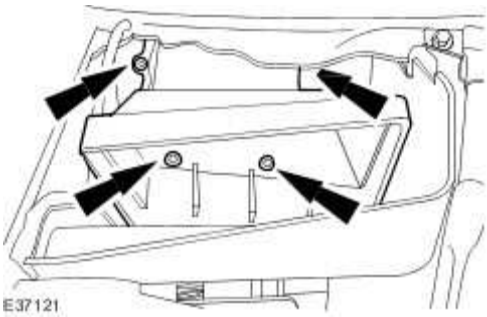

36 . Attach the cabin air filter.

1) Install the cabin air filter.

2) Attach the cabin air filter.

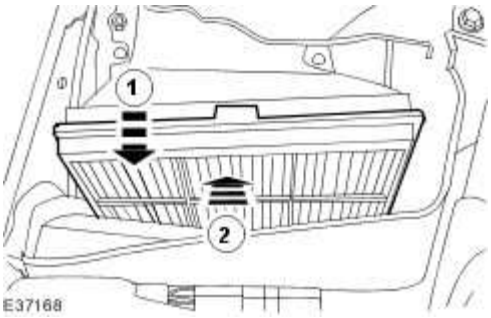

37 . Install the cowl vent screen.
For additional information, refer to Cowl Vent Screen (76.10.01)

38 . Check the caster and camber adjustment.

For additional information, refer to Camber and Caster Adjustment

Front Subframe - 4.2L NA V8 - AJV8/4.2L SC V8 - AJV8/3.5L NA V8 - AJV8 (76.10.05)

Special Service Tools

Powertrain Assembly Jack
HTJ1200-02

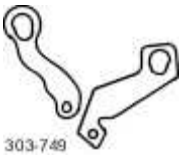

Engine Lifting Brackets
303-749

Engine Support Bracket
303-021

Subframe Alignment Bolt
502-007

Removal

Vehicles with 3.5L or 4.2L engine without supercharger

1. Remove the throttle body.

www.JagDocs.com

. For additional information, refer to Throttle Body - 4.2L NA V8 - AJV8/3.5L NA V8 - AJV8, VIN Range: G00442->G45703 (19.70.04)
For additional information, refer to Throttle Body - 4.2L NA V8 - AJV8/3.5L NA V8 - AJV8, VIN Range: G45704->G99999 (19.70.04)

All vehicles

2 . **NOTE:**

Right-hand shown, left-similar.

Support the radiator.

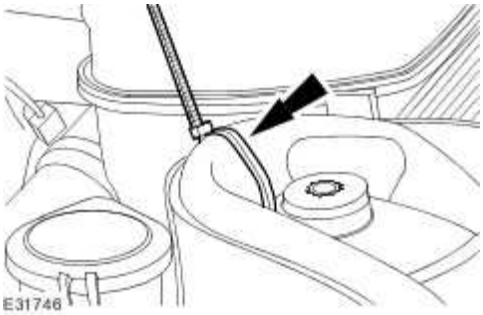

3 **NOTE:**
.

Vehicles with 3.5L or 4.2L engine without supercharger shown, vehicles with 4.2L engine with supercharger similar.

Install the special tools.

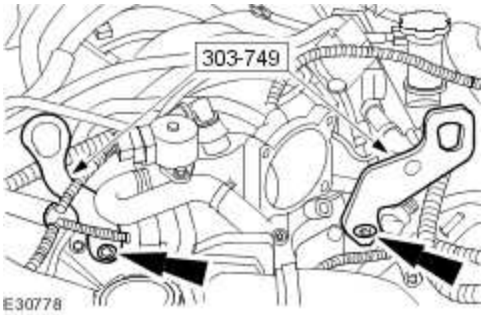

4 **NOTE:**
.

Vehicles with 3.5L or 4.2L engine without supercharger shown, vehicles with 4.2L engine

with supercharger similar.

Install the special tool.

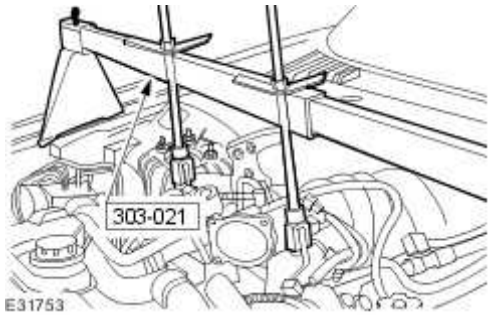

5 . Remove the radiator splash shield.
For additional information, refer to Radiator Splash Shield (76.22.90)

6 . Remove the air deflector.
For additional information, refer to Air Deflector (76.11.41)

7 . Remove both front wheel and tires.
For additional information, refer to Wheel and Tire (74.20.05)

8 . **NOTE:**

Left-hand shown, right-hand similar.

Remove the stabilizer bar link retaining nut.

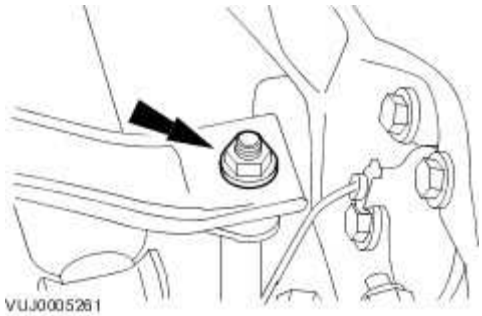

www.JagDocs.com

9 . **NOTE:**

Left-hand shown, right-hand similar.

Remove the stabilizer bar link.

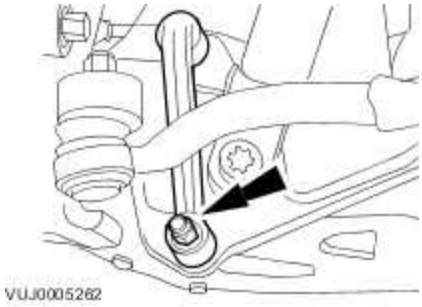

10 . **CAUTION: Make sure the steering gear is supported. Failure to follow this instruction may result in damage to the vehicle.**

Detach the steering gear.

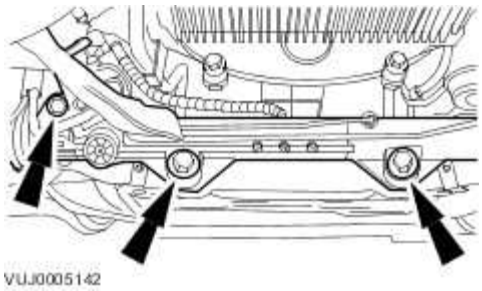

11 . **NOTE:**

Left-hand shown, right-hand similar.

Detach the headlamp leveling sensor retaining clip.

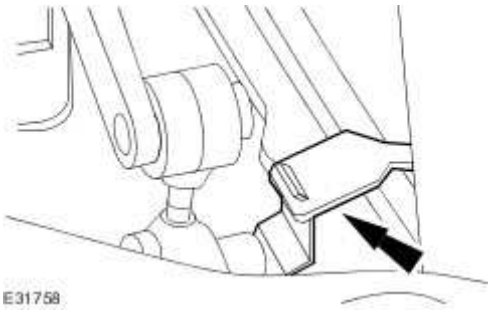

12 . **NOTE:**

Left-hand shown, right-hand similar.

Disconnect the headlamp leveling sensor electrical connector.

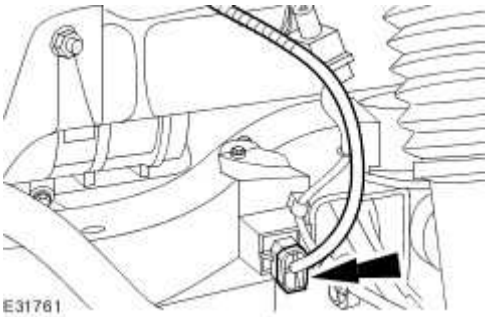

13 . **CAUTION: Make sure the full weight of the suspension components are supported. Failure to follow this instruction may result in damage to the vehicle.**

NOTE:

Left-hand shown, right-hand similar.

Secure the upper arm.

www.JagDocs.com

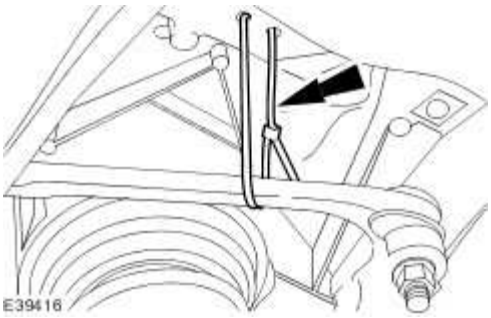

14 . **NOTE:**

Left-hand shown, right-hand similar.

Detach the air spring assembly.

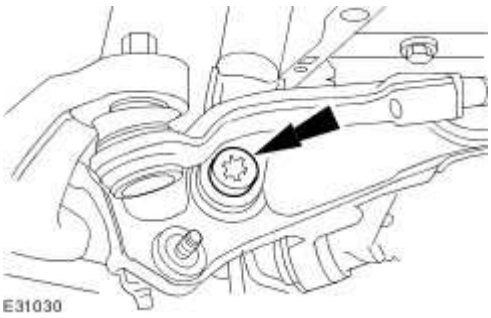

15 . **NOTE:**

Left-hand shown, right-hand similar.

Detach the front lower arm.

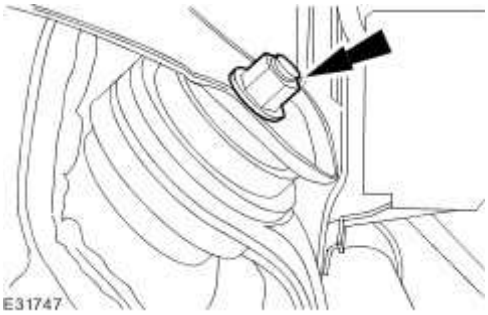

16 . **NOTE:**

Left-hand shown, right-hand similar.

Detach the rear lower arm.

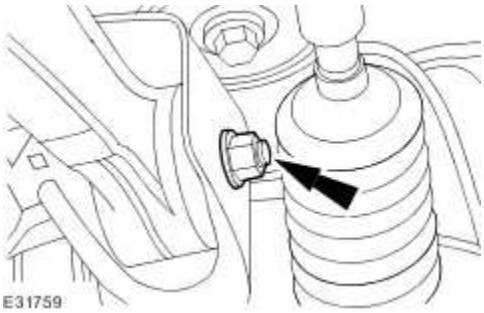

17 . **NOTE:**

Left-hand shown, right-hand similar.

Detach the engine mount.

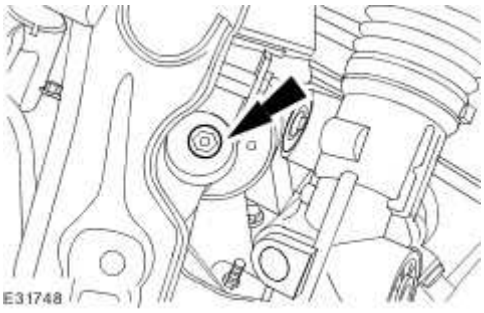

18 . Install the special tool.

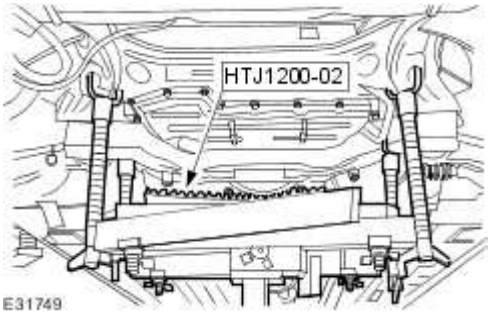

www.JagDocs.com

19 . **NOTE:**

Left-hand shown, right-hand similar.

Remove and discard the front subframe front retaining bolt.

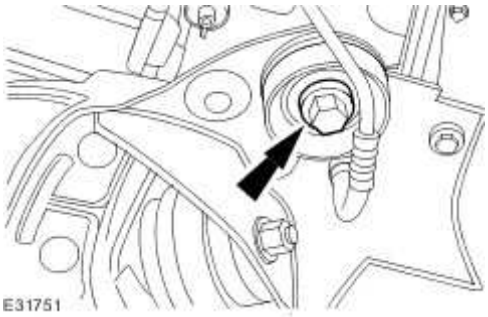

20 . **NOTE:**

Left-hand shown, right-hand similar.

Remove and discard the front subframe rear retaining bolt.

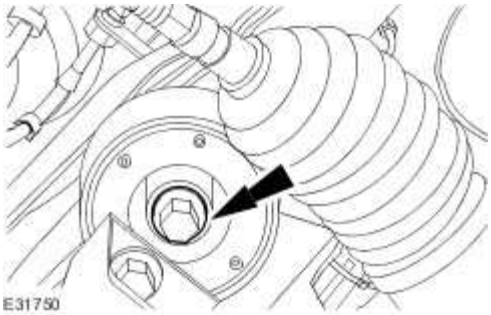

21 . Using the special tool remove the front subframe.

Remove the front subframe spacer.

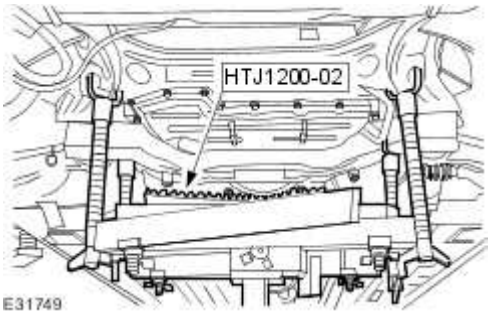

Installation

All vehicles

1 . Using the special tool, install the front subframe.

Install the front subframe spacer.

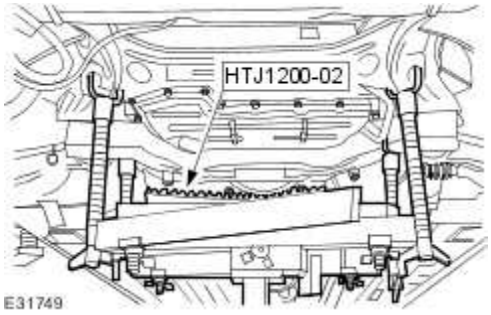

2 . Install the special tool.

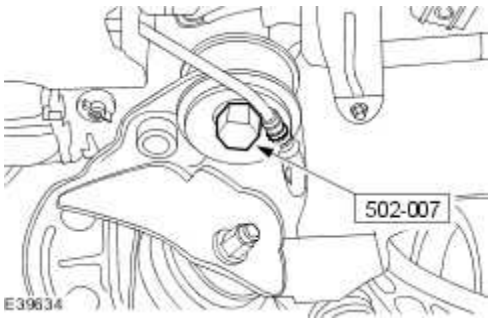

3 . Install the special tool.

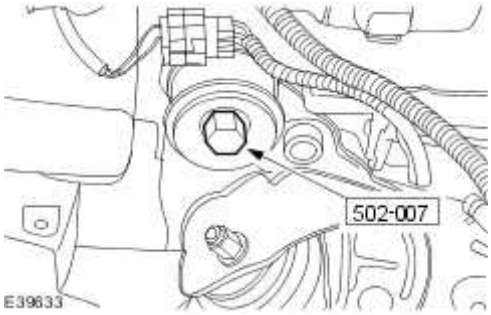

www.JagDocs.com

4 . **NOTE:**

Left-hand shown, right-hand similar.

Install a new front subframe rear retaining bolt.

- Tighten to 115 Nm.

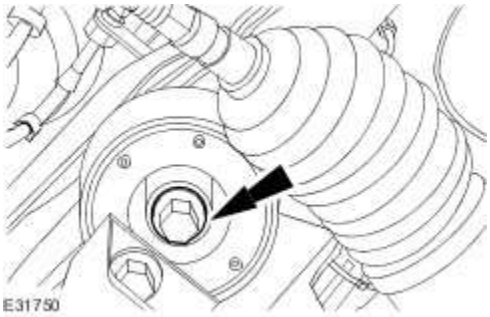

5 . Remove the special tool.

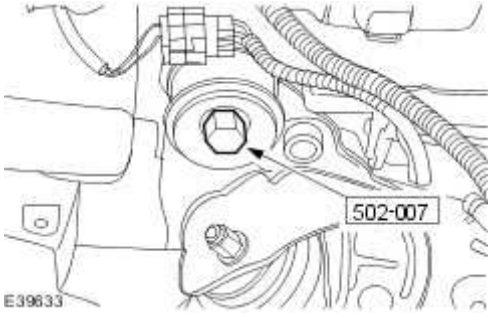

6 . Install a new front subframe front retaining bolt.

- Stage 1: Tighten to 100 Nm.
- Stage 2: Tighten 270°.

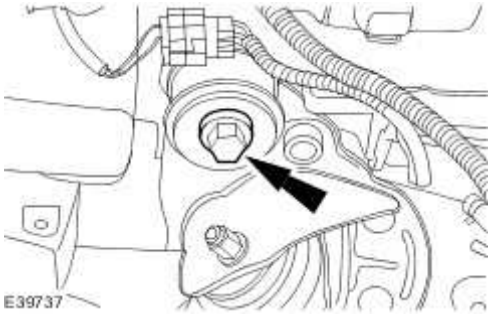

7 . Remove the special tool.

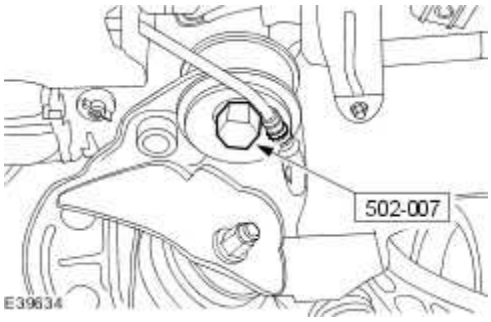

8 . Install a new front subframe front retaining bolt.

- Stage 1: Tighten to 100 Nm.
- Stage 2: Tighten 270°.

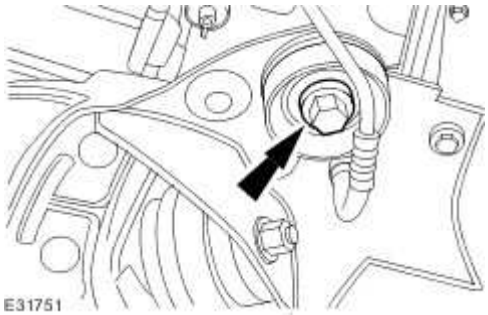

9 . Remove the special tool.

www.JagDocs.com

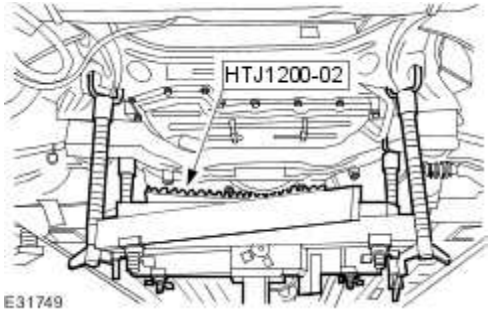

10 . **NOTE:**

Left-hand shown, right-hand similar.

Attach the engine mount.

Tighten to 63 Nm.

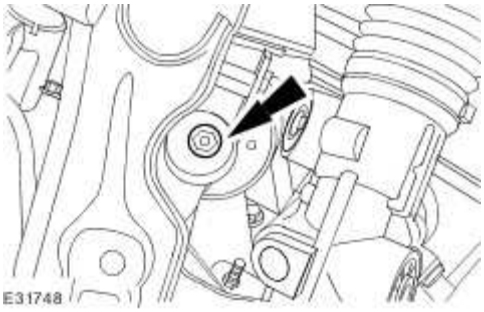

11 . **NOTE:**

Left-hand shown, right-hand similar.

Attach the rear lower arm.

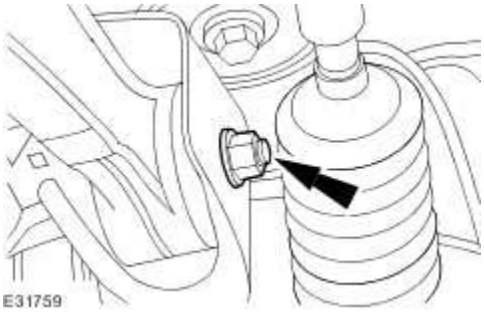

12 . **NOTE:**

Left-hand shown, right-hand similar.

Attach the front lower arm.

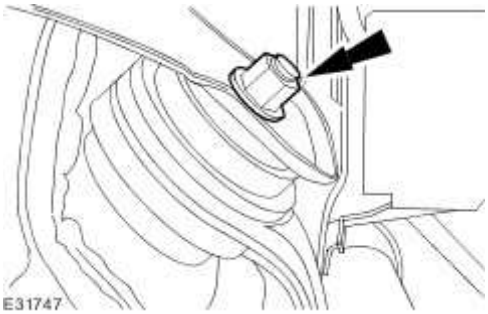

13 . **NOTE:**

Left-hand shown, right-hand similar.

Attach the air spring assembly.

Tighten to 175 Nm.

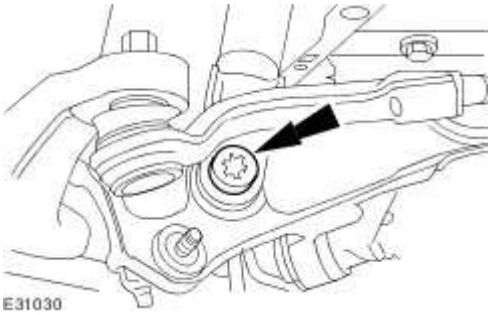

14 . **NOTE:**

Left-hand shown, right-hand similar.

Release the upper arm.

www.JagDocs.com

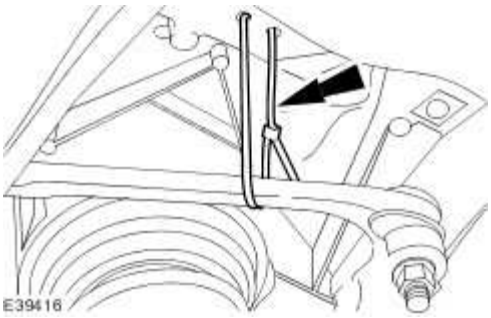

15 . Install the steering gear.

Tighten to 100 Nm.

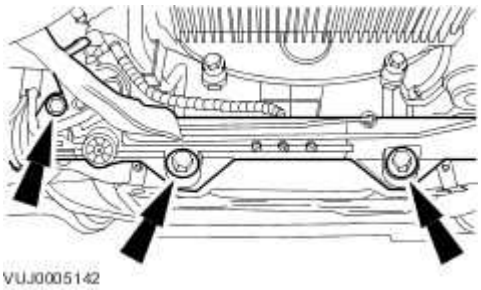

16 . **NOTE:**

Left-hand shown, right-hand similar.

Connect the headlamp leveling sensor electrical connector.

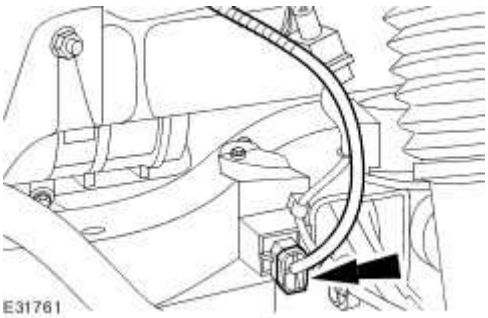

17 . **NOTE:**

Left-hand shown, right-hand similar.

Attach the headlamp leveling sensor retaining clip.

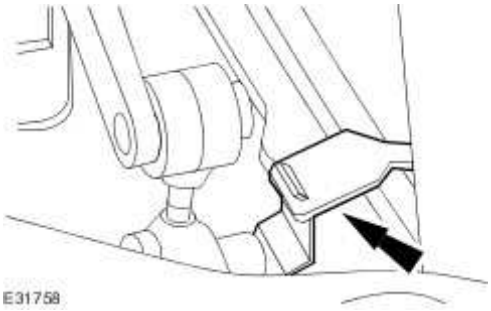

18 . **NOTE:**

Left-hand shown, right-hand similar.

Install the stabilizer bar link.

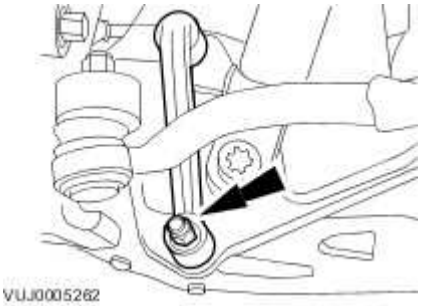

19 . **NOTE:**

Left-hand shown, right-hand similar.

Attach the stabilizer bar link.

- Tighten to 43 Nm.

www.JagDocs.com

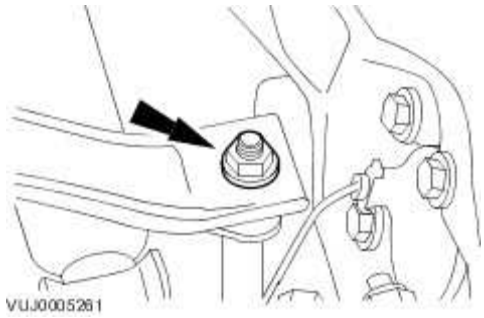

20 . Install both front wheel and tires.
For additional information, refer to Wheel and Tire (74.20.05)

21 . Install the air deflector.
For additional information, refer to Air Deflector (76.11.41)

22 . Install the radiator splash shield.
For additional information, refer to Radiator Splash Shield (76.22.90)

23 **NOTE:**
.

The final tightening of the rear lower arm inner retaining nut and bolt must be carried out with the vehicle on its wheels.

NOTE:

Left-hand shown, right-hand similar.

Tighten to 175 Nm.

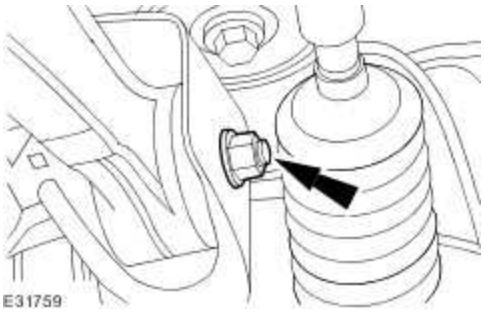

24 **NOTE:**

.

The final tightening of the front lower arm inner retaining nut and bolt must be carried out with the vehicle on its wheels.

NOTE:

Left-hand shown, right-hand similar.

Tighten to 175 Nm.

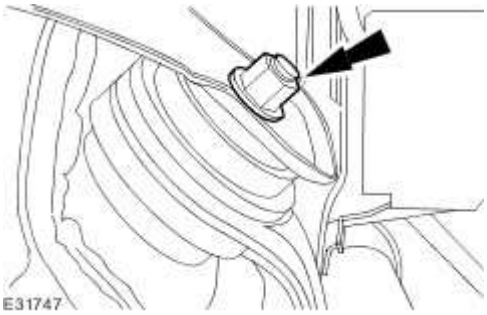

25 . **NOTE:**

Left-hand shown, right-hand similar.

Tighten to 70 Nm.

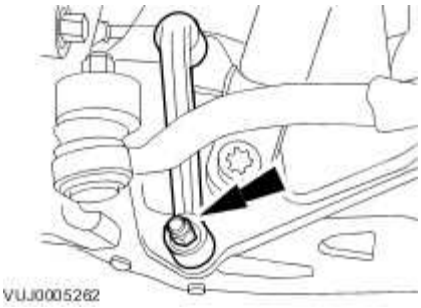

26 . **NOTE:**

Right-hand shown, left-similar.

Remove the radiator support.

www.JagDocs.com

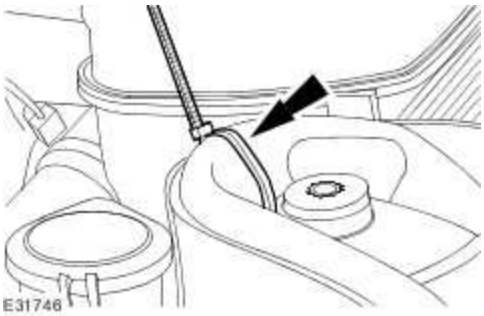

27 **NOTE:**

.

Vehicles with 3.5L or 4.2L engine without supercharger shown, vehicles with 4.2L engine with supercharger similar.

Remove the special tool.

- Loosen the special tool adjustment bolts.

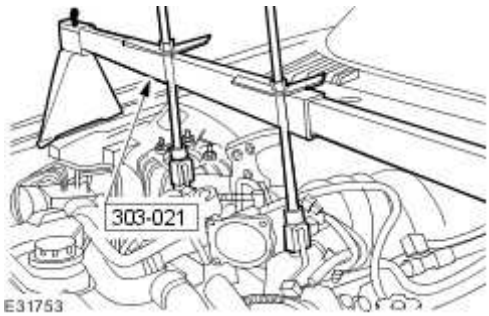

28 **NOTE:**

.

Vehicles with 3.5L or 4.2L engine without supercharger shown, vehicles with 4.2L engine with supercharger similar.

Remove the special tools.

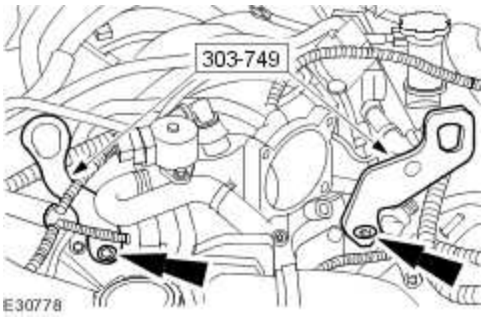

Vehicles with 4.2L engine without supercharger

29 Install the throttle body.

. For additional information, refer to Throttle Body - 4.2L NA V8 - AJV8/3.5L NA V8 - AJV8, VIN Range: G00442->G45703 (19.70.04)

For additional information, refer to Throttle Body - 4.2L NA V8 - AJV8/3.5L NA V8 - AJV8, VIN Range: G45704->G99999 (19.70.04)

All vehicles

30 . Check the caster and camber adjustment.

For additional information, refer to Camber and Caster Adjustment

www.JagDocs.com

Front Subframe - 2.7L V6 - TdV6 (76.10.05)

Special Service Tools

HTJ1200-2
Powertrain Assembly Jack

303-1129
Engine Lifting Brackets

303-021
Engine Support Bracket

502-007
Subframe Alignment Bolt

Removal

1 . Remove the radiator grille opening panel.
For additional information, refer to Radiator Grille Opening Panel (76.10.06)

2 . **NOTE:**

Right-hand shown, left-hand similar.

Using suitable tie strap(s), support the radiator.

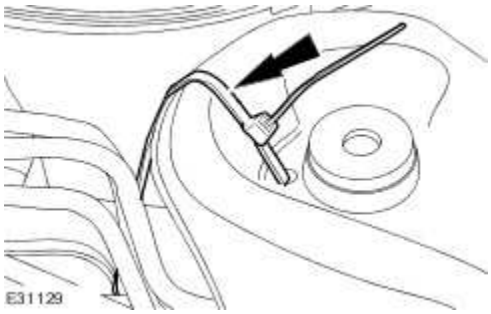

3 . Remove the intake air shutoff throttle.
For additional information, refer to Intake Air Shutoff Throttle

4 . Detach the port deactivation valve retaining bracket.

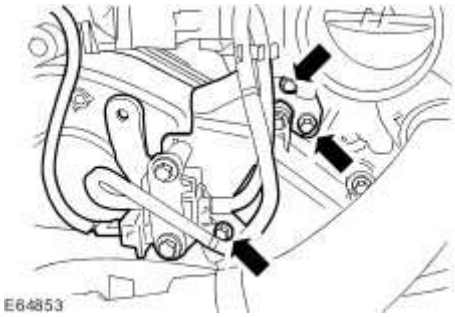

5 . Install the special tools.

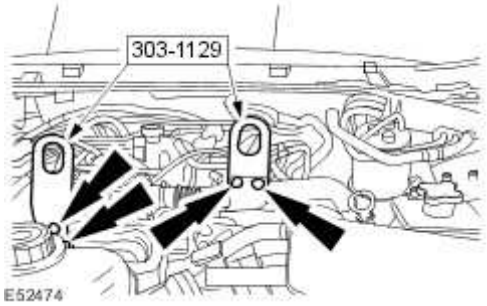

6 . Install the special tool.

www.JagDocs.com

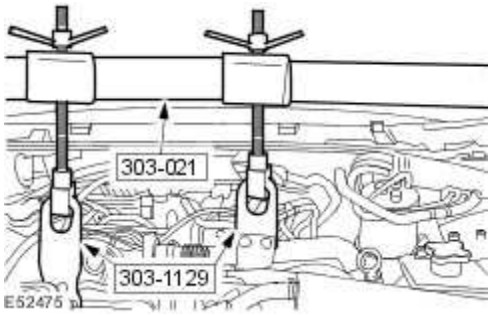

7 . Remove the air deflector.
For additional information, refer to Air Deflector (76.11.41)

8 . Remove the radiator splash shield.
For additional information, refer to Radiator Splash Shield (76.22.90)

9 . Remove both front wheels and tires.
For additional information, refer to Wheel and Tire (74.20.05)

10 . Detach the coolant inlet pipe from the front subframe.

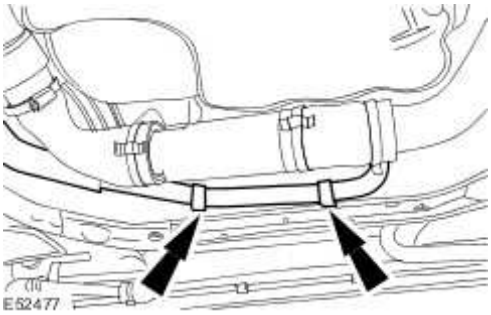

11 . Detach the power steering hose from the front subframe.

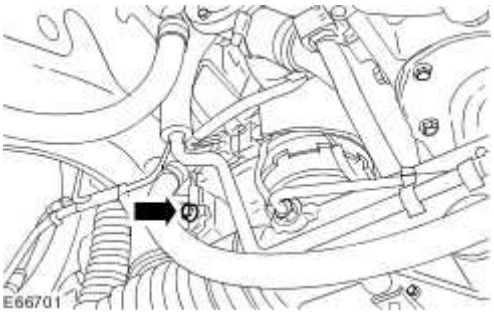

12 . **NOTE:**

Left-hand shown, right-hand similar.

Remove the stabilizer bar link upper retaining nut.

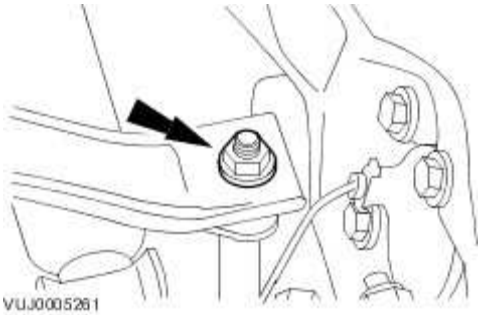

13 . **NOTE:**

Left-hand shown, right-hand similar.

Remove the stabilizer bar link.

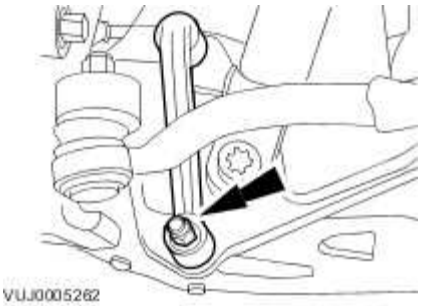

14 . Disconnect the power steering control valve actuator electrical connector.

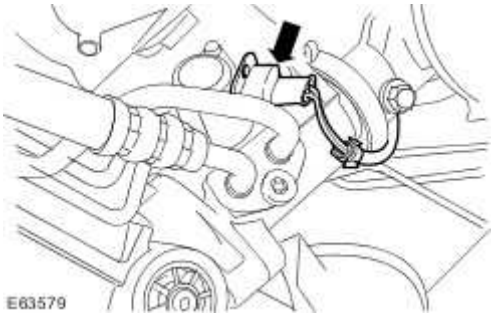

www.JagDocs.com

15 . **CAUTION: The steering gear must be supported. Failure to follow this instruction may result in damage to the steering gear.**

Detach the steering gear.

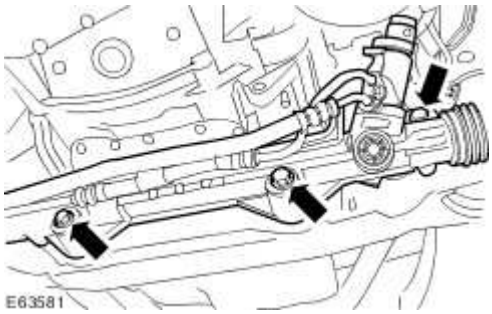

16 . Detach the suspension height sensor.

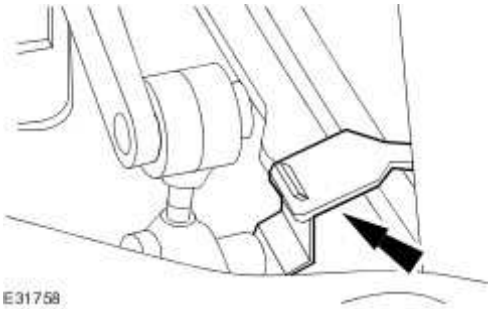

17 . Disconnect the suspension height sensor electrical connector.

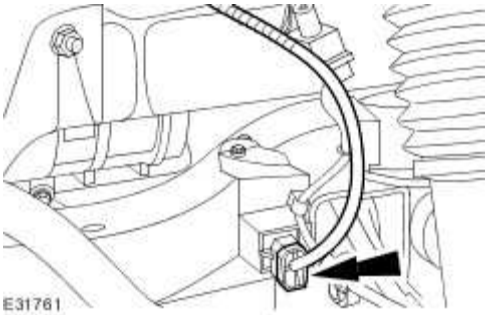

18 . Reposition the left-hand splash shield.

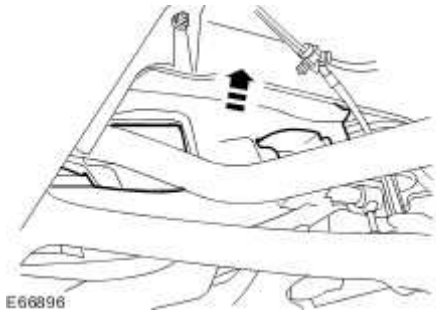

19 . Detach the transmission fluid cooler.

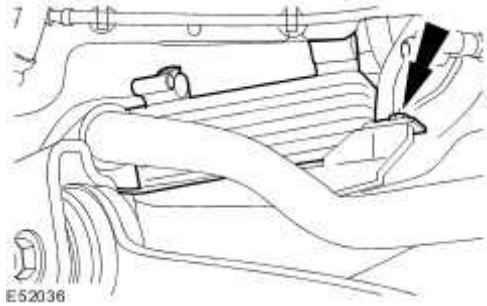

20 . **CAUTION: Make sure the full weight of the suspension components are supported. Failure to follow this instruction may result in damage to the vehicle.**

NOTE:

Left-hand shown, right-hand similar.

Using a suitable tie strap, secure the upper arm.

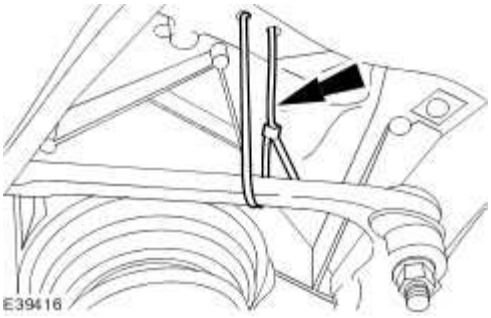

www.JagDocs.com

21 . **NOTE:**

Left-hand shown, right-hand similar.

Detach the air spring assembly.

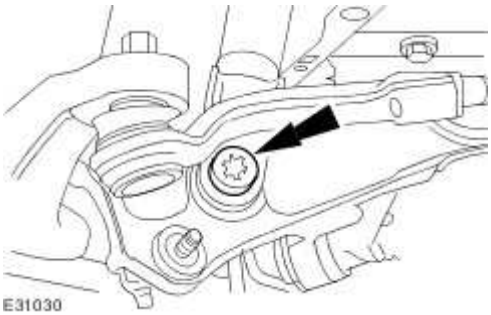

22 . **NOTE:**

Left-hand shown, right-hand similar.

Detach the front lower arm.

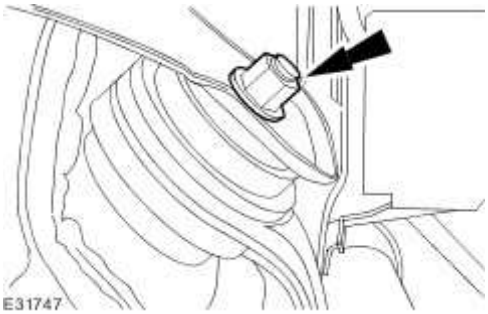

23 . **NOTE:**

Left-hand shown, right-hand similar.

Detach the rear lower arm.

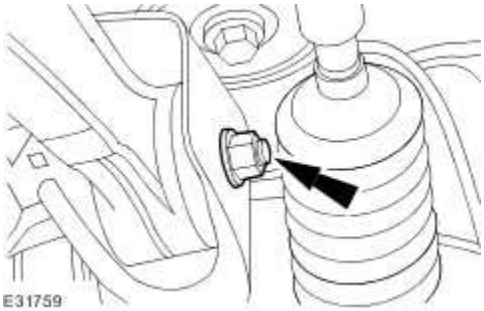

24 . **NOTE:**

Right-hand shown, left-hand similar.

Remove the engine mounts lower retaining nuts.

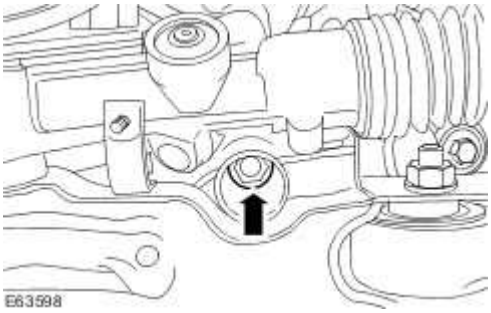

25 . Install the special tool to the front subframe.

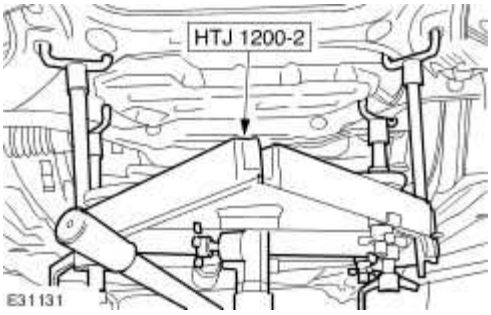

26 . **NOTE:**

Left-hand shown, right-hand similar.

Remove and discard the front subframe front retaining bolt.

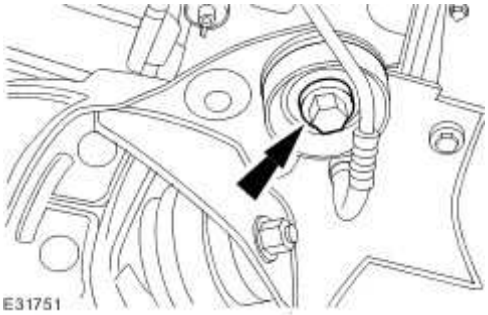

www.JagDocs.com

27 . **NOTE:**

Left-hand shown, right-hand similar.

Remove and discard the front subframe rear retaining bolt.

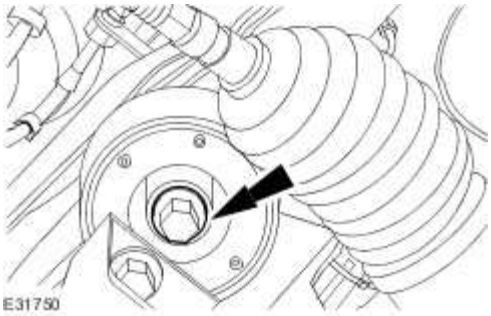

28 . **CAUTION: When lowering the special tool care must be taken to manoeuvre the special tool so that the front subframe does not touch the air conditioning (A/C) pipes. Failure to follow this instruction may result in damage to the A/C pipes.**

Remove the front subframe.

- Remove the front subframe spacer.

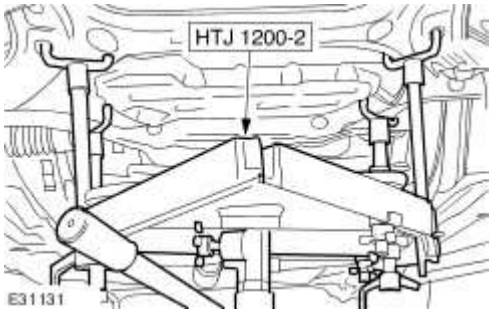

Installation

1 . **CAUTION: When raising the special tool care must be taken to manoeuvre the special tool so that the front subframe does not touch the air conditioning (A/C) pipes.**

Failure to follow this instruction may result in damage to the A/C pipes.

Install the front subframe.

- Install the front subframe spacer.

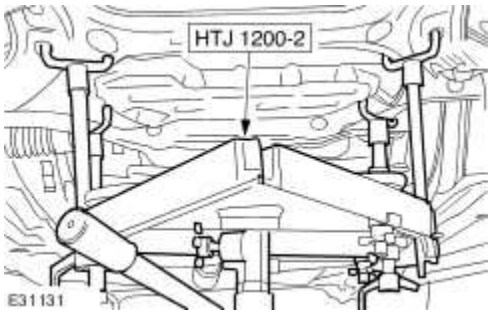

2 . Install the special tool to the front subframe.

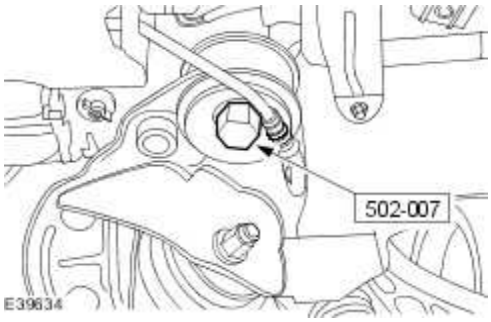

3 . Install the special tool to the front subframe.

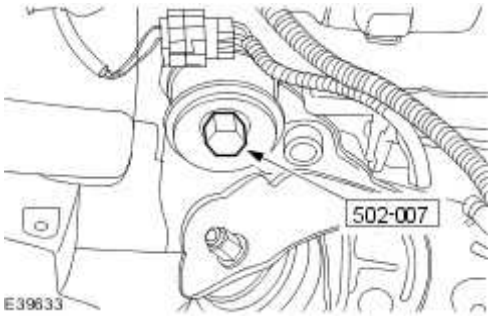

4 . **NOTE:**

Left-hand shown, right-hand similar.

www.JagDocs.com

Install a new front subframe rear retaining bolt.

- Tighten to 115 Nm.

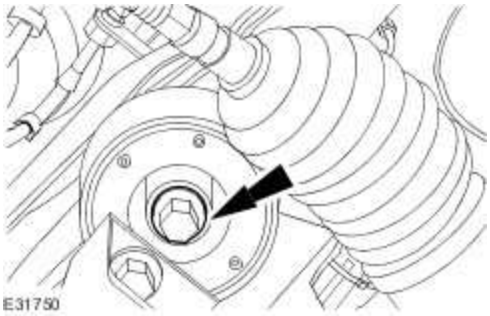

5 . Remove the special tool from the subframe.

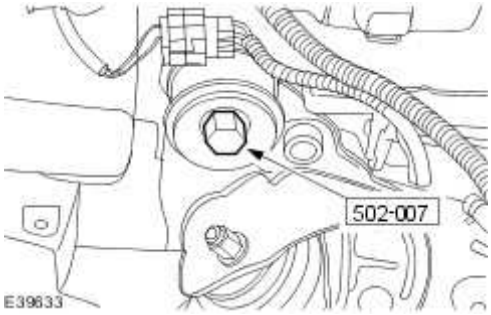

6 . Install a new front subframe front retaining bolt.

- Stage 1: Tighten to 100 Nm.
- Stage 2: Tighten 270°.

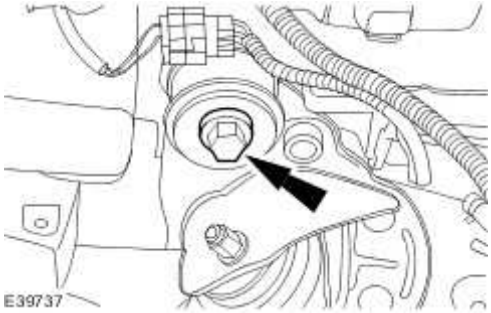

7 . Remove the special tool from the subframe.

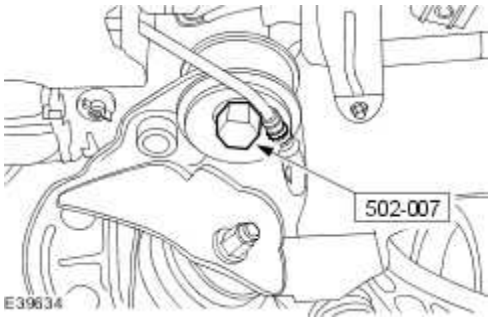

8 . Install a new front subframe front retaining bolt.

- Stage 1: Tighten to 100 Nm.
- Stage 2: Tighten 270°.

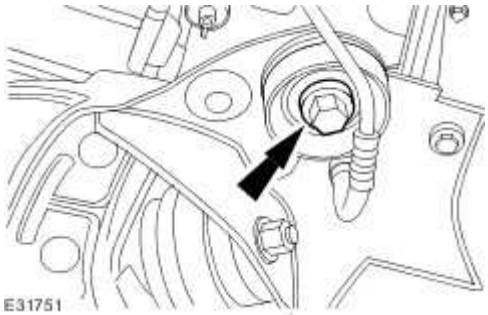

9 . Remove the special tool.

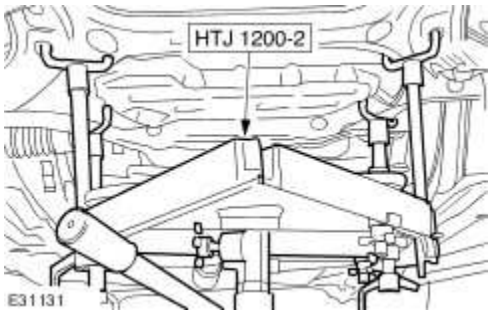

10 . **NOTE:**

Right-hand shown, left-hand similar.

www.JagDocs.com

Install the engine mounts lower retaining nuts.

Tighten to 63 Nm.

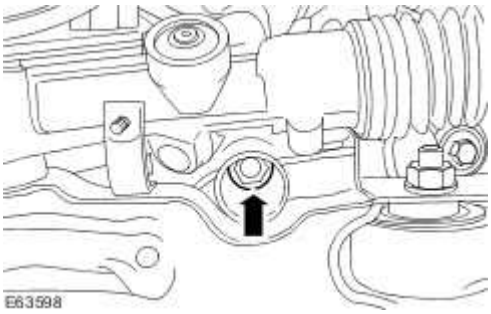

11. **CAUTION: The final tightening of the rear lower arm retaining nut must be carried out with the vehicle on its wheels. Failure to follow this instruction may result in damage to the vehicle.**

NOTE:

Left-hand shown, right-hand similar.

Attach the rear lower arm.

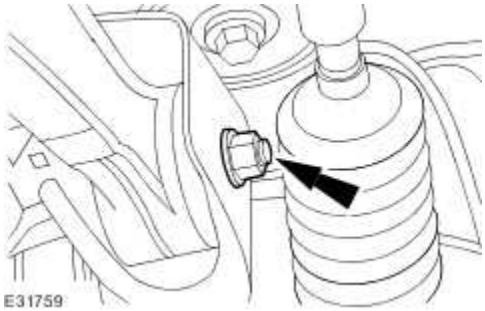

12. **CAUTION: The final tightening of the front lower arm retaining nut must be carried out with the vehicle on its wheels. Failure to follow this instruction may result in damage to the vehicle.**

NOTE:

Left-hand shown, right-hand similar.

Attach the front lower arm.

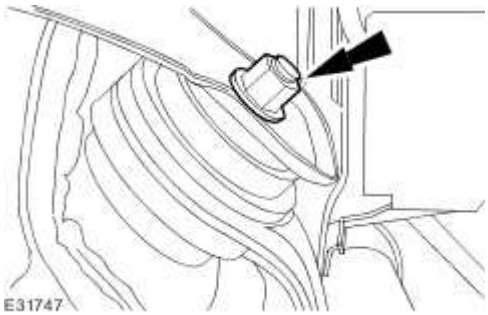

13 . **NOTE:**

Left-hand shown, right-hand similar.

Attach the air spring assembly.

- Tighten to 175 Nm.

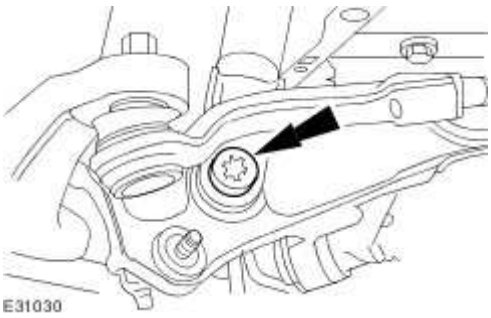

14 . **NOTE:**

Left-hand shown, right-hand similar.

Release the upper arm.

- Remove and discard the tie strap.

www.JagDocs.com

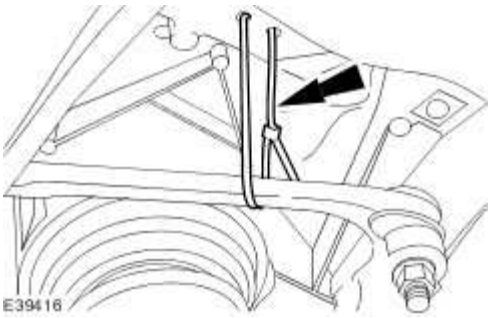

15 . Attach the transmission fluid cooler.

Tighten to 5 Nm.

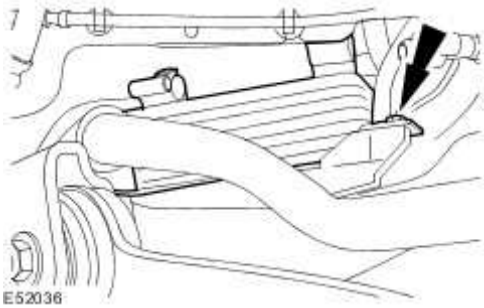

16 . Reposition the left-hand splash shield.

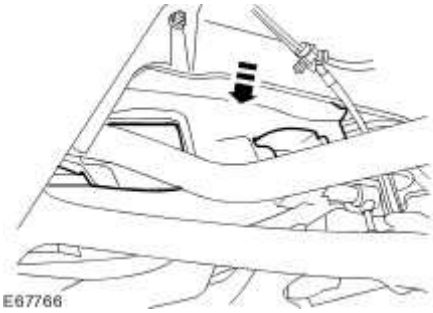

17 . Connect the suspension height sensor electrical connector.

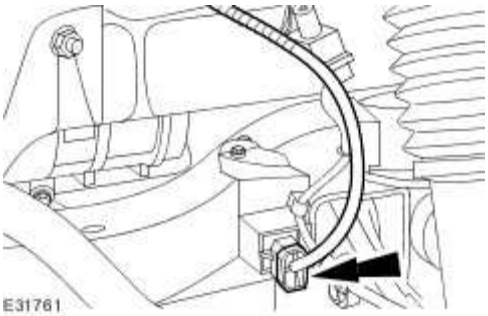

18 . Attach the suspension height sensor.

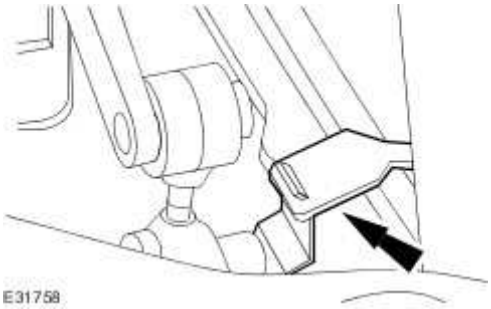

19 . Attach the steering gear.

Tighten to 100 Nm.

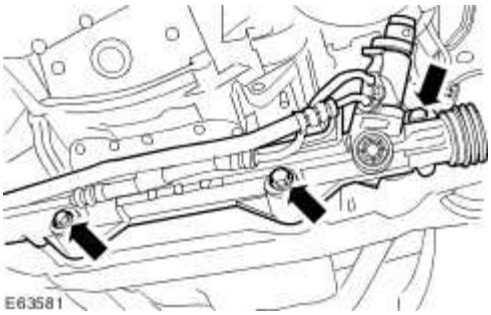

20 . Connect the power steering control valve actuator electrical connector.

www.JagDocs.com

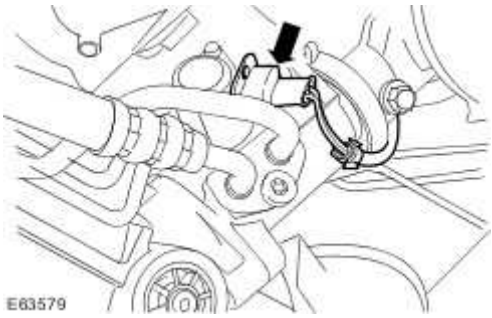

21 . **CAUTION: The final tightening of the stabilizer bar link retaining nut must be carried out with the vehicle on its wheels. Failure to follow this instruction may result in damage to the vehicle.**

NOTE:

Left-hand shown, right-hand similar.

Install the stabilizer bar link.

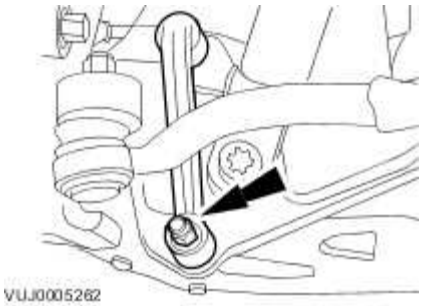

22 . **NOTE:**

Left-hand shown, right-hand similar.

Attach the stabilizer bar link.

- Tighten to 43 Nm.

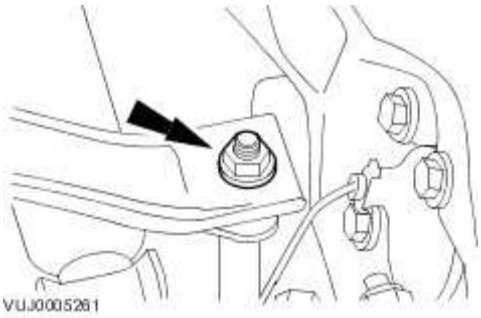

23 . Attach the power steering hose onto the front subframe.

Tighten to 10 Nm.

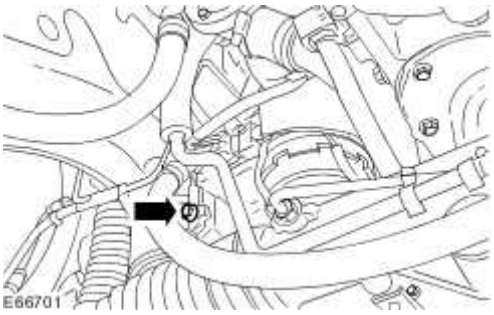

24 . Attach the coolant inlet pipe onto the front subframe.

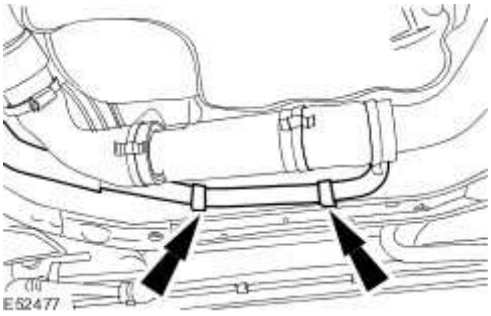

25 . Install both front wheels and tires.
For additional information, refer to Wheel and Tire (74.20.05)

26 . Install the radiator splash shield.
For additional information, refer to Radiator Splash Shield (76.22.90)

www.JagDocs.com

27 . Install the air deflector.
For additional information, refer to Air Deflector (76.11.41)

28 . Remove the special tool.

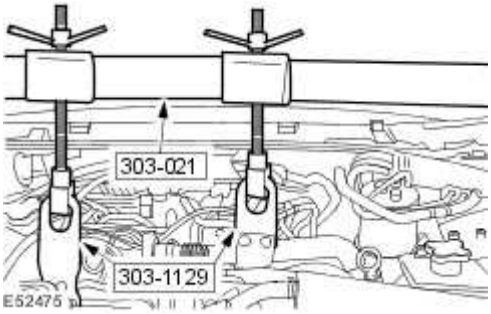

29 . Remove the special tools.

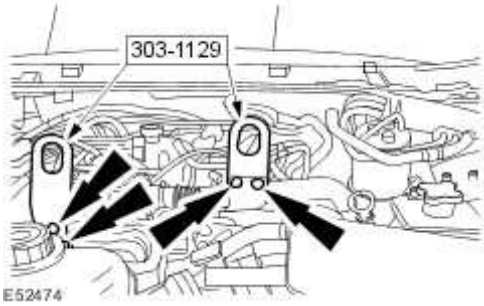

30 . Attach the port deactivation valve retaining bracket.

Tighten to 8 Nm.

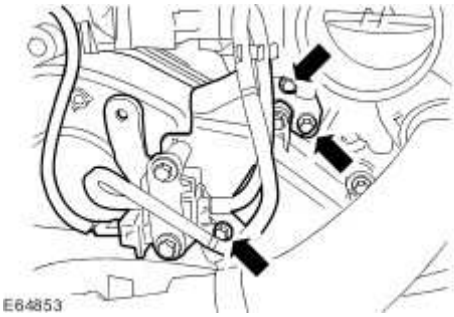

31 . Install the intake air shutoff throttle.
For additional information, refer to Intake Air Shutoff Throttle

32 . **NOTE:**

Right-hand shown, left-hand similar.

Remove and discard the tie straps.

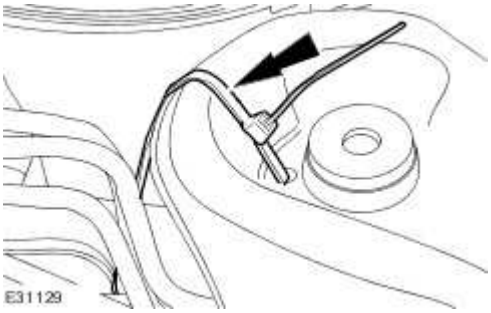

33 . Install the radiator grille opening panel.
For additional information, refer to Radiator Grille Opening Panel (76.10.06)

34 . **CAUTION: The final tightening of the rear lower arm retaining nut must be carried out with the vehicle on its wheels. Failure to follow this instruction may result in damage to the vehicle.**

NOTE:

Left-hand shown, right-hand similar.

Tighten to 175 Nm.

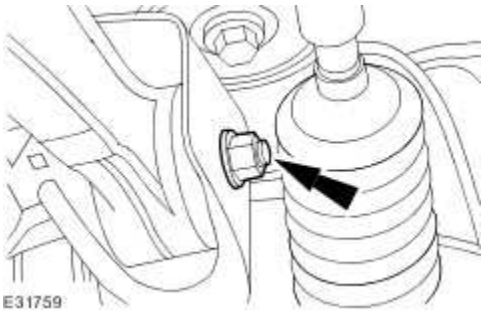

www.JagDocs.com

35. **CAUTION: The final tightening of the front lower arm retaining nut must be carried out with the vehicle on its wheels. Failure to follow this instruction may result in damage to the vehicle.**

NOTE:

Left-hand shown, right-hand similar.

Tighten to 175 Nm.

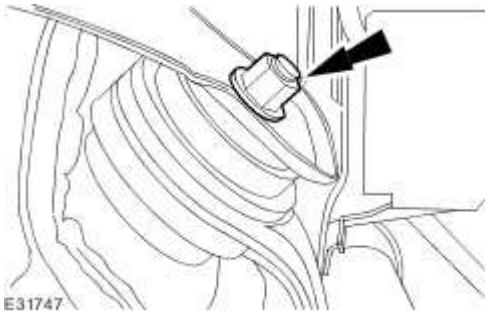

36. **CAUTION: The final tightening of the stabilizer bar link retaining nut must be carried out with the vehicle on its wheels. Failure to follow this instruction may result in damage to the vehicle.**

NOTE:

Left-hand shown, right-hand similar.

Tighten to 70 Nm.

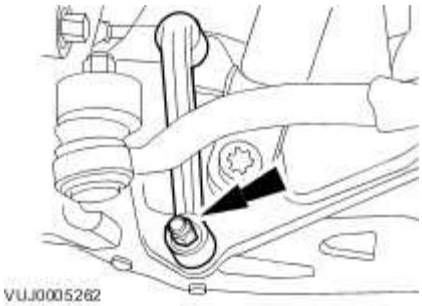

37 . Check the caster and camber adjustment.
For additional information, refer to Camber and Caster Adjustment

www.JagDocs.com

Front Subframe Front Bushing (60.35.51)

Special Service Tools

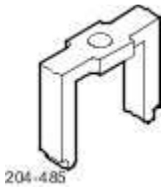

Support - Remover, Front Subframe
204-485

Pusher - Bush, Front Subframe Front Bush
204-486

Support - Replacer, Front Subframe Front Bush
204-488

Installer - Bush, Front Subframe Front Bush
204-487

Removal

1. Remove the front subframe. For additional information, refer to
   . For additional information, refer to Front Subframe - 3.0L NA V6 - AJ27 (76.10.05) or
   For additional information, refer to Front Subframe - 4.2L NA V8 - AJV8/4.2L SC V8 - AJV8/3.5L NA V8 - AJV8 (76.10.05) in this section.

2 . **CAUTION: Make sure the cutting blade does not contact the front subframe. Failure to follow this instruction may result in damage to the front subframe.**

Cut the edges of the front subframe front bushing

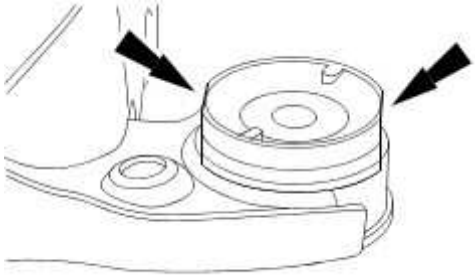

3 . **NOTE:**

Note the orientation of the bushing before removal.

Using the special tools, remove the front subframe front bushing.

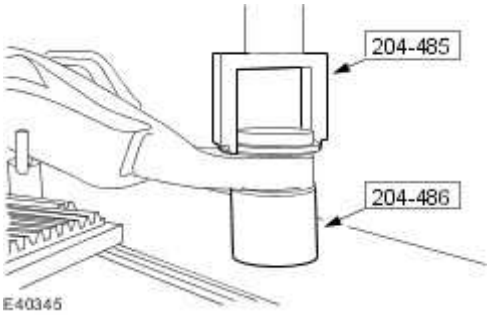

Installation

1 . **NOTE:**

Make sure the bushing is correctly orientated.

Using the special tools, install the front subframe front bushing.

www.JagDocs.com

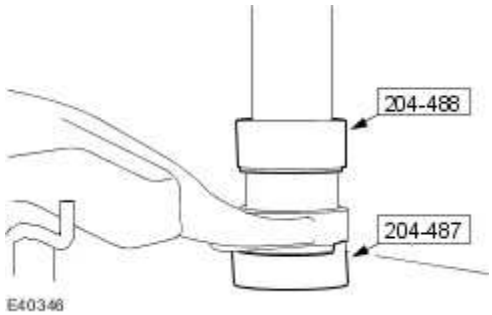

2 Install the front subframe. For additional information, refer to
. For additional information, refer to Front Subframe - 3.0L NA V6 - AJ27 (76.10.05) or
For additional information, refer to Front Subframe - 4.2L NA V8 - AJV8/4.2L SC V8 - AJV8/3.5L NA V8 - AJV8 (76.10.05) in this section.

Front Subframe Rear Bushing (60.35.26)

Special Service Tools

204-489

Support - Remover, Front Subframe Rear Bush
204-489

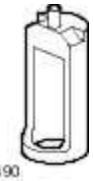

204-490

Pusher - Remover, Front Subframe Rear Bush
204-490

204-481

Receiver - Bush
204-481

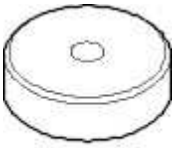

204-492

Installer - Bush, Front Subframe Rear Bush
204-492

204-491

Support - Installer, Front Subframe Rear Bush
204-491

www.JagDocs.com

Removal

1 Remove the front subframe. For additional information, refer to
. For additional information, refer to Front Subframe - 3.0L NA V6 - AJ27 (76.10.05) or
For additional information, refer to Front Subframe - 4.2L NA V8 - AJV8/4.2L SC V8 - AJV8/3.5L NA V8 - AJV8 (76.10.05) in this section.

2 . Install the special tool.

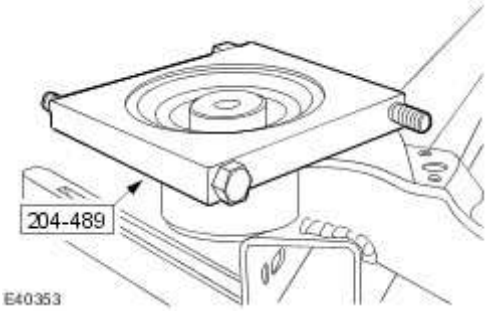

3 . **NOTE:**

Note the orientation of the bushing before removal.

Using the special tools, remove the front subframe rear bushing.

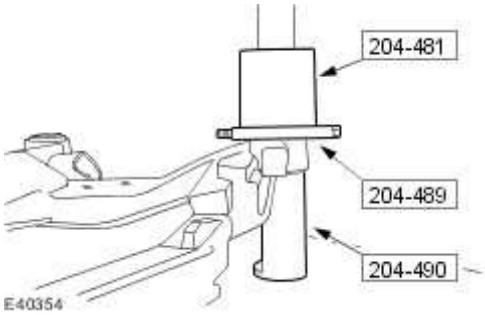

Installation

1
. **WARNING: Make sure the front subframe rear bushing is fully installed into the front subframe. Failure to follow this instruction may result in personal injury.**

NOTE:

Make sure the bushing is correctly orientated.

NOTE:

On installation, make sure the front subframe rear bushing upper lip contacts the front subframe.

Using the special tools, install the front subframe rear bushing.

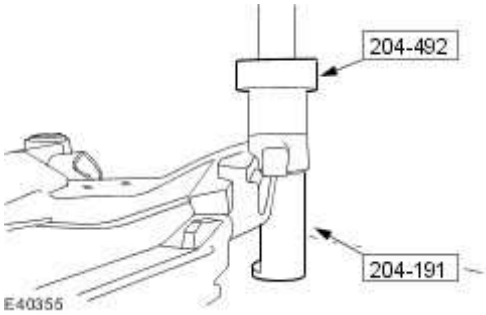

2 Install the front subframe. For additional information, refer to
. For additional information, refer to Front Subframe - 3.0L NA V6 - AJ27 (76.10.05) or For additional information, refer to Front Subframe - 4.2L NA V8 - AJV8/4.2L SC V8 - AJV8/3.5L NA V8 - AJV8 (76.10.05) in this section.

www.JagDocs.com

Rear Subframe (64.25.01)

Special Service Tools

Powertrain Assembly Jack
HTJ1200-2

Removal

1 . Drain the right-hand fuel tank saddle. <<310-00>>

2 . Remove the axle assembly. <<205-02>>

3 . **NOTE:**

Right-hand shown, left-hand similar.

Detach the rear wheel speed sensor wiring harness from the upper arm

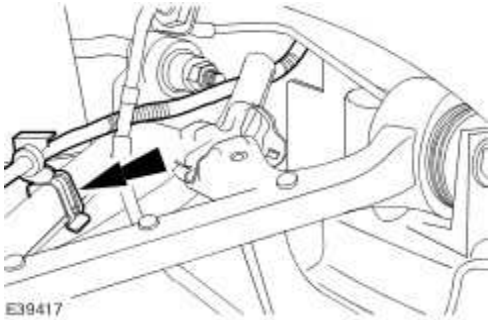

4 . **NOTE:**

Right-hand shown, left-hand similar.

Detach the headlamp leveling sensor retaining clip.

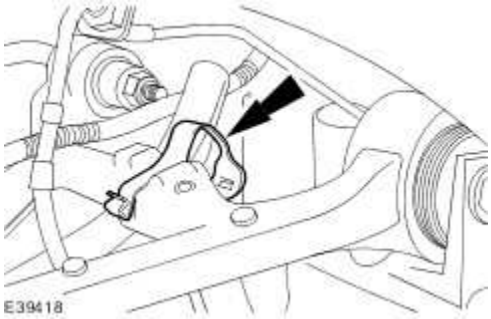

5 . Disconnect the electric parking brake electrical connector.

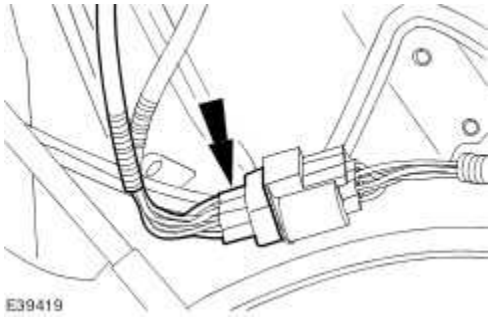

6 . Detach the electric parking brake wiring harness.

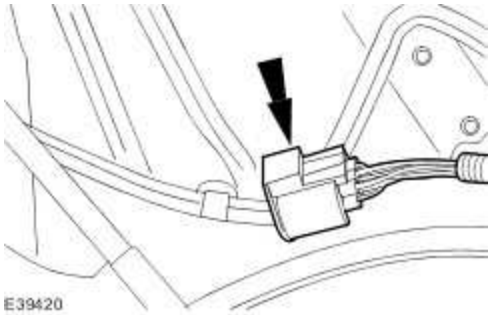

7 . Disconnect the fuel filler hose.

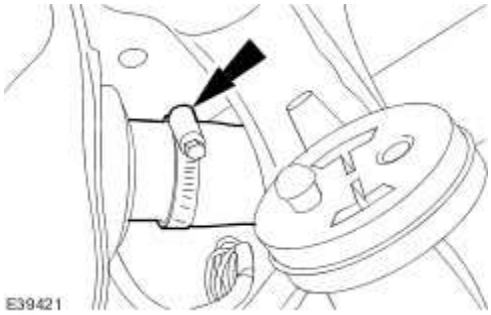

www.JagDocs.com

8 . Disconnect the electrical connectors.

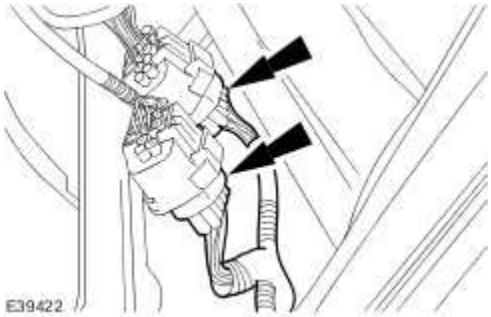

9 . **NOTE:**

Right-hand shown, left-hand similar.

Detach the rear air spring.

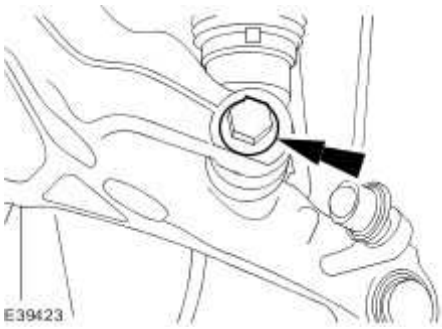

10 . **NOTE:**

Right-hand shown, left-hand similar.

Detach the upper arm.

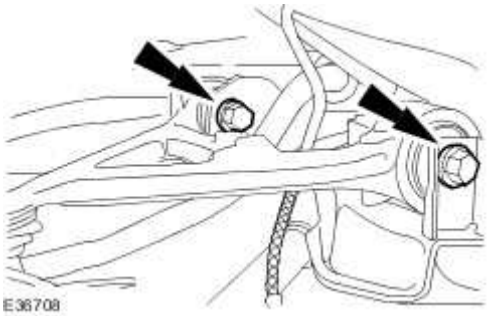

11 . **NOTE:**

Right-hand shown, left-hand similar.

Support the upper arm.

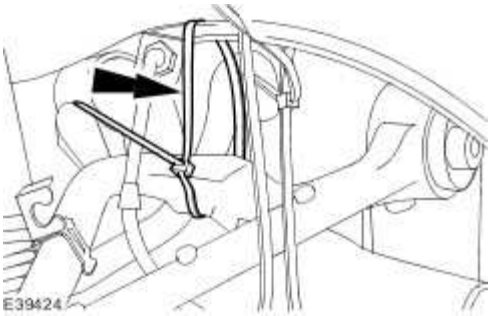

12 . Install the special tool to support the rear subframe.

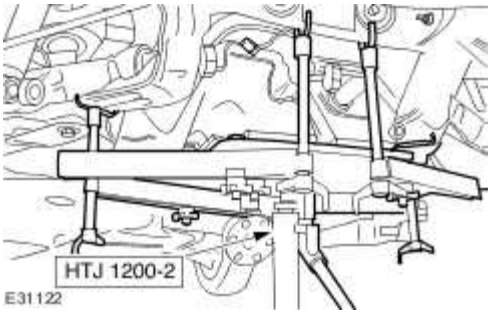

13 . **NOTE:**

Left-hand shown, right-hand similar.

Remove the noise, vibration and harshness brace retaining bolts.

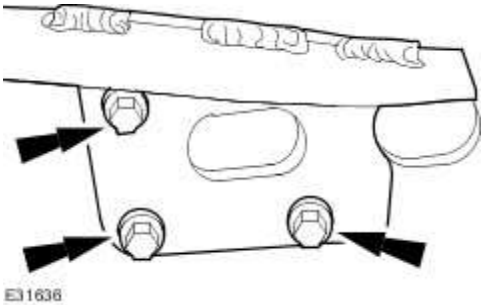

www.JagDocs.com

14 . **NOTE:**

Left-hand shown, right-hand similar.

Remove and discard the rear subframe rear retaining bolt.

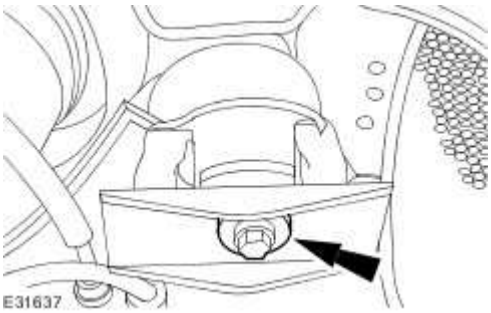

15 . **NOTE:**

Left-hand shown, right-hand similar.

Remove and discard the rear subframe front retaining bolt.

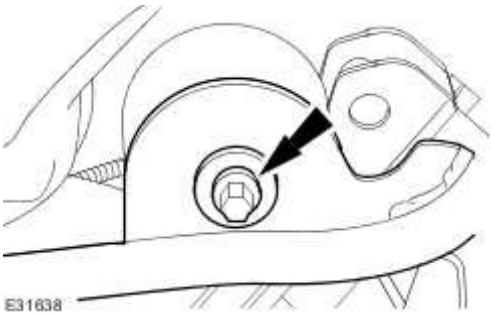

16 . Remove the rear subframe.

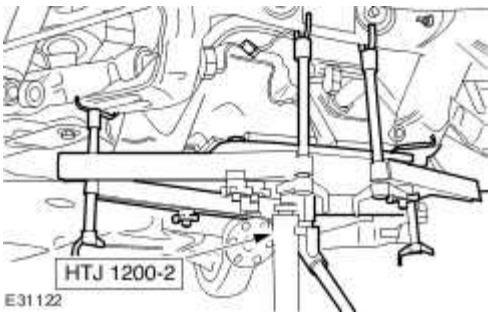

Installation

1 . Install the rear subframe.

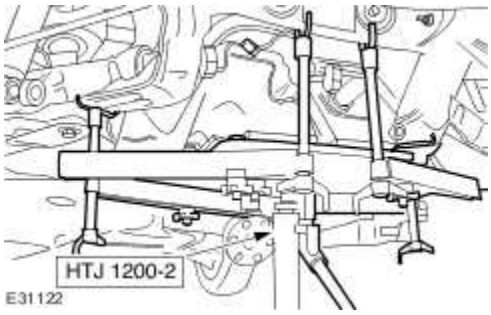

2 . **NOTE:**

Left-hand shown, right-hand similar.

Loosely install the rear subframe front retaining bolt.

Install a new retaining bolt.

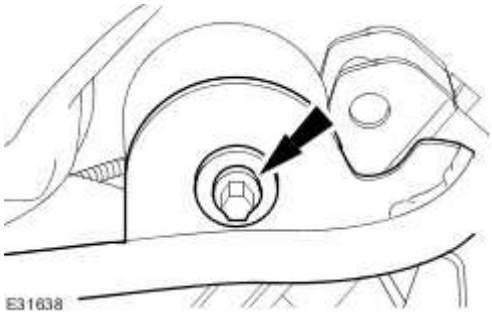

3 . **NOTE:**

Left-hand shown, right-hand similar.

Loosely install the noise, vibration and harshness brace retaining bolts.

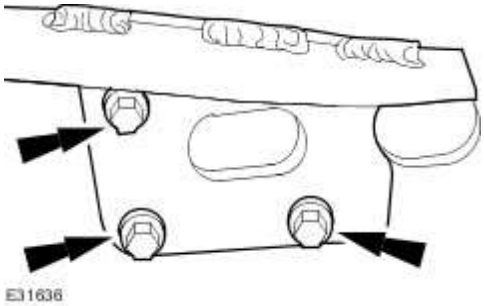

www.JagDocs.com

4 . Tighten to 125 Nm.

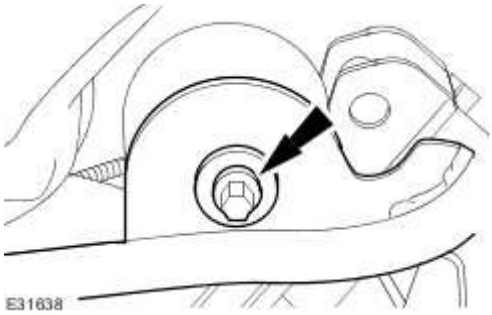

5 . **NOTE:**

Left-hand shown, right-hand similar.

Install the rear subframe rear retaining bolt.

- Install a new retaining bolt.
- Tighten to 125 Nm.

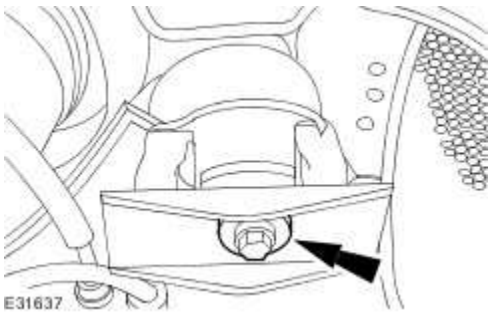

6 . **NOTE:**

Left-hand shown, right-hand similar.

Tighten to 48 Nm.

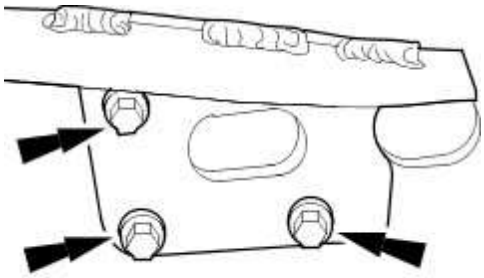

7 . Remove the special tool.

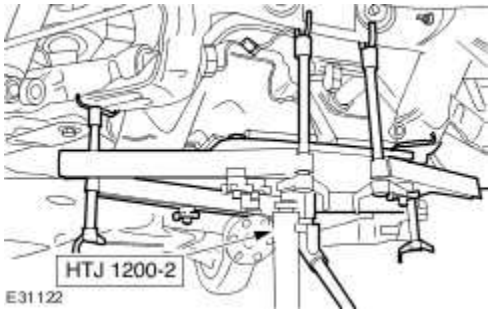

8 . **NOTE:**

Right-hand shown, left-hand similar.

Remove the upper arm support.

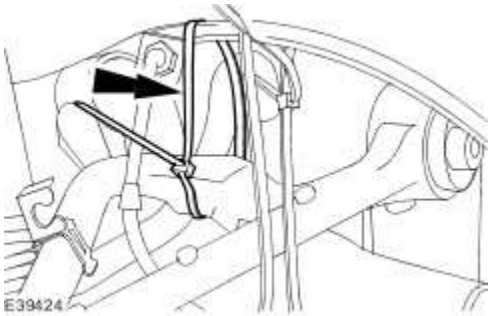

9 . **NOTE:**

Right-hand shown, left-hand similar.

Attach the upper arm.

www.JagDocs.com

Tighten to 98 Nm.

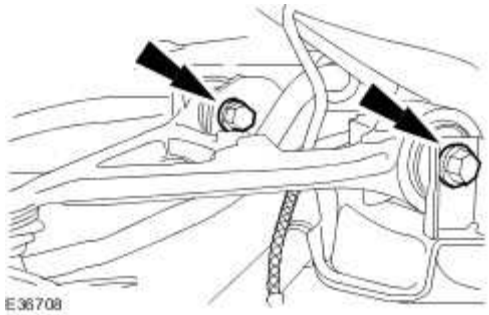

10 . **NOTE:**

Right-hand shown, left-hand similar.

Attach the rear air spring.

Tighten to 133 Nm.

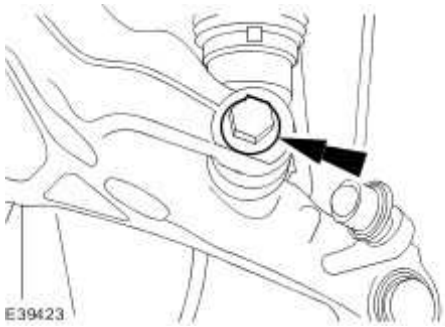

11 . Connect the electrical connectors.

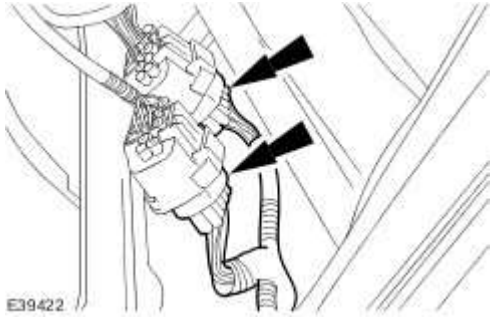

12 . Connect the fuel filler hose.

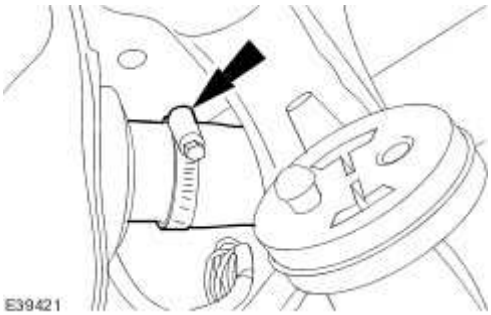

13 . Attach the electric park brake wiring harness.

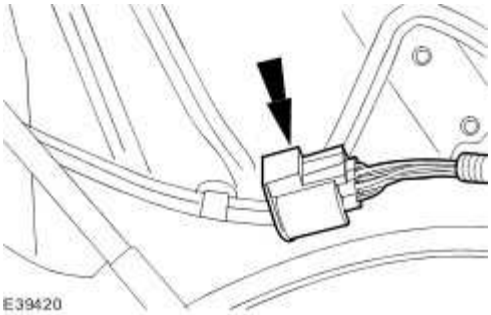

14 . Connect the electric parking brake electrical connector.

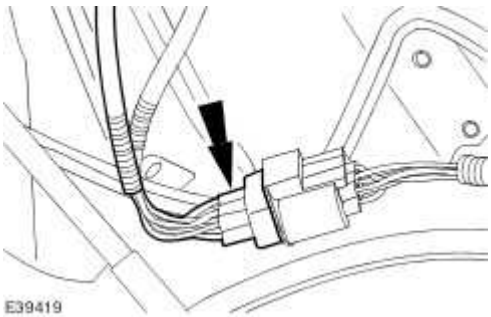

15 . **NOTE:**

Right-hand shown, left-hand similar.

Attach the headlamp leveling sensor retaining clip.

www.JagDocs.com

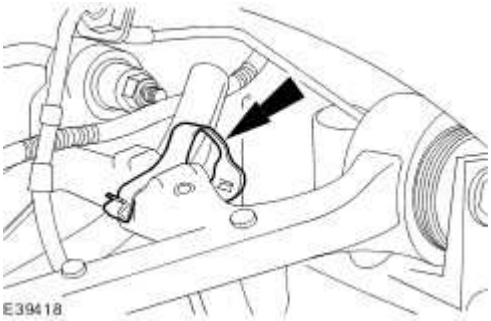

16 . **NOTE:**

Right-hand shown, left-hand similar.

Attach the rear wheel speed sensor wiring harness to the upper arm.

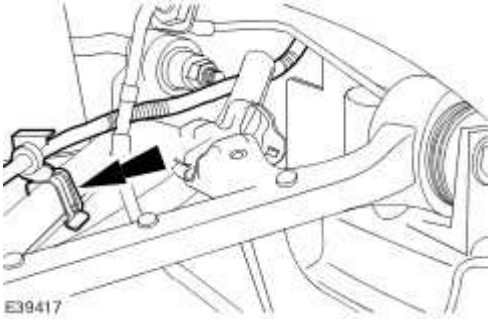

17 . Install the axle assembly. <<205-02>>

18 . Refill the fuel tank.

19 . Carry out the rear toe adjustment procedure. <<204-00>>

Rear Subframe Front Bushing (64.25.34)

Special Service Tools

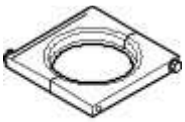

204-479

Remover Support - Bush
204-479

204-481

Receiver - Bush
204-481

204-482

Remover - Bush
204-482

204-480

Support - Bush
204-480

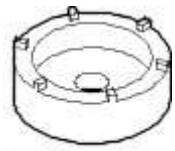

204-483

Installer - Bush
204-483

www.JagDocs.com

Removal

1 . Remove the rear subframe.
For additional information, refer to Rear Subframe (64.25.01)

2 . Install the special tool to the rear subframe front bushing.

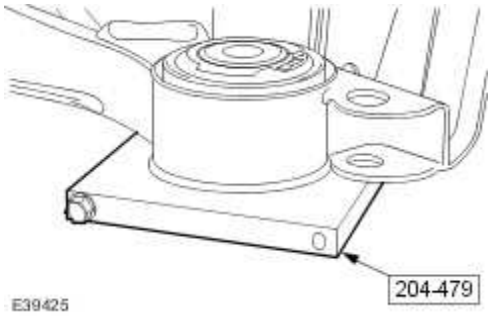

3 . **NOTE:**

Note the orientation of the bushing before removal.

Using the special tools, remove the rear subframe front bushing.

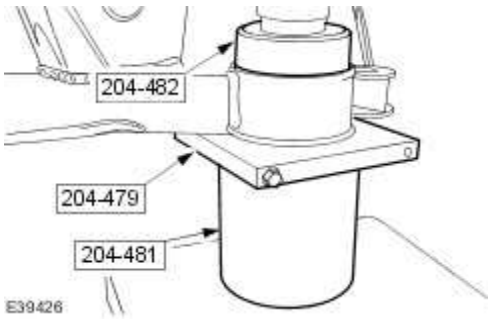

Installation

1 . **NOTE:**

Make sure the bushing is correctly orientated.

Using the special tools, install the rear subframe front bushing.

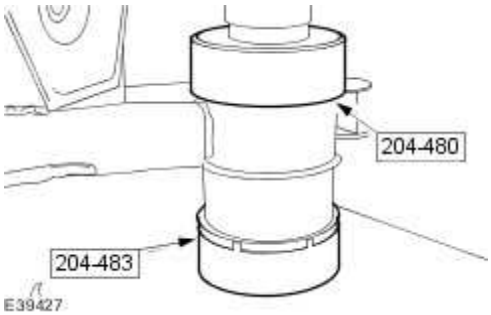

2 . Install the rear subframe.
For additional information, refer to Rear Subframe (64.25.01)

www.JagDocs.com

Rear Subframe Rear Bushing (64.25.36)

Special Service Tools

Forcing bolt
204-469

Remover - bush
204-473

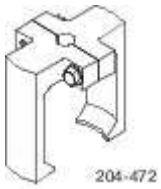

Remover support - bush
204-472

Receiver - bush
204-475

Replacer - bush
204-474

Removal

1 . Remove the rear subframe.
For additional information, refer to

2 . **NOTE:**

Note the orientation of the bushing before removal.

Using the special tools, remove the rear subframe rear bushing.

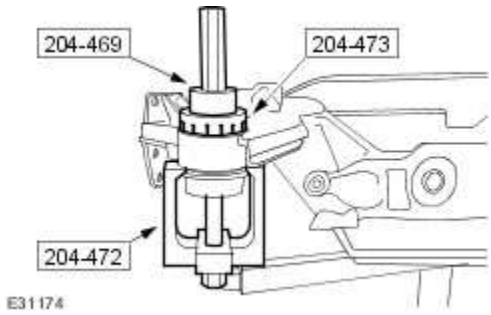

Installation

1 . **NOTE:**

Make sure the bushing is correctly orientated.

Using the special tools, install the rear subframe rear bushing.

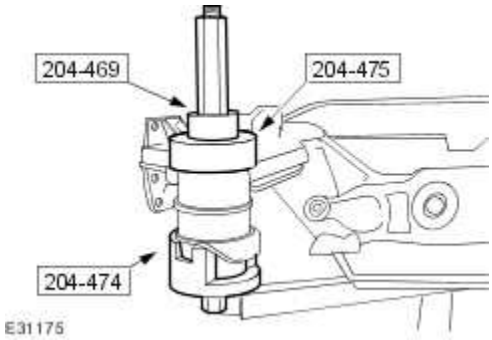

2 . Install the rear subframe.

www.JagDocs.com