FOREWORD

This wiring diagram incorporates the wiring schematics of the Mazda CX-5 and available optional equipment. Actual vehicle wiring may vary slightly depending on optional equipment or local specifications, or both.

For proper repair and maintenance, a thorough familiarization with this manual is important, and it should always be kept in a handy place for quick and easy reference.

All the contents of this manual, including drawings and specifications, are the latest available at the time of printing.
As modifications affecting repair or maintenance occur, relevant information supplementary to this volume will be made available at Mazda dealers. This manual should be kept up-to-date.

Ford Motor Company reserves the right to alter the specifications and contents of this manual without obligation or advance notice.

All rights reserved. No part of this book may be reproduced or used in any form or by any means, electronic or mechanical-including photocopying and recording and the use of any kind of information storage and retrieval system-without permission in writing.

WARNING

Servicing a vehicle can be dangerous. If you have not received service-related training, the risks of injury, property damage, and failure of servicing increase. The recommended servicing procedures for the vehicle in this workshop manual were developed with Mazda-trained technicians in mind. This manual may be useful to non-Mazda trained technicians, but a technician with our service-related training and experience will be at less risk when performing service operations. However, all users of this manual are accepted at least to know general safety procedures.

This manual contains “Warnings” and “Cautions” applicable to risks not normally encountered in a general technician’s experience. They should be followed to reduce the risk of injury and the risk that improper service or repair may damage the vehicle or render it unsafe. It is also important to understand that the “Warnings” and “Cautions” are not exhaustive. It is impossible to warn of all the hazardous consequences that might result from failure to follow the procedures.

The procedures recommended and described in this manual are effective methods of performing service and repair. Some require tools specifically designed for a specific purpose. Persons using procedures and tools which are not recommended by Mazda Motor Corporation must satisfy themselves thoroughly that neither personal safety nor safety of the vehicle will be jeopardized.

The contents of this manual, including drawings and specifications, are the latest available at the time of printing, and Mazda Motor Corporation reserves the right to change the vehicle designs and alter the contents of this manual without notice and without incurring obligation.

Parts should be replaced with genuine Mazda replacement parts or with parts which match the quality of genuine Mazda replacement parts. Persons using replacement parts of lesser quality than that of genuine Mazda replacement parts must satisfy themselves thoroughly that neither personal safety nor safety of the vehicle will be jeopardized. Mazda Motor Corporation is not responsible for any problems which may arise from the use of this manual. The cause of such problems includes but is not limited to insufficient service related training, use of improper tools, use of replacement parts of lesser quality than that of genuine Mazda replacement parts, or not being aware of any revision of this manual.

©2012 FMCSA
Ford Motor Company
of Southern Africa
5883-10-12C

MAZDA CX-5
Wiring Diagram

APPLICATION:
This manual is applicable to vehicles beginning with the Vehicle Identification Numbers (VIN) shown on the following page.

CONTENTS

TITLE	SECTION
GENERAL INFORMATION	00
ENGINE	01
SUSPENSION	02
DRIVELINE/AXLE	03
BRAKES	04
TRANSMISSION/ TRANSAXLE	05
STEERING	06
HEATER, VENTILATION & AIR CONDITIONING (HVAC)	07
RESTRAINTS	08
BODY & ACCESSORIES	09
ALPHABETICAL INDEX	AI

© 2012 Ford Motor Company of Southern Africa

VEHICLE IDENTIFICATION NUMBERS (VIN) (CHASSIS NUMBERS)

Australian specs.

JM0 KE102100 100001-
JM0 KE107100 100001-

General (R.H.D.) specs.

JM6 KE1071*0 100001-

U.K. specs.

JMZ KEC9760# 100001-
JMZ KEF9160# 100001-
JMZ KEF9180# 100001-
JMZ KEN9160# 100001-
JMZ KEN9180# 100001-
JMZ KEN9260# 100001-
JMZ KEN9280# 100001-

SYSTEM INDEX

00 GENERAL INFORMATION

R READING WIRING DIAGRAMS
VEHICLE IDENTIFICATION NUMBER (VIN) CODE 2
VEHICLE IDENTIFICATION NUMBERS (VIN) 3
CONTENTS OF WIRING DIAGRAMS 4
GROUND POINTS 5
SYSTEM CIRCUIT DIAGRAM/CONNECTOR DIAGRAM 6
ROUTING DIAGRAM 8
HARNESS SYMBOLS 9
WIRING COLOR CODE 9
SYMBOLS 9
SERVICE WARNING AND CAUTION FOR VEHICLES WITH SRS AIR BAG SYSTEM 12
SERVICE WARNING FOR VEHICLES WITH DISCHARGE HEADLIGHTS 12
ABBREVIATIONS USED IN THIS MANUAL 12
P ELECTRICAL SYSTEM GENERAL PROCEDURES 14

POWER, GROUND & COMMON CONNECTOR

E ELECTRICAL WIRING SCHEMATIC 18
F FUSE BOX 22
C COMMON CONNECTOR LIST 28
G GROUND POINT 40

DATA LINK CONNECTOR

D DATA LINK CONNECTOR 44

01 ENGINE

12 COOLING SYSTEM
SKYACTIV-G 2.0 50
SKYACTIV-D 2.2 52
14 FUEL SYSTEM (SKYACTIV-G 2.0) 54
17 CHARGING SYSTEM
SKYACTIV-G 2.0 / WITH i-stop SYSTEM 56
SKYACTIV-D 2.2 60
SKYACTIV-G 2.0 / WITHOUT i-stop SYSTEM 64
19 STARTING SYSTEM (SKYACTIV-G 2.0, SKYACTIV-D 2.2) 66
20 CRUISE CONTROL SYSTEM (SKYACTIV-G 2.0, SKYACTIV-D 2.2) 68
40 CONTROL SYSTEM
SKYACTIV-G 2.0 70
SKYACTIV-D 2.2 82

03 DRIVELINE/AXLE

18 4-WHEEL DRIVE
ELECTRONIC 4WD CONTROL SYSTEM 96

04 BRAKES

15 DYNAMIC STABILITY CONTROL 98

05 TRANSMISSION/TRANSAXLE

17 AUTOMATIC TRANSAXLE
AUTOMATIC TRANSAXLE CONTROL SYSTEM 102
18 AUTOMATIC TRANSAXLE SHIFT MECHANISM
SHIFT-LOCK SYSTEM 104

06 STEERING

13 ELECTRIC POWER STEERING (EPS) 106

07 HEATER, VENTILATION & AIR CONDITIONING (HVAC)

40 CONTROL SYSTEM
HEATER AND AIR CONDITIONER SYSTEM
MANUAL A/C 108
AUTO A/C 112
A/C COMPRESSOR CONTROL 118

08 RESTRAINTS

10 AIR BAG SYSTEM
AIR BAG SYSTEM (INCLUDES PRE-TENSIONER SEAT BELT INFORMATION) 120
REAR SEAT BELT REMINDER SYSTEM 126

09 BODY & ACCESSORIES

12 GLASS/WINDOWS/MIRRORS
REAR WINDOW DEFROSTER (INCLUDES HEATED OUTER MIRROR INFORMATION) 128
POWER WINDOW SYSTEM
AUTO-OPEN/CLOSE FUNCTION FOR ALL WINDOWS 130
AUTO-OPEN/CLOSE FUNCTION FOR DRIVER-SIDE WINDOW 142
POWER OUTER MIRROR 136
AUTO DIMMING MIRROR 140
13 SEATS
SEAT WARMER 146
POWER SEAT 148
14 SECURITY AND LOCKS
DOOR LOCK SYSTEM
WITH KEYLESS ENTRY SYSTEM 150
WITH ADVANCED KEYLESS ENTRY SYSTEM 158
THEFT-DETERRENT SYSTEM
U.K. specs., Australian specs. 168
General (R.H.D.) specs. 170
15 SUNROOF 172
18 LIGHTING SYSTEMS
HEADLIGHT
HALOGEN TYPE 174
DISCHARGE TYPE 178
LICENSE PLATE LIGHT 182
PARKING LIGHT 182
TAILLIGHT 182
FOG LIGHT 184
TURN AND HAZARD WARNING LIGHT 186
BACK-UP LIGHT 188
BRAKE LIGHT 190
HIGH-MOUNT BRAKE LIGHT 190
ILLUMINATION LIGHT 192
HEADLIGHT MANUAL LEVELING SYSTEM 194
AFS (ADAPTIVE FRONT LIGHTING SYSTEM) 196
HEADLIGHT AUTO LEVELING SYSTEM 196
STEERING ANGLE SENSOR 198
HIGH BEAM CONTROL (HBC) SYSTEM 200
19 WIPER/WASHER SYSTEM
WIPER AND WASHER 202
HEADLIGHT CLEANER 206
20 ENTERTAINMENT
ACCESSORY SOCKET 208
AUDIO SYSTEM
WITHOUT Bose® TYPE AUDIO 210
Bose® TYPE AUDIO 216
CAR-NAVIGATION SYSTEM
WITHOUT Bose® TYPE AUDIO 224
Bose® TYPE AUDIO 230
Bluetooth SYSTEM (HANDS-FREE TELEPHONE (HF/TEL) SYSTEM) 240
21 POWER SYSTEM 242
22 INSTRUMENTATION/DRIVER INFO.
INSTRUMENT CLUSTER 244
HORN 254
PARKING SENSOR SYSTEM 256
REAR VEHICLE MONITORING SYSTEM 260
LANE DEPARTURE WARNING SYSTEM 262
BLIND SPOT MONITORING (BSM) 264
40 CONTROL SYSTEM
BODY CONTROL SYSTEM 266

AI ALPHABETICAL INDEX

ALPHABETICAL INDEX 272

Two digits (section ID) indicated in front of each title are commonly used with the Workshop Manual.

00R Reading Wiring Diagrams

VEHICLE IDENTIFICATION NUMBER (VIN) CODE

Australian specs., General (R.H.D.) specs.

J M 0 K E 1 0 7 1 0 0 1 2 3 4 5 6

Serial No.	
Dummy	0
Dummy	0
Minor change code	1
Engine	2= 2.2 L (SKYACTIV-D 2.2 Hi, Diesel) 7= 2.0 L (SKYACTIV-G 2.0)
Dummy	0
Body	1= Closed body
Carline and Series	KE= Mazda CX-5
World manufacturer identification	JM0= Mazda (Australian specs.) JM6= Mazda (General (R.H.D.) specs.)

U.K. specs.

J M Z K E C 9 7 6 0 0 1 2 3 4 5 6

Serial No.	
Plant	0= Hiroshima 1= Hofu
Dummy	0
Transmission	6= 6MT 8= 6EAT
Engine	1= 2.2 L (SKYACTIV-D 2.2 Low, Diesel) 2= 2.2 L (SKYACTIV-D 2.2 Hi, Diesel) 7= 2.0 L (SKYACTIV-G 2.0)
Body	9= Station Wagon
Drive axle/ Emission stage	C= 2WD, Stage5 F= 2WD, Stage6 K= 4WD, Stage5 N= 4WD, Stage6 1= 2WD, Stage4 8= 4WD, Stage4
Car line, series	KE= Mazda CX-5
World manufacturer identification	JM7= Mazda (China specs.) JMZ= Mazda (European (L.H.D. U.K.) specs.)

Reading Wiring Diagrams 00R

VEHICLE IDENTIFICATION NUMBERS (VIN)

Australian specs.
- JM0 KE102100 100001-
- JM0 KE107100 100001-

General (R.H.D.) specs.
- JM6 KE1071*0 100001-

U.K. specs.
- JMZ KEC9760# 100001-
- JMZ KEF9160# 100001-
- JMZ KEF9180# 100001-
- JMZ KEN9160# 100001-
- JMZ KEN9180# 100001-
- JMZ KEN9260# 100001-
- JMZ KEN9280# 100001-

00R Reading Wiring Diagrams

CONTENTS OF WIRING DIAGRAMS

- This manual comprises the sections shown below.

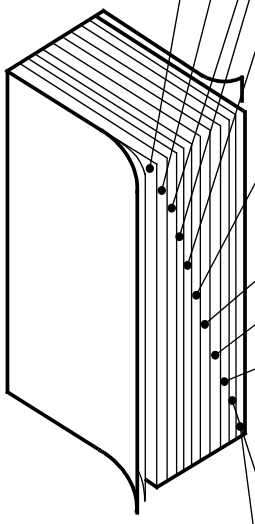

GENERAL INFORMATION	00	R	Reading wiring diagrams	A how-to on using and reading wiring diagrams, using test equipment, checking harness and connectors, and finding trouble spots
		P	Electrical system general procedures	
		E	Electrical wiring schematic	Shows main fuses and other fuses for each system
		F	Fuse box complete wiring system	Shows internal circuits and connectors
		J	Joint box/Junction box complete wiring system	
		C	Common connector list	Shows connectors common throughout system
		G	Ground point	Ground routes from and to the battery
		D	Data link connector	Shows circuit and connector diagrams and component and connector location diagrams
ENGINE	01	12	Cooling system	
		13	Intake air system	
		14	Fuel system	
		17	Charging system	
		18	Ignition system	
		19	Starting system	
		20	Cruise control system	
		40	Control system	
SUSPENSION	02	12	Wheel and tires	
DRIVELINE/AXLE	03	18	4-Wheel drive	
BRAKES	04	13	Antilock brake system	
		14	Traction control system	
		15	Dynamic stability control	
		18	Dynamic stability control/ Roll stability control	
TRANSMISSION/TRANSAXLE	05	13	Automatic transmission	
		14	Automatic transmission shift mechanism	
		17	Automatic transaxle	
		18	Automatic transaxle shift mechanism	
		19	CVT (Continuously variable transaxle)	
STEERING	06	13	Electric power steering (EPS)	
		14	Power steering	
HEATER, VENTILATION & AIR CONDITIONING (HVAC)	07	40	Control system	
RESTRAINTS	08	10	Air bag system	
		11	Seat belt	
BODY & ACCESSORIES	09	12	Glass/Windows/Mirrors	
		13	Seats	
		14	Security and locks	
		15	Sunroof	
		16	Exterior trim	
		18	Lighting systems	
		19	Wiper/Washer system	
		20	Entertainment	
		21	Power systems	
		22	Instrumentation/Driver info.	
		40	Control system	
	AI		Alphabetical Index	Gives page number of circuit diagram for each component

Depending on the vehicle model, the actual sections may be different.

Reading Wiring Diagrams 00R

GROUND POINTS

- This shows ground points of the harness.

GROUND POINT 00G-a

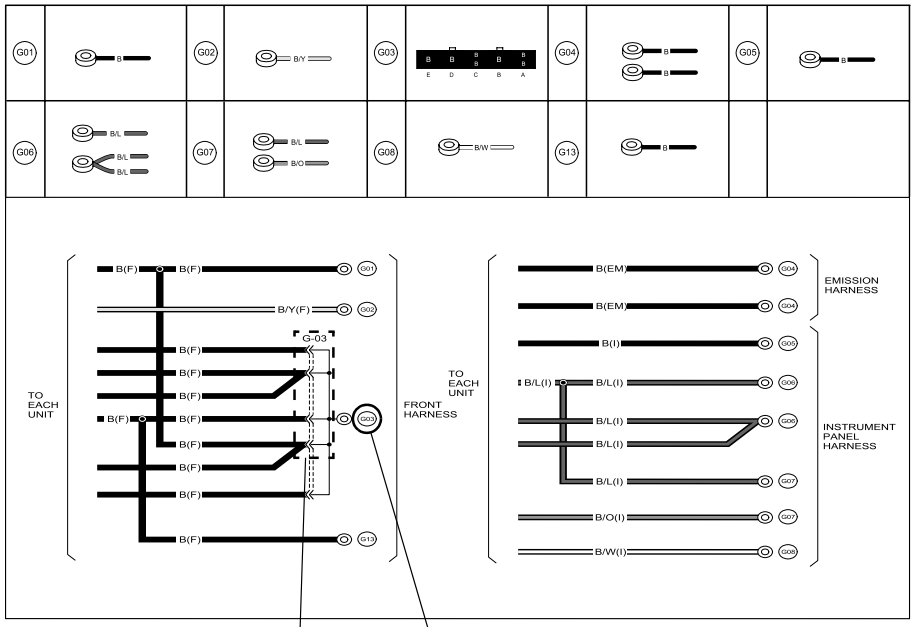

Ground indication

On vehide	Indication
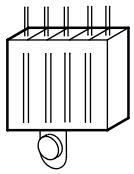	To circuit 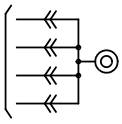

On circuit diagrams and ground points

The ground connection numbers in system circuit diagrams correspond to those in the ground point diagram.

FRONT FOG LIGHT 0918-2

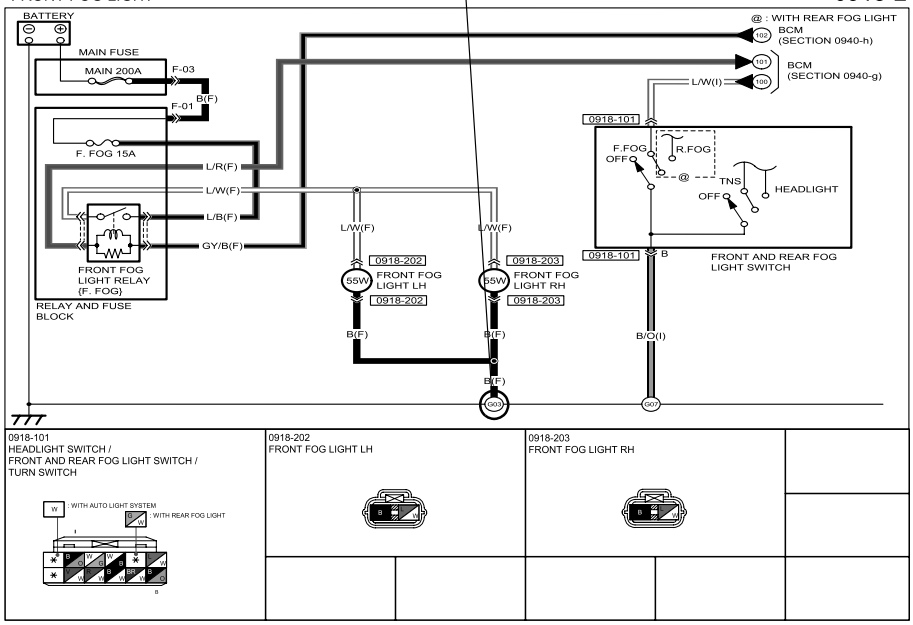

00R Reading Wiring Diagrams

SYSTEM CIRCUIT DIAGRAM/CONNECTOR DIAGRAM

- These diagrams show the circuits for each system, from the power supply to the ground. The power supply side is on the upper part of the page, the ground side on the lower part. The diagrams describe circuits with the ignition switch off.
  Below is an explanation of the various points in the diagram.

System name

The number indicates that the circuit continues to the related system diagram.

{ } : Name indicated on fuse box cover

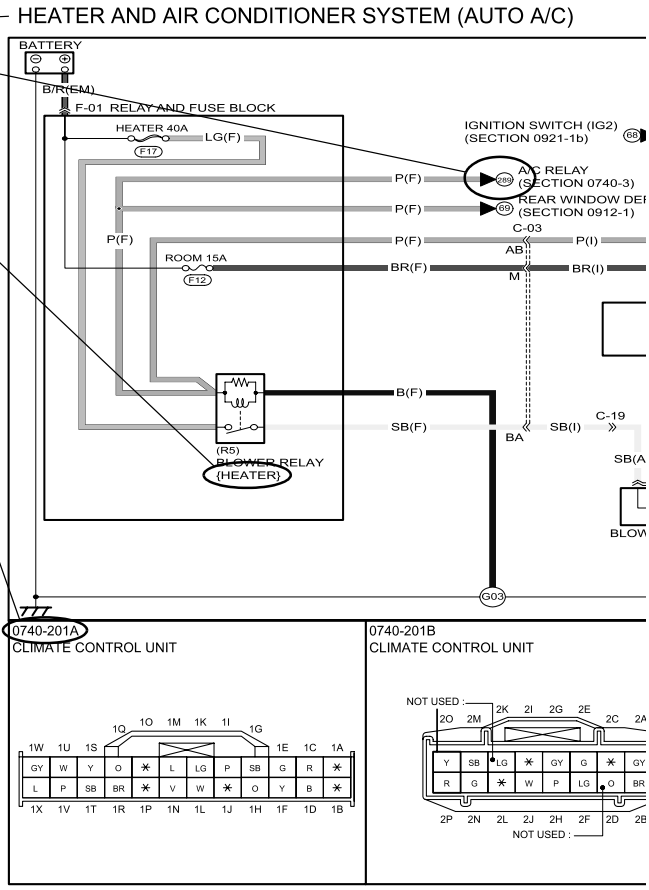

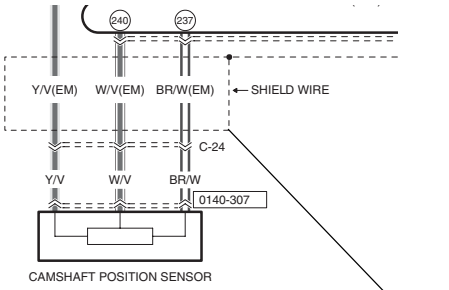

Indicates shielded wire.*

* Shielded wire :
Prevents signal disturbances from electrical interference.
Wire is covered by a metal meshing for grounding.

Connector code

The prefix letter indicates the system in which the connector is used.

- **F**: Fuse box connectors
- **J**: Joint box/Junction box connectors
- **C**: Common connectors
- **G**: Ground point connectors
- **D**: Data link connector
- **0112**: Cooling system connectors
- **0113**: Intake air system connectors
- **0114**: Fuel system connectors
- **0117**: Charging system connectors
- **0118**: Ignition system connectors
- **0119**: Starting system connectors
- **0120**: Cruise control system connectors
- **0140**: Engine control system connectors
- **0212**: Wheel and tires connectors
- **0318**: 4-Wheel drive connectors
- **0413**: Antilock brake system connectors
- **0414**: Traction control system connectors
- **0415**: Dynamic stability control connectors
- **0418**: Dynamic stability control/Roll stability control connectors
- **0513**: Automatic transmission connectors
- **0514**: Automatic transmission shift mechanism connectors
- **0517**: Automatic transaxle connectors
- **0518**: Automatic transaxle shift mechanism connectors
- **0519**: CVT (Continuously variable transaxle) connectors
- **0613**: Electric power steering (EPS) connectors
- **0614**: Power steering connectors
- **0740**: Heater, ventilation & air conditioning (HVAC) control system connectors
- **0810**: Air bag system connectors
- **0811**: Seat belt connectors
- **0912**: Glass/Windows/Mirrors connectors
- **0913**: Seats connectors
- **0914**: Security and locks connectors
- **0915**: Sunroof connectors
- **0916**: Exterior trim connectors
- **0918**: Lighting systems connectors
- **0919**: Wiper/Washer system connectors
- **0920**: Entertainment connectors
- **0921**: Power systems
- **0922**: Instrumentation/Driver info. Connectors
- **0940**: Control system

Reading Wiring Diagrams 00R

Current symbol

Current flows in the direction of the arrow.

Multiplex communication

Indicates communication with connected parts.
Signals are transmitted back and forth between connected parts.

System code

0740-2a

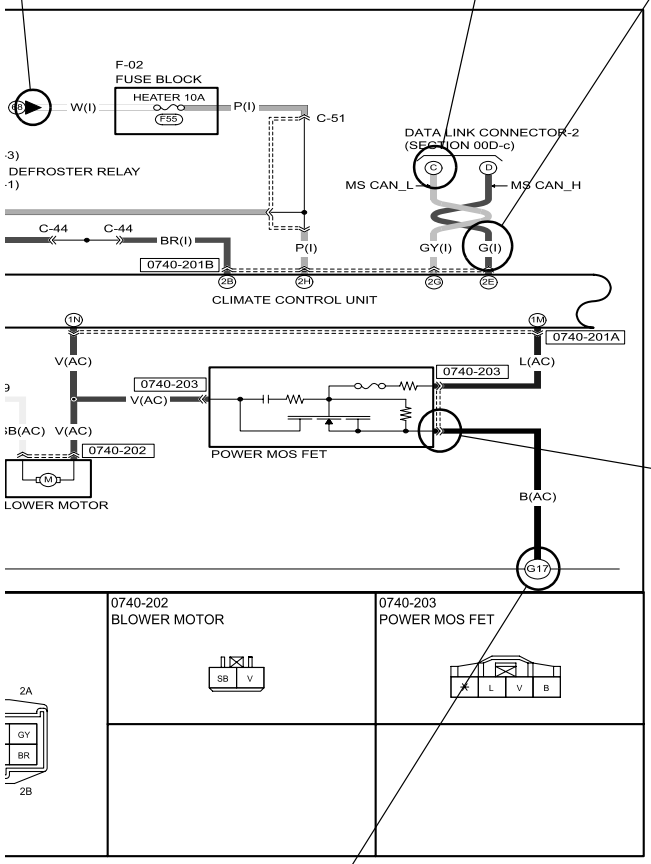

Wire color code (harness symbol)

- Two-color wires are indicated by a two-letter symbol.The first indicates the base color of the wire, the second the color of the stripe.
  For example:
  W/R is a white wire with a red strip
  BR/Y is a brown wire with a yellow strip

Symbol
(Example)

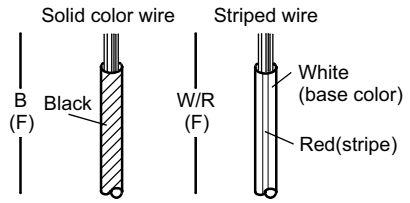

- The harness symbol is in ( ) following the harness symbols (refer to P-9.).

Connector symbols

- Male and female connectors are represented as follows in the circuit and connector diagrams.

		Circuit diagram symbol	Connector diagram symbol
Male	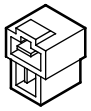	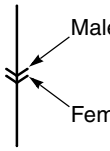 Male	
Female	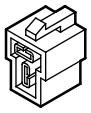 Female		

- Like connectors are linked by dashed lines between the connector symbols.
- Connector diagrams show connectors on the harness side. The terminal indicates the view from the harness side.

(Example)

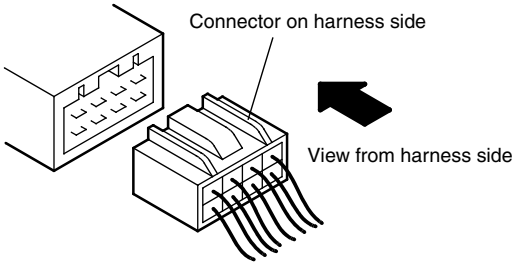

- Colors for connectors except white are given in locations.
- Unused terminals are indicated by ∗.

Ground numbers

A harness ground is represented differently than a unit ground.

Types of grounds	Symbol
Harness 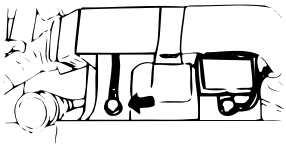	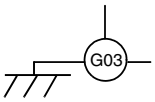
Unit 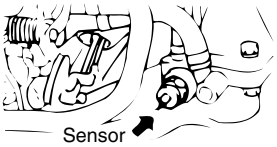	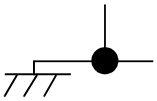

00R Reading Wiring Diagrams

ROUTING DIAGRAM

- The routing diagram shows where electrical components are on the system circuit diagram by call out line and connector symbols.

Connector symbol

Shows the system that uses the connector.

(Example)

Connector	Symbol
Common connectors	C-11
System connectors	0912-301

Ground symbol

Shows the ground in system diagrams.

Component name

Shows the names of components in routing diagrams.

REAR WINDOW DEFROSTER (INCLUDES HEATED OUTER MIRROR INFORMATION) 0912-1

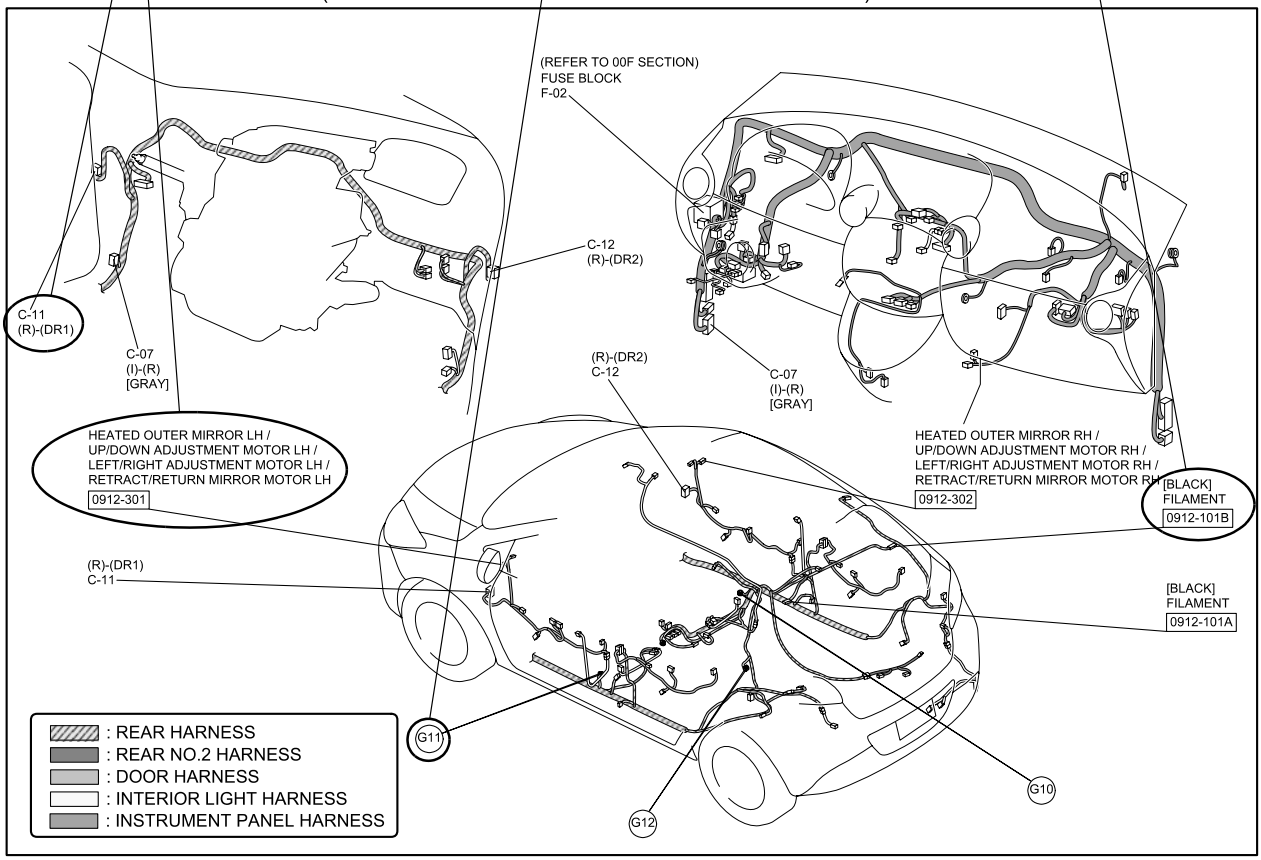

Reading Wiring Diagrams 00R

HARNESS SYMBOLS

DESCRIPTION OF HARNESS	SYMBOL		DESCRIPTION OF HARNESS	SYMBOL	
FRONT HARNESS	(F)		DOOR No. 1 HARNESS	(DR1)	—
FRONT No. 2 HARNESS	(F2)		DOOR No. 2 HARNESS	(DR2)	
ENGINE HARNESS	(E)		DOOR No. 3 HARNESS	(DR3)	
DASH HARNESS	(D)		DOOR No. 4 HARNESS	(DR4)	
REAR HARNESS	(R)		FLOOR HARNESS	(FR)	—
REAR No. 2 HARNESS	(R2)	—	INTERIOR LIGHT HARNESS	(IN)	—
REAR No. 3 HARNESS	(R3)		INTERIOR LIGHT No.2 HARNESS	(IN2)	—
REAR No. 4 HARNESS	(R4)		A/C HARNESS	(AC)	—
REAR No. 5 HARNESS	(R5)		INJECTION HARNESS	(INJ)	—
INSTRUMENT PANEL HARNESS	(I)	—	HAND BRAKE HARNESS	(HB)	—
EMISSION HARNESS	(EM)	—			
EMISSION No. 2 HARNESS	(EM2)				
EMISSION No. 3 HARNESS	(EM3)				

WIRING COLOR CODE

COLOR	CODE	COLOR	CODE
BLACK	B	ORANGE	O
BLUE	L	PINK	P
BROWN	BR	RED	R
DARK BLUE	DL	SKY BLUE	SB
DARK GREEN	DG	TAN	T
GRAY	GY	VIOLET	V
GREEN	G	WHITE	W
LIGHT BLUE	LB	YELLOW	Y
LIGHT GREEN	LG		

SYMBOLS

Symbol	Meaning	Symbol	Meaning
Battery	• Generates electricity through chemical reaction. • Supplies direct current to circuits.	Light (3.4W)	• Emits light and generates heat when current flows through filament.
Ground (1) (G03)	• Connecting point to vehicle body or other ground wire where current flows from positive to negative terminal of battery. • Ground (1) indicates a ground point to body through wire harness. • Ground (2) indicates point where component is grounded directly to body. Remarks • Current will not flow through a circuit if ground is faulty.	Resistance	• A resistor with a constant value. • Mainly used to protect electrical components in circuits by maintaining rated voltage.
Ground (2)		Motor (M)	• Converts electrical energy into mechanical energy.

00R Reading Wiring Diagrams

Symbol	Meaning
Fuse	• Melts when current flow exceeds that specified for circuit, interrupts current flow. Precautions • Do not replace with fuses exceeding specified capacity. <Blade type> <Tube type> <Cartridge type> <Fusible link>
Fuse (For high current fuse)/ Fusible link	
Transistor (1)	• Electrical switching component. • Turns on when voltage is applied to the base (B). Collector (C) Base (B) NPN Emitter (E) Collector indication mark B E C E C B E B C
Transistor (2)	• Reading code. Collector (C) Base (B) PNP Emitter (E) 2 S C 828 A Revision mark Semiconductor Number of terminals A:High-frequency PNP B:Low-frequency PNP C:High-frequency NPN D:Low-frequency NPN
Switch (1) Normally open	• Allows or breaks current flow by opening and closing curcuits.
Switch (2) Normally closed	
Autostop switch	• Automatically shuts off circuit when certain conditions are met.
Relay (1) Normally open	• Current flowing through coil produces electromagnetic force causing contact to close. No current to coil: No flow Current to coil: Flow

Symbol	Meaning
Pump	• Pulls in and discharges gases and liquids.
Cigarette lighter	• Electrical coil that generates heat.
Accessory socket	• Interior power supply.
Horn	• Generates sound when current flows.
Speaker	
Heater	• Generates heat when current flows.
Ignition switch	• Turning ignition key switches circuit to operate various component. (NOTE) Ignition switch is called engine switch on diesel vehicles. ST, B2, B1, IG2, OFF, IG1, OFF, ACC
Harness **Connection** When circuit C-D is connected to circuit A-B, the connection D is indicated by a black dot. **Selection** Diversion point D for the different circuits according to the vehicle's specification is indicated by a white dot.	A, B, C, D For vehicles with ABS, use the A-B circuit. WITH ABS WITHOUT ABS For vehicles without ABS, use the C-B circuit.

Reading Wiring Diagrams 00R

Symbol	Meaning	Symbol	Meaning
Relay (2) Normally closed	• Current flowing through coil produces electromagnetic force causing contact to open. No current to coil — Flow Current to coil — No flow		
Sensor (1)	• Detects characteristics such as intake manifold vacuum and airflow amount according to resistance variation.	Solenoid	• Current flowing through coil generates electromagnetic force to operate plungers.
Sensor (2)	• Detects resistance variation according to operation of other parts.	Diode	• Known as a semiconductor rectifier, the diode allows current flow in one direction only. Cathode(K) — Anode(A) Flow of electric current K A K A K A
Sensor (3)	• A resistor whose resistance variation according to temperature variation. • When temperature increases, resistance decreases.		
Sensor (4)	• Detects pulse signals from rotating object.	Light-emitting diode (LED)	• A diode that lights when current flows. • Unlike ordinary bulbs, the diode does not generate heat when lit. Cathode(K) — Anode(A) Cathode(K) Anode(A) Flow of current
Sensor (5)	• Generates potential difference when tension or pressure is applied.		
Capacitor	• Component that temporarily stores electrical charge.	Reference diode (Zener diode)	• Allows current to flow in one direction up to a certain voltage; allows current to flow in the other direction once that voltage is exceeded.

Symbol	Meaning
Extent of the change in the wiring position (1) E C A B B B B B B F D B E C A F D B	• The wiring position can be exchanged freely within the connector.
Extent of the change in the wiring position (2) E C A B B B B B B F D B E C A F D B	• The wiring position can be exchanged according to the following combinations only. Between A and B, Between C and D, Between E and F
Extent of the change in the wiring position (3) 3 L 2 B 1 B 5 L 4 B 8 B/Y 7 B 6 R 2 1 4 7	• The wiring position can be exchanged according to the following combinations only. Between 1, 2, 4 and 7. • The wiring positions may be indicated by numbers for some connectors.
B A A B A B A B	• The area in which there is no wiring color indicated will not be described because the wiring color information has not been confirmed.

00R Reading Wiring Diagrams

SERVICE WARNING AND CAUTION FOR VEHICLES WITH SRS AIR BAG SYSTEM

If the SRS air bag system inspection is not performed correctly in accordance with the workshop manual procedures it could cause the system to operate (deploy) accidentally, resulting in injury.
Always follow the service warnings and cautions in the workshop manual when performing the SRS air bag system-related inspection or servicing.

SERVICE WARNING FOR VEHICLES WITH DISCHARGE HEADLIGHTS

If the discharge headlight inspection and servicing is not done using the correct procedures in the workshop manual, it could result in electrical shock.
Always follow the service warnings and cautions in the workshop manual when performing the discharge headlight-related inspection or servicing.

ABBREVIATIONS USED IN THIS MANUAL

A	AMPERE
A/C	AIR CONDITIONING
A/F	AIR FUEL RATIO
AAS	AUTO ADJUSTING SUSPENSION
ABS	ANTI-LOCK BRAKING SYSTEM
ACC	ACCESSORIES
ACV	AIR CONTROL VALVE
ADD	ADDITIONAL
AFS	ADAPTIVE FRONT LIGHTING SYSTEM
AIS	AIR INJECTION SYSTEM
ALL	AUTOMATIC LOAD LEVELING
AM	AMPLITUDE MODULATION
AMP	AMPLIFIER
ANT	ANTENNA
ASV	AIR SUPPLY VALVE
AT	AUTOMATIC TRANSMISSION
ATX	AUTOMATIC TRANSAXLE
B+	BATTERY POSITIVE VOLTAGE
BAC	BYPASS AIR CONTROL
BCM	BODY CONTROL MODULE
BSM	BLIND SPOT MONITORING
BZ	BUZZER
CAN	CONTROLLER AREA NETWORK
CIGAR	CIGARETTE
CIS	CONTINUOUS FUEL INJECTION SYSTEM
CKP	CRANKSHAFT POSITION SENSOR
CM	CONTROL MODULE
CMP	CAMSHAFT POSITION SENSOR
COMBI	COMBINATION
CPU	CENTRAL PROCESSING UNIT
CVT	CONTINUOUSLY VARIABLE TRANSAXLE
DEF	DEFROSTER
DI	DISTRIBUTOR IGNITION
DLC	DATA LINK CONNECTOR
DLI	DISTRIBUTORLESS IGNITION
DOHC	DOUBLE-OVERHEAD CAMSHAFT
DPF	DIESEL PARTICULATE FILTER

DRL	DAYTIME RUNNING LIGHT
DSC	DYNAMIC STABILITY CONTROL
DTC	DIAGNOSTIC TROUBLE CODE(S)
DTM	DIAGNOSTIC TEST MODE
ECPS	ELECTRONICALLY CONTROLLED POWER STEERING
ECT	ENGINE CONTROL TEMPERATURE
EGR	EXHAUST GAS RECIRCULATION
EHPAS	ELECTRO HYDRAULIC POWER ASSIST STEERING
EI	ELECTRONIC IGNITION
ELR	EMERGENCY LOCKING RETRACTOR
EPS	ELECTRIC POWER STEERING
ET	ELECTRONIC THROTTLE
ETC	ELECTRONIC THROTTLE CONTROL
EVAP	EVAPORATIVE EMISSION
F	FRONT
F/I	FUEL INJECTOR
FBCM	FRONT BODY CONTROL MODULE
FICB	FAST-IDLE CAM BREAKER
FM	FREQUENCY MODULATION
FP	FUEL PUMP
FPR	FUEL PUMP RELAY
FSC	FORWARD SENSING CAMERA
GEN	GENERATOR
GND	GROUND
GPS	GLOBAL POSITIONING SYSTEM
HBC	HIGH BEAM CONTROL
HI	HIGH
HO2S	HEATED OXYGEN SENSOR
HS	HIGH SPEED
HU	HYDRAULIC UNIT
IAC	IDLE AIR CONTROL
IAT	INTAKE AIR TEMPERATURE
IG	IGNITION
ILLUMI	ILLUMINATION
INFO	INFORMATION
INT	INTERMITTENT
JB	JOINT BOX

Reading Wiring Diagrams 00R

KS	KNOCK SENSOR
LCD	LIQUID CRYSTAL DISPLAY
LDWS	LANE DEPARTURE WARNING SYSTEM
LED	LIGHT EMITTING DIODE
LF	LEFT FRONT
LH	LEFT HAND
LO	LOW
LR	LEFT REAR
M	MOTOR
MAF	MASS AIR FLOW
MAP	MANIFOLD ABSOLUTE PRESSURE
MAX	MAXIMUM
MFI	MULTIPORT FUEL INJECTION
MIC	MICROPHONE
MID	MIDDLE
MIL	MALFUNCTION INDICATOR LAMP
MIN	MINUTE
MIX	MIXTURE
MPX	MULTIPLEX
MS	MIDDLE SPEED
MT	MANUAL TRANSMISSION
MTX	MANUAL TRANSAXLE
N	NEUTRAL
O/D	OVER DRIVE
OBD	ON-BOARD DIAGNOSTIC
OFF	SWITCH OFF
ON	SWITCH ON
P/S	POWER STEERING
P/W	POWER WINDOW
PCM	POWERTRAIN CONTROL MODULE
PCV	POSITIVE CRANKCASE VENTILATION
PJB	PASSENGER JUNCTION BOX
POWER MOS FET	POWER METAL OXIDE SEMICONDUCTOR FIELD EFFECT TRANSISTOR
PRC	PRESSURE REGULATOR CONTROL
PRG	PURGE SOLENOID VALVE
PSP	POWER STEERING PRESSURE
PTC	POSITIVE TEMPERATURE COEFFICIENT HEATER
PWM	PULSE WIDTH MODULATION
QSS	QUICK-START SYSTEM
R	REAR
RBCM	REAR BODY CONTROL MODULE
REC	RECIRCULATION
REG	REGULATOR
RF	RIGHT FRONT
RH	RIGHT HAND
RPM	REVOLUTIONS PER MINUTE
RR	RIGHT REAR

RVM	REAR VEHICLE MONITORING
SAS	SOPHISTICATED AIR BAG SENSOR
SFI	SEQUENTIAL MULTIPOINT FUEL INJECTION
SOL	SOLENOID
SPV	SPILL VALVE
ST	START
SW	SWITCH
TC	TURBOCHARGER
TCC	TORQUE CONVERTER CLUTCH
TCM	TRANSMISSION(TRANSAXLE) CONTROL MODULE
TCS	TRACTION CONTROL SYSTEM
TEMP	TEMPERATURE
TFT	TRANSAXLE FLUID TEMPERATURE
TICS	TRIPLE INDUCTION CONTROL SYSTEM
TNS	TAIL NUMBER SIDE LIGHTS
TP	THROTTLE POSITION SENSOR
TPMS	TIRE PRESSURE MONITORING SYSTEM
TWS	TOTAL WIRING SYSTEM
V	VOLT
VAF	VOLUME AIR FLOW SENSOR
VENT	VENTILATION
VICS	VARIABLE INERTIA CHARGING SYSTEM
VOL	VOLUME
VR	VOLTAGE REGULATOR
VRIS	VARIABLE RESONANCE INDUCTION SYSTEM
VSS	VEHICLE SPEED SENSOR
VTCS	VARIABLE TUMBLE CONTROL SYSTEM
W	WATT(S)
WGN	WAGON
4WD	4 WHEEL DRIVE
4SD	4 DOOR SEDAN
5HB	5 DOOR HATCHBACK

00P Electrical System General Procedures

ELECTRICAL PARTS

B6U000000006W03

Battery Cable

- Before disconnecting connectors or removing electrical parts, disconnect the negative battery cable.

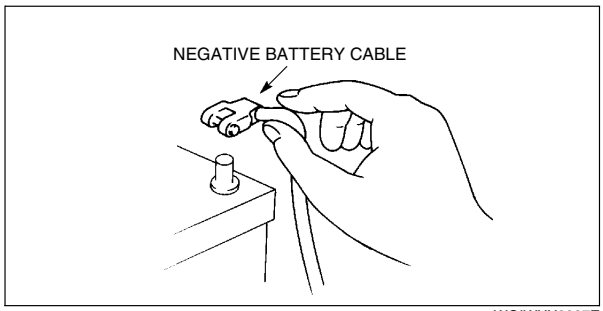

WGIWXX0007E

Wiring Harness

- To remove the wiring harness from the clip in the engine room, pry up the hook of the clip using a flathead screwdriver.

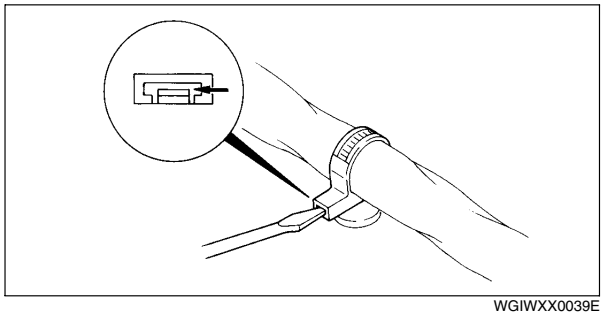

WGIWXX0039E

Caution

- **Do not remove the Harness protective tape. Otherwise, the wires could rub against the body, which could result in water penetration and electrical shorting.**

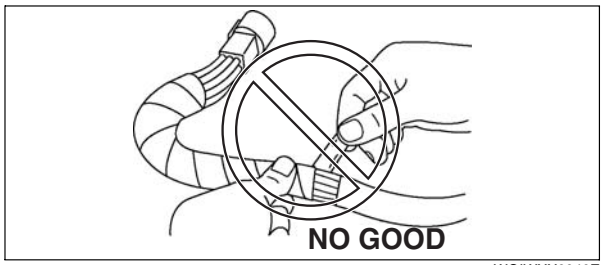

WGIWXX0040E

CONNECTORS

Disconnecting Connectors

- When disconnecting connector, grasp the connectors, not the wires.

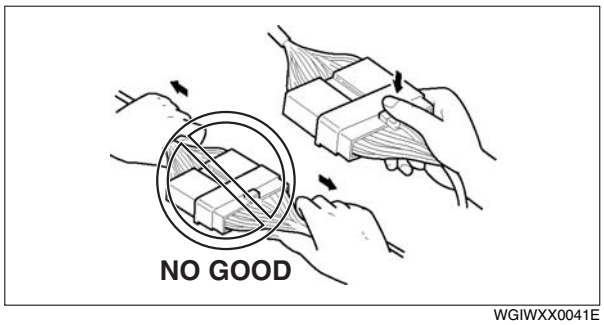

WGIWXX0041E

Electrical System General Procedures 00P

- Connectors can be disconnected by pressing or pulling the lock lever as shown.

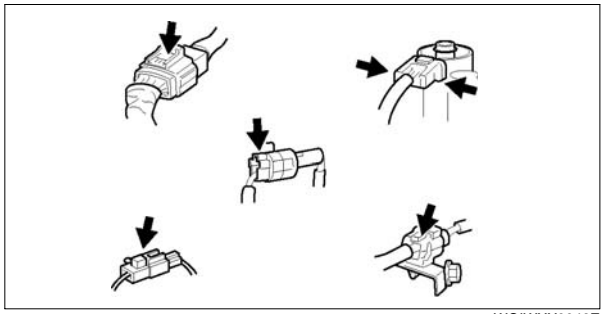

WGIWXX0042E

Locking Connector

- When locking connectors, listen for a click indicating they are securely locked.

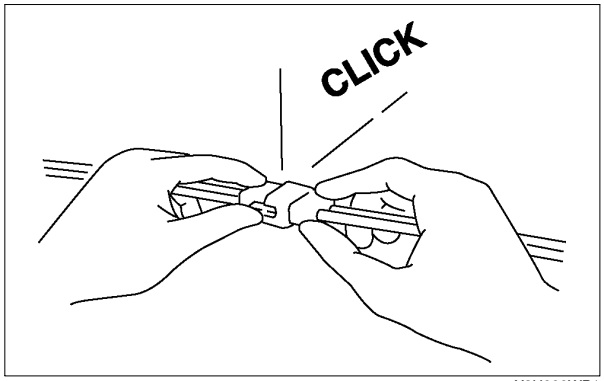

X3U000WB1

Inspection

- When a tester is used to inspect for continuity or measuring voltage, insert the tester probe from the wiring harness side.

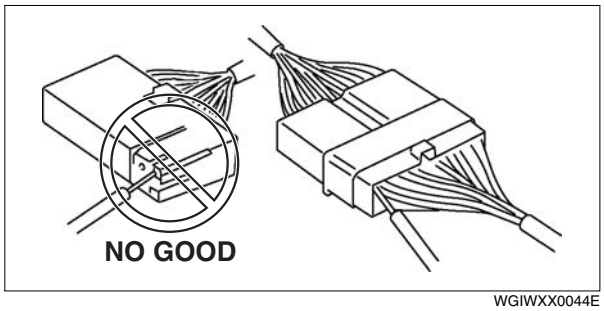

WGIWXX0044E

- Inspect the terminals of waterproof connectors from the connector side since they cannot be accessed from the wiring harness side.

  Caution
  - **To prevent damage to the terminal, wrap a thin wire around the tester probe before inserting into terminal.**

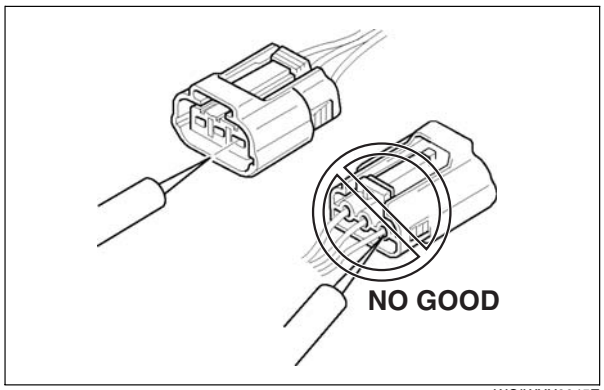

WGIWXX0045E

Electrical System General Procedures 00P

- When replacing a pullout fuse, use the fuse puller.

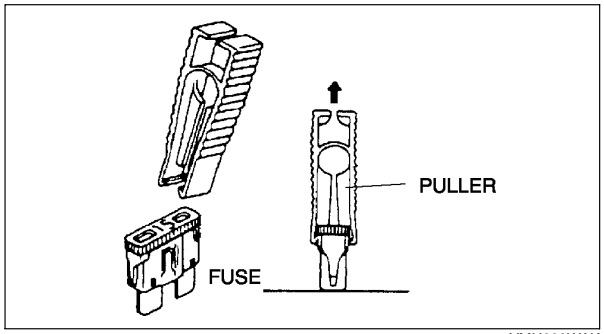

YMU000WAK

ELECTRICAL TROUBLESHOOTING TOOLS

Jumper Wire

- A jumper wire is used to create a temporary circuit. Connect the jumper wire between the terminals of a circuit to bypass a switch.

  Caution
  - **Do not connect a jumper wire from the power source line to a body ground. This may cause burning or other damage to wiring harnesses or electronic components.**

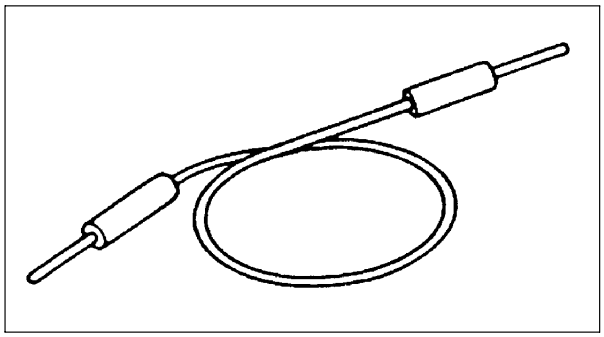
X3U000WBB

Voltmeter

- The DC voltmeter is used to measure circuit voltage. A voltmeter with a range of **15 V or more** is used by connecting the positive (+) probe (red lead wire) to the point where voltage will be measured and the negative (-) probe (black lead wire) to a body ground.

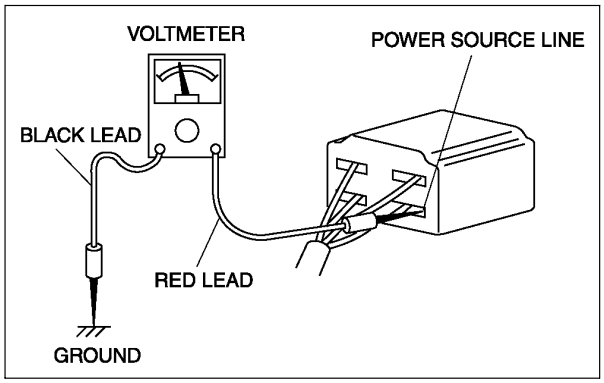

X3U000WBC

Ohmmeter

- The ohmmeter is used to measure the resistance between two points in a circuit and to inspect for continuity and short circuits.

  Caution
  - **Do not connect the ohmmeter to any circuit where voltage is applied. This will damage the ohmmeter.**

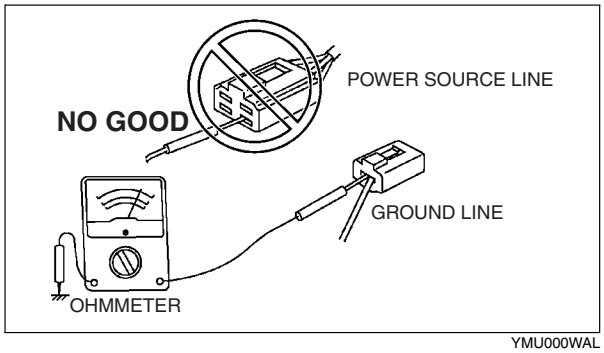

YMU000WAL

ELECTRICAL WIRING SCHEMATIC

00E-1a

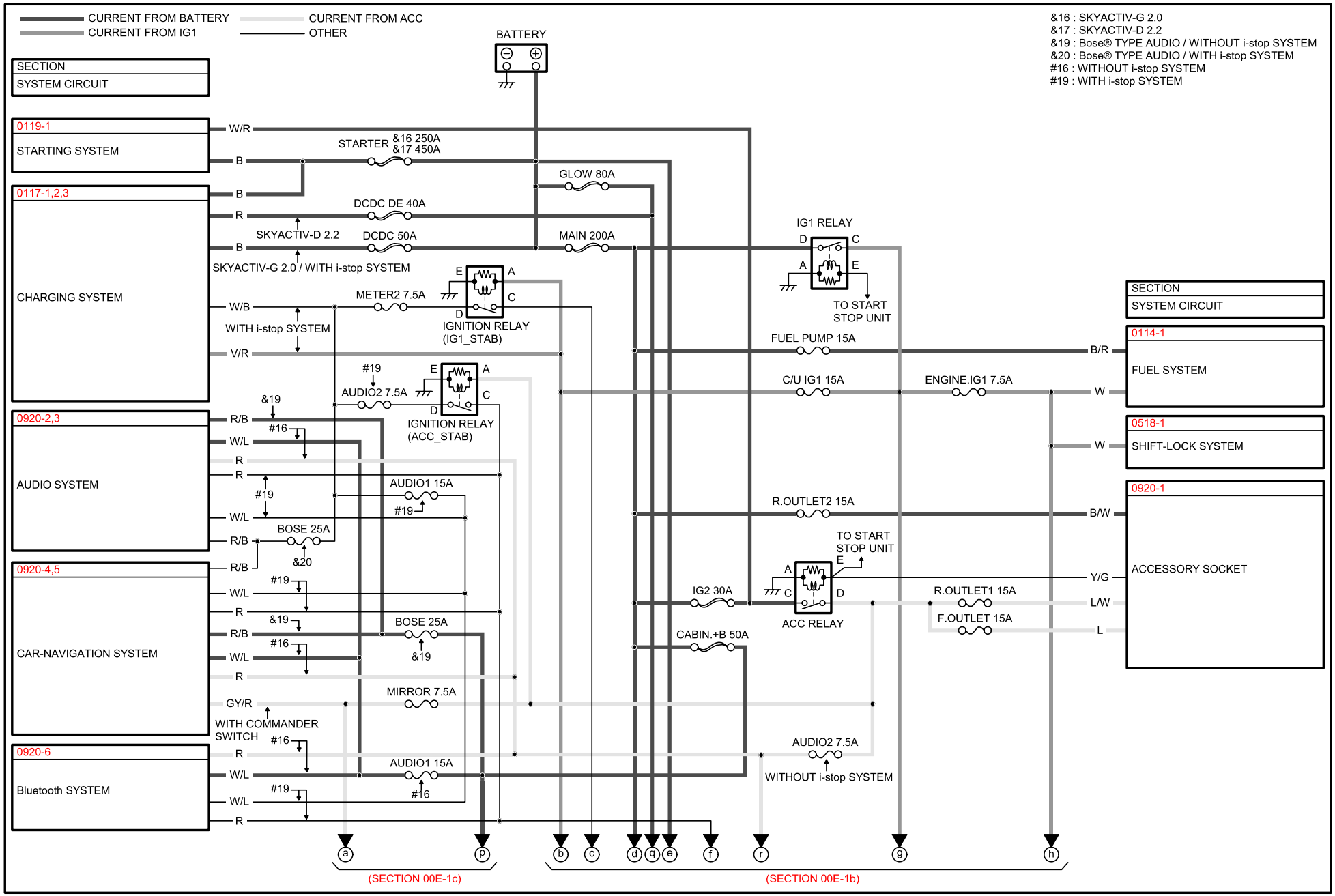

ELECTRICAL WIRING SCHEMATIC

00E-1b

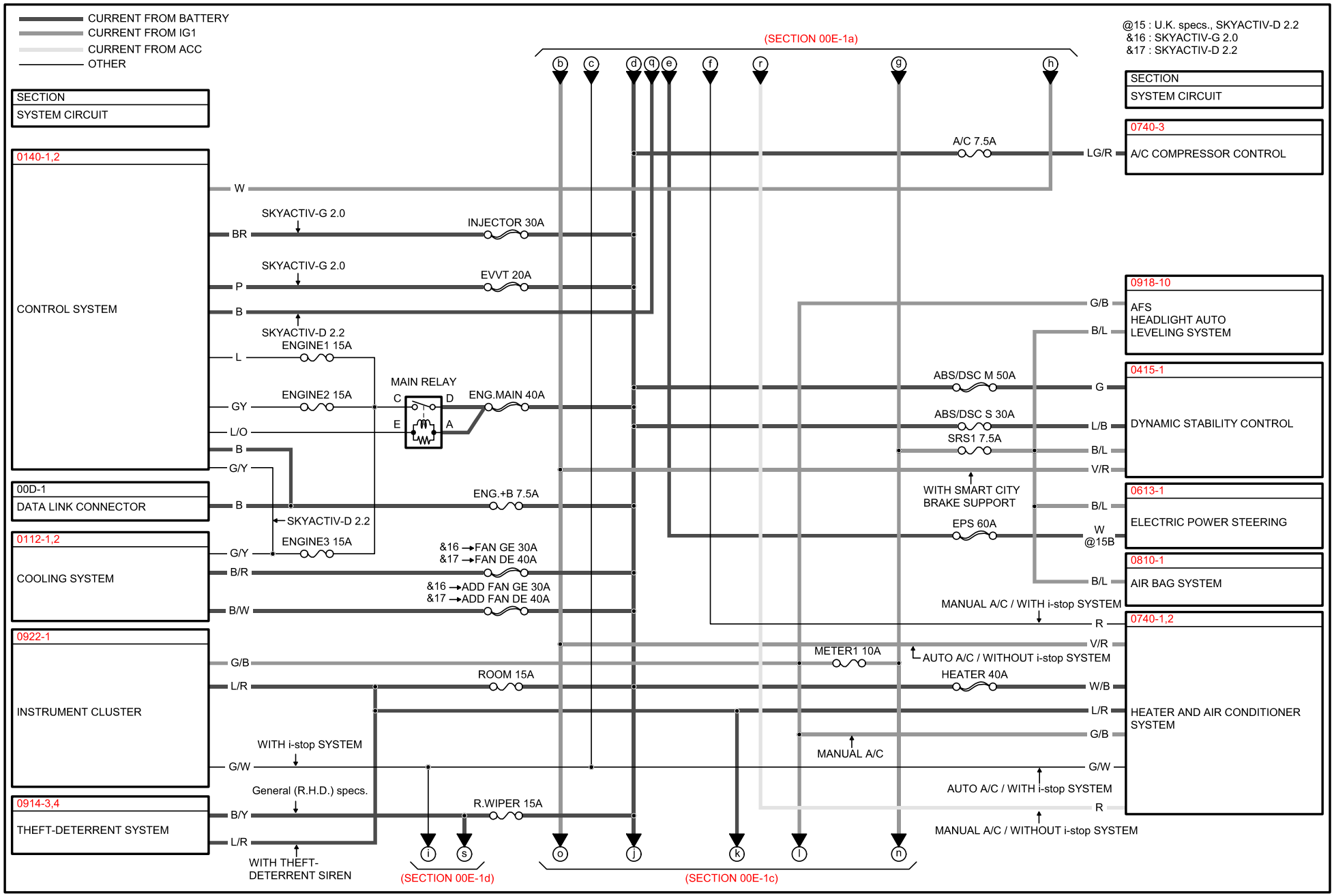

ELECTRICAL WIRING SCHEMATIC

00E-1c

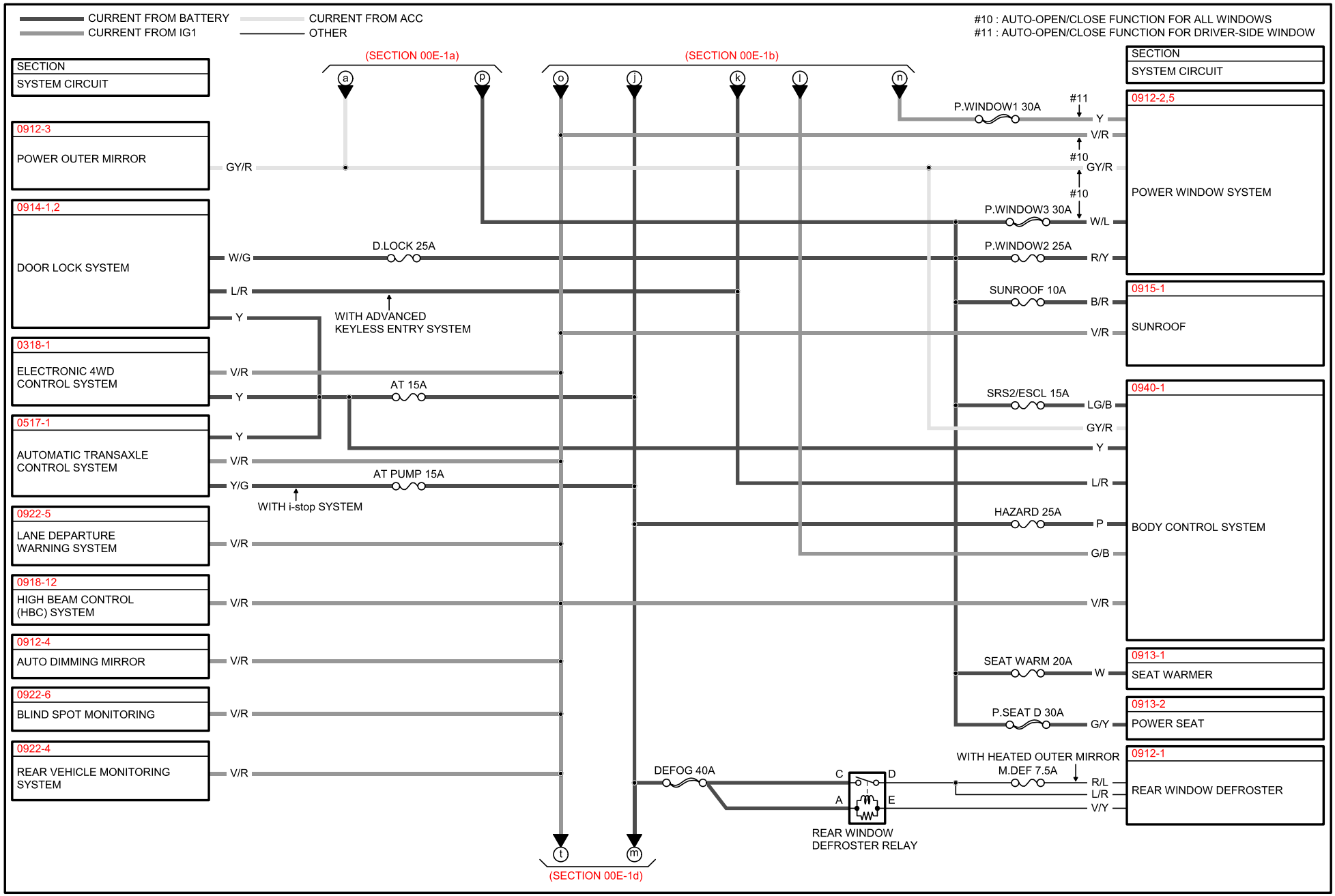

ELECTRICAL WIRING SCHEMATIC

00E-1d

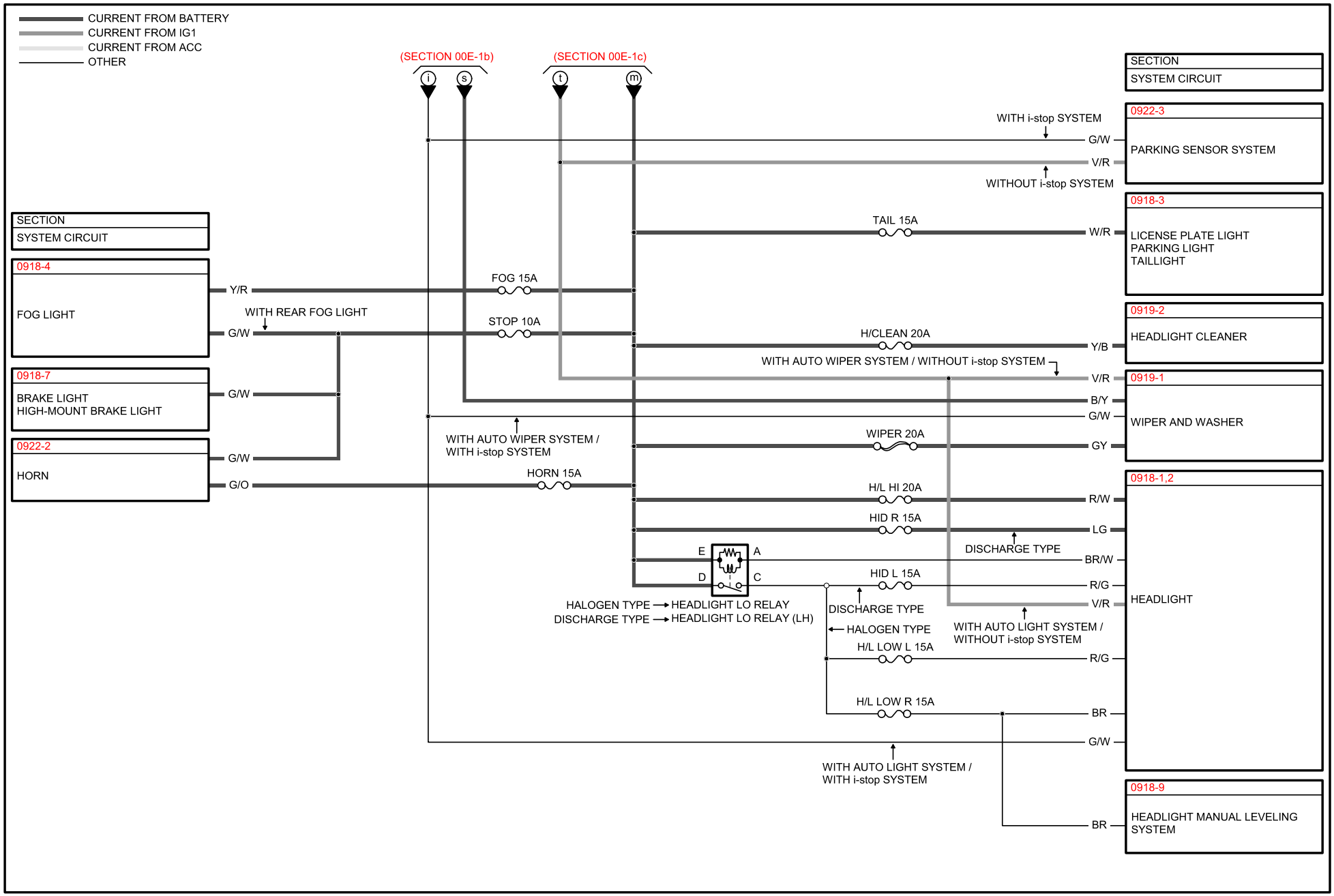

FUSE BOX

00F-1a

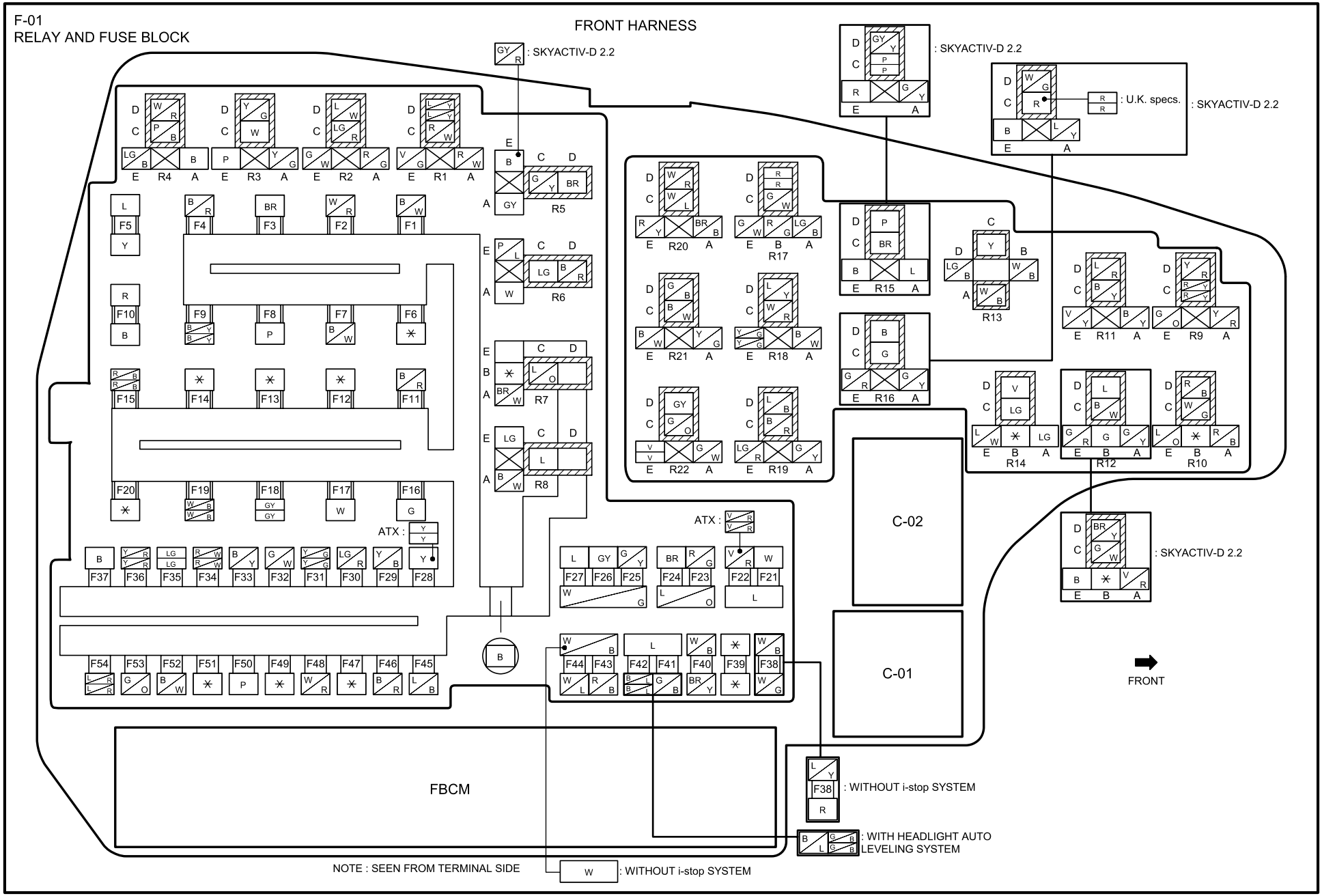

FUSE BOX

NO.	FUSE NAME	FUSE RATING	NO.	FUSE NAME	FUSE RATING
F1	(ADD FAN GE)	(30A)	F28	AT	15A
F2	IG2	30A	F29	(H/CLEAN)	(20A)
F3	(INJECTOR)	(30A)	F30	(A/C)	(7.5A)
F4	(FAN DE)	(40A)	F31	(AT PUMP)	(15A)
F5	(P.WINDOW1)	(30A)	F32	STOP	10A
F6	*	*	F33	(R.WIPER)	(15A)
F7	(ADD FAN DE)	(40A)	F34	H/L HI	20A
F8	(EVVT)	(20A)	F35	(HID R)	(15A)
F9	DEFOG	40A	F36	(FOG)	(15A)
F10	(DCDC DE)	(40A)	F37	ENG.+B	7.5A
F11	(FAN GE)	(30A)	F38	(AUDIO2)	(7.5A)
F12	*	*	F39	*	*
F13	*	*	F40	(METER2)	(7.5A)
F14	*	*	F41	METER1	10A
F15	ENG.MAIN	40A	F42	SRS1	7.5A
F16	ABS/DSC M	50A	F43	(BOSE)	(25A)
F17	CABIN.+B	50A	F44	(AUDIO1)	(15A)
F18	WIPER	20A	F45	ABS/DSC S	30A
F19	HEATER	40A	F46	(FUEL PUMP)	(15A)
F20	(DCDC REG)	(30A)	F47	(FUEL WARM)	(25A)
F21	ENGINE.IG1	7.5A	F48	(TAIL)	(15A)
F22	C/U IG1	15A	F49	*	*
F23	(H/L LOW L) (HID L)	(15A)	F50	HAZARD	25A
F24	(H/L LOW R)	(15A)	F51	(DRL)	(15A)
F25	ENGINE3	15A	F52	(R.OUTLET2)	(15A)
F26	ENGINE2	15A	F53	HORN	15A
F27	ENGINE1	15A	F54	ROOM	15A

( ) : IF EQUIPPED

NO.	RELAY NAME
R1	HEADLIGHT HI RELAY {H/L HI}
R2	(A/C RELAY {A/C})
R3	(ELECTRIC AT OIL PUMP RELAY {AT PUMP})
R4	(TNS RELAY {TAIL})
R5	(FUEL INJECTOR RELAY {INJECTOR}) ← SKYACTIV-G 2.0 (CHECK CONNECTOR) ← SKYACTIV-D 2.2
R6	(FUEL PUMP RELAY {FUEL PUMP})
R7	(HEADLIGHT LO RELAY {H/L LOW}) <{HID L}> ← HALOGEN TYPE (HEADLIGHT LO RELAY (LH) {HID L}) <{H/L LOW}> ← DISCHARGE TYPE
R8	IG1 RELAY {IG1}
R9	(FRONT FOG LIGHT RELAY {FOG})
R10	MAIN RELAY {ENG.MAIN}
R11	REAR WINDOW DEFROSTER RELAY {DEFOG}
R12	(COOLING FAN RELAY NO.3 {ADD FAN GE}) <{DCDC IG1}> ← SKYACTIV-G 2.0 (IGNITION RELAY (IG1_STAB) {DCDC IG1}) <{ADD FAN GE}> ← SKYACTIV-D 2.2
R13	BLOWER RELAY {HEATER}
R14	(HEADLIGHT LO RELAY (RH) {HID R}) <{DRL}>
R15	(ELECTRIC VARIABLE VALVE TIMING RELAY {EVVT}) <{BLOWBY.H}> ← SKYACTIV-G 2.0 (BLOW-BY HEATER RELAY {BLOWBY.H}) <{EVVT}> ← SKYACTIV-D 2.2
R16	(COOLING FAN RELAY NO.2 {FAN GE2}) <{DCDC ACC}> ← SKYACTIV-G 2.0 (IGNITION RELAY (ACC_STAB) {DCDC ACC}) <{FAN GE2}> ← SKYACTIV-D 2.2
R17	(BRAKE LIGHT RELAY {STOP})
R18	ACC RELAY {ACC}
R19	(COOLING FAN RELAY NO.1 {FAN GE1})
R20	STARTER RELAY {STARTER}
R21	(OUTLET RELAY {R.OUTLET})
R22	HORN RELAY {HORN}

( ) : IF EQUIPPED
< > : NOT USED

FUSE BOX

F-02
FUSE BLOCK

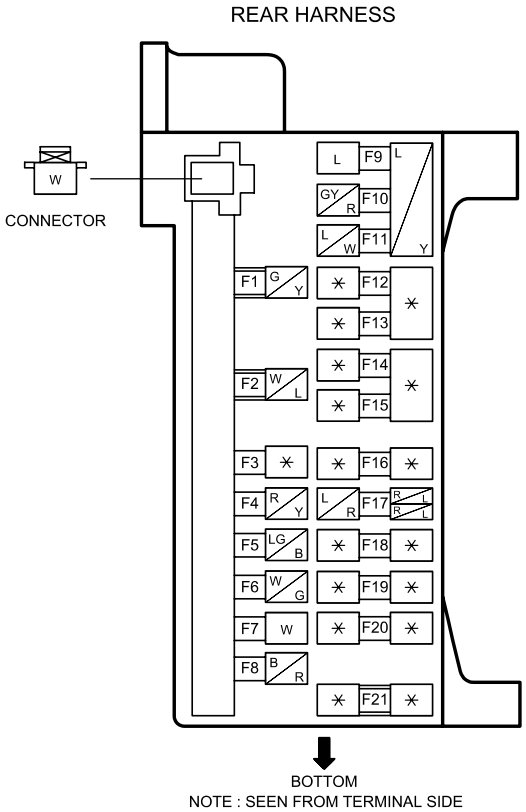

NO.	FUSE NAME	FUSE RATING	NO.	FUSE NAME	FUSE RATING	NO.	FUSE NAME	FUSE RATING
F1	(P.SEAT D)	(30A)	F8	(SUNROOF)	(10A)	F15	*	*
F2	(P.WINDOW3)	(30A)	F9	(F.OUTLET)	(15A)	F16	*	*
F3	(R.OUTLET3)	(15A)	F10	MIRROR	7.5A	F17	(M.DEF)	(7.5A)
F4	P.WINDOW2	25A	F11	(R.OUTLET1)	(15A)	F18	*	*
F5	(SRS2/ESCL)	(15A)	F12	*	*	F19	*	*
F6	D.LOCK	25A	F13	*	*	F20	*	*
F7	(SEAT WARM)	(20A)	F14	*	*	F21	*	*

( ) : IF EQUIPPED

FUSE BOX

00F-3

F-03
RELAY BOX

FRONT HARNESS

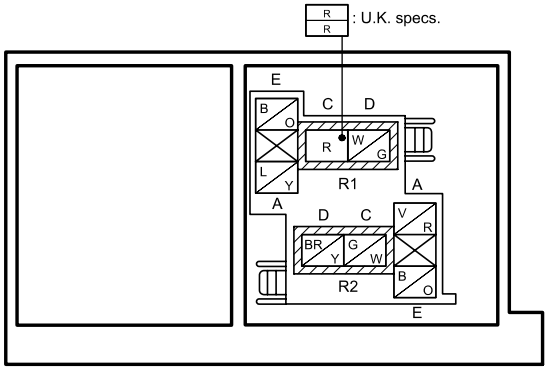

FRONT

NOTE : SEEN FROM TERMINAL SIDE

NO.	RELAY NAME
R1	IGNITION RELAY (ACC_STAB) {DCDC ACC}
R2	IGNITION RELAY (IG1_STAB) {DCDC IG1}

(SKYACTIV-G 2.0)

FRONT HARNESS

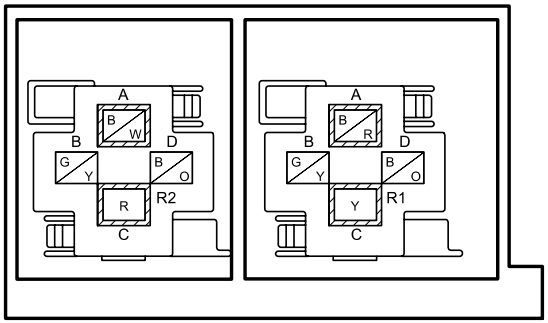

FRONT

NOTE : SEEN FROM TERMINAL SIDE

NO.	RELAY NAME
R1	COOLING FAN RELAY NO.1 {FAN DE}
R2	COOLING FAN RELAY NO.2 {ADD FAN DE}

(SKYACTIV-D 2.2)

FUSE BOX

F-04
MAIN FUSE

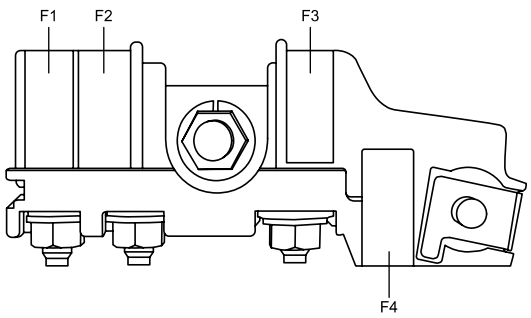

FRONT HARNESS ENGINE HARNESS

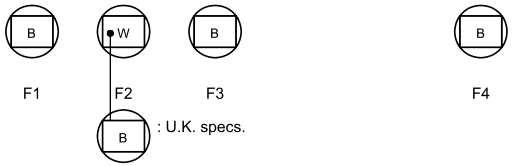

NO.	FUSE NAME	FUSE RATING
F1	DCDC	50A
F2	EPS	60A
F3	MAIN	200A
F4	STARTER	250A

(SKYACTIV-G 2.0)

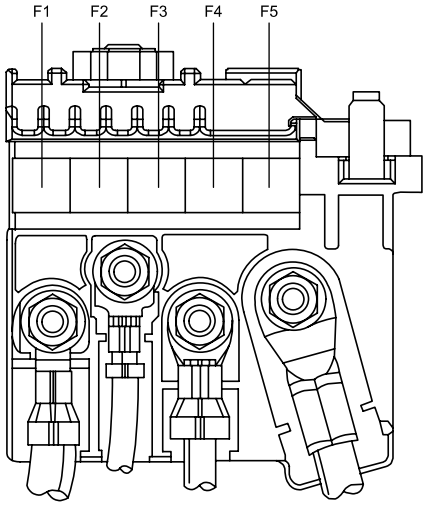

FRONT HARNESS EMISSION HARNESS

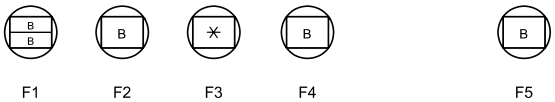

NO.	FUSE NAME	FUSE RATING
F1	GLOW	80A
F2	EPS	60A
F3	*	*
F4	MAIN	200A
F5	STARTER	450A

(SKYACTIV-D 2.2)

THIS PAGE INTENTIONALLY LEFT BLANK

COMMON CONNECTOR LIST

0140-101A
PCM

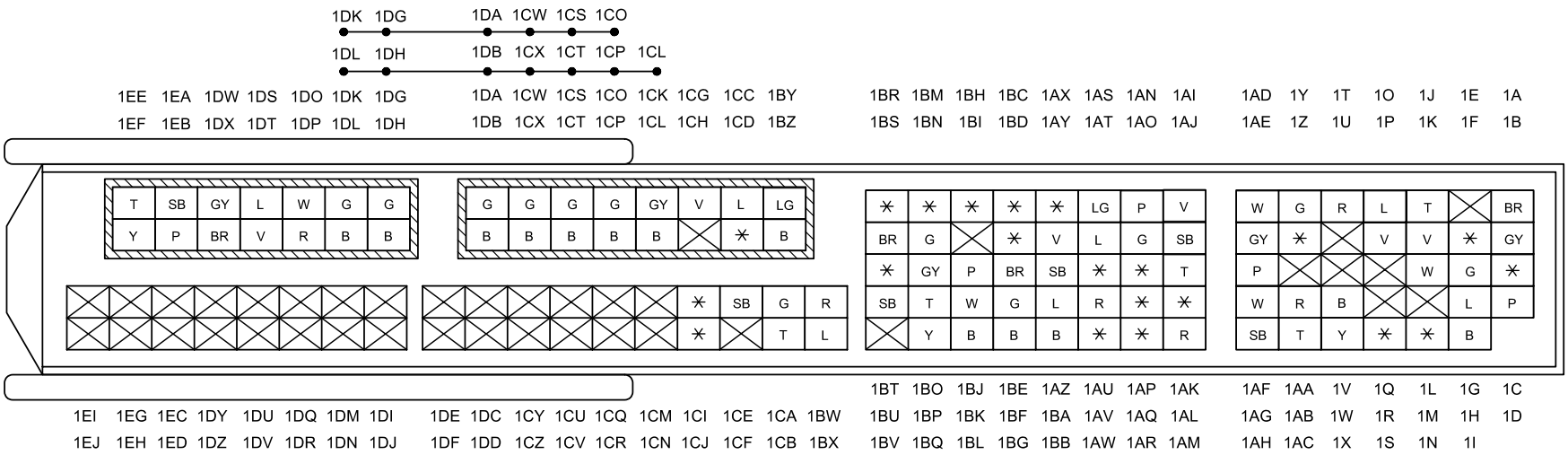

0140-101B
PCM

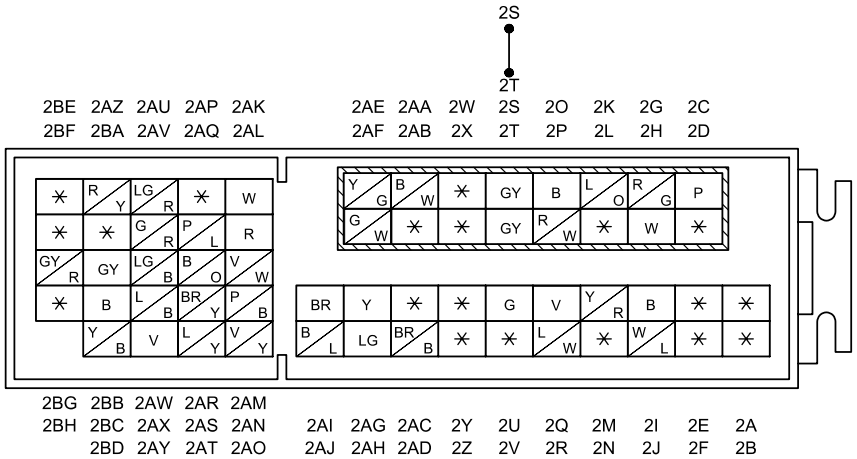

COMMON CONNECTOR LIST

0140-201A
PCM

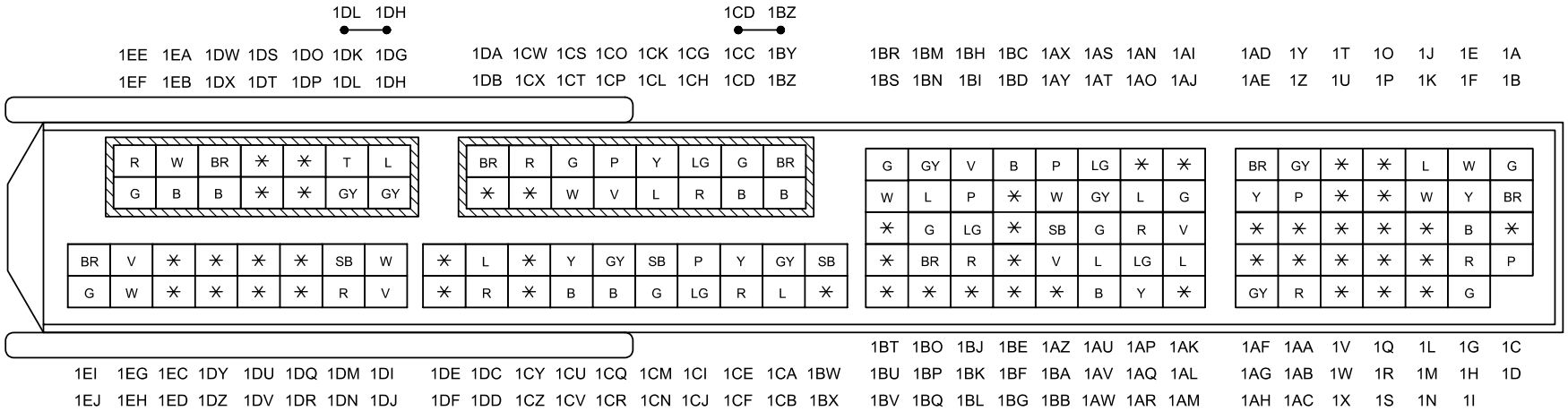

0140-201B
PCM

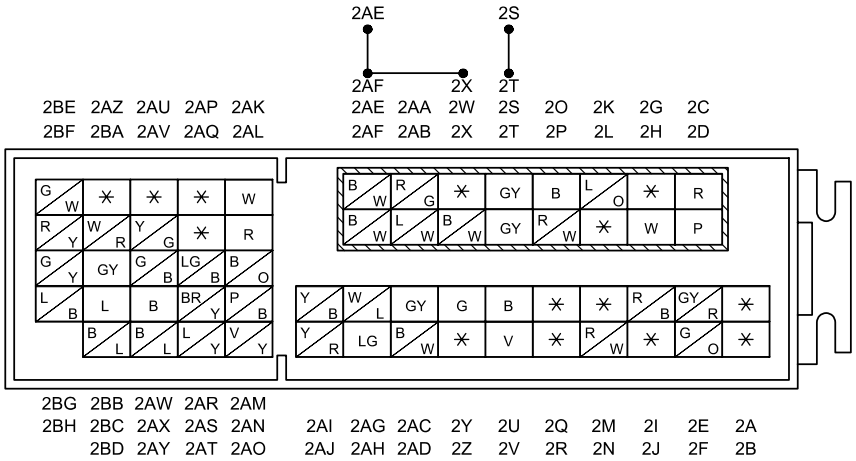

COMMON CONNECTOR LIST

C-01
FRONT HARNESS-EMISSION HARNESS

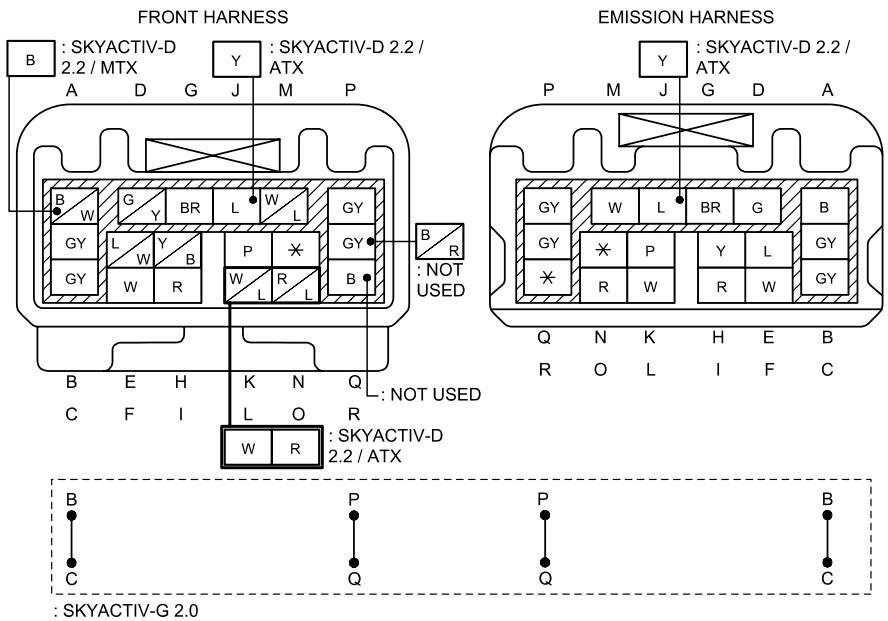

C-02
FRONT HARNESS-EMISSION HARNESS

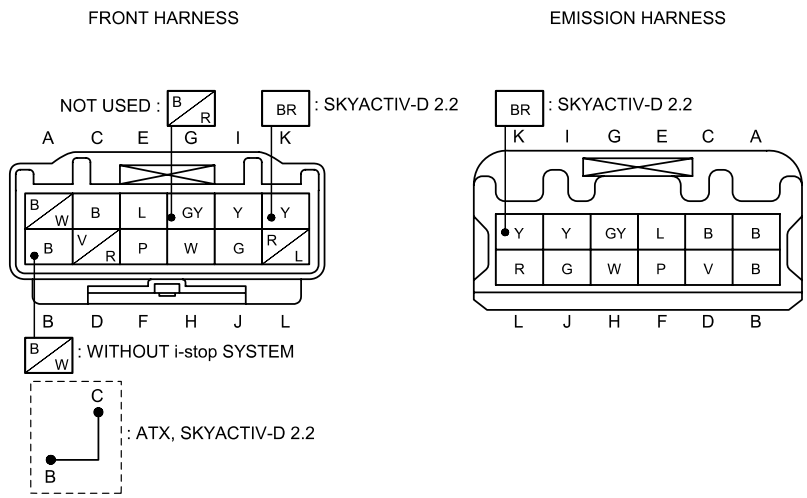

C-03
FRONT HARNESS-INSTRUMENT PANEL HARNESS

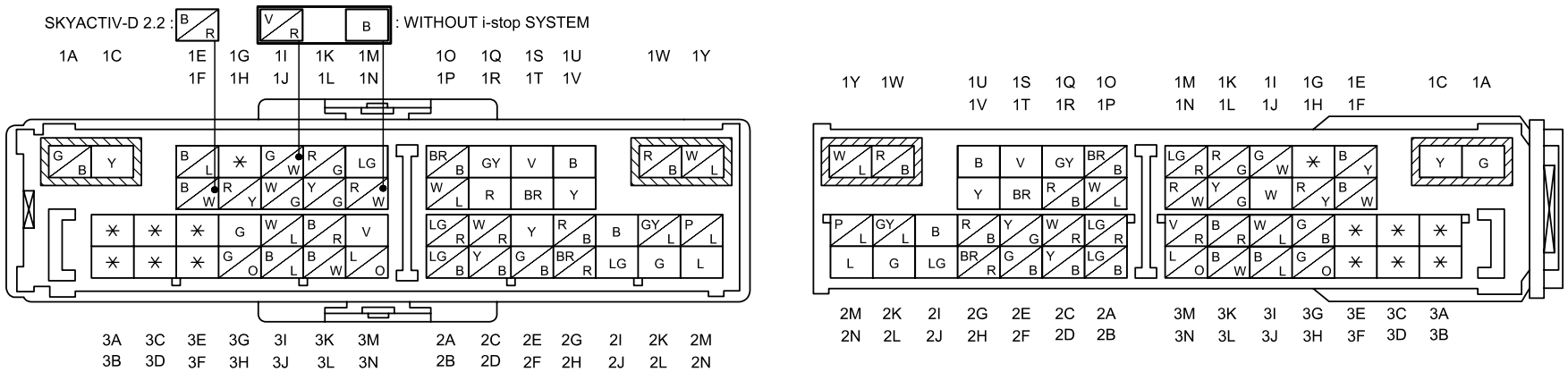

COMMON CONNECTOR LIST

C-04
FRONT HARNESS-REAR HARNESS

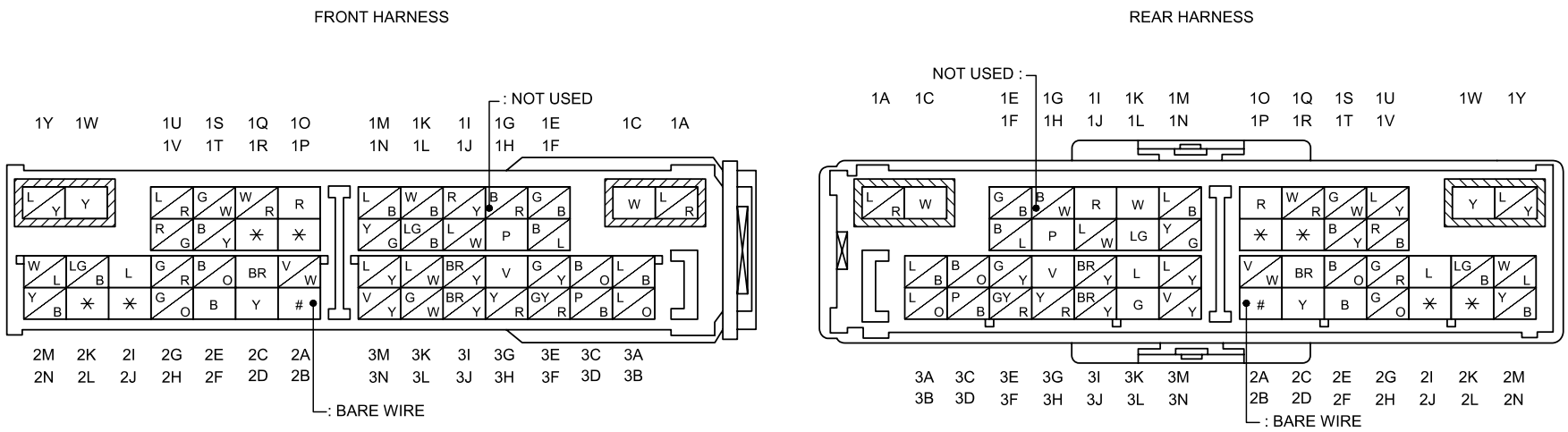

C-05
FRONT HARNESS-REAR HARNESS

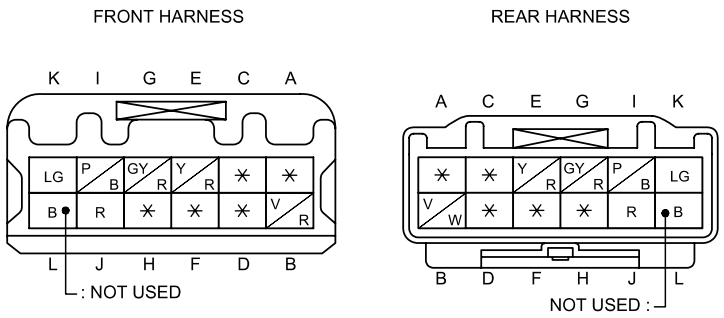

C-06
FRONT HARNESS-SHORT CORD

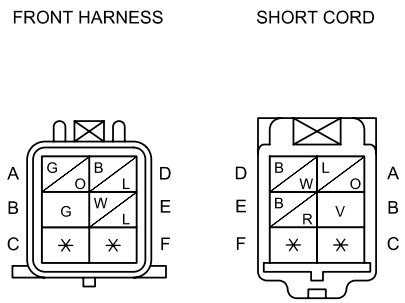

(WITH PARKING SENSOR SYSTEM)

C-07
FRONT HARNESS-SHORT CORD

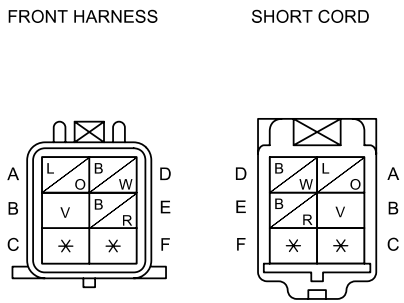

(WITH PARKING SENSOR SYSTEM)

COMMON CONNECTOR LIST

C-08
INSTRUMENT PANEL HARNESS-REAR HARNESS

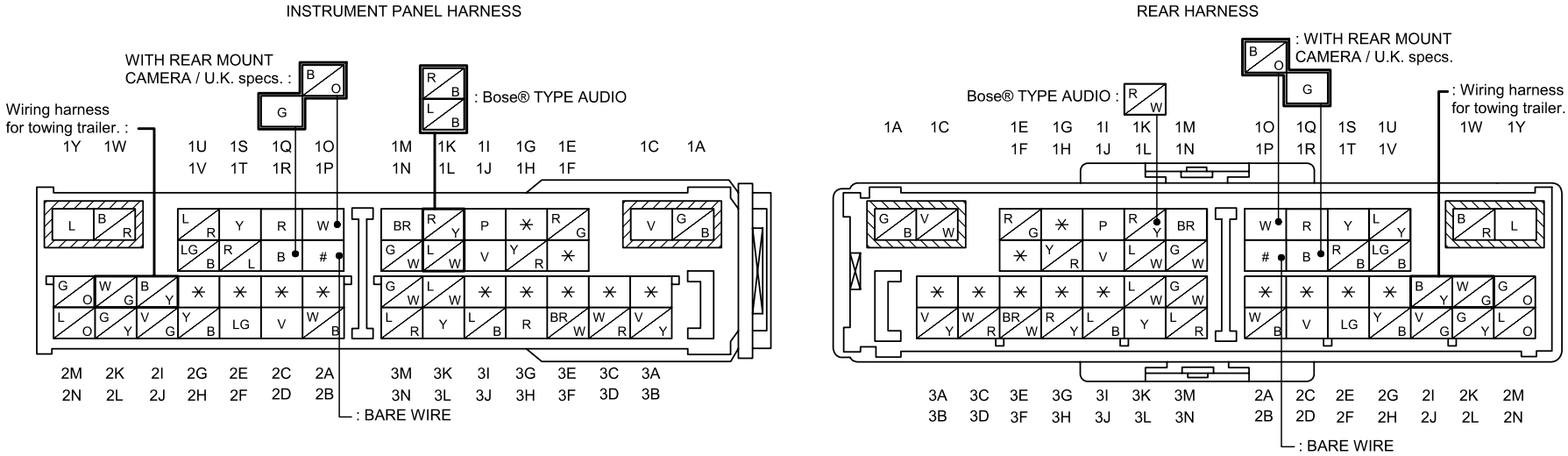

C-09
INSTRUMENT PANEL HARNESS-REAR HARNESS

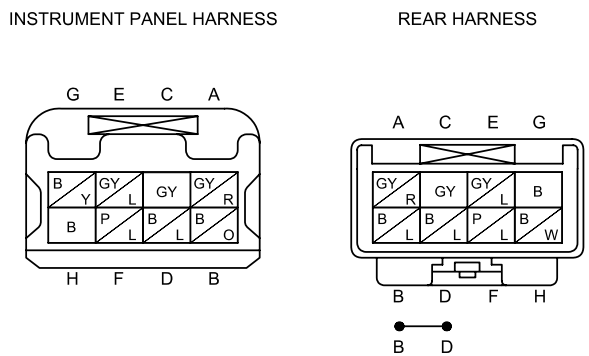

C-10
INSTRUMENT PANEL HARNESS-REAR HARNESS

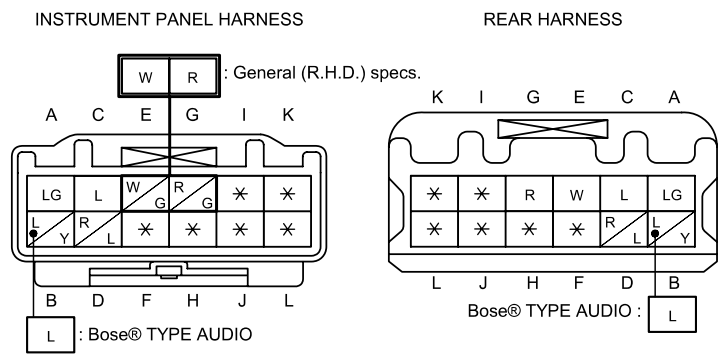

COMMON CONNECTOR LIST

C-11
INSTRUMENT PANEL HARNESS-INTERIOR LIGHT NO.2 HARNESS

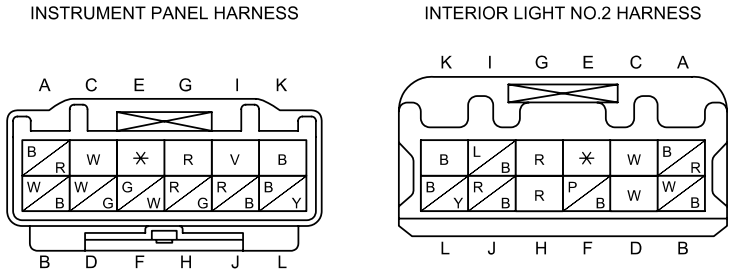

C-12
INSTRUMENT PANEL HARNESS-INTERIOR LIGHT NO.2 HARNESS

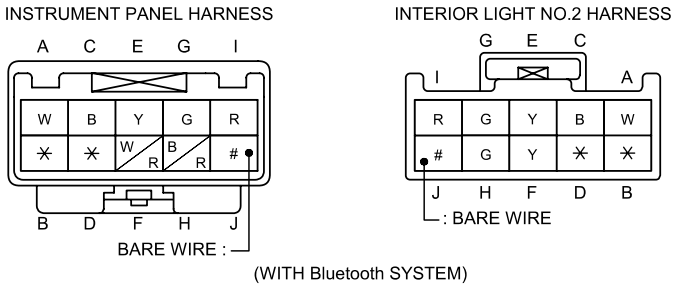

C-13
INSTRUMENT PANEL HARNESS-SHORT CORD

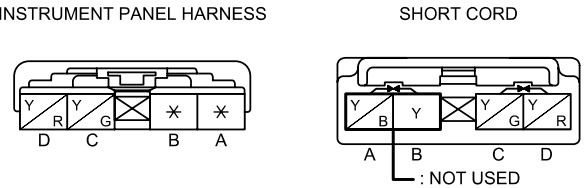

C-14
REAR HARNESS-REAR NO.5 HARNESS

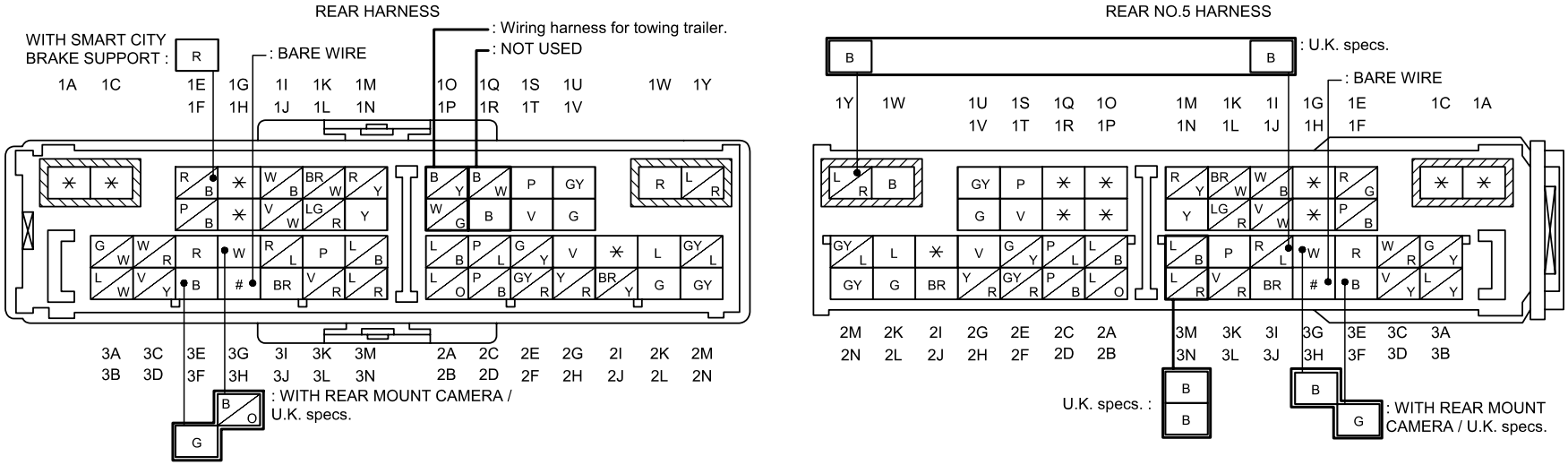

COMMON CONNECTOR LIST

C-15
REAR HARNESS-DOOR NO.1 HARNESS

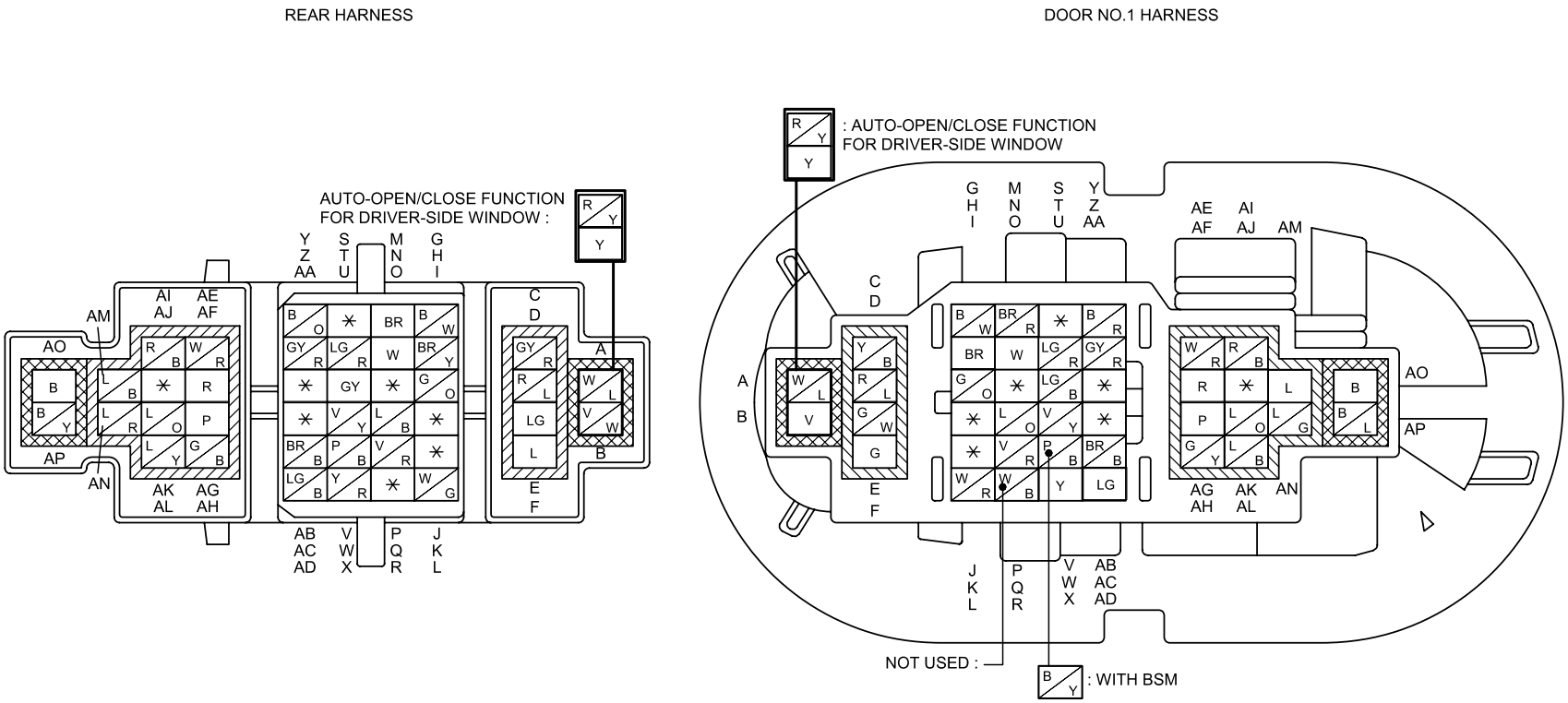

COMMON CONNECTOR LIST

00C-8

C-16
REAR HARNESS-DOOR NO.2 HARNESS

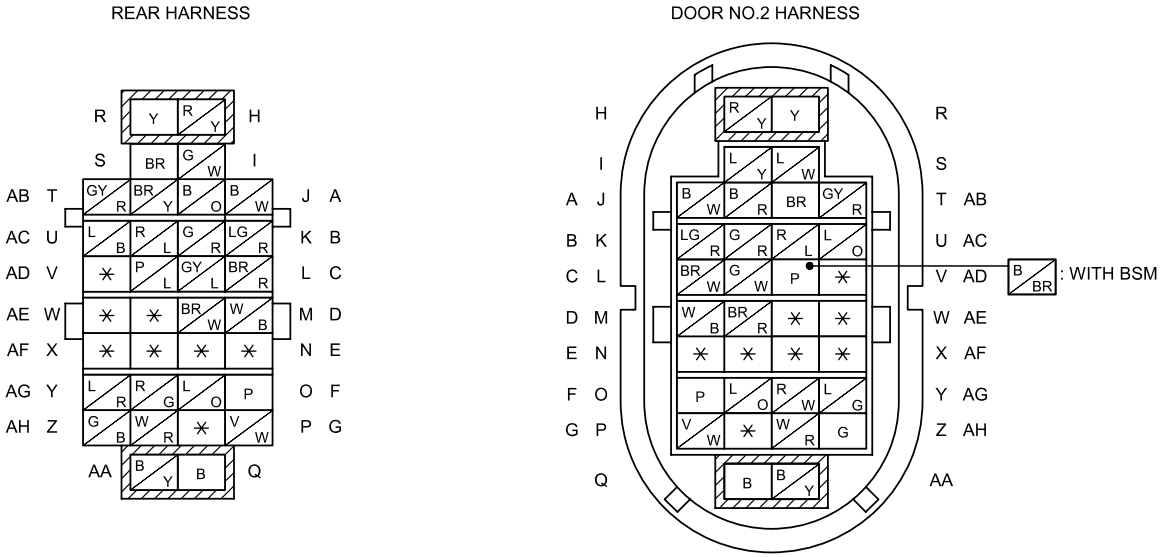

C-17
REAR HARNESS-DOOR NO.3 HARNESS

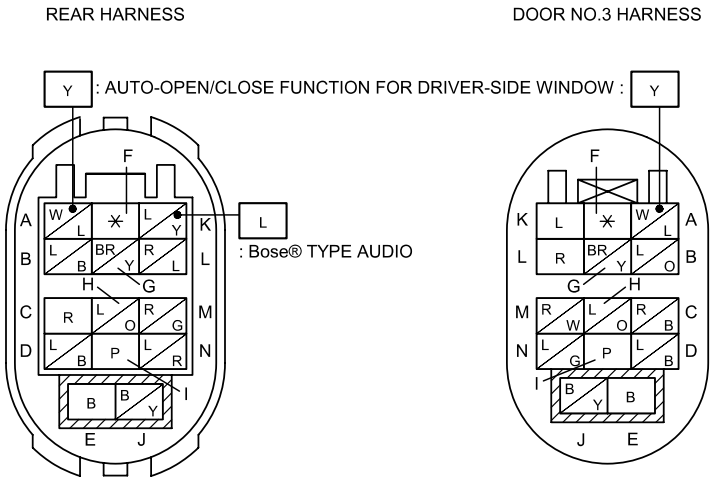

C-18
REAR HARNESS-DOOR NO.4 HARNESS

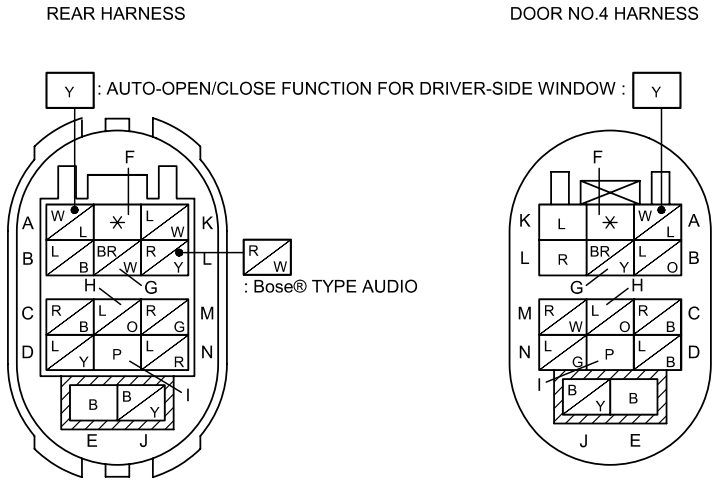

COMMON CONNECTOR LIST

C-19
REAR HARNESS-SHORT CORD

REAR HARNESS

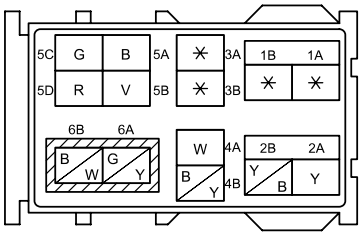

SHORT CORD

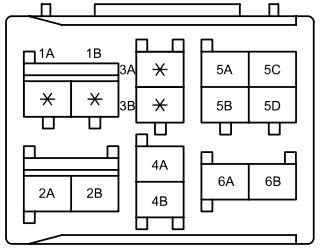

C-20
REAR HARNESS-SHORT CORD

REAR HARNESS

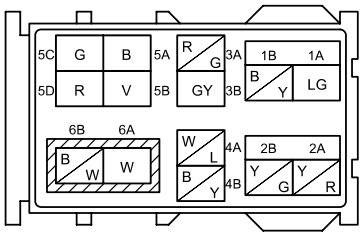

SHORT CORD

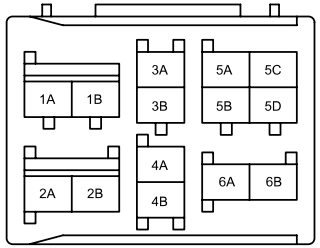

C-21
REAR NO.5 HARNESS-REAR NO.2 HARNESS

REAR NO.5 HARNESS

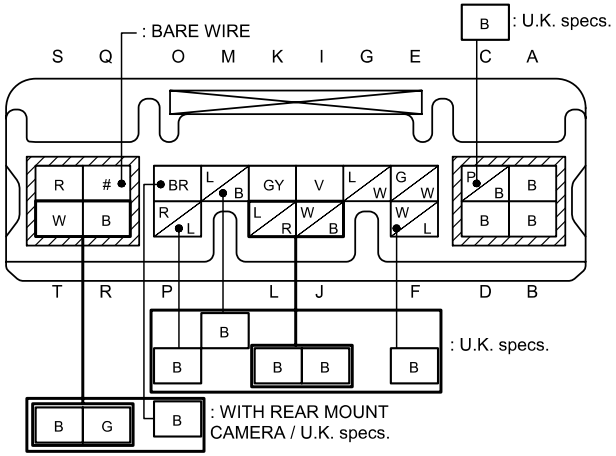

REAR NO.2 HARNESS

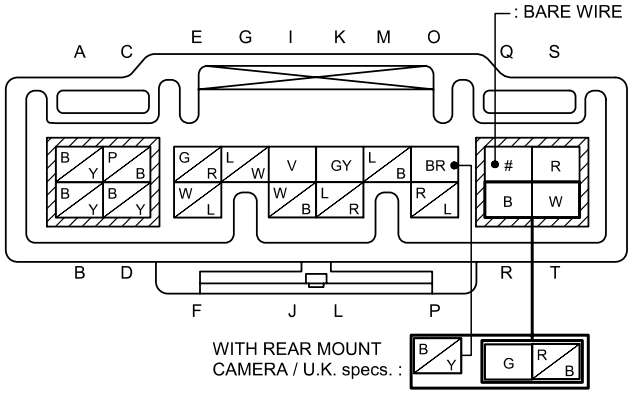

COMMON CONNECTOR LIST

C-22
REAR NO.5 HARNESS-REAR NO.2 HARNESS

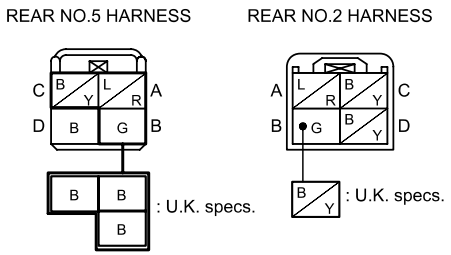

C-23
REAR NO.5 HARNESS-REAR NO.4 HARNESS

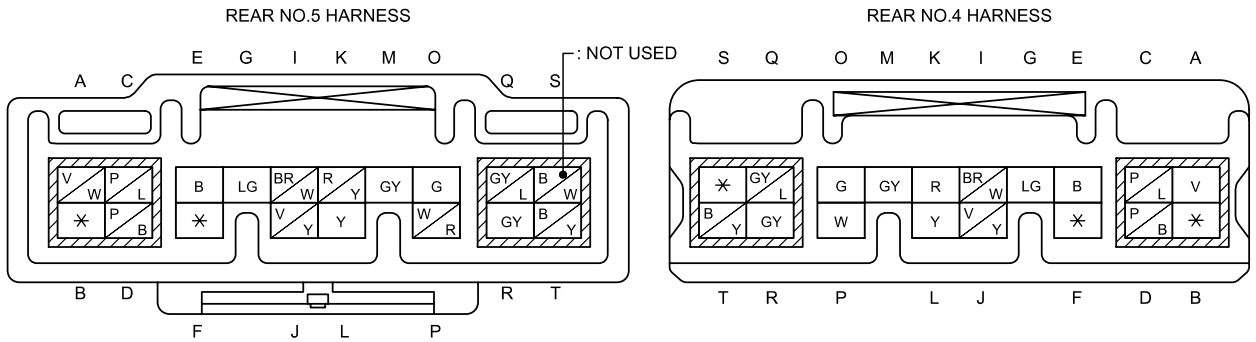

C-24
REAR NO.5 HARNESS-SHORT CORD

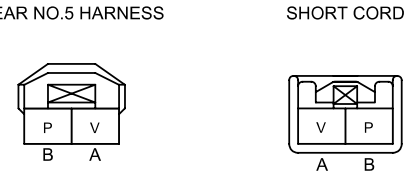

(Bose® TYPE AUDIO)

C-25
REAR NO.5 HARNESS-SHORT CORD

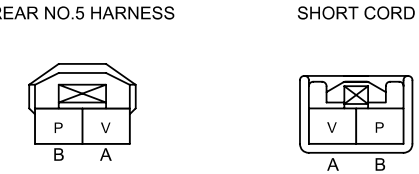

(Bose® TYPE AUDIO)

C-26
REAR NO.5 HARNESS-SHORT CORD

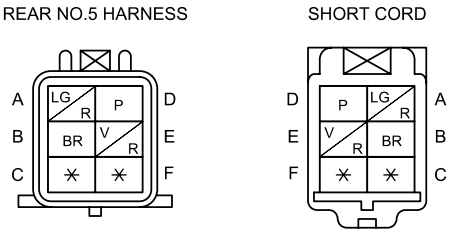

(4WD)

C-27
INTERIOR LIGHT NO.2 HARNESS-SHORT CORD

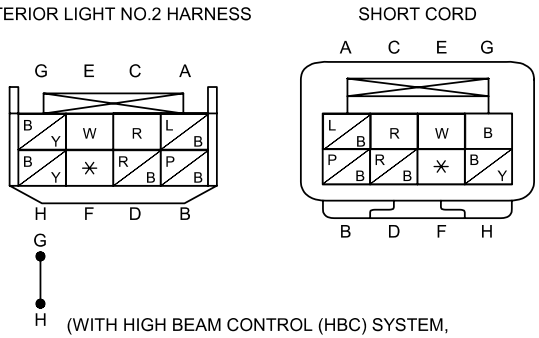

(WITH HIGH BEAM CONTROL (HBC) SYSTEM,
WITH SMART CITY BRAKE SUPPORT)

C-28
REAR NO.4 HARNESS-SHORT CORD

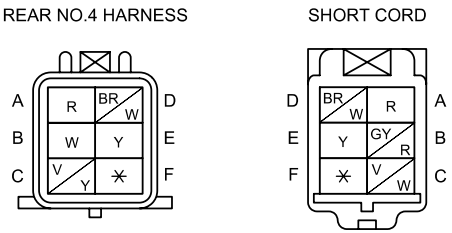

(WITH PARKING SENSOR SYSTEM)

C-30
DOOR NO.1 HARNESS-SHORT CORD

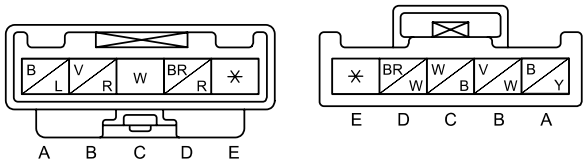

(WITH ADVANCED KEYLESS ENTRY SYSTEM)

COMMON CONNECTOR LIST

C-31
DOOR NO.2 HARNESS-SHORT CORD

DOOR NO.2 HARNESS

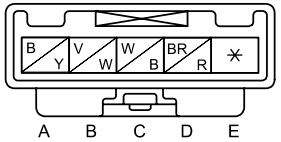

SHORT CORD

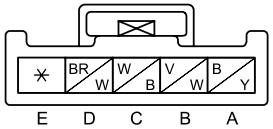

(WITH ADVANCED KEYLESS ENTRY SYSTEM)

C-32
JOINT CONNECTOR

FRONT HARNESS

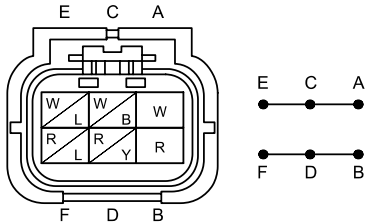

C-33
JOINT CONNECTOR

FRONT HARNESS

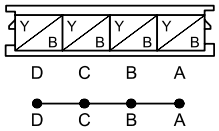

C-34
JOINT CONNECTOR

INSTRUMENT PANEL HARNESS

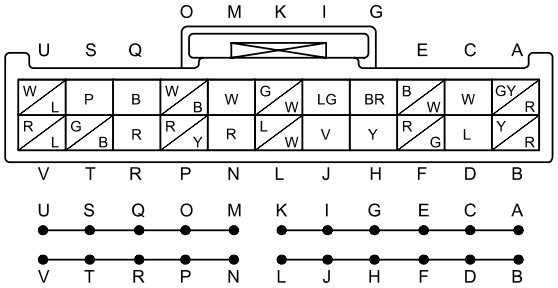

C-36
JOINT CONNECTOR

INSTRUMENT PANEL HARNESS

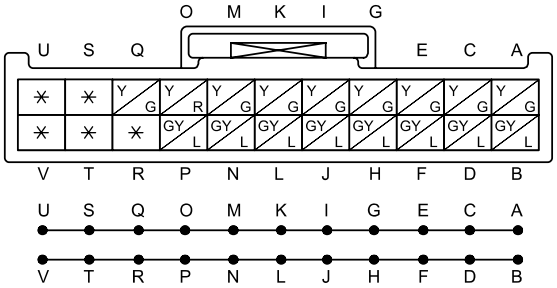

C-37
JOINT CONNECTOR

INSTRUMENT PANEL HARNESS

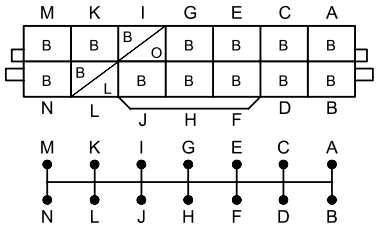

C-38
JOINT CONNECTOR

INSTRUMENT PANEL HARNESS

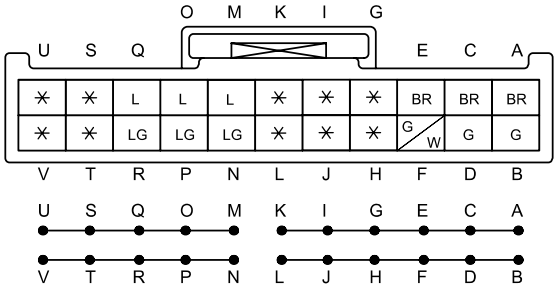

(WITHOUT Bose® TYPE AUDIO)

C-40
JOINT CONNECTOR

REAR NO.5 HARNESS

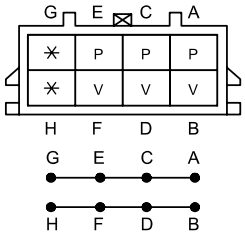

(Bose® TYPE AUDIO)

C-42
JOINT CONNECTOR

INTERIOR LIGHT NO.2 HARNESS

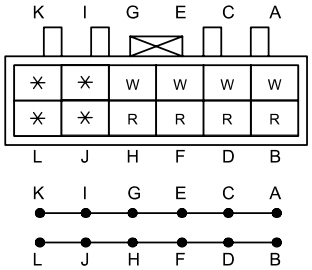

(WITH SMART CITY BRAKE SUPPORT /
WITH HIGH BEAM CONTROL (HBC) SYSTEM)

COMMON CONNECTOR LIST

C-43
REAR NO.5 HARNESS-SHORT CORD

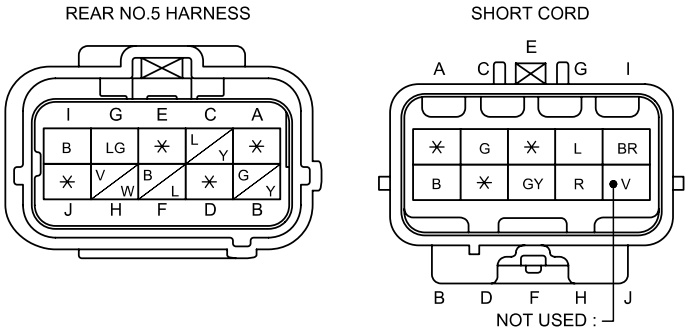

(WITH REAR VEHICLE MONITORING SYSTEM)

C-44
REAR NO.4 HARNESS-SHORT CORD

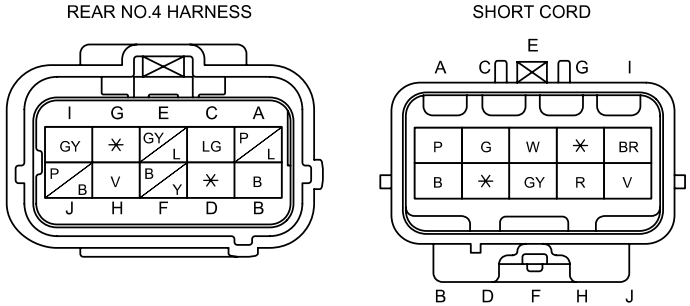

(WITH REAR VEHICLE MONITORING SYSTEM)

C-46
FRONT HARNESS-EMISSION HARNESS

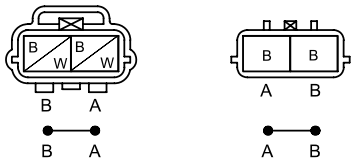

(SKYACTIV-D 2.2)

C-47
JOINT CONNECTOR

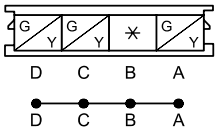

(WITH REAR VEHICLE MONITORING SYSTEM, WITH BSM)

C-48
JOINT CONNECTOR

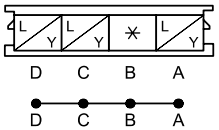

(WITH REAR VEHICLE MONITORING SYSTEM, WITH BSM)

C-49
JOINT CONNECTOR

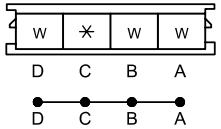

(4WD)

C-50
JOINT CONNECTOR

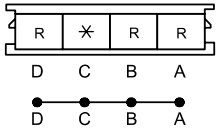

(4WD)

C-51
JOINT CONNECTOR

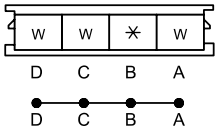

C-52
JOINT CONNECTOR

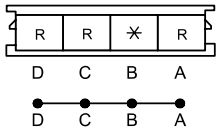

C-53
INSTRUMENT PANEL HARNESS-SHORT CORD

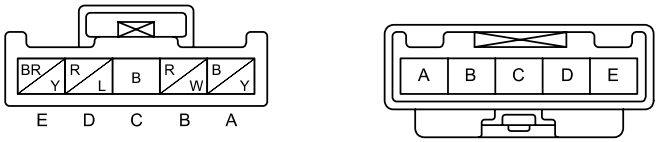

GROUND POINT

00G-1a

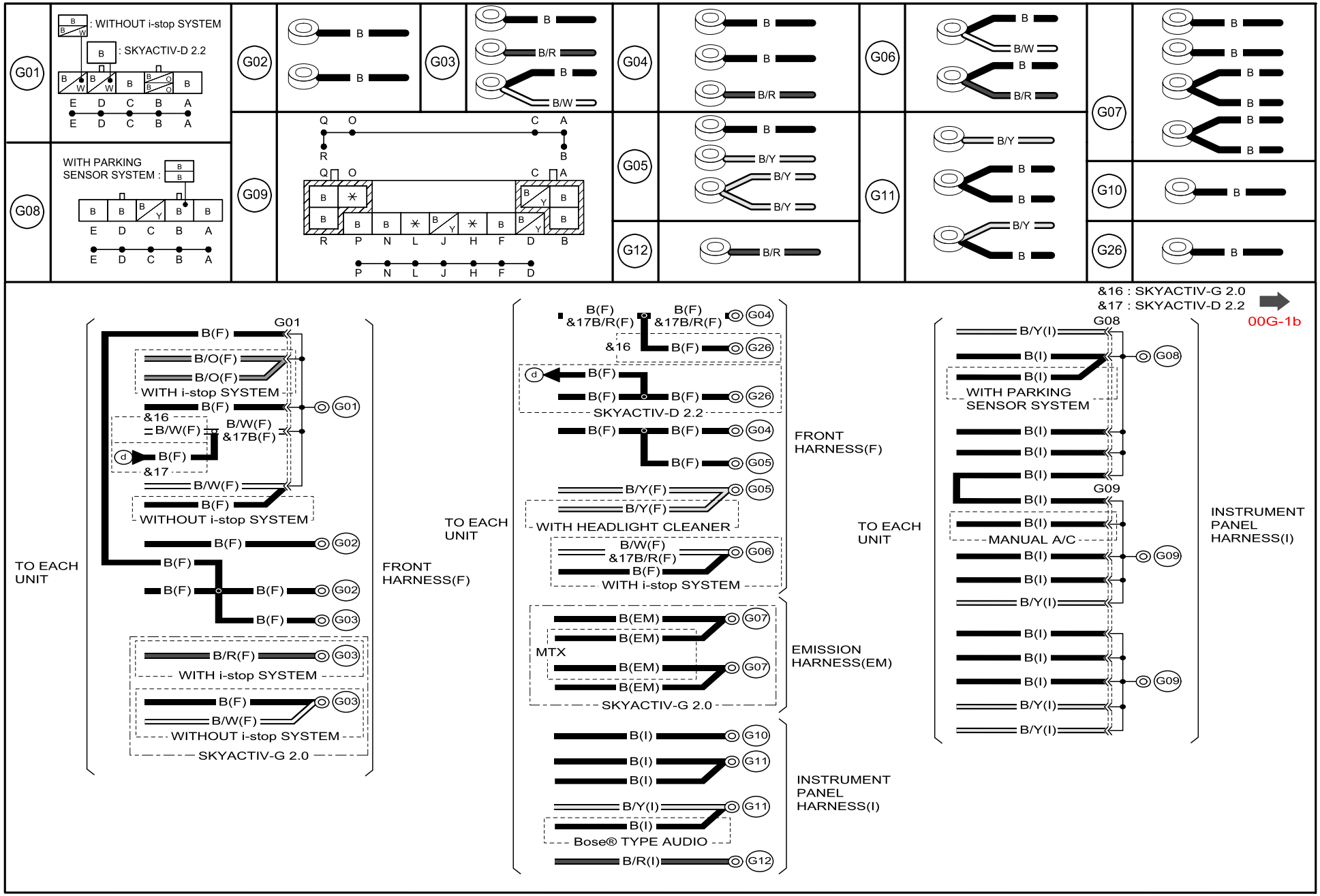

Refer to 00F section for the FUSE BOX, 00C section for the PCM CONNECTOR and COMMON CONNECTOR LIST.

GROUND POINT

00G-1a

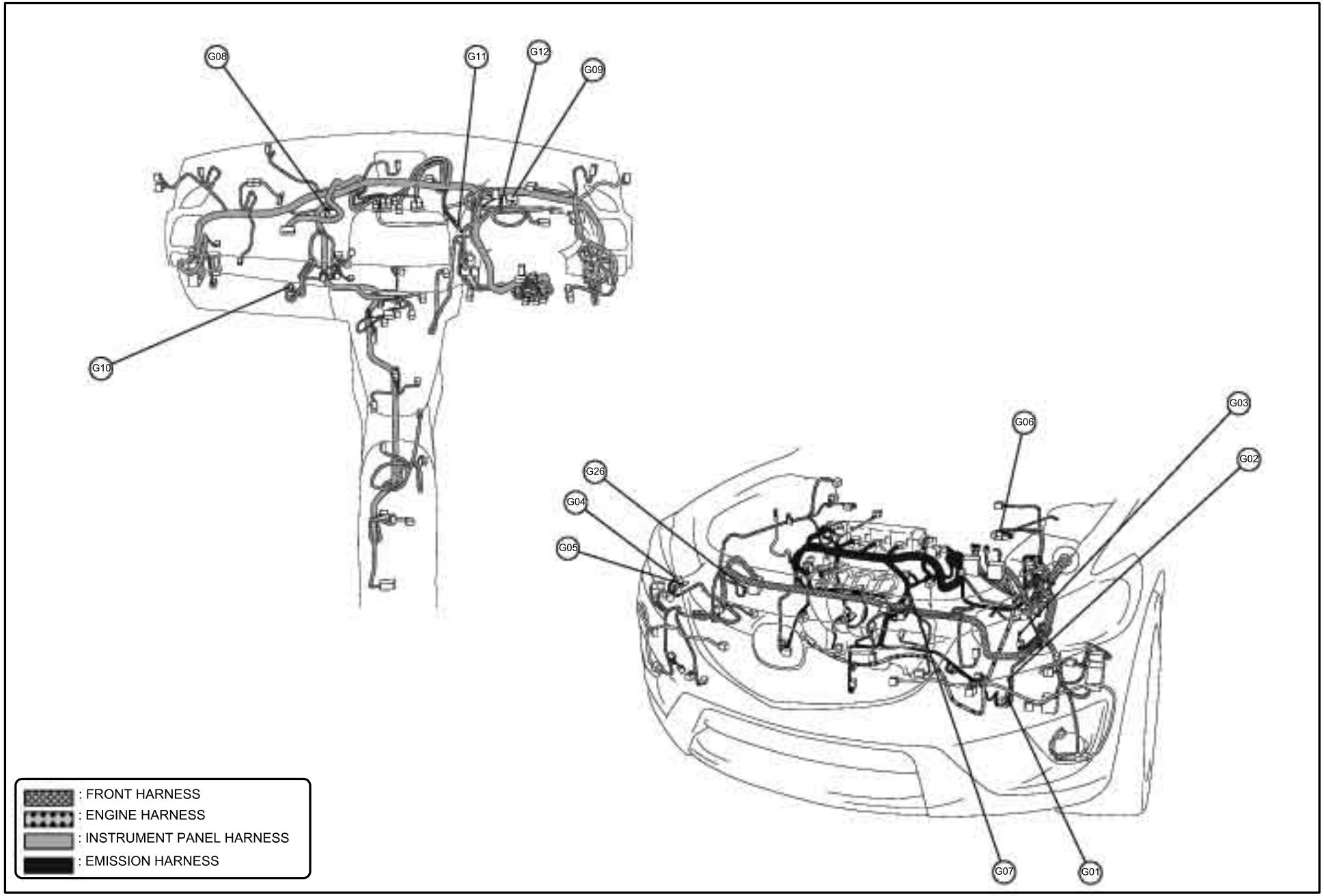

GROUND POINT

00G-1b

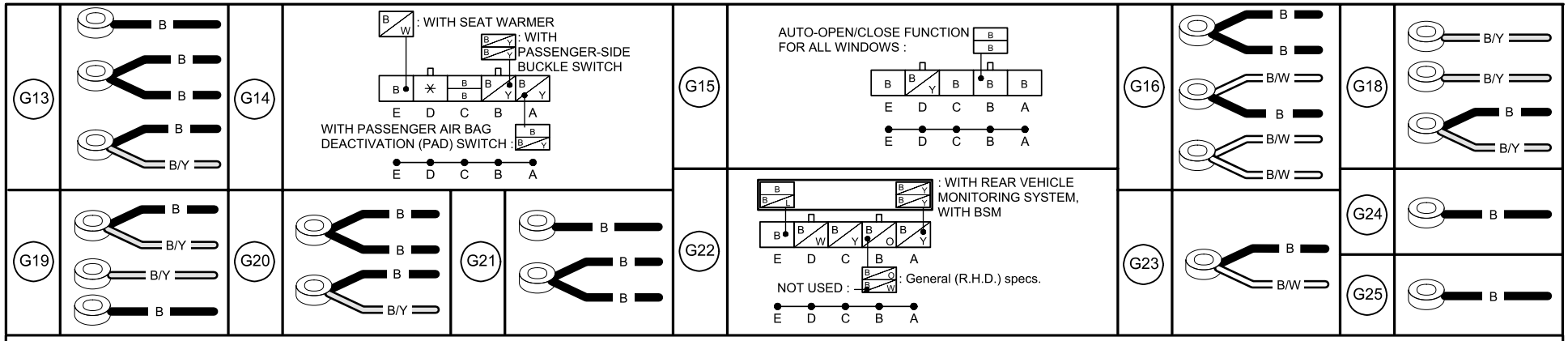

@2 : WITH ADVANCED KEYLESS ENTRY SYSTEM
@14 : WITH REAR VEHICLE MONITORING SYSTEM, WITH BSM
@16 : WITH PASSENGER-SIDE BUCKLE SWITCH
#10 : AUTO-OPEN/CLOSE FUNCTION FOR ALL WINDOWS
#13 : WITH PASSENGER AIR BAG DEACTIVATION (PAD) SWITCH
&11 : WITH SEAT WARMER

00G-1a

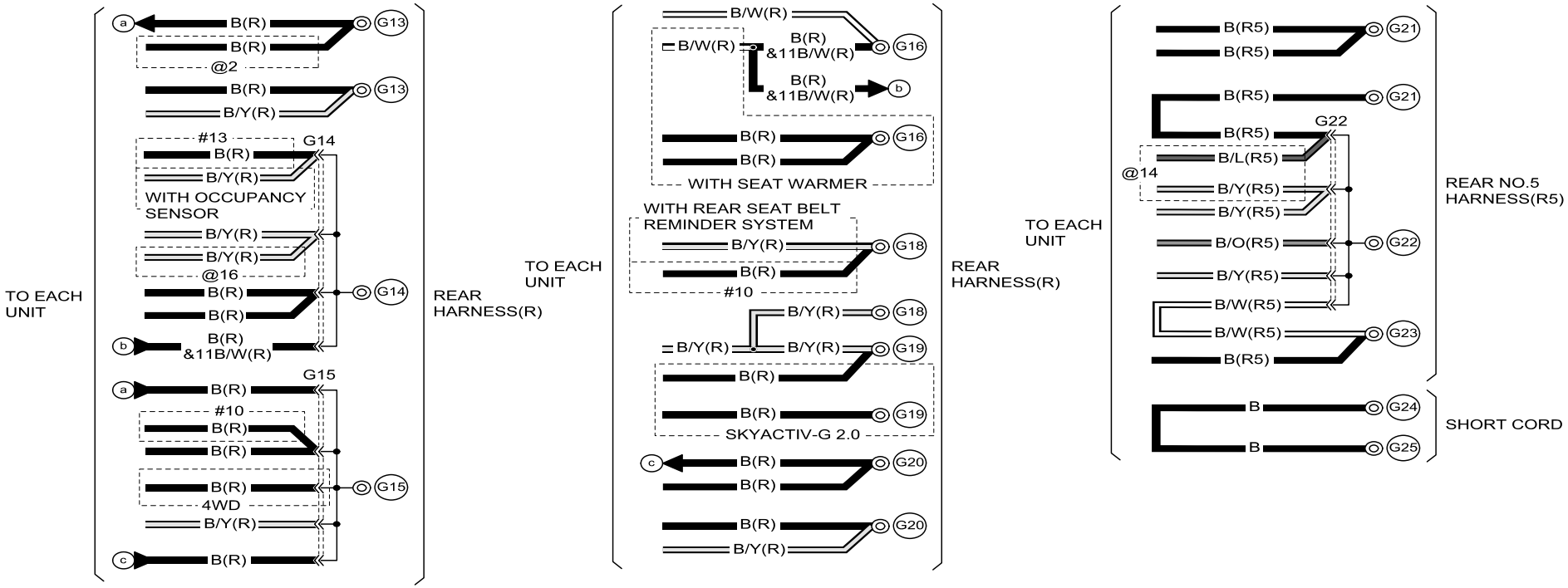

Refer to 00F section for the FUSE BOX, 00C section for the PCM CONNECTOR and COMMON CONNECTOR LIST.

GROUND POINT

00G-1b

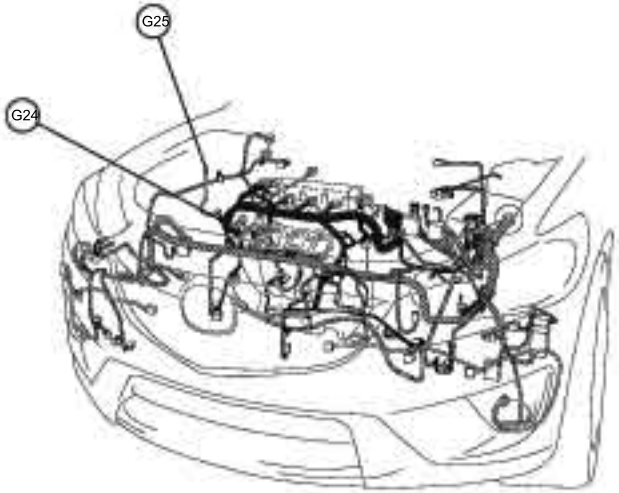

[SKYACTIV-G 2.0]

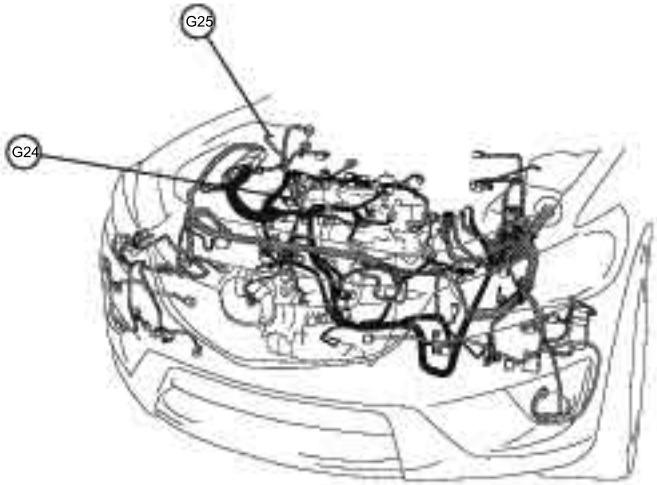

[SKYACTIV-D 2.2]

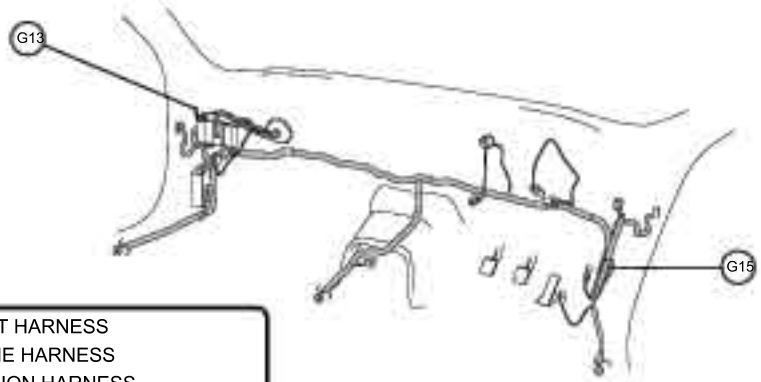

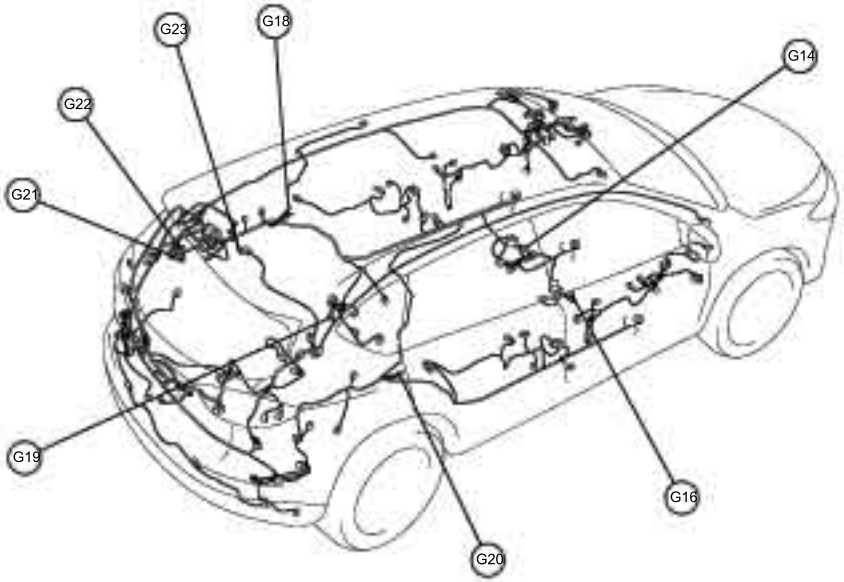

: FRONT HARNESS
: ENGINE HARNESS
: EMISSION HARNESS
: REAR HARNESS
: REAR NO.2 HARNESS
REAR NO.4 HARNESS
REAR NO.5 HARNESS
: DOOR HARNESS
: INTERIOR LIGHT HARNESS
INTERIOR LIGHT NO.2 HARNESS

DATA LINK CONNECTOR

00D-1a

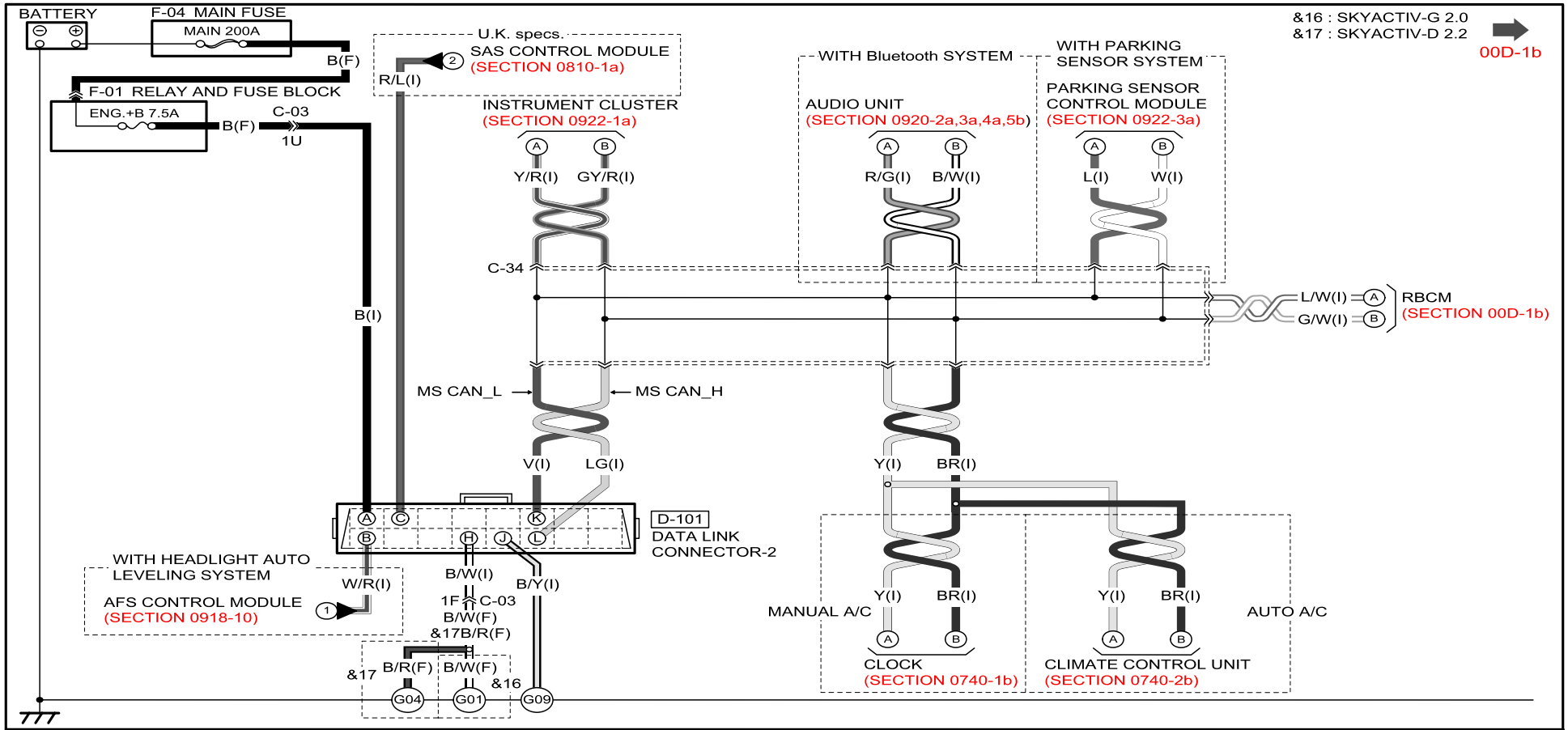

D-101
DATA LINK CONNECTOR-2

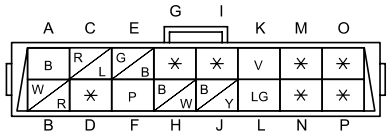

NOTE : SEEN FROM TERMINAL SIDE

Refer to 00F section for the FUSE BOX, 00C section for the PCM CONNECTOR and COMMON CONNECTOR LIST.

DATA LINK CONNECTOR

00D-1a

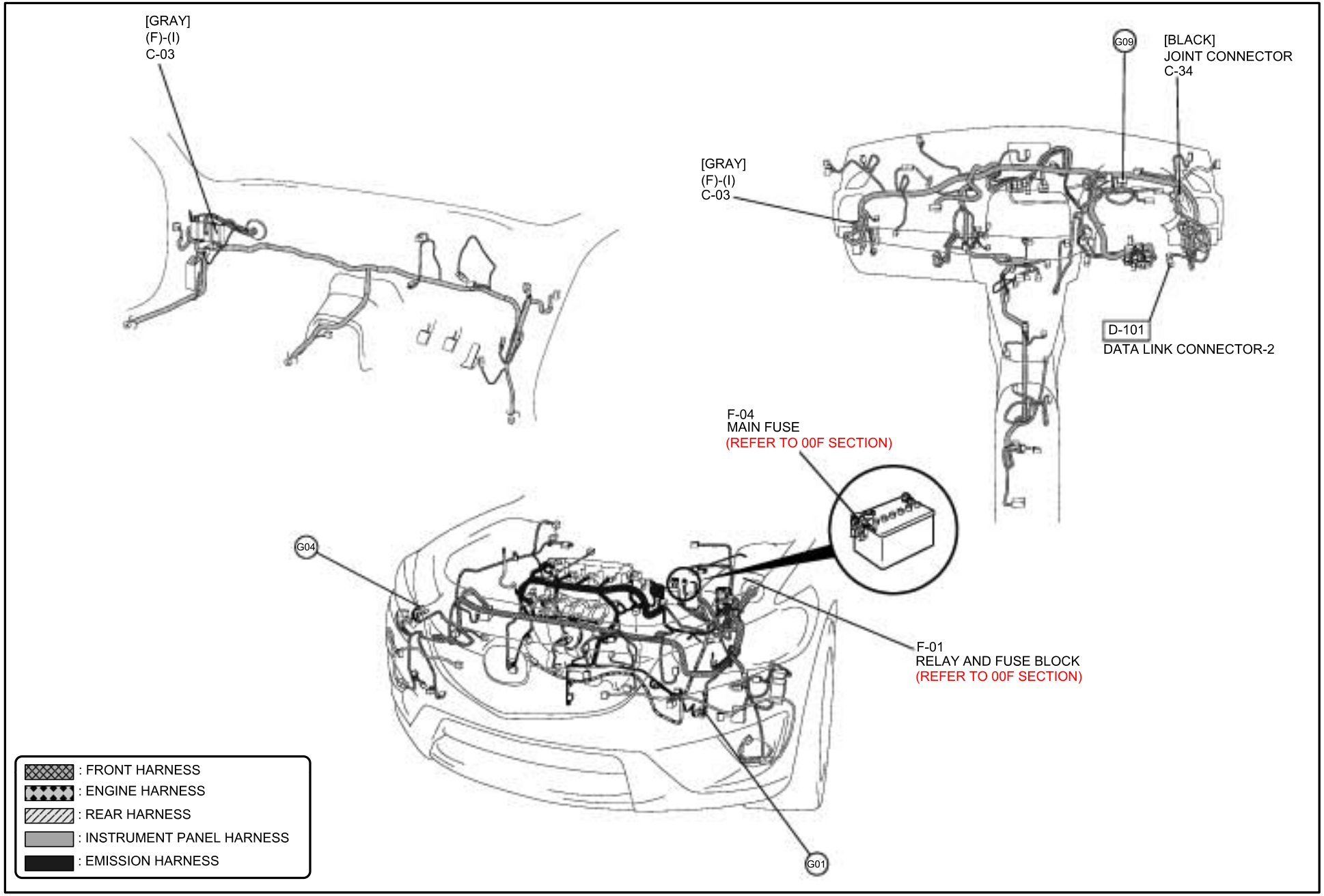

DATA LINK CONNECTOR

00D-1b

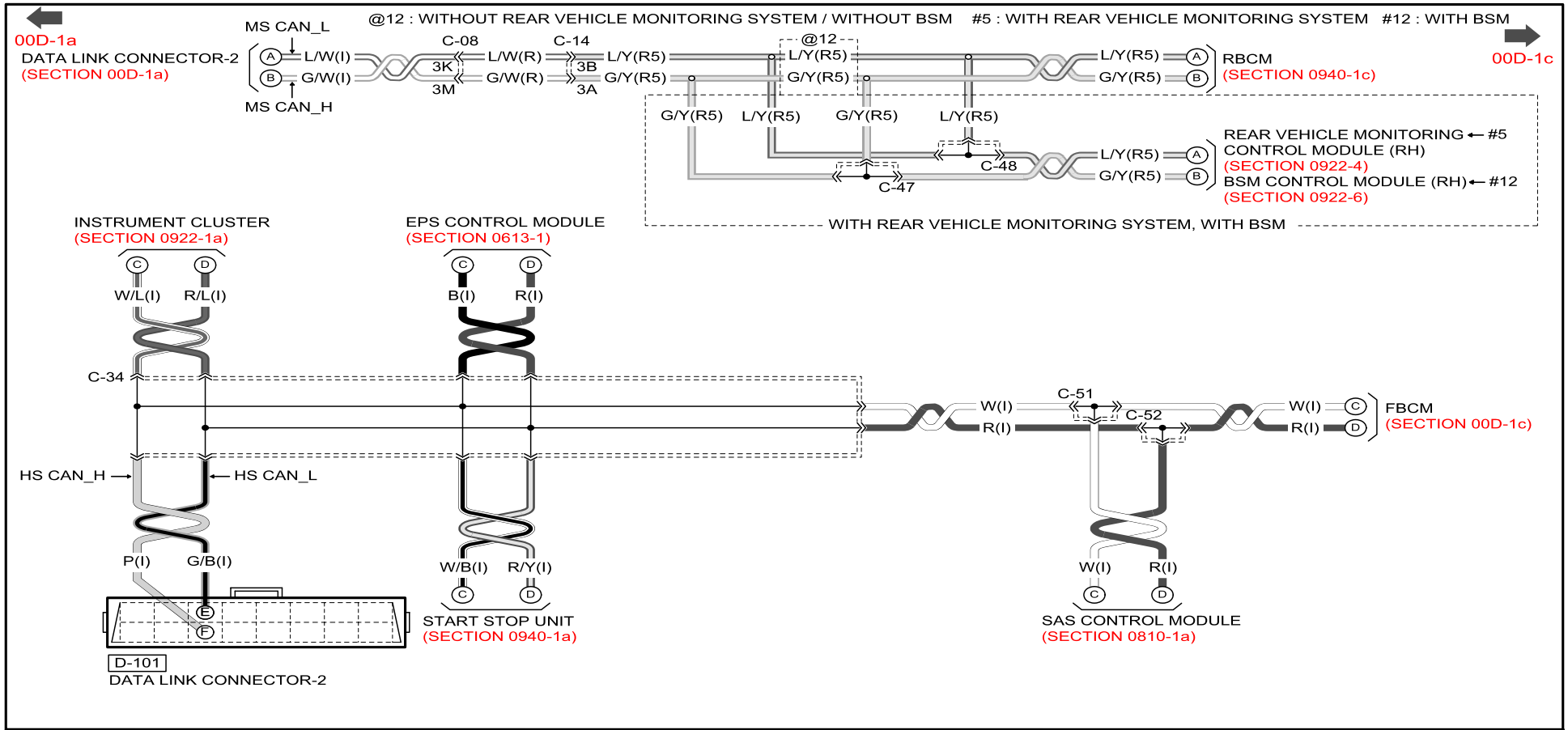

D-101
DATA LINK CONNECTOR-2

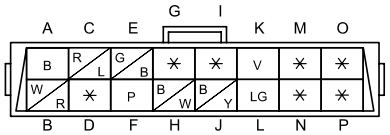

NOTE : SEEN FROM TERMINAL SIDE

Refer to 00F section for the FUSE BOX, 00C section for the PCM CONNECTOR and COMMON CONNECTOR LIST.

DATA LINK CONNECTOR

00D-1b

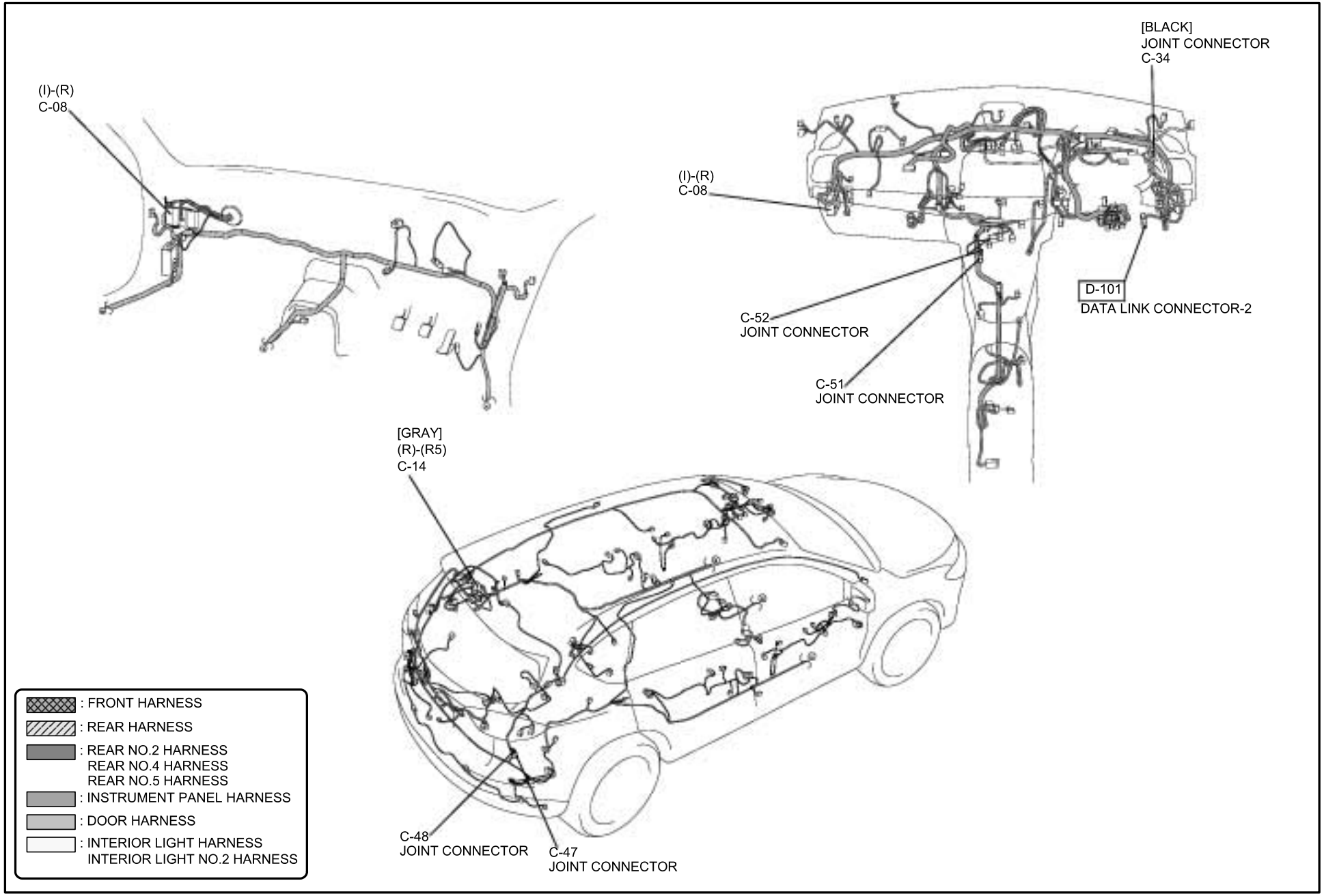

DATA LINK CONNECTOR

00D-1c

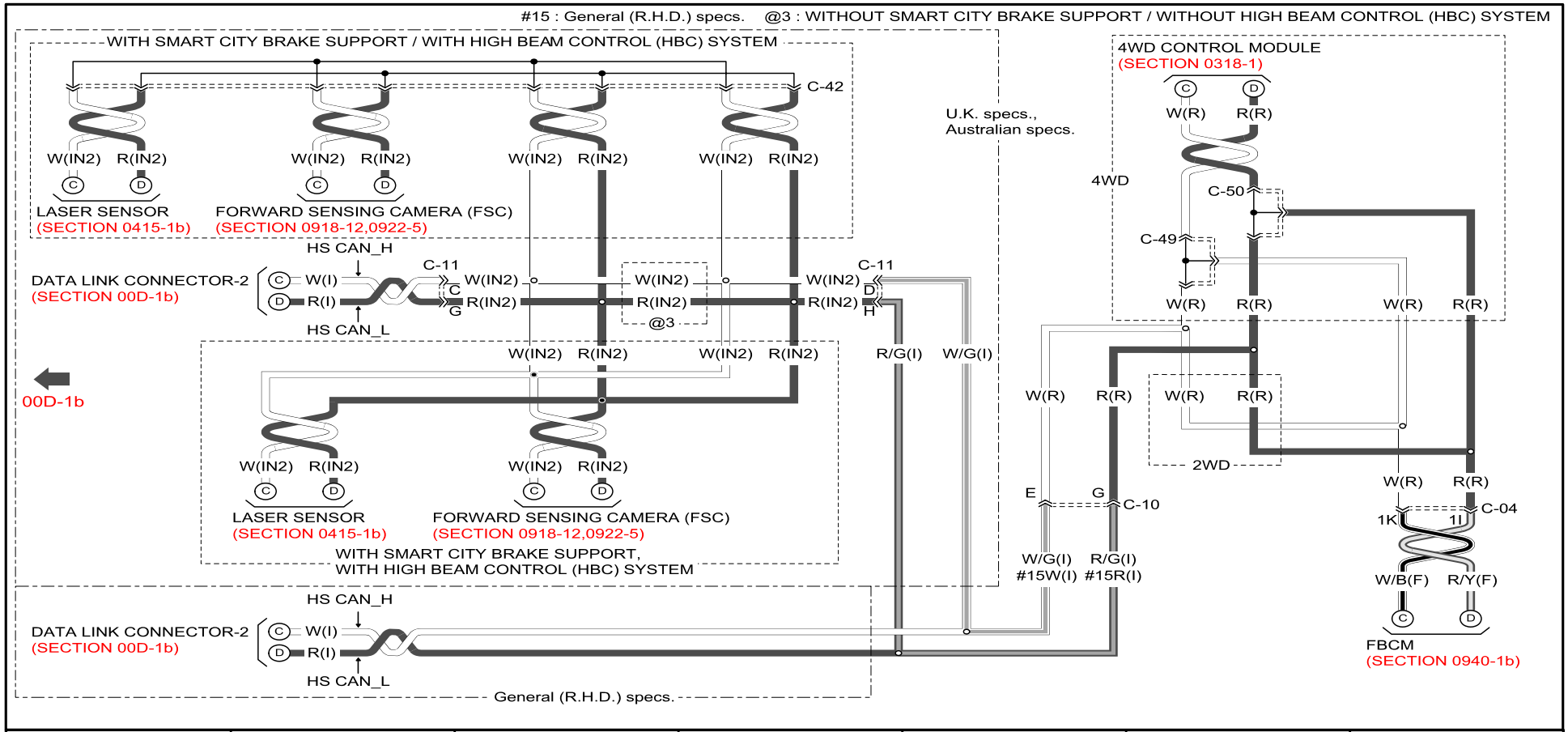

Refer to 00F section for the FUSE BOX, 00C section for the PCM CONNECTOR and COMMON CONNECTOR LIST.

DATA LINK CONNECTOR

00D-1c

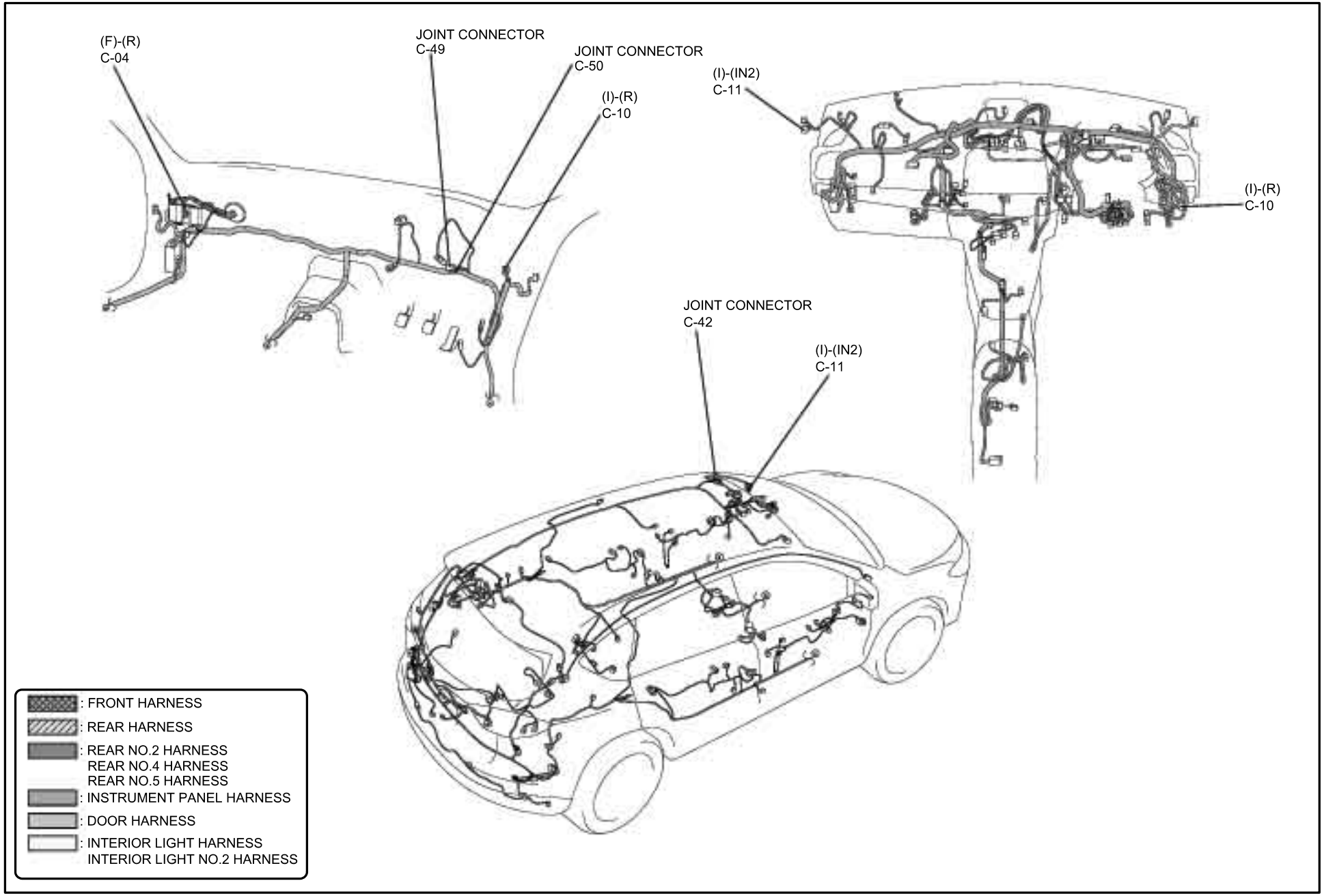

COOLING SYSTEM (SKYACTIV-G 2.0)

0112-1

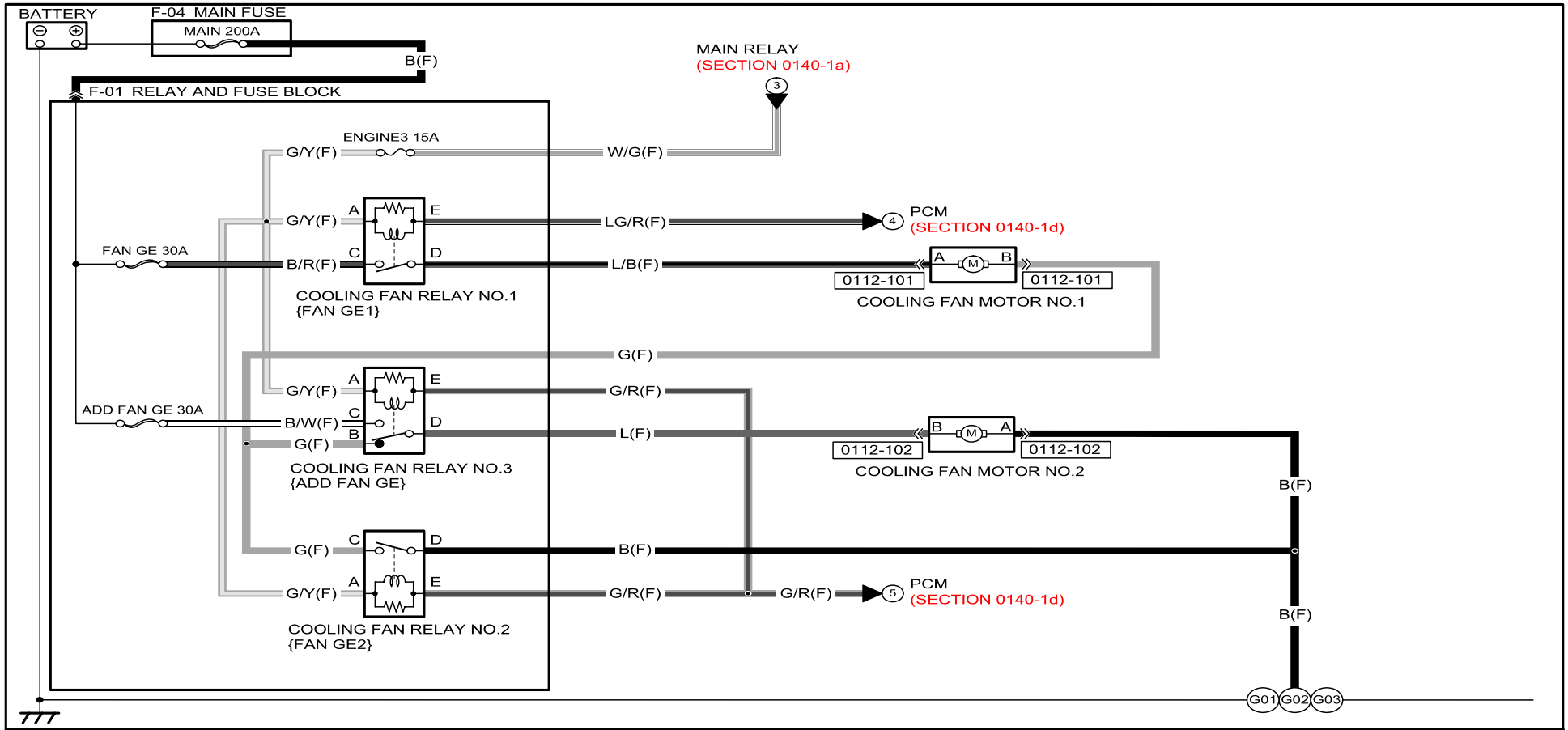

0112-101 COOLING FAN MOTOR NO.1	0112-102 COOLING FAN MOTOR NO.2					
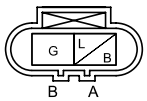	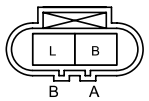					

Refer to 00F section for the FUSE BOX, 00C section for the PCM CONNECTOR and COMMON CONNECTOR LIST.

COOLING SYSTEM (SKYACTIV-G 2.0)

0112-1

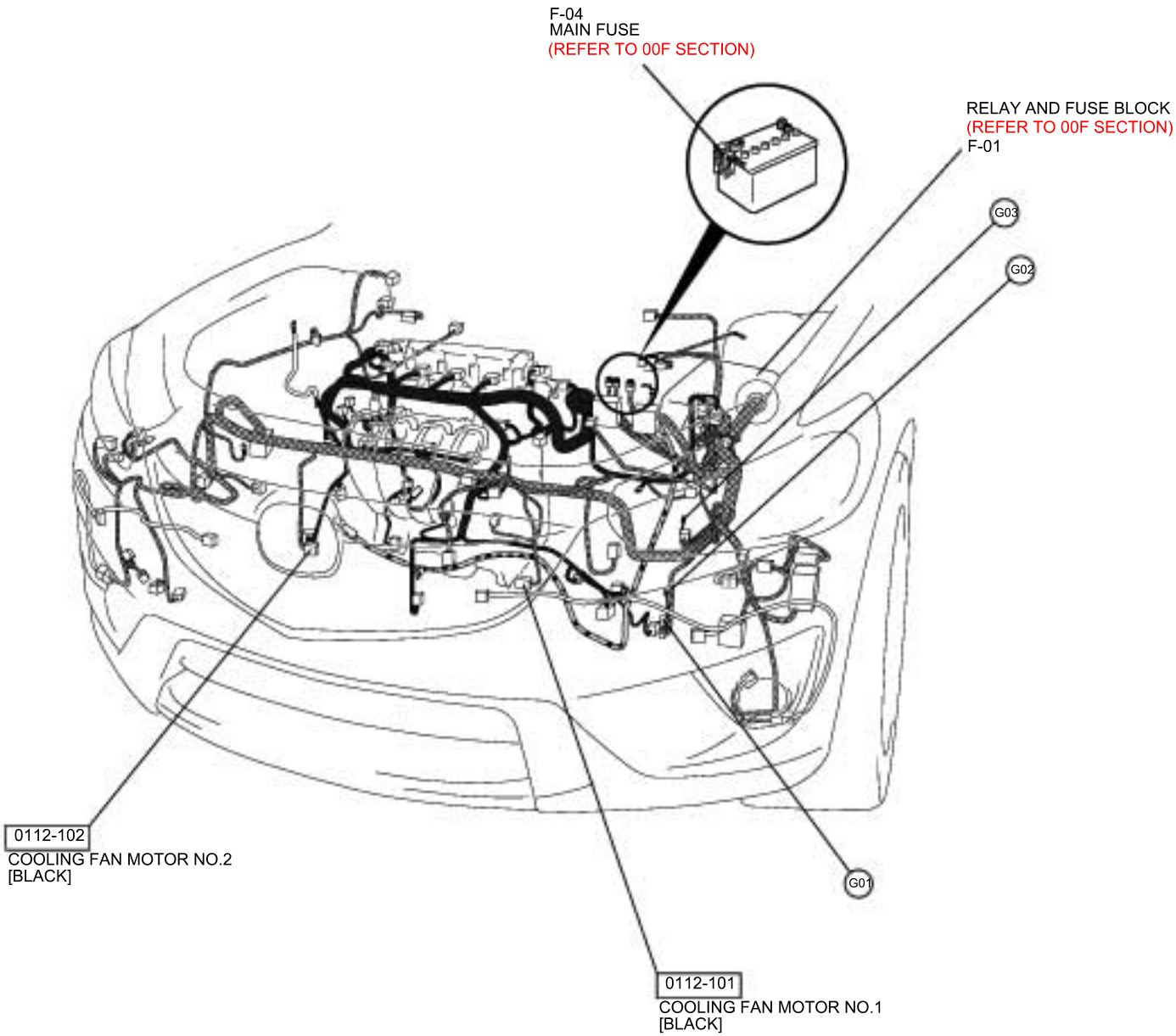

: FRONT HARNESS
: ENGINE HARNESS
: EMISSION HARNESS

COOLING SYSTEM (SKYACTIV-D 2.2)

0112-2

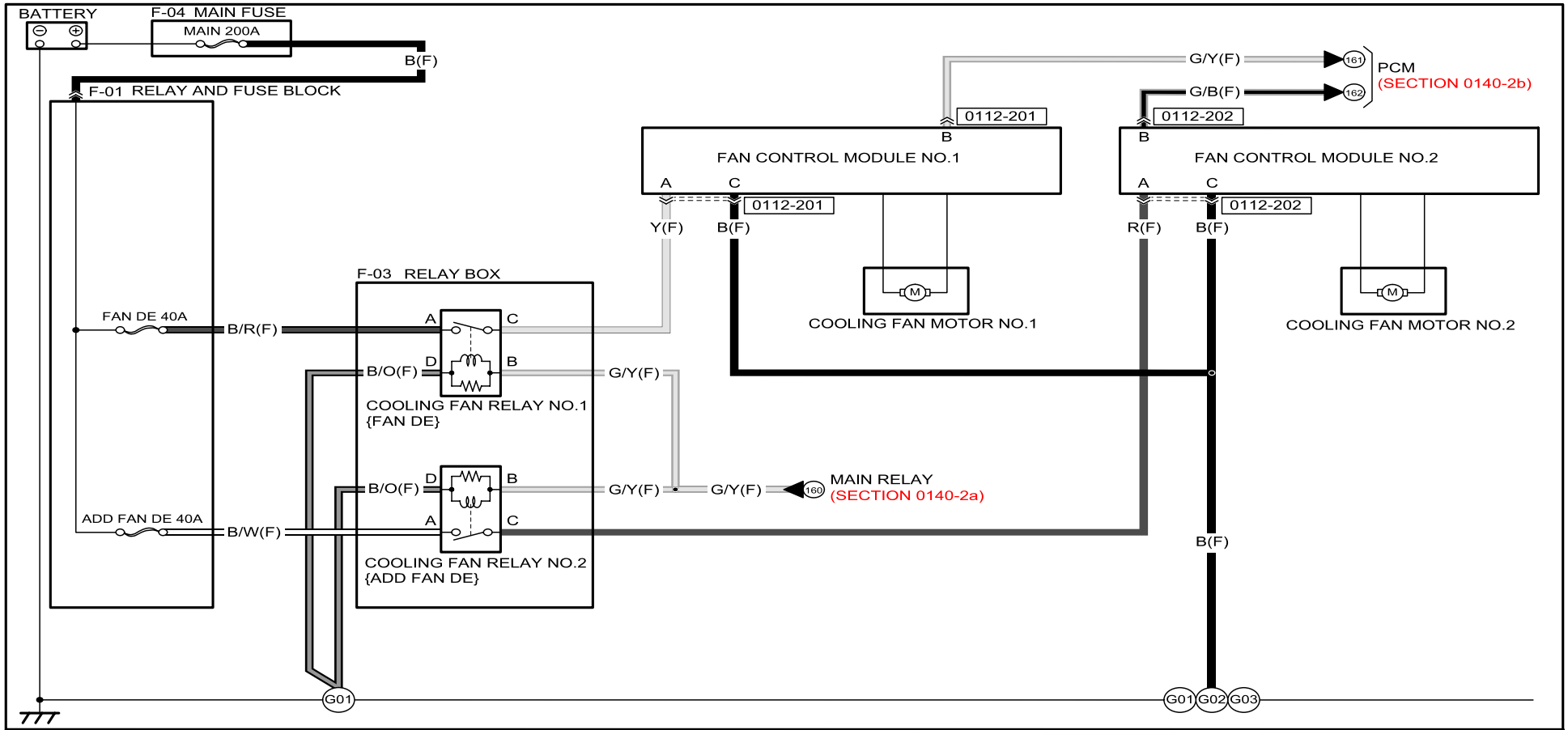

0112-201 FAN CONTROL MODULE NO.1	0112-202 FAN CONTROL MODULE NO.2			
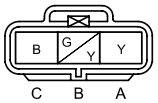	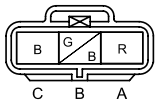			

Refer to 00F section for the FUSE BOX, 00C section for the PCM CONNECTOR and COMMON CONNECTOR LIST.

COOLING SYSTEM (SKYACTIV-D 2.2) 0112-2

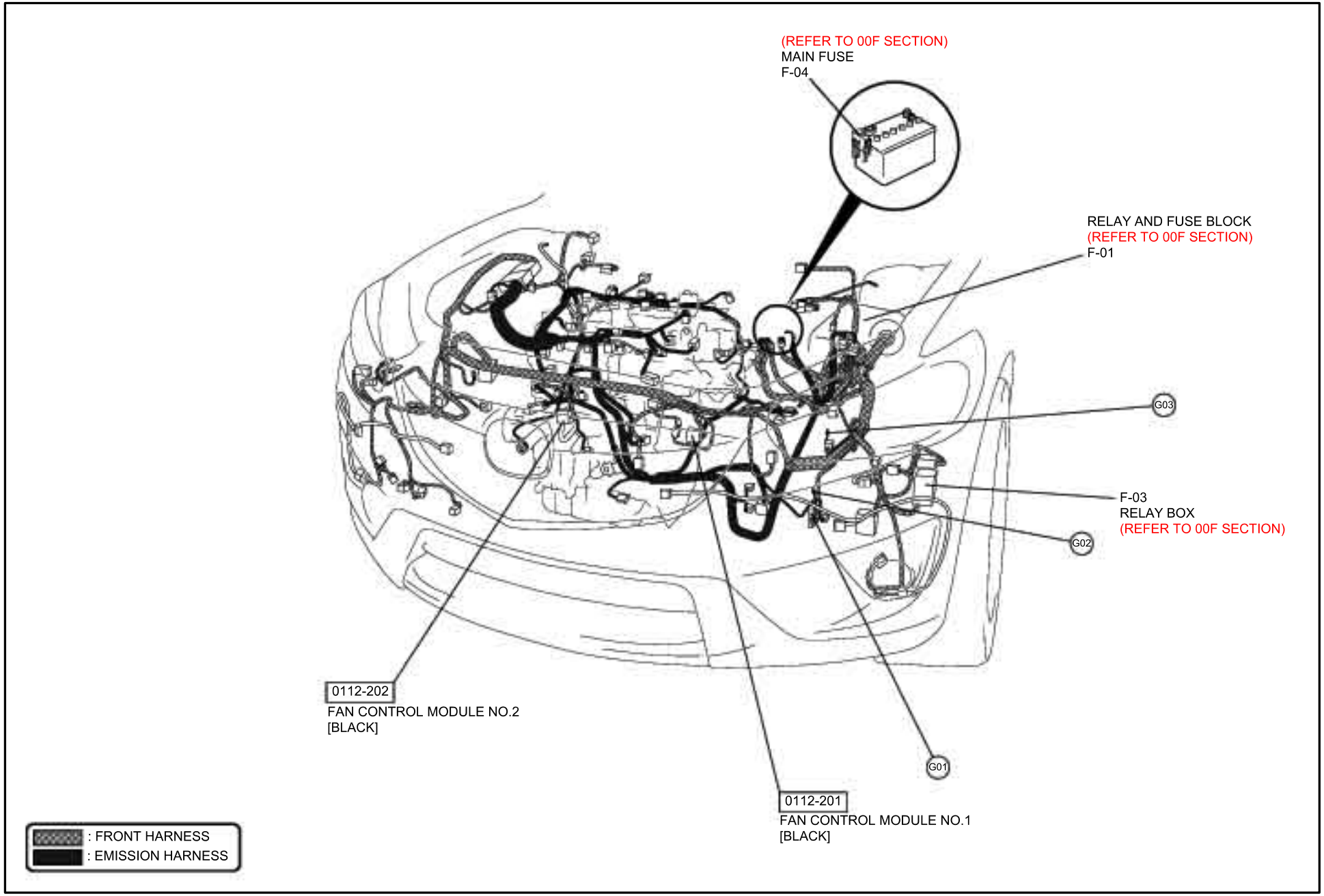

FUEL SYSTEM (SKYACTIV-G 2.0)

0114-1

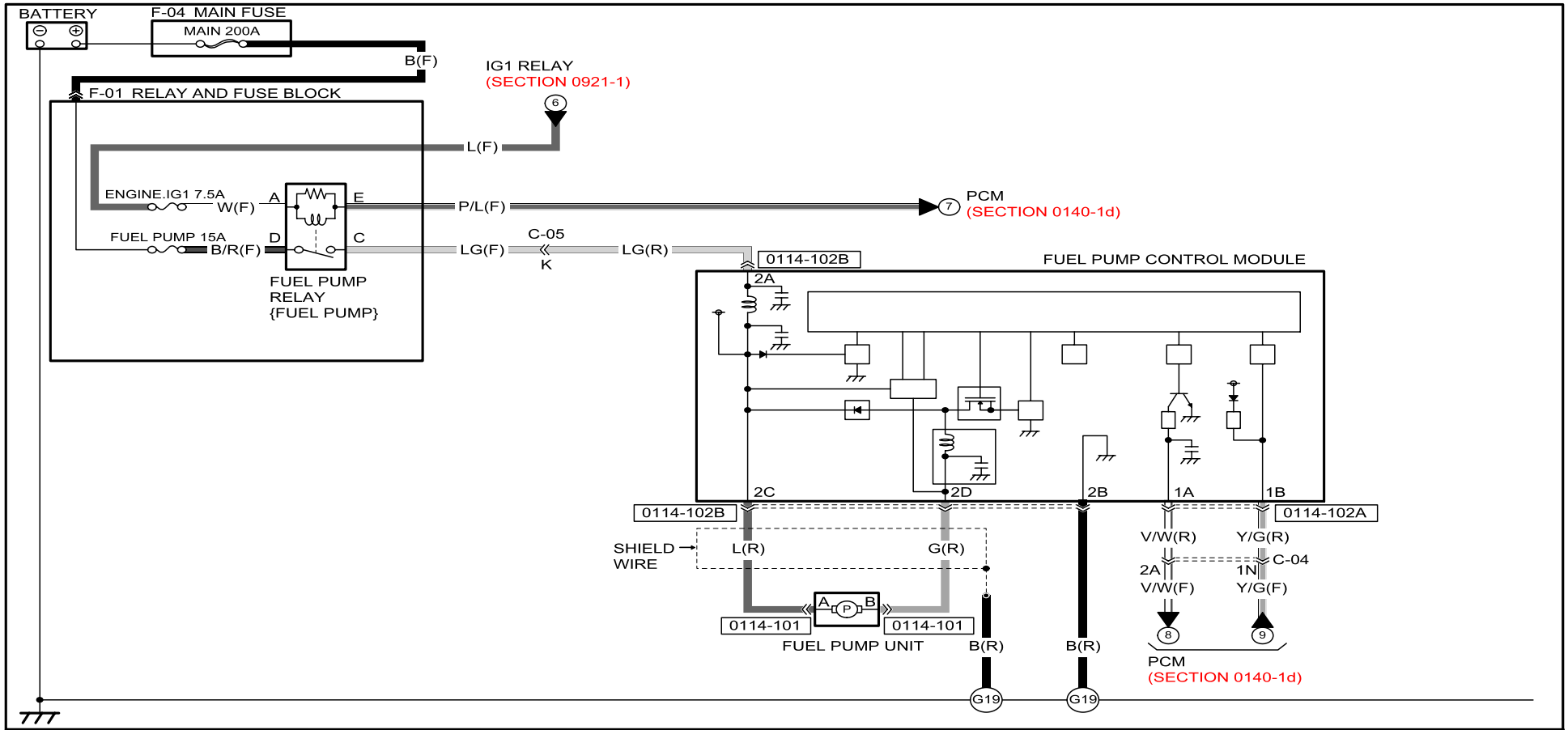

0114-101 FUEL PUMP UNIT / FUEL GAUGE SENDER UNIT	0114-102A FUEL PUMP CONTROL MODULE	0114-102B FUEL PUMP CONTROL MODULE				
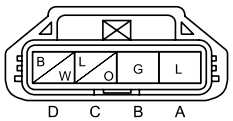	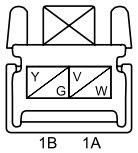	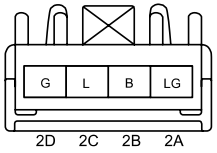				

Refer to 00F section for the FUSE BOX, 00C section for the PCM CONNECTOR and COMMON CONNECTOR LIST.

FUEL SYSTEM (SKYACTIV-G 2.0)

0114-1

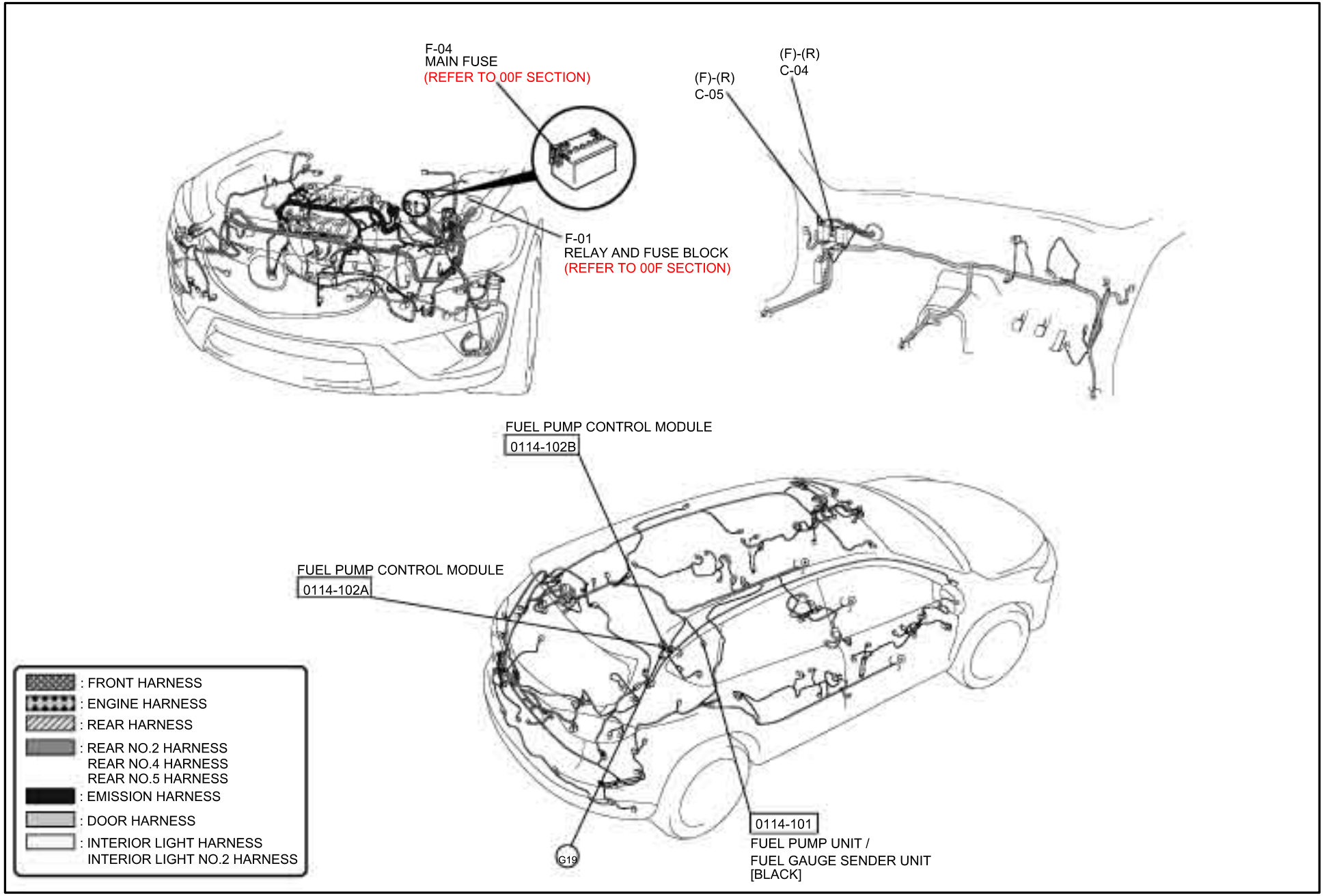

CHARGING SYSTEM (SKYACTIV-G 2.0 / WITH i-stop SYSTEM)

0117-1a

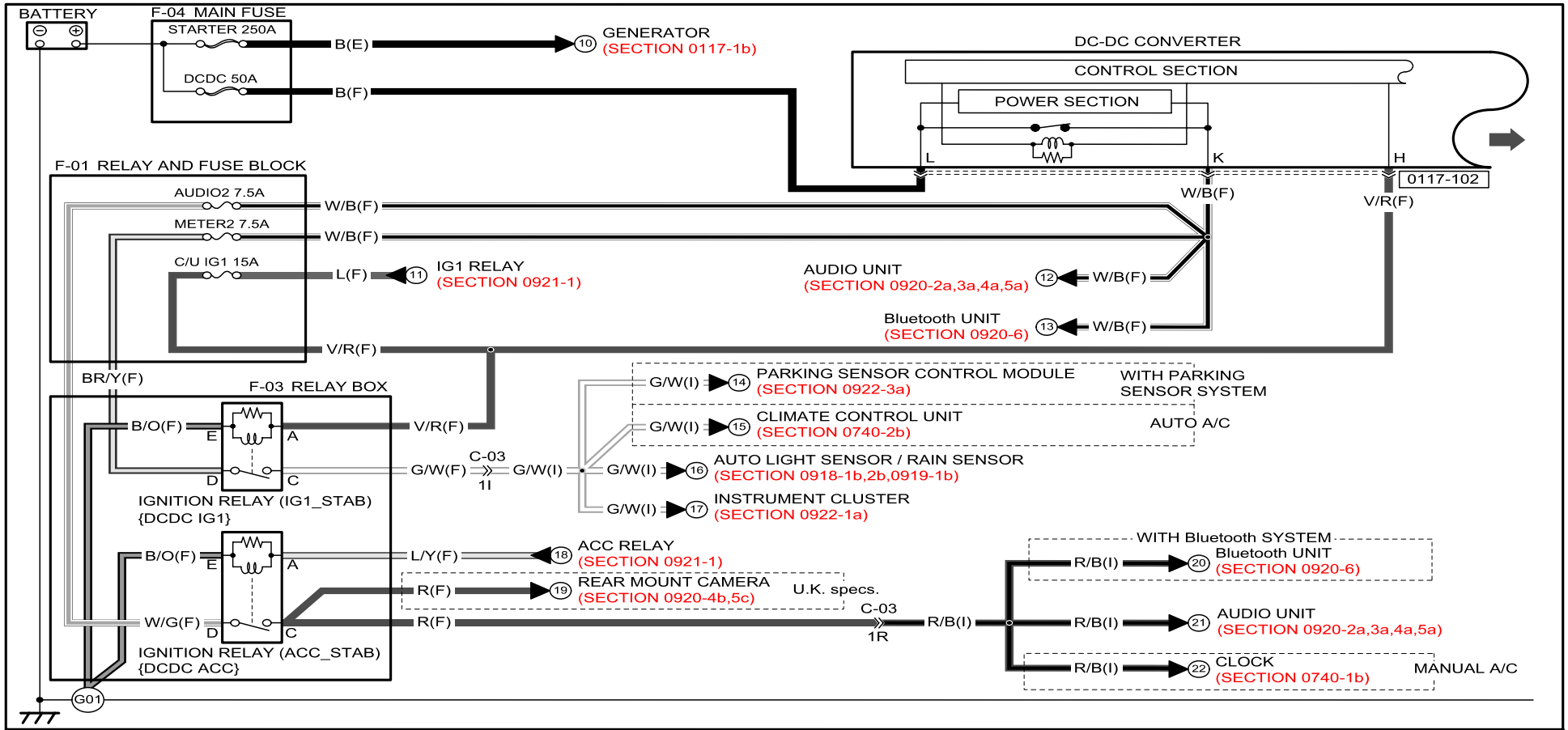

0117-102
DC-DC CONVERTER

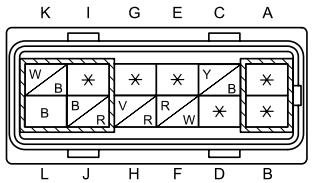

Refer to 00F section for the FUSE BOX, 00C section for the PCM CONNECTOR and COMMON CONNECTOR LIST.

CHARGING SYSTEM (SKYACTIV-G 2.0 / WITH i-stop SYSTEM)

0117-1a

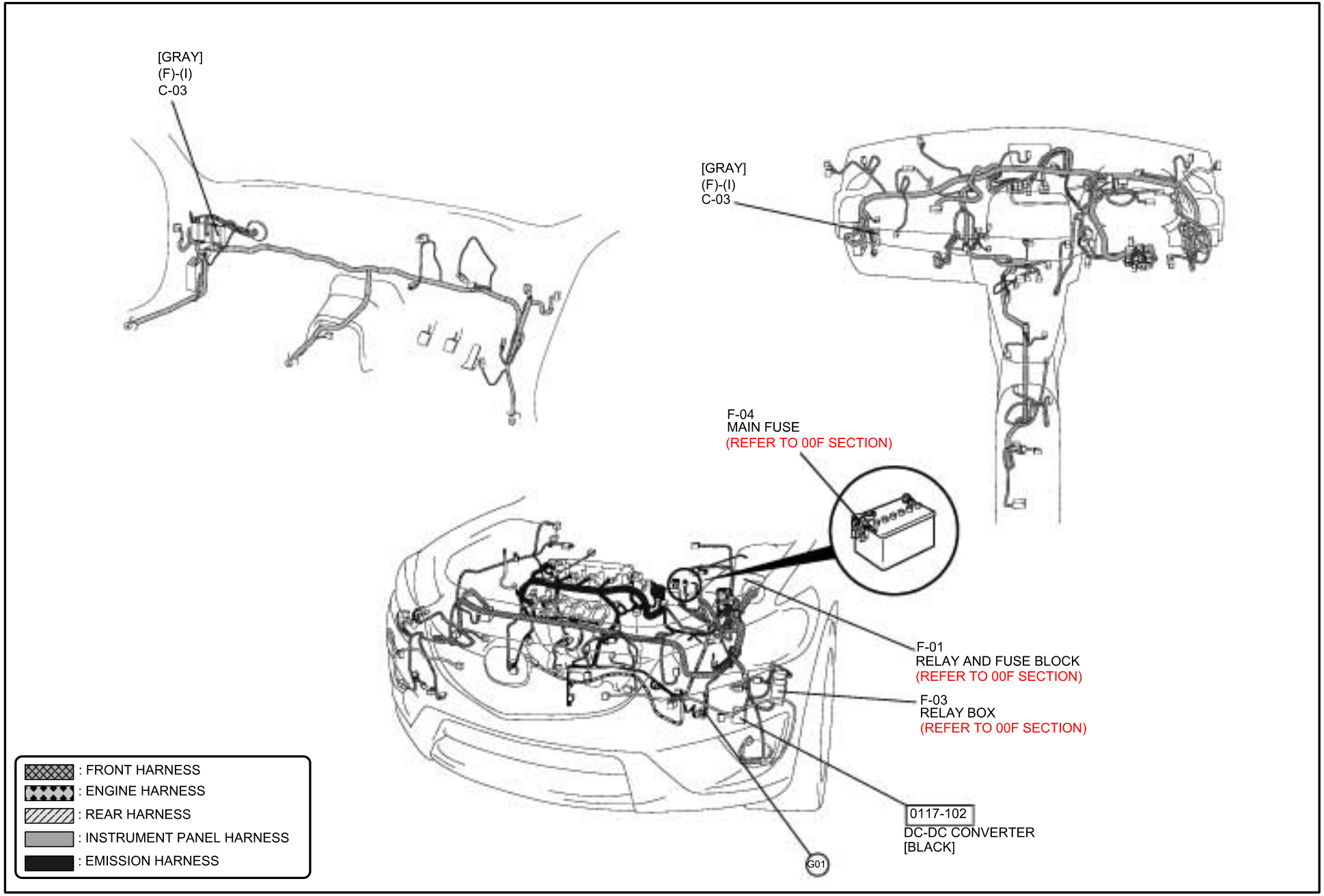

CHARGING SYSTEM (SKYACTIV-G 2.0 / WITH i-stop SYSTEM)

0117-1b

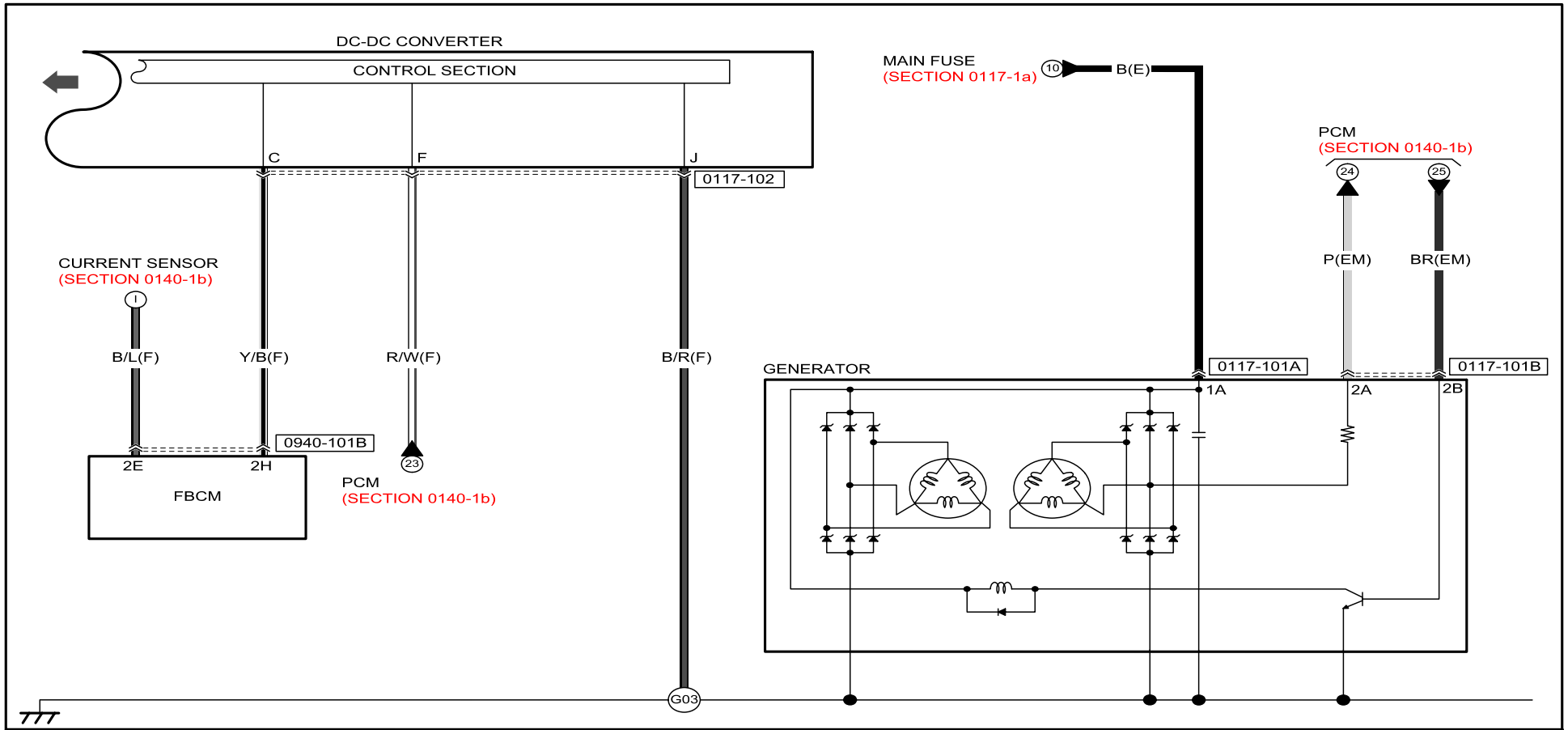

0117-101A GENERATOR	0117-101B GENERATOR	0117-102 DC-DC CONVERTER	0940-101B FBCM
	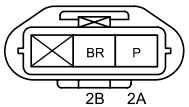	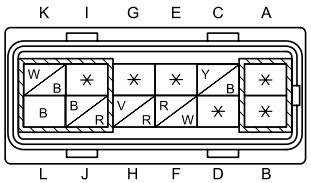	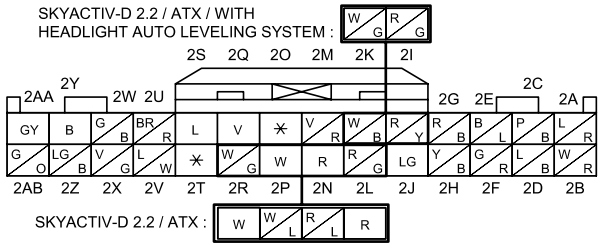

Refer to 00F section for the FUSE BOX, 00C section for the PCM CONNECTOR and COMMON CONNECTOR LIST.

CHARGING SYSTEM (SKYACTIV-G 2.0 / WITH i-stop SYSTEM) 0117-1b

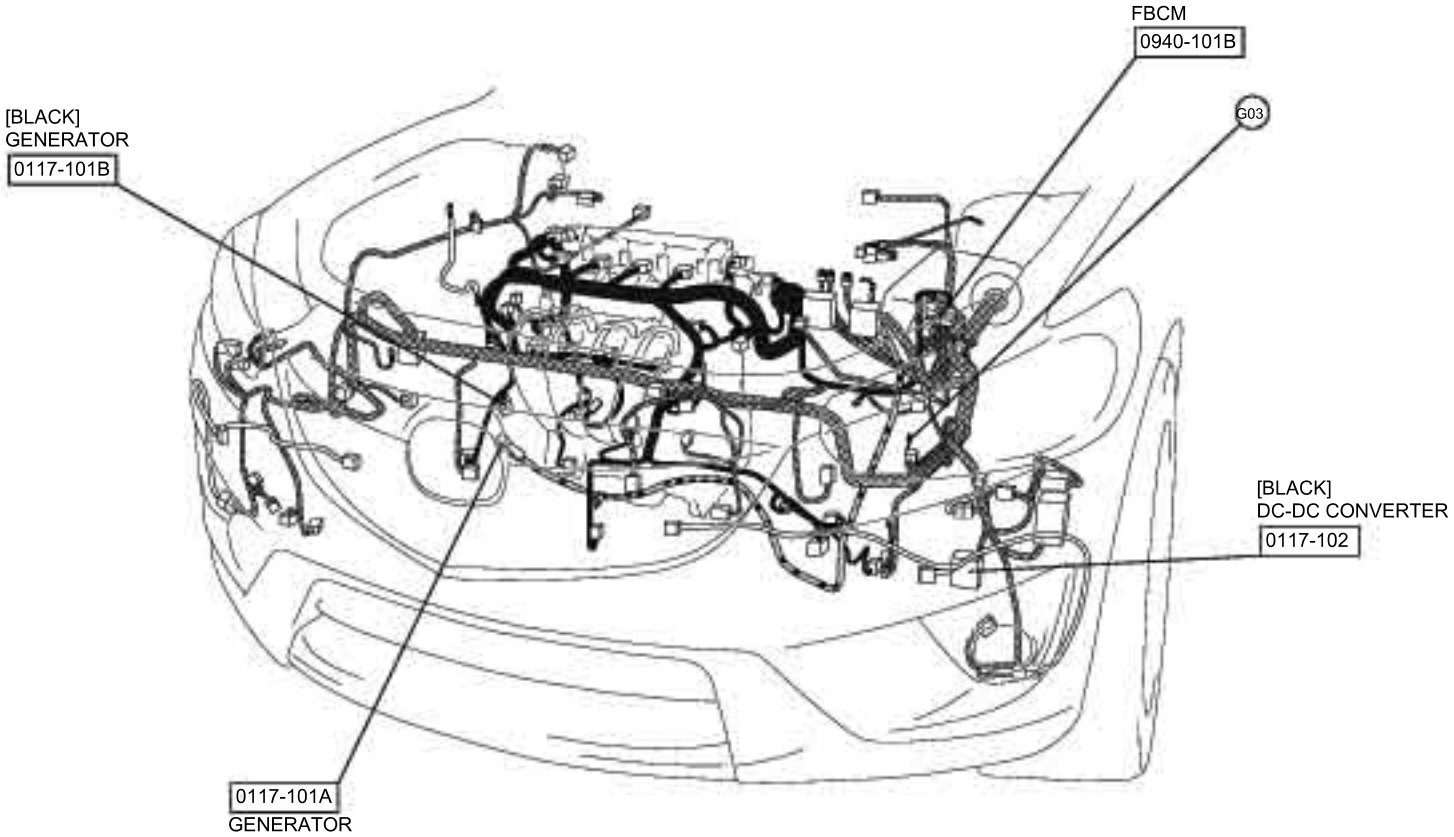

: FRONT HARNESS
: ENGINE HARNESS
: EMISSION HARNESS

CHARGING SYSTEM (SKYACTIV-D 2.2)

0117-2a

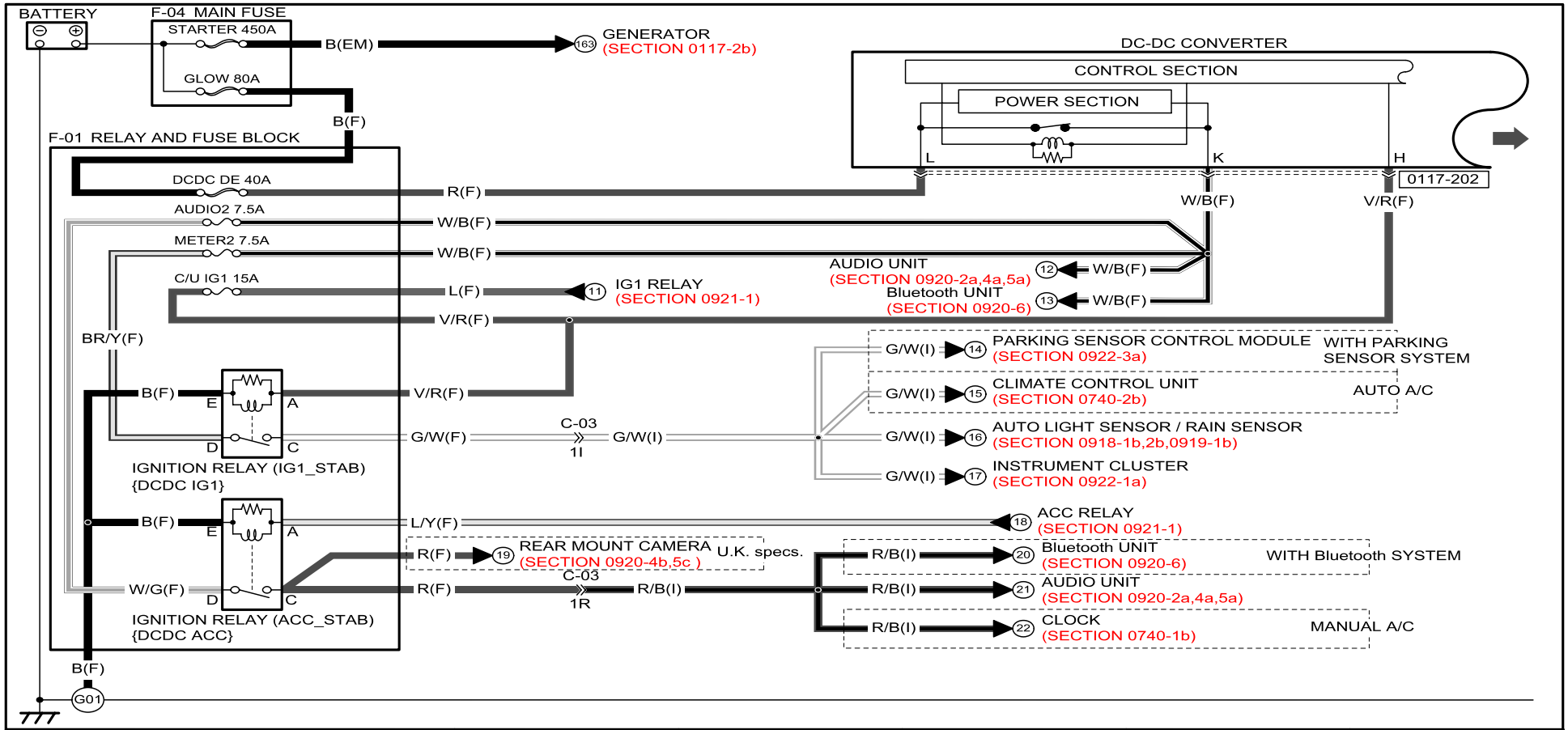

0117-202
DC-DC CONVERTER

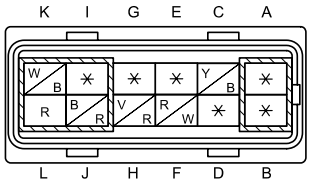

Refer to 00F section for the FUSE BOX, 00C section for the PCM CONNECTOR and COMMON CONNECTOR LIST.

CHARGING SYSTEM (SKYACTIV-D 2.2)

0117-2a

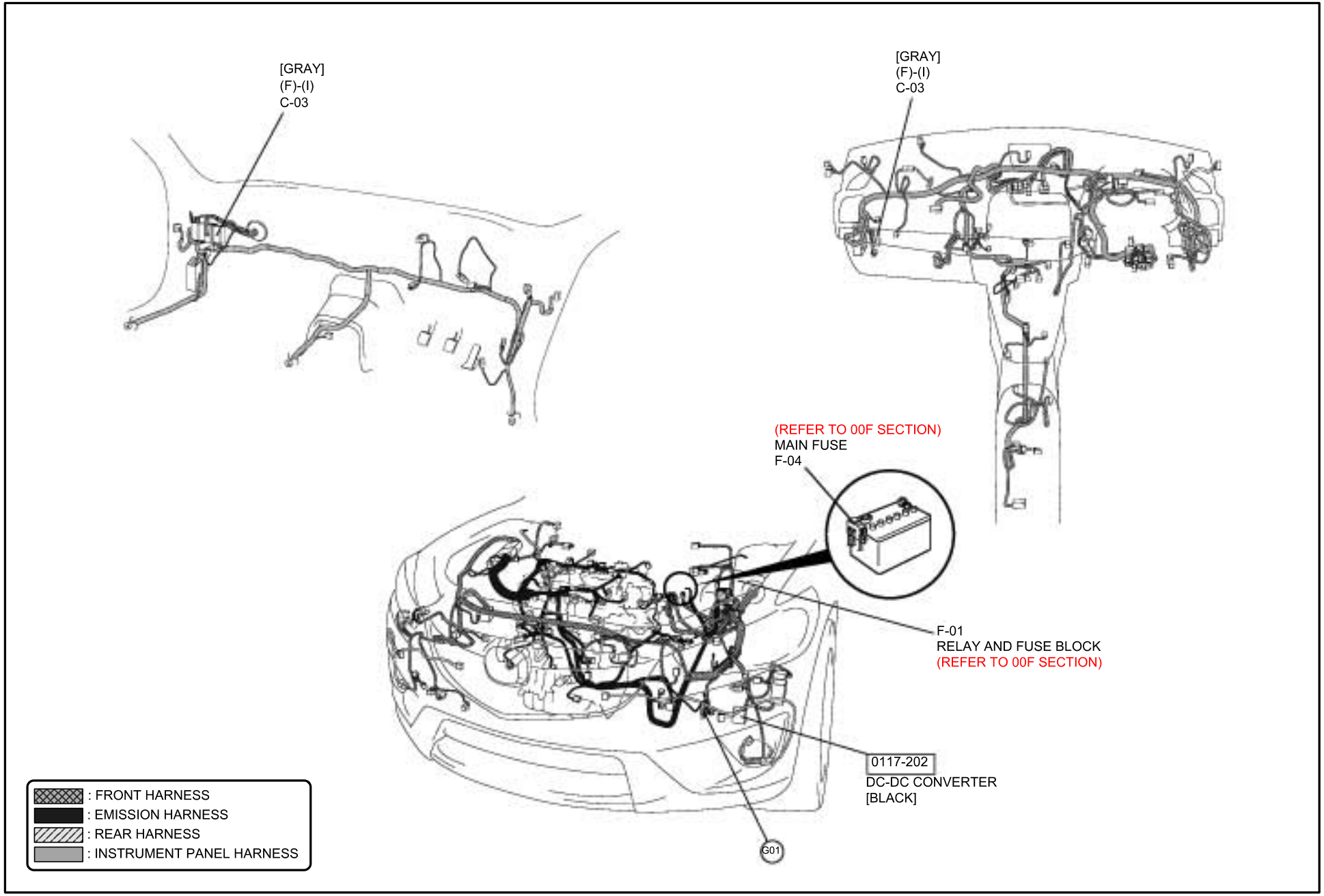

CHARGING SYSTEM (SKYACTIV-D 2.2)

0117-2b

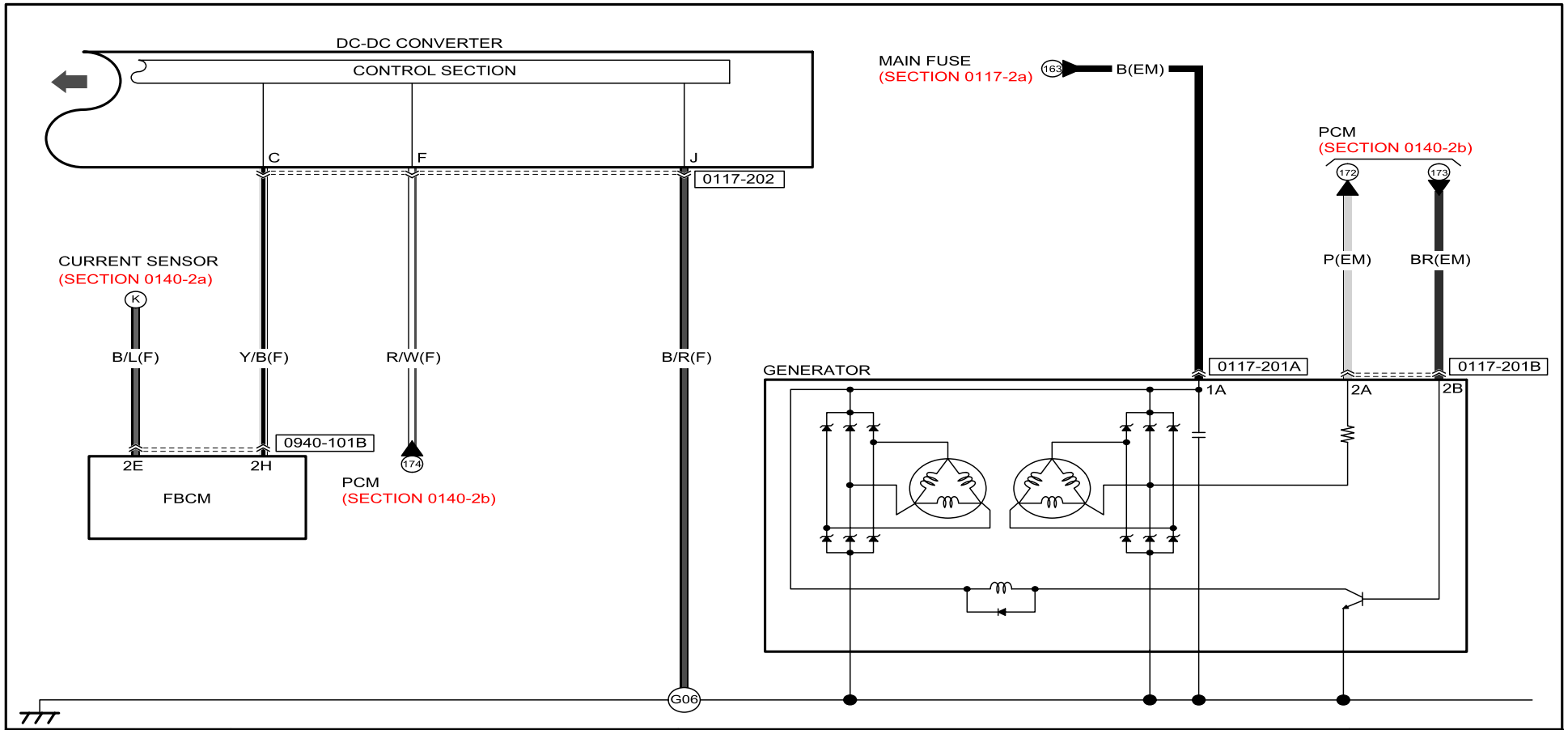

0117-201A
GENERATOR

0117-201B
GENERATOR

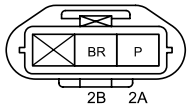

0940-101B
FBCM

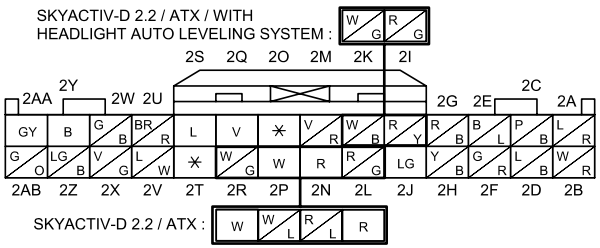

0117-202
DC-DC CONVERTER

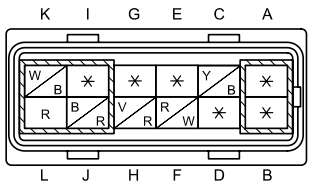

Refer to 00F section for the FUSE BOX, 00C section for the PCM CONNECTOR and COMMON CONNECTOR LIST.

CHARGING SYSTEM (SKYACTIV-D 2.2) 0117-2b

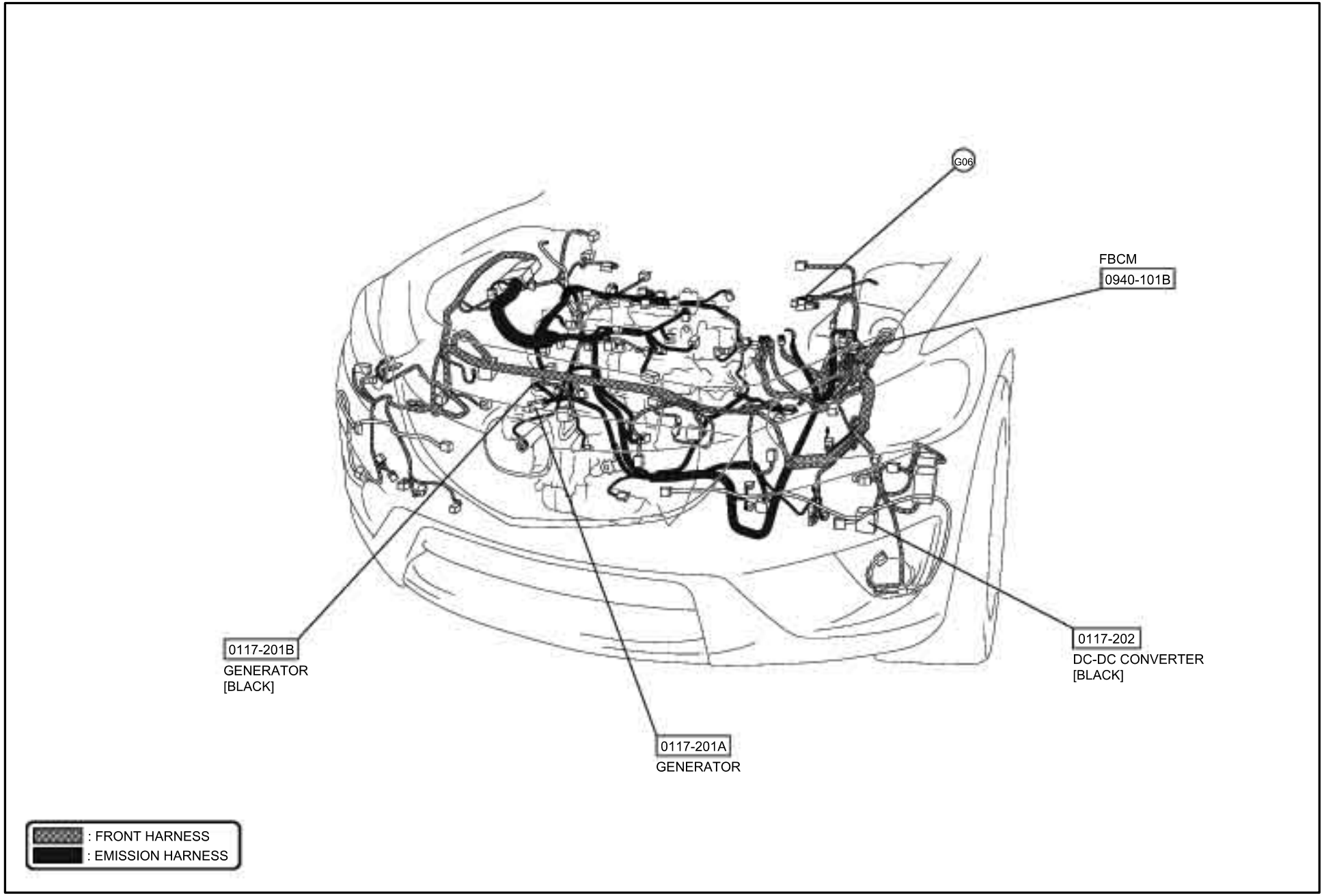

CHARGING SYSTEM (SKYACTIV-G 2.0 / WITHOUT i-stop SYSTEM)

0117-3

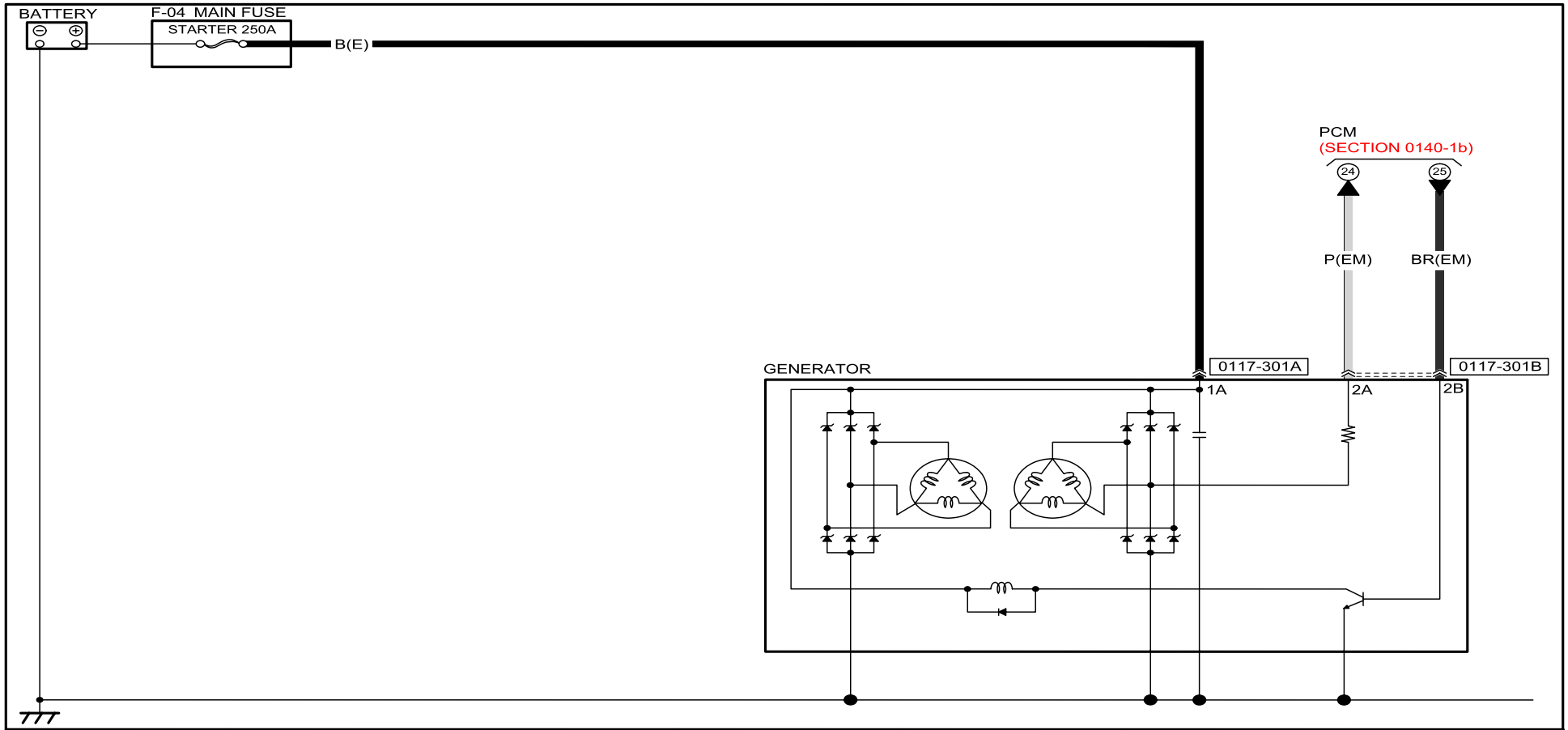

0117-301A GENERATOR	0117-301B GENERATOR					
	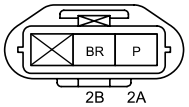					

Refer to 00F section for the FUSE BOX, 00C section for the PCM CONNECTOR and COMMON CONNECTOR LIST.

CHARGING SYSTEM (SKYACTIV-G 2.0 / WITHOUT i-stop SYSTEM) 0117-3

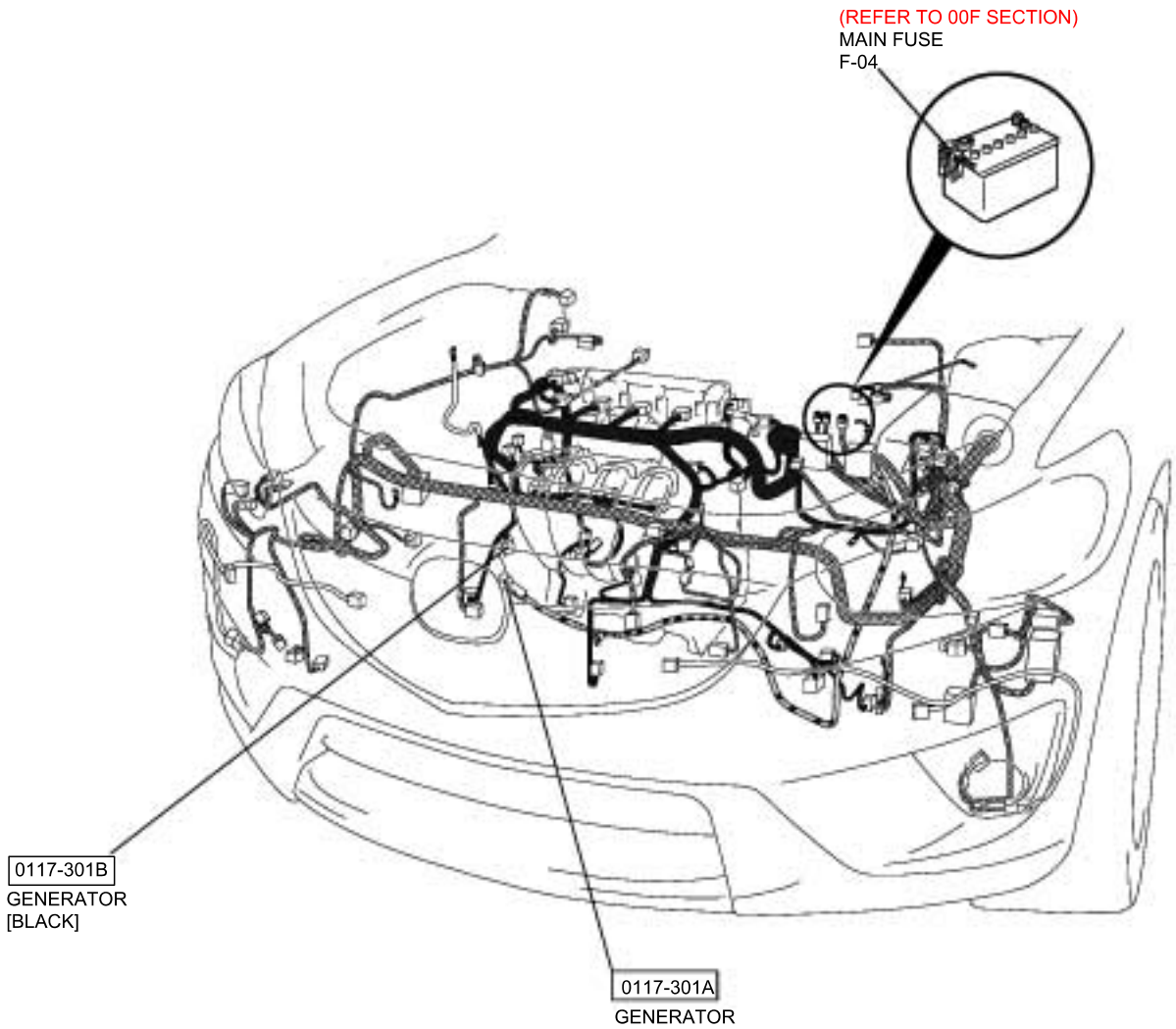

: FRONT HARNESS
: ENGINE HARNESS
: EMISSION HARNESS

STARTING SYSTEM (SKYACTIV-G 2.0, SKYACTIV-D 2.2)

0119-1

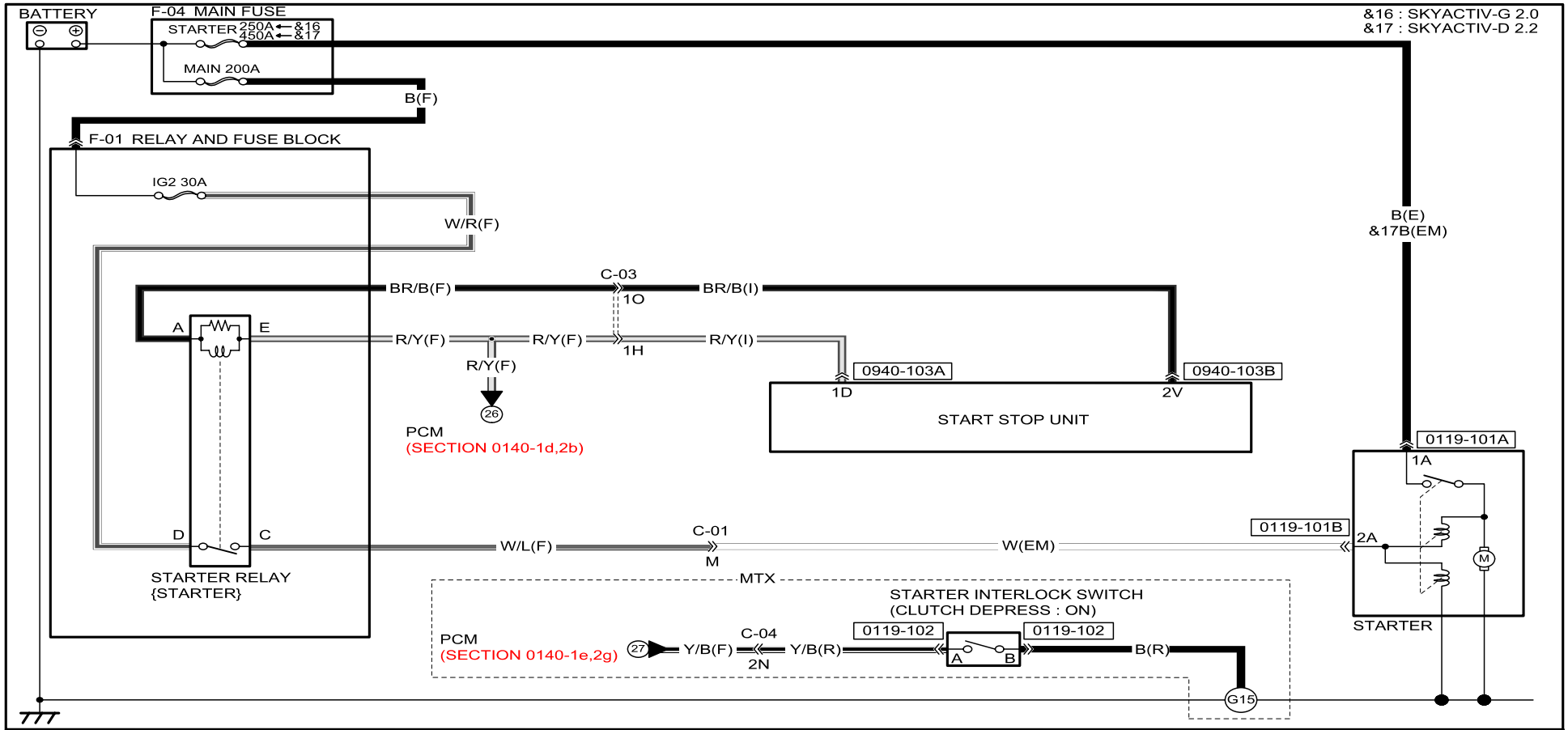

0119-101A
STARTER

0119-101B
STARTER

0119-102
STARTER INTERLOCK SWITCH

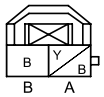

0940-103A
START STOP UNIT

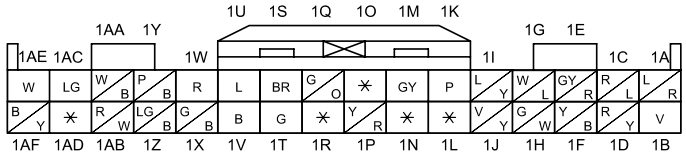

0940-103B
START STOP UNIT

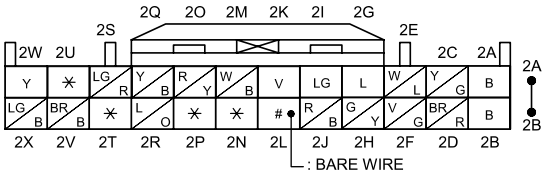

Refer to 00F section for the FUSE BOX, 00C section for the PCM CONNECTOR and COMMON CONNECTOR LIST.

STARTING SYSTEM (SKYACTIV-G 2.0, SKYACTIV-D 2.2)

0119-1

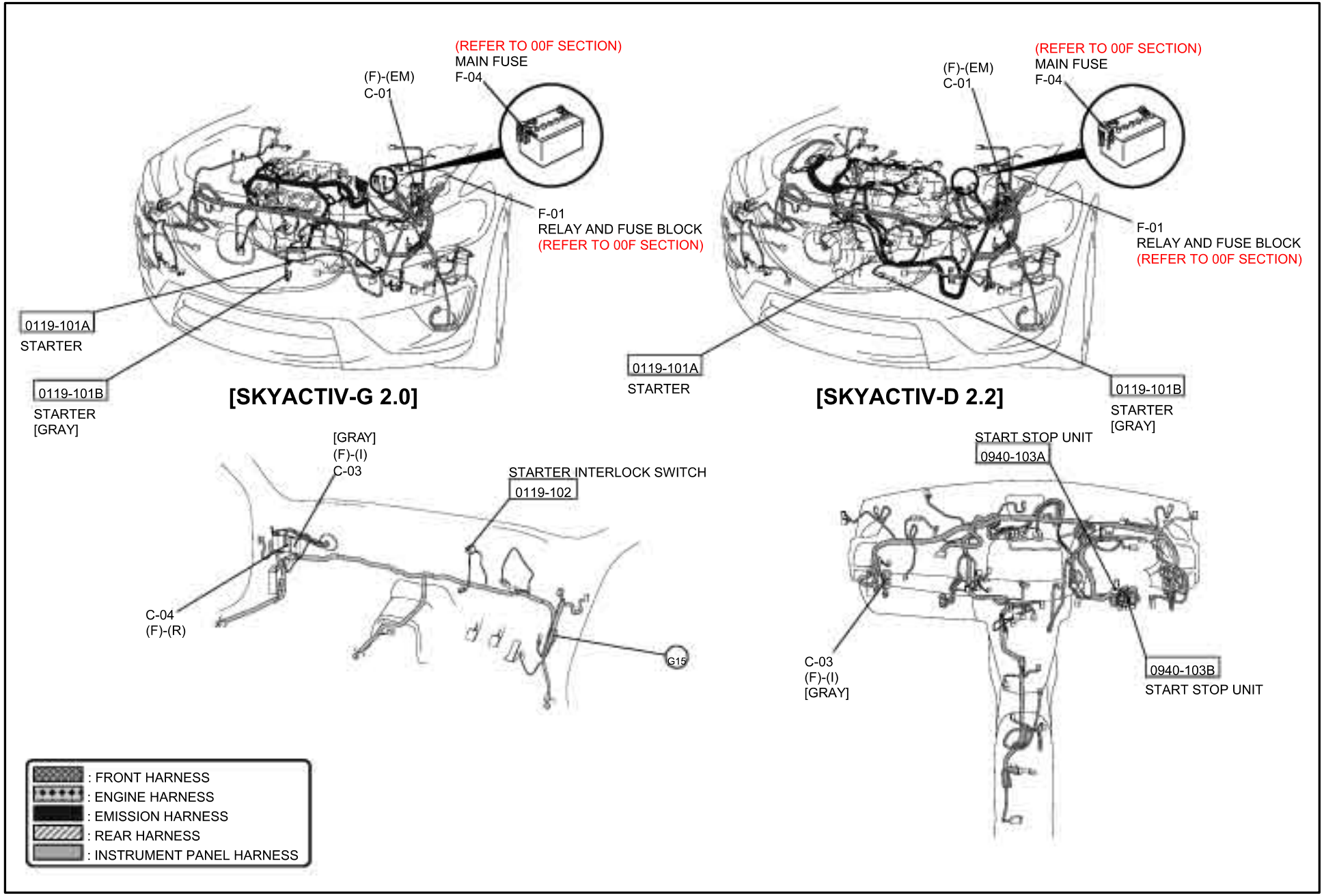

CRUISE CONTROL SYSTEM (SKYACTIV-G 2.0, SKYACTIV-D 2.2)

0120-1

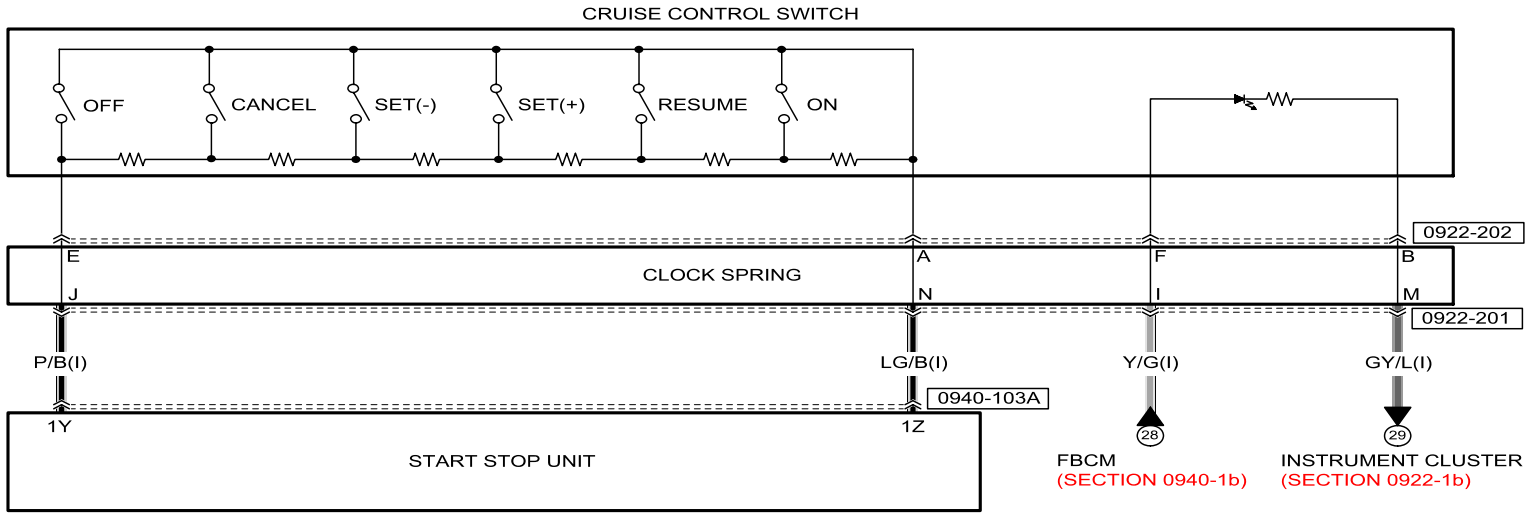

0922-201
CLOCK SPRING

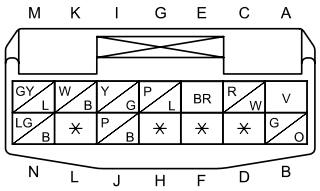

0922-202
CRUISE CONTROL SWITCH /
STEERING SWITCH /
CLOCK SPRING

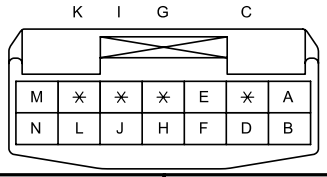

0940-103A
START STOP UNIT

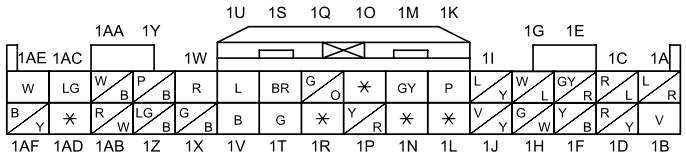

Refer to 00F section for the FUSE BOX, 00C section for the PCM CONNECTOR and COMMON CONNECTOR LIST.

CRUISE CONTROL SYSTEM (SKYACTIV-G 2.0, SKYACTIV-D 2.2)

0120-1

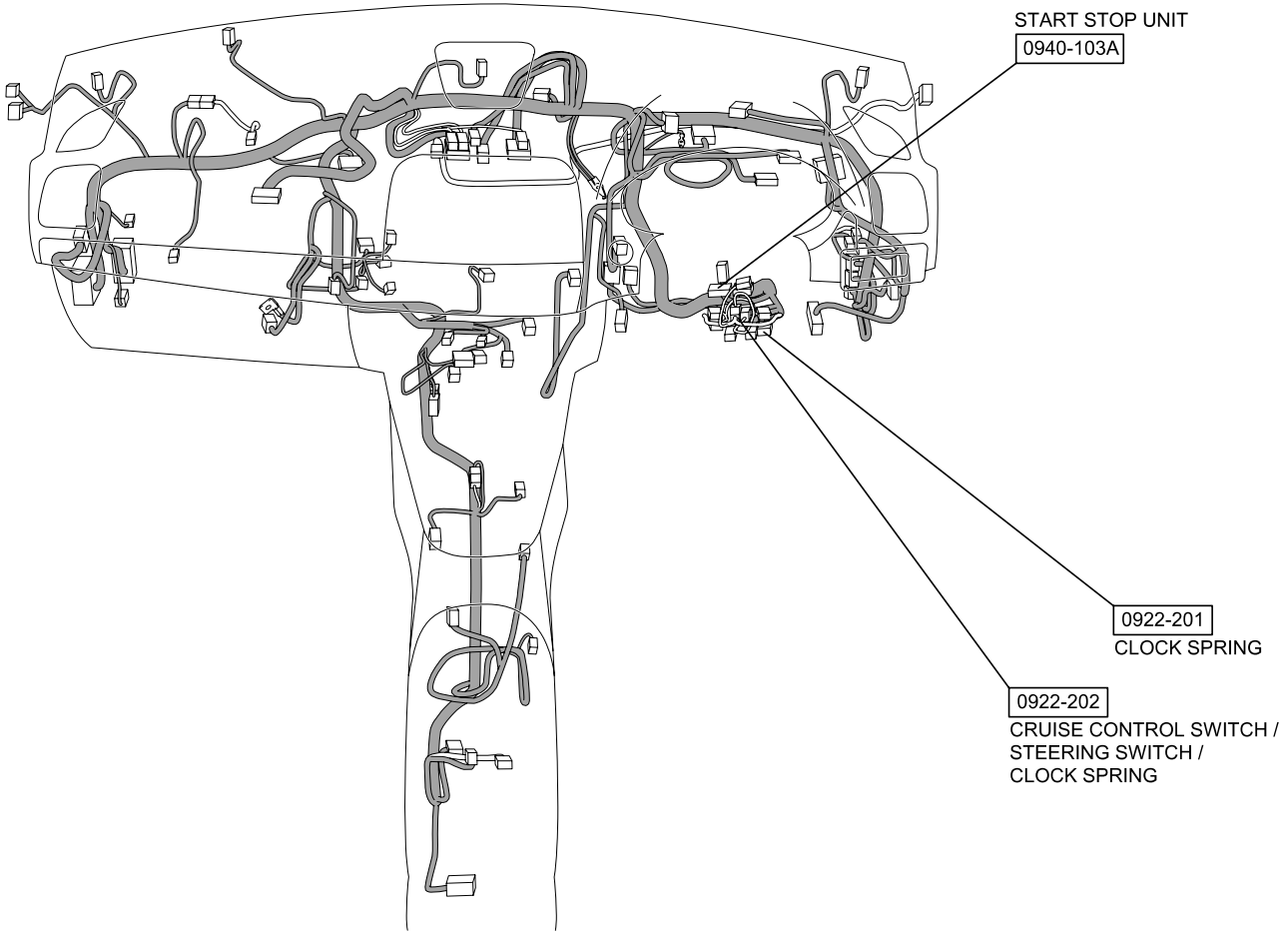

: INSTRUMENT PANEL HARNESS

CONTROL SYSTEM (SKYACTIV-G 2.0)

0140-1a

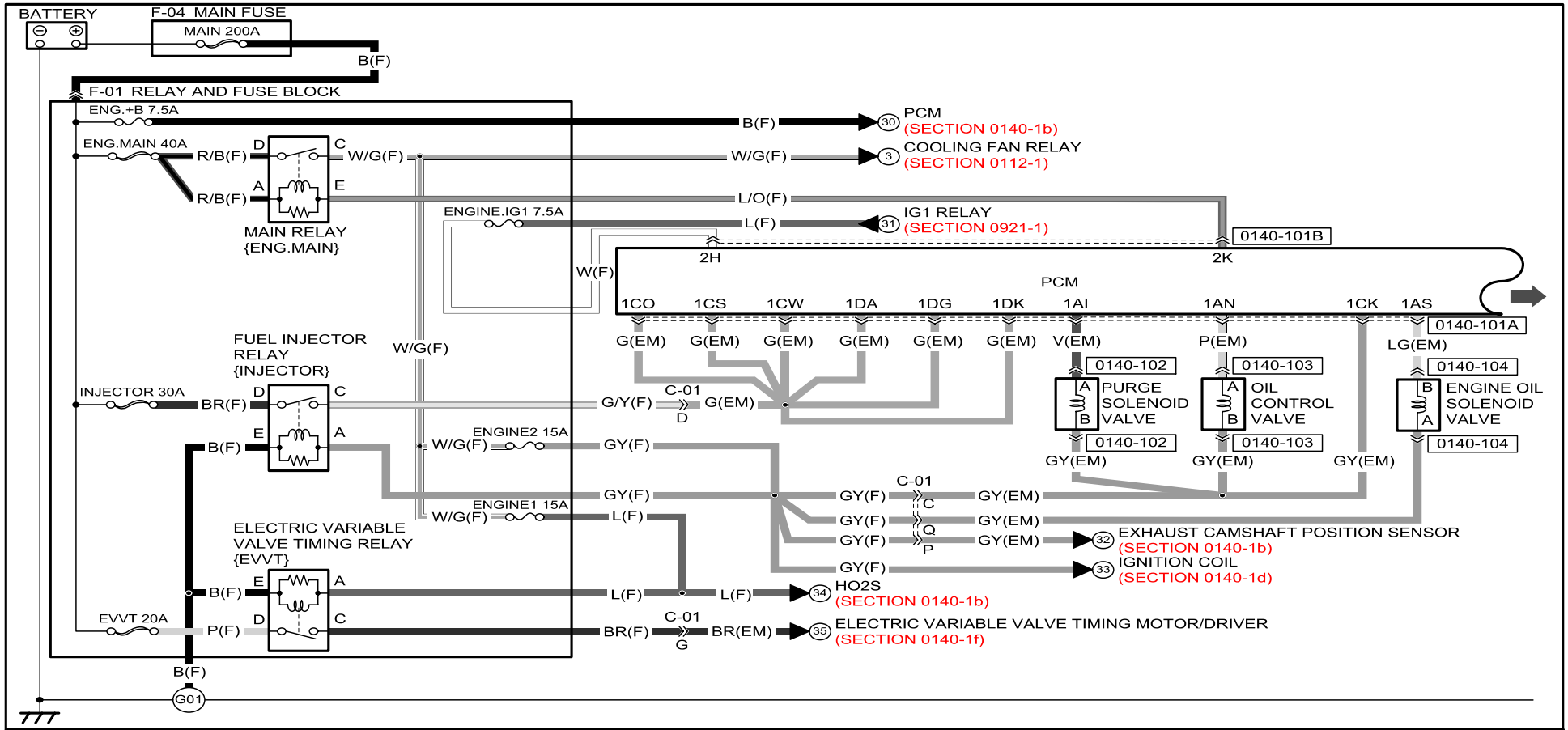

0140-102 PURGE SOLENOID VALVE	0140-103 OIL CONTROL VALVE	0140-104 ENGINE OIL SOLENOID VALVE				

Refer to 00F section for the FUSE BOX, 00C section for the PCM CONNECTOR and COMMON CONNECTOR LIST.

CONTROL SYSTEM (SKYACTIV-G 2.0)

0140-1a

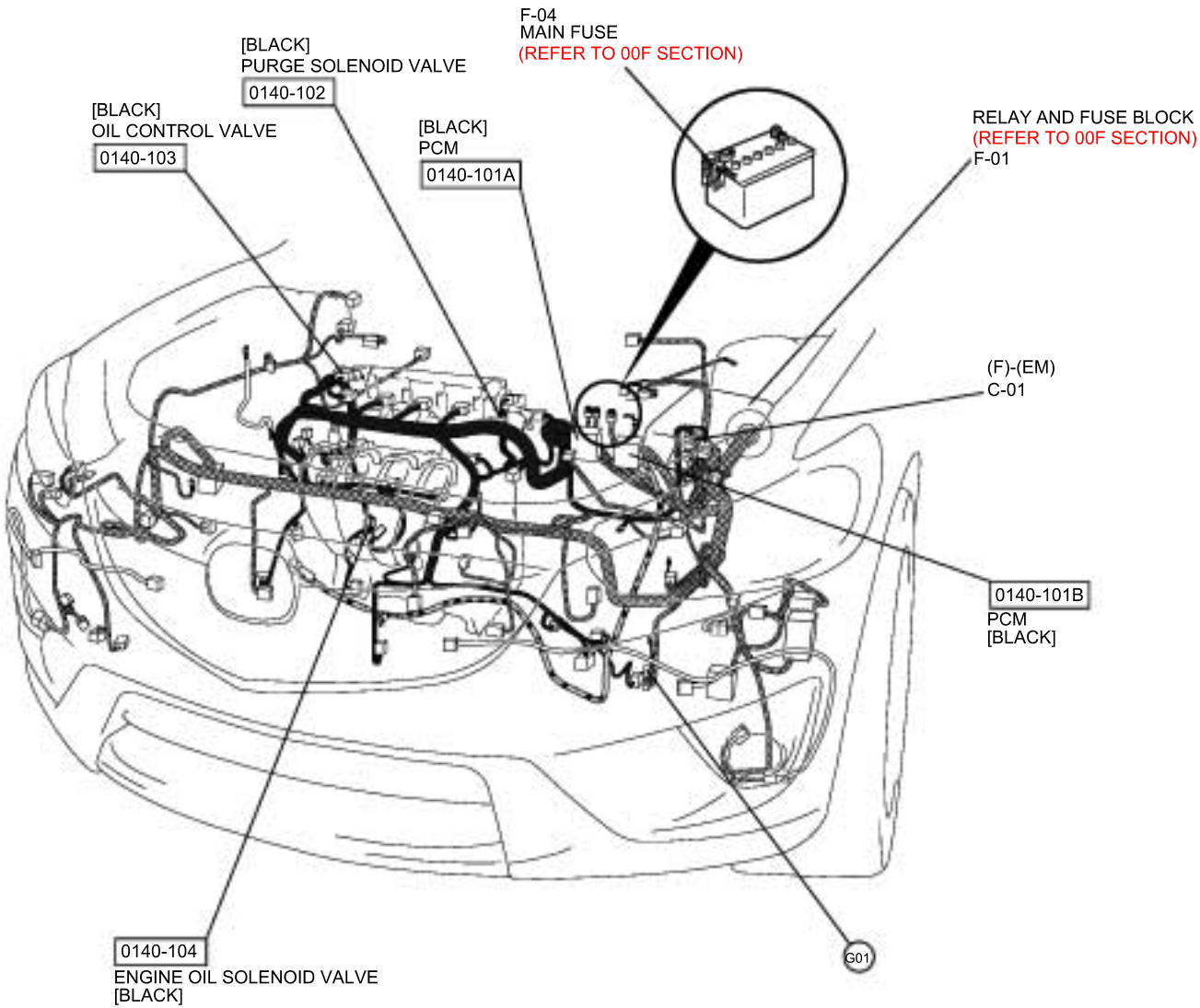

: FRONT HARNESS
: ENGINE HARNESS
: EMISSION HARNESS

CONTROL SYSTEM (SKYACTIV-G 2.0)

0140-1b

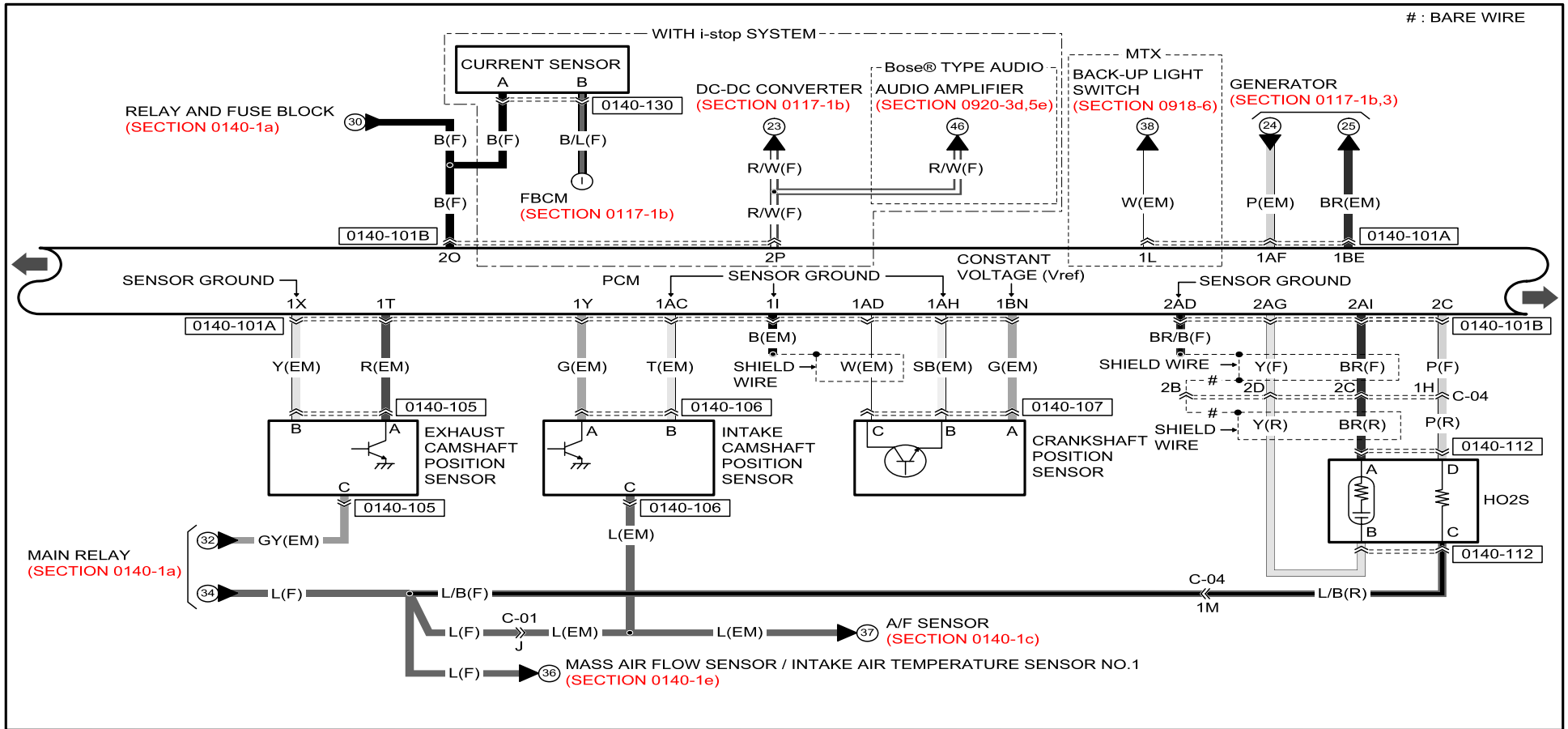

0140-105 EXHAUST CAMSHAFT POSITION SENSOR	0140-106 INTAKE CAMSHAFT POSITION SENSOR	0140-107 CRANKSHAFT POSITION SENSOR	0140-112 HO2S	0140-130 CURRENT SENSOR		
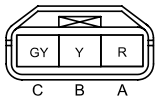	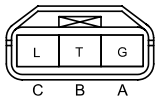	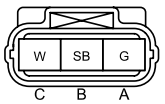	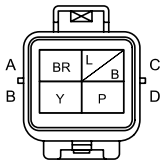	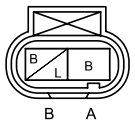		

Refer to 00F section for the FUSE BOX, 00C section for the PCM CONNECTOR and COMMON CONNECTOR LIST.

CONTROL SYSTEM (SKYACTIV-G 2.0)

0140-1b

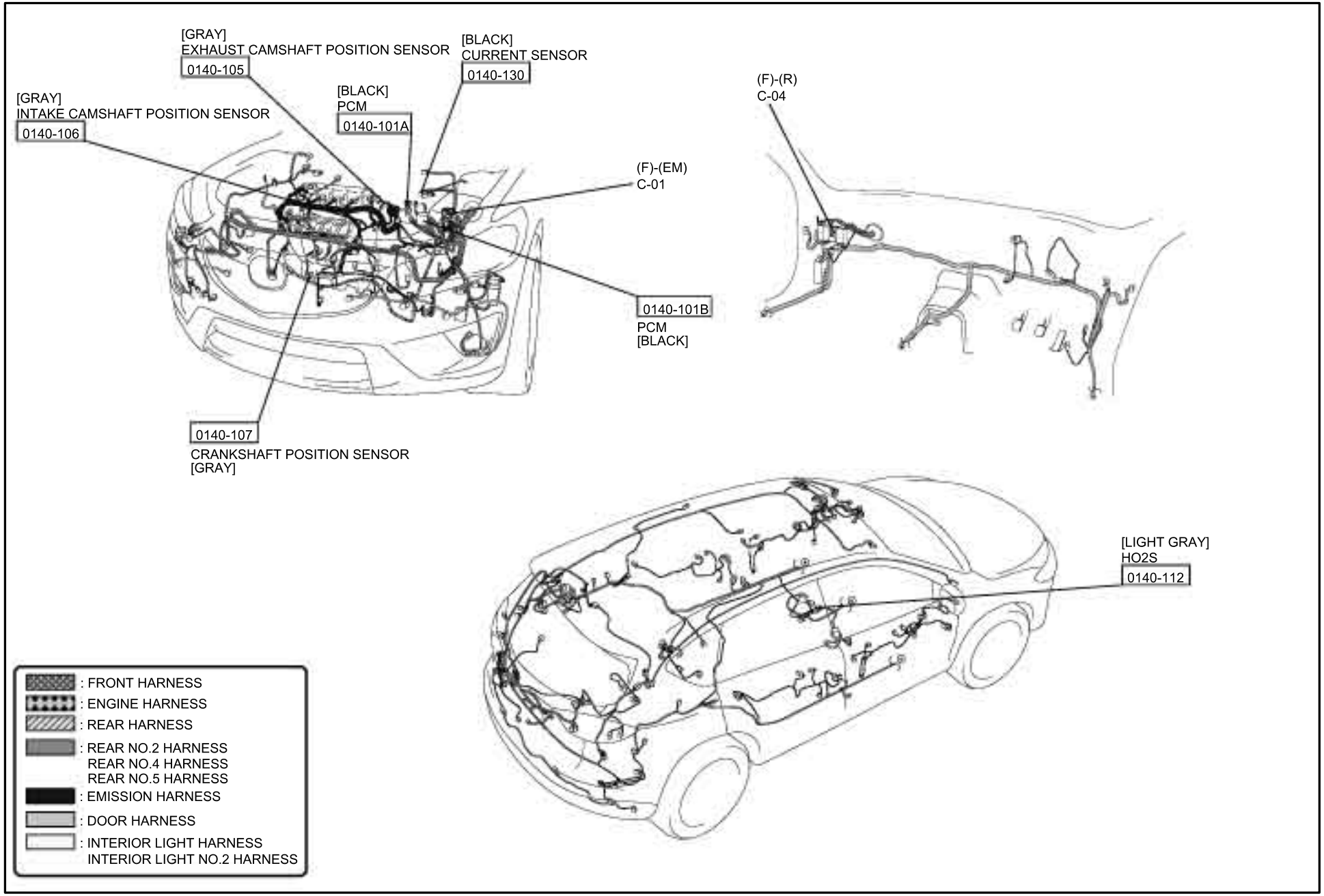

CONTROL SYSTEM (SKYACTIV-G 2.0)

0140-1c

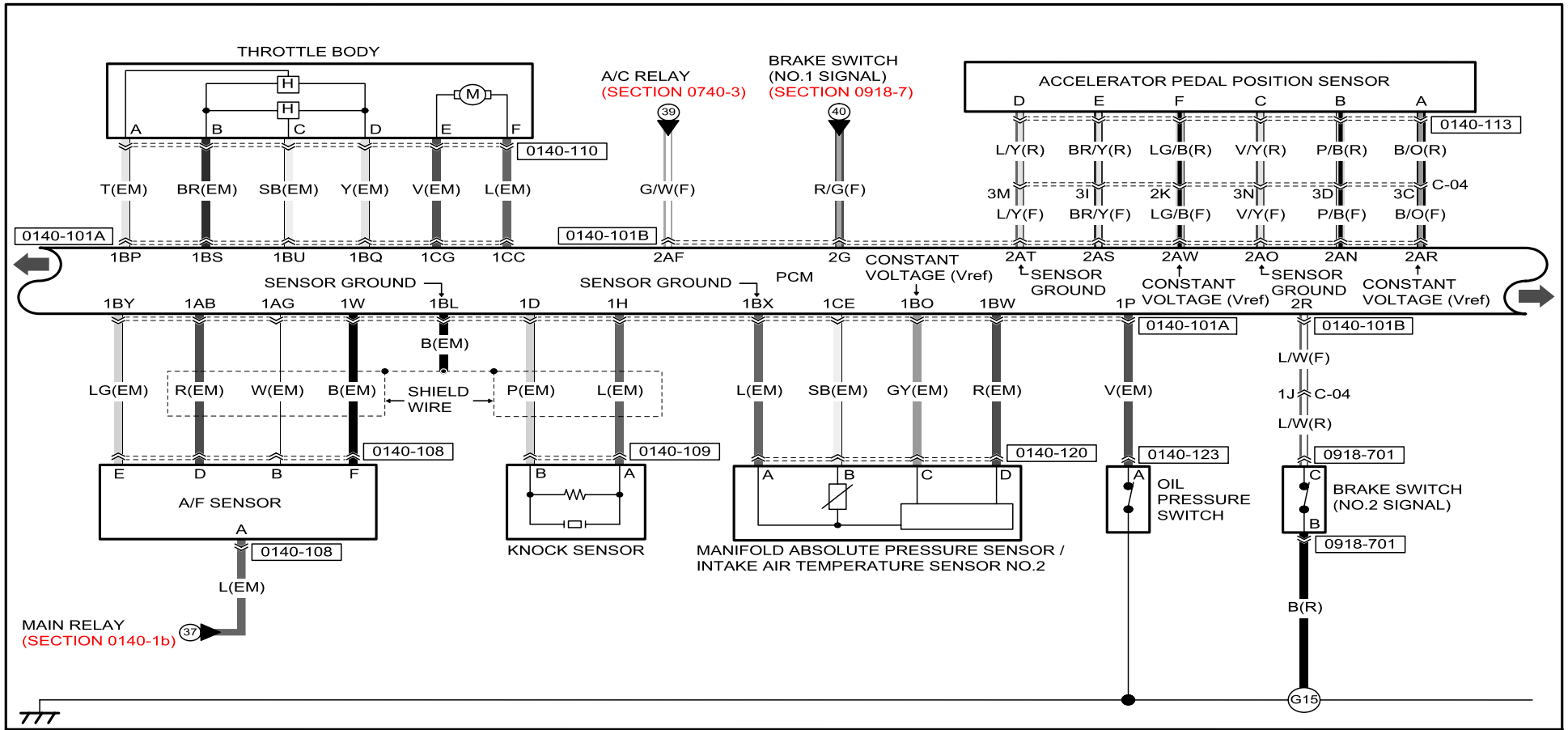

0140-108
A/F SENSOR

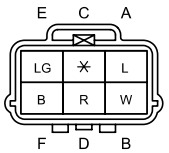

0140-110
THROTTLE BODY

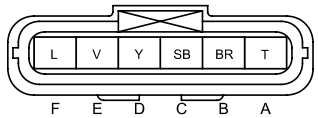

0140-120
MANIFOLD ABSOLUTE PRESSURE SENSOR /
INTAKE AIR TEMPERATURE SENSOR NO.2

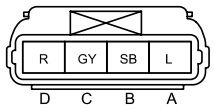

0140-123
OIL PRESSURE SWITCH

0918-701
BRAKE SWITCH

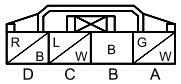

0140-109
KNOCK SENSOR

0140-113
ACCELERATOR PEDAL POSITION SENSOR

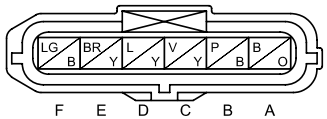

Refer to 00F section for the FUSE BOX, 00C section for the PCM CONNECTOR and COMMON CONNECTOR LIST.

CONTROL SYSTEM (SKYACTIV-G 2.0) 0140-1c

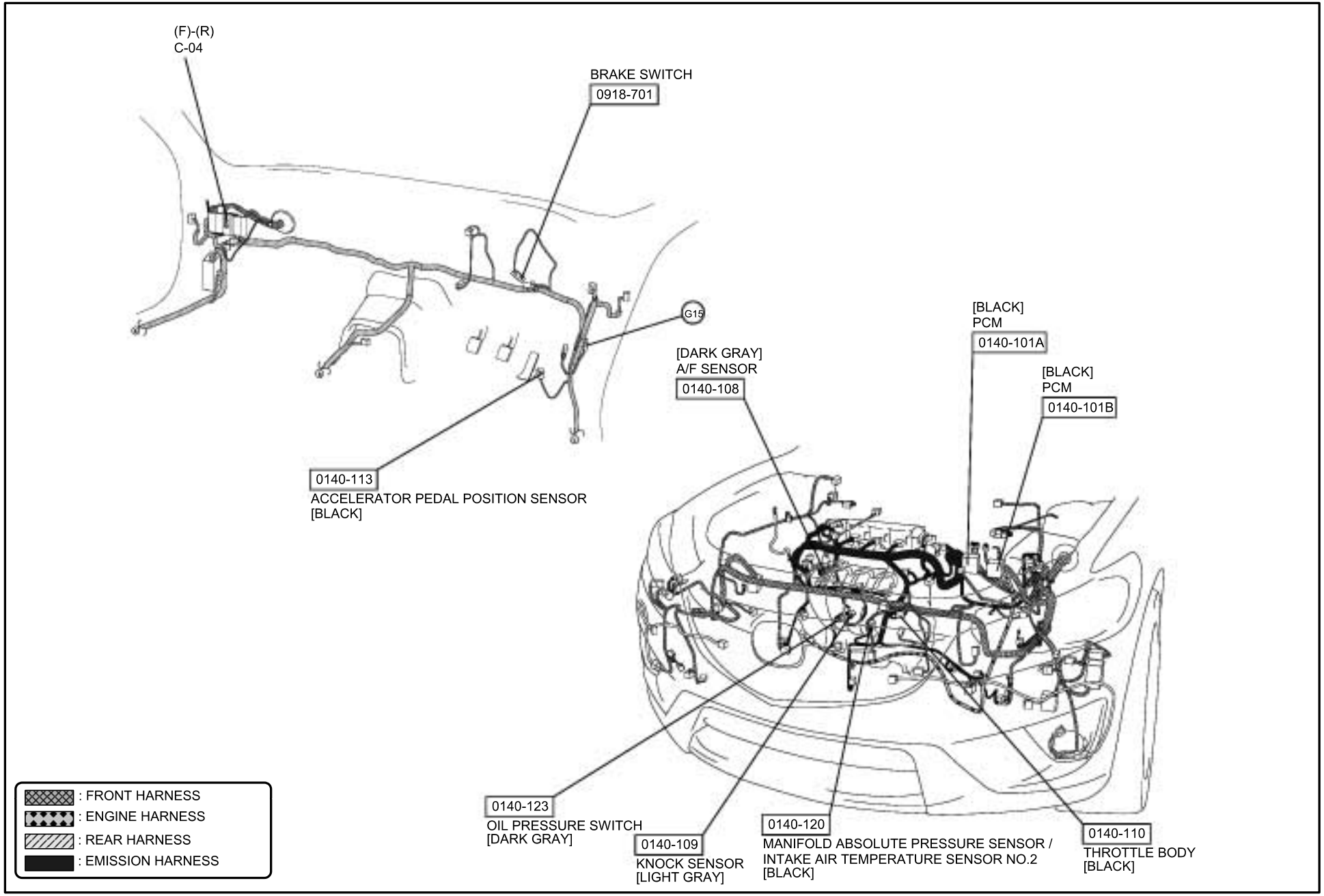

CONTROL SYSTEM (SKYACTIV-G 2.0)

0140-1d

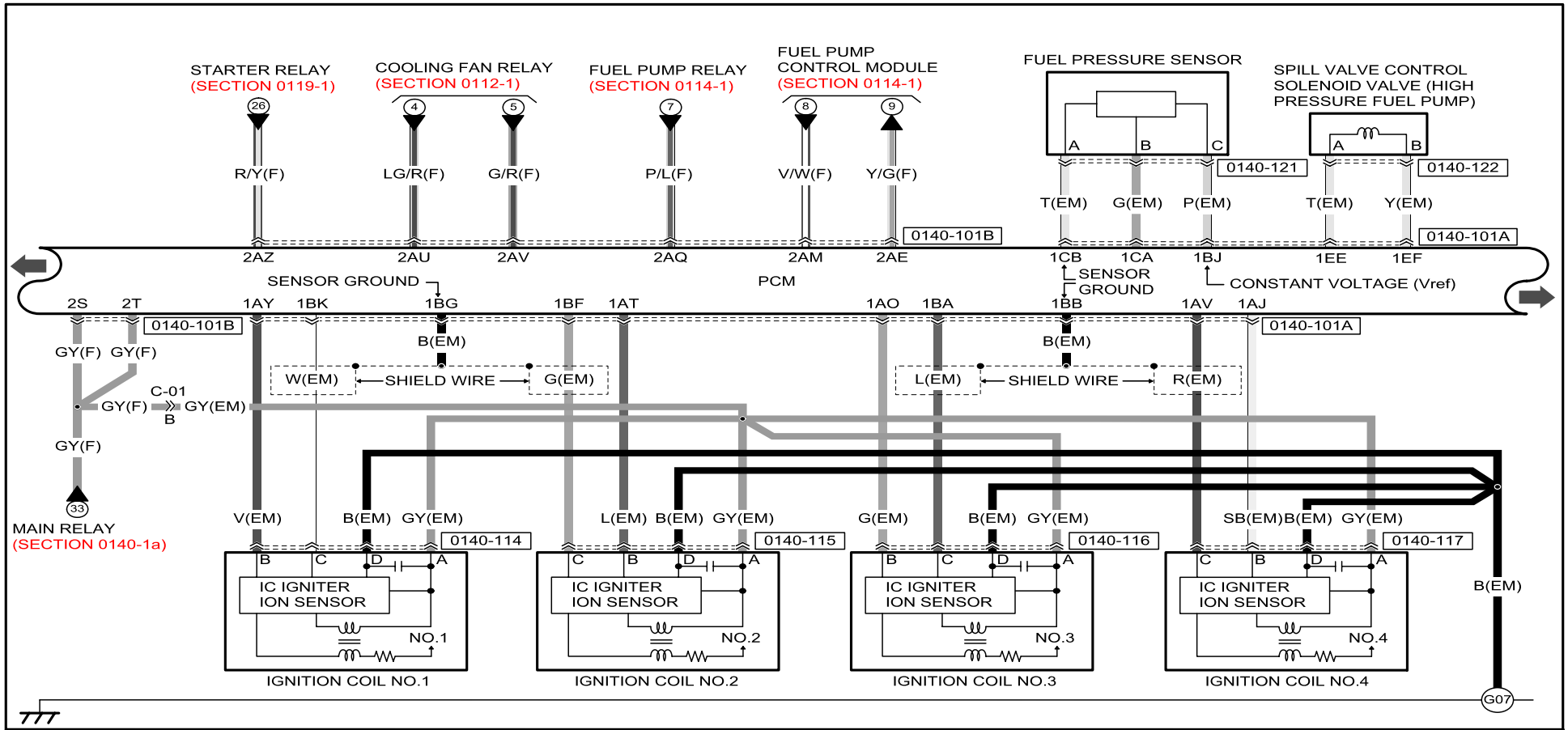

0140-114 IGNITION COIL NO.1	0140-115 IGNITION COIL NO.2	0140-116 IGNITION COIL NO.3	0140-117 IGNITION COIL NO.4	0140-121 FUEL PRESSURE SENSOR	0140-122 SPILL VALVE CONTROL SOLENOID VALVE (HIGH PRESSURE FUEL PUMP)
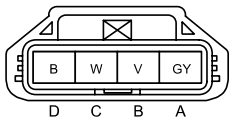	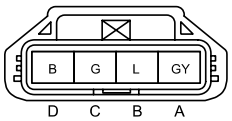	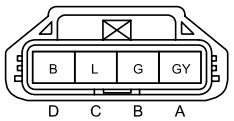	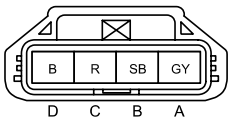	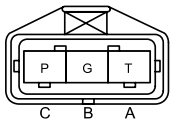	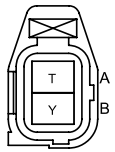

Refer to 00F section for the FUSE BOX, 00C section for the PCM CONNECTOR and COMMON CONNECTOR LIST.

CONTROL SYSTEM (SKYACTIV-G 2.0) 0140-1d

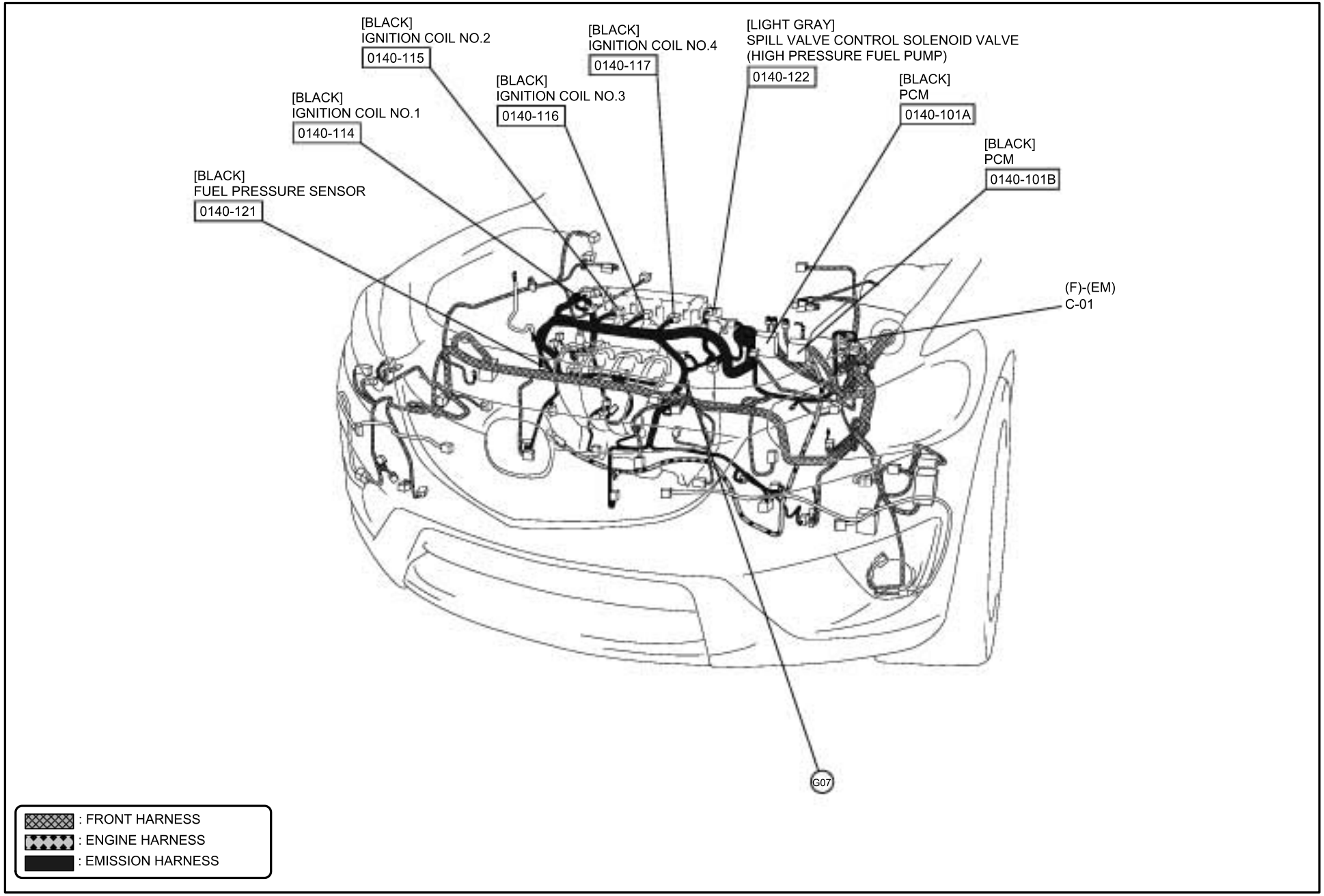

CONTROL SYSTEM (SKYACTIV-G 2.0)

0140-1e

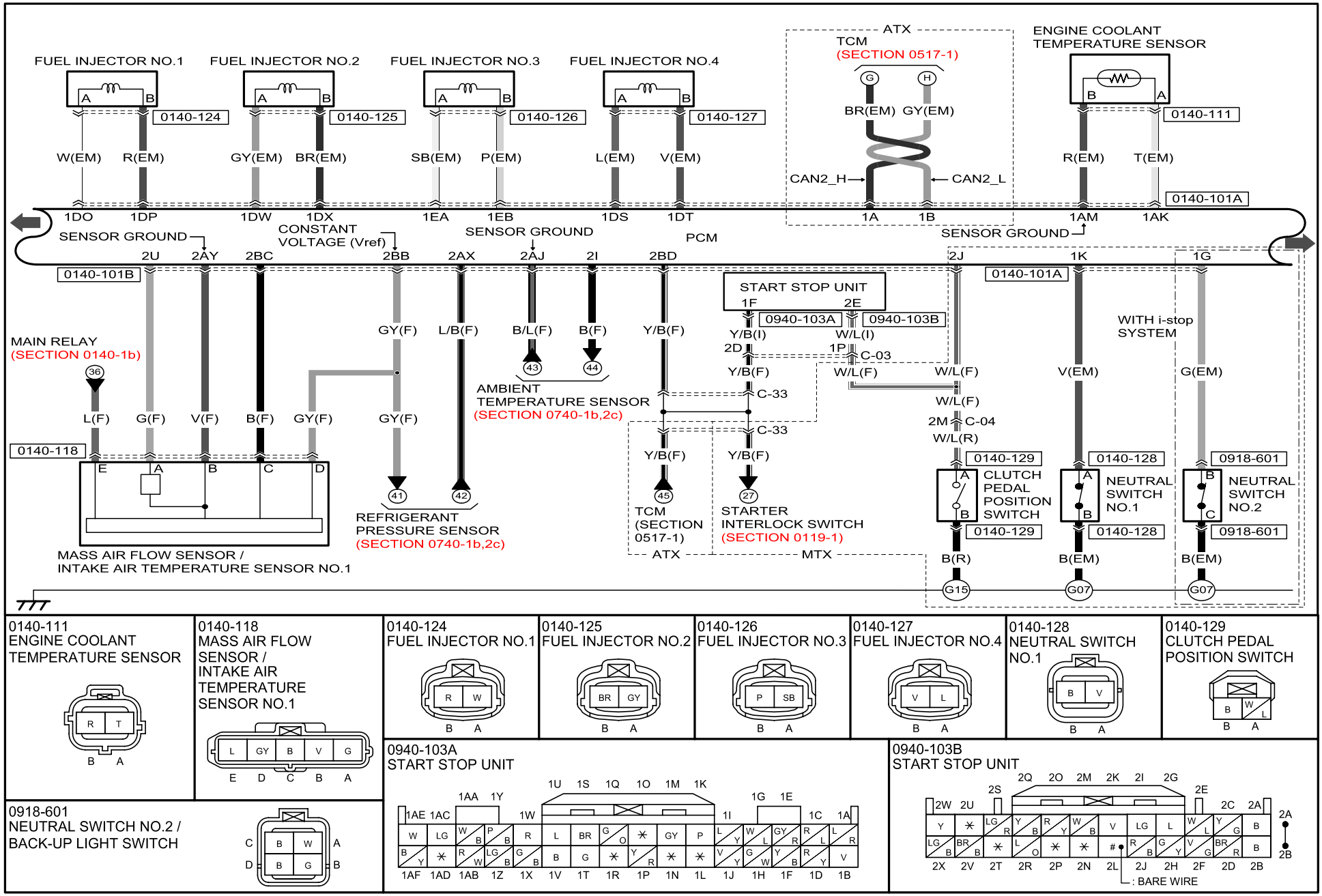

Refer to 00F section for the FUSE BOX, 00C section for the PCM CONNECTOR and COMMON CONNECTOR LIST.

CONTROL SYSTEM (SKYACTIV-G 2.0)

0140-1e

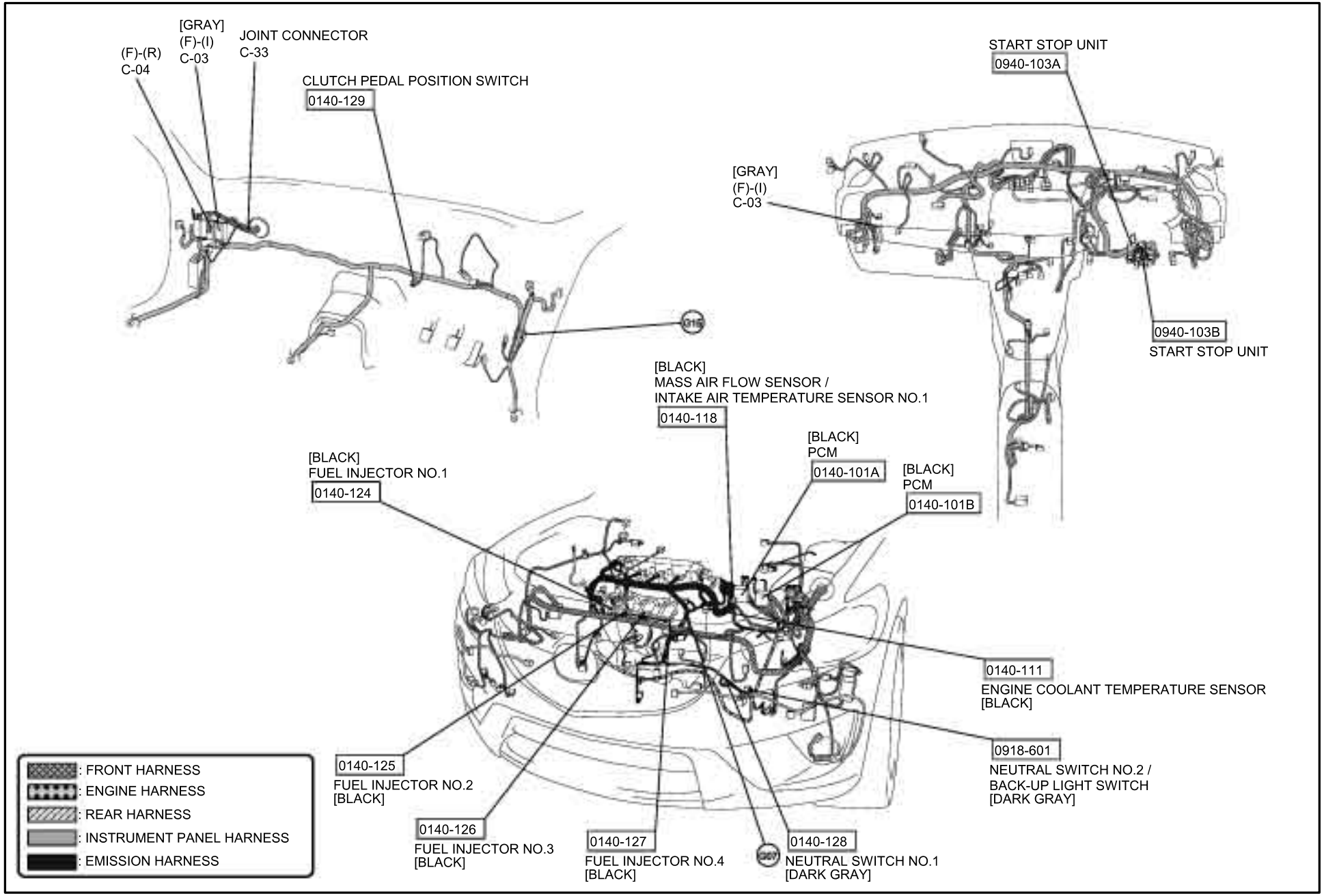

CONTROL SYSTEM (SKYACTIV-G 2.0)

0140-1f

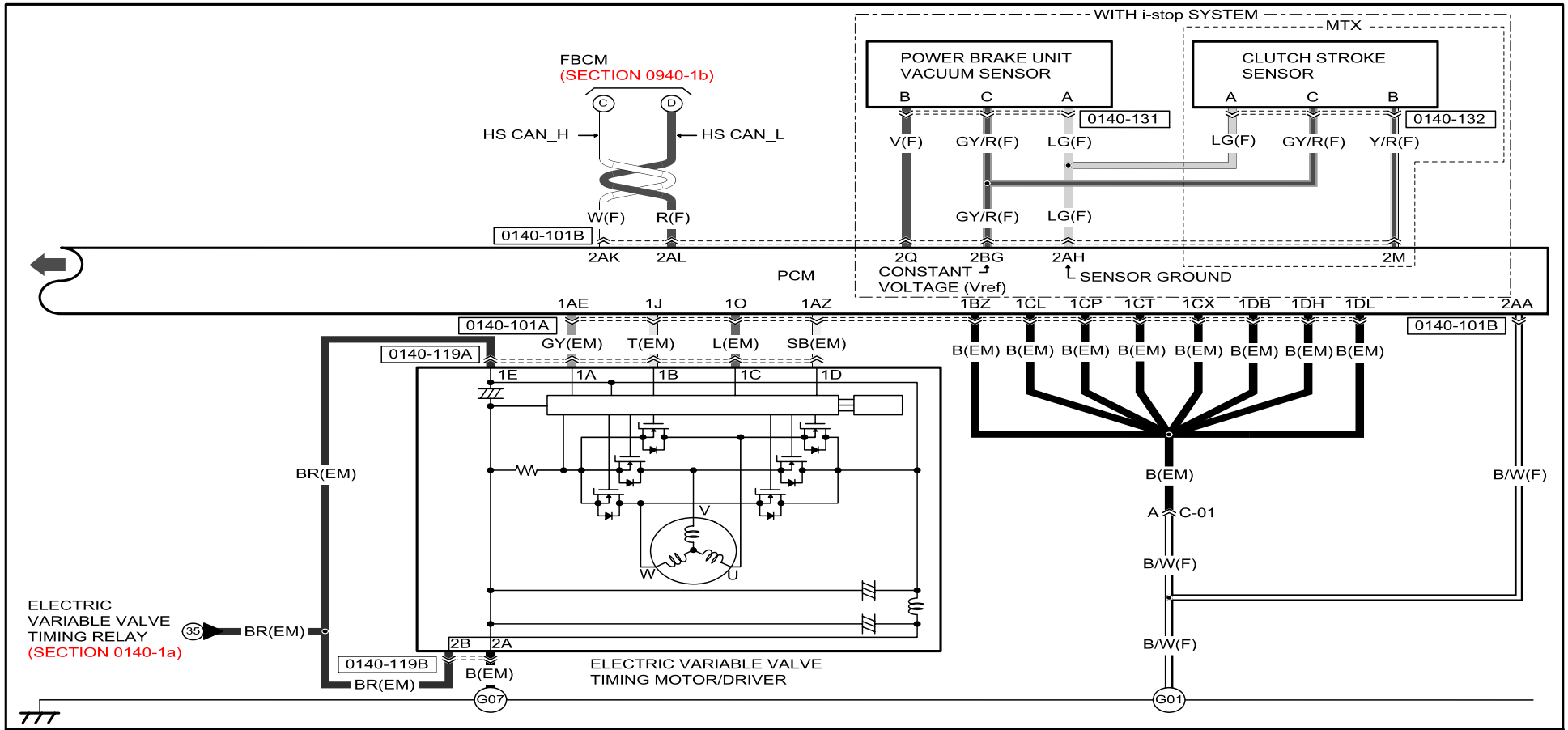

0140-119A
ELECTRIC VARIABLE VALVE
TIMING MOTOR/DRIVER

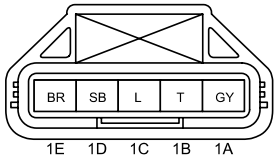

0140-119B
ELECTRIC VARIABLE VALVE TIMING MOTOR/DRIVER

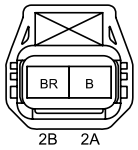

0140-131
POWER BRAKE UNIT
VACUUM SENSOR

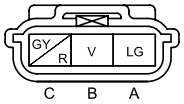

0140-132
CLUTCH STROKE
SENSOR

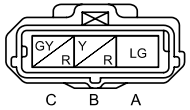

Refer to 00F section for the FUSE BOX, 00C section for the PCM CONNECTOR and COMMON CONNECTOR LIST.

CONTROL SYSTEM (SKYACTIV-G 2.0)

0140-1f

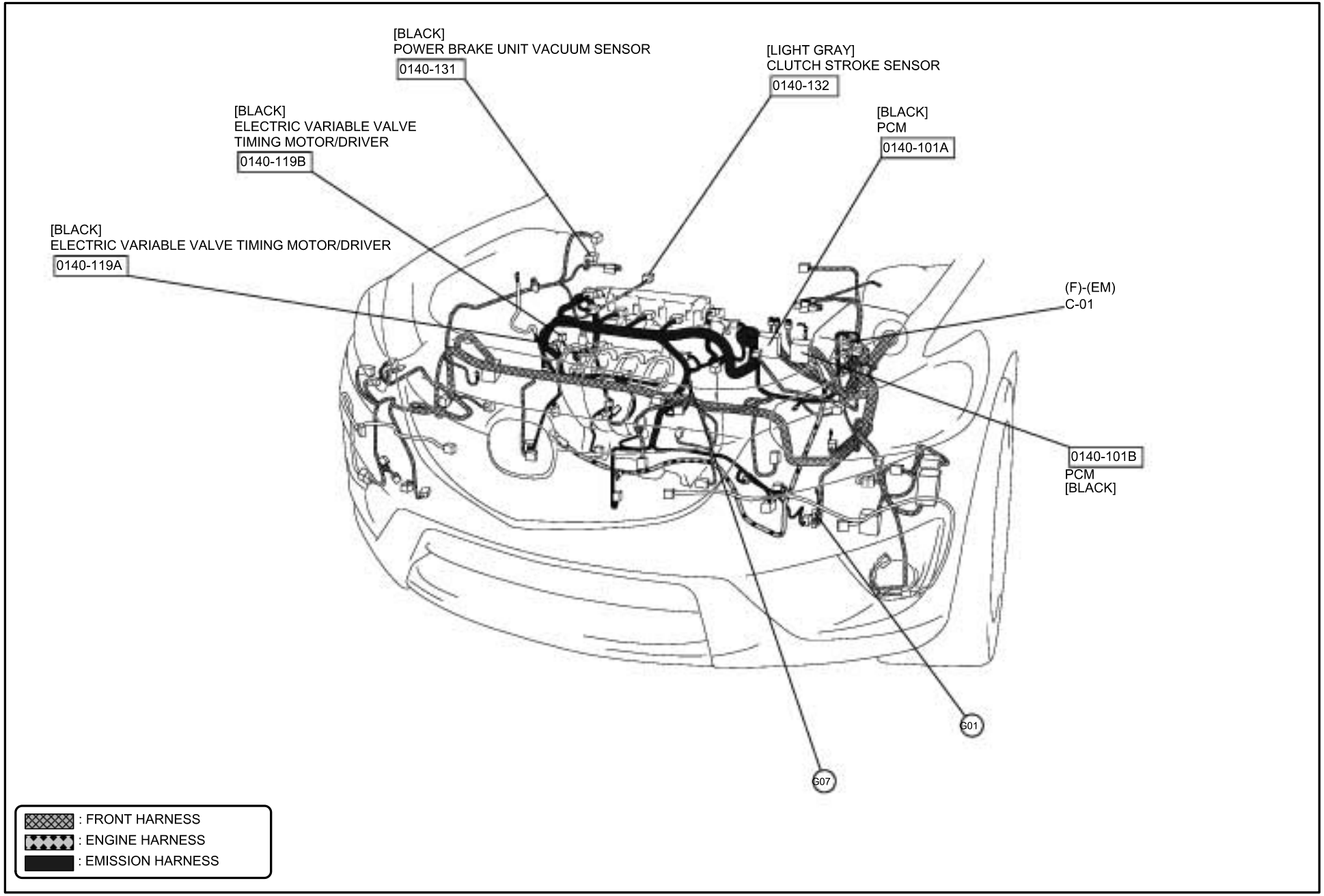

CONTROL SYSTEM (SKYACTIV-D 2.2)

0140-2a

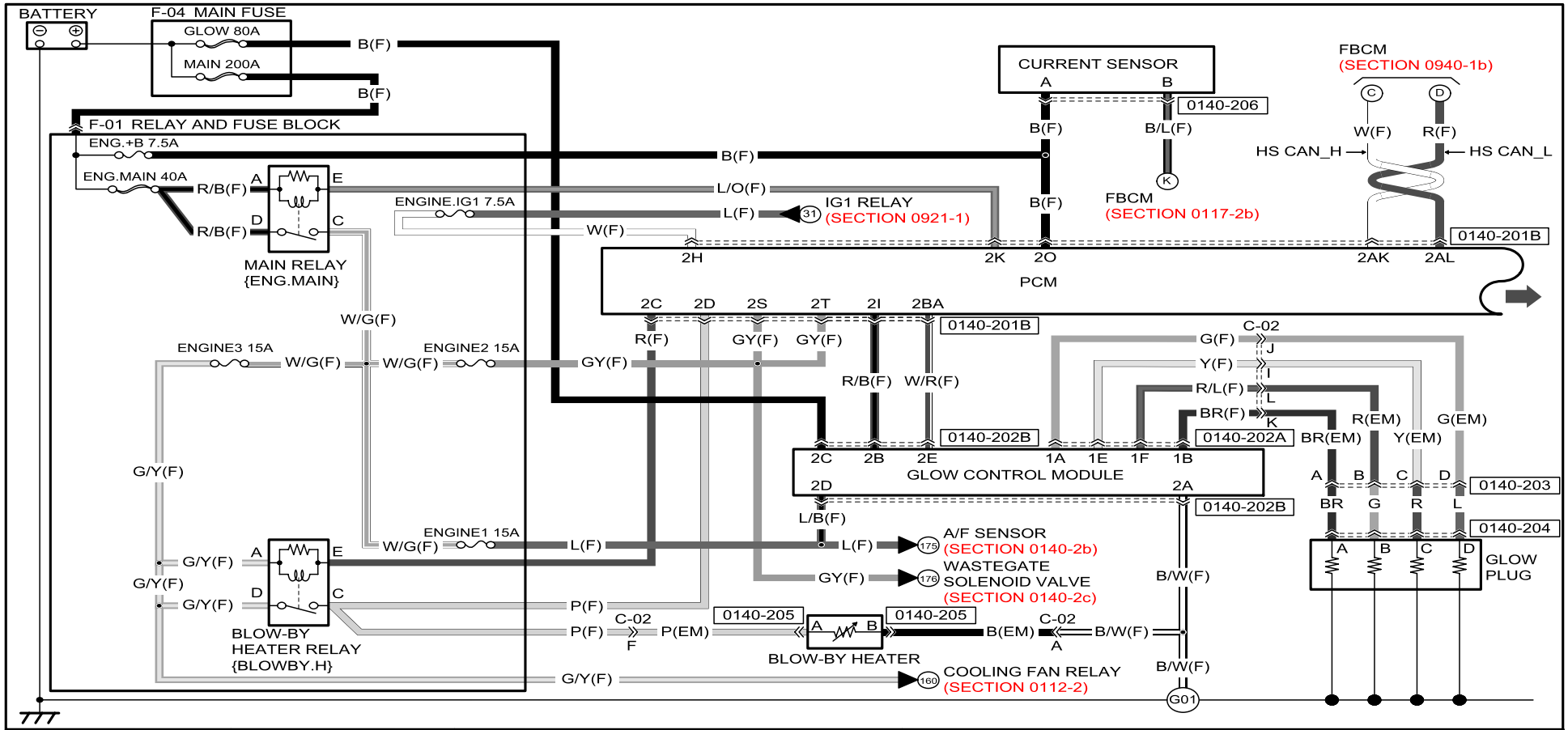

0140-202A
GLOW CONTROL MODULE

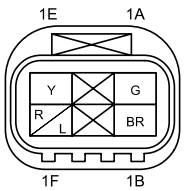

0140-202B
GLOW CONTROL MODULE

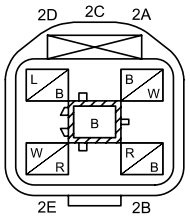

0140-203
EMISSION HARNESS-SHORT CORD

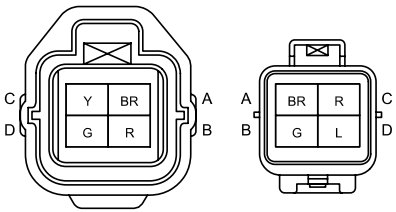

0140-204
GLOW PLUG

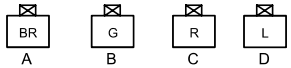

0140-205
BLOW-BY HEATER

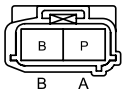

0140-206
CURRENT SENSOR

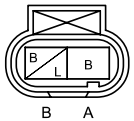

Refer to 00F section for the FUSE BOX, 00C section for the PCM CONNECTOR and COMMON CONNECTOR LIST.

CONTROL SYSTEM (SKYACTIV-D 2.2)

0140-2a

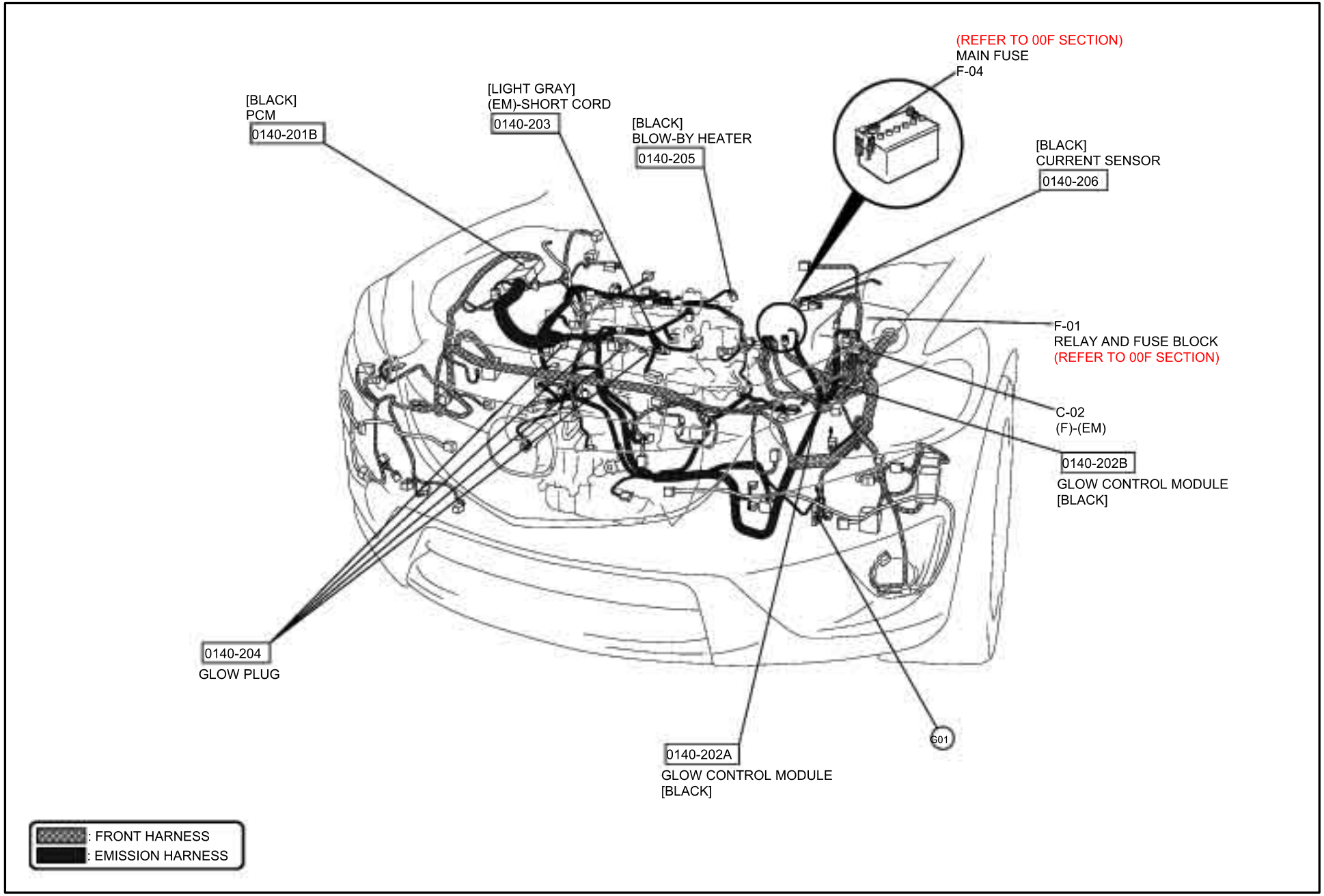

CONTROL SYSTEM (SKYACTIV-D 2.2)

0140-2b

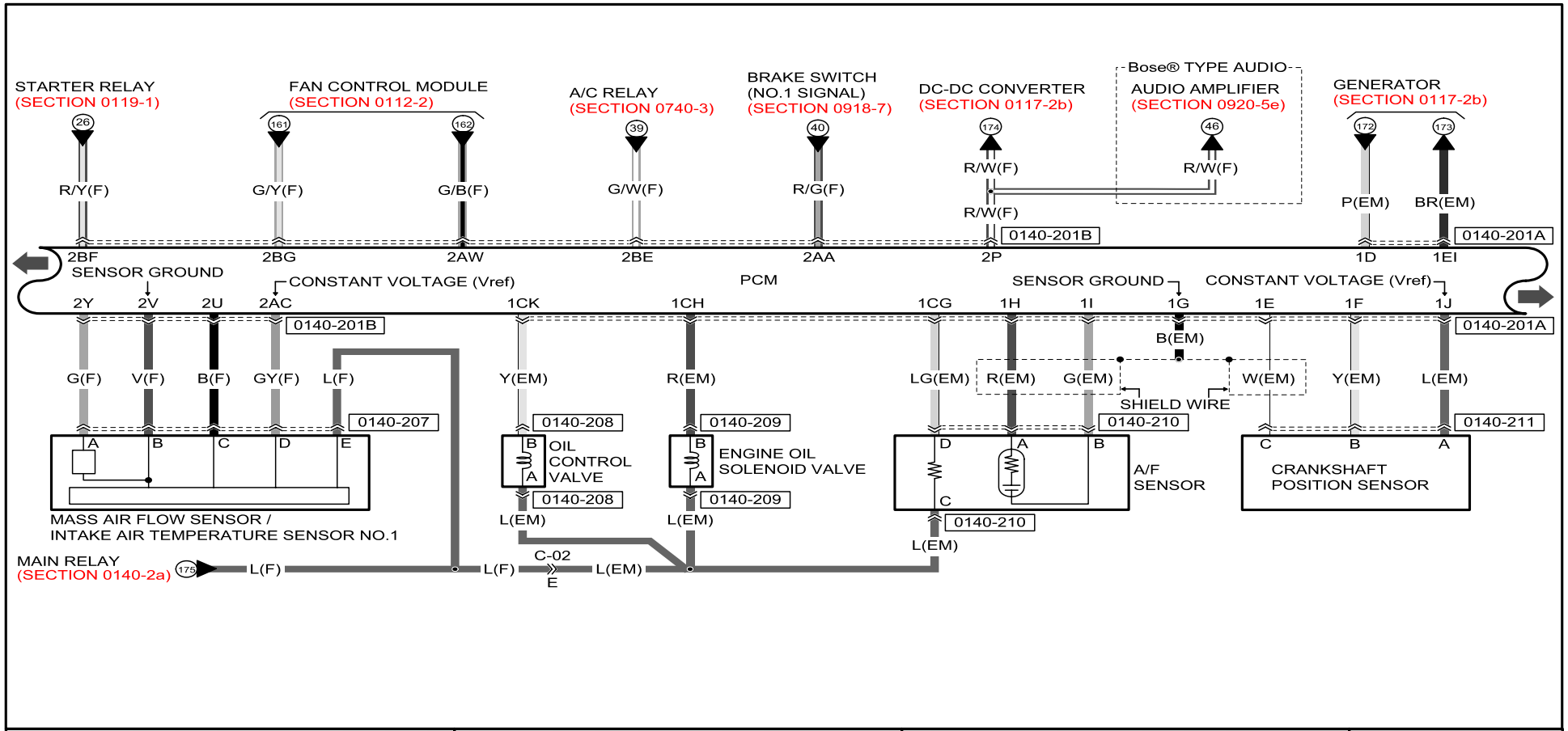

0140-207 MASS AIR FLOW SENSOR / INTAKE AIR TEMPERATURE SENSOR NO.1 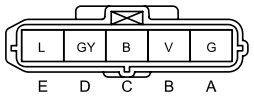 	0140-208 OIL CONTROL VALVE 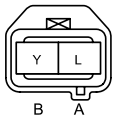 	0140-209 ENGINE OIL SOLENOID VALVE 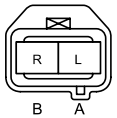 	
0140-210 A/F SENSOR 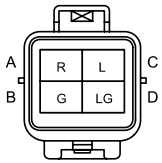 	0140-211 CRANKSHAFT POSITION SENSOR 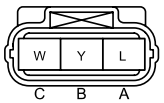 		

Refer to 00F section for the FUSE BOX, 00C section for the PCM CONNECTOR and COMMON CONNECTOR LIST.

CONTROL SYSTEM (SKYACTIV-D 2.2) 0140-2b

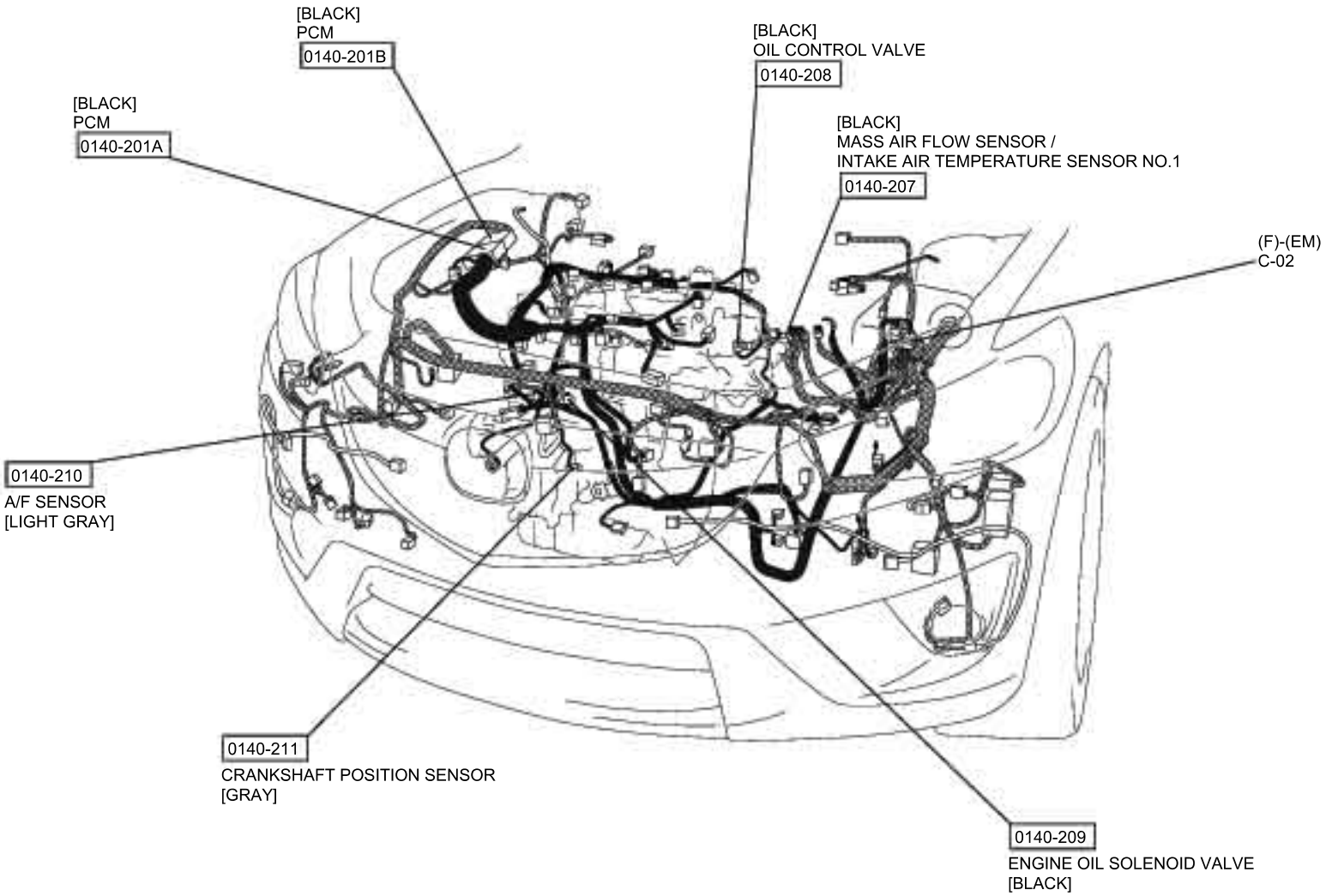

: FRONT HARNESS
: EMISSION HARNESS

CONTROL SYSTEM (SKYACTIV-D 2.2)

0140-2c

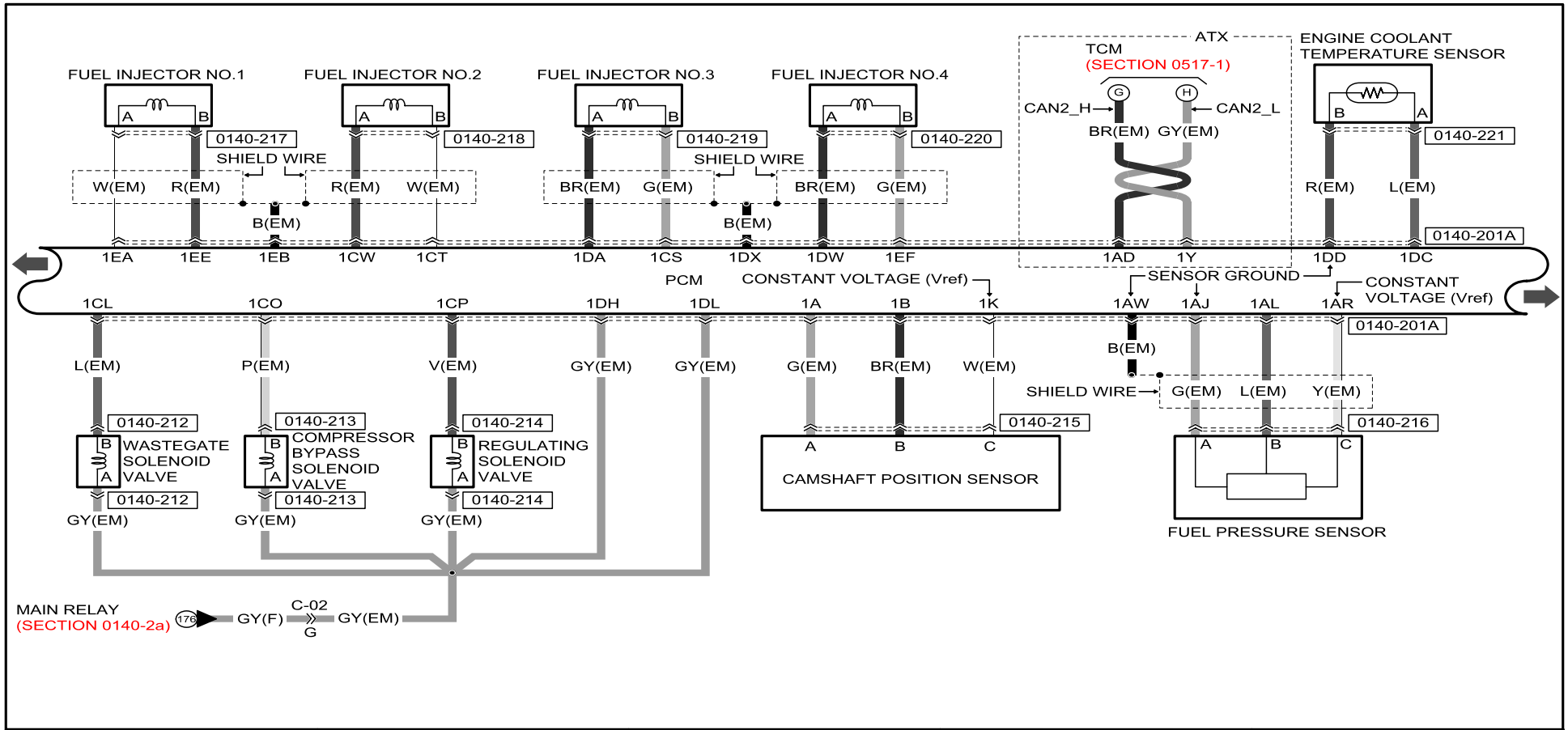

0140-212 WASTEGATE SOLENOID VALVE 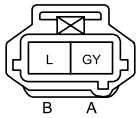	0140-213 COMPRESSOR BYPASS SOLENOID VALVE 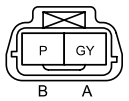	0140-214 REGULATING SOLENOID VALVE 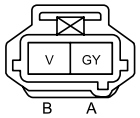	0140-215 CAMSHAFT POSITION SENSOR 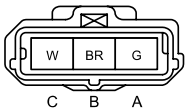	0140-216 FUEL PRESSURE SENSOR 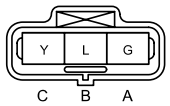
0140-217 FUEL INJECTOR NO.1 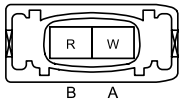	0140-218 FUEL INJECTOR NO.2 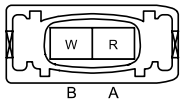	0140-219 FUEL INJECTOR NO.3 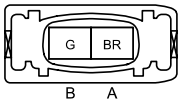	0140-220 FUEL INJECTOR NO.4 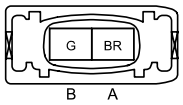	0140-221 ENGINE COOLANT TEMPERATURE SENSOR 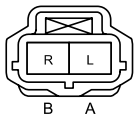

Refer to 00F section for the FUSE BOX, 00C section for the PCM CONNECTOR and COMMON CONNECTOR LIST.

CONTROL SYSTEM (SKYACTIV-D 2.2) 0140-2c

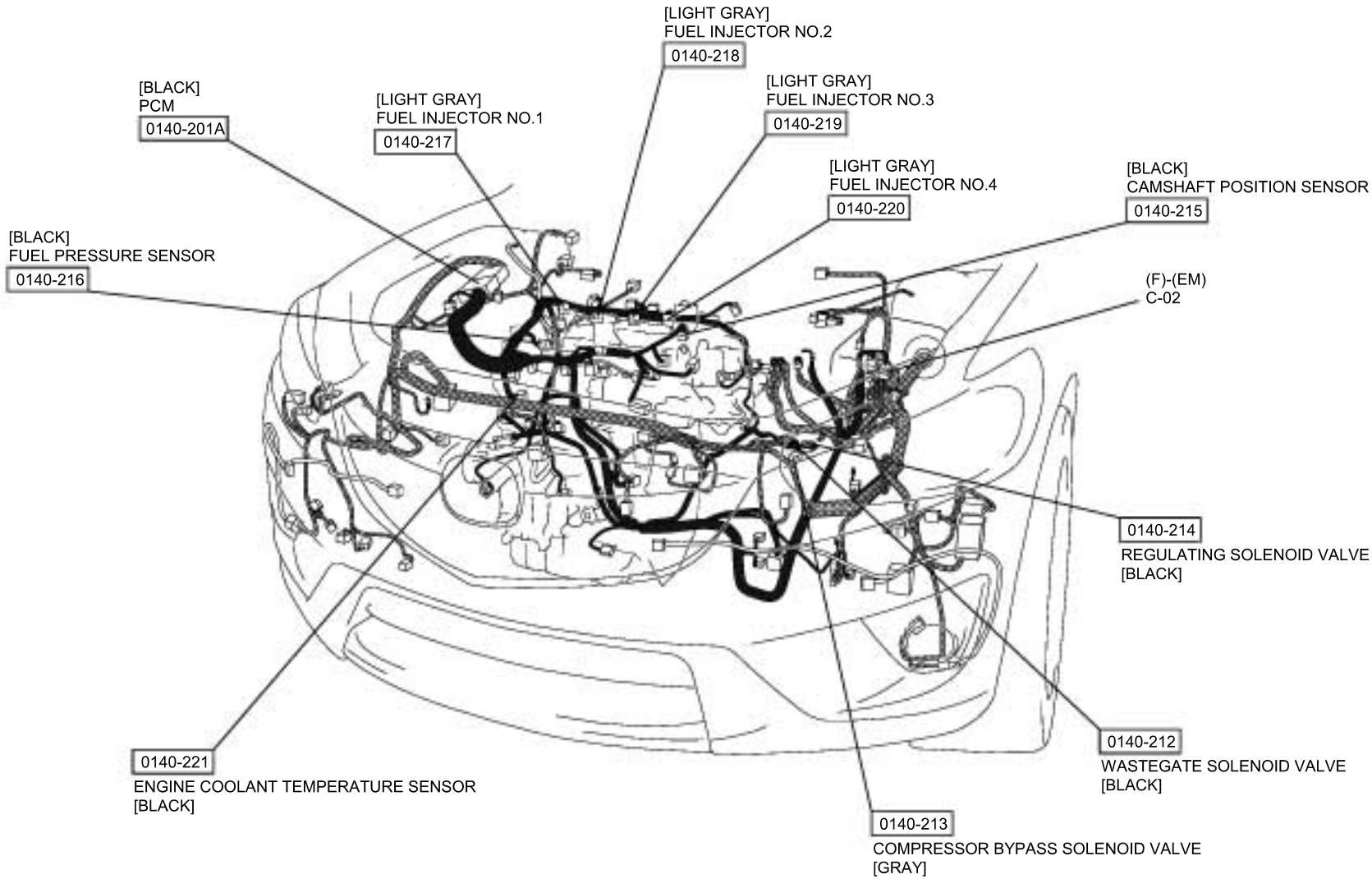

: FRONT HARNESS
: EMISSION HARNESS

CONTROL SYSTEM (SKYACTIV-D 2.2)

0140-2d

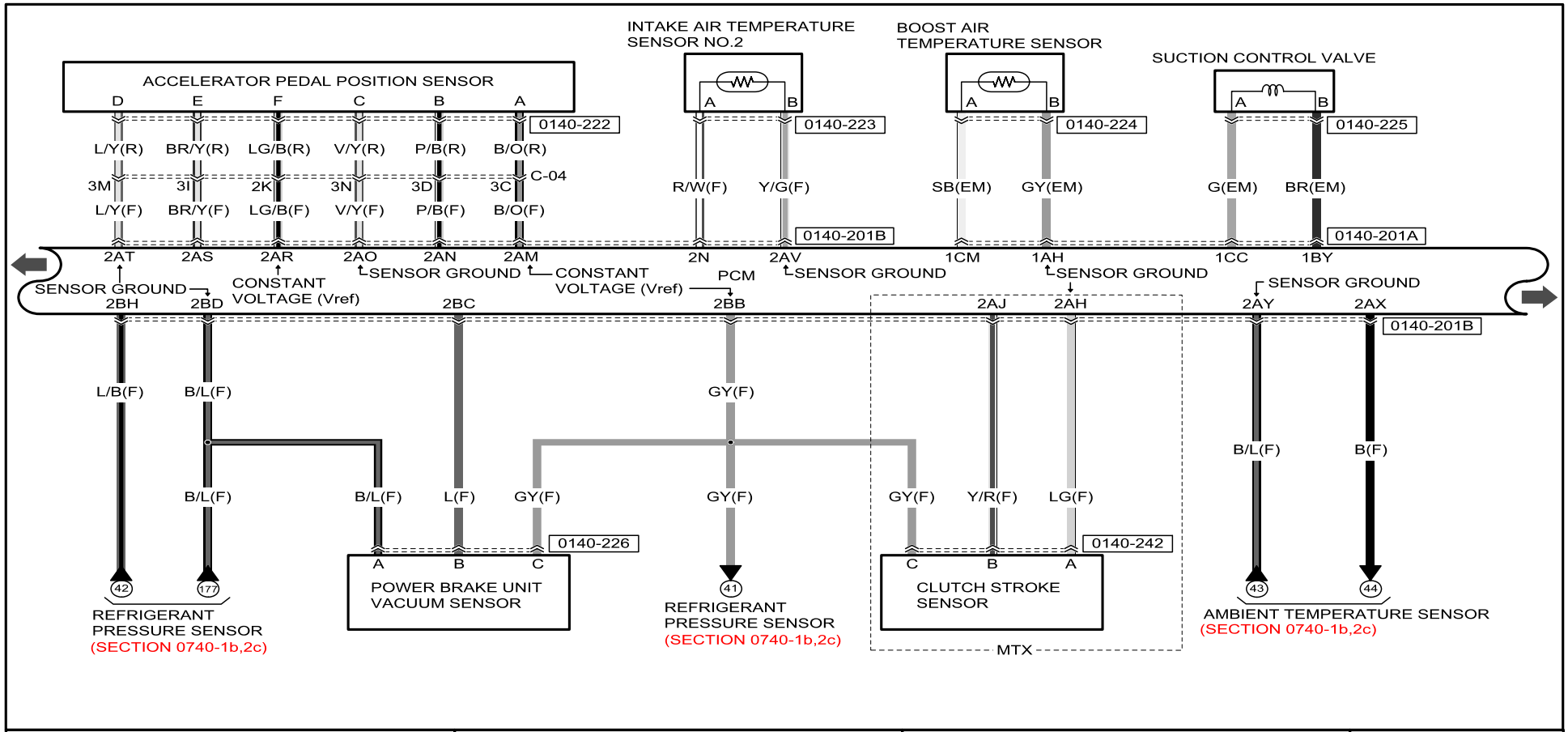

0140-222
ACCELERATOR PEDAL POSITION SENSOR

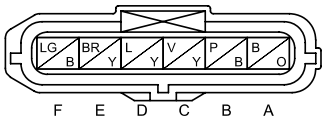

0140-223
INTAKE AIR TEMPERATURE SENSOR NO.2

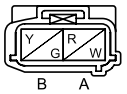

0140-224
BOOST AIR TEMPERATURE SENSOR

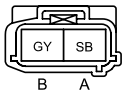

0140-225
SUCTION CONTROL VALVE

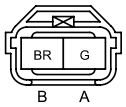

0140-226
POWER BRAKE UNIT VACUUM SENSOR

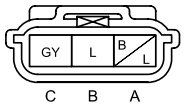

0140-242
CLUTCH STROKE SENSOR

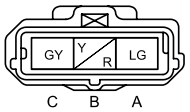

Refer to 00F section for the FUSE BOX, 00C section for the PCM CONNECTOR and COMMON CONNECTOR LIST.

CONTROL SYSTEM (SKYACTIV-D 2.2) 0140-2d

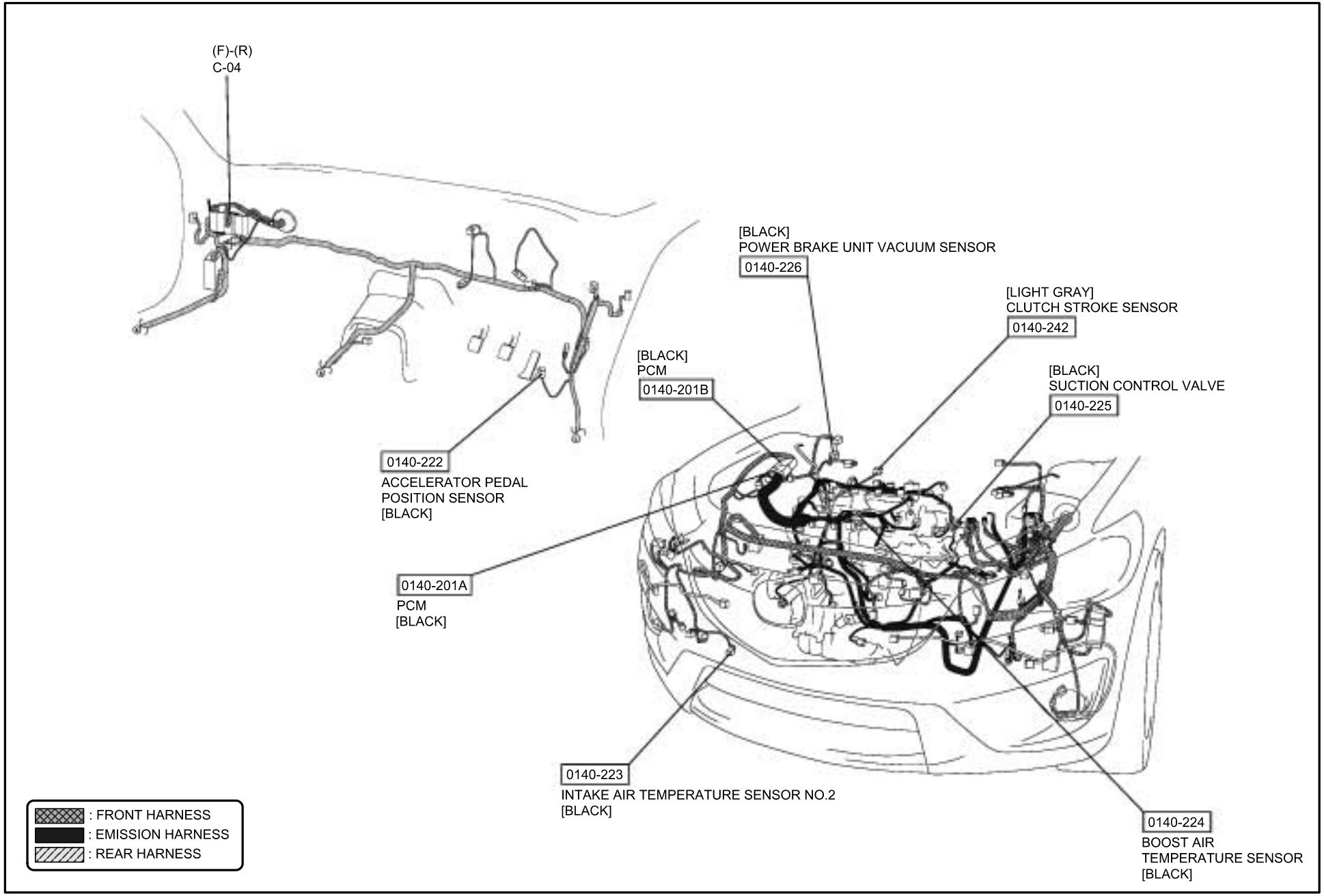

CONTROL SYSTEM (SKYACTIV-D 2.2)

0140-2e

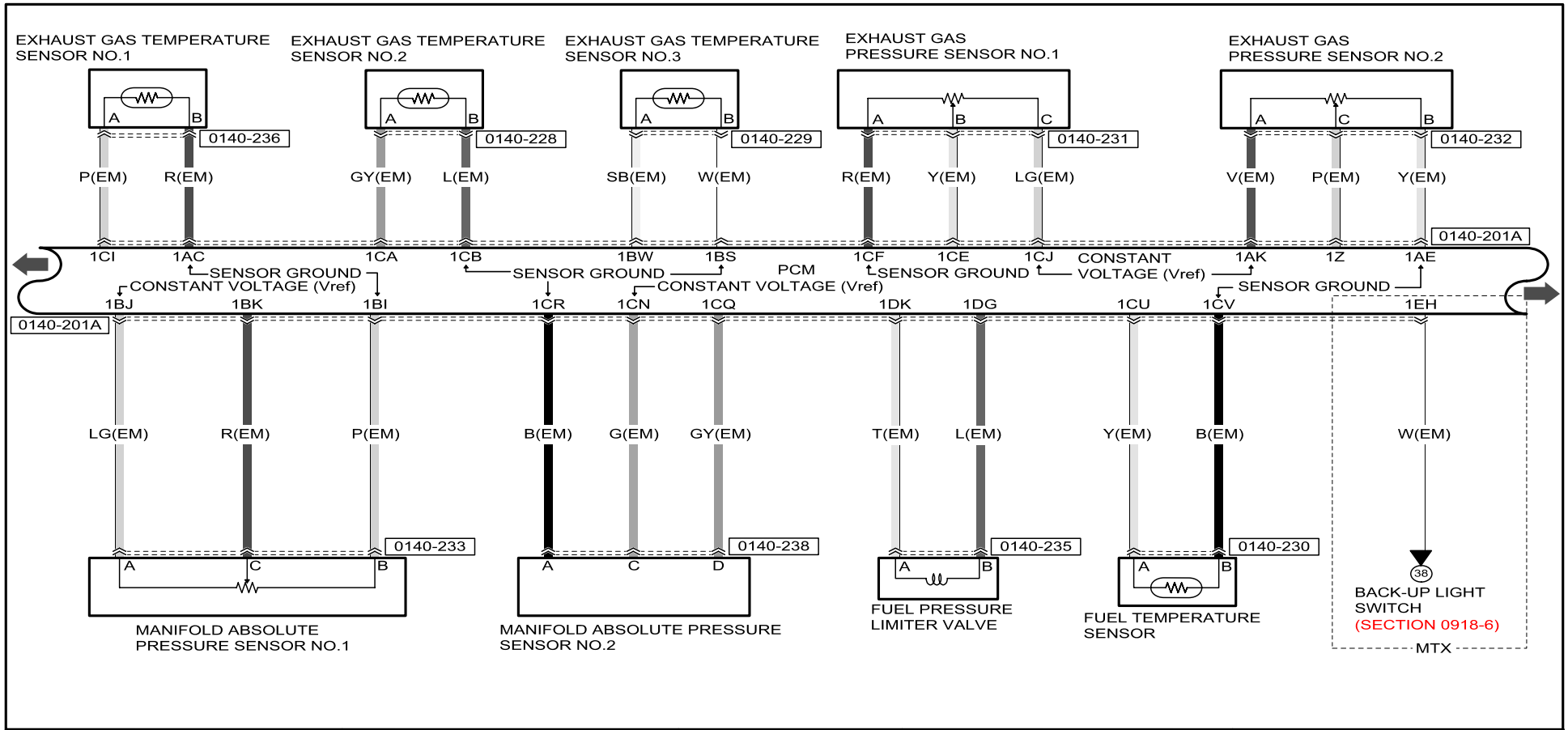

0140-228
EXHAUST GAS TEMPERATURE SENSOR NO.2

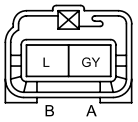

0140-229
EXHAUST GAS TEMPERATURE SENSOR NO.3

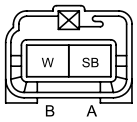

0140-230
FUEL TEMPERATURE SENSOR

0140-231
EXHAUST GAS PRESSURE SENSOR NO.1

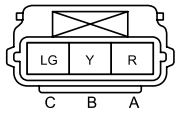

0140-232
EXHAUST GAS PRESSURE SENSOR NO.2

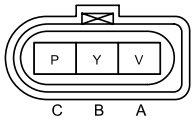

0140-233
MANIFOLD ABSOLUTE PRESSURE SENSOR NO.1

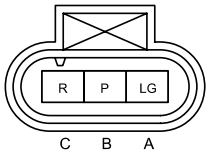

0140-235
FUEL PRESSURE LIMITER VALVE

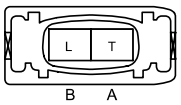

0140-236
EXHAUST GAS TEMPERATURE SENSOR NO.1

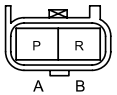

0140-238
MANIFOLD ABSOLUTE PRESSURE SENSOR NO.2

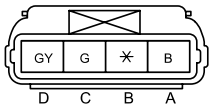

Refer to 00F section for the FUSE BOX, 00C section for the PCM CONNECTOR and COMMON CONNECTOR LIST.

CONTROL SYSTEM (SKYACTIV-D 2.2) 0140-2e

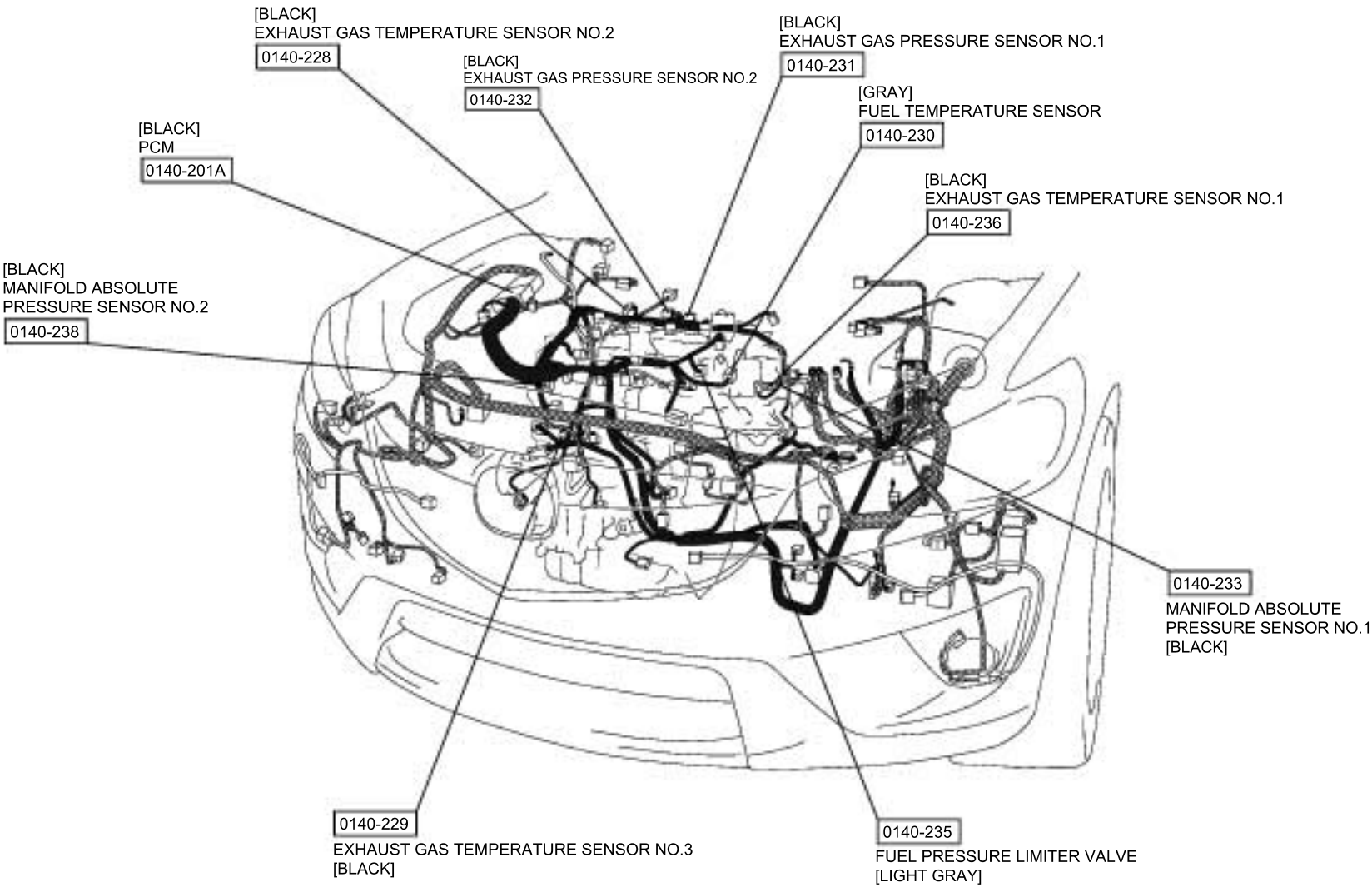

: FRONT HARNESS
: EMISSION HARNESS

CONTROL SYSTEM (SKYACTIV-D 2.2)

0140-2f

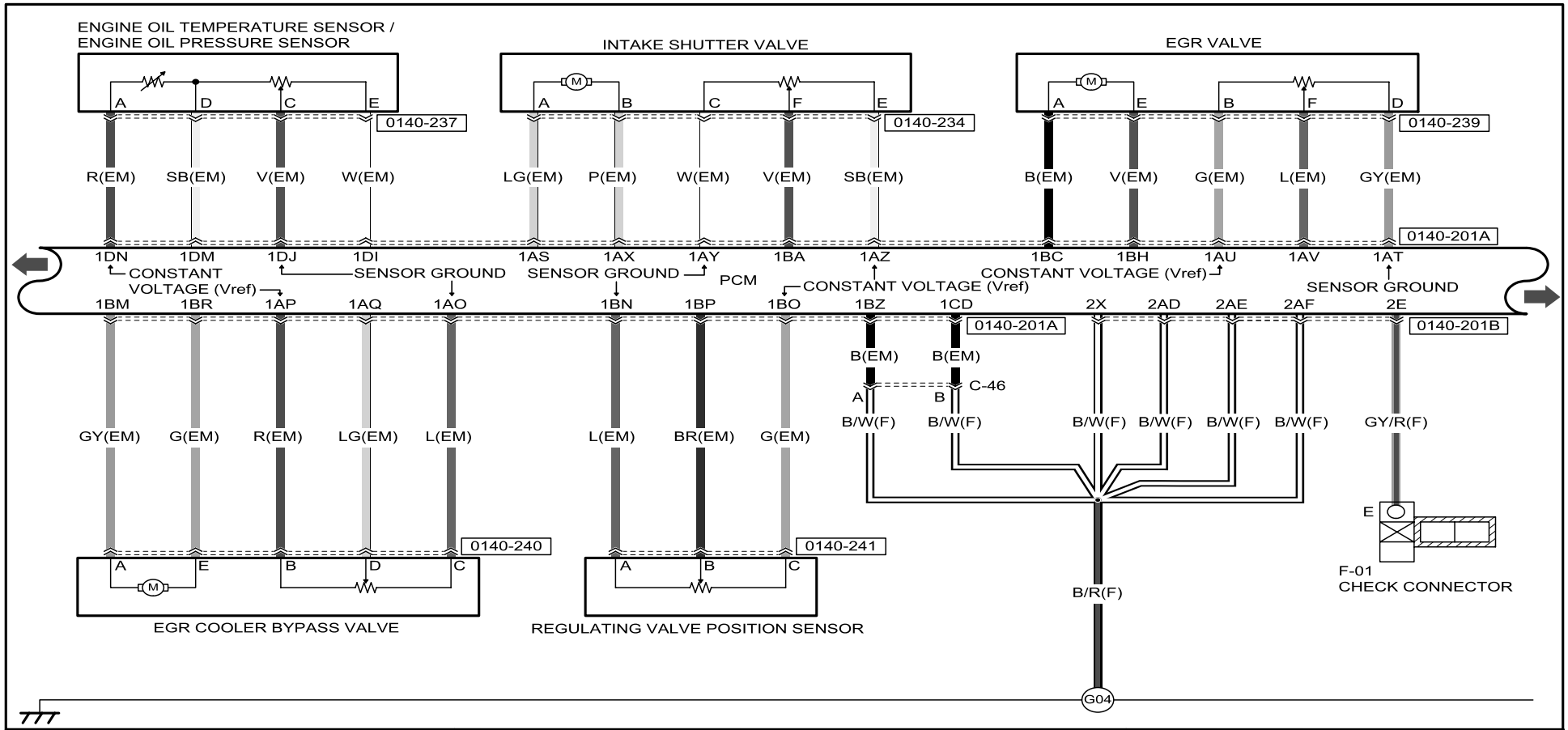

0140-234
INTAKE SHUTTER VALVE

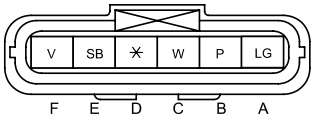

0140-237
ENGINE OIL TEMPERATURE SENSOR / ENGINE OIL PRESSURE SENSOR

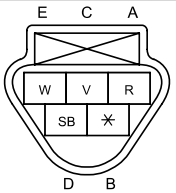

0140-239
EGR VALVE

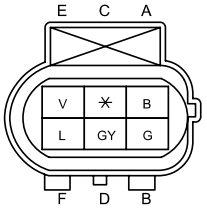

0140-240
EGR COOLER BYPASS VALVE

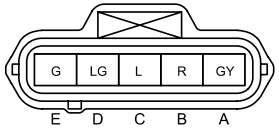

0140-241
REGULATING VALVE POSITION SENSOR

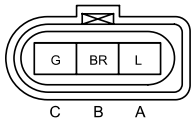

Refer to 00F section for the FUSE BOX, 00C section for the PCM CONNECTOR and COMMON CONNECTOR LIST.

CONTROL SYSTEM (SKYACTIV-D 2.2)

0140-2f

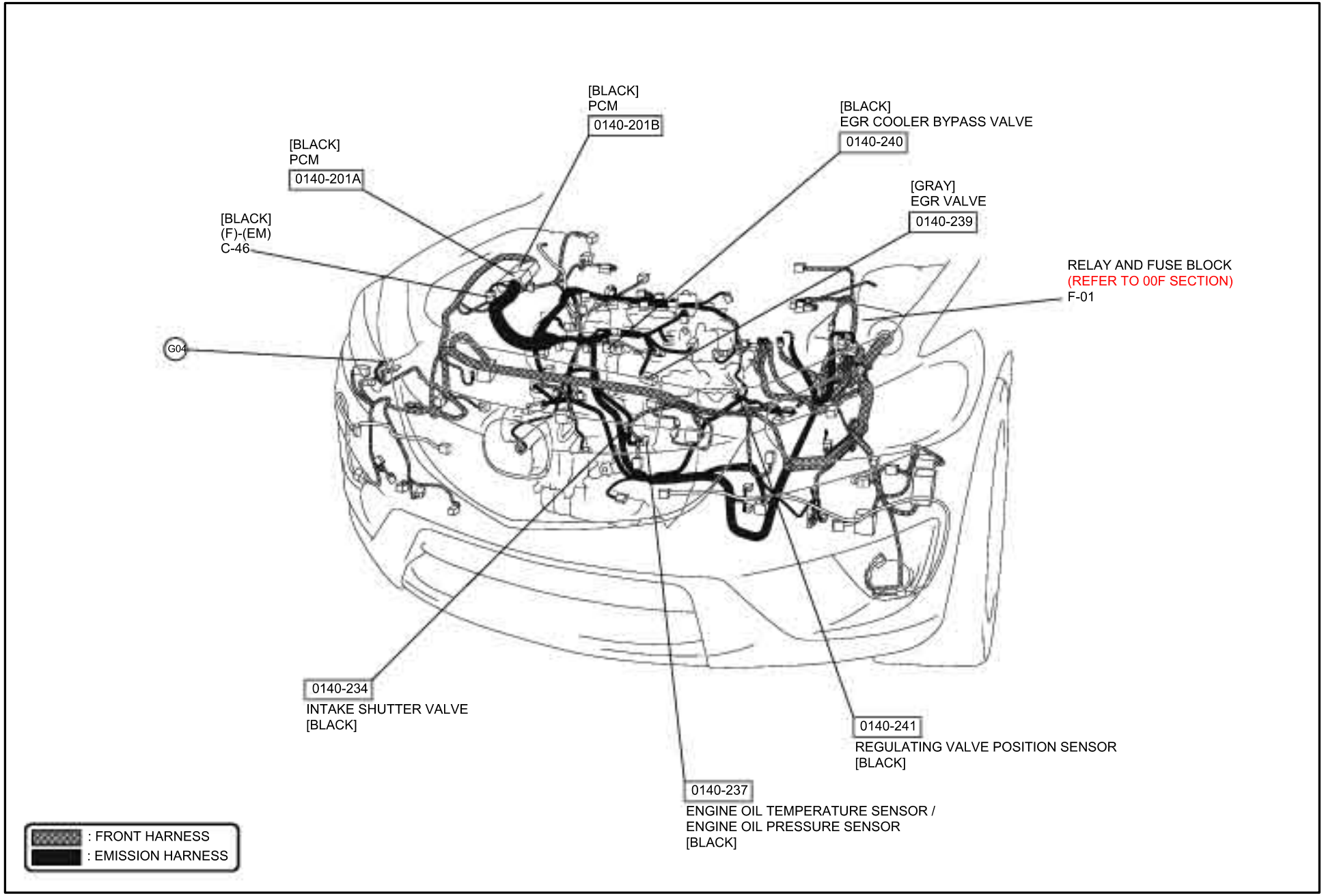

CONTROL SYSTEM (SKYACTIV-D 2.2)

0140-2g

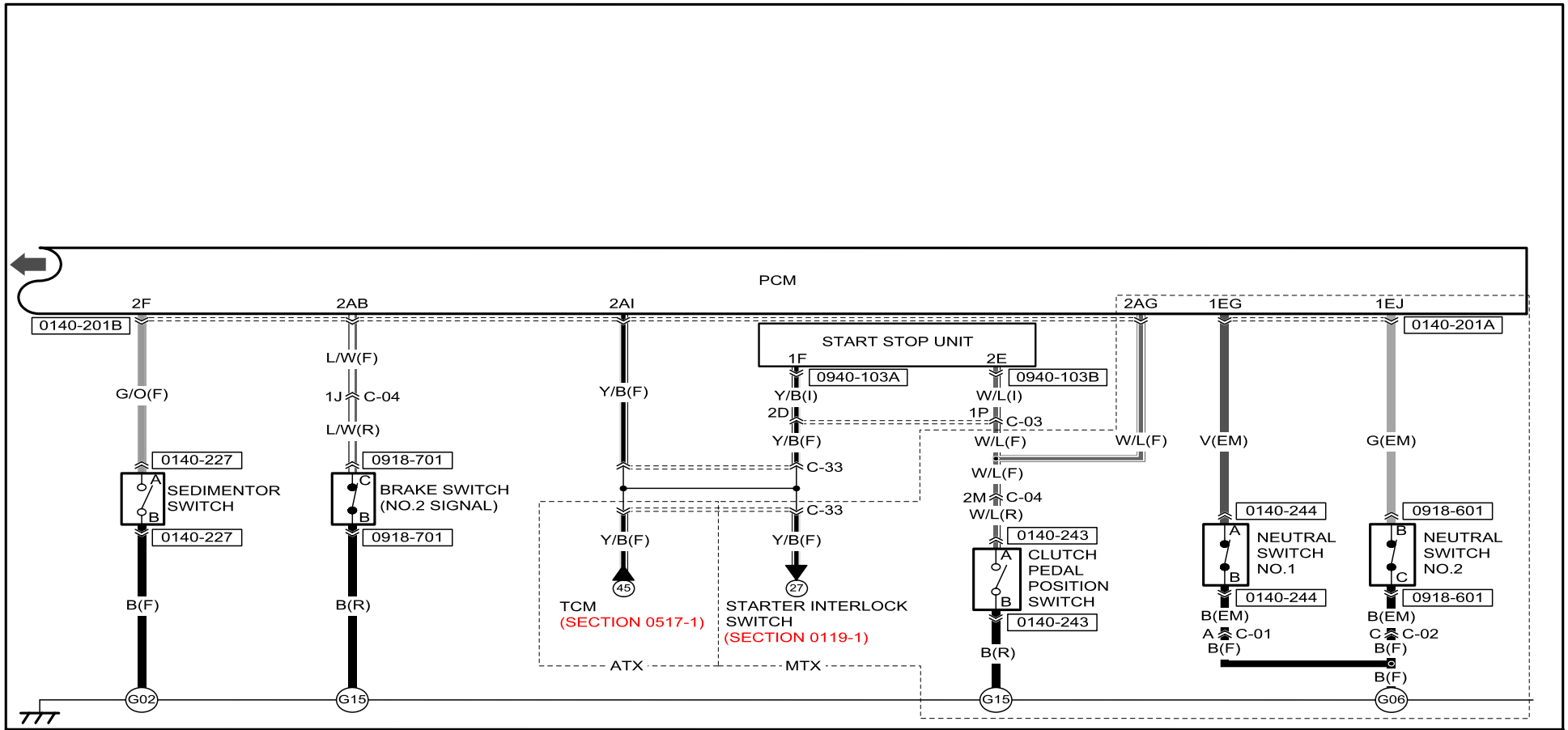

0140-227
SEDIMENTOR SWITCH

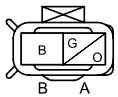

0140-243
CLUTCH PEDAL POSITION SWITCH

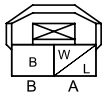

0140-244
NEUTRAL SWITCH NO.1

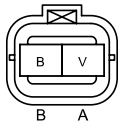

0918-601
NEUTRAL SWITCH NO.2 / BACK-UP LIGHT SWITCH

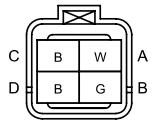

0918-701
BRAKE SWITCH

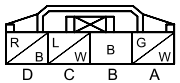

0940-103A
START STOP UNIT

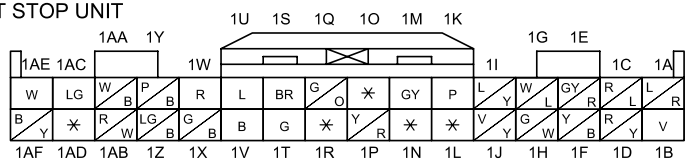

0940-103B
START STOP UNIT

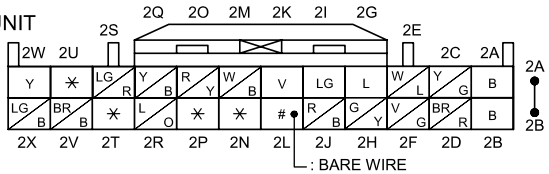

Refer to 00F section for the FUSE BOX, 00C section for the PCM CONNECTOR and COMMON CONNECTOR LIST.

CONTROL SYSTEM (SKYACTIV-D 2.2)

0140-2g

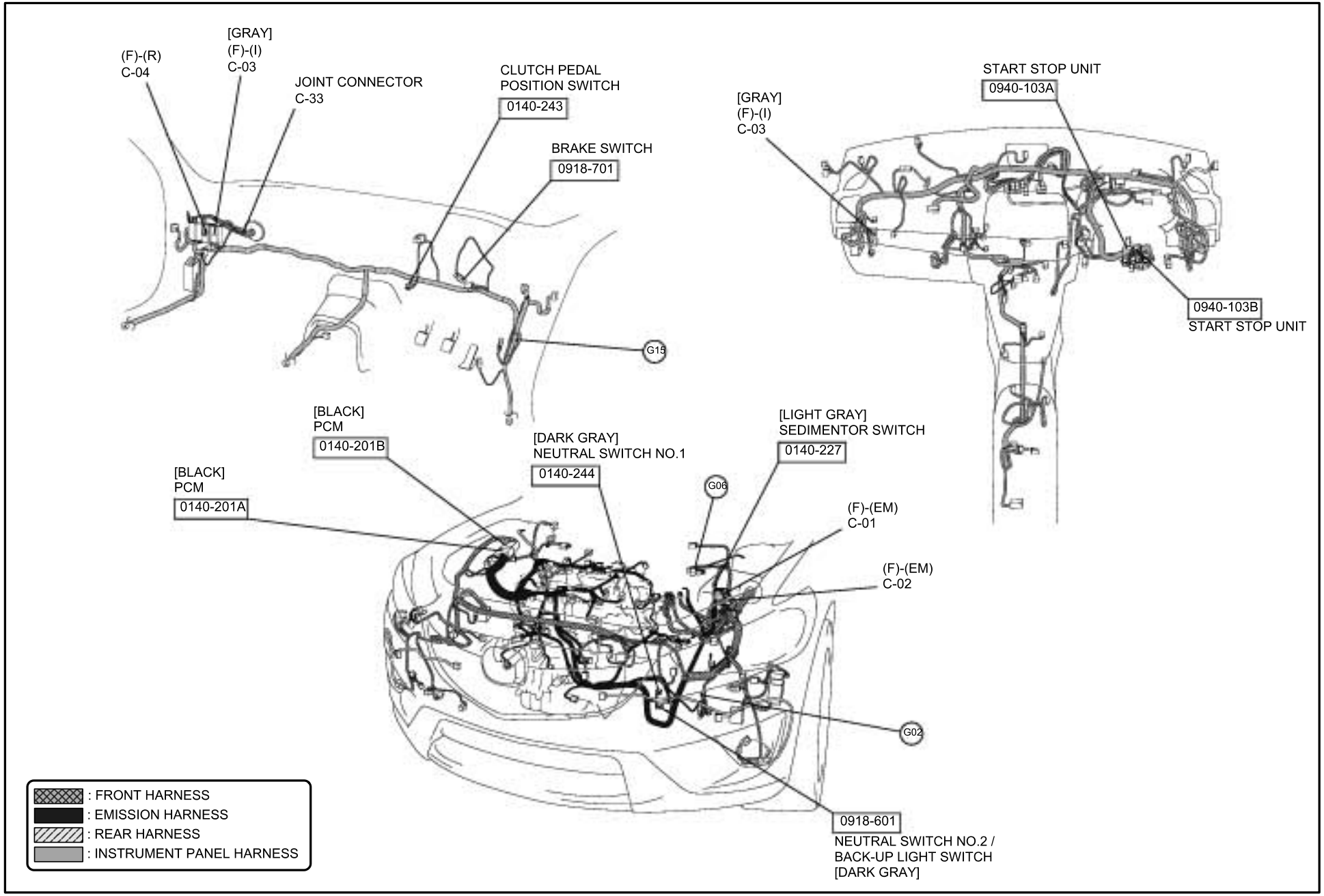

ELECTRONIC 4WD CONTROL SYSTEM

0318-1

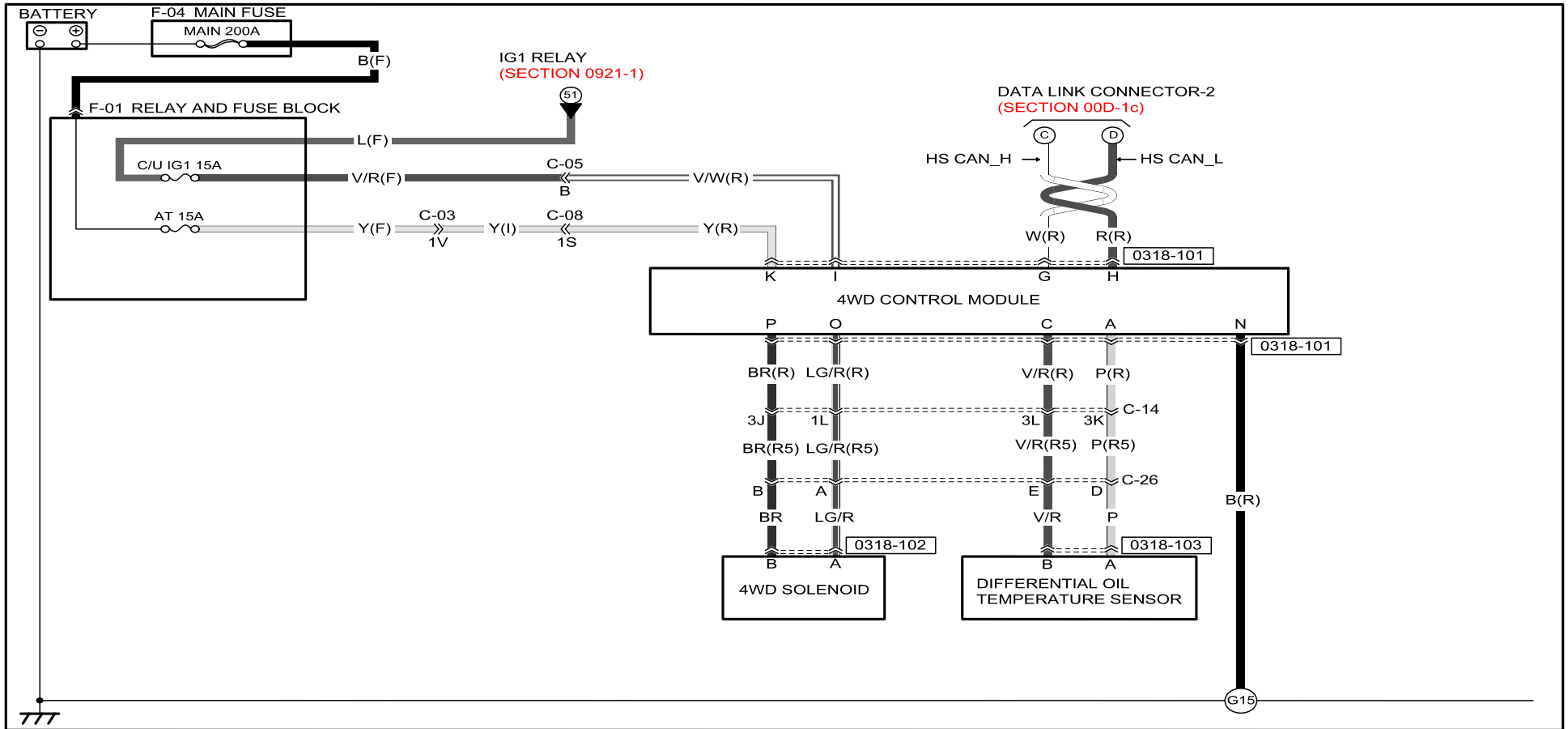

0318-101
4WD CONTROL MODULE

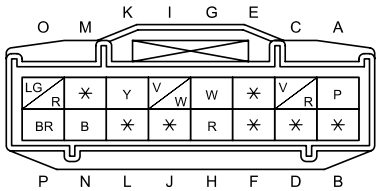

0318-102
4WD SOLENOID

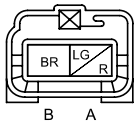

0318-103
DIFFERENTIAL OIL
TEMPERATURE SENSOR

Refer to 00F section for the FUSE BOX, 00C section for the PCM CONNECTOR and COMMON CONNECTOR LIST.

ELECTRONIC 4WD CONTROL SYSTEM

0318-1

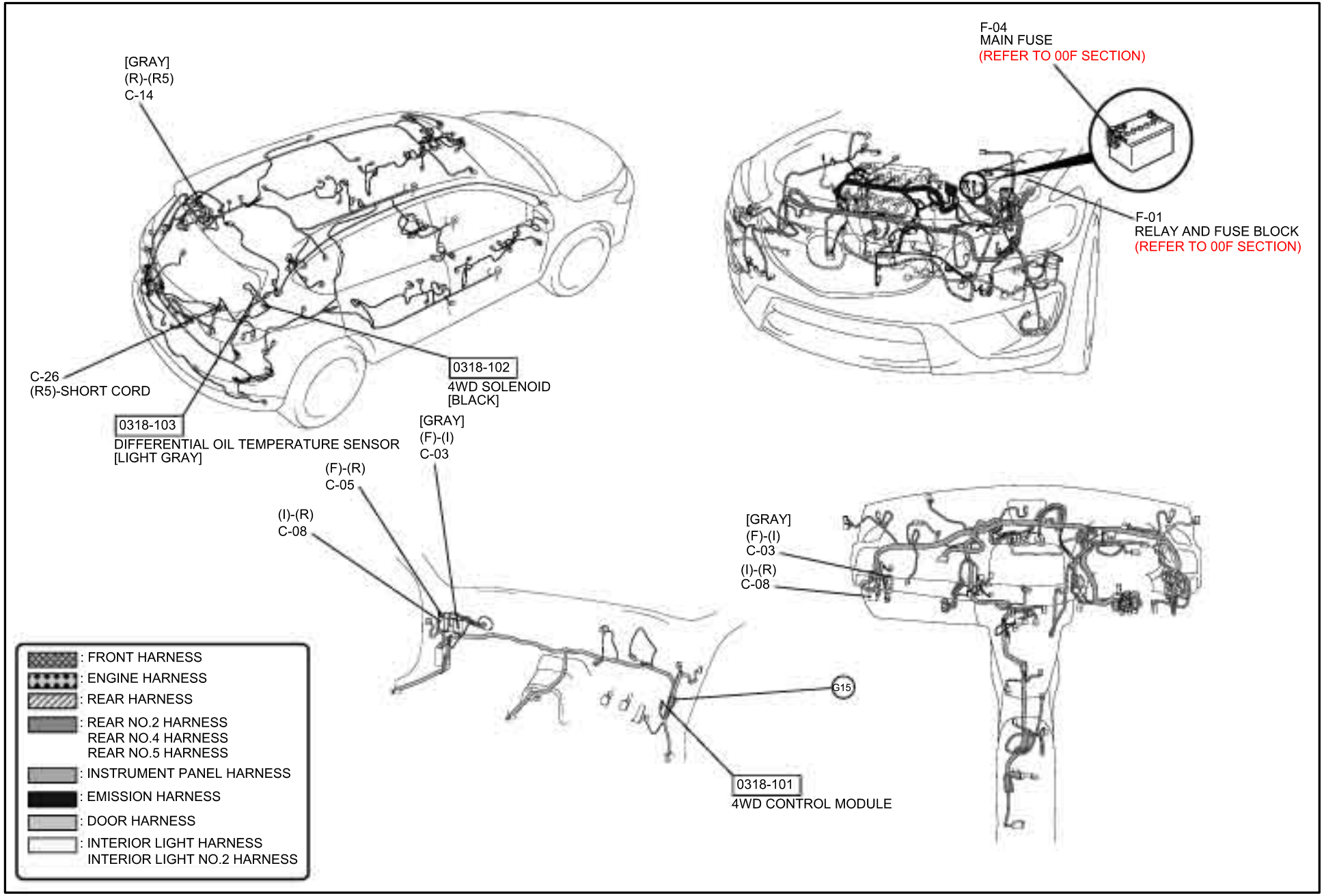

DYNAMIC STABILITY CONTROL

0415-1a

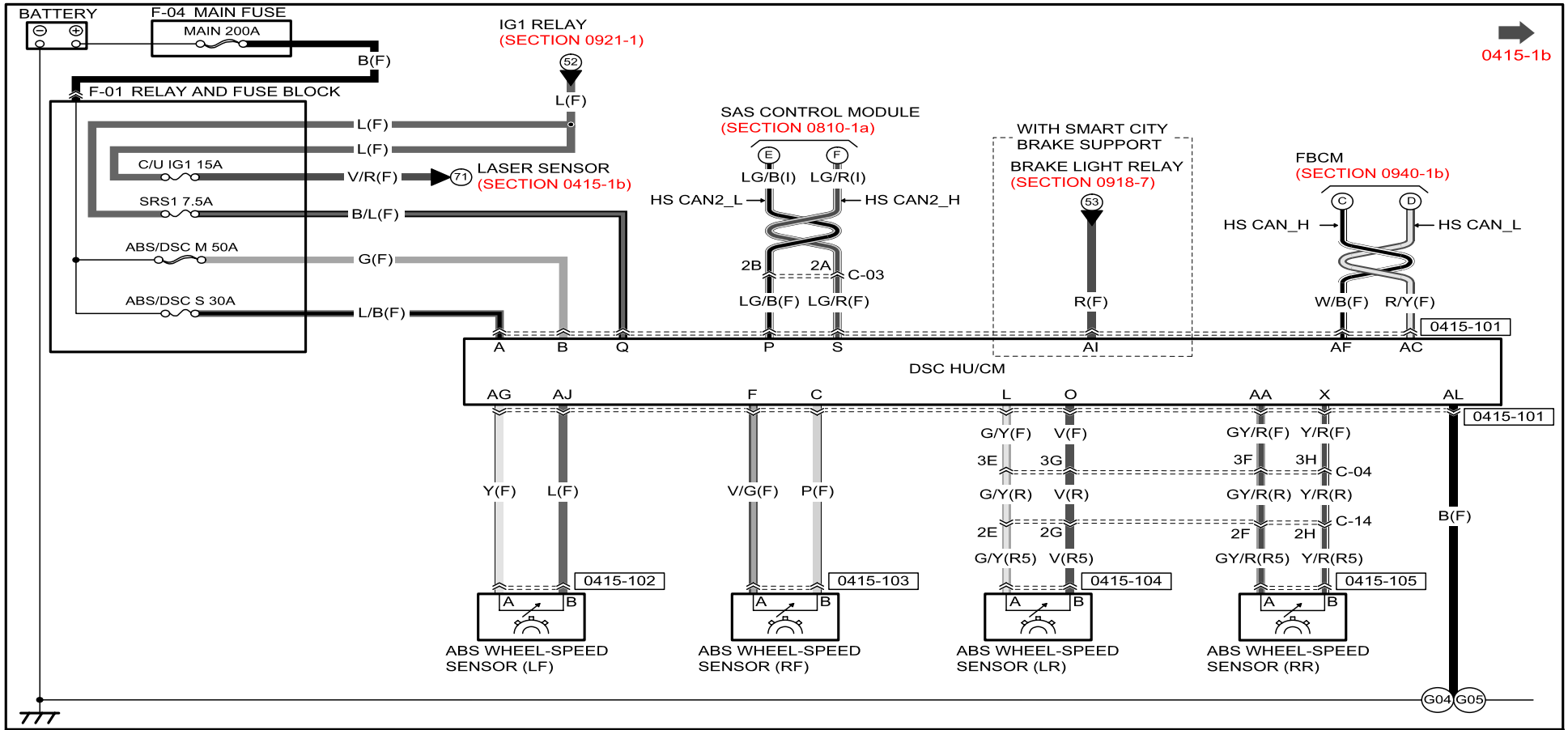

0415-101
DSC HU/CM

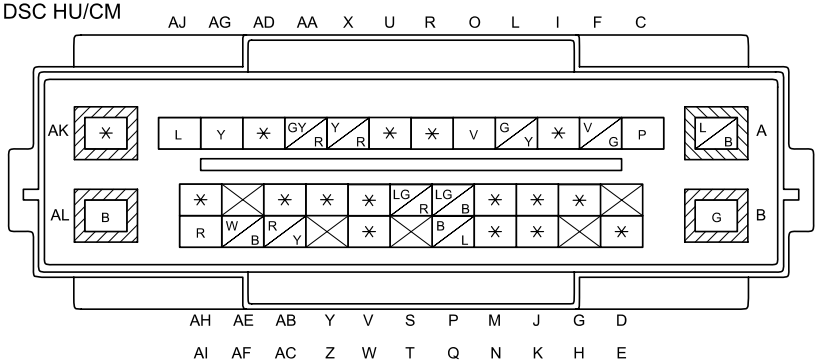

0415-102
ABS WHEEL-SPEED
SENSOR (LF)

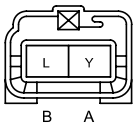

0415-103
ABS WHEEL-SPEED
SENSOR (RF)

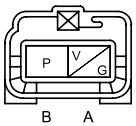

0415-104
ABS WHEEL-SPEED
SENSOR (LR)

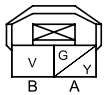

0415-105
ABS WHEEL-SPEED
SENSOR (RR)

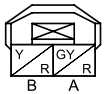

Refer to 00F section for the FUSE BOX, 00C section for the PCM CONNECTOR and COMMON CONNECTOR LIST.

DYNAMIC STABILITY CONTROL

0415-1a

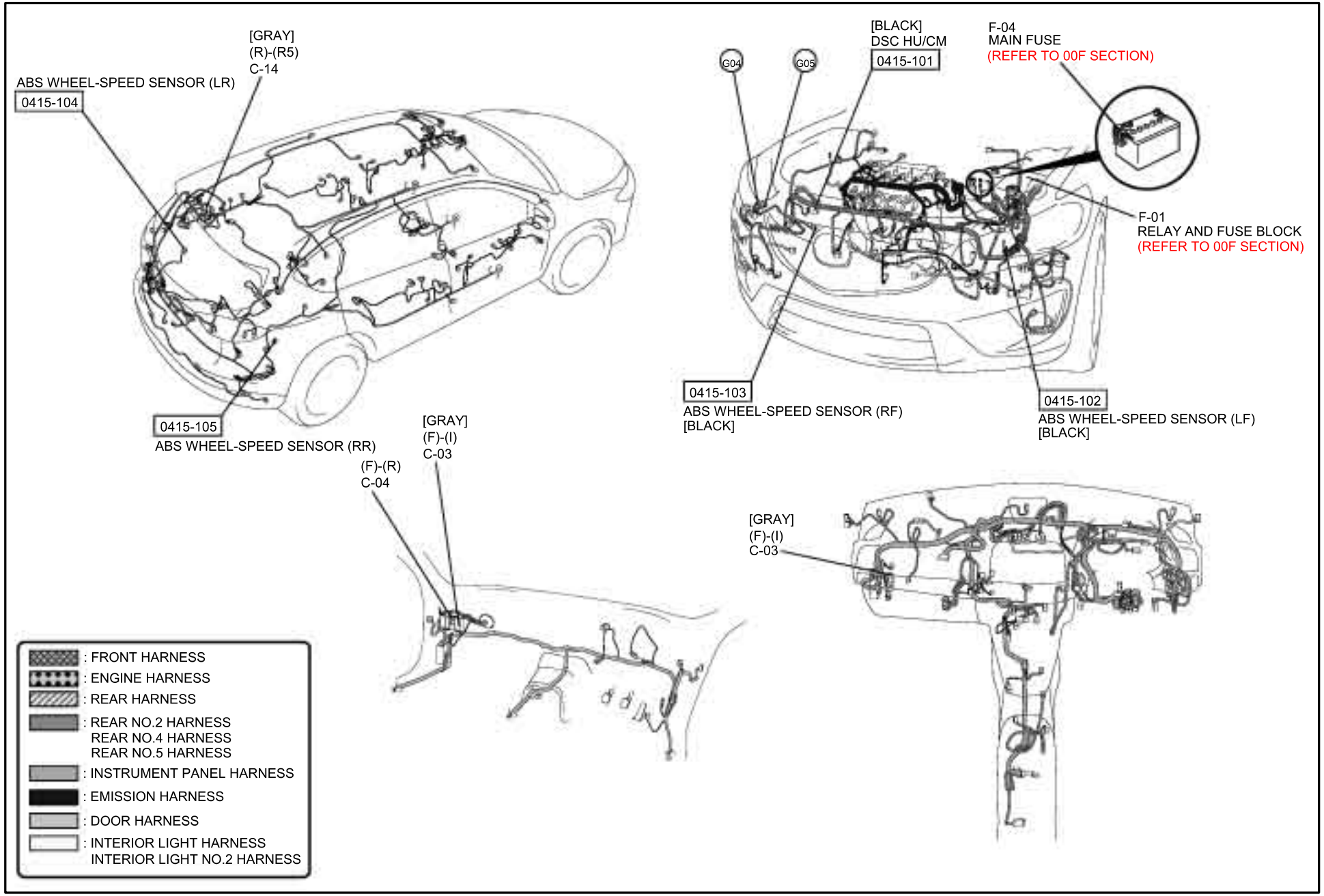

DYNAMIC STABILITY CONTROL

0415-1b

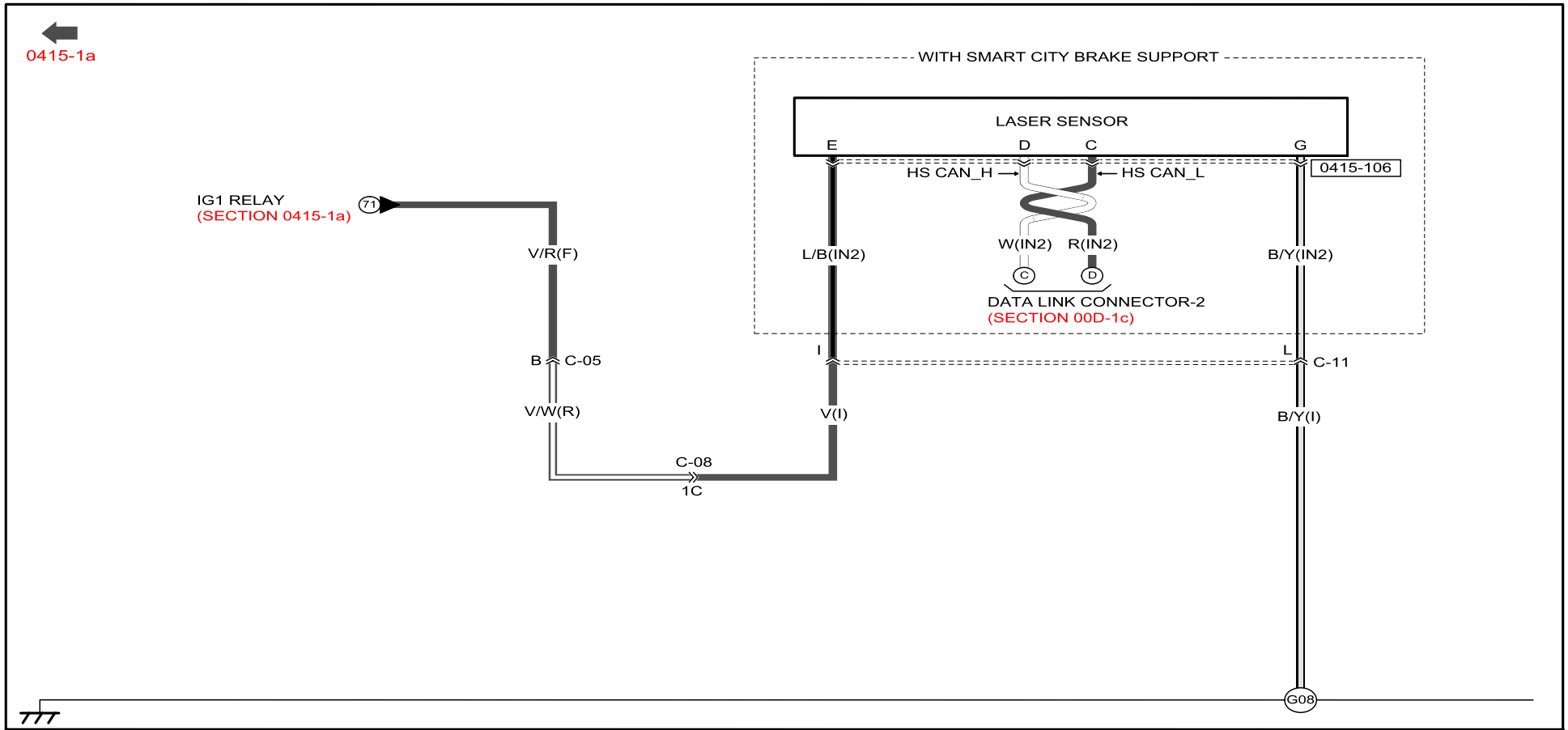

0415-106
LASER SENSOR

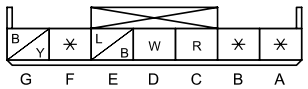

Refer to 00F section for the FUSE BOX, 00C section for the PCM CONNECTOR and COMMON CONNECTOR LIST.

DYNAMIC STABILITY CONTROL

0415-1b

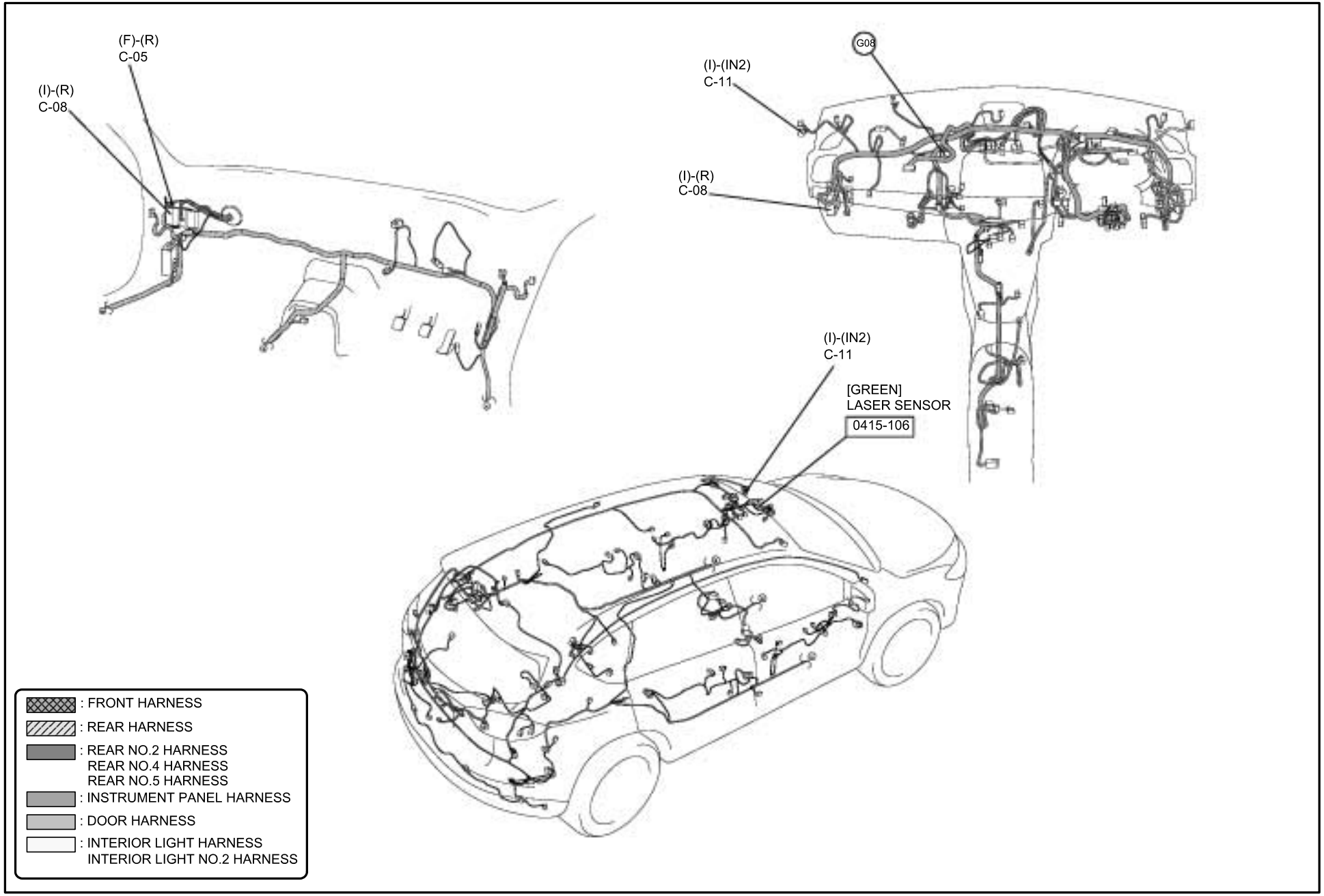

AUTOMATIC TRANSAXLE CONTROL SYSTEM

0517-1

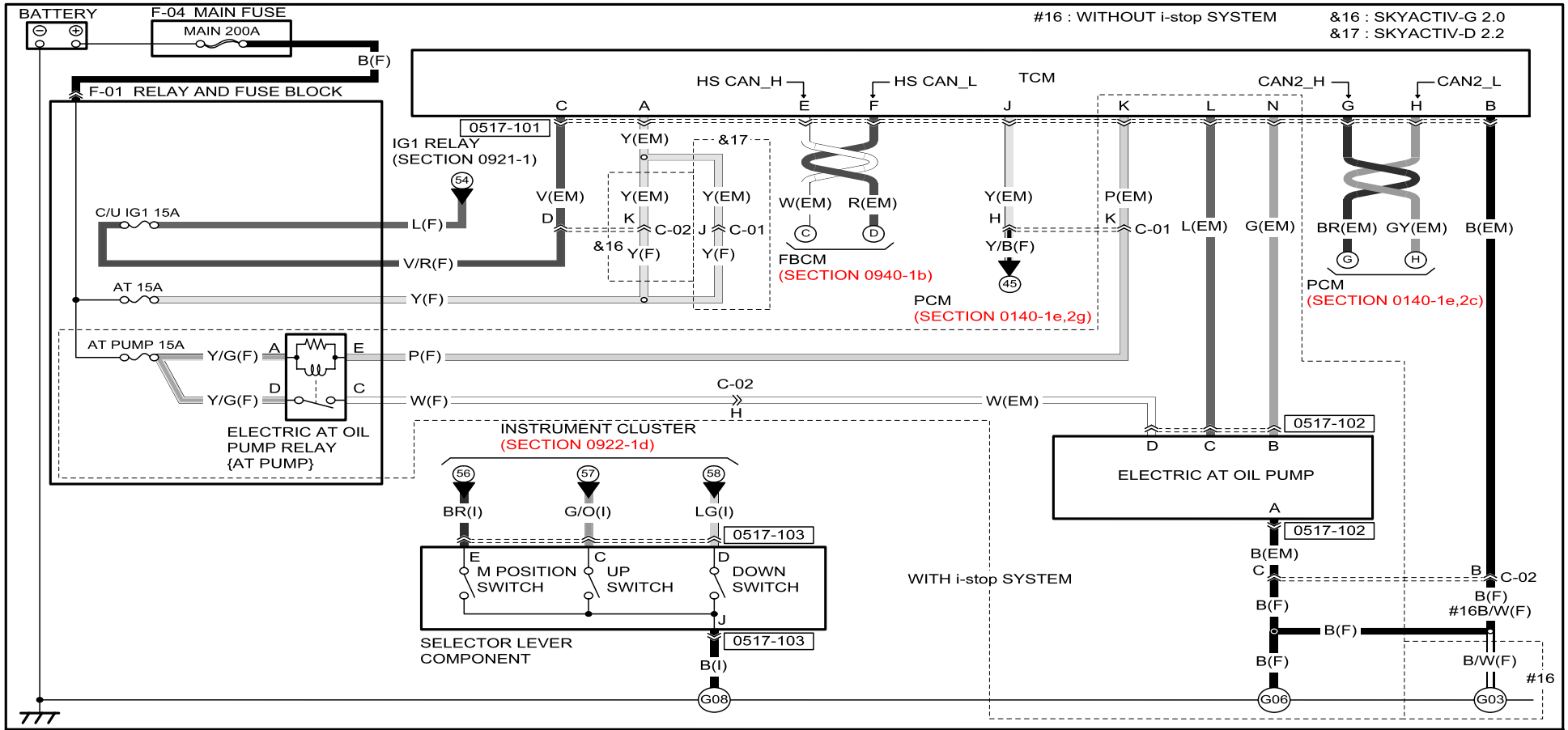

0517-101
TCM

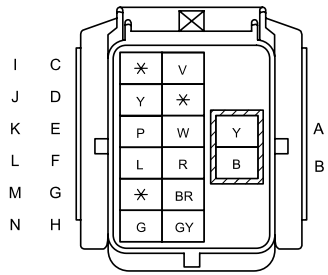

0517-102
ELECTRIC AT OIL PUMP

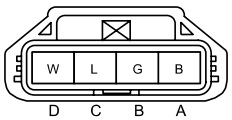

0517-103
SELECTOR LEVER COMPONENT

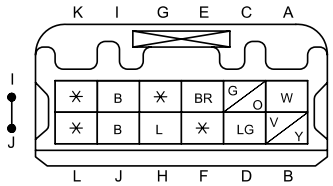

Refer to 00F section for the FUSE BOX, 00C section for the PCM CONNECTOR and COMMON CONNECTOR LIST.

AUTOMATIC TRANSAXLE CONTROL SYSTEM

0517-1

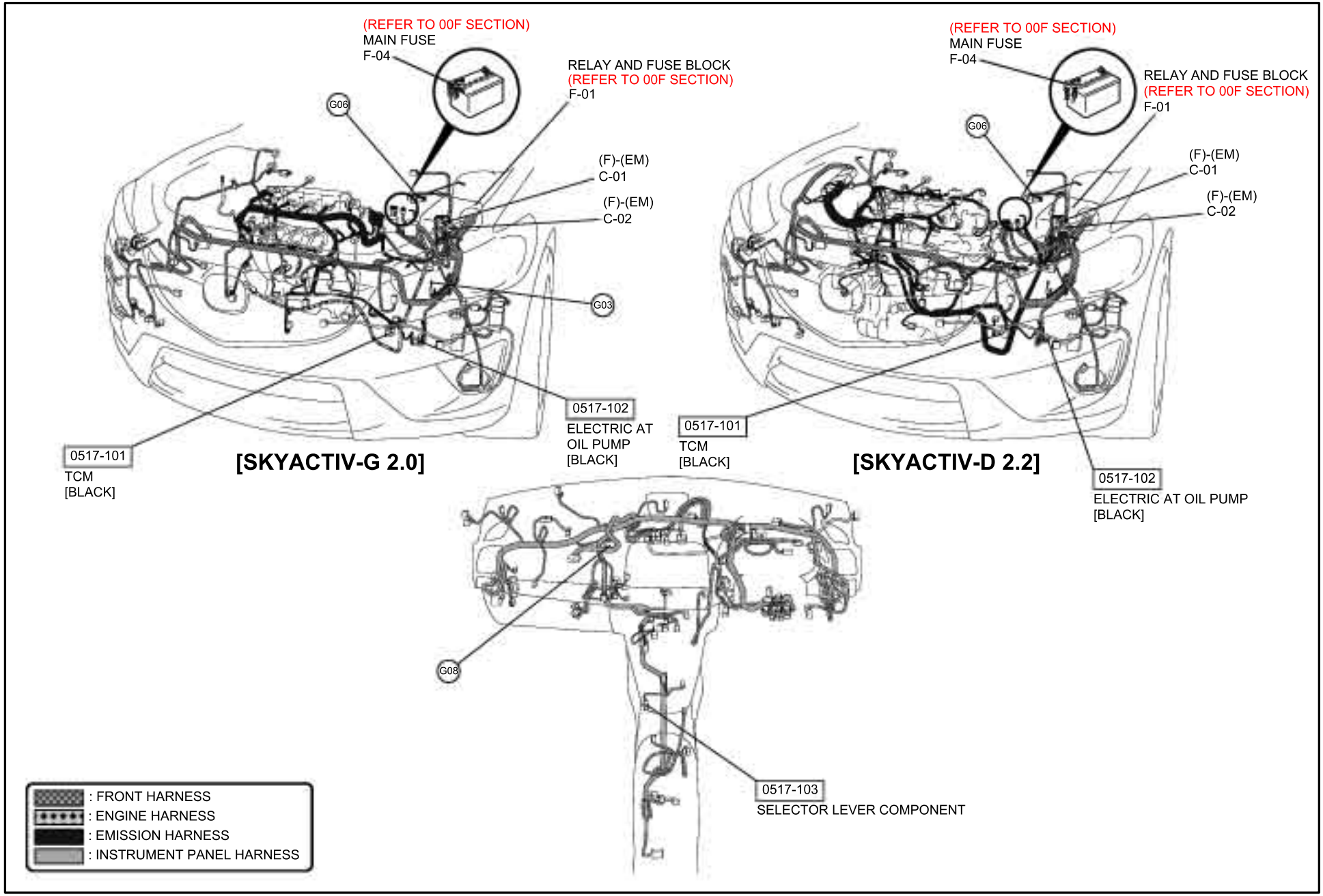

SHIFT-LOCK SYSTEM

0518-1

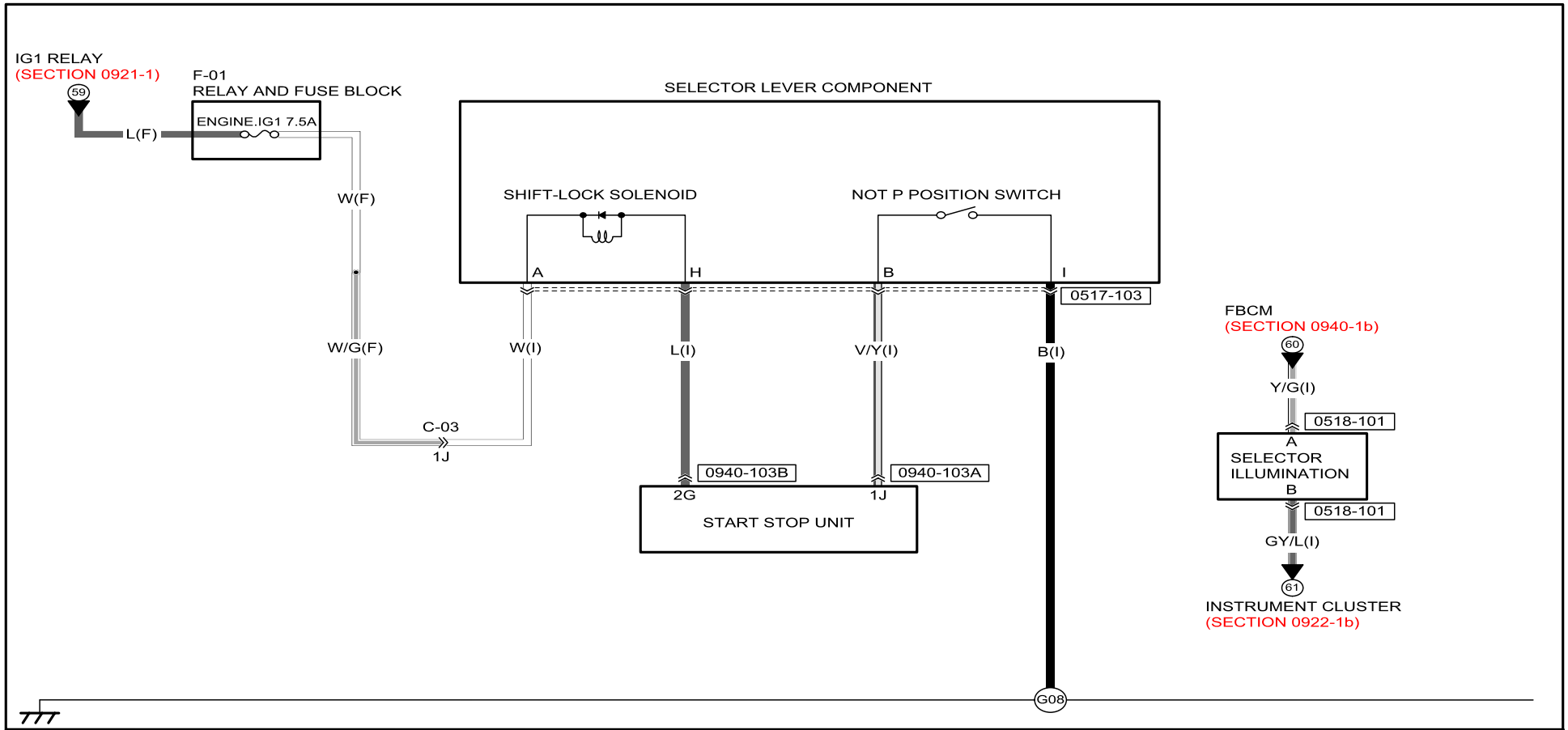

0518-101
SELECTOR ILLUMINATION

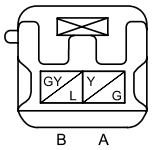

0517-103
SELECTOR LEVER COMPONENT

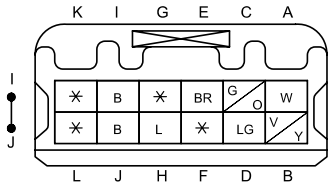

0940-103A
START STOP UNIT

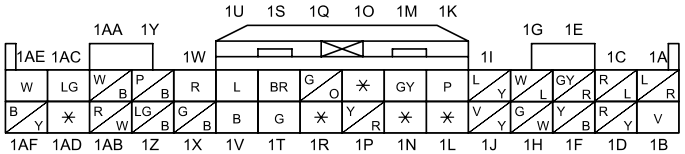

0940-103B
START STOP UNIT

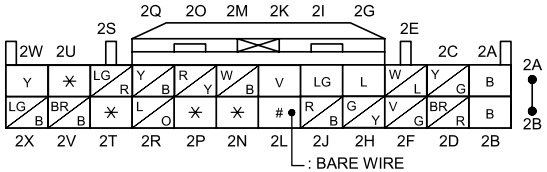

Refer to 00F section for the FUSE BOX, 00C section for the PCM CONNECTOR and COMMON CONNECTOR LIST.

SHIFT-LOCK SYSTEM

0518-1

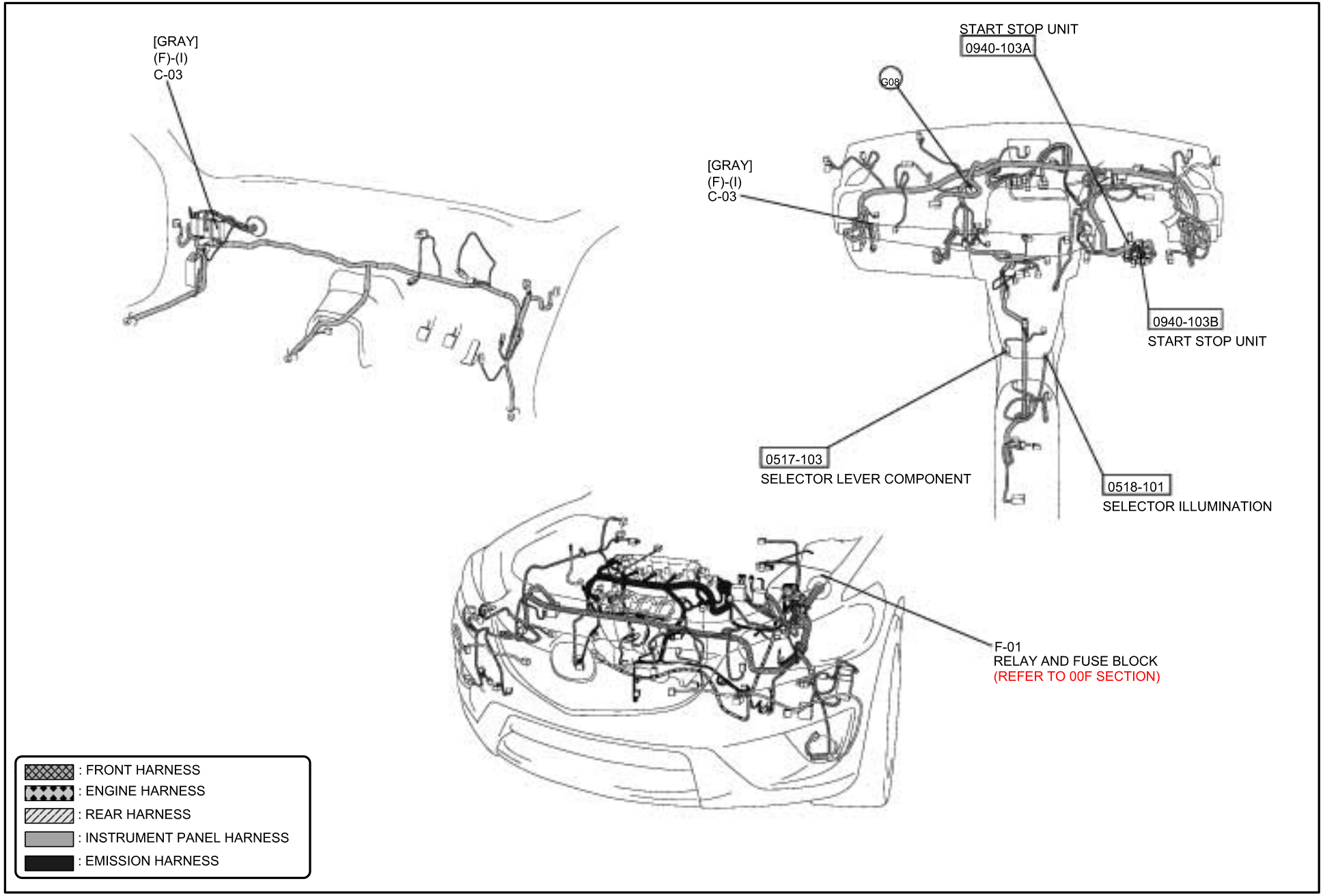

ELECTRIC POWER STEERING (EPS)

0613-1

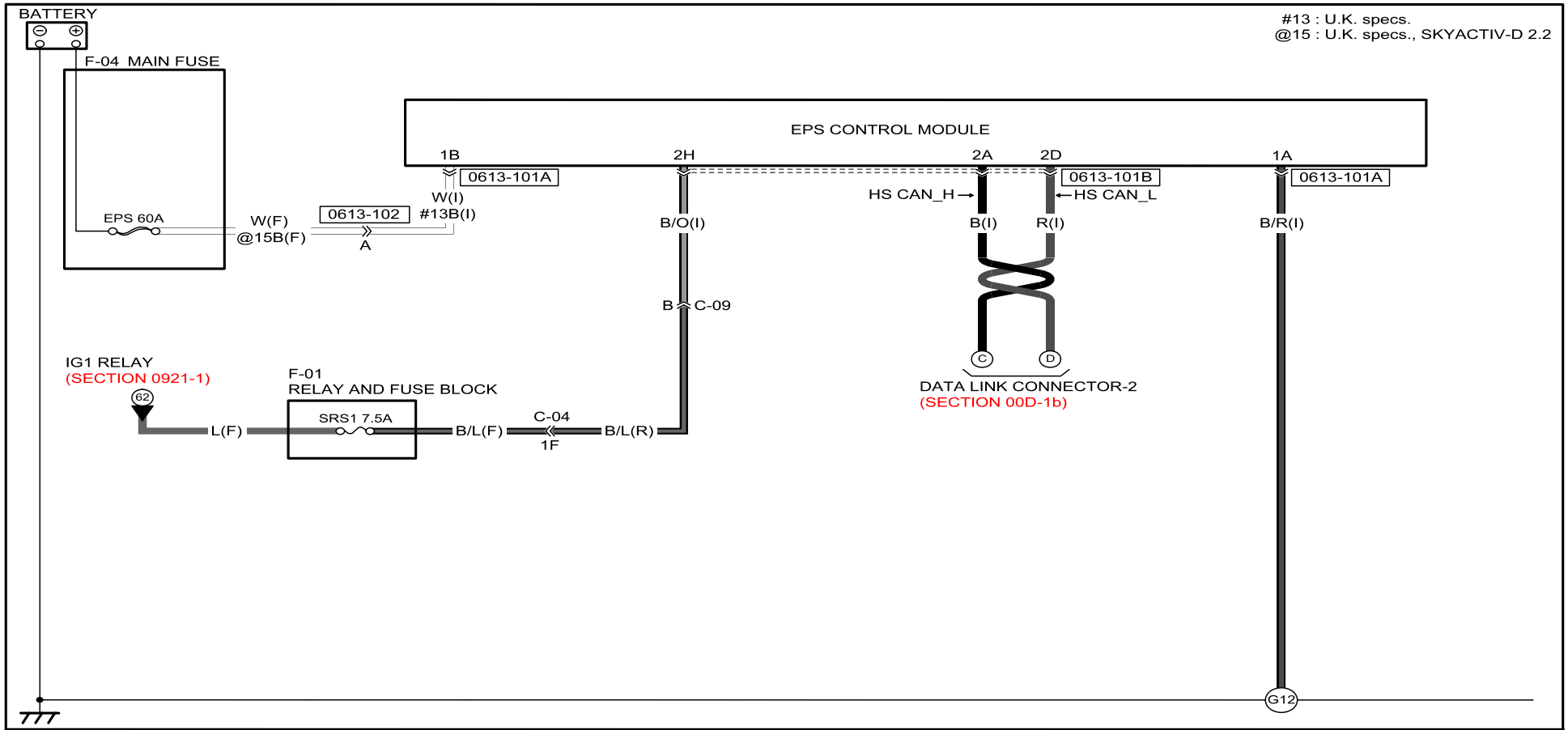

0613-101A EPS CONTROL MODULE	0613-101B EPS CONTROL MODULE	0613-102 FRONT HARNESS-INSTRUMENT PANEL HARNESS		
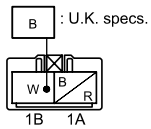	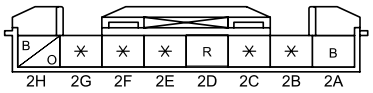	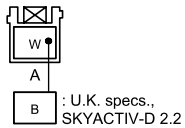	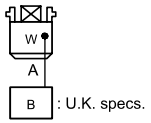	

Refer to 00F section for the FUSE BOX, 00C section for the PCM CONNECTOR and COMMON CONNECTOR LIST.

ELECTRIC POWER STEERING (EPS)

0613-1

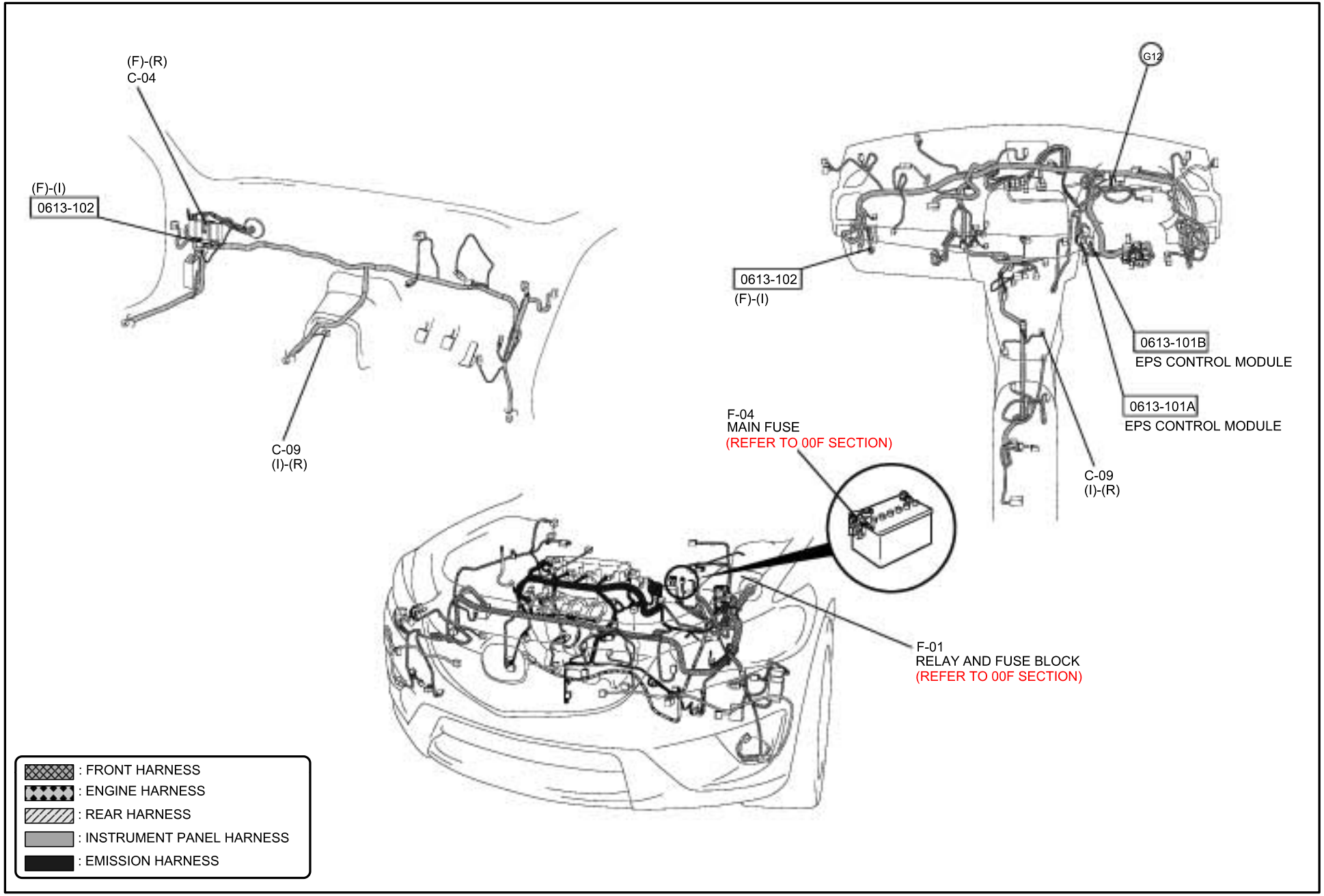

HEATER AND AIR CONDITIONER SYSTEM (MANUAL A/C)

0740-1a

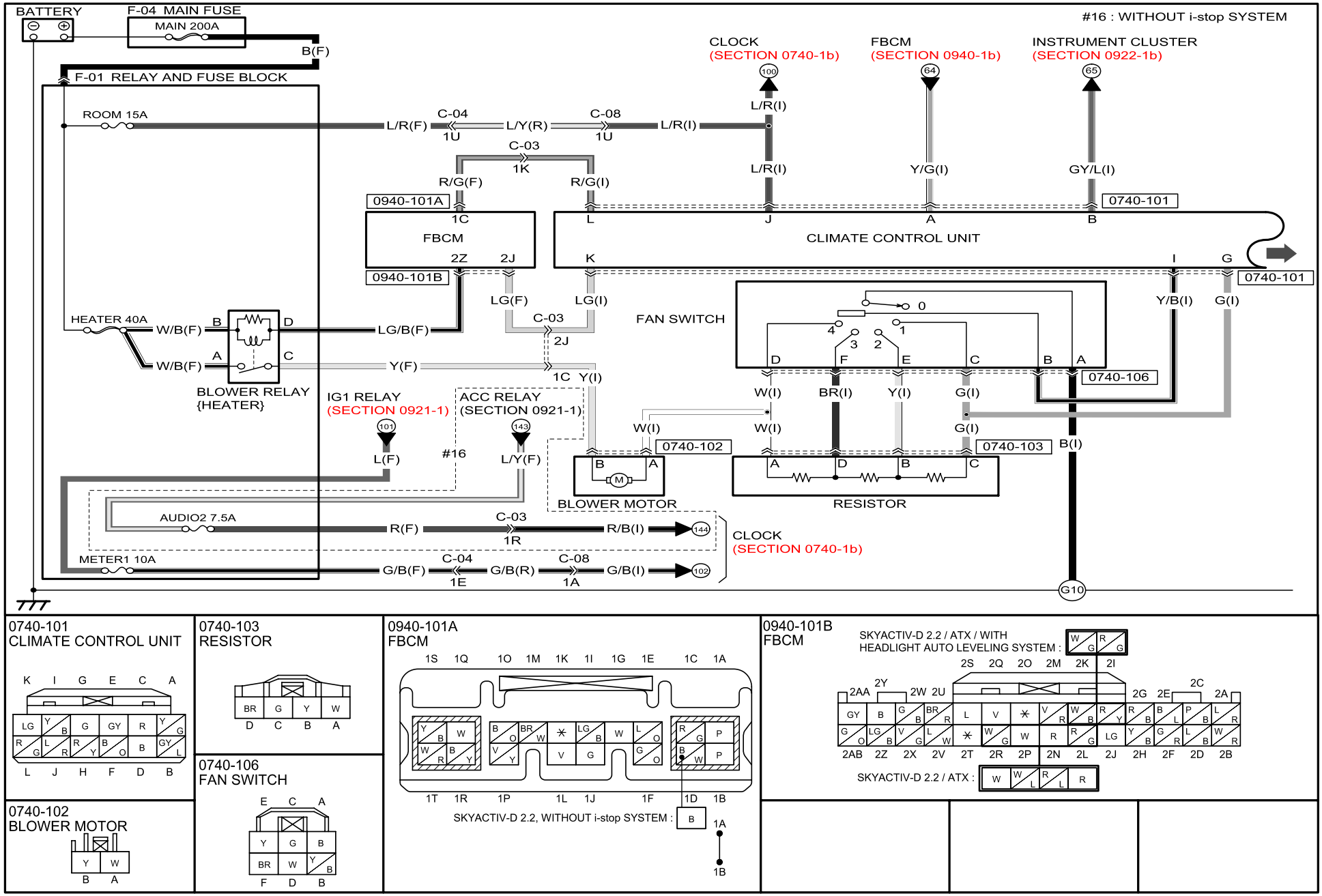

Refer to 00F section for the FUSE BOX, 00C section for the PCM CONNECTOR and COMMON CONNECTOR LIST.

HEATER AND AIR CONDITIONER SYSTEM (MANUAL A/C)

0740-1a

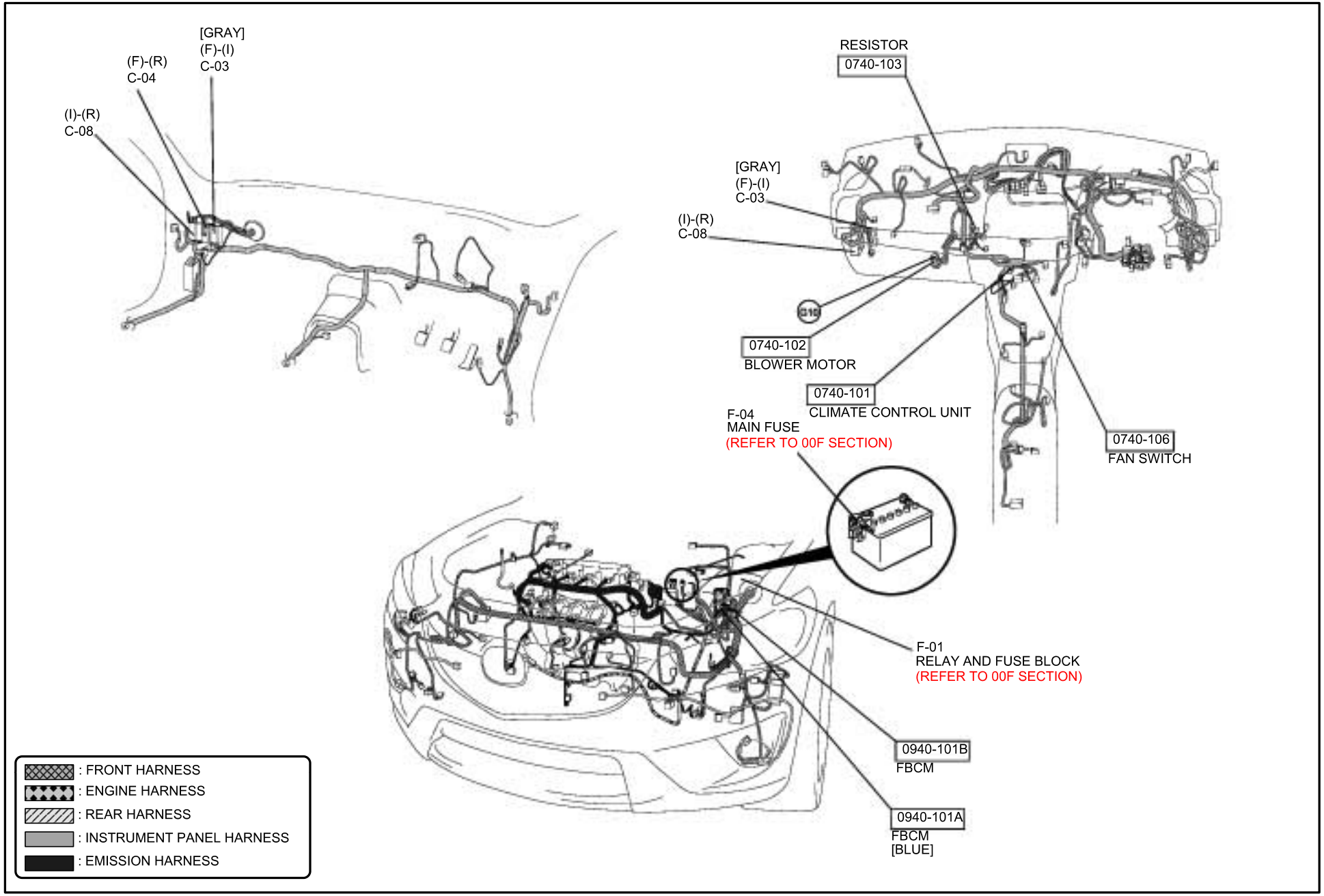

HEATER AND AIR CONDITIONER SYSTEM (MANUAL A/C)

0740-1b

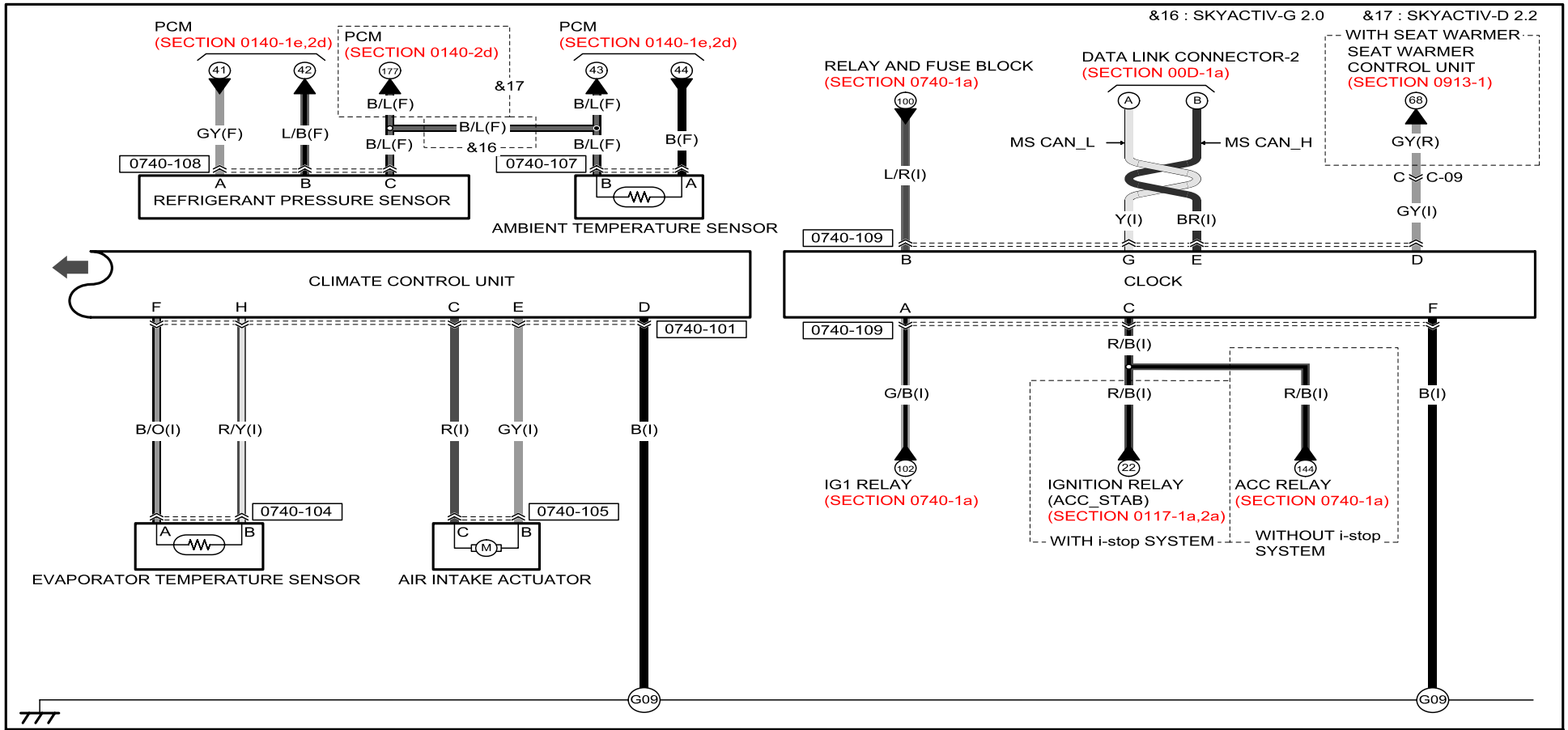

0740-101 CLIMATE CONTROL UNIT	0740-104 EVAPORATOR TEMPERATURE SENSOR	0740-105 AIR INTAKE ACTUATOR	0740-107 AMBIENT TEMPERATURE SENSOR	0740-108 REFRIGERANT PRESSURE SENSOR	0740-109 CLOCK
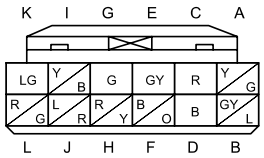	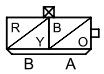	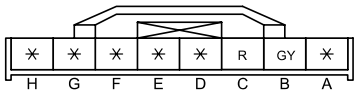	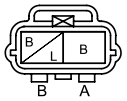	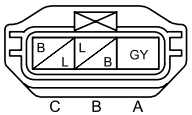	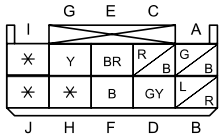

Refer to 00F section for the FUSE BOX, 00C section for the PCM CONNECTOR and COMMON CONNECTOR LIST.

HEATER AND AIR CONDITIONER SYSTEM (MANUAL A/C)

0740-1b

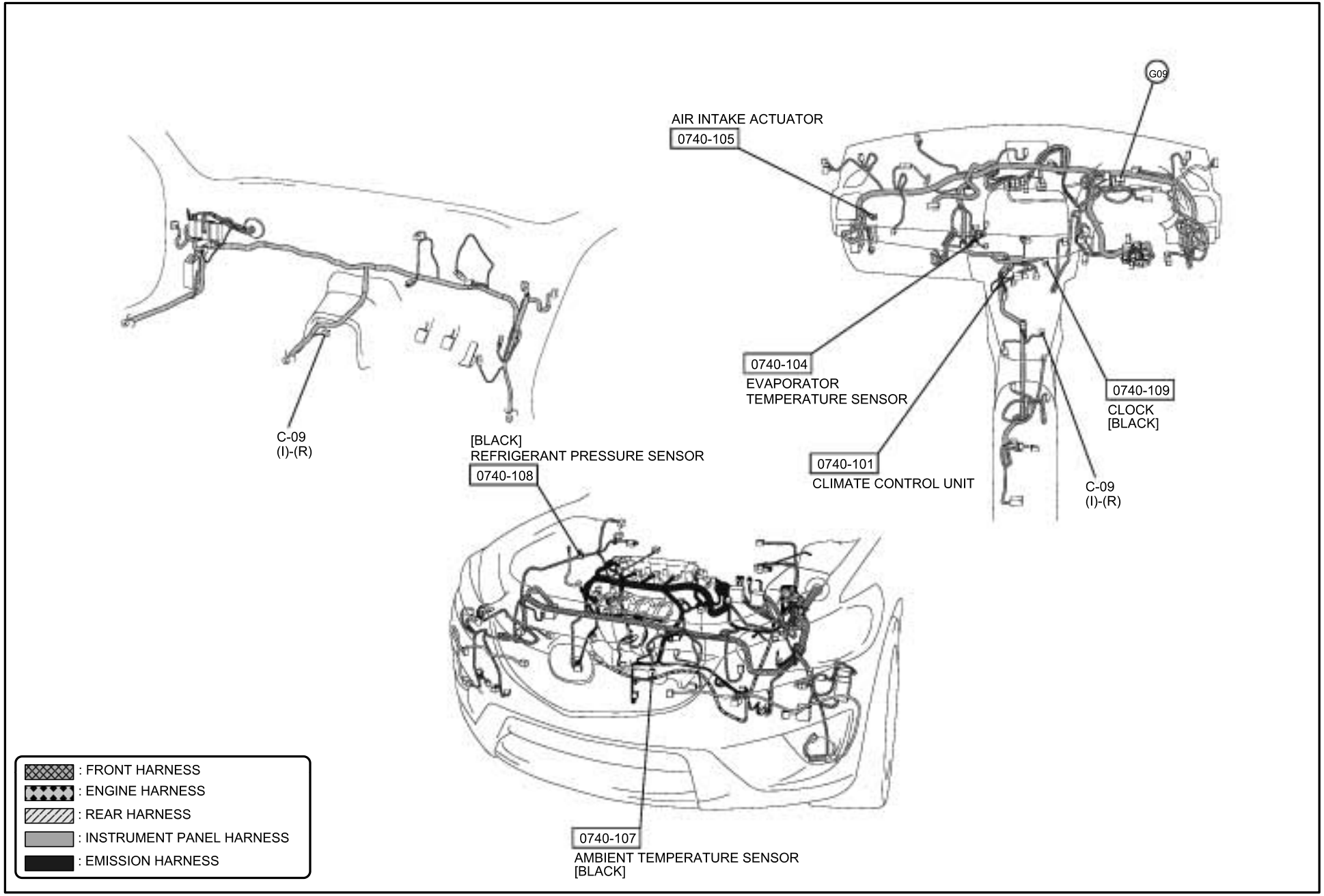

HEATER AND AIR CONDITIONER SYSTEM (AUTO A/C)

0740-2a

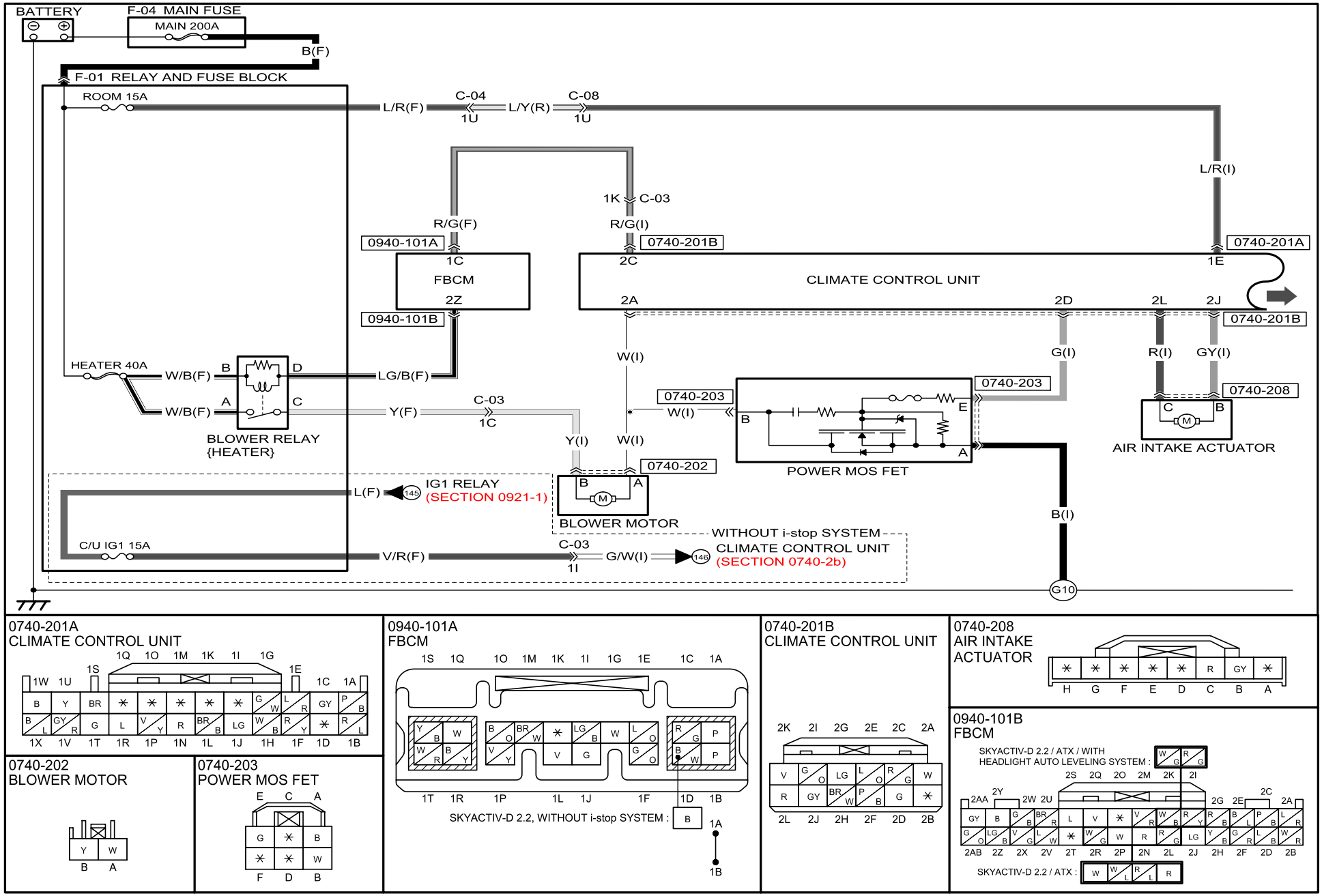

Refer to 00F section for the FUSE BOX, 00C section for the PCM CONNECTOR and COMMON CONNECTOR LIST.

HEATER AND AIR CONDITIONER SYSTEM (AUTO A/C)

0740-2a

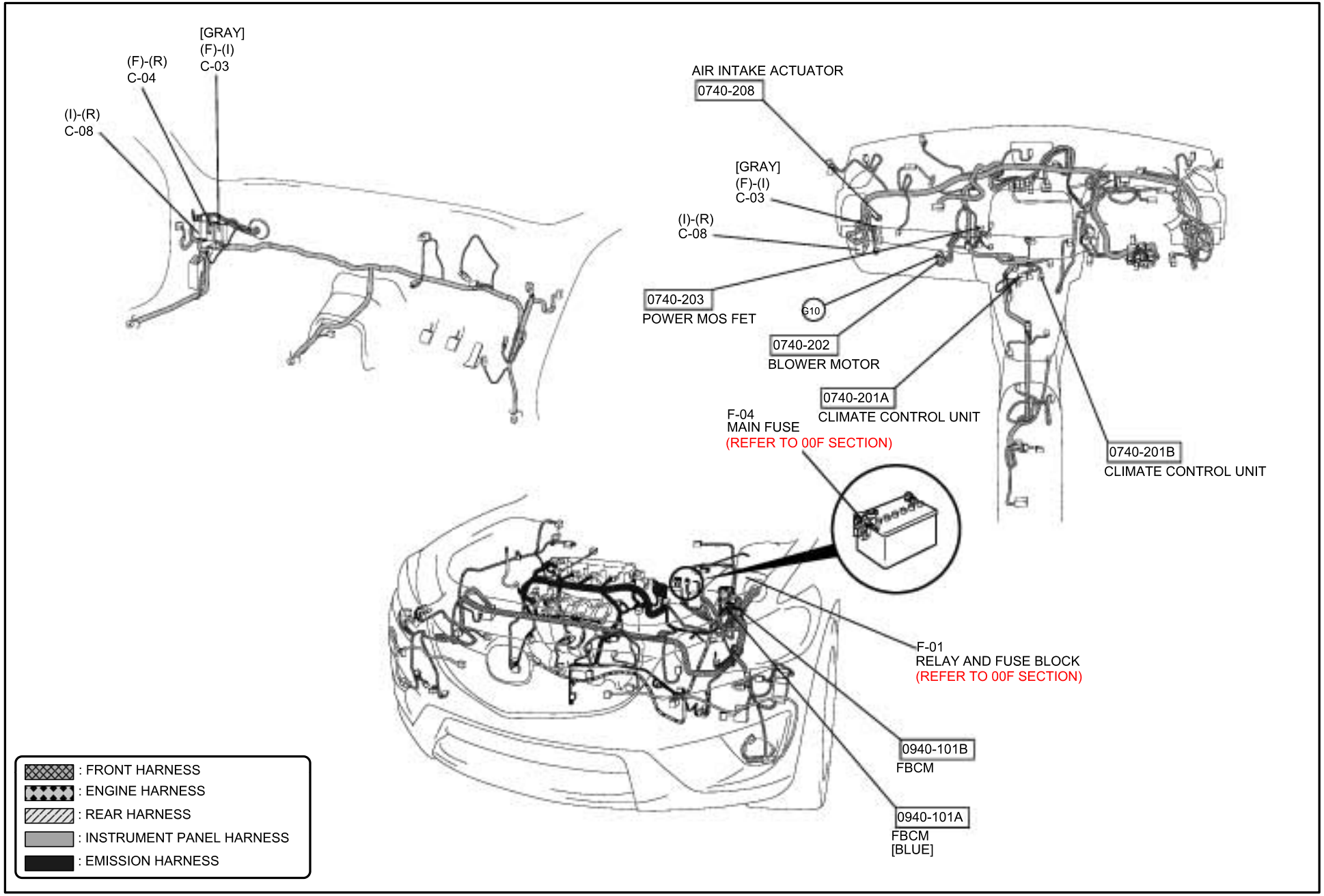

HEATER AND AIR CONDITIONER SYSTEM (AUTO A/C)

0740-2b

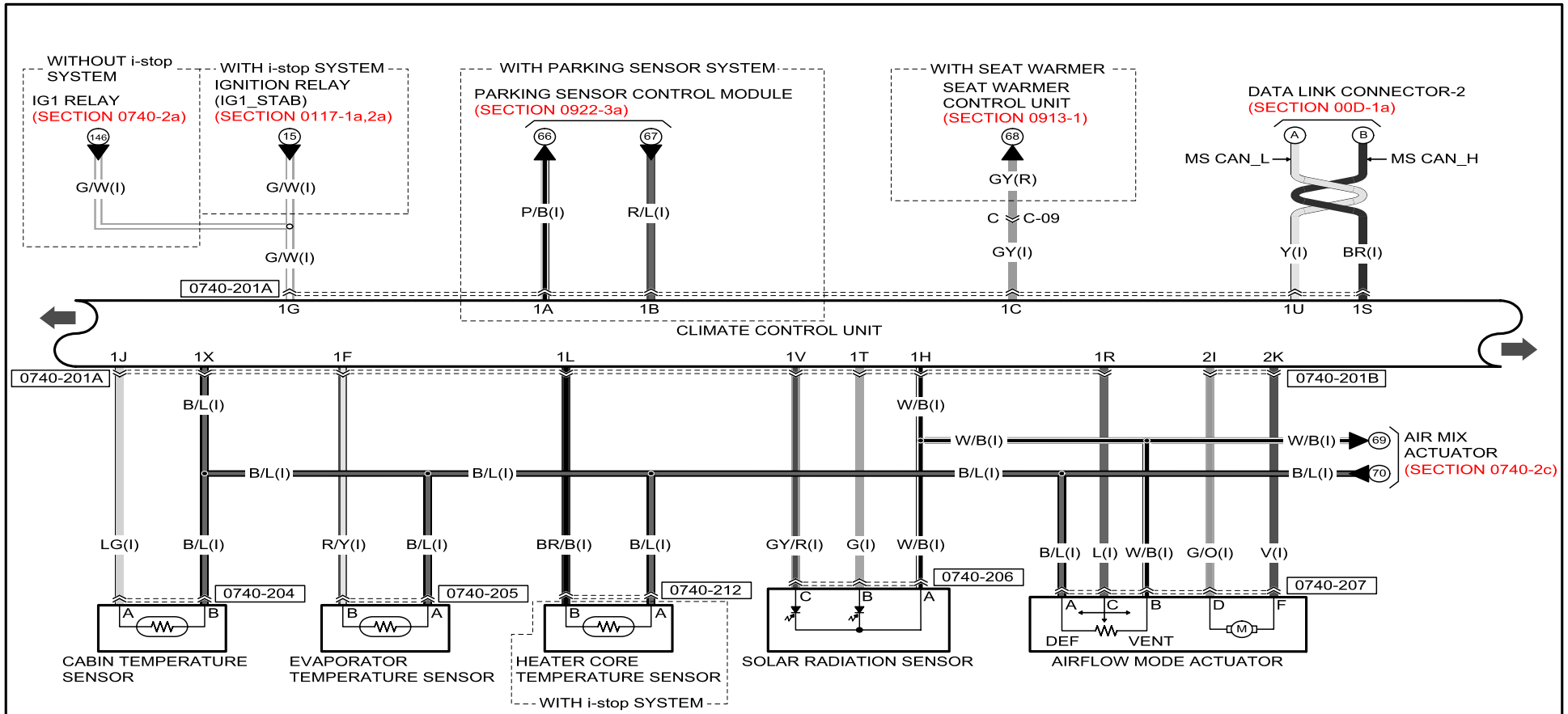

0740-201A
CLIMATE CONTROL UNIT

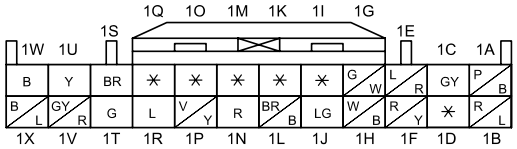

0740-201B
CLIMATE CONTROL UNIT

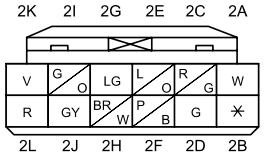

0740-204
CABIN TEMPERATURE
SENSOR

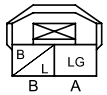

0740-205
EVAPORATOR
TEMPERATURE SENSOR

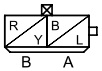

0740-206
SOLAR RADIATION
SENSOR

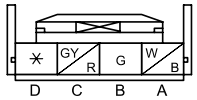

0740-207
AIRFLOW MODE ACTUATOR

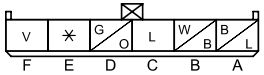

0740-212
HEATER CORE
TEMPERATURE SENSOR

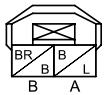

Refer to 00F section for the FUSE BOX, 00C section for the PCM CONNECTOR and COMMON CONNECTOR LIST.

HEATER AND AIR CONDITIONER SYSTEM (AUTO A/C) 0740-2b

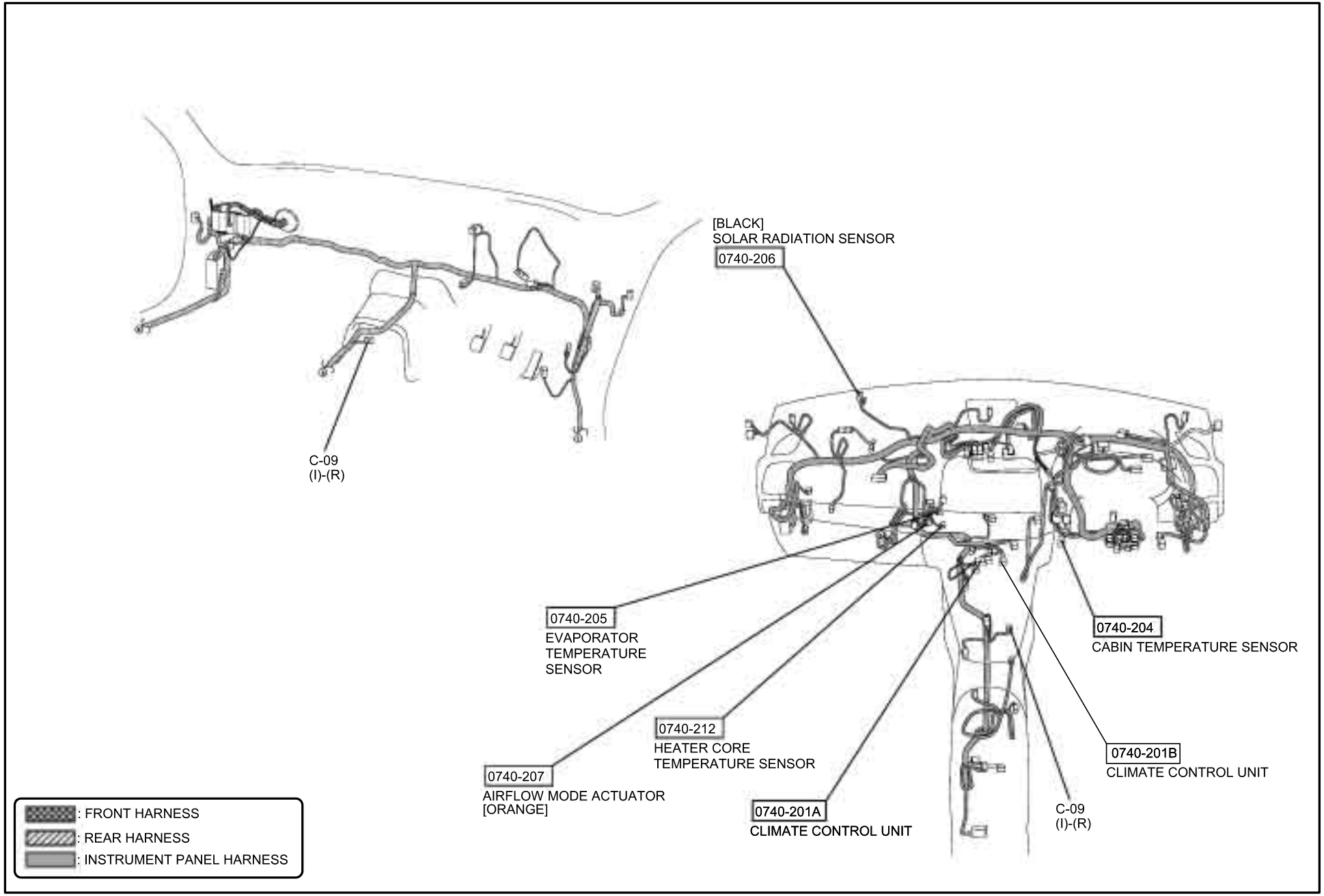

HEATER AND AIR CONDITIONER SYSTEM (AUTO A/C)

0740-2c

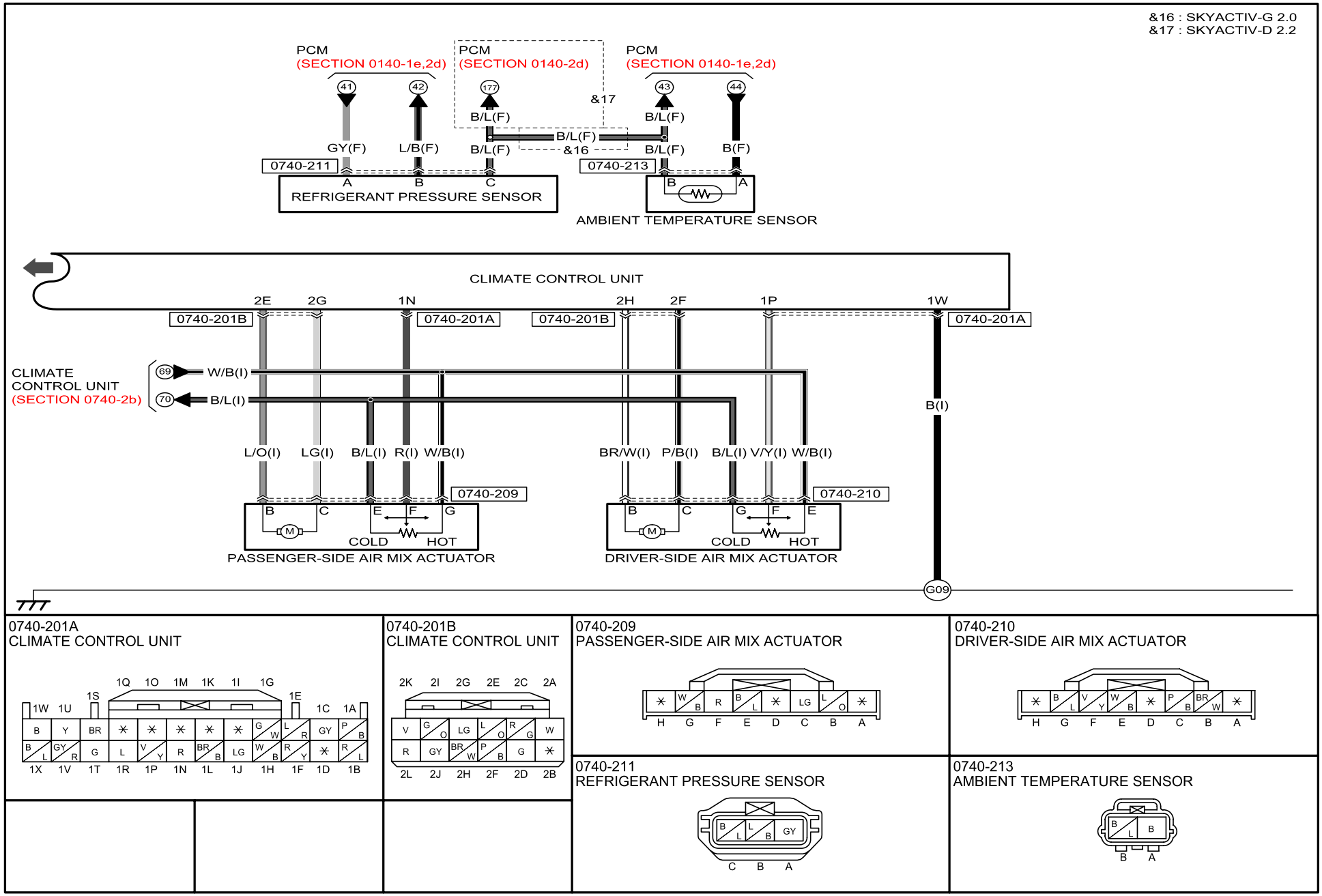

Refer to 00F section for the FUSE BOX, 00C section for the PCM CONNECTOR and COMMON CONNECTOR LIST.

HEATER AND AIR CONDITIONER SYSTEM (AUTO A/C)

0740-2c

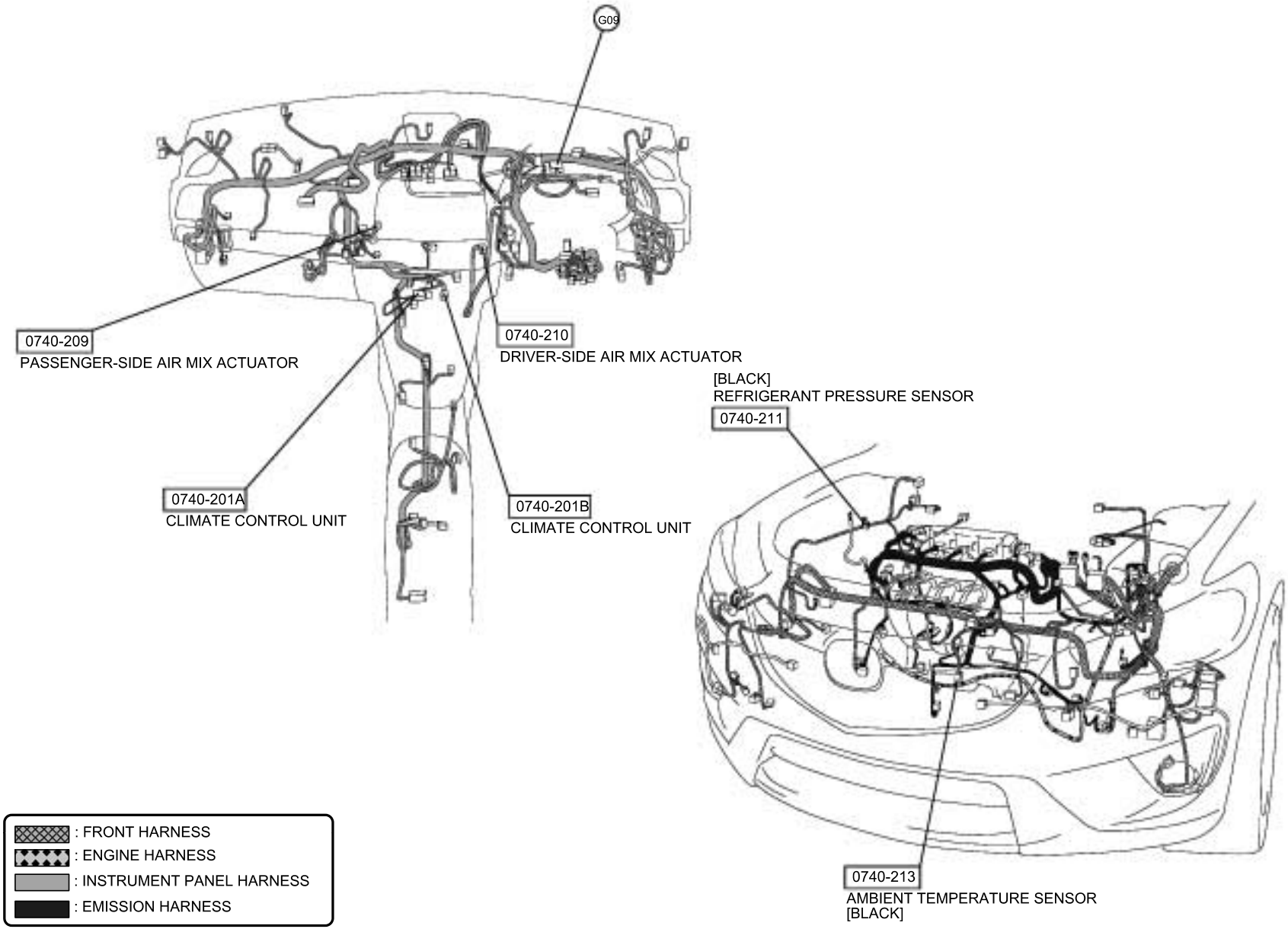

A/C COMPRESSOR CONTROL

0740-3

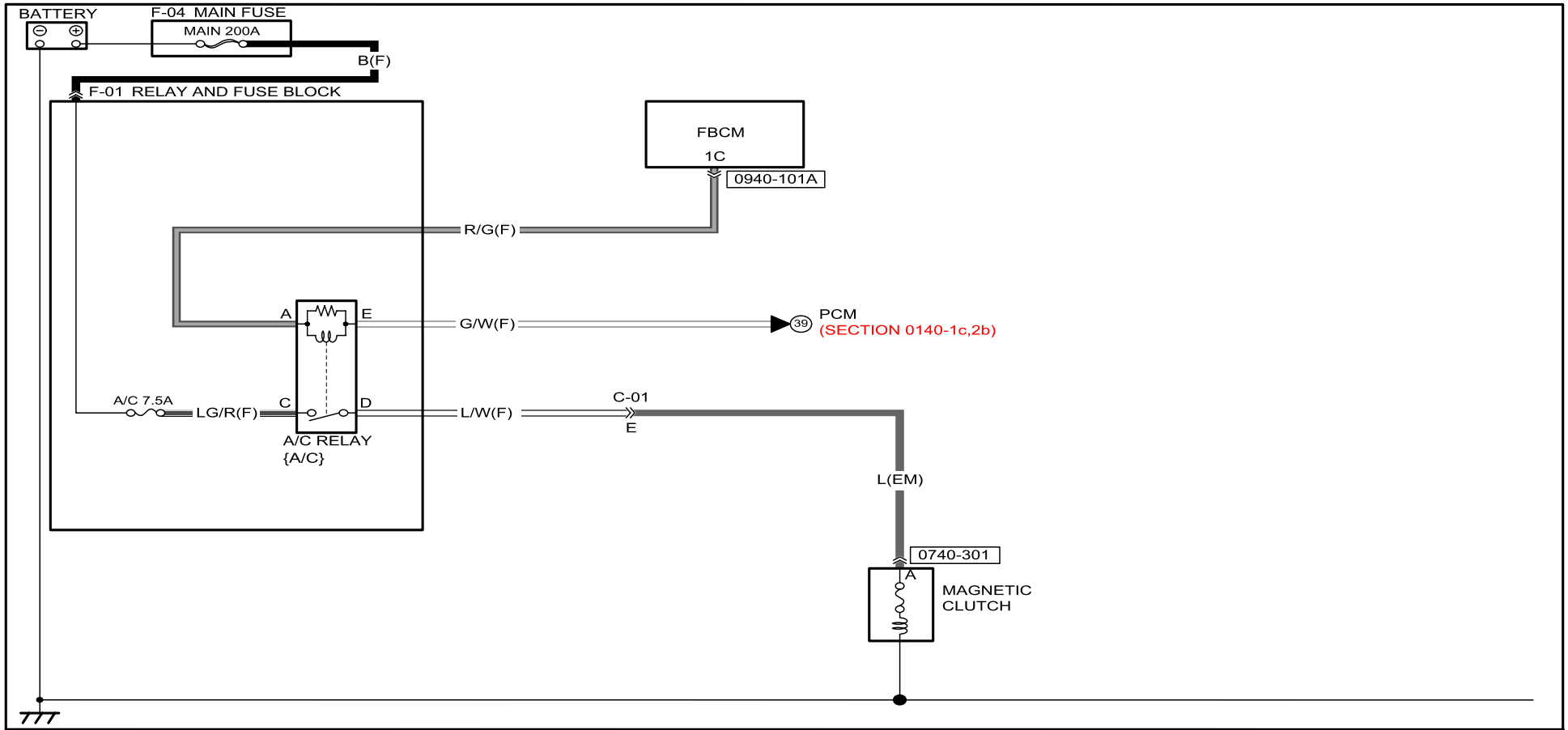

0740-301
MAGNETIC CLUTCH

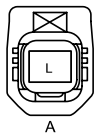

0940-101A
FBCM

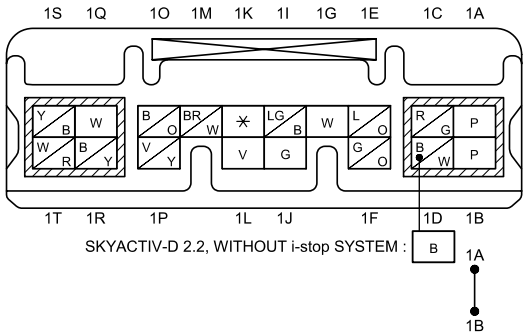

Refer to 00F section for the FUSE BOX, 00C section for the PCM CONNECTOR and COMMON CONNECTOR LIST.

A/C COMPRESSOR CONTROL

0740-3

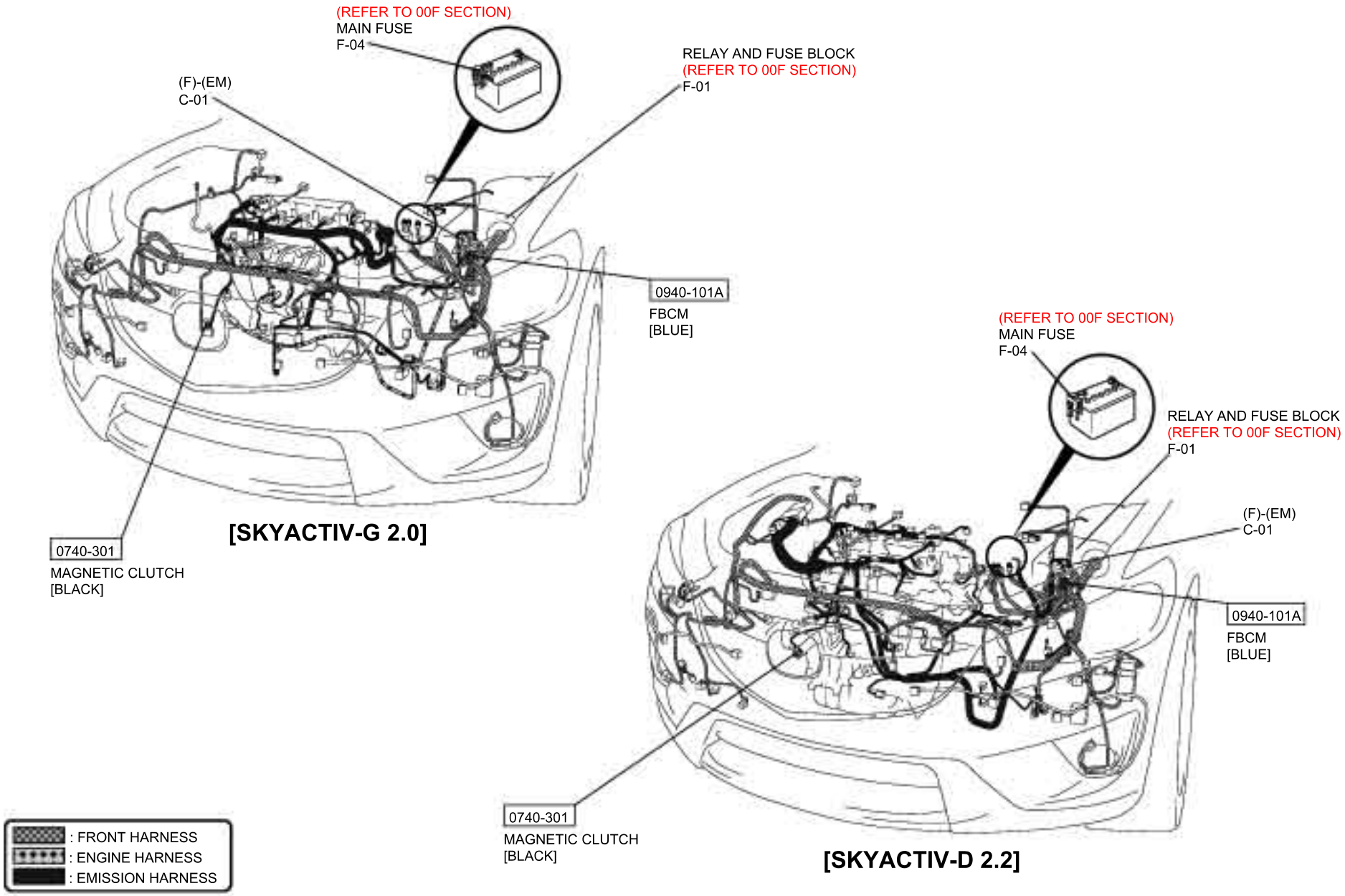

AIR BAG SYSTEM (INCLUDES PRE-TENSIONER SEAT BELT INFORMATION)

0810-1a

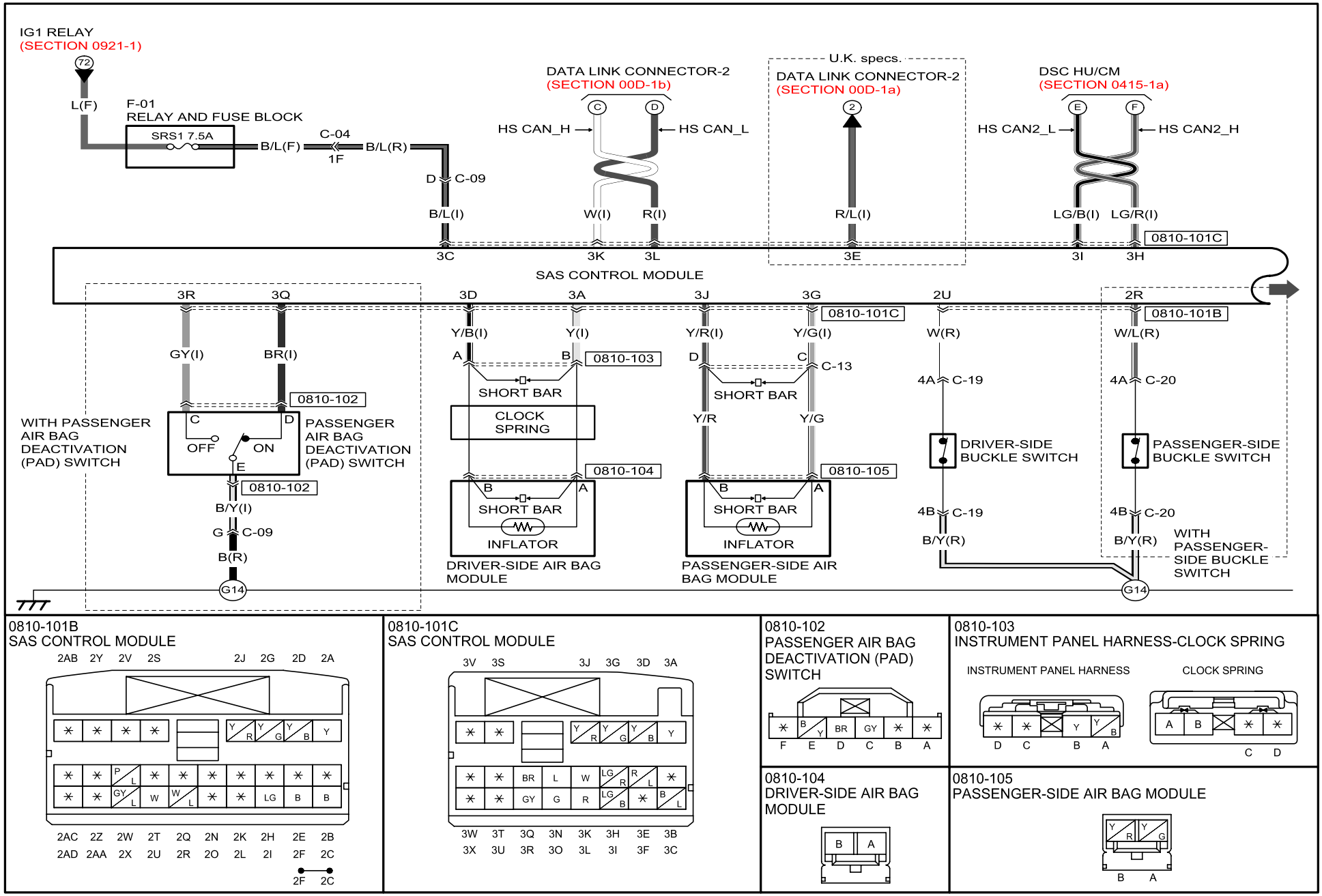

0810-101B
SAS CONTROL MODULE

0810-101C
SAS CONTROL MODULE

0810-102
PASSENGER AIR BAG DEACTIVATION (PAD) SWITCH

0810-103
INSTRUMENT PANEL HARNESS-CLOCK SPRING

0810-104
DRIVER-SIDE AIR BAG MODULE

0810-105
PASSENGER-SIDE AIR BAG MODULE

Refer to 00F section for the FUSE BOX, 00C section for the PCM CONNECTOR and COMMON CONNECTOR LIST.

AIR BAG SYSTEM (INCLUDES PRE-TENSIONER SEAT BELT INFORMATION)

0810-1a

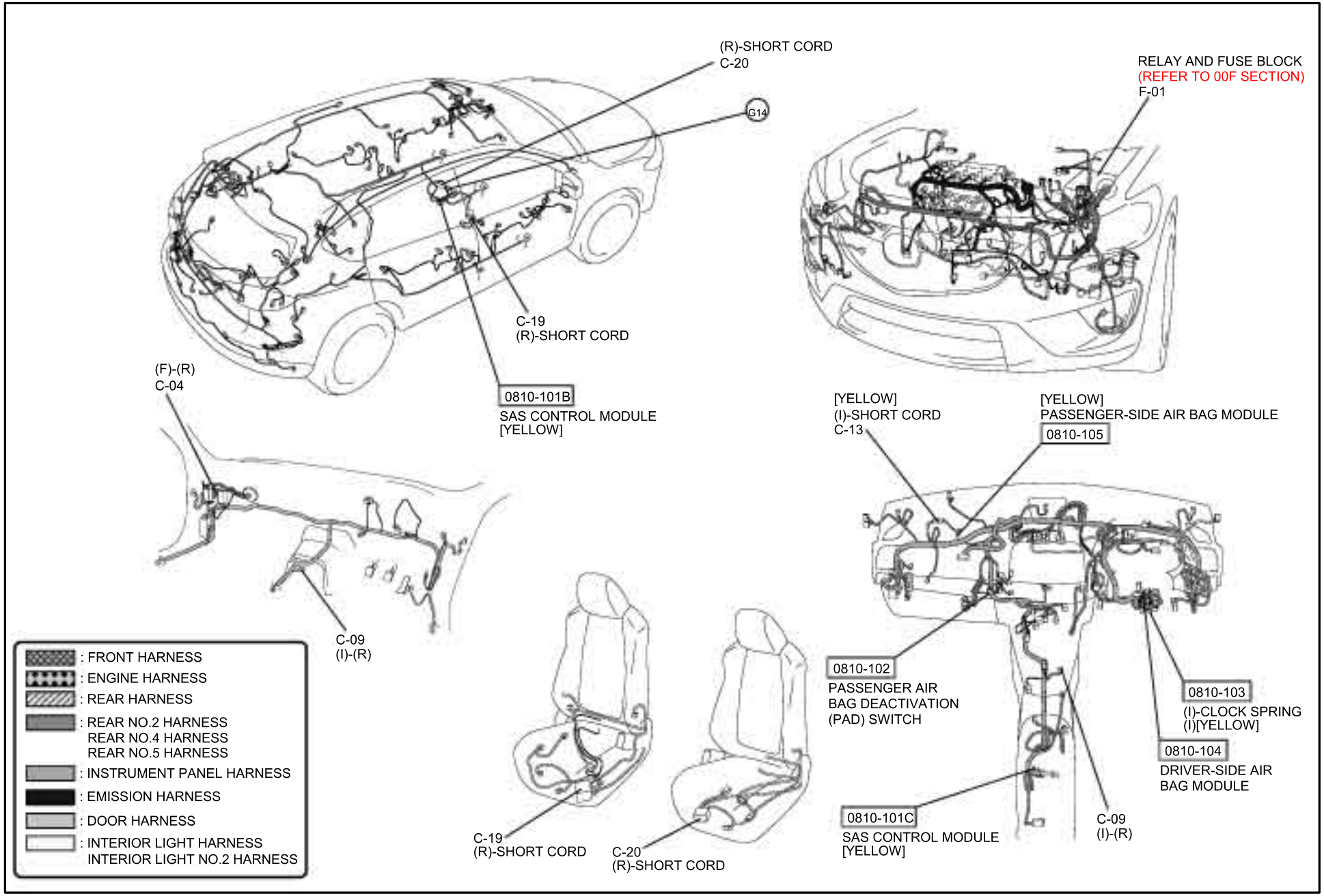

AIR BAG SYSTEM (INCLUDES PRE-TENSIONER SEAT BELT INFORMATION)

0810-1b

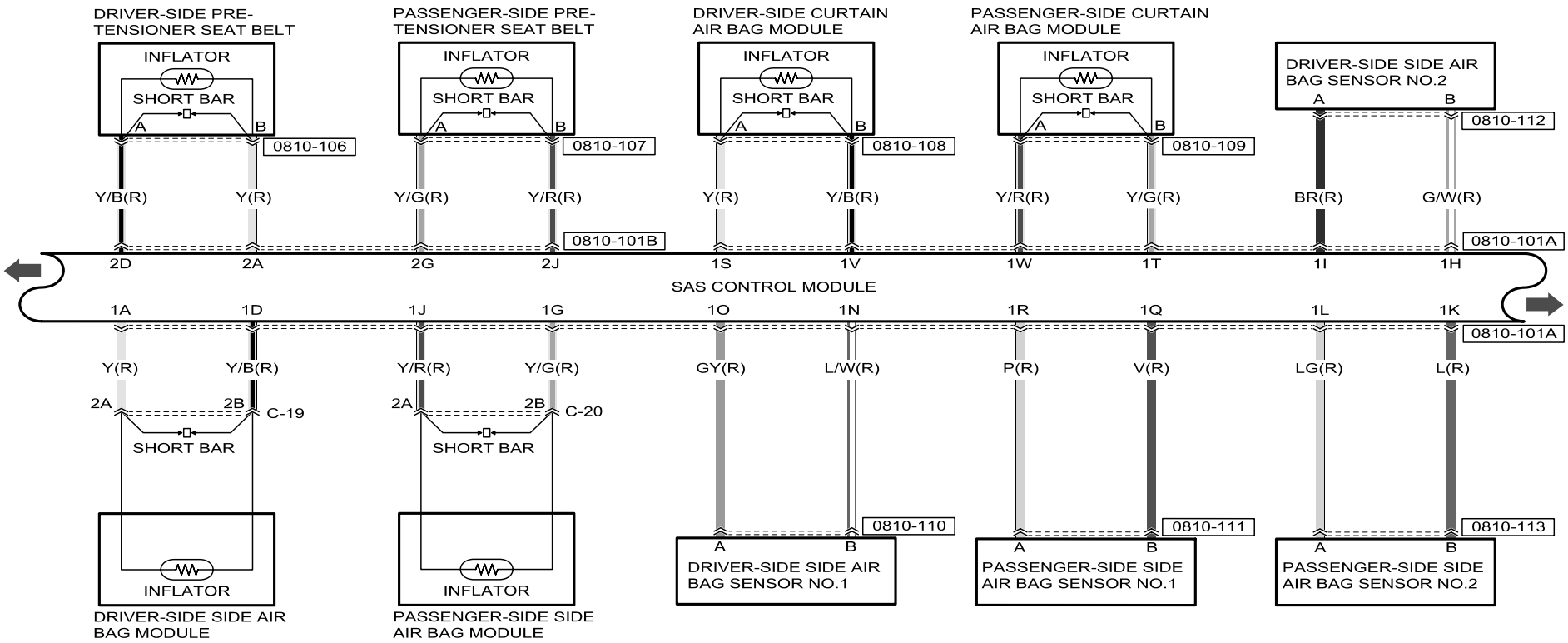

0810-101A
SAS CONTROL MODULE

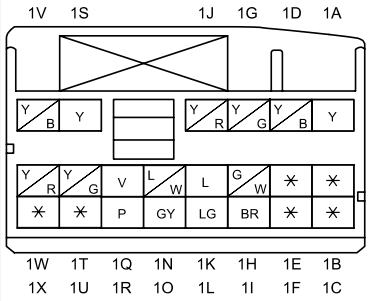

0810-101B
SAS CONTROL MODULE

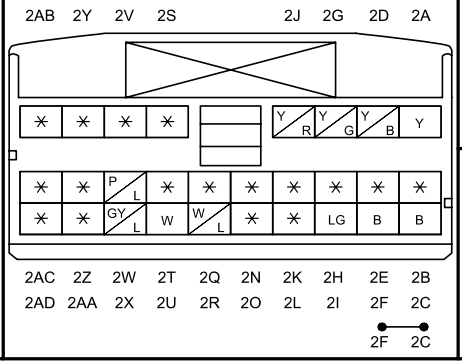

0810-106
DRIVER-SIDE PRE-TENSIONER SEAT BELT

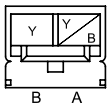

0810-107
PASSENGER-SIDE PRE-TENSIONER SEAT BELT

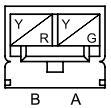

0810-108
DRIVER-SIDE CURTAIN AIR BAG MODULE

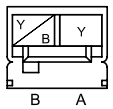

0810-109
PASSENGER-SIDE CURTAIN AIR BAG MODULE

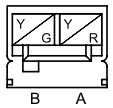

0810-110
DRIVER-SIDE SIDE AIR BAG SENSOR NO.1

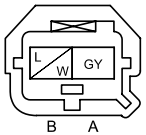

0810-111
PASSENGER-SIDE SIDE AIR BAG SENSOR NO.1

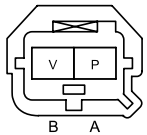

0810-112
DRIVER-SIDE SIDE AIR BAG SENSOR NO.2

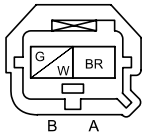

0810-113
PASSENGER-SIDE SIDE AIR BAG SENSOR NO.2

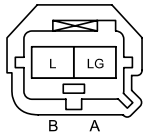

Refer to 00F section for the FUSE BOX, 00C section for the PCM CONNECTOR and COMMON CONNECTOR LIST.

AIR BAG SYSTEM (INCLUDES PRE-TENSIONER SEAT BELT INFORMATION)

0810-1b

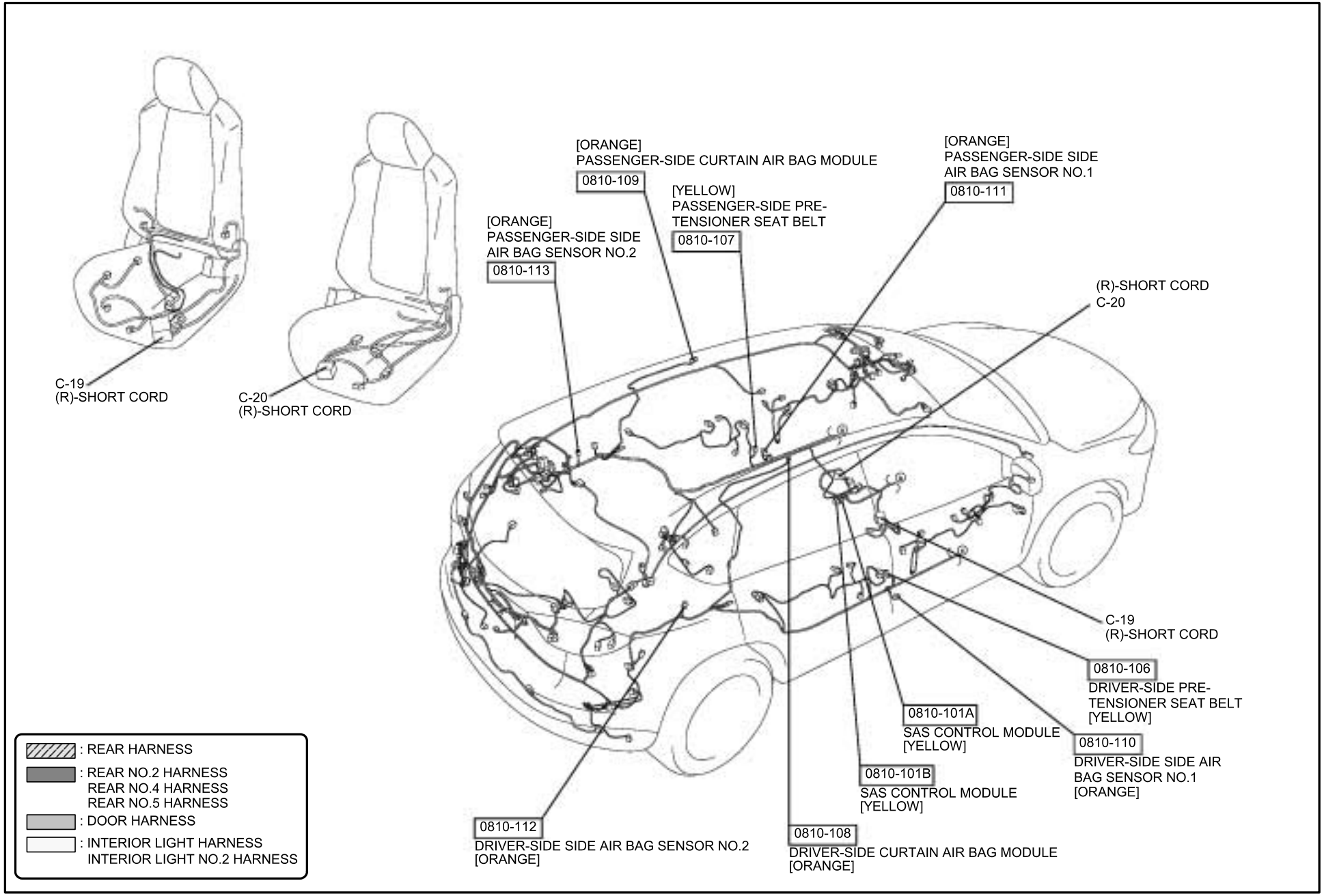

AIR BAG SYSTEM (INCLUDES PRE-TENSIONER SEAT BELT INFORMATION)

0810-1c

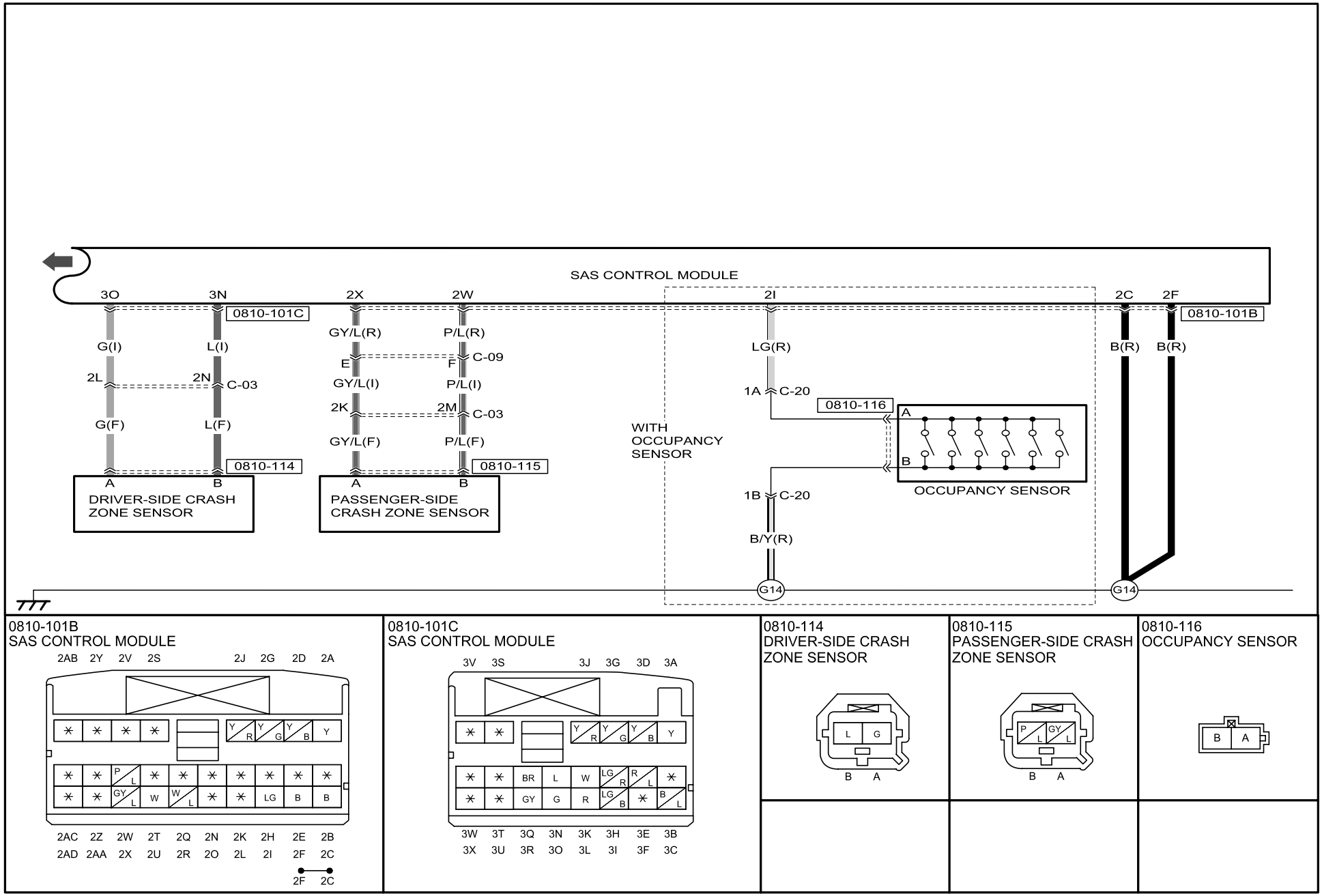

Refer to 00F section for the FUSE BOX, 00C section for the PCM CONNECTOR and COMMON CONNECTOR LIST.

AIR BAG SYSTEM (INCLUDES PRE-TENSIONER SEAT BELT INFORMATION)

0810-1c

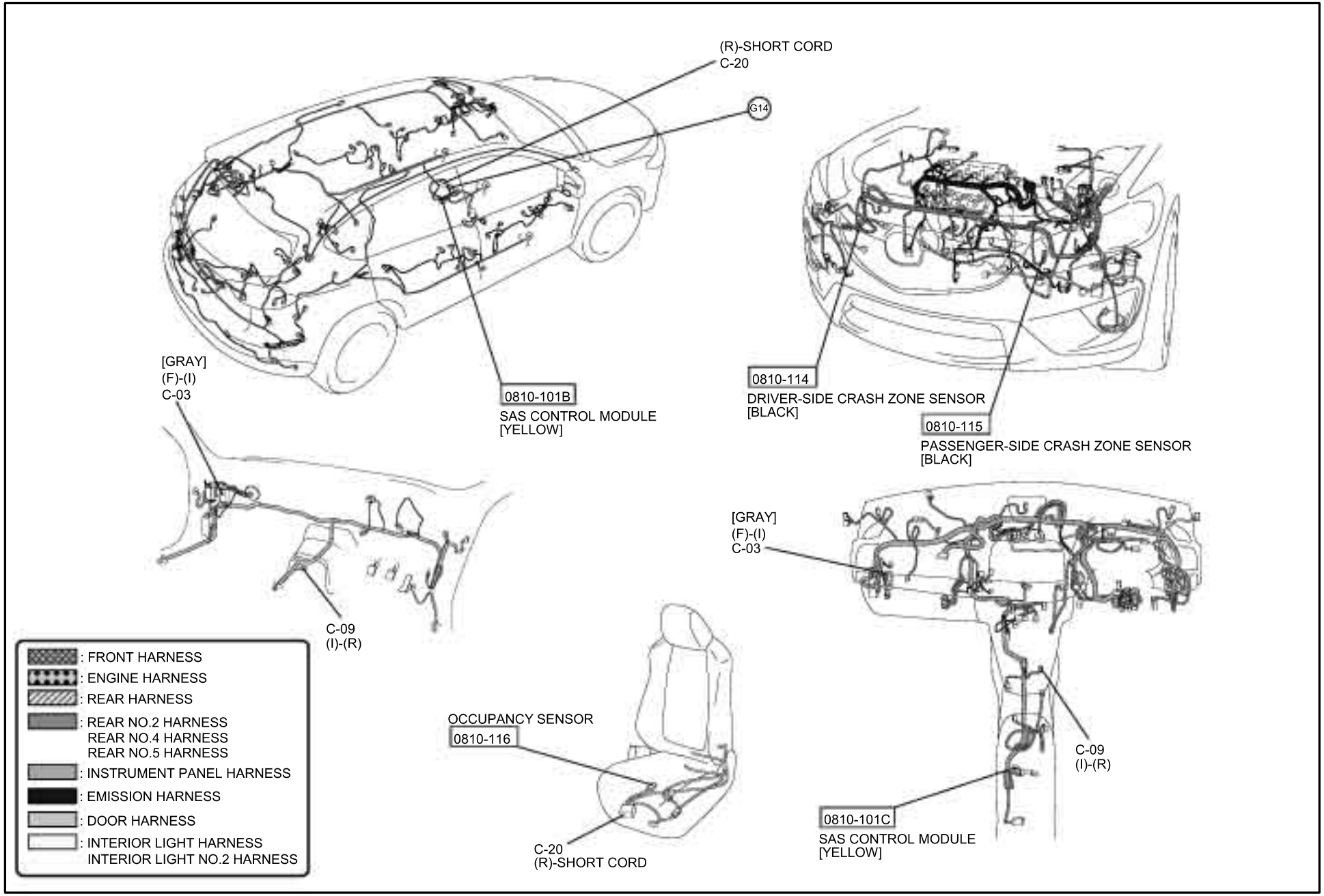

REAR SEAT BELT REMINDER SYSTEM

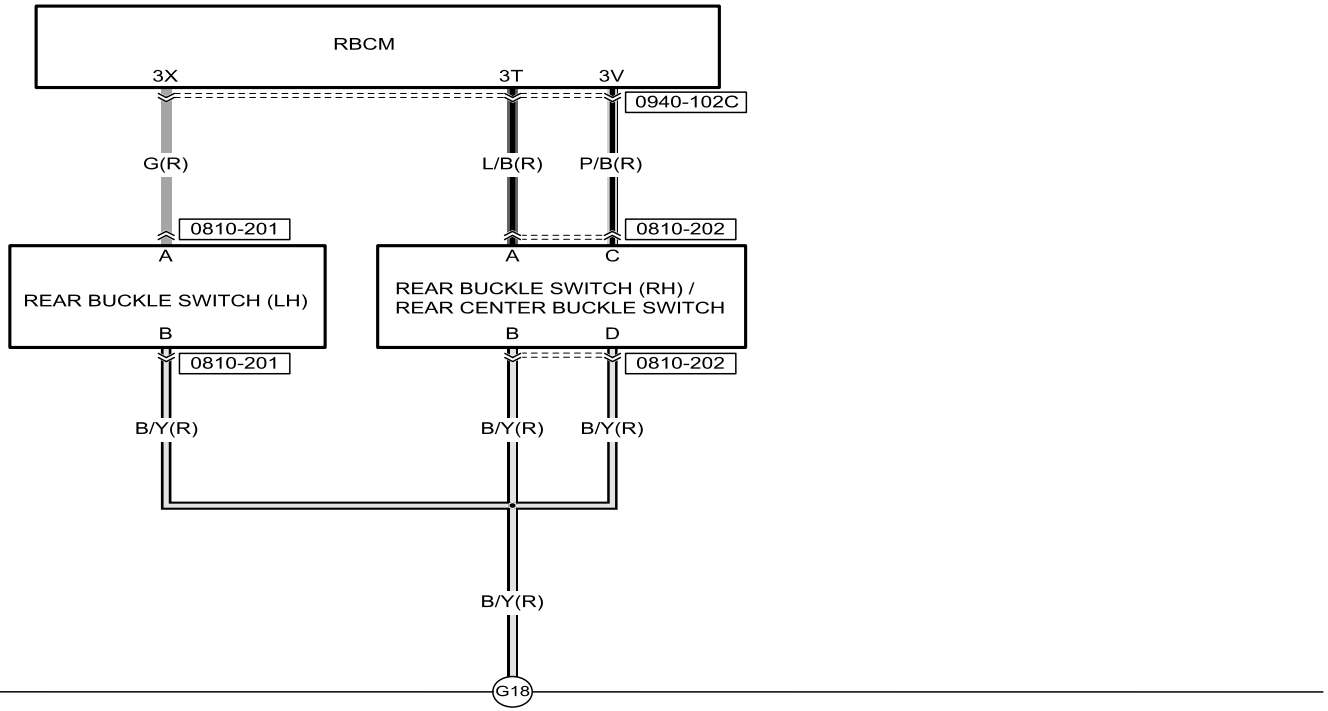

0810-201
REAR BUCKLE SWITCH (LH)

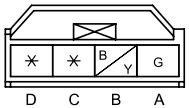

0810-202
REAR BUCKLE SWITCH (RH) /
REAR CENTER BUCKLE SWITCH

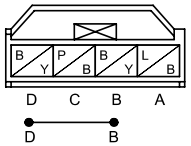

0940-102C
RBCM

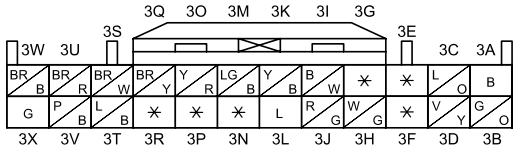

Refer to 00F section for the FUSE BOX, 00C section for the PCM CONNECTOR and COMMON CONNECTOR LIST.

REAR SEAT BELT REMINDER SYSTEM

0810-2

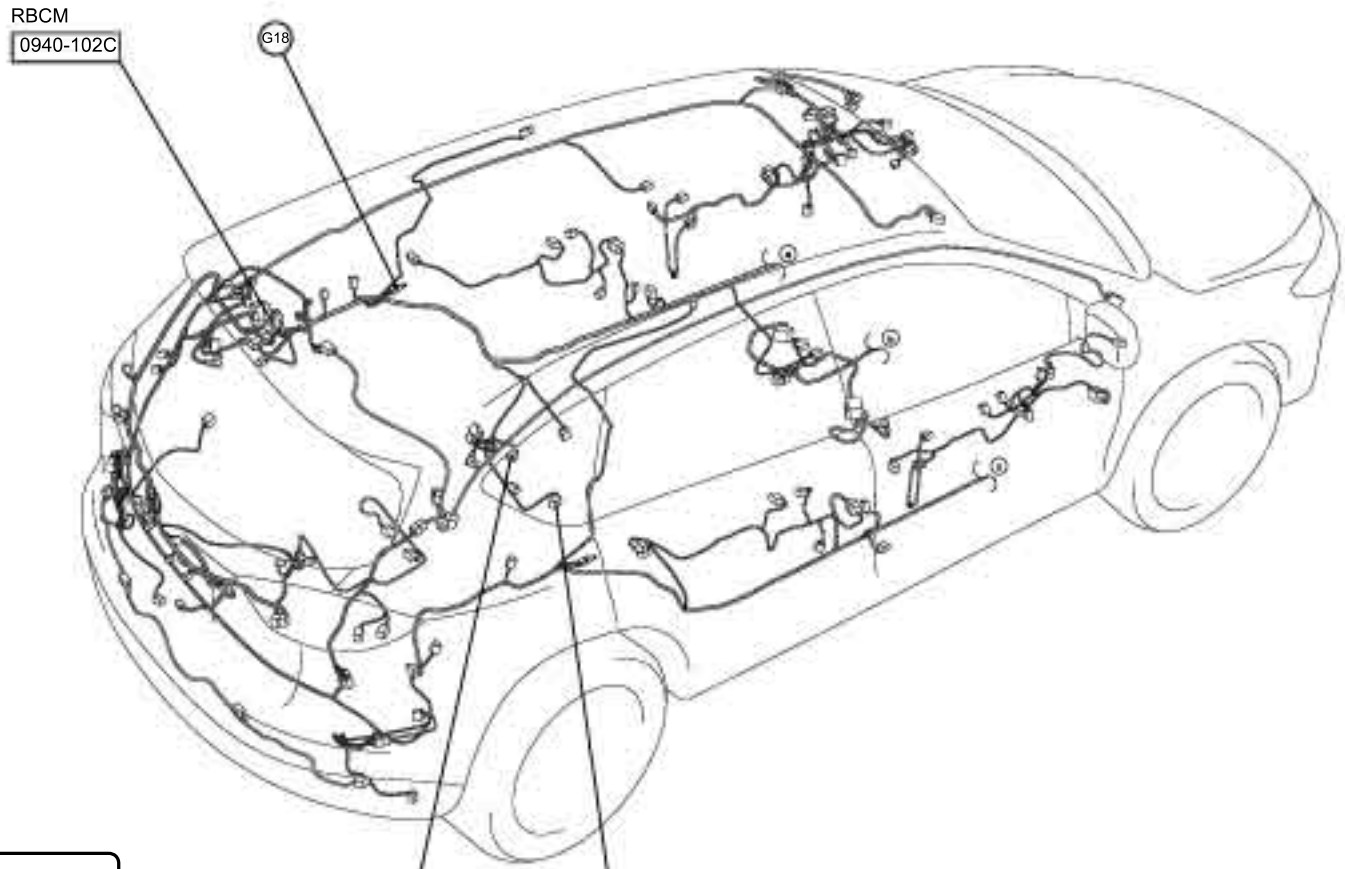

: REAR HARNESS
: REAR NO.2 HARNESS
REAR NO.4 HARNESS
REAR NO.5 HARNESS
: DOOR HARNESS
: INTERIOR LIGHT HARNESS
INTERIOR LIGHT NO.2 HARNESS

REAR WINDOW DEFROSTER (INCLUDES HEATED OUTER MIRROR INFORMATION)

0912-1

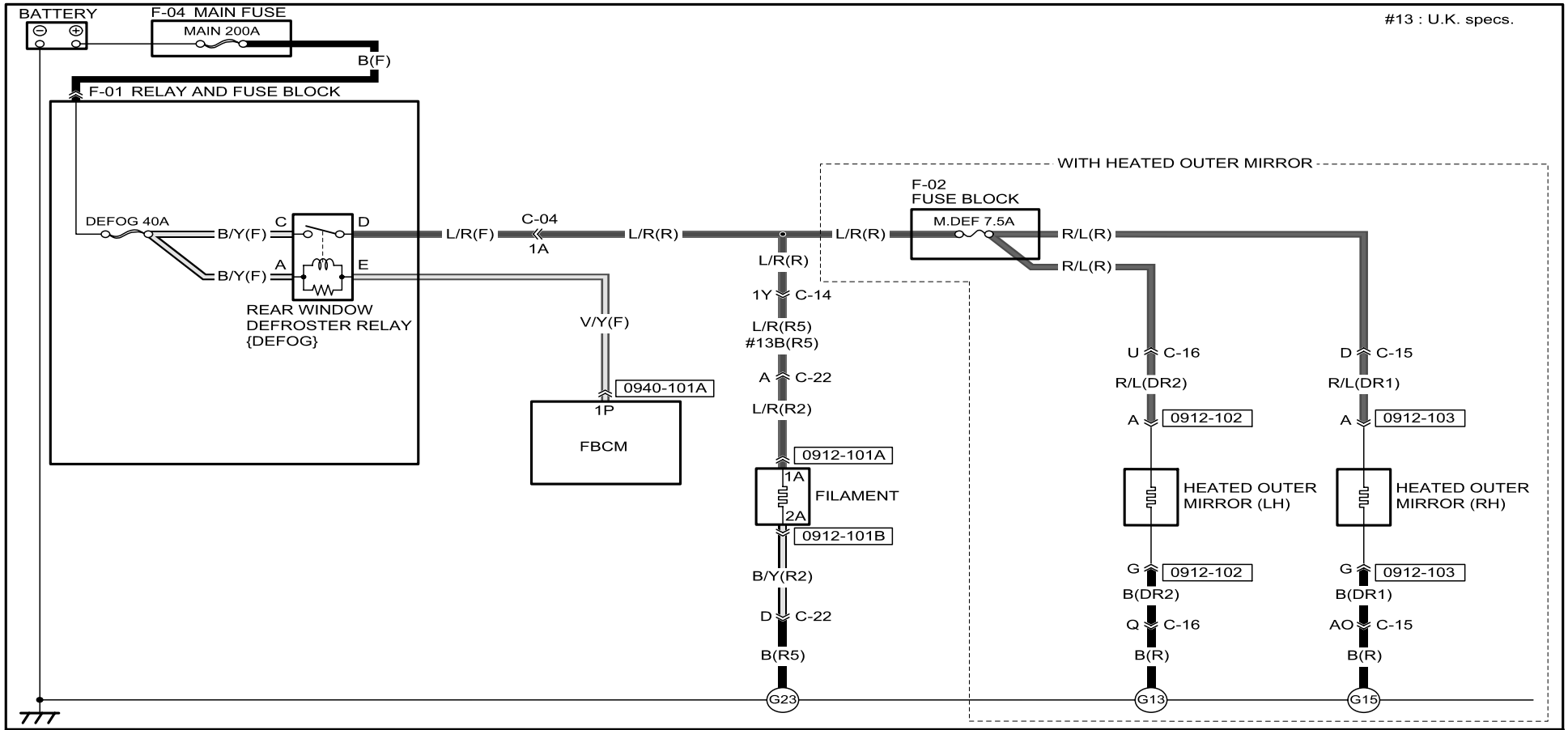

0912-101A
FILAMENT

1A

0912-101B
FILAMENT

2A

0912-102
HEATED OUTER MIRROR (LH) /
POWER OUTER MIRROR (LH) /
RETRACTABLE OUTER MIRROR (LH) /
DOOR NO.2 HARNESS-SHORT CORD /
BSM INDICATOR LIGHT (LH)

DOOR NO.2 HARNESS

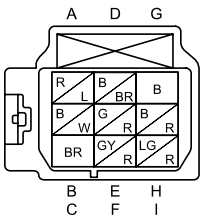

SHORT CORD

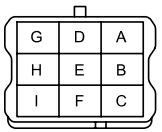

0912-103
HEATED OUTER MIRROR (RH) /
POWER OUTER MIRROR (RH) /
RETRACTABLE OUTER MIRROR (RH) /
DOOR NO.1 HARNESS-SHORT CORD /
BSM INDICATOR LIGHT (RH)

DOOR NO.1 HARNESS

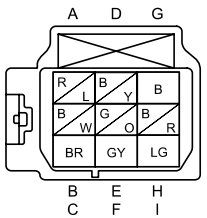

SHORT CORD

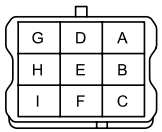

0940-101A
FBCM

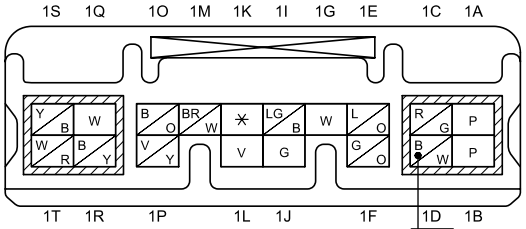

SKYACTIV-D 2.2, WITHOUT i-stop SYSTEM : B

Refer to 00F section for the FUSE BOX, 00C section for the PCM CONNECTOR and COMMON CONNECTOR LIST.

REAR WINDOW DEFROSTER (INCLUDES HEATED OUTER MIRROR INFORMATION)

0912-1

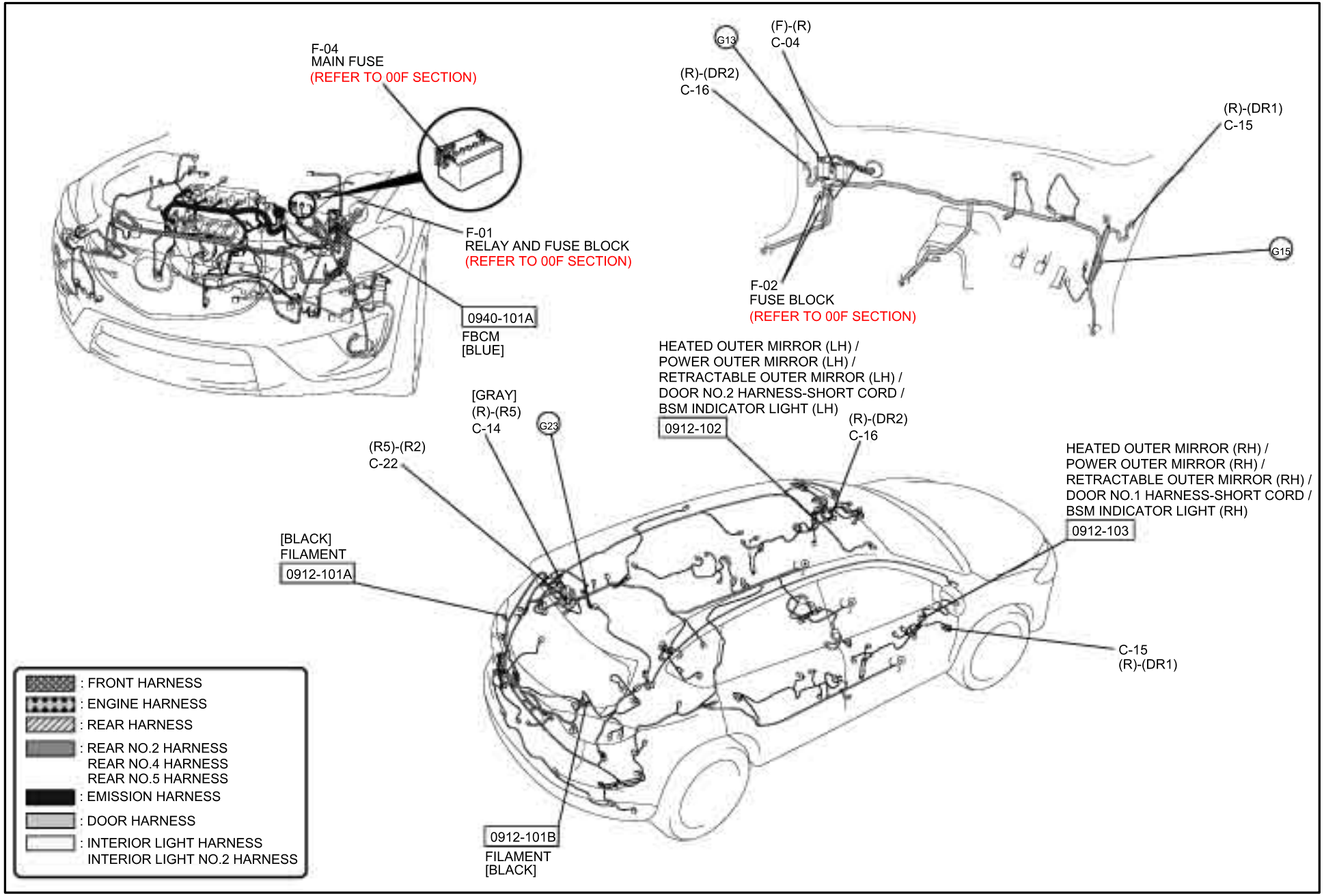

POWER WINDOW SYSTEM (AUTO-OPEN/CLOSE FUNCTION FOR ALL WINDOWS)

0912-2a

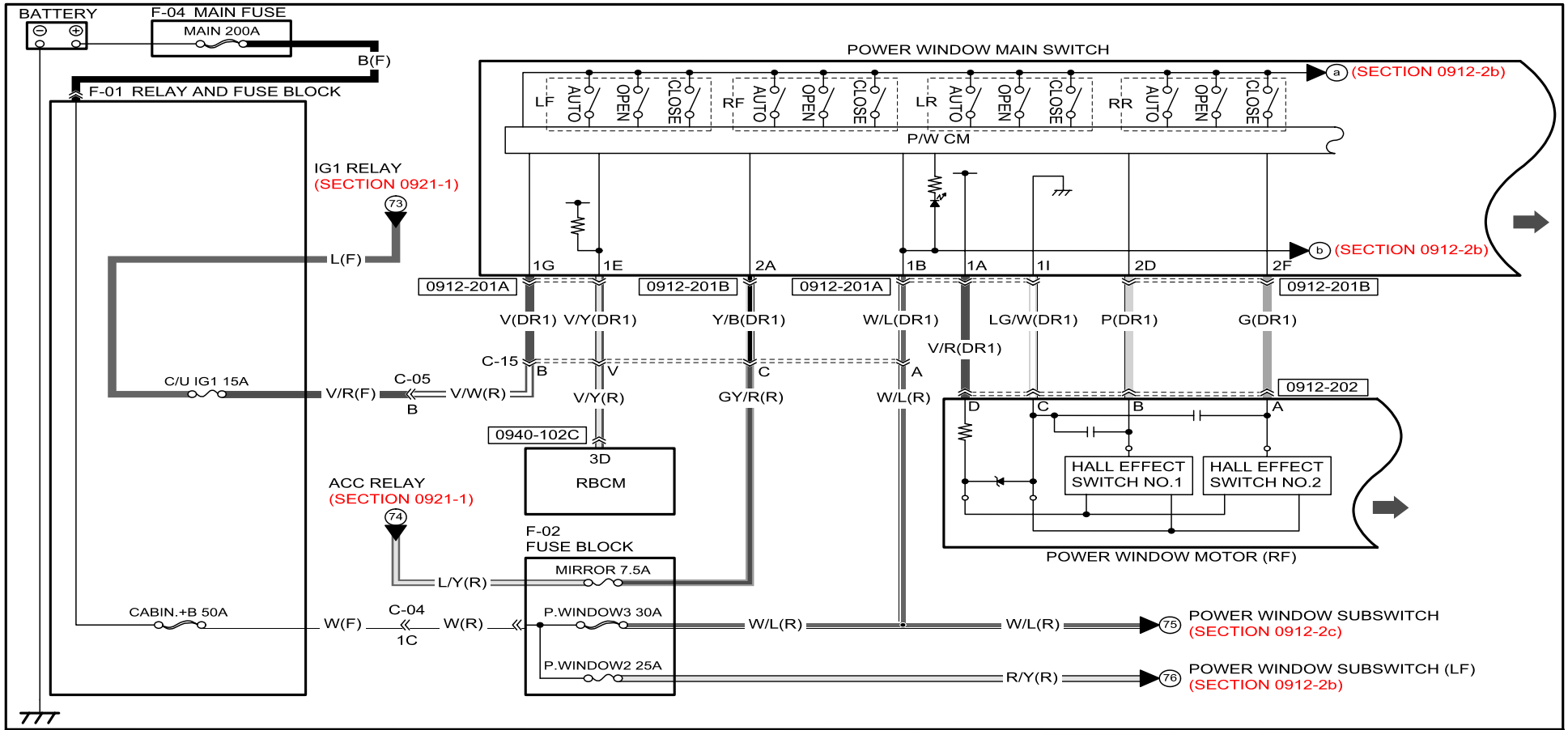

0912-201A
POWER WINDOW MAIN SWITCH /
POWER OUTER MIRROR SWITCH

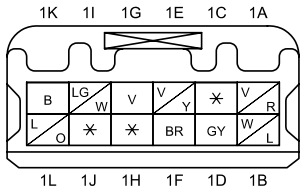

0912-201B
POWER WINDOW MAIN SWITCH /
POWER OUTER MIRROR SWITCH

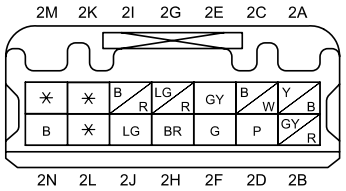

0912-202
POWER WINDOW
MOTOR (RF)

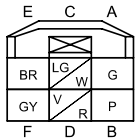

0940-102C
RBCM

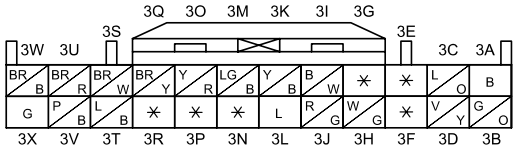

Refer to 00F section for the FUSE BOX, 00C section for the PCM CONNECTOR and COMMON CONNECTOR LIST.

POWER WINDOW SYSTEM (AUTO-OPEN/CLOSE FUNCTION FOR ALL WINDOWS)

0912-2a

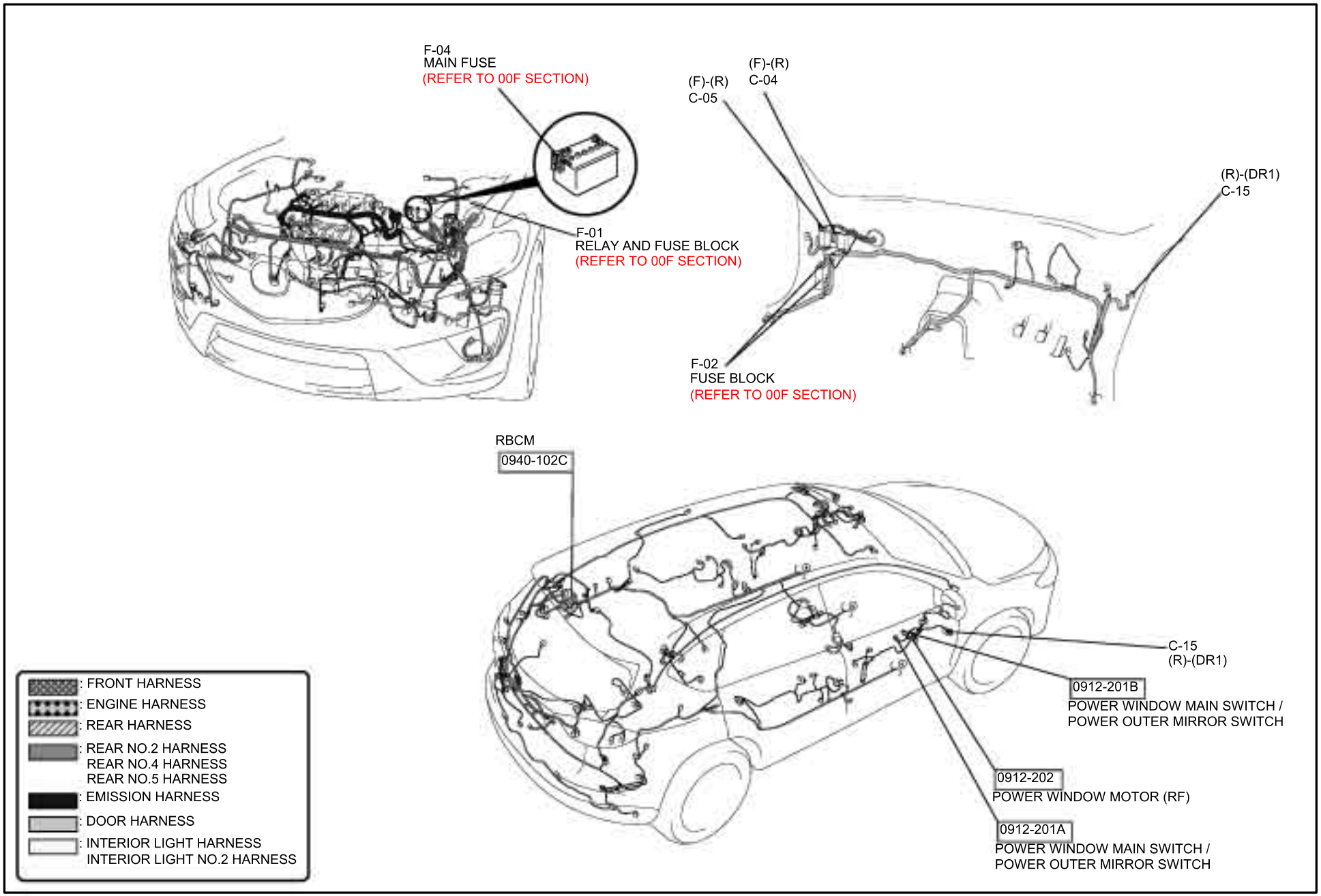

POWER WINDOW SYSTEM (AUTO-OPEN/CLOSE FUNCTION FOR ALL WINDOWS)

0912-2b

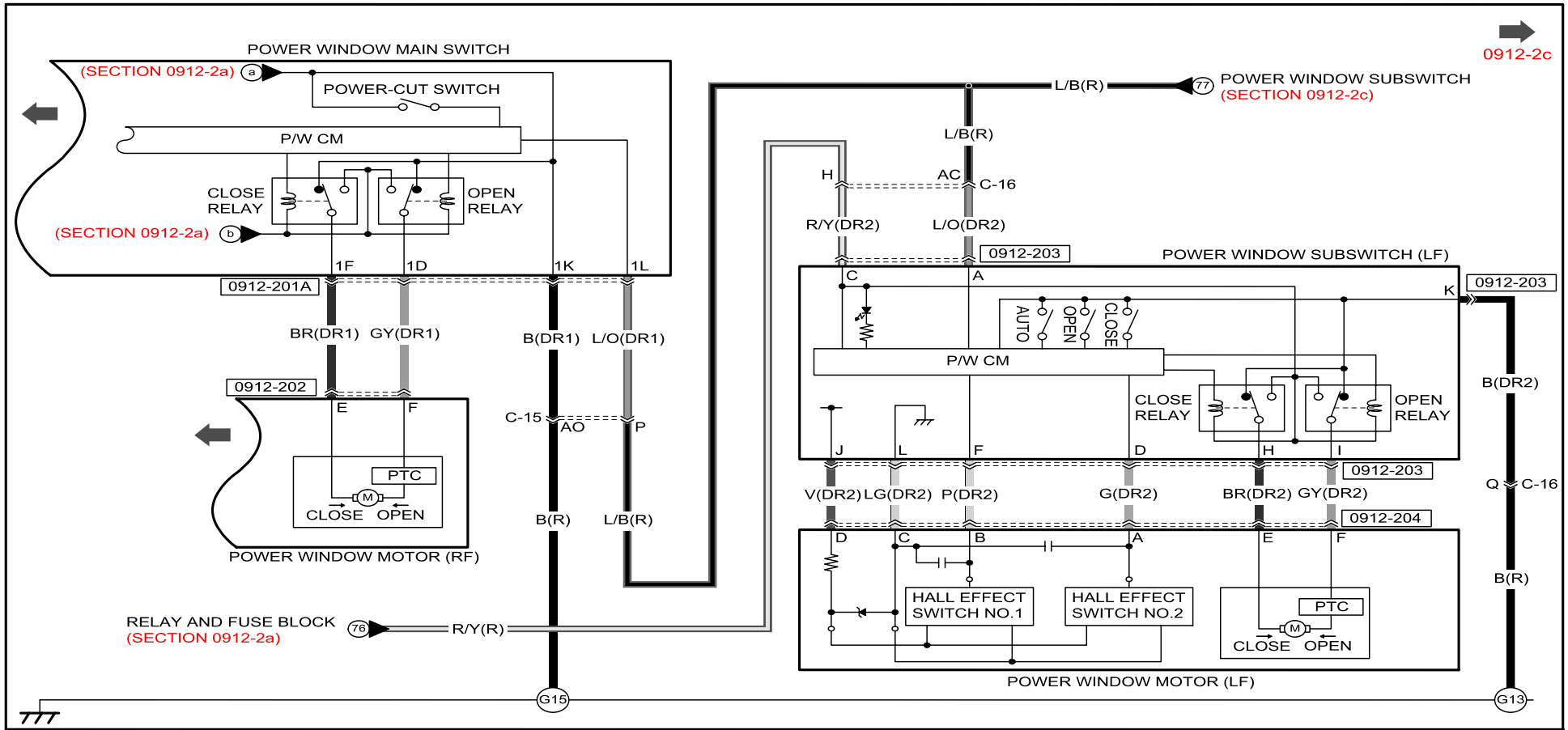

0912-201A
POWER WINDOW MAIN SWITCH /
POWER OUTER MIRROR SWITCH

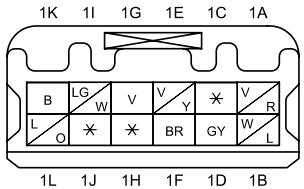

0912-202
POWER WINDOW
MOTOR (RF)

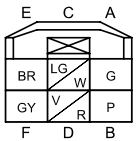

0912-203
POWER WINDOW SUBSWITCH (LF)

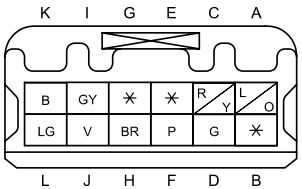

0912-204
POWER WINDOW MOTOR
(LF)

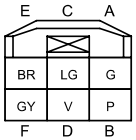

Refer to 00F section for the FUSE BOX, 00C section for the PCM CONNECTOR and COMMON CONNECTOR LIST.

POWER WINDOW SYSTEM (AUTO-OPEN/CLOSE FUNCTION FOR ALL WINDOWS)

0912-2b

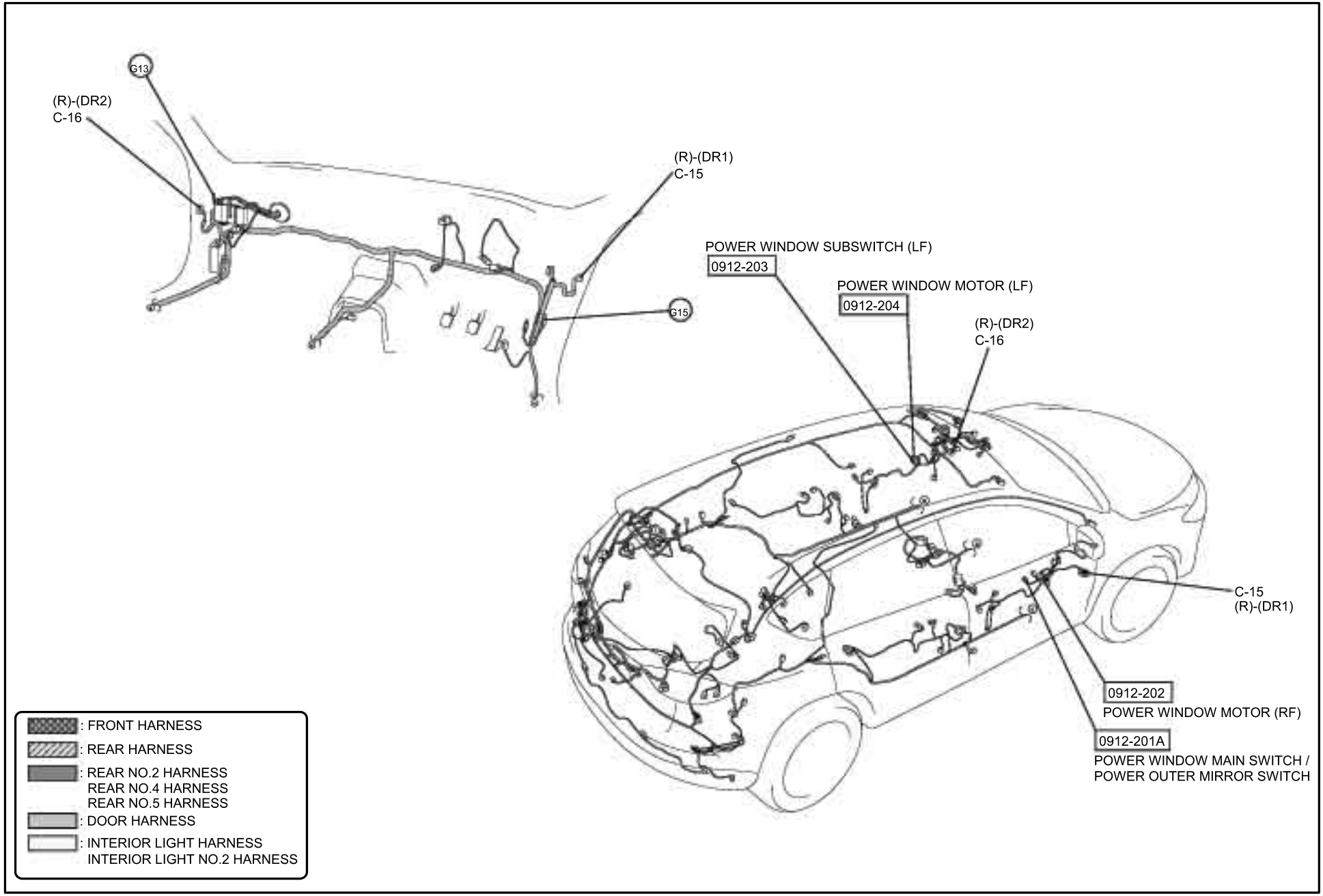

POWER WINDOW SYSTEM (AUTO-OPEN/CLOSE FUNCTION FOR ALL WINDOWS)

0912-2c

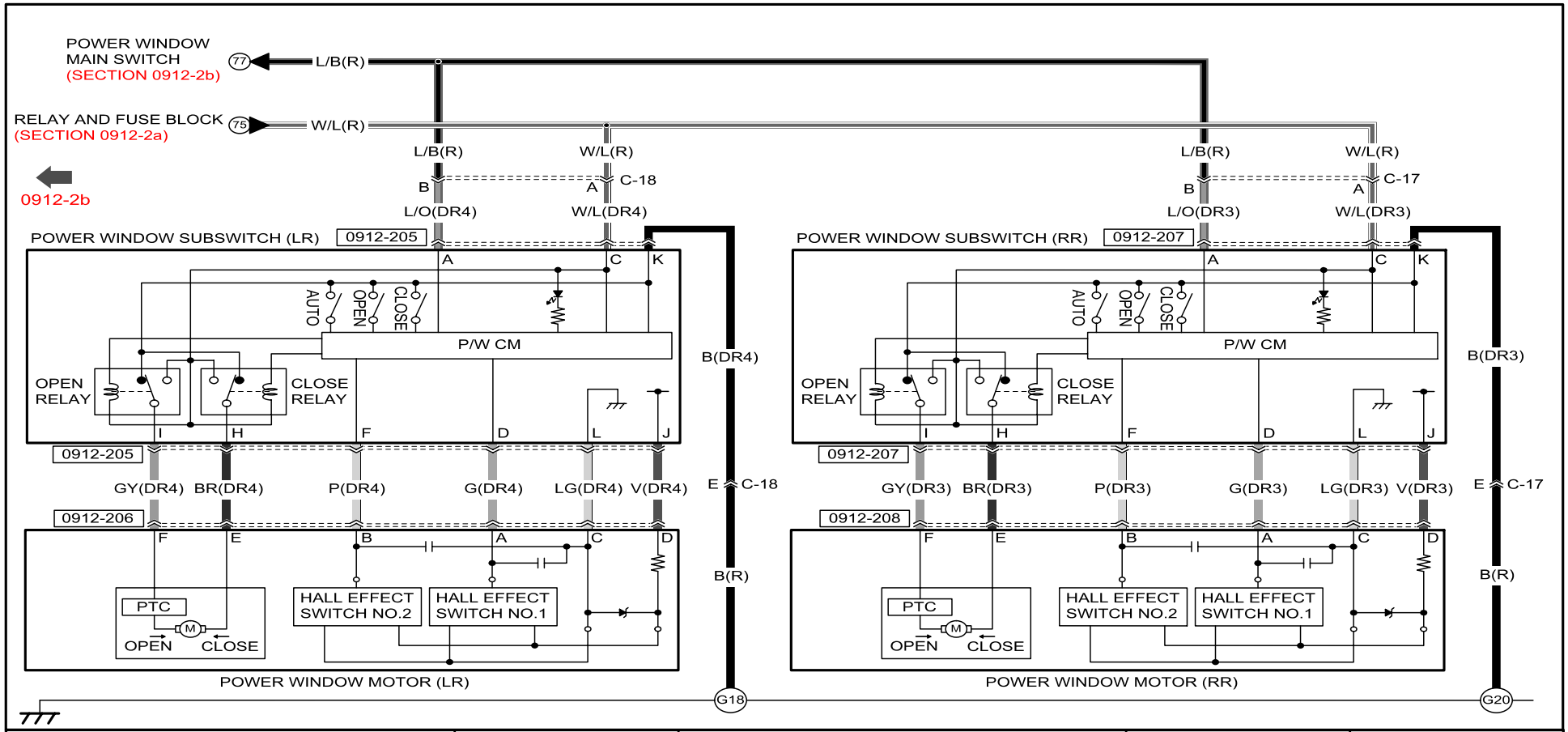

0912-205
POWER WINDOW SUBSWITCH (LR)

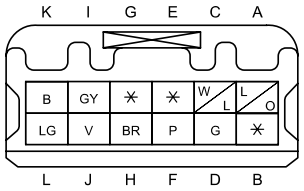

0912-206
POWER WINDOW MOTOR (LR)

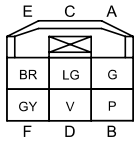

0912-207
POWER WINDOW SUBSWITCH (RR)

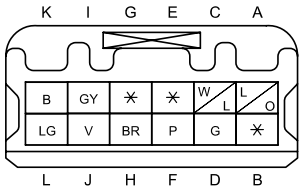

0912-208
POWER WINDOW MOTOR (RR)

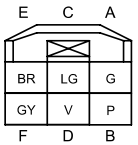

Refer to 00F section for the FUSE BOX, 00C section for the PCM CONNECTOR and COMMON CONNECTOR LIST.

POWER WINDOW SYSTEM (AUTO-OPEN/CLOSE FUNCTION FOR ALL WINDOWS)

0912-2c

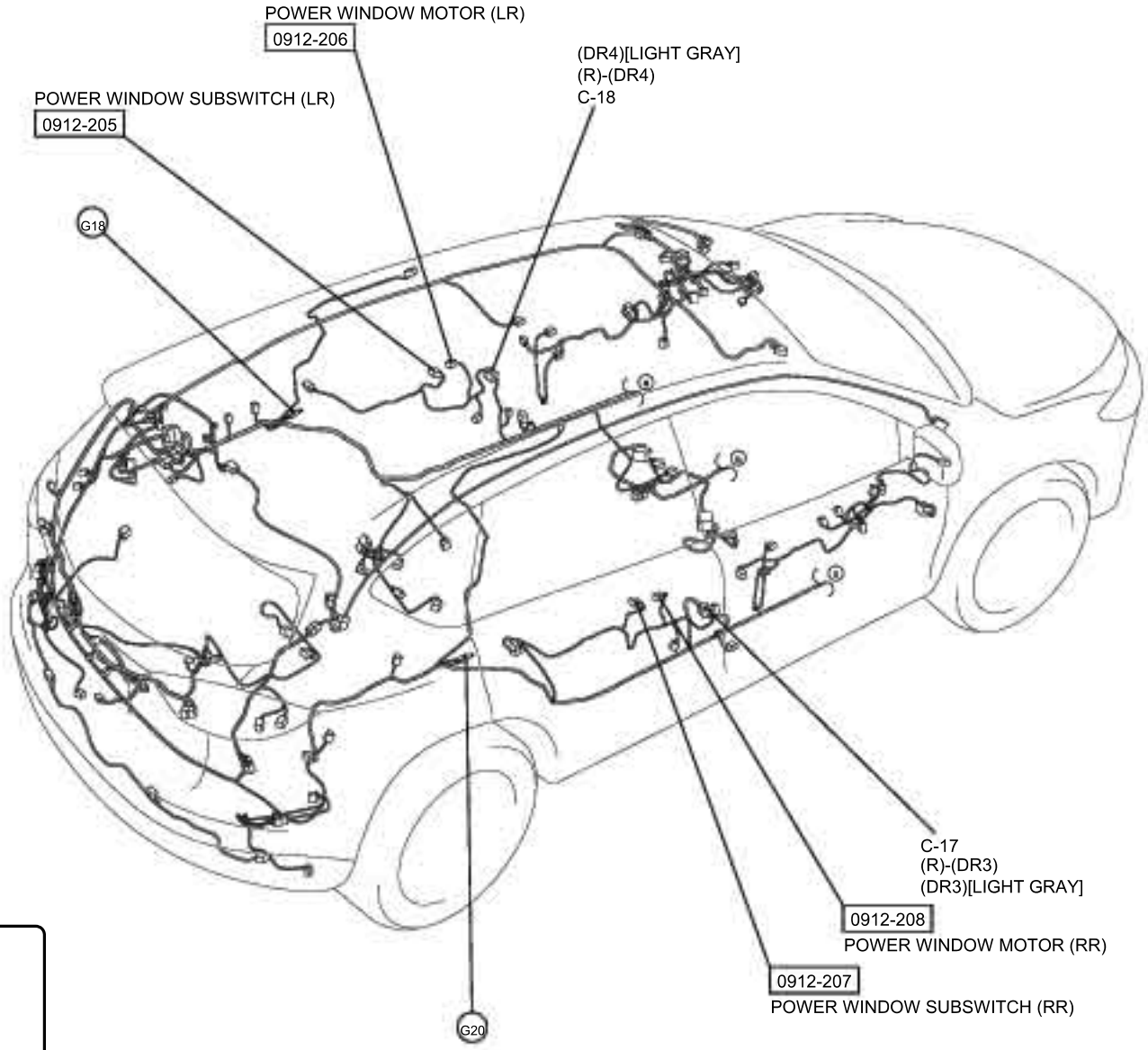

: REAR HARNESS
: REAR NO.2 HARNESS
REAR NO.4 HARNESS
REAR NO.5 HARNESS
: DOOR HARNESS
: INTERIOR LIGHT HARNESS
INTERIOR LIGHT NO.2 HARNESS

POWER OUTER MIRROR

0912-3a

#6 : WITHOUT RETRACTABLE OUTER MIRROR
#7 : WITH RETRACTABLE OUTER MIRROR
#10 : AUTO-OPEN/CLOSE FUNCTION FOR ALL WINDOWS
#11 : AUTO-OPEN/CLOSE FUNCTION FOR DRIVER-SIDE WINDOW

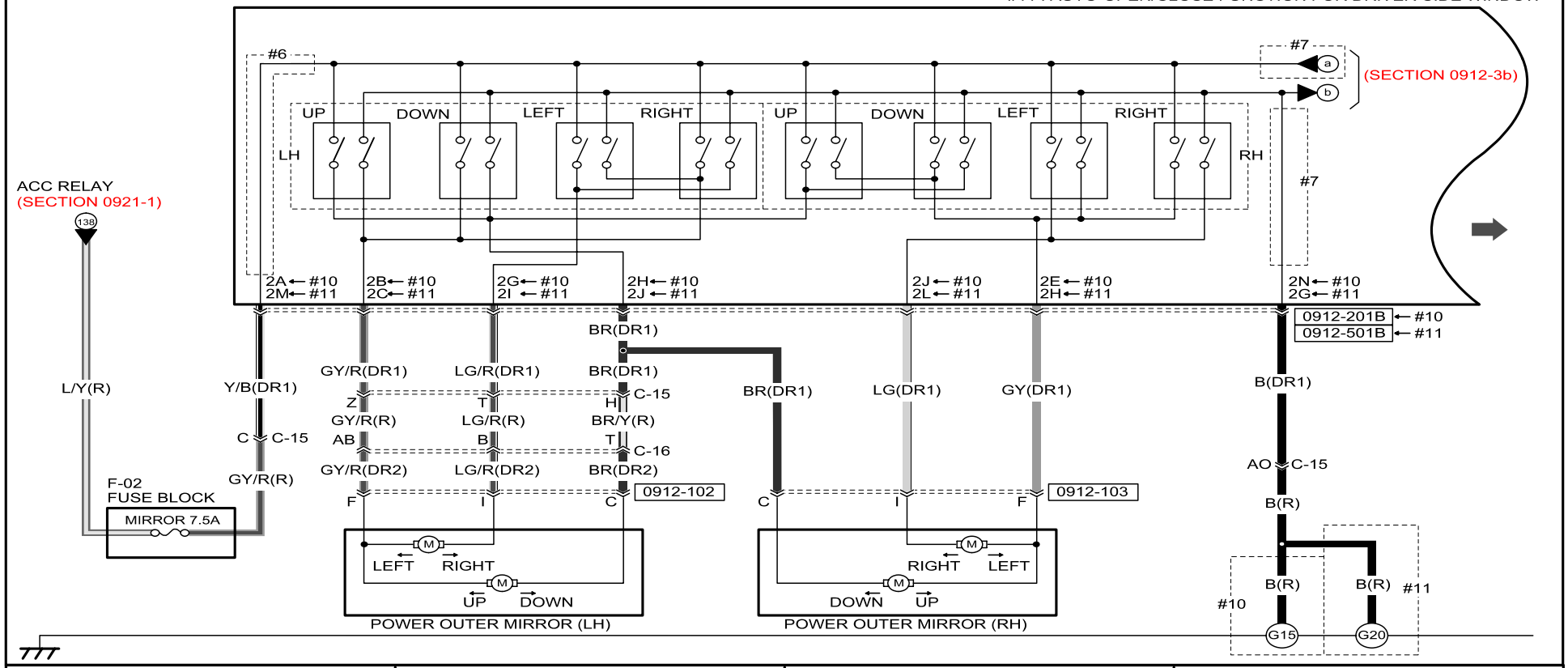

0912-102
HEATED OUTER MIRROR (LH) /
POWER OUTER MIRROR (LH) /
RETRACTABLE OUTER MIRROR (LH) /
DOOR NO.2 HARNESS-SHORT CORD /
BSM INDICATOR LIGHT (LH)

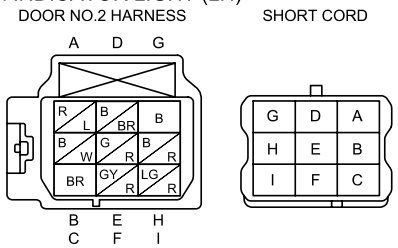

0912-103
HEATED OUTER MIRROR (RH) /
POWER OUTER MIRROR (RH) /
RETRACTABLE OUTER MIRROR (RH) /
DOOR NO.1 HARNESS-SHORT CORD /
BSM INDICATOR LIGHT (RH)

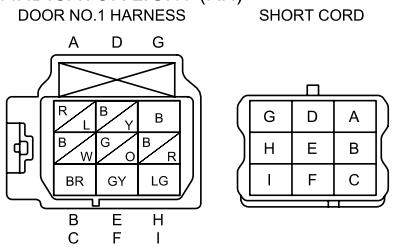

0912-201B
POWER WINDOW MAIN SWITCH /
POWER OUTER MIRROR SWITCH

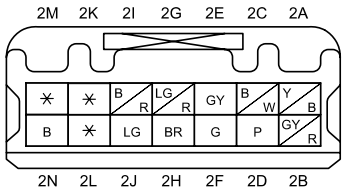

0912-501B
POWER OUTER MIRROR SWITCH /
POWER WINDOW MAIN SWITCH

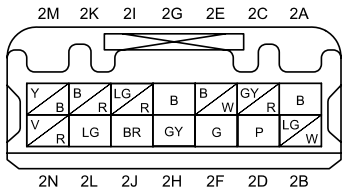

Refer to 00F section for the FUSE BOX, 00C section for the PCM CONNECTOR and COMMON CONNECTOR LIST.

POWER OUTER MIRROR

0912-3a

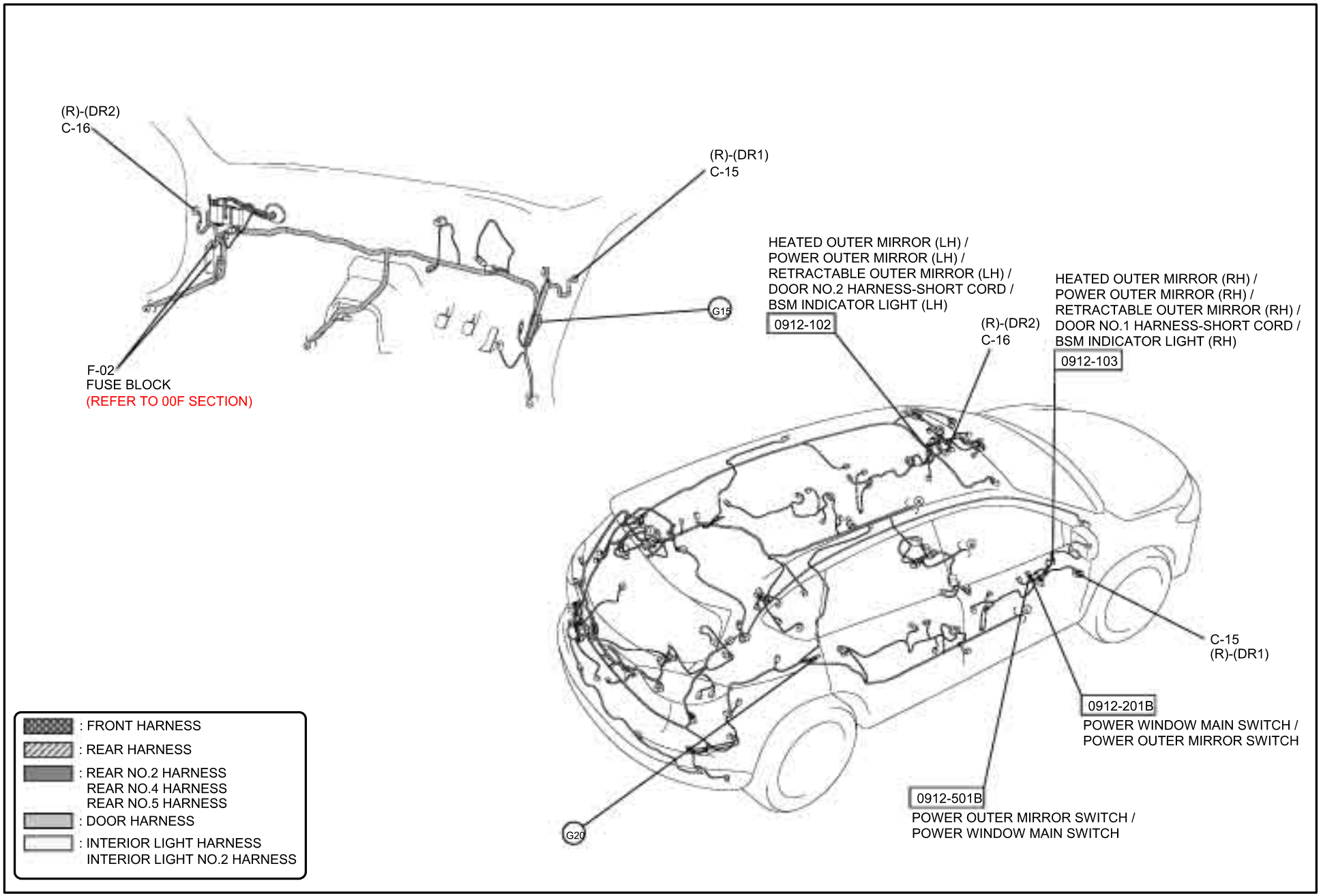

POWER OUTER MIRROR

0912-3b

#6 : WITHOUT RETRACTABLE OUTER MIRROR
#7 : WITH RETRACTABLE OUTER MIRROR
#10 : AUTO-OPEN/CLOSE FUNCTION FOR ALL WINDOWS
#11 : AUTO-OPEN/CLOSE FUNCTION FOR DRIVER-SIDE WINDOW

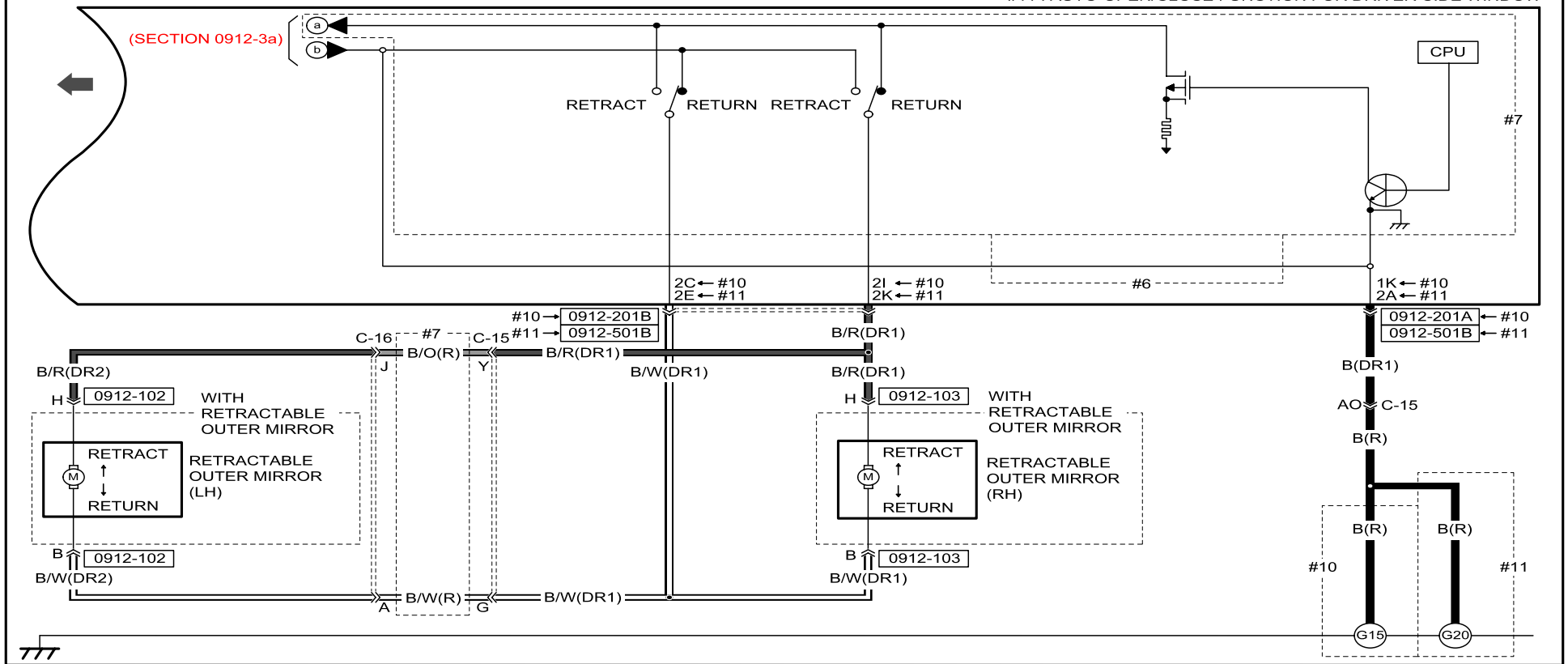

0912-102
HEATED OUTER MIRROR (LH) / POWER OUTER MIRROR (LH) / RETRACTABLE OUTER MIRROR (LH) / DOOR NO.2 HARNESS-SHORT CORD / BSM INDICATOR LIGHT (LH)

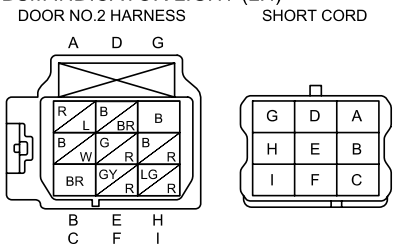

0912-103
HEATED OUTER MIRROR (RH) / POWER OUTER MIRROR (RH) / RETRACTABLE OUTER MIRROR (RH) / DOOR NO.1 HARNESS-SHORT CORD / BSM INDICATOR LIGHT (RH)

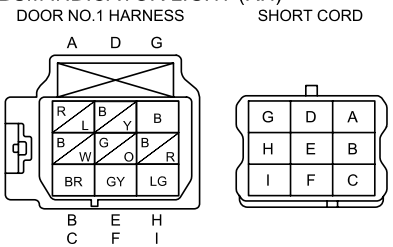

0912-201A
POWER WINDOW MAIN SWITCH / POWER OUTER MIRROR SWITCH

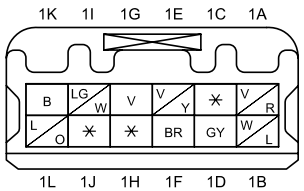

0912-201B
POWER WINDOW MAIN SWITCH / POWER OUTER MIRROR SWITCH

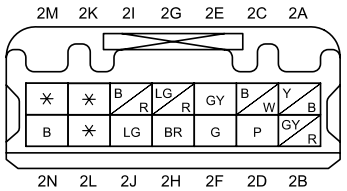

0912-501B
POWER OUTER MIRROR SWITCH / POWER WINDOW MAIN SWITCH

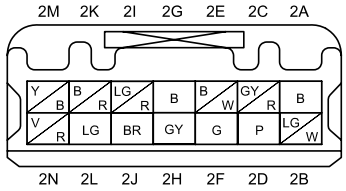

Refer to 00F section for the FUSE BOX, 00C section for the PCM CONNECTOR and COMMON CONNECTOR LIST.

POWER OUTER MIRROR

0912-3b

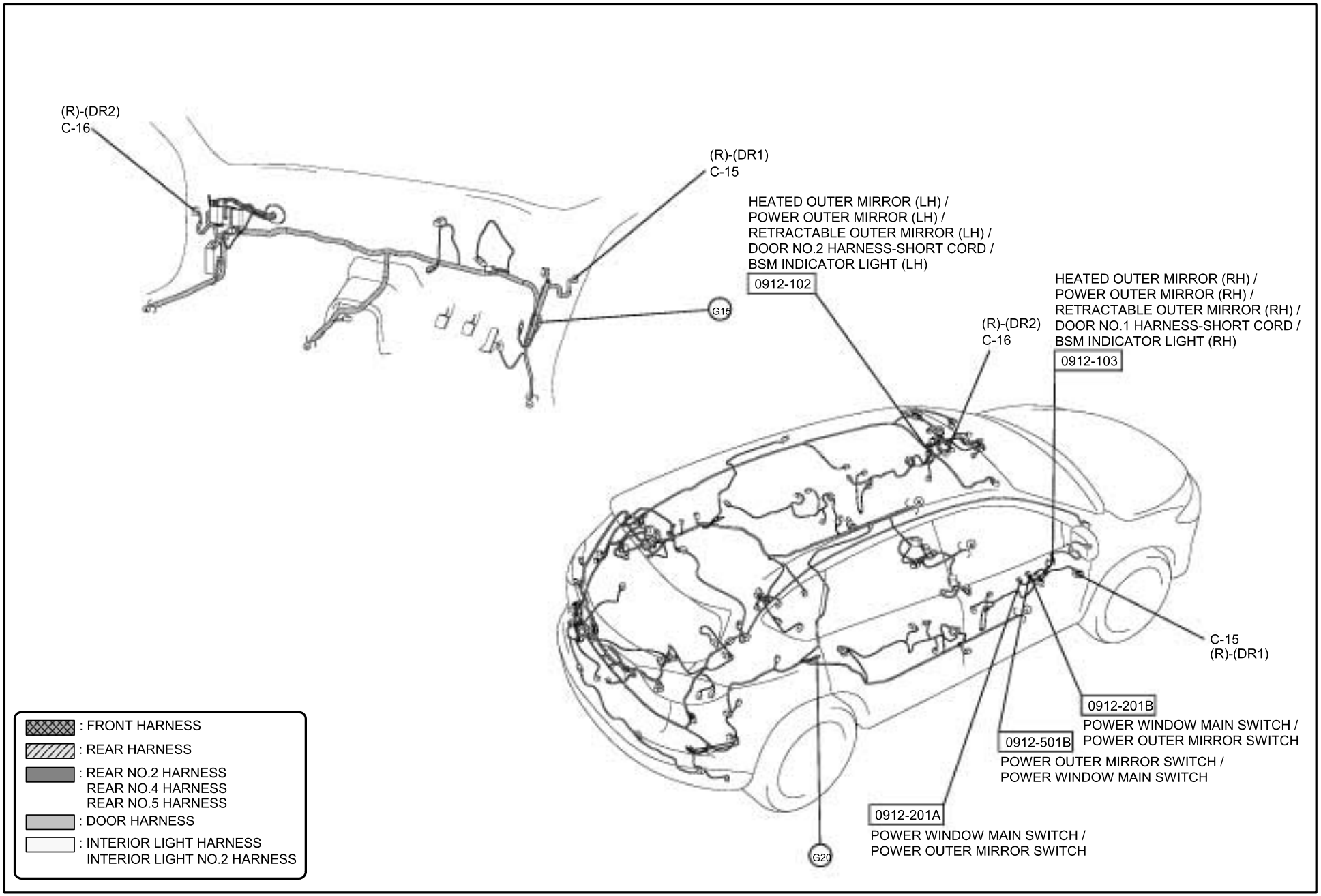

AUTO DIMMING MIRROR

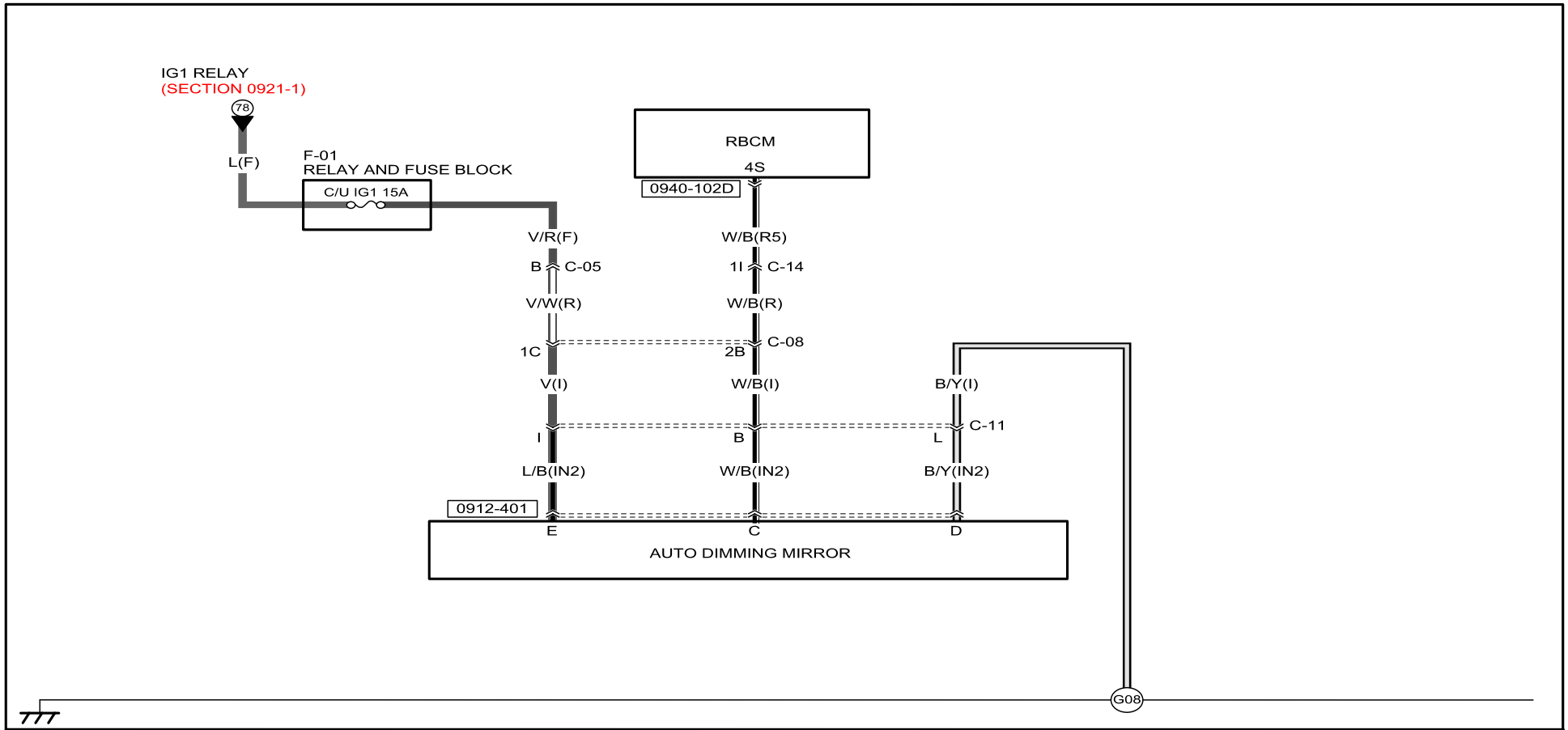

0912-401
AUTO DIMMING MIRROR

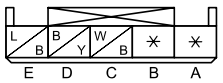

0940-102D
RBCM

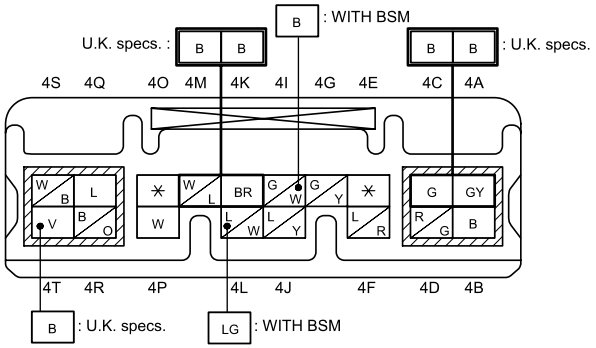

Refer to 00F section for the FUSE BOX, 00C section for the PCM CONNECTOR and COMMON CONNECTOR LIST.

AUTO DIMMING MIRROR

0912-4

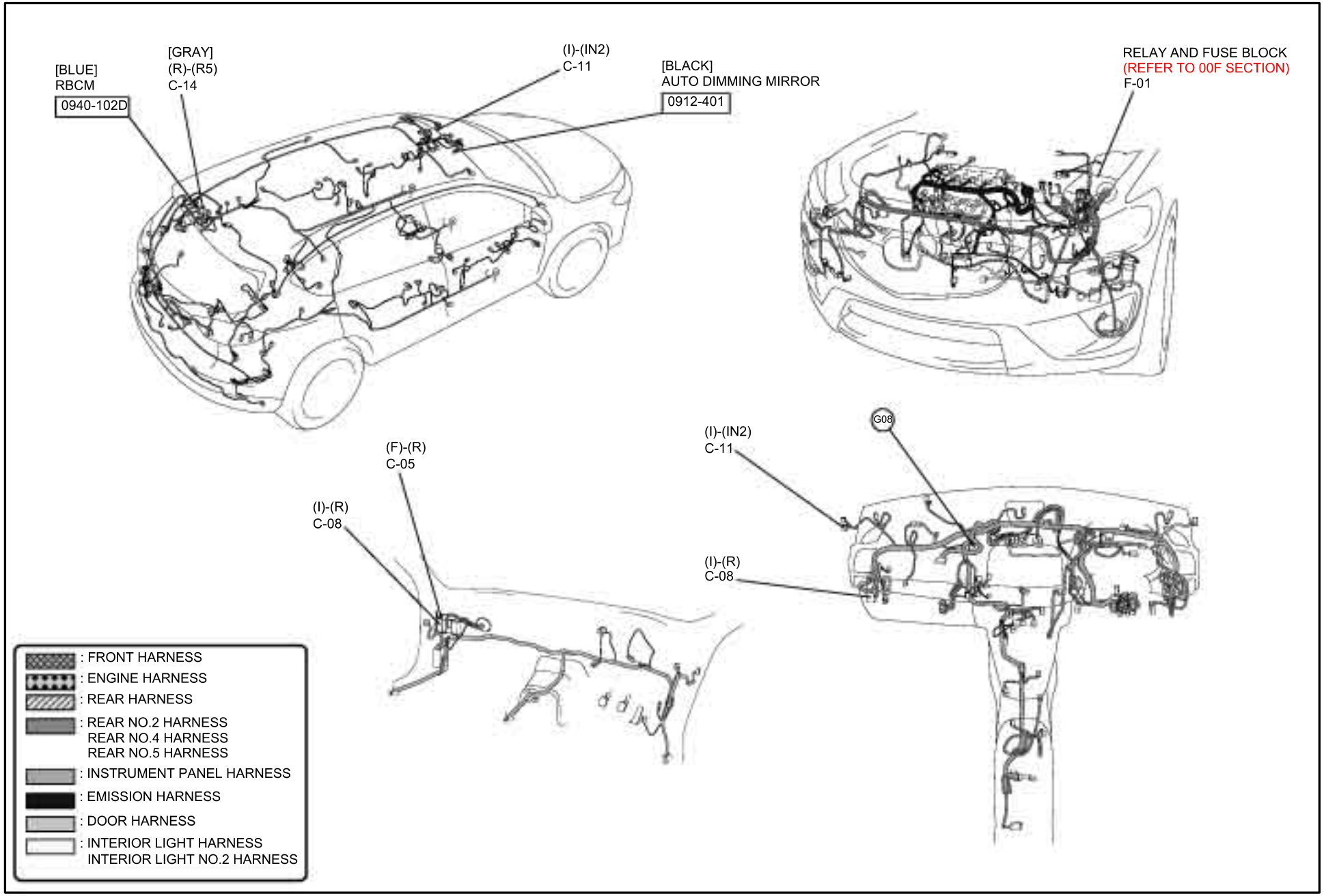

POWER WINDOW SYSTEM (AUTO-OPEN/CLOSE FUNCTION FOR DRIVER-SIDE WINDOW)

0912-5a

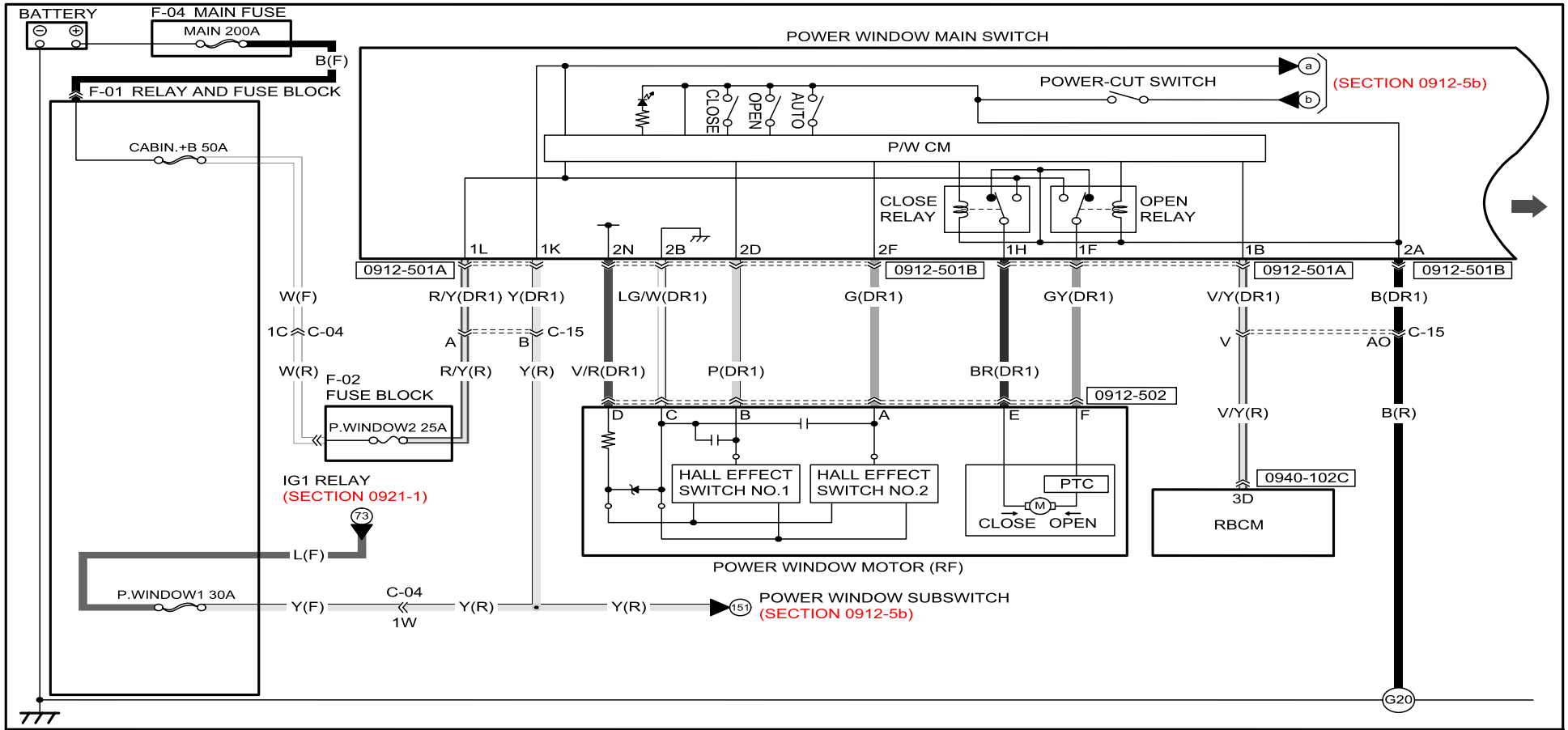

0912-501A
POWER WINDOW MAIN SWITCH

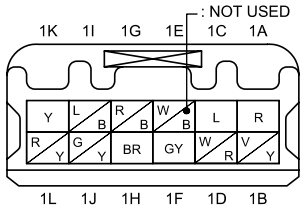

0912-501B
POWER OUTER MIRROR SWITCH /
POWER WINDOW MAIN SWITCH

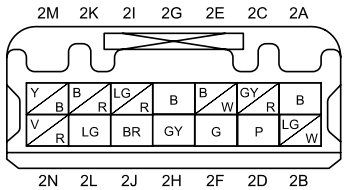

0912-502
POWER WINDOW
MOTOR (RF)

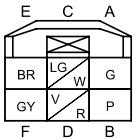

0940-102C
RBCM

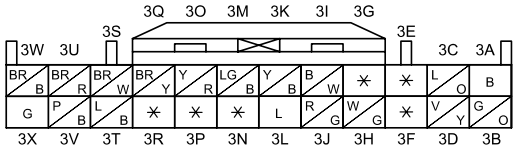

Refer to 00F section for the FUSE BOX, 00C section for the PCM CONNECTOR and COMMON CONNECTOR LIST.

POWER WINDOW SYSTEM (AUTO-OPEN/CLOSE FUNCTION FOR DRIVER-SIDE WINDOW)

0912-5a

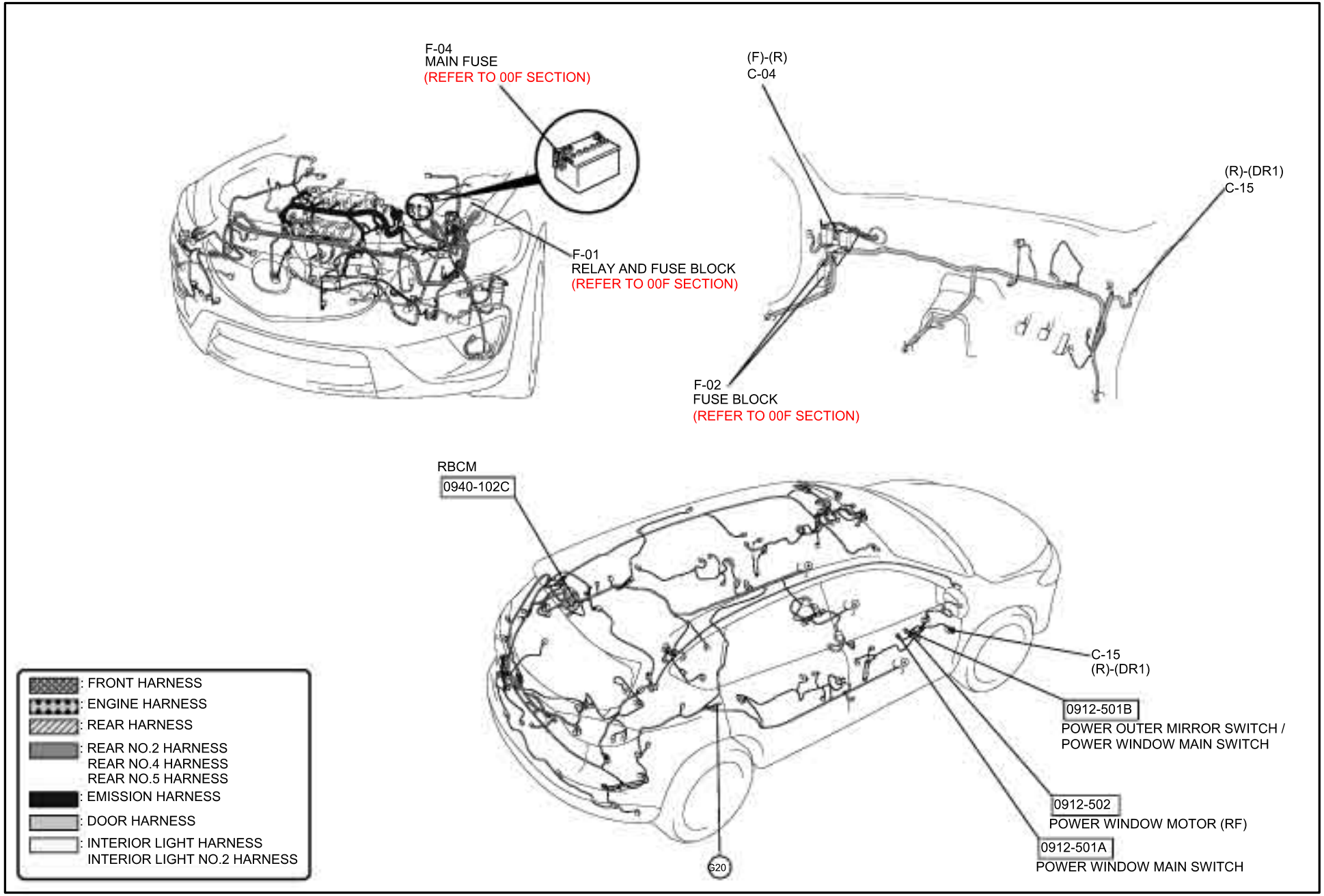

POWER WINDOW SYSTEM (AUTO-OPEN/CLOSE FUNCTION FOR DRIVER-SIDE WINDOW)

0912-5b

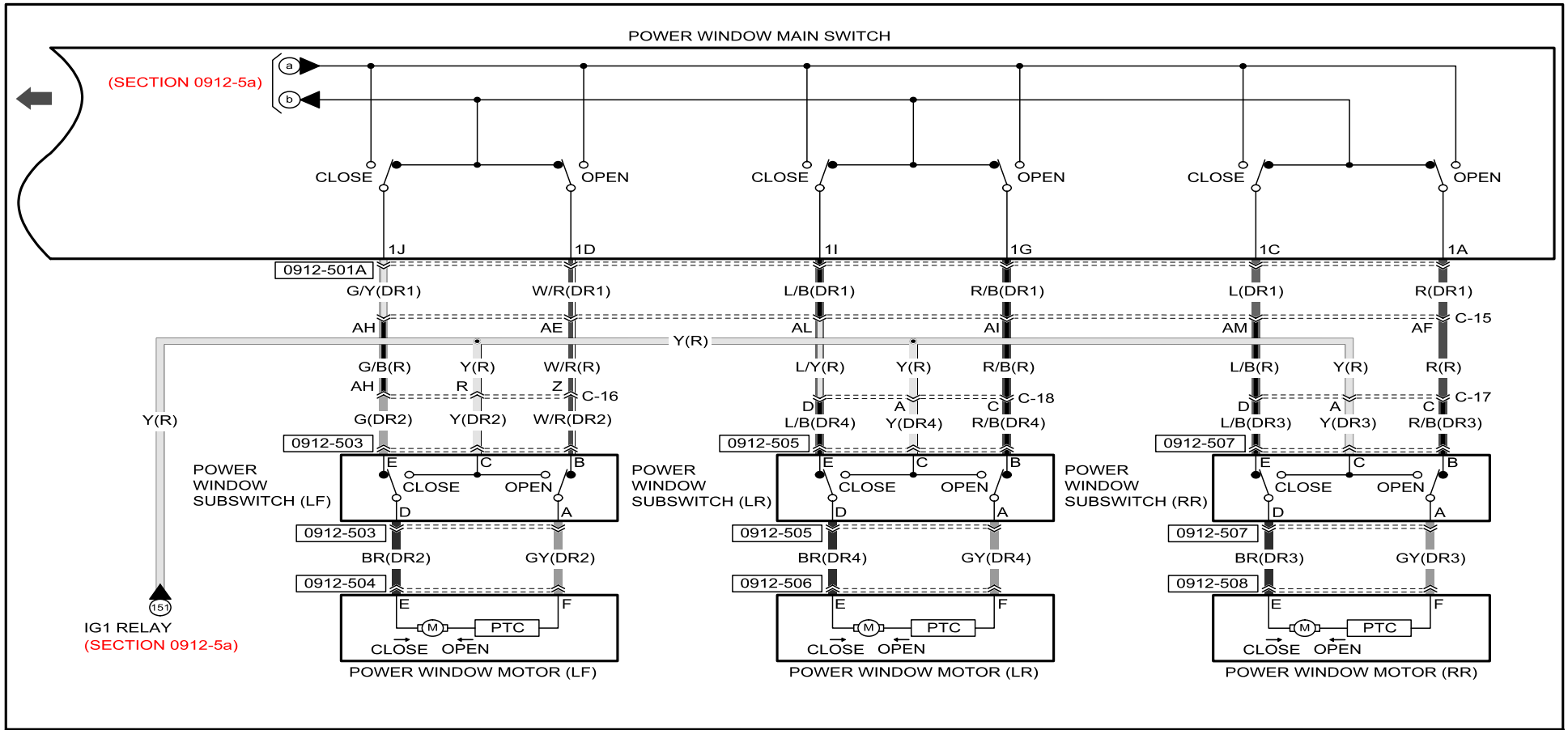

0912-501A
POWER WINDOW MAIN SWITCH

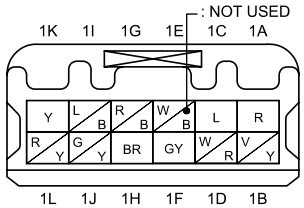

0912-503
POWER WINDOW SUBSWITCH (LF)

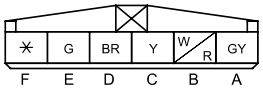

0912-504
POWER WINDOW MOTOR (LF)

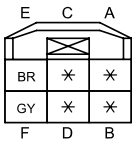

0912-505
POWER WINDOW SUBSWITCH (LR)

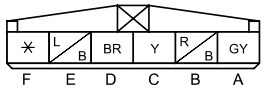

0912-506
POWER WINDOW MOTOR (LR)

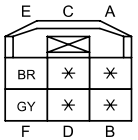

0912-507
POWER WINDOW SUBSWITCH (RR)

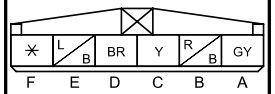

0912-508
POWER WINDOW MOTOR (RR)

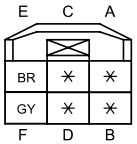

Refer to 00F section for the FUSE BOX, 00C section for the PCM CONNECTOR and COMMON CONNECTOR LIST.

POWER WINDOW SYSTEM (AUTO-OPEN/CLOSE FUNCTION FOR DRIVER-SIDE WINDOW)

0912-5b

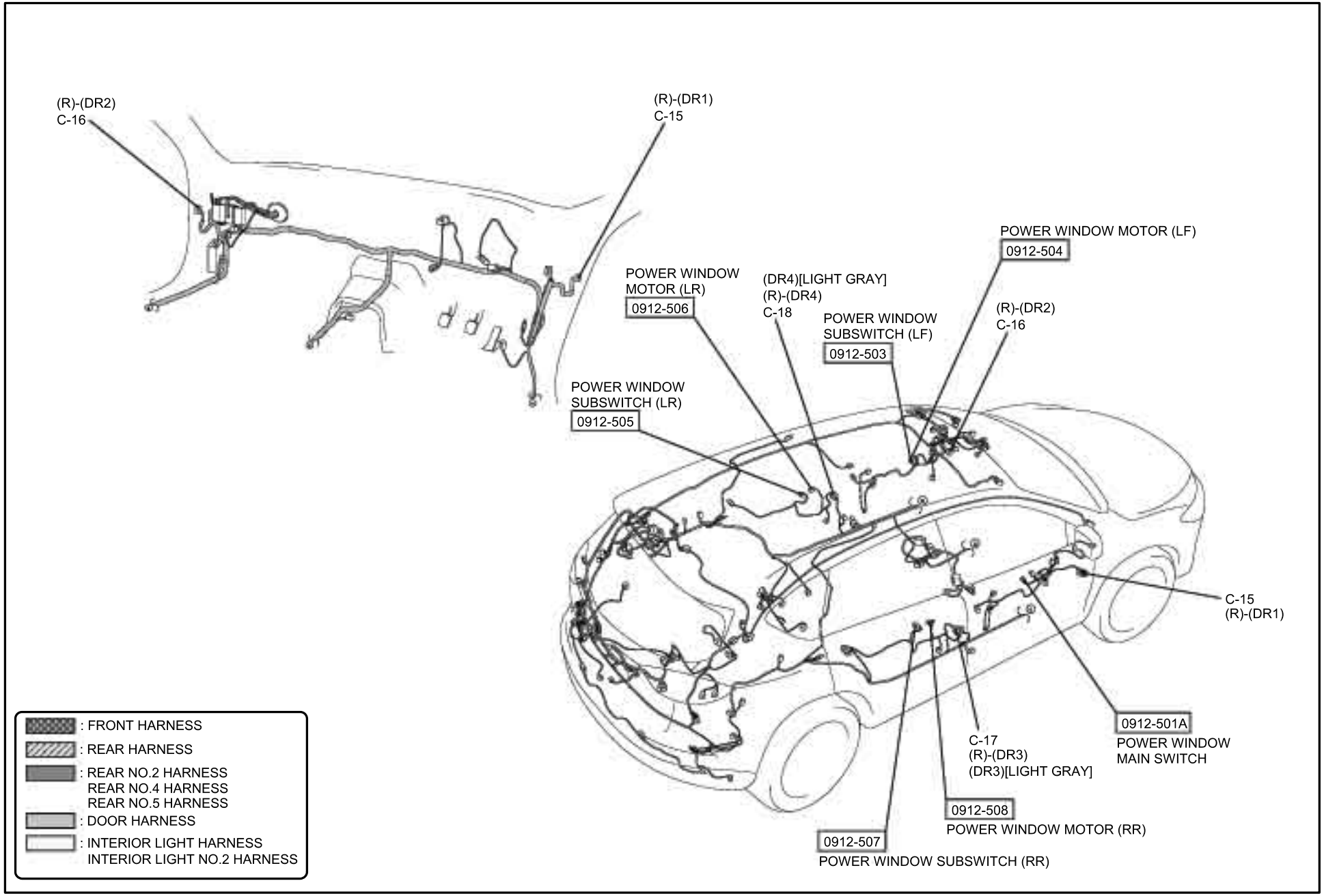

SEAT WARMER

0913-1

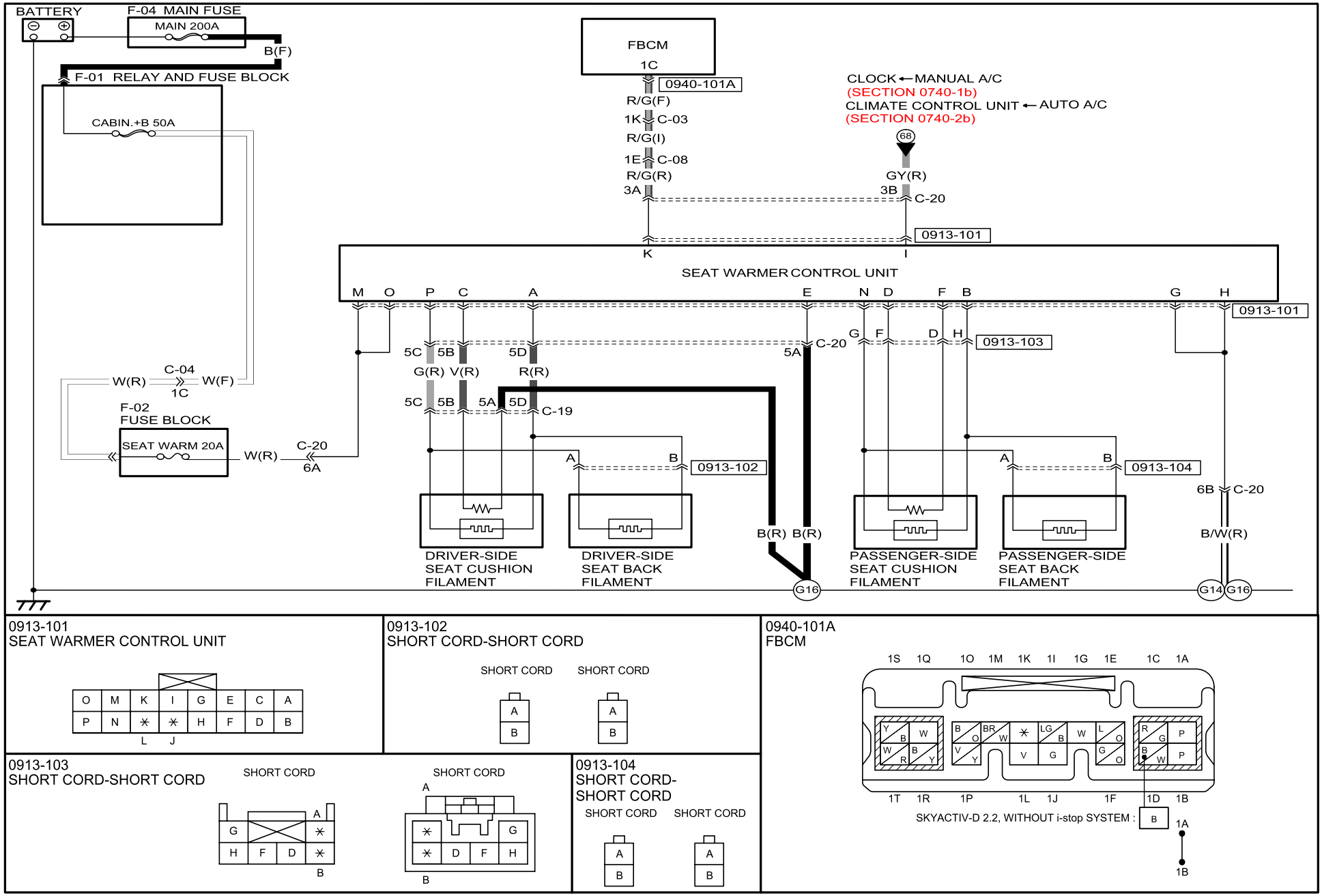

0913-101
SEAT WARMER CONTROL UNIT

0913-102
SHORT CORD-SHORT CORD

0940-101A
FBCM

0913-103
SHORT CORD-SHORT CORD

0913-104
SHORT CORD-
SHORT CORD

Refer to 00F section for the FUSE BOX, 00C section for the PCM CONNECTOR and COMMON CONNECTOR LIST.

SEAT WARMER

0913-1

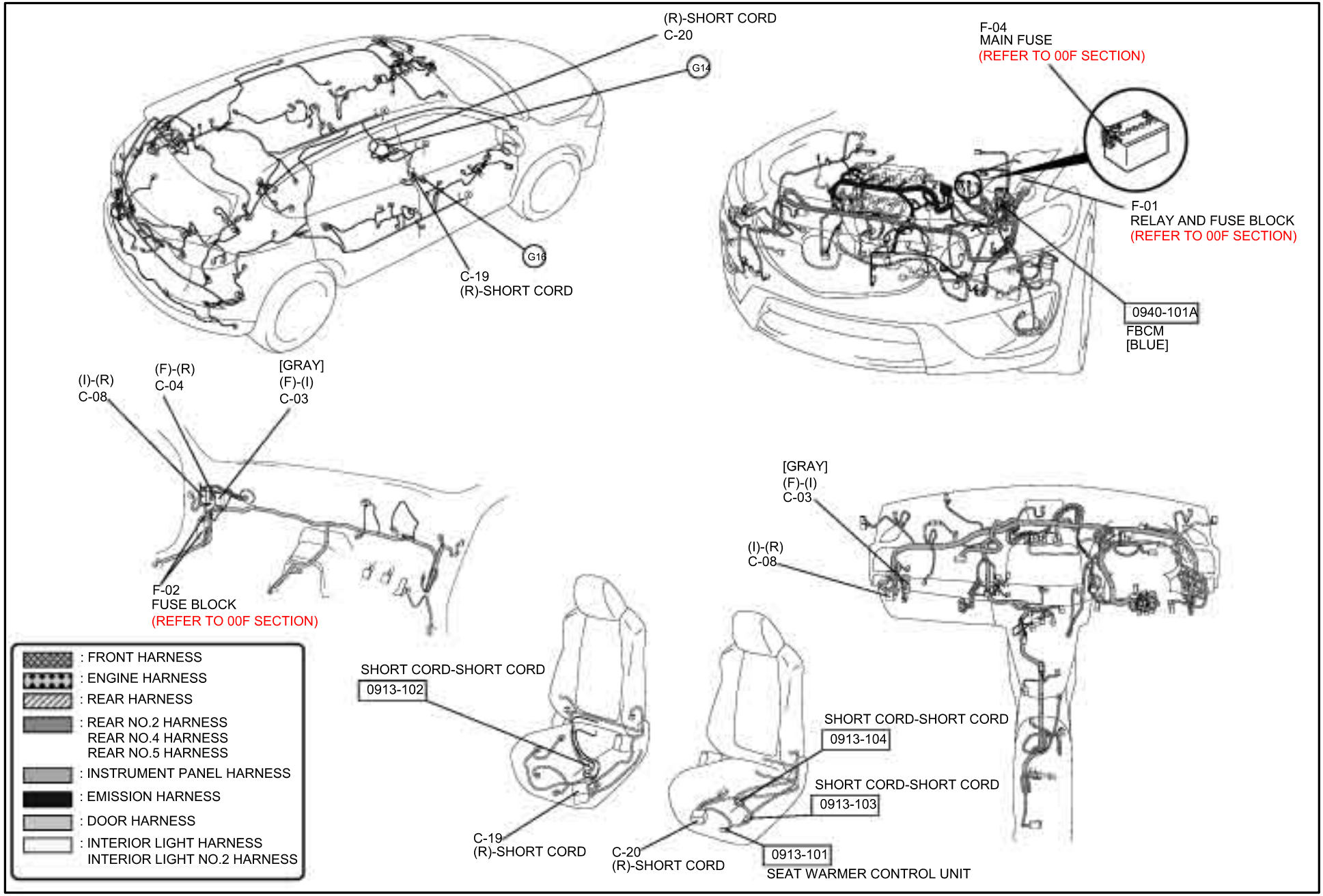

POWER SEAT

0913-2

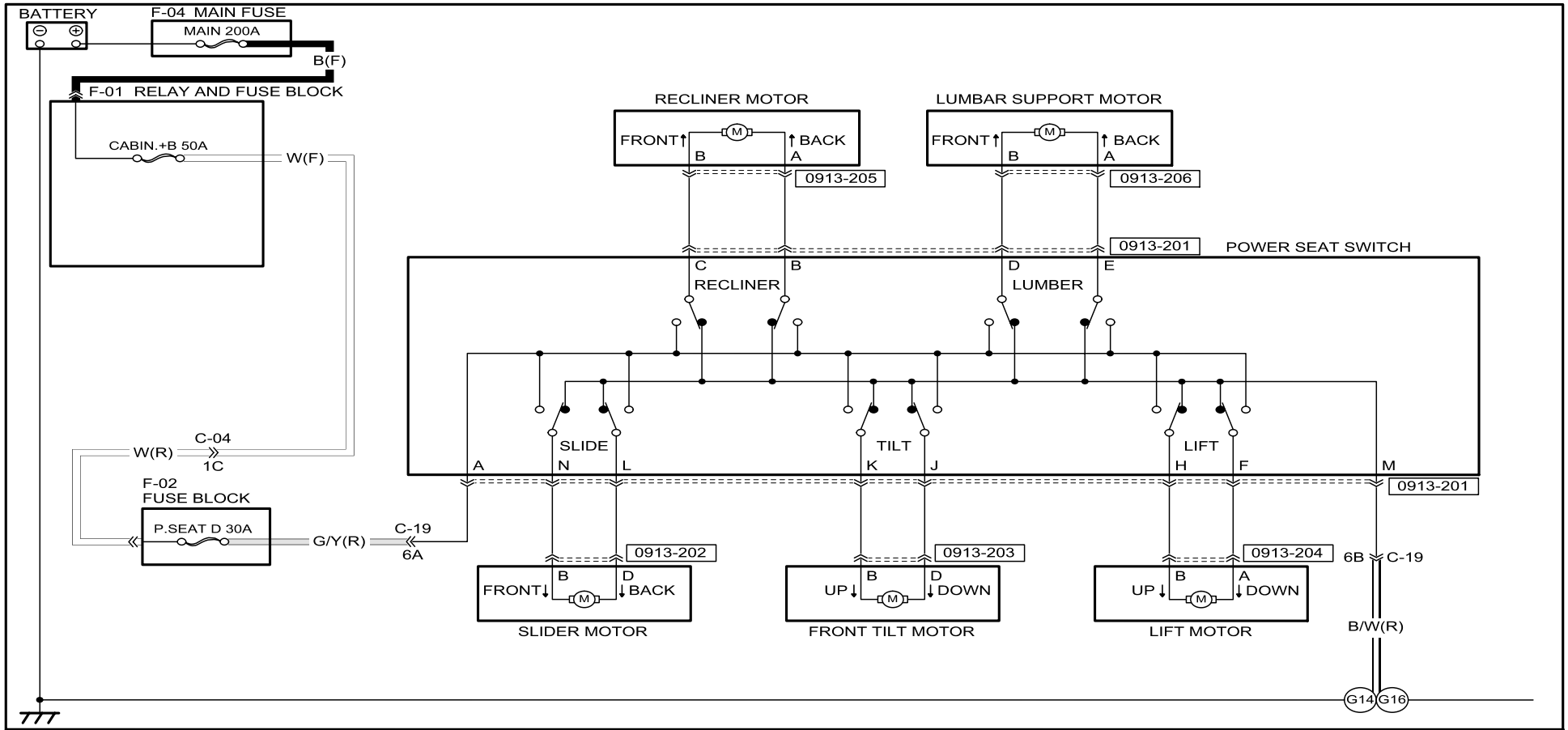

0913-201 POWER SEAT SWITCH	0913-202 SLIDER MOTOR	0913-203 FRONT TILT MOTOR	0913-204 LIFT MOTOR	0913-205 RECLINER MOTOR	0913-206 LUMBAR SUPPORT MOTOR
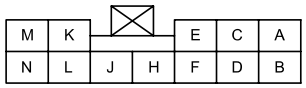	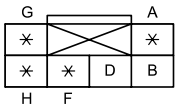	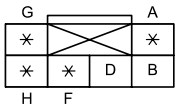	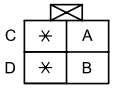	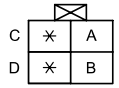	

Refer to 00F section for the FUSE BOX, 00C section for the PCM CONNECTOR and COMMON CONNECTOR LIST.

POWER SEAT

0913-2

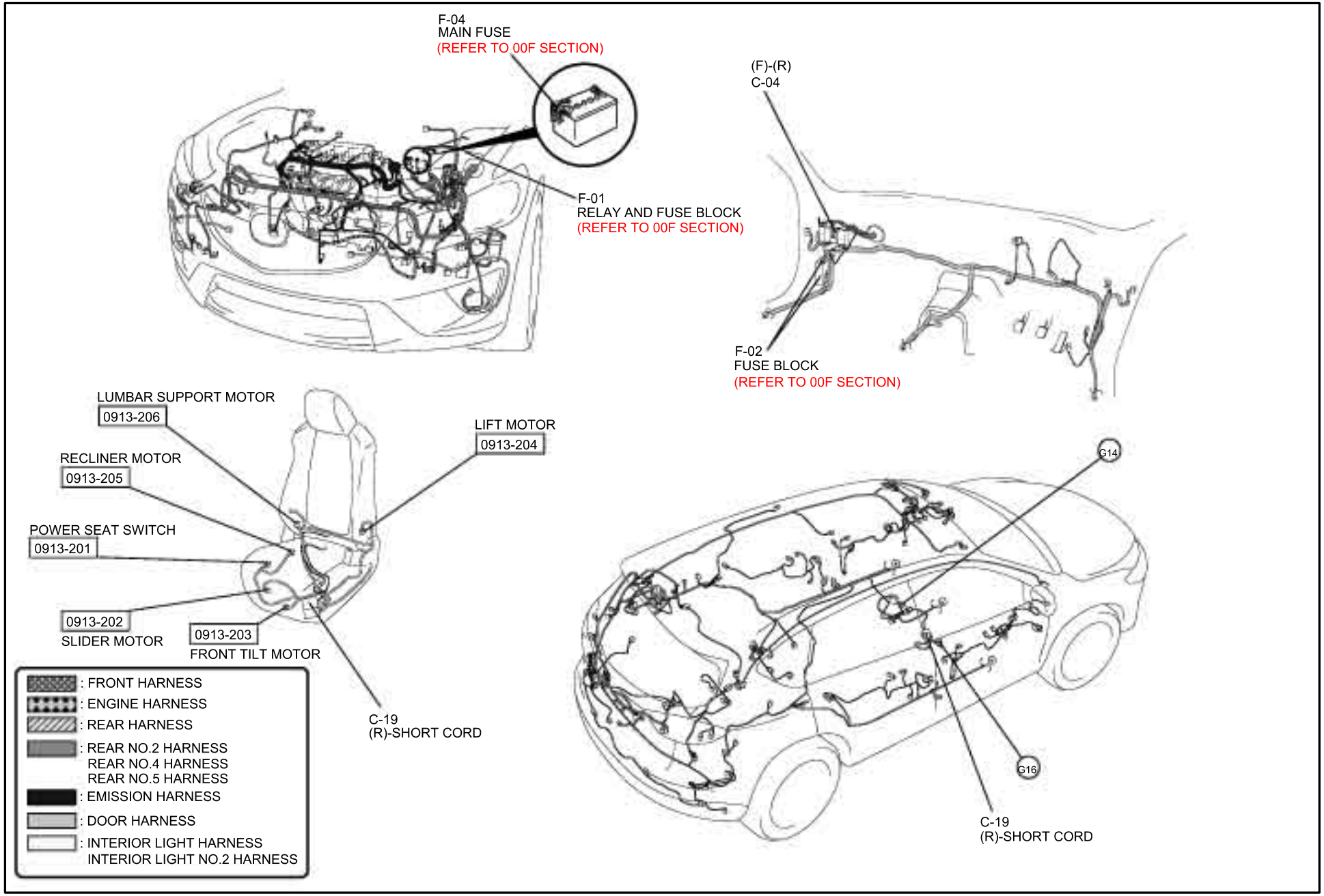

DOOR LOCK SYSTEM (WITH KEYLESS ENTRY SYSTEM)

0914-1a

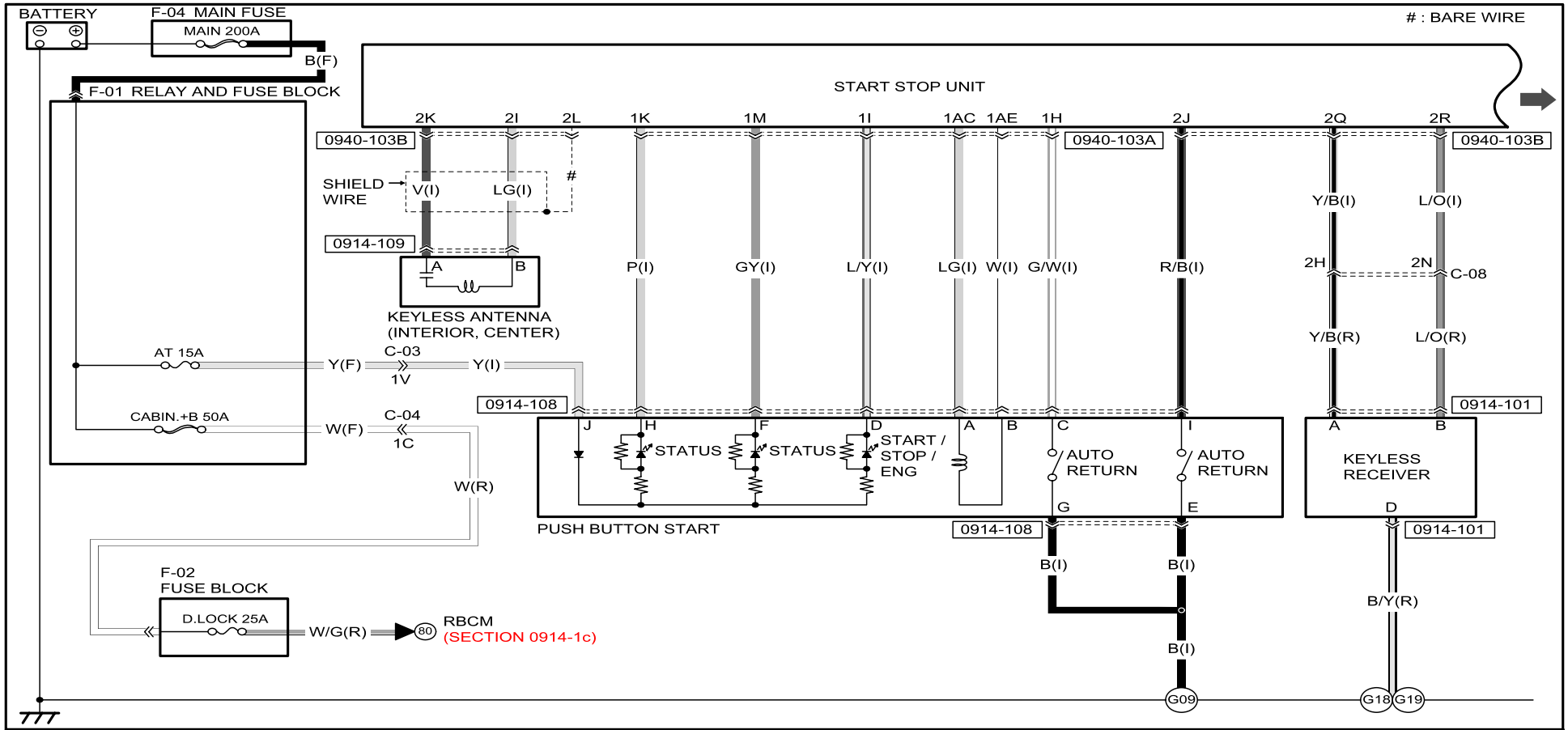

0914-101
KEYLESS RECEIVER

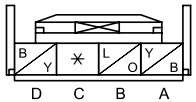

0914-108
PUSH BUTTON START

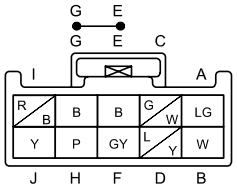

0940-103A
START STOP UNIT

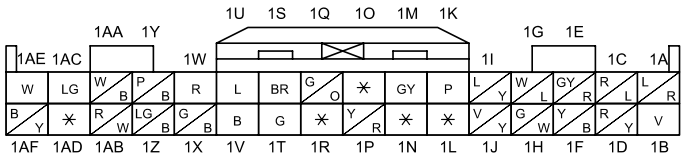

0940-103B
START STOP UNIT

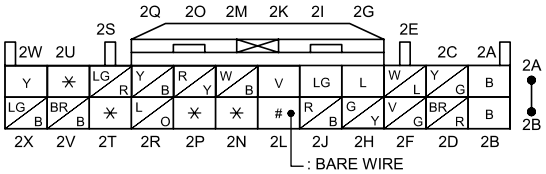

0914-109
KEYLESS ANTENNA
(INTERIOR, CENTER)

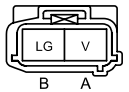

Refer to 00F section for the FUSE BOX, 00C section for the PCM CONNECTOR and COMMON CONNECTOR LIST.

DOOR LOCK SYSTEM (WITH KEYLESS ENTRY SYSTEM)

0914-1a

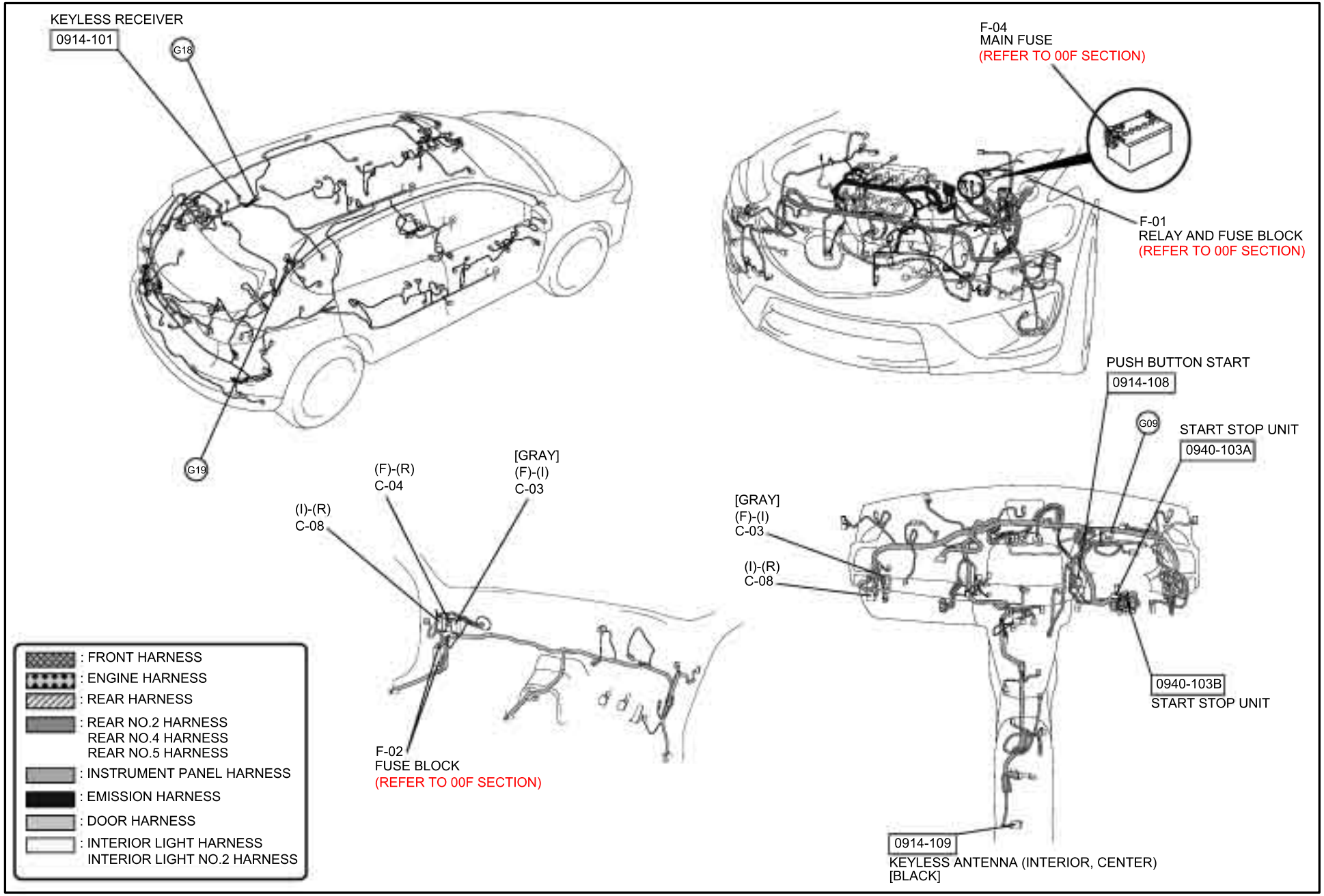

DOOR LOCK SYSTEM (WITH KEYLESS ENTRY SYSTEM)

0914-1b

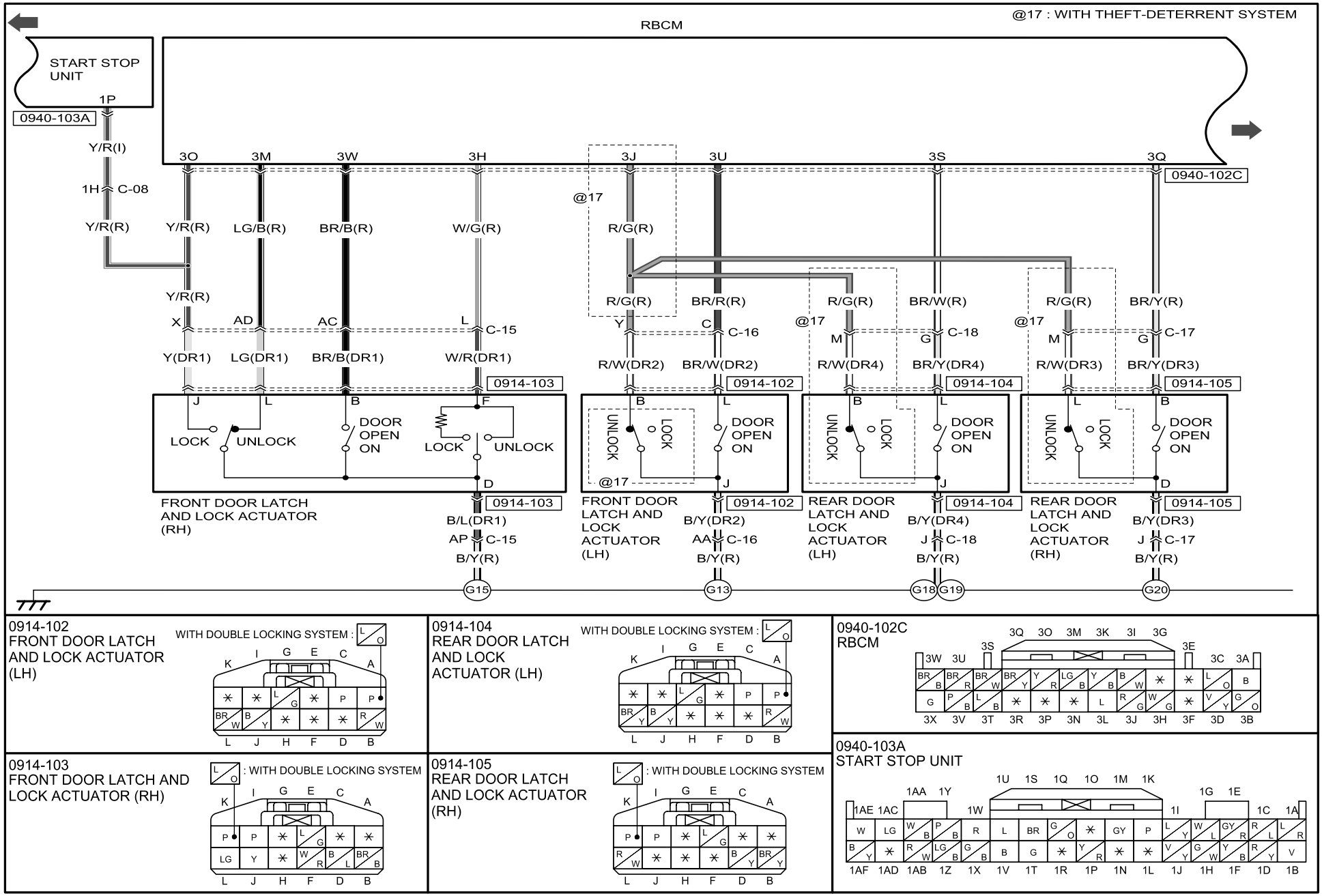

Refer to 00F section for the FUSE BOX, 00C section for the PCM CONNECTOR and COMMON CONNECTOR LIST.

DOOR LOCK SYSTEM (WITH KEYLESS ENTRY SYSTEM)

0914-1b

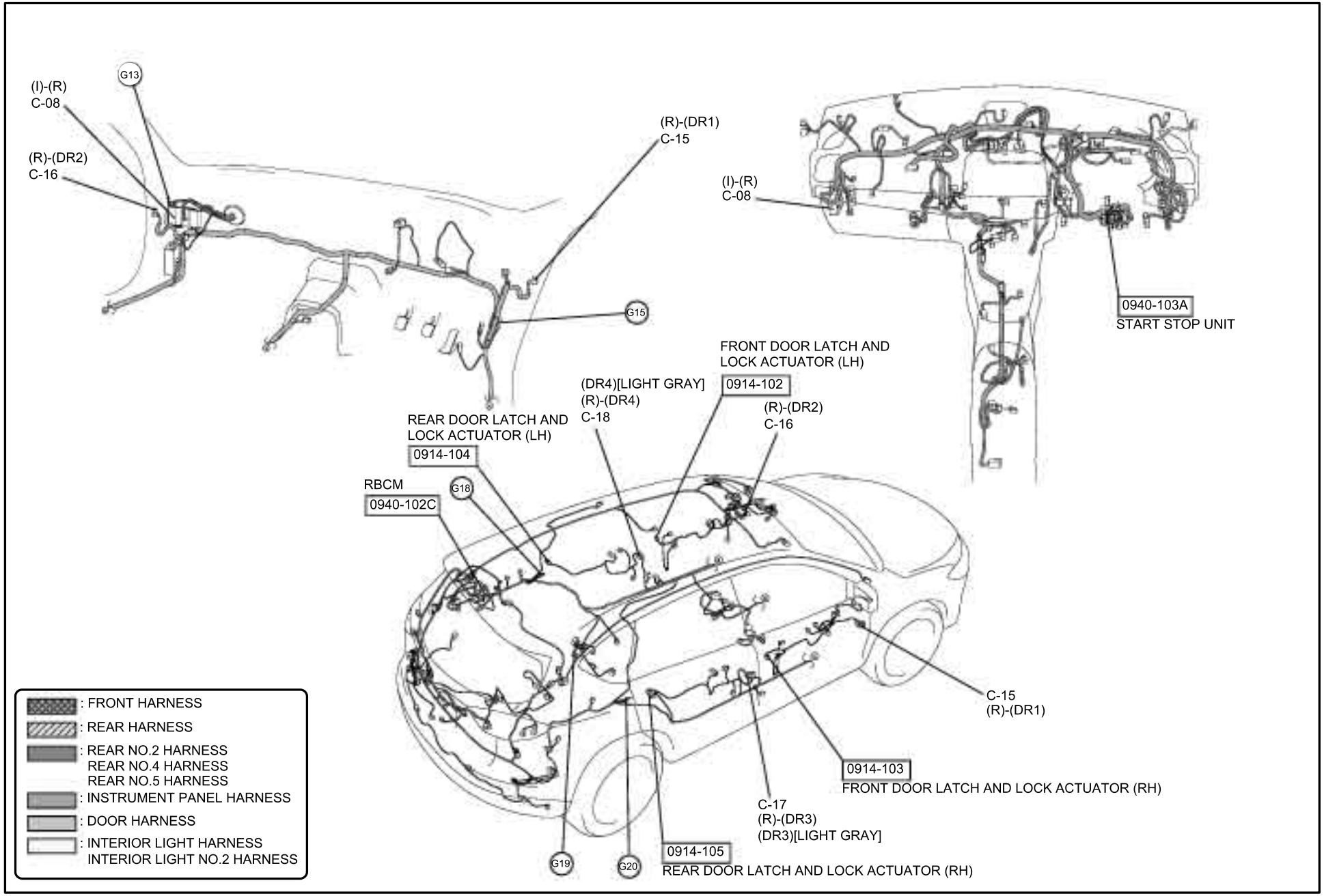

DOOR LOCK SYSTEM (WITH KEYLESS ENTRY SYSTEM)

0914-1c

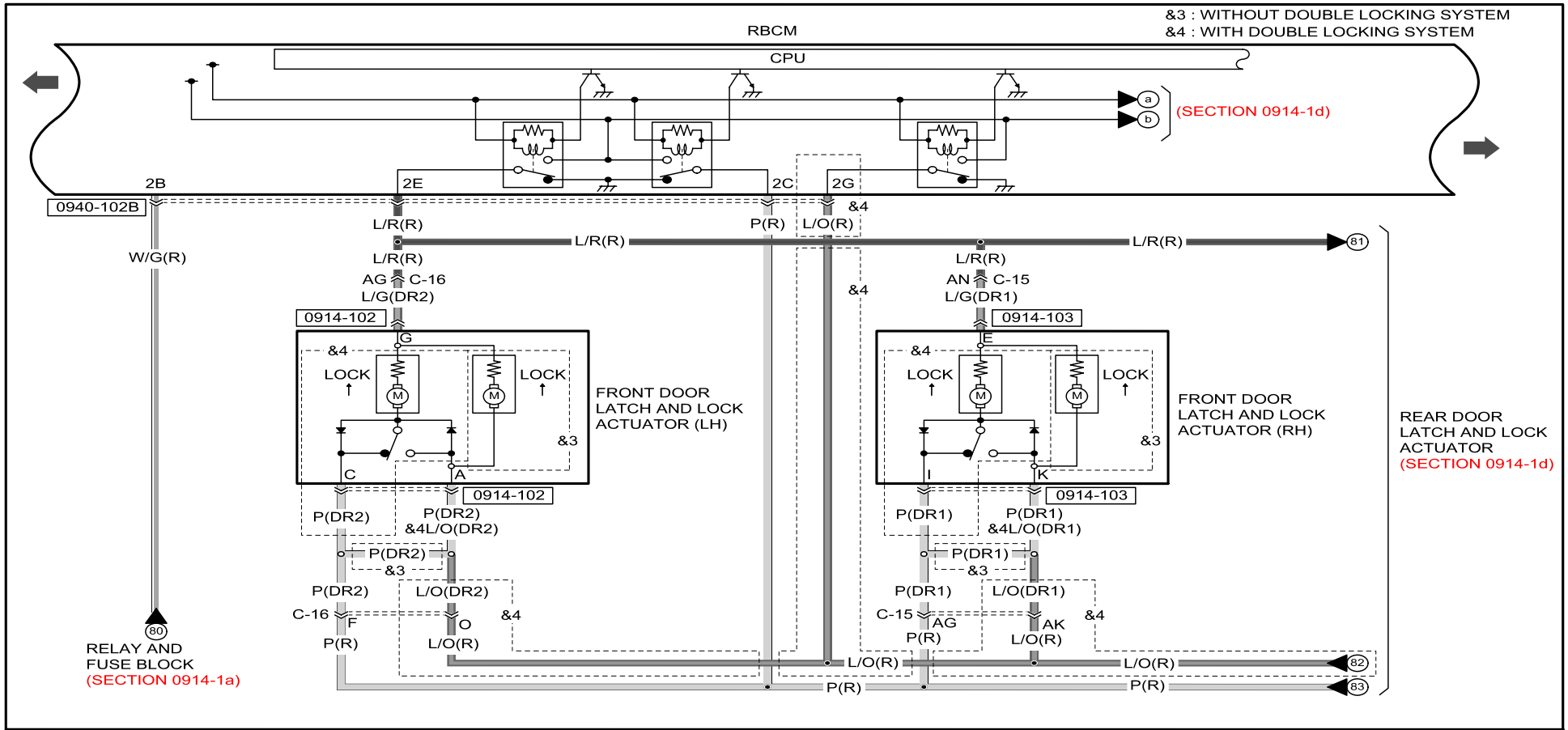

0914-102
FRONT DOOR LATCH AND LOCK ACTUATOR (LH)

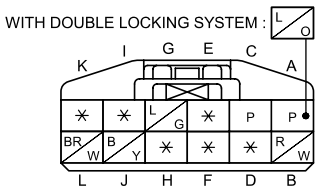

0914-103
FRONT DOOR LATCH AND LOCK ACTUATOR (RH)

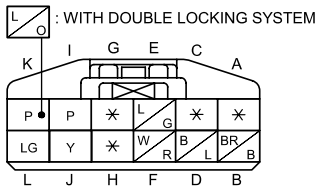

0940-102B
RBCM

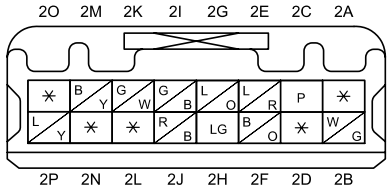

Refer to 00F section for the FUSE BOX, 00C section for the PCM CONNECTOR and COMMON CONNECTOR LIST.

DOOR LOCK SYSTEM (WITH KEYLESS ENTRY SYSTEM)

0914-1c

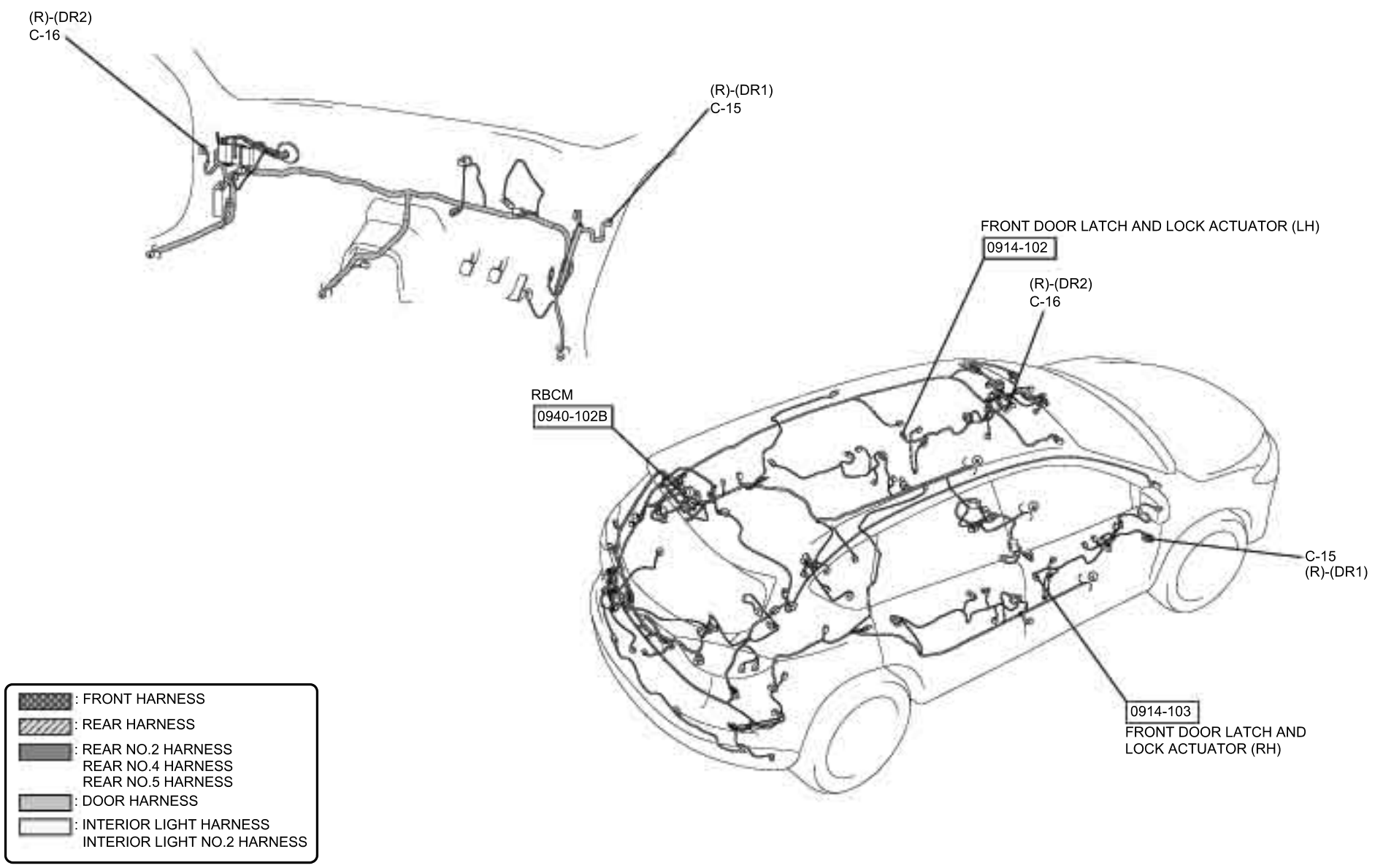

DOOR LOCK SYSTEM (WITH KEYLESS ENTRY SYSTEM)

0914-1d

#13 : U.K. specs.
&3 : WITHOUT DOUBLE LOCKING SYSTEM
&4 : WITH DOUBLE LOCKING SYSTEM

RBCM
CPU
(SECTION 0914-1c)
a
b
4C
4M
0940-102D
81
L/R(R)
L/R(R)
N C-18
L/G(DR4)
0914-104
L/R(R)
N C-17
L/G(DR3)
0914-105
G(R5)
#13B(R5)
B C-22
G(R2)
#13B/Y(R2)
0914-107
W/L(R5)
#13B(R5)
F C-21
W/L(R2)
0914-106
RBCM
(SECTION 0914-1c)
LOCK
LOCK
REAR DOOR LATCH AND LOCK ACTUATOR (LH)
&3
&4
G
A
C
LOCK
LOCK
REAR DOOR LATCH AND LOCK ACTUATOR (RH)
E
K
I
LIFTGATE LOCK ACTUATOR
LIFTGATE OPENER SWITCH
P(DR4)
&4L/O(DR4)
P(DR4)
P(DR3)
&4L/O(DR3)
P(DR3)
B/Y(R2)
B/Y(R2)
P(DR4)
&3
P(DR3)
&3
C-22
L/O(DR4)
P(DR4)
L/O(DR3)
P(DR3)
B/Y(R5)
#13B(R5)
&4
H
I
C-18
&4
H
I
C-17
L/O(R)
P(R)
L/O(R)
P(R)
B(R5)
B/Y(R5)
82
L/O(R)
83
P(R)
G23
G22

0914-104
REAR DOOR LATCH AND LOCK ACTUATOR (LH)

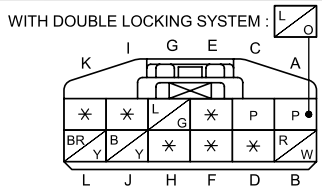

0914-105
REAR DOOR LATCH AND LOCK ACTUATOR (RH)

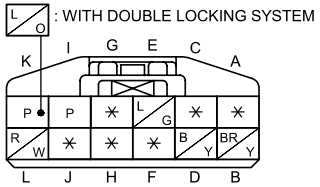

0914-106
LIFTGATE OPENER SWITCH

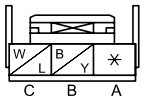

0914-107
LIFTGATE LOCK ACTUATOR / CARGO COMPARTMENT LIGHT SWITCH

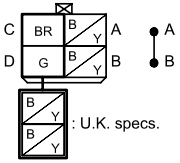

0940-102D
RBCM

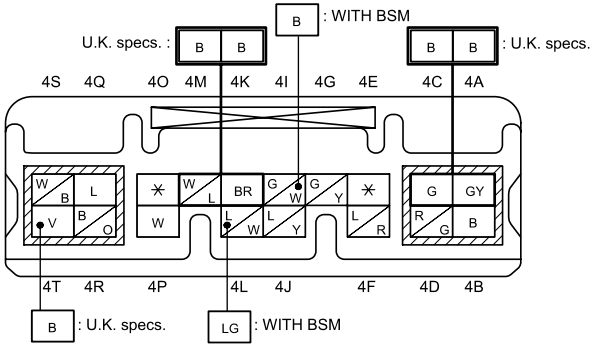

Refer to 00F section for the FUSE BOX, 00C section for the PCM CONNECTOR and COMMON CONNECTOR LIST.

DOOR LOCK SYSTEM (WITH KEYLESS ENTRY SYSTEM)

0914-1d

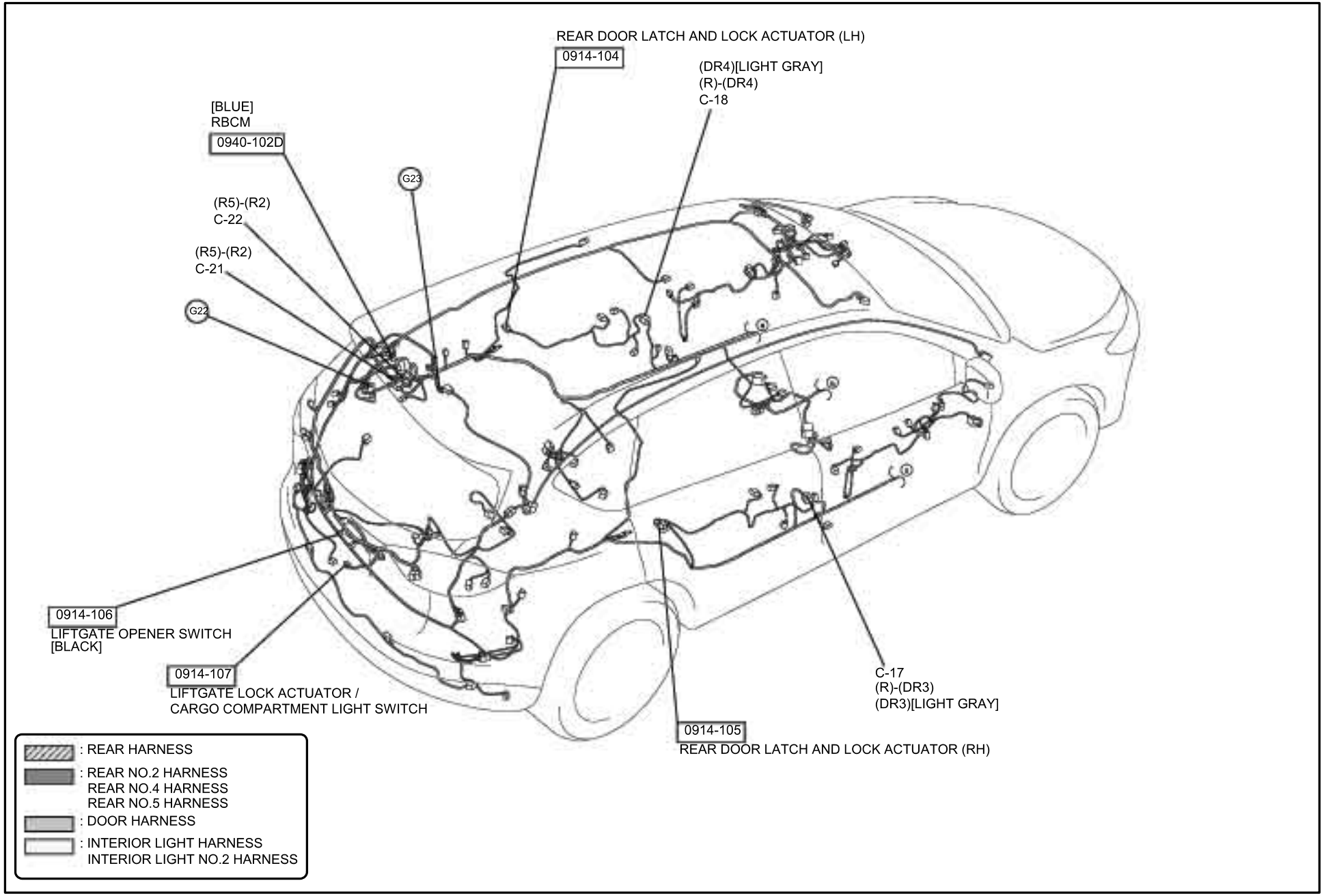

DOOR LOCK SYSTEM (WITH ADVANCED KEYLESS ENTRY SYSTEM)

0914-2a

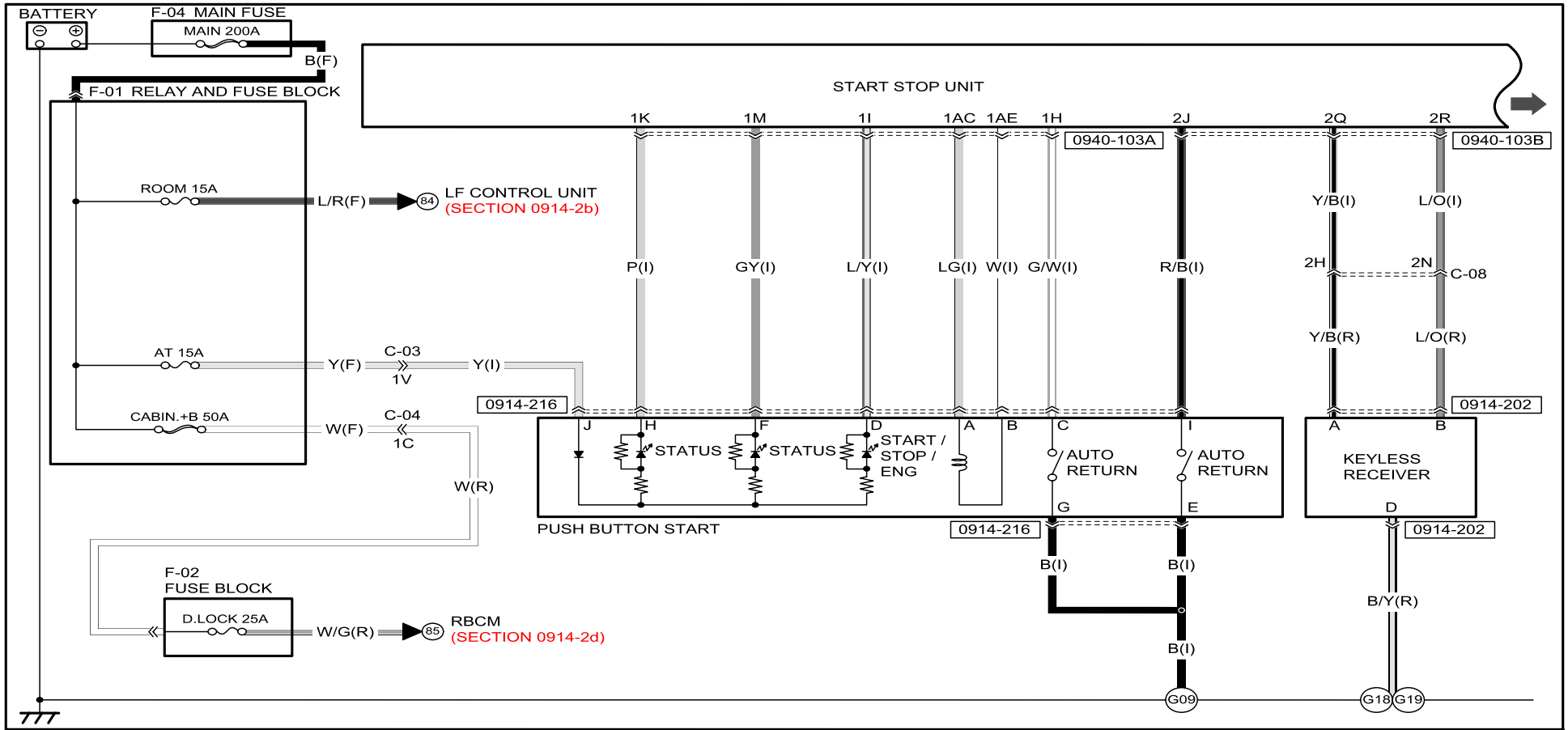

0914-202
KEYLESS RECEIVER

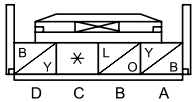

0914-216
PUSH BUTTON START

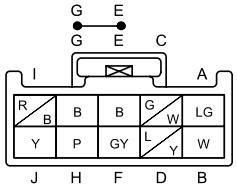

0940-103A
START STOP UNIT

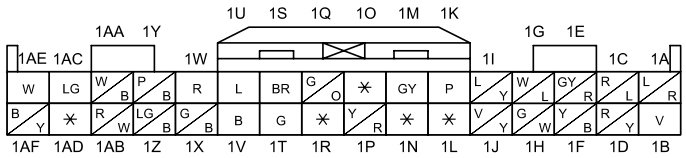

0940-103B
START STOP UNIT

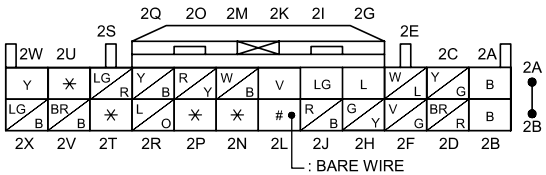

Refer to 00F section for the FUSE BOX, 00C section for the PCM CONNECTOR and COMMON CONNECTOR LIST.

DOOR LOCK SYSTEM (WITH ADVANCED KEYLESS ENTRY SYSTEM)

0914-2a

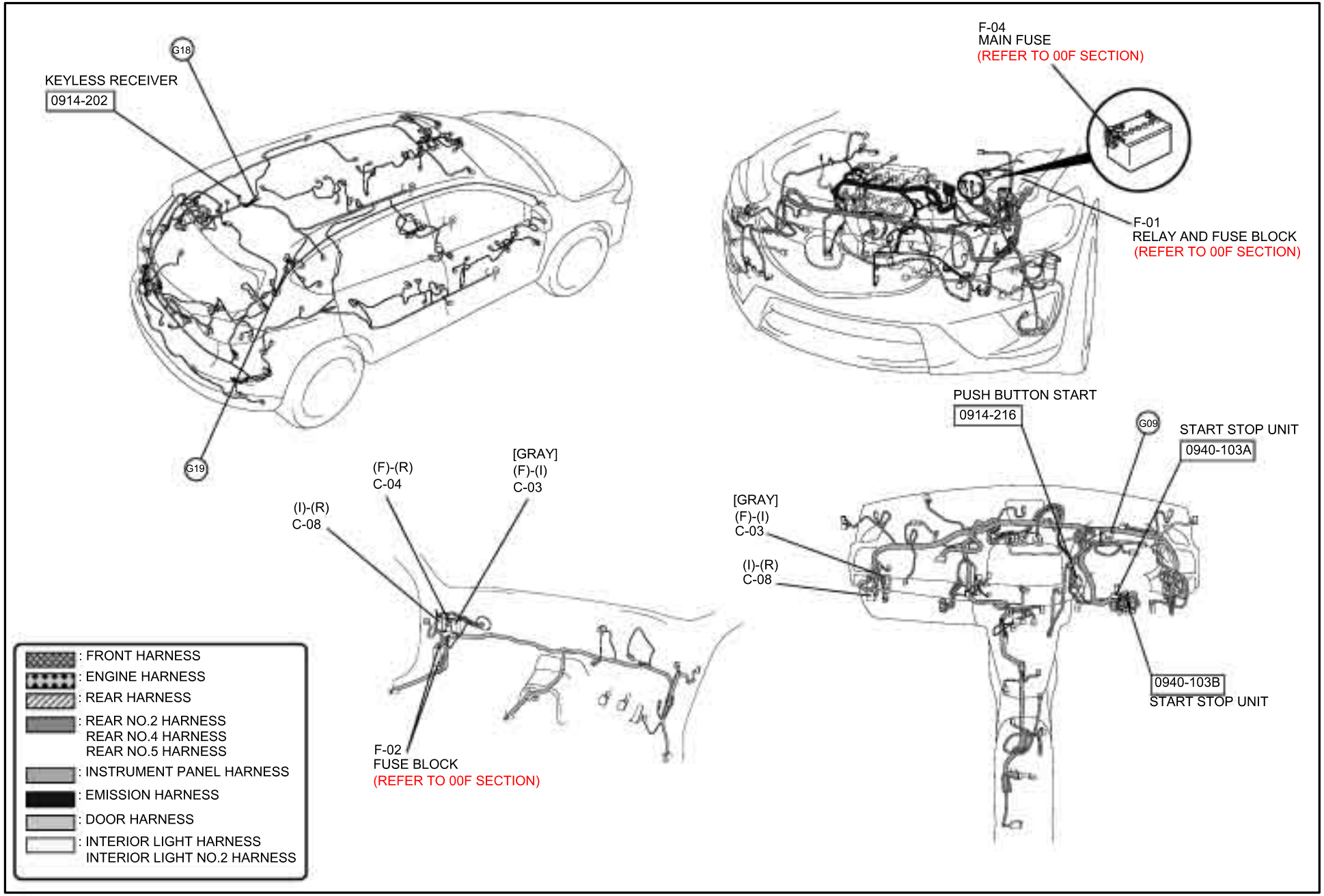

DOOR LOCK SYSTEM (WITH ADVANCED KEYLESS ENTRY SYSTEM)

0914-2b

#13 : U.K. specs.

START STOP UNIT
2F 2H
0940-103B
RELAY AND FUSE BLOCK (SECTION 0914-2a)
84
L/R(F) V/G(I) G/Y(I)
1U C-04 2J 2L
L/Y(R) V/G(R) G/Y(R)
0914-201
A M K

KEYLESS ANTENNA (INTERIOR, FRONT)
A B
0914-203
V(I) LG(I)
2D 2F C-08
V(R) LG(R)
Q O

KEYLESS ANTENNA (INTERIOR, REAR)
A B
0914-204
L(R) P(R)
X Z

KEYLESS BEEPER
A B
0914-208
GY/R(F) Y/R(F)
G E C-05
GY/R(R) Y/R(R)
L N

LF CONTROL UNIT
S U G W Y E AB AA I P
0914-201

W/B(R) BR/W(R) V/W(R)
D M G AA C-16
W/B(DR2) BR/R(DR2) V/W(DR2) B/Y(DR2)
C-31
C D B A
W/B BR/W V/W B/Y B/Y(R)
0914-206
B E D A
KEYLESS ANTENNA (EXTERIOR, LF)
REQUEST SWITCH
FRONT OUTER HANDLE (LH)

W(R) BR(R) V/R(R)
N M Q AP C-15
W(DR1) BR/R(DR1) V/R(DR1) B/L(DR1)
C-30
C D B A
W/B BR/W V/W B/Y B/Y(R)
0914-207
B E D A
KEYLESS ANTENNA (EXTERIOR, RF)
REQUEST SWITCH
FRONT OUTER HANDLE (RH)

G(R) GY(R)
1V 1U
G(R5) GY(R5)
O M C-23
G(R4) GY(R4)
0914-205
A B
KEYLESS ANTENNA (EXTERIOR, REAR)

R/L(R)
3I C-14
R/L(R5)
#13B(R5)
P C-21
R/L(R2)
0914-209
A
AUTO RETURN
B
REQUEST SWITCH (LIFTGATE)
0914-209
B/Y(R2)
C C-22
B/Y(R5)
#13B(R5) B/Y(R5)

B(R)

G13 G15 G22 G13

0914-201
LF CONTROL UNIT

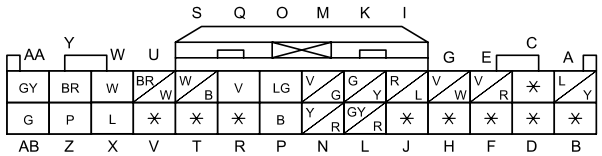

0914-206
FRONT OUTER HANDLE (LH)

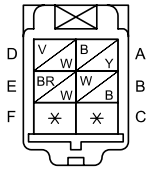

0914-207
FRONT OUTER HANDLE (RH)

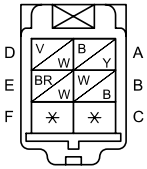

0940-103B
START STOP UNIT

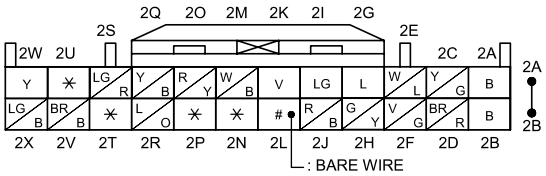

0914-203
KEYLESS ANTENNA (INTERIOR, FRONT)

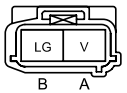

0914-204
KEYLESS ANTENNA (INTERIOR, REAR)

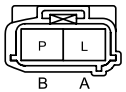

0914-205
KEYLESS ANTENNA (EXTERIOR, REAR)

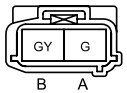

0914-208
KEYLESS BEEPER

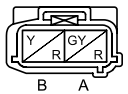

0914-209
REQUEST SWITCH (LIFTGATE)

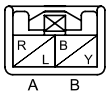

Refer to 00F section for the FUSE BOX, 00C section for the PCM CONNECTOR and COMMON CONNECTOR LIST.

DOOR LOCK SYSTEM (WITH ADVANCED KEYLESS ENTRY SYSTEM)

0914-2b

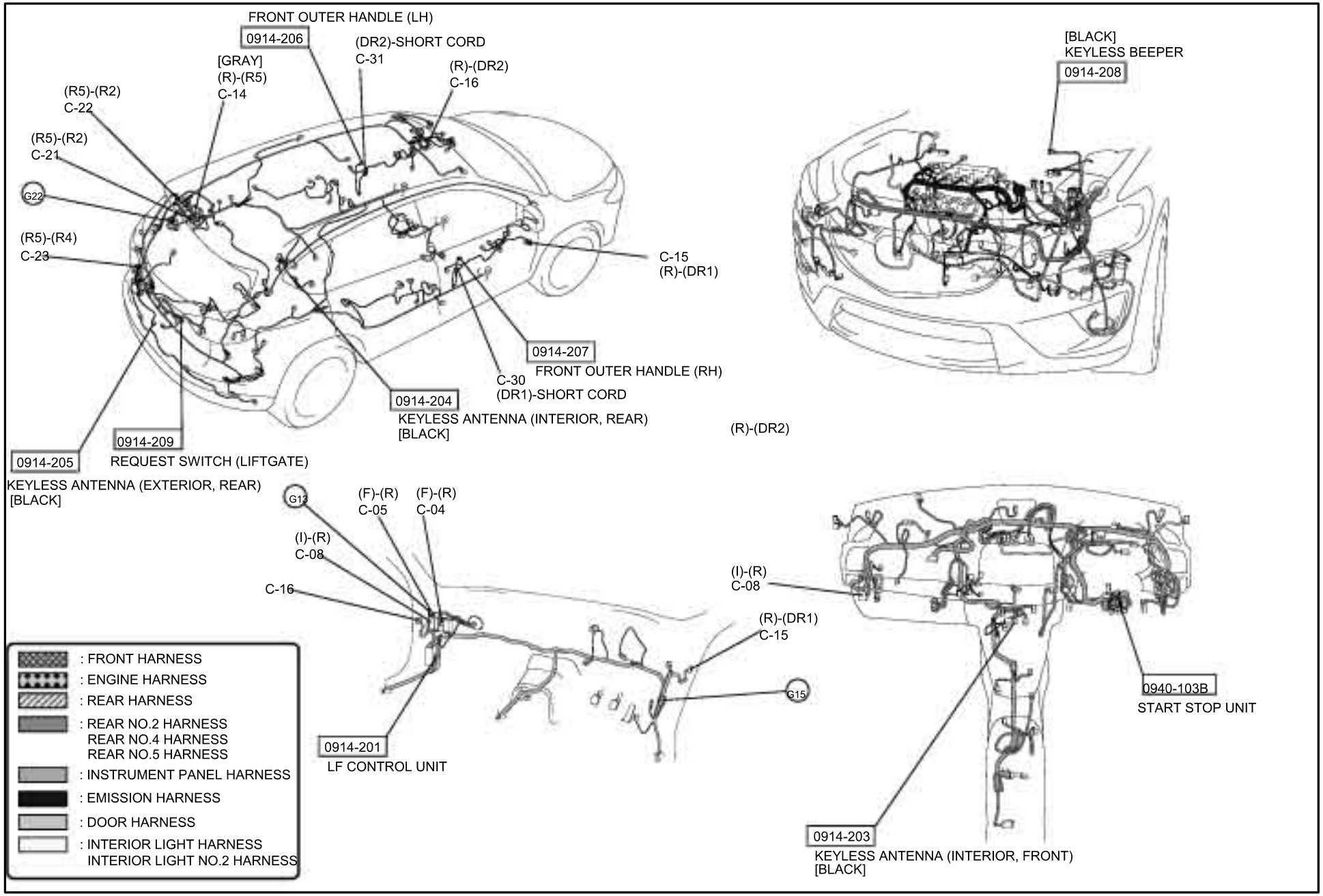

DOOR LOCK SYSTEM (WITH ADVANCED KEYLESS ENTRY SYSTEM)

0914-2c

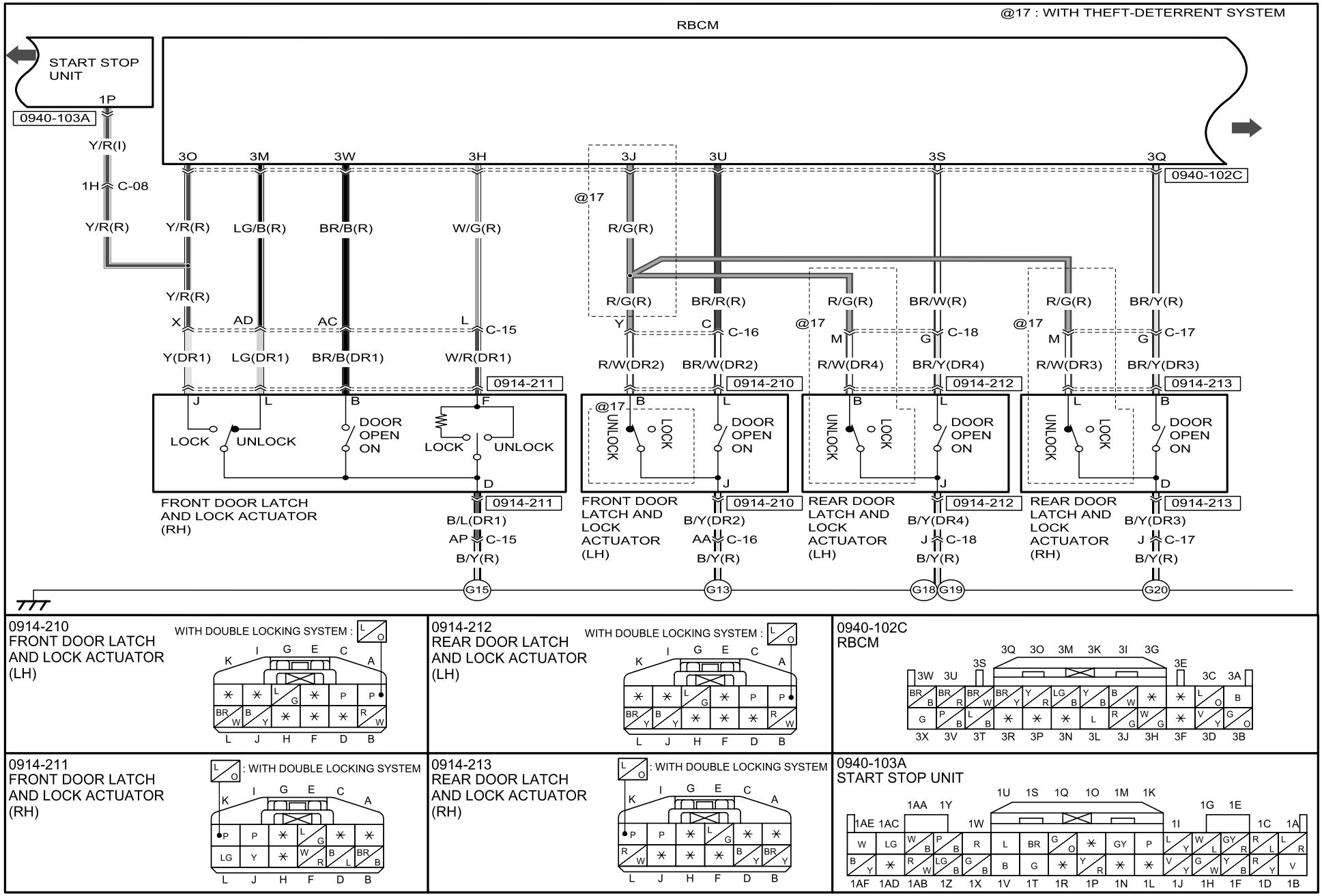

0914-210
FRONT DOOR LATCH AND LOCK ACTUATOR (LH)

0914-212
REAR DOOR LATCH AND LOCK ACTUATOR (LH)

0940-102C
RBCM

0914-211
FRONT DOOR LATCH AND LOCK ACTUATOR (RH)

0914-213
REAR DOOR LATCH AND LOCK ACTUATOR (RH)

0940-103A
START STOP UNIT

Refer to 00F section for the FUSE BOX, 00C section for the PCM CONNECTOR and COMMON CONNECTOR LIST.

DOOR LOCK SYSTEM (WITH ADVANCED KEYLESS ENTRY SYSTEM)

0914-2c

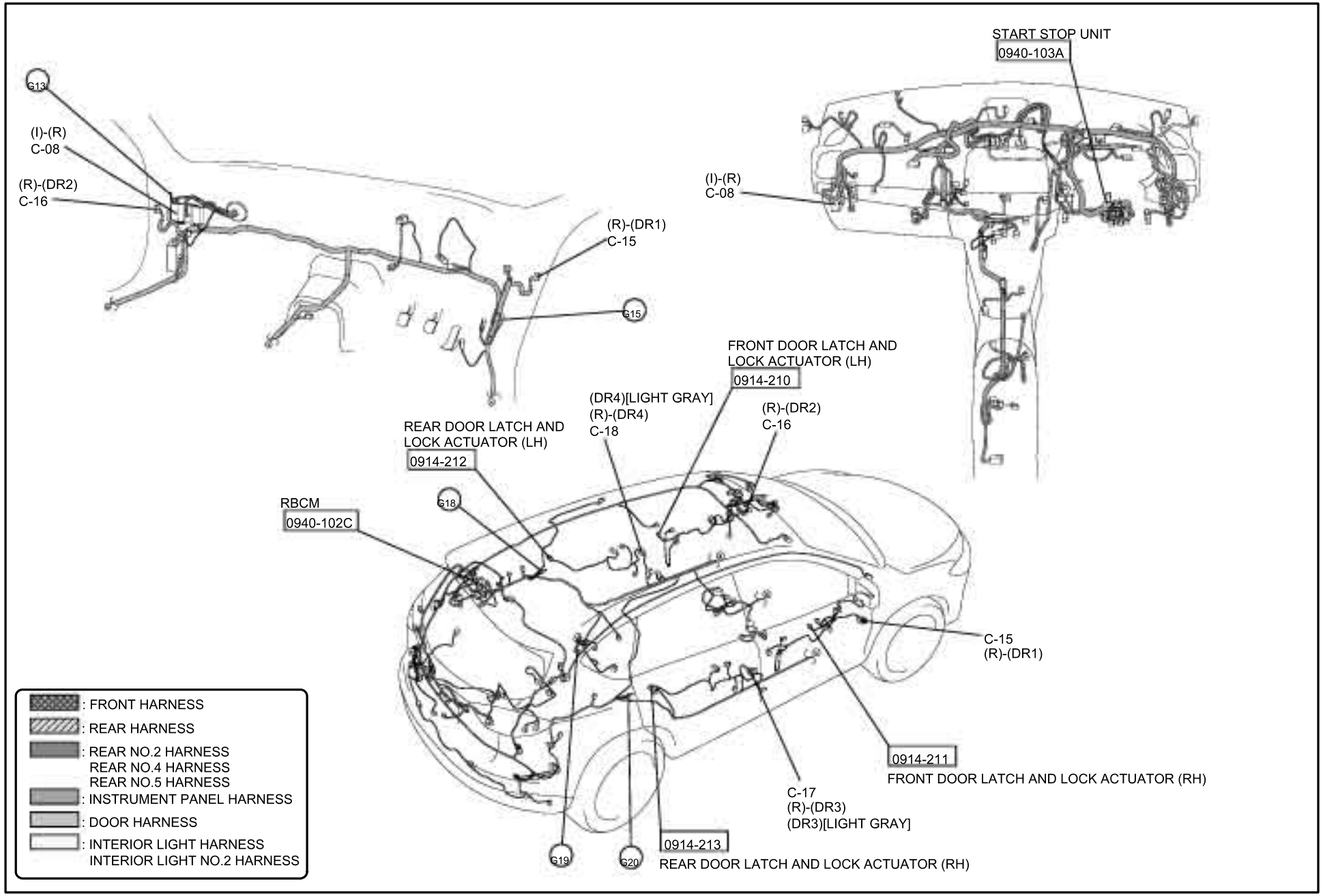

DOOR LOCK SYSTEM (WITH ADVANCED KEYLESS ENTRY SYSTEM)

0914-2d

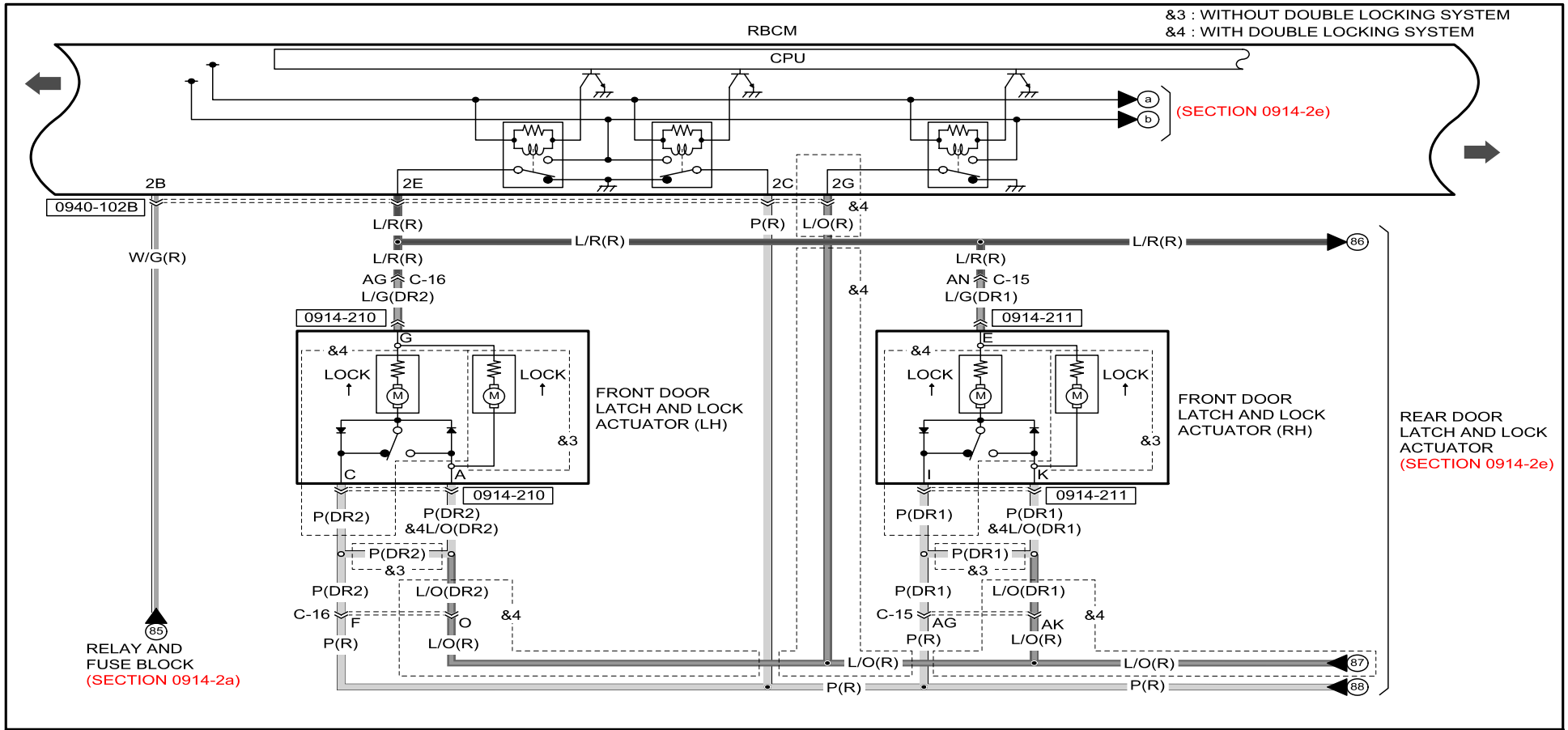

0914-210
FRONT DOOR LATCH AND LOCK ACTUATOR (LH)

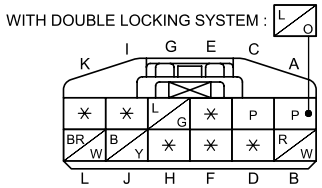

0914-211
FRONT DOOR LATCH AND LOCK ACTUATOR (RH)

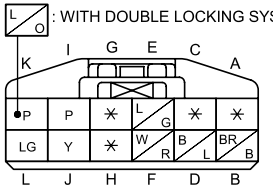

0940-102B
RBCM

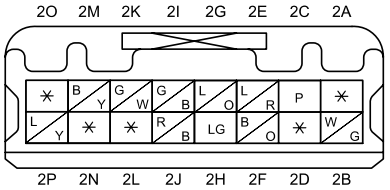

Refer to 00F section for the FUSE BOX, 00C section for the PCM CONNECTOR and COMMON CONNECTOR LIST.

DOOR LOCK SYSTEM (WITH ADVANCED KEYLESS ENTRY SYSTEM)

0914-2d

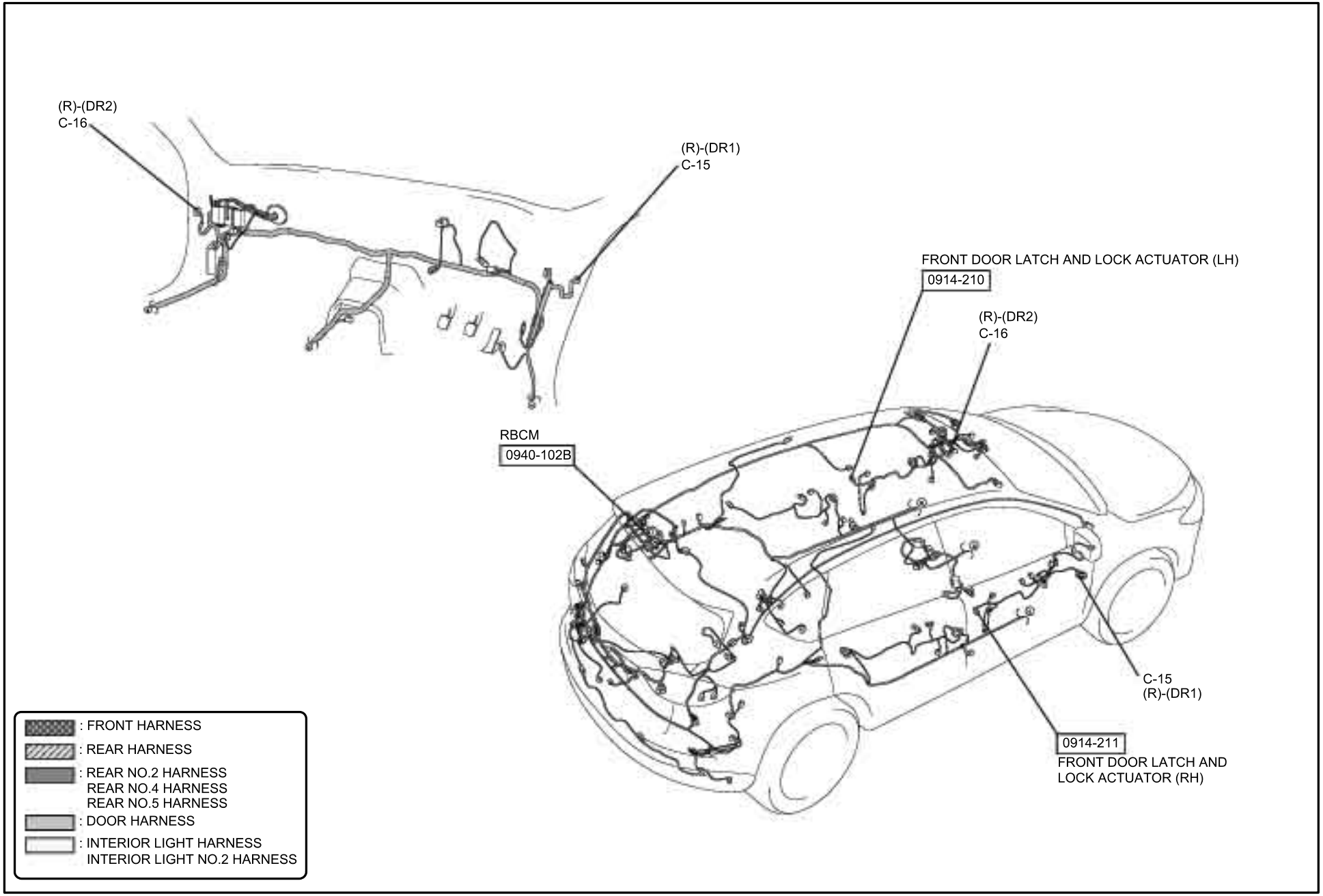

DOOR LOCK SYSTEM (WITH ADVANCED KEYLESS ENTRY SYSTEM)

0914-2e

#13 : U.K. specs.
&3 : WITHOUT DOUBLE LOCKING SYSTEM
&4 : WITH DOUBLE LOCKING SYSTEM

RBCM
CPU
(SECTION 0914-2d)
a
b
4C
4M
0940-102D
86
L/R(R)
L/R(R)
N C-18
L/G(DR4)
0914-212
G
&4
LOCK
LOCK
M
&3
A
C
REAR DOOR LATCH AND LOCK ACTUATOR (LH)
0914-212
P(DR4)
&4L/O(DR4)
P(DR4)
P(DR4)
&3
L/O(DR4)
P(DR4)
&4
H
I
C-18
L/O(R)
P(R)
L/R(R)
N C-17
L/G(DR3)
0914-213
E
&4
LOCK
LOCK
M
&3
K
I
REAR DOOR LATCH AND LOCK ACTUATOR (RH)
0914-213
P(DR3)
&4L/O(DR3)
P(DR3)
P(DR3)
&3
L/O(DR3)
P(DR3)
&4
H
I
C-17
L/O(R)
P(R)
RBCM
(SECTION 0914-2d)
87
L/O(R)
88
P(R)
G(R5)
#13B(R5)
B C-22
G(R2)
#13B/Y(R2)
0914-215
D
M
B
LIFTGATE LOCK ACTUATOR
0914-215
B/Y(R2)
D
B(R5)
G23
W/L(R5)
#13B(R5)
F C-21
W/L(R2)
0914-214
C
B
LIFTGATE OPENER SWITCH
0914-214
B/Y(R2)
C-22
B/Y(R5)
#13B(R5)
B/Y(R5)
G22

0914-212
REAR DOOR LATCH AND LOCK ACTUATOR (LH)

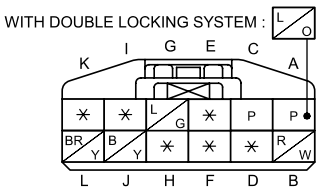

0914-213
REAR DOOR LATCH AND LOCK ACTUATOR (RH)

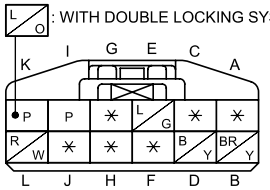

0914-214
LIFTGATE OPENER SWITCH

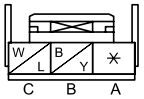

0914-215
LIFTGATE LOCK ACTUATOR / CARGO COMPARTMENT LIGHT SWITCH

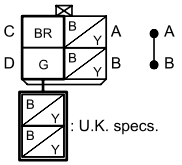

0940-102D
RBCM

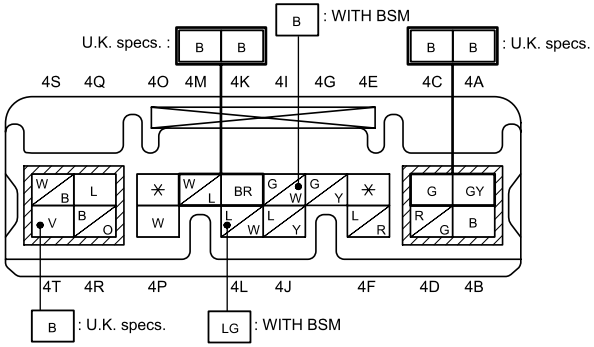

Refer to 00F section for the FUSE BOX, 00C section for the PCM CONNECTOR and COMMON CONNECTOR LIST.

DOOR LOCK SYSTEM (WITH ADVANCED KEYLESS ENTRY SYSTEM)

0914-2e

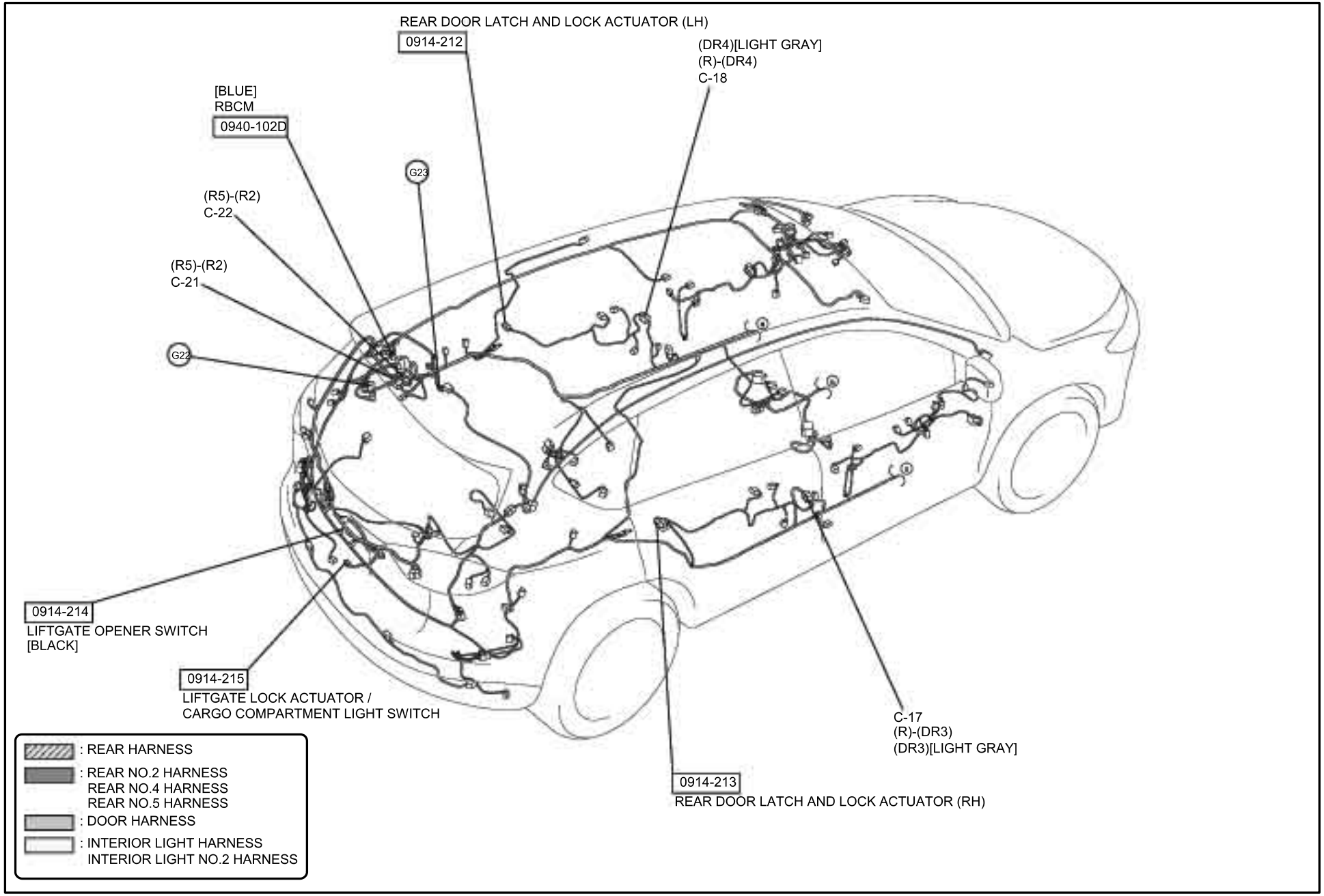

THEFT-DETERRENT SYSTEM (U.K. specs., Australian specs.)

0914-3

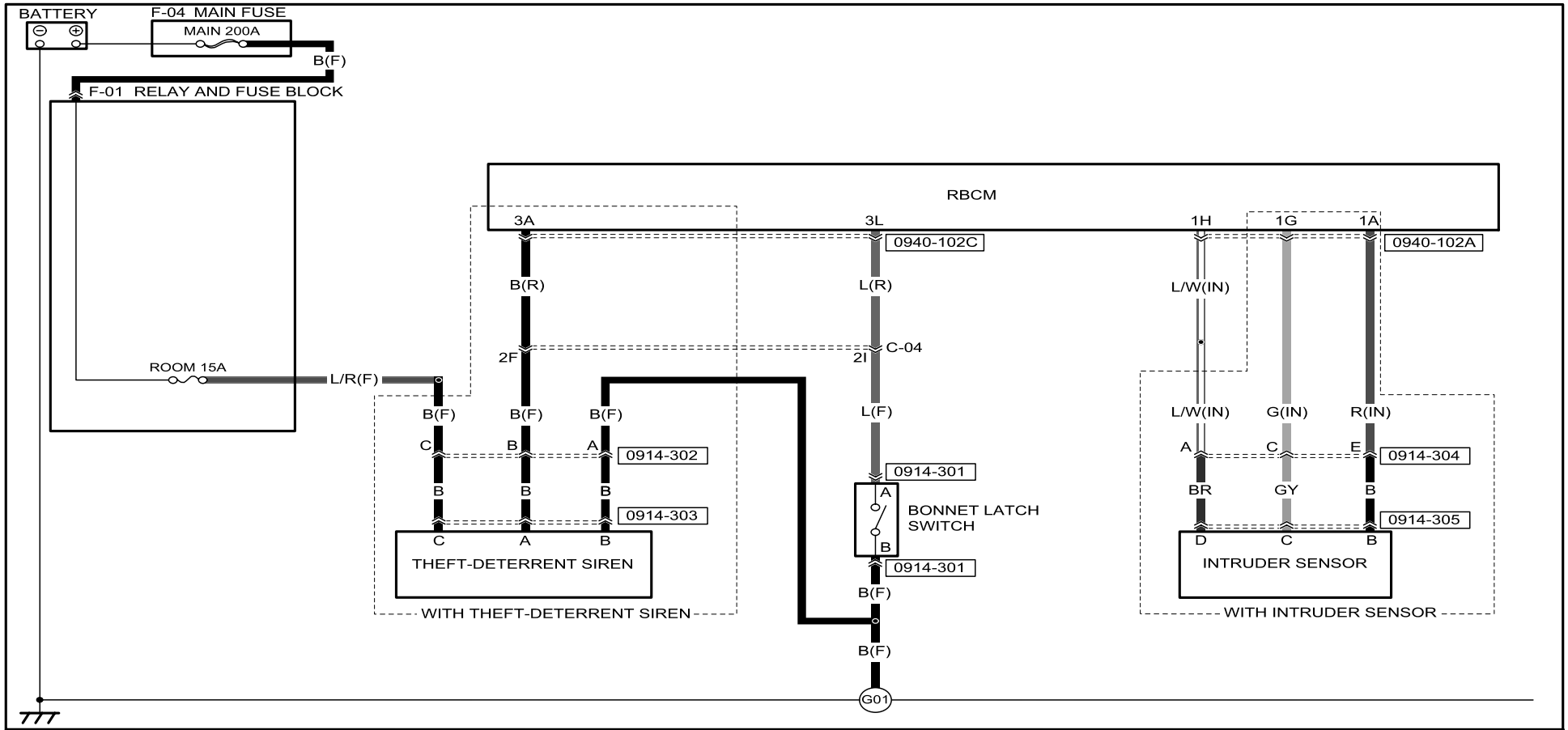

0914-301
BONNET LATCH SWITCH

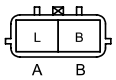

0914-302
FRONT HARNESS-SHORT CORD

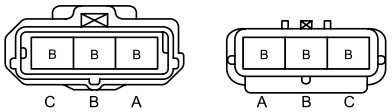

0914-303
THEFT-DETERRENT SIREN

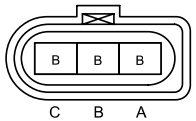

0914-304
INTERIOR LIGHT HARNESS-SHORT CORD

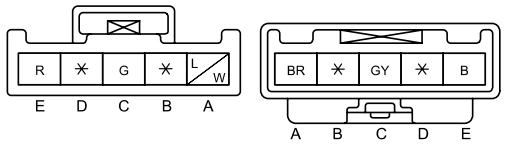

0914-305
INTRUDER SENSOR

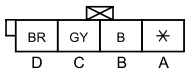

0940-102A
RBCM

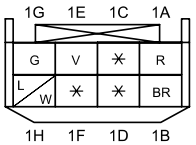

0940-102C
RBCM

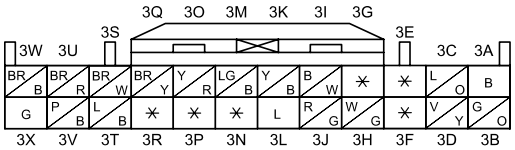

Refer to 00F section for the FUSE BOX, 00C section for the PCM CONNECTOR and COMMON CONNECTOR LIST.

THEFT-DETERRENT SYSTEM (U.K. specs., Australian specs.) 0914-3

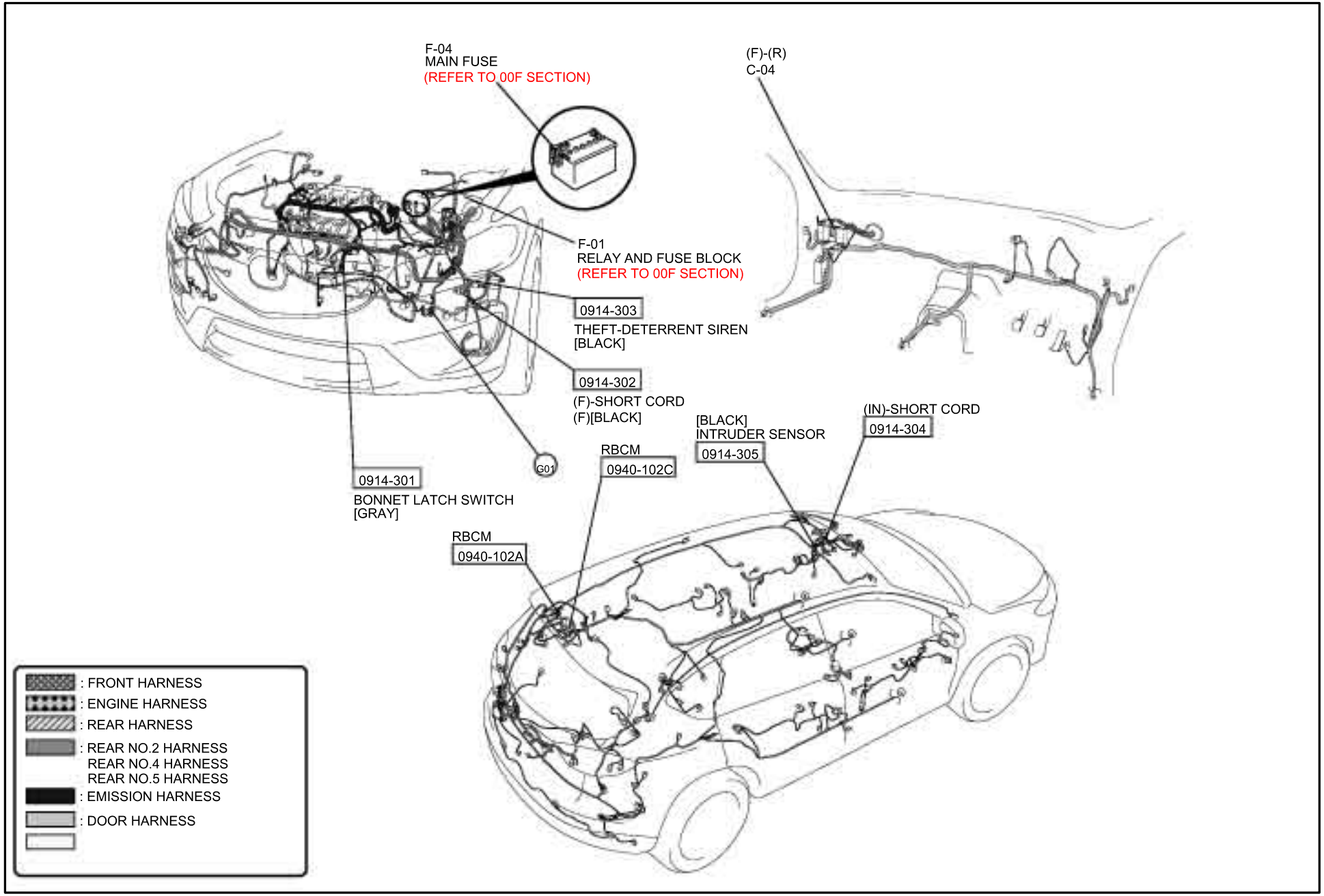

THEFT-DETERRENT SYSTEM (General (R.H.D.) specs.)

0914-4

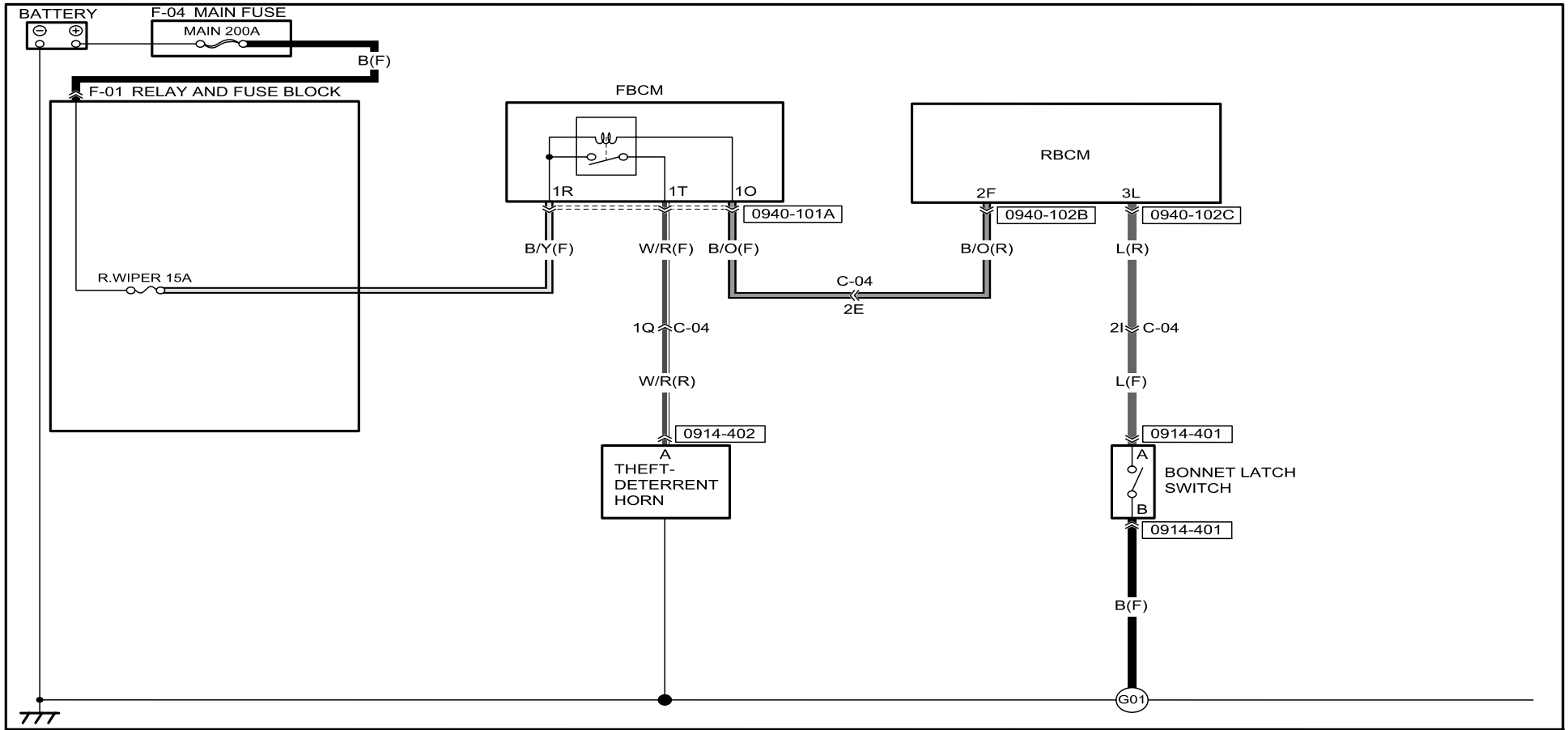

0914-401
BONNET LATCH SWITCH

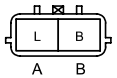

0914-402
THEFT-DETERRENT HORN

0940-101A
FBCM

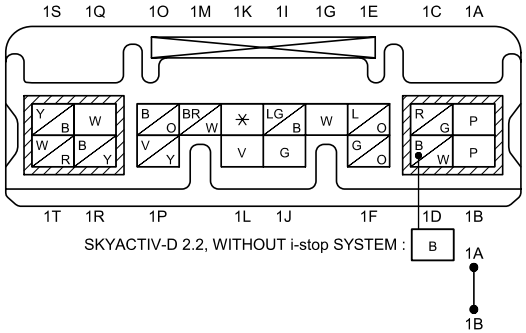

0940-102B
RBCM

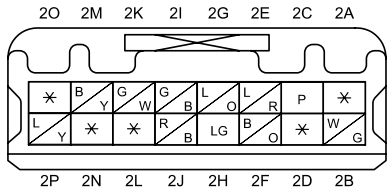

0940-102C
RBCM

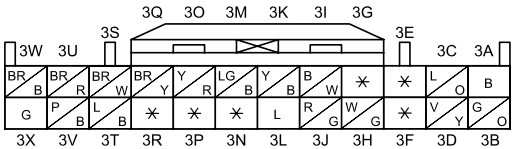

Refer to 00F section for the FUSE BOX, 00C section for the PCM CONNECTOR and COMMON CONNECTOR LIST.

THEFT-DETERRENT SYSTEM (General (R.H.D.) specs.)

0914-4

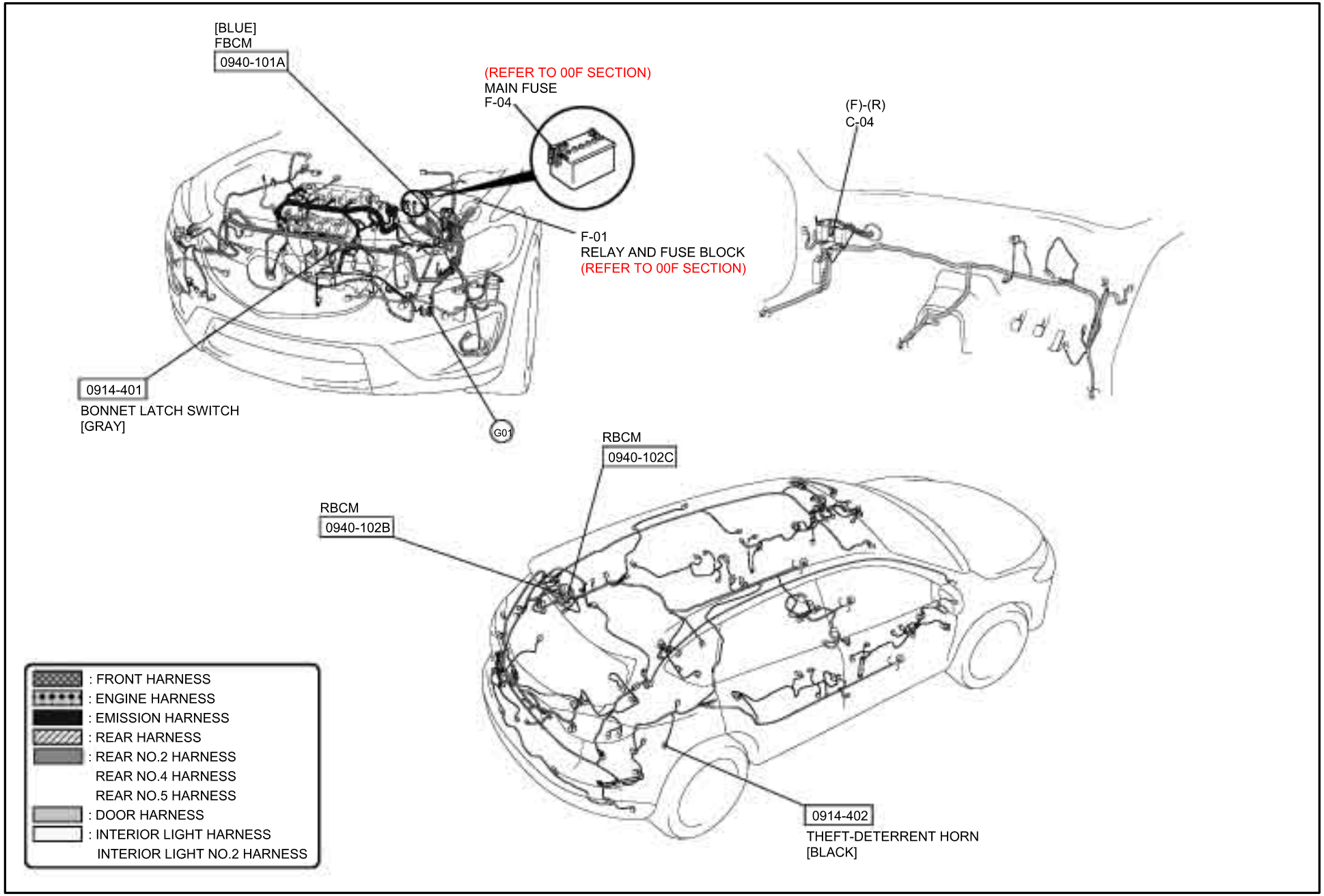

SUNROOF

0915-1

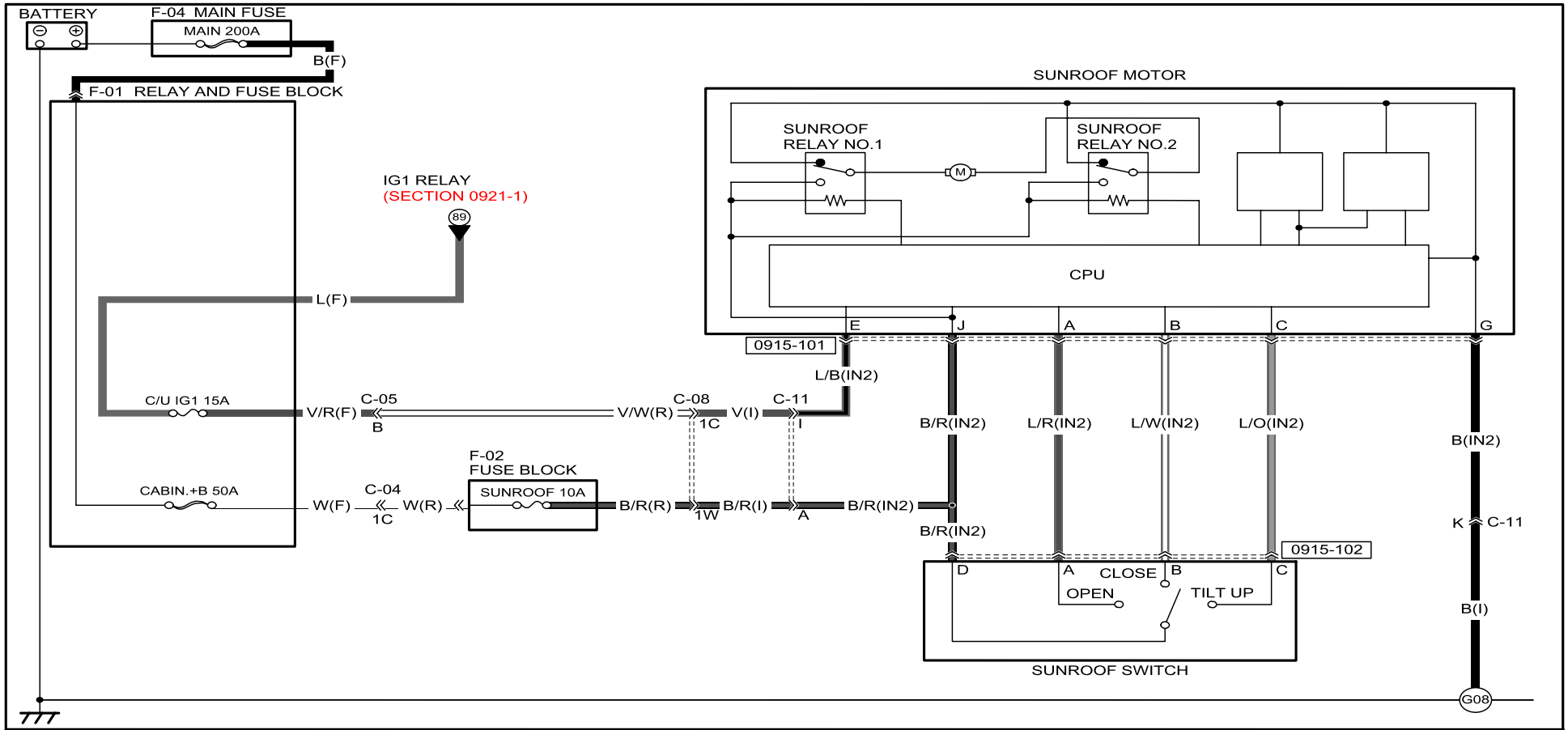

0915-101 SUNROOF MOTOR	0915-102 SUNROOF SWITCH					
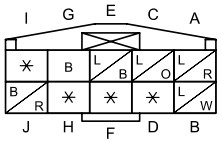	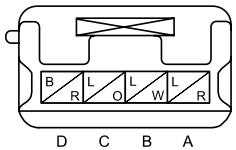					

Refer to 00F section for the FUSE BOX, 00C section for the PCM CONNECTOR and COMMON CONNECTOR LIST.

SUNROOF

0915-1

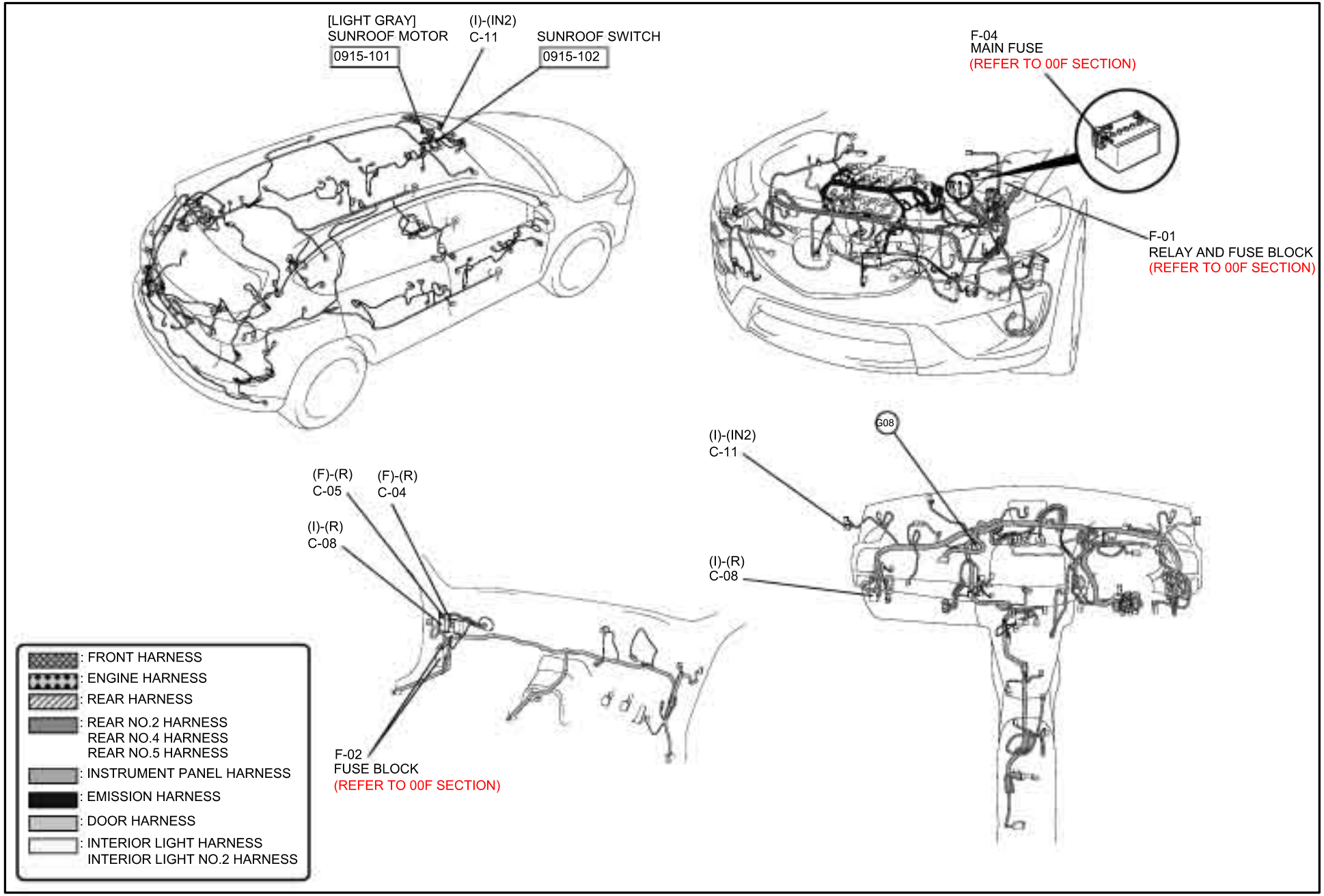

HEADLIGHT (HALOGEN TYPE)

0918-1a

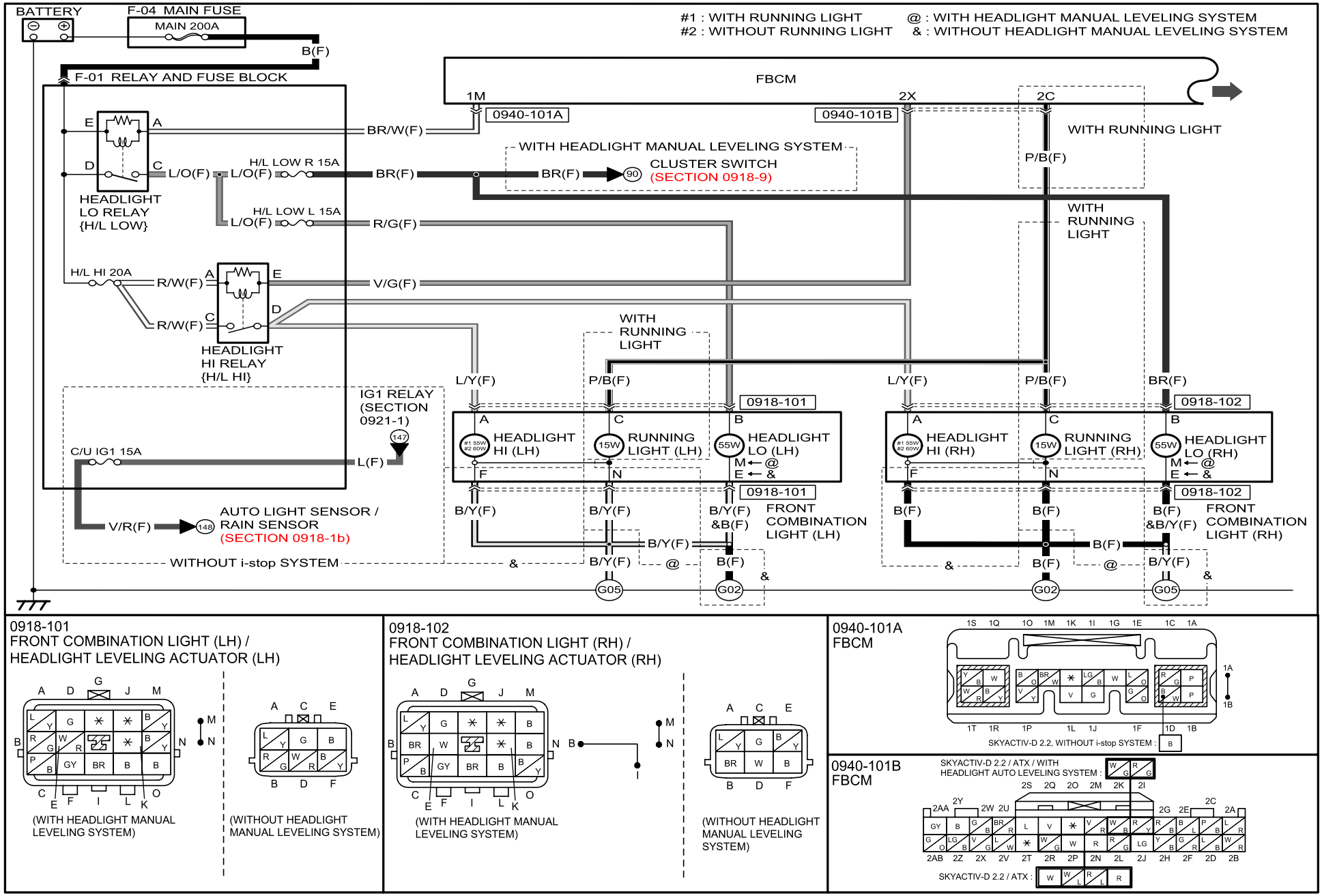

Refer to 00F section for the FUSE BOX, 00C section for the PCM CONNECTOR and COMMON CONNECTOR LIST.

HEADLIGHT (HALOGEN TYPE)

0918-1a

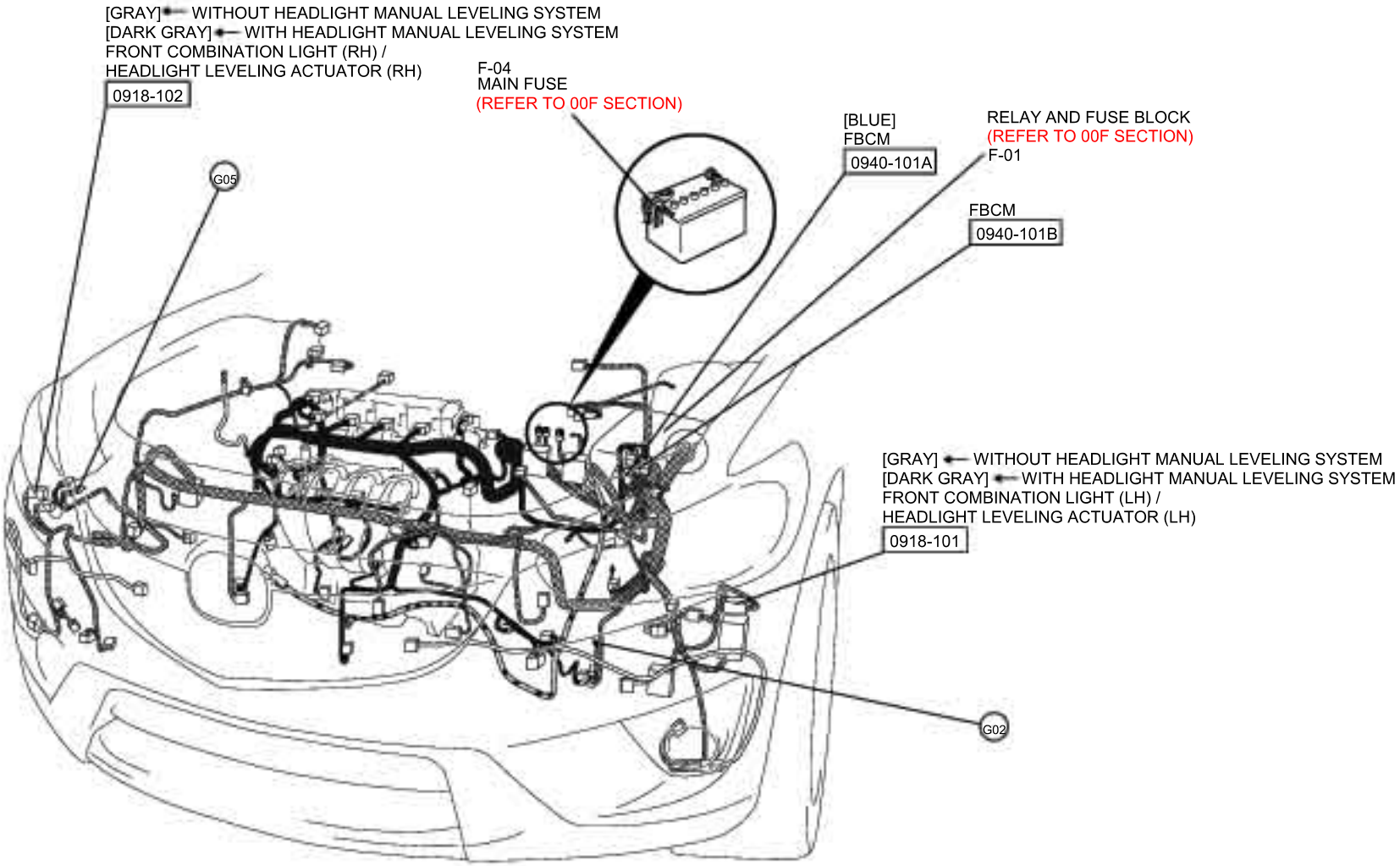

: FRONT HARNESS
: ENGINE HARNESS
: EMISSION HARNESS

HEADLIGHT (HALOGEN TYPE)

0918-1b

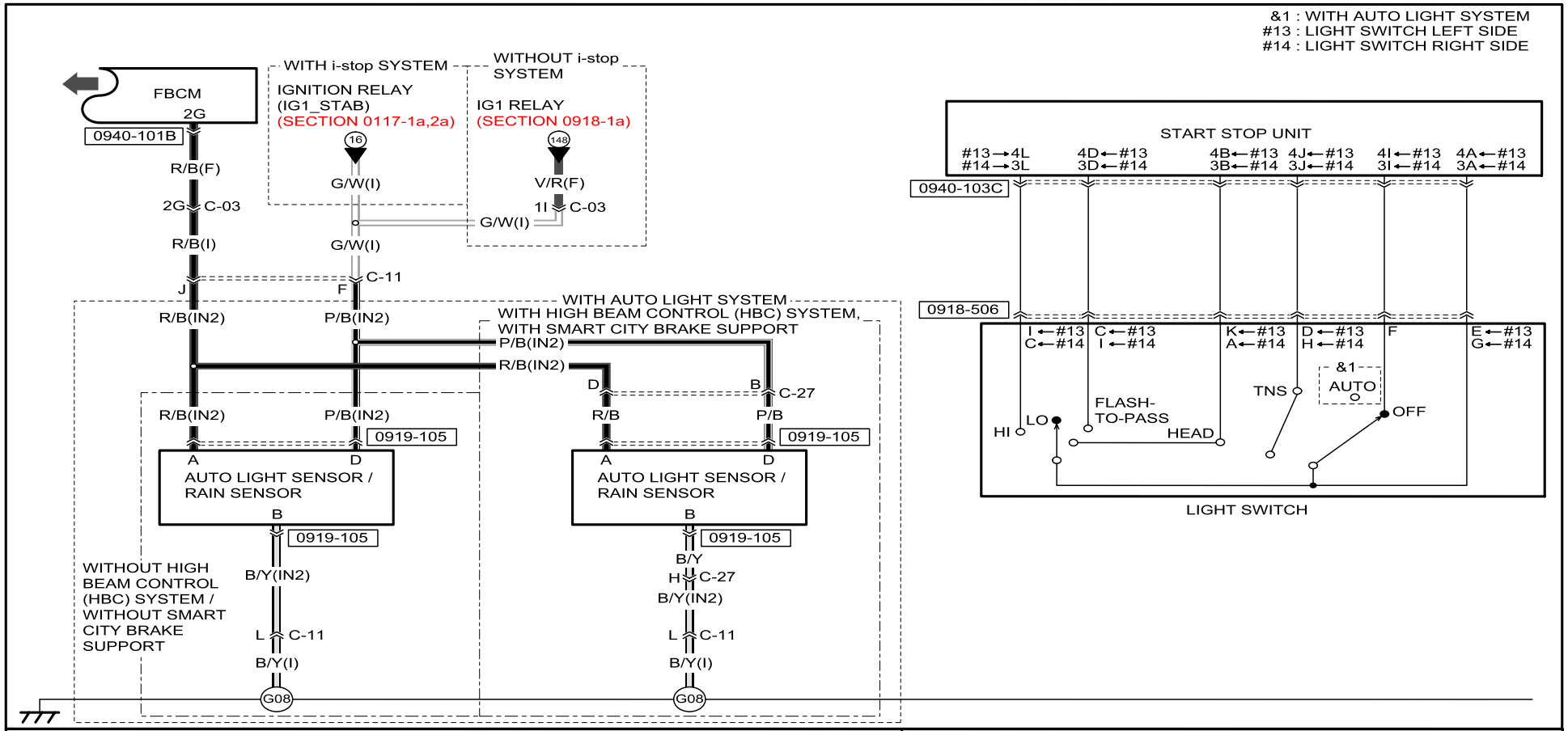

0918-506
LIGHT SWITCH /
FOG LIGHT SWITCH /
TURN SWITCH

: NOT USED

K	J	I	H	G	F	E	D	C	B	A

(LIGHT SWITCH LEFT SIDE)

: NOT USED

K	J	I	H	G	F	E	D	C	B	A

(LIGHT SWITCH RIGHT SIDE)

0940-101B
FBCM

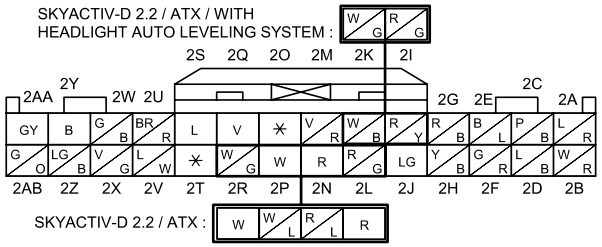

0919-105
AUTO LIGHT SENSOR /
RAIN SENSOR

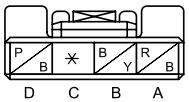

0940-103C
START STOP UNIT

3K											
3L	✱	3J	3I	3H	3G	3F	3E	3D	3C	3B	3A
4L	✱	4J	4I	4H	4G	4F	4E	4D	4C	4B	4A
4K											

Refer to 00F section for the FUSE BOX, 00C section for the PCM CONNECTOR and COMMON CONNECTOR LIST.

HEADLIGHT (HALOGEN TYPE)

0918-1b

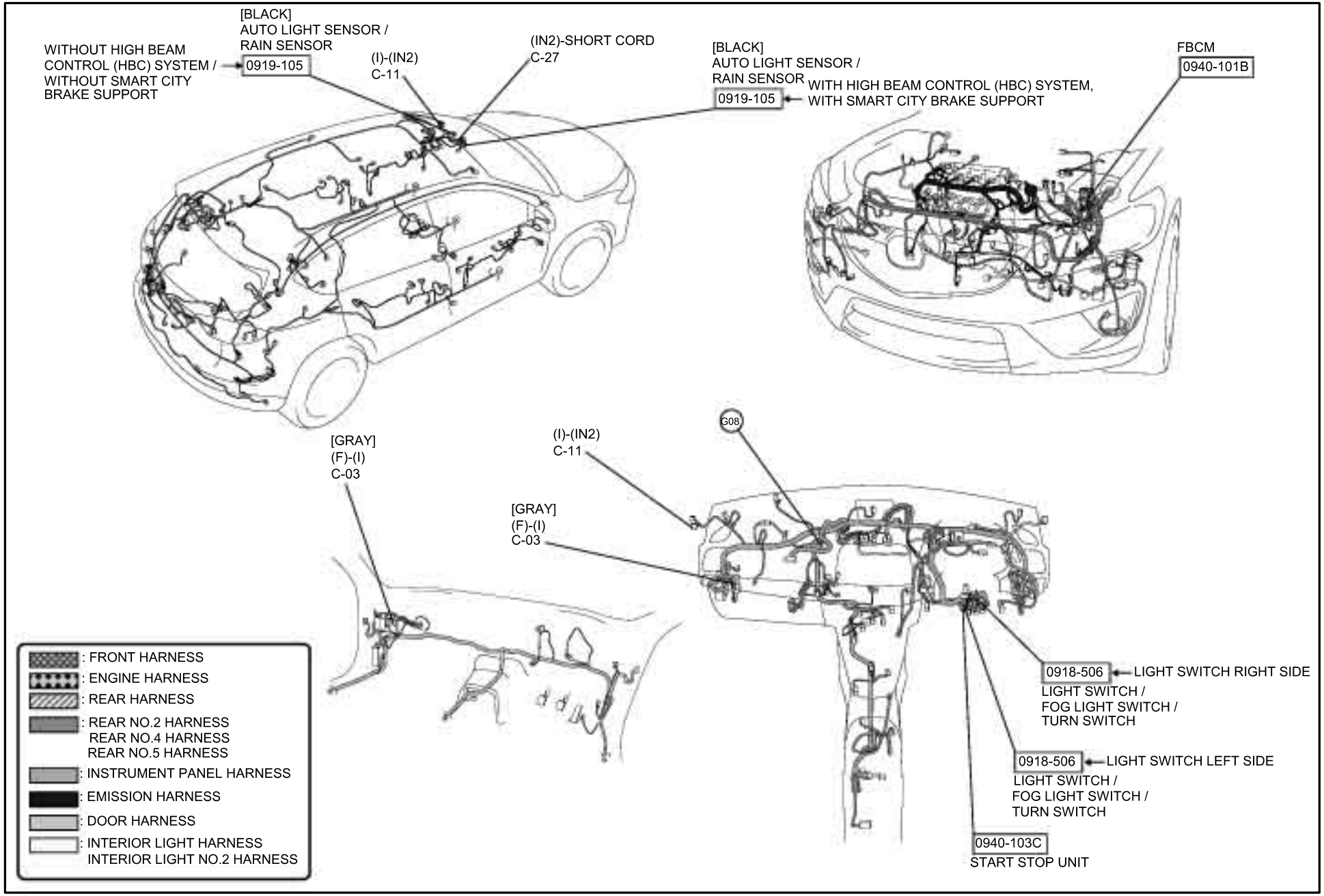

HEADLIGHT (DISCHARGE TYPE)

0918-2a

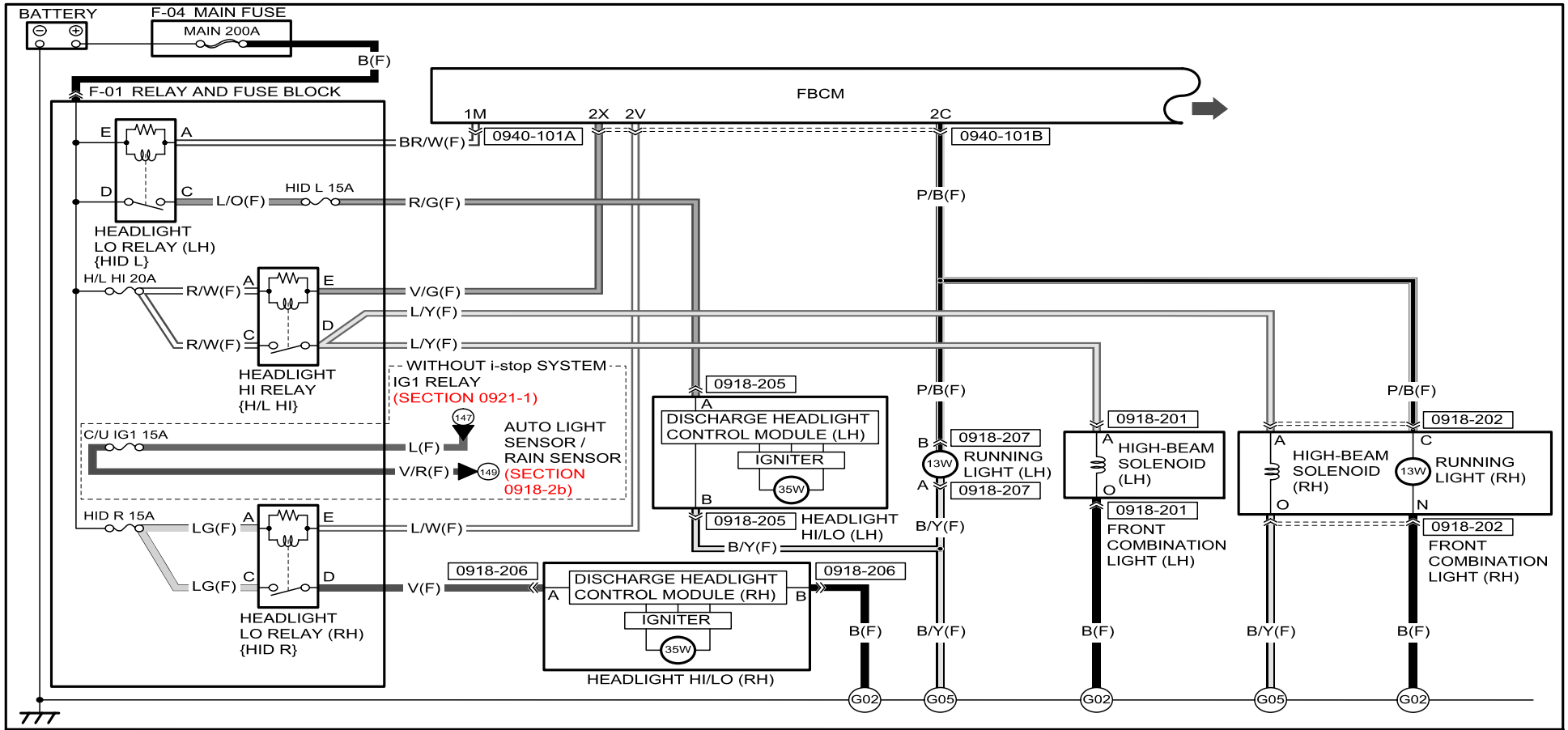

0918-201
FRONT COMBINATION LIGHT (LH) / HEADLIGHT LEVELING ACTUATOR (LH) / SWIVEL ACTUATOR (LH)

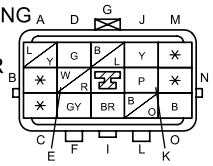

0918-202
FRONT COMBINATION LIGHT (RH) / HEADLIGHT LEVELING ACTUATOR (RH) / SWIVEL ACTUATOR (RH)

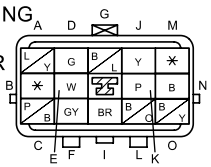

0940-101A
FBCM

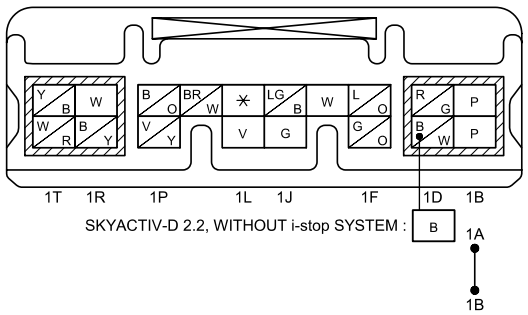

0940-101B
FBCM

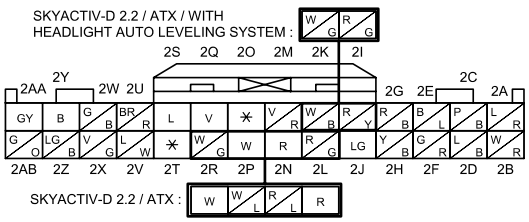

0918-205
HEADLIGHT HI/LO (LH)

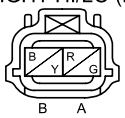

0918-206
HEADLIGHT HI/LO (RH)

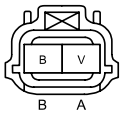

0918-207
RUNNING LIGHT (LH)

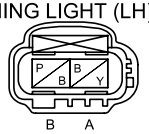

Refer to 00F section for the FUSE BOX, 00C section for the PCM CONNECTOR and COMMON CONNECTOR LIST.

HEADLIGHT (DISCHARGE TYPE)

0918-2a

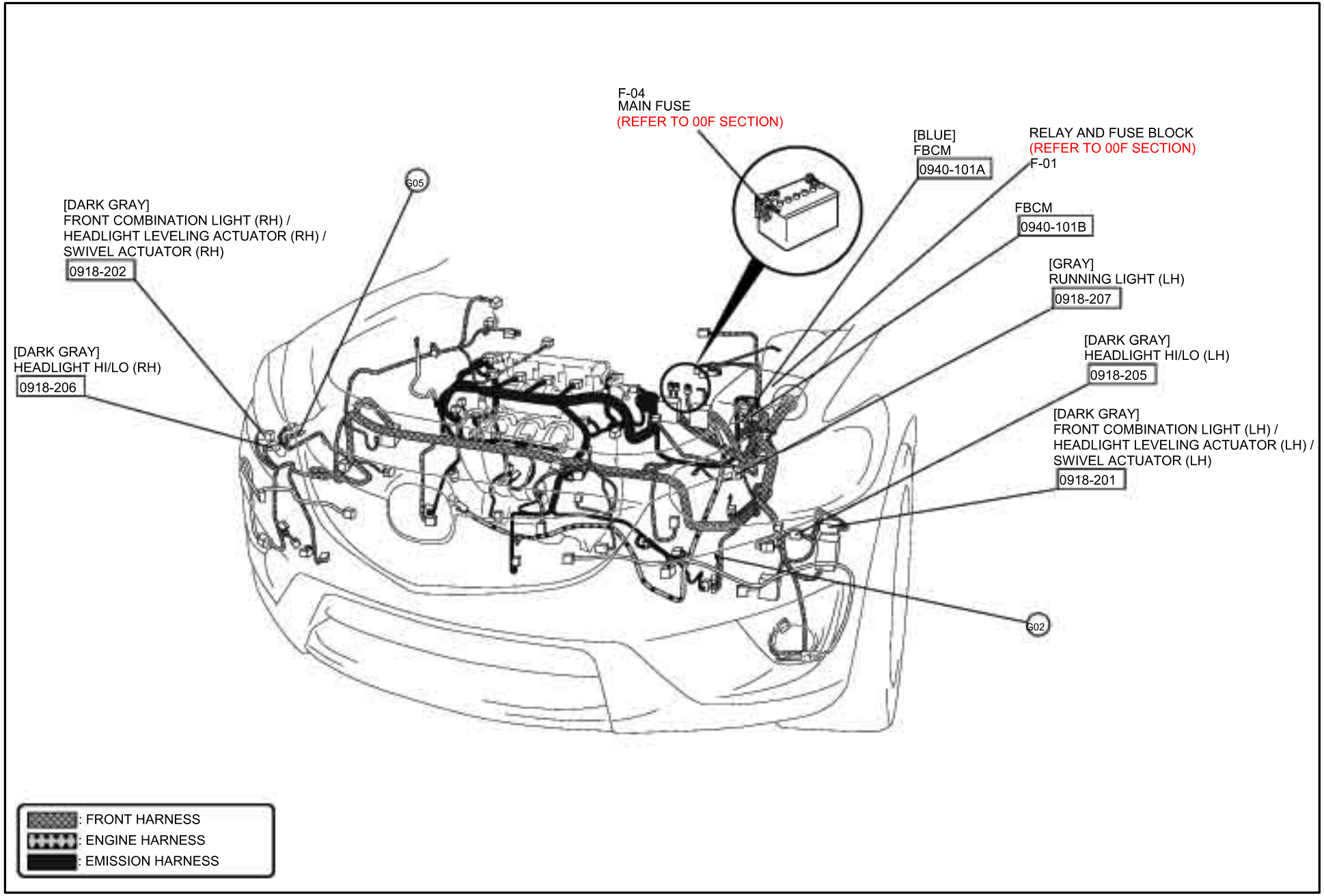

HEADLIGHT (DISCHARGE TYPE)

0918-2b

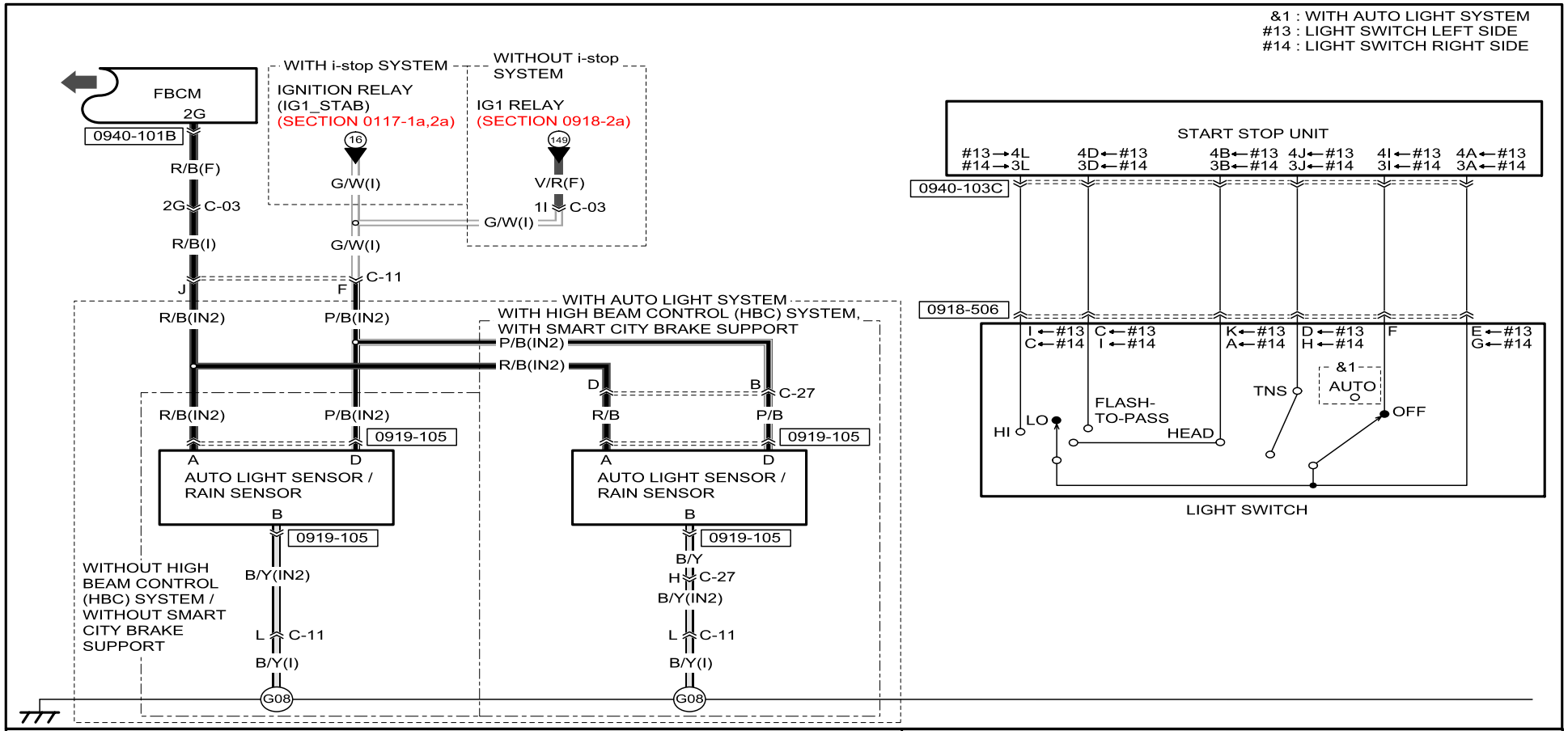

0918-506
LIGHT SWITCH /
FOG LIGHT SWITCH /
TURN SWITCH

(LIGHT SWITCH LEFT SIDE)

(LIGHT SWITCH RIGHT SIDE)

0940-101B
FBCM

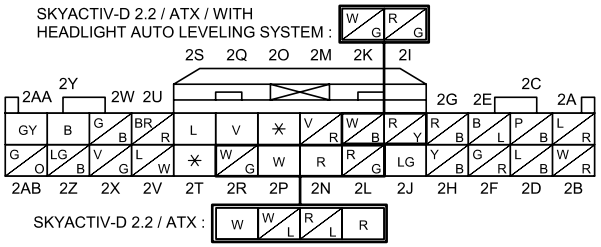

0919-105
AUTO LIGHT SENSOR /
RAIN SENSOR

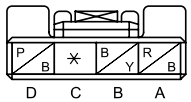

0940-103C
START STOP UNIT

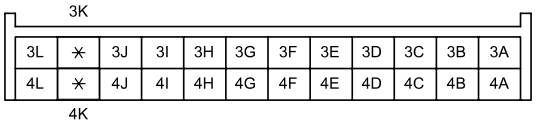

Refer to 00F section for the FUSE BOX, 00C section for the PCM CONNECTOR and COMMON CONNECTOR LIST.

HEADLIGHT (DISCHARGE TYPE)

0918-2b

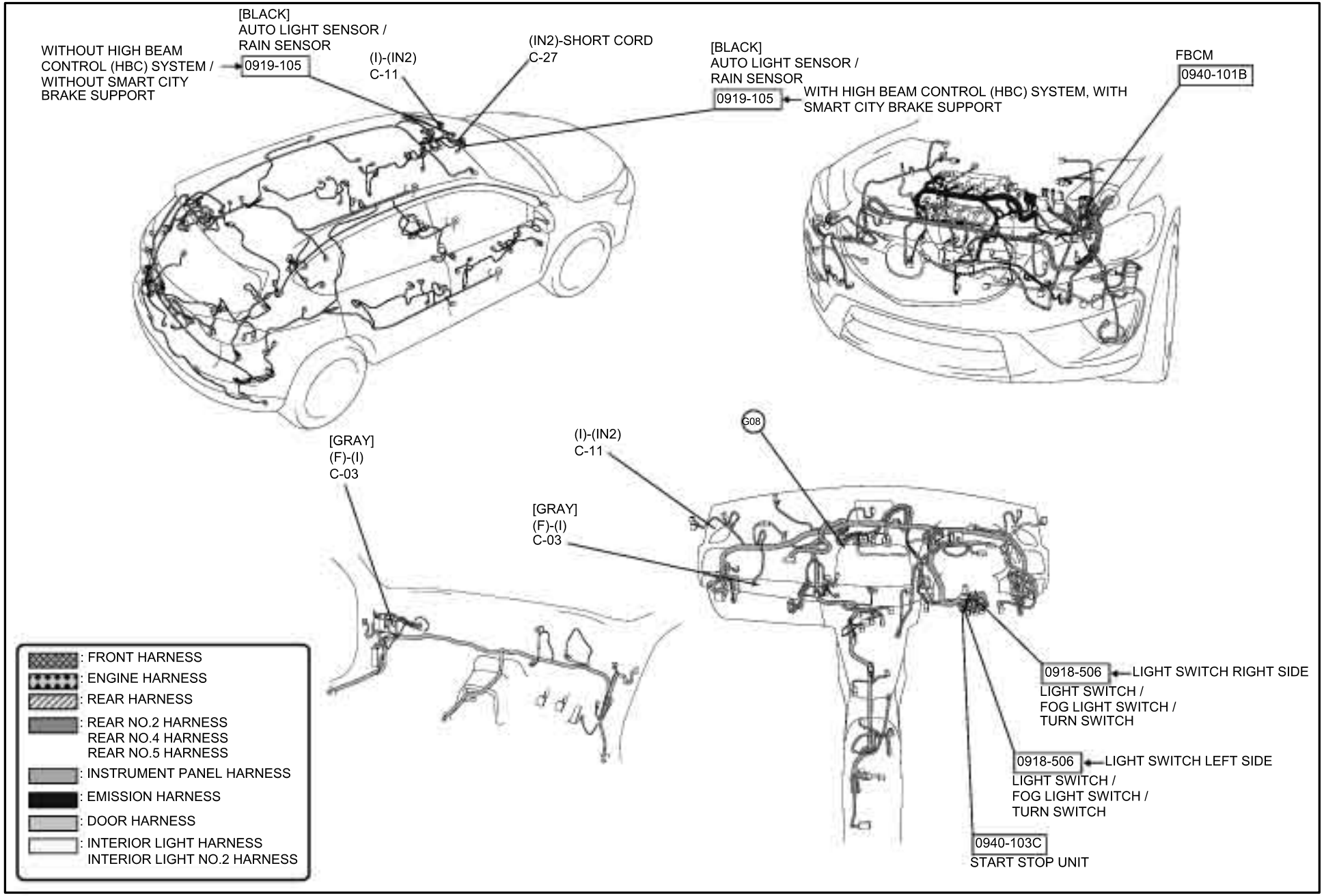

LICENSE PLATE LIGHT / PARKING LIGHT / TAILLIGHT

0918-3

@ : DISCHARGE TYPE, WITH HEADLIGHT MANUAL LEVELING SYSTEM
& : HALOGEN TYPE / WITHOUT HEADLIGHT MANUAL LEVELING SYSTEM

@6 : HALOGEN TYPE
@7 : DISCHARGE TYPE
#13 : U.K. specs.

BATTERY
F-04 MAIN FUSE
MAIN 200A
B(F)
F-01 RELAY AND FUSE BLOCK
TAIL 15A
W/R(F)
TNS RELAY {TAIL}
LG/B(F)
P/B(F)
C-05
P/B(R)
1F C-14
P/B(R5)
P/B(R5) #13B(R5)
C-21
P/B(R2)
FBCM
1I
1J
0940-101A
G(F)
0918-301 TAILLIGHT (REAR COMBINATION LIGHT) (LH)
0918-302 TAILLIGHT (REAR COMBINATION LIGHT) (RH)
0918-303 LICENSE PLATE LIGHT (LH)
0918-304 LICENSE PLATE LIGHT (RH)
0918-305 TAILLIGHT (LIFTGATE LIGHT) (LH)
0918-306 TAILLIGHT (LIFTGATE LIGHT) (RH)
0918-101 ←@6
0918-201 ←@7
0918-102 ←@6
0918-202 ←@7
PARKING LIGHT (LH)
PARKING LIGHT (RH)
FRONT COMBINATION LIGHT (LH)
FRONT COMBINATION LIGHT (RH)
B(F)
B(R5)
B/Y(R5)
B/Y(R2)
C-22
B/Y(R5) #13B(R5)
B/Y(F)
G01
G21
G22
G02
G05

0918-301 TAILLIGHT (REAR COMBINATION LIGHT) (LH) / BRAKE LIGHT (LH)

0918-302 TAILLIGHT (REAR COMBINATION LIGHT) (RH) / BRAKE LIGHT (RH)

0918-303 LICENSE PLATE LIGHT (LH)

0918-304 LICENSE PLATE LIGHT (RH)

0918-305 TAILLIGHT (LIFTGATE LIGHT) (LH)

0918-306 TAILLIGHT (LIFTGATE LIGHT) (RH)

0940-101A FBCM

SKYACTIV-D 2.2, WITHOUT i-stop SYSTEM : B

0918-101 FRONT COMBINATION LIGHT (LH) / HEADLIGHT LEVELING ACTUATOR (LH)

(WITH HEADLIGHT MANUAL LEVELING SYSTEM)

(WITHOUT HEADLIGHT MANUAL LEVELING SYSTEM)

0918-102 FRONT COMBINATION LIGHT (RH) / HEADLIGHT LEVELING ACTUATOR (RH)

(WITH HEADLIGHT MANUAL LEVELING SYSTEM)

(WITHOUT HEADLIGHT MANUAL LEVELING SYSTEM)

0918-201 FRONT COMBINATION LIGHT (LH) / HEADLIGHT LEVELING ACTUATOR (LH) / SWIVEL ACTUATOR (LH)

0918-202 FRONT COMBINATION LIGHT (RH) / HEADLIGHT LEVELING ACTUATOR (RH) / SWIVEL ACTUATOR (RH)

Refer to 00F section for the FUSE BOX, 00C section for the PCM CONNECTOR and COMMON CONNECTOR LIST.

LICENSE PLATE LIGHT / PARKING LIGHT / TAILLIGHT

0918-3

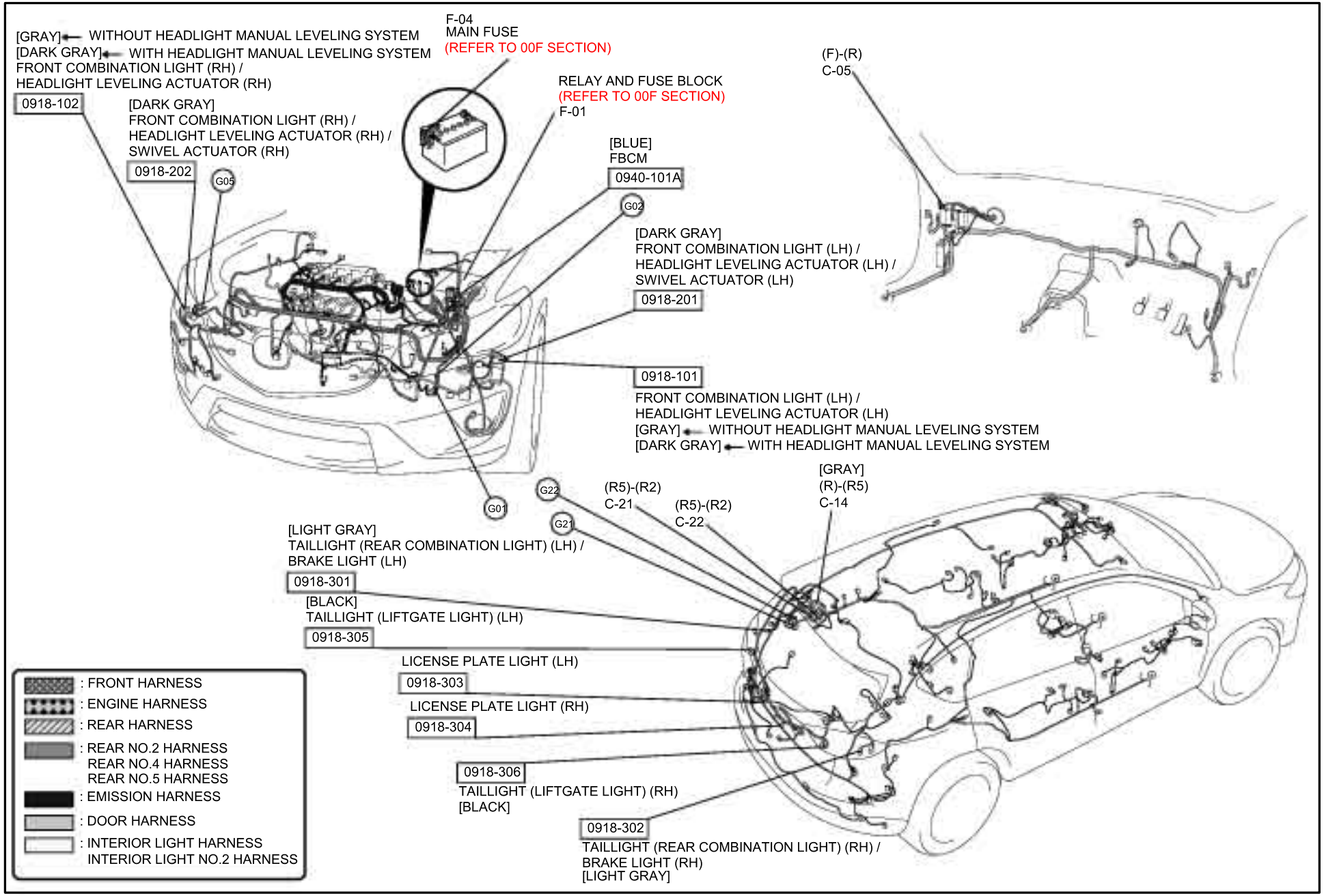

FOG LIGHT

0918-4

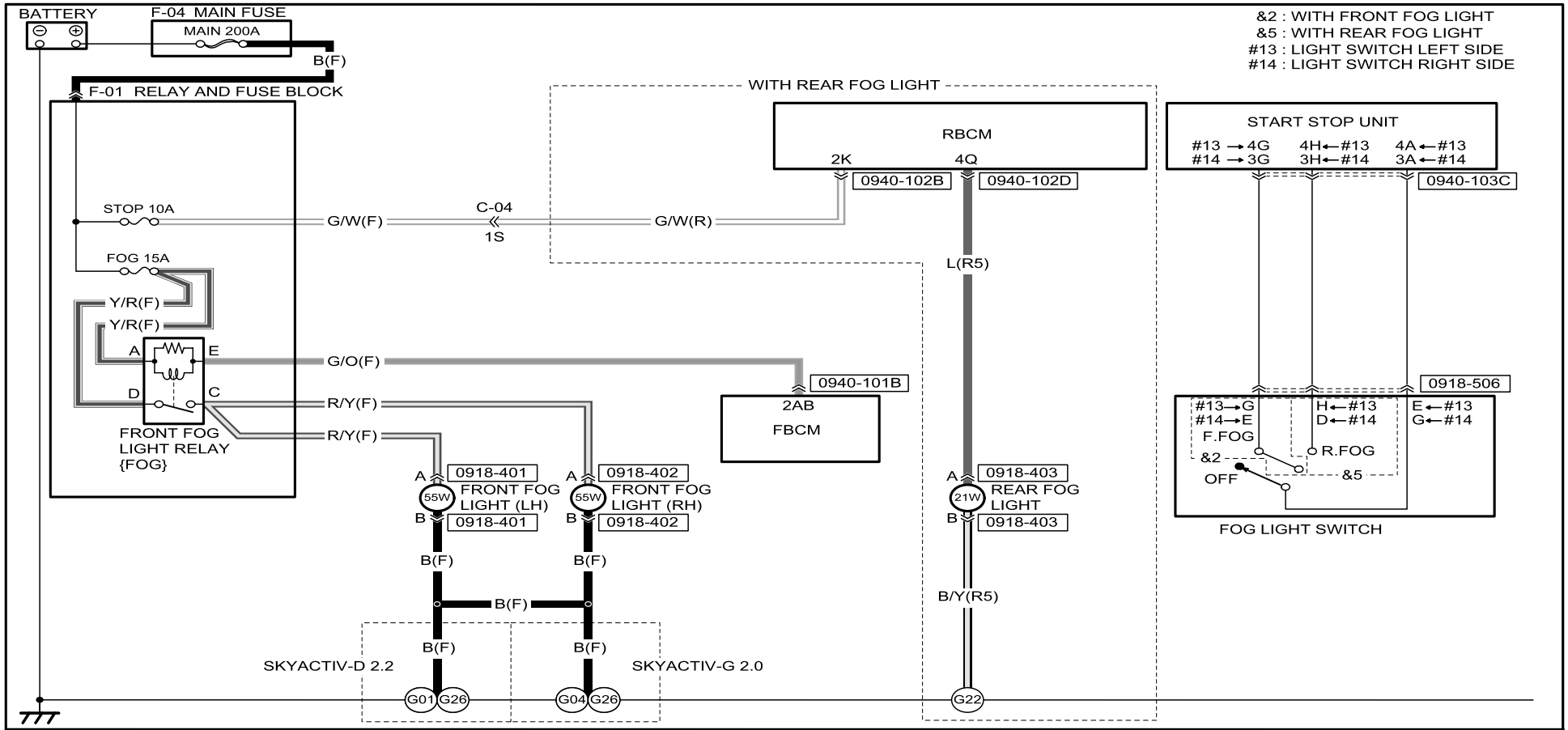

0918-401
FRONT FOG LIGHT (LH)

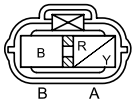

0918-402
FRONT FOG LIGHT (RH)

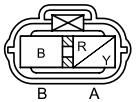

0918-403
REAR FOG LIGHT

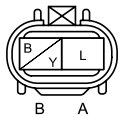

0940-101B
FBCM

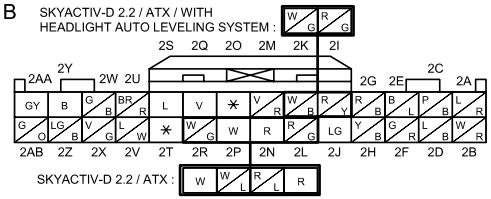

0940-103C
START STOP UNIT

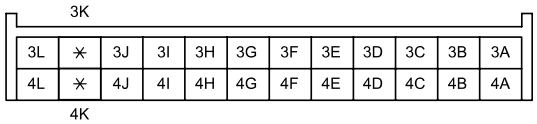

0918-506
LIGHT SWITCH / FOG LIGHT SWITCH / TURN SWITCH

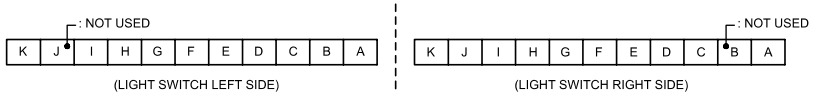

0940-102B
RBCM

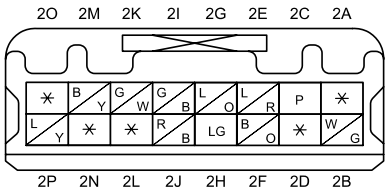

0940-102D
RBCM

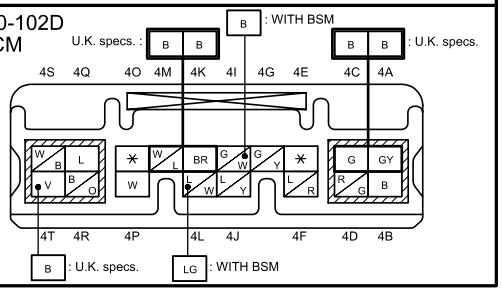

Refer to 00F section for the FUSE BOX, 00C section for the PCM CONNECTOR and COMMON CONNECTOR LIST.

FOG LIGHT

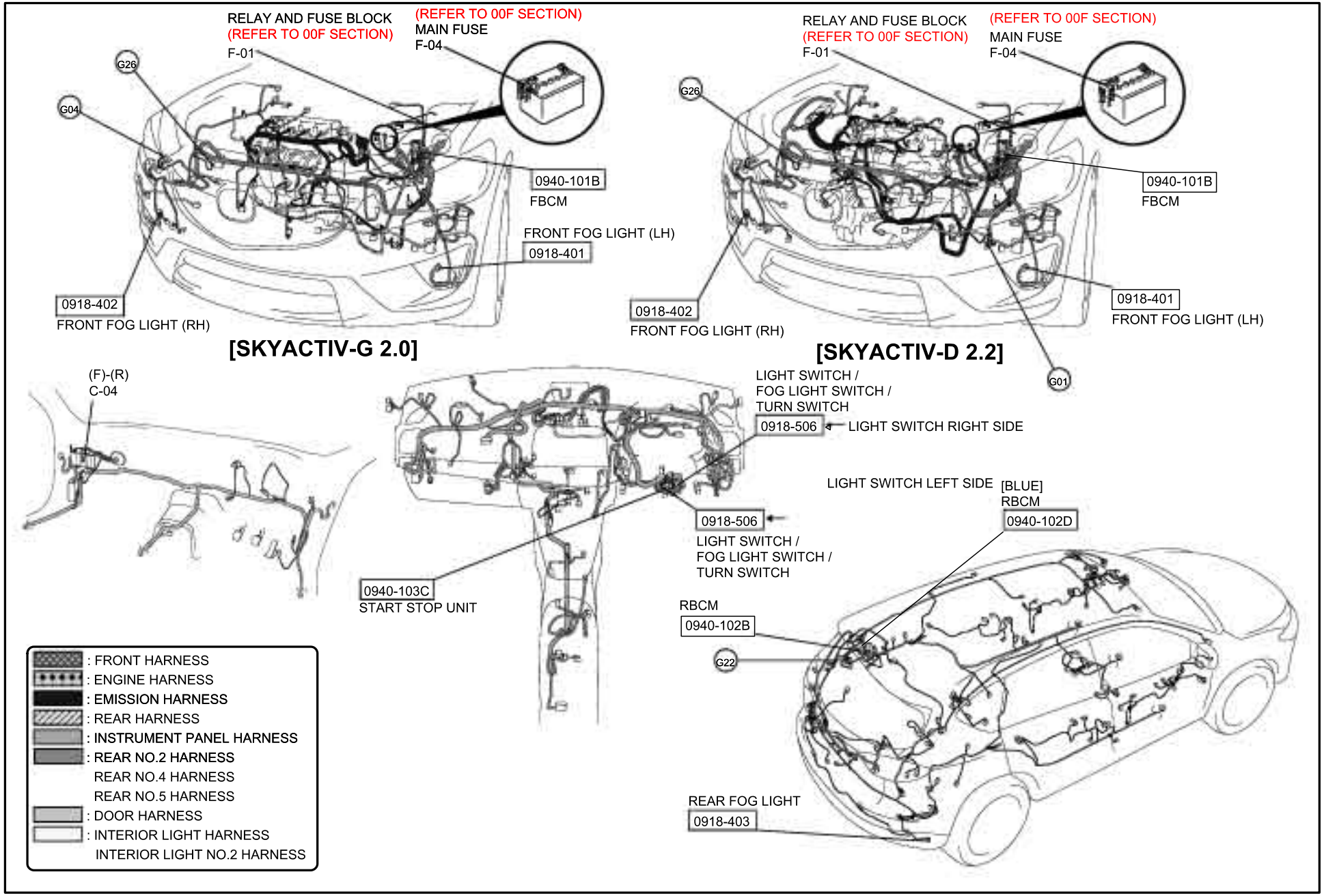
RELAY AND FUSE BLOCK
(REFER TO 00F SECTION)
F-01
(REFER TO 00F SECTION)
MAIN FUSE
F-04
G26
G04
0940-101B
FBCM
FRONT FOG LIGHT (LH)
0918-401
0918-402
FRONT FOG LIGHT (RH)
[SKYACTIV-G 2.0]
RELAY AND FUSE BLOCK
(REFER TO 00F SECTION)
F-01
(REFER TO 00F SECTION)
MAIN FUSE
F-04
G26
0940-101B
FBCM
0918-401
FRONT FOG LIGHT (LH)
0918-402
FRONT FOG LIGHT (RH)
G01
[SKYACTIV-D 2.2]
(F)-(R)
C-04
LIGHT SWITCH /
FOG LIGHT SWITCH /
TURN SWITCH
0918-506
LIGHT SWITCH RIGHT SIDE
LIGHT SWITCH LEFT SIDE
[BLUE]
RBCM
0940-102D
0918-506
LIGHT SWITCH /
FOG LIGHT SWITCH /
TURN SWITCH
0940-103C
START STOP UNIT
RBCM
0940-102B
G22
REAR FOG LIGHT
0918-403
: FRONT HARNESS
: ENGINE HARNESS
: EMISSION HARNESS
: REAR HARNESS
: INSTRUMENT PANEL HARNESS
: REAR NO.2 HARNESS
REAR NO.4 HARNESS
REAR NO.5 HARNESS
: DOOR HARNESS
: INTERIOR LIGHT HARNESS
INTERIOR LIGHT NO.2 HARNESS

TURN AND HAZARD WARNING LIGHT

0918-5

@ : DISCHARGE TYPE, WITH HEADLIGHT MANUAL LEVELING SYSTEM
& : HALOGEN TYPE / WITHOUT HEADLIGHT MANUAL LEVELING SYSTEM
#10 : AUTO-OPEN/CLOSE FUNCTION FOR ALL WINDOWS
#11 : AUTO-OPEN/CLOSE FUNCTION FOR DRIVER-SIDE WINDOW

@6 : HALOGEN TYPE
@7 : DISCHARGE TYPE
#13 : LIGHT SWITCH LEFT SIDE
#14 : LIGHT SWITCH RIGHT SIDE

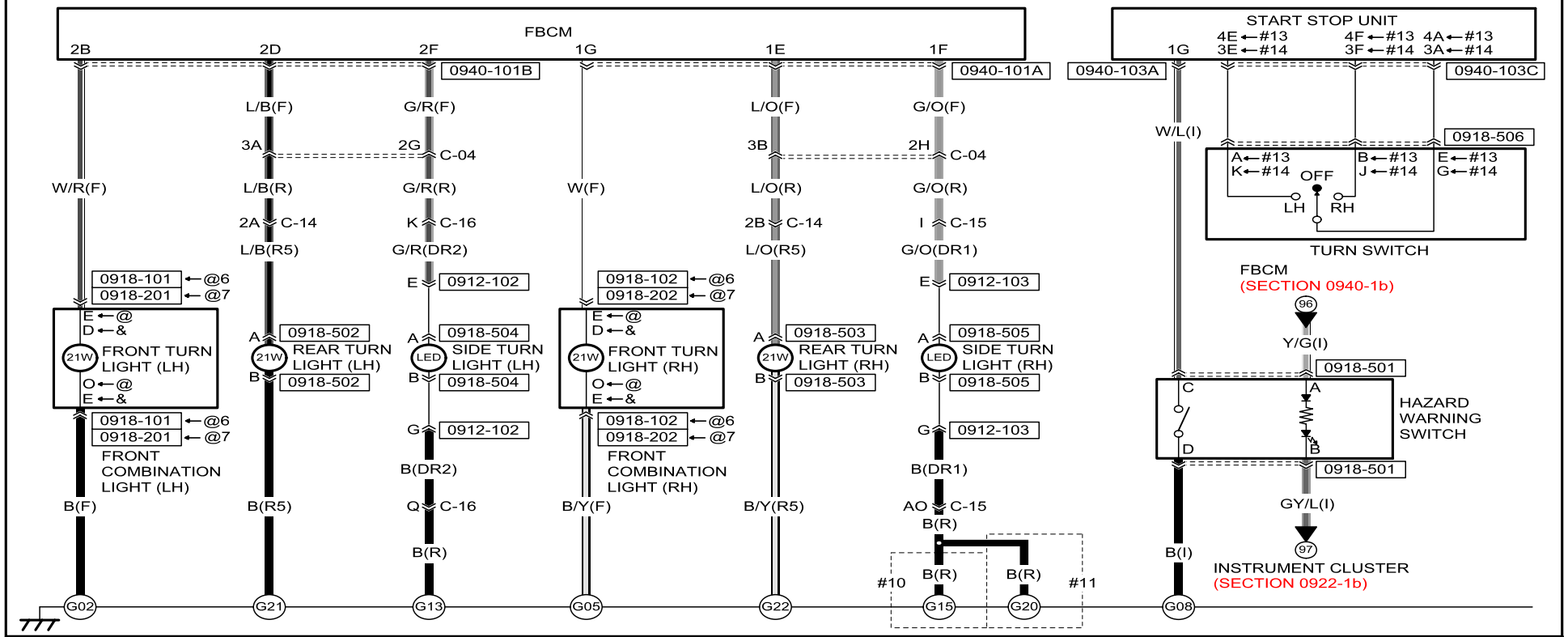

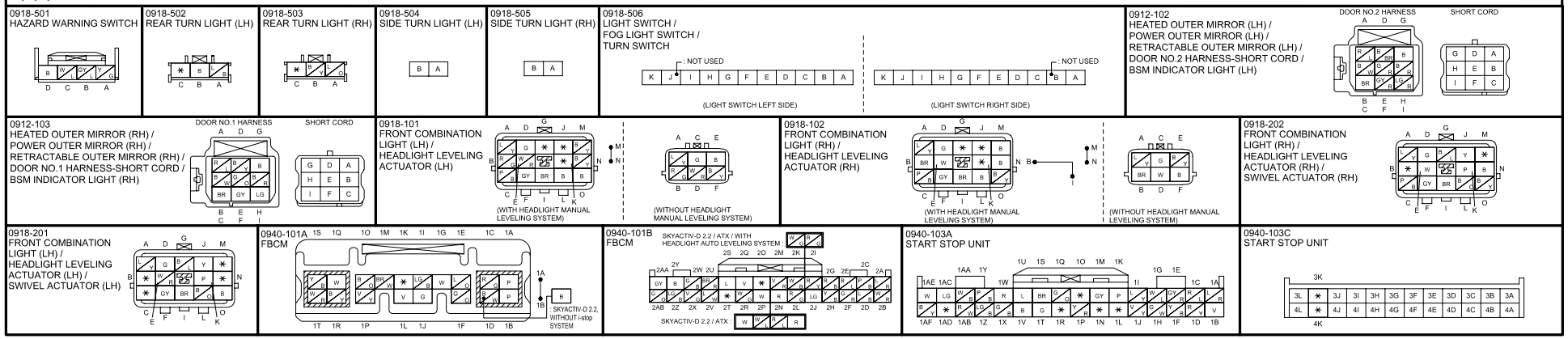

Refer to 00F section for the FUSE BOX, 00C section for the PCM CONNECTOR and COMMON CONNECTOR LIST.

TURN AND HAZARD WARNING LIGHT

0918-5

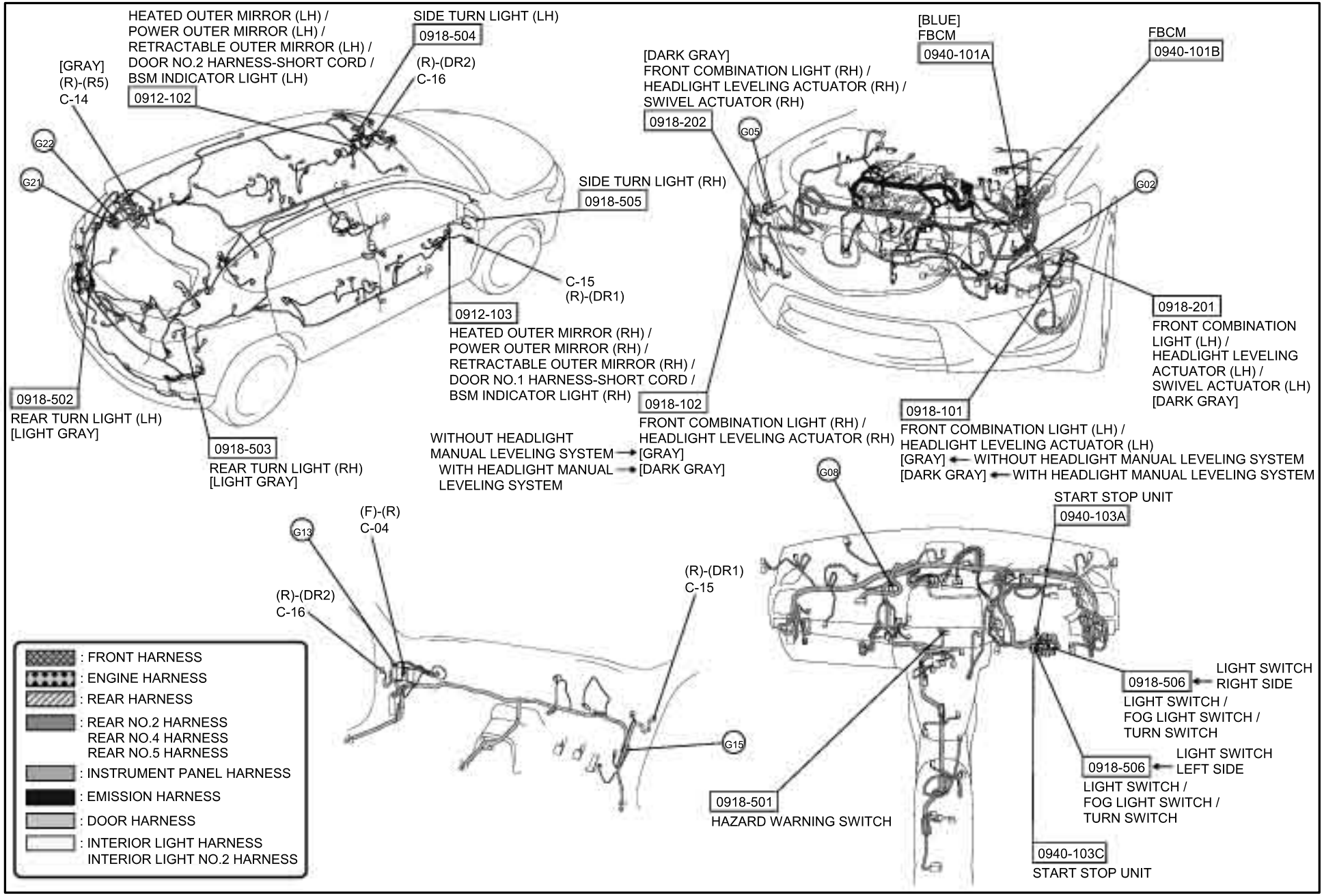

BACK-UP LIGHT

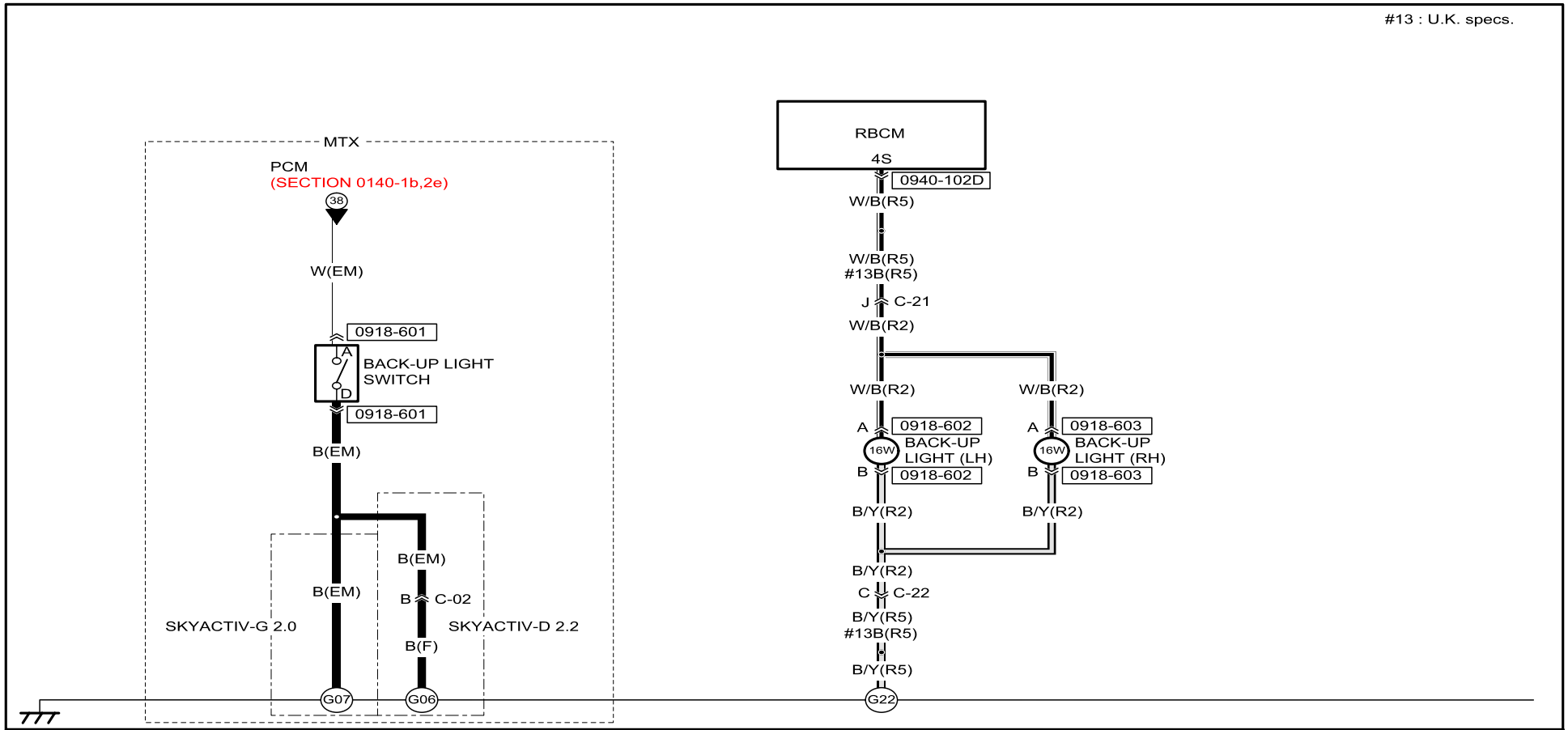

0918-601 NEUTRAL SWITCH NO.2 / BACK-UP LIGHT SWITCH	0918-602 BACK-UP LIGHT (LH)	0918-603 BACK-UP LIGHT (RH)	0940-102D RBCM
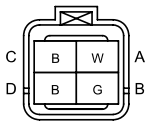	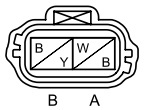	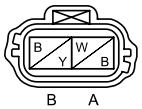	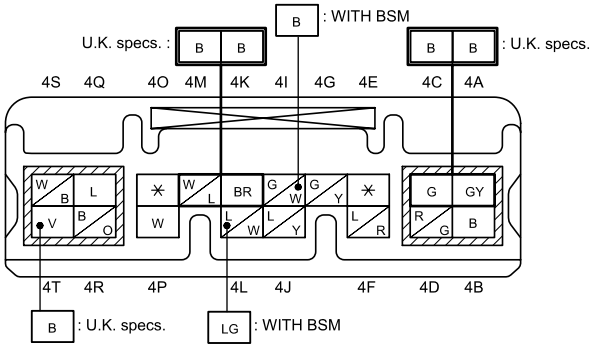

Refer to 00F section for the FUSE BOX, 00C section for the PCM CONNECTOR and COMMON CONNECTOR LIST.

BACK-UP LIGHT

0918-6

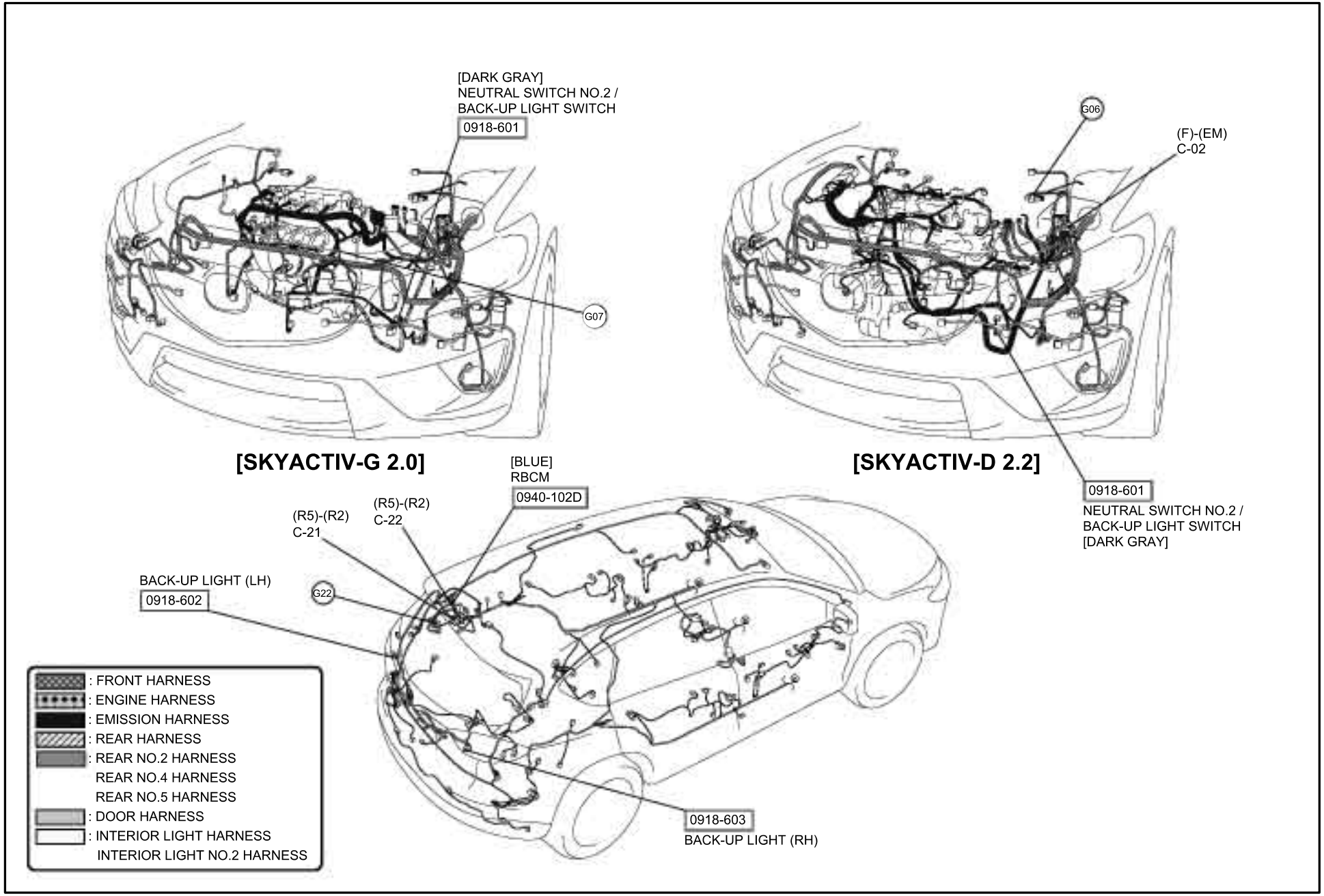

BRAKE LIGHT / HIGH-MOUNT BRAKE LIGHT

0918-7

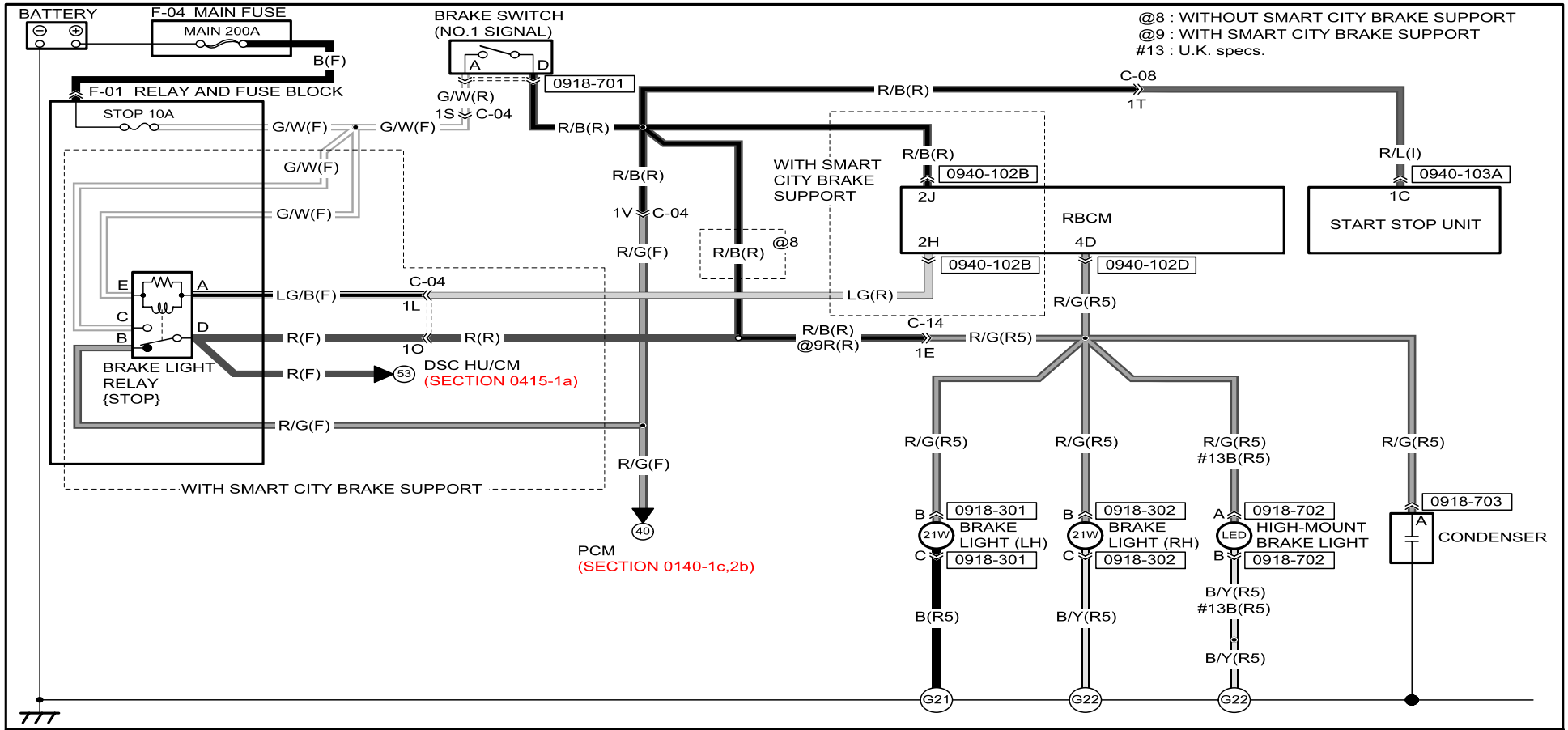

0918-701
BRAKE SWITCH

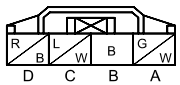

0918-702
HIGH-MOUNT BRAKE LIGHT

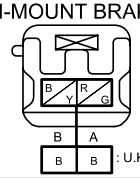

0918-703
CONDENSER

0940-102B
RBCM

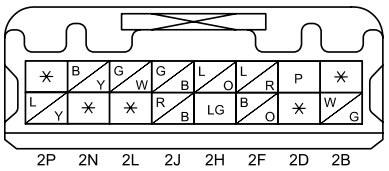

0940-102D
RBCM

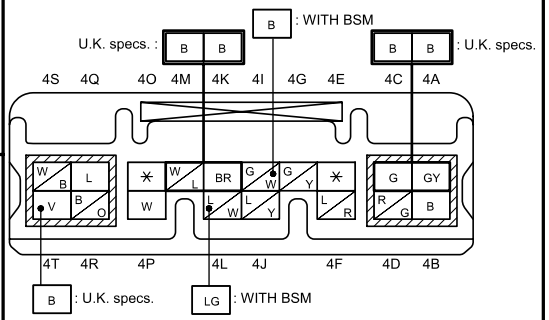

0918-301
TAILLIGHT
(REAR COMBINATION LIGHT) (LH) /
BRAKE LIGHT (LH)

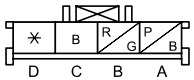

0918-302
TAILLIGHT
(REAR COMBINATION LIGHT) (RH) /
BRAKE LIGHT (RH)

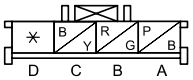

0940-103A
START STOP UNIT

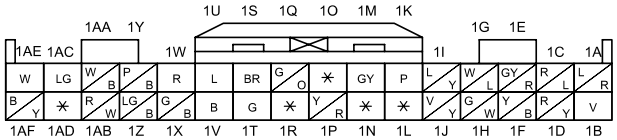

Refer to 00F section for the FUSE BOX, 00C section for the PCM CONNECTOR and COMMON CONNECTOR LIST.

BRAKE LIGHT / HIGH-MOUNT BRAKE LIGHT

0918-7

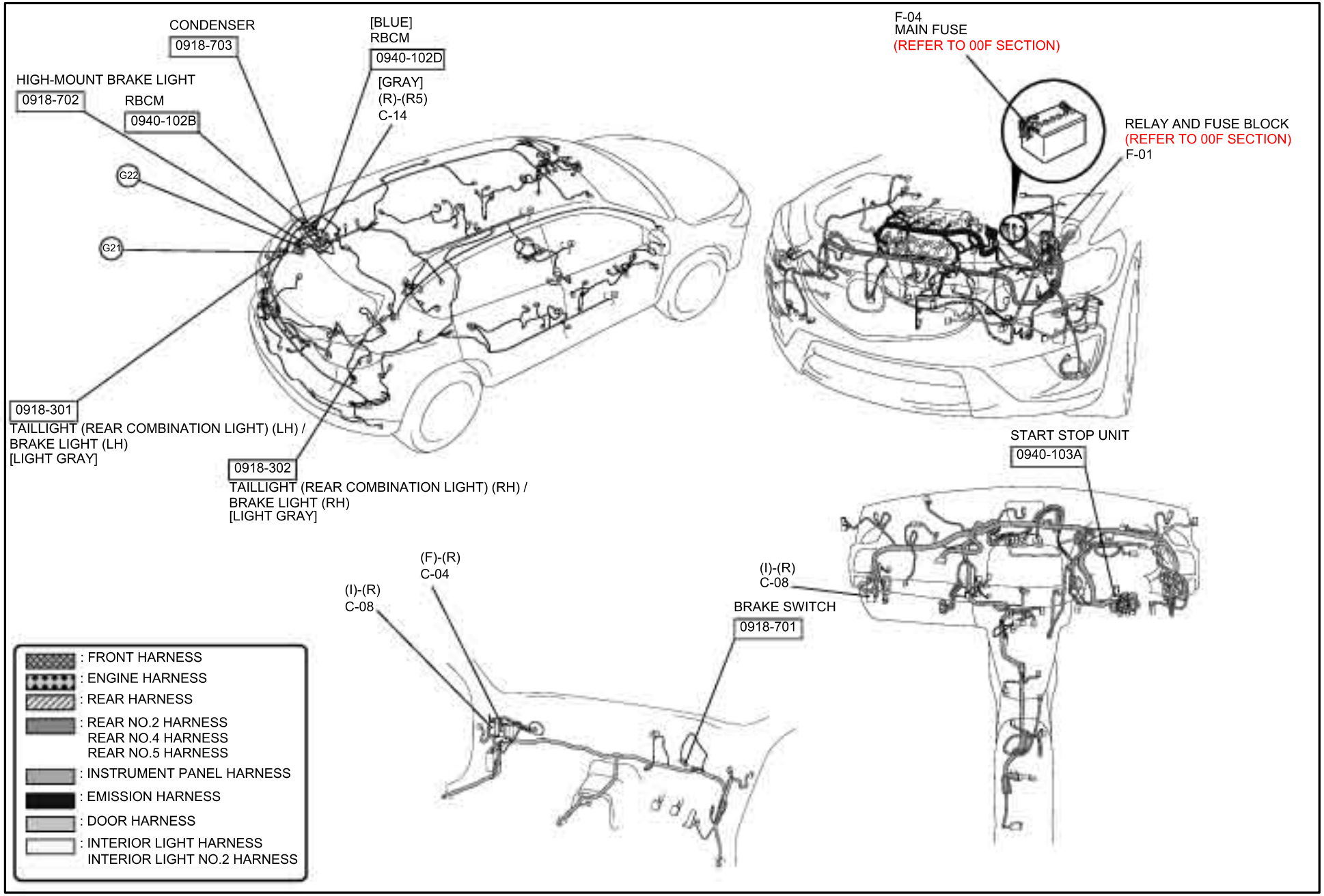

ILLUMINATION LIGHT

0918-8

@1 : WITH KEYLESS ENTRY SYSTEM
@2 : WITH ADVANCED KEYLESS ENTRY SYSTEM
#13 : U.K. specs.

RBCM
1H 1E 1B 4F 4P 4K
0940-102A
L/W(IN) V(IN) BR(IN)
0940-102D
L/R(R5) W(R5)
0918-805
5W
CARGO COMPARTMENT LIGHT
BR(R5)
#13B(R5)
#13D C-21
BR(R2)
#13B/Y(R2)
0914-107 @1
0914-215 @2
CARGO COMPARTMENT LIGHT SWITCH
0914-107 @1
0914-215 @2
B/Y(R2)
D C-22
B(R5)
G23
L/W(IN)
0918-803
0918-804
WITH VANITY MIRROR ILLUMINATION
2W
VANITY MIRROR ILLUMINATION (LH)
VANITY MIRROR ILLUMINATION (RH)
BR(IN)
L(IN)
0918-801
0918-802
F H A G B A C
8W
LH RH
ON OFF
DOOR
OFF ON
FRONT MAP LIGHT
REAR MAP LIGHT
WITH GLOVE COMPARTMENT LIGHT
FBCM
(SECTION 0940-1b)
98
Y/G(I)
0918-806
1.7W
GLOVE COMPARTMENT LIGHT
B(I)
G08

0918-801
FRONT MAP LIGHT

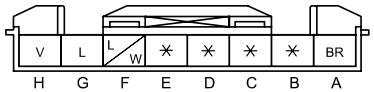

0918-802
REAR MAP LIGHT

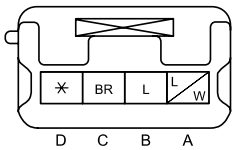

0918-803
VANITY MIRROR ILLUMINATION (LH)

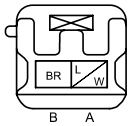

0918-804
VANITY MIRROR ILLUMINATION (RH)

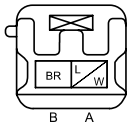

0918-805
CARGO COMPARTMENT LIGHT

0940-102D
RBCM

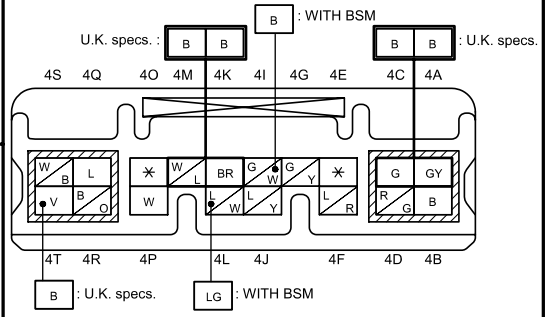

0918-806
GLOVE COMPARTMENT LIGHT

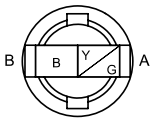

0914-107
LIFTGATE LOCK ACTUATOR / CARGO COMPARTMENT LIGHT SWITCH

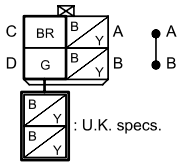

0914-215
LIFTGATE LOCK ACTUATOR / CARGO COMPARTMENT LIGHT SWITCH

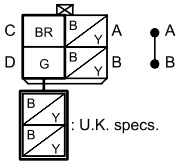

0940-102A
RBCM

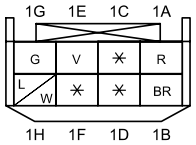

Refer to 00F section for the FUSE BOX, 00C section for the PCM CONNECTOR and COMMON CONNECTOR LIST.

ILLUMINATION LIGHT

0918-8

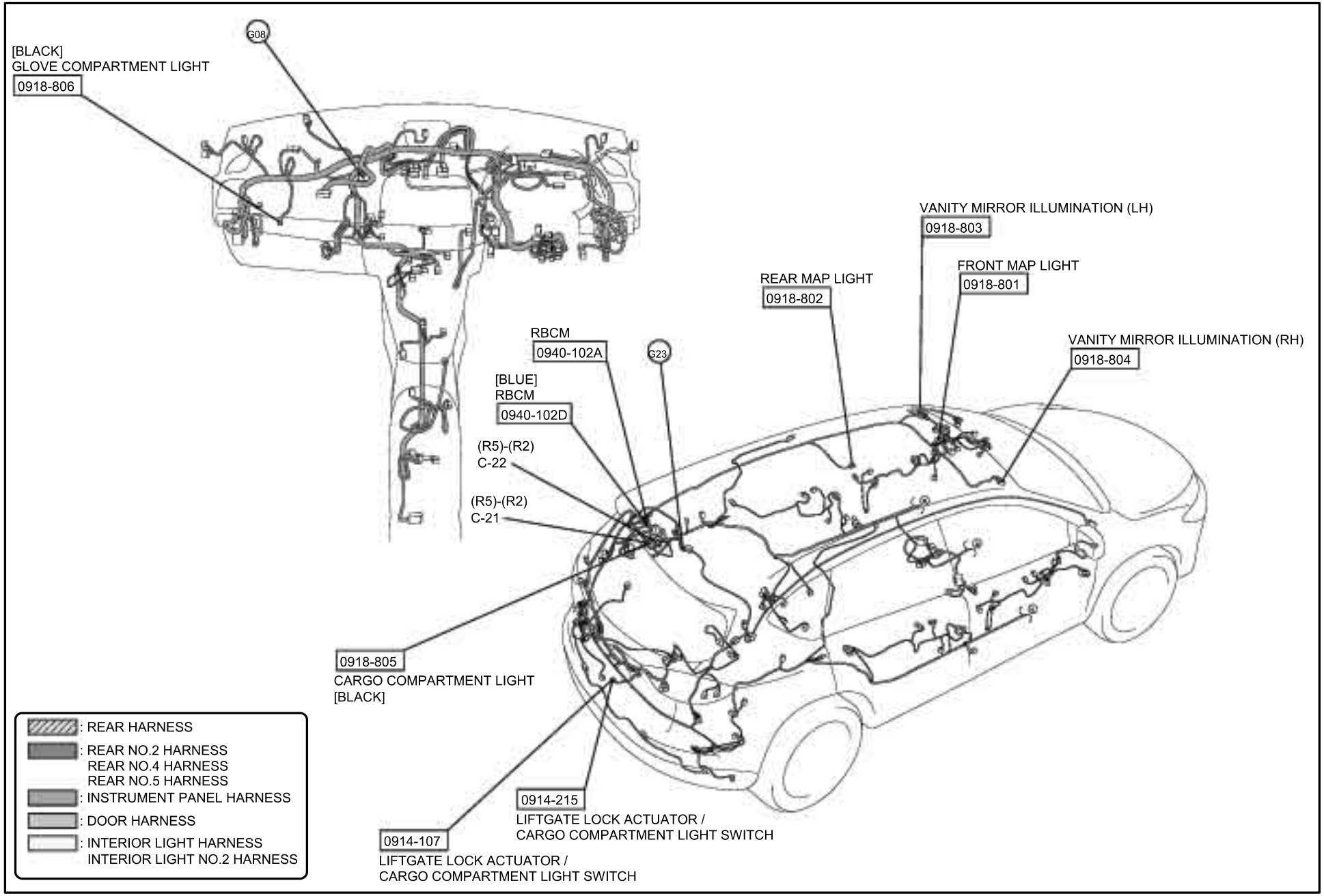

HEADLIGHT MANUAL LEVELING SYSTEM

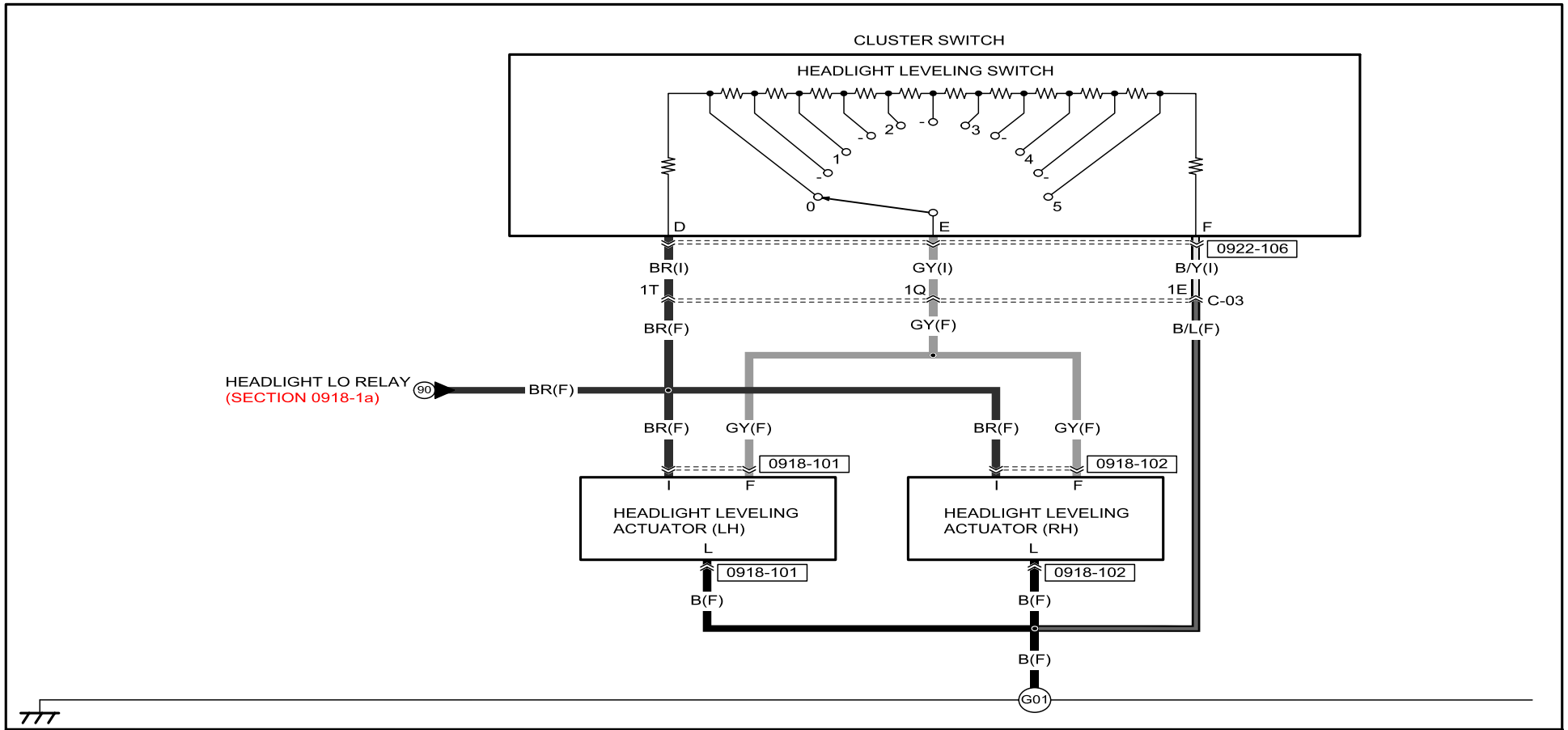

0918-101
FRONT COMBINATION LIGHT (LH) /
HEADLIGHT LEVELING ACTUATOR (LH)

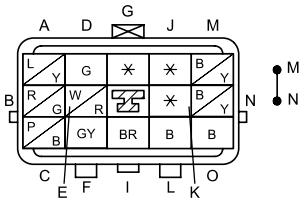

(WITH HEADLIGHT MANUAL LEVELING SYSTEM)

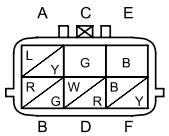

(WITHOUT HEADLIGHT MANUAL LEVELING SYSTEM)

0918-102
FRONT COMBINATION LIGHT (RH) /
HEADLIGHT LEVELING ACTUATOR (RH)

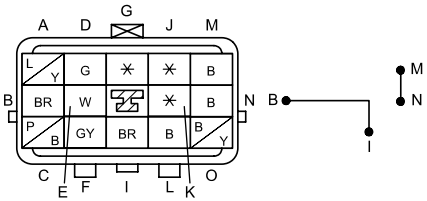

(WITH HEADLIGHT MANUAL LEVELING SYSTEM)

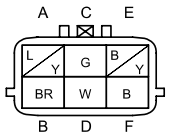

(WITHOUT HEADLIGHT MANUAL LEVELING SYSTEM)

0922-106
CLUSTER SWITCH

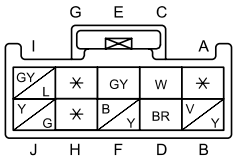

Refer to 00F section for the FUSE BOX, 00C section for the PCM CONNECTOR and COMMON CONNECTOR LIST.

HEADLIGHT MANUAL LEVELING SYSTEM

0918-9

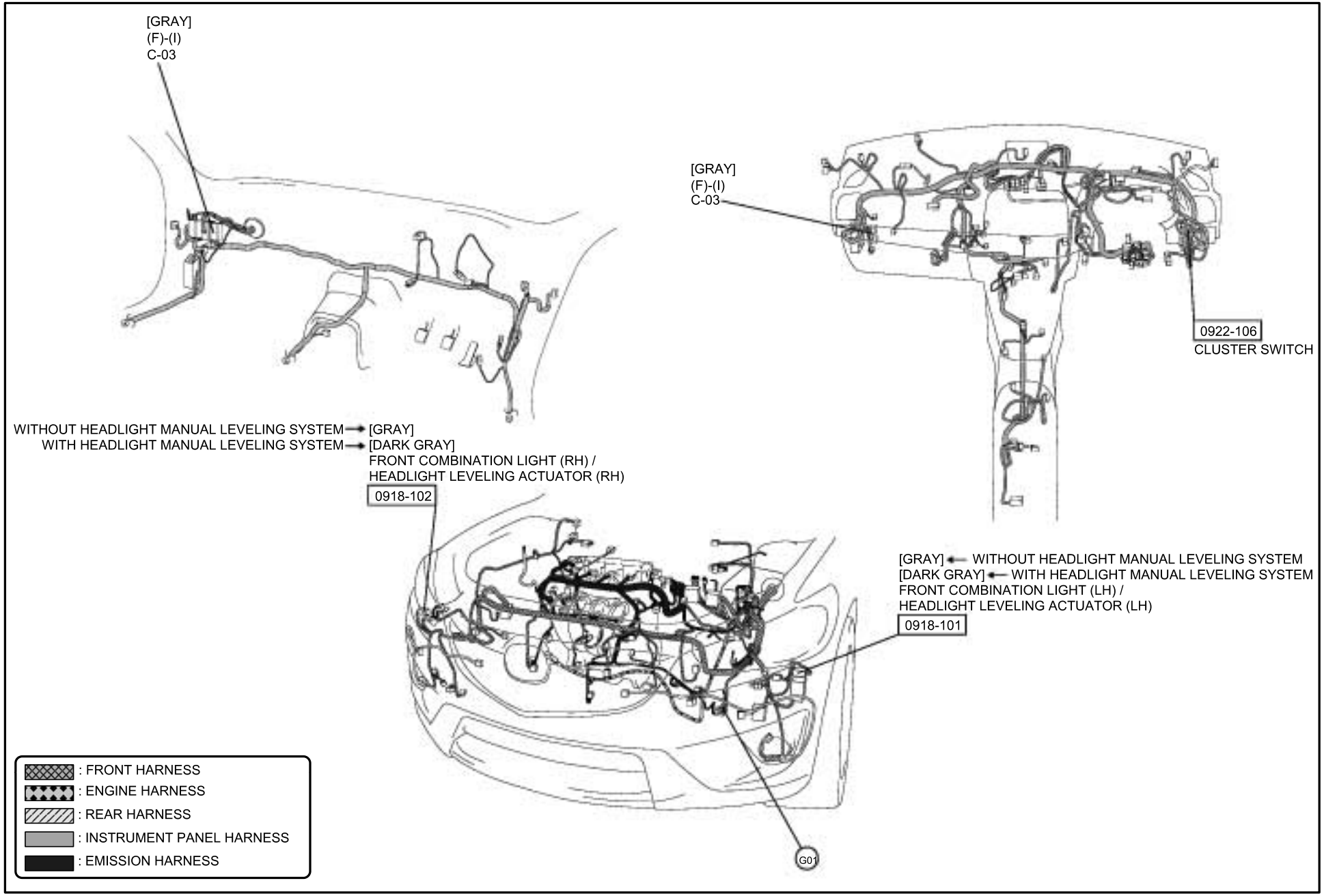

AFS (ADAPTIVE FRONT LIGHTING SYSTEM) / HEADLIGHT AUTO LEVELING SYSTEM

0918-10

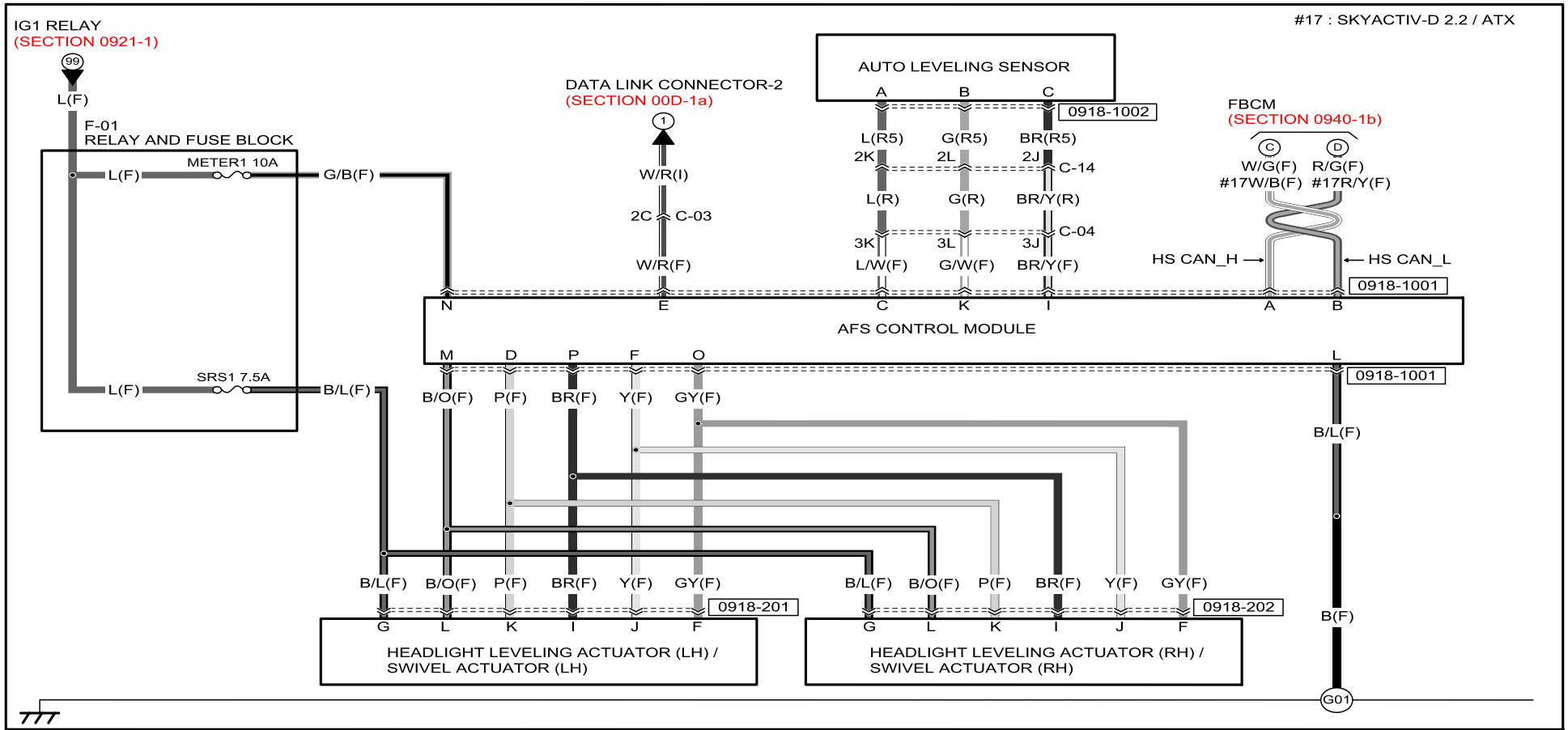

0918-1001
AFS CONTROL MODULE

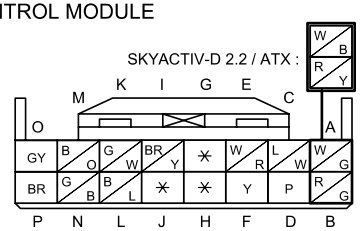

0918-1002
AUTO LEVELING SENSOR

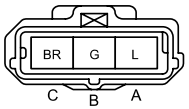

0918-201
FRONT COMBINATION LIGHT (LH) /
HEADLIGHT LEVELING ACTUATOR (LH) /
SWIVEL ACTUATOR (LH)

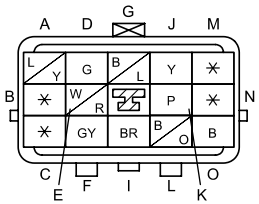

0918-202
FRONT COMBINATION LIGHT (RH) /
HEADLIGHT LEVELING ACTUATOR (RH) /
SWIVEL ACTUATOR (RH)

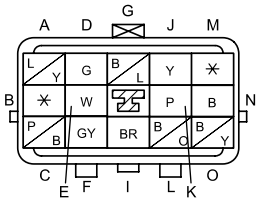

Refer to 00F section for the FUSE BOX, 00C section for the PCM CONNECTOR and COMMON CONNECTOR LIST.

AFS (ADAPTIVE FRONT LIGHTING SYSTEM) / HEADLIGHT AUTO LEVELING SYSTEM

0918-10

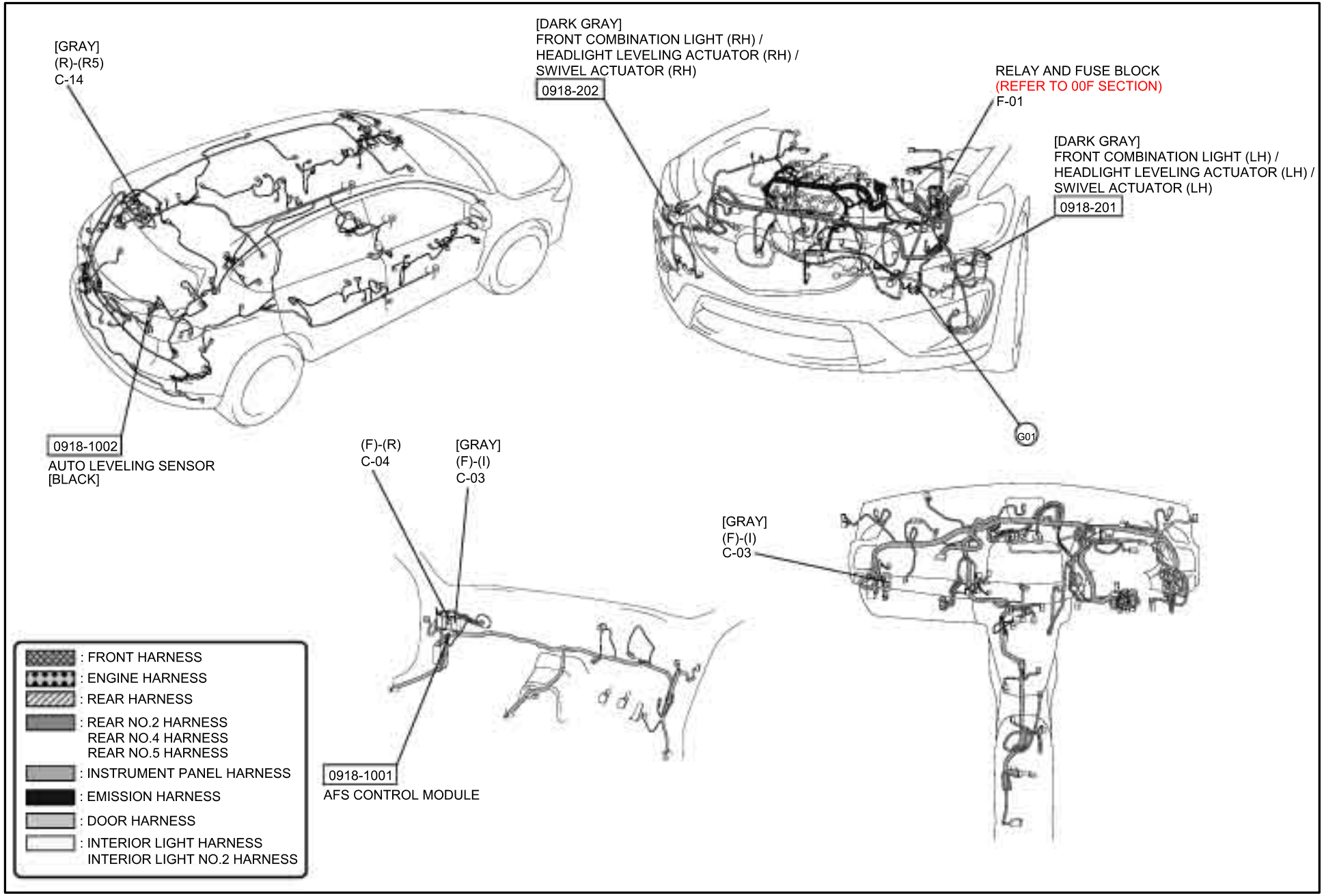

STEERING ANGLE SENSOR

0918-11

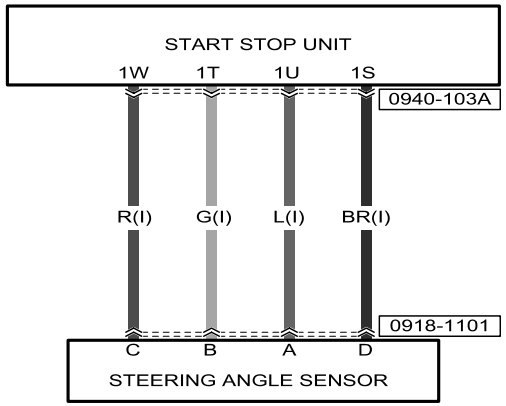

0918-1101
STEERING ANGLE SENSOR

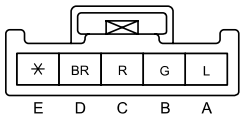

0940-103A
START STOP UNIT

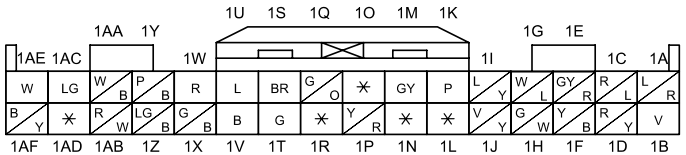

Refer to 00F section for the FUSE BOX, 00C section for the PCM CONNECTOR and COMMON CONNECTOR LIST.

STEERING ANGLE SENSOR

0918-11

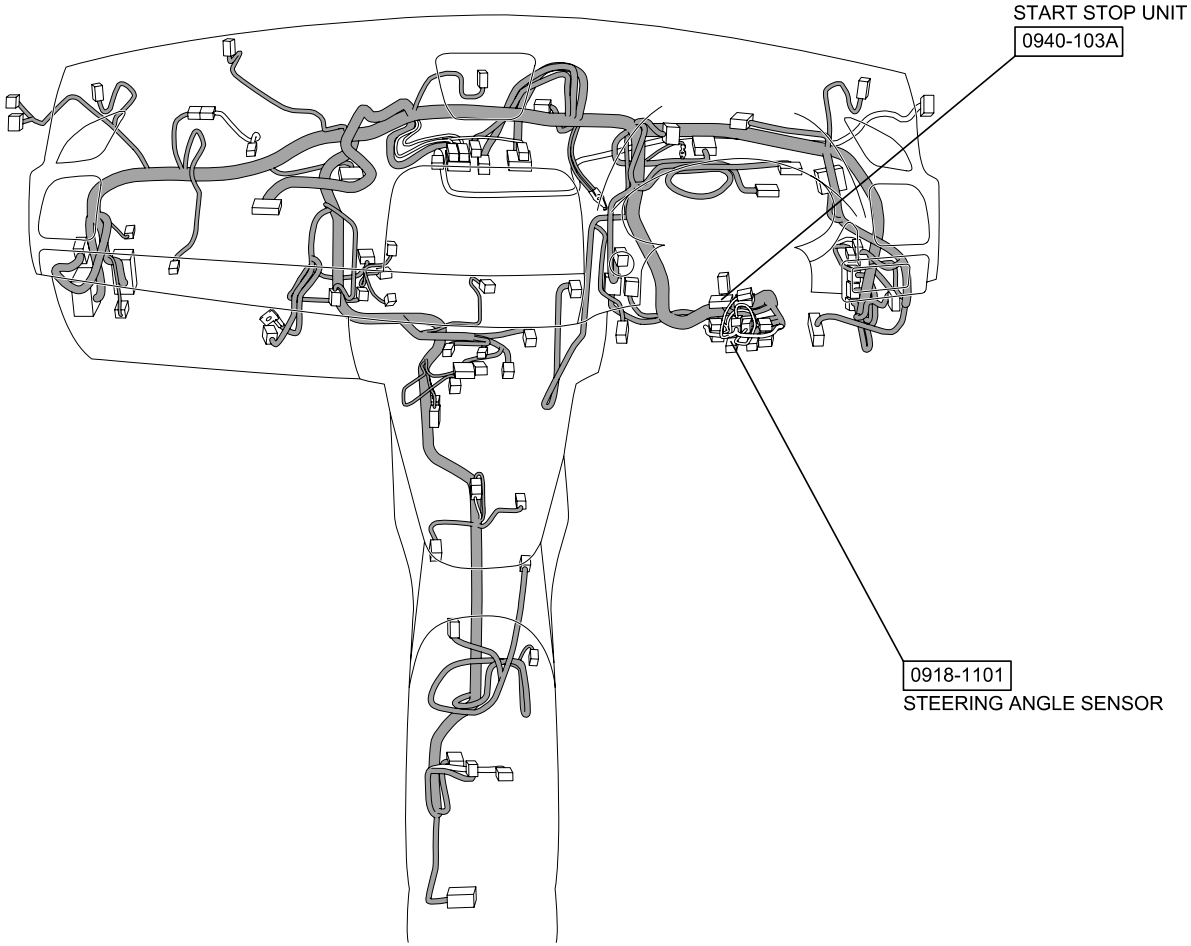

: INSTRUMENT PANEL HARNESS

HIGH BEAM CONTROL (HBC) SYSTEM

0918-12

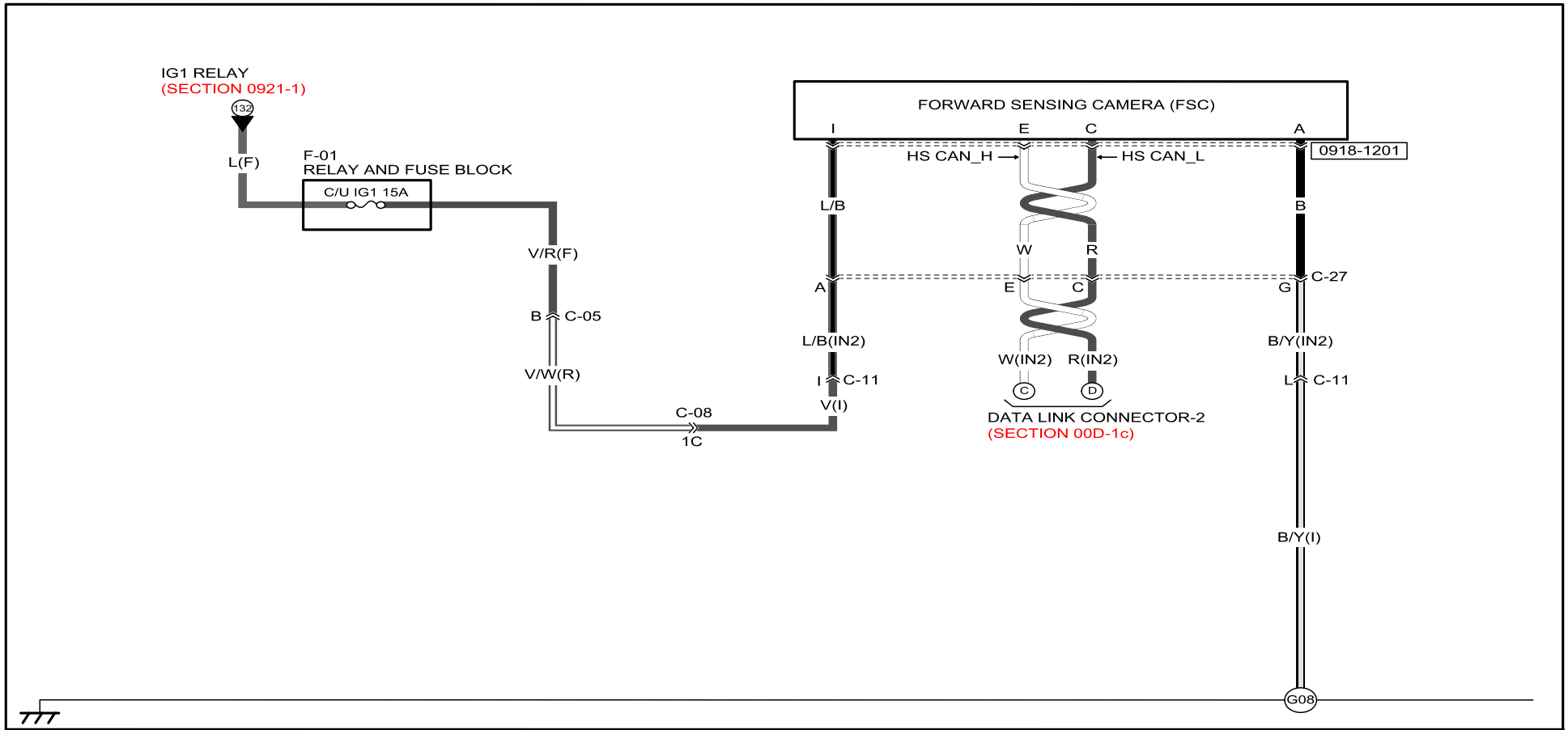

0918-1201
FORWARD SENSING CAMERA (FSC)

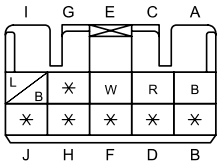

Refer to 00F section for the FUSE BOX, 00C section for the PCM CONNECTOR and COMMON CONNECTOR LIST.

HIGH BEAM CONTROL (HBC) SYSTEM

0918-12

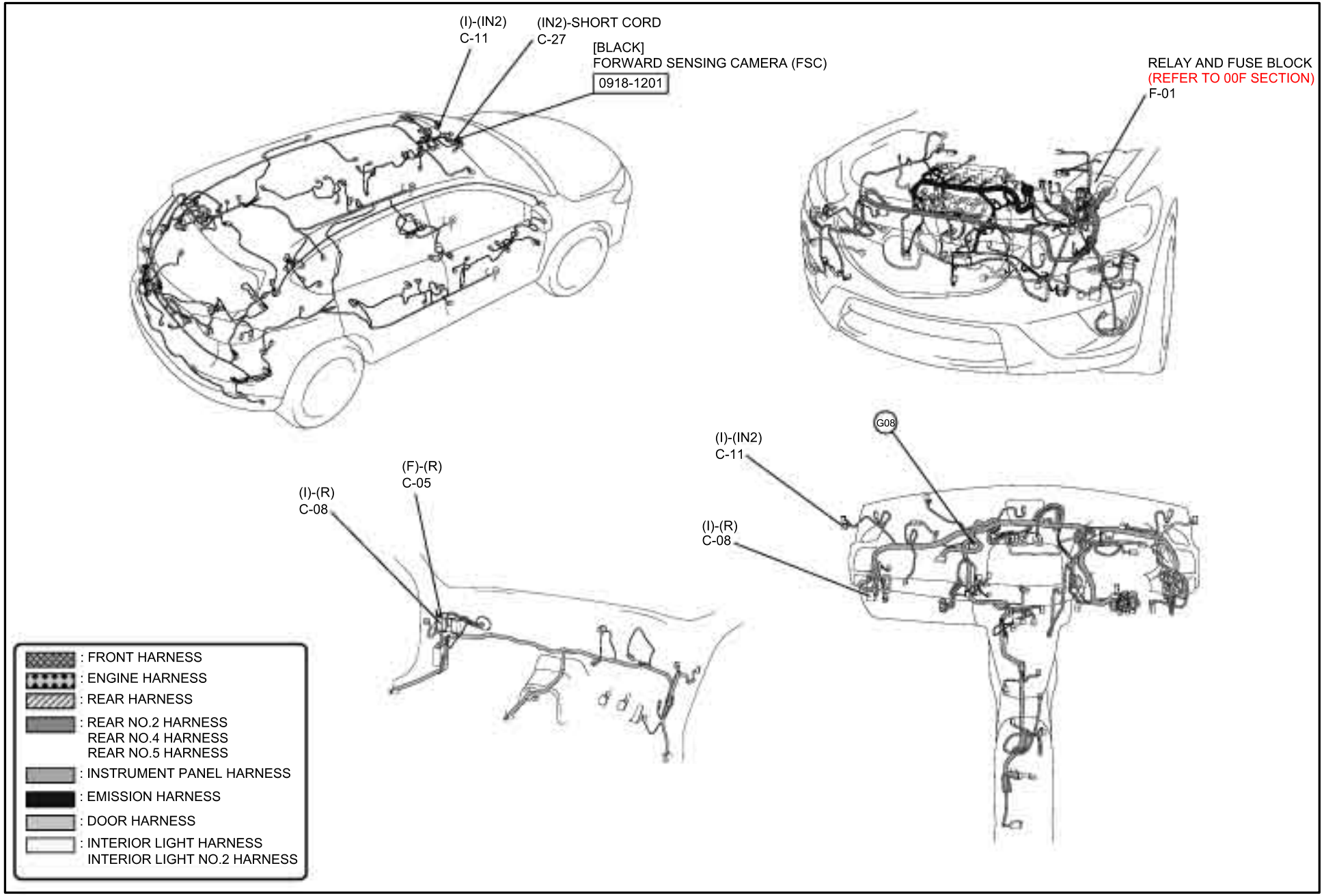

WIPER AND WASHER

0919-1a

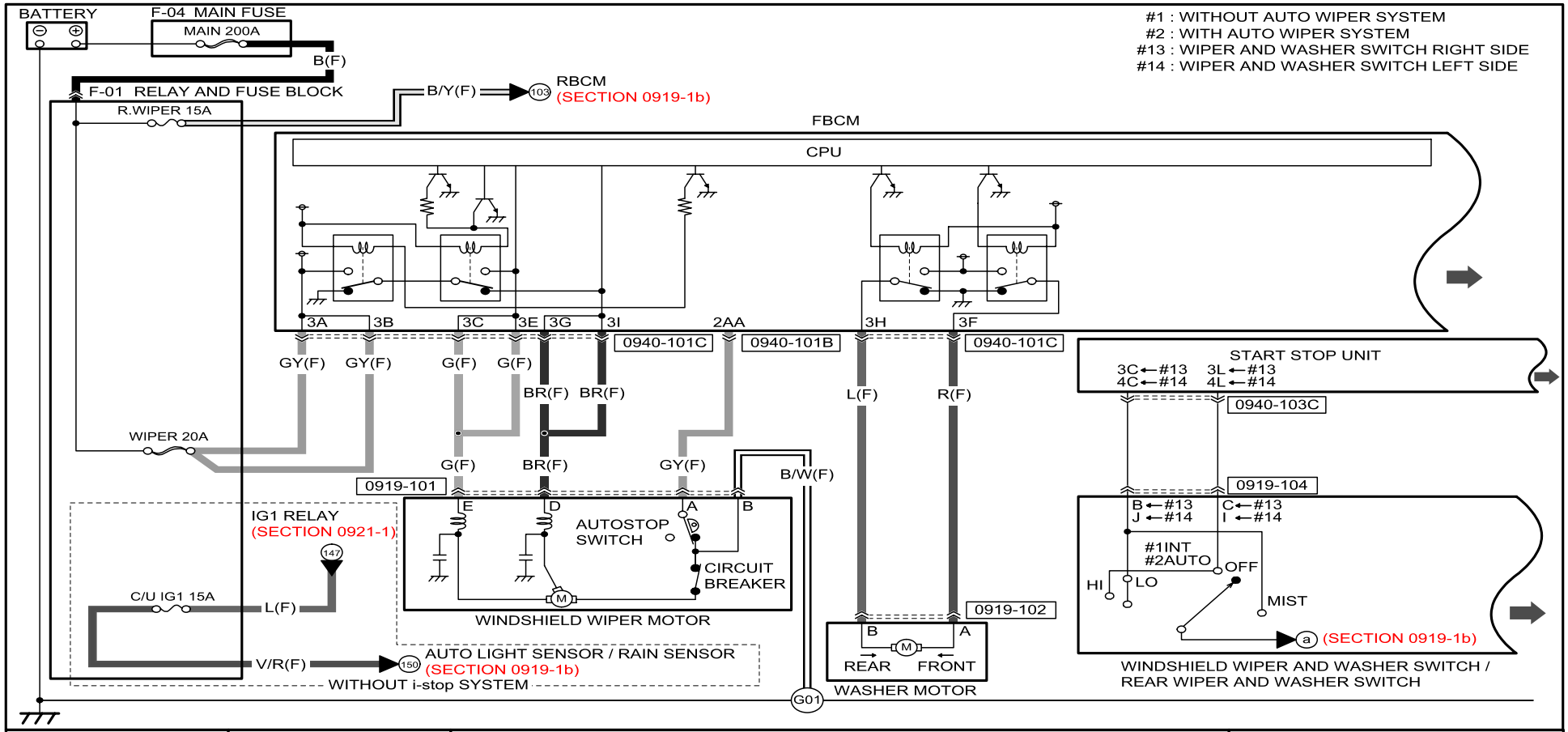

Refer to 00F section for the FUSE BOX, 00C section for the PCM CONNECTOR and COMMON CONNECTOR LIST.

WIPER AND WASHER

0919-1a

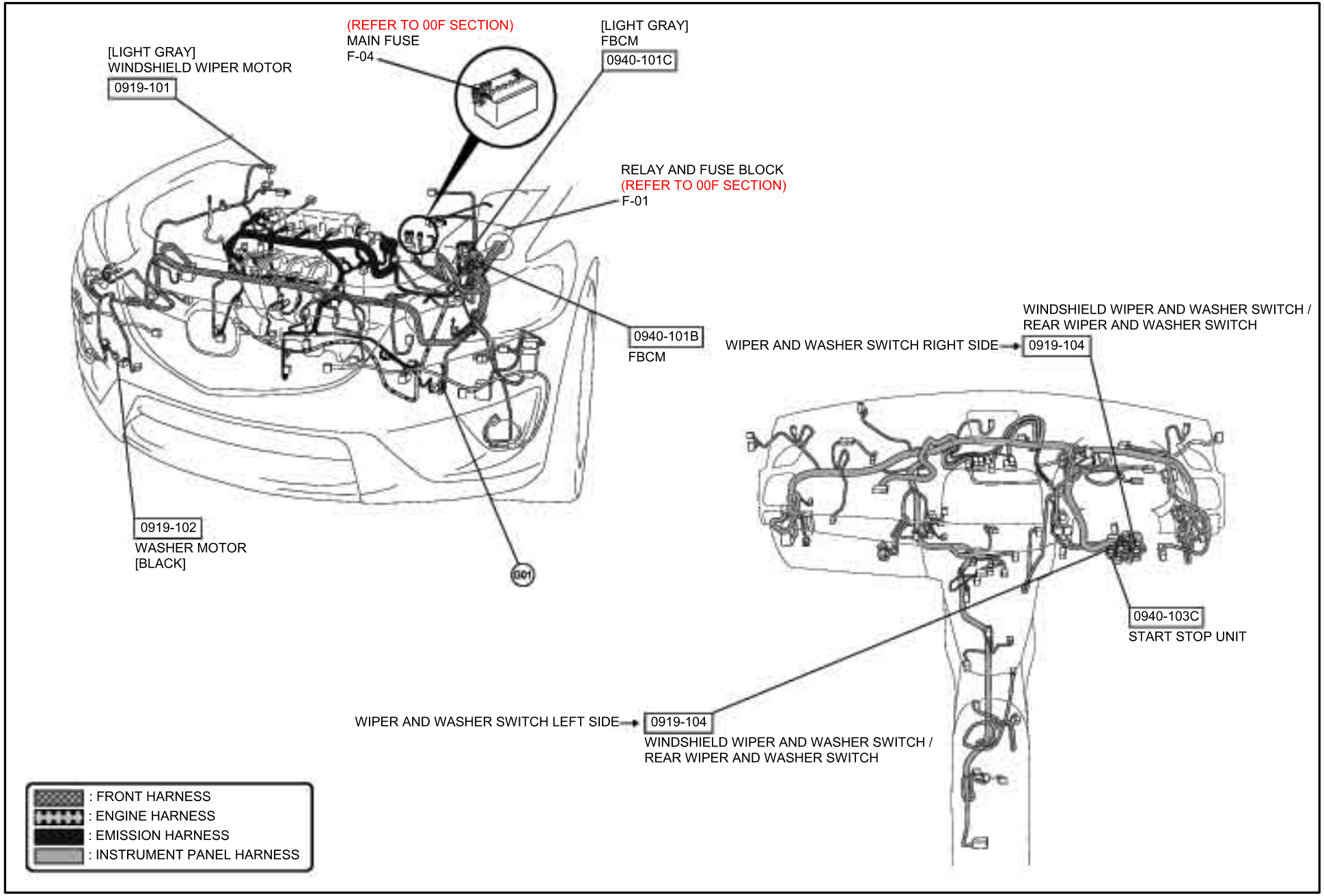

WIPER AND WASHER

0919-1b

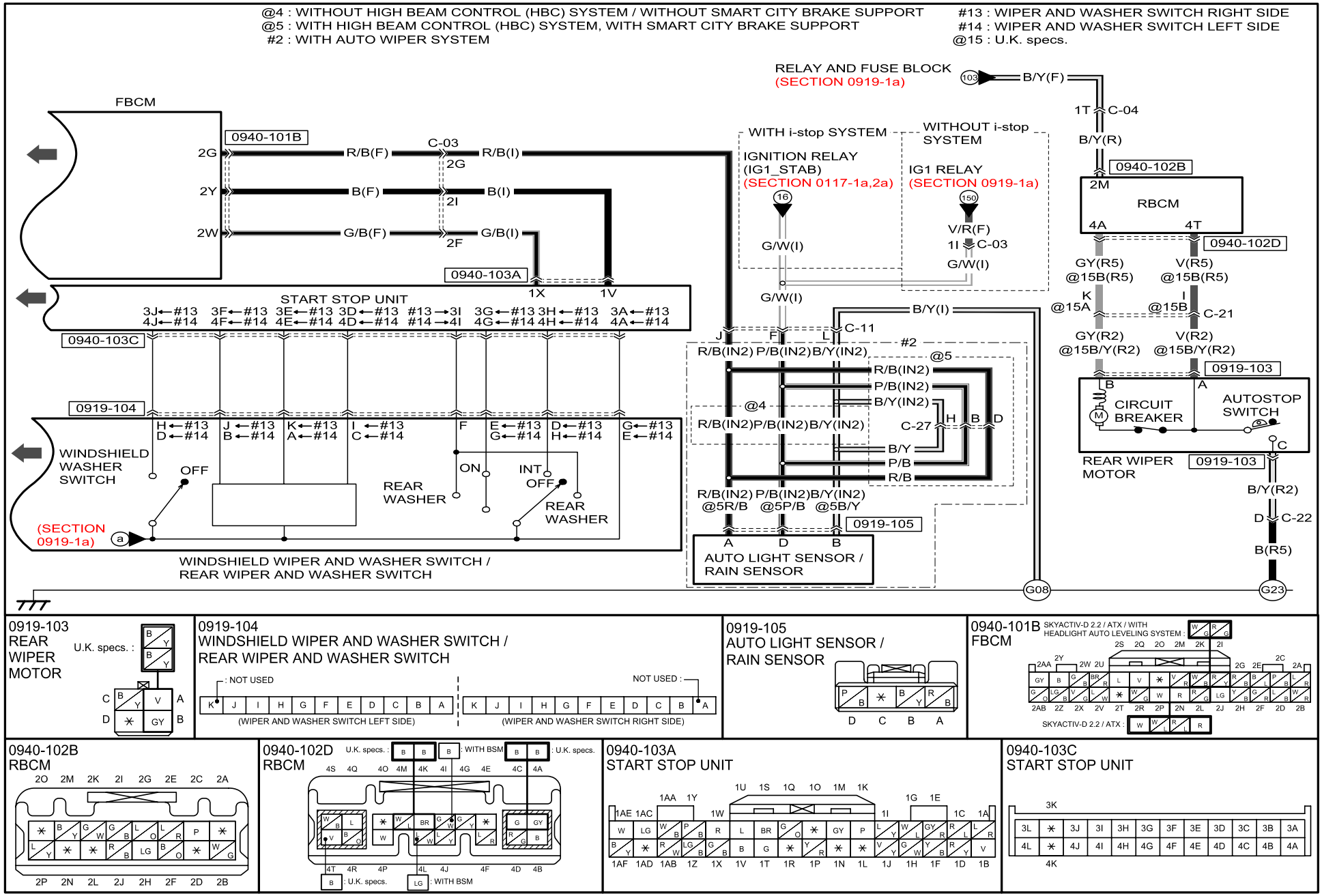

Refer to 00F section for the FUSE BOX, 00C section for the PCM CONNECTOR and COMMON CONNECTOR LIST.

WIPER AND WASHER

0919-1b

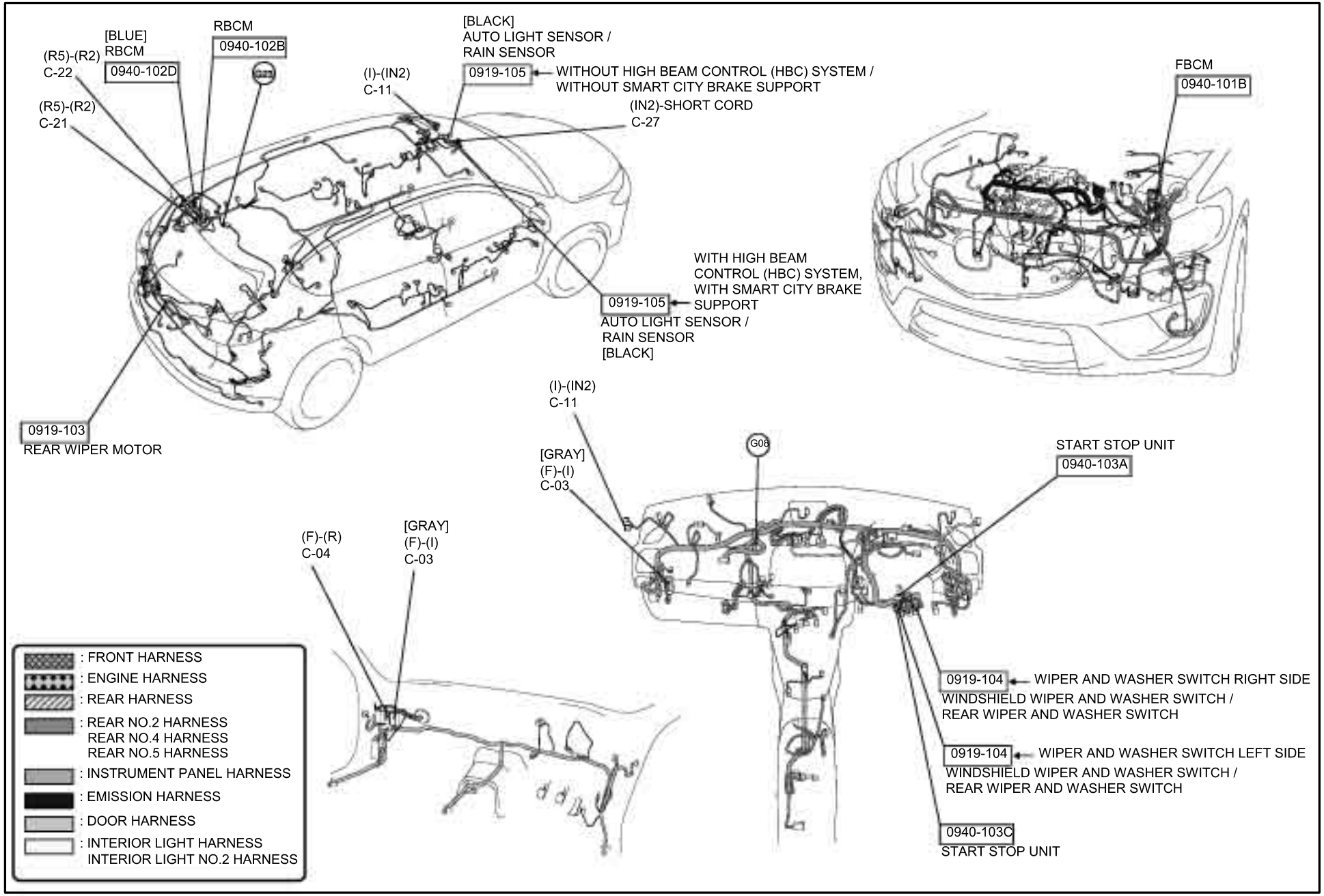

HEADLIGHT CLEANER

0919-2

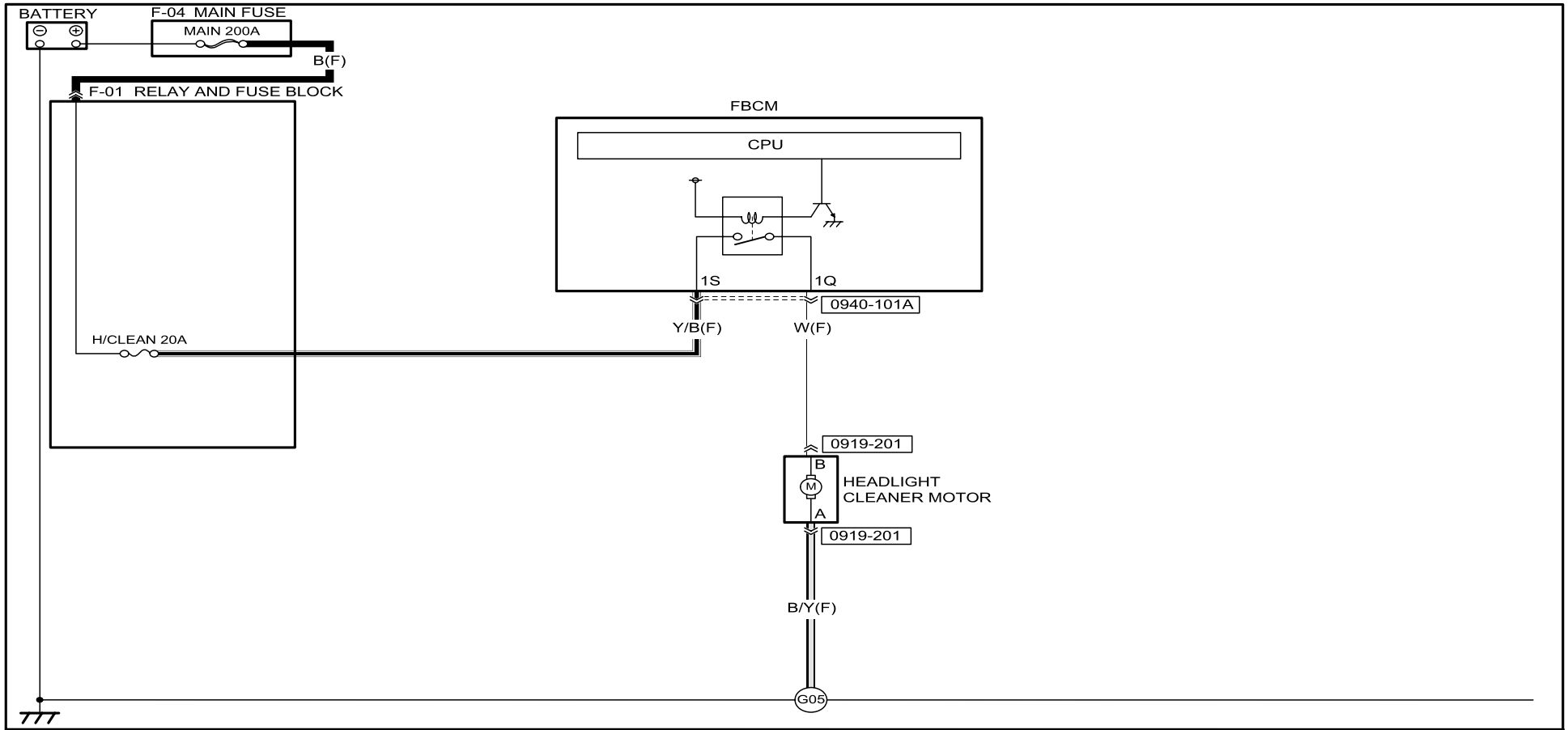

0919-201
HEADLIGHT CLEANER
MOTOR

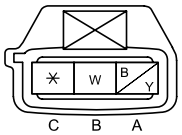

0940-101A
FBCM

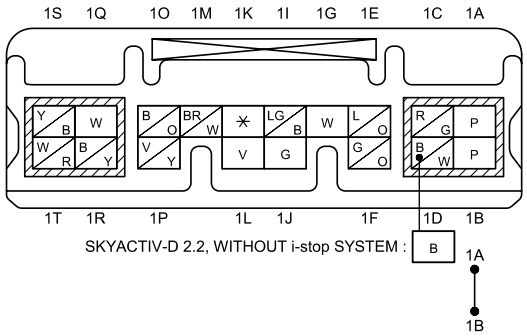

Refer to 00F section for the FUSE BOX, 00C section for the PCM CONNECTOR and COMMON CONNECTOR LIST.

HEADLIGHT CLEANER

0919-2

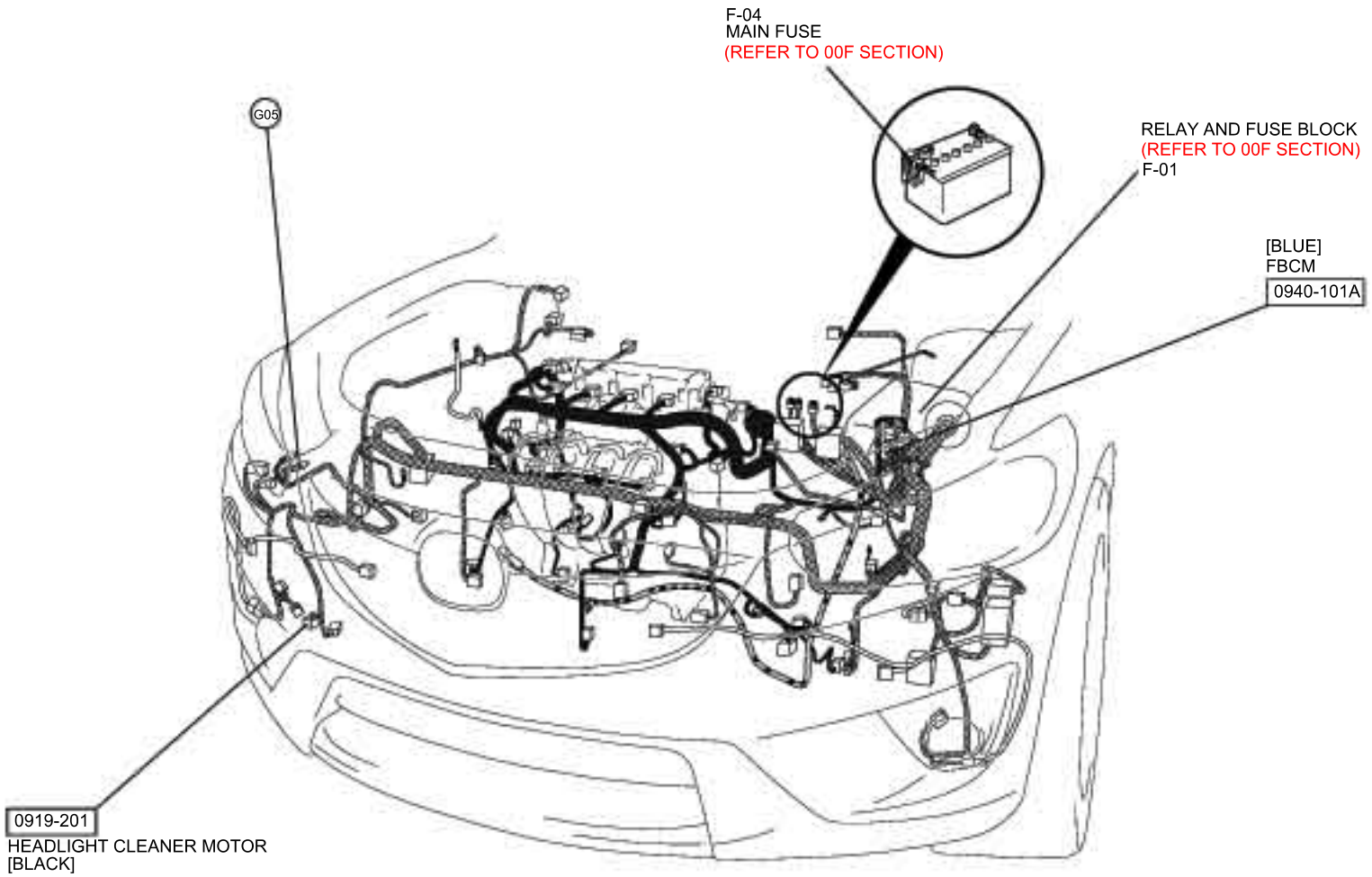

: FRONT HARNESS
: ENGINE HARNESS
: EMISSION HARNESS

ACCESSORY SOCKET

0920-1

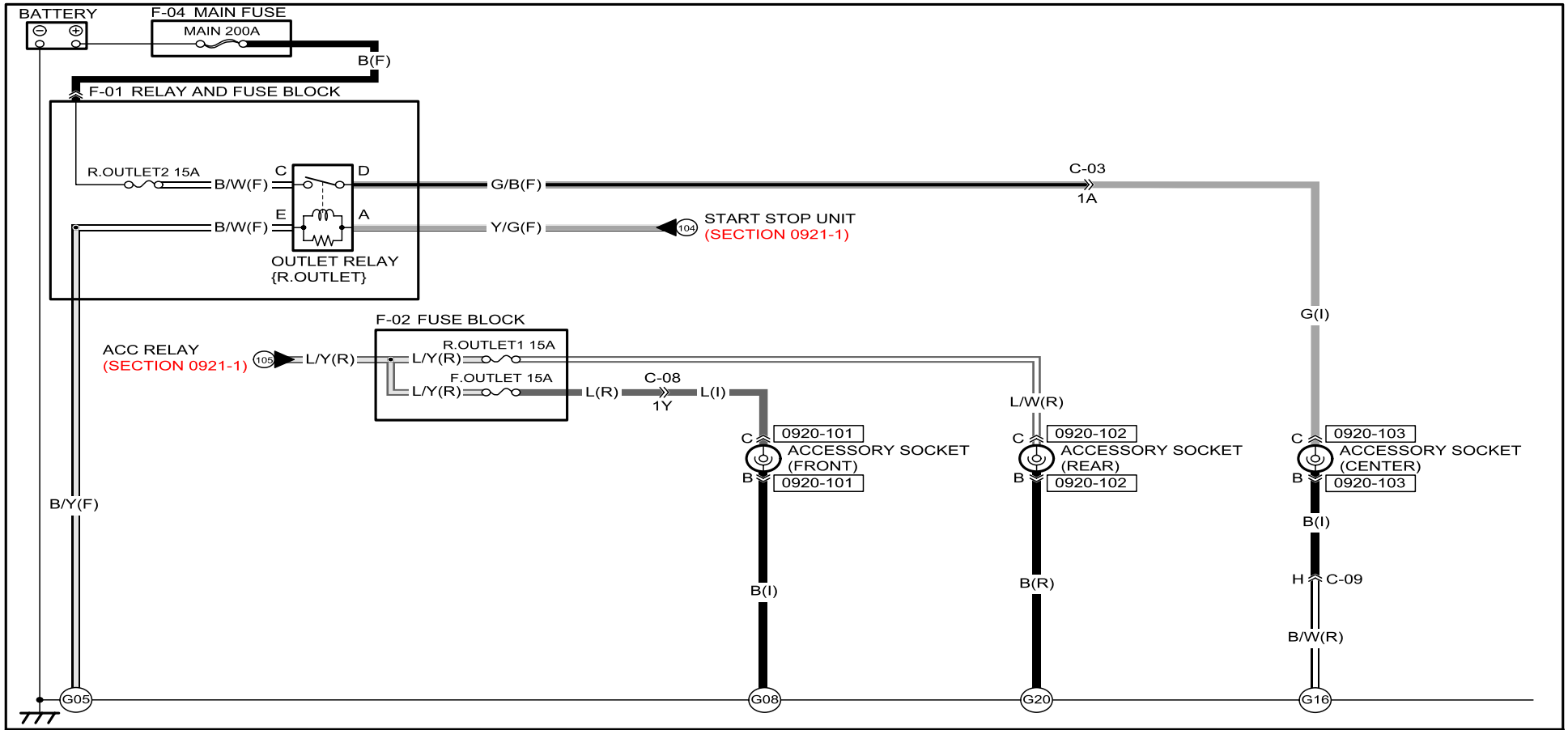

0920-101 ACCESSORY SOCKET (FRONT)	0920-102 ACCESSORY SOCKET (REAR)	0920-103 ACCESSORY SOCKET (CENTER)				
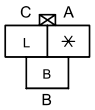	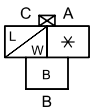	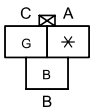				

Refer to 00F section for the FUSE BOX, 00C section for the PCM CONNECTOR and COMMON CONNECTOR LIST.

ACCESSORY SOCKET

0920-1

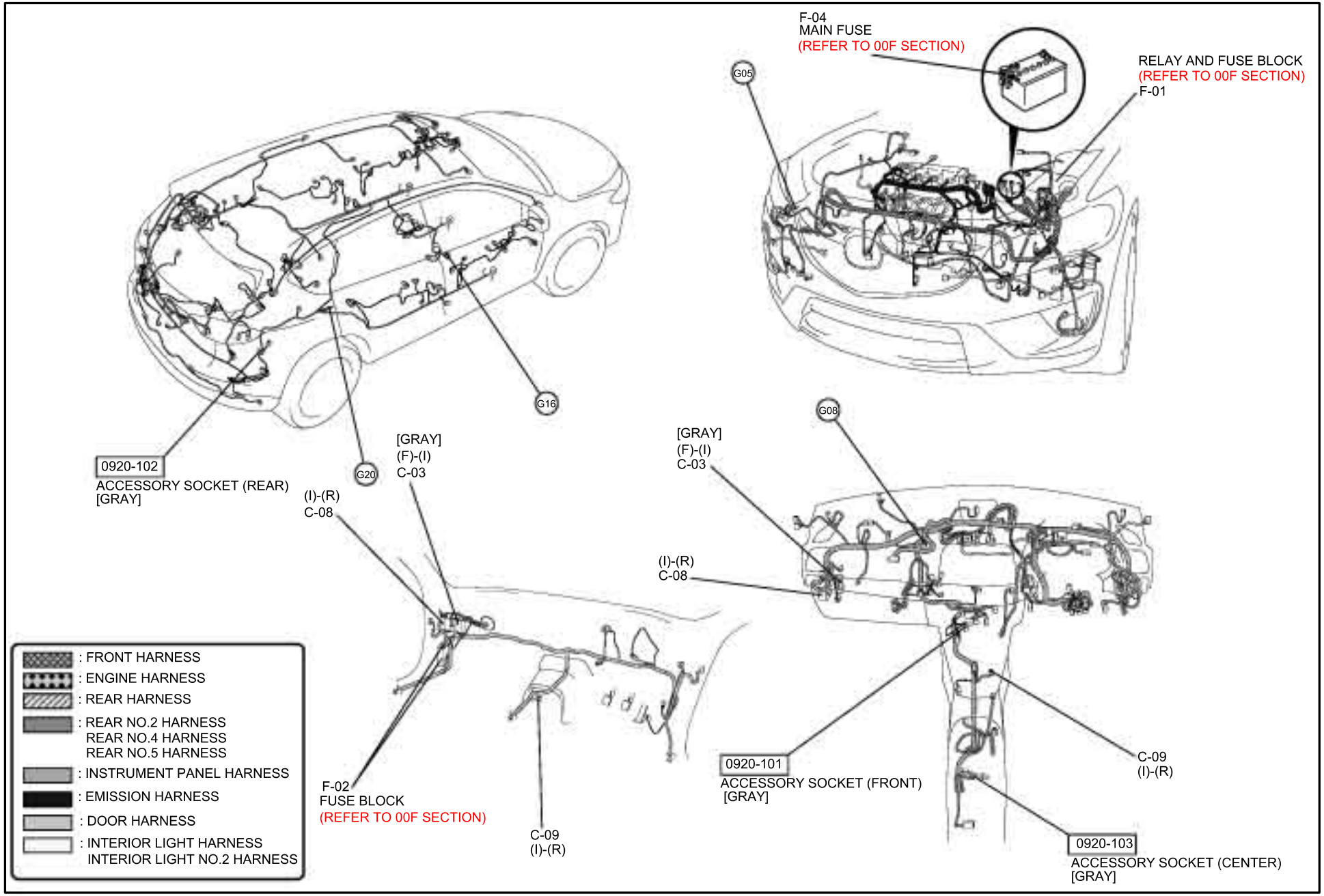

AUDIO SYSTEM (WITHOUT Bose® TYPE AUDIO)

0920-2a

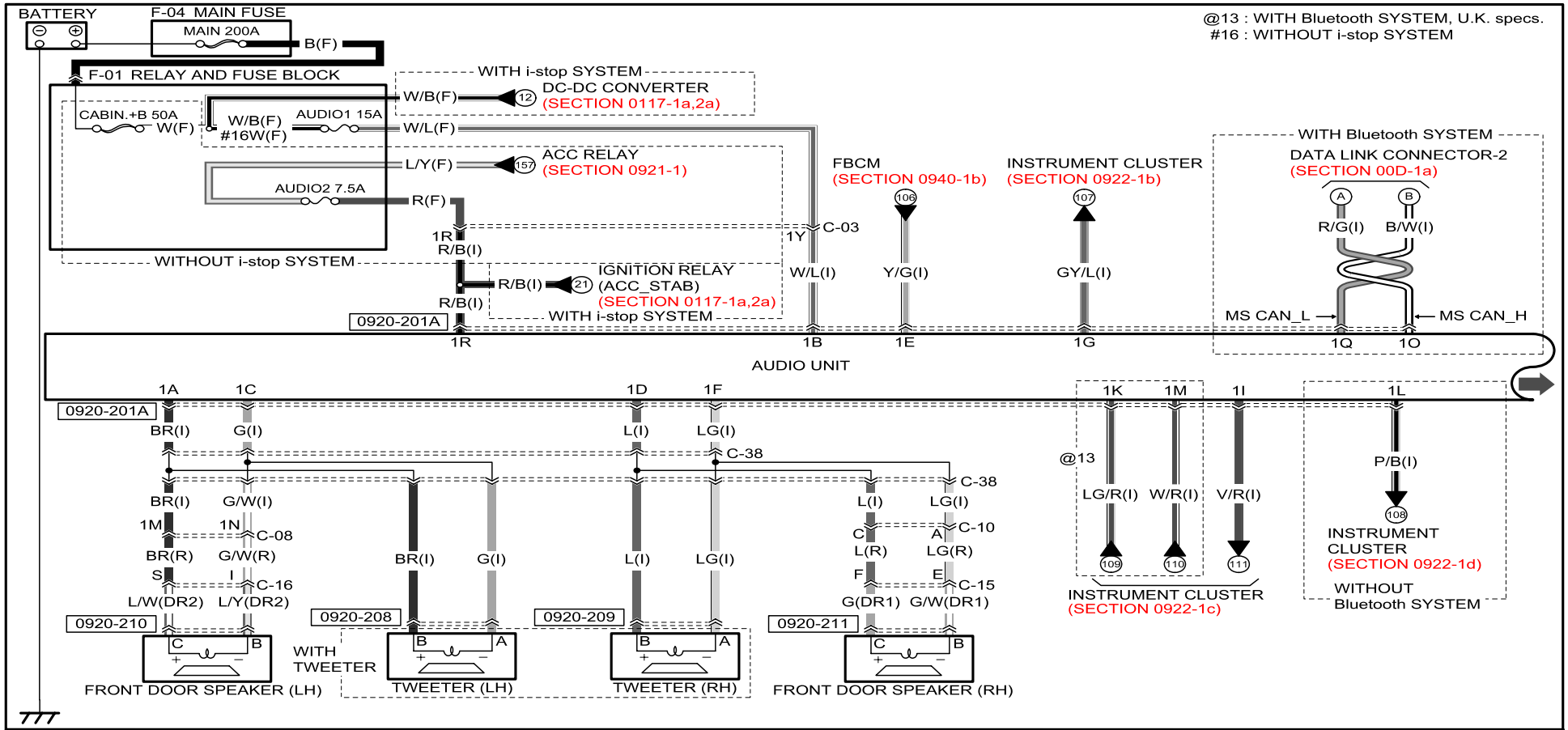

0920-201A
AUDIO UNIT

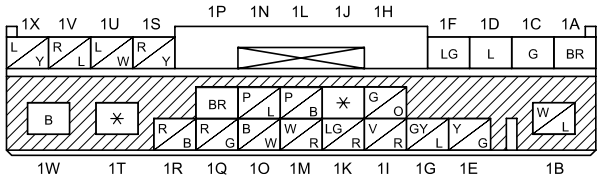

0920-208
TWEETER (LH)

0920-209
TWEETER (RH)

0920-210
FRONT DOOR SPEAKER
(LH)

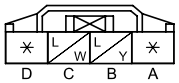

0920-211
FRONT DOOR SPEAKER
(RH)

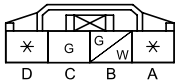

Refer to 00F section for the FUSE BOX, 00C section for the PCM CONNECTOR and COMMON CONNECTOR LIST.

AUDIO SYSTEM (WITHOUT Bose® TYPE AUDIO)

0920-2a

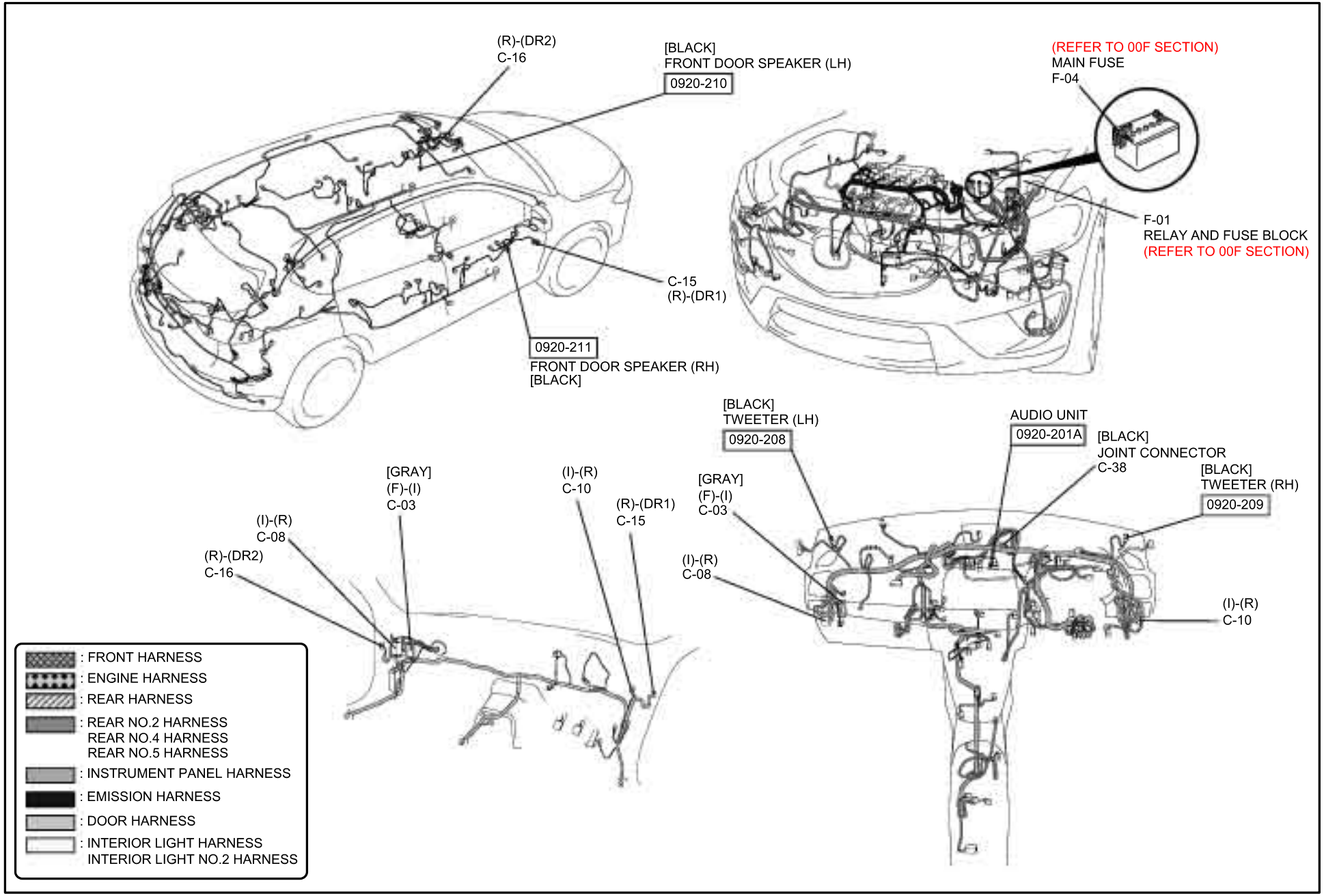

AUDIO SYSTEM (WITHOUT Bose® TYPE AUDIO)

0920-2b

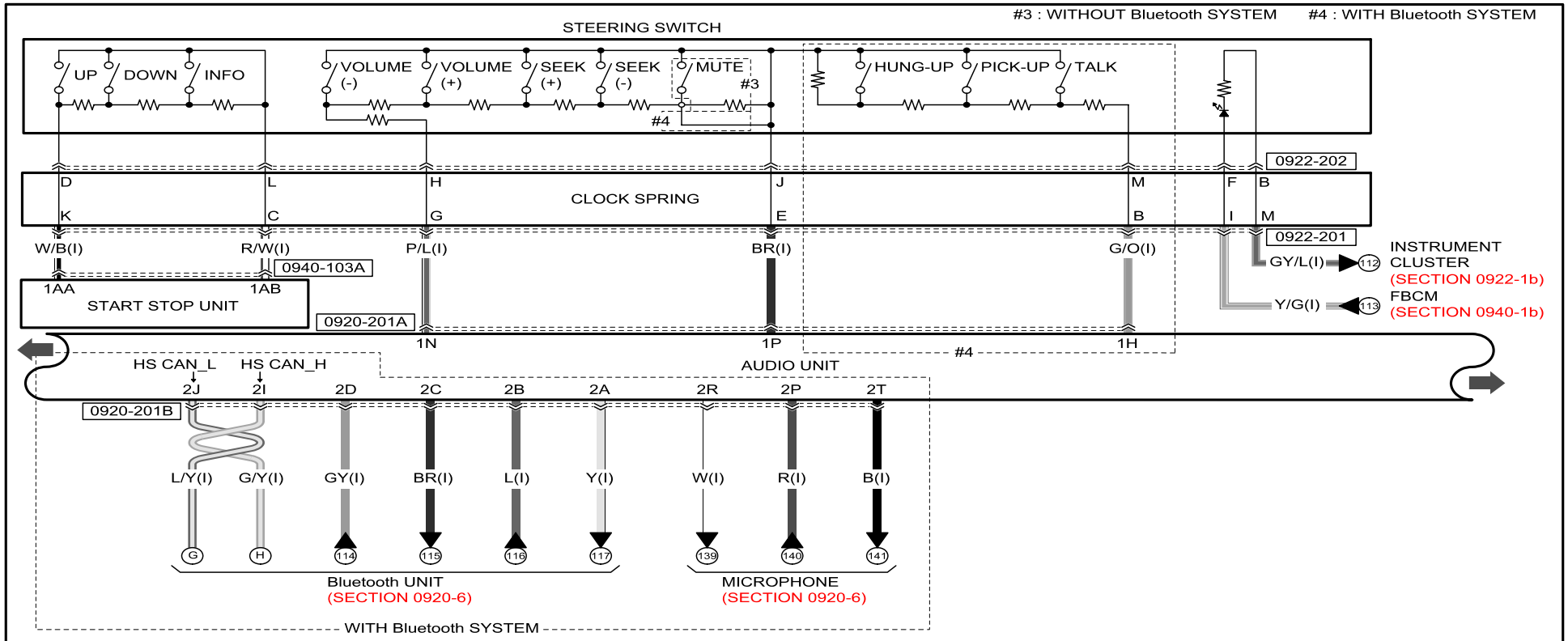

0920-201A
AUDIO UNIT

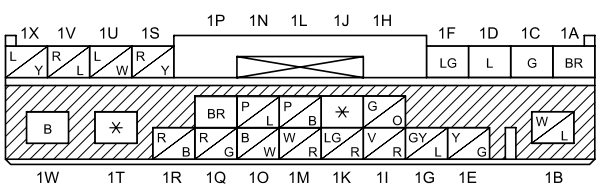

0920-201B
AUDIO UNIT

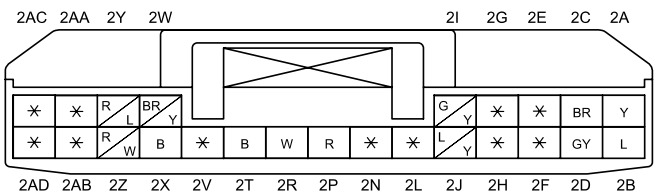

0922-201
CLOCK SPRING

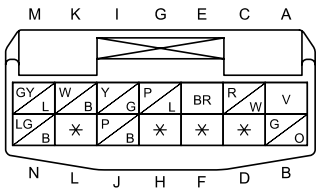

0922-202
CRUISE CONTROL SWITCH / STEERING SWITCH / CLOCK SPRING

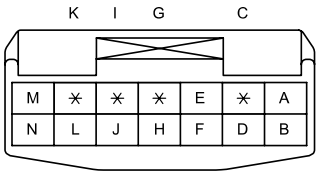

0940-103A
START STOP UNIT

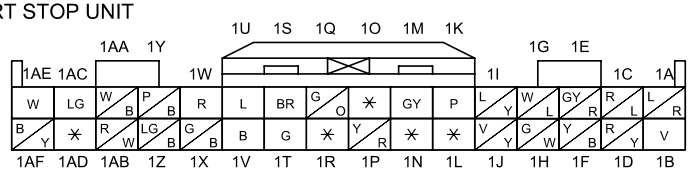

Refer to 00F section for the FUSE BOX, 00C section for the PCM CONNECTOR and COMMON CONNECTOR LIST.

AUDIO SYSTEM (WITHOUT Bose® TYPE AUDIO)

0920-2b

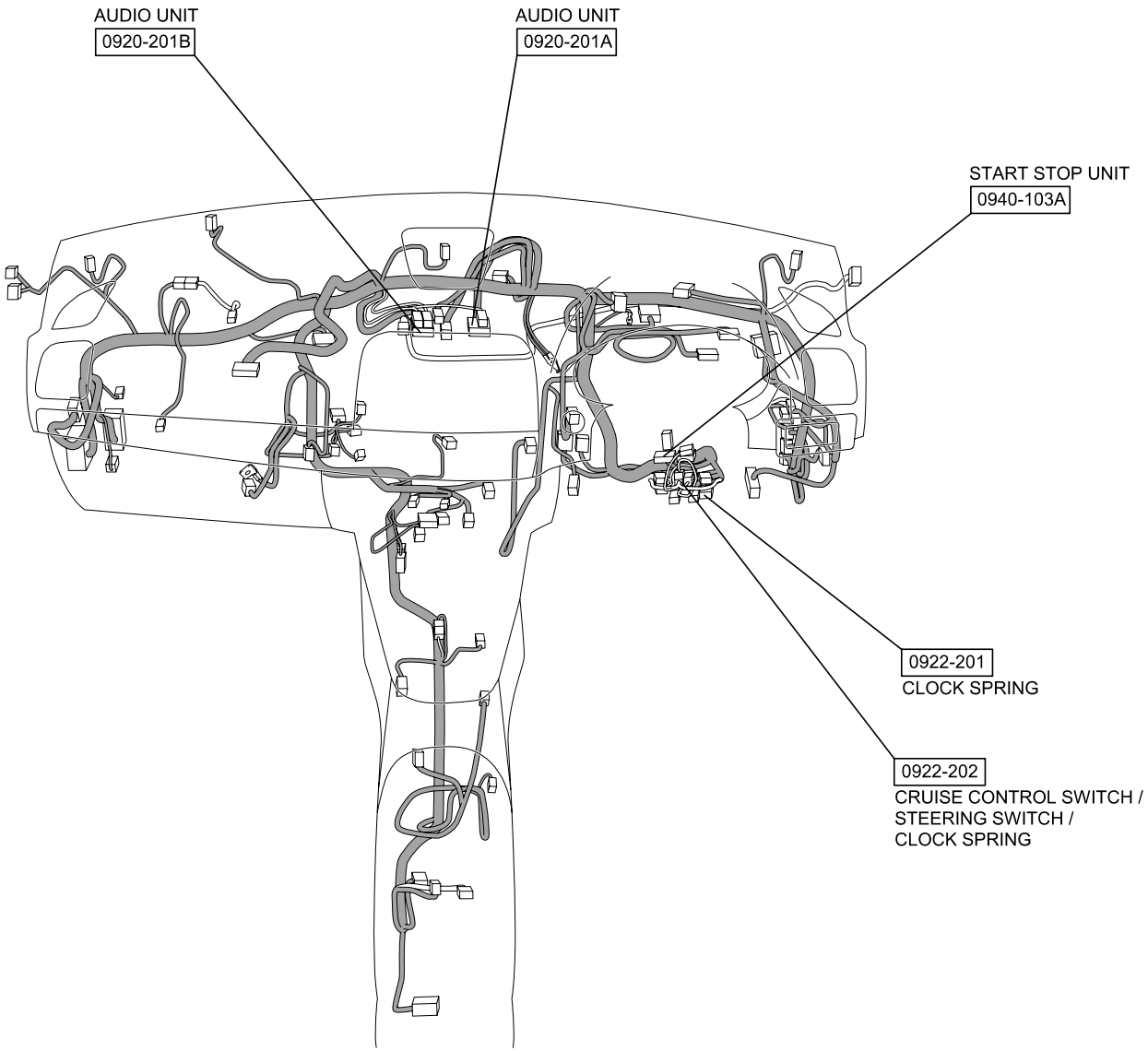

: INSTRUMENT PANEL HARNESS

AUDIO SYSTEM (WITHOUT Bose® TYPE AUDIO)

0920-2c

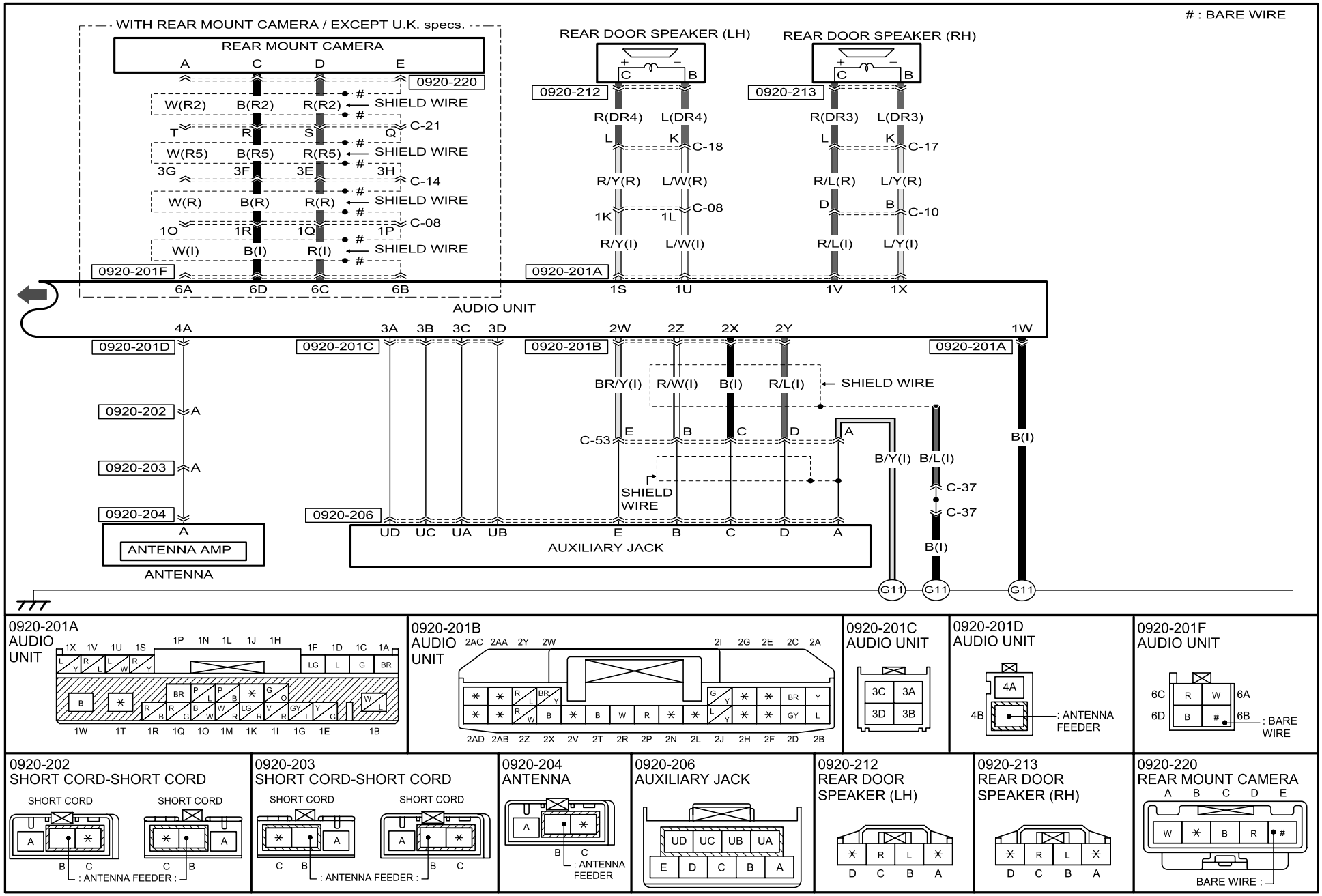

Refer to 00F section for the FUSE BOX, 00C section for the PCM CONNECTOR and COMMON CONNECTOR LIST.

AUDIO SYSTEM (WITHOUT Bose® TYPE AUDIO)

0920-2c

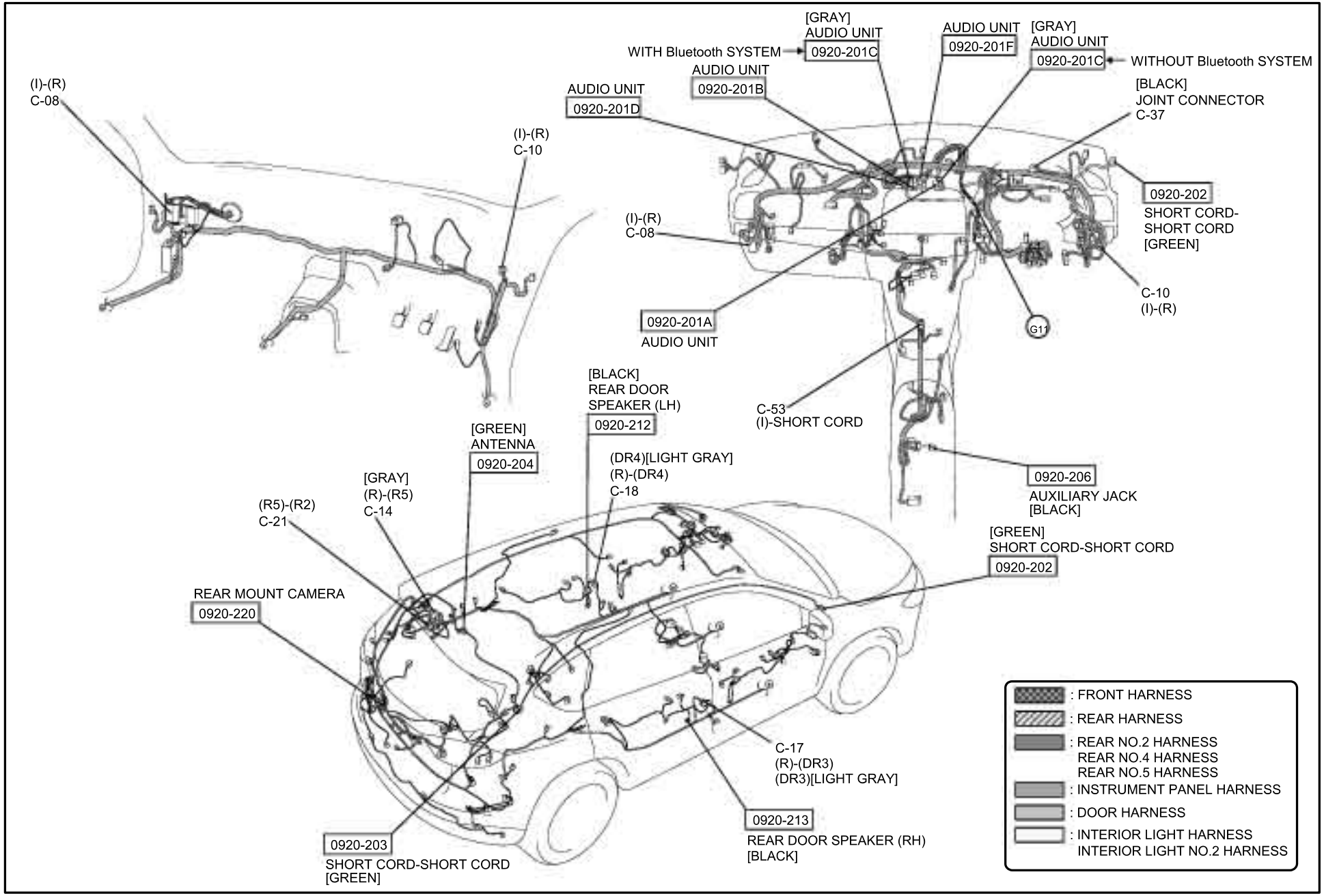

AUDIO SYSTEM (Bose® TYPE AUDIO)

0920-3a

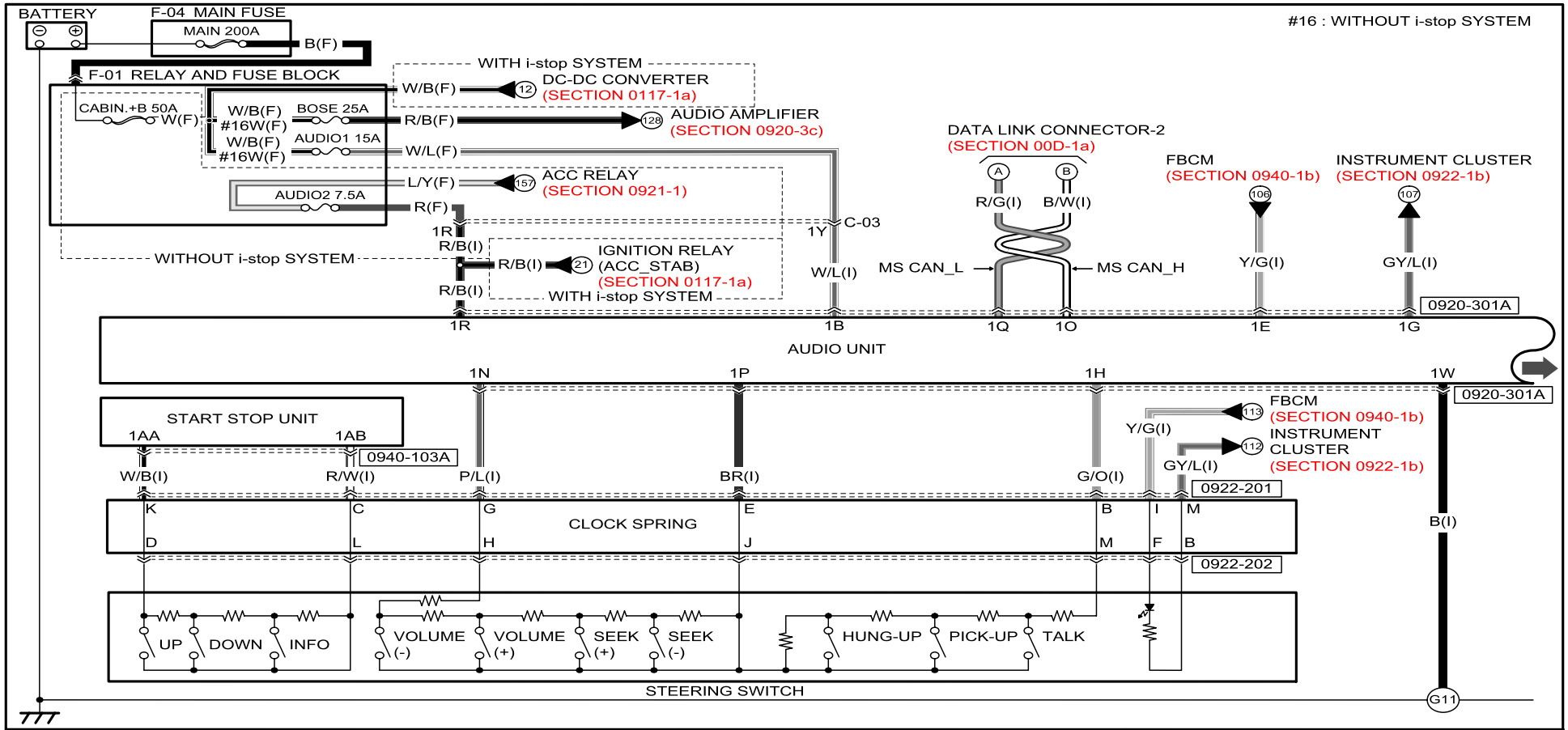

0920-301A
AUDIO UNIT

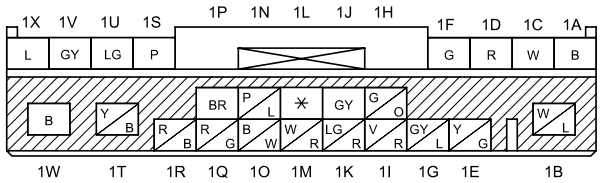

0940-103A
START STOP UNIT

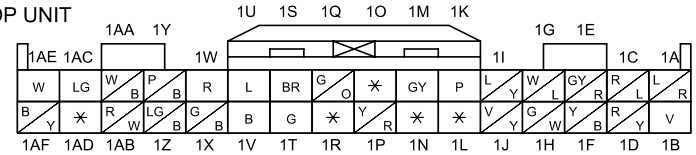

0922-201
CLOCK SPRING

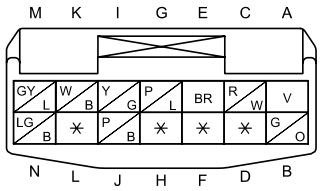

0922-202
CRUISE CONTROL SWITCH /
STEERING SWITCH /
CLOCK SPRING

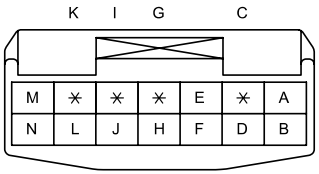

Refer to 00F section for the FUSE BOX, 00C section for the PCM CONNECTOR and COMMON CONNECTOR LIST.

AUDIO SYSTEM (Bose® TYPE AUDIO)

0920-3a

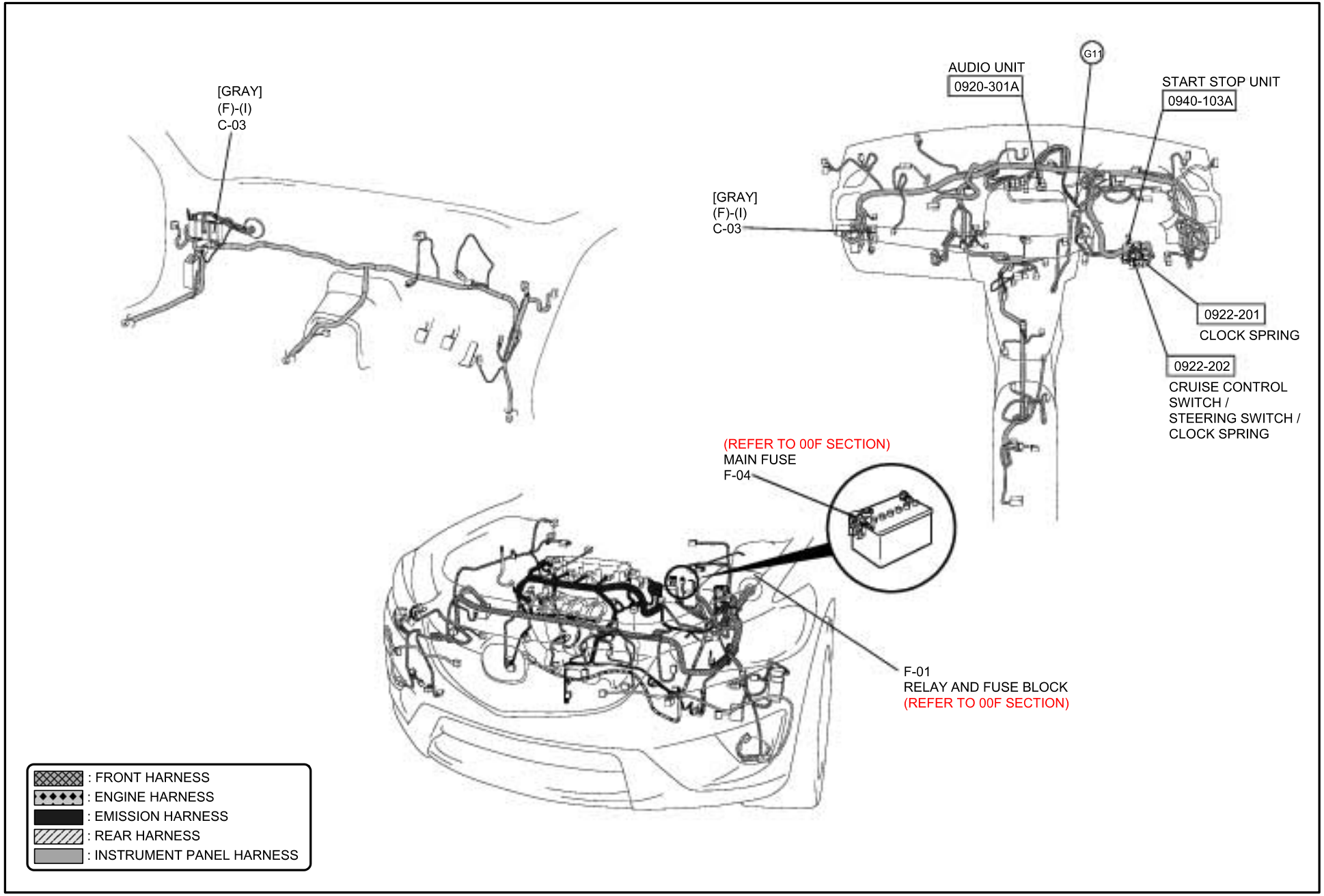

AUDIO SYSTEM (Bose® TYPE AUDIO)

0920-3b

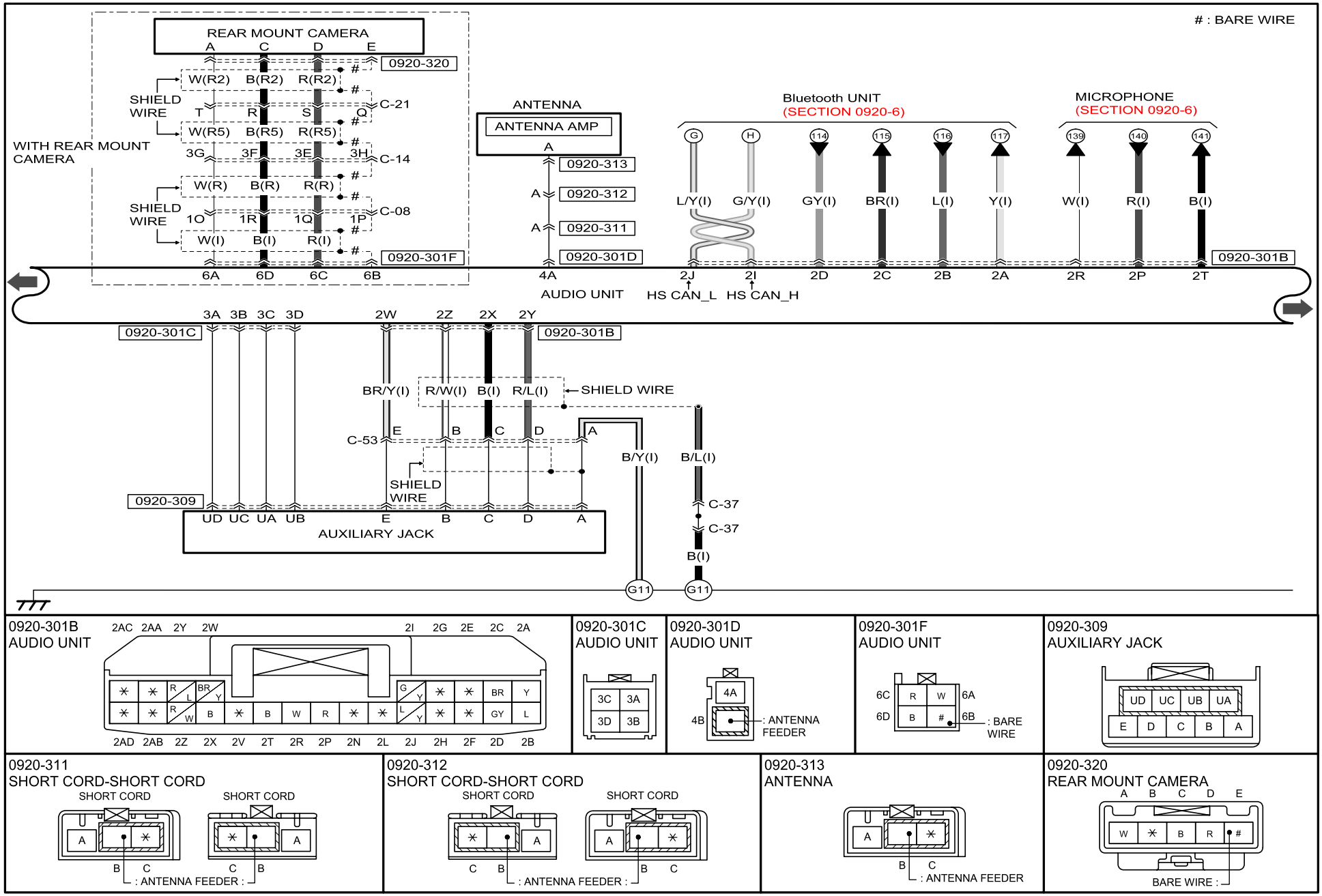

Refer to 00F section for the FUSE BOX, 00C section for the PCM CONNECTOR and COMMON CONNECTOR LIST.

AUDIO SYSTEM (Bose® TYPE AUDIO)

0920-3b

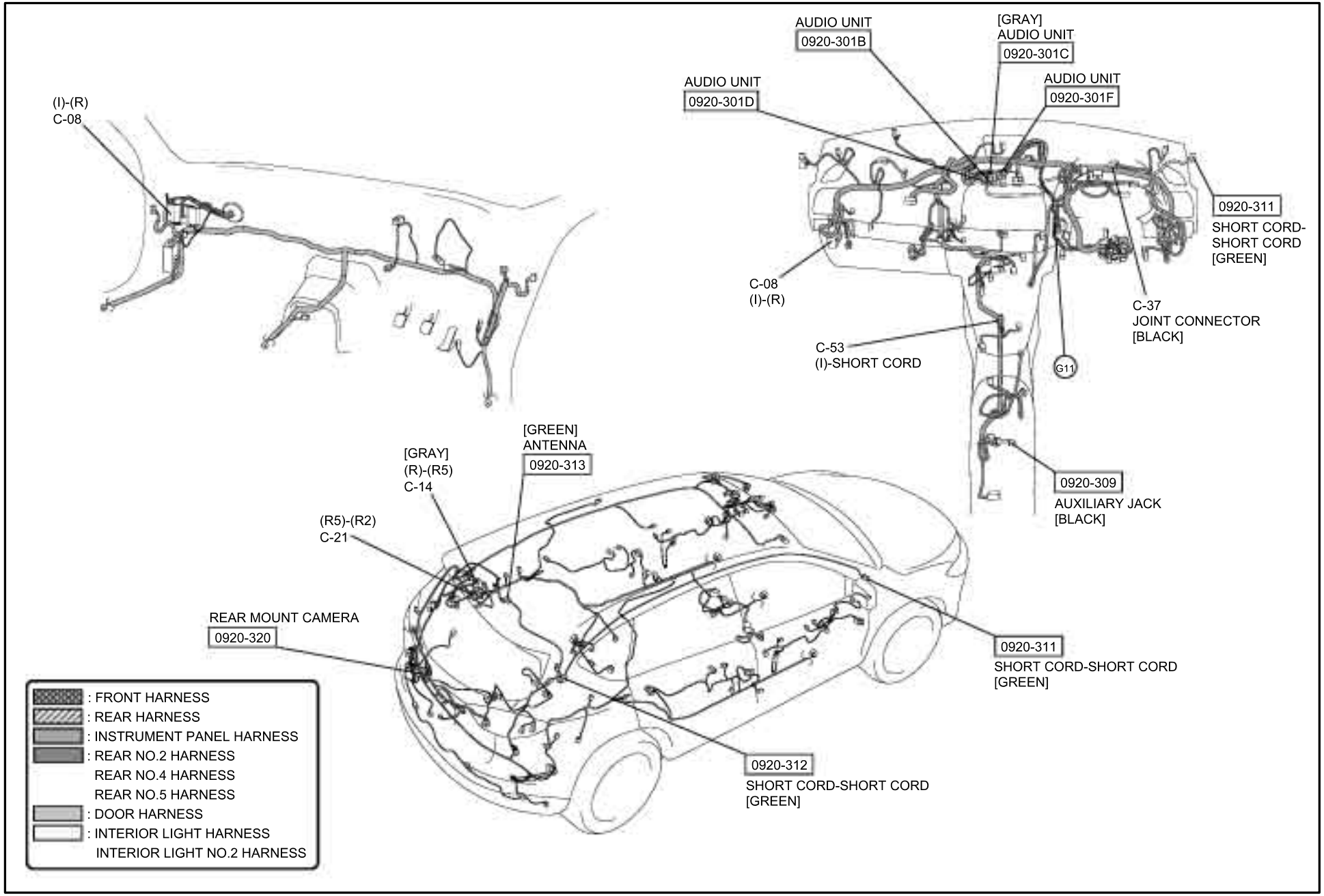

AUDIO SYSTEM (Bose® TYPE AUDIO)

0920-3c

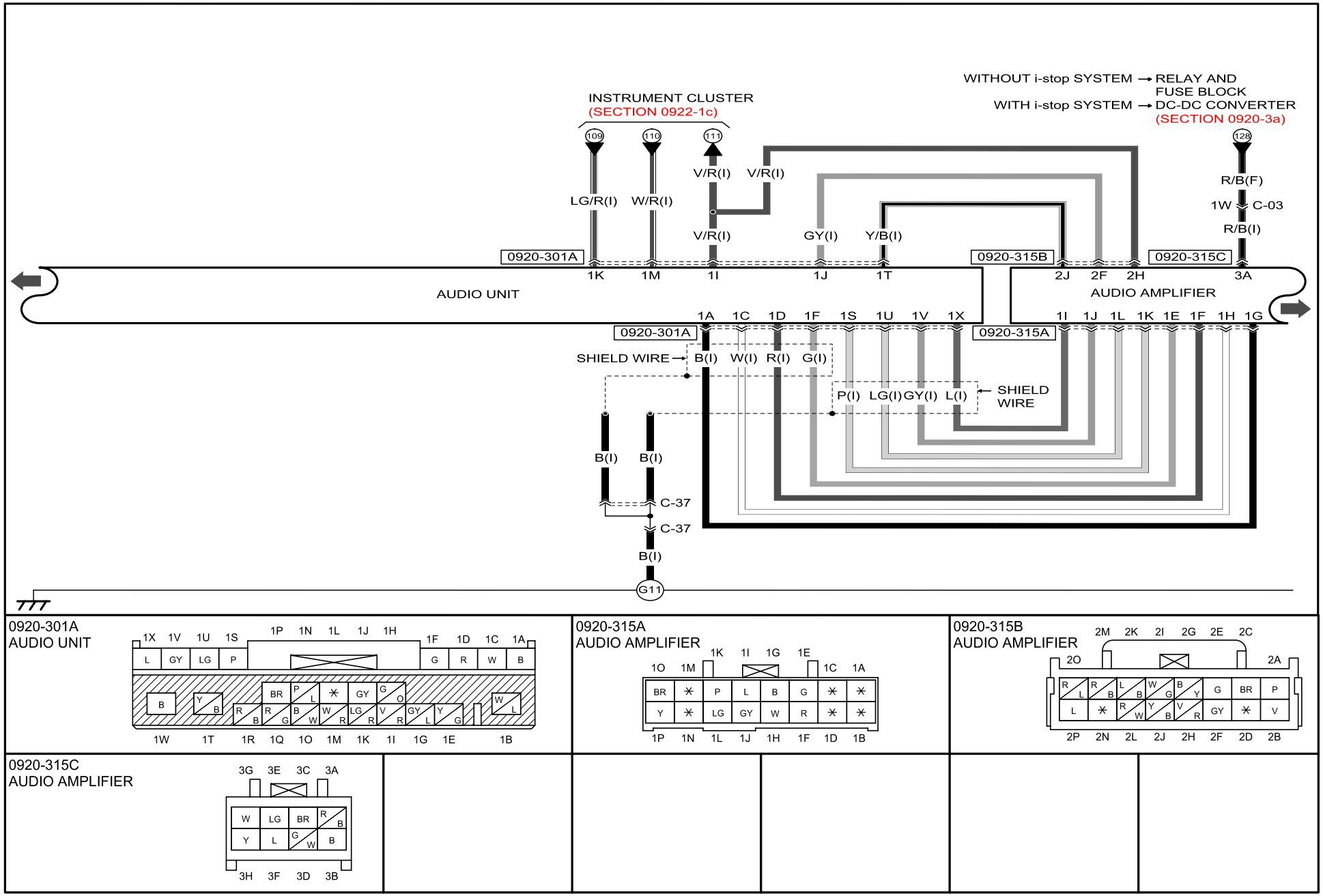

Refer to 00F section for the FUSE BOX, 00C section for the PCM CONNECTOR and COMMON CONNECTOR LIST.

AUDIO SYSTEM (Bose® TYPE AUDIO)

0920-3c

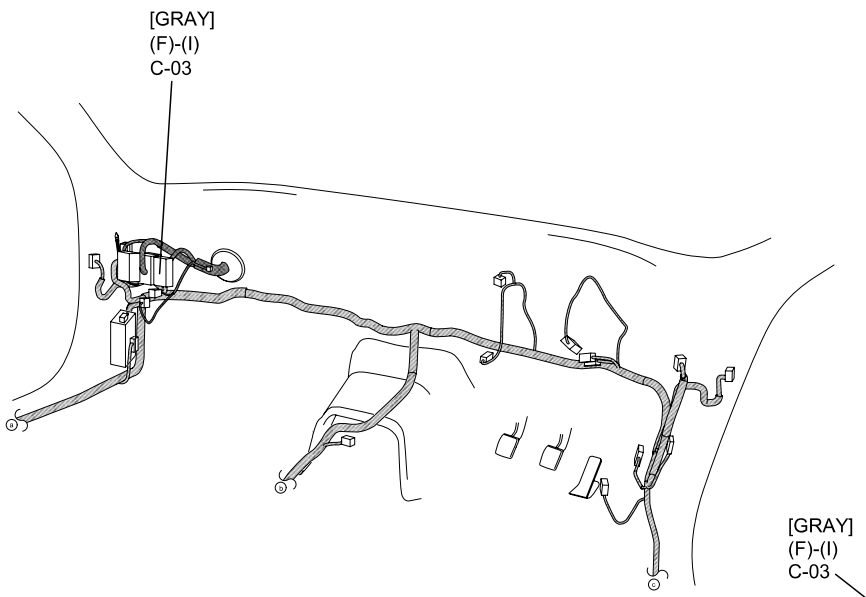

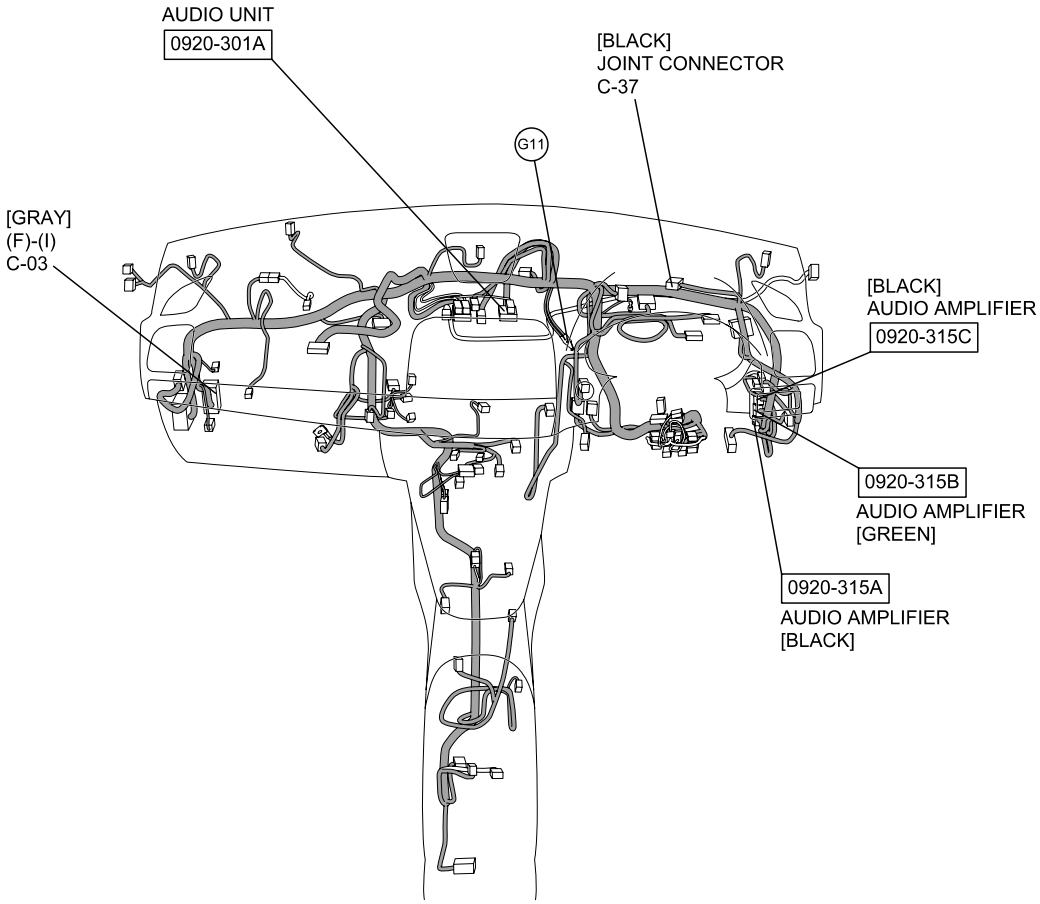

: FRONT HARNESS
: REAR HARNESS
: INSTRUMENT PANEL HARNESS

AUDIO SYSTEM (Bose® TYPE AUDIO)

0920-3d

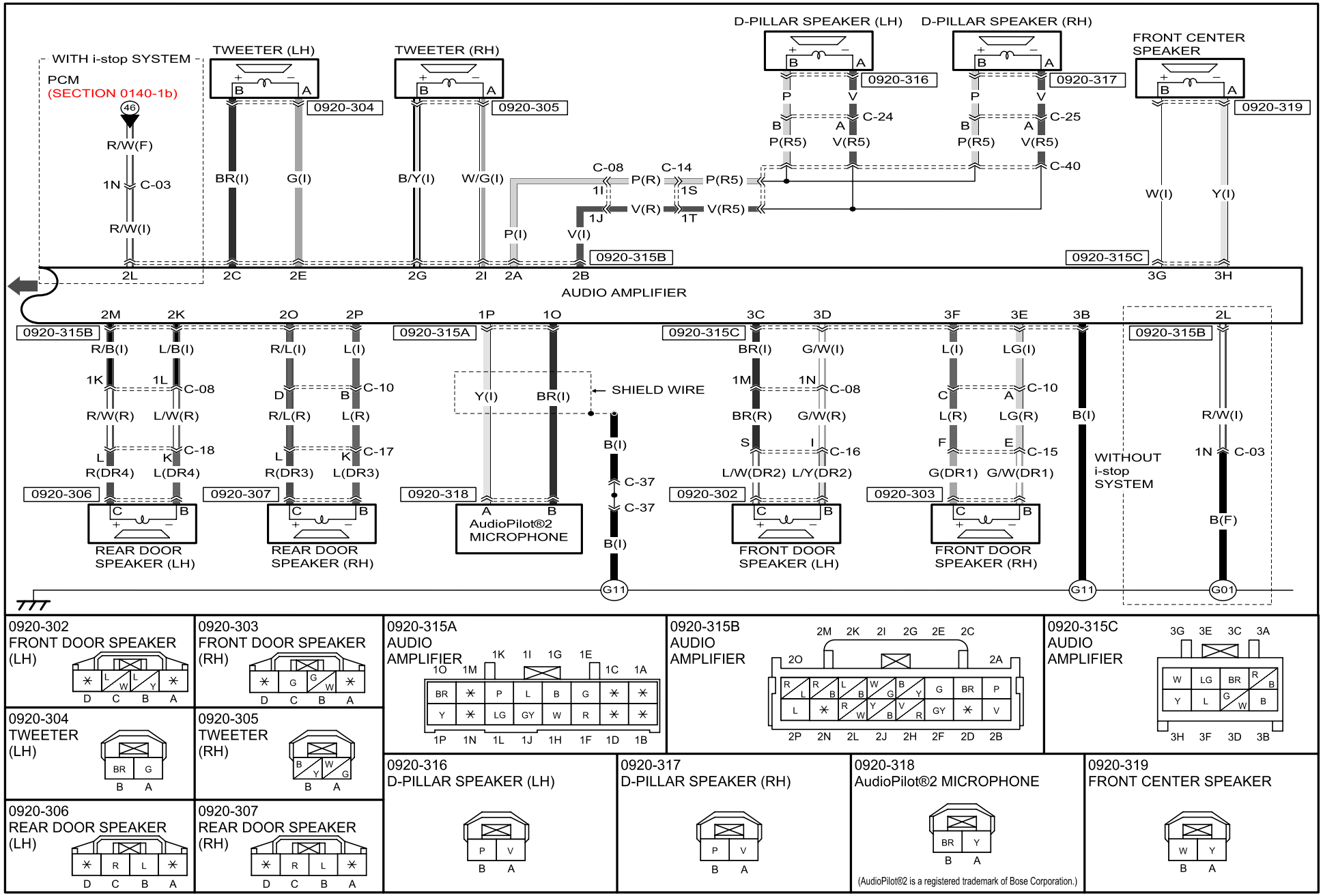

0920-302
FRONT DOOR SPEAKER
(LH)

0920-303
FRONT DOOR SPEAKER
(RH)

0920-315A
AUDIO
AMPLIFIER

0920-315B
AUDIO
AMPLIFIER

0920-315C
AUDIO
AMPLIFIER

0920-304
TWEETER
(LH)

0920-305
TWEETER
(RH)

0920-306
REAR DOOR SPEAKER
(LH)

0920-307
REAR DOOR SPEAKER
(RH)

0920-316
D-PILLAR SPEAKER (LH)

0920-317
D-PILLAR SPEAKER (RH)

0920-318
AudioPilot®2 MICROPHONE

(AudioPilot®2 is a registered trademark of Bose Corporation.)

0920-319
FRONT CENTER SPEAKER

Refer to 00F section for the FUSE BOX, 00C section for the PCM CONNECTOR and COMMON CONNECTOR LIST.

AUDIO SYSTEM (Bose® TYPE AUDIO)

0920-3d

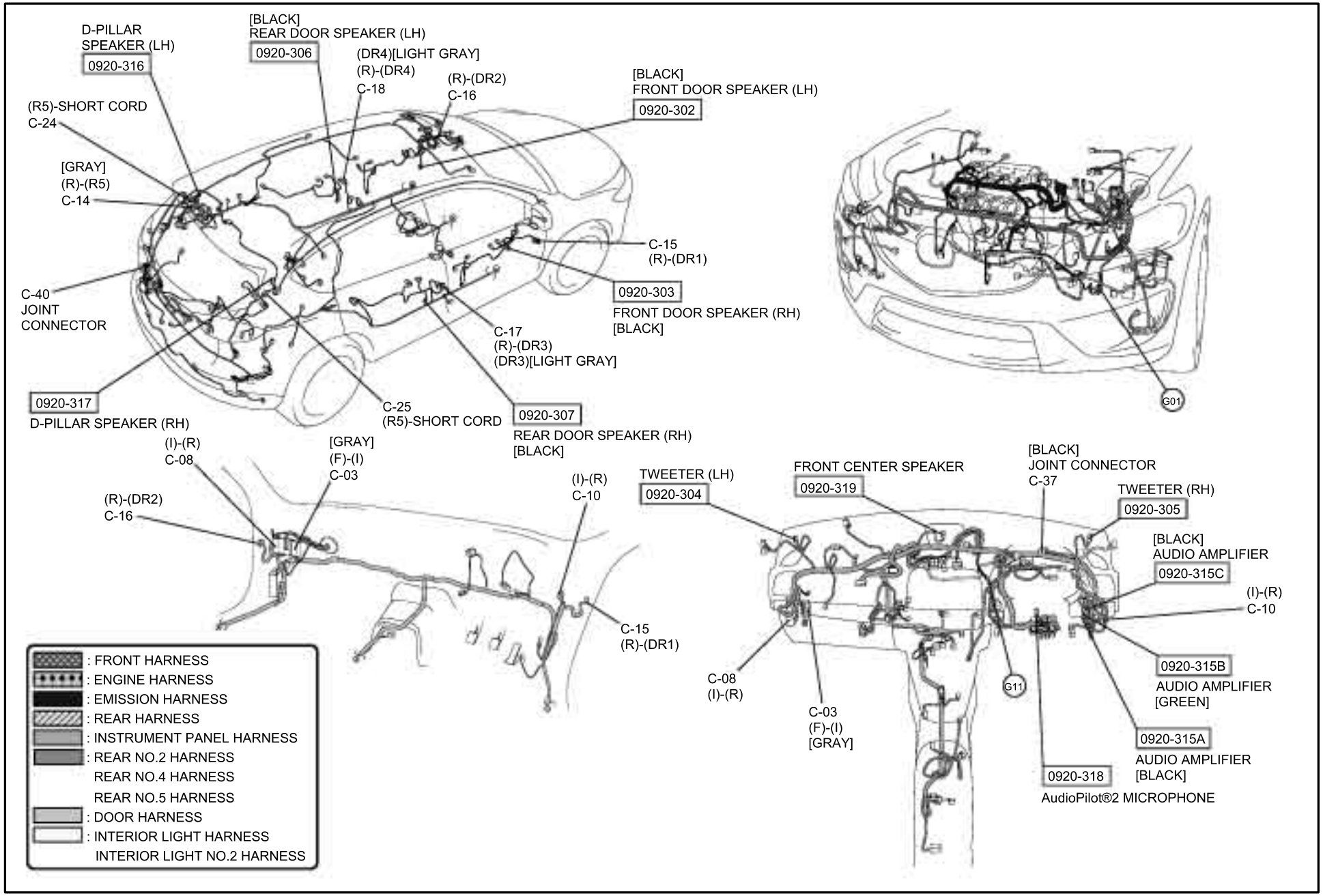

CAR-NAVIGATION SYSTEM (WITHOUT Bose® TYPE AUDIO)

0920-4a

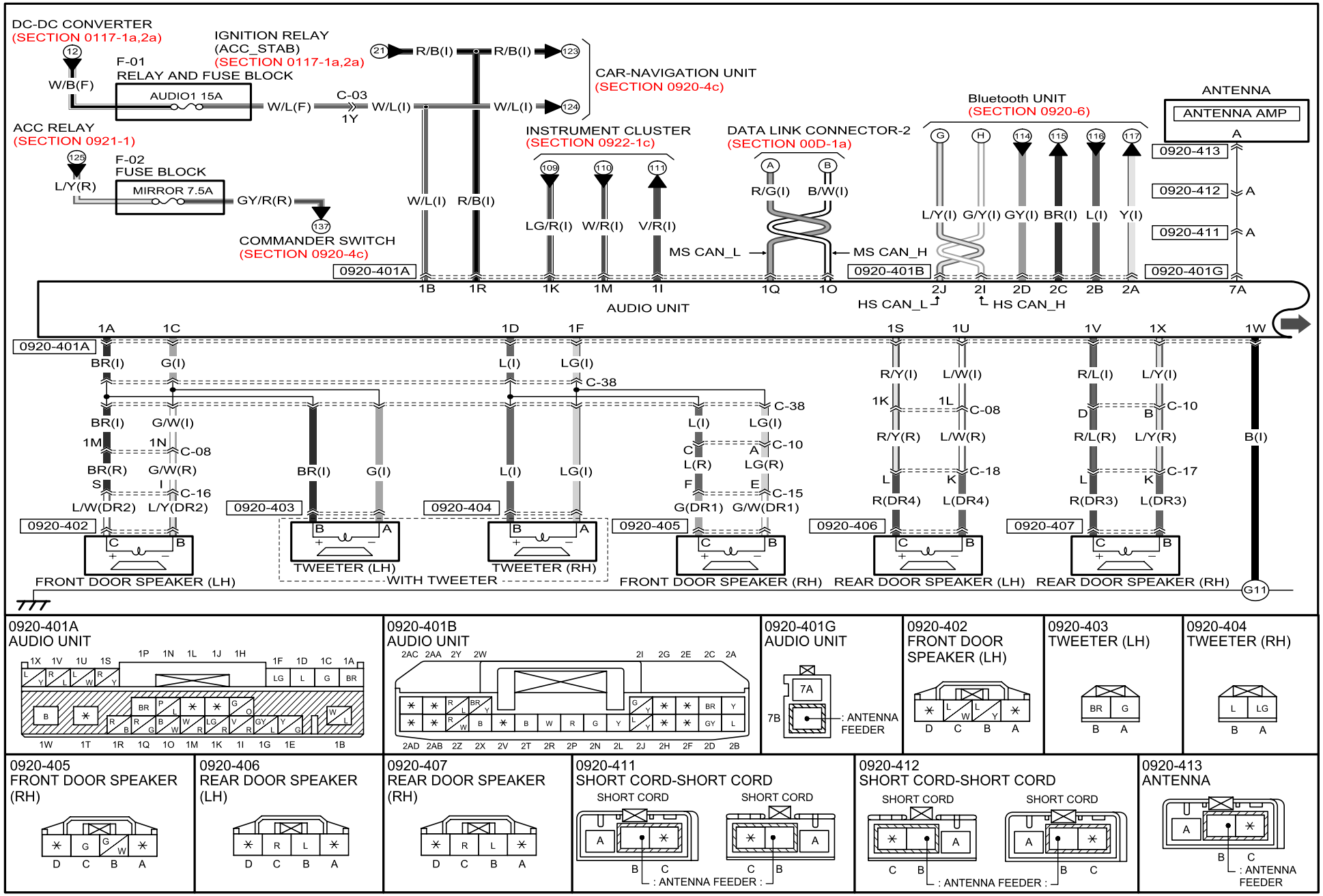

Refer to 00F section for the FUSE BOX, 00C section for the PCM CONNECTOR and COMMON CONNECTOR LIST.

CAR-NAVIGATION SYSTEM (WITHOUT Bose® TYPE AUDIO)

0920-4a

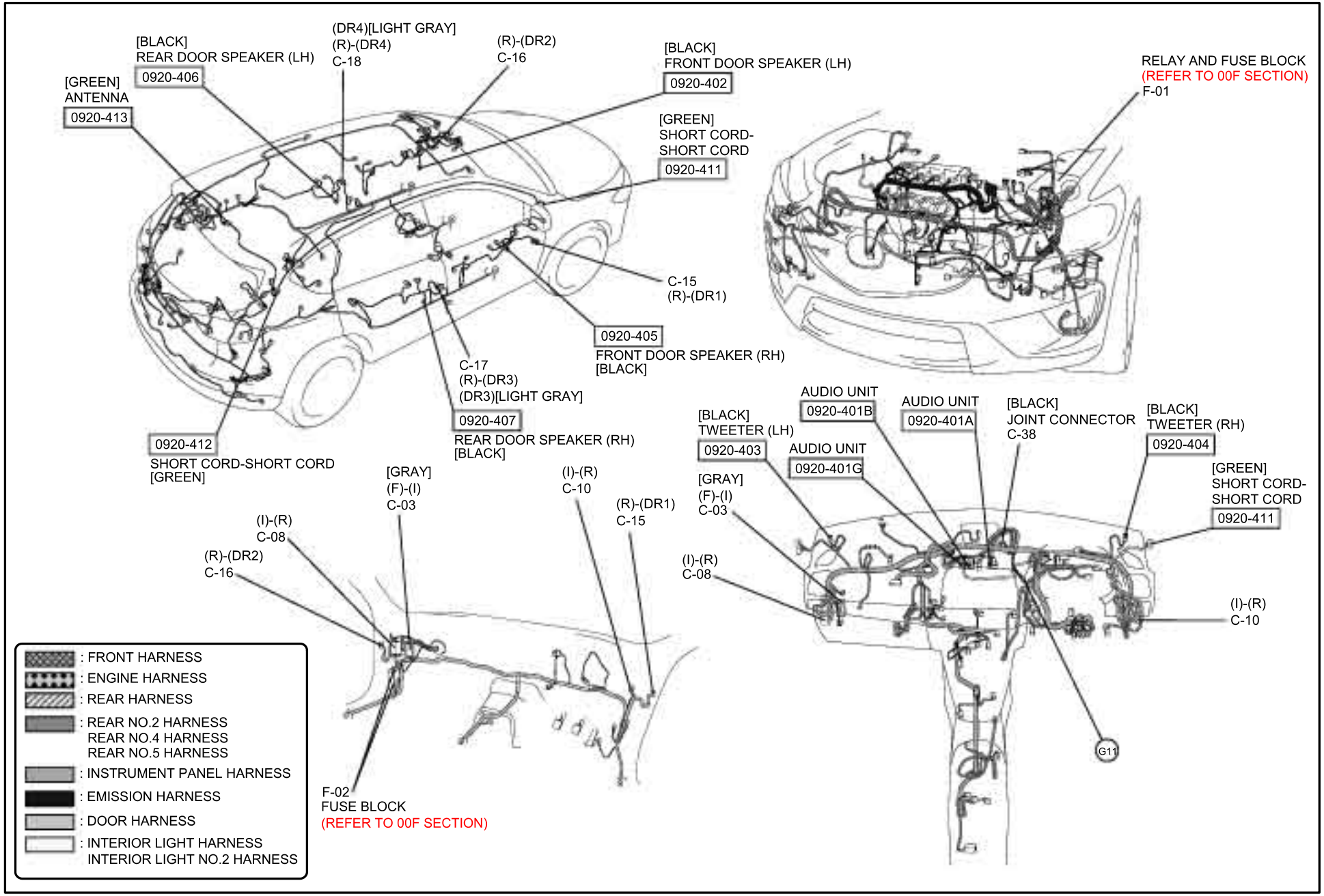

CAR-NAVIGATION SYSTEM (WITHOUT Bose® TYPE AUDIO)

0920-4b

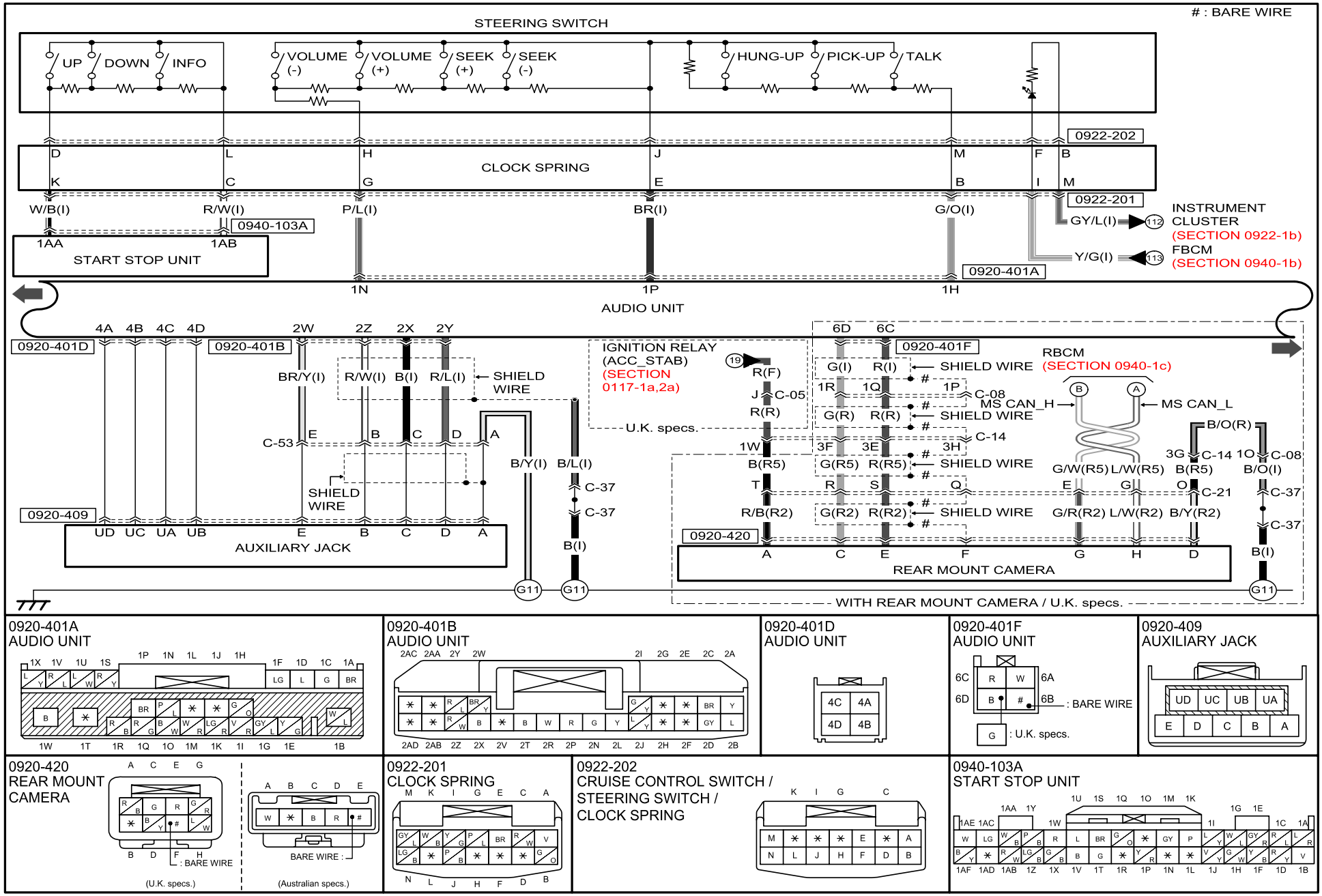

Refer to 00F section for the FUSE BOX, 00C section for the PCM CONNECTOR and COMMON CONNECTOR LIST.

CAR-NAVIGATION SYSTEM (WITHOUT Bose® TYPE AUDIO)

0920-4b

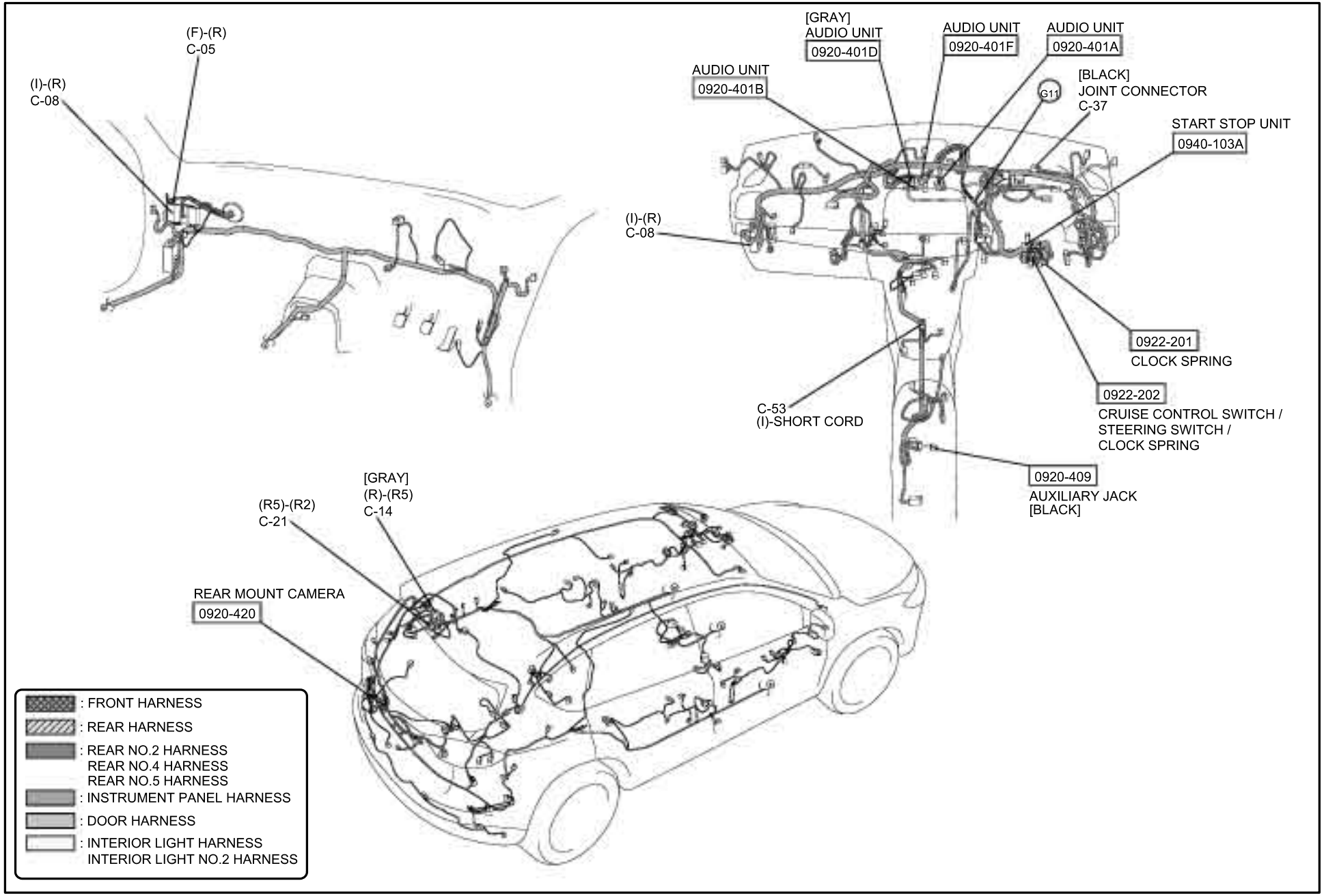

CAR-NAVIGATION SYSTEM (WITHOUT Bose® TYPE AUDIO)

0920-4c

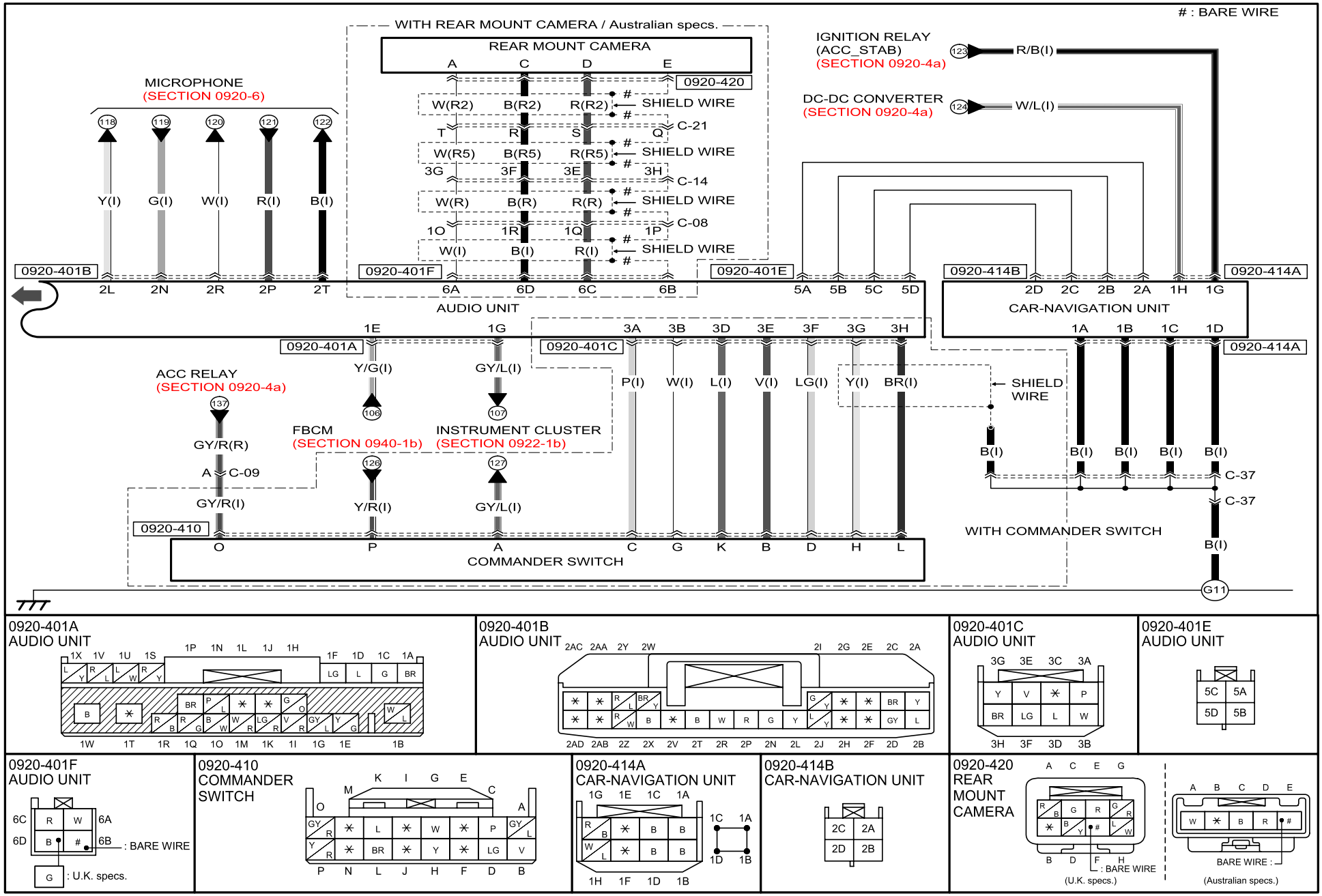

Refer to 00F section for the FUSE BOX, 00C section for the PCM CONNECTOR and COMMON CONNECTOR LIST.

CAR-NAVIGATION SYSTEM (WITHOUT Bose® TYPE AUDIO)

0920-4c

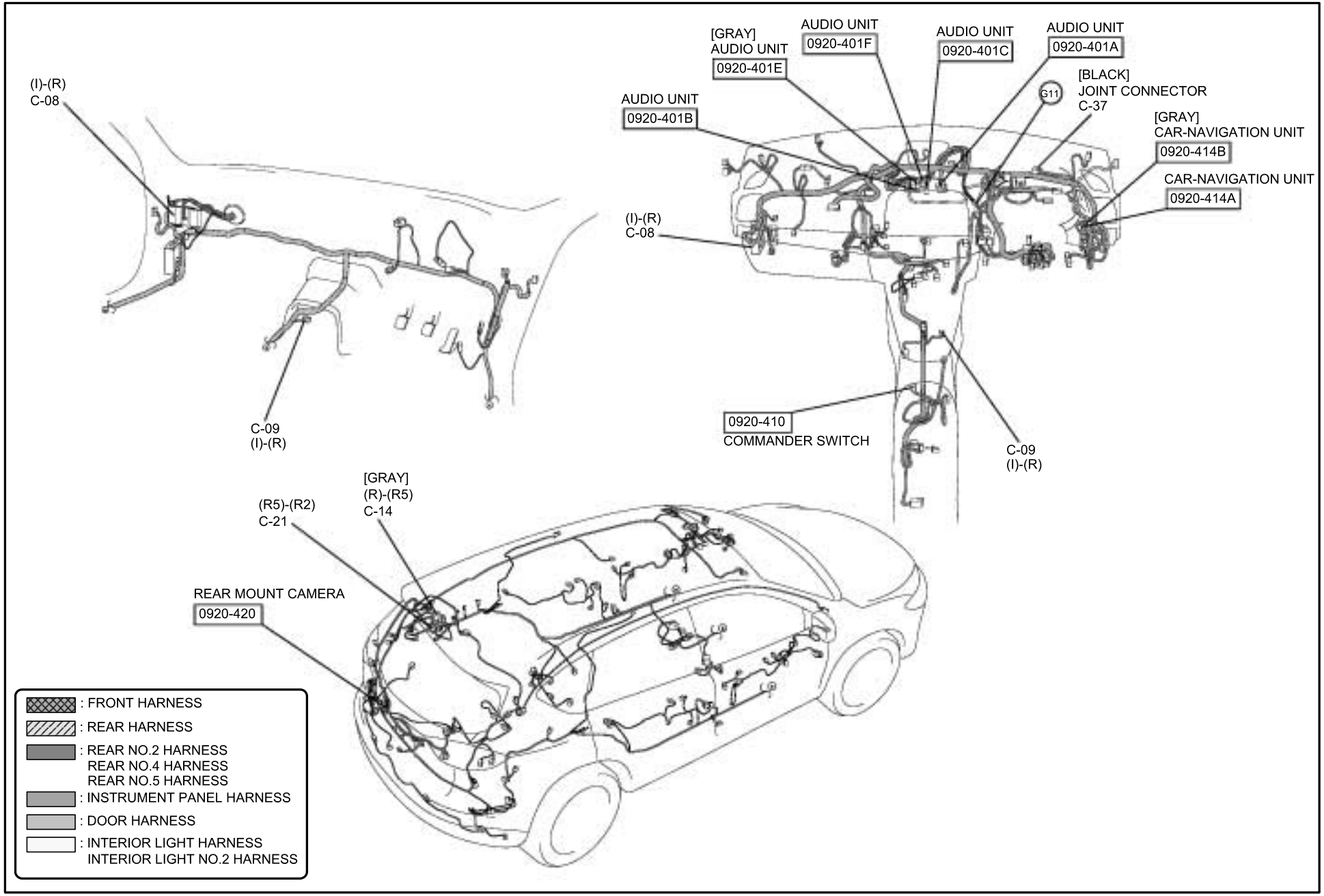

CAR-NAVIGATION SYSTEM (Bose® TYPE AUDIO)

0920-5a

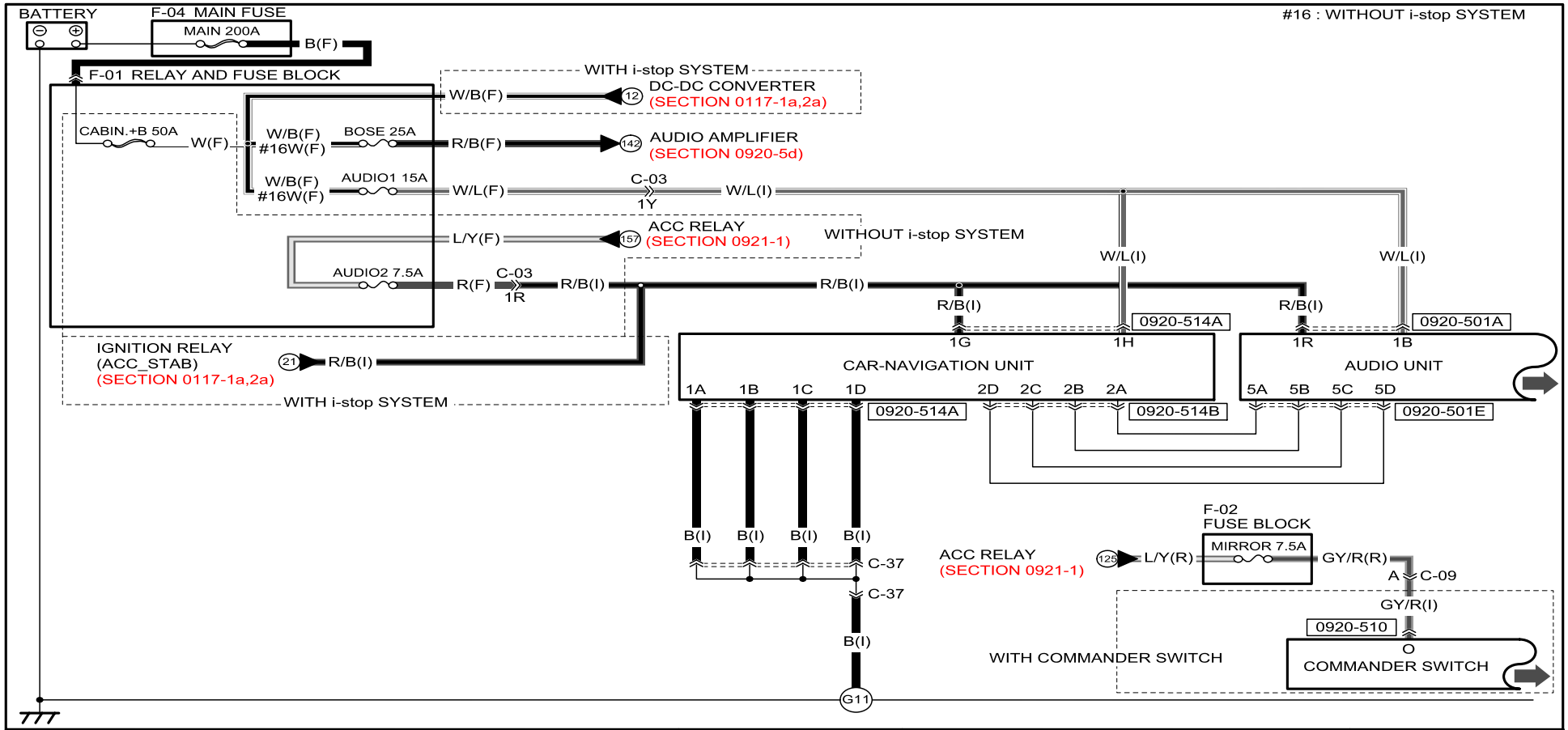

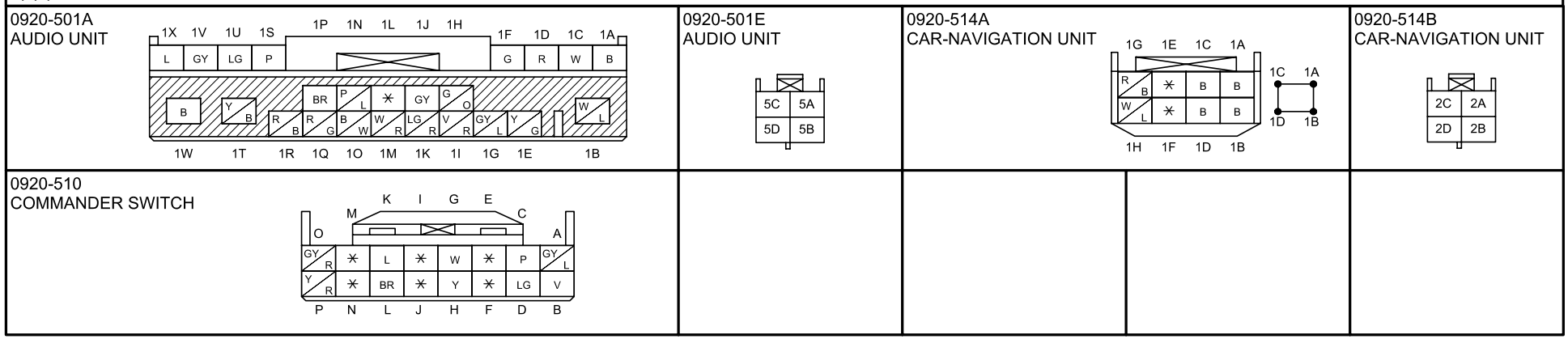

Refer to 00F section for the FUSE BOX, 00C section for the PCM CONNECTOR and COMMON CONNECTOR LIST.

CAR-NAVIGATION SYSTEM (Bose® TYPE AUDIO)

0920-5a

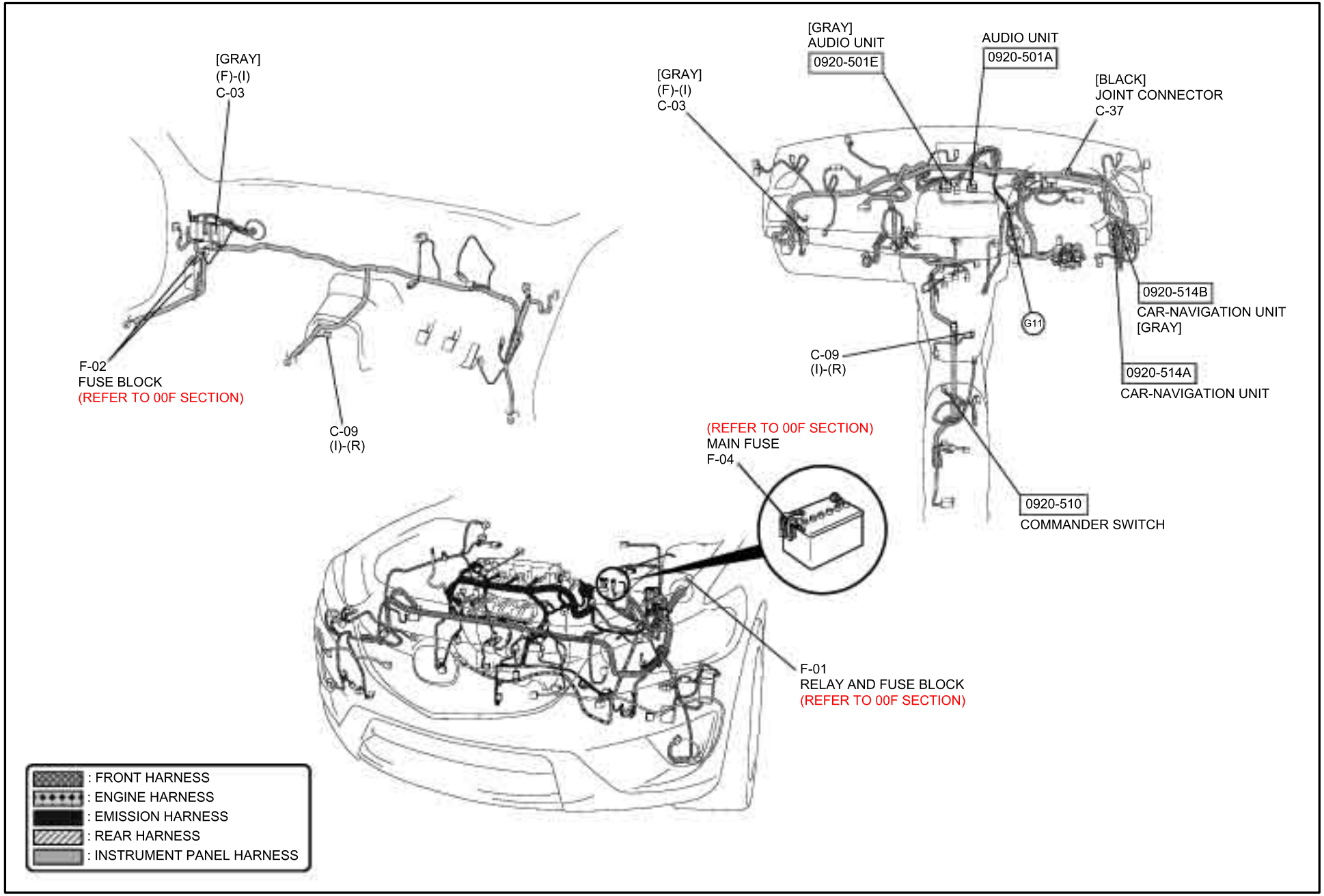

CAR-NAVIGATION SYSTEM (Bose® TYPE AUDIO)

0920-5b

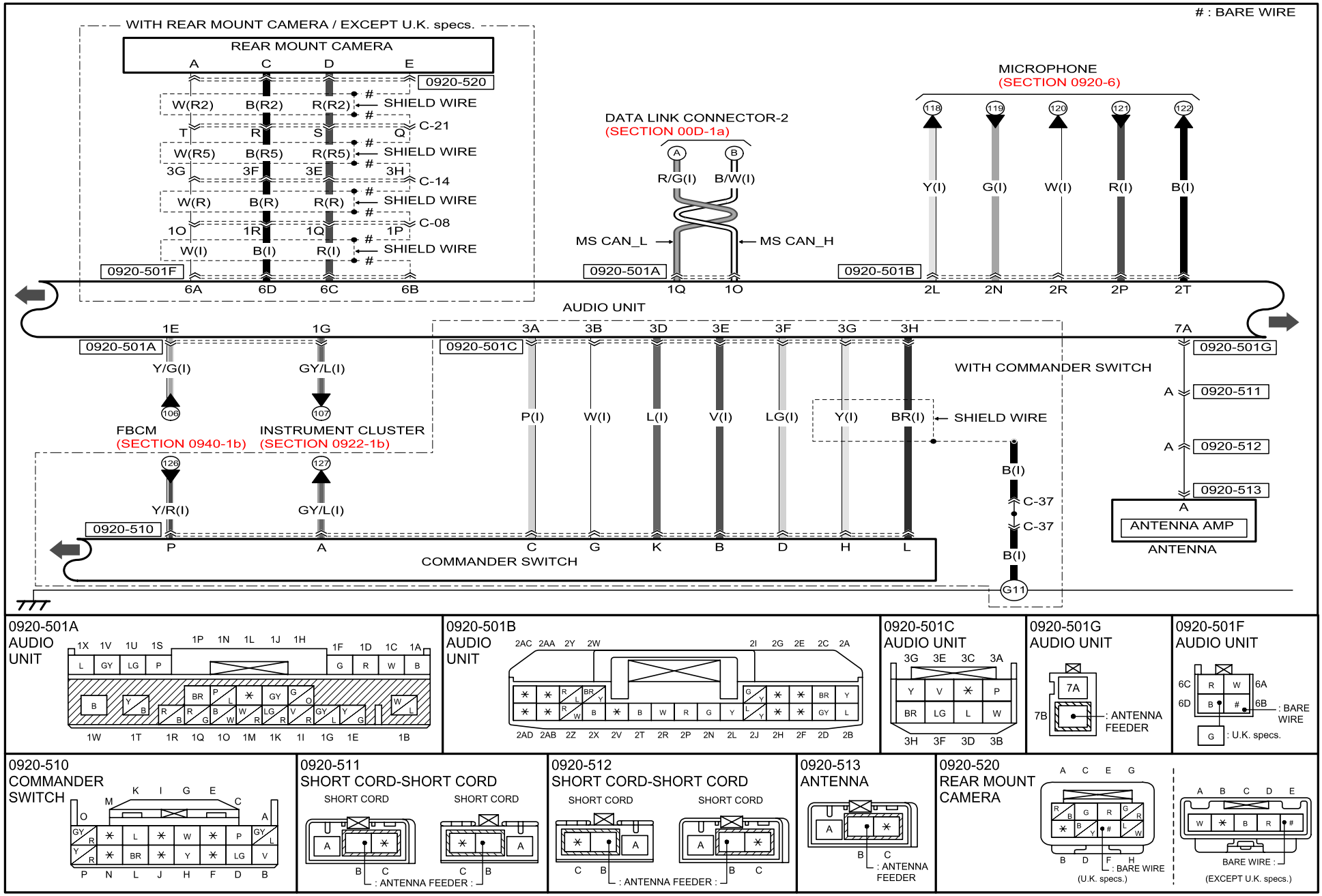

Refer to 00F section for the FUSE BOX, 00C section for the PCM CONNECTOR and COMMON CONNECTOR LIST.

CAR-NAVIGATION SYSTEM (Bose® TYPE AUDIO)

0920-5b

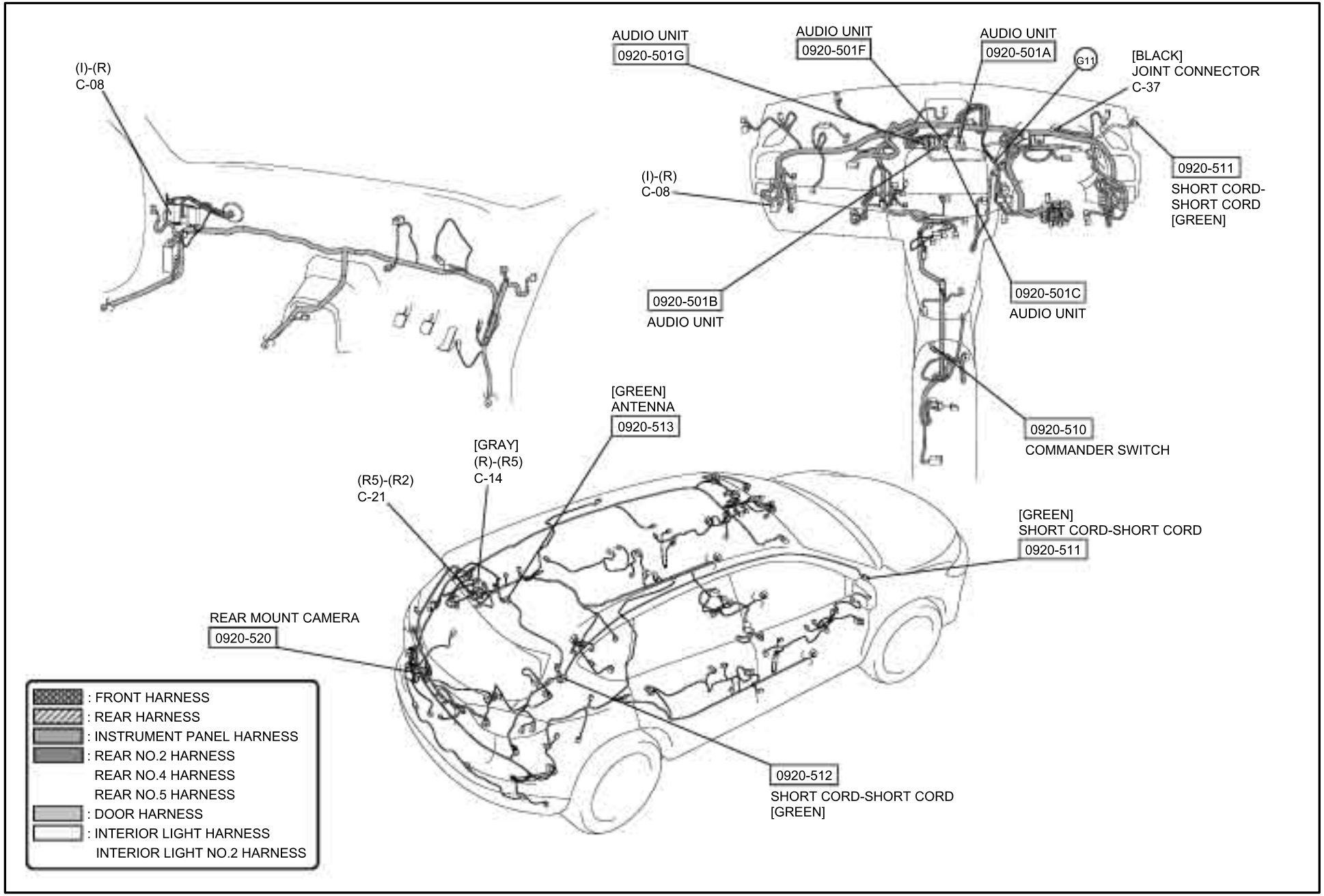

CAR-NAVIGATION SYSTEM (Bose® TYPE AUDIO)

0920-5c

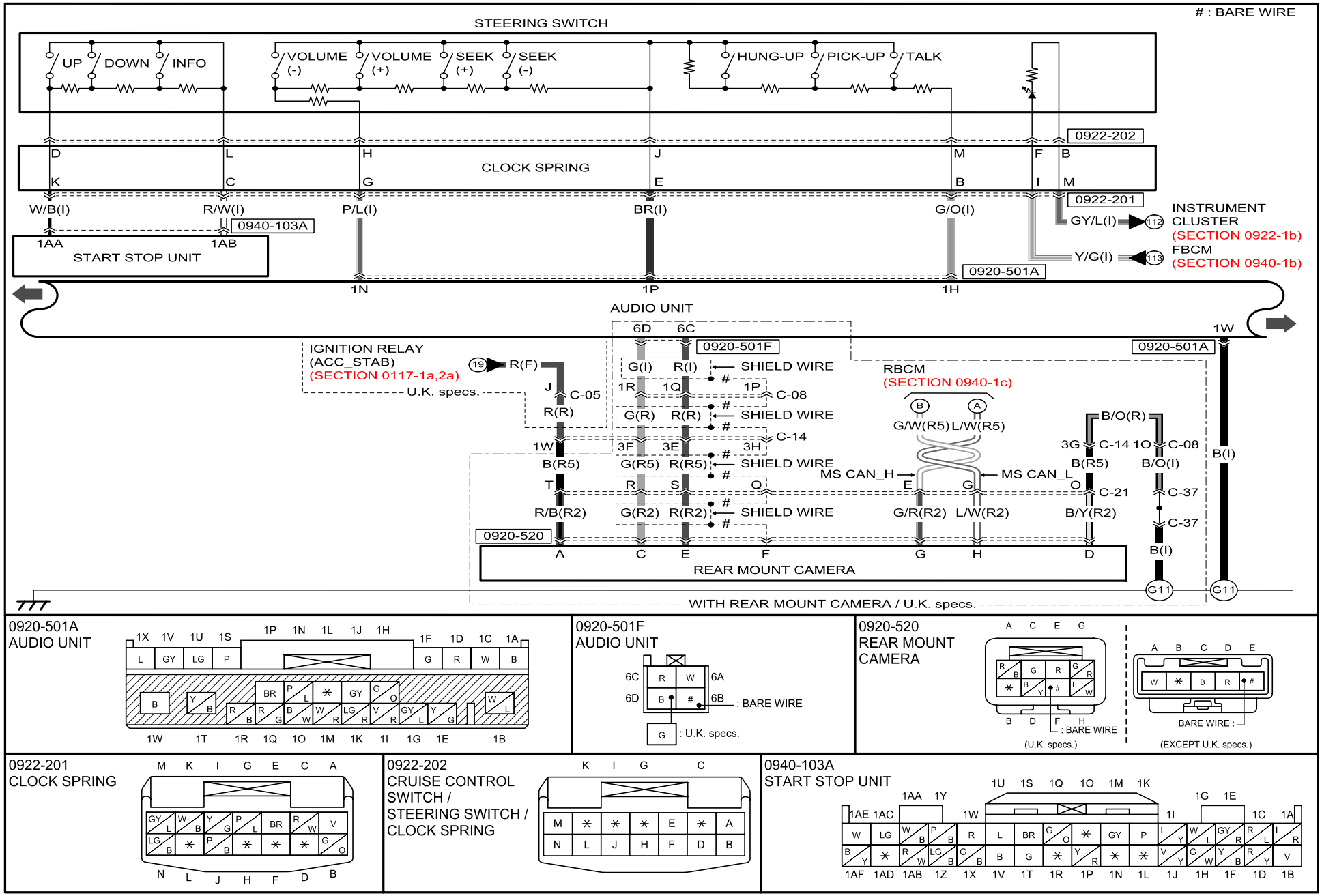

Refer to 00F section for the FUSE BOX, 00C section for the PCM CONNECTOR and COMMON CONNECTOR LIST.

CAR-NAVIGATION SYSTEM (Bose® TYPE AUDIO)

0920-5c

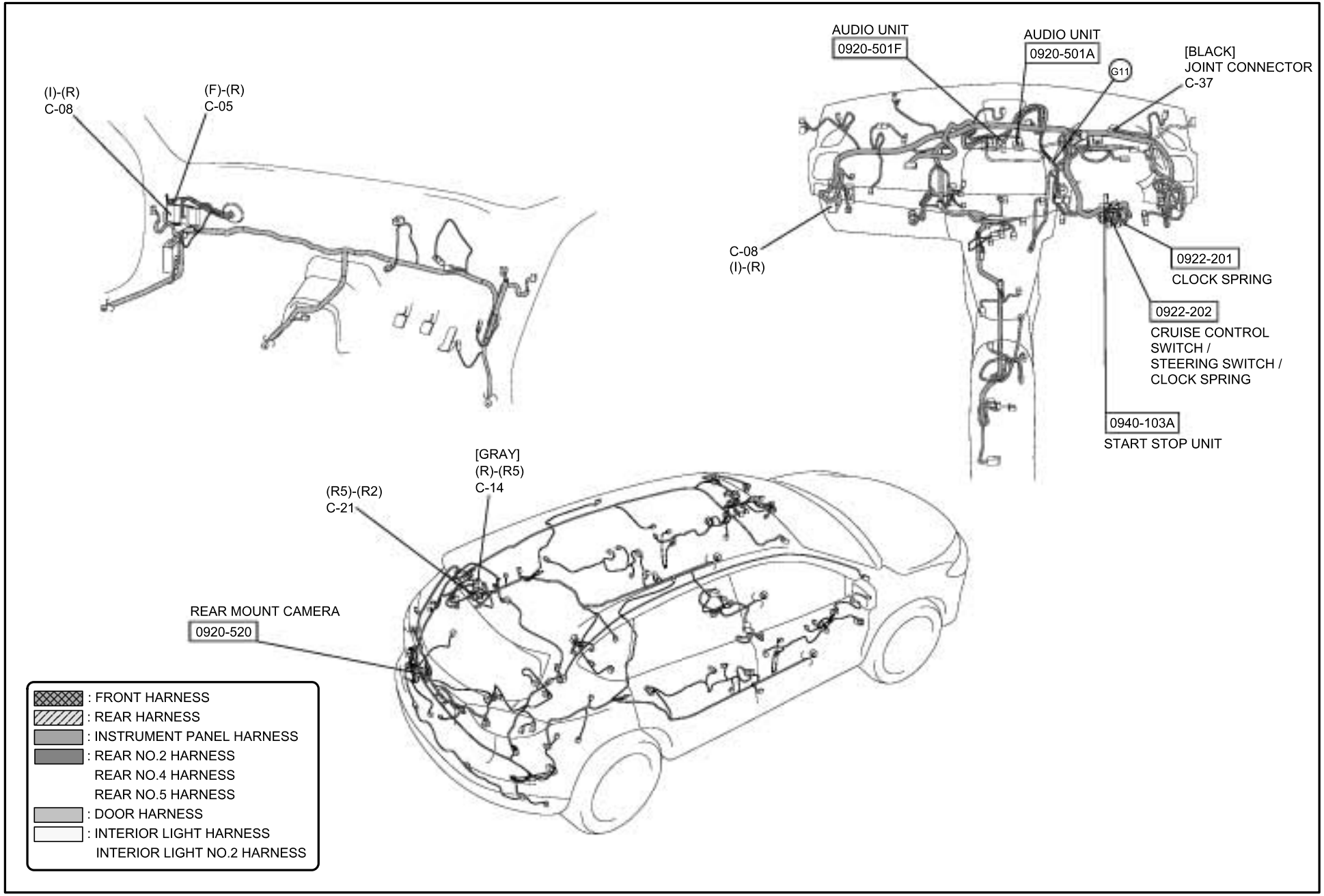

CAR-NAVIGATION SYSTEM (Bose® TYPE AUDIO)

0920-5d

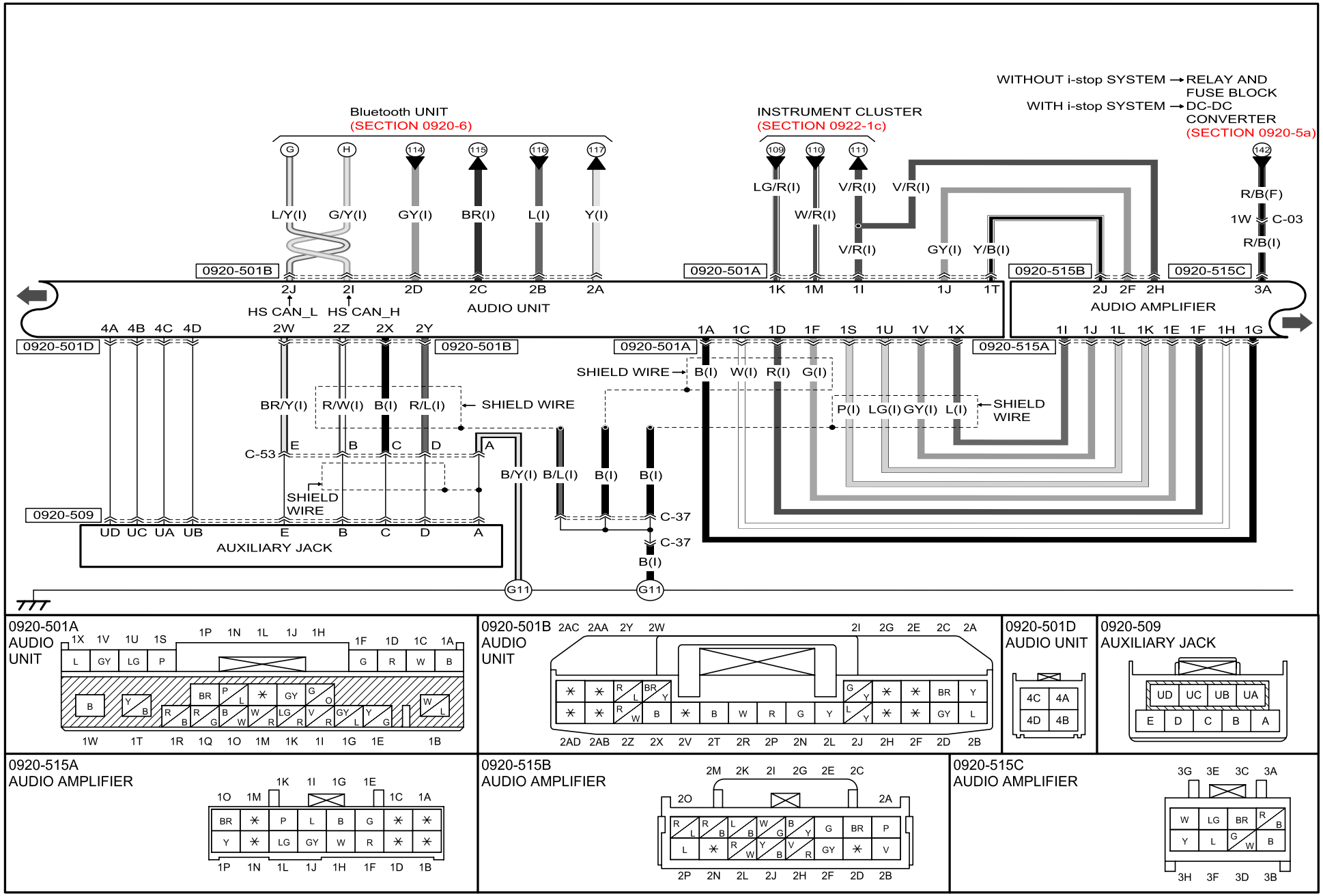

Refer to 00F section for the FUSE BOX, 00C section for the PCM CONNECTOR and COMMON CONNECTOR LIST.

CAR-NAVIGATION SYSTEM (Bose® TYPE AUDIO) 0920-5d

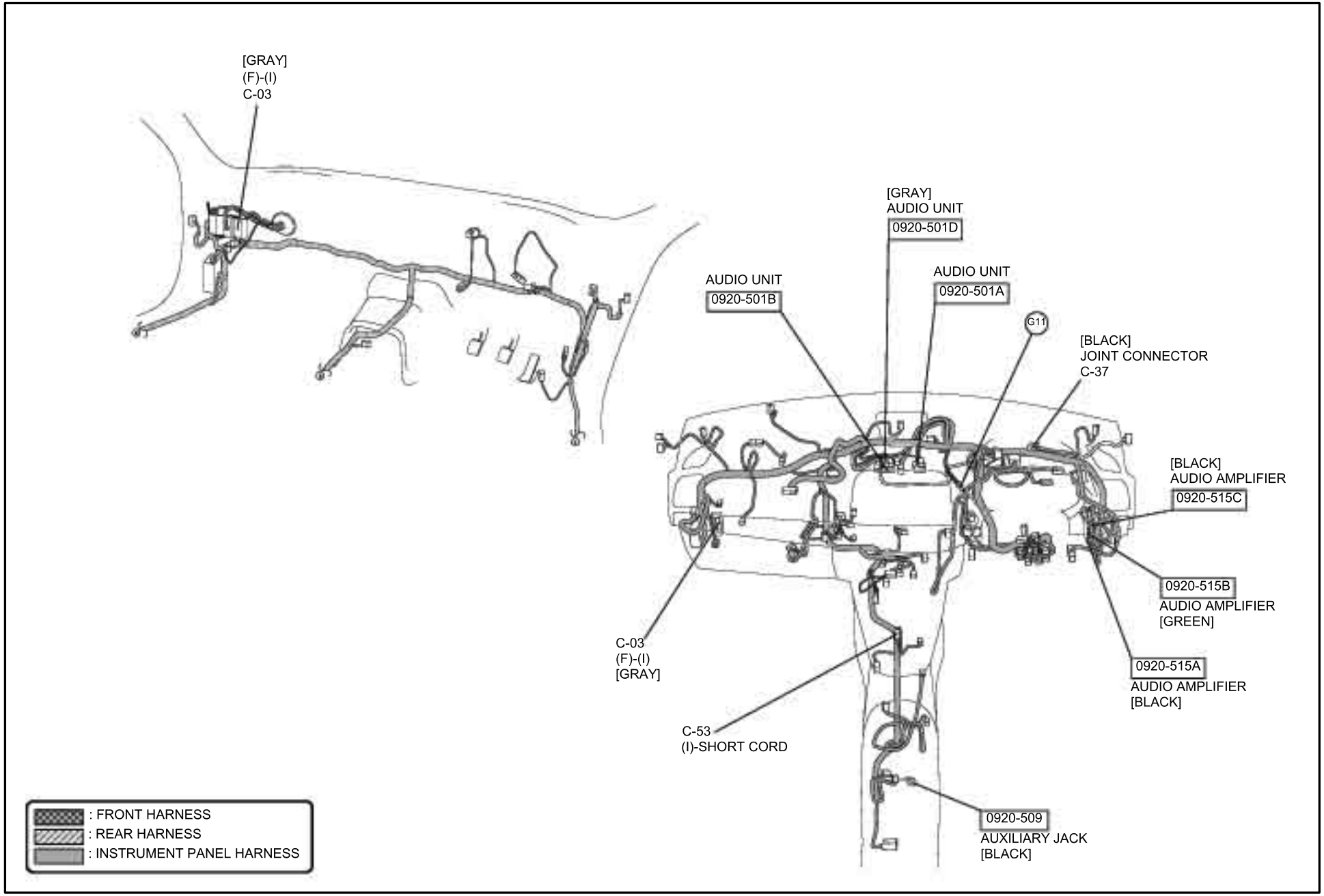

CAR-NAVIGATION SYSTEM (Bose® TYPE AUDIO)

0920-5e

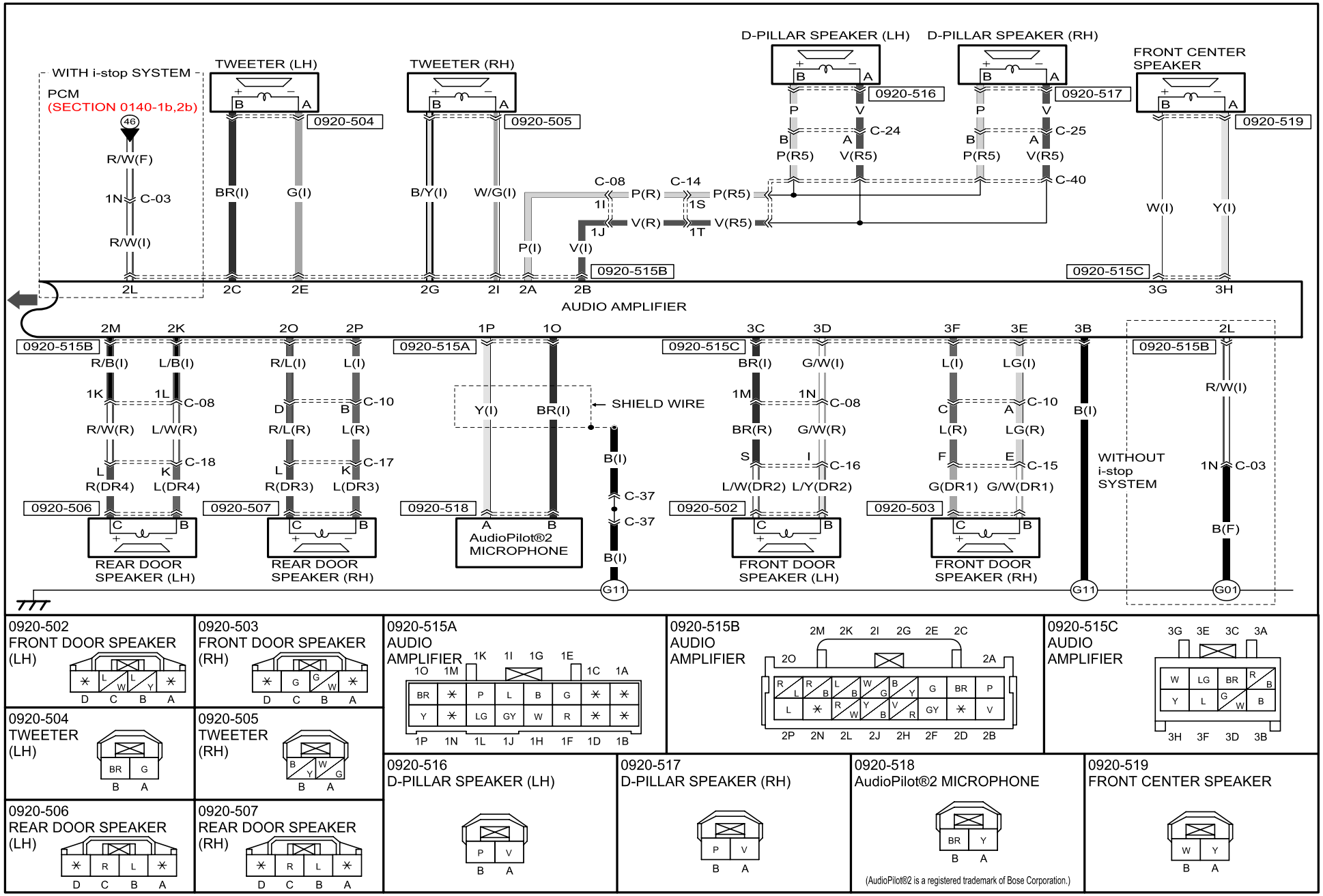

Refer to 00F section for the FUSE BOX, 00C section for the PCM CONNECTOR and COMMON CONNECTOR LIST.

CAR-NAVIGATION SYSTEM (Bose® TYPE AUDIO)

0920-5e

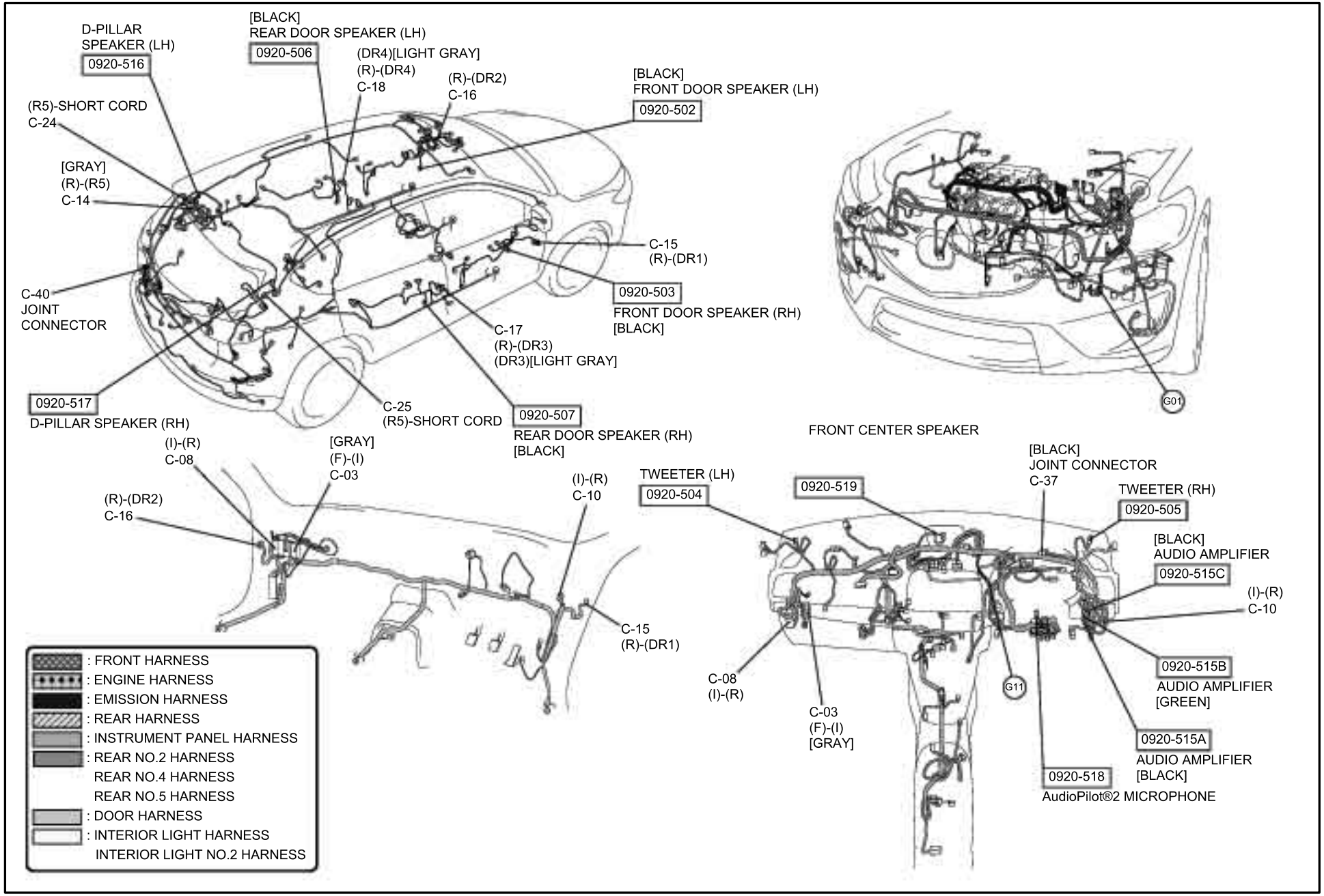

Bluetooth SYSTEM (HANDS-FREE TELEPHONE (HF/TEL) SYSTEM)

0920-6

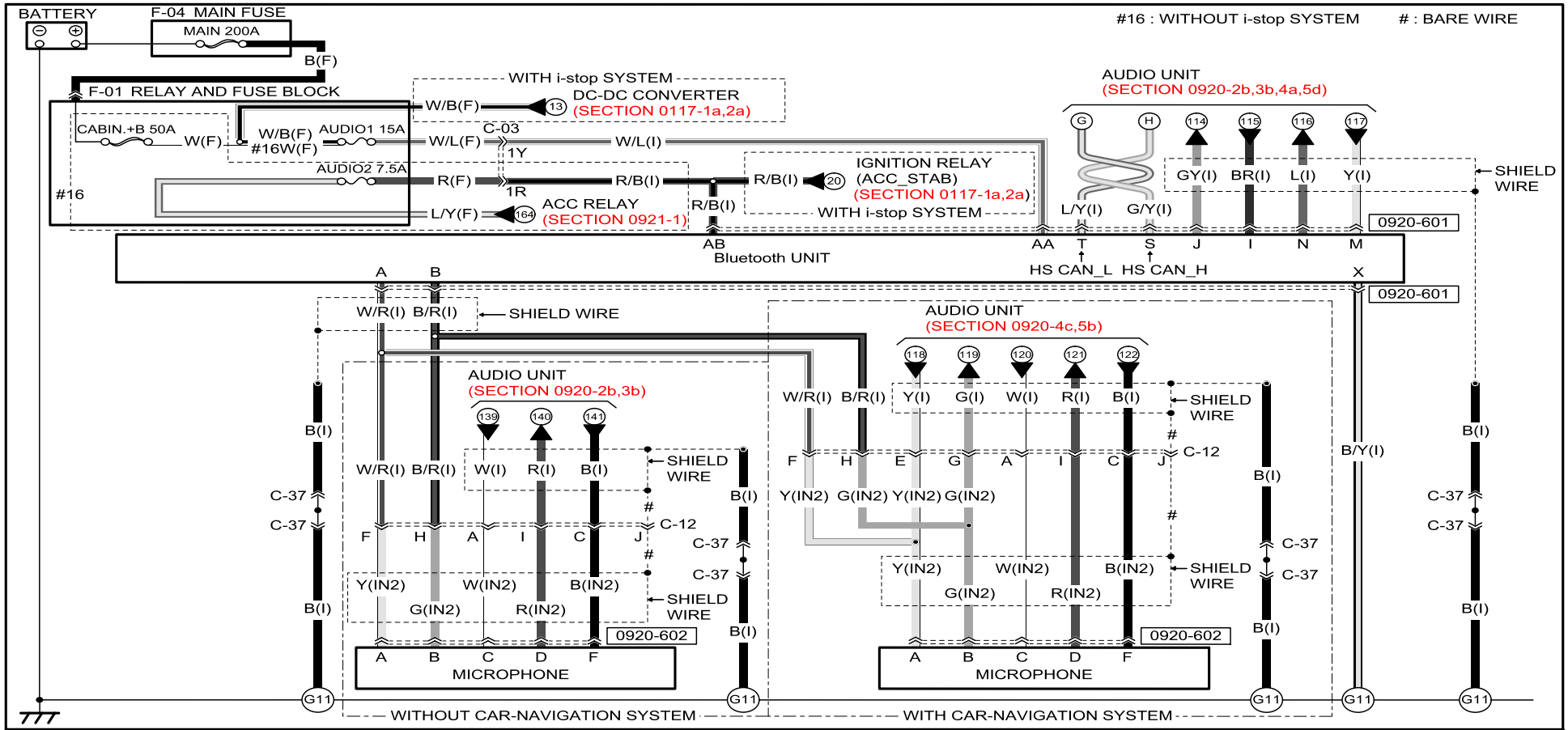

0920-601
Bluetooth UNIT

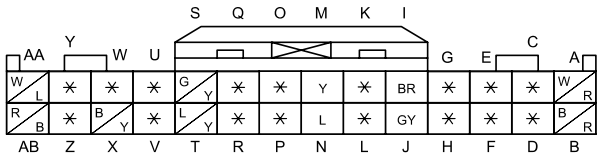

0920-602
MICROPHONE

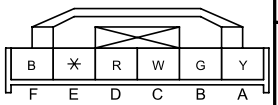

Refer to 00F section for the FUSE BOX, 00C section for the PCM CONNECTOR and COMMON CONNECTOR LIST.

Bluetooth SYSTEM (HANDS-FREE TELEPHONE (HF/TEL) SYSTEM)

0920-6

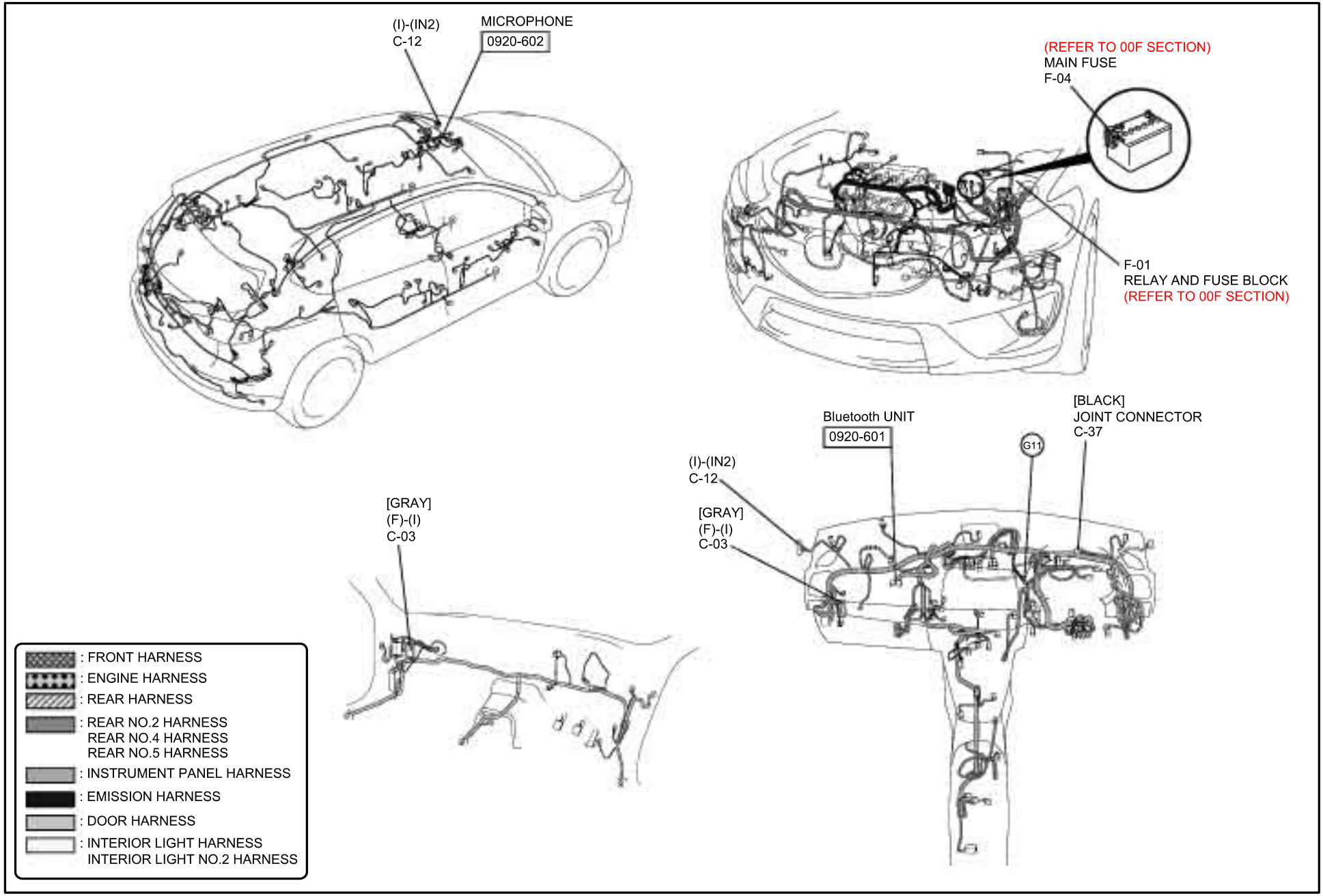

POWER SYSTEM

0921-1

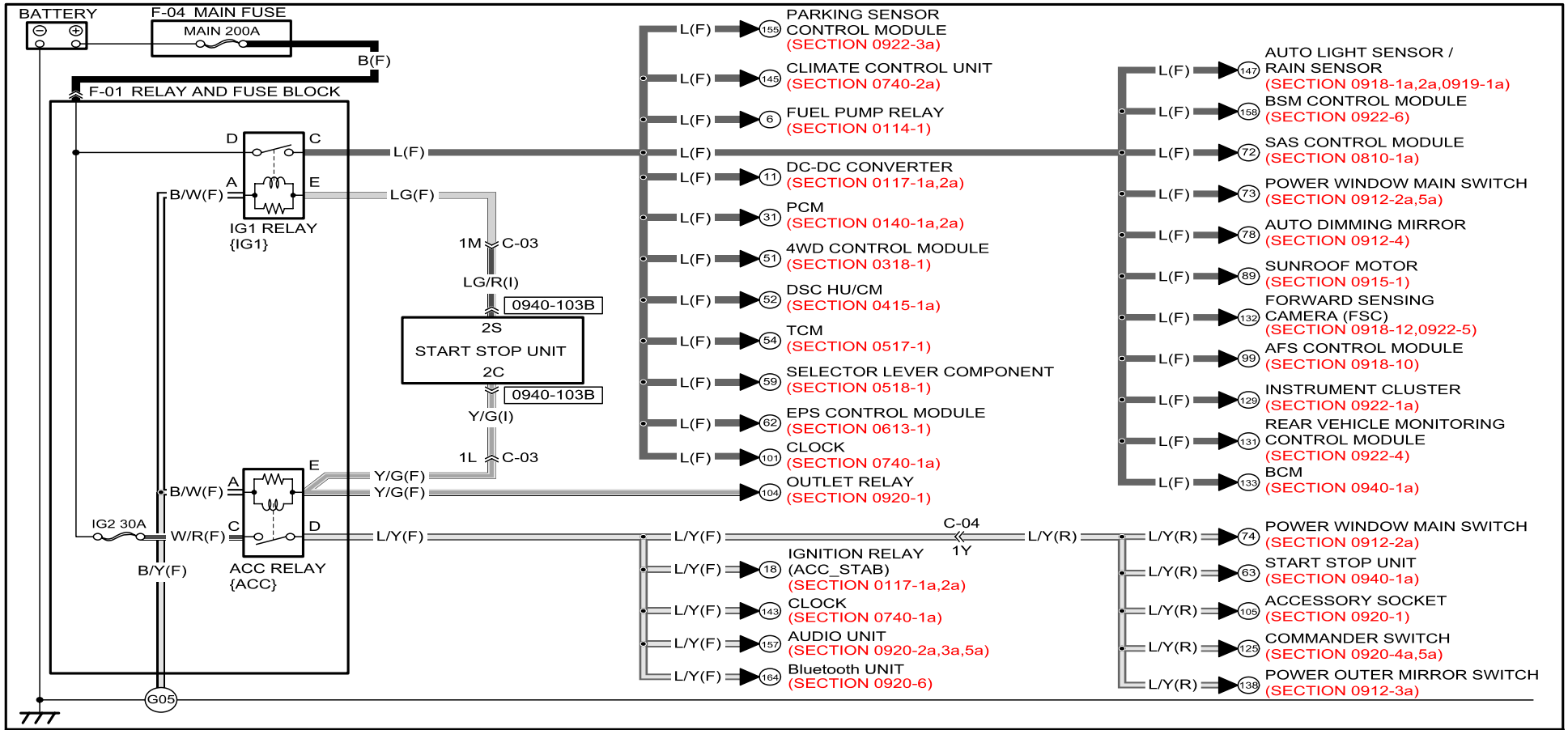

0940-103B
START STOP UNIT

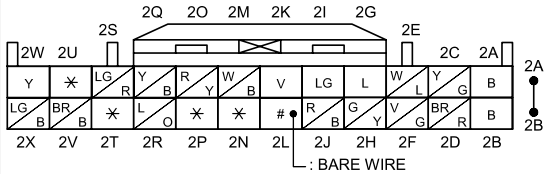

Refer to 00F section for the FUSE BOX, 00C section for the PCM CONNECTOR and COMMON CONNECTOR LIST.

POWER SYSTEM

0921-1

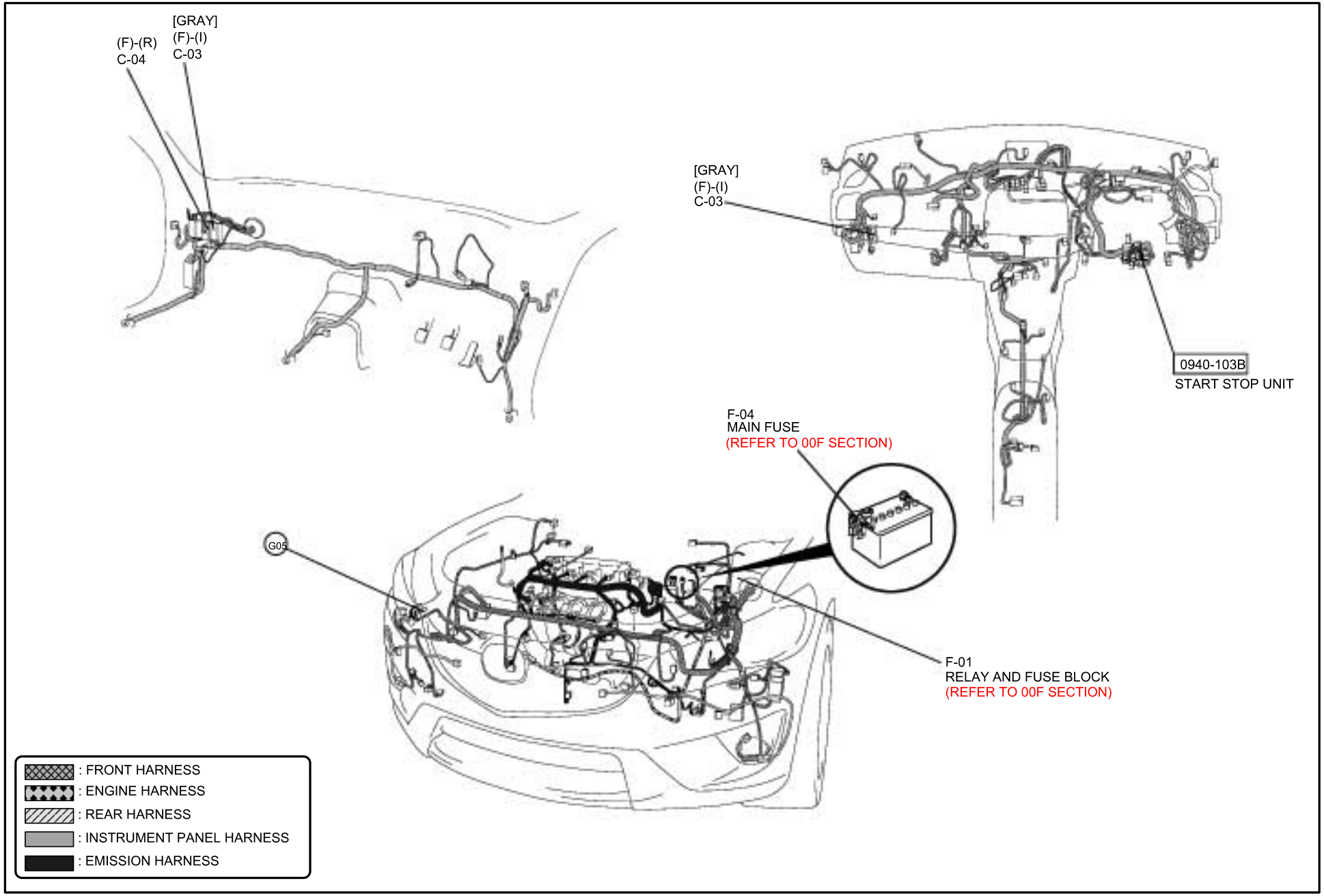

INSTRUMENT CLUSTER

0922-1a

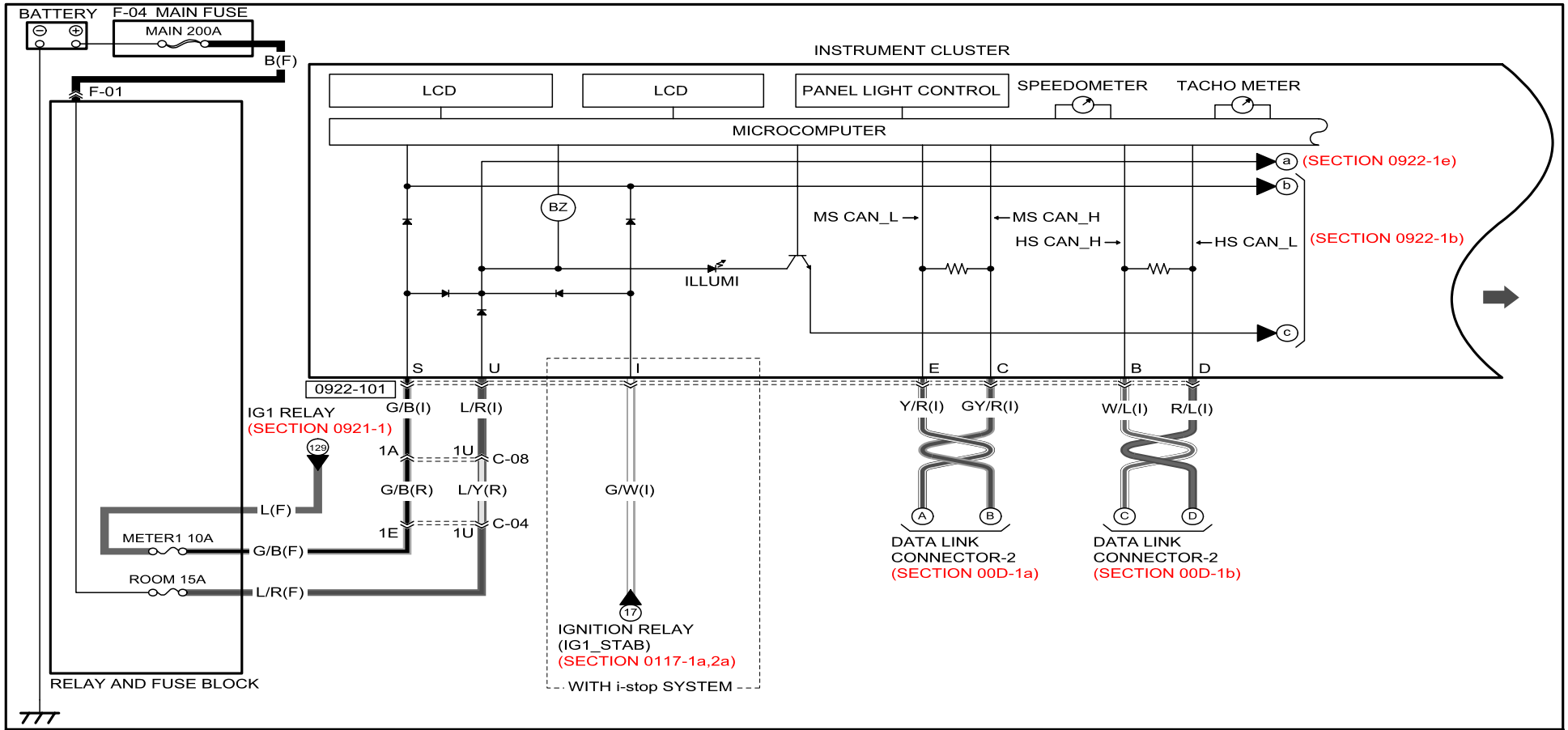

0922-101
INSTRUMENT CLUSTER

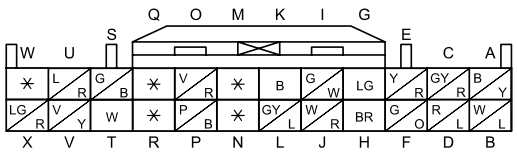

Refer to 00F section for the FUSE BOX, 00C section for the PCM CONNECTOR and COMMON CONNECTOR LIST.

INSTRUMENT CLUSTER

0922-1a

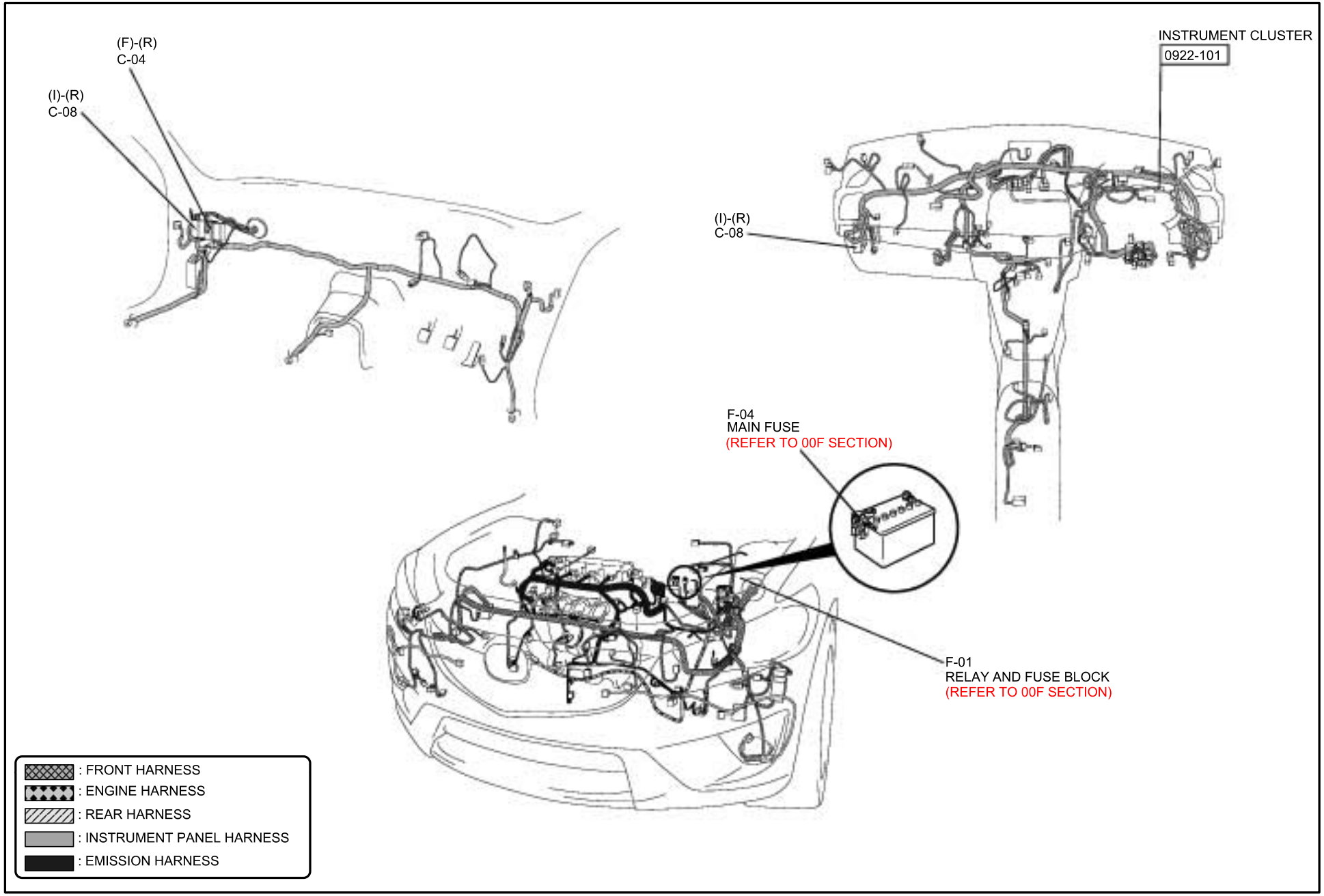

INSTRUMENT CLUSTER

0922-1b

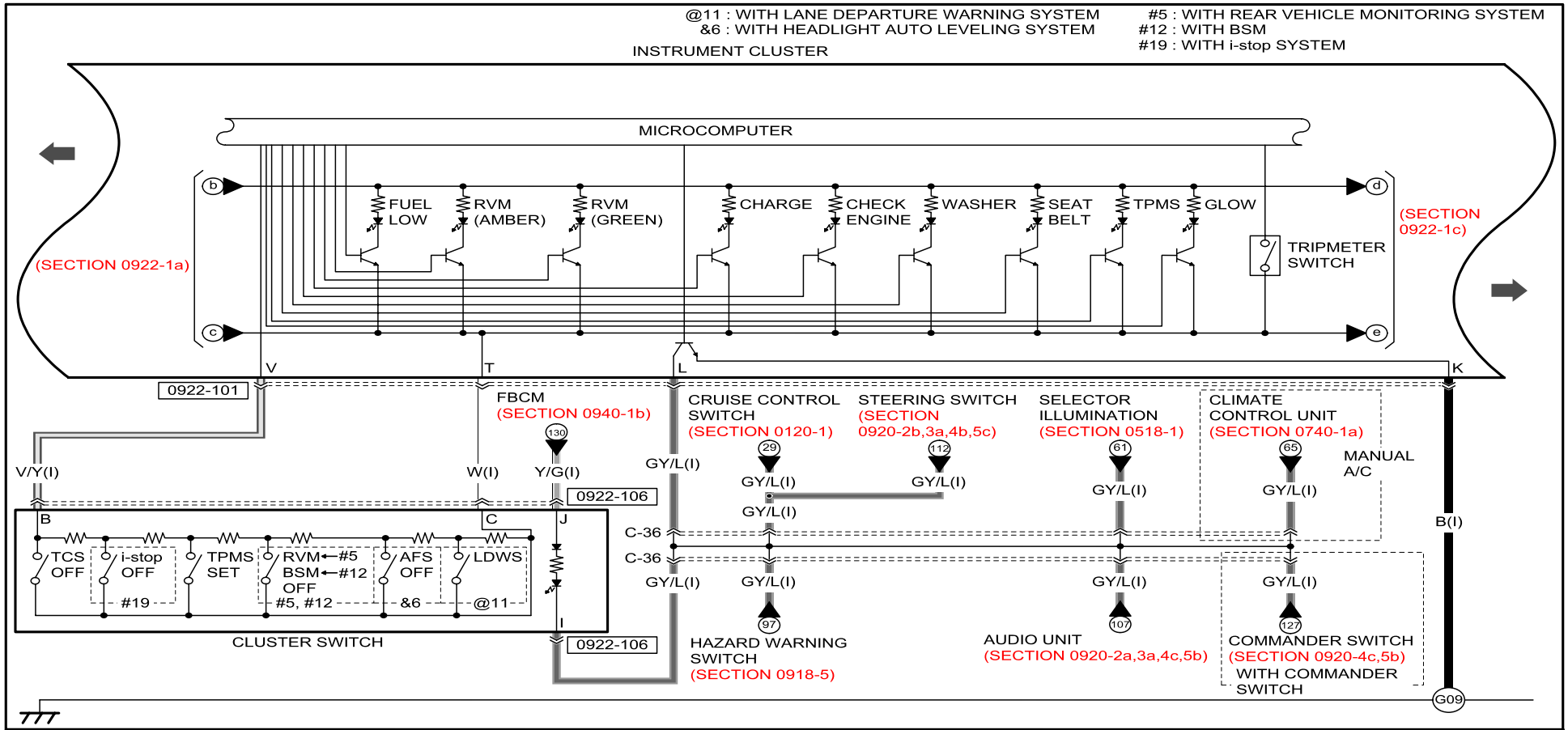

0922-101
INSTRUMENT CLUSTER

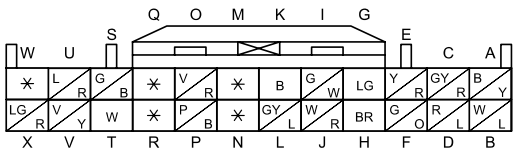

0922-106
CLUSTER SWITCH

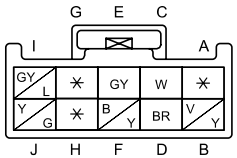

Refer to 00F section for the FUSE BOX, 00C section for the PCM CONNECTOR and COMMON CONNECTOR LIST.

INSTRUMENT CLUSTER

0922-1b

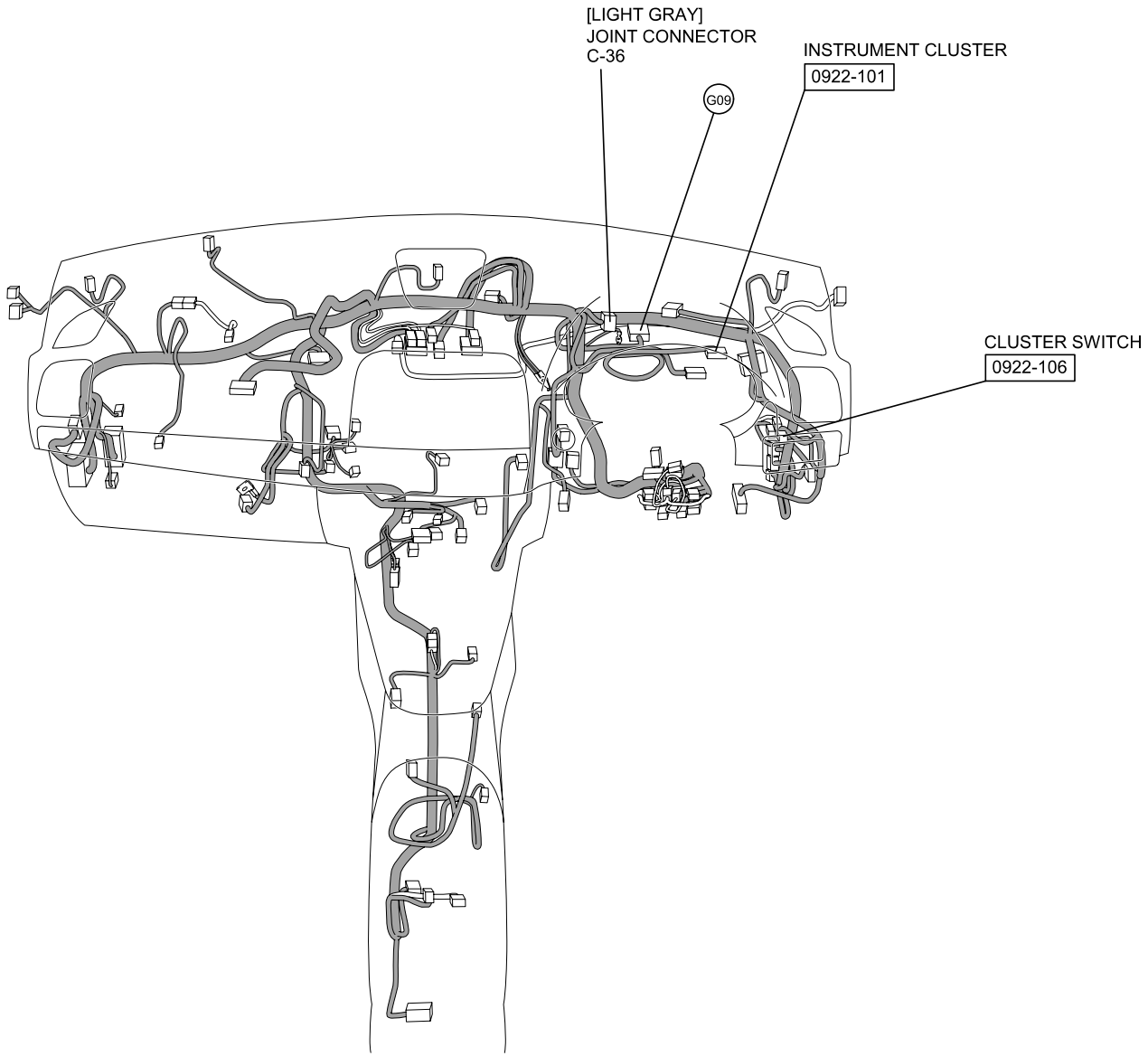

: INSTRUMENT PANEL HARNESS

INSTRUMENT CLUSTER

0922-1c

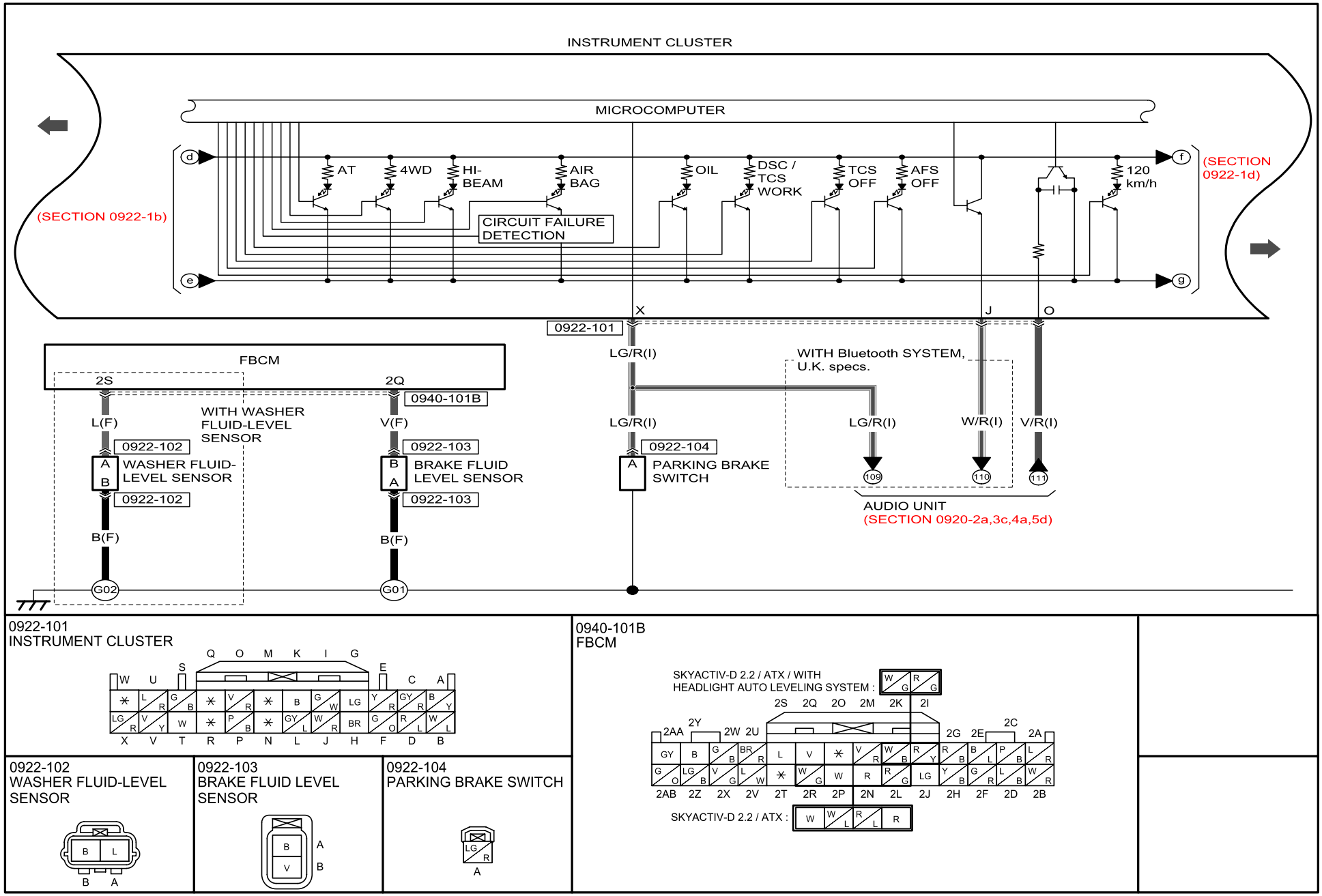

Refer to 00F section for the FUSE BOX, 00C section for the PCM CONNECTOR and COMMON CONNECTOR LIST.

INSTRUMENT CLUSTER

0922-1c

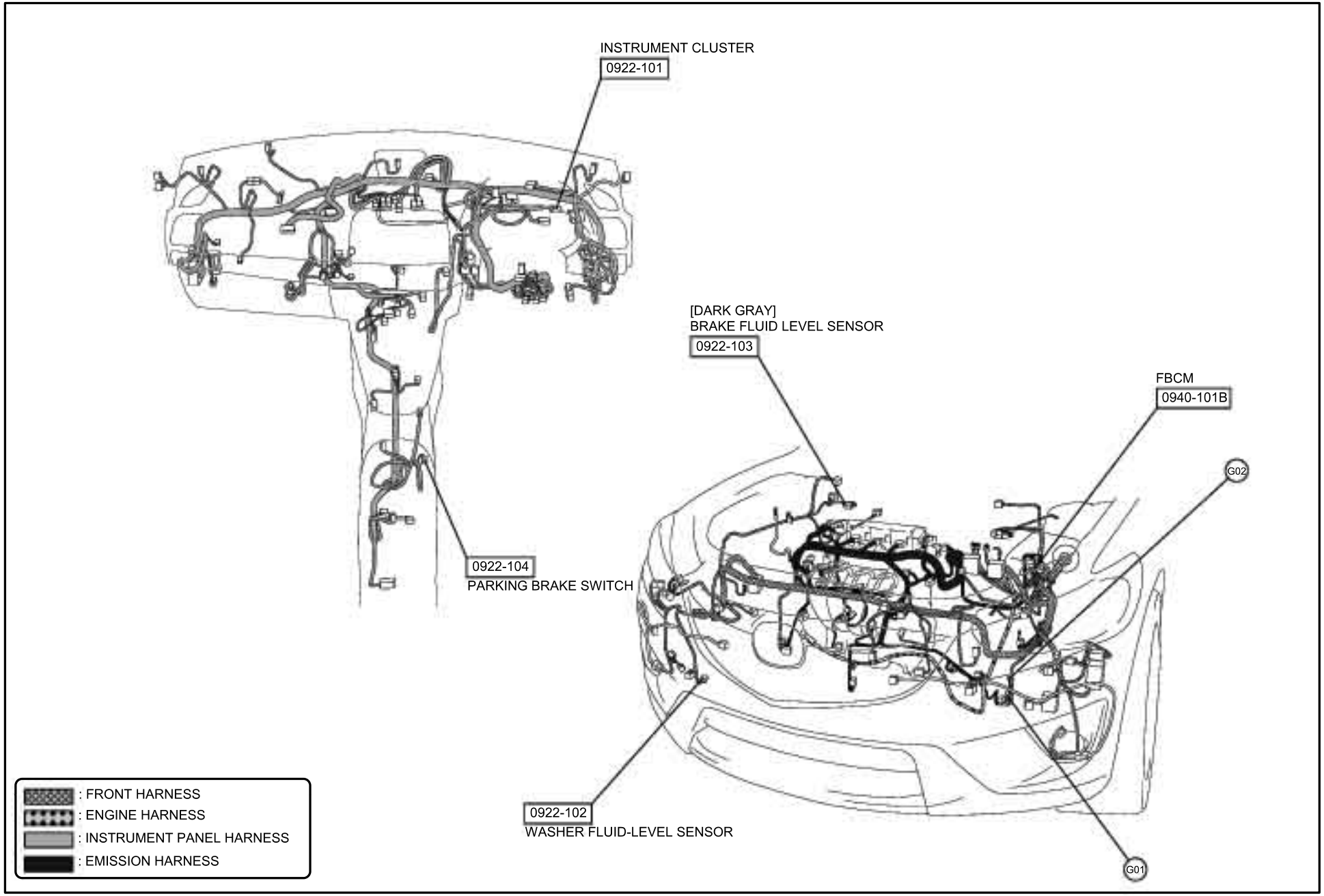

INSTRUMENT CLUSTER

0922-1d

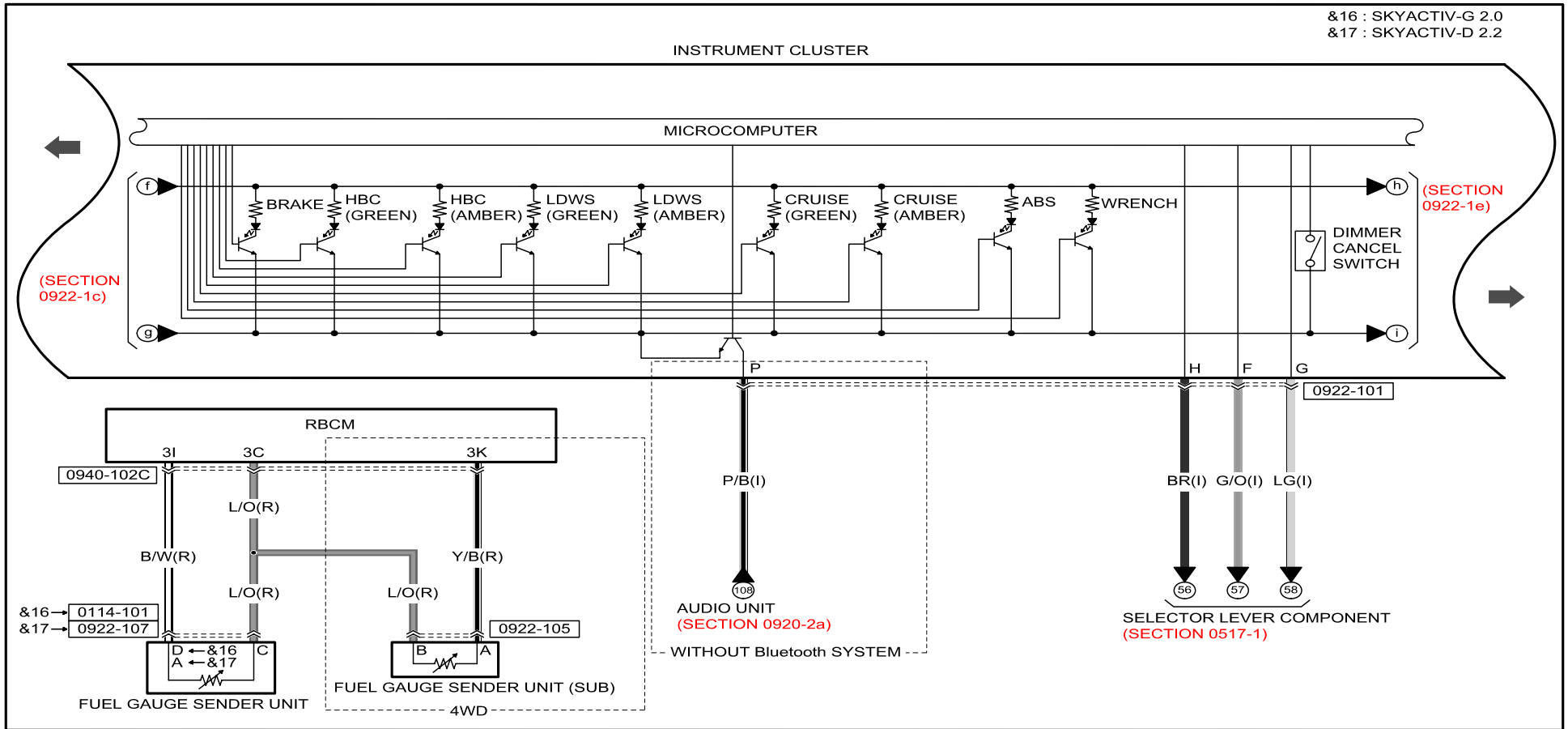

0922-101
INSTRUMENT CLUSTER

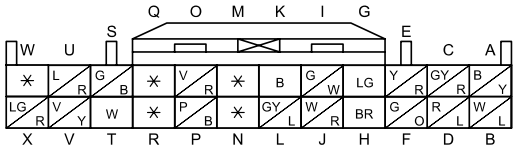

0922-105
FUEL GAUGE SENDER UNIT (SUB)

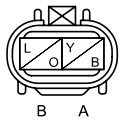

0922-107
FUEL GAUGE SENDER UNIT

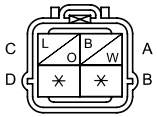

0114-101
FUEL PUMP UNIT / FUEL GAUGE SENDER UNIT

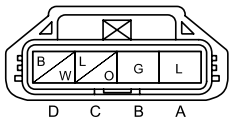

0940-102C
RBCM

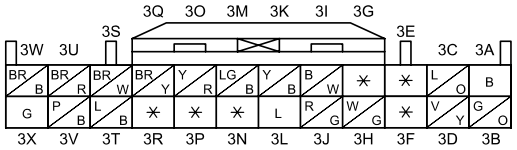

Refer to 00F section for the FUSE BOX, 00C section for the PCM CONNECTOR and COMMON CONNECTOR LIST.

INSTRUMENT CLUSTER

0922-1d

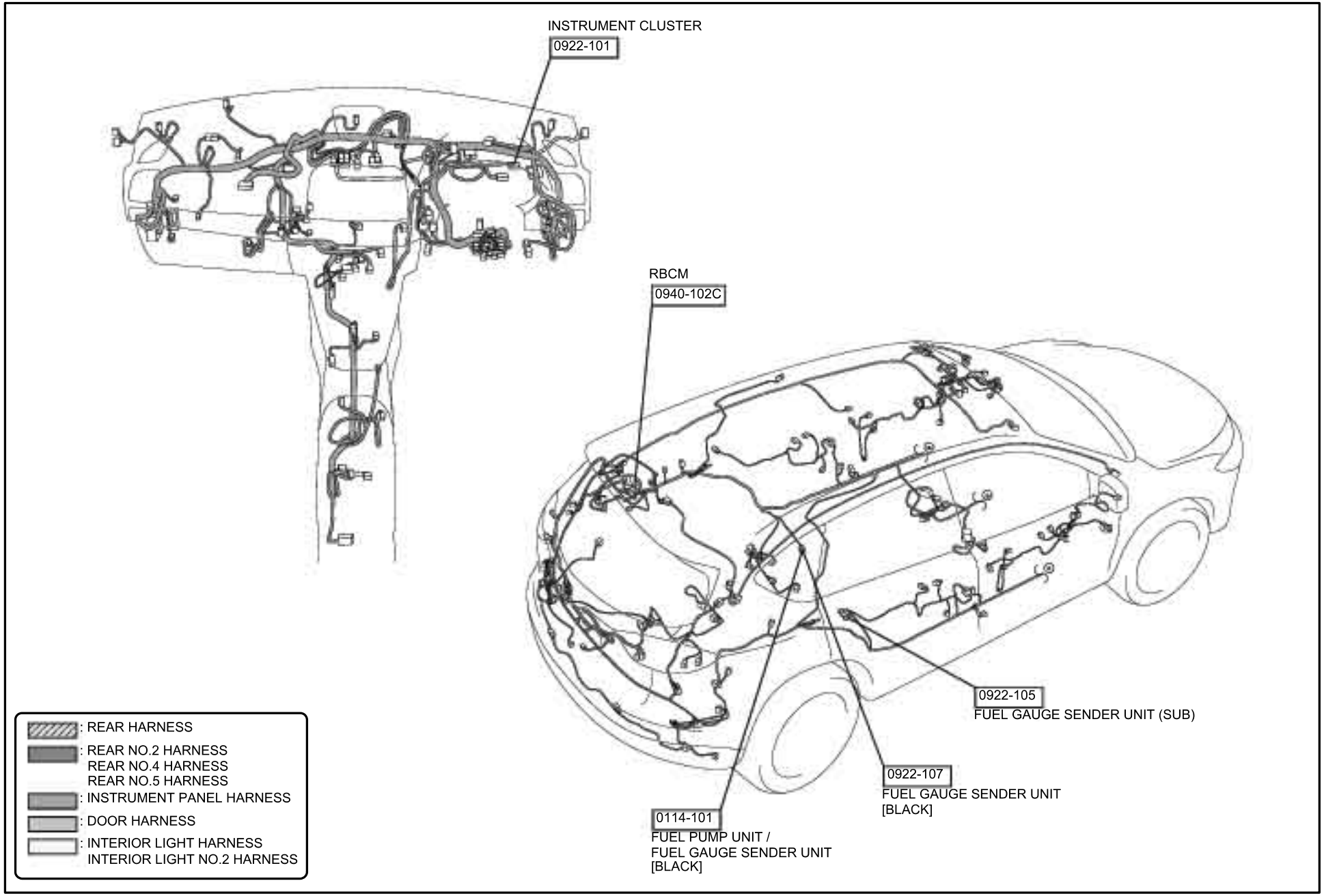

INSTRUMENT CLUSTER

0922-1e

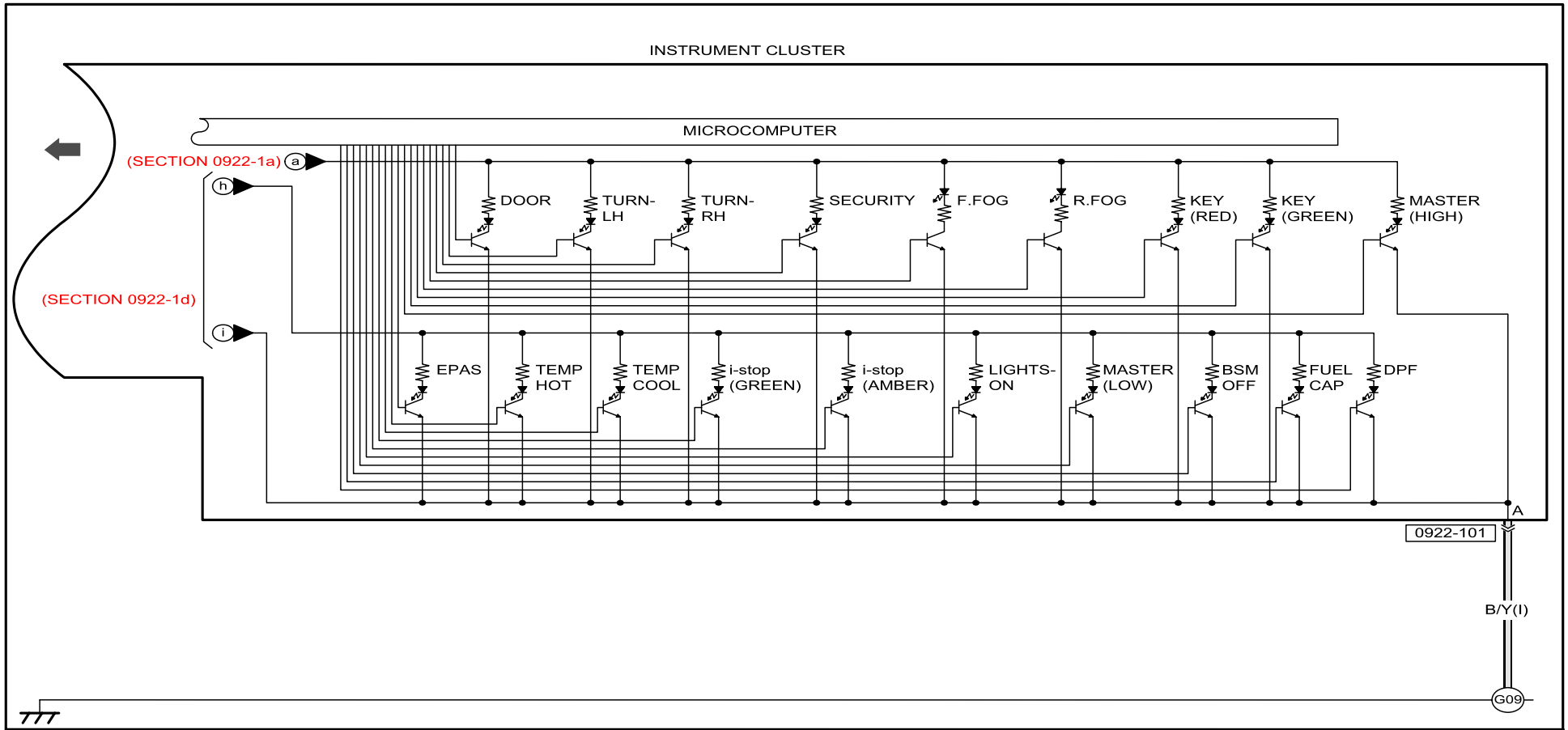

0922-101
INSTRUMENT CLUSTER

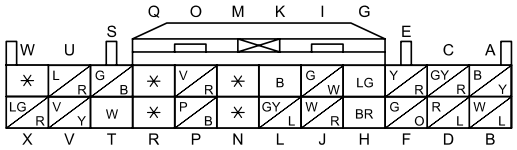

Refer to 00F section for the FUSE BOX, 00C section for the PCM CONNECTOR and COMMON CONNECTOR LIST.

INSTRUMENT CLUSTER

0922-1e

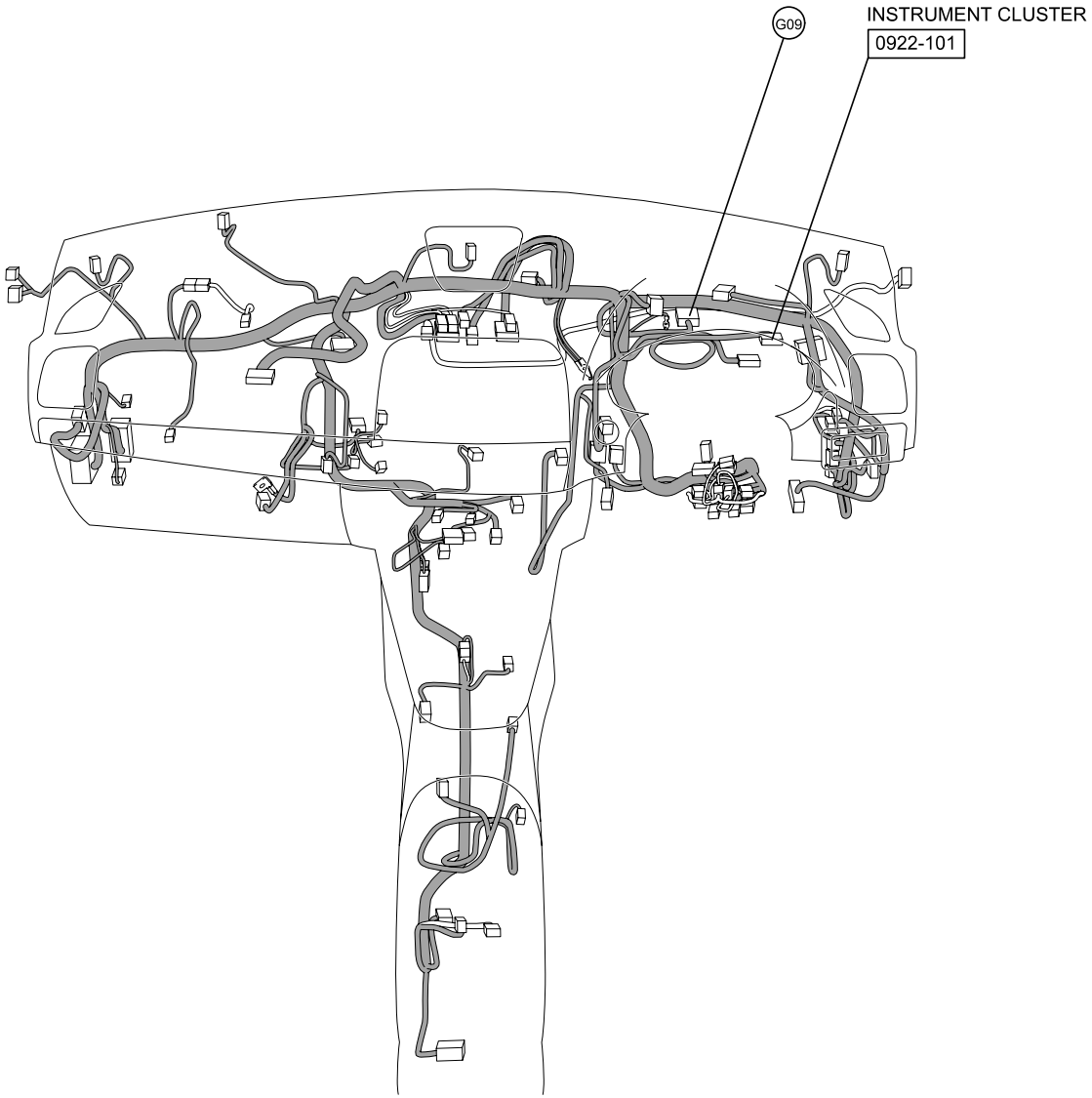

: INSTRUMENT PANEL HARNESS

HORN

0922-2

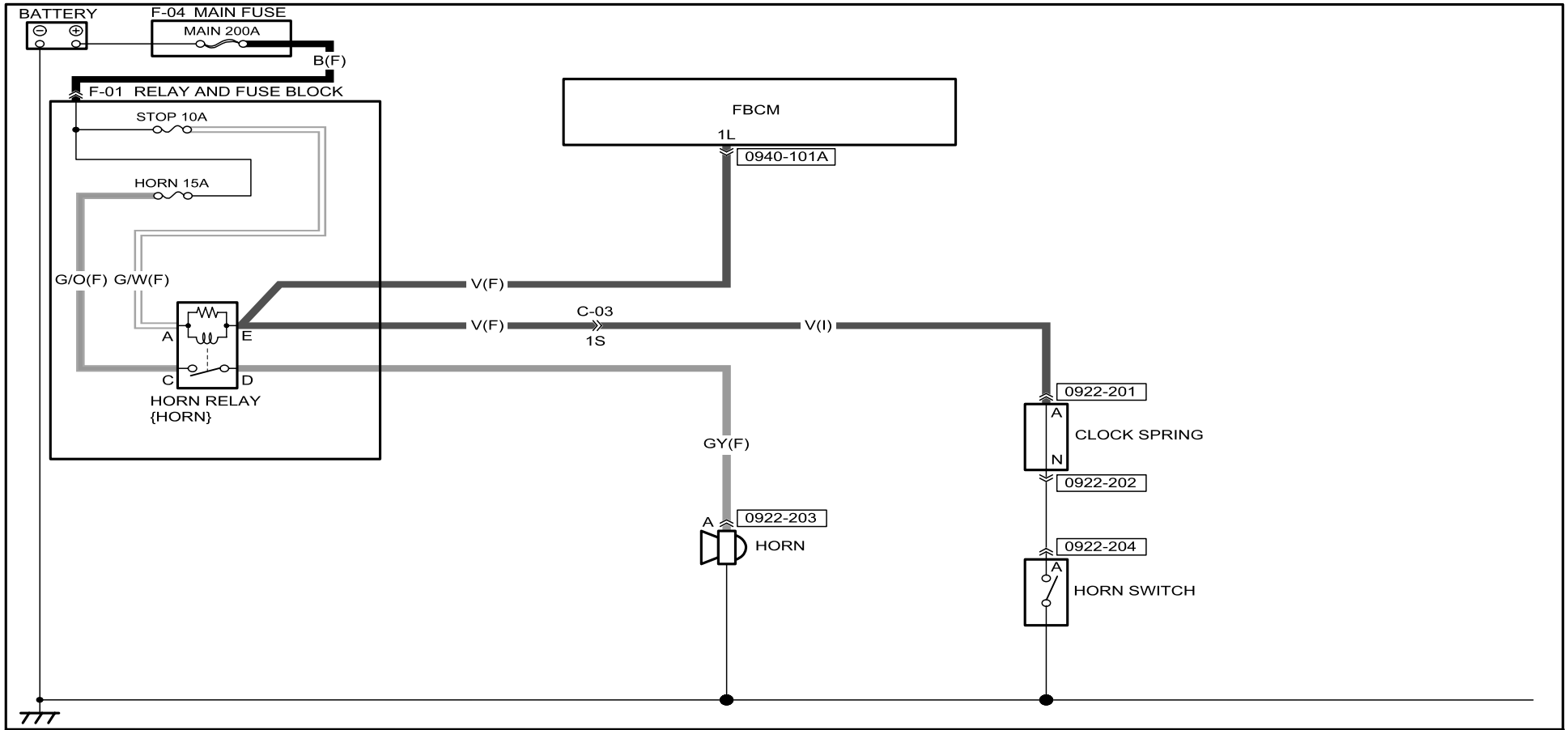

0922-201
CLOCK SPRING

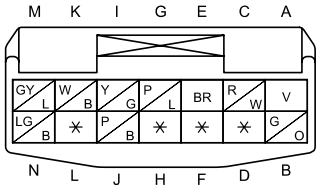

0922-202
CRUISE CONTROL SWITCH /
STEERING SWITCH /
CLOCK SPRING

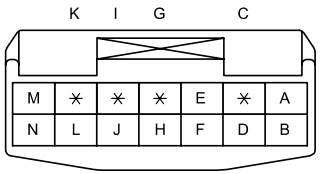

0922-203
HORN

0922-204
HORN SWITCH

0940-101A
FBCM

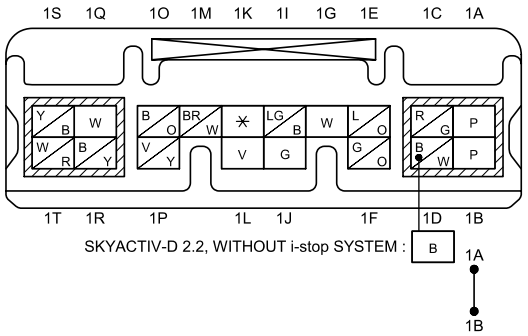

Refer to 00F section for the FUSE BOX, 00C section for the PCM CONNECTOR and COMMON CONNECTOR LIST.

HORN

0922-2

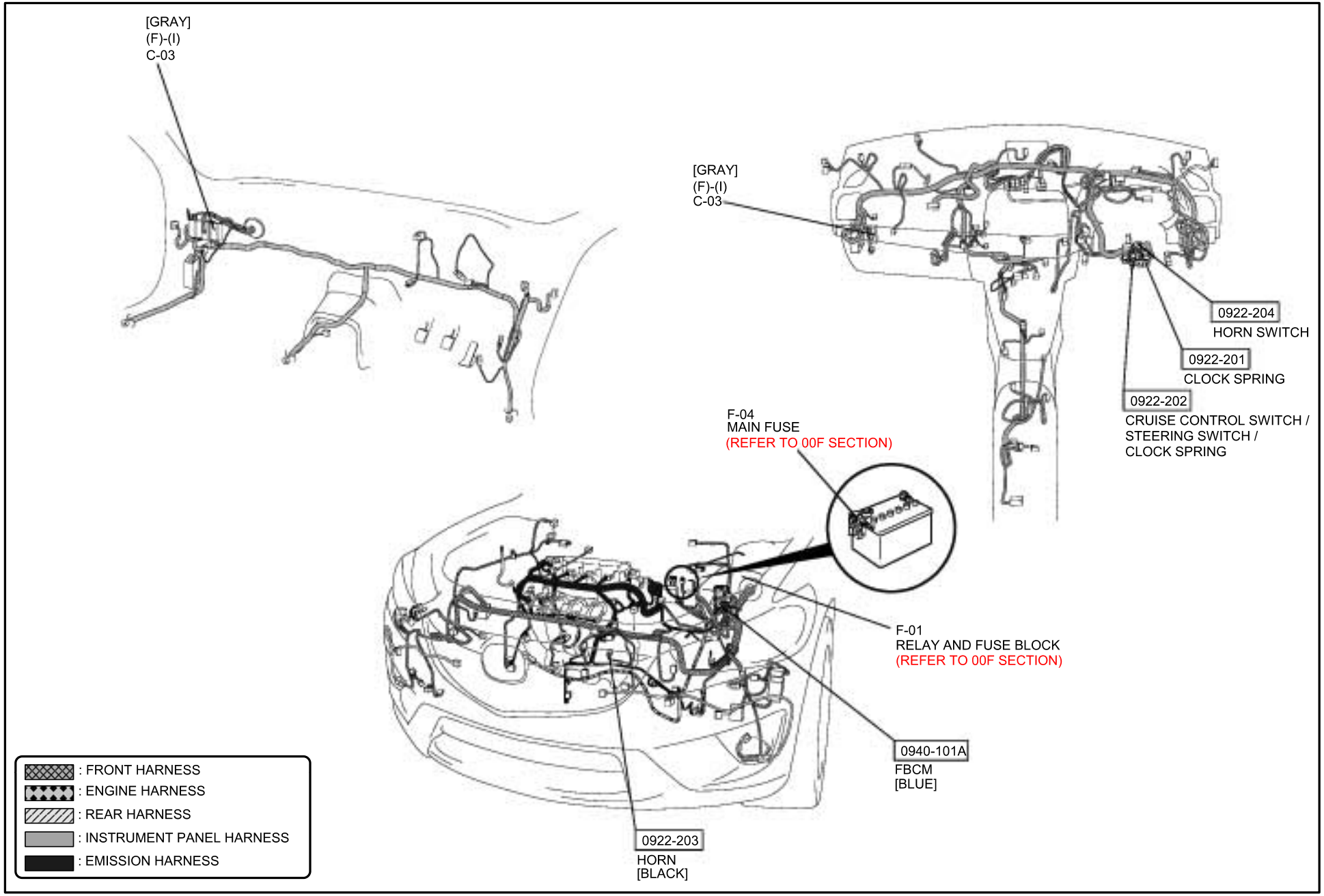
[GRAY]
(F)-(I)
C-03
[GRAY]
(F)-(I)
C-03
0922-204
HORN SWITCH
0922-201
CLOCK SPRING
0922-202
CRUISE CONTROL SWITCH /
STEERING SWITCH /
CLOCK SPRING
F-04
MAIN FUSE
(REFER TO 00F SECTION)
F-01
RELAY AND FUSE BLOCK
(REFER TO 00F SECTION)
0940-101A
FBCM
[BLUE]
0922-203
HORN
[BLACK]
: FRONT HARNESS
: ENGINE HARNESS
: REAR HARNESS
: INSTRUMENT PANEL HARNESS
: EMISSION HARNESS

PARKING SENSOR SYSTEM

0922-3a

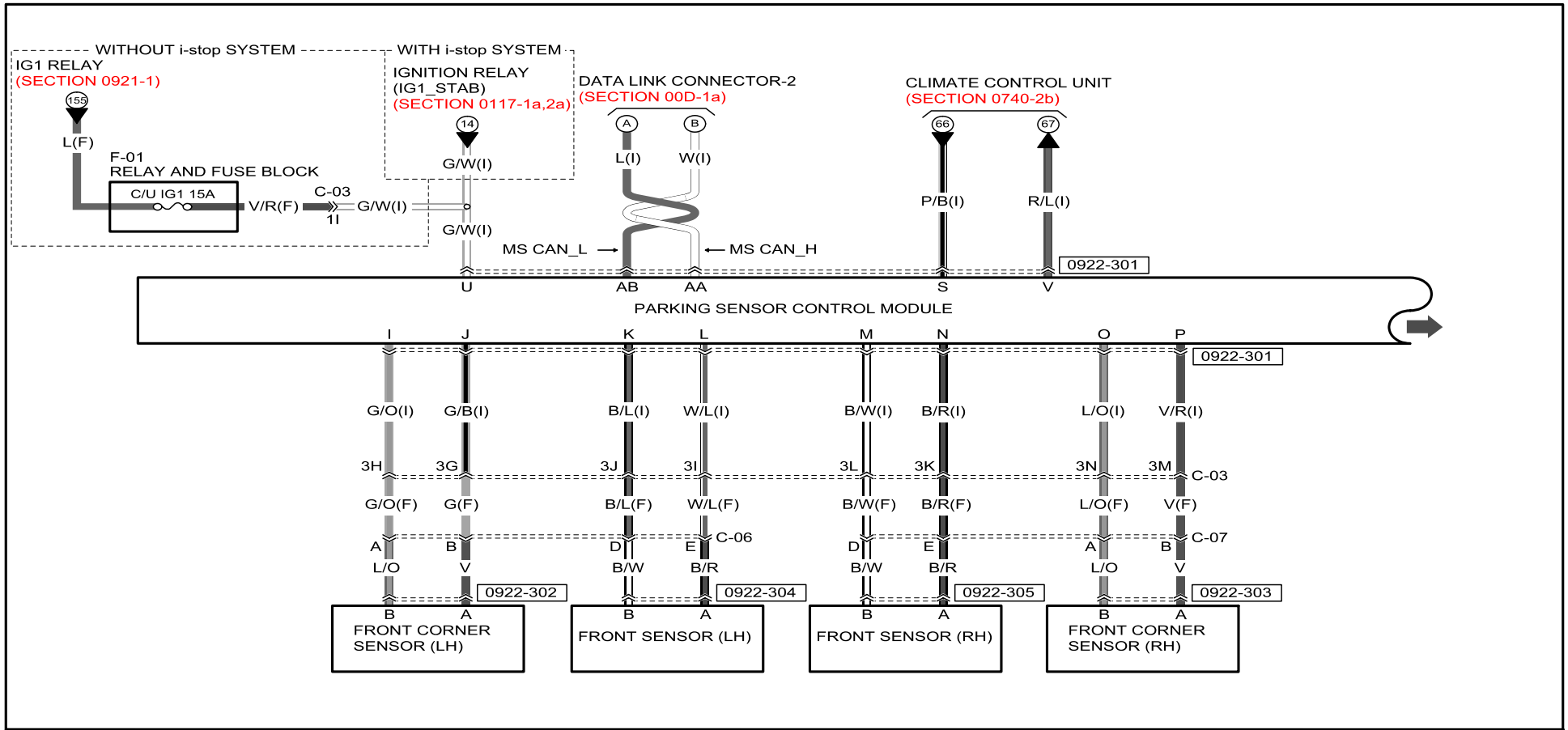

0922-301 PARKING SENSOR CONTROL MODULE	0922-302 FRONT CORNER SENSOR (LH)	0922-303 FRONT CORNER SENSOR (RH)	0922-304 FRONT SENSOR (LH)	0922-305 FRONT SENSOR (RH)
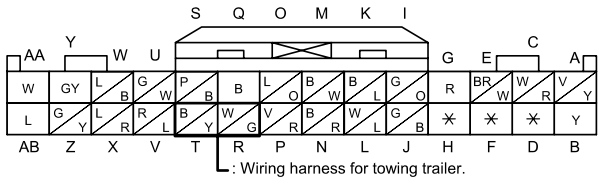	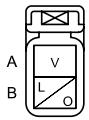	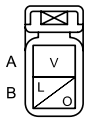	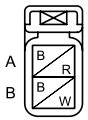	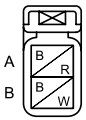

Refer to 00F section for the FUSE BOX, 00C section for the PCM CONNECTOR and COMMON CONNECTOR LIST.

PARKING SENSOR SYSTEM

0922-3a

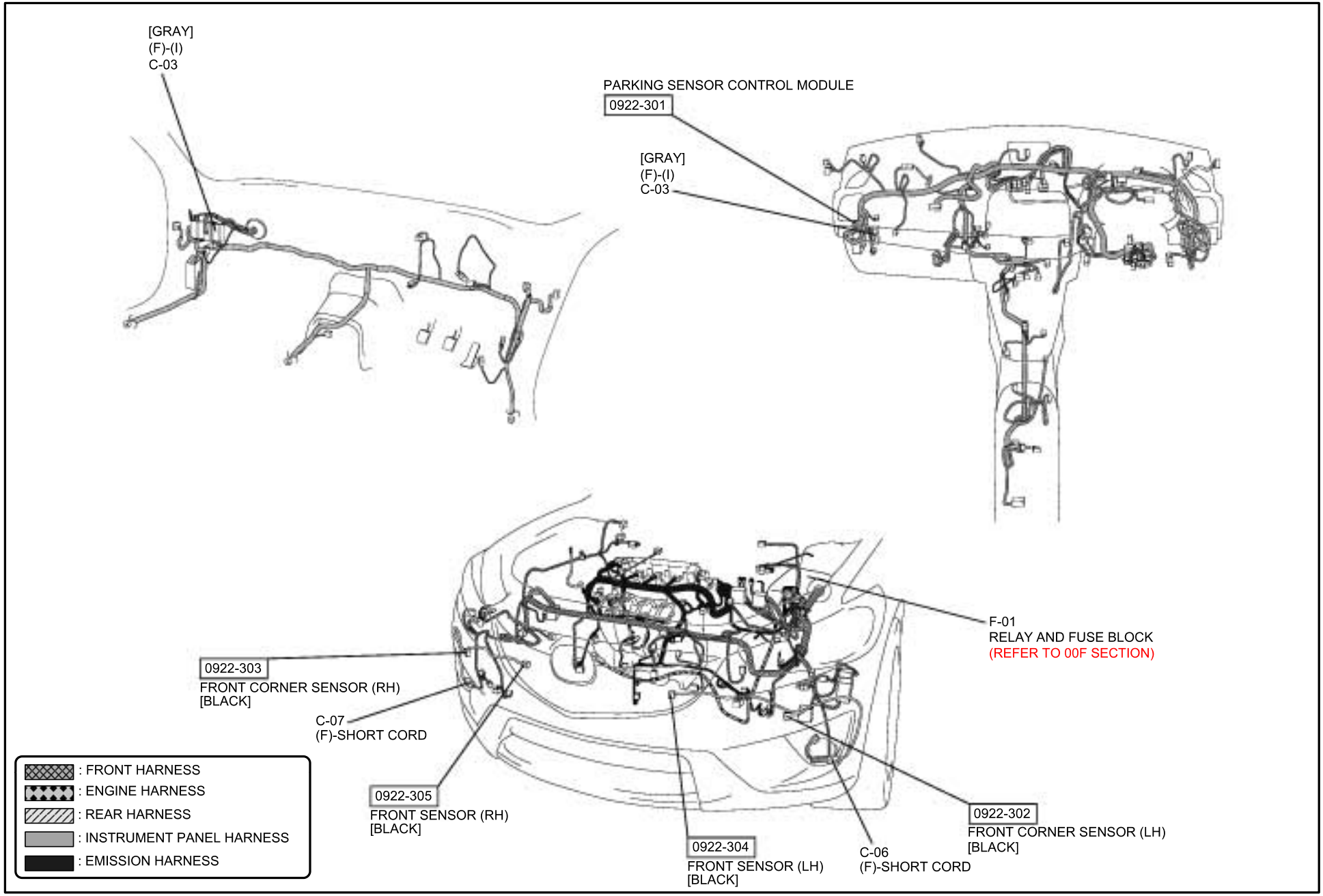

PARKING SENSOR SYSTEM

0922-3b

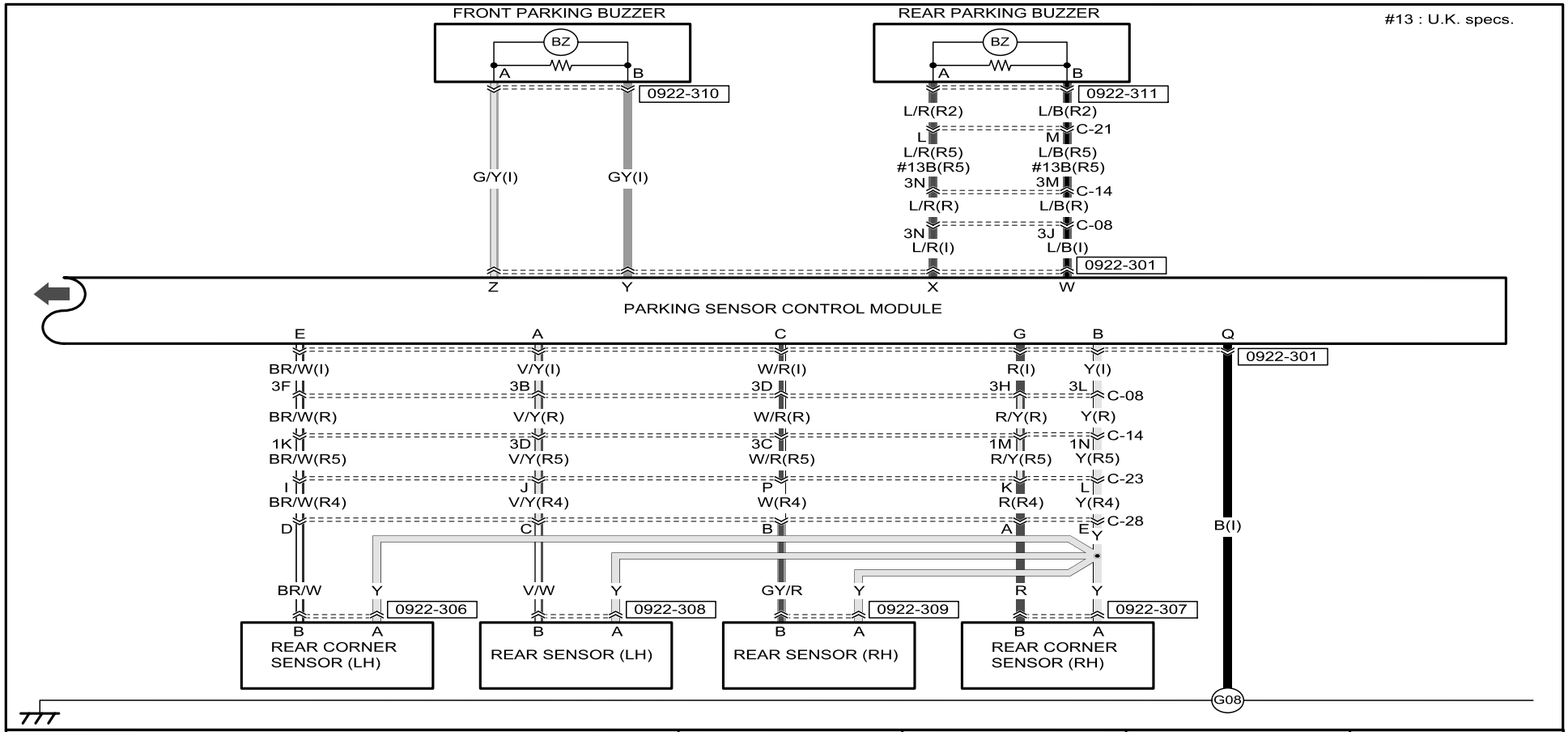

0922-301
PARKING SENSOR CONTROL MODULE

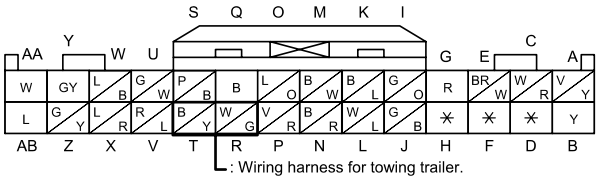

0922-306
REAR CORNER SENSOR (LH)

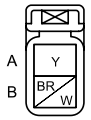

0922-307
REAR CORNER SENSOR (RH)

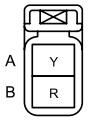

0922-308
REAR SENSOR (LH)

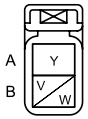

0922-309
REAR SENSOR (RH)

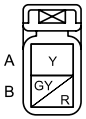

0922-310
FRONT PARKING BUZZER

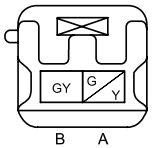

0922-311
REAR PARKING BUZZER

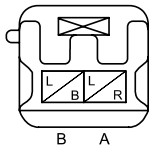

Refer to 00F section for the FUSE BOX, 00C section for the PCM CONNECTOR and COMMON CONNECTOR LIST.

PARKING SENSOR SYSTEM

0922-3b

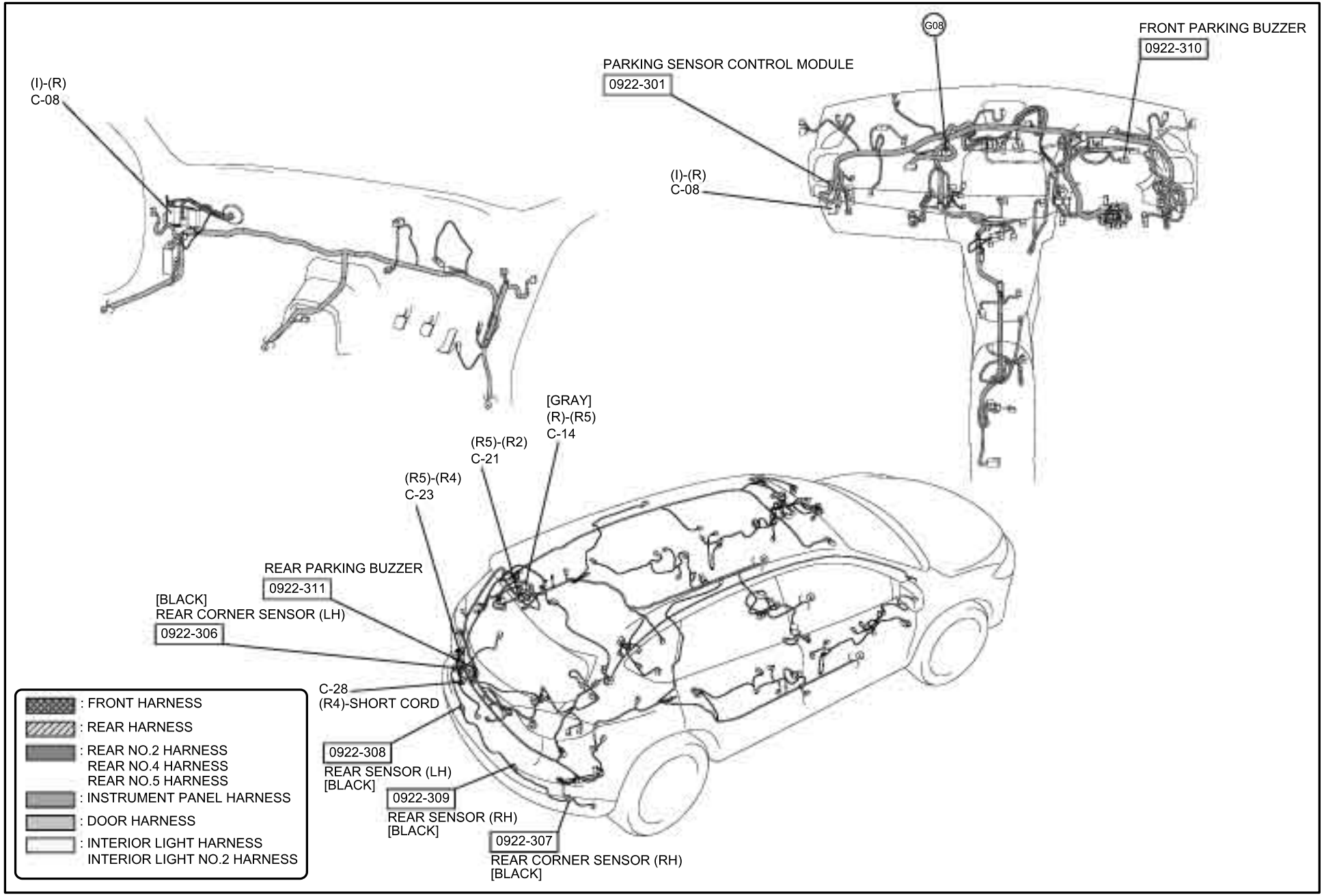

REAR VEHICLE MONITORING SYSTEM

0922-4

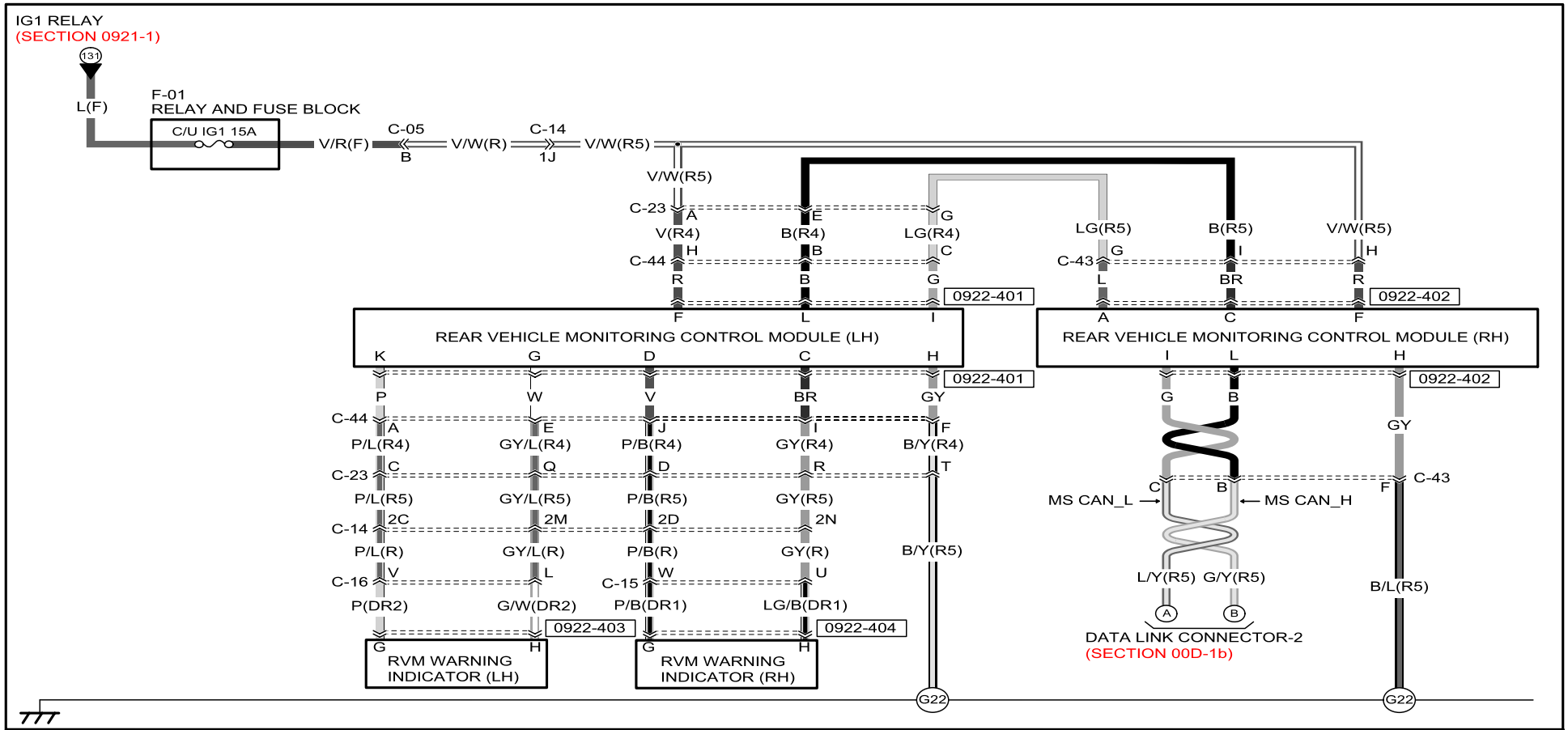

0922-401
REAR VEHICLE MONITORING CONTROL MODULE (LH)

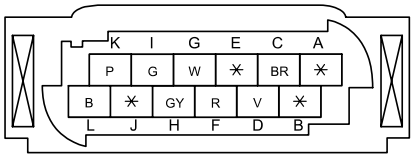

0922-402
REAR VEHICLE MONITORING CONTROL MODULE (RH)

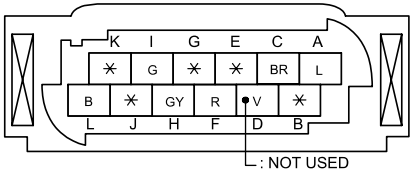

0922-403
RVM WARNING INDICATOR (LH)

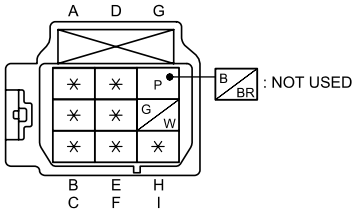

0922-404
RVM WARNING INDICATOR (RH)

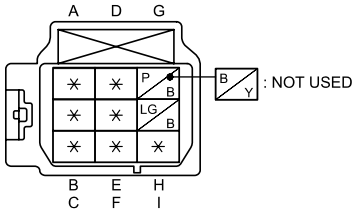

Refer to 00F section for the FUSE BOX, 00C section for the PCM CONNECTOR and COMMON CONNECTOR LIST.

REAR VEHICLE MONITORING SYSTEM

0922-4

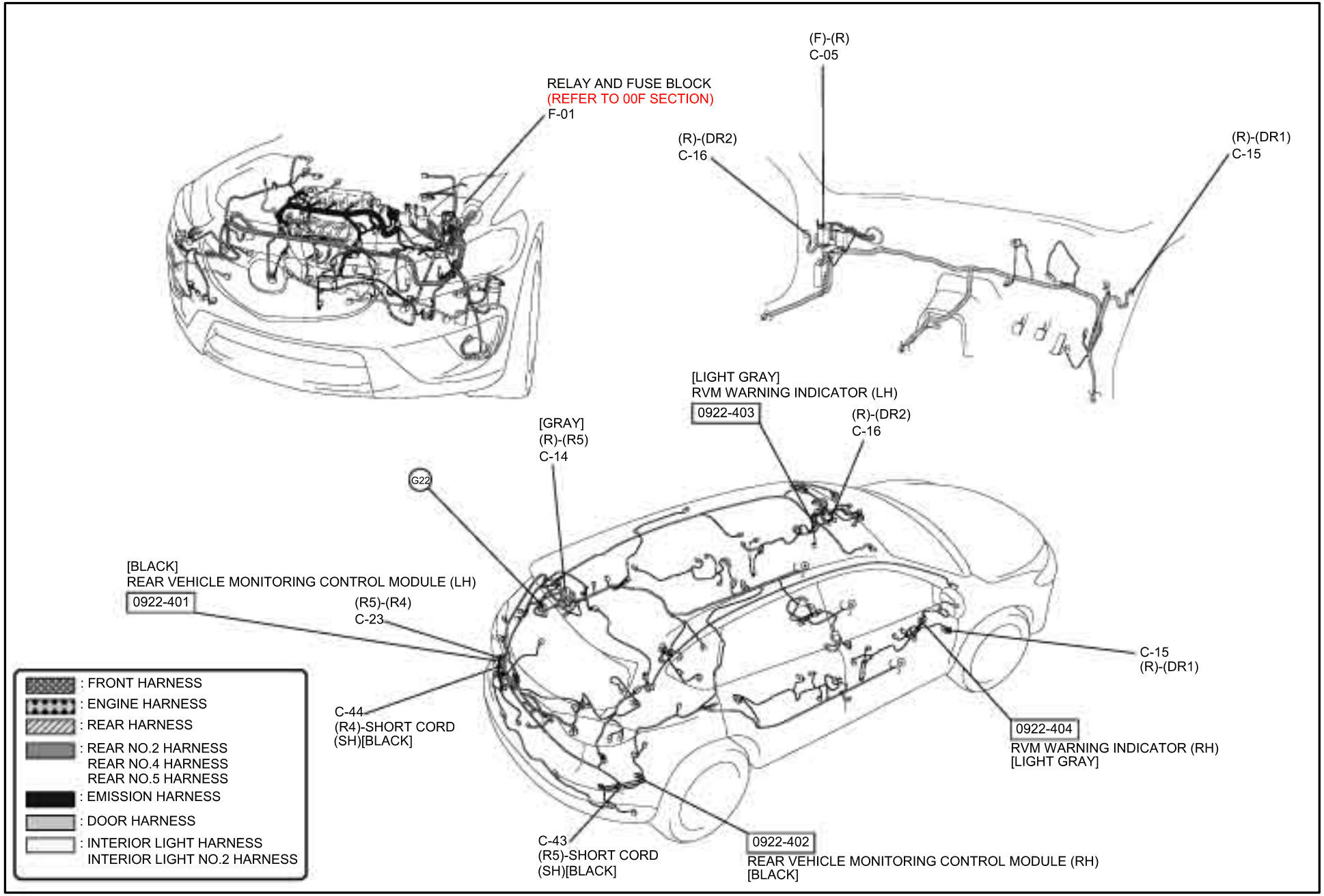

LANE DEPARTURE WARNING SYSTEM

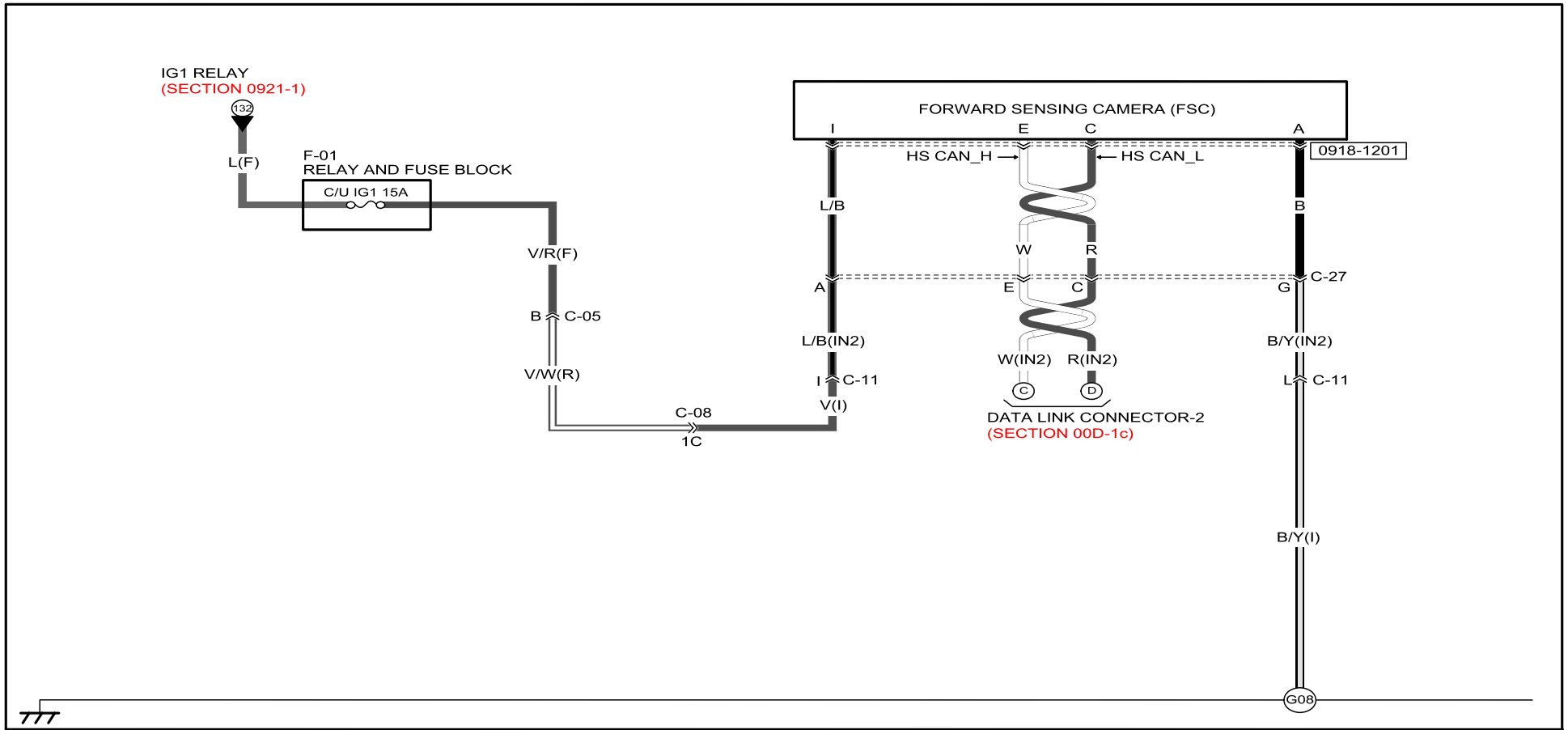

0918-1201
FORWARD SENSING CAMERA (FSC)

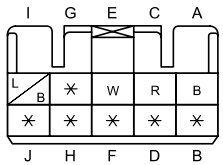

Refer to 00F section for the FUSE BOX, 00C section for the PCM CONNECTOR and COMMON CONNECTOR LIST.

LANE DEPARTURE WARNING SYSTEM

0922-5

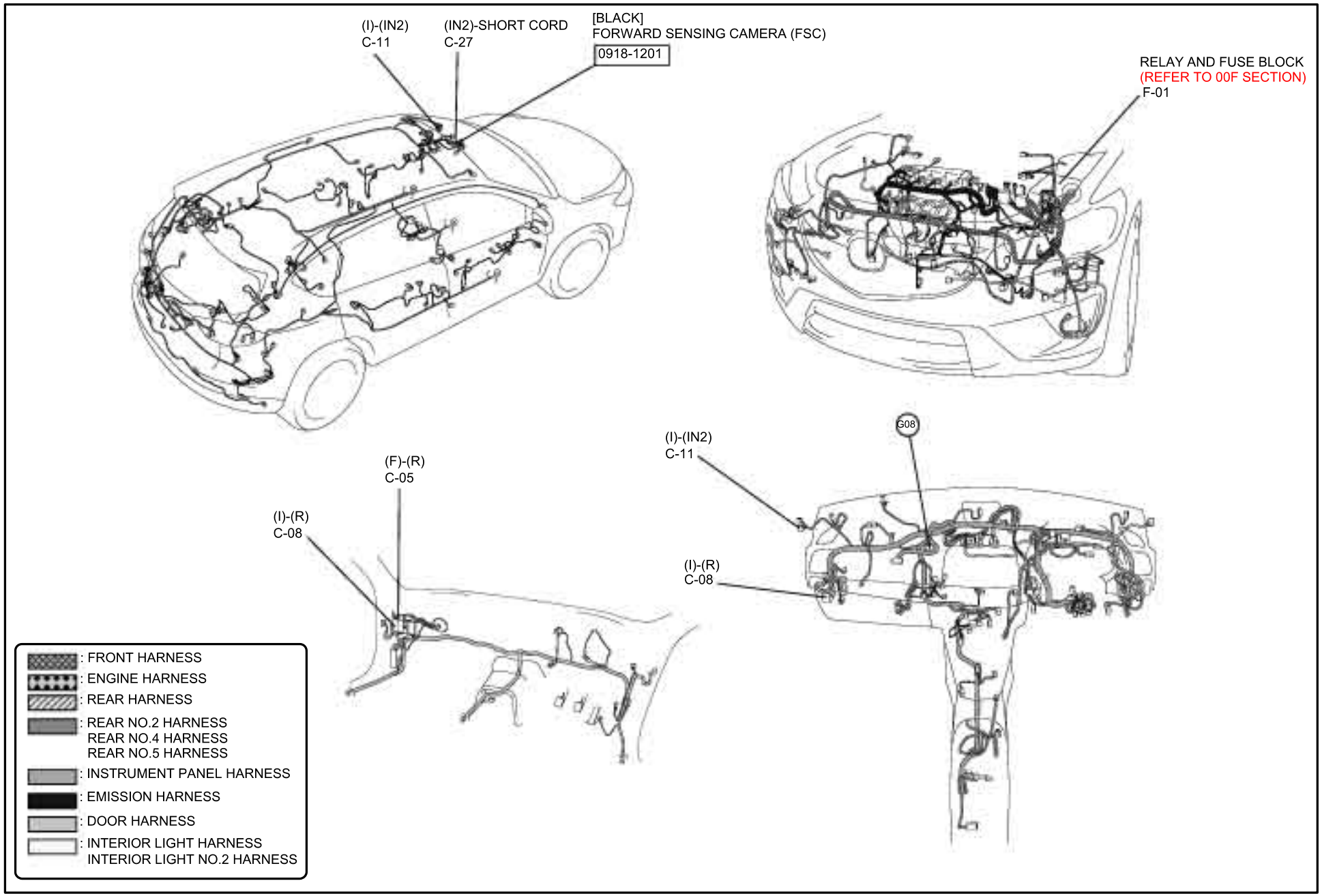

BLIND SPOT MONITORING (BSM)

0922-6

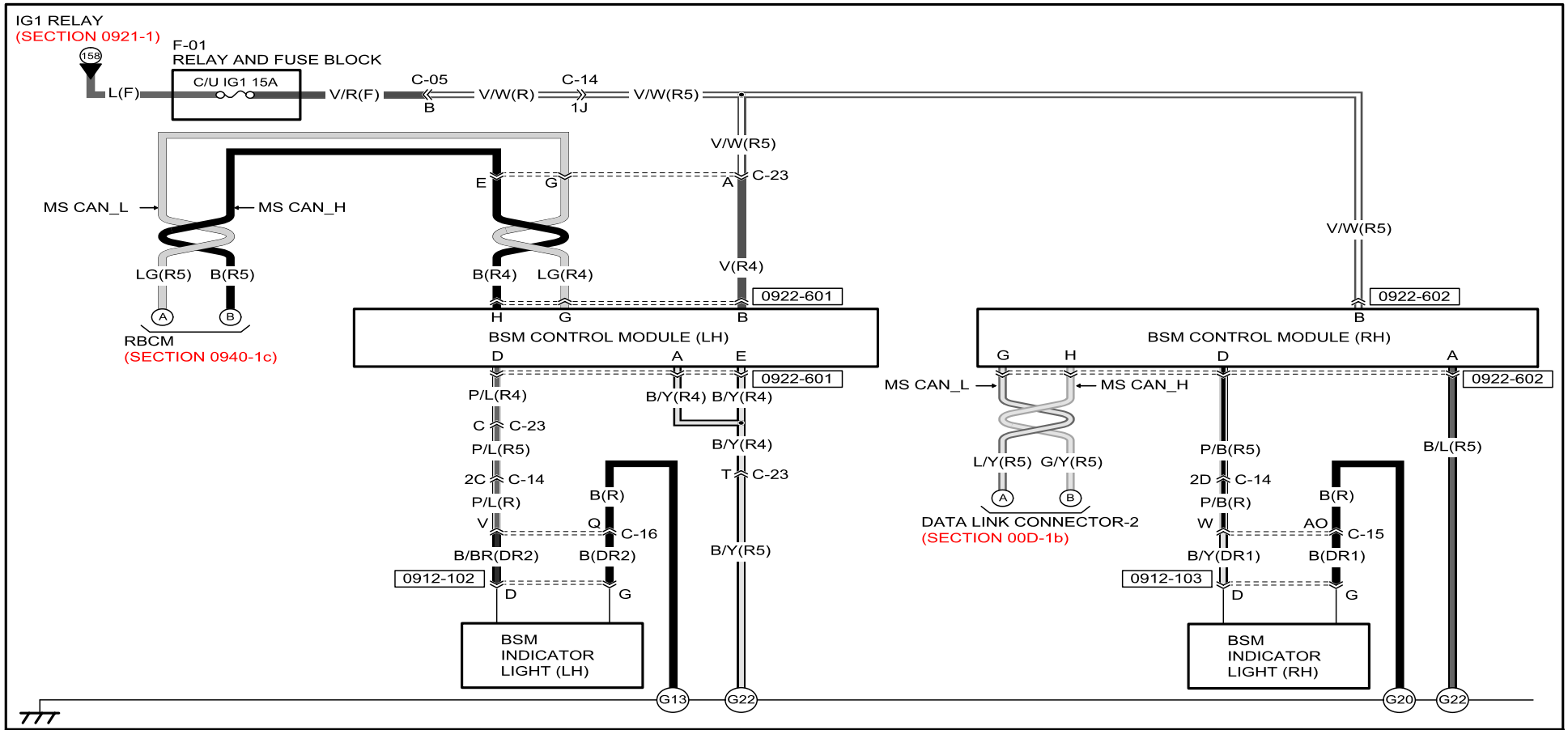

0922-601
BSM CONTROL MODULE (LH)

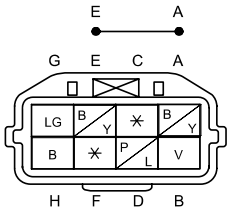

0922-602
BSM CONTROL MODULE (RH)

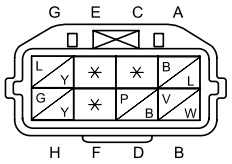

0912-102
HEATED OUTER MIRROR (LH) /
POWER OUTER MIRROR (LH) /
RETRACTABLE OUTER MIRROR (LH) /
DOOR NO.2 HARNESS-SHORT CORD /
BSM INDICATOR LIGHT (LH)

DOOR NO.2 HARNESS

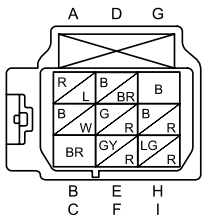

SHORT CORD

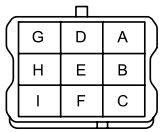

0912-103
HEATED OUTER MIRROR (RH) /
POWER OUTER MIRROR (RH) /
RETRACTABLE OUTER MIRROR (RH) /
DOOR NO.1 HARNESS-SHORT CORD /
BSM INDICATOR LIGHT (RH)

DOOR NO.1 HARNESS

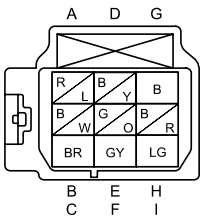

SHORT CORD

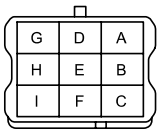

Refer to 00F section for the FUSE BOX, 00C section for the PCM CONNECTOR and COMMON CONNECTOR LIST.

BLIND SPOT MONITORING (BSM)

0922-6

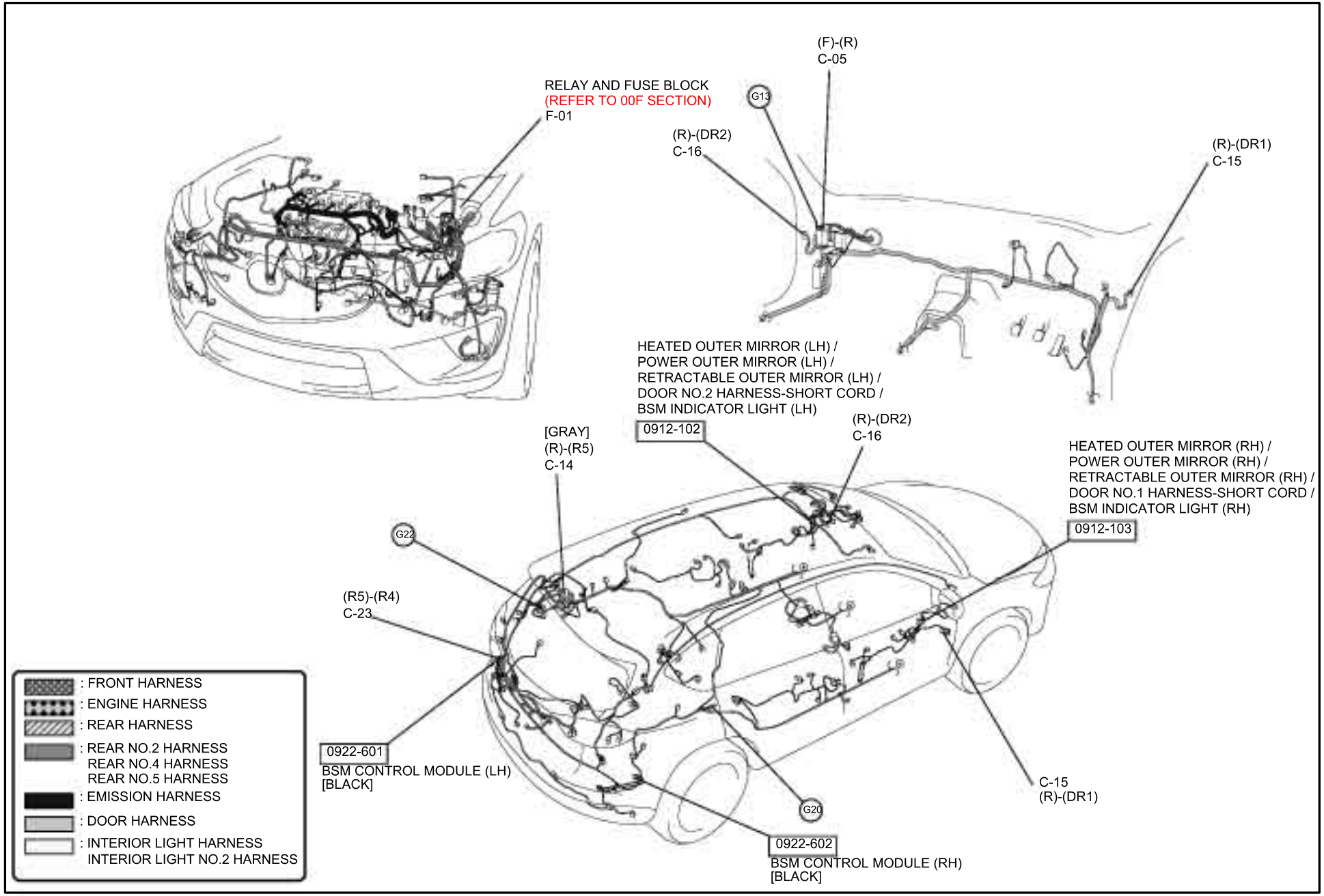

BODY CONTROL SYSTEM

0940-1a

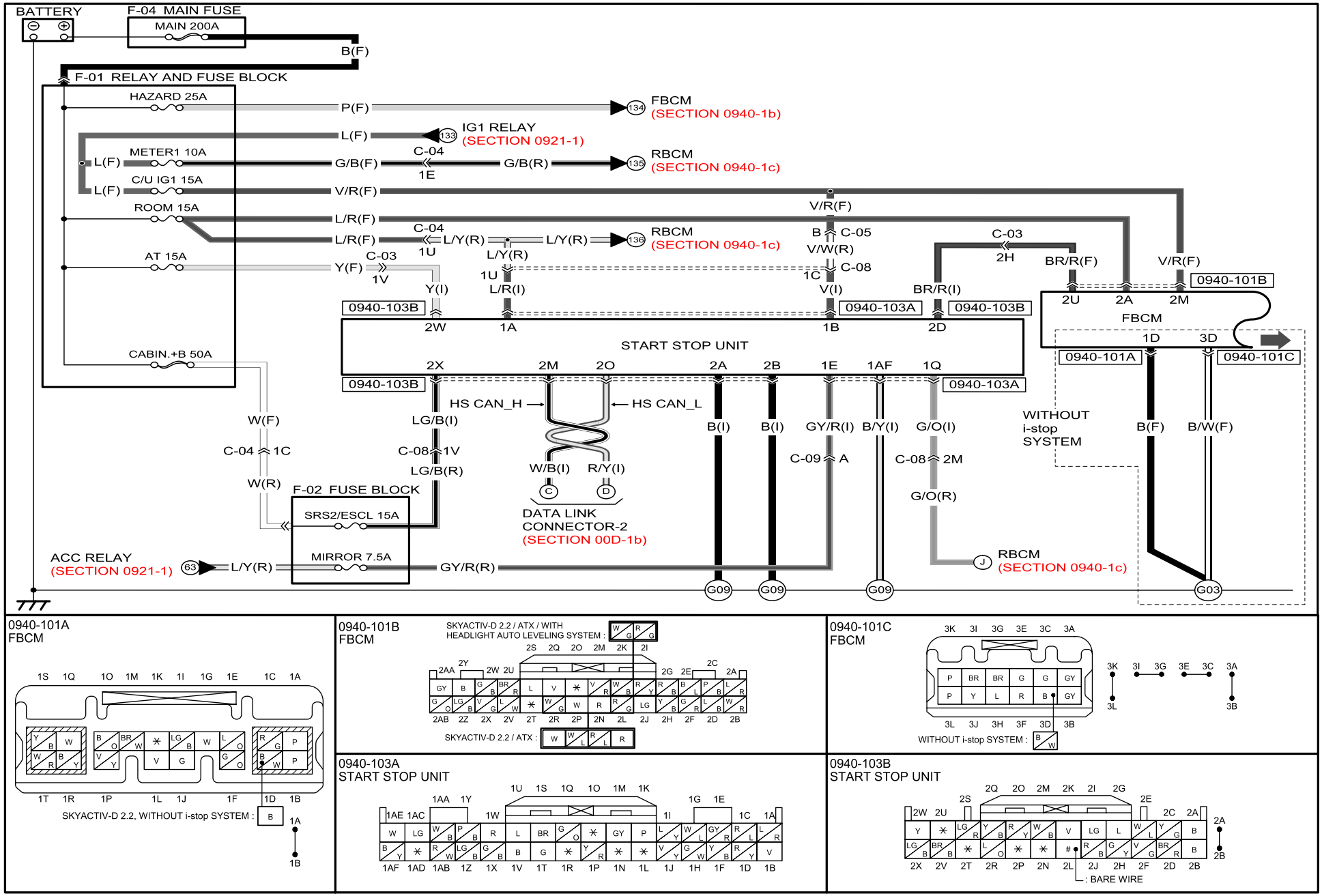

Refer to 00F section for the FUSE BOX, 00C section for the PCM CONNECTOR and COMMON CONNECTOR LIST.

BODY CONTROL SYSTEM

0940-1a

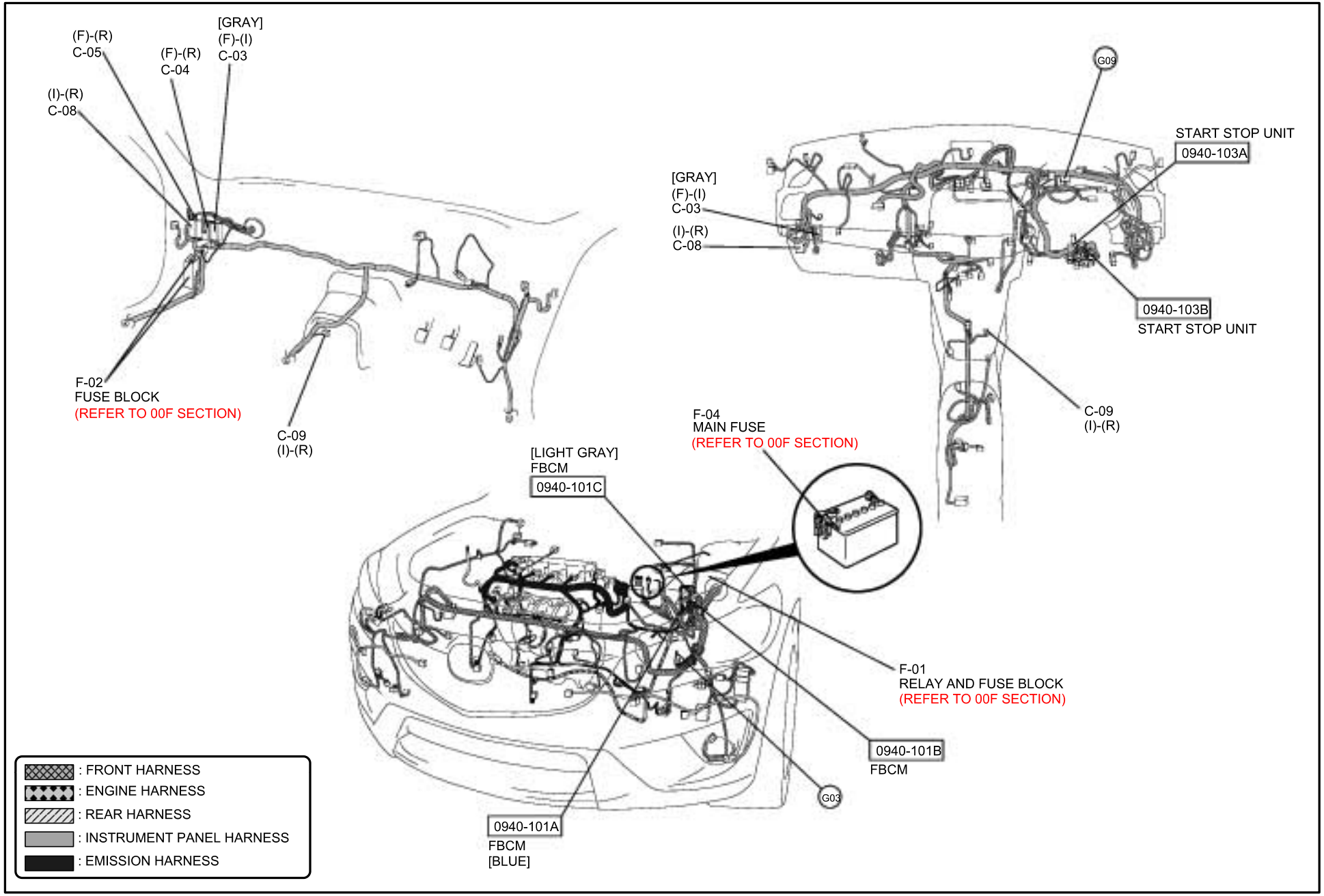

BODY CONTROL SYSTEM

0940-1b

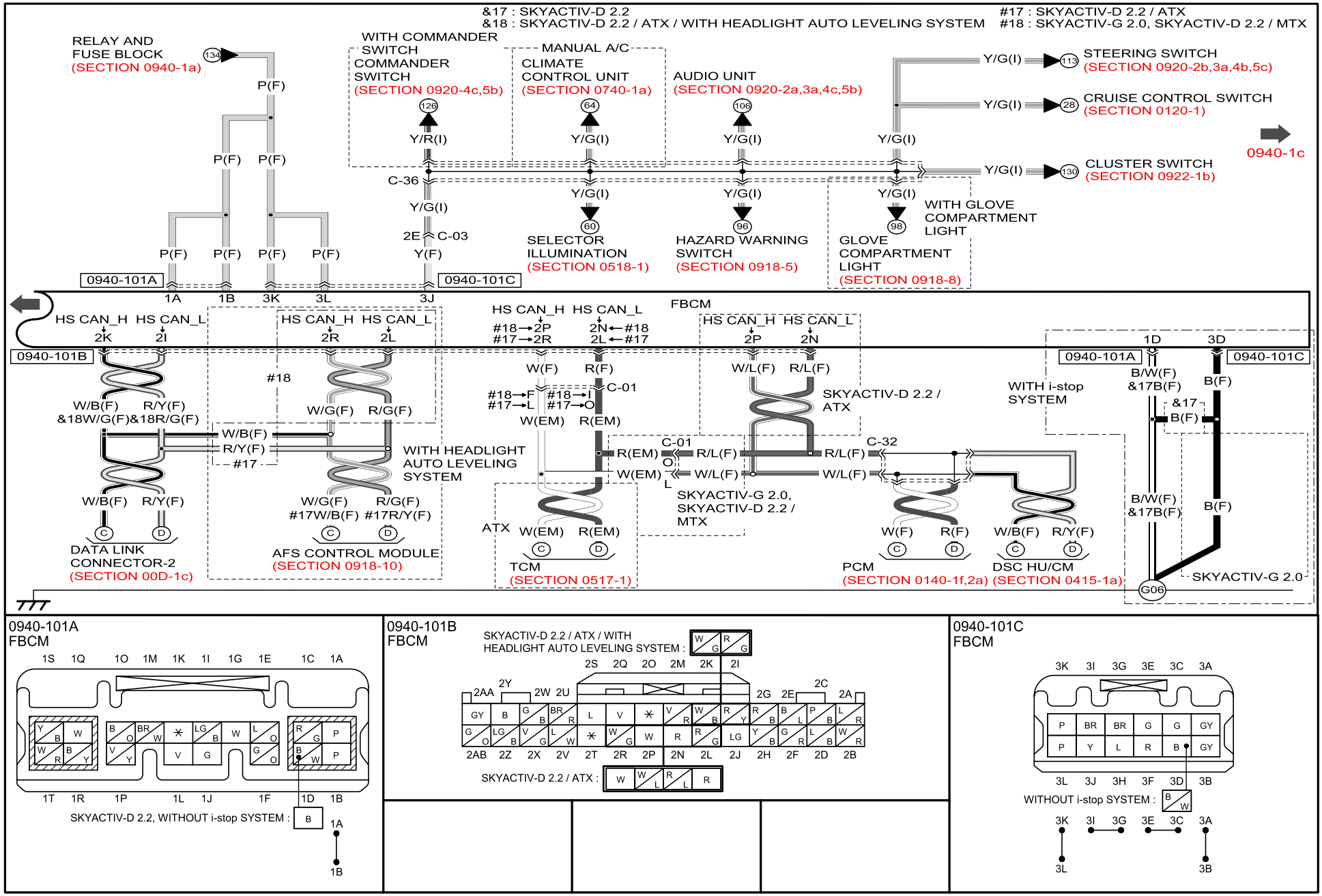

Refer to 00F section for the FUSE BOX, 00C section for the PCM CONNECTOR and COMMON CONNECTOR LIST.

BODY CONTROL SYSTEM

0940-1b

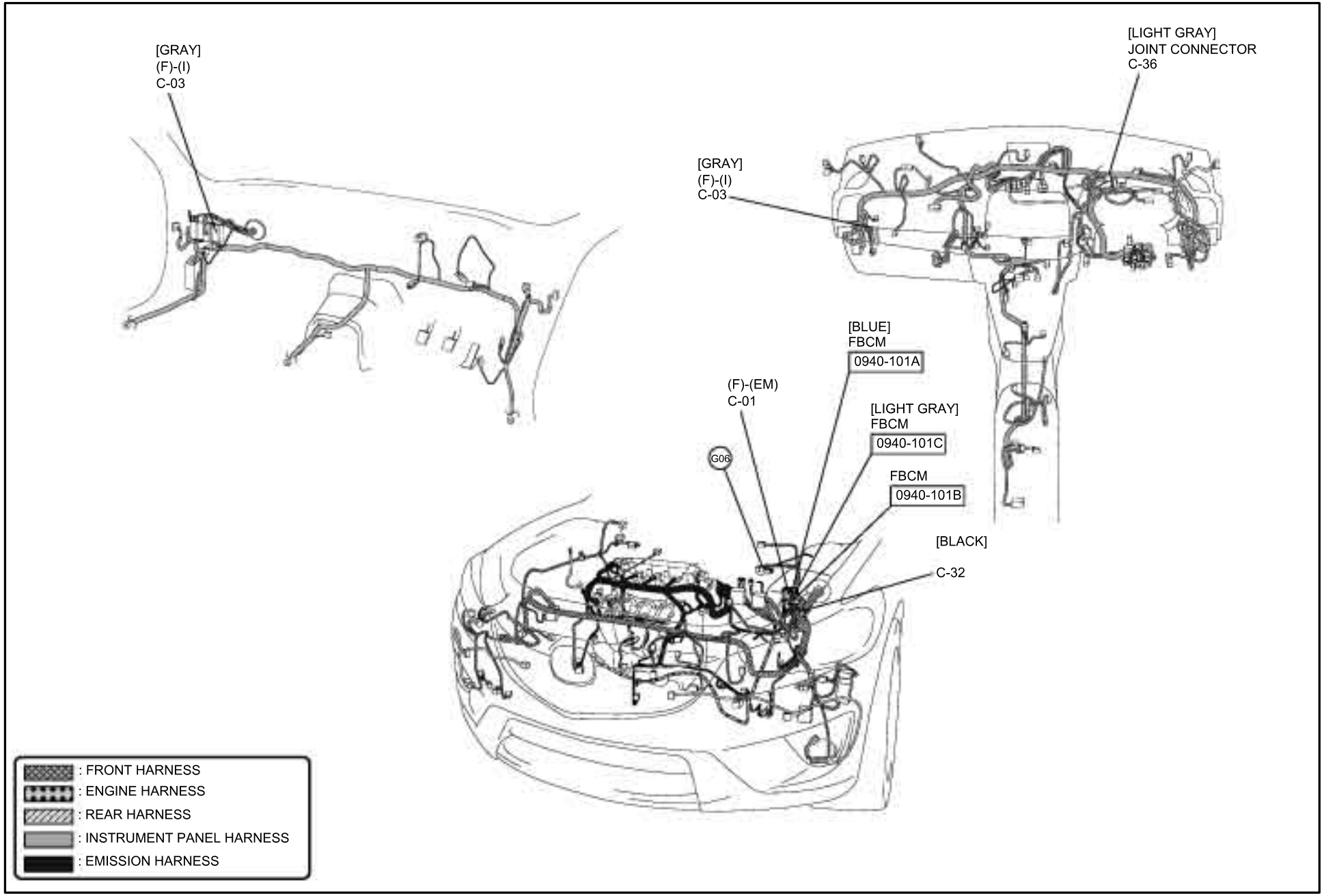

BODY CONTROL SYSTEM

0940-1c

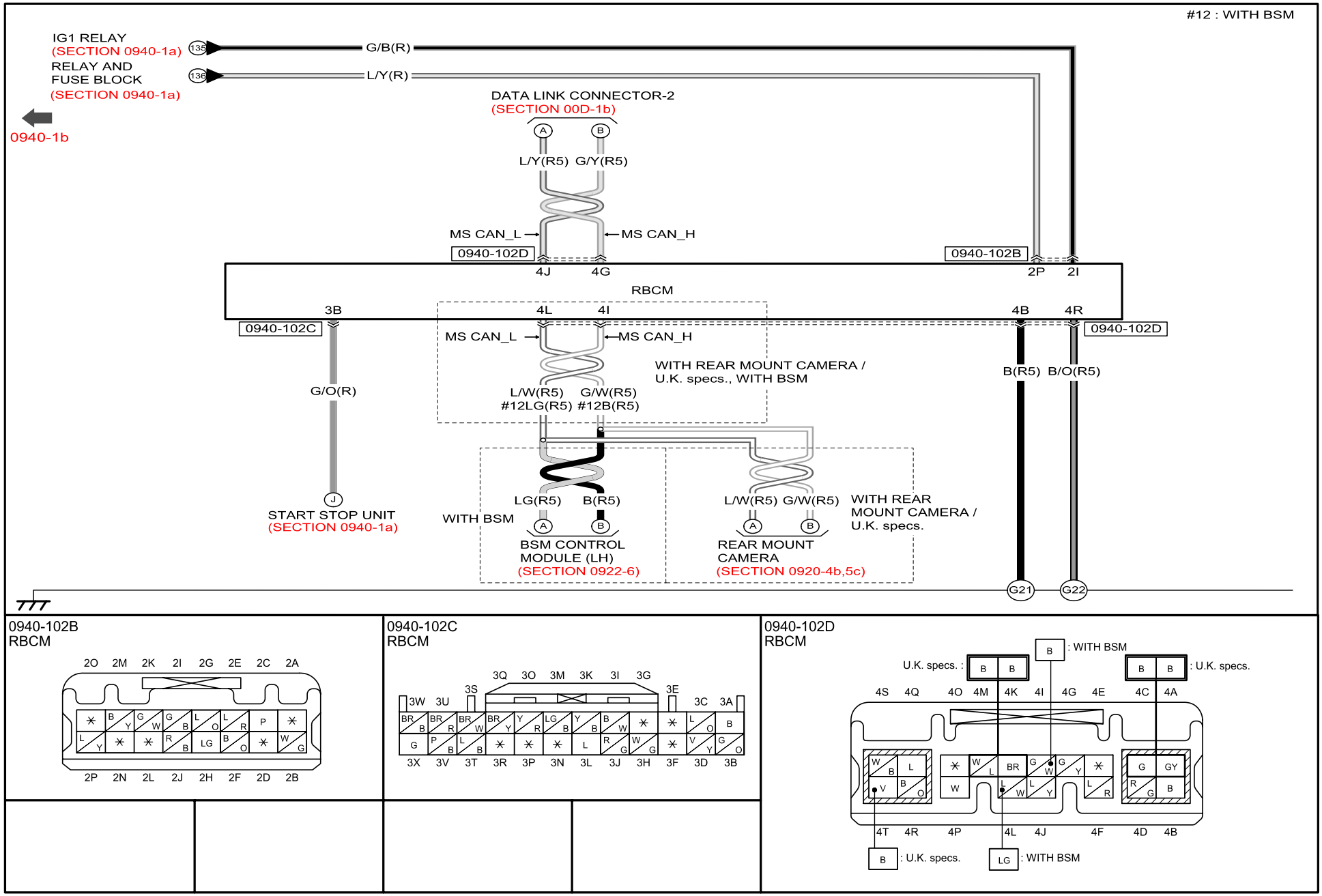

Refer to 00F section for the FUSE BOX, 00C section for the PCM CONNECTOR and COMMON CONNECTOR LIST.

BODY CONTROL SYSTEM

0940-1c

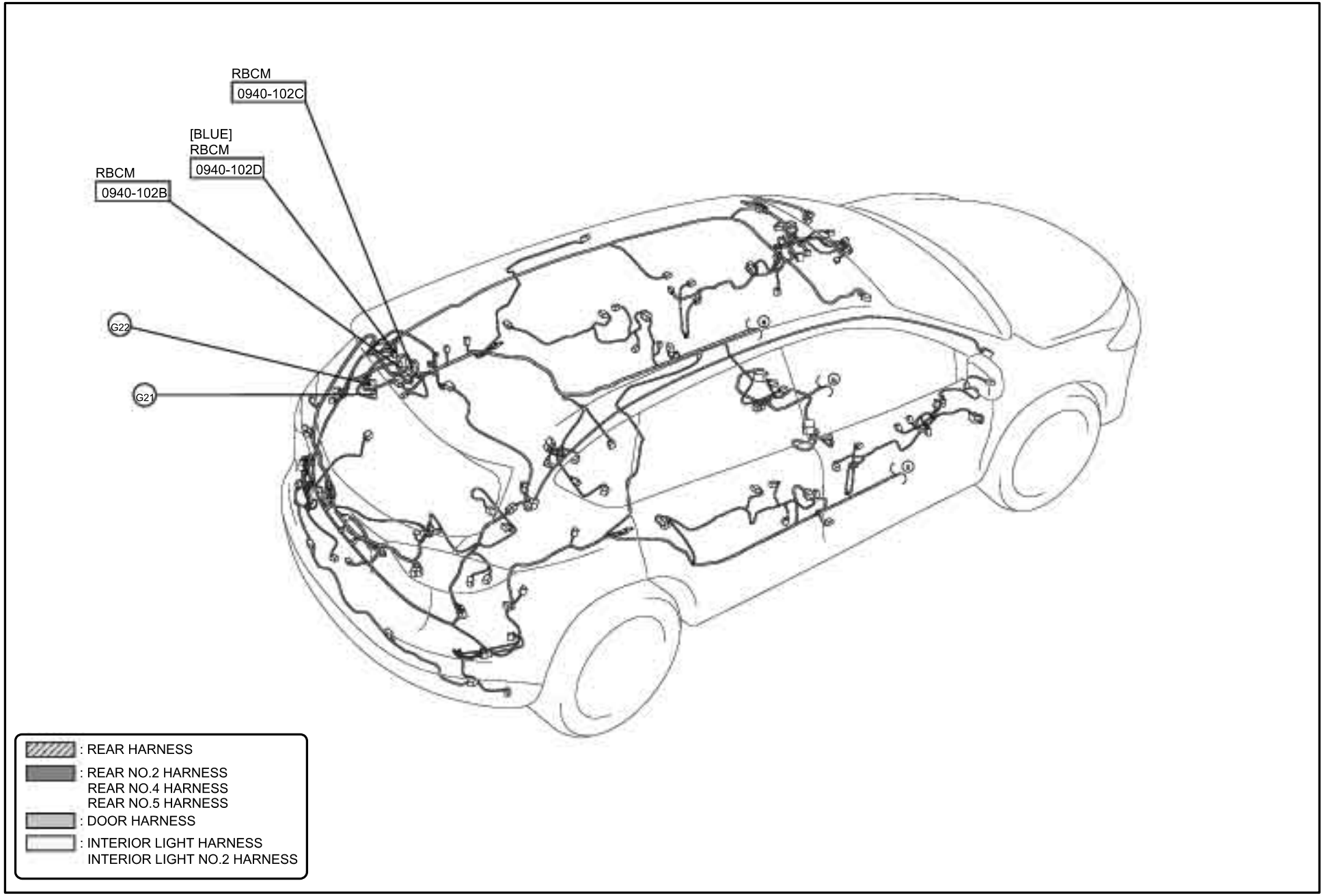

ALPHABETICAL INDEX

4
4WD CONTROL MODULE 96
4WD SOLENOID 96

A
A/C RELAY 23,118
A/F SENSOR 74,84
ABBREVIATIONS 12
ABS WHEEL-SPEED SENSOR 98
ACC RELAY 23,242
ACCELERATOR PEDAL POSITION SENSOR 74,88
ACCESSORY SOCKET 208
AFS CONTROL MODULE 196
AIR BAG MODULE 120
AIR INTAKE ACTUATOR 110,112
AIR MIX ACTUATOR 116
AIRFLOW MODE ACTUATOR 114
AMBIENT TEMPERATURE SENSOR 110,116
ANTENNA 214,218,224,232
AUDIO AMPLIFIER 220,236
AUDIO UNIT 210,216,224,230
AudioPilot®2 MICROPHONE 222,238
AUTO DIMMING MIRROR 140
AUTO LEVELING SENSOR 196
AUTO LIGHT SENSOR 176,180,204
AUXILIARY JACK 214,218,226,236

B
BACK-UP LIGHT 188
BACK-UP LIGHT SWITCH 188
BCM 58,62,108,112,118,126,128,130,140,
142,146,152,162,168,170,174,178,182,
184,186,188,190,192,202,206,248,254,266
BLOW-BY HEATER 82
BLOW-BY HEATER RELAY 23,82
BLOWER MOTOR 108,112
BLOWER RELAY 23,108,112
Bluetooth UNIT 240
BONNET LATCH SWITCH 168,170
BOOST AIR TEMPERATURE SENSOR 88
BRAKE FLUID LEVEL SENSOR 248
BRAKE LIGHT 190
BRAKE LIGHT RELAY 23,190
BRAKE SWITCH 74,94,190
BSM CONTROL MODULE 264
BSM INDICATOR LIGHT 264
BUCKLE SWITCH
(DRIVER-SIDE) 120
(PASSENGER-SIDE) 120
(REAR) 126

C
CABIN TEMPERATURE SENSOR 114
CAMSHAFT POSITION SENSOR 86
CARGO COMPARTMENT LIGHT 192
CARGO COMPARTMENT LIGHT SWITCH 192
CAR-NAVIGATION UNIT 228,230
CENTER BUCKLE SWITCH 126
CENTER SPEAKER 222,238
CHECK CONNECTOR 23,92
CLIMATE CONTROL UNIT 108,112
CLOCK 110
CLOCK SPRING 68,120,212,216,226,234,254
CLUSTER SWITCH 194,246
CLUTCH PEDAL POSITION SWITCH 78,94
CLUTCH STROKE SENSOR 80,88
COMBINATION LIGHT 174,178,182,186
COMMANDER SWITCH 228,230
COMMON CONNECTOR LIST 28
COMPRESSOR BYPASS SOLENOID VALVE 86
CONDENSER 190
COOLING FAN MOTOR 50,52
COOLING FAN RELAY 23,25,50,52
CORNER SENSOR
(FRONT) 256
(REAR) 258
CRANKSHAFT POSITION SENSOR 72,84
CRASH ZONE SENSOR 124
CRUISE CONTROL SWITCH 68
CURRENT SENSOR 72,82
CURTAIN AIR BAG MODULE 122

D
DATA LINK CONNECTOR-2 44
DC-DC CONVERTER 56,60
DIFFERENTIAL OIL TEMPERATURE SENSOR 96
DIMMER CANCEL SWITCH 250
DISCHARGE HEADLIGHT CONTROL MODULE 178
DOOR LATCH AND LOCK ACTUATOR 152,162
DOOR SPEAKER
(FRONT) 210,222,224,238
(REAR) 214,222,224,238
D-PILLAR SPEAKER 222,238
DRIVER-SIDE AIR BAG MODULE 120
DRIVER-SIDE AIR MIX ACTUATOR 116
DRIVER-SIDE BUCKLE SWITCH 120
DRIVER-SIDE CRASH ZONE SENSOR 124
DRIVER-SIDE CURTAIN AIR BAG MODULE 122
DRIVER-SIDE PRE-TENSIONER SEAT BELT 122
DRIVER-SIDE SEAT BACK FILAMENT 146
DRIVER-SIDE SEAT CUSHION FILAMENT 146
DRIVER-SIDE SIDE AIR BAG MODULE 122
DRIVER-SIDE SIDE AIR BAG SENSOR 122
DSC HU/CM 98

E
EGR COOLER BYPASS VALVE 92
EGR VALVE 92
ELECTRIC AT OIL PUMP 102
ELECTRIC AT OIL PUMP RELAY 23,102
ELECTRIC VARIABLE VALVE TIMING MOTOR/DRIVER 80
ELECTRIC VARIABLE VALVE TIMING RELAY 23,70
ELECTRICAL WIRING SCHEMATIC 18
ENGINE COOLANT TEMPERATURE SENSOR 78,86
ENGINE OIL PRESSURE SENSOR 92
ENGINE OIL SOLENOID VALVE 70,84
ENGINE OIL TEMPERATURE SENSOR 92
EPS CONTROL MODULE 106
EVAPORATOR TEMPERATURE SENSOR 110,114
EXHAUST CAMSHAFT POSITION SENSOR 72
EXHAUST GAS PRESSURE SENSOR 90
EXHAUST GAS TEMPERATURE SENSOR 90

F
FAN CONTROL MODULE 52
FAN SWITCH 108
FBCM 58,62,108,112,118,128,146,170,174,
178,182,184,186,202,206,248,254,266
FILAMENT 128
FOG LIGHT 184
FOG LIGHT RELAY 23,184
FOG LIGHT SWITCH 184
FORWARD SENSING CAMERA (FSC) 200,262
FRONT CENTER SPEAKER 222,238
FRONT COMBINATION LIGHT 174,178,182,186
FRONT CORNER SENSOR 256
FRONT DOOR LATCH AND LOCK ACTUATOR 152,162
FRONT DOOR SPEAKER 210,222,224,238
FRONT FOG LIGHT 184
FRONT FOG LIGHT RELAY 23,184

ALPHABETICAL INDEX

PAGE 2 OF 3

FRONT MAP LIGHT 192
FRONT OUTER HANDLE 160
FRONT PARKING BUZZER....258
FRONT SENSOR 256
FRONT TILT MOTOR....148
FRONT TURN LIGHT 186
FUEL GAUGE SENDER UNIT....250
FUEL INJECTOR 78,86
FUEL INJECTOR RELAY....23,70
FUEL PRESSURE LIMITER VALVE....90
FUEL PRESSURE SENSOR....76,86
FUEL PUMP CONTROL MODULE 54
FUEL PUMP RELAY 23,54
FUEL PUMP UNIT 54
FUEL TEMPERATURE SENSOR....90
FUSE BOX 22

G

GENERAL INFORMATION 4
GENERATOR....58,62,64
GLOVE COMPARTMENT LIGHT....192
GLOW CONTROL MODULE 82
GLOW PLUG 82
GROUND POINT 40

H

HAZARD WARNING SWITCH....186
HEADLIGHT 174,178
HEADLIGHT CLEANER MOTOR 206
HEADLIGHT HI RELAY 23,174,178
HEADLIGHT LEVELING ACTUATOR....194,196
HEADLIGHT LEVELING SWITCH....194
HEADLIGHT LO RELAY 23,174,178
HEATED OUTER MIRROR....128
HEATER CORE TEMPERATURE SENSOR 114
HIGH-BEAM SOLENOID 178
HIGH-MOUNT BRAKE LIGHT....190
HO2S 72
HORN 254
HORN RELAY 23,254
HORN SWITCH 254

I

IG1 RELAY....23,242
IGNITION COIL....76
IGNITION RELAY....23,25,56,60
INSTRUMENT CLUSTER....244
INTAKE AIR TEMPERATURE SENSOR 74,84
INTAKE CAMSHAFT POSITION SENSOR 72
INTAKE SHUTTER VALVE....92
INTRUDER SENSOR 168

K

KEYLESS ANTENNA 150,160
KEYLESS BEEPER 160
KEYLESS RECEIVER 150,158
KNOCK SENSOR 74

L

LASER SENSOR 100
LF CONTROL UNIT 160
LICENSE PLATE LIGHT 182
LIFT MOTOR 148
LIFTGATE LOCK ACTUATOR 156,166
LIFTGATE OPENER SWITCH....156,166
LIGHT SWITCH 176,180
LUMBAR SUPPORT MOTOR....148

M

MAGNETIC CLUTCH....118
MAIN RELAY....23,70,82
MANIFOLD ABSOLUTE PRESSURE SENSOR.... 74,90
MAP LIGHT 192
MASS AIR FLOW SENSOR.... 78,84
MICROPHONE.... 240
MOUNT CAMERA.... 214,218,226,232

N

NEUTRAL SWITCH 78,94

O

OCCUPANCY SENSOR.... 124
OIL CONTROL VALVE 70,84
OIL PRESSURE SWITCH.... 74
OUTER HANDLE 160
OUTLET RELAY.... 23,208

P

PARKING BRAKE SWITCH 248
PARKING BUZZER 258
PARKING LIGHT 182
PARKING SENSOR CONTROL MODULE 256
PASSENGER AIR BAG DEACTIVATION (PAD) SWITCH....120
PASSENGER-SIDE AIR BAG MODULE 120
PASSENGER-SIDE AIR MIX ACTUATOR 116
PASSENGER-SIDE BUCKLE SWITCH 120
PASSENGER-SIDE CRASH ZONE SENSOR 124
PASSENGER-SIDE CURTAIN AIR BAG MODULE 122
PASSENGER-SIDE PRE-TENSIONER SEAT BELT.... 122
PASSENGER-SIDE SEAT BACK FILAMENT 146
PASSENGER-SIDE SEAT CUSHION FILAMENT 146
PASSENGER-SIDE SIDE AIR BAG MODULE.... 122
PASSENGER-SIDE SIDE AIR BAG SENSOR.... 122
PCM 70,82
POWER BRAKE UNIT VACUUM SENSOR 80,88
POWER MOS FET 112
POWER OUTER MIRROR.... 136
POWER OUTER MIRROR SWITCH.... 136
POWER SEAT SWITCH.... 148
POWER WINDOW MAIN SWITCH 130,142
POWER WINDOW MOTOR 130,142
POWER WINDOW SUBSWITCH.... 132,144
PRE-TENSIONER SEAT BELT 122
PURGE SOLENOID VALVE 70
PUSH BUTTON START 150,158

R

RAIN SENSOR.... 176,180,204
RBCM.... 126,130,140,142,152,162,168,
170,184,188,190,192,204,250,270
REAR BUCKLE SWITCH.... 126
REAR CENTER BUCKLE SWITCH 126
REAR CORNER SENSOR.... 258
REAR DOOR LATCH AND LOCK ACTUATOR 152,162
REAR DOOR SPEAKER.... 214,222,224,238
REAR FOG LIGHT 184
REAR MAP LIGHT 192
REAR MOUNT CAMERA.... 214,218,226,232
REAR PARKING BUZZER 258
REAR SENSOR 258
REAR TURN LIGHT.... 186
REAR VEHICLE MONITORING CONTROL MODULE....260
REAR WINDOW DEFROSTER RELAY 23,128
REAR WIPER AND WASHER SWITCH 202
REAR WIPER MOTOR 204
RECLINER MOTOR 148
REFRIGERANT PRESSURE SENSOR.... 110,116
REGULATING SOLENOID VALVE.... 86
REGULATING VALVE POSITION SENSOR 92
REQUEST SWITCH.... 160
RESISTOR 108

ALPHABETICAL INDEX

PAGE 3 OF 3

RETRACTABLE OUTER MIRROR..... 138
RUNNING LIGHT 174,178
RVM WARNING INDICATOR 260

S

SAS CONTROL MODULE 120
SEAT BACK FILAMENT..... 146
SEAT CUSHION FILAMENT..... 146
SEAT WARMER CONTROL UNIT 146
SEDIMENTOR SWITCH 94
SELECTOR ILLUMINATION 104
SELECTOR LEVER COMPONENT..... 102,104
SENSOR
(FRONT)..... 256
(REAR) 258
SIDE AIR BAG MODULE 122
SIDE AIR BAG SENSOR 122
SIDE TURN LIGHT 186
SLIDER MOTOR 148
SOLAR RADIATION SENSOR..... 114
SPILL VALVE CONTROL SOLENOID VALVE
(HIGH PRESSURE FUEL PUMP)..... 76
START STOP UNIT 66,68,78,94,104,150,158,176,180,
184,186,190,198,202,212,216,226,234,242,266
STARTER 66
STARTER INTERLOCK SWITCH 66
STARTER RELAY..... 23,66
STEERING ANGLE SENSOR..... 198
STEERING SWITCH..... 212,216,226,234
SUCTION CONTROL VALVE..... 88
SUNROOF MOTOR 172
SUNROOF RELAY 172
SUNROOF SWITCH 172
SWIVEL ACTUATOR..... 196

T

TAILLIGHT..... 182
TCM..... 102
THEFT-DETERRENT HORN 170
THEFT-DETERRENT SIREN 168
THROTTLE BODY..... 74
TILT MOTOR 148
TNS RELAY..... 23,182
TRIPMETER SWITCH 246
TURN LIGHT..... 186
TURN SWITCH 186
TWEETER..... 210,222,224,238

V

VANITY MIRROR ILLUMINATION 192
VEHICLE IDENTIFICATION NUMBERS (VIN) 3

W

WASHER FLUID-LEVEL SENSOR..... 248
WASHER MOTOR..... 202
WASTEGATE SOLENOID VALVE..... 86
WINDSHIELD WIPER AND WASHER SWITCH..... 202
WINDSHIELD WIPER MOTOR..... 202
WIPER AND WASHER SWITCH 202
WIPER MOTOR
(WINDSHIELD)..... 202
(REAR) 204
WIRING COLOR CODE..... 9