YAMAHA

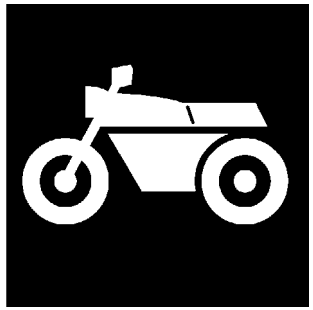

PARTS CATALOGUE
CATALOGO DE REPUESTOS

FZ16 (1ES2) ARGENTINA
FZ16 (1ES2) MEXICO

1L1ES-200S1

( )

YAMAHA
GENUINE
Parts & Accessories

FZ16
CATALOGO DE REPUESTOS
©2011 por Yamaha Motor Co., Ltd.
1ª edición, junio 2011
Todos los derechos reservados.
Toda reproducción o uso no autorizado
sin el consentimiento escrito de
Yamaha Motor Co., Ltd.
quedan expresamente prohibidos
Impreso en Japón.

FZ16
PARTS CATALOGUE
©2011 by Yamaha Motor Co., Ltd.
1st edition, June 2011
All rights reserved.
Any reprinting or unauthorized use
without the written permission of
Yamaha Motor Co., Ltd.
is expressly prohibited.
Printed in Japan.

PROLOGO

Este catálogo de repuestos corresponde a las piezas para el o los modelos que figuran en la página de portada. Al formular el pedido de repuestos, se ruega citar este catálogo y especificar correctamente el número y el nombre de las piezas.

1. Las modificaciones y agregados que se hayan realizado después de la edición de este Catálogo de Repuestos, serán anunciados en las Informaciones de Recambios.
   Es recomendable que se hagan las correcciones necesarias en el Catálogo de Repuestos de acuerdo con las Informaciones de Recambios.

2. Abreviaciones
   En este. Catálogo de Repuestos se emplean las siguientes abreviaciones.

   "UR" Usar el número de partes especificado
   "UN" Usar la cantidad necesaria
   "AP" Piezas sustitutivas
   "LM" Fabricación local (Hay que pedir los repuestos en las cercanías)
   "F#" Nº de bastidor (Nº aplicable a la máquina)
   "O/S" Sobredimensionado

3. La cantidad de componentes para el montaje
   - Los componentes, suministrados como conjunto, se describen con un punto (.) que precede al nombre del parte como se indica a continuación.
   - La numeración que aparece a la derecha de cada descripción indica la cantidad de partes por cada unidad de conjunto.

CODIGO Nº	DESCRIPCION	CANT.	OBSERVACIONES
2F5–83310–60	ENSAMBLAJE DE LA LUZ	2	
115–83311–60	.BOMBILLA (6V–18W)	1	

4. Los colores de los componentes se indican como sigue en la columna de "OBSERVACIONES".

CODIGO Nº	DESCRIPCION	CANT.	OBSERVACIONES
2N4–24110–00–X5	COMP. DEL TANQUE	2	MXR
3J1–24240–10	.GRAFICO, DEL TANQUE	1	PARA MXR

5. Debe tenerse en cuenta que las ilustraciones sirven como guia para la búsqueda de los números de partes y no deben usarse para el montaje. Durante el montaje, se recomienda usar el manual de taller correspondiente.

6. EL asterisco (*) antes del número de referencia indica los elementos modificados después de la primera edición.

FOREWORD

This Parts Catalogue is related to the parts for the model(s) on the cover page. When you are ordering replacement parts, please refer to this Parts Catalogue and quote both part numbers and part names correctly.

1. Modifications or additions which have been made after the issue of the Parts Catalogue will be announced in the Parts News.
   It is advisable that you make the necessary corrections to the Parts Catalogue according to the Parts News.

2. Abbreviations
   The following abbreviations are used in this Parts Catalogue.

   “UR” Use specified parts number.
   “UN” Use as many as needed.
   “AP” Alternate Parts
   “LM” Locally Made (Parts need to be ordered locally)
   “F#” Frame No. (Applicable machine No.)
   “O/S” Over Size

3. The number of components for assembly
   - Parts, which are to be supplied in an assembly, are listed with a dot (.) in front of the part name as shown below.
   - The numeral appearing to the right of each component part indicates the quantity of parts for each assembly unit.

PART NO.	DESCRIPTION	Q’TY	REMARKS
2F5–83310–60	FRONT FLASHER LIGHT ASSY	2	
115–83311–60	.BULB (6V–18W)	1	

4. Applicable colours of graphics are represented in the “REMARKS” as shown below.

PART NO.	DESCRIPTION	Q’TY	REMARKS
2N4–24110–00–X5	FUEL TANK COMP.	2	MXR
3J1–24240–10	.GRAPHIC, FUEL TANK	1	FOR MXR

5. Note that the illustrations for reference in finding parts numbers are not to be used for assembling. When assembling, please use the applicable service manual.

6. The asterisk (*) before a reference number indicates modified items after the first edition.

7. Números de serie

Nº de Serie del bastidor

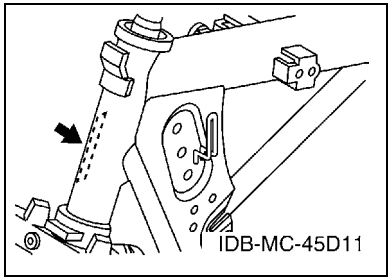

Nº de Serie del motor

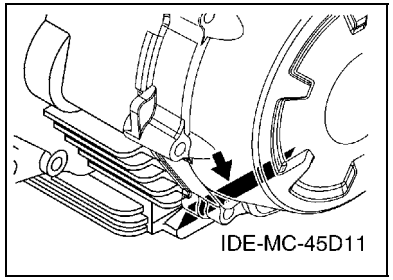

8. Códigos de color aplicables (El símbolo (*) muestra el color de modelo.)

Abreviatura	Nombre de color	Código de color
DBNM8	DARK BLUISH GRAY METALLIC 8	0919
DRMK(*)	DEEP RED METALLIC K	0918
S8	SILVER 8	0895
YB(*)	YAMAHA BLACK	0033

9. Nº de serie inicial aplicable

Nº de Serie del bastidor

Nº de serie	Nombre de la columna de cantidades	Código de Modelo

Nº de Serie del motor

Nº de serie	Nombre de la columna de cantidades	Código de Modelo

7. Applicable Serial No.

Frame Serial No.

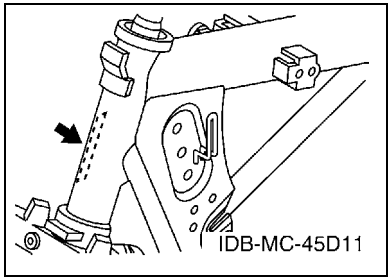

Engine Serial No.

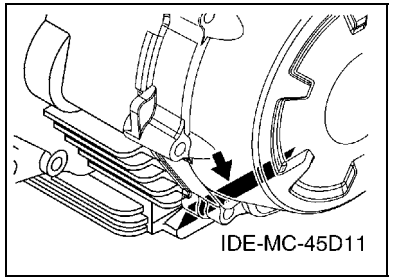

8. Applicable Colour Code (The (*) mark shows Model colour.)

Abbreviation	Colour Name	Colour Code
DBNM8	DARK BLUISH GRAY METALLIC 8	0919
DRMK(*)	DEEP RED METALLIC K	0918
S8	SILVER 8	0895
YB(*)	YAMAHA BLACK	0033

9. Applicable Starting Serial No.

Frame Serial No.

Serial No.	Name Of Q'ty Column	Model Code

Engine Serial No.

Serial No.	Name Of Q'ty Column	Model Code

CONTENIDO

MOTOR

CILINDRO 1
CIGUENAL & PISTON 3
VALVULA 5
ARBOL DE LEVAS & CADENA 6
BOMBA DE ACEITE 7
ADMISION 8
CARBURADOR 10
DESCARGA 12
CARTER 13
CUBIERTA DE CARTER 1 14
ARRANQUE 15
EMBRAGUE DEL ARRANQUE 16
EMBRAGUE 17
TRANSMISION 19
LEVA DE CAMBIO & HORQUILLA 21
EJE DE CAMBIO & PEDAL 22

SHASIS

CUADRO 23
GUARDABARRO 24
CUBIERTA LATERAL 25
BRAZO TRASERO & SUSPENSION 27
DIRECCION 28
HORQUILLA DELANTERA 29
DEPOSITO DE COMBUSTIBLE 31
DEPOSITO DE COMBUSTIBLE 2 33
ASIENTO 34
RUEDA DELANTERA 35
CALIBRE FRENO DELANTERA 36
RUEDA TRASERA 37
MANILLAR & CABLE 39
CILINDRO MAESTRO DELANTERO 40
SOPORTE & APOYAPIE 41
SOPORTE & APOYAPIE 2 43
GENERADOR 45
MOTOR DE ARRANQUE 46
LUZ DE DESTELLADOR 47
MEDIDOR 49
FARO DELANTERO 50
LUZ DE COLA 51
INTERRUPTOR DE MANILLAR&PALANC 52
EQUIPO ELECTRICO 1 53
EQUIPO ELECTRICO 2 54

INDICE

INDICE NUMERICO 55

CONTENTS

ENGINE

CYLINDER 1
CRANKSHAFT & PISTON 3
VALVE 5
CAMSHAFT & CHAIN 6
OIL PUMP 7
INTAKE 8
CARBURETOR 10
EXHAUST 12
CRANKCASE 13
CRANKCASE COVER 1 14
STARTER 15
STARTER CLUTCH 16
CLUTCH 17
TRANSMISSION 19
SHIFT CAM & FORK 21
SHIFT SHAFT 22

CHASSIS

FRAME 23
FENDER 24
SIDE COVER 25
REAR ARM & SUSPENSION 27
STEERING 28
FRONT FORK 29
FUEL TANK 31
FUEL TANK 2 33
SEAT 34
FRONT WHEEL 35
FRONT BRAKE CALIPER 36
REAR WHEEL 37
STEERING HANDLE & CABLE 39
FRONT MASTER CYLINDER 40
STAND & FOOTREST 41
STAND & FOOTREST 2 43
GENERATOR 45
STARTING MOTOR 46
FLASHER LIGHT 47
METER 49
HEADLIGHT 50
TAILLIGHT 51
HANDLE SWITCH & LEVER 52
ELECTRICAL 1 53
ELECTRICAL 2 54

INDEX

NUMERICAL INDEX 55

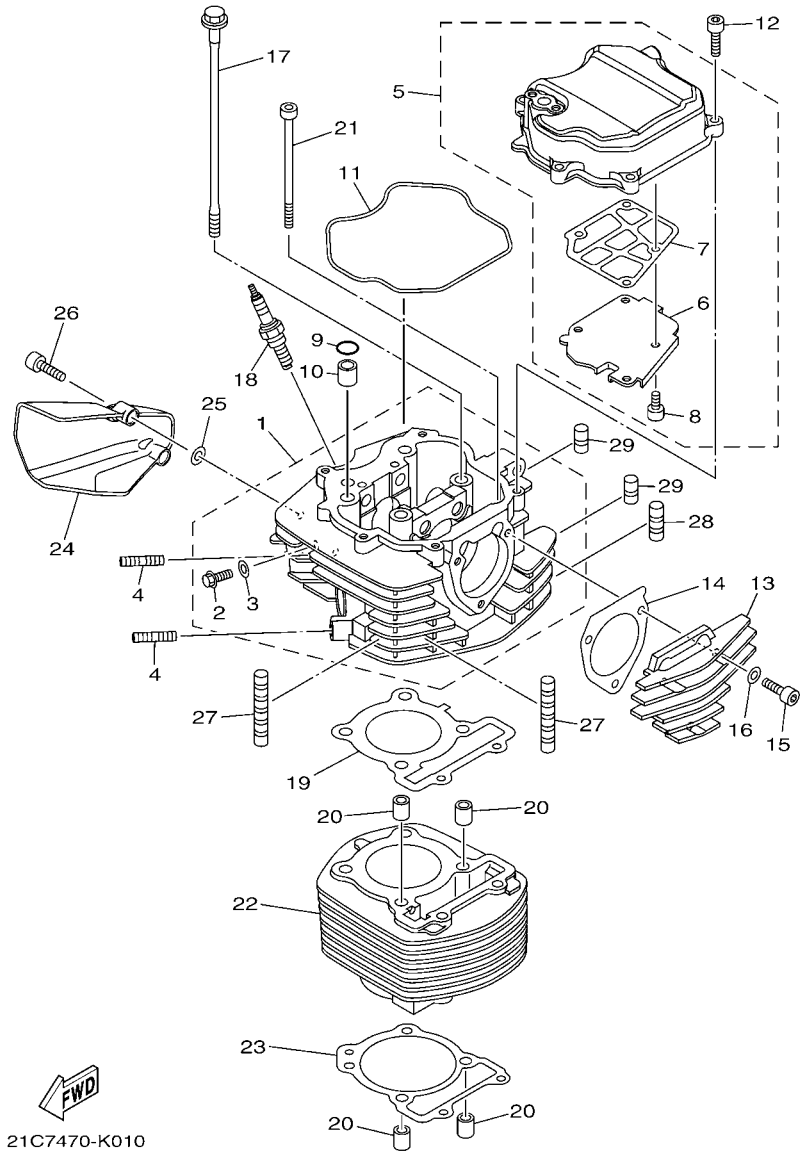

FIG. 1 CILINDRO — CYLINDER

REF. Nº	CODIGO Nº PART NO.	DESCRIPCION DESCRIPTION	1ES2					OBSERVACIONES REMARKS
1	54B–E1111–00	CULATA CILINDRO 1 HEAD, CYLINDER 1	1					
2	95022–06012	.PERNO, DE BRIDA .BOLT, FLANGE	1					
3	90430–06014	.JUNTA .GASKET	1					
4	95617–08620	PERNO DE PUNTAL BOLT, STUD	2					
5	1ES–E1190–00	TAPA CULATA DE CILINDRO 1 COVER, CYLINDER HEAD 1	1					
6	54B–E1165–00	.PLACA RESPIRADERO .PLATE, BREATHER	1					
7	45P–E1169–00	.EMAPQ CBTA.DE RESP. .GASKET, BREATHER COVER	1					
8	91317–05010	.PERNO .BOLT	4					
9	93210–12800	ANILLO O O-RING	1					
10	93612–16254	PASADOR DE CLAVIJA PIN, DOWEL	1					
11	21C–E1193–00	EMPAQUE GASKET, HEAD COVER 1	1					
12	91317–06025	PERNO BOLT	5					
13	54B–E1186–00	CUBIERTA CULATA CIL.LAT.2 COVER, CYLINDER HEAD SIDE 2	1					
14	45P–E2435–00	EMPAQUE GASKET	1					
15	91317–06025	PERNO BOLT	3					
16	90430–06014	JUNTA GASKET	3					
17	90105–08197	TORNILLO BOLT, FLANGE	4					
18	94703–00885	BUJIA (NGK CPR8EA) PLUG, SPARK (NGK CPR8EA)	1					
19	54B–E1181–00	JUNTA, DE CULATA 1 GASKET, CYLINDER HEAD 1	1					
20	91810–14804	PASADOR DE CLAVIJA PIN, DOWEL	4					
21	90110–06304	TORNILLO ALLEN BOLT, HEXAGON SOCKET HEAD	2					
22	54B–E1310–00	CILINDRO CYLINDER	1					
23	21C–E1351–00	JUNTA, DE CILINDRO GASKET, CYLINDER	1					
24	21C–E2661–10	CONDUCTO DUCT	1					
25	90201–05015	ARANDELA PLANA WASHER, PLATE	2					
26	90110–06846	TORNILLO ALLEN BOLT, HEXAGON SOCKET HEAD	2					
27	21C–E1161–00	AMORTIGUADOR 1 ABSORBER 1	2					

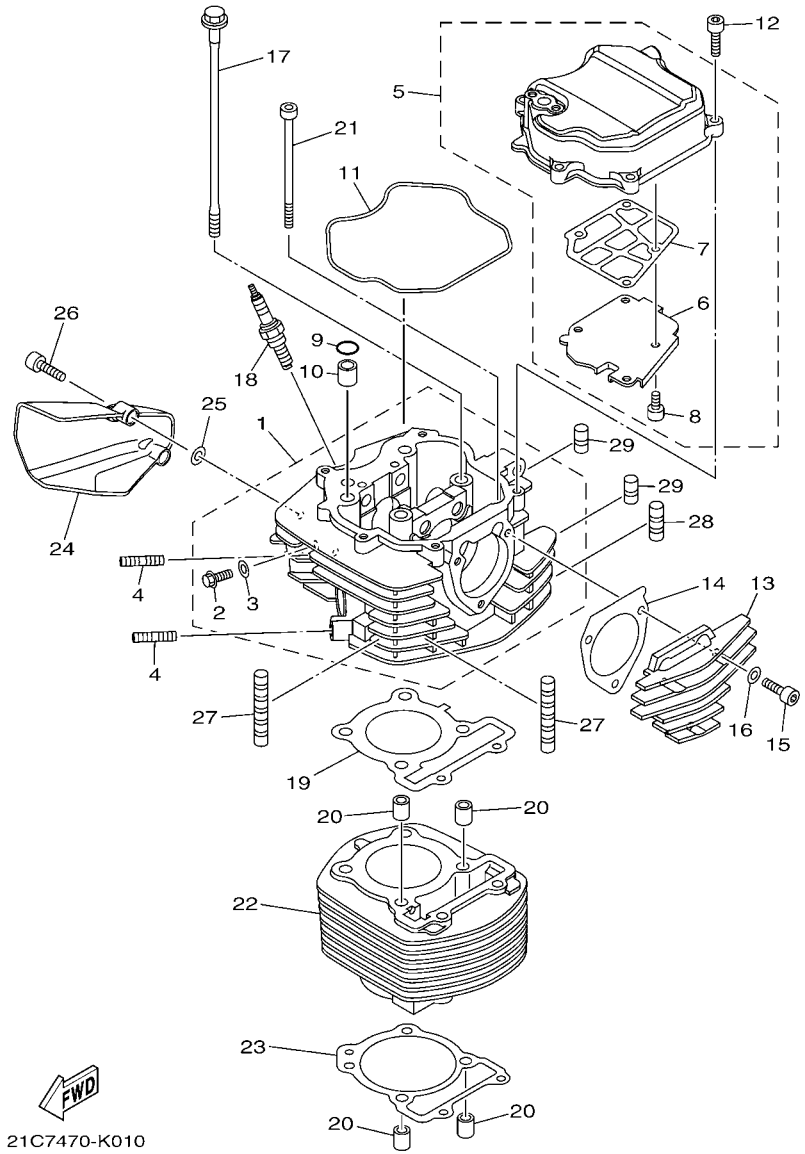

FIG. 1 CILINDRO — CYLINDER

REF. Nº	CODIGO Nº PART NO.	DESCRIPCION DESCRIPTION	1ES2					OBSERVACIONES REMARKS
28	21C–E1161–10	AMORTIGUADOR 1 ABSORBER 1	1					
29	21C–E1161–20	AMORTIGUADOR 1 ABSORBER 1	2					

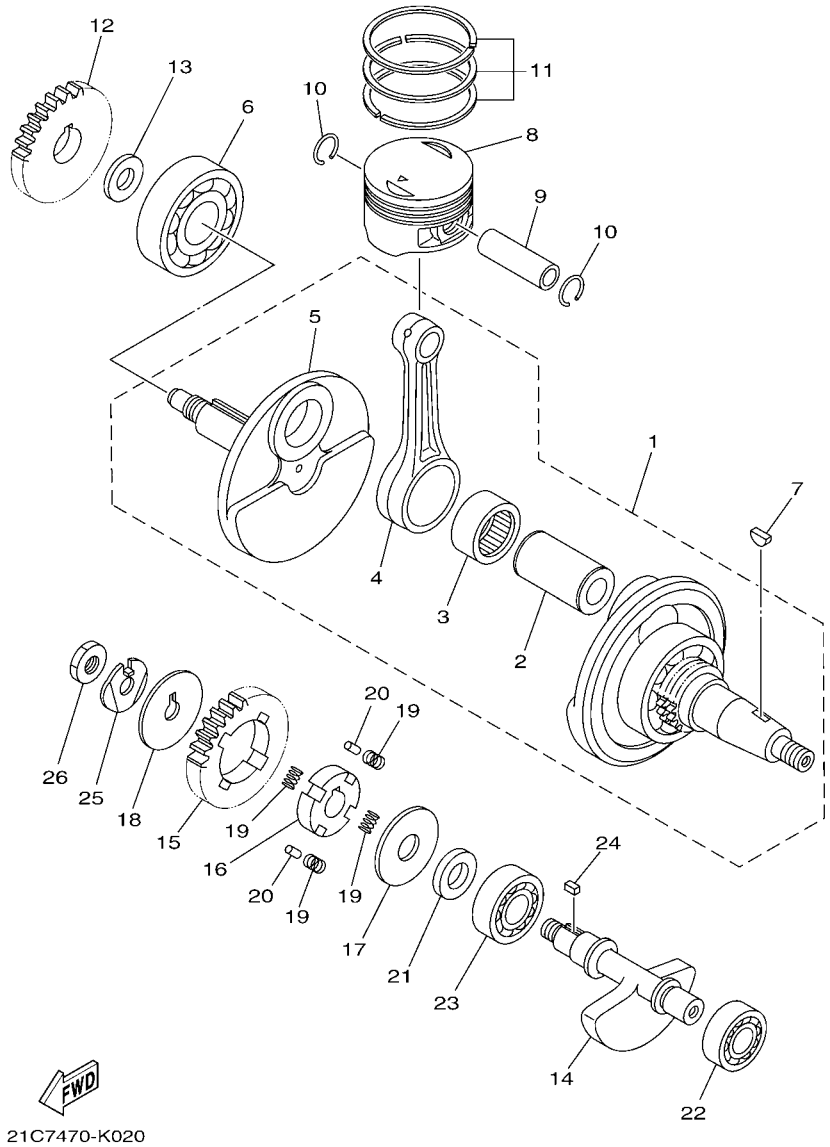

FIG. 2 CIGUENAL & PISTON — CRANKSHAFT & PISTON

REF. Nº	CODIGO Nº PART NO.	DESCRIPCION DESCRIPTION	1ES2					OBSERVACIONES REMARKS
1	21C–E1400–09	CIGUENAL COMPLETO CRANKSHAFT ASSY	1					
2	21C–E1681–01	.PASADOR MANIVELA 1 .PIN, CRANK 1	1					
3	93310–628X0	.COJINETE DE RODILLOS .BEARING	1					
4	21C–E1651–00	.BIELA .ROD, CONNECTING	1					
5	21C–E1422–00	.MANIVELA 2 .CRANK 2	1					
6	93306–305YR	COJINETE BEARING	1					
7	90280–03017	CUNA WOODRUFF KEY, WOODRUFF	1					
8	21C–E1631–00	PISTON (NORMA) PISTON (STD)	1					
	21C–E1636–09	PISTON (0.50MM O/S) PISTON (0.50MM O/S)	1					AP AP
	21C–E1638–09	PISTON (1.00MM O/S) PISTON (1.00MM O/S)	1					AP AP
9	21C–E1633–00	PASADOR, PISTON PIN, PISTON	1					
10	93450–16812	SEGURO CIRCLIP	2					
11	21C–E1603–00	JUEGO DE ANILLOS (NORMA) PISTON RING SET (STD)	1					
	21C–E1605–00	JUEGO DE ANILLOS (0.50MM O/S) PISTON RING SET (0.50MM O/S)	1					AP AP
	21C–E1607–00	JUEGO DE ANILLOS (1.00MM O/S) PISTON RING SET (1.00MM O/S)	1					AP AP
12	54B–E1536–00	ENGRANAJE TRACCION GEAR, DRIVE	1					
13	90387–20813	ESPACIADOR COLLAR	1					
14	54B–E1454–00	PESO 1 WEIGHT 1	1					
15	21C–E1531–00	ENGRANAJE CONTRAPESO GEAR, BALANCE WEIGHT	1					
16	21C–E1496–20	COPA TOPE BOSS, BUFFER	1					
17	90201–15022	ARANDELA PLANA WASHER, PLATE	1					
18	90214–10006	ARANDELA DE POSICION WASHER, CLAW	1					
19	54B–E1476–00	RESORTE SPRING	4					
20	21C–E3362–00	RODILLO ROLLER	2					
21	90387–155J0	ESPACIADOR COLLAR	1					
22	93306–252YG	COJINETE BEARING	1					
23	93306–253Y6	COJINETE BEARING	1					

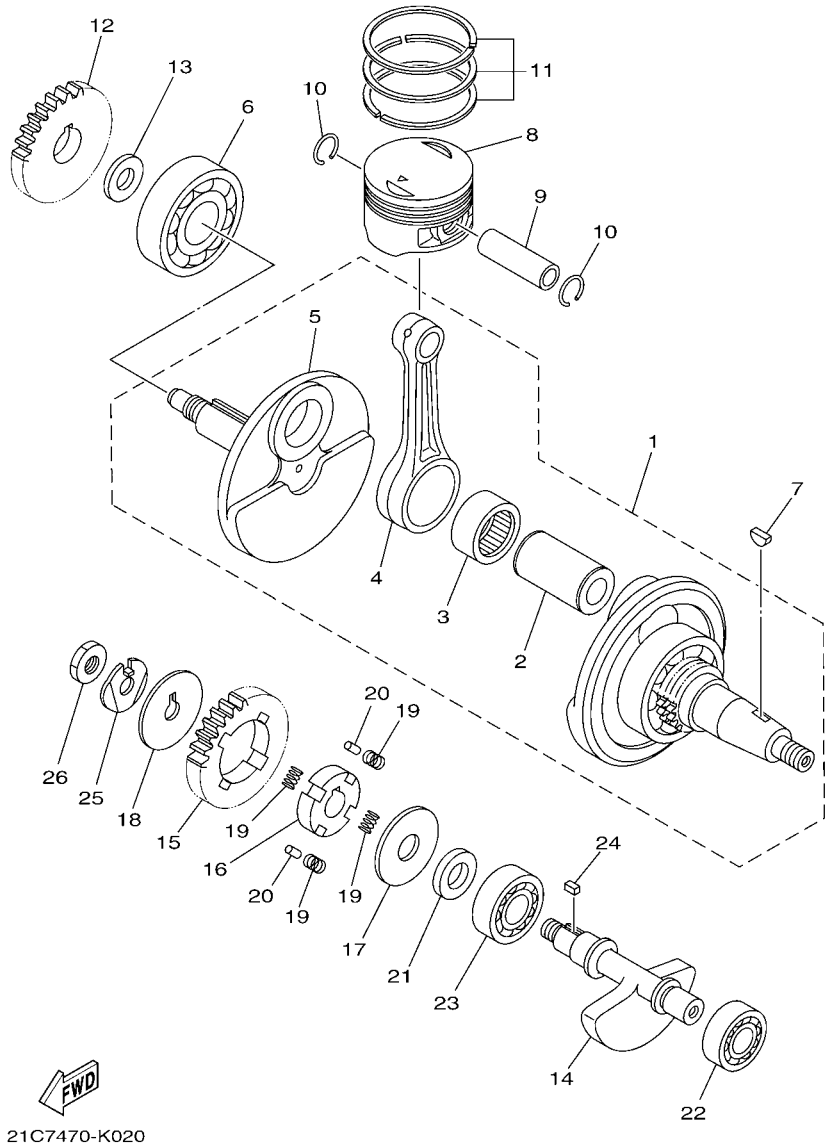

FIG. 2 CIGUENAL & PISTON — CRANKSHAFT & PISTON

REF. Nº	CODIGO Nº PART NO.	DESCRIPCION DESCRIPTION	1ES2					OBSERVACIONES REMARKS
24	90282–05031	CHAVETA, RECTA KEY, STRAIGHT	1					
25	90215–10284	ARANDELA DE CIERRE WASHER, LOCK	1					
26	90170–10405	TUERCA NUT	1					

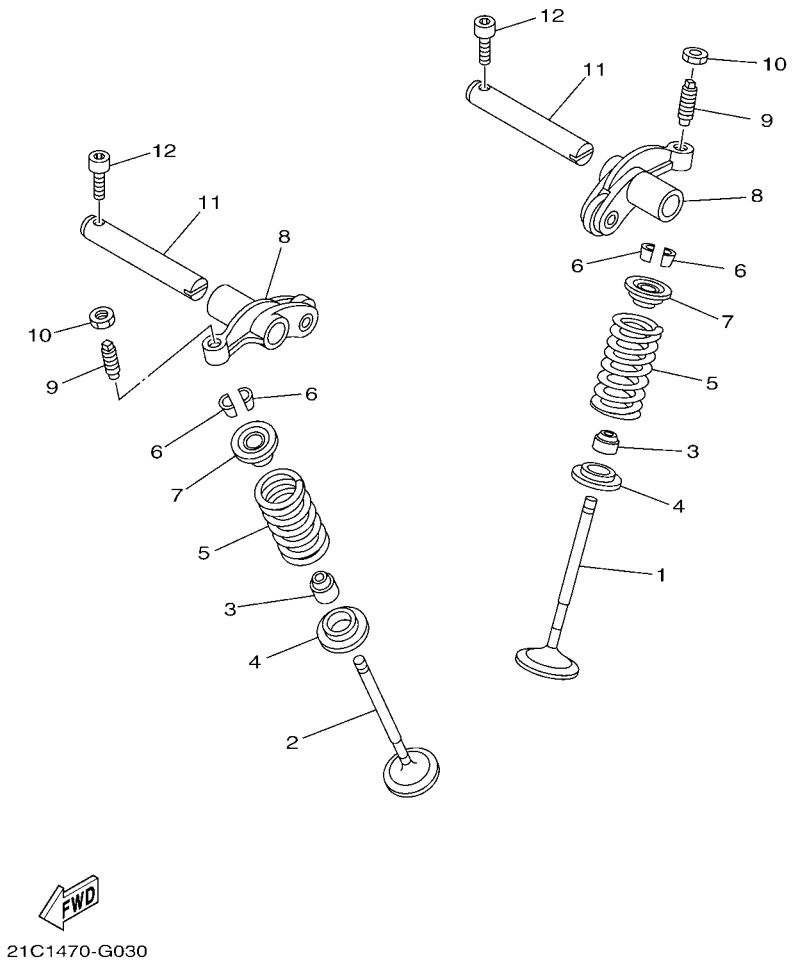

FIG. 3 VALVULA VALVE

REF. Nº	CODIGO Nº PART NO.	DESCRIPCION DESCRIPTION	1ES2					OBSERVACIONES REMARKS
1	54B–E2111–00	VALVULA DE ADMISION VALVE, INTAKE	1					
2	54B–E2121–00	VALVULA DE ESCAPE VALVE, EXHAUST	1					
3	21C–E2119–00	SELLO DE ACEITE VALVULA SEAL, VALVE STEM	2					
4	21C–E2126–00	ASIENTO RESORTE DE VALVULA2 SEAT, VALVE SPRING 2	2					
5	21C–E2113–00	RESORTE VALVULA INTERNA SPRING, VALVE INNER	2					
6	22F–12118–01	SEGURO DE VALVULA COTTER, VALVE	4					
7	21C–12117–00	RETEN RESORTE DE VALVULA RETAINER, VALVE SPRING	2					
8	21C–E2151–00	BRAZO DE BALANCIN DE VALVULA ARM, VALVE ROCKER	2					
9	21C–12159–00	TORNILLO DE AJUSTE DE VALVULA SCREW, VALVE ADJUSTING	2					
10	90170–06128	TUERCA NUT	2					
11	21C–E2156–00	EJE DE BALANCIN SHAFT, ROCKER 2	2					
12	91317–05016	PERNO BOLT	2					

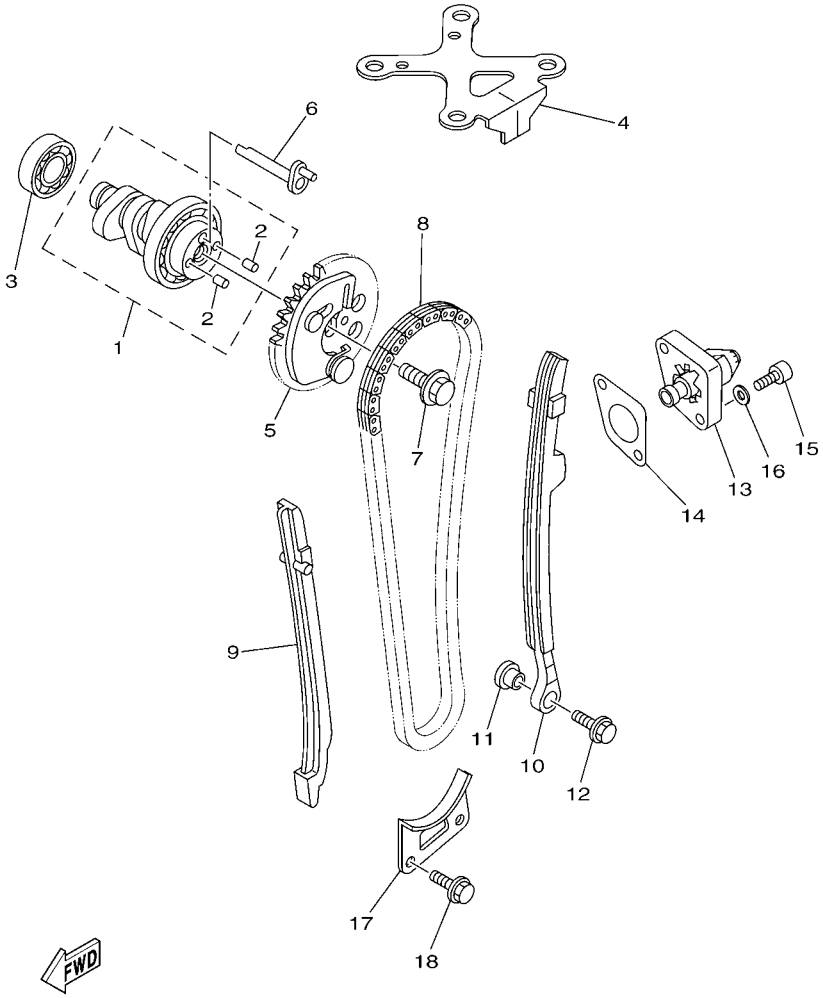

FIG. 4 ARBOL DE LEVAS & CADENA CAMSHAFT & CHAIN

REF. Nº	CODIGO Nº PART NO.	DESCRIPCION DESCRIPTION	1ES2					OBSERVACIONES REMARKS
1	21C–E2170–00	ARBOL DE LEVAS COMPLETO 1 CAMSHAFT ASSY 1	1					
2	93605–06800	.PASADOR DE CLAVIJA .PIN, DOWEL	2					
3	93306–002X2	COJINETE BEARING	1					
4	21C–E111F–00	PLACA PLATE	1					
5	54B–E2280–00	EQUIPO DE DESCOMPRESION DECOMPRESSION ASSY	1					
6	21C–E2288–00	LEVA DE DESCOMPRESION CAM, DECOMPRESSION	1					
7	90105–08196	TORNILLO BOLT, FLANGE	1					
8	94591–69096	CADENA CHAIN	1					
9	21C–E2231–00	TOPE DE GUIA 1 GUIDE, STOPPER 1	1					
10	21C–E2241–00	TOPE DE GUIA 2 GUIDE, STOPPER 2	1					
11	4LS–E5598–00	COLLAR COLLAR	1					
12	95802–06020	TORNILLO DE REBORDE BOLT, FLANGE	1					
13	21C–E2210–00	TENSOR CADENA DE LEVA TENSIONER ASSY, CAM CHAIN	1					
14	5MX–E2213–01	EMPAQUE DE CAJA TENSOR GASKET, TENSIONER CASE	1					
15	91317–06018	PERNO BOLT	2					
16	90201–06037	ARANDELA PLANA (T=1.0) WASHER, PLATE (T=1.0)	2					
17	21C–E2437–00	TOPE STOPPER	1					
18	95027–06016	PERNO, DE BRIDA BOLT, FLANGE	2					

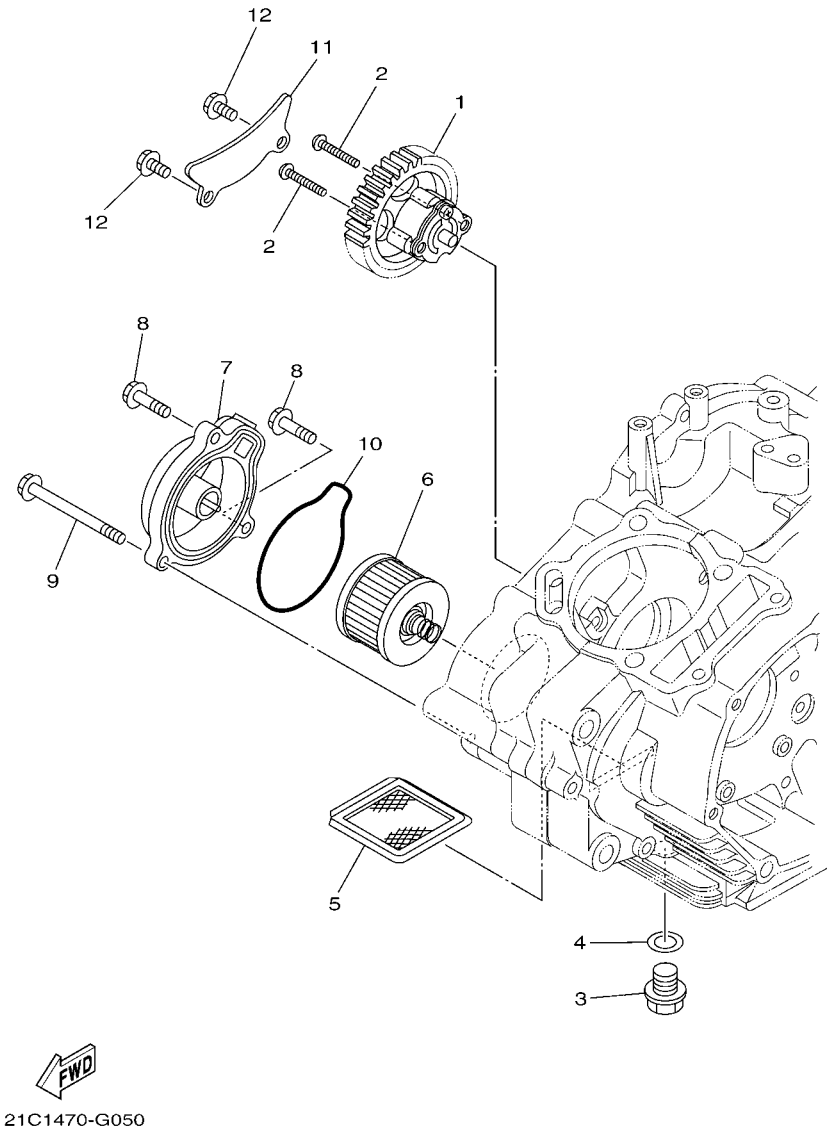

FIG. 5 BOMBA DE ACEITE OIL PUMP

REF. Nº	CODIGO Nº PART NO.	DESCRIPCION DESCRIPTION	1ES2					OBSERVACIONES REMARKS
1	54B–E3300–00	BOMBA DE ACEITE COMPLETA OIL PUMP ASSY	1					
2	90111–05808	TORNILLO BOLT,HEX. SOCKET BUTTON	2					
3	90340–12097	TORNILLO, DE DRENAJE PLUG, STRAIGHT SCREW	1					
4	90430–12227	JUNTA GASKET	1					
5	4LS–E3411–00	FILTRO DE ACEITE STRAINER, OIL	1					
6	21C–E3440–00	ELEMENTO FILTRO DE ACEITE ELEMENT ASSY, OIL CLEANER	1					
7	21C–E3447–00	TAPA DEL ELEMENTO COVER, OIL ELEMENT	1					
8	95027–06020	PERNO, DE BRIDA BOLT, FLANGE	2					
9	95027–06065	PERNO, DE BRIDA BOLT, FLANGE	1					
10	21C–E3449–00	JUNTA DE TAPA DE ELEMENTO GASKET, ELEMENT COVER	1					
11	21C–E3327–00	CUBIERTA ENGRANAJE DE BOMBA COVER, PUMP GEAR	1					
12	95022–06012	PERNO, DE BRIDA BOLT, FLANGE	2					

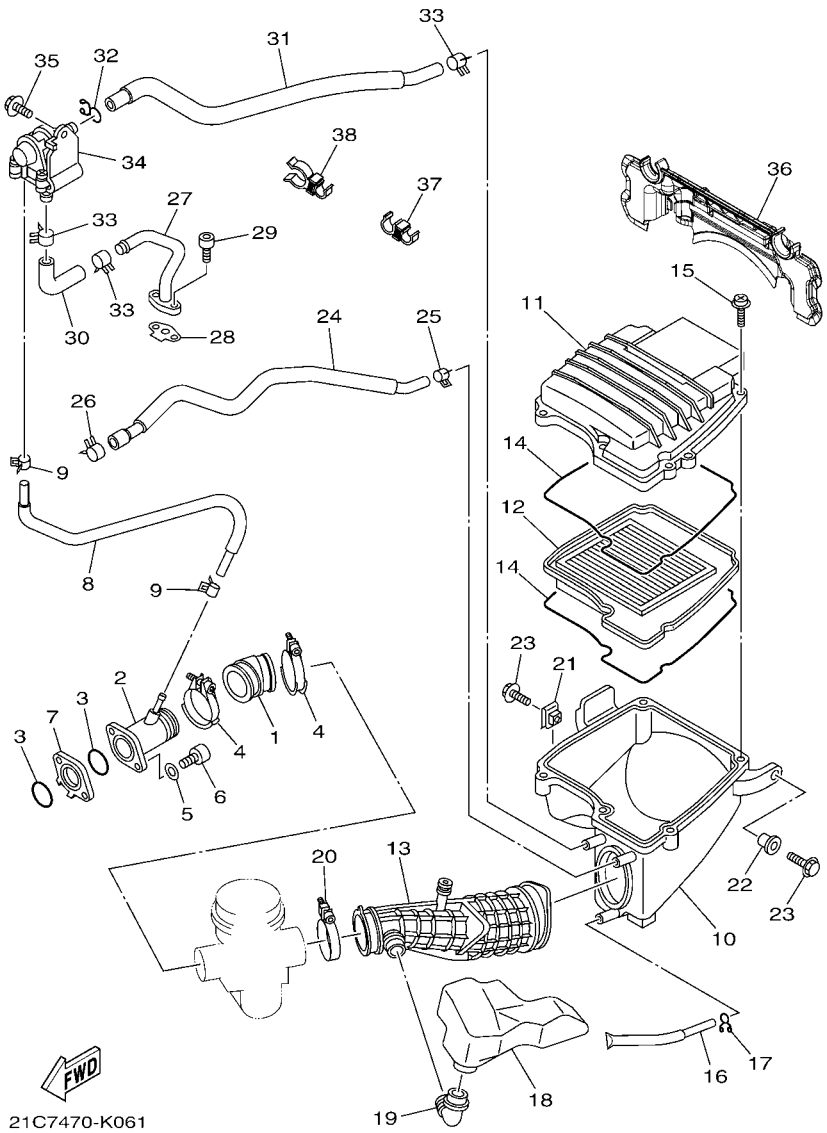

FIG. 6 ADMISION INTAKE

REF. Nº	CODIGO Nº PART NO.	DESCRIPCION DESCRIPTION	1ES2					OBSERVACIONES REMARKS
1	21C–E3586–01	TOBERA DE CARBURADOR 1 JOINT, CARBURETOR 1	1					
2	21C–E3536–01	TOBERA DE CARBURADOR JT. , CARBURETOR	1					
3	93210–30611	ANILLO O O-RING	2					
4	90450–44803	BRIDA, MANGUERA HOSE CLAMP ASSY	2					
5	92907–06600	ARANDELA WASHER, PLATE	2					
6	91317–06025	PERNO BOLT	2					
7	21C–E3595–00	TOBERA JOINT	1					
8	21C–E3542–00	MANGUERA, DE VACIO 1 HOSE, VACUUM SENSING 1	1					
9	90467–08808	PRESILLA CLIP	2					
10	21C–E4411–00	CAJA FILTRO DEL AIRE 1 CASE, AIR CLEANER 1	1					
11	21C–E4412–00	TAPA CAJA DEL FILTRO 1 CAP, CLEANER CASE 1	1					
12	21C–E4450–00	ELEMENTO COMP.FILTRO DE AIRE ELEMENT ASSY, AIR CLEANER	1					
13	21C–E4453–00	UNION DEL FILTRO DEL AIRE 1 JOINT, AIR CLEANER 1	1					
14	21C–E4452–00	SELLO SEAL	2					
15	97602–05320	TORNILLO CON RONDONA SCREW, PAN HEAD WITH WASHER	5					
16	21C–E443E–00	TUBO, DRENAJE PIPE, DRAIN	1					
17	90467–12800	PRESILLA CLIP	1					
18	21C–E4877–00	RESONATOR RESONATOR	1					
19	21C–E4485–00	TUBO DE UNION PIPE, JOINT	1					
20	90450–50802	BRIDA, MANGUERA HOSE CLAMP ASSY	1					
21	90183–06802	TUERCA DE RESORTE NUT, SPRING	1					
22	90387–06737	ESPACIADOR COLLAR	1					
23	95827–06016	TORNILLO BOLT, FLANGE	2					
24	21C–E1166–10	TUBO RESPIRADERO 1 PIPE, BREATHER 1	1					
25	90467–13816	PRESILLA CLIP	1					
26	90467–16805	PRESILLA CLIP	1					
27	21C–E4872–00	TUBO 2 PIPE 2	1					

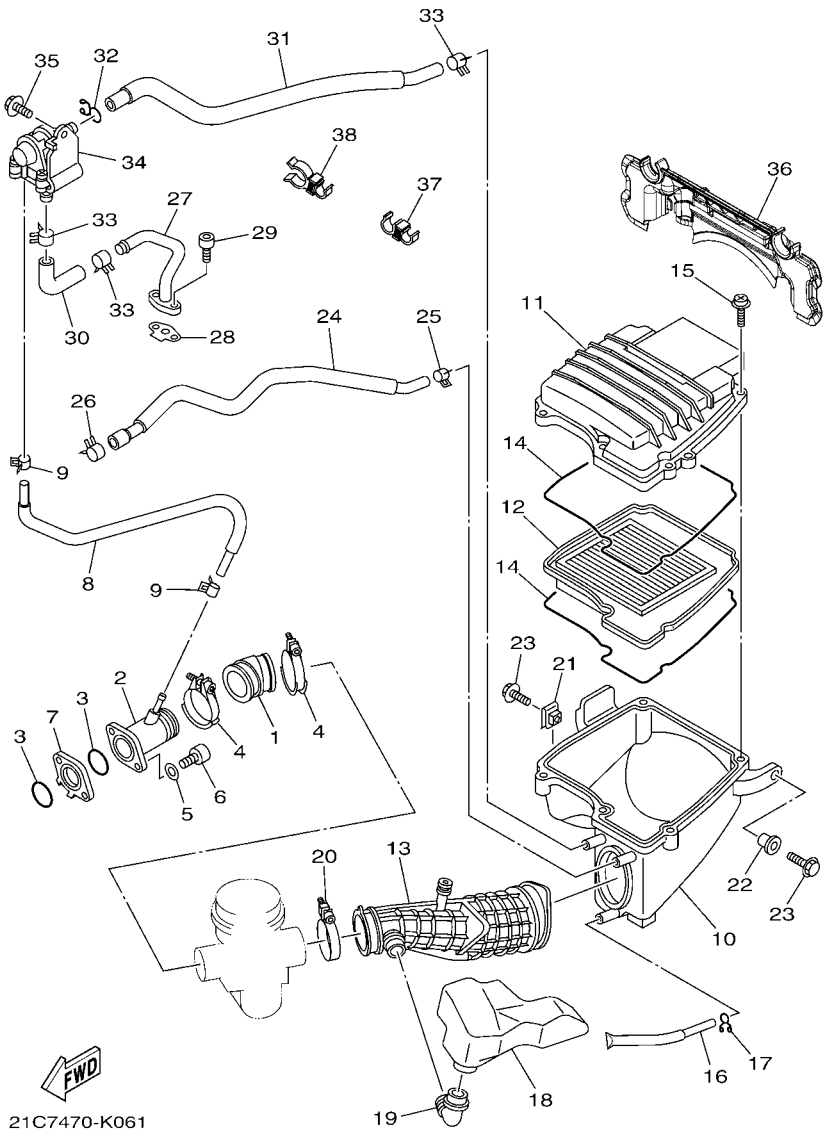

FIG. 6 ADMISION INTAKE

REF. Nº	CODIGO Nº PART NO.	DESCRIPCION DESCRIPTION	1ES2					OBSERVACIONES REMARKS
28	21C–E4815–00	EMPAQUE GASKET	1					
29	91317–06016	PERNO BOLT	2					
30	21C–E4881–00	TUBO 1 HOSE, BEND 1	1					
31	21C–E4882–00	TUBO 2 HOSE, BEND 2	1					
32	90467–15012	PRESILLA CLIP	1					
33	90467–16805	PRESILLA CLIP	3					
34	45P–E4803–10	VALVULA DE AIRE COMPLETA AIR INDUCTION SYSTEM ASSY	1					
35	95827–06012	TORNILLO BOLT, FLANGE	1					
36	21C–E449E–00	CUBIERTA DE FILTRO DE AIRE COVER, AIR CLEANER	1					
37	90464–11014	BRIDA CLAMP	1					
38	90464–16016	BRIDA CLAMP	1					

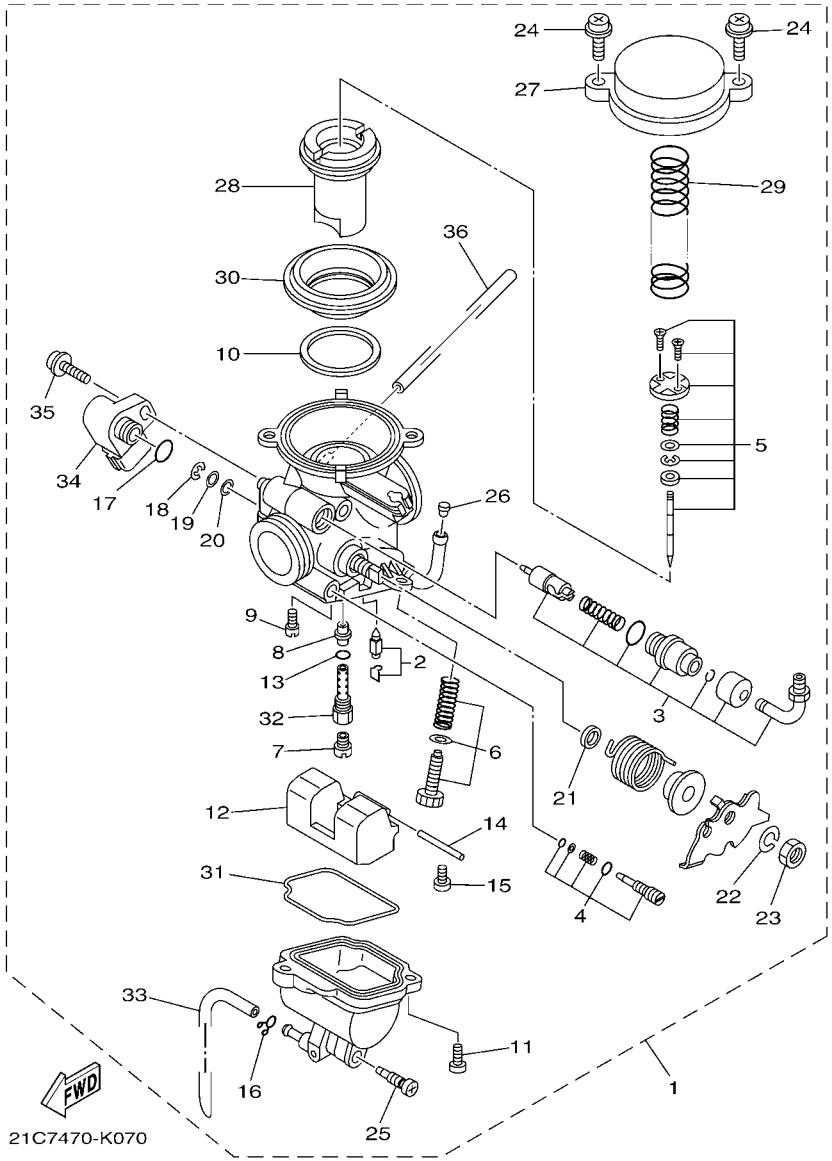

FIG. 7 CARBURADOR CARBURETOR

REF. Nº	CODIGO Nº PART NO.	DESCRIPCION DESCRIPTION	1ES2					OBSERVACIONES REMARKS
1	21C–E4901–30	CARBURADOR COMPLETO 1 CARBURETOR ASSY 1	1					
2	5YY–14150–00	.AGUJA DEL CARB. .NEEDLE ASSY	1					
3	21C–1410A–00	.JUEGO DE ARRANQUE .STARTER SET	1					
4	21C–14105–00	.TORNILLO DE PILOTO .PILOT SCREW SET	1					
5	21C–1490J–10	.CJTO. AGUJA .NEEDLE SET	1					
6	21C–14103–00	.CJTO. TORNILLO DEL RALENTI .THROTTLE SCREW SET	1					
7	3G2–1423A–73	.INYECTOR,PRINCIPAL (#112.5) .JET, MAIN (#112.5)	1					
8	21C–1414M–41	.BOQUILLA PRINCIPAL .NOZZLE, MAIN	1					
9	1NT–14142–15	.SURTIDOR DE RALENTI (# 15) .JET, PILOT (# 15)	1					
10	5GH–14918–10	.ANILLO .RING	1					
11	98502–05012	.TORNILLO .SCREW, PAN HEAD	2					
12	54B–14985–00	.BOIA .FLOAT	1					
13	583–14561–00	.ANILLO O .O-RING	1					
14	353–14186–00	.PASADOR DE LA BOYA .PIN, FLOAT	1					
15	98507–04008	.TORNILLO DE CABEZA CON PLANA .SCREW, PAN HEAD	1					
16	22F–14139–00	.PRESILLA TUBO .CLIP, PIPE	1					
17	5YP–14561–00	.ANILLO O .O-RING	1					
18	22F–14137–00	.PRESILLA .CLIP	1					
19	22F–14953–00	.ARANDELA .WASHER	1					
20	6K8–14597–10	.ARANDELA .WASHER	1					
21	2A2–14997–00	.SELLO .SEAL	1					
22	92902–08100	.ARANDELA .WASHER, SPRING	1					
23	812–14594–00	.TUERCA .NUT	1					
24	4KM–14216–00	.TORNILLO .SCREW	2					
25	21C–14191–00	.TORNILLO, DE DRENAJE .PLUG, DRAIN	1					
26	5LW–14994–00	.FILTRO .NET, FILTER	1					
27	21C–14958–10	.CUBIERTA DE DIAFRAGMA .COVER, DIAPHRAGM	1					

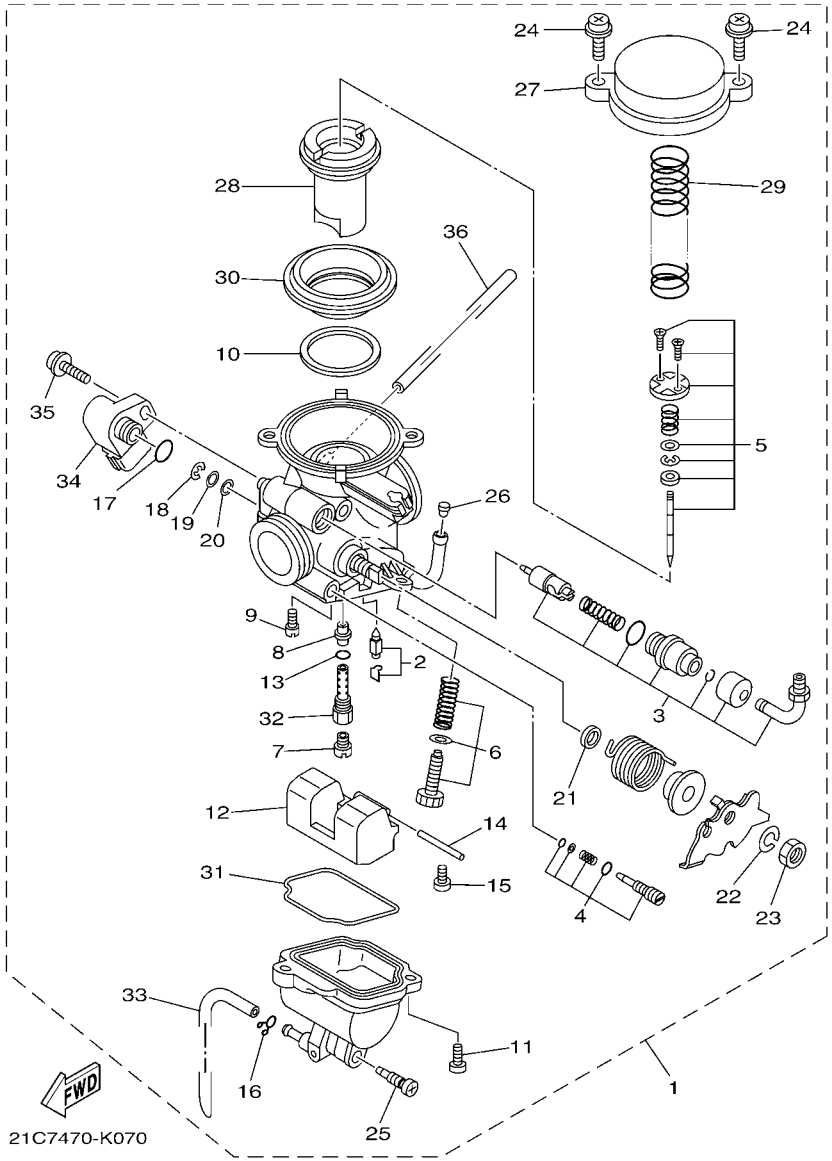

FIG. 7 CARBURADOR CARBURETOR

REF. Nº	CODIGO Nº PART NO.	DESCRIPCION DESCRIPTION	1ES2					OBSERVACIONES REMARKS
28	21C–14340–00	.VALVULA COMPLETA .VALVE ASSY	1					
29	21C–14275–00	.RESORTE .SPRING	1					
30	21C–14545–00	.DIAFRAGMA .DIAPHRAGM	1					
31	21C–14147–00	.ANILLO O .O-RING	1					
32	21C–1496A–00	.BOQUILLA PRINCIPAL .HOLDER, NEEDEL JET	1					
33	21C–14987–00	.TUBO .HOSE	1					
34	21C–85885–00	.TERMICA SENSORIO .THROTTLE SENSOR ASSY	1					
35	21C–14216–00	.TORNILLO .SCREW	1					
36	21C–1410E–00	.TUBO .HOSE	1					

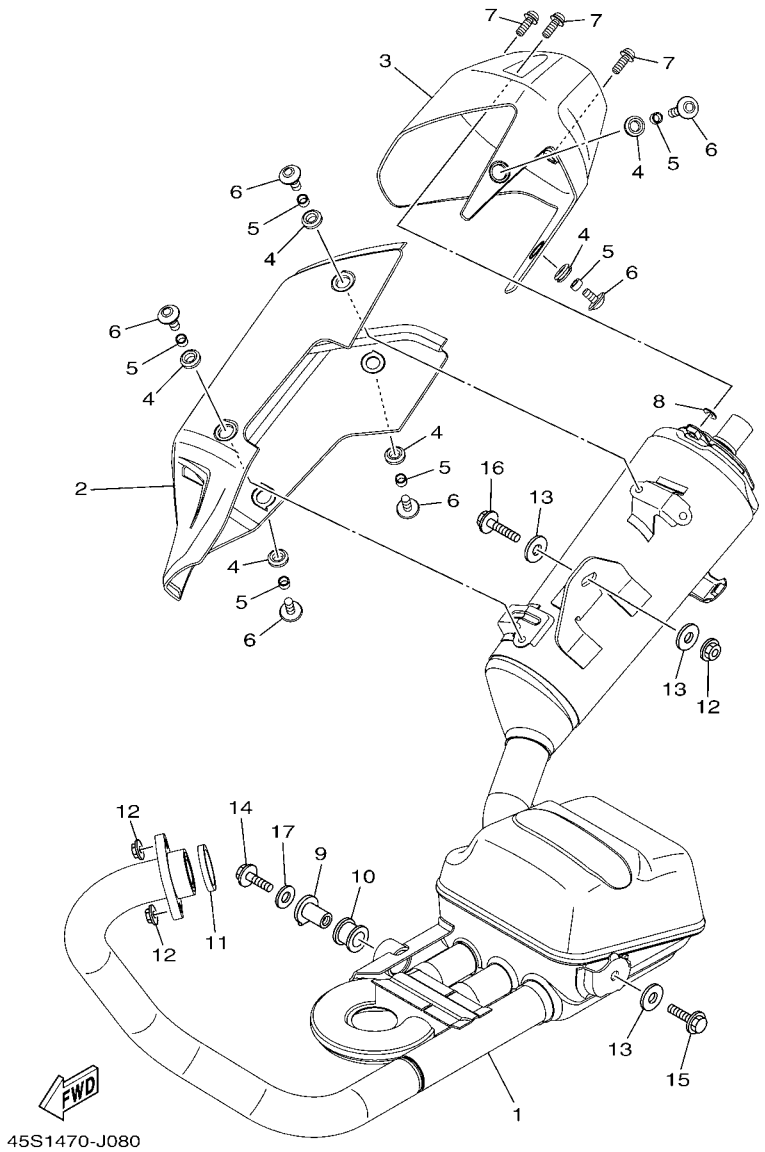

FIG. 8 DESCARGA EXHAUST

REF. Nº	CODIGO Nº PART NO.	DESCRIPCION DESCRIPTION	1ES2					OBSERVACIONES REMARKS
1	21C–E4703–10	SILENCIADOR COMPL. 1 MUFFLER COMP. 1	1					
2	21C–E4718–00	PROTECTOR DE SILENCIADOR 1 PROTECTOR, MUFFLER 1	1					
3	21C–E4799–01	TAPA CAP	1					
4	90480–12581	TAPON GROMMET	6					
5	90387–06023	ESPACIADOR COLLAR	6					
6	90111–06087	TORNILLO BOLT,HEX. SOCKET BUTTON	6					
7	90111–06807	TORNILLO BOLT,HEX. SOCKET BUTTON	3					
8	90202–05807	ARANDELA DE PLANA WASHER, PLATE	3					
9	21C–E4775–00	TUERCA NUT	1					
10	20P–E4747–00	AMORTIGUADOR DE SILENCIADOR DAMPER, MUFFLER	1					
11	21C–E4613–00	JUNTA, TUBO DE ESCAPE GASKET, EXHAUST PIPE	1					
12	95707–08500	TUERCA DE BRIDA NUT, FLANGE	3					
13	90201–08612	ARANDELA PLANA WASHER, PLATE	3					
14	95807–08025	TORNILLO BOLT, FLANGE	1					
15	95807–08035	TORNILLO BOLT, FLANGE	1					
16	95817–08040	TORNILLO BOLT, FLANGE	1					
17	90201–087F0	ARANDELA PLANA WASHER, PLATE	1					

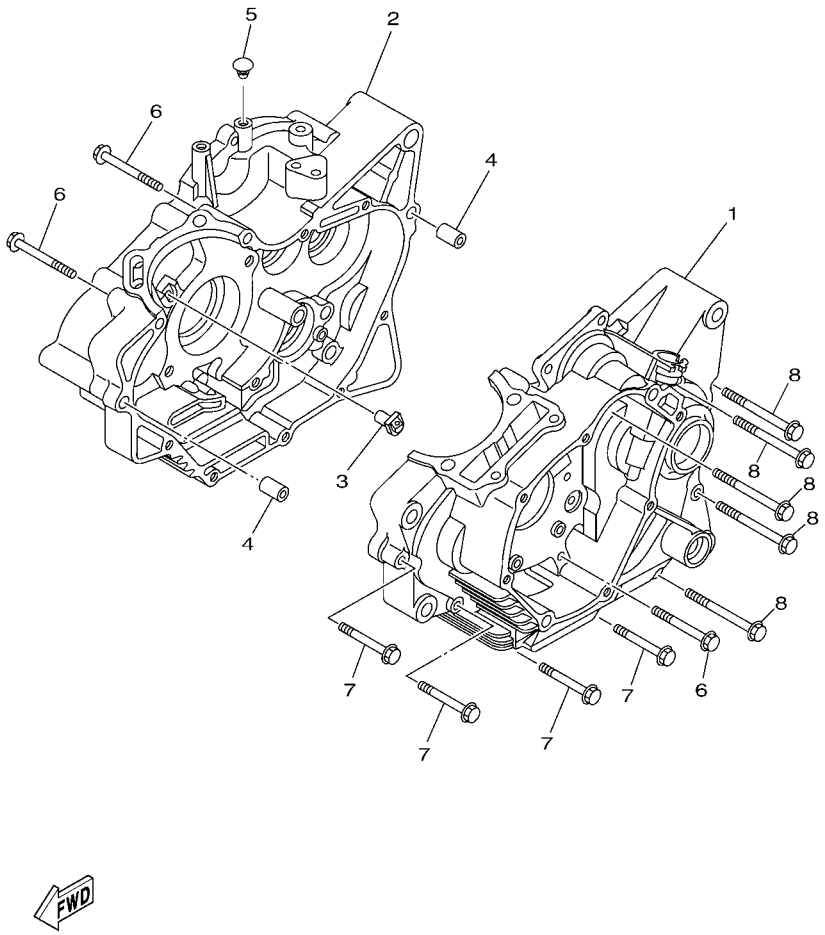

FIG. 9 CARTER — CRANKCASE

REF. Nº	CODIGO Nº PART NO.	DESCRIPCION DESCRIPTION	1ES2					OBSERVACIONES REMARKS
1	54B–E5111–00	CARTER MANIVELA 1 CRANKCASE 1	1					
2	54B–E5121–00	CARTER MANIVELA 2 CRANKCASE 2	1					
3	21C–E5155–00	BOQUILLA 3 NOZZLE 3	1					
4	91830–21014	PASADOR DE CLAVIJA PIN, DOWEL	2					
5	90338–05801	TAPON PLUG	1					
6	95027–06055	PERNO, DE BRIDA BOLT, FLANGE	3					
7	95027–06045	PERNO, DE BRIDA BOLT, FLANGE	4					
8	95027–06070	PERNO, DE BRIDA BOLT, FLANGE	5					

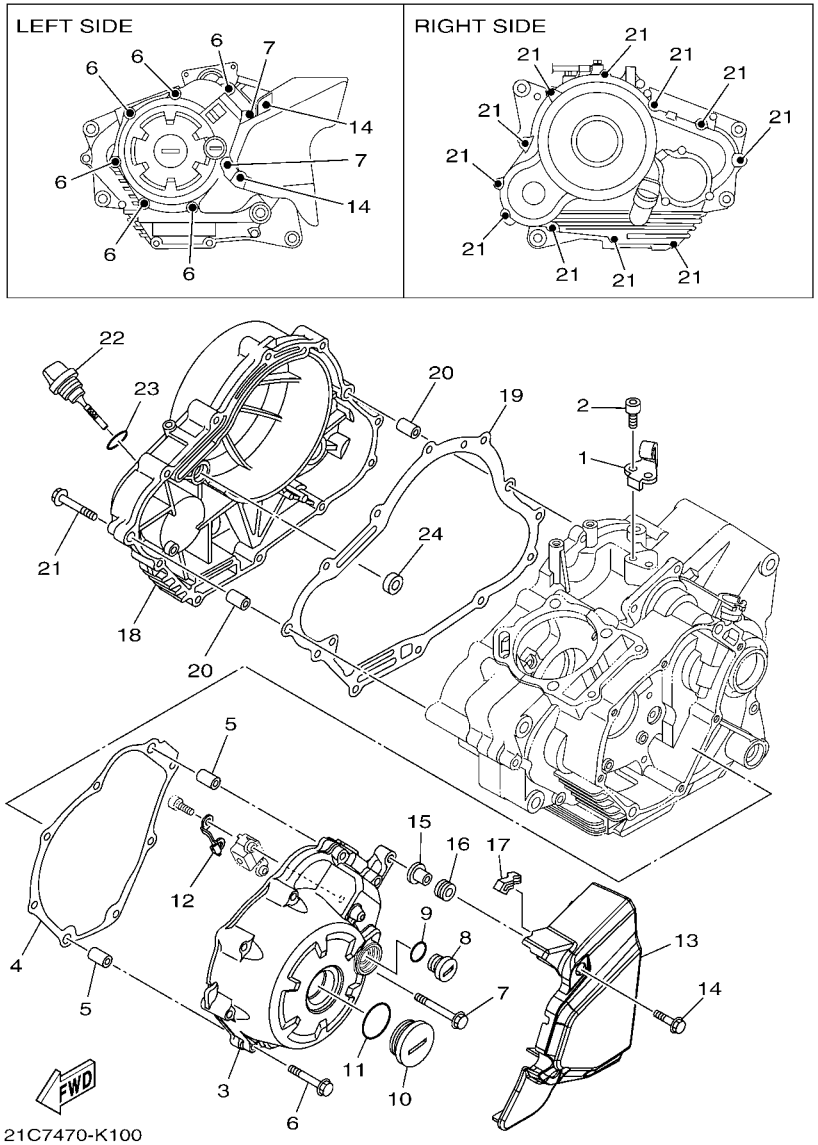

FIG. 10 CUBIERTA DE CARTER 1 CRANKCASE COVER 1

REF. Nº	CODIGO Nº PART NO.	DESCRIPCION DESCRIPTION	1ES2					OBSERVACIONES REMARKS
1	21C–E5441–00	SOSTEN DE CABLE DE EMBRAGUE HOLDER, CLUTCH CABLE	1					
2	91317–06014	PERNO BOLT	2					
3	21C–E5411–10	CUBIERTA DE CARTER 1 COVER, CRANKCASE 1	1					
4	45P–E5451–00	EMPAQ DE CUBIERTA DE CARTER GASKET, CRANKCASE COVER 1	1					
5	91830–21014	PASADOR DE CLAVIJA PIN, DOWEL	2					
6	95027–06040	PERNO, DE BRIDA BOLT, FLANGE	6					
7	95027–06050	PERNO, DE BRIDA BOLT, FLANGE	2					
8	90340–14824	TORNILLO, DE DRENAJE PLUG, STRAIGHT SCREW	1					
9	93210–14899	ANILLO O O-RING	1					
10	90340–32823	TORNILLO, DE DRENAJE PLUG, STRAIGHT SCREW	1					
11	93210–32814	ANILLO O O-RING	1					
12	21C–E5113–00	PLACA PLATE	1					
13	21C–E5418–01	CUBIERTA CAJA DE CADENA COVER, CHAIN CASE	1					
14	95807–06020	TORNILLO BOLT, FLANGE	2					
15	90387–068C9	ESPACIADOR COLLAR	2					
16	90480–12812	TAPON GROMMET	2					
17	21C–E542A–00	AMORTIGUADOR 1 DAMPER 1	1					
18	21C–E5421–00	TAPA DE CARTER DERECHA COVER, CRANKCASE 2	1					
19	45P–E5461–00	JUNTA TAPA CARTER DERECHO 2 GASKET, CRANKCASE COVER 2	1					
20	91830–21014	PASADOR DE CLAVIJA PIN, DOWEL	2					
21	95027–06040	PERNO, DE BRIDA BOLT, FLANGE	11					
22	54B–E5362–00	TAPON DEL NIVEL DE ACEITE PLUG, OIL LEVEL	1					
23	93210–19809	ANILLO O O-RING	1					
24	93101–10838	SELLO ACEITE OIL SEAL	1					

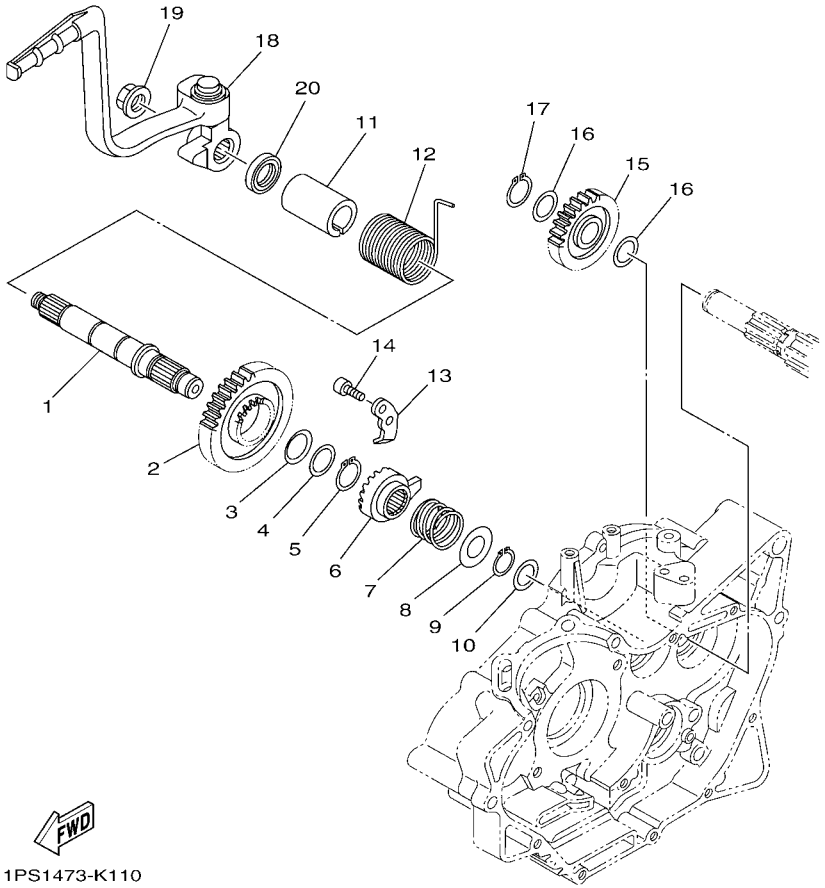

FIG. 11 ARRANQUE STARTER

REF. Nº	CODIGO Nº PART NO.	DESCRIPCION DESCRIPTION	1ES2					OBSERVACIONES REMARKS
1	54B–E5661–00	EJE DE PEDAL DE ARRANQUE AXLE, KICK	1					
2	21C–E5641–10	ENGRANAJE PEDAL ARRANQUE GEAR, KICK	1					
3	90208–20005	ARANDELA DE RESORTE CONICO WASHER, CONICAL SPRING	1					
4	90201–20685	ARANDELA PLANA (T=0.5) WASHER, PLATE (T=0.5)	1					
5	93410–20038	SEGURO CIRCLIP	1					
6	21C–E5671–00	RUEDA DE TRINQUETE WHEEL, RATCHET	1					
7	21C–E5767–00	RESORTE SPRING	1					
8	90201–167P7	ARANDELA PLANA WASHER, PLATE	1					
9	99009–16400	PRESILLA REDONDA CIRCLIP	1					
10	90201–162H4	ARANDELA PLANA WASHER, PLATE	1					
11	54B–E5664–10	GUIA DE RESORTE GUIDE, SPRING	1					
12	54B–E5665–00	RESORTE DE PEDAL DE ARRANQUE SPRING, KICK	1					
13	21C–E5674–00	GUIA DE RUEDA DE TRINQUETE GUIDE, RATCHET WHEEL	1					
14	91317–06016	PERNO BOLT	2					
15	45P–E5651–00	PINON LIBRE, PEDAL ARRANQUE GEAR, KICK IDLE	1					
16	90201–177G4	ARANDELA PLANA WASHER, PLATE	2					
17	99009–17400	PRESILLA REDONDA CIRCLIP	1					
18	21C–E5620–00	PEDAL DE ARRANQUE COMPLETO KICK CRANK ASSY	1					
19	90179–12659	TUERCA NUT	1					
20	93109–20821	SELLO ACEITE OIL SEAL	1					

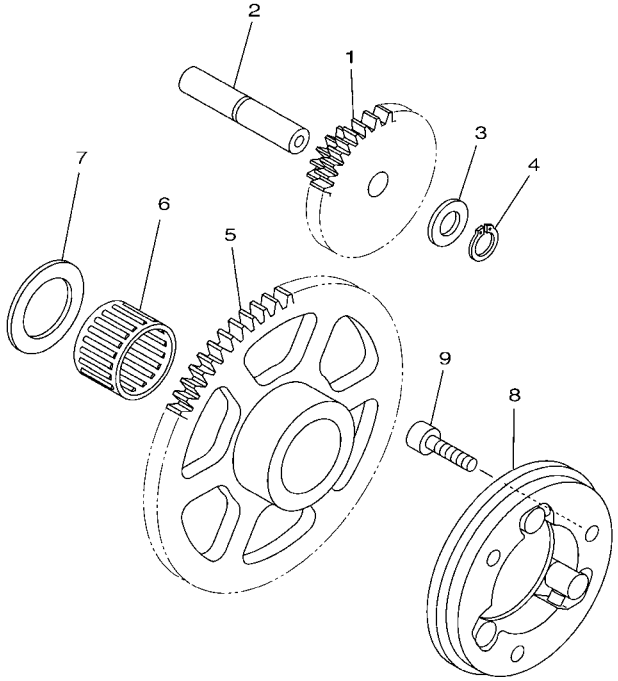

1PS1473-K120

FIG. 12 EMBRAGUE DEL ARRANQUE STARTER CLUTCH

REF. Nº	CODIGO Nº PART NO.	DESCRIPCION DESCRIPTION	1ES2					OBSERVACIONES REMARKS
1	21C–E5514–10	ENGRANAJE 2 GEAR 2	1					
2	21C–E5521–00	EJE 1 SHAFT 1	1					
3	90201–105E8	ARANDELA PLANA WASHER, PLATE	1					
4	99009–10400	PRESILLA REDONDA CIRCLIP	1					
5	45P–E5524–00	RUEDA DE ARRANQUE WHEEL, STARTER	1					
6	93310–325X3	COJINETE DE RODILLOS BEARING	1					
7	90201–25290	ARANDELA PLANA WASHER, PLATE	1					
8	54B–E5580–00	ENSAMBLE EXT.EMBRAGUE ARRANQUE STARTER CLUTCH OUTER ASSY	1					
9	91317–06020	PERNO BOLT	3					

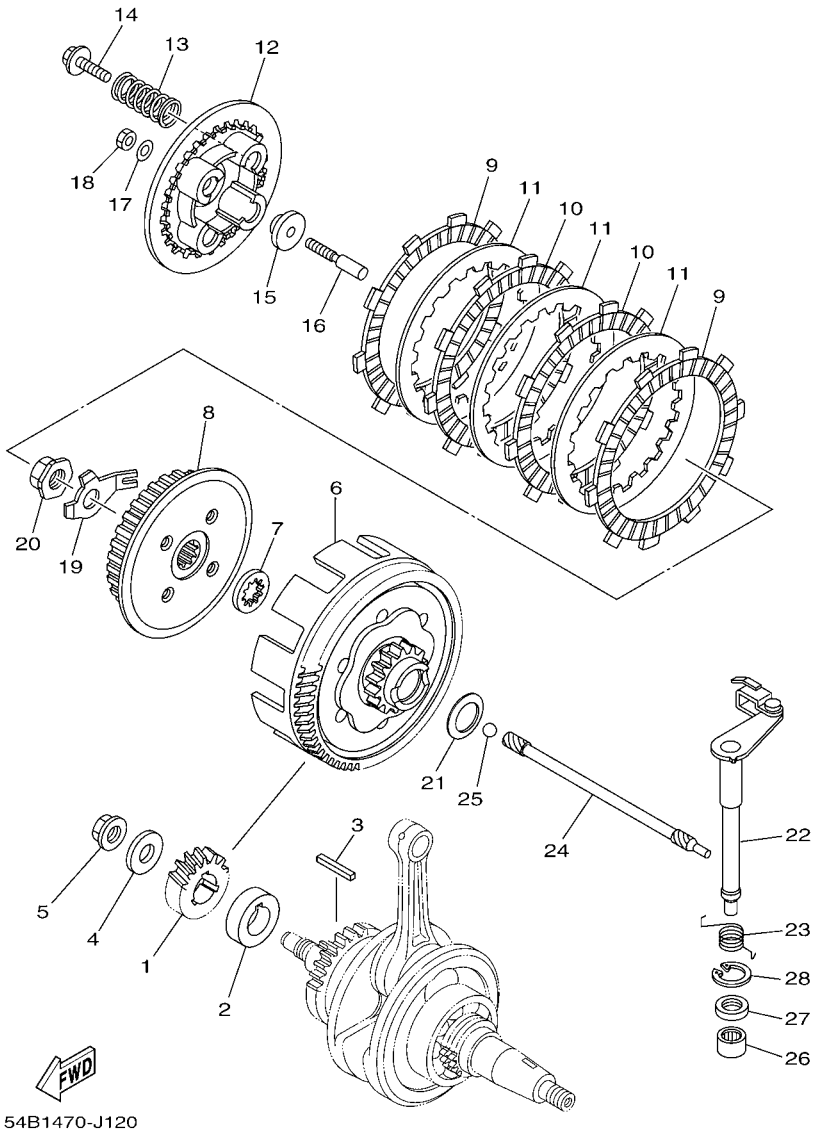

FIG. 13 EMBRAGUE CLUTCH

REF. Nº	CODIGO Nº PART NO.	DESCRIPCION DESCRIPTION	1ES2					OBSERVACIONES REMARKS
1	54B–E6111–00	ENGRANAJE TRACC.PRIMARIA GEAR, PRIMARY DRIVE	1					
2	54B–E7258–00	COLLAR 1 COLLAR 1	1					
3	21C–E6193–00	CHAVETA DE AGUJA KEY, FEATHER	1					
4	90201–12019	ARANDELA PLANA WASHER, PLATE	1					
5	90179–12802	TUERCA NUT	1					
6	54B–E6150–00	CAMPANA DE EMBRAGUE PRIMARY DRIVEN GEAR COMP.	1					
7	21C–E6154–00	ARANDELA, DE EMPUJE 1 PLATE, THRUST 1	1					
8	21C–E6371–00	CUBO, DE EMBRAGUE BOSS, CLUTCH	1					
9	54B–E6321–00	PLACA DE FRICCION PLATE, FRICTION	2					
10	21C–E6331–00	DISCO, DE FRICCION 2 PLATE, FRICTION 2	2					
11	21C–E6324–00	PLACA DE EMBRAGUE PLATE, CLUTCH 1	3					
12	54B–E6351–00	PLATO DE PRESION PLATE, PRESSURE 1	1					
13	21C–E6333–00	RESORTE DE EMBRAGUE 1 SPRING, CLUTCH 1	4					
14	21C–E6337–00	TORNILLO DE RESORTE SCREW, SPRING	4					
15	21C–E6358–00	PLACA DE EMPUJE PLATE, PUSH	1					
16	21C–E6356–01	VARILLA DE EMPUJE 1 ROD, PUSH 1	1					
17	54B–E6144–00	ARANDELA WASHER	1					
18	3C1–E6344–00	TUERCA DE AJUSTE NUT, ADJUSTING	1					
19	21C–E6135–10	ARANDELA DE CIERRE WASHER, LOCK	1					
20	90179–14001	TUERCA NUT	1					
21	90208–20003	ARANDELA DE RESORTE CONICO WASHER, CONICAL SPRING	1					
22	21C–E6380–01	LEVA DE EMPUJE COMPLETA PUSH LEVER ASSY	1					
23	21C–16345–10	RESORTE DE RETORNO SPRING, RETURN	1					
24	54B–E6357–00	VARILLA DE EMPUJE 2 ROD, PUSH 2	1					
25	93505–16844	BOLA BALL	1					
26	93315–112Y9	COJINETE DE RODILLOS BEARING	1					
27	93102–12877	SELLO ACEITE OIL SEAL	1					

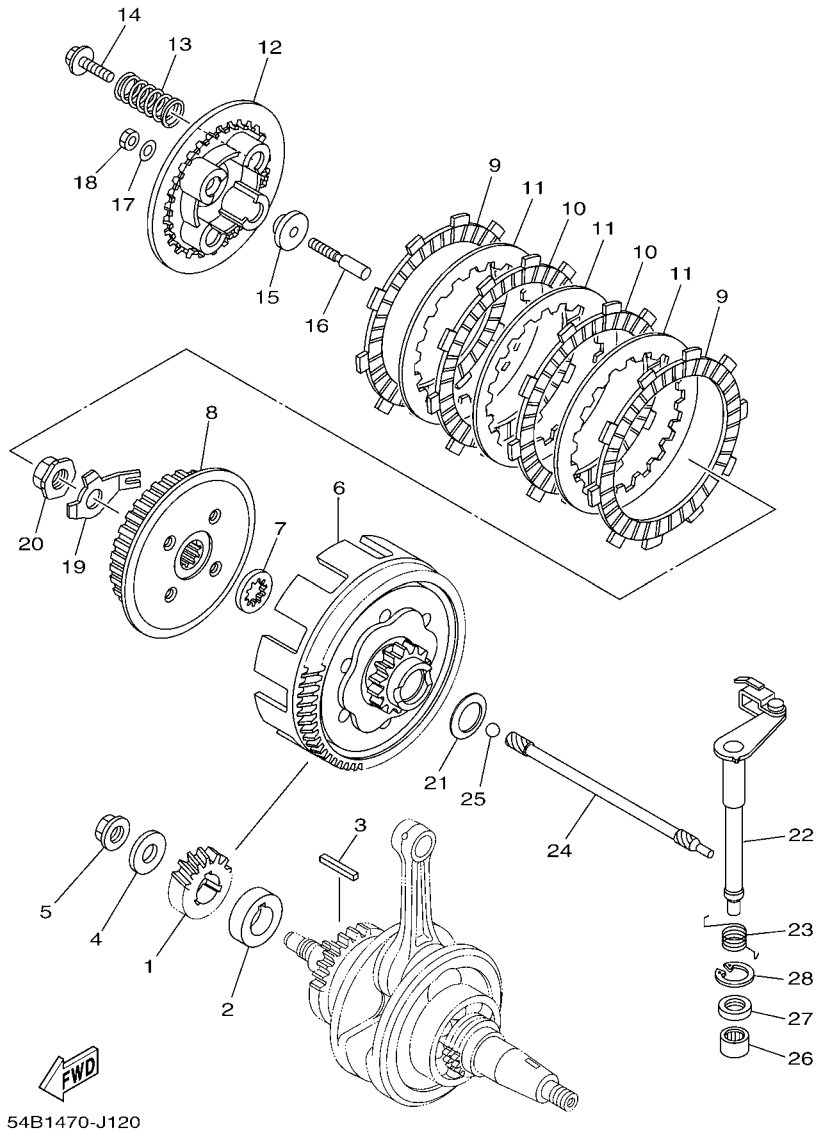

FIG. 13 EMBRAGUE CLUTCH

REF. Nº	CODIGO Nº PART NO.	DESCRIPCION DESCRIPTION	1ES2					OBSERVACIONES REMARKS
28	99009–20500	PRESILLA REDONDA CIRCLIP	1					

FIG. 14 TRANSMISION — TRANSMISSION

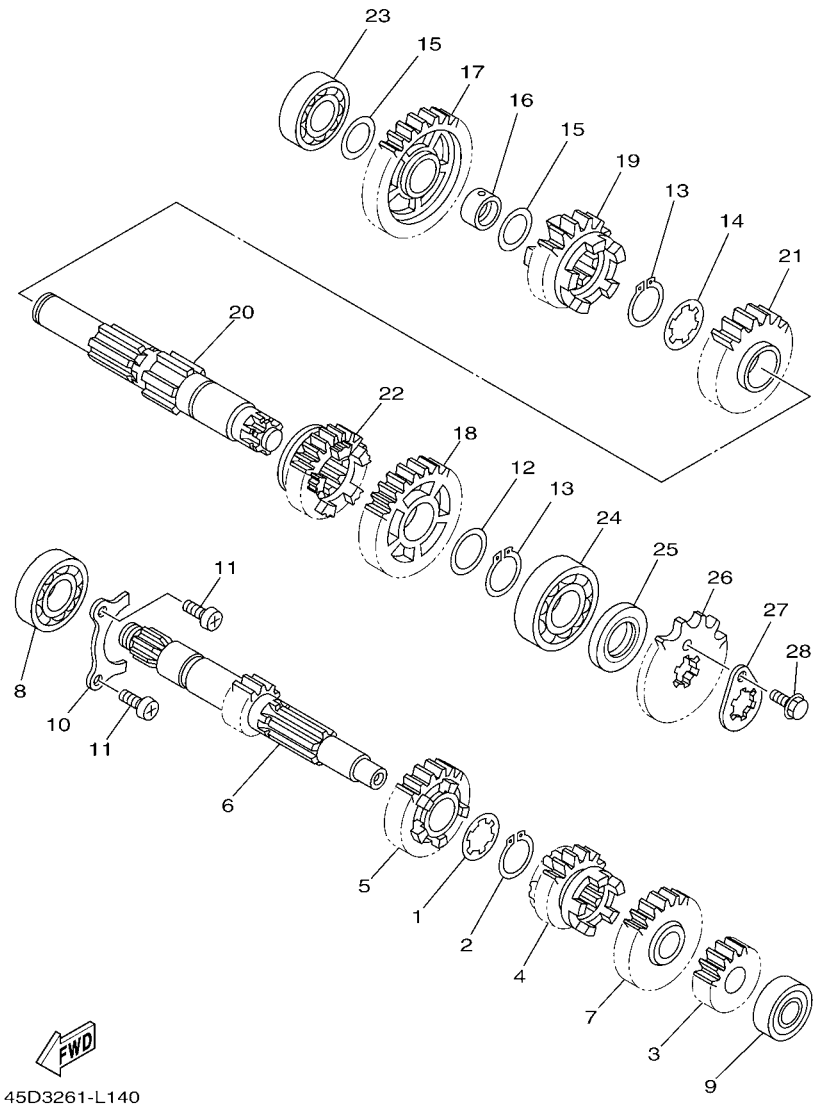

REF. Nº	CODIGO Nº PART NO.	DESCRIPCION DESCRIPTION	1ES2					OBSERVACIONES REMARKS
1	90209–17285	ARANDELA DE SEPARACION WASHER	1					
2	93410–20038	SEGURO CIRCLIP	1					
3	21C–E7121–00	ENGRANAJE PINON DE 2DA (19T) GEAR, 2ND PINION (19T)	1					
4	21C–E7131–20	ENGRANAJE PINON DE 3RA (22T) GEAR, 3RD PINION (22T)	1					
5	21C–E7141–40	ENGRANAJE PINON DE 4TA (22T) GEAR, 4TH PINION (22T)	1					
6	21C–E7411–40	EJE PRIMARIO (14T) AXLE, MAIN (14T)	1					
7	21C–E7151–50	ENGRANAJE PINON DE 5TA GEAR, 5TH PINION	1					
8	93306–054YE	COJINETE BEARING	1					UR UR
	93306–054Y6	COJINETE BEARING	1					UR UR
9	93306–201Y4	COJINETE BEARING	1					
10	21C–E7471–00	PLACA, DE CUBIERTA PLATE, COVER	1					
11	98517–06012	TORNILLO DE CABEZA CON PLANA SCREW, PAN HEAD	2					
12	90201–22793	ARANDELA PLANA WASHER, PLATE	1					
13	93410–22039	SEGURO CIRCLIP	2					
14	90209–18208	ARANDELA DE SEPARACION WASHER	1					
15	90201–177G4	ARANDELA PLANA WASHER, PLATE	2					
16	21C–E7258–00	COLLAR 1 COLLAR 1	1					
17	21C–E7211–20	ENGRANAJE RUEDA DE 1 RA (38T) GEAR, 1ST WHEEL (38T)	1					
18	21C–E7221–20	ENGRANAJE RUEDA DE 2DA (34T) GEAR, 2ND WHEEL (34T)	1					
19	21C–E7241–40	ENGRANAJE DE RUEDA 4TA (23T) GEAR, 4TH WHEEL (23T)	1					
20	21C–E7402–40	EJE DE TRACCION COMPLETO DRIVE AXLE ASSY	1					
21	21C–E7231–30	ENGRANAJE RUEDA DE 3RA (29T) GEAR, 3RD WHEEL (29T)	1					
22	21C–E7251–40	ENGRANAJE RUEDA DE 5TA (21T) GEAR, 5TH WHEEL (21T)	1					
23	93306–203XR	COJINETE BEARING	1					
24	93306–272X4	COJINETE BEARING	1					UR UR
	93306–272X1	COJINETE BEARING	1					UR UR
25	93102–22818	SELLO ACEITE OIL SEAL	1					

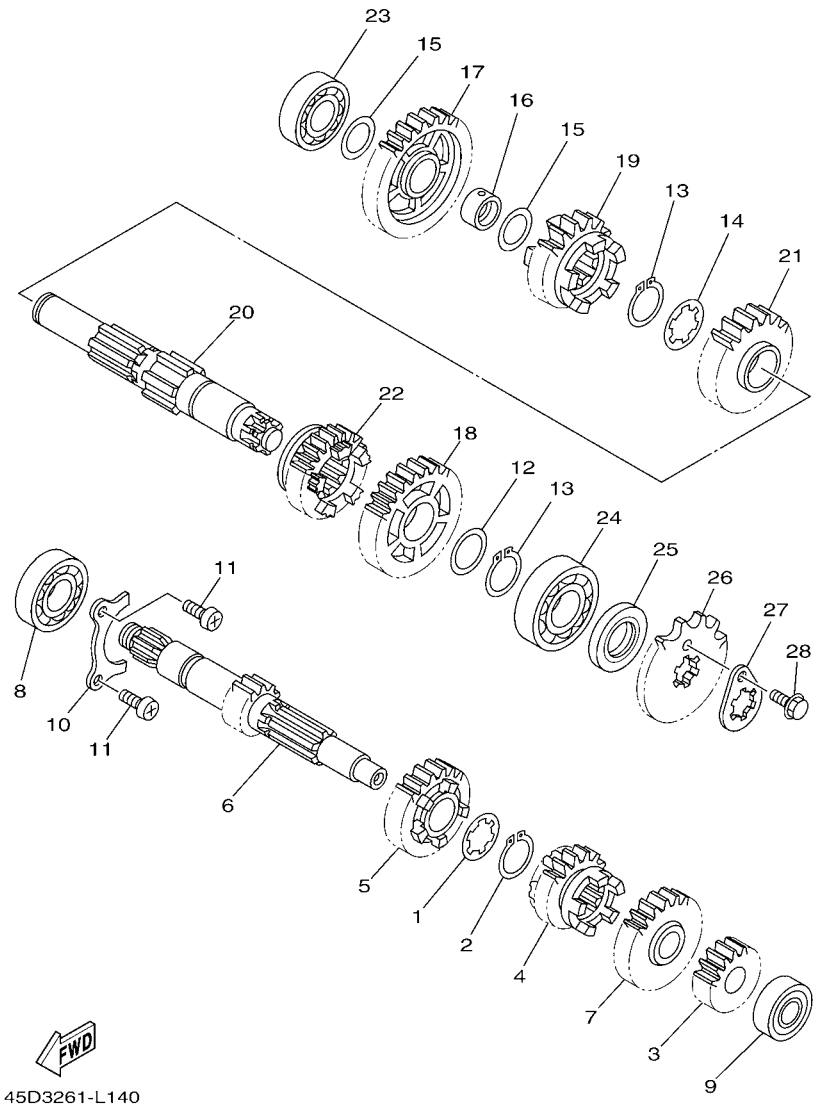

FIG. 14 TRANSMISION — TRANSMISSION

REF. Nº	CODIGO Nº PART NO.	DESCRIPCION DESCRIPTION	1ES2					OBSERVACIONES REMARKS
26	93822–14800	CORONA (14T) SPROCKET, DRIVE (14T)	1					
27	4LS–E7456–00	SOPORTE DE CORONA HOLDER, SPROCKET	1					
28	95027–06010	PERNO, DE BRIDA BOLT, FLANGE	1					

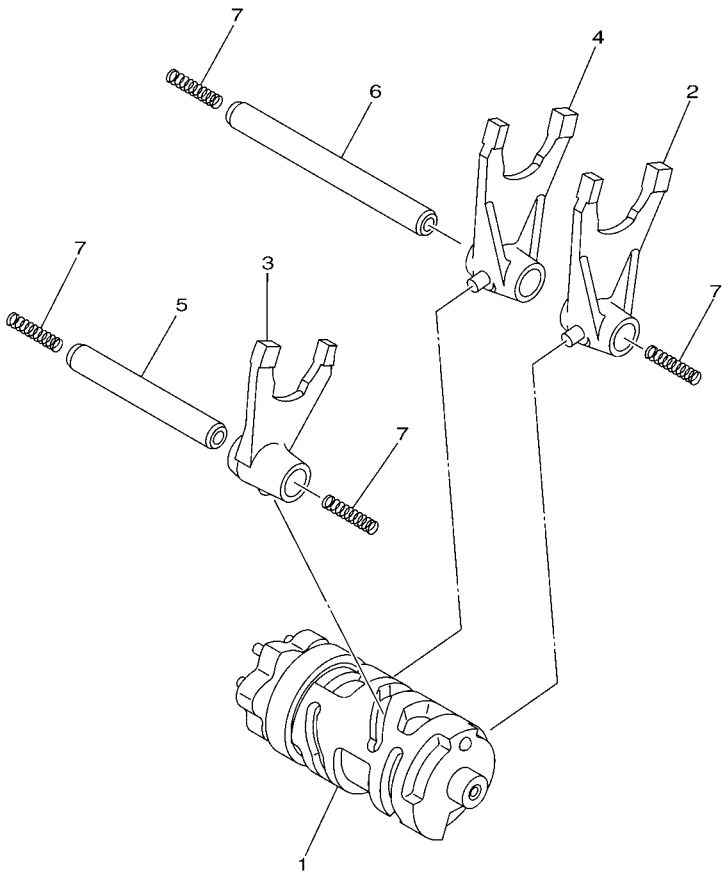

21C1470-G140

FIG. 15 LEVA DE CAMBIO & HORQUILLA SHIFT CAM & FORK

REF. Nº	CODIGO Nº PART NO.	DESCRIPCION DESCRIPTION	1ES2					OBSERVACIONES REMARKS
1	21C–E8540–30	LEVA DEL CAMBIO COMPLETA SHIFT CAM ASSY	1					
2	21C–E8511–00	HORQUILLA DEL CAMBIO 1 FORK, SHIFT 1	1					
3	21C–E8512–00	HORQUILLA DEL CAMBIO 2 FORK, SHIFT 2	1					
4	21C–E8513–00	HORQUILLA DEL CAMBIO 3 FORK, SHIFT 3	1					
5	21C–E8531–00	BARRA GUIA HORQ. CAMBIO 1 BAR, SHIFT FORK GUIDE 1	1					
6	21C–E8535–00	BARRA GUIA HORQ .CAMBIO 2 BAR, SHIFT FORK GUIDE 2	1					
7	90501–06800	RESORTE DE COMPRESION SPRING, COMPRESSION	4					

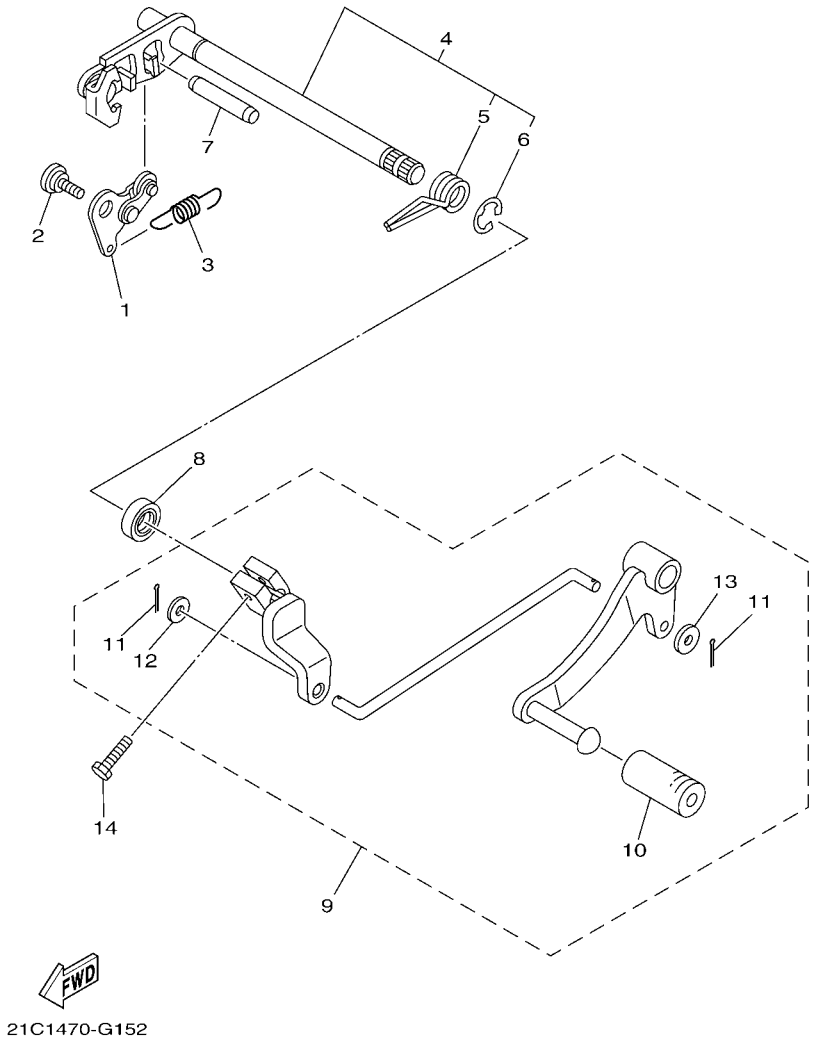

FIG. 16 EJE DE CAMBIO & PEDAL SHIFT SHAFT

REF. Nº	CODIGO Nº PART NO.	DESCRIPCION DESCRIPTION	1ES2					OBSERVACIONES REMARKS
1	21C–E8140–00	PALANCA DE TOPE COMPLETA STOPPER LEVER ASSY	1					
2	90109–06259	PERNO BOLT	1					
3	21C–E8337–00	RESORTE SPRING	1					
4	21C–E8101–01	EJE SELECTOR COMPLETO SHIFT SHAFT ASSY	1					
5	90508–32805	.RESORTE DE TORSION .SPRING, TORSION	1					
6	99001–10600	.PRESILLA REDONDA .CIRCLIP	1					
7	93608–43238	PASADOR DE CLAVIJA PIN, DOWEL	1					
8	93102–12875	SELLO ACEITE OIL SEAL	1					
9	21C–E8110–10	PEDAL DE CAMBIO COMPLETO SHIFT PEDAL ASSY	1					
10	20P–E8113–00	.FUNDA DEL PEDAL DEL CAMBIO .COVER, SHIFT PEDAL	1					
11	91401–20012	.CHAVETA .PIN, COTTER	2					
12	92902–06200	.ARANDELA .WASHER	1					
13	90201–06871	.ARANDELA PLANA .WASHER, PLATE	1					
14	97012–06020	PERNO BOLT	1					

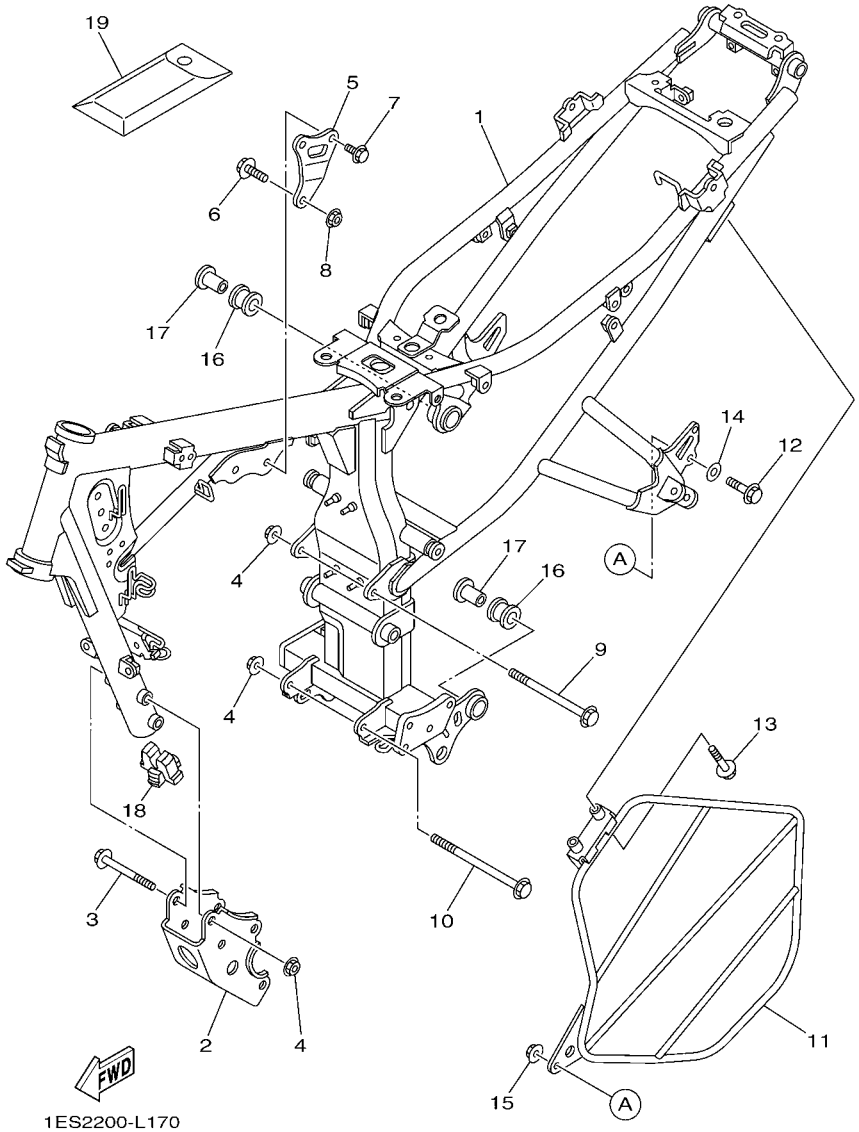

FIG. 17 CUADRO FRAME

REF. Nº	CODIGO Nº PART NO.	DESCRIPCION DESCRIPTION	1ES2					OBSERVACIONES REMARKS
1	21C–F1110–10	ARMAZON COMPLETO FRAME COMP.	1					
2	21C–F1316–00	SOPORTE DE MOTOR 3 STAY, ENGINE 3	1					
3	95812–10080	TORNILLO DE REBORDE BOLT, FLANGE	4					
4	90179–10658	TUERCA NUT	6					
5	21C–F1317–00	SOPORTE DE MOTOR 3 STAY, ENGINE 3	1					
6	95812–08035	TORNILLO DE REBORDE BOLT, FLANGE	1					
7	95812–08016	TORNILLO DE REBORDE BOLT, FLANGE	2					
8	90179–08674	TUERCA NUT	1					
9	95817–10130	TORNILLO BOLT, FLANGE	1					
10	90105–10174	TORNILLO BOLT, FLANGE	1					
11	21C–F1298–00	PROTECTOR PROTECTOR, FOOT REST	1					
12	95807–06016	TORNILLO BOLT, FLANGE	1					
13	95802–06025	TORNILLO DE REBORDE BOLT, FLANGE	2					
14	90201–061A5	ARANDELA PLANA WASHER, PLATE	1					
15	95702–06500	TUERCA DE BRIDA NUT, FLANGE	1					
16	20P–E4747–00	AMORTIGUADOR DE SILENCIADOR DAMPER, MUFFLER	2					
17	90387–08822	ESPACIADOR COLLAR	2					
18	21C–F1638–01	AMORTIGUADOR 1 DAMPER 1	1					
19	21C–F8100–20	JUEGO DE HERRAMIENTAS TOOL KIT	1					

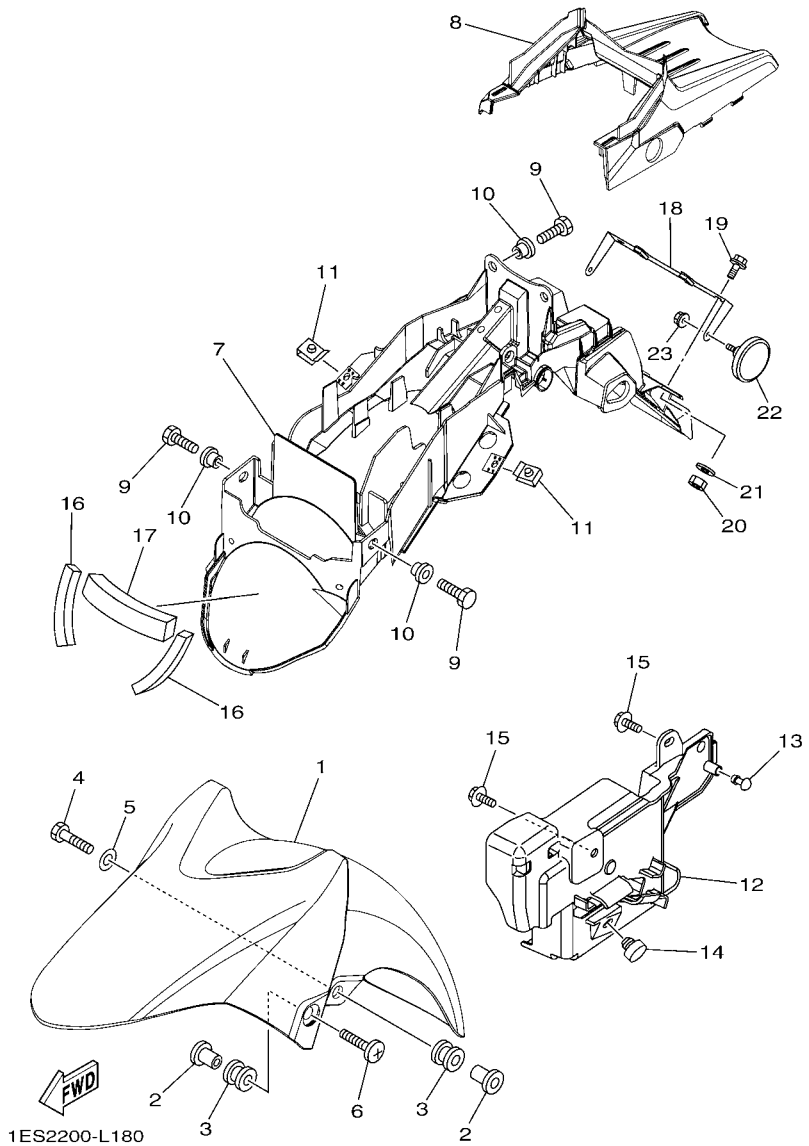

FIG. 18 GUARDABARRO FENDER

REF. Nº	CODIGO Nº PART NO.	DESCRIPCION DESCRIPTION	1ES2					OBSERVACIONES REMARKS
1	21C–F1511–00–0X	GUARDABARRO DELANTERO FENDER, FRONT	1					UR PARA YB UR FOR YB
	21C–F1511–00–1X	GUARDABARRO DELANTERO FENDER, FRONT	1					UR PARA DRMK UR FOR DRMK
2	90387–068C5	ESPACIADOR COLLAR	4					
3	90480–08801	TAPON GROMMET	4					
4	97022–06020	PERNO BOLT	2					
5	90201–06726	ARANDELA PLANA WASHER, PLATE	2					
6	90154–06061	TORNILLO DE LIGAR SCREW, BINDING	2					
7	21C–F1611–00	GUARDABARRO TRASERO FENDER, REAR	1					
8	21C–F1651–00	TAPA DE GUARDABARRO TRAS. COVER, REAR FENDER	1					
9	97012–06014	PERNO BOLT	4					
10	90387–06048	ESPACIADOR COLLAR	4					
11	90183–05818	TUERCA DE RESORTE NUT, SPRING	2					
12	21C–F177G–10	CAJA DE BATERIA BOX, BATTERY	1					
13	21C–F1717–00	AMORTIGUADOR DAMPER	1					
14	4LS–F4741–00	COJIN DE ASIENTO PAD, SEAT	1					
15	90119–06117	TORNILLO CON ARANDELA BOLT, WITH WASHER	2					
16	21C–F1669–00	SELLO SEAL	2					
17	21C–F16A2–00	SELLO 2 SEAL, 2	1					
18	1ES–F1641–00	SOPORTE DE REFLECTOR BRACKET, REFLECTOR	1					
19	95807–06016	TORNILLO BOLT, FLANGE	2					
20	95607–06100	TUERCA AUTOBLOCANTE NUT, U	2					
21	90201–06078	ARANDELA PLANA WASHER, PLATE	2					
22	1ES–H5111–00	REFLECTOR DELANTERA 1 REFLECTOR, FRONT 1	2					
23	95707–05500	TUERCA DE BRIDA NUT, FLANGE	2					

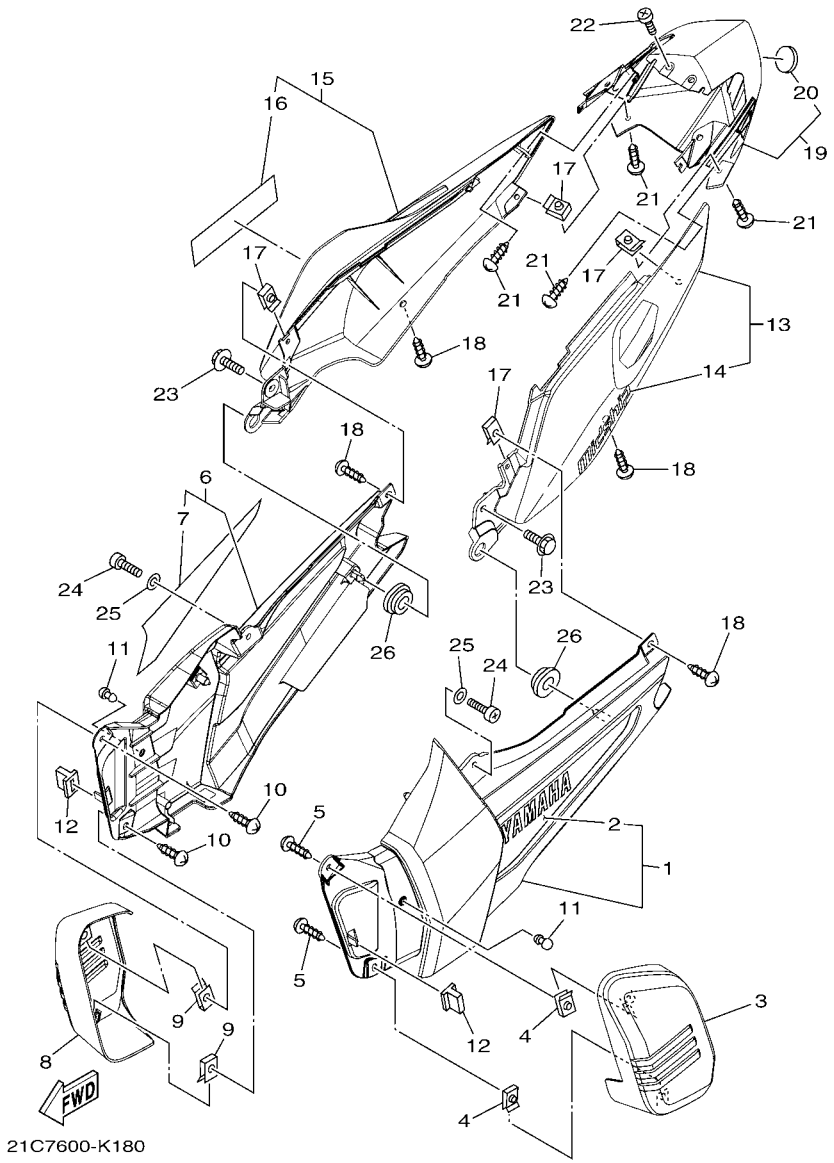

FIG. 19 CUBIERTA LATERAL SIDE COVER

REF. Nº	CODIGO Nº PART NO.	DESCRIPCION DESCRIPTION	1ES2					OBSERVACIONES REMARKS
1	45S–XF171–30–P3	JUEGO DE GRAFICOS 1 COVER, SIDE 1	1					DBNM8 DBNM8
2	45S–F173E–00	.GRAFICO, 1 .GRAPHIC, 1	1					
3	21C–F172A–10	PANEL 1 PANEL 1	1					
4	90183–05818	TUERCA DE RESORTE NUT, SPRING	2					
5	97702–50012	TORNILLO ROSCA HEMBRA SCREW, TAPPING	2					
6	45S–XF172–30–P3	TAPA LTERAL 2 COVER, SIDE 2	1					DBNM8 DBNM8
7	45S–F173F–00	.GRAFICO 2 .GRAPHIC, 2	1					
8	21C–F172F–10	PANEL 2 PANEL 2	1					
9	90183–05818	TUERCA DE RESORTE NUT, SPRING	2					
10	97702–50012	TORNILLO ROSCA HEMBRA SCREW, TAPPING	2					
11	21C–F1717–00	AMORTIGUADOR DAMPER	2					
12	5DG–F1778–00	AMORTIGUADOR DE MONTAJE DAMPER, LOCATING 1	2					
13	21C–XF173–60–33	TAPA LATERAL 3 COVER, SIDE 3	1					UR PARA YB UR FOR YB
	21C–XF173–C0–P1	TAPA LATERAL 3 COVER, SIDE 3	1					UR PARA DRMK UR FOR DRMK
14	21C–F174G–60	.GRAFICO 3 .GRAPHIC, 3	1					UR PARA YB UR FOR YB
	21C–F174G–90	.GRAFICO 3 .GRAPHIC, 3	1					UR PARA DRMK UR FOR DRMK
15	21C–XF174–60–33	CUBIERTA LATERAL 4 COVER, SIDE 4	1					UR PARA YB UR FOR YB
	21C–XF174–C0–P1	CUBIERTA LATERAL 4 COVER, SIDE 4	1					UR PARA DRMK UR FOR DRMK
16	21C–F174G–60	.GRAFICO 3 .GRAPHIC, 3	1					UR PARA YB UR FOR YB
	21C–F174G–90	.GRAFICO 3 .GRAPHIC, 3	1					UR PARA DRMK UR FOR DRMK
17	90183–05818	TUERCA DE RESORTE NUT, SPRING	4					
18	97702–50012	TORNILLO ROSCA HEMBRA SCREW, TAPPING	4					
19	21C–XF17C–70–33	CUBIERTA LATERAL 5 COVER, SIDE 5	1					UR PARA YB UR FOR YB
	21C–XF17C–A0–P1	CUBIERTA LATERAL 5 COVER, SIDE 5	1					UR PARA DRMK UR FOR DRMK
20	5TS–F836B–02	.MARCA .TUNING FORK MARK	1					
21	97707–50012	TORNILLO SCREW, TRUSS HEAD TAPPING	4					
22	98507–06012	TORNILLO DE CABEZA PLANA SCREW, PAN HEAD	2					

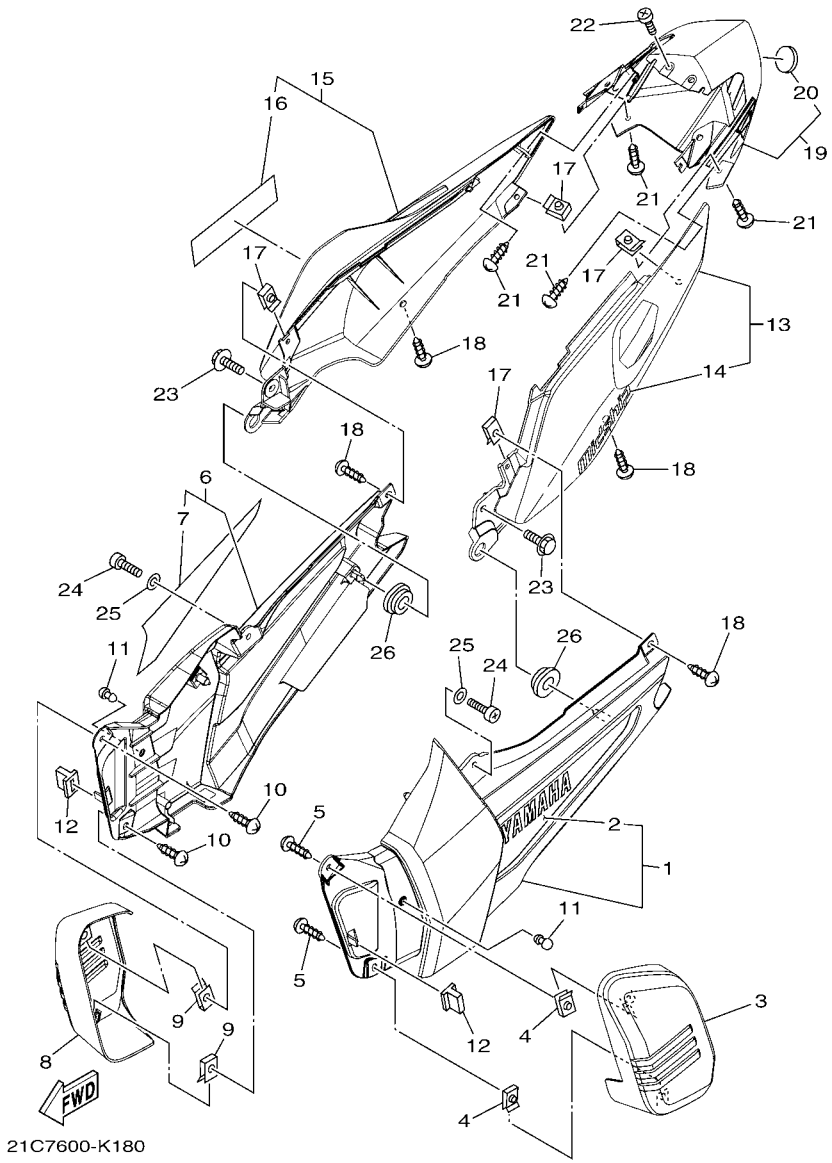

FIG. 19 CUBIERTA LATERAL SIDE COVER

REF. Nº	CODIGO Nº PART NO.	DESCRIPCION DESCRIPTION	1ES2					OBSERVACIONES REMARKS
23	90119–06137	TORNILLO CON ARANDELA BOLT, WITH WASHER	2					
24	98502–06016	TORNILLO SCREW, PAN HEAD	2					
25	90201–06055	ARANDELA PLANA WASHER, PLATE	2					
26	90480–01559	TAPON GROMMET	2					

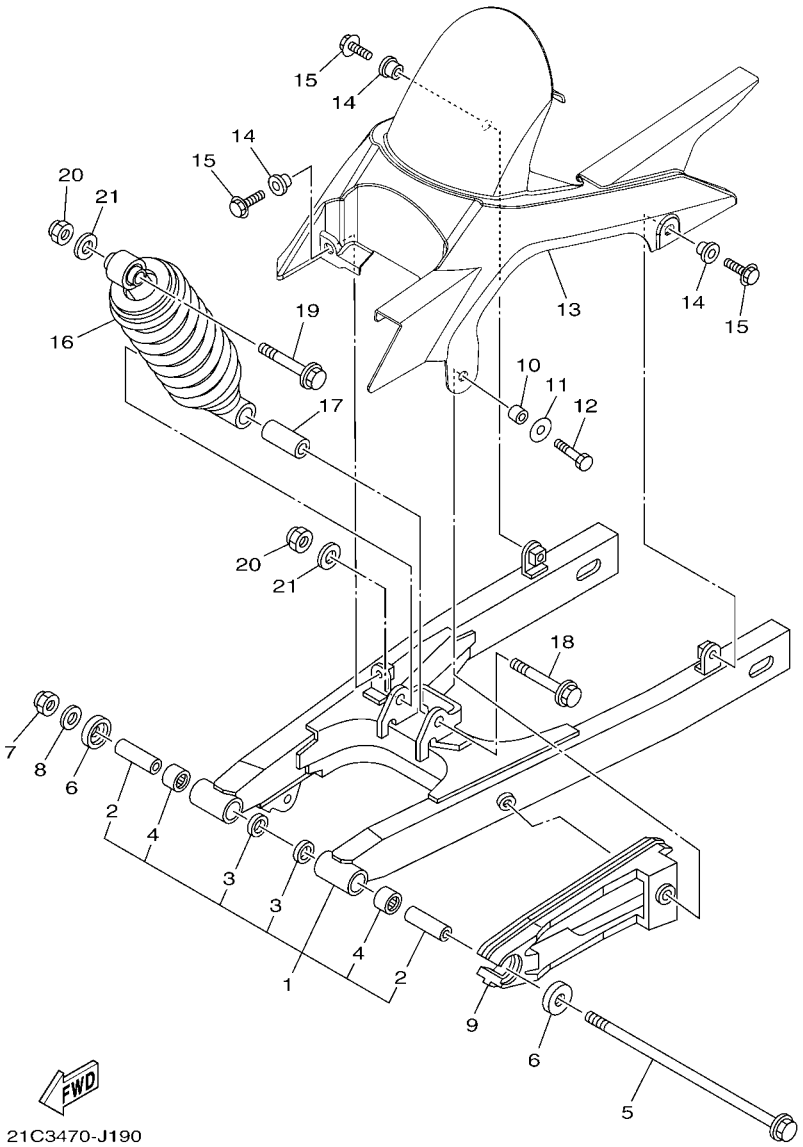

FIG. 20 BRAZO TRASERO & SUSPENSION REAR ARM & SUSPENSION

REF. Nº	CODIGO Nº PART NO.	DESCRIPCION DESCRIPTION	1ES2					OBSERVACIONES REMARKS
1	21C–WF211–00	BRAZO TRASERO COMPLETO REAR ARM COMP.	1					
2	21C–F2184–00	.BUJE .BUSH	2					
3	93109–18803	.SELLO ACEITE .OIL SEAL	2					
4	93317–318Y5	.COJINETE .BEARING	2					
5	21C–F2141–00	EJE DEL BARCULANTE SHAFT, PIVOT	1					
6	20P–F2129–00	TAPA DE EMPUJE 2 COVER, THRUST 2	2					
7	95614–12100	TUERCA AUTOBLOCANTE NUT, U	1					
8	90201–12030	ARANDELA PLANA WASHER, PLATE	1					
9	21C–F2151–00	SELLO DE GUARDA SEAL, GUARD	1					
10	90387–066J9	ESPACIADOR COLLAR	1					
11	90201–060A3	ARANDELA PLANA WASHER, PLATE	1					
12	97027–06025	PERNO BOLT, HEXAGON	1					
13	21C–F1650–00	GUARDABARRO TRANSERO COMP. REAR FENDER COMP.	1					
14	90387–068S1	ESPACIADOR COLLAR	3					
15	95807–06014	TORNILLO BOLT, FLANGE	3					
16	21C–F2210–00	AMORTIGUADOR TRASERO COMPLETO SHOCK ABSORBER ASSY, REAR	1					
17	90387–12845	ESPACIADOR COLLAR	1					
18	90105–12057	TORNILLO BOLT, FLANGE	1					
19	90105–12085	TORNILLO BOLT, FLANGE	1					
20	95612–12100	TUERCA U NUT, U	2					
21	90201–12030	ARANDELA PLANA WASHER, PLATE	2					

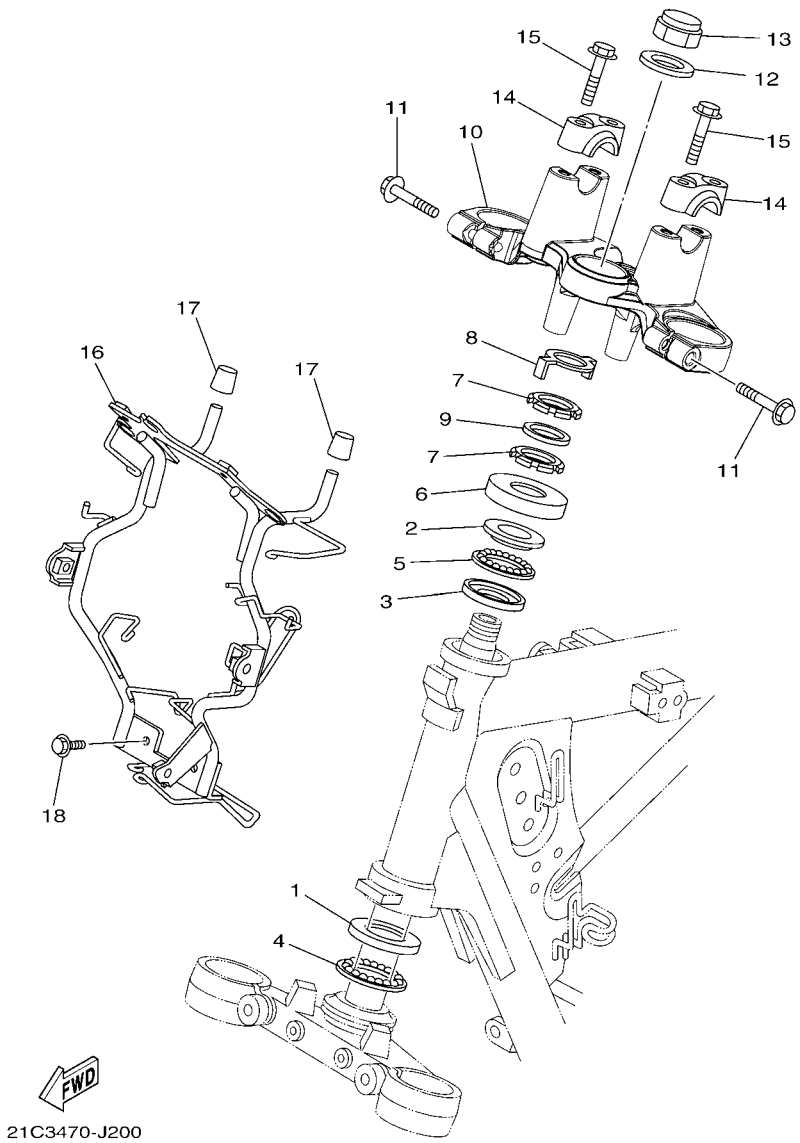

FIG. 21 DIRECCION STEERING

REF. Nº	CODIGO Nº PART NO.	DESCRIPCION DESCRIPTION	1ES2					OBSERVACIONES REMARKS
1	5KA–F3412–00	PISTA DE BOLAS 2 RACE, BALL 2	1					
2	5KA–F3413–00	BASE DE BOLA 3 RACE, BALL 3	1					
3	5KA–F3414–00	BASE DE BOLA 4 RACE, BALL 4	1					
4	4LS–F341E–10	RETEN DE COJINETE RETAINER, BALL BEARING	1					
5	4LS–F341E–00	RETEN DE COJINETE RETAINER, BALL BEARING	1					
6	5YY–F3416–00	CUBIERTA DE BASE DE BOLA 2 COVER, BALL RACE 2	1					
7	90179–25615	TUERCA NUT	2					
8	90214–25800	ARANDELA DE POSICION WASHER, CLAW	1					
9	90202–26142	ARANDELA DE PLANA WASHER, PLATE	1					
10	21C–F3435–00	PLATINA SUPERIOR CROWN, HANDLE	1					
11	95022–08040	PERNO, DE BRIDA BOLT, FLANGE	2					
12	90201–22018	ARANDELA PLANA WASHER, PLATE	1					
13	90176–22081	TUERCA CORONA NUT, CROWN	1					
14	21C–F3441–00	SOPORTE DE MANUBRIO HOLDER, HANDLE UPPER	2					
15	95024–08035	PERNO, BRIDA BOLT, FLG.(SMALL HEAD)	4					
16	21C–F3174–20	SOPORTE DEL FARO DELANTERO STAY, HEADLIGHT	1					
17	21C–F317J–00	AMORTIGUADOR 1 DAMPER 1	2					
18	95807–06014	TORNILLO BOLT, FLANGE	2					

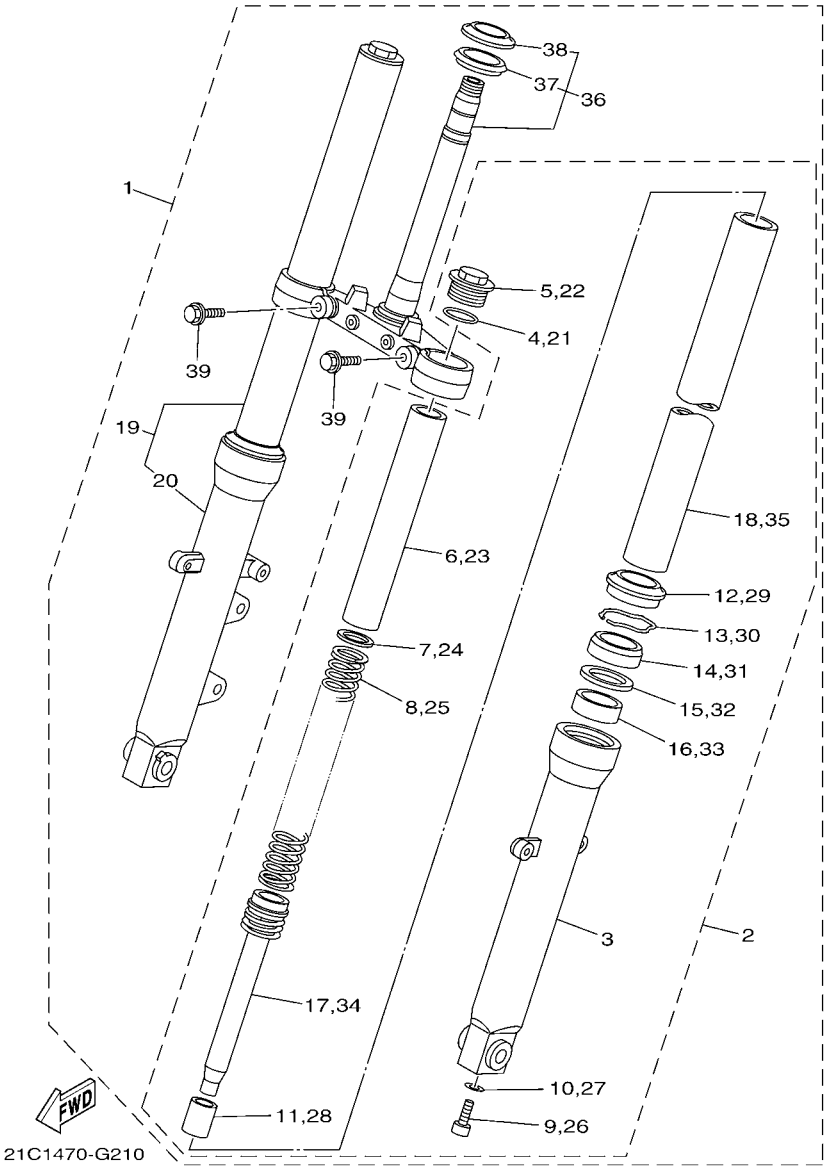

FIG. 22 HORQUILLA DELANTERA FRONT FORK

REF. Nº	CODIGO Nº PART NO.	DESCRIPCION DESCRIPTION	1ES2					OBSERVACIONES REMARKS
1	21C–F3100–01	HORQUILLA DELANTERA COMPLETA FRONT FORK ASSY	1					
2	21C–F3102–01	.HORQUILLA DELANTERA COMPL.(MI) .FRONT FORK ASSY (L.H)	1					
3	21C–F3126–01	..TUBO EXTERIOR (IZQUIERDO) ..TUBE, OUTER (LEFT)	1					
4	21C–F3114–00	..EMPAQUE ..GASKET	1					
5	21C–F3111–00	..PERNO DE TAPA ..BOLT, CAP	1					
6	21C–F3118–00	..SEPARADOR ..SPACER	1					
7	21C–F3149–00	..ARANDELA DE RESORTE SUPERIOR ..WASHER, SPRING UPPER	1					
8	21C–F3141–00	..RESORTE HORQUILLA DELANT. ..SPRING, FRONT FORK	1					
9	21C–F3181–00	..TORNILLO CABEZAHEXAGONAL ..BOLT, HEXAGON SOCKET HEAD	1					
10	21C–F3158–00	..EMPAQUE ..GASKET	1					
11	21C–F3173–00	..VASTAGO AHUSADO ..SPINDLE, TAPER	1					
12	4EB–23144–00	..GUARDAPOLVO ..SEAL, DUST	1					
13	21C–F3156–00	..ANILLO DE ENGANCHE ..RING, SNAP	1					
14	4EB–23145–01	..RETEN DE ACEITE ..OIL SEAL	1					
15	21C–F3146–00	..ARANDELA DE SELLO DE ACEITE ..WASHER, OIL SEAL	1					
16	4FM–23125–40	..METAL CORREDIZO 1 ..METAL, SLIDE 1	1					
17	21C–F3170–00	..CILINDRO COMPL DE HORQ DELANT ..CYLINDER COMP., FRONT FORK	1					
18	21C–F3110–00	..TUBO INTERIOR COMPLETO 1 ..INNER TUBE COMP.1	1					
19	21C–F3103–01	.HORQUILLA DELANTERA COMPL.(MD) .FRONT FORK ASSY (R.H)	1					
20	21C–F3136–01	..TUBO EXTERIOR (DERECHO) ..TUBE, OUTER (RIGHT)	1					
21	21C–F3114–00	..EMPAQUE ..GASKET	1					
22	21C–F3111–00	..PERNO DE TAPA ..BOLT, CAP	1					
23	21C–F3118–00	..SEPARADOR ..SPACER	1					
24	21C–F3149–00	..ARANDELA DE RESORTE SUPERIOR ..WASHER, SPRING UPPER	1					
25	21C–F3141–00	..RESORTE HORQUILLA DELANT. ..SPRING, FRONT FORK	1					
26	21C–F3181–00	..TORNILLO CABEZAHEXAGONAL ..BOLT, HEXAGON SOCKET HEAD	1					
27	21C–F3158–00	..EMPAQUE ..GASKET	1					

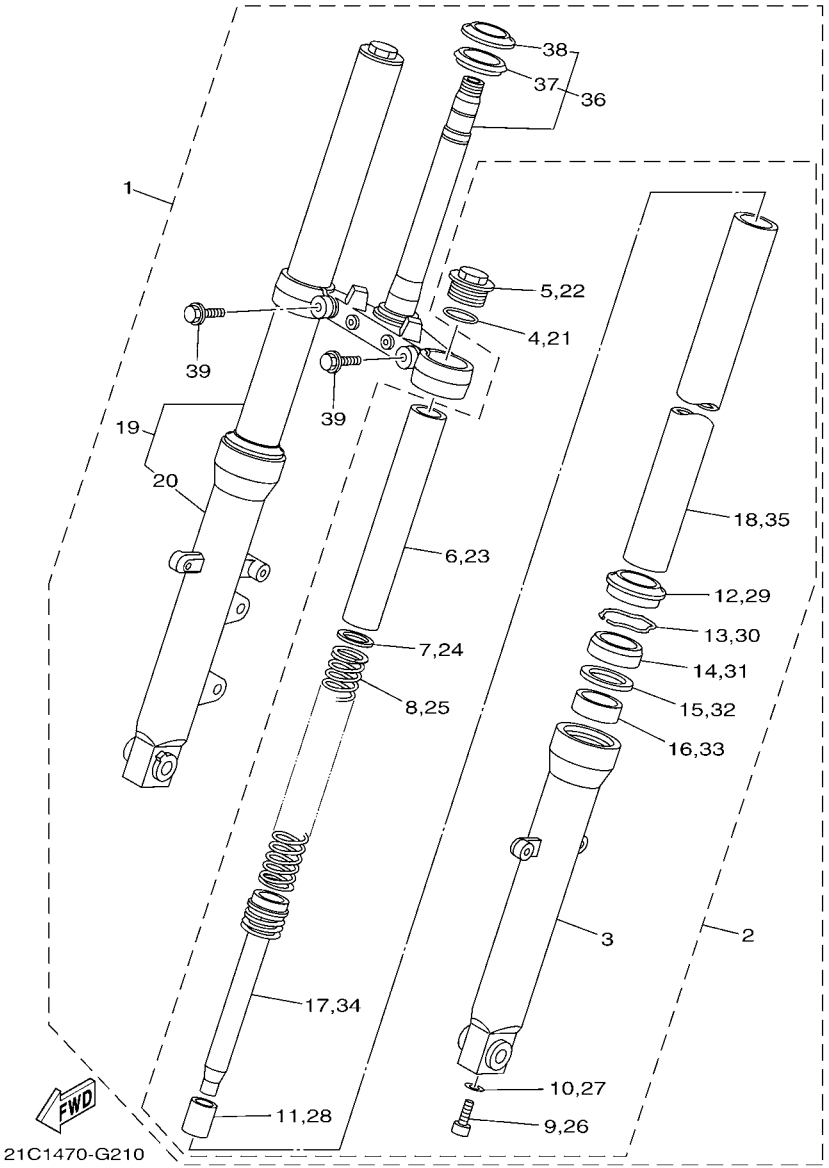

FIG. 22 HORQUILLA DELANTERA FRONT FORK

REF. Nº	CODIGO Nº PART NO.	DESCRIPCION DESCRIPTION	1ES2					OBSERVACIONES REMARKS
28	21C–F3173–00	..VASTAGO AHUSADO ..SPINDLE, TAPER	1					
29	4EB–23144–00	..GUARDAPOLVO ..SEAL, DUST	1					
30	21C–F3156–00	..ANILLO DE ENGANCHE ..RING, SNAP	1					
31	4EB–23145–01	..RETEN DE ACEITE ..OIL SEAL	1					
32	21C–F3146–00	..ARANDELA DE SELLO DE ACEITE ..WASHER, OIL SEAL	1					
33	4FM–23125–40	..METAL CORREDIZO 1 ..METAL, SLIDE 1	1					
34	21C–F3170–00	..CILINDRO COMPL DE HORQ DELANT ..CYLINDER COMP., FRONT FORK	1					
35	21C–F3110–00	..TUBO INTERIOR COMPLETO 1 ..INNER TUBE COMP.1	1					
36	21C–F3340–00	.PLATINA INFERIOR COMPLETA .UNDER BRACKET COMP.	1					
37	5YY–F3462–00	..SELLO PARA POLVO ..SEAL, DUST	1					
38	5KA–F3411–00	..PISTA DE BOLAS 1 ..RACE, BALL 1	1					
39	21C–F3346–00	.PERNO 1 .BOLT 1	2					

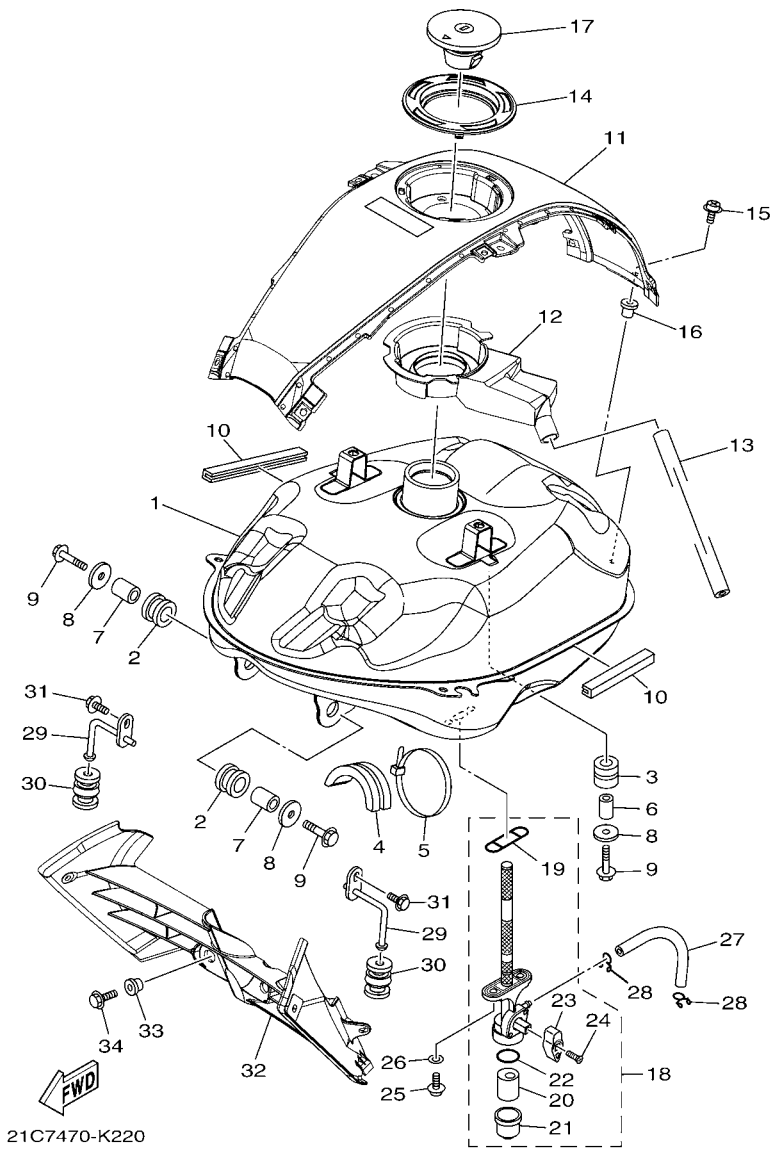

FIG. 23 DEPOSITO DE COMBUSTIBLE FUEL TANK

REF. Nº	CODIGO Nº PART NO.	DESCRIPCION DESCRIPTION	1ES2					OBSERVACIONES REMARKS
1	21C–F4110–00	DEPOSITO DE COMBUSTIBLE COMP. FUEL TANK COMP.	1					
2	21C–F4181–00	AMORTIGUADOR DE MONTAJE 1 DAMPER, LOCATING 1	2					
3	21C–F4182–00	AMORTIGUADOR DE MONTAJE 2 DAMPER, LOCATING 2	2					
4	21C–F4183–00	AMORTIGUADOR DE MONTAJE 3 DAMPER, LOCATING 3	1					
5	90464–80802	BRIDA CLAMP	1					
6	90387–06554	ESPACIADOR COLLAR	2					
7	90387–107H6	ESPACIADOR COLLAR	2					
8	90201–060A3	ARANDELA PLANA WASHER, PLATE	4					
9	95822–06030	TORNILLO DE REBORDE BOLT, FLANGE	4					
10	21C–F4188–10	MOLDURA DEPOSITO COMBUST. MOLD, FUEL TANK	2					
11	21C–XF17D–80–33	CUBIERTA, TECHO COVER, TOP	1					UR PARA YB UR FOR YB
	21C–XF17D–90–P1	CUBIERTA, TECHO COVER, TOP	1					UR PARA DRMK UR FOR DRMK
12	21C–F414A–00	CUBIERTA DE LLENADOR COVER, FILLER	1					
13	21C–F4318–00	TUBO DE REBOSAMIENTO PIPE, OVERFLOW	1					
14	21C–F4614–00–P0	PLACA DE TAPA PLATE, CAP	1					S8 PARA YB,DRMK S8 FOR YB,DRMK
15	90159–05065	TORNILLO CON VALONA SCREW, WITH WASHER	3					
16	90179–05523	TUERCA NUT	3					
17	21C–WF461–10	TAPA DE DEPOSITO COMPLETO CAP ASSY WITH LOCK	1					
18	21C–F4500–10	GRIFO DE COMBUSTIBLE 1 FUEL COCK ASSY 1	1					
19	54B–F4512–10	.EMPAQUE .GASKET	1					
20	54B–F4514–10	.RED DE FILTRO 1 .NET, FILTER 1	1					
21	54B–F4521–10	.COPA DE FILTRO .CUP, FILTER	1					
22	54B–F4564–10	.EMPAQUE .GASKET	1					
23	54B–F4598–10	.PERILLA .KNOB	1					
24	54B–F4535–10	.TORNILLO ACCESORIO DE PALANCA .SCREW, LEVER FITTING	1					
25	90149–06108	TORNILLO DE REGLAJE SCREW	2					
26	90202–05807	ARANDELA DE PLANA WASHER, PLATE	2					

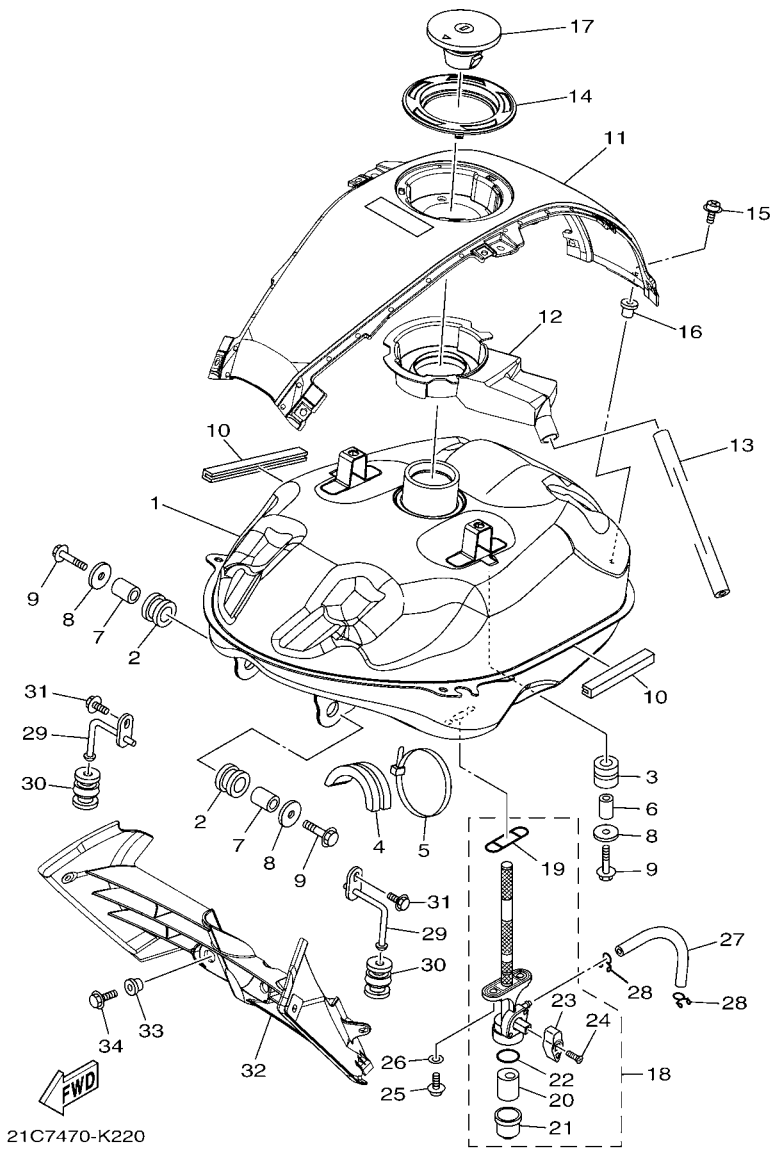

FIG. 23 DEPOSITO DE COMBUSTIBLE FUEL TANK

REF. Nº	CODIGO Nº PART NO.	DESCRIPCION DESCRIPTION	1ES2					OBSERVACIONES REMARKS
27	21C–F4311–00	TUBO DE COMBUSTIBLE 1 PIPE, FUEL 1	1					
28	90467–100A3	PRESILLA CLIP	2					
29	21C–F411G–10	CUBIERTA COMPL. 1, GUIA DE AIR HOOK, SIDE COVER 1	2					
30	21C–F411J–10	AMORTIGUADOR, DE CUBIERTA LAT DAMPER, SIDE COVER	2					
31	95802–06012	TORNILLO DE REBORDE BOLT, FLANGE	2					
32	21C–F4124–10	ARO RESF DE AIRE AIR SHROUD	1					
33	90387–06048	ESPACIADOR COLLAR	2					
34	95827–06012	TORNILLO BOLT, FLANGE	2					

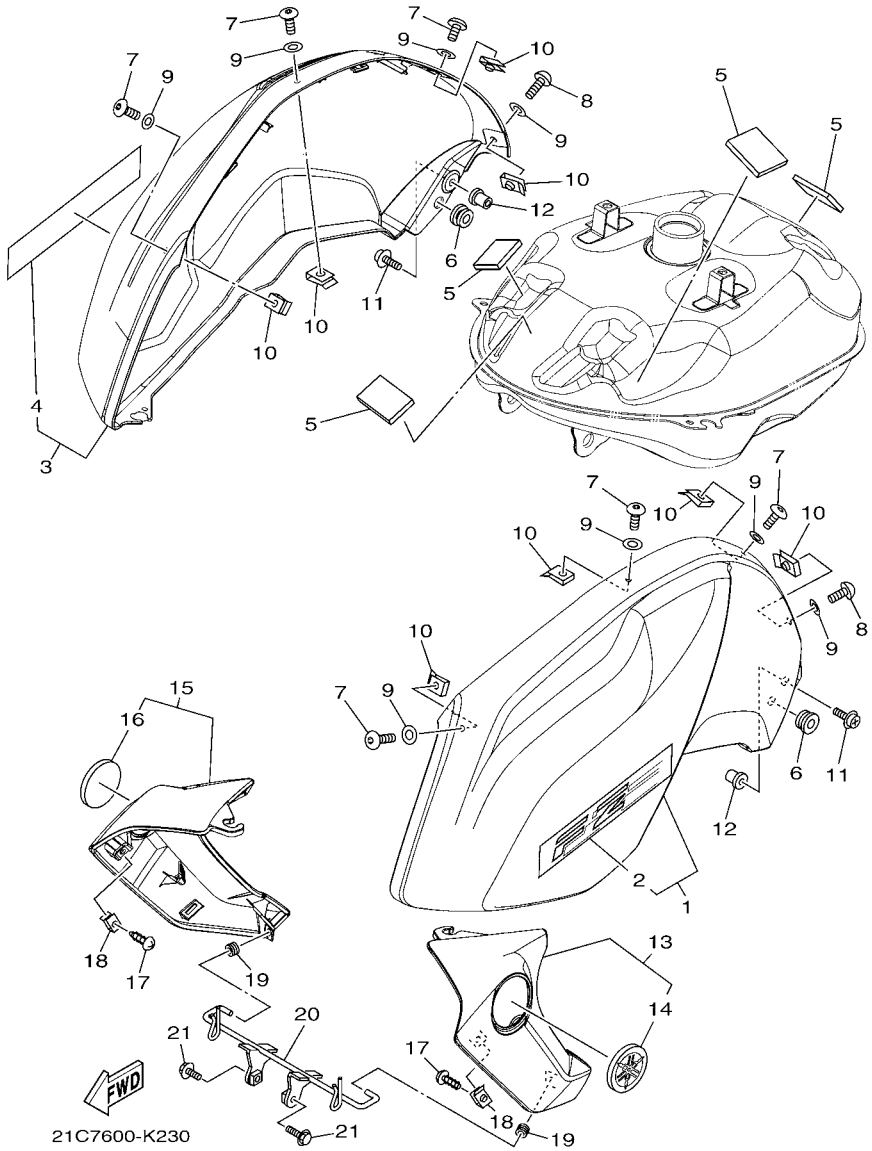

FIG. 24 DEPOSITO DE COMBUSTIBLE 2 FUEL TANK 2

REF. Nº	CODIGO Nº PART NO.	DESCRIPCION DESCRIPTION	1ES2					OBSERVACIONES REMARKS
1	21C–XF412–C0–33	CUBIERTA LATERAL 1 TANK SIDE COVER 1	1					UR PARA YB UR FOR YB
	21C–XF412–D0–P0	CUBIERTA LATERAL 1 TANK SIDE COVER 1	1					UR PARA DRMK UR FOR DRMK
2	21C–F4245–30	.CALCOMANIA DEPOSITO COMBUST.2 .GRAPHIC, FUEL TANK 2	1					UR PARA YB UR FOR YB
	21C–F4245–40	.CALCOMANIA DEPOSITO COMBUST.2 .GRAPHIC, FUEL TANK 2	1					UR PARA DRMK UR FOR DRMK
3	21C–XF413–C0–33	CUBIERTA LATERAL 2 TANK SIDE COVER 2	1					UR PARA YB UR FOR YB
	21C–XF413–D0–P0	CUBIERTA LATERAL 2 TANK SIDE COVER 2	1					UR PARA DRMK UR FOR DRMK
4	21C–F4246–30	.CALCOMANIA 3 .GRAPHIC 3	1					UR PARA YB UR FOR YB
	21C–F4246–40	.CALCOMANIA 3 .GRAPHIC 3	1					UR PARA DRMK UR FOR DRMK
5	21C–F414H–10	EQUILIBRIO, CUBIERTA DAMPER, PLATE 1	4					
6	90480–13398	TAPON GROMMET	2					
7	90111–05003	TORNILLO BOLT,HEX. SOCKET BUTTON	6					
8	90111–05002	TORNILLO BOLT,HEX. SOCKET BUTTON	2					
9	90202–05180	ARANDELA DE PLANA WASHER, PLATE	8					
10	90183–05061	TUERCA DE RESORTE NUT, SPRING	8					
11	90159–05065	TORNILLO CON VALONA SCREW, WITH WASHER	2					
12	90179–05523	TUERCA NUT	2					
13	21C–XF137–80–33	GUIDE A AIR COMPLET 1 SCOOP & GUIDE AIR 1	1					UR PARA YB UR FOR YB
	21C–XF137–90–P0	GUIDE A AIR COMPLET 1 SCOOP & GUIDE AIR 1	1					UR PARA DRMK UR FOR DRMK
14	5TS–F413B–00	.EMBLEMA .EMBLEM	1					
15	21C–XF13A–80–33	GUIDE A AIR COMPLET 2 SCOOP & GUIDE AIR 2	1					UR PARA YB UR FOR YB
	21C–XF13A–90–P0	GUIDE A AIR COMPLET 2 SCOOP & GUIDE AIR 2	1					UR PARA DRMK UR FOR DRMK
16	5TS–F413B–00	.EMBLEMA .EMBLEM	1					
17	97702–50012	TORNILLO ROSCA HEMBRA SCREW, TAPPING	4					
18	90183–05818	TUERCA DE RESORTE NUT, SPRING	4					
19	90480–12816	TAPON GROMMET	2					
20	21C–F4216–10	SOPORTE STAY	1					
21	95802–06012	TORNILLO DE REBORDE BOLT, FLANGE	2					

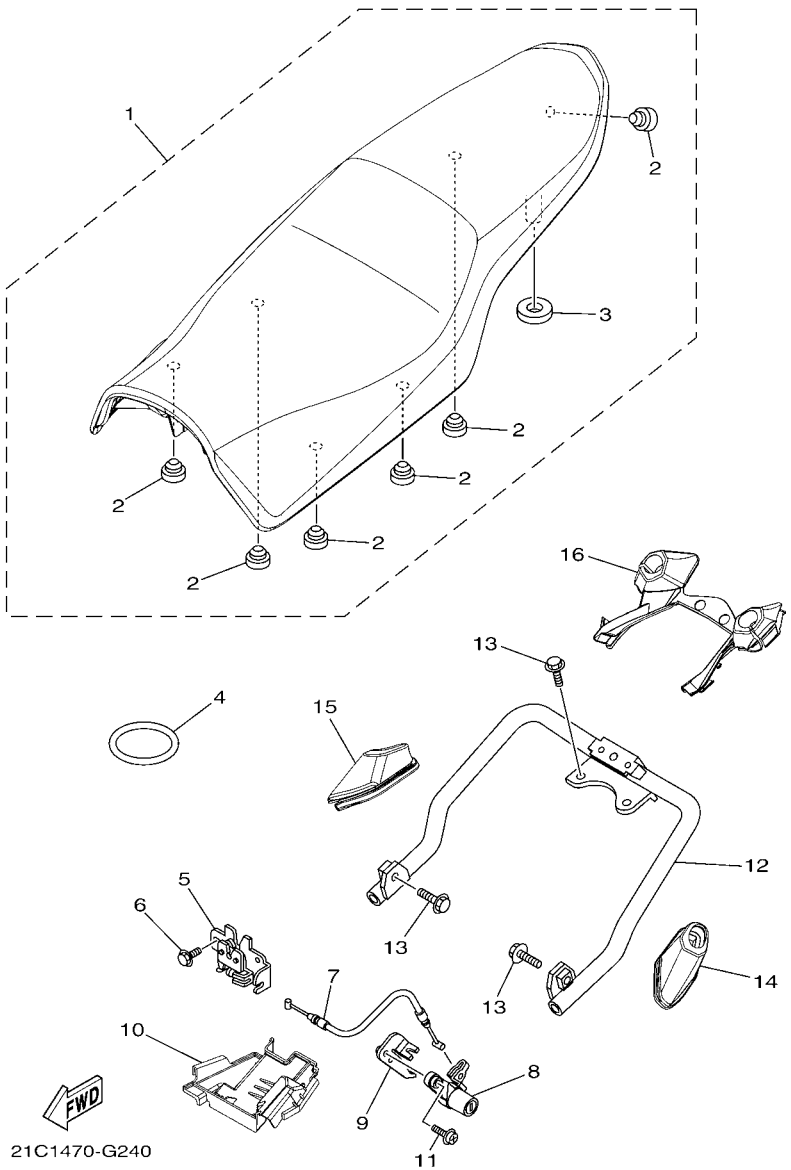

FIG. 25 ASIENTO SEAT

REF. Nº	CODIGO Nº PART NO.	DESCRIPCION DESCRIPTION	1ES2					OBSERVACIONES REMARKS
1	45S–F4730–01	SILLIN DOBLE COMPLETO DOUBLE SEAT ASSY	1					
2	20P–F4741–00	.COJIN DE ASIENTO .PAD, SEAT	6					
3	21C–F4763–00	.COJIN DE ASIENTO 2 .PAD, SEAT 2	1					
4	20P–H2131–00	TIRANTE DE BATERIA BAND, BATTERY	1					
5	21C–F4780–01	CERRADURA SILLIN COMPLETO SEAT LOCK ASSY	1					
6	95022–06010	PERNO, DE BRIDA BOLT, FLANGE	2					
7	21C–F478E–01	CABLE CABLE, SEAT LOCK	1					
8	21C–WF479–00	CUBIERTA, DE COLA ROTOR SUB ASSY WITH KEY	1					
9	21C–F117K–00	SOPORTE DE CERRADURA STAY, LOCK	1					
10	21C–F472T–10	CUBIERTA, ASIENTO DE CIERRE COVER, SEAT LOCK	1					
11	90159–06054	TORNILLO CON VALONA SCREW, WITH WASHER	1					
12	21C–F4773–31	MANIJA DE ASIENTO HANDLE, SEAT	1					
13	95022–08016	PERNO, DE BRIDA BOLT, FLANGE	4					
14	21C–F479T–00	FUNDA 1, ASIENTO DE MANUBRIO BOOT, HANDLE SEAT 1	1					
15	21C–F479U–00	FUNDA 2, ASIENTO DE MANUBRIO BOOT, HANDLE SEAT 2	1					
16	21C–F479V–00	FUNDA 3, ASIENTO DE MANUBRIO BOOT, HANDLE SEAT 3	1					

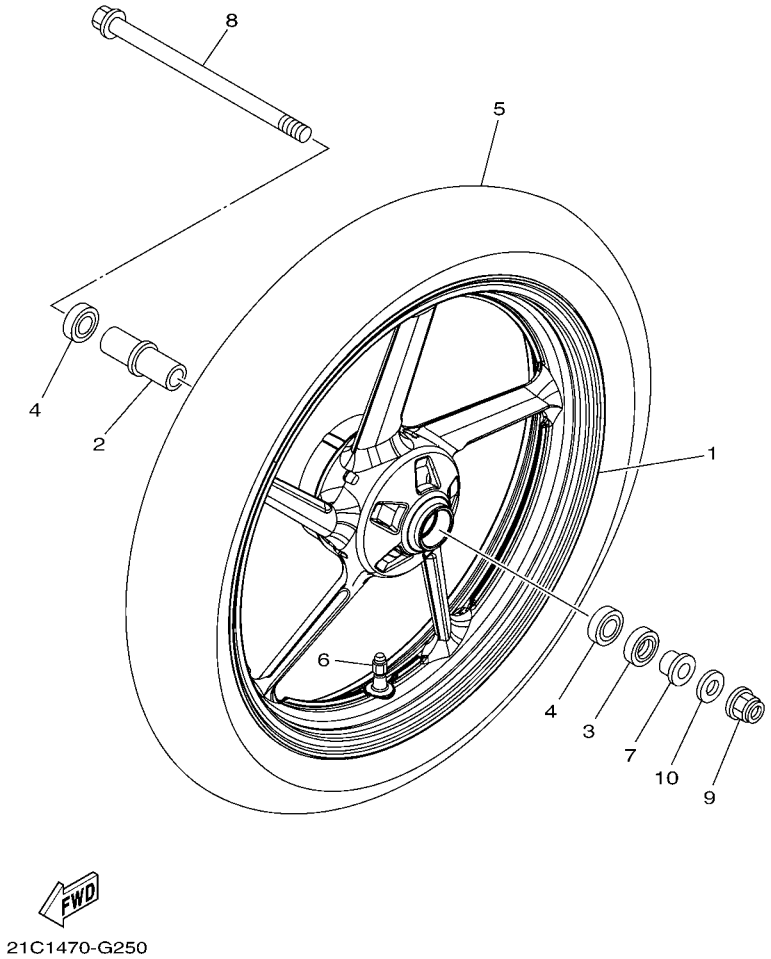

FIG. 26 RUEDA DELANTERA FRONT WHEEL

REF. Nº	CODIGO Nº PART NO.	DESCRIPCION DESCRIPTION	1ES2					OBSERVACIONES REMARKS
1	21C–F5168–10–33	RUEDA FUNDIDA DELANTERA CAST WHEEL, FRONT	1					YB PARA YB,DRMK YB FOR YB,DRMK
2	21C–F510C–10	COLLAR COLLAR ASSY.	1					
3	93106–22808	SELLO ACEITE OIL SEAL	1					
4	93306–252XG	COJINETE BEARING	2					UR UR
	93306–252YH	COJINETE BEARING	2					UR UR
5	94110–17804	NEUMATICO(100/80-17 MC 52P) TIRE (100/80-17 MC 52P)	1					MRF MRF
6	93900–00824	VALVULA VALVE, RIM TR413	1					
7	21C–F5183–01	COLLAR DE RUEDA COLLAR, WHEEL	1					
8	21C–F5181–00	EJE DE LA RUEDA AXLE, WHEEL	1					
9	95602–14200	TUERCA DE AUTO-CIERRE NUT, SELF-LOCKING	1					
10	92902–14200	ARANDELA WASHER	1					

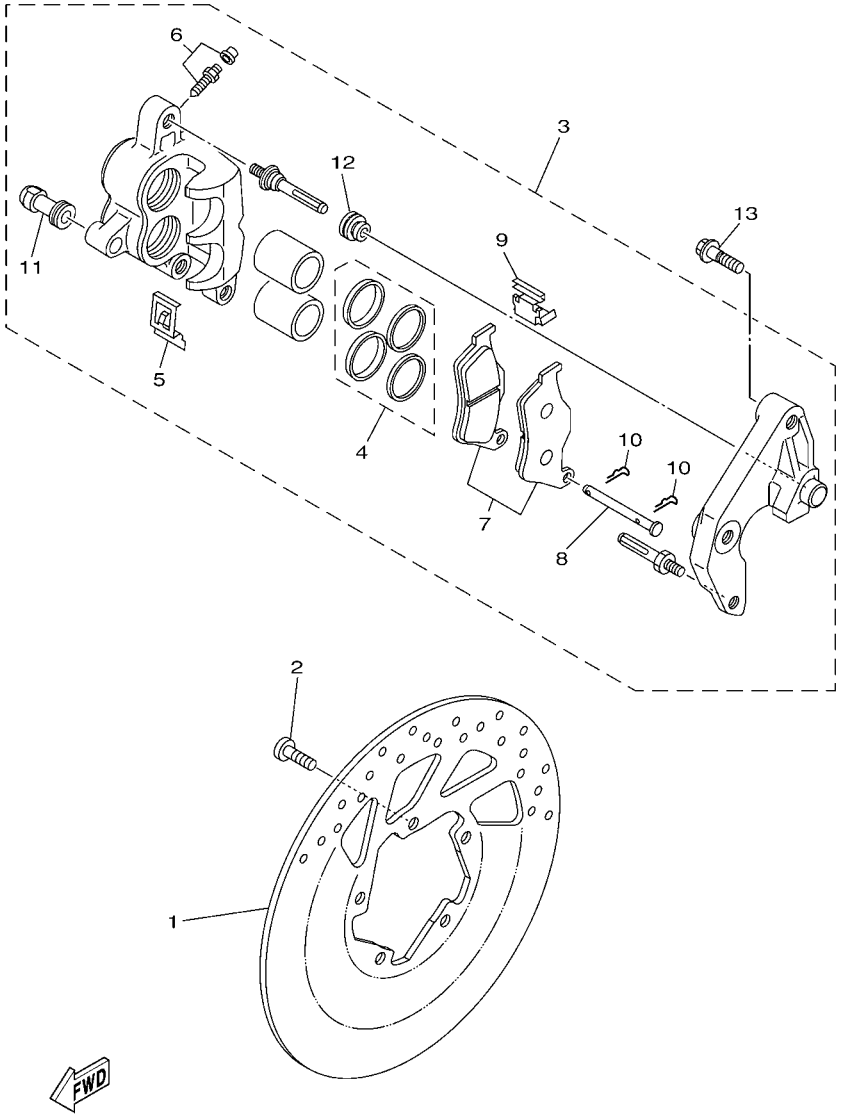

FIG. 27 CALIBRE FRENO DELANTERA FRONT BRAKE CALIPER

REF. Nº	CODIGO Nº PART NO.	DESCRIPCION DESCRIPTION	1ES2					OBSERVACIONES REMARKS
1	21C–F582U–00	DISCO DE FRENO (DERECHO) DISK, BRAKE (RIGHT)	1					
2	90111–08847	TORNILLO BOLT,HEX. SOCKET BUTTON	5					
3	5YY–F580U–20	CALIBRE COMPLETO (DERECHO) CALIPER ASSY (RIGHT)	1					
4	5US–W0047–00	.JUEGO DE RETENES DE PINZA .CALIPER SEAL KIT	1					
5	5US–F5977–00	.RESORTE DE RETORNO .SPRING, RETURN	1					
6	5US–W0048–00	.CJTO TORNILLO DE PURGA .BLEED SCREW KIT	1					
7	5US–W0045–00	.JUEGO DE COJIN DE FRENO .BRAKE PAD KIT	1					
8	5US–F5744–00	.PASADOR 2 .PIN 2	1					
9	5US–F5827–00	.CUNA DE CALIBRE .SHIM, CALIPER	1					
10	5US–W0016–00	.PRESILLA .CLIP	1					
11	5US–W0068–00	.AISLANTE .INSULATOR	1					
12	5US–W0053–00	.DUST COVER .DUST COVER	1					
13	90105–10319	TORNILLO BOLT, FLANGE	2					

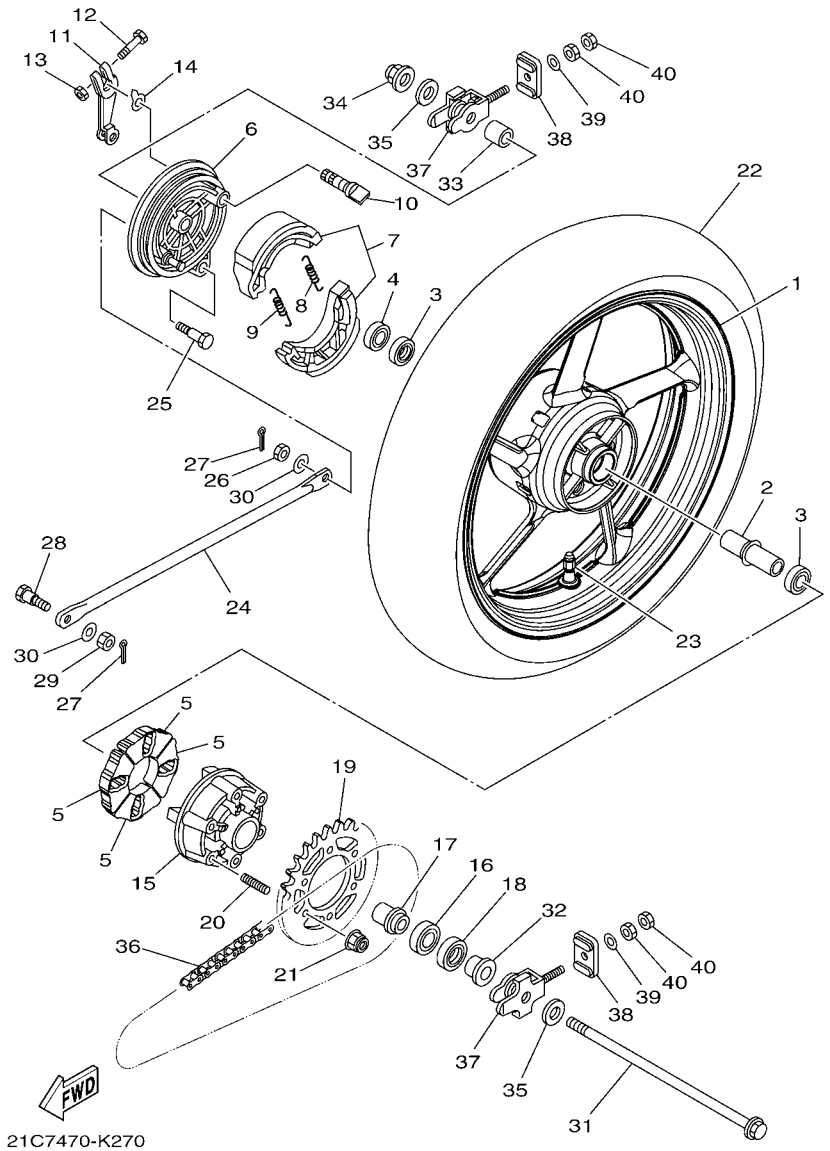

FIG. 28 RUEDA TRASERA REAR WHEEL

REF. Nº	CODIGO Nº PART NO.	DESCRIPCION DESCRIPTION	1ES2					OBSERVACIONES REMARKS
1	21C–F5338–10–33	RUEDA FUNDIDA TRASERA CAST WHEEL, REAR	1					YB PARA YB,DRMK YB FOR YB,DRMK
2	21C–F530S–10	ASAMBLEA DE COLLAR COLLAR ASSY	1					
3	93306–252XG	COJINETE BEARING	2					UR UR
	93306–252YH	COJINETE BEARING	2					UR UR
4	93106–22808	SELLO ACEITE OIL SEAL	1					
5	21C–F5364–00	AMORTIGUADOR DAMPER	4					
6	5US–F5321–10	PLACA DE ZAPATA DE FRENO PLATE, BRAKE SHOE	1					
7	5YY–WF533–00	JUEGO DE ZAPATA DE FRENO BRAKE SHOE KIT	1					
8	90506–12001	RESORTE DE TENSION SPRING, TENSION	1					
9	90506–15001	RESORTE DE TENSION SPRING, TENSION	1					
10	5YY–F5351–00	ARBOL DE LEVAS CAMSHAFT	1					
11	21C–F5355–01	PALANCA DE ARBOL DE LEVAS LEVER, CAMSHAFT	1					
12	90101–06046	TORNILLO BOLT	1					
13	95307–06600	TUERCA NUT	1					
14	36L–F533A–00	PLACA INDICADOR PLATE, INDICATOR	1					
15	20P–F5366–00–33	EMBRAGUE DE MASA CLUTCH, HUB	1					YB PARA YB,DRMK YB FOR YB,DRMK
16	93306–054YA	COJINETE BEARING	1					UR UR
	93306–054Y5	COJINETE BEARING	1					UR UR
17	20P–F5377–00	COLLAR DE RUEDA COLLAR, WHEEL	1					
18	93106–26801	SELLO ACEITE OIL SEAL	1					
19	21C–F5440–00	CORONA (40T) SPROCKET, DRIVEN (40T)	1					
20	90116–08834	ESPARRAGO BOLT, STUD	6					
21	95602–08200	TUERCA DE AUTO-CIERRE NUT, SELF-LOCKING	6					
22	94114–17800	NEUMATICO(140/60-17 MC 63P) TIRE (140/60-17 MC 63P)	1					MRF MRF
23	93900–00824	VALVULA VALVE, RIM TR413	1					
24	21C–F5371–00	BARRA TENSORA BAR, TENSION	1					
25	90109–08063	PERNO BOLT	1					

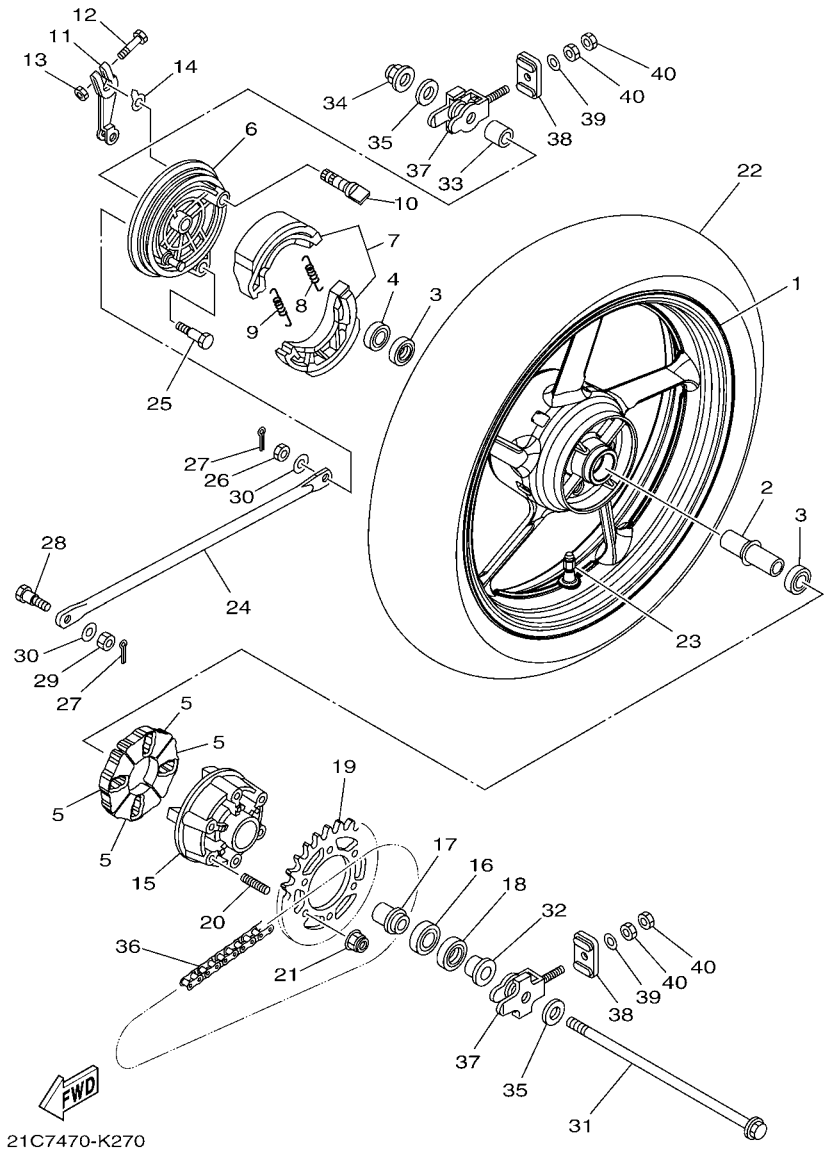

FIG. 28 RUEDA TRASERA REAR WHEEL

REF. Nº	CODIGO Nº PART NO.	DESCRIPCION DESCRIPTION	1ES2					OBSERVACIONES REMARKS
26	95302–08700	TUERCA NUT	1					
27	91401–20012	CHAVETA PIN, COTTER	2					
28	90109–08223	PERNO BOLT	1					
29	95302–08600	TUERCA NUT	1					
30	92902–08200	ARANDELA WASHER	2					
31	21C–F5381–00	EJE DE RUEDA AXLE, WHEEL	1					
32	21C–F5377–01	COLLAR DE RUEDA COLLAR, WHEEL	1					
33	21C–F5383–10	COLLAR DE RUEDA COLLAR, WHEEL	1					
34	95602–14200	TUERCA DE AUTO-CIERRE NUT, SELF-LOCKING	1					
35	90201–15026	ARANDELA PLANA WASHER, PLATE	2					
36	94568–B5128	CADENA (R428HBSX-128-2) CHAIN (R428HBSX-128-2)	1					
37	21C–F5388–11	TIRADOR DE CADENA 1 PULLER, CHAIN 1	2					
38	21C–F2174–00	EXTREMO 1 END 1	2					
39	92902–08600	ARANDELA WASHER, PLATE	2					
40	95302–08600	TUERCA NUT	4					

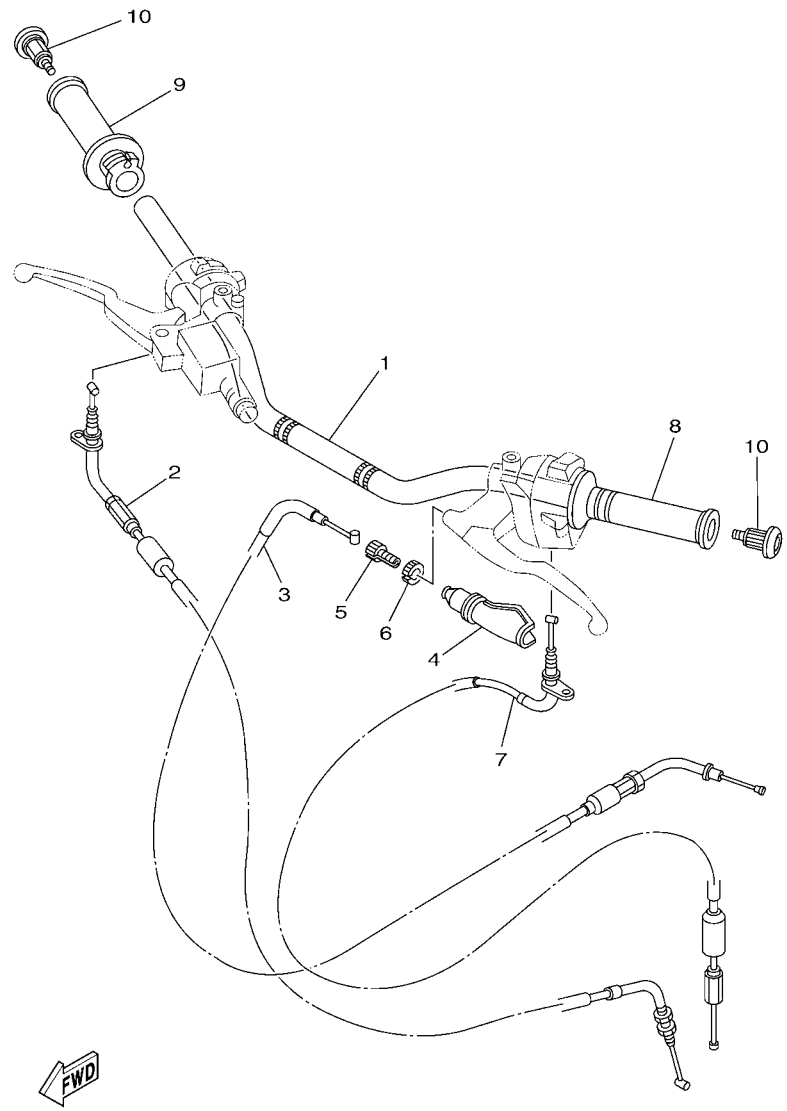

FIG. 29 MANILLAR & CABLE — STEERING HANDLE & CABLE

REF. Nº	CODIGO Nº PART NO.	DESCRIPCION DESCRIPTION	1ES2					OBSERVACIONES REMARKS
1	21C–F6111–01	MANUBRIO HANDLEBAR	1					
2	21C–F6311–10	CABLE DE ACELERADOR 1 CABLE, THROTTLE 1	1					
3	21C–F6335–00	CABLE DE EMBRAGUE CABLE, CLUTCH	1					
4	4TL–F6372–00	CUBIERTA DE PALANCA DE MANUB 1 COVER, HANDLE LEVER 1	1					
5	90123–08046	PERNO BOLT	1					
6	90179–08148	TUERCA NUT	1					
7	21C–F6331–01	CABLE DE ARRANQUE CABLE, STARTER 1	1					
8	21C–F6241–00	EMPUNADURA GRIP	1					
9	21C–F6240–00	EMPUNADURA COMPLETA GRIP ASSY	1					
10	21C–F620B–20	EXTREMO DE EMPUNADURA END GRIP ASSY	2					

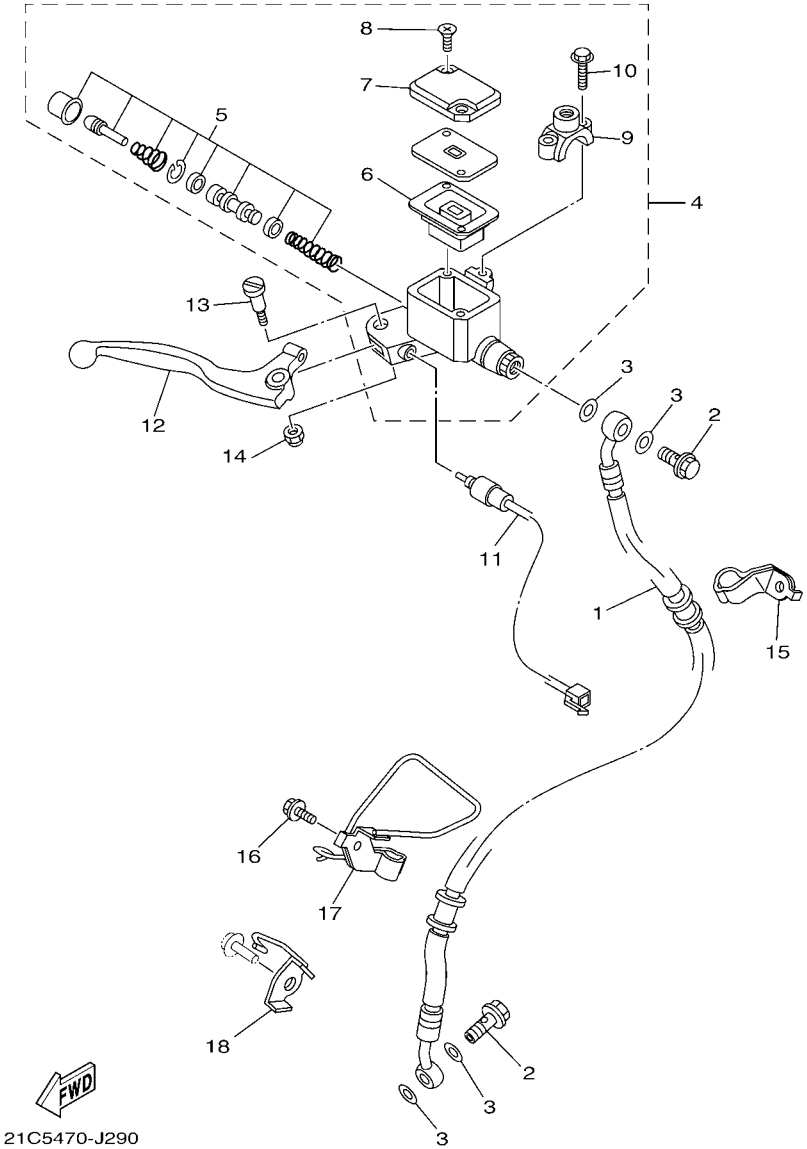

FIG. 30 CILINDRO MAESTRO DELANTERO FRONT MASTER CYLINDER

REF. Nº	CODIGO Nº PART NO.	DESCRIPCION DESCRIPTION	1ES2					OBSERVACIONES REMARKS
1	21C–F5872–00	MANGUERA DE FRENO 1 HOSE, BRAKE 1	1					
2	90401–10818	PERNO DE UNION BOLT, UNION	2					
3	90201–10815	ARANDELA PLANA WASHER, PLATE	4					
4	21C–F583T–00	CILINDRO MAESTRO COMPLETO MASTER CYLINDER ASSY	1					
5	5US–W0041–00	.JUEGO DE CILINDRO MAESTRO .CYLINDER KIT, MASTER	1					
6	5US–25854–00	.EMPAQUE,DIAFRAGMA .DIAPHRAGM, RESERVOIR	1					
7	5US–25852–00	.TAPA DE TANQUE DE RESERVA .CAP, RESERVOIR	1					
8	98706–04012	.TORNILLO DE CABEZA PLANA .SCREW, FLAT HEAD	2					
9	5YY–F5867–00	.SOPORTE DE CILINDRO MAESTRO .BRACKET, MASTER CYLINDER	1					
10	90105–06859	.TORNILLO .BOLT, FLANGE	2					
11	21C–H3980–00	INTERRUP. DE PARADA DELANTERO FRONT STOP SWITCH ASSY	1					
12	5YY–H3922–01	PALANCA 2 LEVER 2	1					
13	90109–06859	PERNO BOLT	1					
14	90185–06802	TUERCA AUTOBLOCANTE NUT, SELF-LOCKING	1					
15	21C–F5875–00	SOPORTE DE MANGUERA FRENO 1 HOLDER, BRAKE HOSE 1	1					
16	95807–06012	TORNILLO BOLT, FLANGE	1					
17	21C–F5876–00	SOPORTE DE MANGUERA FRENO 2 HOLDER, BRAKE HOSE 2	1					
18	21C–F3317–00	SOSTEN DE CABLE HOLDER, CABLE	1					

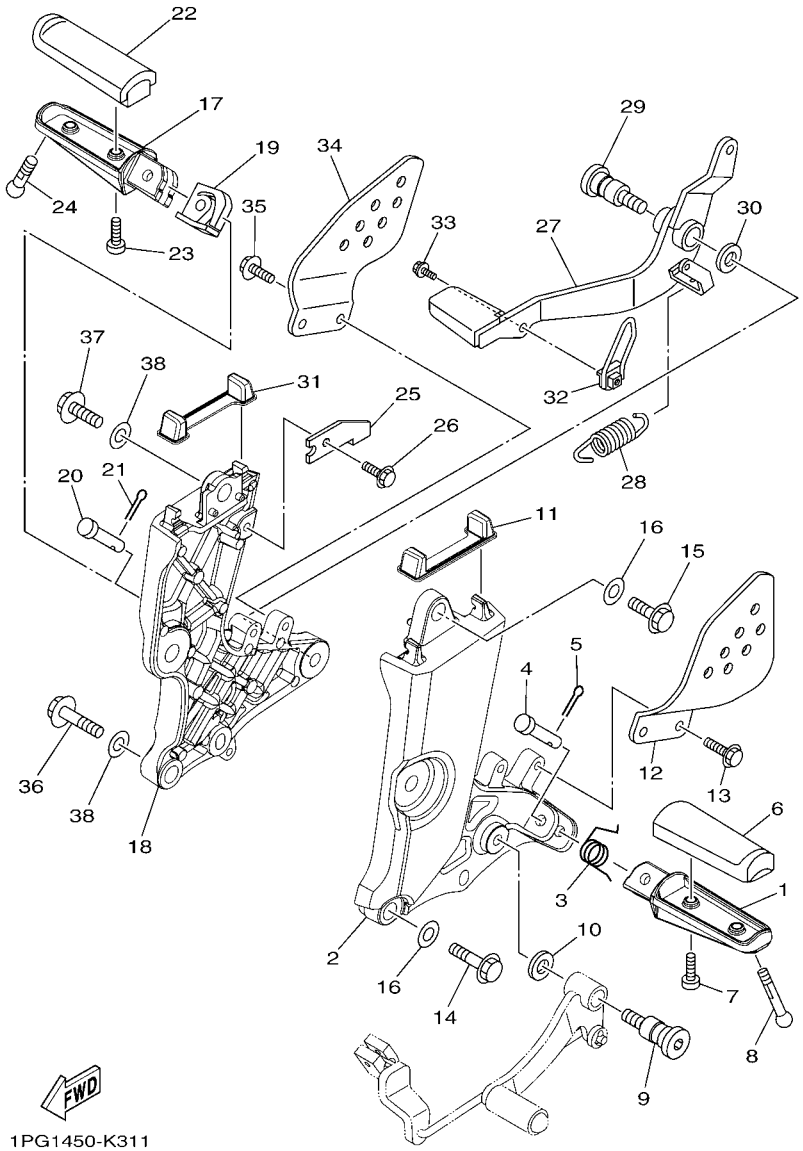

FIG. 31 SOPORTE & APOYAPIE STAND & FOOTREST

REF. Nº	CODIGO Nº PART NO.	DESCRIPCION DESCRIPTION	1ES2					OBSERVACIONES REMARKS
1	35B–F7451–00	APOYAPIE FOOTREST	1					
2	21C–F7452–00–P2	SOPORTE, DE APOYAPIE 1 BRACKET, FOOTREST 1	1					DBNM8 (YB,DRMK) DBNM8 (YB,DRMK)
3	90508–183B9	RESORTE DE TORSION SPRING, TORSION	1					
4	91701–08040	PASADOR DE ABRAZADERA PIN	1					
5	91401–25015	CHAVETA PIN, COTTER	1					
6	21C–F7413–00	CUBIERTA DE APOYAPIE COVER, FOOTREST	1					
7	98502–05014	TORNILLO SCREW, PAN HEAD	2					
8	90109–08202	PERNO BOLT	1					
9	21C–F7261–00	EJE SHAFT	1					
10	90201–10841	ARANDELA PLANA WASHER, PLATE	1					
11	21C–F7414–00	AMORTIGUADOR DE APOYAPIE DAMPER, FOOTREST	1					
12	21C–F7445–01	PLACE 1 PLATE 1	1					
13	95812–06014	TORNILLO DE REBORDE BOLT, FLANGE	2					
14	95812–08035	TORNILLO DE REBORDE BOLT, FLANGE	2					
15	95812–08025	TORNILLO DE REBORDE BOLT, FLANGE	1					
16	90201–08866	ARANDELA PLANA WASHER, PLATE	3					
17	35B–F7461–00	APOYAPIE FOOTREST	1					
18	21C–F7462–00–P2	SOPORTE, DE APOYAPIE 2 BRACKET, FOOTREST 2	1					DBNM8 (YB,DRMK) DBNM8 (YB,DRMK)
19	21C–F7426–00	RESORTE DE RETORNO SPRING, RETURN	1					
20	91701–08040	PASADOR DE ABRAZADERA PIN	1					
21	91401–25015	CHAVETA PIN, COTTER	1					
22	21C–F7413–00	CUBIERTA DE APOYAPIE COVER, FOOTREST	1					
23	98502–05014	TORNILLO SCREW, PAN HEAD	2					
24	90109–08202	PERNO BOLT	1					
25	21C–F144G–00	SOPORTE DE INTERRUPTOR STAY, STOP SWITCH	1					
26	95802–06010	TORNILLO DE REBORDE BOLT, FLANGE	1					
27	21C–F7211–10	PEDAL DE FRENO PEDAL, BRAKE	1					

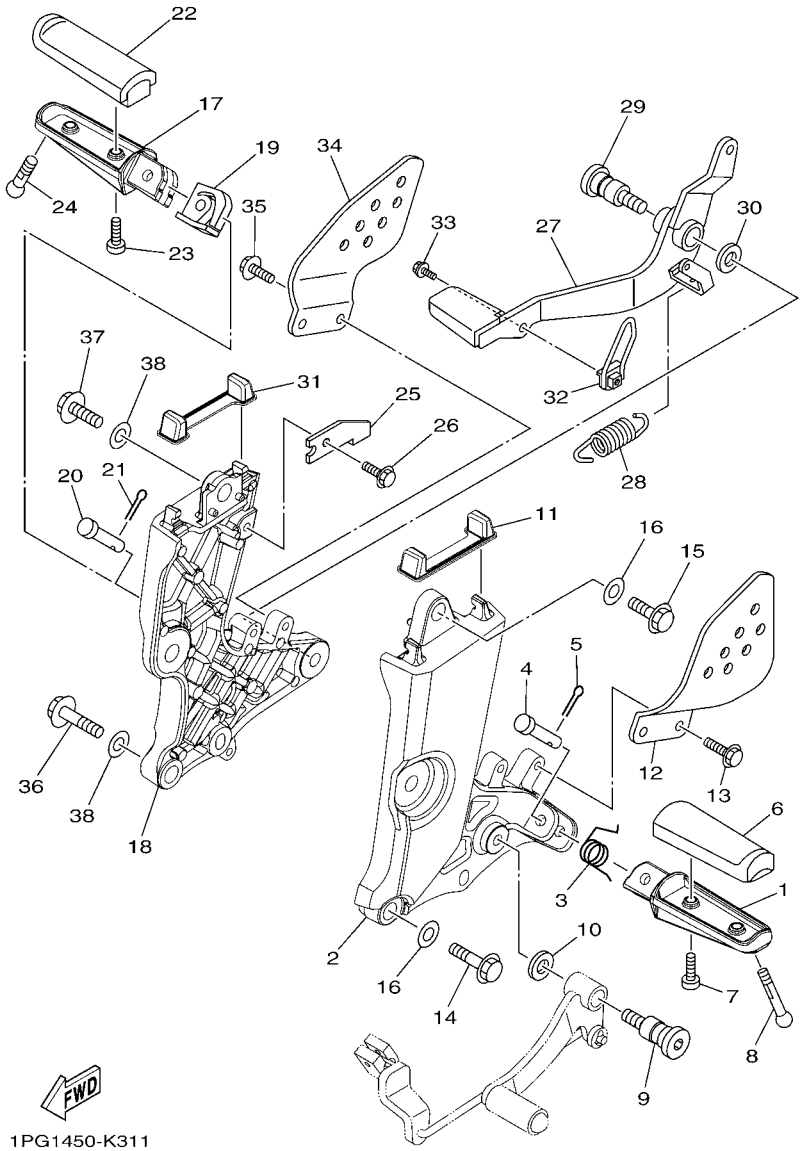

FIG. 31 SOPORTE & APOYAPIE STAND & FOOTREST

REF. Nº	CODIGO Nº PART NO.	DESCRIPCION DESCRIPTION	1ES2					OBSERVACIONES REMARKS
28	90506–26807	RESORTE DE TENSION SPRING, TENSION	1					
29	21C–F7261–00	EJE SHAFT	1					
30	90201–10841	ARANDELA PLANA WASHER, PLATE	1					
31	21C–F7414–00	AMORTIGUADOR DE APOYAPIE DAMPER, FOOTREST	1					
32	21C–F721A–00	GUIA DE PLACA GUIDE, PLATE	1					
33	95812–06014	TORNILLO DE REBORDE BOLT, FLANGE	1					
34	21C–F7446–01	PLACE 2 PLATE 2	1					
35	95812–06014	TORNILLO DE REBORDE BOLT, FLANGE	2					
36	95812–08035	TORNILLO DE REBORDE BOLT, FLANGE	2					
37	95812–08025	TORNILLO DE REBORDE BOLT, FLANGE	1					
38	90201–08866	ARANDELA PLANA WASHER, PLATE	3					

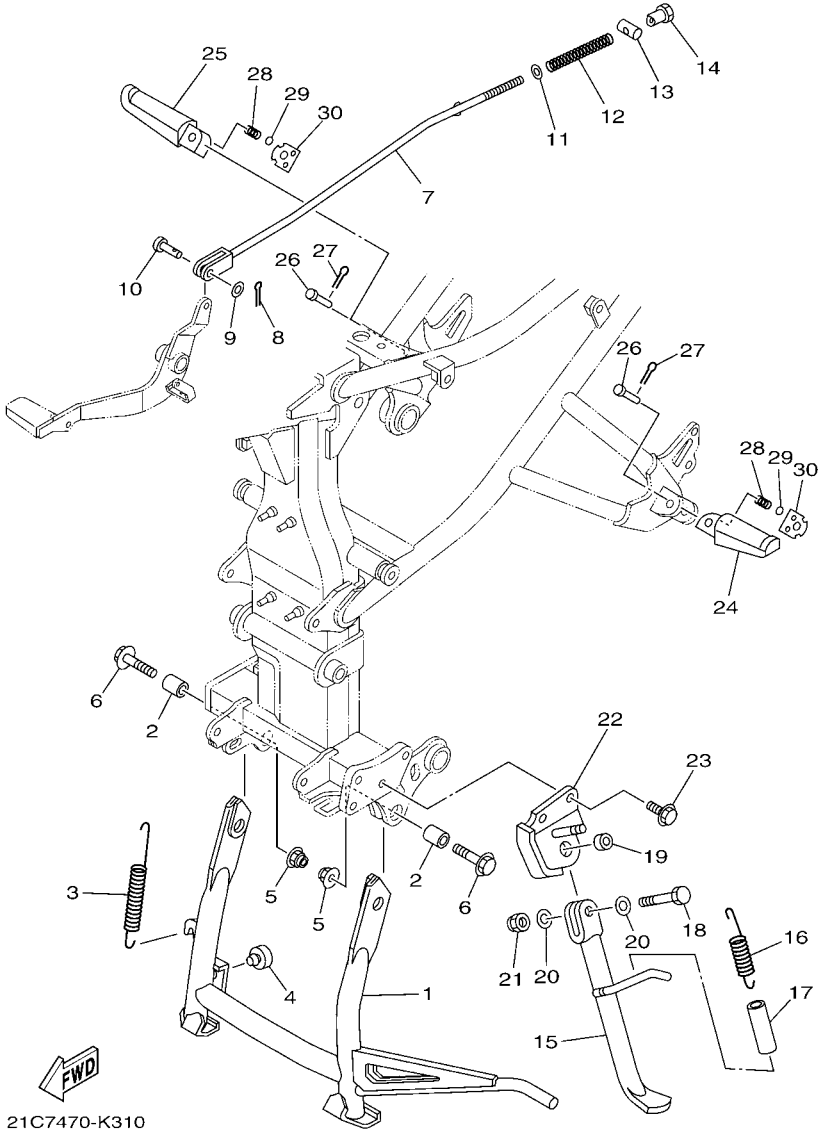

FIG. 32 SOPORTE & APOYAPIE 2 STAND & FOOTREST 2

REF. Nº	CODIGO Nº PART NO.	DESCRIPCION DESCRIPTION	1ES2					OBSERVACIONES REMARKS
1	45S–F7111–00	PUNTAL PRINCIPAL STAND, MAIN	1					
2	90387–10822	ESPACIADOR COLLAR	2					
3	90506–35816	RESORTE DE TENSION SPRING, TENSION	1					
4	21C–F7114–00	TOPE DE PUNTAL PRINCIPAL STOPPER, MAIN STAND	1					
5	95602–10200	TUERCA DE AUTO-CIERRE NUT, U FLANGE	2					
6	90105–10009	TORNILLO BOLT, FLANGE	2					
7	21C–F7231–00	VARILLA DE FRENO ROD, BRAKE	1					
8	91401–20012	CHAVETA PIN, COTTER	1					
9	92902–06200	ARANDELA WASHER	1					
10	90240–06804	PASADOR CON HOYO PIN, CLEVIS	1					
11	92902–06200	ARANDELA WASHER	1					
12	90501–10245	RESORTE DE COMPRESION SPRING, COMPRESSION	1					
13	90249–12008	PASADOR PIN	1					
14	90179–06018	TUERCA NUT	1					
15	21C–F7311–00	PUNTAL LATERAL STAND, SIDE	1					
16	90506–23807	RESORTE DE TENSION SPRING, TENSION	1					
17	90445–13806	TUBO HOSE	1					
18	90101–10006	TORNILLO BOLT	1					
19	90387–10003	ESPACIADOR COLLAR	1					
20	90201–101J1	ARANDELA PLANA WASHER, PLATE	2					
21	90185–10811	TUERCA AUTOBLOCANTE NUT, SELF-LOCKING	1					
22	21C–F7321–01	SOPORTE DE PUNTAL LATERAL BRACKET, SIDE STAND	1					
23	95022–10025	PERNO, DE BRIDA BOLT, FLANGE	2					
24	20P–F7431–00	APOYAPIE POSTERIOR 1 FOOTREST, REAR 1	1					
25	20P–F7441–00	APOYAPIE POSTERIOR 2 FOOTREST, REAR 2	1					
26	91701–08035	PASADOR DE ABRAZADERA PIN	2					
27	91401–25015	CHAVETA PIN, COTTER	2					

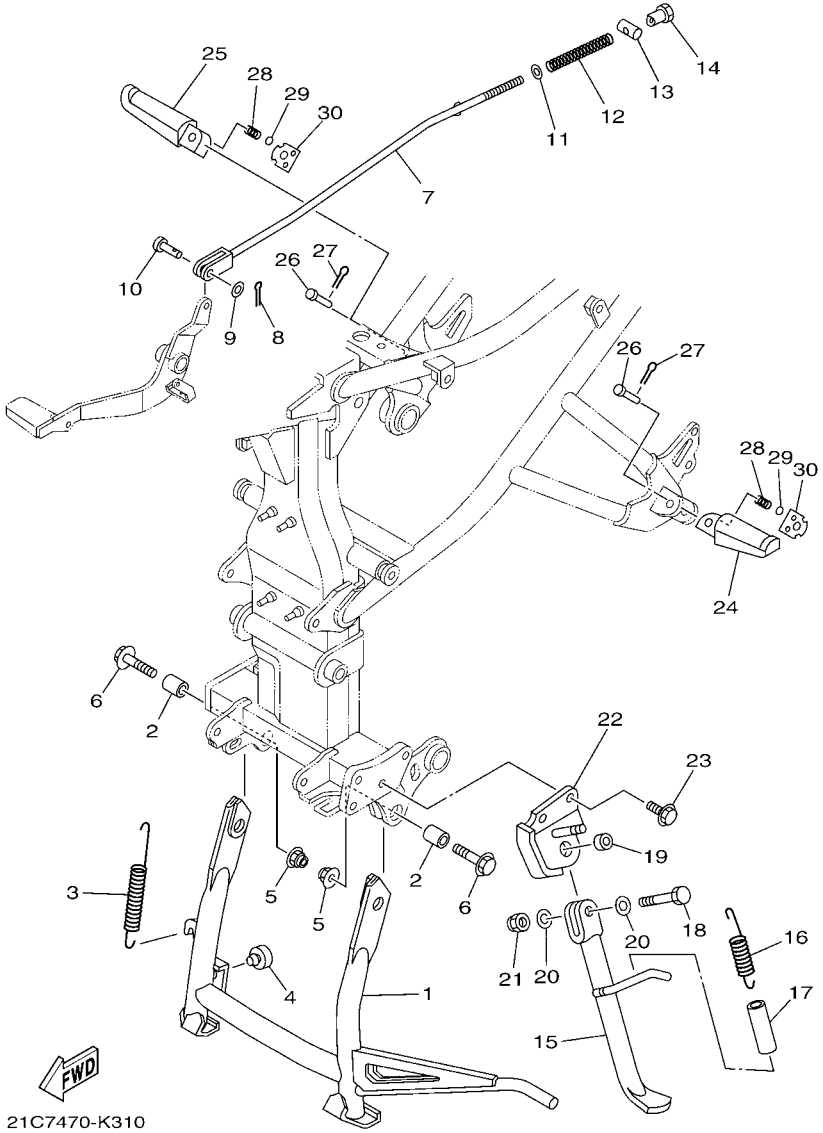

FIG. 32 SOPORTE & APOYAPIE 2 STAND & FOOTREST 2

REF. Nº	CODIGO Nº PART NO.	DESCRIPCION DESCRIPTION	1ES2					OBSERVACIONES REMARKS
28	90501–12743	RESORTE DE COMPRESION SPRING, COMPRESSION	2					
29	93501–04805	BOLA BALL	2					
30	35B–F7437–00	ARANDELA ESPECIAL WASHER, SPECIAL	2					

FIG. 33 GENERADOR GENERATOR

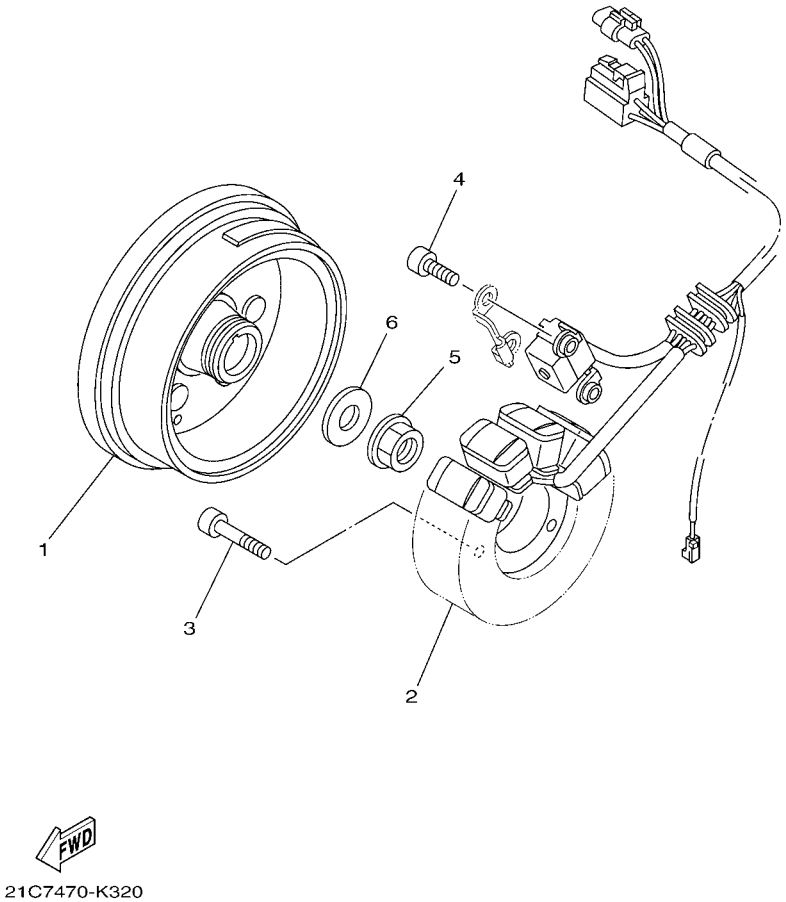

REF. Nº	CODIGO Nº PART NO.	DESCRIPCION DESCRIPTION	1ES2					OBSERVACIONES REMARKS
1	21C–H1450–10	ROTOR COMPLETO ROTOR ASSY	1					
2	54B–H1410–00	ESTATOR COMPLETO STATOR ASSY	1					
3	91312–06030	TORNILLO BOLT	3					
4	91312–06016	TORNILLO BOLT	2					
5	95707–12500	TUERCA DE BRIDA NUT, FLANGE	1					
6	90201–122H1	ARANDELA PLANA WASHER, PLATE	1					

FIG. 34 MOTOR DE ARRANQUE STARTING MOTOR

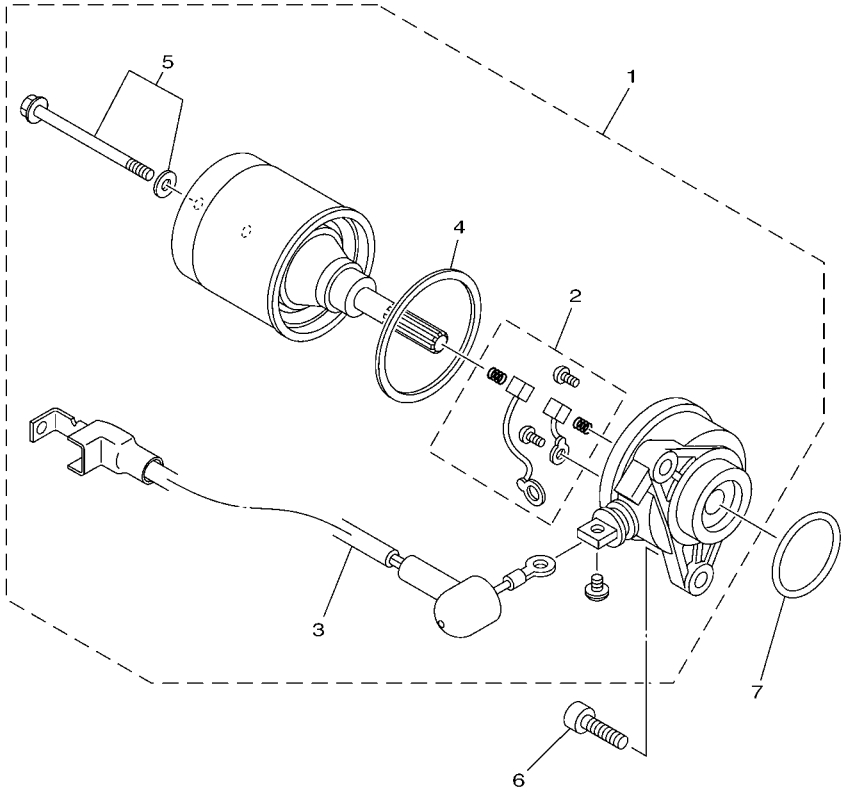

21C7470-K330

REF. Nº	CODIGO Nº PART NO.	DESCRIPCION DESCRIPTION	1ES2					OBSERVACIONES REMARKS
1	21C–H1800–10	MOTOR DE ARRANQUE COMPLETO STARTING MOTOR ASSY	1					
2	5TP–H1801–00	.JUEGO DE ESCOBILLA .BRUSH SET	1					
3	21C–H183G–00	.CABLE DEL MOTOR COMPL. .CORD COMP.	1					
4	5D9–H1861–00	.EMPAQUETADURA .GASKET	1					
5	5D9–H1828–00	.TORNILLO DE EMPUJE 2 .SCREW 2	2					
6	91312–06020	TORNILLO BOLT	2					
7	93210–29807	ANILLO O O-RING	1					

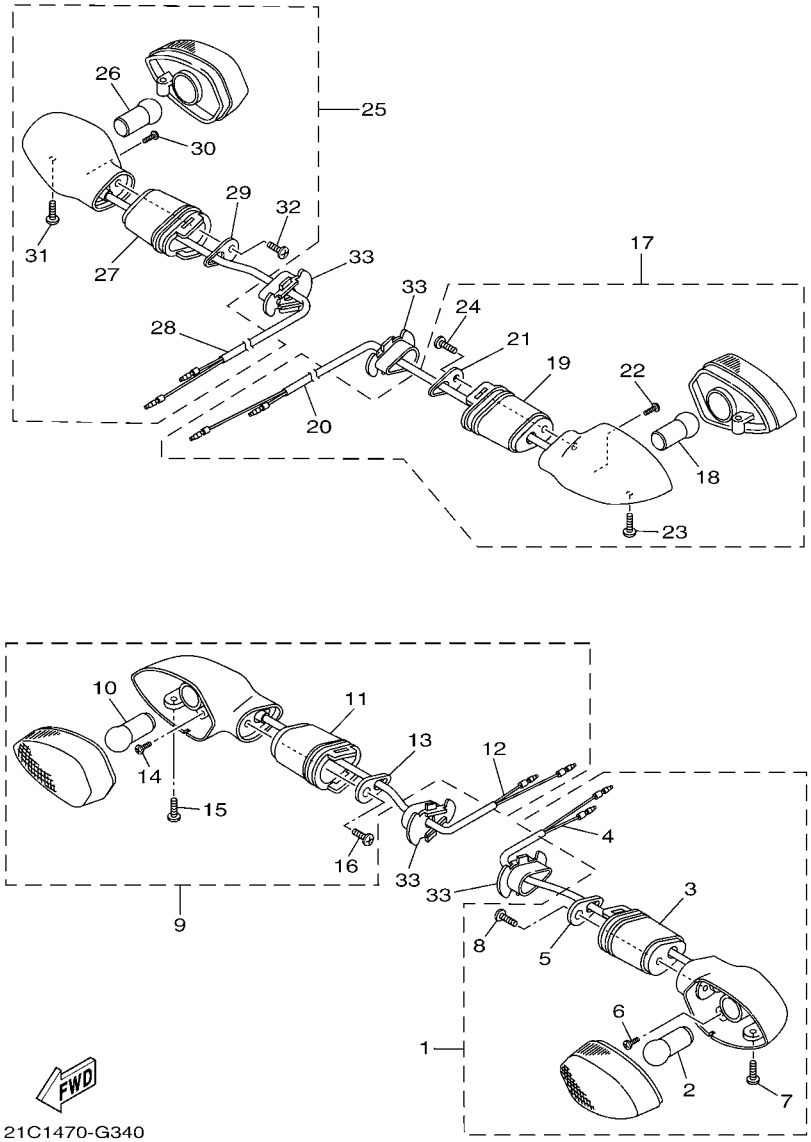

FIG. 35 LUZ DE DESTELLADOR FLASHER LIGHT

REF. Nº	CODIGO Nº PART NO.	DESCRIPCION DESCRIPTION	1ES2					OBSERVACIONES REMARKS
1	21C–H3310–00	DESTELLADOR DE LUZ DELANT. FRONT FLASHER LIGHT ASSY 1	1					
2	21C–H3311–00	.BOMBILLA (12V-10W) .BULB, FLASHER (12V-10W)	1					
3	20P–H3318–10	.SOPORTE DE DESTELLADOR 1 .STAY, FLASHER 1	1					
4	21C–H331E–00	.CORDON COMPLETO .CORD ASSY	1					
5	20P–H3618–00	.PLACA .PLATE	1					
6	20P–H213A–00	.TORNILLO ACCESORIO .SCREW, FITTING	1					
7	20P–H3333–00	.TORNILLO ACCESORIO DE LENTE .SCREW, LENS FITTING	1					
8	20P–H2133–00	.TORNILLO ACCESORIO .SCREW, FITTING	1					
9	21C–H3320–00	DESTELLADOR DE LUZ DELANT. FRONT FLASHER LIGHT ASSY 2	1					
10	21C–H3311–00	.BOMBILLA (12V-10W) .BULB, FLASHER (12V-10W)	1					
11	20P–H3318–10	.SOPORTE DE DESTELLADOR 1 .STAY, FLASHER 1	1					
12	21C–H332E–00	.CABLE COMPL. .CORD ASSY	1					
13	20P–H3618–00	.PLACA .PLATE	1					
14	20P–H213A–00	.TORNILLO ACCESORIO .SCREW, FITTING	1					
15	20P–H3333–00	.TORNILLO ACCESORIO DE LENTE .SCREW, LENS FITTING	1					
16	20P–H2133–00	.TORNILLO ACCESORIO .SCREW, FITTING	1					
17	21C–H3330–00	DESTELLADOR DE LUZ TRAS.COMPL. REAR FLASHER LIGHT ASSY 1	1					
18	21C–H3311–00	.BOMBILLA (12V-10W) .BULB, FLASHER (12V-10W)	1					
19	20P–H3318–00	.SOPORTE DE DESTELLADOR 1 .STAY, FLASHER 1	1					
20	21C–H355M–00	.CORDON COMPLETO .CORD ASSY	1					
21	20P–H3618–00	.PLACA .PLATE	1					
22	20P–H213A–00	.TORNILLO ACCESORIO .SCREW, FITTING	1					
23	20P–H3333–00	.TORNILLO ACCESORIO DE LENTE .SCREW, LENS FITTING	1					
24	20P–H2133–00	.TORNILLO ACCESORIO .SCREW, FITTING	1					
25	21C–H3340–00	DESTELLADOR DE LUZ TRAS.COMPL. REAR FLASHER LIGHT ASSY 2	1					
26	21C–H3311–00	.BOMBILLA (12V-10W) .BULB, FLASHER (12V-10W)	1					
27	20P–H3318–00	.SOPORTE DE DESTELLADOR 1 .STAY, FLASHER 1	1					

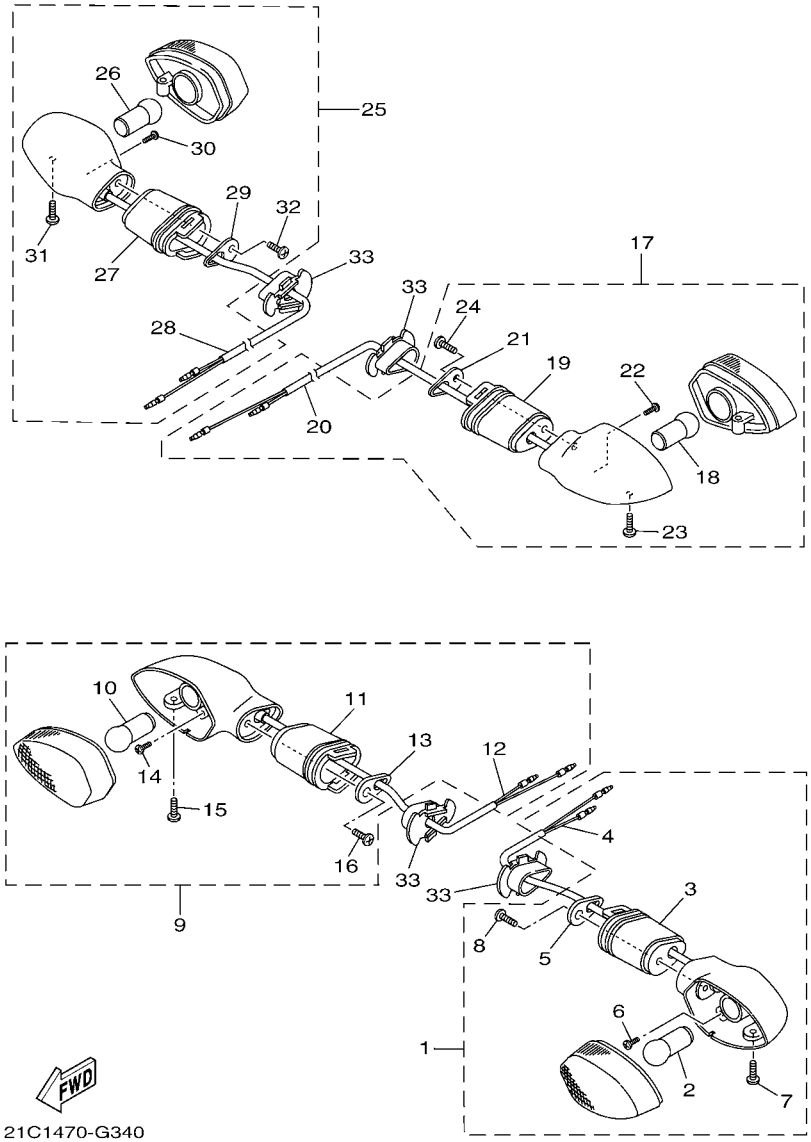

FIG. 35 LUZ DE DESTELLADOR FLASHER LIGHT

REF. Nº	CODIGO Nº PART NO.	DESCRIPCION DESCRIPTION	1ES2					OBSERVACIONES REMARKS
28	21C–H334E–00	.CABLE COMPLETA .CORD ASS'Y	1					
29	20P–H3618–00	.PLACA .PLATE	1					
30	20P–H213A–00	.TORNILLO ACCESORIO .SCREW, FITTING	1					
31	20P–H3333–00	.TORNILLO ACCESORIO DE LENTE .SCREW, LENS FITTING	1					
32	20P–H2133–00	.TORNILLO ACCESORIO .SCREW, FITTING	1					
33	5YY–H3318–10	SOPORTE DE DESTELLADOR 1 STAY, FLASHER 1	4					

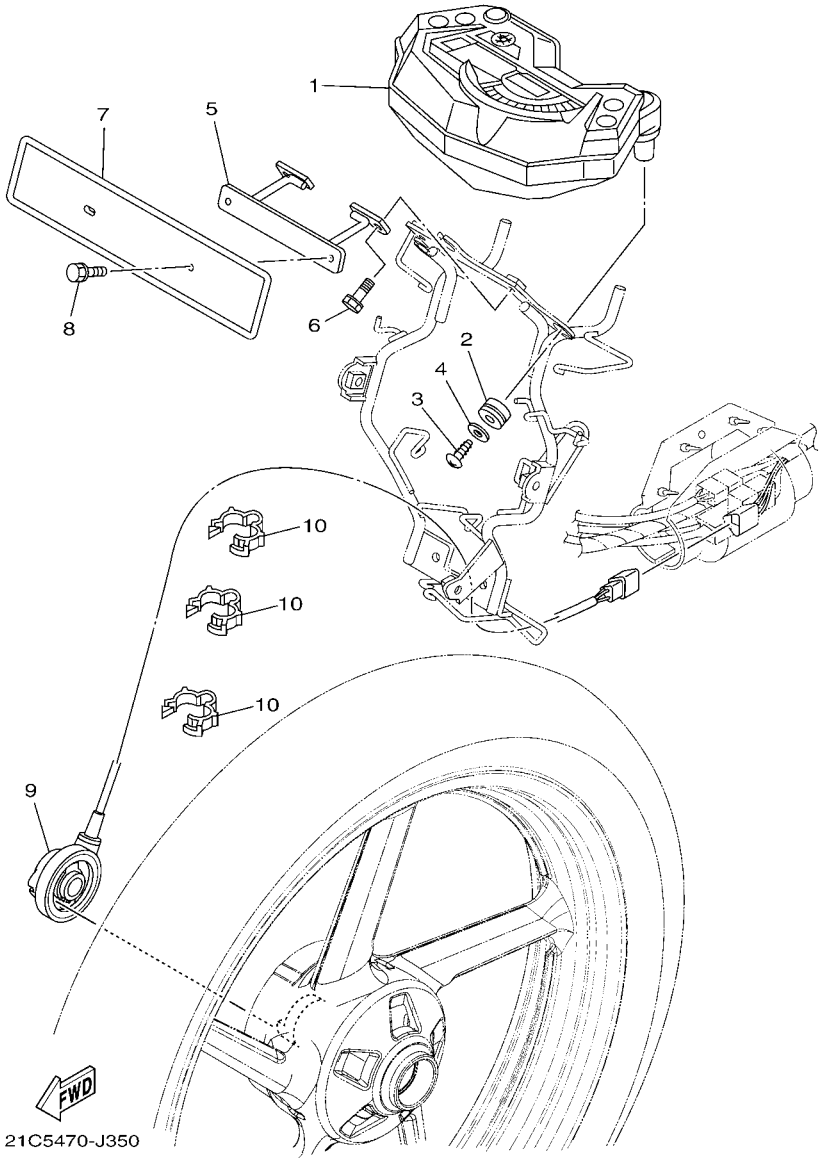

FIG. 36 MEDIDOR METER

REF. Nº	CODIGO Nº PART NO.	DESCRIPCION DESCRIPTION	1ES2					OBSERVACIONES REMARKS
1	45S–H3500–20	METRO COMPLETO METER ASSY	1					
2	90480–14818	TAPON GROMMET	3					
3	97707–50014	TORNILLO SCREW, TRUSS HEAD TAPPING	3					
4	90201–05036	ARANDELA PLANA WASHER, PLATE	3					
5	21C–F3487–00	SOPORTE DE PLACA STAY, PLATE	1					
6	97507–05512	PERNO CON ARANDELA BOLT, WITH WASHER	2					
7	5US–F3485–00	PLACA DE LICENCIA PLATE, NUMBER	1					
8	97507–05512	PERNO CON ARANDELA BOLT, WITH WASHER	2					
9	21C–H3756–01	SENSOR, UNIDAD SENSOR, UNIT	1					
10	90464–14803	BRIDA CLAMP	3					

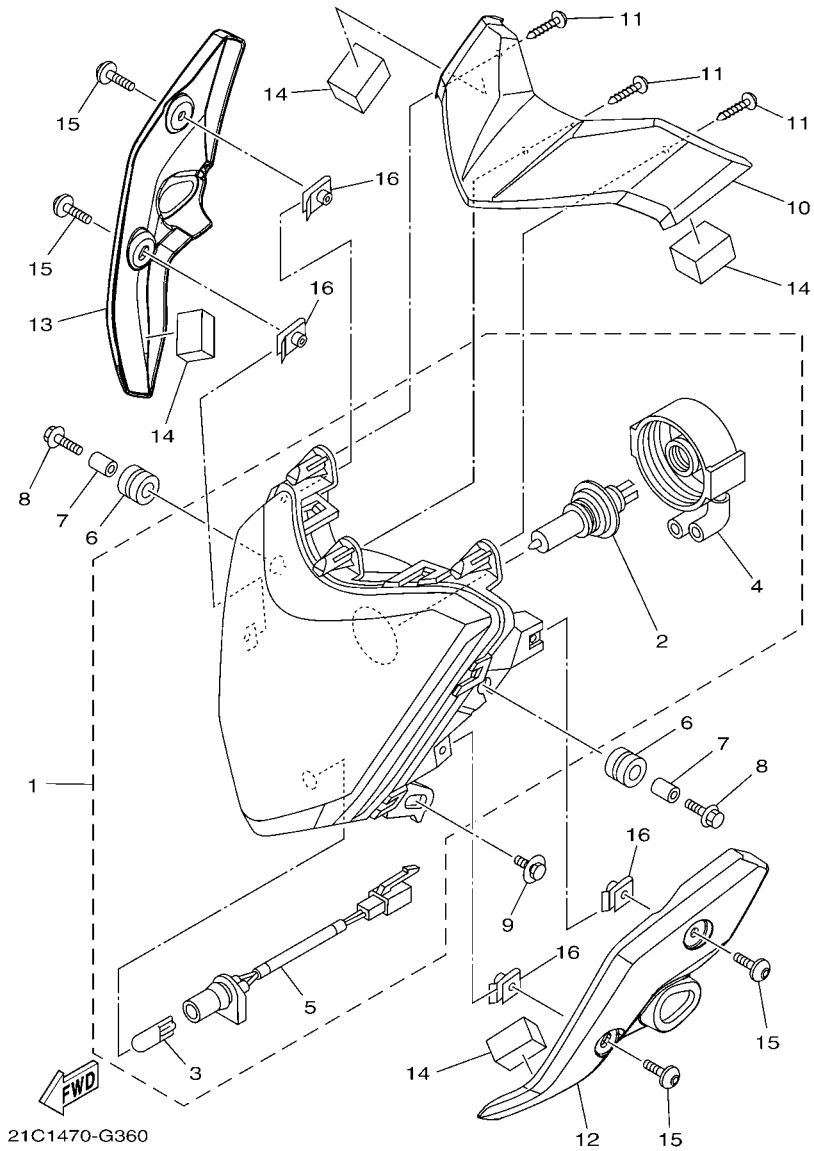

FIG. 37 FARO DELANTERO HEADLIGHT

REF. Nº	CODIGO Nº PART NO.	DESCRIPCION DESCRIPTION	1ES2					OBSERVACIONES REMARKS
1	1ES–H4300–00	FARO DELANTERO COMPLETO HEADLIGHT ASSY	1					
2	21C–H4314–00	.AMPOLLETA (12V-35/35W) .BULB (12V-35/35W)	1					
3	21C–H4347–00	.AMPOLLETA (12V-5W) .BULB (12V-5W)	1					
4	21C–H4502–00	.CUBIERTA COMPLETO .COVER COMP.	1					
5	21C–H4312–00	.CABLE COMPLETA .CORD ASSY	1					
6	90480–14101	TAPON GROMMET	2					
7	90387–068D4	ESPACIADOR COLLAR	2					
8	95802–06025	TORNILLO DE REBORDE BOLT, FLANGE	2					
9	90119–06194	TORNILLO CON ARANDELA BOLT, WITH WASHER	1					
10	21C–F3121–20	CUBIERTA SUPERIOR 1 COVER, UPPER 1	1					
11	97707–40014	TORNILLO ROSCA HEMBRA SCREW, TAPPING	3					
12	21C–F3122–00–33	CUBIERTA EXTERIOR 1 COVER, OUTER 1	1					UR PARA YB UR FOR YB
	21C–F3122–00–P1	CUBIERTA EXTERIOR 1 COVER, OUTER 1	1					UR PARA DRMK UR FOR DRMK
13	21C–F3132–00–33	CUBIERTA EXTERIOR 2 COVER, OUTER 2	1					UR PARA YB UR FOR YB
	21C–F3132–00–P1	CUBIERTA EXTERIOR 2 COVER, OUTER 2	1					UR PARA DRMK UR FOR DRMK
14	21C–H4527–10	AMORTIGUADOR DAMPER	4					
15	90111–06121	TORNILLO BOLT,HEX. SOCKET BUTTON	4					
16	90183–06821	TUERCA DE RESORTE NUT, SPRING	4					

FIG. 38 LUZ DE COLA — TAILLIGHT

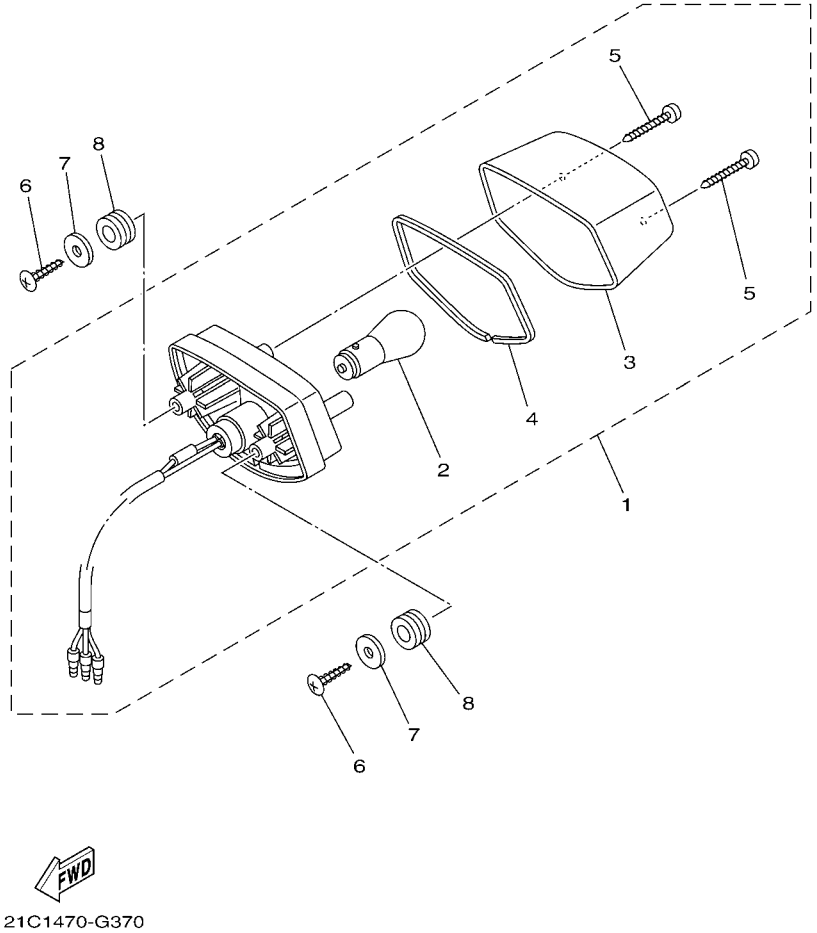

REF. Nº	CODIGO Nº PART NO.	DESCRIPCION DESCRIPTION	1ES2					OBSERVACIONES REMARKS
1	21C–H4710–00	UNIDAD FARO TRASERO COMPL. TAILLIGHT UNIT ASSY	1					
2	21C–H4714–00	.AMPOLLETA (12V-21/5W) .BULB (12V-21/5W)	1					
3	21C–H4721–00	.LENTE DE FARO TRASERO .LENS, TAILLIGHT	1					
4	21C–H4723–00	.EMPAQUE LENTE FARO TRASERO .GASKET, TAIL LENS	1					
5	97702–40030	.TORNILLO ROSCA HEMBRA .SCREW, TAPPING	2					
6	97702–50025	TORNILLO ROSCA HEMBRA SCREW, TAPPING	2					
7	90201–05036	ARANDELA PLANA WASHER, PLATE	2					
8	90480–14819	TAPON GROMMET	2					

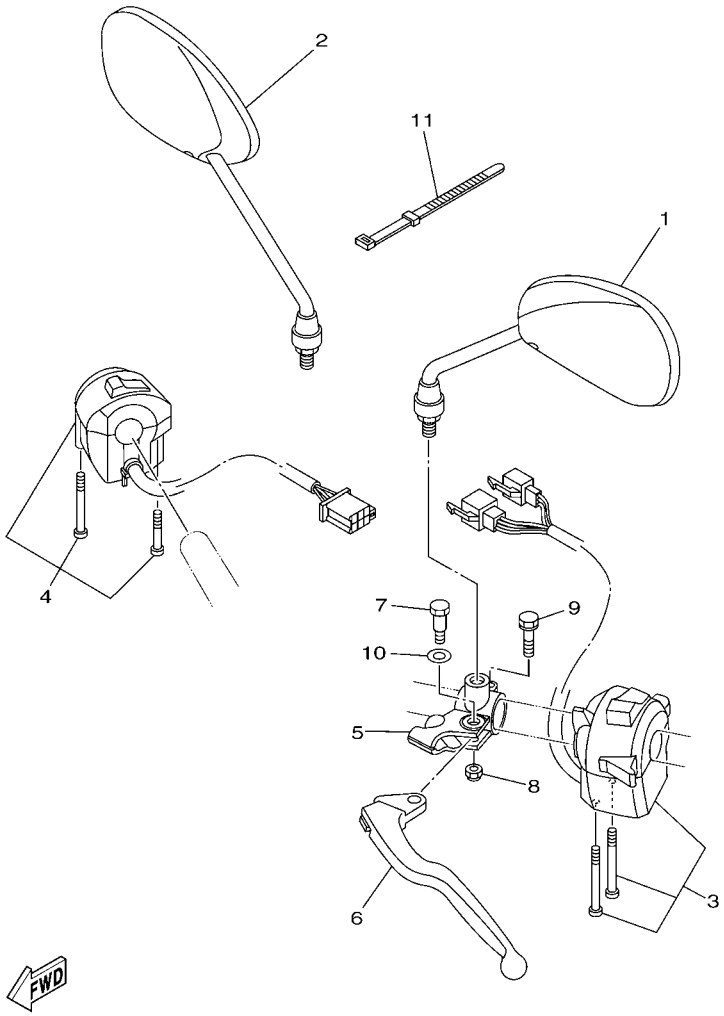

1ES2200-L390

FIG. 39 INTERRUPTOR DE MANILLAR&PALANC HANDLE SWITCH & LEVER

REF. Nº	CODIGO Nº PART NO.	DESCRIPCION DESCRIPTION	1ES2					OBSERVACIONES REMARKS
1	21C–F6280–00	ESPEJO COMPLETO (IZQUIERDO) REAR VIEW MIRROR ASSY (LEFT)	1					
2	21C–F6290–00	ESPEJO COMPLETO (DERECHO) REAR VIEW MIRROR ASSY (RIGHT)	1					
3	21C–H3972–01	INTERRUPTOR DE MANIJA 4 SWITCH, HANDLE 4	1					
4	21C–H3975–00	INTERRUPTOR DE MANIJA 2 SWITCH, HANDLE 2	1					
5	5YY–H2911–00	SOPORTE DE LEVA 1 HOLDER, LEVER 1	1					
6	21C–H3912–00	PALANCA 1 LEVER 1	1					
7	36L–H3945–10	PERNO DE PALANCA BOLT, LEVER	1					
8	95707–06300	TUERCA DE BRIDA NUT, NYLON	1					
9	9750M–06425	PERNO CON ARANDELA BOLT, WITH WASHER	1					
10	90201–08834	ARANDELA PLANA WASHER, PLATE	1					
11	36L–H3936–00	BANDA DE CABLE DE INTERRUPTOR BAND, SWITCH CORD	2					

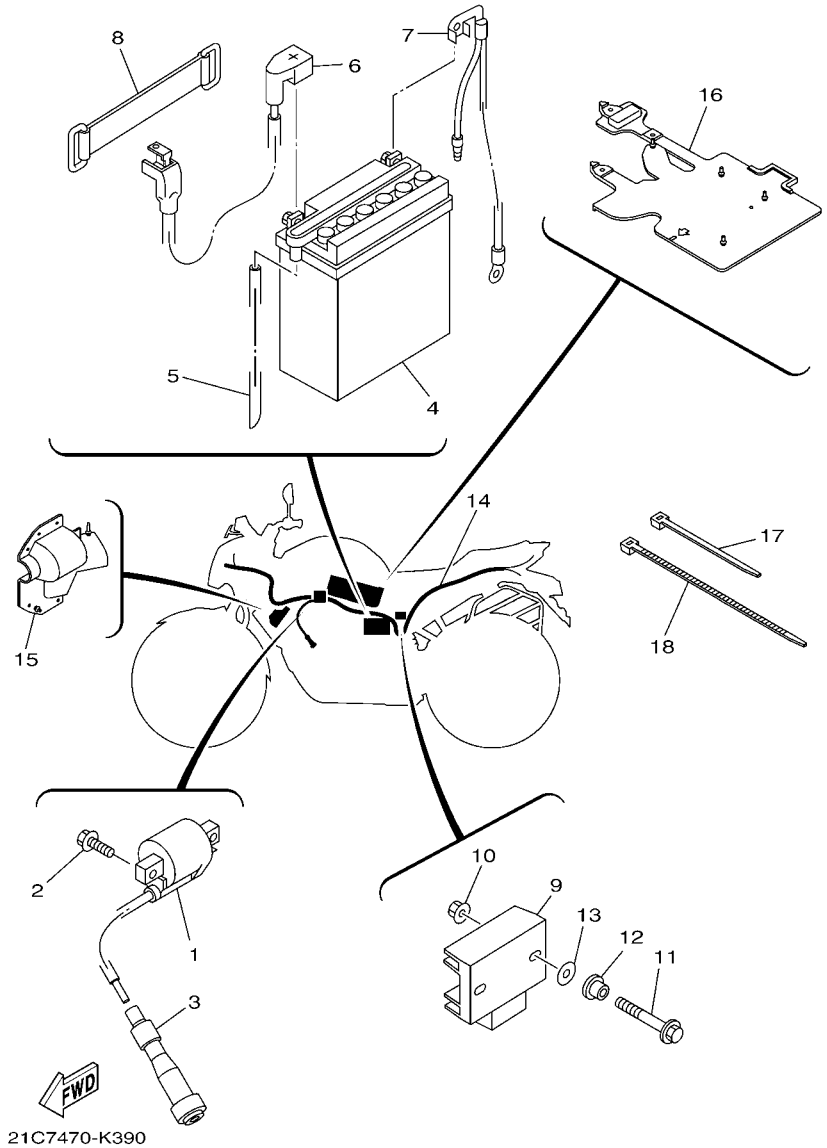

FIG. 40 EQUIPO ELECTRICO 1 ELECTRICAL 1

REF. Nº	CODIGO Nº PART NO.	DESCRIPCION DESCRIPTION	1ES2					OBSERVACIONES REMARKS
1	21C–H2310–00	BOBINA DE ENCENDIDO COMPLETA IGNITION COIL ASSY	1					
2	95027–06020	PERNO, DE BRIDA BOLT, FLANGE	2					
3	20P–H2370–01	TAPON DE BUJIA COMPLT PLUG CAP ASSY	1					
4	21C–H2110–00	BATERIA COMPLETA(MINDA MLX-5LE BATTERY ASSY (MINDA MLX-5LE)	1					
5	90446–07805	TUBO RESEIRADERO HOSE	1					
6	21C–H2115–10	CABLE CONDUCTOR POSITIVO WIRE, PLUS LEAD	1					
7	21C–H2116–10	CABLE CONDUCTOR NEGATIVO WIRE, MINUS LEAD	1					
8	5YY–H2131–10	TIRANTE DE BATERIA BAND, BATTERY	1					
9	54B–H1960–00	RECTIFICADOR Y REGULADOR RECTIFIER & REGULATOR ASSY	1					
10	95702–06500	TUERCA DE BRIDA NUT, FLANGE	2					
11	95812–06025	TORNILLO DE REBORDE BOLT, FLANGE	2					
12	90387–06048	ESPACIADOR COLLAR	2					
13	90202–05807	ARANDELA DE PLANA WASHER, PLATE	2					
14	21C–H2590–30	CONJUNTO DE CABLES WIRE HARNESS ASSY	1					
15	21C–H2599–00	CUBIERTA DE CONECTOR COVER, CONNECTER	1					
16	21C–H252U–00	CUBIERTA COVER	1					
17	90464–16061	BRIDA CLAMP	3					
18	90464–80802	BRIDA CLAMP	1					

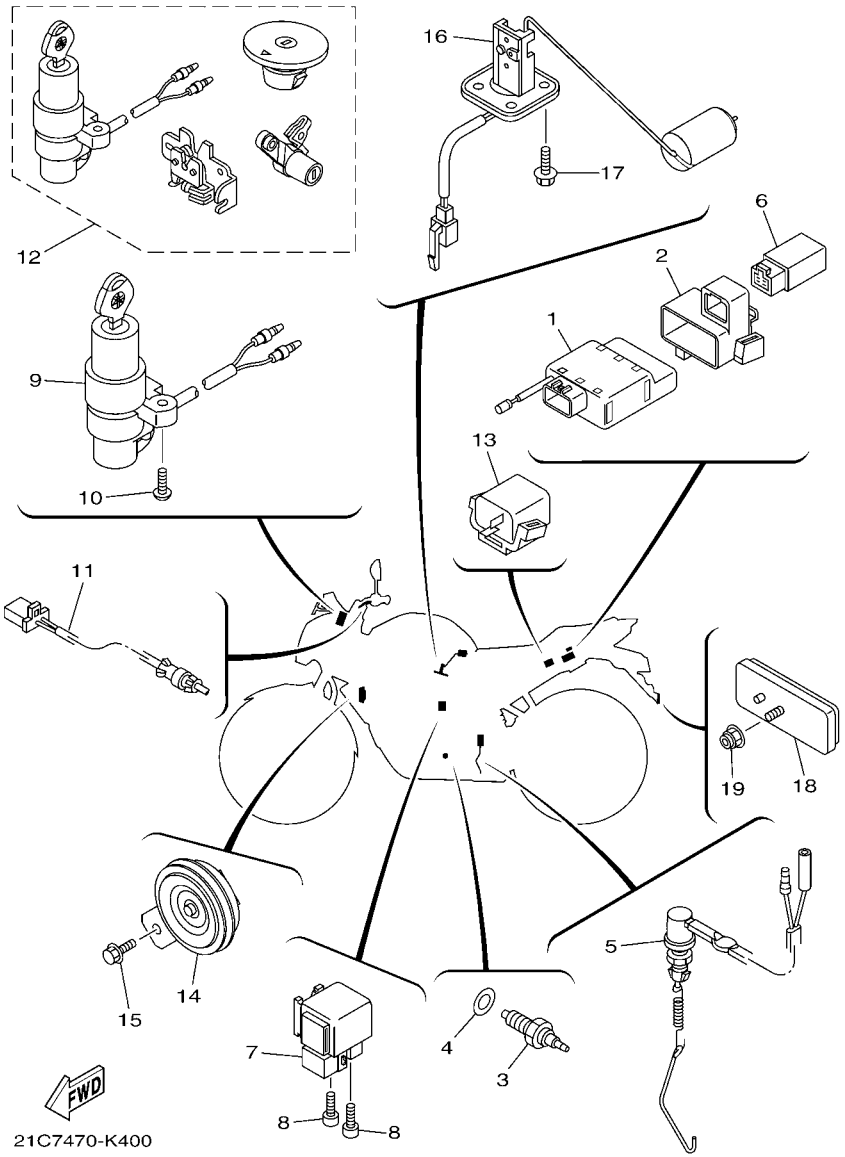

FIG. 41 EQUIPO ELECTRICO 2 ELECTRICAL 2

REF. Nº	CODIGO Nº PART NO.	DESCRIPCION DESCRIPTION	1ES2					OBSERVACIONES REMARKS
1	21C–H5540–10	UNIDAD C.D.I. COMPLETA C.D.I. UNIT ASSY	1					
2	21C–H5546–10	BANDA BAND	1					
3	21C–H2540–00	INTERRUPTOR NEUTRAL COMPL NEUTRAL SWITCH ASSY	1					
4	90430–10148	JUNTA GASKET	1					
5	21C–H2530–00	INTERRUPTOR DE PARADA COMPLETO STOP SWITCH ASSY	1					
6	21C–H1951–01	RELE RELAY	1					
7	21C–H1940–10	CONJUNTO ARRANCADOR RELEVO STARTER RELAY ASSY	1					
8	91312–05008	TORNILLO BOLT	2					
9	1ES–H2501–00	LLAVE DE IGNICION COMPLT MAIN SWITCH STEERING LOCK	1					
10	90149–06843	TORNILLO DE REGLAJE SCREW	2					
11	21C–H2917–00	INTERRUPTOR SWITCH	1					
12	1ES–XH250–10	LLAVE DE IGNICION COMPLT MAIN SW. STRG. LOCK SUB ASSY	1					AP AP
13	21C–H3350–00	RELE DE DESTELLADOR COMPL. FLASHER RELAY ASSY	1					
14	21C–H3371–00	BOCINA HORN	1					
15	95802–06012	TORNILLO DE REBORDE BOLT, FLANGE	1					
16	21C–H5701–02	MEDIDOR DE COMBUSTIBLE COMPL. SENDER ASSY	1					
17	90119–05022	TORNILLO CON ARANDELA BOLT, WITH WASHER	4					
18	5US–H5110–00	REFLECTOR COMPLETO REFLECTOR ASSY	1					
19	95702–05500	TUERCA DE BRIDA NUT, FLANGE	1					

INDICE NUMERICO
NUMERICAL INDEX

CODIGO Nº PART NO.	REF. Nº
21C–12117–00	3 – 7
22F–12118–01	3 – 6
21C–12159–00	3 – 9
21C–14103–00	7 – 6
21C–14105–00	7 – 4
21C–1410A–00	7 – 3
21C–1410E–00	7 – 36
22F–14137–00	7 – 18
22F–14139–00	7 – 16
1NT–14142–15	7 – 9
21C–14147–00	7 – 31
21C–1414M–41	7 – 8
5YY–14150–00	7 – 2
353–14186–00	7 – 14
21C–14191–00	7 – 25
21C–14216–00	7 – 35
4KM–14216–00	7 – 24
3G2–1423A–73	7 – 7
21C–14275–00	7 – 29
21C–14340–00	7 – 28
21C–14545–00	7 – 30
583–14561–00	7 – 13
5YP–14561–00	7 – 17
812–14594–00	7 – 23
6K8–14597–10	7 – 20
21C–1490J–10	7 – 5
5GH–14918–10	7 – 10
22F–14953–00	7 – 19
21C–14958–10	7 – 27
21C–1496A–00	7 – 32
54B–14985–00	7 – 12
21C–14987–00	7 – 33
5LW–14994–00	7 – 26
2A2–14997–00	7 – 21
21C–16345–10	13 – 23
4FM–23125–40	22 – 16
	22 – 33
4EB–23144–00	22 – 12
	22 – 29
4EB–23145–01	22 – 14
	22 – 31
5US–25852–00	30 – 7
5US–25854–00	30 – 6
21C–85885–00	7 – 34
54B–E1111–00	1 – 1
21C–E111F–00	4 – 4
21C–E1161–00	1 – 27
21C–E1161–10	1 – 28

CODIGO Nº PART NO.	REF. Nº
21C–E1161–20	1 – 29
54B–E1165–00	1 – 6
21C–E1166–10	6 – 24
45P–E1169–00	1 – 7
54B–E1181–00	1 – 19
54B–E1186–00	1 – 13
1ES–E1190–00	1 – 5
21C–E1193–00	1 – 11
54B–E1310–00	1 – 22
21C–E1351–00	1 – 23
21C–E1400–09	2 – 1
21C–E1422–00	2 – 5
54B–E1454–00	2 – 14
54B–E1476–00	2 – 19
21C–E1496–20	2 – 16
21C–E1531–00	2 – 15
54B–E1536–00	2 – 12
21C–E1603–00	2 – 11
21C–E1605–00	2 – 11
21C–E1607–00	2 – 11
21C–E1631–00	2 – 8
21C–E1633–00	2 – 9
21C–E1636–09	2 – 8
21C–E1638–09	2 – 8
21C–E1651–00	2 – 4
21C–E1681–01	2 – 2
54B–E2111–00	3 – 1
21C–E2113–00	3 – 5
21C–E2119–00	3 – 3
54B–E2121–00	3 – 2
21C–E2126–00	3 – 4
21C–E2151–00	3 – 8
21C–E2156–00	3 – 11
21C–E2170–00	4 – 1
21C–E2210–00	4 – 13
5MX–E2213–01	4 – 14
21C–E2231–00	4 – 9
21C–E2241–00	4 – 10
54B–E2280–00	4 – 5
21C–E2288–00	4 – 6
45P–E2435–00	1 – 14
21C–E2437–00	4 – 17
21C–E2661–10	1 – 24
54B–E3300–00	5 – 1
21C–E3327–00	5 – 11
21C–E3362–00	2 – 20
4LS–E3411–00	5 – 5
21C–E3440–00	5 – 6

CODIGO Nº PART NO.	REF. Nº
21C–E3447–00	5 – 7
21C–E3449–00	5 – 10
21C–E3536–01	6 – 2
21C–E3542–00	6 – 8
21C–E3586–01	6 – 1
21C–E3595–00	6 – 7
21C–E4411–00	6 – 10
21C–E4412–00	6 – 11
21C–E443E–00	6 – 16
21C–E4450–00	6 – 12
21C–E4452–00	6 – 14
21C–E4453–00	6 – 13
21C–E4485–00	6 – 19
21C–E449E–00	6 – 36
21C–E4613–00	8 – 11
21C–E4703–10	8 – 1
21C–E4718–00	8 – 2
20P–E4747–00	8 – 10
	17 – 16
21C–E4775–00	8 – 9
21C–E4799–01	8 – 3
45P–E4803–10	6 – 34
21C–E4815–00	6 – 28
21C–E4872–00	6 – 27
21C–E4877–00	6 – 18
21C–E4881–00	6 – 30
21C–E4882–00	6 – 31
21C–E4901–30	7 – 1
54B–E5111–00	9 – 1
21C–E5113–00	10 – 12
54B–E5121–00	9 – 2
21C–E5155–00	9 – 3
54B–E5362–00	10 – 22
21C–E5411–10	10 – 3
21C–E5418–01	10 – 13
21C–E5421–00	10 – 18
21C–E542A–00	10 – 17
21C–E5441–00	10 – 1
45P–E5451–00	10 – 4
45P–E5461–00	10 – 19
21C–E5514–10	12 – 1
21C–E5521–00	12 – 2
45P–E5524–00	12 – 5
54B–E5580–00	12 – 8
4LS–E5598–00	4 – 11
21C–E5620–00	11 – 18
21C–E5641–10	11 – 2
45P–E5651–00	11 – 15

CODIGO Nº PART NO.	REF. Nº
54B–E5661–00	11 – 1
54B–E5664–10	11 – 11
54B–E5665–00	11 – 12
21C–E5671–00	11 – 6
21C–E5674–00	11 – 13
21C–E5767–00	11 – 7
54B–E6111–00	13 – 1
21C–E6135–10	13 – 19
54B–E6144–00	13 – 17
54B–E6150–00	13 – 6
21C–E6154–00	13 – 7
21C–E6193–00	13 – 3
54B–E6321–00	13 – 9
21C–E6324–00	13 – 11
21C–E6331–00	13 – 10
21C–E6333–00	13 – 13
21C–E6337–00	13 – 14
3C1–E6344–00	13 – 18
54B–E6351–00	13 – 12
21C–E6356–01	13 – 16
54B–E6357–00	13 – 24
21C–E6358–00	13 – 15
21C–E6371–00	13 – 8
21C–E6380–01	13 – 22
21C–E7121–00	14 – 3
21C–E7131–20	14 – 4
21C–E7141–40	14 – 5
21C–E7151–50	14 – 7
21C–E7211–20	14 – 17
21C–E7221–20	14 – 18
21C–E7231–30	14 – 21
21C–E7241–40	14 – 19
21C–E7251–40	14 – 22
21C–E7258–00	14 – 16
54B–E7258–00	13 – 2
21C–E7402–40	14 – 20
21C–E7411–40	14 – 6
4LS–E7456–00	14 – 27
21C–E7471–00	14 – 10
21C–E8101–01	16 – 4
21C–E8110–10	16 – 9
20P–E8113–00	16 – 10
21C–E8140–00	16 – 1
21C–E8337–00	16 – 3
21C–E8511–00	15 – 2
21C–E8512–00	15 – 3
21C–E8513–00	15 – 4
21C–E8531–00	15 – 5

CODIGO Nº PART NO.	REF. Nº
21C–E8535–00	15 – 6
21C–E8540–30	15 – 1
21C–F1110–10	17 – 1
21C–F117K–00	25 – 9
21C–F1298–00	17 – 11
21C–F1316–00	17 – 2
21C–F1317–00	17 – 5
21C–F144G–00	31 – 25
21C–F1511–00–0X	18 – 1
21C–F1511–00–1X	18 – 1
21C–F1611–00	18 – 7
21C–F1638–01	17 – 18
1ES–F1641–00	18 – 18
21C–F1650–00	20 – 13
21C–F1651–00	18 – 8
21C–F1669–00	18 – 16
21C–F16A2–00	18 – 17
21C–F1717–00	18 – 13
	19 – 11
21C–F172A–10	19 – 3
21C–F172F–10	19 – 8
45S–F173E–00	19 – 2
45S–F173F–00	19 – 7
21C–F174G–60	19 – 14
	19 – 16
21C–F174G–90	19 – 14
	19 – 16
5DG–F1778–00	19 – 12
21C–F177G–10	18 – 12
20P–F2129–00	20 – 6
21C–F2141–00	20 – 5
21C–F2151–00	20 – 9
21C–F2174–00	28 – 38
21C–F2184–00	20 – 2
21C–F2210–00	20 – 16
21C–F3100–01	22 – 1
21C–F3102–01	22 – 2
21C–F3103–01	22 – 19
21C–F3110–00	22 – 18
	22 – 35
21C–F3111–00	22 – 5
	22 – 22
21C–F3114–00	22 – 4
	22 – 21
21C–F3118–00	22 – 6
	22 – 23
21C–F3121–20	37 – 10
21C–F3122–00–33	37 – 12

CODIGO Nº PART NO.	REF. Nº
21C–F3122–00–P1	37 – 12
21C–F3126–01	22 – 3
21C–F3132–00–33	37 – 13
21C–F3132–00–P1	37 – 13
21C–F3136–01	22 – 20
21C–F3141–00	22 – 8
	22 – 25
21C–F3146–00	22 – 15
	22 – 32
21C–F3149–00	22 – 7
	22 – 24
21C–F3156–00	22 – 13
	22 – 30
21C–F3158–00	22 – 10
	22 – 27
21C–F3170–00	22 – 17
	22 – 34
21C–F3173–00	22 – 11
	22 – 28
21C–F3174–20	21 – 16
21C–F317J–00	21 – 17
21C–F3181–00	22 – 9
	22 – 26
21C–F3317–00	30 – 18
21C–F3340–00	22 – 36
21C–F3346–00	22 – 39
5KA–F3411–00	22 – 38
5KA–F3412–00	21 – 1
5KA–F3413–00	21 – 2
5KA–F3414–00	21 – 3
5YY–F3416–00	21 – 6
4LS–F341E–00	21 – 5
4LS–F341E–10	21 – 4
21C–F3435–00	21 – 10
21C–F3441–00	21 – 14
5YY–F3462–00	22 – 37
5US–F3485–00	36 – 7
21C–F3487–00	36 – 5
21C–F4110–00	23 – 1
21C–F411G–10	23 – 29
21C–F411J–10	23 – 30
21C–F4124–10	23 – 32
5TS–F413B–00	24 – 14
	24 – 16
21C–F414A–00	23 – 12
21C–F414H–10	24 – 5
21C–F4181–00	23 – 2
21C–F4182–00	23 – 3

INDICE NUMERICO
NUMERICAL INDEX

CODIGO Nº PART NO.	REF. Nº
21C–F4183–00	23 – 4
21C–F4188–10	23 – 10
21C–F4216–10	24 – 20
21C–F4245–30	24 – 2
21C–F4245–40	24 – 2
21C–F4246–30	24 – 4
21C–F4246–40	24 – 4
21C–F4311–00	23 – 27
21C–F4318–00	23 – 13
21C–F4500–10	23 – 18
54B–F4512–10	23 – 19
54B–F4514–10	23 – 20
54B–F4521–10	23 – 21
54B–F4535–10	23 – 24
54B–F4564–10	23 – 22
54B–F4598–10	23 – 23
21C–F4614–00–P0	23 – 14
21C–F472T–10	25 – 10
45S–F4730–01	25 – 1
20P–F4741–00	25 – 2
4LS–F4741–00	18 – 14
21C–F4763–00	25 – 3
21C–F4773–31	25 – 12
21C–F4780–01	25 – 5
21C–F478E–01	25 – 7
21C–F479T–00	25 – 14
21C–F479U–00	25 – 15
21C–F479V–00	25 – 16
21C–F510C–10	26 – 2
21C–F5168–10–33	26 – 1
21C–F5181–00	26 – 8
21C–F5183–01	26 – 7
21C–F530S–10	28 – 2
5US–F5321–10	28 – 6
21C–F5338–10–33	28 – 1
36L–F533A–00	28 – 14
5YY–F5351–00	28 – 10
21C–F5355–01	28 – 11
21C–F5364–00	28 – 5
20P–F5366–00–33	28 – 15
21C–F5371–00	28 – 24
20P–F5377–00	28 – 17
21C–F5377–01	28 – 32
21C–F5381–00	28 – 31
21C–F5383–10	28 – 33
21C–F5388–11	28 – 37
21C–F5440–00	28 – 19
5US–F5744–00	27 – 8

CODIGO Nº PART NO.	REF. Nº
5YY–F580U–20	27 – 3
5US–F5827–00	27 – 9
21C–F582U–00	27 – 1
21C–F583T–00	30 – 4
5YY–F5867–00	30 – 9
21C–F5872–00	30 – 1
21C–F5875–00	30 – 15
21C–F5876–00	30 – 17
5US–F5977–00	27 – 5
21C–F6111–01	29 – 1
21C–F620B–20	29 – 10
21C–F6240–00	29 – 9
21C–F6241–00	29 – 8
21C–F6280–00	39 – 1
21C–F6290–00	39 – 2
21C–F6311–10	29 – 2
21C–F6331–01	29 – 7
21C–F6335–00	29 – 3
4TL–F6372–00	29 – 4
45S–F7111–00	32 – 1
21C–F7114–00	32 – 4
21C–F7211–10	31 – 27
21C–F721A–00	31 – 32
21C–F7231–00	32 – 7
21C–F7261–00	31 – 9
	31 – 29
21C–F7311–00	32 – 15
21C–F7321–01	32 – 22
21C–F7413–00	31 – 6
	31 – 22
21C–F7414–00	31 – 11
	31 – 31
21C–F7426–00	31 – 19
20P–F7431–00	32 – 24
35B–F7437–00	32 – 30
20P–F7441–00	32 – 25
21C–F7445–01	31 – 12
21C–F7446–01	31 – 34
35B–F7451–00	31 – 1
21C–F7452–00–P2	31 – 2
35B–F7461–00	31 – 17
21C–F7462–00–P2	31 – 18
21C–F8100–20	17 – 19
5TS–F836B–02	19 – 20
54B–H1410–00	33 – 2
21C–H1450–10	33 – 1
21C–H1800–10	34 – 1
5TP–H1801–00	34 – 2

CODIGO Nº PART NO.	REF. Nº
5D9–H1828–00	34 – 5
21C–H183G–00	34 – 3
5D9–H1861–00	34 – 4
21C–H1940–10	41 – 7
21C–H1951–01	41 – 6
54B–H1960–00	40 – 9
21C–H2110–00	40 – 4
21C–H2115–10	40 – 6
21C–H2116–10	40 – 7
20P–H2131–00	25 – 4
5YY–H2131–10	40 – 8
20P–H2133–00	35 – 8
	35 – 16
	35 – 24
	35 – 32
20P–H213A–00	35 – 6
	35 – 14
	35 – 22
	35 – 30
21C–H2310–00	40 – 1
20P–H2370–01	40 – 3
1ES–H2501–00	41 – 9
21C–H252U–00	40 – 16
21C–H2530–00	41 – 5
21C–H2540–00	41 – 3
21C–H2590–30	40 – 14
21C–H2599–00	40 – 15
5YY–H2911–00	39 – 5
21C–H2917–00	41 – 11
21C–H3310–00	35 – 1
21C–H3311–00	35 – 2
	35 – 10
	35 – 18
	35 – 26
20P–H3318–00	35 – 19
	35 – 27
20P–H3318–10	35 – 3
	35 – 11
5YY–H3318–10	35 – 33
21C–H331E–00	35 – 4
21C–H3320–00	35 – 9
21C–H332E–00	35 – 12
21C–H3330–00	35 – 17
20P–H3333–00	35 – 7
	35 – 15
	35 – 23
	35 – 31
21C–H3340–00	35 – 25

CODIGO Nº PART NO.	REF. Nº
21C–H334E–00	35 – 28
21C–H3350–00	41 – 13
21C–H3371–00	41 – 14
45S–H3500–20	36 – 1
21C–H355M–00	35 – 20
20P–H3618–00	35 – 5
	35 – 13
	35 – 21
	35 – 29
21C–H3756–01	36 – 9
21C–H3912–00	39 – 6
5YY–H3922–01	30 – 12
36L–H3936–00	39 – 11
36L–H3945–10	39 – 7
21C–H3972–01	39 – 3
21C–H3975–00	39 – 4
21C–H3980–00	30 – 11
1ES–H4300–00	37 – 1
21C–H4312–00	37 – 5
21C–H4314–00	37 – 2
21C–H4347–00	37 – 3
21C–H4502–00	37 – 4
21C–H4527–10	37 – 14
21C–H4710–00	38 – 1
21C–H4714–00	38 – 2
21C–H4721–00	38 – 3
21C–H4723–00	38 – 4
5US–H5110–00	41 – 18
1ES–H5111–00	18 – 22
21C–H5540–10	41 – 1
21C–H5546–10	41 – 2
21C–H5701–02	41 – 16
5US–W0016–00	27 – 10
5US–W0041–00	30 – 5
5US–W0045–00	27 – 7
5US–W0047–00	27 – 4
5US–W0048–00	27 – 6
5US–W0053–00	27 – 12
5US–W0068–00	27 – 11
21C–WF211–00	20 – 1
21C–WF461–10	23 – 17
21C–WF479–00	25 – 8
5YY–WF533–00	28 – 7
21C–XF137–80–33	24 – 13
21C–XF137–90–P0	24 – 13
21C–XF13A–80–33	24 – 15
21C–XF13A–90–P0	24 – 15
45S–XF171–30–P3	19 – 1

CODIGO Nº PART NO.	REF. Nº
45S–XF172–30–P3	19 – 6
21C–XF173–60–33	19 – 13
21C–XF173–C0–P1	19 – 13
21C–XF174–60–33	19 – 15
21C–XF174–C0–P1	19 – 15
21C–XF17C–70–33	19 – 19
21C–XF17C–A0–P1	19 – 19
21C–XF17D–80–33	23 – 11
21C–XF17D–90–P1	23 – 11
21C–XF412–C0–33	24 – 1
21C–XF412–D0–P0	24 – 1
21C–XF413–C0–33	24 – 3
21C–XF413–D0–P0	24 – 3
1ES–XH250–10	41 – 12
90101–06046	28 – 12
90101–10006	32 – 18
90105–06859	30 – 10
90105–08196	4 – 7
90105–08197	1 – 17
90105–10009	32 – 6
90105–10174	17 – 10
90105–10319	27 – 13
90105–12057	20 – 18
90105–12085	20 – 19
90109–06259	16 – 2
90109–06859	30 – 13
90109–08063	28 – 25
90109–08202	31 – 8
	31 – 24
90109–08223	28 – 28
90110–06304	1 – 21
90110–06846	1 – 26
90111–05002	24 – 8
90111–05003	24 – 7
90111–05808	5 – 2
90111–06087	8 – 6
90111–06121	37 – 15
90111–06807	8 – 7
90111–08847	27 – 2
90116–08834	28 – 20
90119–05022	41 – 17
90119–06117	18 – 15
90119–06137	19 – 23
90119–06194	37 – 9
90123–08046	29 – 5
90149–06108	23 – 25
90149–06843	41 – 10
90154–06061	18 – 6

CODIGO Nº PART NO.	REF. Nº
90159–05065	23 – 15
	24 – 11
90159–06054	25 – 11
90170–06128	3 – 10
90170–10405	2 – 26
90176–22081	21 – 13
90179–05523	23 – 16
	24 – 12
90179–06018	32 – 14
90179–08148	29 – 6
90179–08674	17 – 8
90179–10658	17 – 4
90179–12659	11 – 19
90179–12802	13 – 5
90179–14001	13 – 20
90179–25615	21 – 7
90183–05061	24 – 10
90183–05818	18 – 11
	19 – 4
	19 – 9
	19 – 17
	24 – 18
90183–06802	6 – 21
90183–06821	37 – 16
90185–06802	30 – 14
90185–10811	32 – 21
90201–05015	1 – 25
90201–05036	36 – 4
	38 – 7
90201–06037	4 – 16
90201–06055	19 – 25
90201–06078	18 – 21
90201–060A3	20 – 11
	23 – 8
90201–061A5	17 – 14
90201–06726	18 – 5
90201–06871	16 – 13
90201–08612	8 – 13
90201–087F0	8 – 17
90201–08834	39 – 10
90201–08866	31 – 16
	31 – 38
90201–101J1	32 – 20
90201–105E8	12 – 3
90201–10815	30 – 3
90201–10841	31 – 10
	31 – 30
90201–12019	13 – 4

INDICE NUMERICO
NUMERICAL INDEX

CODIGO Nº PART NO.	REF. Nº
90201–12030	20 – 8
	20 – 21
90201–122H1	33 – 6
90201–15022	2 – 17
90201–15026	28 – 35
90201–162H4	11 – 10
90201–167P7	11 – 8
90201–177G4	11 – 16
	14 – 15
90201–20685	11 – 4
90201–22018	21 – 12
90201–22793	14 – 12
90201–25290	12 – 7
90202–05180	24 – 9
90202–05807	8 – 8
	23 – 26
	40 – 13
90202–26142	21 – 9
90208–20003	13 – 21
90208–20005	11 – 3
90209–17285	14 – 1
90209–18208	14 – 14
90214–10006	2 – 18
90214–25800	21 – 8
90215–10284	2 – 25
90240–06804	32 – 10
90249–12008	32 – 13
90280–03017	2 – 7
90282–05031	2 – 24
90338–05801	9 – 5
90340–12097	5 – 3
90340–14824	10 – 8
90340–32823	10 – 10
90387–06023	8 – 5
90387–06048	18 – 10
	23 – 33
	40 – 12
90387–06554	23 – 6
90387–066J9	20 – 10
90387–06737	6 – 22
90387–068C5	18 – 2
90387–068C9	10 – 15
90387–068D4	37 – 7
90387–068S1	20 – 14
90387–08822	17 – 17
90387–10003	32 – 19
90387–107H6	23 – 7
90387–10822	32 – 2

CODIGO Nº PART NO.	REF. Nº
90387–12845	20 – 17
90387–155J0	2 – 21
90387–20813	2 – 13
90401–10818	30 – 2
90430–06014	1 – 3
	1 – 16
90430–10148	41 – 4
90430–12227	5 – 4
90445–13806	32 – 17
90446–07805	40 – 5
90450–44803	6 – 4
90450–50802	6 – 20
90464–11014	6 – 37
90464–14803	36 – 10
90464–16016	6 – 38
90464–16061	40 – 17
90464–80802	23 – 5
	40 – 18
90467–08808	6 – 9
90467–100A3	23 – 28
90467–12800	6 – 17
90467–13816	6 – 25
90467–15012	6 – 32
90467–16805	6 – 26
	6 – 33
90480–01559	19 – 26
90480–08801	18 – 3
90480–12581	8 – 4
90480–12812	10 – 16
90480–12816	24 – 19
90480–13398	24 – 6
90480–14101	37 – 6
90480–14818	36 – 2
90480–14819	38 – 8
90501–06800	15 – 7
90501–10245	32 – 12
90501–12743	32 – 28
90506–12001	28 – 8
90506–15001	28 – 9
90506–23807	32 – 16
90506–26807	31 – 28
90506–35816	32 – 3
90508–183B9	31 – 3
90508–32805	16 – 5
91312–05008	41 – 8
91312–06016	33 – 4
91312–06020	34 – 6
91312–06030	33 – 3

CODIGO Nº PART NO.	REF. Nº
91317–05010	1 – 8
91317–05016	3 – 12
91317–06014	10 – 2
91317–06016	6 – 29
	11 – 14
91317–06018	4 – 15
91317–06020	12 – 9
91317–06025	1 – 12
	1 – 15
	6 – 6
91401–20012	16 – 11
	28 – 27
	32 – 8
91401–25015	31 – 5
	31 – 21
	32 – 27
91701–08035	32 – 26
91701–08040	31 – 4
	31 – 20
91810–14804	1 – 20
91830–21014	9 – 4
	10 – 5
	10 – 20
92902–06200	16 – 12
	32 – 9
	32 – 11
92902–08100	7 – 22
92902–08200	28 – 30
92902–08600	28 – 39
92902–14200	26 – 10
92907–06600	6 – 5
93101–10838	10 – 24
93102–12875	16 – 8
93102–12877	13 – 27
93102–22818	14 – 25
93106–22808	26 – 3
	28 – 4
93106–26801	28 – 18
93109–18803	20 – 3
93109–20821	11 – 20
93210–12800	1 – 9
93210–14899	10 – 9
93210–19809	10 – 23
93210–29807	34 – 7
93210–30611	6 – 3
93210–32814	10 – 11
93306–002X2	4 – 3
93306–054Y5	28 – 16

CODIGO Nº PART NO.	REF. Nº
93306–054Y6	14 – 8
93306–054YA	28 – 16
93306–054YE	14 – 8
93306–201Y4	14 – 9
93306–203XR	14 – 23
93306–252XG	26 – 4
	28 – 3
93306–252YG	2 – 22
93306–252YH	26 – 4
	28 – 3
93306–253Y6	2 – 23
93306–272X1	14 – 24
93306–272X4	14 – 24
93306–305YR	2 – 6
93310–325X3	12 – 6
93310–628X0	2 – 3
93315–112Y9	13 – 26
93317–318Y5	20 – 4
93410–20038	11 – 5
	14 – 2
93410–22039	14 – 13
93450–16812	2 – 10
93501–04805	32 – 29
93505–16844	13 – 25
93605–06800	4 – 2
93608–43238	16 – 7
93612–16254	1 – 10
93822–14800	14 – 26
93900–00824	26 – 6
	28 – 23
94110–17804	26 – 5
94114–17800	28 – 22
94568–B5128	28 – 36
94591–69096	4 – 8
94703–00885	1 – 18
95022–06010	25 – 6
95022–06012	1 – 2
	5 – 12
95022–08016	25 – 13
95022–08040	21 – 11
95022–10025	32 – 23
95024–08035	21 – 15
95027–06010	14 – 28
95027–06016	4 – 18
95027–06020	5 – 8
	40 – 2
95027–06040	10 – 6
	10 – 21

CODIGO Nº PART NO.	REF. Nº
95027–06045	9 – 7
95027–06050	10 – 7
95027–06055	9 – 6
95027–06065	5 – 9
95027–06070	9 – 8
95302–08600	28 – 29
	28 – 40
95302–08700	28 – 26
95307–06600	28 – 13
95602–08200	28 – 21
95602–10200	32 – 5
95602–14200	26 – 9
	28 – 34
95607–06100	18 – 20
95612–12100	20 – 20
95614–12100	20 – 7
95617–08620	1 – 4
95702–05500	41 – 19
95702–06500	17 – 15
	40 – 10
95707–05500	18 – 23
95707–06300	39 – 8
95707–08500	8 – 12
95707–12500	33 – 5
95802–06010	31 – 26
95802–06012	23 – 31
	24 – 21
	41 – 15
95802–06020	4 – 12
95802–06025	17 – 13
	37 – 8
95807–06012	30 – 16
95807–06014	20 – 15
	21 – 18
95807–06016	17 – 12
	18 – 19
95807–06020	10 – 14
95807–08025	8 – 14
95807–08035	8 – 15
95812–06014	31 – 13
	31 – 33
	31 – 35
95812–06025	40 – 11
95812–08016	17 – 7
95812–08025	31 – 15
	31 – 37
95812–08035	17 – 6
	31 – 14

CODIGO Nº PART NO.	REF. Nº
95812–08035	31 – 36
95812–10080	17 – 3
95817–08040	8 – 16
95817–10130	17 – 9
95822–06030	23 – 9
95827–06012	6 – 35
	23 – 34
95827–06016	6 – 23
97012–06014	18 – 9
97012–06020	16 – 14
97022–06020	18 – 4
97027–06025	20 – 12
97507–05512	36 – 6
	36 – 8
9750M–06425	39 – 9
97602–05320	6 – 15
97702–40030	38 – 5
97702–50012	19 – 5
	19 – 10
	19 – 18
	24 – 17
97702–50025	38 – 6
97707–40014	37 – 11
97707–50012	19 – 21
97707–50014	36 – 3
98502–05012	7 – 11
98502–05014	31 – 7
	31 – 23
98502–06016	19 – 24
98507–04008	7 – 15
98507–06012	19 – 22
98517–06012	14 – 11
98706–04012	30 – 8
99001–10600	16 – 6
99009–10400	12 – 4
99009–16400	11 – 9
99009–17400	11 – 17
99009–20500	13 – 28