# 2007 WQ Fiesta
## (including XR4)

# Repair Manual

**NOTE:** ***All references to "gasoline" or "gas" (US terminology) in this manual should be read as "petrol" and NOT as "LPG".***

## PART No. WSM 110

**Registered at the National Library, Canberra, ACT Australia**

ISBN 1 921140 151 (Set)
ISBN 1 921140 16X (Volume 1)
ISBN 1 921140 178 (Volume 2)
ISBN 1 921140 186 (Volume 3)

**© 2007 Ford Motor Company of Australia Ltd.**
**Registered Office: CAMPBELLFIELD, VICTORIA**
A.B.N. 30 004 116 223

Reproduction in whole or in part is prohibited without written approval.

PRINTED IN AUSTRALIA. May 2007

# CONTENTS


| TITLE | SECTION |
|---|---|
| **VOLUME 1** | |
| **GENERAL INFORMATION** | **Group 1** |
| General Information | 100 |
| **CHASSIS** | **Group 2** |
| Suspension | 204 |
| Driveline | 205 |
| Brake System | 206 |
| Steering System | 211 |
| **POWERTRAIN** | **Group 3** |
| Engine | 303 |
| Transmission / Transaxle, Clutch and Transfer Case | 308 |
| Exhaust System | 309 |
| Fuel System | 310 |
| **VOLUME 2** | |
| **ELECTRICAL** | **Group 4** |
| Climate Control System | 412 |
| Instrumentation and Warning Systems | 413 |
| Battery and Charging System | 414 |
| Entertainment Systems | 415 |
| Lighting | 417 |
| Electrical Distribution | 418 |
| Electronic Feature Group | 419 |
| **BODY AND PAINT** | **Group 5** |
| **VOLUME 3** | |
| Body | 501 |
| Frame and Mounting | 502 |
| **WIRING DIAGRAMS** | **APPENDICES** |

# 2006.0 Fiesta

# Workshop Manual

## Table of Contents


### GROUP 1 General Information

**Service Information**
General Information 100-00
Identification Codes 100-01
Jacking and Lifting 100-02
Noise, Vibration and Harshness 100-04

### GROUP 2 Chassis

**Suspension**
Suspension System - General Information 204-00
Front Suspension 204-01
Rear Suspension 204-02
Wheels and Tires 204-04

**Driveline**
Front Drive Halfshafts 205-04

**Brake System**
Brake System - General Information 206-00
Drum Brake 206-02
Front Disc Brake 206-03
Rear Disc Brake 206-04
Parking Brake and Actuation 206-05
Hydraulic Brake Actuation 206-06
Power Brake Actuation 206-07
Anti-Lock Control 206-09A
Anti-Lock Control - Traction Control 206-09B
Anti-Lock Control - Stability Assist 206-09C

**Steering System**
Steering System - General Information 211-00
Power Steering 211-02
Steering Linkage 211-03
Steering Column 211-04
Steering Column Switches 211-05

### GROUP 3 Powertrain

**Engine**
Engine System - General Information 303-00
Engine - 1.25L Duratec-16V (Sigma)/1.4L Duratec-16V (Sigma)/1.6L Duratec-16V (Sigma) 303-01A
Engine - 2.0L Duratec-HE (MI4) 303-01B
Engine Cooling - 1.3L Duratec-8V (Rocam)/1.25L Duratec-16V (Sigma)/1.4L Duratec-16V (Sigma)/1.6L Duratec-16V (Sigma) 303-03A
Engine Cooling - 2.0L Duratec-HE (MI4) 303-03B
Fuel Charging and Controls - 1.25L Duratec-16V (Sigma)/1.4L Duratec-16V (Sigma)/1.6L Duratec-16V (Sigma) 303-04A
Fuel Charging and Controls - 2.0L Duratec-HE (MI4) 303-04B
Accessory Drive 303-05
Starting System 303-06
Engine Ignition 303-07A
Engine Ignition - 2.0L Duratec-HE (MI4) 303-07B
Engine Emission Control - 1.3L Duratec-8V (Rocam)/1.25L Duratec-16V (Sigma)/1.4L Duratec-16V (Sigma)/1.6L Duratec-16V (Sigma) 303-08A
Engine Emission Control - 2.0L Duratec-HE (MI4) 303-08B

Intake Air Distribution and Filtering 303-12
Evaporative Emissions 303-13
Electronic Engine Controls 303-14

**Automatic Transmission/Transaxle**
Automatic Transmission/Transaxle - Vehicles With: 4-Speed Automatic Transmission (AW81-40) 307-01
Transmission/Transaxle Cooling - Vehicles With: 4-Speed Automatic Transmission (AW81-40) 307-02
Automatic Transmission/Transaxle External Controls - Vehicles With: 4-Speed Automatic Transmission (AW81-40) 307-05

**Manual Transmission/Transaxle, Clutch and Transfer Case**
Manual Transmission/Transaxle and Clutch - General Information 308-00
Clutch 308-01
Clutch Controls 308-02
Manual Transmission/Transaxle 308-03
Manual Transmission/Transaxle External Controls 308-06

**Exhaust System**
Exhaust System 309-00

**Fuel System**
Fuel System - General Information 310-00
Fuel Tank and Lines 310-01
Acceleration Control - 1.3L Duratec-8V (Rocam)/1.25L Duratec-16V (Sigma)/1.4L Duratec-16V (Sigma)/1.6L Duratec-16V (Sigma) 310-02A
Acceleration Control - 2.0L Duratec-HE (MI4) 310-02B

## GROUP 4 Electrical

**Climate Control System**
Climate Control System - General Information 412-00
Air Distribution and Filtering 412-01
Heating and Ventilation 412-02
Air Conditioning 412-03
Control Components 412-04

**Instrumentation and Warning Systems**
Instrument Cluster and Panel Illumination 413-00
Instrument Cluster 413-01
Horn 413-06
Information and Message Center 413-08
Warning Devices 413-09
Parking Aid 413-13

**Battery and Charging System**
Charging System - General Information 414-00
Battery, Mounting and Cables 414-01
Generator and Regulator 414-02

**Information and Entertainment Systems**
Information and Entertainment System - General Information 415-00
Audio Unit 415-01
Antenna 415-02

**Lighting**
Exterior Lighting 417-01
Interior Lighting 417-02

**Electrical Distribution**
Module Communications Network 418-00
Module Configuration 418-01

**Electronic Feature Group**
Anti-Theft - Active 419-01A
Anti-Theft - Passive 419-01B
Cellular Phone 419-08
Multifunction Electronic Modules 419-10

## GROUP 5 Body and Paint

**Body and Paint**
Body System - General Information 501-00
Front End Body Panels 501-02
Body Closures 501-03
Interior Trim and Ornamentation 501-05
Exterior Trim and Ornamentation 501-08
Rear View Mirrors 501-09
Seating 501-10
Glass, Frames and Mechanisms 501-11
Instrument Panel and Console 501-12

Handles, Locks, Latches and Entry Systems 501-14
Wipers and Washers 501-16
Bumpers 501-19
Safety Belt System 501-20A
Supplemental Restraint System 501-20B
Body Repairs - General Information 501-25
Body Repairs - Vehicle Specific Information and Tolerance Checks 501-26
Front End Sheet Metal Repairs 501-27
Roof Sheet Metal Repairs 501-28
Side Panel Sheet Metal Repairs 501-29
Rear End Sheet Metal Repairs 501-30
Paint - General Information 501-36

**Frame and Mounting**

Uni-Body, Subframe and Mounting System 502-00

To the best of our knowledge, the illustrations, technical information, data and descriptions in this issue were correct at the time of going to print. The right to change prices, specifications, equipment and maintenance instructions at any time without notice is reserved as part of FORD policy of continuous development and improvement for the benefit of our customers.

No part of this publication may be reproduced, stored in a data processing system or transmitted in any form, electronic, mechanical, photocopy, recording, translation or by any other means without prior permission of Ford-Werke Aktiengesellschaft. No liability can be accepted for any inaccuracies in this publication, although every possible care has been taken to make it as complete and accurate as possible.

Copyright ©

FORD-WERKE AKTIENGESELLSCHAFT

Service training programs D-F/GT-1

Printed in Germany - rewi druckhaus, Wissen
-

Printed on environmentally friendly chlorine-free paper. (GB)

GROUP

# 1

# General Information

SECTION TITLE PAGE

**Service Information**
General Information.....100-00
Identification Codes.....100-01
Jacking and Lifting.....100-02
Noise, Vibration and Harshness.....100-04

GROUP

# Chassis 2

SECTION TITLE PAGE


**Suspension**
Suspension System - General Information....204-00
Front Suspension....204-01
Rear Suspension....204-02
Wheels and Tires....204-04

**Driveline**
Front Drive Halfshafts....205-04

**Brake System**
Brake System - General Information....206-00
Drum Brake....206-02
Front Disc Brake....206-03
Rear Disc Brake....206-04
Parking Brake and Actuation....206-05
Hydraulic Brake Actuation....206-06
Power Brake Actuation....206-07
Anti-Lock Control....206-09A
Anti-Lock Control - Traction Control....206-09B
Anti-Lock Control - Stability Assist....206-09C

**Steering System**
Steering System - General Information....211-00
Power Steering....211-02
Steering Linkage....211-03
Steering Column....211-04
Steering Column Switches....211-05

GROUP

# 3

# Powertrain

SECTION TITLE PAGE


**Engine**

Engine System - General Information....303-00
Engine1.25L Duratec-16V (Sigma)/1.4L Duratec-16V (Sigma)/1.6L Duratec-16V (Sigma)....303-01A
Engine2.0L Duratec-HE (MI4)....303-01B
Engine Cooling1.3L Duratec-8V (Rocam)/1.25L Duratec-16V (Sigma)/1.4L Duratec-16V (Sigma)/1.6L Duratec-16V (Sigma)....303-03A
Engine Cooling2.0L Duratec-HE (MI4)....303-03B
Fuel Charging and Controls1.25L Duratec-16V (Sigma)/1.4L Duratec-16V (Sigma)/1.6L Duratec-16V (Sigma)....303-04A
Fuel Charging and Controls2.0L Duratec-HE (MI4)....303-04B
Accessory Drive....303-05
Starting System....303-06
Engine Ignition....303-07A
Engine Ignition2.0L Duratec-HE (MI4)....303-07B
Engine Emission Control1.3L Duratec-8V (Rocam)/1.25L Duratec-16V (Sigma)/1.4L Duratec-16V (Sigma)/1.6L Duratec-16V (Sigma)....303-08A
Engine Emission Control2.0L Duratec-HE (MI4)....303-08B
Intake Air Distribution and Filtering....303-12
Evaporative Emissions....303-13
Electronic Engine Controls....303-14

**Automatic Transmission/Transaxle**

Automatic Transmission/TransaxleVehicles With: 4-Speed Automatic Transmission (AW81-40)....307-01
Transmission/Transaxle CoolingVehicles With: 4-Speed Automatic Transmission (AW81-40)....307-02
Automatic Transmission/Transaxle External ControlsVehicles With: 4-Speed Automatic Transmission (AW81-40)....307-05

**Manual Transmission/Transaxle, Clutch and Transfer Case**

Manual Transmission/Transaxle and Clutch - General Information....308-00
Clutch....308-01
Clutch Controls....308-02
Manual Transmission/Transaxle....308-03
Manual Transmission/Transaxle External Controls....308-06

**Exhaust System**
Exhaust System....309-00
**Fuel System**
Fuel System - General Information....310-00
Fuel Tank and Lines....310-01
Acceleration Control1.3L Duratec-8V (Rocam)/1.25L Duratec-16V (Sigma)/1.4L Duratec-16V (Sigma)/1.6L Duratec-16V (Sigma)....310-02A
Acceleration Control2.0L Duratec-HE (MI4)....310-02B

GROUP

# 4

# Electrical

SECTION TITLE PAGE


**Climate Control System**
Climate Control System - General Information....412-00
Air Distribution and Filtering....412-01
Heating and Ventilation....412-02
Air Conditioning....412-03
Control Components....412-04

**Instrumentation and Warning Systems**
Instrument Cluster and Panel Illumination....413-00
Instrument Cluster....413-01
Horn....413-06
Information and Message Center....413-08
Warning Devices....413-09
Parking Aid....413-13

**Battery and Charging System**
Charging System - General Information....414-00
Battery, Mounting and Cables....414-01
Generator and Regulator....414-02

**Information and Entertainment Systems**
Information and Entertainment System - General Information....415-00
Audio Unit....415-01
Antenna....415-02

**Lighting**
Exterior Lighting....417-01
Interior Lighting....417-02

**Electrical Distribution**
Module Communications Network....418-00
Module Configuration....418-01

**Electronic Feature Group**
Anti-Theft - Active....419-01A
Anti-Theft - Passive....419-01B
Cellular Phone....419-08
Multifunction Electronic Modules....419-10

GROUP

# 5

# Body and Paint

SECTION TITLE PAGE


**Body and Paint**

Body System - General Information....501-00
Front End Body Panels....501-02
Body Closures....501-03
Interior Trim and Ornamentation....501-05
Exterior Trim and Ornamentation....501-08
Rear View Mirrors....501-09
Seating....501-10
Glass, Frames and Mechanisms....501-11
Instrument Panel and Console....501-12
Handles, Locks, Latches and Entry Systems....501-14
Wipers and Washers....501-16
Bumpers....501-19
Safety Belt System....501-20A
Supplemental Restraint System....501-20B
Body Repairs - General Information....501-25
Body Repairs - Vehicle Specific Information and Tolerance Checks....501-26
Front End Sheet Metal Repairs....501-27
Roof Sheet Metal Repairs....501-28
Side Panel Sheet Metal Repairs....501-29
Rear End Sheet Metal Repairs....501-30
Paint - General Information....501-36

**Frame and Mounting**

Uni-Body, Subframe and Mounting System....502-00

# SECTION 100-00 General Information

## VEHICLE APPLICATION:2006.0 Fiesta

CONTENTS PAGE

### DESCRIPTION AND OPERATION


About This Manual ..... 100-00-3
Introduction ..... 100-00-3
Special Tools ..... 100-00-3
Important Safety Instructions ..... 100-00-3
Warnings, Cautions and Notes in This Manual ..... 100-00-3
How to Use This Manual ..... 100-00-3
Special Tools and Torque Figures ..... 100-00-5
Health and Safety Precautions ..... 100-00-6
Introduction ..... 100-00-6
Acids and Alkalis ..... 100-00-6
Air Bags ..... 100-00-6
Air Conditioning Refrigerant ..... 100-00-6
Adhesives and Sealers ..... 100-00-7
Antifreeze ..... 100-00-8
Asbestos ..... 100-00-8
Battery Acids ..... 100-00-8
Brake and Clutch Linings and Pads ..... 100-00-8
Brake Fluids (Polyalkylene Glycols) ..... 100-00-8
Brazing ..... 100-00-8
Chemical Materials ..... 100-00-8
Chlorofluorocarbons (CFC) ..... 100-00-9
Clutch Fluids ..... 100-00-9
Clutch Linings and Pads ..... 100-00-9
Corrosion Protection Materials ..... 100-00-9
Cutting ..... 100-00-9
Dewaxing ..... 100-00-10
Dusts ..... 100-00-10
Electric Shock ..... 100-00-10
Engine Oils ..... 100-00-10
Exhaust Fumes ..... 100-00-10
Fibre Insulation ..... 100-00-10
Fire ..... 100-00-10
First Aid ..... 100-00-11
Fluoroelastomer ..... 100-00-11
Foams - Polyurethane ..... 100-00-11
Freon ..... 100-00-11
Fuels ..... 100-00-11
Gas Cylinders ..... 100-00-12
Gases ..... 100-00-12
Gaskets (Fluoroelastomer) ..... 100-00-12
General Workshop Tools and Equipment ..... 100-00-12
High Pressure Air, Lubrication and Oil Test Equipment ..... 100-00-13
Halon ..... 100-00-13
Legal Aspects ..... 100-00-13

Lubricants and Greases..... 100-00-13
Transmission Fluids..... 100-00-13
Noise..... 100-00-14
Noise Insulation Materials..... 100-00-14
O-Rings (Fluoroelastomer)..... 100-00-14
Paints..... 100-00-14
Pressurized Equipment..... 100-00-15
Solder..... 100-00-15
Solvents..... 100-00-15
Sound Insulation..... 100-00-15
Suspended Loads..... 100-00-15
Transmission Brake Bands..... 100-00-16
Underseal..... 100-00-16
Viton..... 100-00-16
Welding..... 100-00-16
Warning Symbols on Vehicles..... 100-00-17
White Spirit..... 100-00-18
Standard Workshop Practices..... 100-00-19
Vehicle in Workshop..... 100-00-19
Alternative Fuel..... 100-00-19
Alternative Fuel — Do's..... 100-00-19
Alternative Fuel — Do Nots..... 100-00-19
Towing the Vehicle..... 100-00-20
Connecting a Slave Battery Using Jumper Cables..... 100-00-20
Component Cleaning..... 100-00-21
Calibration of Essential Measuring Equipment..... 100-00-21
Solvents, Sealants and Adhesives..... 100-00-22
Introduction..... 100-00-22
Road/Roller Testing..... 100-00-23
Pre-Test Checks..... 100-00-23
Starting the Engine..... 100-00-23
Road or Roller Testing..... 100-00-23
Brake Testing..... 100-00-24

## DESCRIPTION AND OPERATION

# About This Manual

## Introduction

This manual has been written in a format that is designed to meet the needs of technicians worldwide. The objective is to use common formats and include similar content in each manual.

This manual provides general descriptions for accomplishing diagnosis and testing, service and repair work with tested, effective techniques. Following them will help assure reliability.

## Special Tools

The special tool(s) table provided at the beginning of each procedure shows all special tools required to carry out a repair. Where possible, illustrations are provided to assist in identifying the special tool required.

## Important Safety Instructions

Appropriate service methods and correct repair procedures are essential for the safe, reliable operation of all motor vehicles as well as the personal safety of the individual carrying out the work.

This manual cannot possibly anticipate all such variations and provide advice or cautions as to each. Anyone who departs from the instructions provided in this manual must first establish that he compromises neither his personal safety nor the vehicle integrity by his choice of methods, tools or components.

## Warnings, Cautions and Notes in This Manual

▲ **WARNING:Warnings are used to indicate that failure to follow a procedure correctly may result in personal injury.**

⚠ **CAUTION:Cautions are used to indicate that failure to follow a procedure correctly may result in damage to the vehicle or equipment being used.**

**NOTE:**Notes are used to provide additional essential information required to carry out a complete and satisfactory repair.

As you read through this manual, you will come across WARNINGS, CAUTIONS and NOTES.

A warning, caution or note is placed at the beginning of a series of steps if it applies to multiple steps. If the warning, caution or note only applies to one step, it is placed at the beginning of the specific step (after the step number).

## How to Use This Manual

This manual covers diagnosis and testing, service and repair procedures.

This manual is structured into groups and sections, with specific system sections collected together under their relevant group.

A group covers a specific portion of the vehicle. The manual is divided into five groups, General Information, Chassis, Powertrain, Electrical and Body and Paint. The number of the group is the first number of a section number.

Pages at the start of the manual list all sections available. Each section has a contents list detailing Specifications, Description and Operation, Diagnosis and Testing, In Vehicle Repairs, Disassembly and Assembly, Removal and Installation.

If components need to be removed or disassembled in sequence, the sequence will be identified numerically in a graphic and the corresponding text will be numbered accordingly.

All left and right-hand references to the vehicle are taken from a position sitting in the driver seat looking forward.

All left and right-hand references to the engine are taken from a position at the flywheel looking towards the front camshaft pulley.

Where appropriate, instructions will be given for the use of the diagnostic tool.

### Overview Procedures

Overview procedures contain an exploded view illustration(s). The numbered sequence within the illustration(s) indicate the order to be followed when removing/disassembling or when installing/assembling a component. Additional information, symbol(s) or a torque figure, may also be shown alongside the component.

There are ten symbols used to give additional information when removing/disassembling or when installing/assembling a component.

## DESCRIPTION AND OPERATION

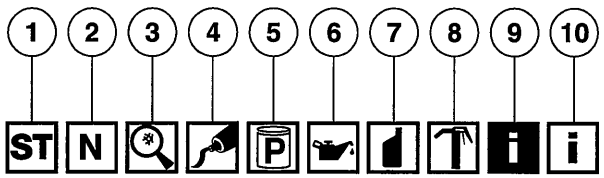


TIE42918

| Item | Designation | Description |
|---|---|---|
| 1 | Special tool | A special tool is required for this component. There will also be a removal or installation symbol alongside the special tool symbol. |
| 2 | Install new component | Discard the old component and install a new component. |
| 3 | Inspect | Check the component for damage. |
| 4 | Apply sealant | Apply sealant to the component as specified in the mate-rials table. |
| 5 | Apply petroleum jelly | Apply petroleum jelly to the component as specified in the materials table. |
| 6 | Apply oil | Apply oil to the component as specified in the materials table. |
| 7 | Apply fluid | Apply fluid to the component as specified in the materials table. |
| 8 | Apply grease | Apply grease to the component as specified in the mate-rials table. |
| 9 | Removal or Disassembly detail | Go to the removal or disassembly detail for additional information to remove or disassemble a component |
| 10 | Installation or Assembly detail | Go to the installation or assembly detail for additional information to install or assemble a component |

### Inspection and Verification

Visual Inspection Charts, Symptom Charts and other information charts (such as diagnostic routines) or supplement test procedures with technical specifications will navigate the user to a specific test procedure.

### Symptom Chart

The symptom chart indicates symptoms, sources and actions to address a condition.

### Pinpoint Tests

For electrical systems, pinpoint test steps are used to identify the source of a concern in a logical, step-by-step manner. pinpoint tests have two columns: CONDITIONS and DETAILS/RESULTS/ACTIONS.

The CONDITIONS column is used exclusively for graphics and icons (with or without captions) and the DETAILS/RESULTS/ACTIONS column provides direction to another test step or specific corrective actions.

The boxed numbers indicate the order in which the described action is to be performed.

# DESCRIPTION AND OPERATION

### Component Tests

A component test is used when a component is tested in multiple pinpoint tests, or if a procedure is too complicated to be formatted within a single page of the pinpoint test.

### Graphics

Test graphics show the measurement or test to be performed in a test step.

A representative tester graphic is used for voltmeters and ohmmeters.

If multiple measurements are made in a single graphic, the test leads are drawn with a solid line until the test lead splits to indicate the multiple measurements, at which point dashed lines are used.

Breakout box-type testers are represented by a double circle test pin. Test pins are labeled with the pin number.

## Special Tools and Torque Figures

Any requirement for special tools will picture the tool, showing it in use and with its tool number shown. Torque settings will be given at the relevant point in the procedure.

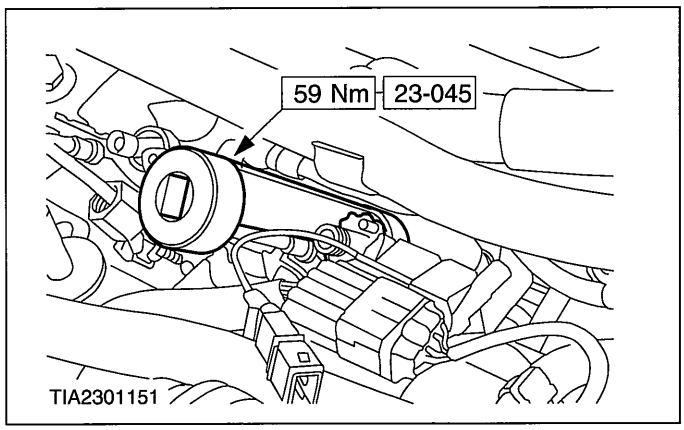

## DESCRIPTION AND OPERATION

# Health and Safety Precautions

## Introduction

Many of the procedures associated with vehicle maintenance and repair involve physical hazards or other risks to health. This subsection lists, alphabetically, some of these hazardous operations and the materials and equipment associated with them. Precautions necessary to avoid these hazards are identified.

The list is not exhaustive and all operations and procedures, and the handling of materials, should be carried out with health and safety in mind.

Before using any product the Materials Safety Data Sheet supplied by the manufacturer or supplier should be consulted.

## Acids and Alkalis

See also Battery Acids.

For example caustic soda, sulphuric acid.

Used in batteries and cleaning materials.

Irritant and corrosive to the skin, eyes, nose and throat. Cause burns. Can destroy ordinary protective clothing.

Avoid splashes to the skin, eyes and clothing. Wear suitable protective impervious apron, gloves and goggles. Do not breath mists.

Make sure access to eye wash bottles, shower and soap are readily available for splashing accidents.

Display Eye Hazard sign.

## Air Bags

See also Fire, Chemical Materials.

Highly flammable, explosive – observe No Smoking policy.

Used as a safety restraint system mounted in the steering wheel and passenger side of the instrument panel.

The inflator contains a high-energetic propellant which, when ignited, produces a VERY HOT GAS (2500°C).

The gas generant used in air bags is Sodium Azide. This material is hermetically sealed in the module and is completely consumed during deployment. No attempt should be made to open an air bag inflator as this will lead to the risk of exposure to Sodium Azide. If a gas generator is ruptured, full protective clothing should be worn when dealing with the spillage.

After normal deployment, gloves and safety goggles must be worn during the handling process.

Deployed air bags should be disposed of in a plastic bag in accordance with local regulations at an approved chemical waste site.

Following any direct contact with gas generant.

- wash affected areas thoroughly with water.
- seek medical assistance if necessary.

Air Bags - Do's

- Do store modules in an upright position.
- Do keep modules dry.
- Do carry modules with the cover side pointing away from the body.
- Do place modules with their cover side upwards.
- Do carefully inspect modules for damage.
- Do stand to one side when connecting modules.
- Do make sure all test equipment is properly calibrated and maintained.
- Do wash hands after handling deployed air bags.

Air Bags - Do Nots

- Do not store highly flammable material together with modules or gas generators.
- Do not store gas generators at temperatures exceeding 80°C.
- Do not store modules upside down.
- Do not attempt to open a gas generator housing.
- Do not expose gas generators to open flame or sources of heat.
- Do not place anything on top of a module cover.
- Do not use damaged modules.
- Do not touch a fired module or gas generator for at least 10 minutes.
- Do not use any electrical probes on the wiring circuit.

## Air Conditioning Refrigerant

See also Chlorofluorocarbon, Chemical Materials

Highly flammable, combustible – observe No Smoking policy.

## DESCRIPTION AND OPERATION

Skin contact may result in frostbite.

Instructions given by the manufacturer must be followed. Avoid naked lights, wear suitable protective gloves and goggles.

If refrigerant comes into contact with the skin or eyes, immediately rinse the affected areas with water. Eyes should also be rinsed with an appropriate irrigation solution and should not be rubbed. SEEK MEDICAL ASSISTANCE IF NECESSARY.

### Air Conditioning Refrigerant - Do Nots

- Do not expose refrigerant bottles to sunlight or heat.
- Do not stand refrigerant bottles upright; when filling, hold them with the valve downwards.
- Do not expose refrigerant bottles to frost.
- Do not drop refrigerant bottles.
- Do not vent refrigerant to atmosphere under any circumstance.
- Do not mix refrigerants, for example R12 (Freon) and R134a.

### Adhesives and Sealers

See also Fire, Chemical Materials.

Highly flammable, flammable, combustible – observe No Smoking policy.

Generally should be stored in No Smoking areas. Cleanliness and tidiness in use should be observed, for example disposable paper covering benches; should be dispensed from applicators where possible; containers, including secondary containers, should be labeled appropriately.

### Solvent-based Adhesives/Sealers - See Solvents

Follow manufacturers instructions.

### Water-based Adhesives/Sealers

Those based on polymer emulsions and rubber latexes may contain small amounts of volatile toxic and harmful chemicals. Skin and eye contact should be avoided and adequate ventilation provided during use.

### Hot Melt Adhesives

In the solid state, they are safe. In the molten state they may cause burns and health hazards may arise from the inhalation of toxic fumes.

Use appropriate protective clothing and a thermostatically controlled heater with a thermal cut-out and adequate extraction.

### Resin-based Adhesives/Sealers, for example Epoxide and Formaldehyde Resin-based

Mixing should be carried out in well ventilated areas, as harmful or toxic volatile chemicals may be released.

Skin contact with uncured resins and hardeners can result in irritation, dermatitis, and absorption of toxic or harmful chemicals through the skin. Splashes can damage the eyes.

Provide adequate ventilation and avoid skin and eye contact.

### Anaerobic, Cyanoacrylate (super-glues) and other Acrylic Adhesives

Many are irritant, sensitizing or harmful to the skin and respiratory tract. Some are eye irritants.

Skin and eye contact should be avoided and the manufacturers instructions followed.

Cyanoacrylate adhesives (super-glues) MUST NOT contact the skin or eyes. If skin or eye tissue is bonded, cover with a clean moist pad and SEEK IMMEDIATE MEDICAL ATTENTION. Do not attempt to pull tissue apart. Use in well ventilated areas as vapors can cause irritation to the nose and eyes.

For two-pack systems see Resin-based and Isocyanate Adhesives/Sealers.

### Isocyanate (Polyurethane) Adhesives/Sealers

See also Resin-based Adhesives.

Individuals suffering from asthma or respiratory allergies should not work with or near these materials as sensitivity reactions can occur.

Over exposure is irritating to the eyes and respiratory system. Excessive concentrations may produce effects on the nervous system including

## DESCRIPTION AND OPERATION

drowsiness. In extreme cases, loss of consciousness may result. Long term exposure to vapor concentrations may result in adverse health effects.

Prolonged contact with the skin may have a defatting effect which may lead to skin irritation and in some cases, dermatitis.

Splashes entering the eye will cause discomfort and possible damage.

Any spraying should preferably be carried out in exhaust ventilated booths, removing vapors and spray droplets from the breathing zone.

Wear appropriate gloves, eye and respiratory protection.

### Antifreeze

See also Fire, Solvents.

For example isopropanol, ethylene glycol, methanol.

Highly flammable, flammable, combustible.

Used in vehicle coolant systems, brake air pressure systems, screenwash solutions.

Vapors may be given off from coolant antifreeze (glycol) when heated. Avoid breathing these vapors.

Antifreeze may be absorbed through the skin in toxic or harmful quantities. Antifreeze, if swallowed, can be fatal and MEDICAL ATTENTION SHOULD BE SOUGHT IMMEDIATELY.

These products must not be used in any cooling or industrial water system that is connected or linked to general, food preparation or drinking water supplies.

### Asbestos

See also Warning Symbols on Vehicles at the end of this subsection.

Breathing asbestos dust may cause lung damage or, in some cases, cancer.

Used in brake and clutch linings, transmission brake bands and gaskets.

The use of drum cleaning units, vacuum cleaning or damp wiping is preferred.

Asbestos dust waste should be dampened, placed in a sealed container and marked for safe disposal. If any cutting or drilling is attempted on materials containing asbestos the item should be dampened and only hand tools or low speed power tools used.

### Battery Acids

See also Acids and Alkalis.

Gases released during charging are explosive. Never use naked flames or allow sparks near charging or recently charged batteries.

Make sure there is adequate ventilation.

### Brake and Clutch Linings and Pads

See Asbestos.

### Brake Fluids (Polyalkylene Glycols)

See also Fire.

Splashes to the skin and eyes are slightly irritating. Avoid skin and eye contact as far as possible. Inhalation vapor hazards do not arise at ambient temperatures because of the very low vapor pressure.

### Brazing

See Welding.

### Chemical Materials

See also Legal Aspects.

Chemical materials such as solvents, sealers, adhesives, paints, resin foams, battery acids, antifreeze, brake fluids, fuels, oils and grease should always be used with caution and stored and handled with care. They may be toxic, harmful, corrosive, irritant or highly flammable and give rise to hazardous fumes and dusts.

The effects of excessive exposure to chemicals may be immediate or delayed; briefly experienced or permanent; cumulative; superficial; life threatening; or may reduce life expectancy.

## DESCRIPTION AND OPERATION

### Chemical Materials - Do's

- Do carefully read and observe hazard and precaution warnings given on material containers (labels) and in any accompanying leaflets, posters or other instructions. Material health and safety data sheets can be obtained from manufacturers.
- Do remove chemical materials from the skin and clothing as soon as practicable after soiling. Change heavily soiled clothing and have it cleaned.
- Do organize work practices and protective clothing to avoid soiling of the skin and eyes; breathing vapors, aerosols, dusts or fumes; inadequate container labeling; fire and explosion hazards.
- Do wash before job breaks, before eating, smoking, drinking or using toilet facilities when handling chemical materials.
- Do keep work areas clean, uncluttered and free of spills.
- Do store chemical materials according to national and local regulations.
- Do keep chemical materials out of the reach of children.

### Chemical Materials - Do Nots

- Do not mix chemical materials except under the manufacturers instructions; some chemicals can form other toxic or harmful chemicals, give off toxic or harmful fumes or become explosive when mixed together.
- Do not spray chemical materials, particularly those based on solvents, in confined spaces, for example when people are inside a vehicle.
- Do not apply heat or flame to chemical materials except under the manufacturers instructions. Some are highly flammable and some may release toxic or harmful fumes.
- Do not leave containers open. Fumes given off can build up to toxic, harmful or explosive concentrations. Some fumes are heavier than air and will accumulate in confined areas such as pits.
- Do not transfer chemical materials to unlabelled containers.
- Do not clean hands or clothing with chemicals. Chemicals, particularly solvents and fuels, will dry the skin and may cause irritation leading to dermatitis or be absorbed through the skin in toxic or harmful quantities.
- Do not use emptied containers for other materials except when they have been cleaned under supervised conditions.
- Do not sniff or smell chemical materials. Brief exposure to high concentrations of fumes can be toxic or harmful.

### Chlorofluorocarbons (CFC)

There is concern in the scientific community that CFCs and Halons are depleting the upper ozone layer which filters out harmful ultraviolet radiation. Decreased filtration of ultraviolet radiation may result in increases in skin cancer, cataracts and immune system suppression in humans, as well as decreased productivity of crops and aquatic systems.

CFCs are used primarily as refrigerants in vehicle air conditioning systems and as aerosol propellants. Halons are used as fire extinguishants.

### Clutch Fluids

See Brake fluids.

### Clutch Linings and Pads

See Asbestos.

### Corrosion Protection Materials

See also Solvents, Fire.

Highly flammable, flammable – observe No Smoking policy.

These materials are varied and the manufacturers instructions must be followed. They may contain solvents, resins or petroleum products. Skin and eye contact should be avoided. They should only be sprayed in conditions of adequate ventilation and not in confined spaces.

### Cutting

See Welding.

## DESCRIPTION AND OPERATION

### Dewaxing

See Solvents and Fuels (Kerosene).

### Dusts

Powder, dusts or clouds may be irritant, harmful or toxic. Avoid breathing dusts from powdery chemical materials or those arising from dry abrasion operations. Wear respiratory protection if ventilation is inadequate.

Fine dusts of combustible material can present an explosion hazard. Avoid explosive limits and sources of ignition.

### Electric Shock

Electric shock can result from the use of faulty electrical equipment or from the misuse of equipment in good condition.

Make sure that electrical equipment is maintained in good condition and frequently tested. Faulty equipment should be labeled and preferably removed from the workstation.

Make sure that flexes, cables, plugs and sockets are not frayed, kinked, cut, cracked or otherwise damaged.

Make sure that electrical equipment and flexes do not come into contact with water.

Make sure that electrical equipment is protected by the correct rated fuse.

Never misuse electrical equipment and never use equipment that is in any way faulty. The results could be fatal.

Make sure that the cables of mobile electrical equipment cannot get trapped and damaged, such as in a vehicle hoist.

Make sure that the designated electrical workers are trained in basic First Aid.

In cases of electrocution:

- switch off the power supply before approaching the victim.
- if this is not possible push or drag the victim from the source of electricity using dry non-conductive material.
- commence resuscitation if trained to do so.
- SUMMON MEDICAL ASSISTANCE.

### Engine Oils

See Lubricants and Grease.

### Exhaust Fumes

These contain asphyxiating, harmful and toxic chemicals and particles such as carbon oxides, nitrogen oxides, aldehydes, lead and aromatic hydrocarbons. Engines should be run only under conditions of adequate exhaust extraction or general ventilation and not in confined spaces.

#### Gasoline (petrol) engine

There may not be adequate warning of odor or of irritation before toxic or harmful effects arise. These may be immediate or delayed.

#### Diesel engine

Soot, discomfort and irritation usually give adequate warning of hazardous fume concentrations.

### Fibre Insulation

See also Dusts.

Used in noise and sound insulation.

The fibrous nature of surfaces and cut edges can cause skin irritation. This is usually a physical and not a chemical effect.

Precautions should be taken to avoid excessive skin contact through careful organization of work practices and the use of gloves.

### Fire

See also Welding, Foams, Legal Aspects.

Many of the materials found on or associated with the repair of vehicles are highly flammable. Some give off toxic or harmful fumes if burnt.

Observe strict fire safety when storing and handling flammable materials or solvents, particularly near electrical equipment or welding processes.

Make sure, before using electrical or welding equipment, that there is no fire hazard present.

Have a suitable fire extinguisher available when using welding or heating equipment.

## DESCRIPTION AND OPERATION

### First Aid

Apart from meeting any legal requirements it is desirable for someone in the workshop to be trained in First Aid procedures.

Splashes in the eye should be flushed carefully with clean water for at least ten minutes.

Soiled skin should be washed with soap and water.

In case of cold burns, from alternative fuels, place affected area in cool to cold water.

Individuals affected by inhalation of gases and fumes should be removed to fresh air immediately. If effects persist, consult a doctor.

If liquids are swallowed inadvertently, consult a doctor giving him the information on the container or label. Do not induce vomiting unless this action is indicated on the label.

### Fluoroelastomer

See Viton.

### Foams - Polyurethane

See also Fire.

Used in sound and noise insulation. Cured foams used in seat and trim cushioning.

Follow manufacturers instructions.

Unreacted components are irritating and may be harmful to the skin and eyes. Wear gloves and goggles.

Individuals with chronic respiratory diseases, asthma, bronchial medical problems, or histories of allergic diseases should not work in or near uncured materials.

The components, vapors or spray mists can cause direct irritation, sensitivity reactions and may be toxic or harmful.

Vapors and spray mists must not be inhaled. These materials must be applied with adequate ventilation and respiratory protection. Do not remove the respirator immediately after spraying; wait until the vapors/mists have cleared.

Burning of the uncured components and the cured foams can generate toxic and harmful fumes. Smoking, naked flames or the use of electrical equipment during foaming operations and until vapors/mists have cleared should not be allowed. Any heat cutting of cured foams or partially cured foams should be conducted with extraction ventilation. See also the vehicle Body Repair Manual.

### Freon

See Air Conditioning Refrigerant.

### Fuels

See also, Fire, Legal Aspects, Chemicals and Solvents.

Avoid skin contact with fuel where possible. Should contact occur, wash the affected skin with soap and water.

#### Gasoline (Petrol)

Highly flammable - observe No Smoking policy.

Swallowing can result in mouth and throat irritation and absorption from the stomach can result in drowsiness and unconsciousness. Small amounts can be fatal to children. Aspiration of liquid into the lungs, through vomiting, is a very serious hazard.

Gasoline dries the skin and can cause irritation and dermatitis on prolonged or repeated contact. Liquid in the eye causes severe smarting.

Motor gasoline may contain appreciable quantities of benzene, which is toxic upon inhalation, and the concentration of gasoline vapors must be kept very low. High concentrations will cause eye, nose and throat irritation, nausea, headache, depression and symptoms of drunkenness. Very high concentrations will result in rapid loss of consciousness.

Make sure there is adequate ventilation when handling and using gasoline. Great care must be taken to avoid the serious consequences of inhalation in the event of vapor build up arising from spillages in confined spaces.

Special precautions apply to cleaning and maintenance operations on gasoline storage tanks.

Gasoline should not be used as a cleaning agent. It must not be siphoned by mouth. See First Aid.

#### Gas-oil (Diesel Fuel)

Combustible.

## DESCRIPTION AND OPERATION

Gross or prolonged skin contact with high boiling point gas oils may also cause serious skin disorders including skin cancer.

### Kerosene (Paraffin)

Used also as heating fuel, solvent and cleaning agent.

Flammable - observe No Smoking policy.

Irritation of the mouth and throat may result from swallowing. The main hazard from swallowing arises if liquid aspiration into the lungs occurs.

Liquid contact dries the skin and can cause irritation or dermatitis. Splashes in the eye may be slightly irritating.

In normal circumstances the low volatility does not give rise to harmful vapors. Exposure to mists and vapors from kerosene at elevated temperature should be avoided (mists may arise in dewaxing). Avoid skin and eye contact and make sure there is adequate ventilation.

### Alternative Fuel

Highly flammable. Observe ``NO SMOKING" signs.

Make sure there is adequate ventilation when working on alternative fuelled vehicles. Great care must be taken to avoid the serious consequences of inhalation in the event of vapor build up in confined spaces.

Inhalation in high concentrations may cause dizziness, headache, nausea and loss of co-ordination. Very high concentrations may result in loss of consciousness.

Contact with liquefied petroleum gas (LPG) or compressed natural gas (CNG) to the skin may cause cold burns and frost bite.

Long sleeved cotton overalls, steel toe capped safety boots and rubber neoprene gloves should be worn during removal and installation of LPG/CNG fuel system components.

LPG/CNG fuel leaks could cause a fire and be a hazard to health that can lead to personal injury, illness or even death.

If a leak is detected, under no circumstances attempt to seal the leak by tightening the union/connection until the fuel in the system or component is depressurized. Once tightened the system should be checked for integrity following the specified procedures.

If the fuel tank is to be removed for service or repair the fuel must be evacuated using dedicated equipment and following the specified procedures.

### Gas Cylinders

See also Fire.

Gases such as oxygen, acetylene, argon and propane are normally stored in cylinders at pressures of up to 138 bar (2000 psi) and great care should be taken in handling these cylinders to avoid mechanical damage to them or to the valve gear attached. The contents of each cylinder should be clearly identified by appropriate markings.

Cylinders should be stored in well-ventilated enclosures, and protected from ice and snow, or direct sunlight. Fuel gases, for example acetylene and propane, should not be stored in close proximity to oxygen cylinders.

Care should be exercised to prevent leaks from gas cylinders and lines, and to avoid sources of ignition.

Only trained personnel should undertake work involving gas cylinders.

### Gases

See Gas Cylinders.

### Gaskets (Fluoroelastomer)

See Viton.

### General Workshop Tools and Equipment

It is essential that all tools and equipment are maintained in good condition and that the correct safety equipment is used where required.

Never use tools or equipment for any purpose other than that for which they were designed. Never overload equipment such as hoists, jacks, axle and chassis stands or lifting slings. Damage caused by overloading is not always immediately apparent and may result in a fatal failure the next time that the equipment is used.

## DESCRIPTION AND OPERATION

Do not use damaged or defective tools or equipment, particularly high-speed equipment such as grinding wheels. A damaged grinding wheel can disintegrate without warning and cause serious injury.

Wear suitable eye protection when using grinding, chiseling or sand blasting equipment.

Wear a suitable breathing mask when using abrasive blasting equipment, working with asbestos-based materials or using spraying equipment.

Make sure there is adequate ventilation to control dusts, mists and fumes.

### High Pressure Air, Lubrication and Oil Test Equipment

See also Lubricants and Greases.

Always keep high-pressure equipment in good condition, and regularly maintained, particularly at joints and unions.

Never direct a high-pressure nozzle, for example diesel injector, at the skin as the fluid may penetrate to the underlying tissue, and cause serious injury.

### Halon

See CFCs.

### Legal Aspects

There are many laws and regulations relating to health and safety in the use and disposal of materials and equipment in a workshop.

For a safe working environment and to avoid environmental pollution, workshops should be familiar, in detail, with the many health and safety laws and regulations within their country, published by both national and local authorities.

### Lubricants and Greases

Avoid all prolonged and repeated contact with mineral oils. All lubricants and greases may be irritating to the eyes and skin.

### Transmission Fluids

#### Safety instructions

Certain Transmission and Power Steering fluids supplied to Ford may contain additives which have the potential to cause skin disease (dermatitis) to exposed persons. The dermatitis may be irritant or allergic in nature. Risks are higher where prolonged or repeated skin contact with a fluid may occur. These fluids are used for vehicle initial fill and service purposes. This sub-section is to:

- Inform Service personnel who may come into contact with these vehicle fluids (hazard communication).
- Summarise appropriate workplace control measures and personal protective equipment requirements.
- Draw attention to the existence of Material Safety Datasheets (MSDS's) for the fluids (available from Ford Customer Service Division). These MSDS's contain detailed information on hazards and appropriate controls.

#### Control measures

Workplace risk assessments made under national chemical control regulations should identify operations involving the fluids as potentially hazardous and specify workplace control and worker awareness measures. In such circumstances, the relevant Material Safety Datasheet (see the details specified below) which specifies hazards and control measures in detail should be made available for guidance.

Avoid unprotected skin contact with the fluids, and in particular, avoid prolonged or repeated skin contact. Work practices should be organised so as to minimise the potential for skin contact. This may include the use of drip trays, absorbents, correct fluid handling equipment (funnels etc), and workplace housekeeping measures such as the cleaning of contaminated surfaces.

Personnel engaged in operations where skin contact could occur (such as fluid draining or filling) should wear impervious gloves made from nitrile rubber, certified to a chemical protection standard, e.g. Europe Standard EN374. This glove type is widely available from reputable suppliers of gloves for chemical protection [including the manufacturers Ansell-Admont (Solvex Range), North Safety products (North Nitrile Latex Gloves range), and

## DESCRIPTION AND OPERATION

Marigold Industrial (Blue Nitrile range)]. If gloves become torn or contaminated on the inside they should be replaced. Eye protection with safety glasses is appropriate. Use of an impervious apron and arm protectors may be necessary if more extensive exposure is possible. Use of skin barrier creams suitable for work with mineral oil products may offer some supplementary protection, but such barrier creams should not be used in place of protective clothing.

If accidental skin contact occurs with the fluids, wash the area thoroughly with soap or skin cleanser and water.

Accidental eye contact should be dealt with as per normal first aid practices, by flushing the eyes with an eye wash or clean cool water for 10 minutes, after which medical attention should be obtained.

Remove and launder clothing which becomes contaminated with the fluids. Do not place rags contaminated with fluid in clothing pockets.

Wash thoroughly after completing operations where skin exposure may have occurred.

It is important that personnel do not smoke, eat or drink whilst handling the fluids or affected transmissions. These measures are designed to limit the risk from accidental ingestion.

Label any decanted fluid properly/use an equivalent label to that on original product containers.

Clean up any spills promptly using an inert absorbent and wash down contaminated surfaces with detergent and water.

Dispose of any waste fluids safely as hazardous waste.

### Safety Data Sheets

Safety Data Sheets, which detail specific material handling instructions and precautions are available from the respective national sales company, and via internet www.msds.ford.com.

### Used Engine Oil

Prolonged and repeated contact with mineral oil will result in the removal of natural fats from the skin, leading to dryness, irritation and dermatitis. In addition, used engine oil contains potentially harmful contaminants, which may cause skin cancer. Adequate means of skin protection and washing facilities must be provided.

Do not employ used engine oils as lubricants or for any application where appreciable skin contact is likely to occur.

### Environmental Precautions

Burning used engine oil in small space heaters or boilers can be recommended only for units of approved design. If in doubt check with the appropriate local authority and manufacturer of approved appliances.

Dispose of used oil and used oil filters through authorized waste disposal contractors or licensed waste disposal sites, or to the waste oil reclamation trade. If in doubt, contact the relevant local authority for advice on disposal facilities.

It is illegal to pour used oil on to the ground, down sewers or drains, or into watercourses.

### Noise

Some operations may produce high noise levels, which could, in time, damage hearing. In these cases, suitable ear protection must be worn.

### Noise Insulation Materials

See Foams, Fibre Insulation.

### O-Rings (Fluoroelastomer)

See Viton.

### Paints

See also Solvents, Chemical Materials.

Highly flammable, flammable - observe No Smoking policy

### One Pack

Can contain harmful or toxic pigments, driers and other components as well as solvents. Spraying should be carried out only with adequate ventilation.

## DESCRIPTION AND OPERATION

### Two Pack

Can also contain harmful and toxic unreacted resins and resin hardening agents. The manufacturers instructions should be followed. See also Resin-based Adhesives and Isocyanate Adhesives and Sealers under Adhesives and Sealers.

Spraying should preferably be carried out in exhausted ventilated booths removing vapor and spray mists from the breathing zone. Individuals working in booths should wear appropriate respiratory protection. Those doing small-scale repair work in the open workshop should wear air-fed respirators.

### Pressurized Equipment

See High Pressure Air, Lubrication and Oil Test Equipment.

### Solder

Solders are mixtures of metals such that the melting point of the mixture is below that of the constituent metals (normally lead and tin). Solder application does not normally give rise to toxic lead fumes, provided a gas/air flame is used. Oxy-acetylene flames should not be used, as they are much hotter and will cause lead fumes to be produced.

Some fumes may be produced by the application of any flame to surfaces coated with grease, and inhalation of these should be avoided.

Removal of excess solder should be undertaken with care, to make sure that fine lead dust is not produced, which can give toxic effects if inhaled. Respiratory protection may be necessary.

Solder spillage and filings should be collected and removed promptly to prevent general air contamination by lead.

High standards of personal hygiene are necessary in order to avoid ingestion of lead or inhalation of solder dust from clothing.

### Solvents

See also Chemical Materials, Fuels (Kerosene), Fire.

For example acetone, white spirit, toluene, xylene, trichloroethane.

Used in cleaning and dewaxing materials, paints, plastics, resins and thinners.

Some may be highly flammable or flammable.

Skin contact will degrease the skin and may result in irritation and dermatitis following repeated or prolonged contact. Some can be absorbed through the skin in toxic or harmful quantities.

Splashes in the eye may cause severe irritation and could lead to loss of vision.

Brief exposure of high concentrations of vapors or mists will cause eye and throat irritation, drowsiness, dizziness, headaches and, in the worst circumstances, unconsciousness.

Repeated or prolonged exposure to excessive but lower concentrations of vapors or mists, for which there might not be adequate warning indications, can cause more serious toxic or harmful effects.

Aspiration into the lungs, for example through vomiting, is the most serious consequence of swallowing.

Avoid splashes to the skin, eyes and clothing. Wear protective gloves, goggles and clothing if necessary.

Make sure there is good ventilation when in use, avoid breathing fumes, vapors and spray mists and keep containers tightly sealed. Do not use in confined spaces.

When spraying materials containing solvents, for example paints, adhesive, coatings, use extraction ventilation or personal respiratory protection in the absence of adequate general ventilation.

Do not apply heat or flame except under specific and detailed manufacturers instructions.

### Sound Insulation

See Fibre Insulation, Foams.

### Suspended Loads

⚠ **CAUTION:Never improvise lifting tackle.**

There is always a danger when loads are lifted or suspended. Never work under an unsupported, suspended or raised load, for example a suspended engine.

Always make sure that lifting equipment such as jacks, hoists, axle stands and slings are adequate and suitable for the job, in good condition and regularly maintained.

# DESCRIPTION AND OPERATION

## Transmission Brake Bands

See Asbestos.

## Underseal

See Corrosion Protection.

## Viton

In common with many other manufacturers vehicles, some components have O-rings, seals or gaskets, which contain a material known as `Viton'.

Viton is a fluoroelastomer, that is a synthetic rubber type material, which contains Fluorine. It is commonly used for O-rings, gaskets and seals of all types. Although Viton is the most well known fluoroelastomer, there are others, including Fluorel and Tecmoflon.

When used under design conditions fluoroelastomers are perfectly safe. If, however, they are exposed to temperatures in excess of 400°C, the material will not burn, but will decompose, and one of the products formed is hydrofluoric acid.

This acid is extremely corrosive and may be absorbed directly, through contact, into the general body system.

O-rings, seals or gaskets which have been exposed to very high temperatures will appear charred or as a black sticky substance.

DO NOT; under any circumstances touch them or the attached components.

Enquiries should be made to determine whether Viton or any other fluoroelastomer has been used in the affected O-ring, seal or gasket. If they are of natural rubber or nitrile there is no hazard. If in doubt, be cautious, as the material may be Viton or any fluoroelastomer.

If Viton or any other fluoroelastomers have been used, the affected area should be decontaminated before the commencement of work.

Disposable heavy duty plastic gloves should be worn at all times, and the affected area washed down using wire wool and a limewater (calcium hydroxide) solution to neutralize the acid before disposing of the decomposed Viton residue and final cleaning of the area. After use, the plastic gloves should be discarded carefully and safely.

## Welding

See also Fire, Electric Shock, Gas Cylinders.

Welding processes include Resistance Welding (Spot Welding), Arc Welding and Gas Welding.

### Resistance Welding

This process may cause particles of molten metal to be emitted at a high velocity, and the eyes and skin must be protected.

### Arc Welding

This process emits a high level of ultra-violet radiation, which may cause arc-eye, and skin burns to the operator and to other persons nearby. Gas-shielded welding processes are particularly hazardous in this respect. Personal protection must be worn, and screens used to shield other people.

CONTACT LENS WEARERS ARE ADVISED TO REVERT TO ORDINARY SPECTACLES WHEN ARC WELDING as the arc spectrum is believed to emit microwaves which dry out the fluid between the lens and the eye. This may result in blindness when the lens is removed from the eye.

Metal spatter will also occur, and appropriate eye and skin protection is necessary.

The heat of the welding arc will produce fumes and gases from the metals being welded, the rods and from any applied coatings or contamination on the surfaces being worked on. These gases and fumes may be toxic and inhalation of these should be avoided. The use of extraction ventilation to remove the fumes from the working area may be necessary particularly in cases where the general ventilation is poor, or where considerable welding work is anticipated. In extreme cases or confined spaces where adequate ventilation cannot be provided, air-fed respirators may be necessary.

### Gas Welding (and Cutting)

Oxy-acetylene torches may be used for welding and cutting, and special care must be taken to prevent leakage of these gases, with consequent risk of fire and explosion.

The process will produce metal spatter and eye and skin protection is necessary.

## DESCRIPTION AND OPERATION

The flame is bright, and eye protection should be used, but the ultra-violet emission is much less than that from arc welding, and lighter filters may be used.

The process itself produces few toxic fumes, but such fumes and gases may be produced from coatings on the work, particularly during cutting away of damaged body parts, and inhalation of the fumes should be avoided.

In brazing, toxic fumes may be produced from the metals in the brazing rod, and a severe hazard may arise if brazing rods containing cadmium are used. In this event particular care must be taken to avoid inhalation of fumes and expert advice may be required.

SPECIAL PRECAUTIONS MUST BE TAKEN BEFORE ANY WELDING OR CUTTING TAKES PLACE ON VESSELS, WHICH HAVE CONTAINED COMBUSTIBLE MATERIALS, FOR EXAMPLE BOILING OR STEAMING OUT OF FUEL TANKS.

### Warning Symbols on Vehicles

Decals showing warning symbols will be found on various vehicle components.

These decals must not be removed. The warnings are for the attention of owners/operators and persons carrying out service or repair operations on the vehicle.

The most commonly found decals are reproduced below together with an explanation of the warnings.

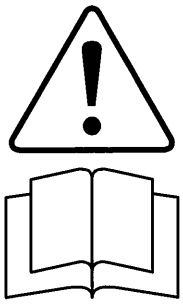

TIM0101001

1. Components or assemblies displaying the caution triangle and open book symbol advise consultation of the relevant section of the owner literature before touching or attempting adjustments of any kind.

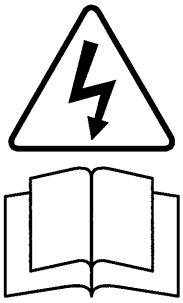

TIM0101002

2. Components or assemblies displaying the warning triangle with the `electrified' arrow and open book symbol give warning of inherent high voltages. Never touch these with the engine running or the ignition switched on. See Electric Shock in this subsection.

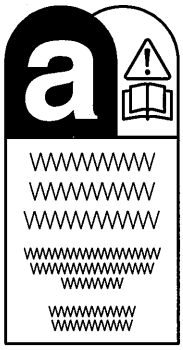

TIM0101003

3. Vehicles and replacement components which contain asbestos are identified by this symbol. See Asbestos in this subsection.

TIM0101004

4. Components or assemblies displaying this symbol give warning that the component contains a corrosive substance. See Acids and Alkalis in this subsection.

## DESCRIPTION AND OPERATION

TIM0101005

5. Displaying the caution circle with a deleted lighted match symbol, caution against the use of naked lights or flames within the immediate vicinity due to the presence of highly flammable or explosive liquids or vapors. See Fire in this subsection.

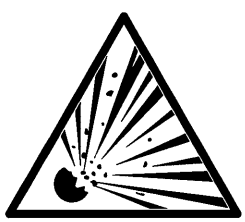

TIM0101006

6. Displaying this symbol (normally in conjunction with 5 above) warn of the presence of potentially explosive matter within the immediate vicinity.

TIM0101008

7. Displaying this symbol warn that children should not be allowed in the immediate vicinity unsupervised.

### White Spirit

See Solvents.

## DESCRIPTION AND OPERATION

# Standard Workshop Practices

### Vehicle in Workshop

When working on a vehicle in the workshop always make sure that:

- the parking brake is applied or the wheels are securely chocked to prevent the vehicle moving forwards or backwards.
- the key is removed from key operated hood locks before any work is carried out around the front of the vehicle.
- if the engine is to be run, there is adequate ventilation, or an extraction hose to remove exhaust fumes.
- there is adequate room to raise the vehicle and remove the wheels, if necessary.
- fender covers are always fitted if any work is to be carried out in the engine compartment.
- the battery is disconnected if working on the engine, underneath the vehicle, or if the vehicle is raised.

⚠ **CAUTION:When electric arc welding on a vehicle, always disconnect the generator wiring to prevent the possibility of a surge of current causing damage to the internal components of the generator.**

- if using welding equipment on the vehicle, a suitable fire extinguisher is readily available.

### Alternative Fuel

▲ **WARNING:When servicing the fuel system always follow the recommended procedures. Failure to follow these instructions may result in personal injury.**

If the odor of liquefied petroleum gas (LPG) or compressed natural gas (CNG) is present in the air in the workshop, warn all persons in the area to:

- extinguish all flames and lighted tobacco.
- shut off electrical and air powered equipment.
- evacuate the area.
- ventilate the area.
- contact the fire control authorities.
- remove the vehicle to a dedicated, ventilated area.

### Alternative Fuel — Do's

- Do work on the vehicle in a designated area, that is well ventilated and with access restricted to qualified personnel only.
- Install new warning labels to their original locations.
- If possible always isolate the alternative fuel tank, and run the vehicle on the alternative fuel until it automatically switches to its normal fuel prior to taking the vehicle into the workshop service area.
- Only use tested and approved components and pipes when repairing or servicing LPG and CNG systems.

### Alternative Fuel — Do Nots

- Do not vent off LPG fuel.
- Do not use shop air pressure to force LPG fuel from the fuel tank.
- Do not use paint drying ovens above 40°C for any alternative fuel vehicle. LPG and CNG fuel tanks must be removed from the vehicle prior to being put into paint drying ovens above 40°C.
- Do not modify the system or install new components that are not designed for gas vehicles.
- Do not evacuate fuel tanks unless there is repair that requires the removal of the fuel tank.
- Do not work on the fuel lines or system components unless the alternative fuel has been evacuated and the pressure in the system reduced to atmospheric or less.
- Do not use anything other than the specified leak detector fluid to trace fuel leaks.

Be aware of situations that may cause the LPG or CNG fuel system to vent off fuel, such as:

- extremely hot days.
- parking by a space heater.
- hoisting a vehicle up near a ceiling heater.

Only fully trained personnel, who are conversant with local standards, are to work on alternative fuel vehicles.

## DESCRIPTION AND OPERATION

### Towing the Vehicle

**WARNING:When the vehicle is being towed, the ignition switch must be in position II (steering lock released and warning lamps illuminated). Only then will the steering, turn signal lamps, horn and stop lamps be operational. Failure to follow these instructions may result in personal injury.**

**NOTE:**The removable towing eye (if equipped), has a left-hand thread and must be fully tightened before towing can commence.

When towing is necessary, the vehicle towing eyes should be used. The rope must be securely fastened to the towing eyes and must also be attached to the other vehicle such that the rope will not foul the bodywork.

When a vehicle with automatic transmission is towed, the gear selector must be in position N (Neutral). Never tow a vehicle with automatic transmission at a speed greater than 30 mph (50 km/h) or for a distance greater than 30 miles (50 km). If it is necessary to tow the vehicle a greater distance, the drive wheels must be lifted clear off the ground.

Alternatively the vehicle can be transported on a low loader or a trailer.

### Connecting a Slave Battery Using Jumper Cables

**WARNING:If the slave battery has recently been charged and is gassing, cover the vent plugs or covers with a damp cloth to reduce the risk of explosion should arcing occur when connecting the jumper cables. Failure to follow these instructions may result in personal injury.**

**CAUTIONS:**

**A discharged battery condition may have been caused by an electrical short circuit. If this condition exists there will be an apparently live circuit on the vehicle even when all normal circuits are switched off. This can cause arcing when the jumper cables are connected.**

**While it is not recommended that the vehicle is jump started, it is recognized that this may occasionally be the only practical way to mobilize a vehicle. In such an instance, the discharged battery must be recharged immediately after jump starting to avoid permanent damage.**

- Always make sure that the jumper cables are adequate for the task. Heavy duty cables must be used.
- Always make sure that the slave battery is of the same voltage as the vehicle battery. The batteries must be connected in parallel.
- Always make sure that switched electric circuits are switched off before connecting jumper cables. This reduces the risk of arcing occurring when the final connection is made.

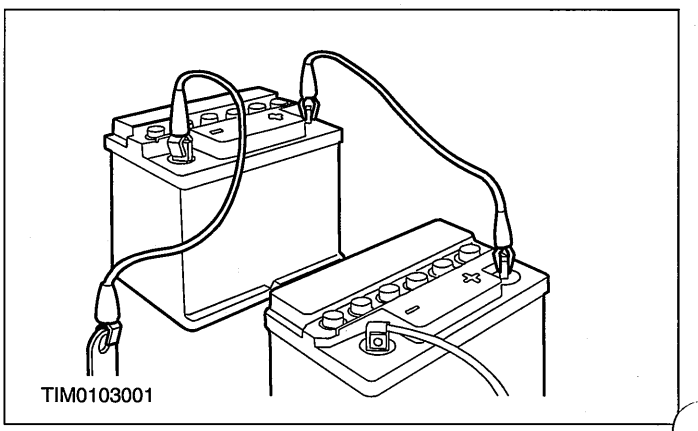


**WARNING:Make sure that the ends of the jumper cables do not touch each other or ground against the vehicle body at any time while the cables are attached to the battery. A fully charged battery, if shorted through jumper cables, can discharge at a rate well above 1000 amps causing violent arcing and very rapid heating of the jumper cables and terminals, and can even cause the battery to explode. Failure to follow these instructions may result in personal injury.**

Always connect the jumper cables in the following sequence:

- Slave battery positive first and then vehicle battery positive.
- Slave battery negative next and then vehicle ground at least 12 inches (300 mm) from the battery terminal, for example engine lifting eye.

Always reduce the engine speed to idle before disconnecting the jumper cables.

Before removing the jumper cables from the vehicle that had the discharged battery, switch on the heater blower (high) or the heated rear window, to reduce the voltage peak when the cables are removed.

## DESCRIPTION AND OPERATION

Always disconnect the jumper cables in the reverse order to the connecting sequence and do not short the ends of the cables.

Do not rely on the generator to restore a discharged battery. For a generator to recharge a battery, it would take in excess of eight hours continuous driving with no additional loads placed on the battery.

### Component Cleaning

To prevent the ingress of dirt, accumulations of loose dirt and greasy deposits should be removed before disconnecting or dismantling components or assemblies.

Components should be thoroughly cleaned before inspection prior to reassembly.

#### Cleaning Methods:

- Dry cleaning.
- Removal of loose dirt with soft or cable brushes.
- Scraping dirt off with a piece of metal or wood.
- Wiping off with a rag.

▲ **WARNING:Wear eye protection when cleaning vehicle components with compressed air, a steam cleaner or a power washer. Failure to follow this instruction may result in personal injury.**

**CAUTIONS:**

⚠ **Compressed air is sometimes 'wet' so use with caution, especially on hydraulic systems.**

⚠ **To prevent damage to the electrical connectors in the engine compartment, do not use a steam cleaner or a power washer to clean the engine compartment.**

- Blowing dirt off with compressed air.
- Removal of dry dust using vacuum equipment. This method must always be used to remove friction lining material dust (asbestos particles).
- Steam cleaning.

▲ **WARNING:Most solvents require careful handling and some are harmful. Refer to Health and Safety Precautions and to the manufacturers literature for the relevant safety precautions. Failure to follow these instructions may result in personal injury.**

Various solvents are available which are suitable for component cleaning. Some components, such as brake hydraulic parts and electrical assemblies should be cleaned only with recommended solvents — refer to Solvents, Sealers and Adhesives or to the section of the manual relevant to the component.

### Calibration of Essential Measuring Equipment

▲ **WARNING:Equipment, which requires regular calibration, must be calibrated in accordance with the manufacturers instructions. Failure to follow this instruction may result in personal injury or damage to components.**

It is of fundamental importance that certain essential equipment, for example torque wrenches, multimeters, exhaust gas analyzers or rolling roads, are regularly calibrated in accordance with the manufacturers instructions.

## DESCRIPTION AND OPERATION

# Solvents, Sealants and Adhesives

## Introduction

**WARNING:Always handle all solvents, sealers and adhesives with extreme care. Some contain chemicals or give off fumes which can be dangerous to health. Always follow the manufacturers instructions. If in doubt about any substance, particularly a solvent, DO NOT use it.**

**CAUTION:If in doubt about the suitability of any proprietary solvent or sealer for a particular application, contact the manufacturer of the product for information regarding storage, handling and application.**

The Health and Safety Precautions subsection refers to some commonly used chemicals and materials, hazards associated with their use, and safety measures to be taken.

## DESCRIPTION AND OPERATION

# Road/Roller Testing

Road or roller testing may be carried out for various reasons and a procedure detailing pre-test checks, engine starting and stopping, pre-driving checks, on-test checks and final checks to be completed on completion of the test is given below.

Unless complete vehicle performance is being checked, the full road test procedure need not be carried out. Instead, those items particularly relevant to the system(s) being checked can be extracted.

## Pre-Test Checks

**WARNING:If the brake system hydraulic fluid level is low, pedal travel is excessive or a hydraulic leak is found, do not attempt to road test the vehicle until the reason for the low fluid level, excessive pedal travel or hydraulic leak is found and rectified.**

It is suggested that pre-test checks and functional tests of those systems and circuits which affect the safe and legal operations of the vehicle, such as brakes, lights and steering, should always be carried out before the road or roller test.

With the ignition switched off, check:

- the engine oil level.
- the engine coolant level.
- the tires, for correct pressure, compatible types and tread patterns, and wear within limits.
- that there is sufficient fuel in the tank to complete the test.
- all around the engine, transmission and under the vehicle for oil, coolant, hydraulic and fuel leaks. Make a note of any apparent leaks and wipe off the surrounding areas to make it easier to identify the extent of the leak on completion of the test.

## Starting the Engine

**NOTE:**On initial drive away from cold and within the first 1.5 km (1 mile), do not depress the accelerator pedal beyond half travel until the vehicle has attained a minimum speed of 25 km/h (15 miles/h). Never operate at high engine speed or with the accelerator pedal at full travel whilst the engine is cold.

With the ignition switched off, check:

- that the parking brake is applied.
- that the gear lever is in the neutral position.
- that all instrument gauges (except fuel gauge) read zero.

With the ignition switched on, check:

- that the ignition controlled warning lamps are illuminated.
- that the engine temperature gauge registers a reading compatible with the engine temperature.
- that the fuel gauge registers a reading appropriate to the fuel level in the tank.
- the operation of the parking brake warning lamp and fluid level warning indicator.

## Road or Roller Testing

**CAUTION:If road testing, check the brake operation while still traveling at low speed before continuing with the test. If the brakes pull to one side, or appear to be otherwise faulty, do not continue with the road test until the fault has been found and rectified.**

During the road or roller test, check:

- that the clutch pedal operation is not stiff or heavy.
- that the initial gear engagement is smooth and there is no evidence of clutch drag.
- that the parking brake control operates smoothly and releases quickly and completely.
- that the clutch takes up the drive smoothly, without slip or judder.
- that gear changing is smooth with no abnormal noises or vibrations from the transmission.
- the engine power output is satisfactory, full power is achieved, acceleration is smooth and pedal operation is not stiff or heavy, and engine speed returns to idle correctly.
- there is no excessive or abnormally colored smoke from the engine under normal driving, heavy load or overrun conditions.
- that steering operation, including power steering (if equipped), is smooth, accurate, not excessively heavy or with excessive free play or vibration.
- that the steering does not pull to one side and self centers smoothly after cornering.

## DESCRIPTION AND OPERATION

- that the speedometer, coolant temperature gauge and tachometer (if equipped) register the correct readings and operate correctly.
- that the switches and controls operate smoothly and positively, warning and indicator lamps operate correctly and the direction indicator control self cancels when the steering is returned to the straight ahead position.
- that the heating and ventilation systems operate correctly and effectively.
- the brake operation and efficiency.
- oil, coolant, hydraulic, air and fuel leaks.
- abnormal temperature of any moving components or assemblies, for example wheel hubs, transmission and axle, which might indicate over tightness or lack of lubrication.

### Brake Testing

**WARNING:When brake testing, avoid breathing the fumes from hot brakes, this may contain asbestos dust which is hazardous to health. Failure to follow this instruction may result in personal injury.**

**For additional information, refer to: Health and Safety Precautions (100-00 General Information, Description and Operation).**

**CAUTIONS:**

**Avoid brake testing on busy roads where it may cause inconvenience or danger to other road users.**

**Brake testing which includes heavy brake applications should not be carried out with new brake pads/discs or linings/drums until the components have bedded-in. New brake friction components will not reach full efficiency until the bedding-in process is complete.**

Test the brakes at several speeds within the normal operating range using both light and heavy pedal pressure. Note any tendency to snatch, pull or drag, and any undue delay in application or release.

Allow the vehicle to coast and note any tendency to pull to one side, or evidence that the brakes are binding.

After stopping the vehicle (not immediately after a period of heavy braking), carefully check the brake temperature. A brake disc or brake drum that feels hot or is appreciably hotter than the others, indicates that the brake is binding.

After completion of the test, check for:

# SECTION 100-01 Identification Codes

## VEHICLE APPLICATION:2006.0 Fiesta

CONTENTS PAGE

### DESCRIPTION AND OPERATION

Identification Codes ..... 100-01-2
VIN (an example of VIN shown) ..... 100-01-3
Vehicle Certification Label (Typical) or VIN Plate ..... 100-01-5

## DESCRIPTION AND OPERATION

# Identification Codes

The vehicle identification plate (VIN plate) is located on the right-hand B-pillar. The codes stamped or printed on the VIN plate during production enable the precise details of the vehicle build specification to be established. The vehicle identification number (VIN) may also be viewed through the windshield or in the engine compartment where it is stamped onto the suspension strut top mount.

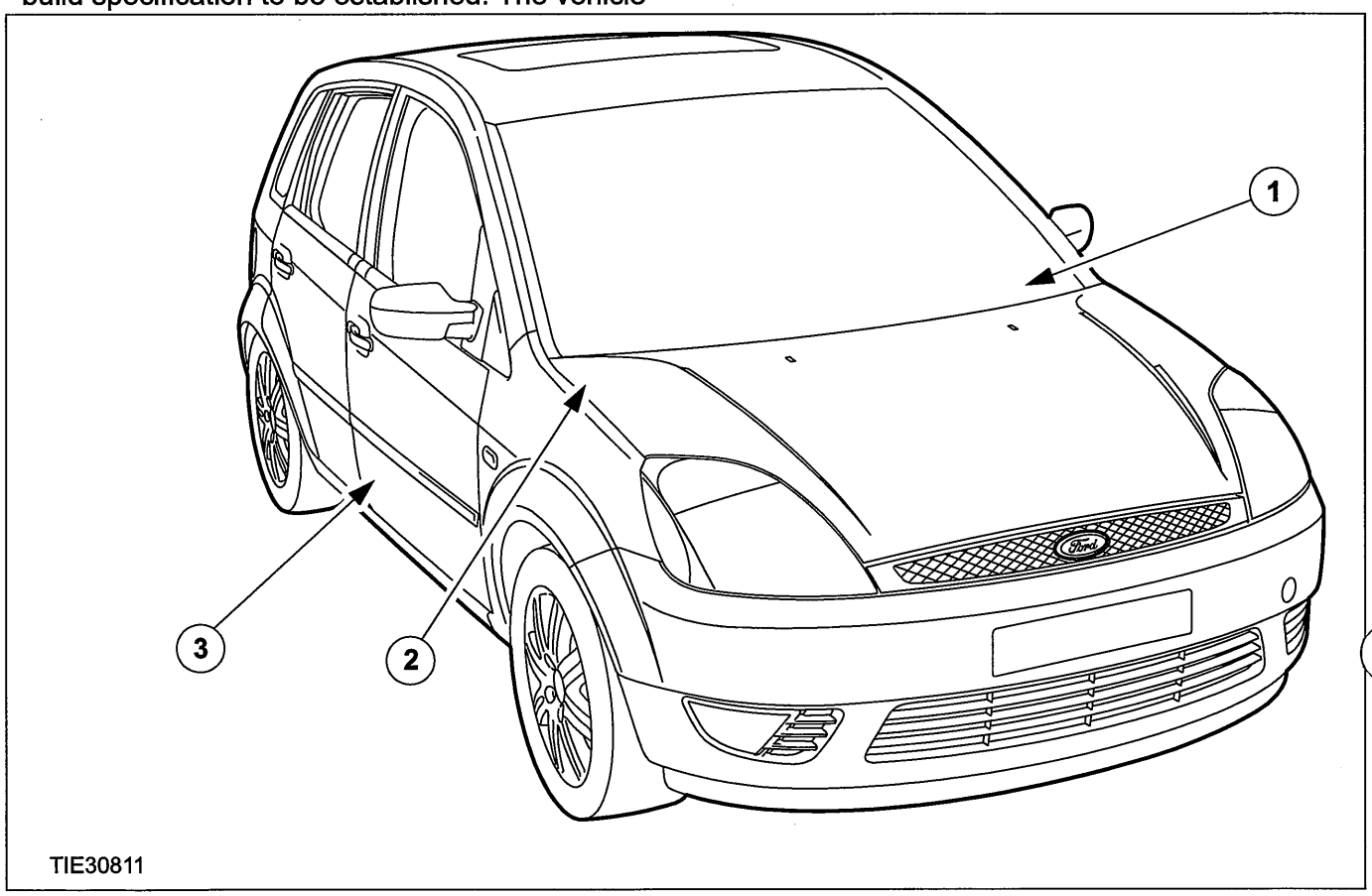


| Item | Description |
|---|---|
| 1 | Visible VIN |
| 2 | VIN on the suspension strut top mount |
| 3 | VIN plate |

## DESCRIPTION AND OPERATION

**VIN (an example of VIN shown)**

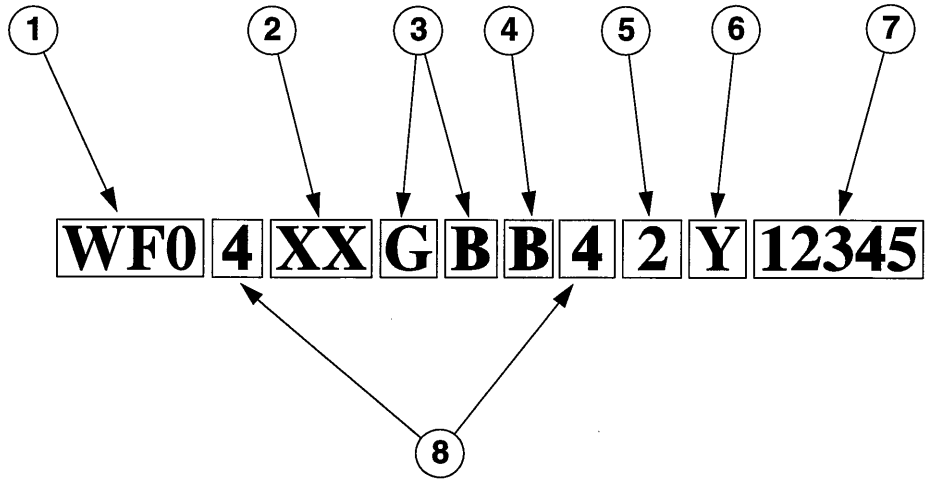


E0025438

| Item | Description |
|---|---|
| 1 | VIN Position 1, 2 and 3 - World manufacturer identifier |
| 2 | VIN Position 5 and 6 - Constant X |
| 3 | VIN Position 7 and 8 - Product source company and assembly plant |
| 4 | VIN Position 9 - Model |

| Item | Description |
|---|---|
| 5 | VIN Position 11 - Year of manufacture |
| 6 | VIN Position 12 - Month of manufacture |
| 7 | VIN Positions 13 to 17 - Vehicle serial number |
| 8 | VIN Position 4 and 10 - Body type |

**VIN Position 1, 2 and 3 - World Manufacturer Identifier**

| Codes | World Manufacturer |
|---|---|
| WF0 | Ford-Werke AG Germany (European vehicles) |

**VIN Position 4 and 10 - Body Type**

| Code | Body Type |
|---|---|
| C | 3-door van (Fiesta) |
| D | 3-door (Fiesta) |
| H | 5-door (Fiesta) |
| U | 5-door (Fusion) |

**VIN Position 5 and 6 — Constant X**

## DESCRIPTION AND OPERATION

### VIN Position 7 and 8 - Product Source Company and Assembly Plant

| Code | Product Source Company and Assembly Plant |
|---|---|
| GA | Cologne/Germany |
| WP | Valencia/Spain |

### VIN Position 9 - Model

| Code | Model |
|---|---|
| J | Fiesta/Fusion |

### VIN Position 11 - Year of Manufacture

| Code | Year of Manufacture |
|---|---|
| 2 | 2002 |
| 3 | 2003 |
| 4 | 2004 |
| 5 | 2005 |
| 6 | 2006 |
| 7 | 2007 |

### VIN Position 12 - Month of Manufacture

| Month | 2002 | 2003 | 2004 | 2005 | 2006 | 2007 |
|---|---|---|---|---|---|---|
| January | L | C | B | J | L | C |
| February | Y | K | R | U | Y | K |
| March | S | D | A | M | S | D |
| April | T | E | G | P | T | E |
| May | J | L | C | B | J | L |
| June | U | Y | K | R | U | Y |
| July | M | S | D | A | M | S |
| August | P | T | E | G | P | T |
| September | B | J | L | C | B | J |
| October | R | U | Y | K | R | U |
| November | A | M | S | D | A | M |
| December | G | P | T | E | G | P |

### VIN Positions 13 to 17 - Vehicle Serial Number
### Five Digit Number

## DESCRIPTION AND OPERATION

### Vehicle Certification Label (Typical) or VIN Plate

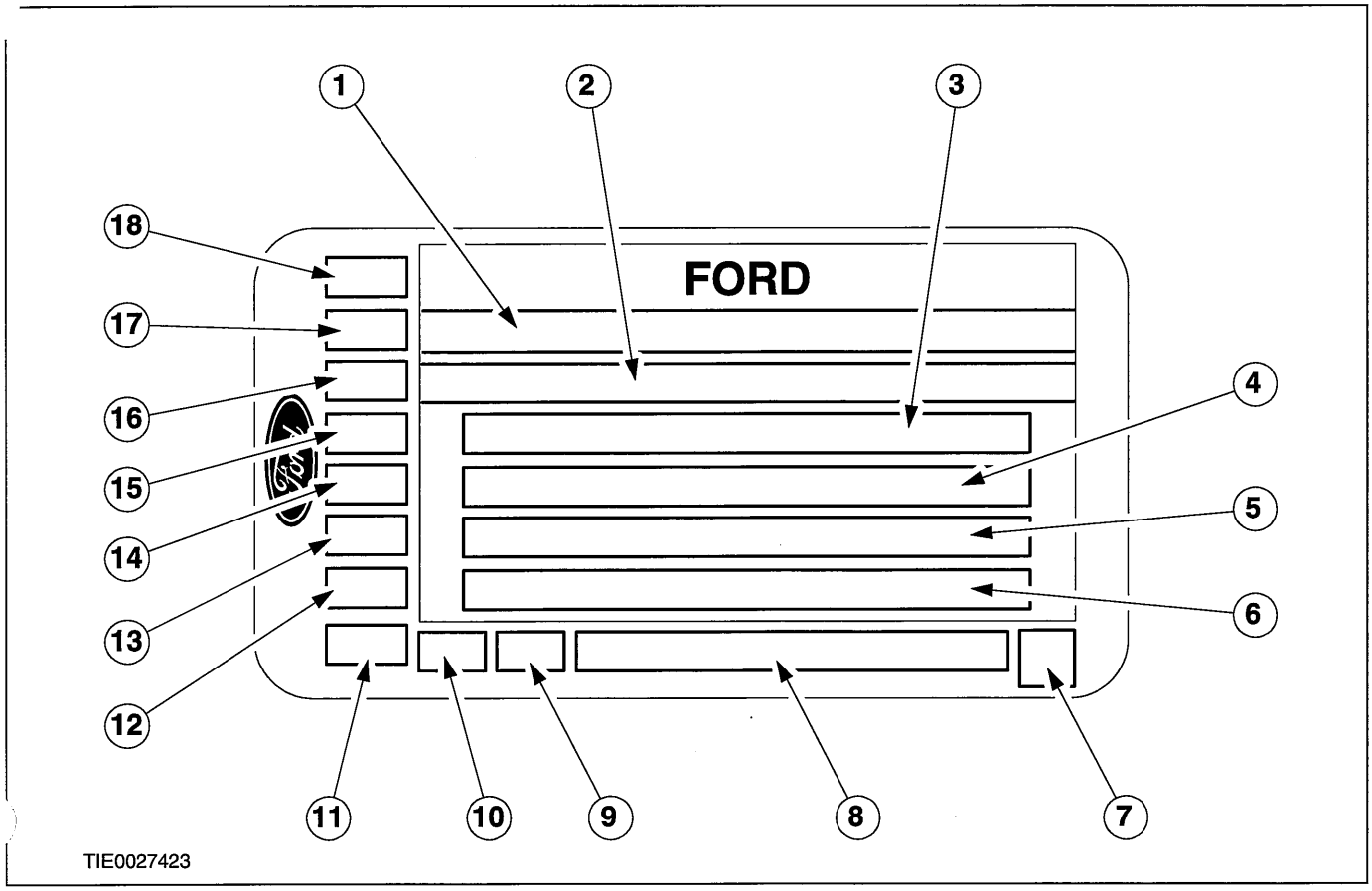


| Item | Description |
|---|---|
| 1 | National or whole vehicle type approval |
| 2 | VIN |
| 3 | Gross vehicle mass (GVM) |
| 4 | Gross train mass (GTM) |
| 5 | Maximum permissible front axle mass |
| 6 | Maximum permissible rear axle mass |
| 7 | Smoke value (diesel only) |
| 8 | Model body or type |
| 9 | Model type |

| Item | Description |
|---|---|
| 10 | Door combination |
| 11 | Exhaust emission level codes |
| 12 | Body color codes |
| 13 | Interior trim codes |
| 14 | Transaxle final drive ratio |
| 15 | Transaxle codes |
| 16 | Engine codes |
| 17 | Hand of drive |
| 18 | Axle mounting (Transit only) |

**Items 1 to 6: Vehicle Certification Label**

| Item | Details |
|---|---|
| Item 1: National or whole vehicle type approval | A unique code required by legislation in certain territories. |
| Item 2: VIN | Vehicle identification number. |
| Item 3: GVM | Indicates maximum legal laden mass, in territories where this is required. |

## DESCRIPTION AND OPERATION

| Item | Details |
|---|---|
| Item 4: GTM | Indicates the maximum combined mass of vehicle and trailer or caravan. |
| Item 5: Maximum permissible front axle mass | Maximum permissible loading on the front wheels of the vehicle. |
| Item 6: Maximum permissible rear axle mass | Maximum permissible loading on the rear wheels of the vehicle. |

**Item 7: Smoke Value (Diesel only)**

| Number | Smoke Value |
|---|---|
| | Per meter |

**Item 8 Model Body or Type**

| Code | Model Body or Type |
|---|---|
| JC3 | 3-door van (Fiesta) |
| JD3 | 3-door (Fiesta) |
| JH1 | 5-door (Fiesta) |
| JU2 | 5-door (Fusion) |

**Item 9: Model Type**

| Code | Model Type |
|---|---|
| - | - |

**Item 10: Door Combination**

| Code | Door Combination |
|---|---|
| - | - |

**Item 11: Exhaust Emission Level Codes**

| Code | Exhaust Emissions |
|---|---|
| S | 2000 EEC (Stage III) |
| 7 | Stage IV requirements |

**Item 12: Body Color Codes**

| Code | Body Color |
|---|---|
| B | Diamond White |
| D | Panther Black |
| G | Performance Blue |
| J | Tonic |
| K | Colorado Red |
| L | Deep Rosso Red |
| M | Magnum Grey |
| Q | Oyster Silver |

## DESCRIPTION AND OPERATION

| Code | Body Color |
|---|---|
| R | Honour Green |
| U | Neptune Green |
| W | Ink Blue |
| Z | Flare |
| 1 | Sublime |
| 2 | Aquarius |
| 3 | Vitro |
| 6 | Moondust Silver |
| 7 | Machine Silver |
| 8 | Deep Navy |
| For vehicles built in continental plants, the second digit of the paint code, on the VIN label, denotes the original model year of the color's introduction, ('0'=color introduction in 2000 model year). | |

**Item 13: Interior Trim Codes**

| Code | Interior Trim |
|---|---|
| AT | Dogtooth - Mamara Blue |
| BR | Compass - Blue |
| DC | Cord - Dark Flint |
| DM | Mirage - Plum |
| FB | Bussac - Medium Flint |
| FC | Cord - Medium Flint |
| FP | Metropolitan - Medium Flint |
| FT | Dogtooth - Medium Flint |
| GM | Mirage - Green |
| HH | Humy - Dark Flint - Dark Flint |
| IW | Wire - Infra Red |
| JH | Humy - Dark Flint - Ebony |
| LM | Mirage - Medium Light Flint |
| MI | Intro - Midnight Black |
| MT | Dogtooth - Midnight Black |
| NM | Mirage - Tan |
| QB | Bussac - Ebony |
| QL | Leather - Ebony |
| QM | Mirage - Ebony |
| QZ | Leather - Ebony |
| Q2 | Leather - Ebony |

## DESCRIPTION AND OPERATION

| Code | Interior Trim |
|---|---|
| RK | Compass - Red |
| RR | Compass - Red |
| TB | Bussac - Light Stone |
| TL | Leather - Light Stone |
| VK | Compass - Silver |

**Item 14: Transaxle Final Drive Ratio**

| Code | Transaxle Final Drive Ratio |
|---|---|
| A | 3.37 |
| B | 4.06 |
| M | 4.05 |
| R | 4.25 |
| 3 | 4.375 |
| 4 | 3.82 |

**Item 15: Transaxle Codes**

| Code | Transaxle |
|---|---|
| A | 5-Speed Manual Transaxle (iB5) |
| B | 5-Speed Manual Transaxle (iB5) Automated Shift Manual |
| C | 4-Speed Automatic Transaxle (AW81- 40LE) |

**Item 16: Engine Codes**

| Code | Engine |
|---|---|
| A | 1.3L Duratec-8V (Rocam) (60PS) |
| H | 1.6L Duratorq-TDCi (DV) Diesel (90PS) |
| U | 1.25L Duratec-16V (Sigma) (75PS) |
| X | 1.4L Duratec-16V (Sigma) (80PS) |
| Y | 1.6L Duratec-16V (Sigma) (100PS) |
| 4 | 2.0L Duratec-HE (MI4) (150PS) |
| 6 | 1.4L DuraTorq-TDCi (DV) (68PS) |
| 7 | 1.25L Duratec-16V (Sigma) (70PS) |
| 9 | 1.3L Duratec-8V (Rocam) (70PS) |

**Item 17: Hand of Drive**

| Code | Drive |
|---|---|
| 1 | Left-hand drive |
| 2 | Right-hand drive |
| 3 | Left-hand drive |

## DESCRIPTION AND OPERATION

| Code | Drive |
|---|---|
| 4 | Right-hand drive |
| 5 | Left-hand drive |
| 6 | Right-hand drive |
| N | Left-hand drive |
| P | Right-hand drive |
| Q | Left-hand drive |
| R | Right-hand drive |
| S | Left-hand drive |
| T | Right-hand drive |

# SECTION 100-02 Jacking and Lifting

## VEHICLE APPLICATION:2006.0 Fiesta

CONTENTS PAGE

### DESCRIPTION AND OPERATION

Jacking..... 100-02-2
Lifting..... 100-02-5

## DESCRIPTION AND OPERATION

# Jacking

**WARNING:Only the specified jacking points may be used for jacking up and supporting the vehicle.**

**CAUTION:Park the vehicle on a flat, level and stable surface. If the vehicle must be lifted on a soft surface, the supporting forces must be spread by using a suitable base under the jack. Place a wheel chock against the wheel opposite the jack. Failure to follow these instructions may result in personal injury.**

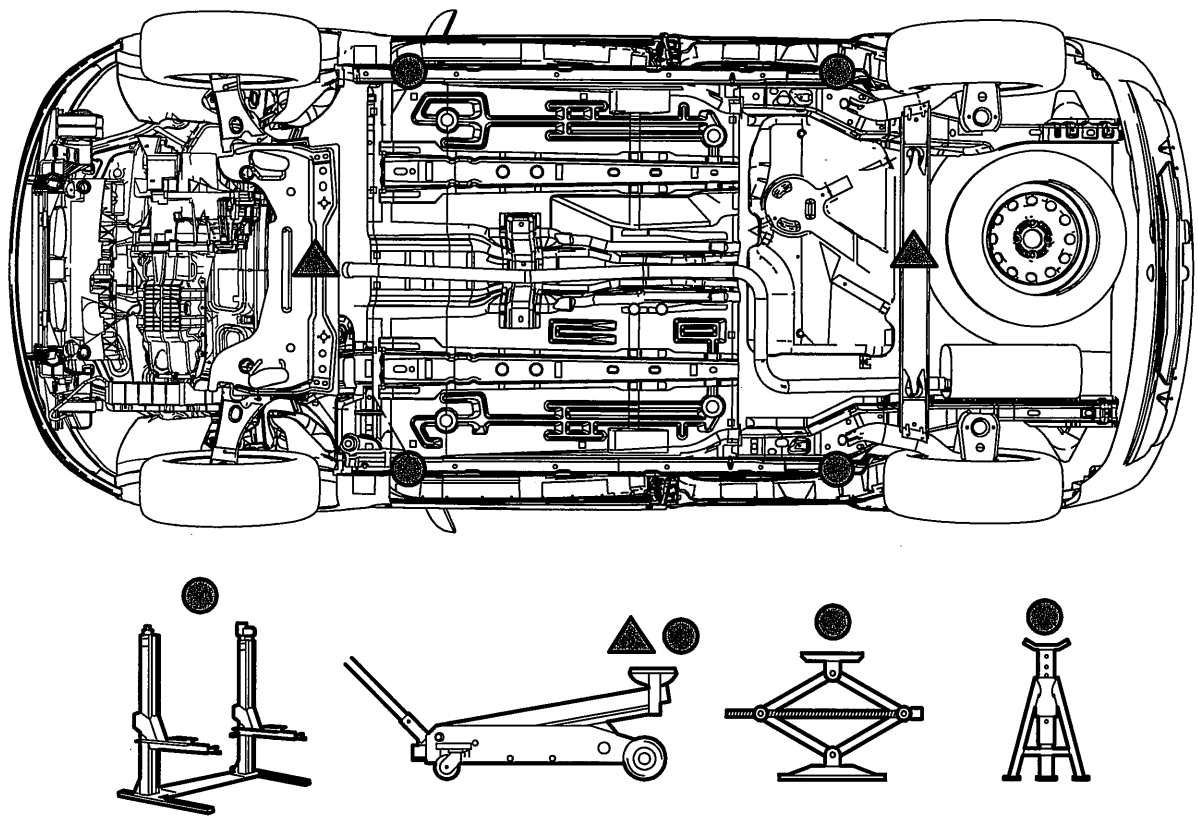

E31125

In order to prevent damage to the rocker panel moulding (if equipped), the covers must be removed at the relevant locations in the rocker panel moulding before raising the vehicle.

## DESCRIPTION AND OPERATION

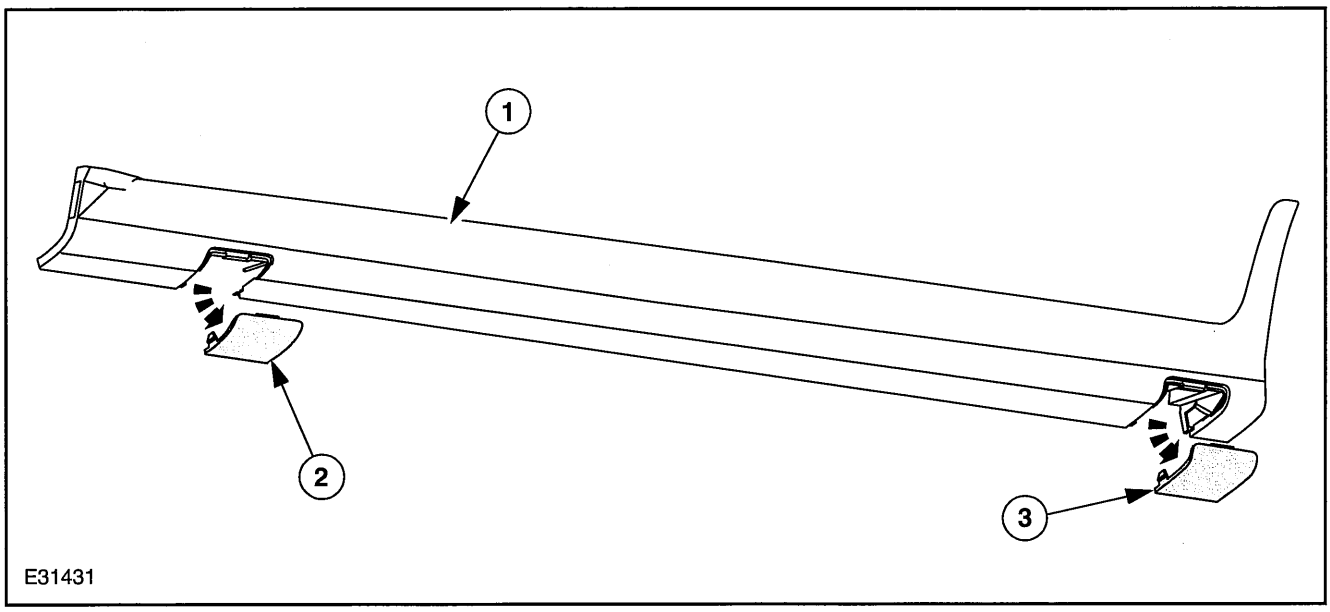


| Item | Description |
|---|---|
| 1 | Rocker panel moulding (left-hand side shown) |
| 2 | Front cover |
| 3 | Rear cover |

**CAUTIONS:**

⚠ **When lifting the vehicle with a trolley jack or a lifting platform, special adapters with locating plates must be used.**

⚠ **In order to prevent damage to the chassis and the body, the vehicle must be lifted or supported using the adapters shown in the illustration.**

## DESCRIPTION AND OPERATION

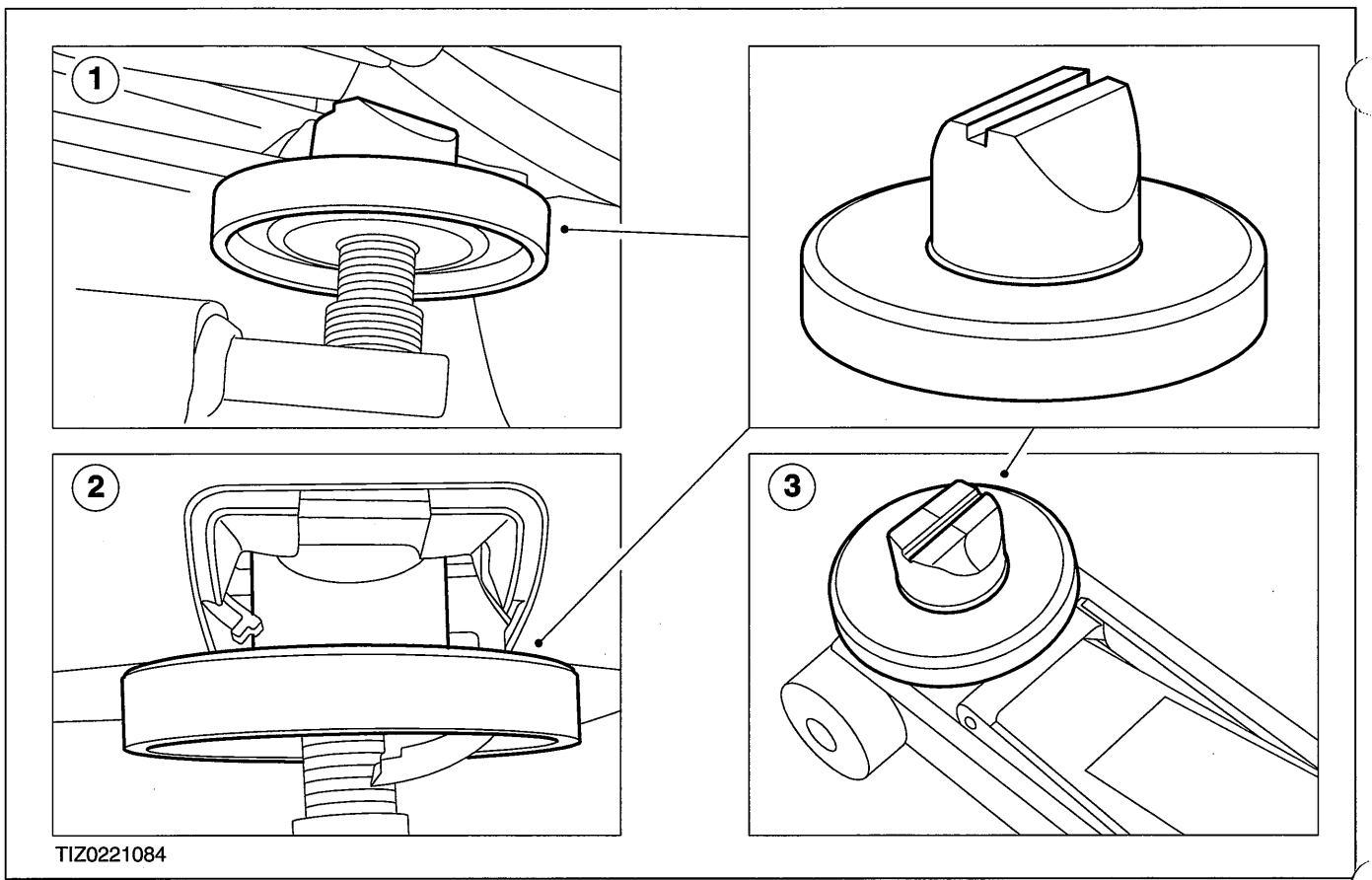


**Adapters for jacking points**

| Item | Description |
|---|---|
| 1 | Adapter with locating plate and rear jacking point (viewing angle from below the vehicle) |
| 2 | Adapter with locating plate and rear jacking point |
| 3 | Adapter with locating plate in conjunction with the trolley jack |

## DESCRIPTION AND OPERATION

# Lifting

**WARNING:Only raise the vehicle at the specified lifting points.**

**CAUTION:Place blocks underneath the hoist points if a two-column hoist is used.**

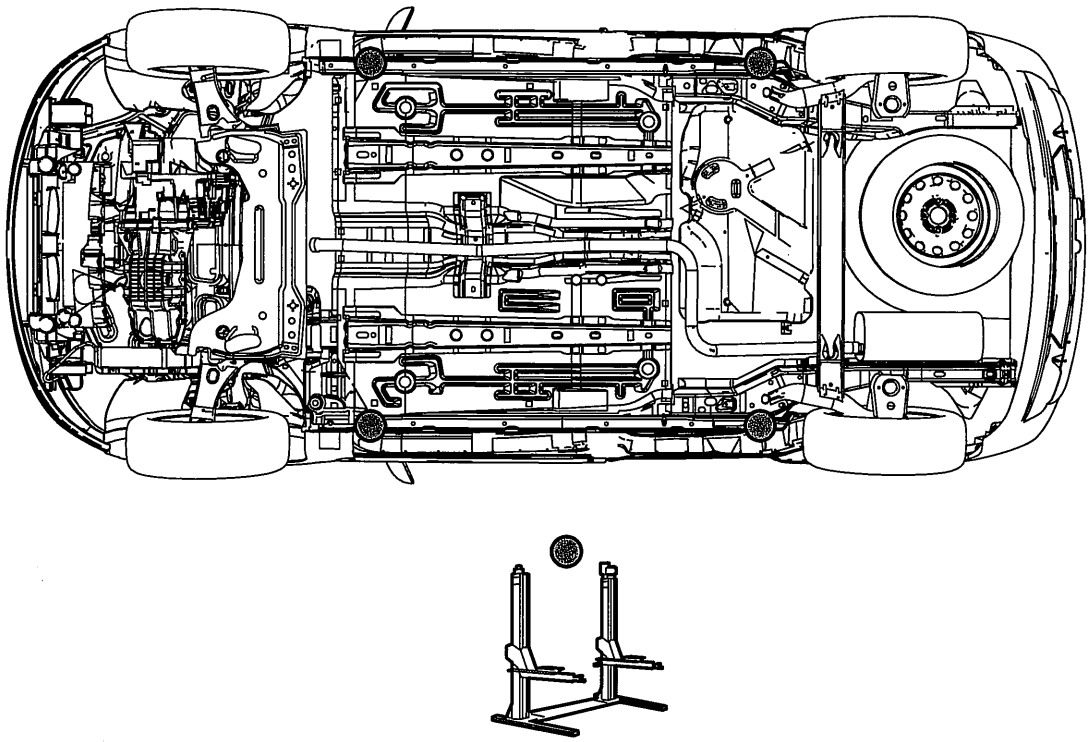

E31126

# SECTION 100-04 Noise, Vibration and Harshness

## VEHICLE APPLICATION:2006.0 Fiesta

CONTENTS PAGE

### DESCRIPTION AND OPERATION


Noise, Vibration and Harshness (NVH) ..... 100-04-2
Diagnostic Theory ..... 100-04-2
Know the System ..... 100-04-2
Know the History of the System ..... 100-04-2
Know the History of the Condition ..... 100-04-2
Know the Probability of Certain Conditions Developing ..... 100-04-2
Do Not Cure the Symptom and Leave the Cause ..... 100-04-2
Be Positive the Cause is Found ..... 100-04-2
Diagnostic Charts ..... 100-04-2


### DIAGNOSIS AND TESTING


Noise, Vibration and Harshness (NVH) ..... 100-04-4
Inspection and Verification ..... 100-04-4
Noise Diagnostic Procedure ..... 100-04-4
Road Test ..... 100-04-5
Road Test Quick Checks ..... 100-04-5
Road Conditions ..... 100-04-6
Vehicle Preparation ..... 100-04-6
Power Steering Conditions ..... 100-04-6
Power Steering Operation Noise Check ..... 100-04-6
Symptom Chart ..... 100-04-9
Pinpoint Tests ..... 100-04-16


### GENERAL PROCEDURES


Powertrain/Drivetrain Mount Neutralizing ..... (14 001 0) 100-04-23

## DESCRIPTION AND OPERATION

# Noise, Vibration and Harshness (NVH)

Noise, vibration and harshness (NVH) is becoming more important as vehicles become more sophisticated and passenger comfort levels increase. This section is designed to aid in the diagnosis and testing and repair of NVH concerns.

- Noise is defined as sounds not associated with the operation of passenger compartment equipment that interface with customer satisfaction.
- Vibration is defined as impulses felt by the customer that are not caused by road surface changes.
- Harshness is a ride quality issue where the customer feels that the vehicle response to the road surface is sharply transmitted to the customer.

## Diagnostic Theory

Diagnosis is more than just following a series of interrelated steps in order to find the solution to the specific condition. It is a way of looking at systems that are not functioning the way they should and finding out why. Also it is knowing how the system should work and whether it is working correctly.

There are basic rules for diagnosis. If these rules are followed, the cause of the condition is usually found the first time through the system.

## Know the System

- Know how the parts go together.
- Know how the system operates as well as its limits and what happens when the system goes wrong.
- Sometimes this means checking the system against one that is known to be working correctly.

## Know the History of the System

A clue in any one of these areas may save time:

- How old or new is the system?
- What kind of treatment has it had?
- Has it been serviced in the past in such a manner that might relate to the present condition?
- What is the service history?

## Know the History of the Condition

- Did it start suddenly or appear gradually?
- Was it related to some other occurrence such as a collision or previous part replacement?
- Know how the condition made itself known; it may be an important clue to the cause.

## Know the Probability of Certain Conditions Developing

- Look for the simple rather than the complex.
- For example:
  - Electrical conditions usually occur at connections rather than components.
  - An engine no-start is more likely to be caused by a loose wire or small adjustment rather than a sheared-off camshaft.
- Know the difference between impossible and improbable. Certain failures in a system can be improbable but still happen.
- New parts are just that, new. It does not mean they are always good functioning parts.

## Do Not Cure the Symptom and Leave the Cause

Lowering the pressure in a front tire may correct the condition of a vehicle leaning to one side, but it does not correct the original condition.

## Be Positive the Cause is Found

- Double check findings.
- What caused a worn component?
- A loose transmission or engine mount could indicate that other mounts are also loose.

## Diagnostic Charts

Charts are a simple way of expressing the relationship between basic logic and a physical system of components. They help discover the cause of a condition in the least time. Diagnostic charts combine many areas of diagnosis into one visual display:

## DESCRIPTION AND OPERATION

- Probability of certain things occurring in a system.
- Speed of checking certain components or functions before others.
- Simplicity of performing certain tests before others.
- Elimination of checking huge portions of a system by performing simple tests.
- Certainty of narrowing down the search to a small portion before performing in-depth testing.

The fastest way to find a condition is to work with the tools that are available. This means working with proven diagnostic charts and the correct special equipment for the system.

## DIAGNOSIS AND TESTING

# Noise, Vibration and Harshness (NVH)

## Inspection and Verification

1. Verify the customer concern.
2. Visually inspect for obvious signs of mechanical or electrical damage.
3. If an obvious cause for an observed or reported concern is found, correct the cause (if possible) before proceeding to the next step.
4. If the concern is not visually evident, verify the symptom and REFER to the Symptom Chart.

## How to Use this Diagnostic Procedure Section

- Noise, vibration and harshness (NVH) concerns have become more important as vehicles have become more sensitive to these vibrations. This section is designed to aid in identifying these concerns.
- The section provides diagnostic procedures based on symptom. If the condition occurs at high speed, for instance, the most likely place to start is under Shake and Vibration While Driving.
- The road test procedure will tell how to sort the conditions into categories and how to tell a vibration from a shake.
- A series of Road Test Quick Checks are provided to make sure that a cause is either pinpointed or eliminated.
- Name the condition, proceed to the appropriate section and locate the correct diagnosis. When the condition is identified, the job is partly done.
- Follow the diagnostic procedure as outlined.
- Quick Checks are described within the step, while more involved tests and adjustments are outlined in General Procedures.
- Always follow each step exactly and make notes to recall important findings later.

## Customer Interview

The road test and customer interview (if available) provide information that will help identify the concern and will provide direction to the correct starting point for diagnosis.

## Identify the Condition

NVH usually occur in four areas:

- tires
- engine accessories
- suspension
- driveline

It is important, therefore, that an NVH concern be isolated into its specific area(s) as soon as possible. The easiest and quickest way to do this is to carry out the Road Test as outlined. To assist in the diagnosis and testing procedure(s), use a suitable approved NVH diagnosis tester.

## Noise Diagnostic Procedure

### Non-Axle Noise

The five most common sources of non-axle noise are exhaust, tires, roof racks, trim panels and transmission.

Therefore, make sure that none of the following conditions are the cause of the noise before proceeding with a driveline teardown and diagnosis.

- In certain conditions, the pitch of the exhaust may sound very much like gear noise. At other times, it can be mistaken for a wheel bearing rumble.
- Tires, especially snow tires, can have a high pitched tread whine or roar, similar to gear noise. Radial tires may have this characteristic. Also, any non-standard tire with an unusual tread construction may emit a roar or whine noise.
- Trim panels can also cause whistling or whining noise.
- Clunk may be a metallic noise heard when the automatic transaxle is engaged in "R" (REVERSE) or "D" (DRIVE) or it may occur when the throttle is applied or released. It is caused by backlash somewhere in the driveline.
- Bearing rumble sounds like marbles being tumbled. This condition is usually caused by a damaged wheel bearing.

# DIAGNOSIS AND TESTING

## Noise Conditions

- Gear noise is typically a howling or whining due to gear damage or incorrect bearing preload. It can occur at various speeds and driving conditions, or it can be continuous.
- Chuckle is a particular rattling noise that sounds like a stick against the spokes of a spinning bicycle wheel. It occurs while decelerating from 64 km/h (40 mph) and can usually be heard all the way to a stop. The frequency varies with vehicle speed.
- Knock is very similar to chuckle, though it may be louder and occurs on acceleration or deceleration. The teardown will disclose what has to be corrected.

Clicking, popping or grinding noises may be caused by the following:

- worn, damaged or incorrectly installed wheel bearing, suspension or brake component.

Check and rule out tires, exhaust and trim items before disassembling the transmission to diagnose and correct gear noise.

The noises described under Road Test usually have specific causes that can be diagnosed by observation as the unit is disassembled. The initial clues are the type of noise heard on the road test and driving conditions.

## Vibration Conditions

Vibration at highway speeds may be caused by the following:

- out-of-balance front or rear wheels.
- out-of-round tires.

Shudder or vibration during acceleration may be caused by the following:

- damaged powertrain/drivetrain mounts.
- excessively high constant velocity (CV) joint operating angles caused by incorrect ride height. Check ride height, verify correct spring rate and check items under inoperative conditions.

## Road Test

A gear-driven unit will produce a certain amount of noise. Some noise is acceptable and may be audible at certain speeds or under various driving conditions, as on a newly paved asphalt road. The slight noise is in no way detrimental and must be considered normal.

The road test and customer interview (if available) provide information needed to identify the condition and give direction to the correct starting point for diagnosis.

1. Make notes throughout the diagnosis routine. Make sure to write down even the smallest bit of information, because it may turn out to be the most important.
2. Do not touch anything until a road test and a thorough visual inspection of the vehicle have been carried out. Leave the tire pressures and vehicle load just where they were when the condition was first observed. Adjusting tire pressures, vehicle load or making other adjustments may reduce the condition(s) intensity to a point where it cannot be identified clearly. It may also inject something new into the system, preventing correct diagnosis.
3. Make a visual inspection as part of the preliminary diagnosis routine, writing down anything that does not look right. Note tire pressures, but do not adjust them yet. Note leaking fluids, loose nuts and bolts, or bright spots where components may be rubbing against each other. Check the load space for unusual loads.
4. Road test the vehicle and define the condition by reproducing it several times during the road test.
5. Carry out the Road Test Quick Checks as soon as the condition is reproduced. This will identify the correct diagnostic procedure. Carry out the Road Test Quick Checks more than once to verify they are providing a valid result. Remember, the Road Test Quick Checks may not tell where the concern is, but they will tell where it is not.

## Road Test Quick Checks

1. 24-80 km/h (15-50 mph): with light acceleration, a moaning noise is heard and possibly a vibration felt in the front floor panel. It is usually worse at a particular engine speed and at a particular throttle setting during acceleration at that speed. It may also produce a moaning sound, depending on what component is causing it. REFER to Tip-in Moan in the Driveline Noise and Vibration Symptom Chart.

## DIAGNOSIS AND TESTING

2. Acceleration/Deceleration: With slow acceleration and deceleration, a shake is sometimes noticed in the steering wheel/column, seats, front floor panel, front door trim panel or front end sheet metal. It is a low frequency vibration (around 9-15 cycles per second). It may or may not be increased by applying the brakes lightly. REFER to Idle Boom/Shake/Vibration in the Driveline Noise and Vibration Symptom Chart.
3. High Speed: A vibration is felt in the front floor panel or seats with no visible shake, but with an accompanying sound or rumble, buzz, hum, drone or booming noise. Coast with the clutch pedal depressed (manual transmission) or shift control selector lever in "N" (NEUTRAL) (automatic transmission) and engine idling. If vibration is still evident, it may be related to wheels, tires, front brake discs, wheel hubs or front wheel bearings. REFER to Shake and Vibration While Driving in the Driveline Noise and Vibration Symptom Chart.
4. Engine rpm Sensitive: A vibration is felt whenever the engine reaches a particular rpm. It will disappear in neutral coasts. The vibration can be duplicated by operating the engine at the problem rpm while the vehicle is stationary. It can be caused by any component, from the accessory drive belt to the clutch or torque converter which turns at engine speed when the vehicle is stopped. REFER to Shake and Vibration While Driving in the Driveline Noise and Vibration Symptom Chart.
5. Noise and Vibration While Turning: Clicking, popping or grinding noises may be due to the following:

- worn, damaged or incorrectly installed front wheel bearing.
- damaged powertrain/drivetrain mounts.

### Road Conditions

An experienced technician will always establish a route that will be used for all NVH diagnosis road tests. The road selected should be reasonably smooth, level and free of undulations (unless a particular condition needs to be identified). A smooth asphalt road that allows driving over a range of speeds is best. Gravel or bumpy roads are unsuitable because of the additional road noise produced. Once the route is established and consistently used, the road noise variable is eliminated from the test results.

**NOTE:**Some concerns may be apparent only on smooth asphalt roads.

If a customer complains of a noise or vibration on a particular road and only on a particular road, the source of the concern may be the road surface. If possible, try to test the vehicle on the same type of road.

### Vehicle Preparation

Carry out a thorough visual inspection of the vehicle before carrying out the road test. Note anything which is unusual. Do not repair or adjust any condition until the road test is carried out, unless the vehicle is inoperative or the condition could pose a hazard to the technician. After verifying that the condition has been corrected, make sure all components removed have been installed.

### Power Steering Conditions

Check for the noise in the following conditions to verify the customer concern.

- Check for the noise in several temperature conditions.
- Is the noise from when the vehicle was new?
- Can the noise be repeated constantly or is it random?
- Check the condition of the vehicle age, mileage and service record.
- Interview the customer to find the operating condition in which the noise will occur. Test the vehicle based on the detail(s) from the customer interview.
- Follow the power steering operation noise condition tables below, to find which condition the noise will occur.

### Power Steering Operation Noise Check

Step 1: Check for NVH concerns from non-steering components, which may sound like noises coming from the steering system.

## DIAGNOSIS AND TESTING

| Power assisted steering operating condition | | | |
|---|---|---|---|
| Parking | | Driving | |
| Steering central/slightly off center | Steering at a steering lock stop | Driving straight ahead | Cornering condition |
| REFER to NVH concerns from other components column A | REFER to NVH concerns from other components column B | REFER to NVH concerns from other components column C | REFER to NVH concerns from other components column D |

**NVH concerns from other components**

| NVH concerns from other condition (column A to D) | | | | | |
|---|---|---|---|---|---|
| **Noise** | **Driving Condition** | **A** | **B** | **C** | **D** |
| Pedal box knocking | Drive off, stop driving and slow cornering over uneven roads | X | X | O | X |
| Stabilizer bar link knocking | Drive off, driving and cornering | X | O | O | X |
| Engine support insulator knocking | Drive off, driving, acceleration and deceleration | X | | X | |
| Air conditioning knocking | Engine on, activate switch for air conditioning | X | X | O | O |
| Suspension knocking (Subframe, Springs) | Drive off, driving, cornering, acceleration and deceleration | X | | O | X |
| Constant velocity (CV) joint knocking | Drive off, driving, cornering, acceleration and deceleration | X | O | | X |
| Washer bottle | Deceleration, acceleration and single impact | O | | X | |
| Loose suspension bolts | All driving conditions | O | | O | X |
| Instrument panel rattle/ squeak | All driving conditions. Engine rpm dependant | X | X | X | X |

- X = Noise will most likely occur in this operating condition.
- O = Noise can possibly occur in this operating condition.
- Blank = Noise is unlikely to occur in this operating condition.

Step 2: Check for steering system NVH concerns according to operation condition described at the customer interview.

| Power assisted steering operating condition | | | | | |
|---|---|---|---|---|---|
| Parking | | Driving | | Vehicle stationary with engine off | |
| Steering central/ slightly off center | Steering at a steering lock stop | Steering central/slightly off center | Steering at a steering lock stop | Steering central/ slightly off centre | Steering at a steering lock stop |

## DIAGNOSIS AND TESTING

| Power assisted steering operating condition | | | | | |
|---|---|---|---|---|---|
| Parking | | Driving | | Vehicle stationary with engine off | |
| REFER to steering system NVH concerns column A | REFER to steering system NVH concerns column B | REFER to steering system NVH concerns column C | REFER to steering system NVH concerns column D | REFER to steering system NVH concerns column E | REFER to steering system NVH concerns column F |

**Steering system NVH concerns**

| Steering System operation condition (column A to F) | | | | | | | |
|---|---|---|---|---|---|---|---|
| **Noise** | **Driving condition** | **A** | **B** | **C** | **D** | **E** | **F** |
| Moan | Parking between lock stops, at engine idle and also increased engine speed | X | O | | | | |
| Whine | Driving, high engine rpm. Must be present from new | O | O | X | X | | |
| Hiss | a) Parking between lock stops. Must be present from new | X | X | O | O | | |
| | b) Holding steering wheel against lock stops. Must be present from new | | X | | | | |
| Lock stop impact knock | a) Parking at lock stop. Must be present from new | | X | | | | X |
| Mechanical knock (power assisted steering (PAS) off) | b) Parking between lock stops, engine OFF. Must be present from new | | | | | X | |
| Mechanical Knock (PAS on) | c) Parking between lock stops, engine ON (ball joint knock) | X | | | | | |
| Hammer knock | d) Parking into lock stop and release (vehicle with hydraulic power assisted steering (HPAS) only, not for vehicles with electro-hydraulic power assisted steering (EHPAS)) | | X | | | | |
| Hydraulic knock (clonk) | e) Driving, cobble stones, rough road (clonk). Must be present from new | | | O | X | | |
| Column knock | f) Parking, driving. cobble stones and rough roads | X | X | O | X | X | X |
| Column rattle | Mainly driving on rough roads | O | | X | X | O | |
| Toc-toc | Steering left and right at high frequency. Must be present from new | X | | | | | |
| Grinding | When turning steering wheel | X | | | O | X | |
| Zip | At engine start, low temperatures below -10°C only | X | O | | | | |

- X = Noise will most likely occur in this operating condition.
- O = Noise can possibly occur in this operating condition.
- Blank = Noise is unlikely to occur in this operating condition.

## DIAGNOSIS AND TESTING

Step 3: According to each identified operating condition (Column A, B, C, D, E, F), check each possible Steering System NVH concern with the detail symptom charts below.

Before conducting a vehicle test to identify a NVH concern carry out the following checks.

1. Check the tire pressures and adjust to specification, as necessary.
2. Make sure the steering system fluid is correct, the system is free of leaks and is operating correctly.
3. Make sure the vehicle steering system temperature is the same as described at the customer interview.
4. All evaluations must take place in a relatively quiet location.
5. The heating - air conditioning (A/C) fan and radio must be turned off during evaluations and the windows closed.

## Symptom Chart

### Power Steering Moan Noise

#### Test Condition

Listen for steering moan noise with the vehicle parked, transmission in neutral and all windows closed in the following test conditions.

1. Engine speed at idle with no steering action.
2. Engine speed at idle with slow 90 degrees per second turning of the steering wheel.
3. Engine speed at 1250 +/- 50 rpm with no steering action.
4. Engine speed at 1250 +/- 50 rpm with slow 90 degrees per second turning of the steering wheel.

## DIAGNOSIS AND TESTING

| Symptom | Possible Sources | Action |
|---|---|---|
| Power steering system moan noise – A continuous low pitched humming noise occurs when the steering wheel is turned and the steering system is loaded. Noise frequency changes with engine rpm changes. Particularly annoying at lower engine speed. | Power steering lines. | • CHECK the routing of the power steering lines.<br>• CHECK the power steering line clamps are secure.<br>• CHECK the power steering lines for clearance from the vehicle body, front axle cross-member and steering gear. |
| | Incorrect power steering fluid. | FLUSH the power steering system. REFER to: (211-00 )<br>Power Steering System Flushing - 1.8L Duratec-HE (MI4)/1.8L Duratec-SCi (MI4)/2.0L Duratec-HE (MI4) (General Procedures),<br>Power Steering System Flushing - 3.0L Duratec-SE (VE6)/2.5L Duratec-VE (VE6)/3.0L Duratec-ST (VE6) (General Procedures),<br>Power Steering System Flushing - 2.0L Duratorq-Di/TDDi (Puma) Diesel/2.0L Duratorq-TDCi (Puma) Diesel/2.2L Duratorq-TDCi (Puma) Diesel (General Procedures). |
| | Power steering pump. | Pressure pulses from the power steering pump. Certain amount of noise level acceptable, not a safety critical item. |

### Power Steering Whine Noise

#### Test Condition

Listen for steering whine noise with the vehicle parked, transmission in neutral and all windows closed in the following test conditions.

1. Engine speed at 1800 +/- 50 rpm with no steering action.
2. Engine speed at 1800 +/- 50 rpm with slow 90 degrees turning of the steering wheel.
3. Engine speed at 3000 +/- 50 rpm with no steering action.
4. Engine speed at 3000 +/- 50 rpm with slow 90 degrees turning of the steering wheel.

## DIAGNOSIS AND TESTING

| Symptom | Possible Sources | Action |
|---|---|---|
| Power steering system whine noise – a high pitched buzzing sound like an electric motor or drill. Whine occurs at the higher engine rpm, 1500 - 5000 rpm, frequency does not change if system is loaded or not loaded. | Power steering fluid aeration. | BLEED the power steering system.<br>REFER to: Power Steering System Bleeding (211-00 Steering System - General Information, General Procedures). |
| | Incorrect power steering fluid. | FLUSH the power steering system. REFER to: (211-00 )<br>Power Steering System Flushing - 1.8L Duratec-HE (MI4)/1.8L Duratec-SCi (MI4)/2.0L Duratec-HE (MI4) (General Procedures),<br>Power Steering System Flushing - 3.0L Duratec-SE (VE6)/2.5L Duratec-VE (VE6)/3.0L Duratec-ST (VE6) (General Procedures),<br>Power Steering System Flushing - 2.0L Duratorq-Di/TDDi (Puma) Diesel/2.0L Duratorq-TDCi (Puma) Diesel/2.2L Duratorq-TDCi (Puma) Diesel (General Procedures). |
| | Overheated power steering fluid. | FLUSH the power steering system. REFER to: (211-00 )<br>Power Steering System Flushing - 1.8L Duratec-HE (MI4)/1.8L Duratec-SCi (MI4)/2.0L Duratec-HE (MI4) (General Procedures),<br>Power Steering System Flushing - 3.0L Duratec-SE (VE6)/2.5L Duratec-VE (VE6)/3.0L Duratec-ST (VE6) (General Procedures),<br>Power Steering System Flushing - 2.0L Duratorq-Di/TDDi (Puma) Diesel/2.0L Duratorq-TDCi (Puma) Diesel/2.2L Duratorq-TDCi (Puma) Diesel (General Procedures). |
| | Hydraulic operating condition of the power steering pump. | Certain amount of noise level acceptable, not a safety critical item. |

## DIAGNOSIS AND TESTING

### Power Steering Hiss Noise

**Test Condition**

Listen for steering hiss noise with the vehicle parked, transmission in neutral and all windows closed in the following test conditions.

| Symptom | Possible Sources | Action |
|---|---|---|
| **NOTE:**Engine speed at idle turning the steering wheel slowly lock to lock.<br>Power steering system hiss noise – a high frequency, continuous rush or swish noise like escaping air from a balloon. Hiss occurs while turning between the steering lock stops, all steering angles. Noise does not change with engine rpm and is worse at high operating temperatures. | Floor seal. | CHECK the installation and potential damage of the floor seal. |
| | Power steering gear valve design. | Certain amount of noise level acceptable, not a safety critical item. |
| | Power steering system hydraulic design. | Certain amount of noise level acceptable, not a safety critical item. |
| **NOTE:**Engine speed at idle holding the steering wheel against a steering lock for three seconds. Do not hold for more than five seconds.<br>Power steering system hiss noise – a continuous noise like escaping air occurs while holding the steering against a steering lock stop. | Power steering pump pressure relief valve. | Certain amount of noise level acceptable, not a safety critical item. |

### Power Steering Lock Stop Impact Knock Noise

**Test Condition**

Listen for steering knock noise with the engine speed at idle in the following test conditions (noise also apparent with engine off).

1. Turn the steering wheel to the left-hand and right-hand steering locks and listen for the impact noise.

| Symptom | Possible Sources | Action |
|---|---|---|
| Power steering system knock noise – a heavy loud sound like a knock on a door that occurs in parking condition when hitting the lock stop. | Power steering gear mechanical noise, metal to metal at end of steering travel. | Certain amount of noise level acceptable, not a safety critical item. |

### Power Steering Mechanical Knock Noise (PAS off)

**Test Condition**

Listen for steering knock noise with the engine off in the following test conditions (no power assist).

1. Turn the steering wheel 90 degrees to the right, hold and then quickly release.
2. Turn the steering wheel 90 degrees to the left, hold and then quickly release.

## DIAGNOSIS AND TESTING

| Symptom | Possible Sources | Action |
|---|---|---|
| Power steering system knock noise – a heavy loud repeating sound like a knock on a door that occurs in several driving and steering conditions. | Power steering system knock noise – a damped, metallic knock noise which only occurs at steering condition with engine off (very high efforts). | Certain amount of noise level acceptable, not a safety critical item. |
| | Tolerances in the steering gear components. | Certain amount of noise level acceptable, not a safety critical item. |

### Power Steering Mechanical Knock Noise (PAS on)

**Test Condition**

Listen for steering knock noise with the engine speed at idle in the following test conditions (power assist).

1. Turn the steering wheel to a steering lock and return to center quickly.
2. Turn the steering wheel 90 degrees to the left and then 90 degrees to the right quickly.

| Symptom | Possible Sources | Action |
|---|---|---|
| Power steering system knock noise – clear knock noise from steering gear linkage area. | Worn tie-rod ball joints (inner and outer ball joints). | REFER to Steering System.<br>REFER to: Steering System (211-00, Diagnosis and Testing). |

### Power Steering Hammer Knock (Hydraulic) Noise

**Test Condition**

Listen for steering knock noise with the engine speed at idle in the following test conditions (for vehicles with hydraulic power assisted steering only, not electro-hydraulic power steering).

1. Turn the steering wheel to a steering lock position and return quickly.

| Symptom | Possible Sources | Action |
|---|---|---|
| Power steering system knock noise – loud, metallic sound if hitting the suspension cross-member with a hammer (sounds like metallic noise but is created by pressure impulse in gear and return line). | Hydraulic noise created by pressure impulses. | Certain amount of noise level acceptable, not a safety critical item. |

### Power Steering Hydraulic Knock/Clonk Noise

**Test Condition**

Listen for steering knock/clonk noise in the following test conditions with the windows closed.

1. Drive over cobbled roads at low speed 10-30 km/h (6-20 mph) with and without turning.
2. Drive over straight tar strips road rails or 25 mm tall harshness strips at low speed 10-30 km/h (6-20 mph) both driving straight and with moderate turning.

## DIAGNOSIS AND TESTING

| Symptom | Possible Sources | Action |
|---|---|---|
| Power steering system knock/ clonk noise – sounds almost identical to column knock that occurs when driving and cornering over cobbled stones or rough roads. Noise may appear to emanate from a location closer to the floor than that for column knock (Sounds like metallic noise but is created by pressure impulse in gear and return line – similar to a sound like quickly turning off a water tap). | Power steering return lines. | Certain amount of noise level acceptable, not a safety critical item. |
| | High power assist gain of power steering gear valve (steering gear design - no quality issue). | Certain amount of noise level acceptable, not a safety critical item. |
| | High power steering pump flow rate (by design). | Certain amount of noise level acceptable, not a safety critical item. |

### Power Steering Column Knock Noise

#### Test Condition

Listen for steering knock noise in the following test conditions with windows closed.

1. Drive over cobbled stones at low speed 16-40 km/h (10-25 mph) with and without steering input carefully listening for knock sounds.
2. Drive over straight tar strips, road rails or 25 mm tall harshness strips at low speed 16-40 km/h (10-25 mph) both driving straight and with moderate cornering.

| Symptom | Possible Sources | Action |
|---|---|---|
| Power steering system column knock noise – a loose sounding rattle or vibration coming from the column. Noticeable by hearing and touch. | Steering column or steering column shaft. | CHECK the steering column retaining bolts and attachments to the steering column and secure if necessary.<br>REFER to: Specifications (211-04, Specifications). |
| | | Check steering column and intermediate shaft for free play or loose components.<br>REFER to: Steering System (211-00, Diagnosis and Testing). |

### Power Steering Toc-Toc Noise

#### Test Condition

Listen for steering toc-toc noise with the engine speed at idle and the vehicle parked, automatic transmission in "P" (PARK) or manual transmission in neutral and the windows closed.

1. Turn the steering wheel from left to right abruptly changing direction.
2. Drive the vehicle for low speed parking manoeuvres constantly changing steering direction.

## DIAGNOSIS AND TESTING

| Symptom | Possible Sources | Action |
|---|---|---|
| Power steering system toc-toc noise – a metallic noise created when changing direction of steering wheel rotation during parking manoeuvre or at stand-still. | Steering gear (design tolerance in steering rack). | Certain amount of noise level acceptable, not a safety critical item. |

### Power Steering Grinding Noise

#### Test Condition

Listen for steering grinding noise with the engine speed at idle and the vehicle parked, automatic transmission in "P" (PARK) or manual transmission in neutral and the windows closed.

1. Slowly turn the steering wheel from lock to lock.
2. Tilt and extend the steering column in various positions and slowly turn the steering wheel from lock to lock.

| Symptom | Possible Sources | Action |
|---|---|---|
| Power steering system grinding noise – an abrasive noise (like sand paper rubbing against wood) occurs between moving components such as steering wheel and the steering column shroud. | Steering wheel to shroud interference. | Certain amount of noise level acceptable, not a safety critical item. |
| | Steering column bearing. | Certain amount of noise level acceptable, not a safety critical item. |
| | Foreign material in contact with the steering column shaft. | CHECK if floor covering is obstructing the steering gear pinion. |
| | | CHECK the installation of the floor seal. |
| | Clockspring. | CHECK the clockspring and secure if necessary.<br>REFER to: Clockspring (501-20B, Removal and Installation). |

### Power Steering Zip Noise

| Symptom | Possible Sources | Action |
|---|---|---|
| Power steering system zip noise – occurs when hydraulic fluid does not flow freely through the power steering pump supply hose from steering fluid reservoir to power steering pump causing cavitation at the pump. Zip is primarily a cold weather start-up phenomenon (below -10°C). | High viscosity of power steering fluid at low temperature. | Certain amount of noise level acceptable, not a safety critical item. |
| | Aeration of the power steering fluid. | BLEED the power steering system.<br>REFER to: Power Steering System Bleeding (211-00 Steering System - General Information, General Procedures). |

# DIAGNOSIS AND TESTING

## Driveline Noise and Vibration

| Symptom | Possible Sources | Action |
|---|---|---|
| Shake and vibration while driving | • Wheel end vibration.<br>• Engine/transmission. | GO to Pinpoint Test A. |
| Tip-in moan | • Air cleaner.<br>• Power assisted steering.<br>• Powertrain.<br>• Powertrain/drivetrain mounts.<br>• Exhaust system. | GO to Pinpoint Test B. |
| Idle boom/shake/vibration/ shudder | • Cable(s)/hose(s).<br>• Powertrain/drivetrain mounts.<br>• Exhaust system.<br>• Belt/pulleys. | GO to Pinpoint Test C. |

## Suspension Noise and Vibration

| Symptom | Possible Sources | Action |
|---|---|---|
| Wheel end vibration analysis | • Suspension.<br>• Wheel bearings. | GO to Pinpoint Test D. |
| Non-axle noise | • Trim panels.<br>• Air conditioning (A/C) system.<br>• Accessories. | GO to Pinpoint Test E. |

## Pinpoint Tests

**NOTE:** These Pinpoint Tests are designed to take the technician through a step-by-step diagnosis procedure to determine the cause of a condition. It may not always be necessary to follow the chart to its conclusion. Carry out only the pinpoint test steps necessary to correct the condition. Then check the operation of the system to make sure the condition has been corrected.

After verifying that the condition has been corrected, make sure all components removed have been installed.

**PINPOINT TEST A : SHAKE AND VIBRATION WHILE DRIVING**

| TEST CONDITIONS | DETAILS/RESULTS/ACTIONS |
|---|---|
| **A1: NEUTRAL COAST** | |
| | 1 Carry out the neutral coast test.<br>• Does the vibration disappear during the neutral coast test?<br>→ **Yes**<br>GO to A2.<br>→ **No**<br>GO to Pinpoint Test D. |

## DIAGNOSIS AND TESTING

| TEST CONDITIONS | DETAILS/RESULTS/ACTIONS |
|---|---|
| **A2: CHECK THE POWERTRAIN/DRIVETRAIN MOUNTS** | |
| | 1 Carry out the powertrain/drivetrain mount neutralizing procedure<br>• Are the mounts OK?<br>→ **Yes**<br>Vehicle condition corrected. ROAD TEST as necessary.<br>→ **No**<br>INSTALL new powertrain/drivetrain mounts as necessary. ROAD TEST as necessary. |

### PINPOINT TEST B : TIP-IN MOAN

| TEST CONDITIONS | DETAILS/RESULTS/ACTIONS |
|---|---|
| **B1: CHECK THE AIR CLEANER** | |
| | 1 Check the condition of the air cleaner mounts, inlet tube, outlet tube, resonators and all other components associated with the air induction system for correct installation and tightness of all connections.<br>• Are the components OK?<br>→ **Yes**<br>GO to B2.<br>→ **No**<br>REPAIR or INSTALL new components as necessary. ROAD TEST as necessary. |
| **B2: CHECK THE EXHAUST SYSTEM** | |
| | 1 Carry out the exhaust system neutralizing procedure.<br>REFER to: Exhaust System Neutralizing (100-04, General Procedures).<br>• Is the exhaust system OK?<br>→ **Yes**<br>GO to B3.<br>→ **No**<br>REPAIR as necessary. ROAD TEST as necessary. |

## DIAGNOSIS AND TESTING

| TEST CONDITIONS | DETAILS/RESULTS/ACTIONS |
|---|---|
| **B3: CHECK THE POWER STEERING** | |
| | 1 Remove the accessory drive belt and test for tip-in moan. REFER to: (303-05 Accessory Drive)<br>Accessory Drive Belt - 1.8L Duratec-HE (MI4)/1.8L Duratec-SCi (MI4)/2.0L Duratec-HE (MI4) (Removal and Installation),<br>Accessory Drive Belt - 3.0L Duratec-SE (VE6)/2.5L Duratec-VE (VE6)/3.0L Duratec-ST (VE6) (Removal and Installation),<br>Accessory Drive Belt - 2.0L Duratorq-Di/TDDi (Puma) Diesel/2.0L Duratorq-TDCi (Puma) Diesel/2.2L Duratorq-TDCi (Puma) Diesel (Removal and Installation).<br>• Is the tip-in moan OK?<br>→ **Yes**<br>REPAIR the power steering as necessary.<br>REFER to: Steering System (211-00 Steering System - General Information, Diagnosis and Testing).<br>→ **No**<br>GO to B4. |
| **B4: CHECK THE POWERTRAIN/DRIVETRAIN MOUNTS** | |
| | 1 Carry out the powertrain/drivetrain mount neutralizing procedure<br>• Are the powertrain/drivetrain mounts OK?<br>→ **Yes**<br>Vehicle condition corrected. ROAD TEST as necessary.<br>→ **No**<br>INSTALL new powertrain/drivetrain mounts as necessary. ROAD TEST as necessary. |

## DIAGNOSIS AND TESTING

### PINPOINT TEST C : IDLE BOOM/SHAKE/VIBRATION/SHUDDER

| TEST CONDITIONS | DETAILS/RESULTS/ACTIONS |
|---|---|
| **C1: CHECK THE CABLE/HOSES** | |
| | 1 Check the engine compartment for any component that may have a touch condition between the engine and body or chassis. For example: control cable, air conditioning (A/C) hoses, acceleration cable.<br>• Are the components OK?<br>→ **Yes**<br>GO to C2.<br>→ **No**<br>REPAIR or INSTALL new components as necessary. ROAD TEST as necessary. |
| **C2: CHECK THE ENGINE COOLING RADIATOR** | |
| | 1 Check the engine cooling radiator mountings and bushings for security and condition. Check the radiator installation for any component that may have a touch condition.<br>• Is the installation and bushings OK?<br>→ **Yes**<br>GO to C3.<br>→ **No**<br>REPAIR or INSTALL new components as necessary. ROAD TEST as necessary. |
| **C3: CHECK THE EXHAUST SYSTEM** | |
| | 1 Carry out the exhaust system neutralizing procedure.<br>REFER to: Exhaust System Neutralizing (100-04, General Procedures).<br>• Is the exhaust system OK?<br>→ **Yes**<br>GO to C4.<br>→ **No**<br>REPAIR as necessary. ROAD TEST as necessary. |

## DIAGNOSIS AND TESTING

| TEST CONDITIONS | DETAILS/RESULTS/ACTIONS |
|---|---|
| **C4: CHECK THE POWERTRAIN/DRIVETRAIN MOUNTS** | |
| | 1 Carry out the powertrain/drivetrain mount neutralizing procedure<br>• Are the powertrain/drivetrain mounts OK?<br>→ **Yes**<br>Vehicle condition corrected. ROAD TEST as necessary.<br>→ **No**<br>INSTALL new powertrain/drivetrain mounts as necessary. ROAD TEST as necessary. |

### PINPOINT TEST D : WHEEL END VIBRATION ANALYSIS

| TEST CONDITIONS | DETAILS/RESULTS/ACTIONS |
|---|---|
| **D1: INSPECT THE WHEELS AND TIRES** | |
| | 1 Inspect the wheels and tires.<br>REFER to: Wheels and Tires (204-04 Wheels and Tires, Diagnosis and Testing).<br>• Are the wheels and tires OK?<br>→ **Yes**<br>GO to D2.<br>→ **No**<br>INSTALL new wheels or tires as necessary.<br>REFER to: Wheel and Tire (204-04 Wheels and Tires, Removal and Installation).<br>ROAD TEST as necessary. |

## DIAGNOSIS AND TESTING

| TEST CONDITIONS | DETAILS/RESULTS/ACTIONS |
|---|---|
| **D2: INSPECT THE WHEEL BEARINGS** | |
| | 1 Inspect the wheel bearings.<br>REFER to: Wheel Bearing Inspection (204-00 Suspension System - General Information, General Procedures).<br>• Are the wheel bearings OK?<br>→ **Yes**<br>GO to D3.<br>→ **No**<br>INSTALL new wheel bearings as necessary. REFER to:<br>Wheel Bearing (204-01 Front Suspension, Removal and Installation),<br>Wheel Bearing - 2.0L Duratorq-Di/TDDi (Puma) Diesel/2.0L Duratorq-TDCi (Puma) Diesel, Vehicles With: 5-Speed Automatic Transaxle (5F31J) (204-01 Front Suspension, Removal and Installation),<br>Wheel Hub (204-02 Rear Suspension, Removal and Installation).<br>ROAD TEST as necessary. |
| **D3: INSPECT THE WHEEL AND TIRE RUNOUT** | |
| | 1 Inspect the wheel and tire runout.<br>• Is the wheel and tire runout OK?<br>→ **Yes**<br>Balance the wheels and tires. Refer to the wheel balance equipment manufacturer's instructions. ROAD TEST as necessary.<br>→ **No**<br>INSTALL new wheels or tires as necessary.<br>REFER to: Wheel and Tire (204-04 Wheels and Tires, Removal and Installation).<br>ROAD TEST as necessary. |

## DIAGNOSIS AND TESTING

### PINPOINT TEST E : NON-AXLE NOISE

| TEST CONDITIONS | DETAILS/RESULTS/ACTIONS |
|---|---|
| **E1: INSPECT THE VEHICLE TRIM** | |
| | 1 Check the radiator grille and trim panels to see if they are the source of the noise.<br>• Are the vehicle trim components causing the noise?<br>→ **Yes**<br>INSTALL new trim components or REPAIR as necessary. ROAD TEST as necessary.<br>→ **No**<br>GO to E2. |
| **E2: CHECK THE AIR CONDITIONING (A/C) SYSTEM FOR NOISE** | |
| | 1 Ignition switch in position III. |
| | 2 Ignition switch in position II. |
| | 3 Check the A/C system components for noise by turning the A/C system on and off.<br>• Is the A/C system causing the noise?<br>→ **Yes**<br>INSPECT the A/C system. REFER to: (412-00 Climate Control System - General Information)<br>Climate Control System (Diagnosis and Testing), Climate Control System (Diagnosis and Testing). ROAD TEST as necessary.<br>→ **No**<br>GO to E3. |
| **E3: CHECK NON-FACTORY FITTED ACCESSORIES** | |
| | 1 Check any non-factory installed accessories for being the source of the noise. For example: touch condition body-to-frame, antennas, deflectors and fog lights.<br>• Are the accessories the cause of the noise?<br>→ **Yes**<br>ADJUST, REPAIR, or INSTALL new accessories or fasteners as required. ROAD TEST as necessary.<br>→ **No**<br>VERIFY the customer concern. |

## GENERAL PROCEDURES

# Powertrain/Drivetrain Mount Neutralizing(14 001 0)

**NOTE:**There is no procedure for neutralizing the powertrain/drivetrain mounts. To check the alignment of the powertrain mounts visually, proceed as follows.

1. **Loosen the rear support insulator retaining bolts (if equipped).**
2. **Loosen the powertrain/drivetrain mount retaining bolts.**
3. **NOTE:Support the powertrain/drivetrain in an approximate position and height.**

**NOTE:**Make sure that the right-hand mount and left-hand insulator align over the studs on the powertrain and drivetrain to allow the fixings to be assembled through the large holes in the support insulator bracket without overstraining.

**Check the powertrain/drivetrain mount alignment.**

4. **Tighten the powertrain/drivetrain mount to powertrain/drivetrain mount bracket retaining bolts.**
5. **Tighten the powertrain/drivetrain mount to body retaining bolts.**
6. **Tighten the rear support insulator retaining bolts (if equipped).**

# SECTION 204-00 Suspension System - General Information

## VEHICLE APPLICATION:2006.0 Fiesta

CONTENTS PAGE

**SPECIFICATIONS**

Specifications..... 204-00-2

**DIAGNOSIS AND TESTING**

Suspension System..... 204-00-4
Inspection and Verification..... 204-00-4
Symptom Chart..... 204-00-4
Pinpoint Tests..... 204-00-8
Component Tests..... 204-00-14

**GENERAL PROCEDURES**

Wheel Bearing Inspection..... 204-00-16
Front Toe Adjustment..... (14 117 0) 204-00-17

## SPECIFICATIONS

### Front Wheel Alignment (at curb weight)

| Description | | Tolerance Range | Setting or Nominal | Maximum Variance Left or Right |
|---|---|---|---|---|
| Caster angle | Degrees and minutes | 4°38' to 2°38' | 3°38' | 1°00' |
| | Decimal degrees | 4.64° to 2.64° | 3.64° | 1.00° |
| Camber angle | Degrees and minutes | 0°36' to -1°54' | -0°39' | 1°15' |
| | Decimal degrees | 0.60° to -1.90° | -0.65° | 1.25° |
| Total toe | mm | 3.1 Toe in ± 2.2 | 3.1 Toe in ± 1.0 | - |
| | Degrees and minutes | 0°30' Toe in ± 0°21' | 0°30 Toe in ± 0°10' | - |
| | Decimal degrees | 0.50° Toe in ± 0.35° | 0.50° Toe in ± 0.17° | - |

### Front Wheel Alignment (at curb weight) – ST150

| Description | | Tolerance Range | Setting or Nominal | Maximum Variance Left or Right |
|---|---|---|---|---|
| Caster angle | Degrees and minutes | 4°47' to 2°47' | 3°47' | 1°00' |
| | Decimal degrees | 4.78° to 2.78° | 3.78° | 1.00° |
| Camber angle | Degrees and minutes | 0°02' to -2°28' | -1°13' | 1°15' |
| | Decimal degrees | 0.03° to -2.47° | -1.22° | 1.25° |
| Total toe | mm | 1.1 Toe in ± 2.4 | 1.1 Toe in ± 1.2 | - |
| | Degrees and minutes | 0°09' Toe in ± 0°20' | 0°09' Toe in ± 0°10' | - |
| | Decimal degrees | 0.15° Toe in ± 0.34° | 0.15° Toe in ± 0.17° | - |

### Front Wheel Alignment (at curb weight) - 3-Door Sport

| Description | | Tolerance Range | Setting or Nominal | Maximum Variance Left or Right |
|---|---|---|---|---|
| Caster angle | Degrees and minutes | 4°39' to 2°34' | 3°37' | 1°00' |
| | Decimal degrees | 4.65° to 2.57° | 3.61° | 1.00° |
| Camber angle | Degrees and minutes | 0°25' to -2°08' | -0°52' | 1°15' |
| | Decimal degrees | 0.41° to -2.13° | -0.86° | 1.25° |
| Total toe | mm | 3.1 Toe in ± 2.2 | 3.1 Toe in ± 1.0 | - |
| | Degrees and minutes | 0°30' Toe in ± 0°21' | 0°30 Toe in ± 0°10' | - |
| | Decimal degrees | 0.50° Toe in ± 0.35° | 0.50° Toe in ± 0.17° | - |

## SPECIFICATIONS

### Rear Wheel Alignment (at curb weight) - All vehicles except ST150

| Description | | Tolerance Range | Setting or Nominal | Maximum Variance Left or Right |
|---|---|---|---|---|
| Camber angle | Degrees and minutes | 0°07' to -2°23' | -1°08' | 1°15' |
| | Decimal degrees | 0.11° to -2.39° | -1.14° | 1.25° |
| Total toe | mm | 3.2 Toe in ± 2.1 | 3.2 | - |
| | Degrees and minutes | 0°31' Toe in ± 0°20' | 0°31' | - |
| | Decimal degrees | 0.52° Toe in ± 0.34° | 0.52° | - |

### Rear Wheel Alignment (at curb weight) – ST150

| Description | | Tolerance Range | Setting or Nominal | Maximum Variance Left or Right |
|---|---|---|---|---|
| Camber angle | Degrees and minutes | 0°06' to -2°24' | -1°09' | 1°15' |
| | Decimal degrees | 0.10° to -2.40° | -1.15° | 1.25° |
| Total toe | mm | 3.6 Toe in ± 4.8 | 3.6 | - |
| | Degrees and minutes | 0°31' Toe in ± 0°40' | 0°31' | - |
| | Decimal degrees | 0.51° Toe in ± 0.67° | 0.51° | - |

### Torque Specifications

| Item | Nm | lb-ft | lb-in |
|---|---|---|---|
| Tie-rod end locknut | 63 | 46 | - |

## DIAGNOSIS AND TESTING

# Suspension System

### Special Tool(s)

| | |
|---|---|
| 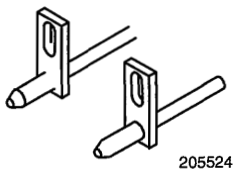 205524 | Alignment Pins, Subframe 205-524 (15-122) |

## Inspection and Verification

1. Verify the customer concern.
2. Visually inspect for obvious signs of mechanical damage.

### Visual Inspection Chart

| Mechanical |
|---|
| Tire pressure(s) |
| Wheels and tires |
| Wheel knuckles |
| Tie-rod ends |
| Front suspension lower arm ball joints |
| Front suspension lower arm bushings |
| Front strut and spring assemblies |
| Front stabilizer bar and connecting links |
| Rear springs |
| Rear shock absorbers |
| Rear suspension beam axle and bushings |

3. If an obvious cause for an observed or reported concern is found, correct the cause (if possible) before proceeding to the next step.
4. If the cause is not visually evident, verify the symptom and refer to the Symptom Chart.

## Symptom Chart

### Symptom Chart

| Symptom | Possible Sources | Action |
|---|---|---|
| • Drift left or right | • Vehicle attitude incorrect (front or rear is high or low). | • CHECK for abnormal loading, spring sag or non-standard springs. |
| | • Steering gear or linkage worn or damaged. | • CHECK the steering system. REFER to: (211-00 Steering System - General Information) Steering System (Diagnosis and Testing), Steering System - 1.6L Duratorq-TDCi (DV) Diesel (Diagnosis and Testing). |
| | • Brake system. | • CHECK the brake system. REFER to: Brake System (206-00 Brake System - General Information, Diagnosis and Testing). |
| | • Incorrect wheel alignment. | • ADJUST the wheel alignment. REFER to: Specifications (204-00 Suspension System - General Information, Specifications). |

## DIAGNOSIS AND TESTING

| Symptom | Possible Sources | Action |
|---|---|---|
| | • Incorrect front crossmember alignment. | • Using the special tool, CHECK the front crossmember alignment. |
| | • Worn front wheel bearings. | • CHECK the wheel bearings.<br>REFER to: Wheel Bearing Inspection (204-00 Suspension System - General Information, General Procedures). |
| | • Wheels and tires. | • GO to Pinpoint Test A. |
| • Steering wheel off-center | • Vehicle attitude incorrect (front or rear is high or low). | • CHECK for abnormal loading, spring sag or non-standard springs. |
| | • Steering gear or linkage worn or damaged. | • CHECK the steering system. REFER to: (211-00 Steering System - General Information)<br>Steering System (Diagnosis and Testing),<br>Steering System - 1.6L Duratorq-TDCi (DV) Diesel (Diagnosis and Testing). |
| | • Suspension lower arm ball joint. | • CARRY OUT the Ball Joint Inspection component test in this procedure. |
| | • Incorrect wheel alignment. | • ADJUST the wheel alignment.<br>REFER to: Specifications (204-00 Suspension System - General Information, Specifications). |
| • Tracks incorrectly | • Incorrect front suspension toe, castor or camber angles. | • CHECK the wheel alignment.<br>REFER to: Specifications (204-00 Suspension System - General Information, Specifications).<br>INSTALL new suspension components as necessary. |
| | • Incorrect rear suspension toe or camber angles. | • CHECK the wheel alignment.<br>REFER to: Specifications (204-00 Suspension System - General Information, Specifications).<br>INSTALL new suspension components as necessary. |
| | • Front or rear suspension damage. | • INSTALL new suspension components as necessary. |

## DIAGNOSIS AND TESTING

| Symptom | Possible Sources | Action |
|---|---|---|
| • Rough ride | • Front strut and spring assemblies. | • CARRY OUT the Strut or Shock Absorber Testing component test in this procedure.<br>• CHECK and INSTALL new suspension components as necessary.<br>REFER to: Front Strut and Spring Assembly (204-01 Front Suspension, Disassembly and Assembly). |
| | • Front stabilizer bar, connecting links or bushings. | • CHECK and INSTALL new suspension components as necessary. REFER to: (204-01 Front Suspension)<br>Front Stabilizer Bar Bushing (Removal and Installation), Front Stabilizer Bar (Removal and Installation). |
| | • Front suspension lower arm bushings. | • INSTALL a new lower arm.<br>REFER to: Lower Arm (204-01 Front Suspension, Removal and Installation). |
| | • Rear suspension bushings. | • CHECK and INSTALL new components as necessary. |
| | • Rear shock absorbers. | • CARRY OUT the Strut or Shock Absorber Testing component test in this procedure.<br>• CHECK and INSTALL new suspension components as necessary. |
| • Excessive noise | • Front strut and spring assembly or rear shock absorber and spring upper mounting bolts or nuts loose or broken. | • GO to Pinpoint Test B. |
| | • Shock absorbers leaking | • GO to Pinpoint Test B. |
| | • Shock absorber performance incorrect | • GO to Pinpoint Test B. |
| | • Stabilizer bar components | • GO to Pinpoint Test B. |
| | • Strut and spring assembly and springs | • GO to Pinpoint Test B. |
| | • Springs moving on spring upper or lower seats | • GO to Pinpoint Test B. |
| | • Suspension bushings | • GO to Pinpoint Test B. |
| | • Lower arm ball joint | • GO to Pinpoint Test B. |

## DIAGNOSIS AND TESTING

| Symptom | Possible Sources | Action |
|---|---|---|
| | • Worn front wheel bearings | • GO to Pinpoint Test B. |
| | • Wheels and tires | • GO to Pinpoint Test B. |
| • Incorrect tire wear | • Front or rear suspension damage. | • CHECK and INSTALL new suspension components as necessary. |
| | • Incorrect wheel alignment. | • ADJUST the wheel alignment.<br>REFER to: Specifications (204-00 Suspension System - General Information, Specifications). |
| • Vibration | • Damaged or worn front wheel bearings. | • CHECK the front wheel bearings.<br>REFER to: Wheel Bearing Inspection (204-00 Suspension System - General Information, General Procedures). |
| | • Wheels and tires. | • CHECK the tires. BALANCE or INSTALL new tires as necessary. |
| | • Incorrect wheel alignment. | • ADJUST the wheel alignment.<br>REFER to: Specifications (204-00 Suspension System - General Information, Specifications). |
| | • Steering gear or linkage worn or damaged. | • CHECK the steering system. REFER to: (211-00 Steering System - General Information)<br>Steering System (Diagnosis and Testing),<br>Steering System - 1.6L Duratorq-TDCi (DV) Diesel (Diagnosis and Testing). |
| | • Front strut and spring assemblies. | • CARRY OUT the Strut or Shock Absorber Testing component test in this procedure.<br>• CHECK and INSTALL new suspension components as necessary.<br>REFER to: Front Strut and Spring Assembly (204-01 Front Suspension, Disassembly and Assembly). |

## DIAGNOSIS AND TESTING

| Symptom | Possible Sources | Action |
|---|---|---|
| | • Damaged front suspension lower arm(s). | • INSTALL a new lower arm(s).<br>REFER to: Lower Arm (204-01 Front Suspension, Removal and Installation). |

## Pinpoint Tests

### PINPOINT TEST A : DRIFT LEFT OR RIGHT

| TEST CONDITIONS | DETAILS/RESULTS/ACTIONS |
|---|---|
| ▲ **WARNING:To avoid personal injury due to the loss of vehicle control, the inspection should be carried out by two people to maintain safe driving conditions. Adequate grip should always be maintained on the steering wheel. Failure to follow these instructions may result in personal injury.** | |
| **NOTE:**The following conditions must be met when evaluating the vehicle. | |
| **NOTE:**The tire swapping procedures are for bi-directional rotating tires only. | |
| **A1: SWAP THE FRONT WHEEL AND TIRE ASSEMBLIES** | |
| | 1 Raise and support the vehicle. REFER to: (100-02 Jacking and Lifting)<br>Jacking (Description and Operation), Lifting (Description and Operation).<br>– Swap the front left-hand wheel and tire assembly with the front right-hand wheel and tire assembly.<br>– Road test the vehicle.<br>• Does the vehicle drift?<br>→ **Yes**<br>GO to A2.<br>→ **No**<br>Vehicle condition corrected. |

## DIAGNOSIS AND TESTING

| TEST CONDITIONS | DETAILS/RESULTS/ACTIONS |
|---|---|
| **A2: SWAP THE REAR WHEEL AND TIRE ASSEMBLIES** | |
| | 1 Raise and support the vehicle. REFER to: (100-02 Jacking and Lifting)<br>Jacking (Description and Operation), Lifting (Description and Operation).<br>– Swap the rear left-hand wheel and tire assembly with the rear right-hand wheel and tire assembly.<br>– Road test the vehicle.<br>• Does the vehicle drift?<br>→ **Yes**<br>GO to A3.<br>→ **No**<br>Vehicle condition corrected. |
| **A3: SWAP THE LEFT-HAND WHEEL AND TIRE ASSEMBLIES** | |
| | 1 Raise and support the vehicle. REFER to: (100-02 Jacking and Lifting)<br>Jacking (Description and Operation), Lifting (Description and Operation).<br>– Swap the front left-hand wheel and tire assembly with the rear left-hand wheel and tire assembly.<br>– Road test the vehicle.<br>• Does the vehicle drift?<br>→ **Yes**<br>GO to A4.<br>→ **No**<br>Vehicle condition corrected. |
| **A4: SWAP THE RIGHT-HAND WHEEL AND TIRE ASSEMBLIES** | |
| | 1 Raise and support the vehicle. REFER to: (100-02 Jacking and Lifting)<br>Jacking (Description and Operation), Lifting (Description and Operation).<br>– Swap the front right-hand wheel and tire assembly with the rear right-hand wheel and tire assembly.<br>– Road test the vehicle.<br>• Does the vehicle drift?<br>→ **Yes**<br>GO to A5.<br>→ **No**<br>Vehicle condition corrected. |

## DIAGNOSIS AND TESTING

| TEST CONDITIONS | DETAILS/RESULTS/ACTIONS |
|---|---|
| **A5: SWAP THE FRONT LEFT-HAND WHEEL AND TIRE ASSEMBLY** | |
| | 1 Raise and support the vehicle.<br>– Swap the front left-hand wheel and tire assembly with the rear right-hand wheel and tire assembly.<br>– Road test the vehicle.<br>• Does the vehicle drift?<br>→ **Yes**<br>GO to A6.<br>→ **No**<br>Vehicle condition corrected. |
| **A6: SWAP THE FRONT RIGHT-HAND WHEEL AND TIRE ASSEMBLY** | |
| | 1 Raise and support the vehicle. REFER to: (100-02 Jacking and Lifting)<br>Jacking (Description and Operation), Lifting (Description and Operation).<br>– Swap the front right-hand wheel and tire assembly with the rear left-hand wheel and tire assembly.<br>– Road test the vehicle.<br>• Does the vehicle drift?<br>→ **Yes**<br>GO to A7.<br>→ **No**<br>Vehicle condition corrected. |
| **A7: INSTALL NEW TIRES** | |
| **NOTE:** Install new tires only once. | |
| | 1 Install new tires to the four road wheels. TEST the system for normal operation.<br>• Does the vehicle drift?<br>→ **Yes**<br>Verify possible sources, refer to the Symptom Chart.<br>→ **No**<br>Vehicle condition corrected. |

## DIAGNOSIS AND TESTING

### PINPOINT TEST B : EXCESSIVE NOISE

| TEST CONDITIONS | DETAILS/RESULTS/ACTIONS |
|---|---|
| **B1: INSPECT ALL STRUT AND SPRING ASSEMBLY AND SHOCK ABSORBER MOUNTING BOLTS AND NUTS** | |
| | 1 Inspect the strut and spring assembly and shock absorber mounting bolts and nuts.<br>• Are the mounting bolts or nuts loose or broken?<br>→ **Yes**<br>TIGHTEN or INSTALL new mounting bolts and nuts. REFER to:<br>Specifications (204-01 Front Suspension, Specifications),<br>Specifications (204-02 Rear Suspension, Specifications).<br>→ **No**<br>GO to B2. |
| **B2: INSPECT THE STRUT AND SPRING ASSEMBLIES AND SHOCK ABSORBERS FOR LEAKS** | |
| | **NOTE:**Make sure that the oil is not from another source.<br>1 Inspect the strut and spring assemblies and shock absorbers for signs of oil weepage or leaks. Refer to weepage and leakage conditions in the Strut or Shock Absorber Testing component test in this procedure.<br>• Are the struts or shock absorbers leaking?<br>→ **Yes**<br>INSTALL new struts or shock absorbers as necessary. REFER to:<br>Front Strut and Spring Assembly (204-01 Front Suspension, Removal and Installation),<br>Rear Shock Absorber (204-02 Rear Suspension, Removal and Installation).<br>→ **No**<br>GO to B3. |

## DIAGNOSIS AND TESTING

| TEST CONDITIONS | DETAILS/RESULTS/ACTIONS |
|---|---|
| **B3: INSPECT THE SPRINGS AND STABILIZER BAR(S)** | |
| | 1 Inspect the springs and stabilizer bar(s) for damage.<br>• Are the springs or stabilizer bar(s) damaged?<br>→ **Yes**<br>INSTALL new springs or stabilzer bar(s). REFER to:<br>Front Strut and Spring Assembly (204-01 Front Suspension, Disassembly and Assembly),<br>Front Stabilizer Bar (204-01 Front Suspension, Removal and Installation),<br>Spring (204-02 Rear Suspension, Removal and Installation).<br>→ **No**<br>GO to B4. |
| **B4: INSPECT THE SUSPENSION BUSHINGS** | |
| | 1 Inspect the suspension bushings for excessive wear or damage.<br>• Are the bushings worn or damaged?<br>→ **Yes**<br>INSTALL new components as necessary. REFER to:<br>Front Stabilizer Bar Bushing (204-01 Front Suspension, Removal and Installation),<br>Lower Arm (204-01 Front Suspension, Removal and Installation),<br>Front Strut and Spring Assembly (204-01 Front Suspension, Removal and Installation),<br>Rear Shock Absorber (204-02 Rear Suspension, Removal and Installation),<br>Trailing Arm Bushing (204-02 Rear Suspension, Removal and Installation).<br>→ **No**<br>GO to B5. |
| **B5: INSPECT THE SUSPENSION LOWER ARM BALL JOINTS** | |
| | 1 Carry out the Ball Joint Inspection component test in this procedure.<br>• Is the lower arm ball joint or gaiter damaged?<br>→ **Yes**<br>INSTALL a new lower arm.<br>REFER to: Lower Arm (204-01 Front Suspension, Removal and Installation).<br>→ **No**<br>GO to B6. |

## DIAGNOSIS AND TESTING

| TEST CONDITIONS | DETAILS/RESULTS/ACTIONS |
|---|---|
| **B6: INSPECT THE WHEEL BEARINGS** | |
| | 1 Check the wheel bearings.<br>REFER to: Wheel Bearing Inspection (204-00 Suspension System - General Information, General Procedures).<br>• Are the wheel bearings damaged?<br>→ **Yes**<br>INSTALL a new wheel bearing(s). REFER to:<br>Front Wheel Bearing (204-01 Front Suspension, Removal and Installation),<br>Rear Wheel Bearing (204-02 Rear Suspension, Removal and Installation).<br>→ **No**<br>GO to B7. |
| **B7: INSPECT THE WHEELS AND TIRES** | |
| | 1 Check the tires for uneven wear.<br>• Is there uneven tire wear?<br>→ **Yes**<br>REFER to the symptom chart.<br>→ **No**<br>GO to B8. |
| **B8: INSPECT THE STRUT AND SPRING ASSEMBLY AND REAR SUSPENSION SPRING INTERFACE** | |
| | 1 Loosen the strut and spring assemblies and shock absorbers top and bottom mounting bolts and nuts. Tighten the mounting bolts and nuts. REFER to:<br>Specifications (204-01 Front Suspension, Specifications),<br>Specifications (204-02 Rear Suspension, Specifications).<br>– Carry out a road test.<br>REFER to: Road/Roller Testing (100-00 General Information, Description and Operation).<br>• Is the concern still evident?<br>→ **Yes**<br>GO to B9.<br>→ **No**<br>Vehicle condition corrected. |
| **B9: INSPECT THE STRUT AND SPRING ASSEMBLIES AND SHOCK ABSORBER COMPONENTS** | |
| | 1 Check that the spring is correctly located on the spring seat and has not moved. |

## DIAGNOSIS AND TESTING

| TEST CONDITIONS | DETAILS/RESULTS/ACTIONS |
|---|---|
| | 2 Disassemble the strut and spring and assembly and inspect the individual components.<br>REFER to: Front Strut and Spring Assembly (204-01 Front Suspension, Disassembly and Assembly). |
| | 3 Inspect the shock absorber top mount for wear or damage. |
| | 4 Carry out the Strut or Shock Absorber Testing component test in this procedure.<br>• Are any of the strut and spring assemblies or shock absorber components damaged?<br>→ **Yes**<br>INSTALL new components as necessary. REFER to:<br>Front Strut and Spring Assembly (204-01 Front Suspension, Disassembly and Assembly),<br>Rear Shock Absorber (204-02 Rear Suspension, Removal and Installation),<br>Spring (204-02 Rear Suspension, Removal and Installation).<br>→ **No**<br>REINSTALL the strut and spring assemblies or shock absorbers. GO to B10. |
| **B10: CARRY OUT A ROAD TEST** | |
| | 1 Carry out a road test.<br>REFER to: Road/Roller Testing (100-00 General Information, Description and Operation).<br>• Is the concern still evident?<br>→ **Yes**<br>REFER to: Noise, Vibration and Harshness (NVH) (100-04 Noise, Vibration and Harshness, Diagnosis and Testing).<br>→ **No**<br>Vehicle condition corrected. |

## Component Tests

Raise and support the vehicle. REFER to: (100-02 Jacking and Lifting)

Jacking (Description and Operation),
Lifting (Description and Operation).

### Ball Joint Inspection

1. Firmly grasp the outer end of the suspension lower arm and try to move it up and down, watching and feeling for any movement. Free movement will usually be accompanied by an audible "click". There should be no free movement.

## DIAGNOSIS AND TESTING

2. If there is any free movement install a new lower arm.

   REFER to: Lower Arm (204-01 Front Suspension, Removal and Installation).
3. If a new lower arm is installed it will be necessary to check and adjust the front wheel alignment.

   REFER to: Specifications (204-00 Suspension System - General Information, Specifications).

### Strut or Shock Absorber Inspection

**NOTE:**Inspect the struts or shock absorber for signs of oil weepage or leaks. Make sure that the oil is not from another source.

Weepage:

- deposits a thin film of oil on the strut and spring assembly or shock absorber.
- is normally noticed due to a collection of dust on the strut and spring assembly or shock absorber.
- occurs during the normal running-in period of 4800 - 8050 km. After this period no new signs of oil should be visible.
- does not require new struts or shock absorbers to be installed.

Leakage:

- covers the entire strut and spring assembly or shock absorber with oil.
- will drip oil onto the surrounding suspension components.
- requires new struts or shock absorbers to be installed.

### Strut or Shock Absorber Testing

**NOTE:**Struts or shock absorbers must be tested in the vertical position.

1. Remove both strut and spring assemblies or shock absorbers. The piston rods should extend.
   - Disassemble the strut and spring assemblies.

     REFER to: Front Strut and Spring Assembly (204-01 Front Suspension, Disassembly and Assembly).
2. Compress the piston rods. Both piston rods should offer the same resistance when compressing.
3. Compress and release the piston rods. The piston rods should extent equally.
4. Compress and pull the piston rod in the vertical position. Feel if the resistance force at the point of direction change-over is perceptible without a lag. If a lag is perceptible it is an indication of damper valve damage and new struts or shock absorbers must be installed. REFER to:

   Front Strut and Spring Assembly (204-01 Front Suspension, Disassembly and Assembly),
   Front Strut and Spring Assembly (204-01 Front Suspension, Removal and Installation),
   Rear Shock Absorber (204-02 Rear Suspension, Removal and Installation).

## GENERAL PROCEDURES

# Wheel Bearing Inspection

### Special Tool(s)

| | |
|---|---|
| 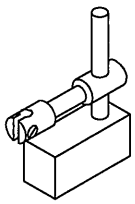 15008 | Holding Fixture, Dial Indicator Gauge 205-044 (15-008) |

### General Equipment

| |
|---|
| Dial indicator gauge |

### Check

1. **NOTE:Do not to confuse lower arm ball joint looseness with bearing looseness.**

   **Raise and support the front of the vehicle. For additional information, refer to: (100-02)**

   **Jacking (Description and Operation), Lifting (Description and Operation).**

2. **Check for loose front wheel bearings by rocking the wheels at the top and bottom.**

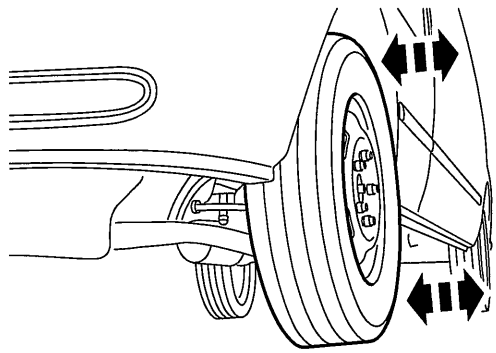
TIE0014196

3. **Spin the wheel quickly by hand and make sure the wheel turns smoothly without noise from the wheel bearings.**

4. **Remove the front brake caliper anchor plate.**

   **For additional information, refer to: Brake Caliper Anchor Plate (206-03, Removal and Installation).**

5. **Position a suitable Dial indicator gauge fixture or equivalent, against the wheel hub, then push and pull the wheel hub. Measure the end play of the wheel hub and front wheel bearing assembly. There should be no end play. If end play exists, install new wheel bearings.**

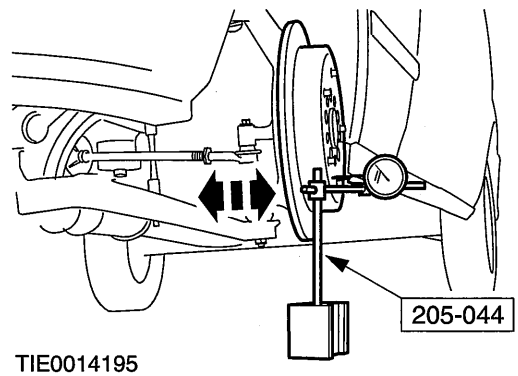

TIE0014195

6. **Install the front brake caliper anchor plate.**

   **For additional information, refer to: Brake Caliper Anchor Plate (206-03, Removal and Installation).**

## GENERAL PROCEDURES

# Front Toe Adjustment(14 117 0)

**NOTE:**Make sure that the vehicle is standing on a level surface.

**1. Centralize the steering and lock it in position.**

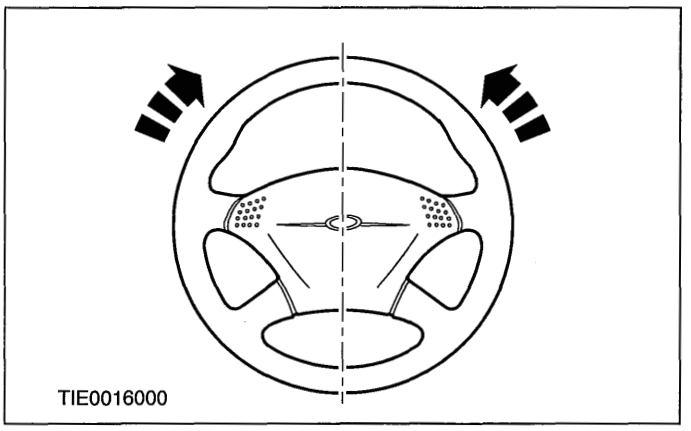


**2. Loosen the tie-rod end locknuts.**

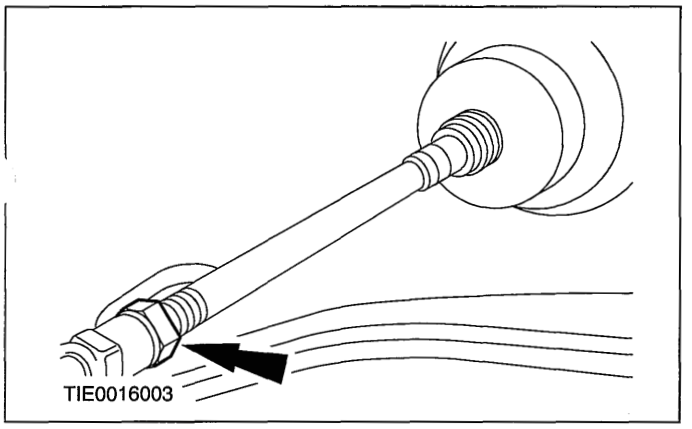


**3. Remove the steering gear boot outer clamps.**

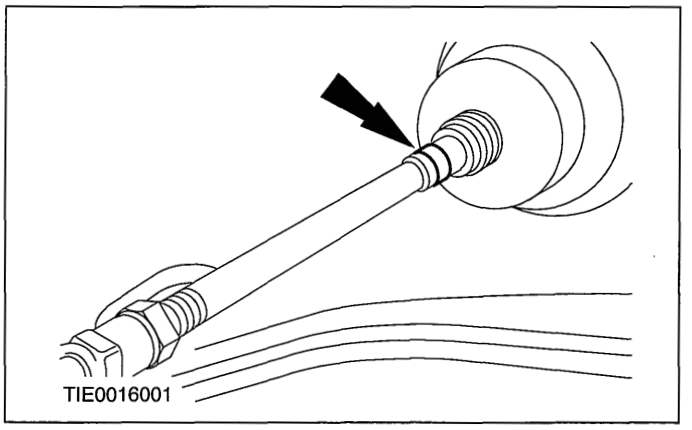


**4. Rotate the tie-rods an equal amount in either a clockwise or a counterclockwise direction to adjust the toe setting.**

**For additional information, refer to: Specifications (204-00, Specifications).**

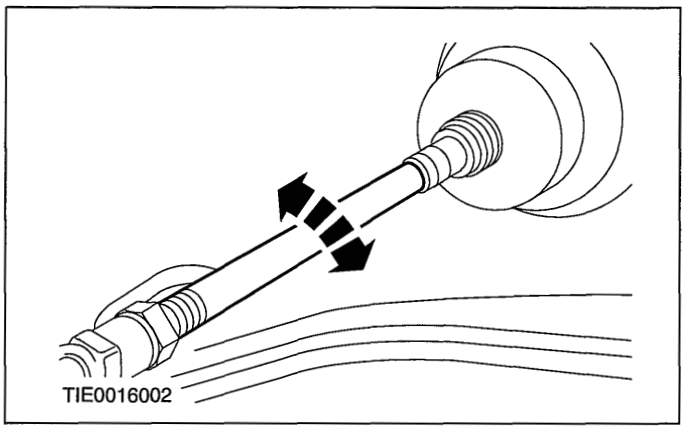


**5. Tighten the tie-rod end locknuts.**

**For additional information, refer to: Tie Rod End (211-03 Steering Linkage, Removal and Installation).**

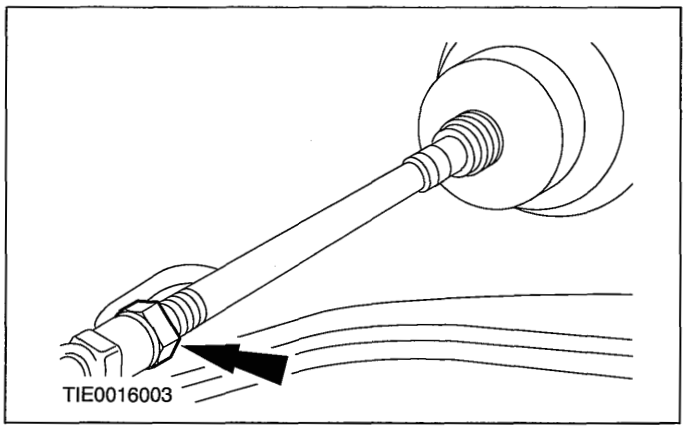


**6. Install the steering gear boot outer clamps.**

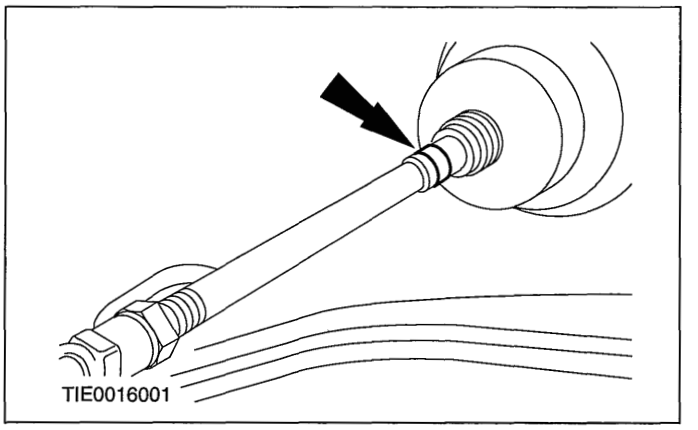

# SECTION 204-01 Front Suspension

## VEHICLE APPLICATION:2006.0 Fiesta

CONTENTS PAGE


**SPECIFICATIONS**

Specifications ..... 204-01-2

**DESCRIPTION AND OPERATION**

Front Suspension ..... 204-01-3

**DIAGNOSIS AND TESTING**

Front Suspension ..... 204-01-5

**REMOVAL AND INSTALLATION**

Front Stabilizer Bar Bushing ..... (14 754 0) 204-01-6
Lower Arm ..... (14 706 0) 204-01-7
Front Stabilizer Bar ..... (14 752 0) 204-01-9
Wheel Knuckle ..... (14 343 0) 204-01-13
Front Strut and Spring Assembly ..... (14 781 0) 204-01-19
Front Wheel Bearing ..... (14 411 0) 204-01-21

**DISASSEMBLY AND ASSEMBLY**

Front Strut and Spring Assembly ..... (14 783 4) 204-01-23

## SPECIFICATIONS

### Torque Specifications

| Item | Nm | lb-ft | lb-in |
|---|---|---|---|
| Top mount retaining nuts | 25 | 18 | - |
| Thrust bearing retaining nut | 48 | 35 | - |
| Stabilizer bar connecting link to strut and spring retaining nut | 48 | 35 | - |
| Wheel knuckle to suspension strut pinch bolt | 85 | 63 | - |
| Brake caliper anchor plate retaining bolts | 70 | 52 | - |
| Lower arm ball joint to wheel knuckle retaining nut | 48 | 35 | - |
| Tie-rod end retaining nut | 48 | 35 | - |
| Stabilizer bar clamp retaining bolts | 55 | 41 | - |
| Stabilizer bar to connecting link retaining nut | 55 | 41 | - |
| Steering gear retaining bolts | 48 | 35 | - |
| Lower arm front retaining bolt | a) | - | - |
| Lower arm rear clamp retaining bolts | 55 | 41 | - |
| Crossmember front retaining bolts | 70 | 52 | - |
| Crossmember rear retaining bolts | 115 | 85 | - |
| Crossmember inner and outer retaining bolts | 175 | 129 | - |
| Wheel hub retaining nut | 290 | 214 | - |
| Engine support insulator center bolt | 48 | 35 | - |
| Wheel speed sensor retaining nut | 9 | - | 80 |

a) Refer to the procedure in this section.

## DESCRIPTION AND OPERATION

# Front Suspension

### Overview

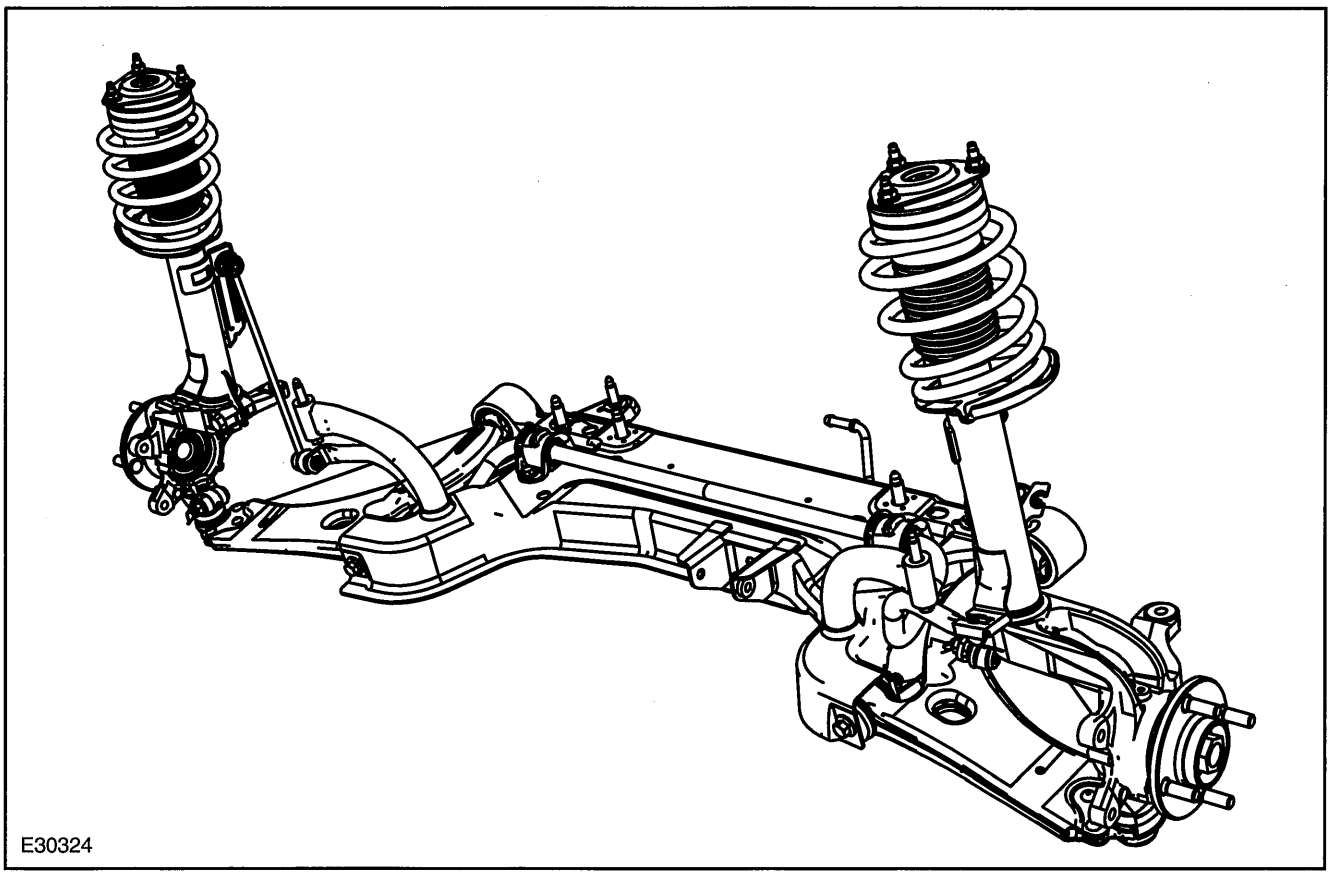


**NOTE:**During installation of the front wheel bearing it is important to adhere to the specified installation position, as the anti-lock brake system ( ABS ) sensor ring is located in the wheel bearing. A coloured rubber ring is provided to indicate the correct installation position. If the wheel bearing were to be installed incorrectly then this would cause failure of the ABS .

A newly developed Mc-Pherson front suspension with L-shaped lower arms is used. These lower suspension arms are linked via large rubber mountings to a reinforced and extremely rigid front axle crossmember.

The ball head between the lower suspension arm and the suspension strut is secured with three rivets. Toe-in is adjusted via adjustable track rods. The lower suspension arms can only be replaced as a complete unit.

## DESCRIPTION AND OPERATION

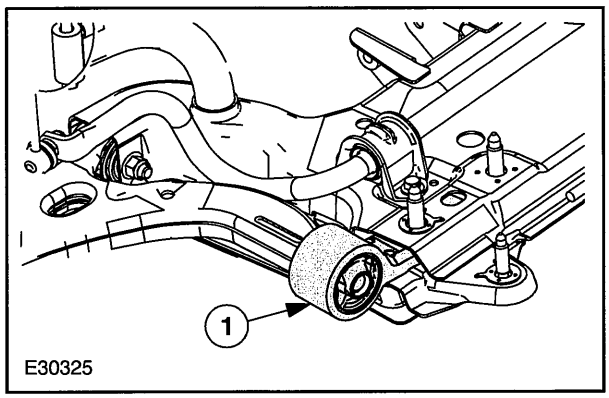


| Item | Description |
|---|---|
| 1 | Rear rubber mounting |

The rear rubber mountings for the lower suspension arms are enclosed in aluminium brackets. This provides more vibration damping than previously. Both the front and rear brackets are arranged horizontally.

The suspension strut turret support bearings have two separate routes for independently deflecting the spring and shock absorber forces into the body. This reduces the level of noise transmitted from the road surface.

The correct installation position must be observed when installing the suspension strut turret support bearings. This is indicated by an arrow on the suspension strut turret support bearing. The shock absorbers are gas shock absorbers.

The spring travel has been increased by 6 mm, and the track has been increased by 48 mm to 1477 mm.

## DIAGNOSIS AND TESTING

# Front Suspension

REFER to Section 204-00 [Suspension System - General Information].

## REMOVAL AND INSTALLATION

# Front Stabilizer Bar Bushing(14 754 0)

### Removal

1. **Remove the stabilizer bar.**

   **For additional information, refer to Stabilizer Bar in this section.**

2. **Remove the stabilizer bar bushings on both sides.**

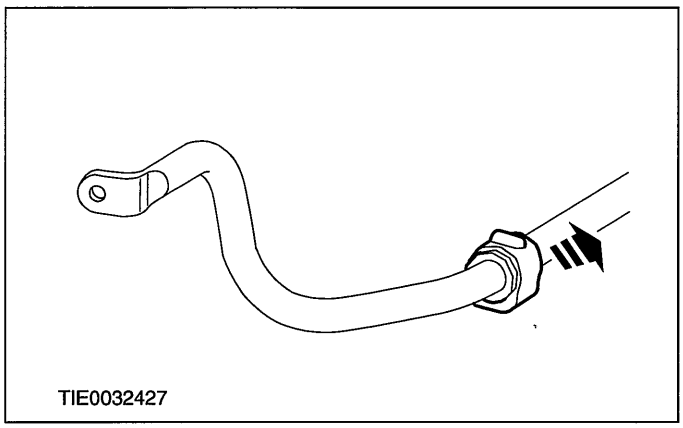


### Installation

1. **CAUTIONS:**

   **⚠Do not lubricate the stabilizer bar bushings.**

   **⚠The stabilizer bar bushings must be positioned with the slot facing forwards of the stabilizer bar.**

   **⚠The stabilizer bar bushings must be positioned as shown.**

**NOTE:**The location of the stabilizer bar bushings should be measured from the center mark on the stabilizer bar.

**Install the stabilizer bar bushings.**

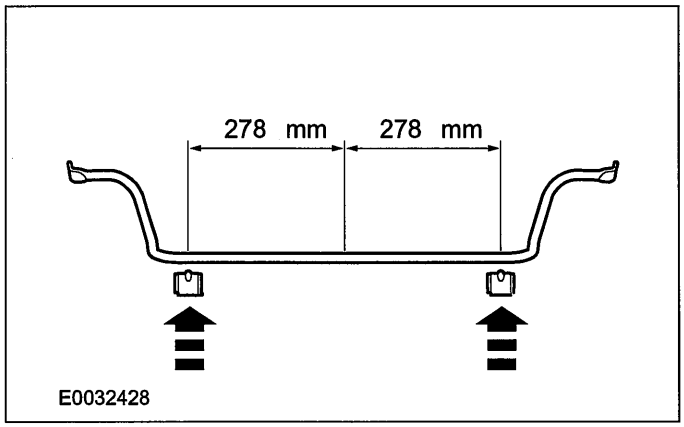


2. **Install the stabilizer bar.**

   **For additional information, refer to Stabilizer Bar in this section.**

## REMOVAL AND INSTALLATION

# Lower Arm(14 706 0)

### Removal

1. **Remove the wheel and tire. For additional information, refer to Section 204-04 [Wheels and Tires].**
2. **⚠CAUTION:Protect the ball joint seal using a soft cloth to prevent damage.**

   **Detach the lower arm ball joint from the wheel knuckle.**

   - Remove the heat shield.

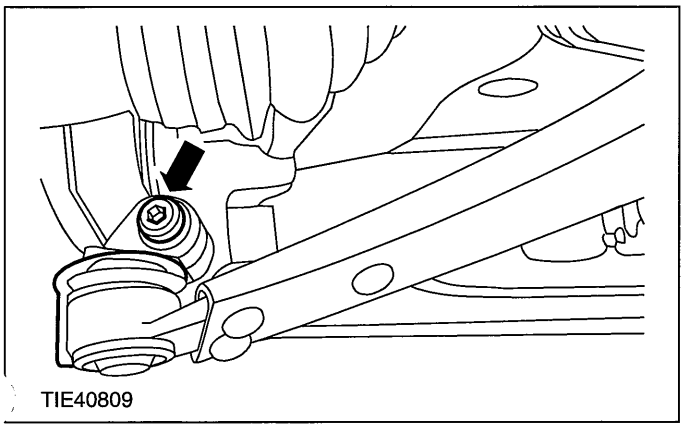
TIE40809

3. **Remove the crossmember outer retaining bolt.**

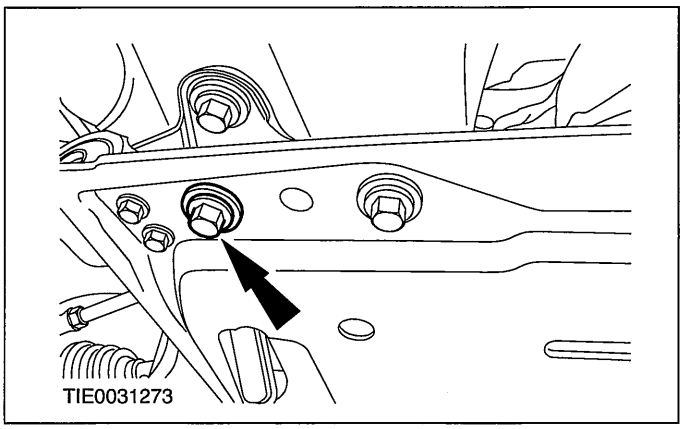
TIE0031273

4. **Remove the lower arm.**

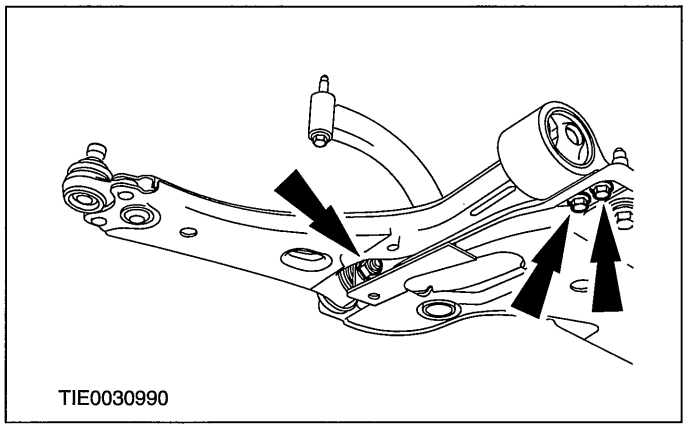
TIE0030990

### Installation

1. **NOTE:Do not fully tighten the lower arm to crossmember retaining bolts at this stage.**

   **Install the lower arm.**

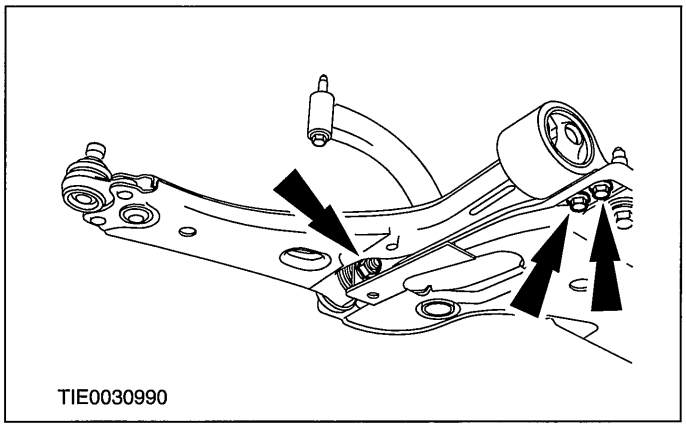
TIE0030990

2. **Install the crossmember outer retaining bolt.**

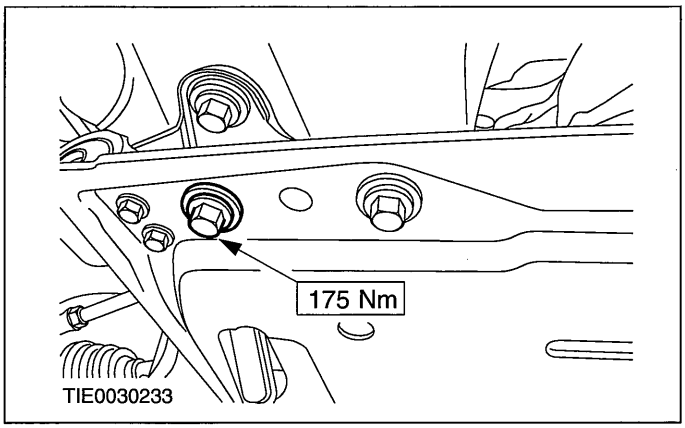

TIE0030233

3. **⚠CAUTION:Make sure the heat shield is installed to prevent damage to the ball joint.**

## REMOVAL AND INSTALLATION

**Install the heat shield.**

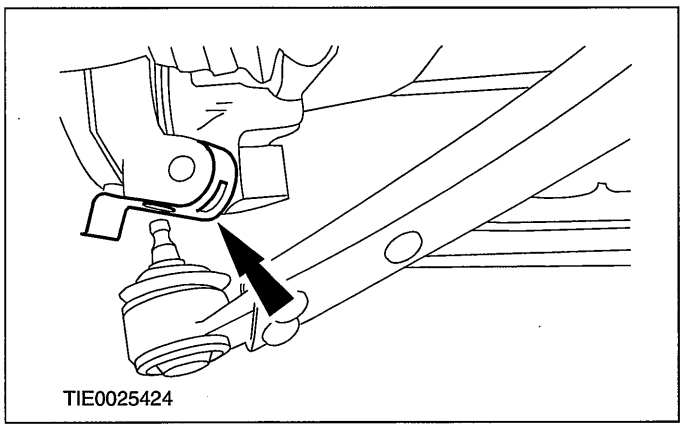


4. **⚠CAUTION:The lower arm pinch bolt must be installed from the rear of the wheel knuckle.**

   **Attach the lower arm ball joint to the wheel knuckle.**

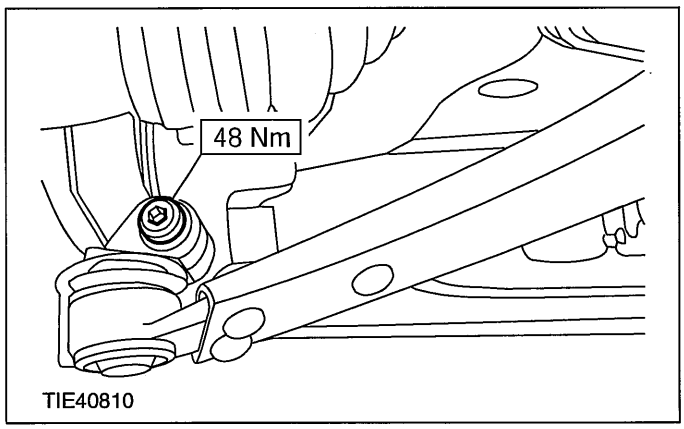


5. **Install the wheel and tire. For additional information, refer to Section 204-04 [Wheels and Tires].**
6. **NOTE:The lower arm to crossmember retaining bolts must be tightened with the vehicle weight on the road wheels.**

   **Tighten the lower arm to crossmember retaining bolts.**

   1. Tighten the bolt in two stages.
      - Stage 1: 80 Nm.
      - Stage 2: 55 degrees.
   2. Tighten the bolts.

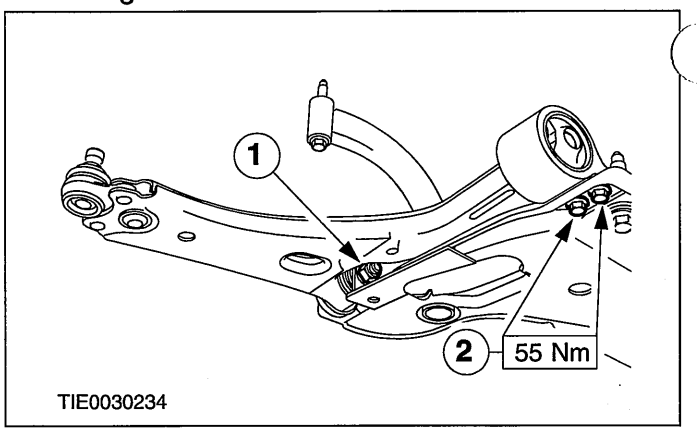


7. **Check the toe setting and adjust as necessary. For additional information, refer to Section 204-00 [Suspension System - General Information].**

## REMOVAL AND INSTALLATION

# Front Stabilizer Bar(14 752 0)

### Special Tool(s)

| | |
|---|---|
| 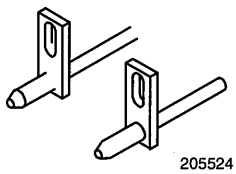 205524 | Alignment Pins, Subframe 205-524 (15-122) |

### General Equipment

| |
|---|
| Transmission jack |
| Wooden block |

## Removal

1. **NOTE:Make sure the road wheels are in the straight ahead position.**

   **Centralize the steering and lock it in position.**

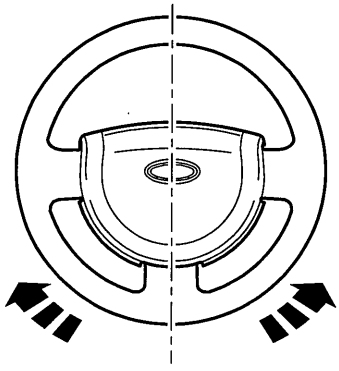
TIE0026894

2. **Detach the steering column shaft from the steering gear pinion.**
   - Discard the retaining bolt.

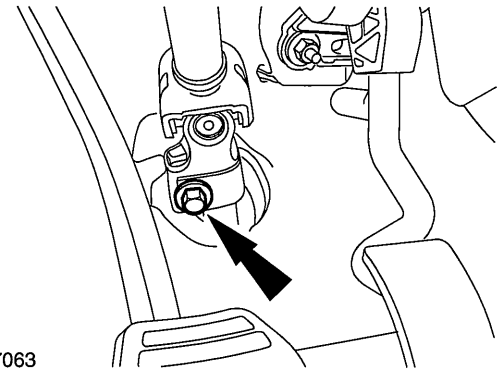
TIE0027063

3. **Raise and support the vehicle.**

   **For additional information, refer to: Jacking (100-02 Jacking and Lifting, Description and Operation) / Lifting (100-02 Jacking and Lifting, Description and Operation).**

4. **NOTE:Use a 5 mm Allen key to prevent the ball joint from rotating.**

   **Detach the stabilizer bar connecting link from the stabilizer bar on both sides.**

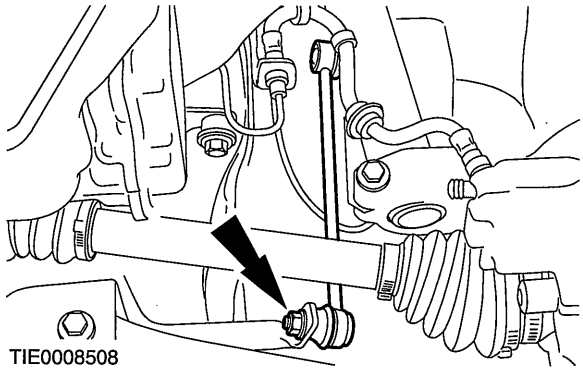
TIE0008508

5. **Remove the engine support insulator.**

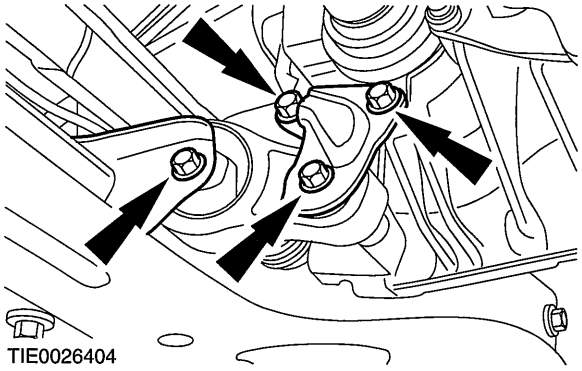
TIE0026404

## REMOVAL AND INSTALLATION

6. **Detach the exhaust system from the exhaust hanger insulator.**

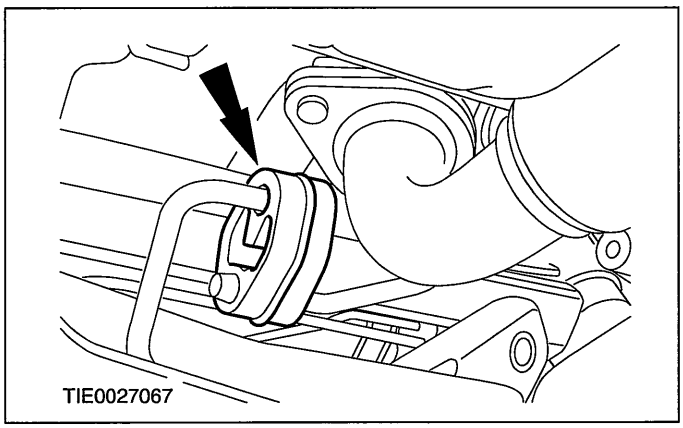


7. **Using a suitable transmission jack and a wooden block, support the crossmember.**
8. **Remove the crossmember retaining bolts on both sides.**

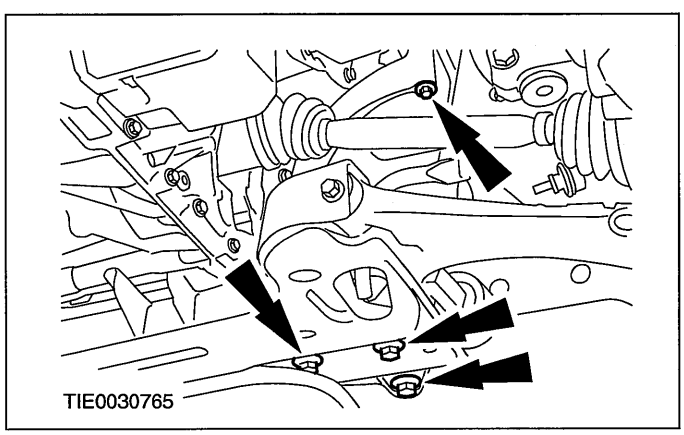


9. **Lower the crossmember to gain access to the stabilizer bar.**
10. **Remove the stabilizer bar clamp on both sides.**

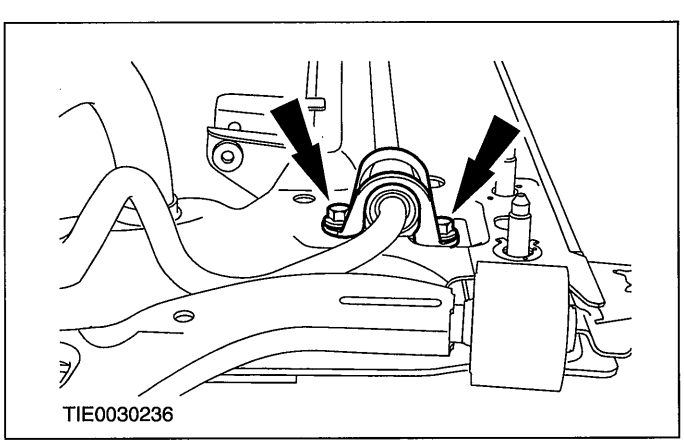


11. **Remove the stabilizer bar.**
12. **Remove the stabilizer bar bushings.**

    **For additional information, refer to: Front Stabilizer Bar Bushing (204-01 Front Suspension, Removal and Installation).**

### Installation

1. **Install the stabilizer bar bushings.**

   **For additional information, refer to: Front Stabilizer Bar Bushing (204-01 Front Suspension, Removal and Installation).**
2. **Position the stabilizer bar on the crossmember.**
3. **NOTE:Do not fully tighten the stabilizer bar clamp retaining bolts at this stage.**

   **Install the stabilizer bar clamp on both sides.**

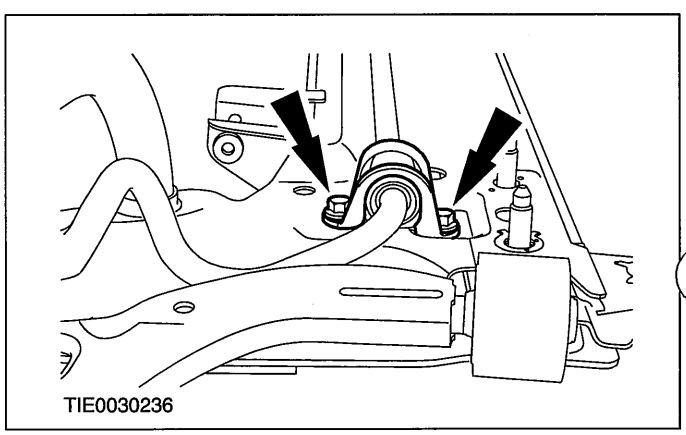


4. **▲WARNING:When installing the stabilizer bar, the measurement must be taken in a vertical plane between the crossmember and the stabilizer bar. Failure to follow this instruction may result in personal injury.**

   **Set the stabilizer bar to the installation setting.**

   - Using cable ties, support the stabilizer bar on both sides.

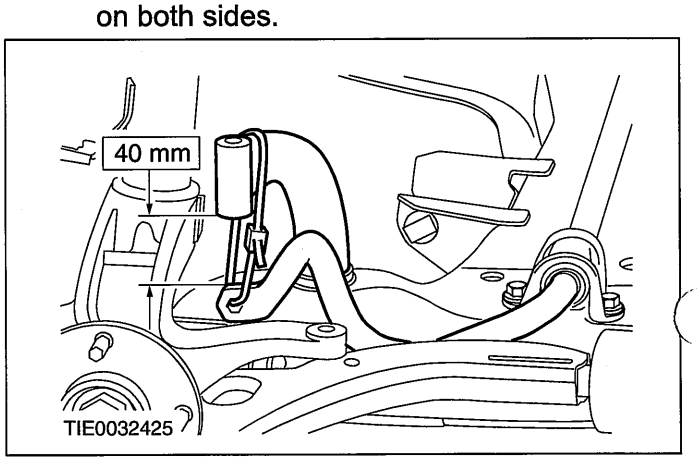

## REMOVAL AND INSTALLATION

5. **Install the stabilizer bar.**
   - Tighten the bolts in two stages.
   - Stage 1: 10 Nm.
   - Stage 2: 55 Nm.

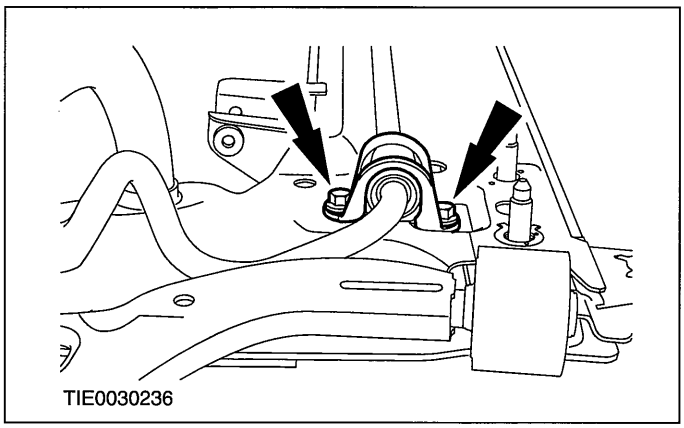


6. **Remove the cable ties.**
7. **Using the transmission jack and the wooden block, position the crossmember.**
8. **NOTE:Use the inner crossmember retaining bolt to locate the special tools.**

   **Install the special tools on both sides.**

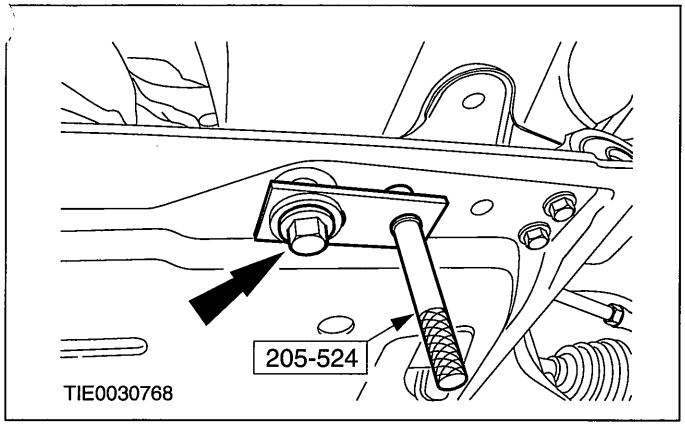


9. **⚠CAUTION:While tightening the crossmember retaining bolts, make sure the crossmember does not move.**

   **Install the crossmember retaining bolts on both sides.**

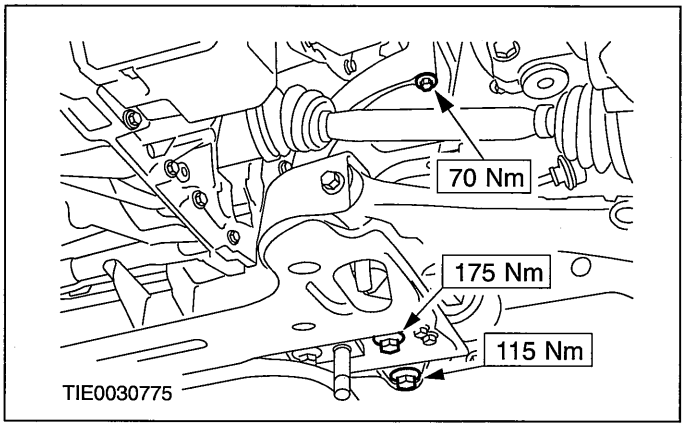


10. **Remove the special tools.**
11. **Install the crossmember inner retaining bolts on both sides.**

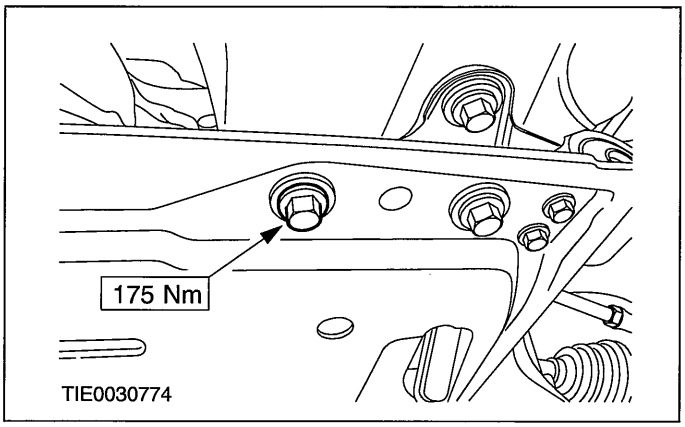


12. **Remove the transmission jack and wooden block.**
13. **Attach the exhaust system to the exhaust hanger insulator.**

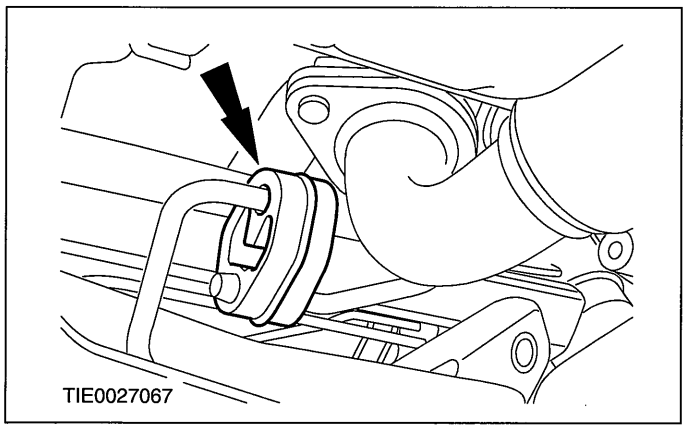

## REMOVAL AND INSTALLATION

14. Install the engine support insulator.

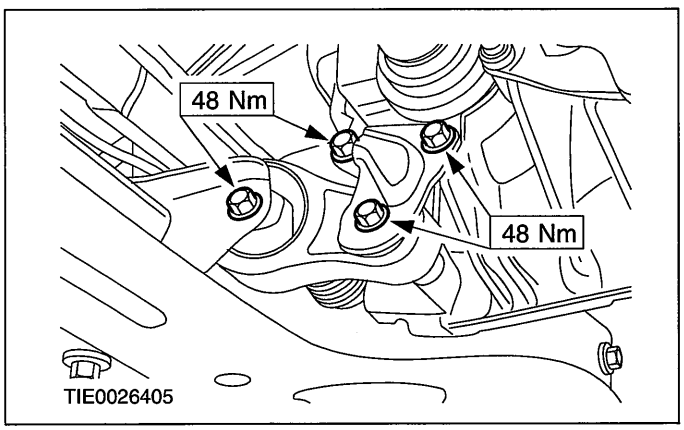


15. NOTE:Use a 5 mm Allen key to prevent the ball joint from rotating.

    Attach the stabilizer bar connecting link to the stabilizer bar on both sides.

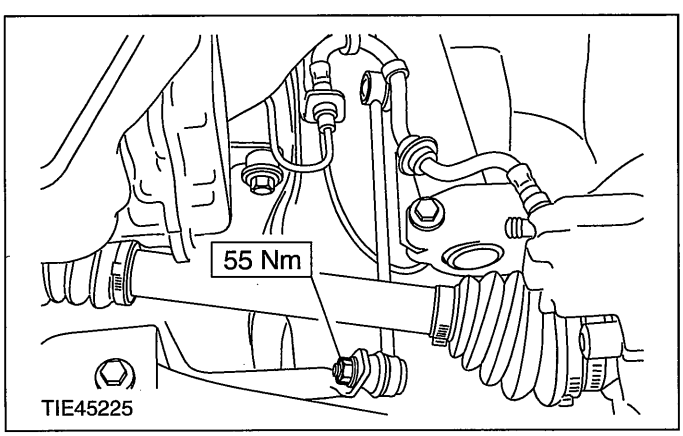


16. Lower the vehicle.

17. ▲WARNING:Install a new steering column to steering gear pinion retaining bolt. Failure to follow this instruction may result in personal injury.

    Attach the steering column shaft to the steering gear pinion.

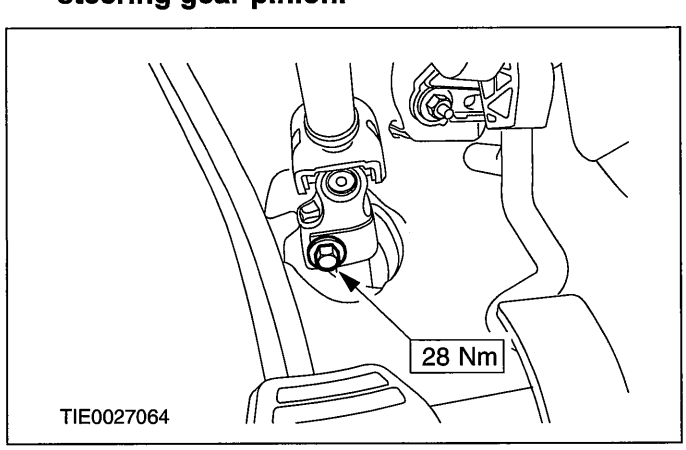


18. Check the toe setting and adjust as necessary.

    For additional information, refer to:
    Specifications (204-00 Suspension System - General Information, Specifications)
    / Front Toe Adjustment (204-00 Suspension System - General Information, General Procedures).

## REMOVAL AND INSTALLATION

# Wheel Knuckle(14 343 0)

### Special Tool(s)

| | |
|---|---|
| 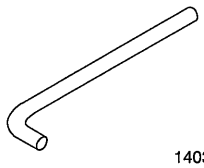 14039 | Lever, Wheel Knuckle 204-159 (14-039) |
| 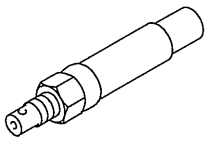 14041 | Installer, Halfshaft 204-161 (14-041) |
| 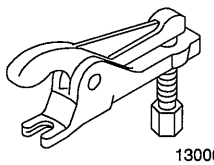 13006 | Separator, Ball Joint 211-020 (13-006) |

### General Equipment

| |
|---|
| Three leg puller |

## Removal

All vehicles

**1. Loosen the wheel hub retaining nut.**

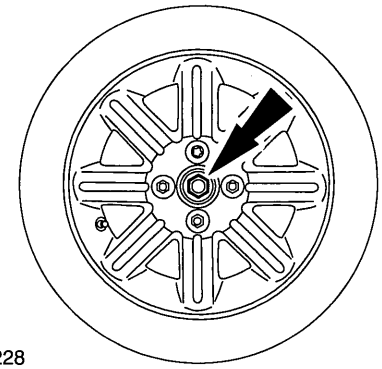
TIE0030228

**2. Loosen the strut and spring assembly top mount retaining nuts by five turns.**

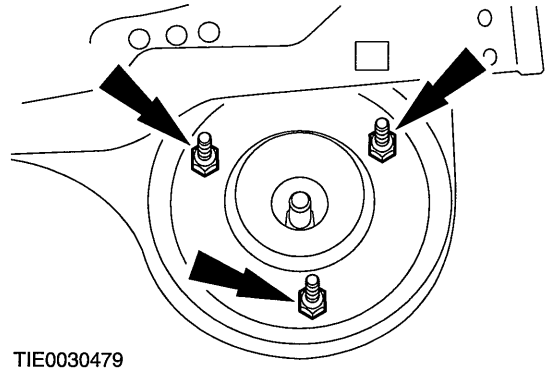
TIE0030479

**3. Remove the wheel and tire.**

**For additional information, refer to: Wheel and Tire (204-04 Wheels and Tires, Removal and Installation).**

**4. NOTE:Make a note of the position of the brake hose, to aid installation.**

**Detach the brake hose from the brake hose support bracket.**

- Remove the retaining clip.

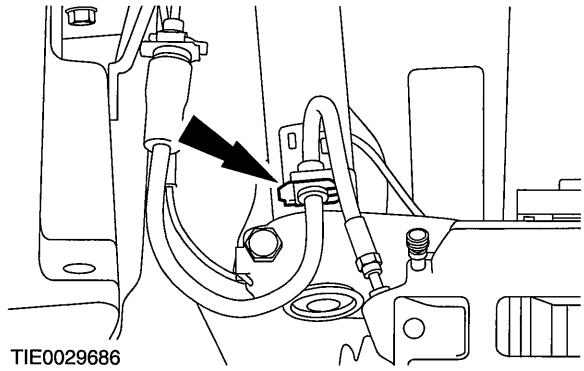
TIE0029686

**5. ⚠CAUTION:Suspend the brake caliper and anchor plate to prevent load being placed on the brake hose.**

## REMOVAL AND INSTALLATION

**Detach the brake caliper and anchor plate from the wheel knuckle.**

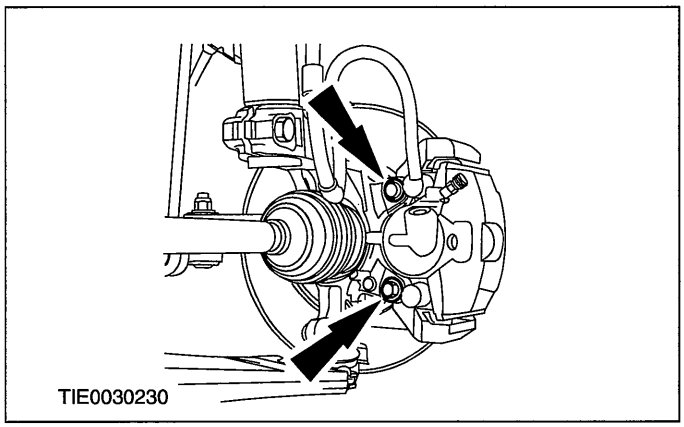
TIE0030230

6. **Remove the brake disc.**
   - Remove and discard the retaining washer (if equipped).

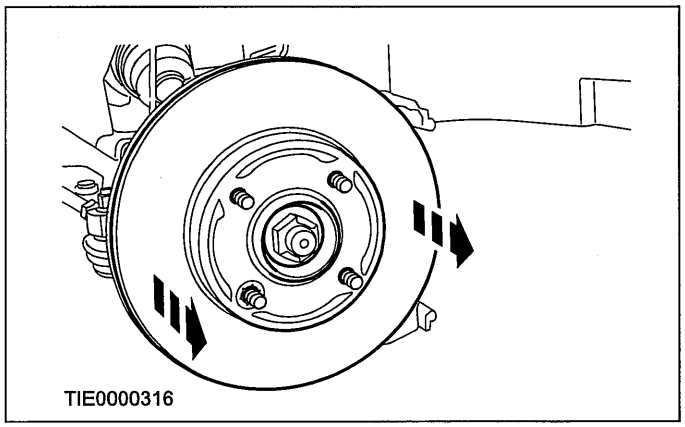
TIE0000316

Vehicles with anti-lock brakes

7. **Detach the wheel speed sensor from the wheel knuckle.**

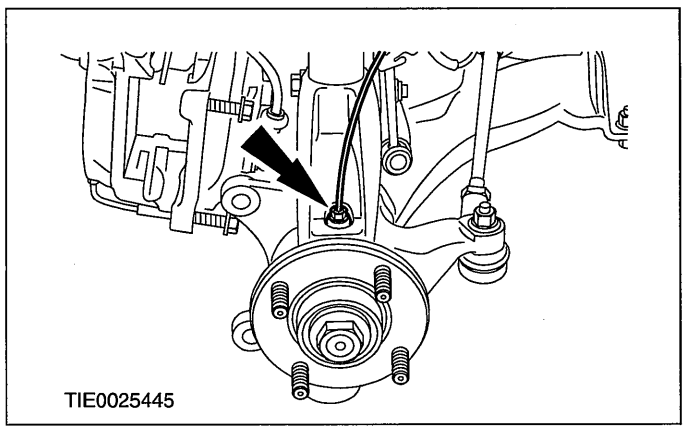
TIE0025445

All vehicles

8. **⚠CAUTION:Leave the tie-rod end retaining nut in place to protect the ball joint stud.**

**NOTE:**Use a 5 mm Allen key to prevent the ball joint stud from rotating.

**Loosen the tie-rod end retaining nut.**

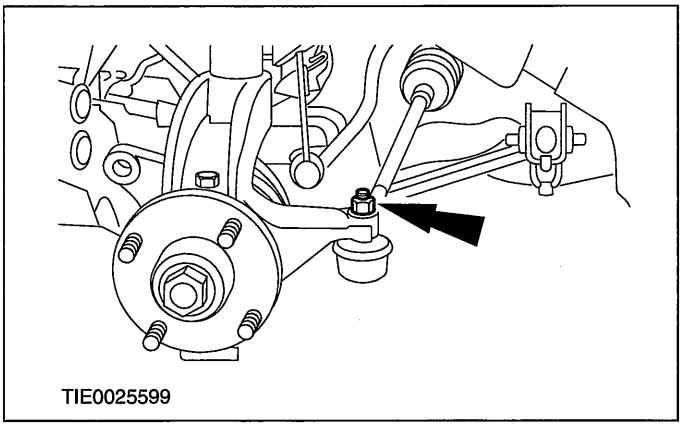
TIE0025599

9. **⚠CAUTION:Protect the ball joint seal using a soft cloth to prevent damage.**

   **Using the special tool, detach the tie-rod end from the wheel knuckle.**

   1. Release the tie-rod end.
   2. Remove and discard the tie rod end retaining nut.

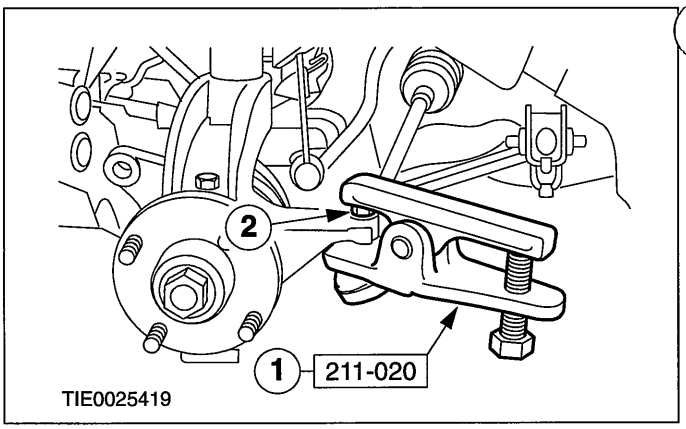

TIE0025419

10. **⚠CAUTION:Protect the ball joint seal using a soft cloth to prevent damage.**

    **Detach the lower arm ball joint from the wheel knuckle.**

## REMOVAL AND INSTALLATION

- Remove the heat shield.

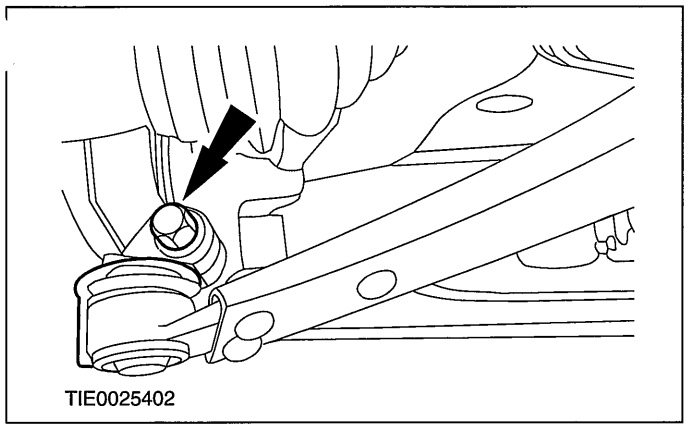
TIE0025402

**11. Remove and discard the wheel hub retaining nut.**

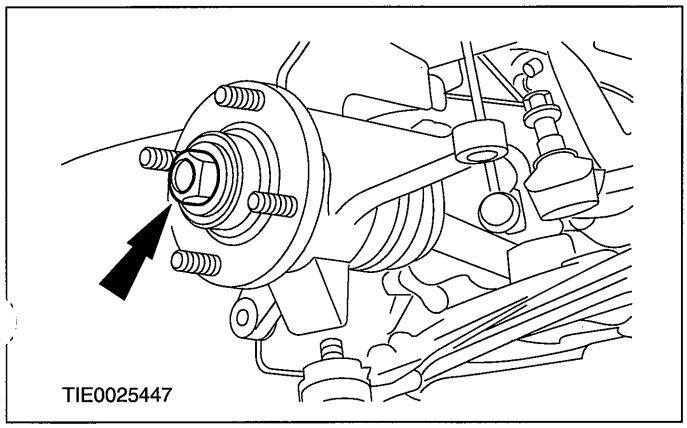
TIE0025447

**12. Remove the wheel knuckle to suspension strut pinch bolt.**

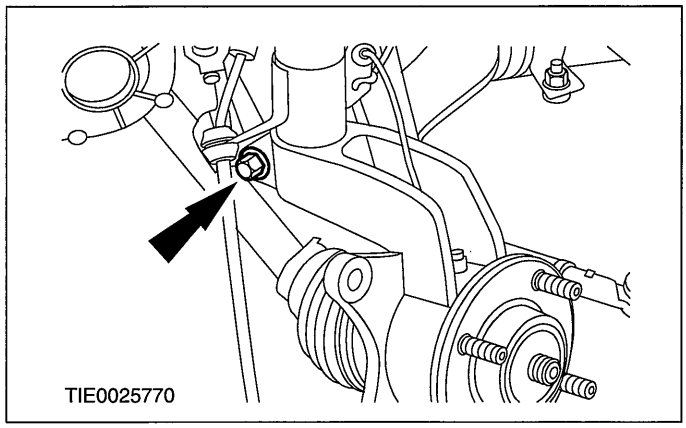
TIE0025770

**13. NOTE:Support the halfshaft. The inner joint must not be bent more than 18 degrees. The outer joint must not be bent more than 45 degrees.**

**Using a suitable three leg puller, detach the wheel hub from the halfshaft.**

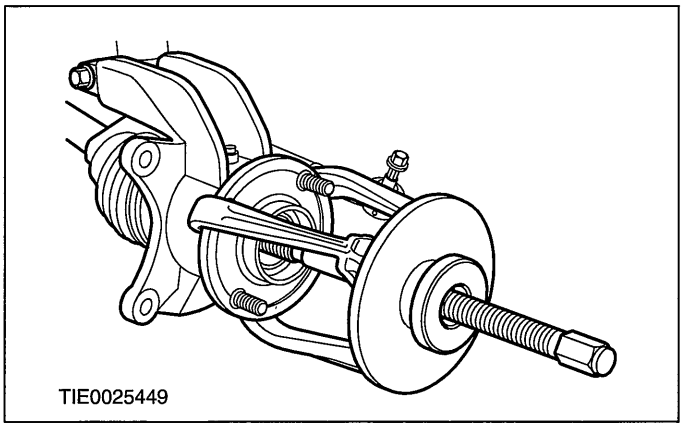
TIE0025449

**14. Using the special tool, remove the wheel knuckle.**

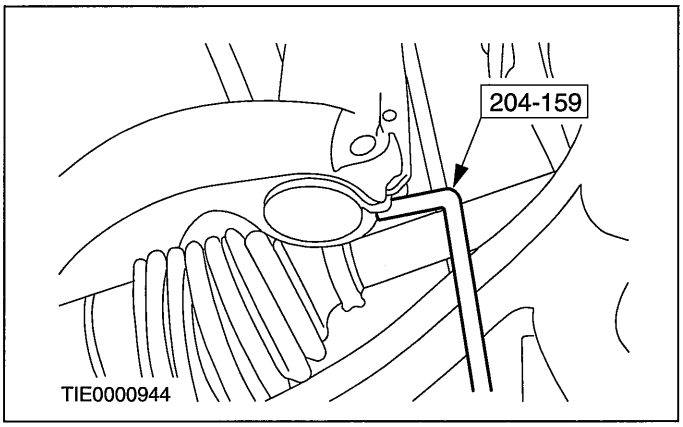

TIE0000944

### Installation

All vehicles

**1. Install the wheel knuckle.**

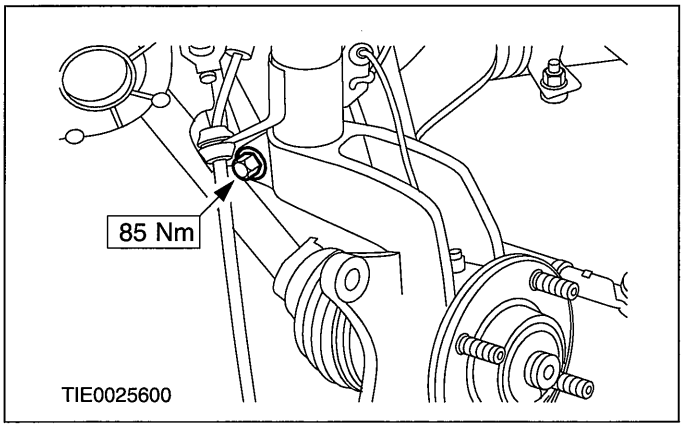

TIE0025600

**2. ⚠CAUTION:Make sure the halfshaft is completely installed into the wheel hub.**

## REMOVAL AND INSTALLATION

**Using the special tool, attach the wheel hub to the halfshaft.**

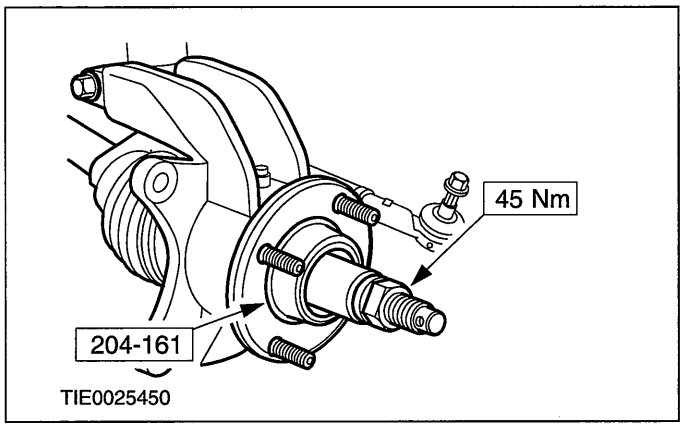


3. **⚠CAUTION:Make sure the heat shield is installed to prevent damage to the ball joint.**

   **Install the heat shield.**

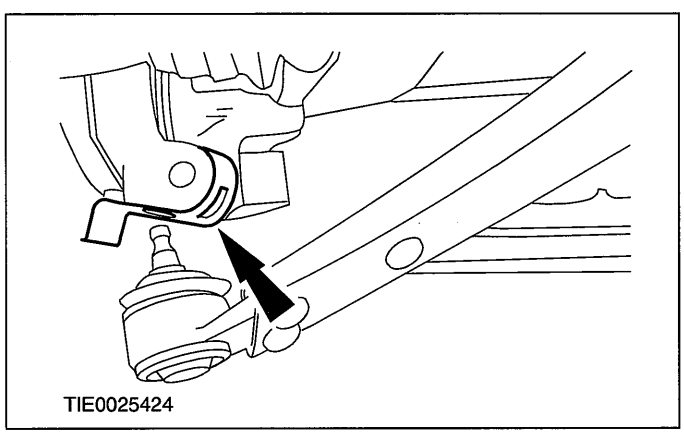


4. **⚠CAUTION:The lower arm pinch bolt must be installed from the rear of the wheel knuckle.**

   **Attach the lower arm ball joint to the wheel knuckle.**

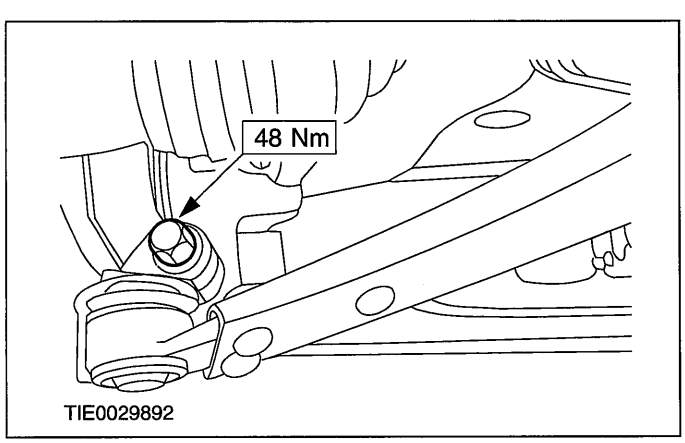


5. **▲WARNING:Install a new tie-rod end retaining nut. Failure to follow this instruction may result in personal injury.**

**NOTE:**Use a 5 mm Allen key to prevent the ball joint stud from rotating.

**Attach the tie-rod end to the wheel knuckle.**

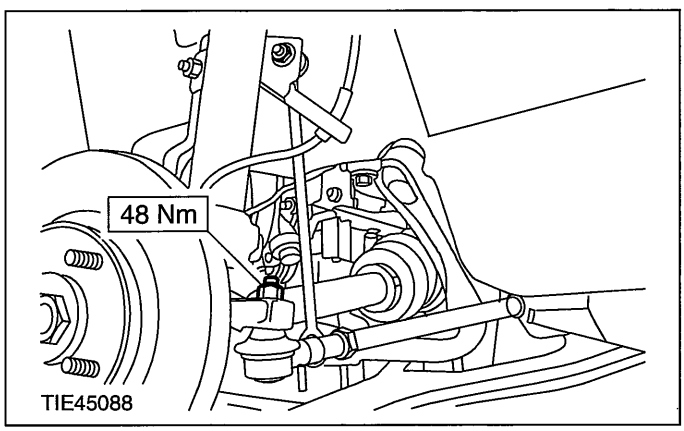


Vehicles with anti-lock brakes

6. **Attach the wheel speed sensor to the wheel knuckle.**

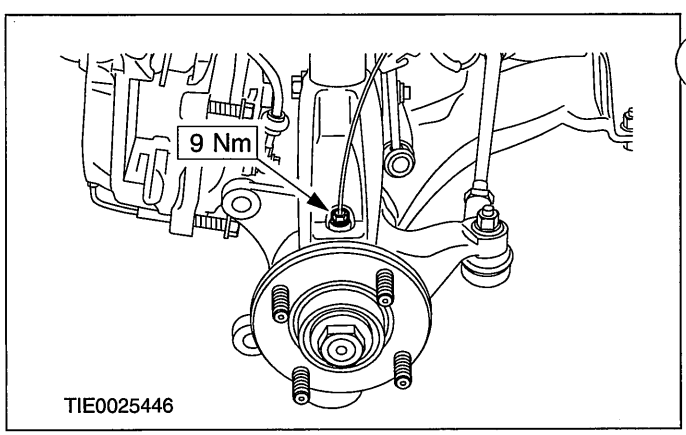


All vehicles

7. **Install the brake disc.**

8. **⚠CAUTION:Do not twist the brake hose when attaching the brake caliper to prevent damage to the brake hose.**

## REMOVAL AND INSTALLATION

**Attach the brake caliper and anchor plate to the wheel knuckle.**

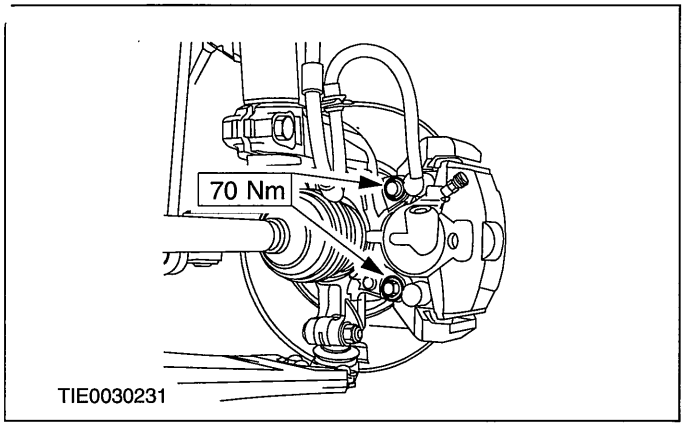


**9. CAUTIONS:**

**⚠Make sure the brake hose is correctly located in the brake hose support bracket to prevent damage to the brake hose.**

**⚠Make sure the brake hose retaining clip is located on the underside of the brake hose support bracket to prevent damage to the brake hose.**

**Attach the brake hose to the brake hose support bracket.**

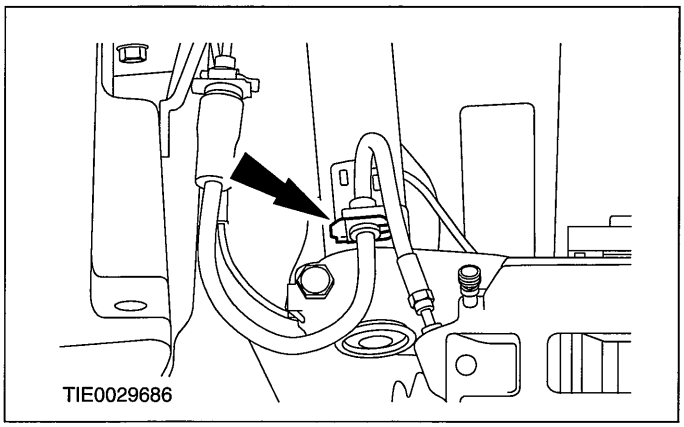


**10. ▲WARNING:Install a new wheel hub retaining nut. Failure to follow this instruction may result in personal injury.**

**With the aid of another technician, apply the brakes and pre-load the wheel bearing by installing the wheel hub retaining nut.**

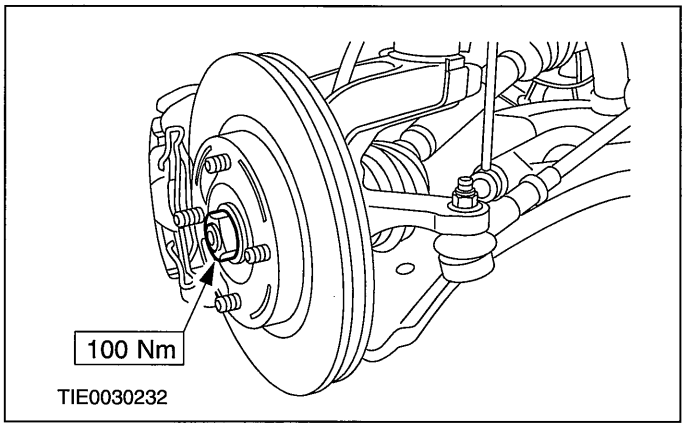


**11. Install the wheel and tire.**

**For additional information, refer to: Wheel and Tire (204-04 Wheels and Tires, Removal and Installation).**

**12. Tighten the wheel hub retaining nut.**

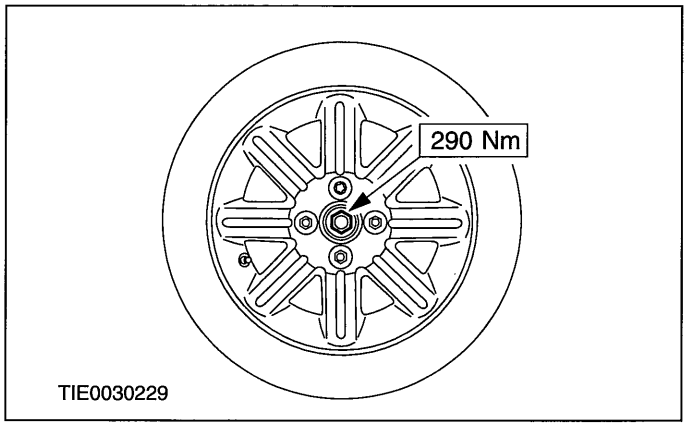


**13. Tighten the strut and spring assembly top mount retaining nuts.**

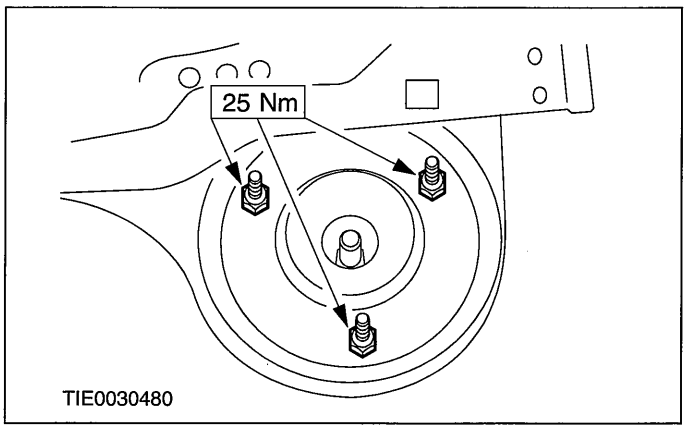

## REMOVAL AND INSTALLATION

14. Check the toe setting and adjust as necessary.

    For additional information, refer to: Specifications (204-00 Suspension System - General Information, Specifications).

## REMOVAL AND INSTALLATION

# Front Strut and Spring Assembly(14 781 0)

### Special Tool(s)

| | |
|---|---|
| 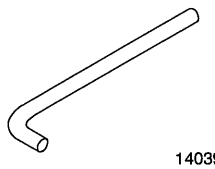 14039 | Lever, Wheel Knuckle 204-159 (14-039) |

## Removal

1. **Remove the wheel and tire. For additional information, refer to Section 204-04 [Wheels and Tires].**
2. **NOTE:Make a note of the position of the brake hose, to aid installation.**

   **Detach the brake hose from the brake hose support bracket.**

   - Remove the retaining clip.

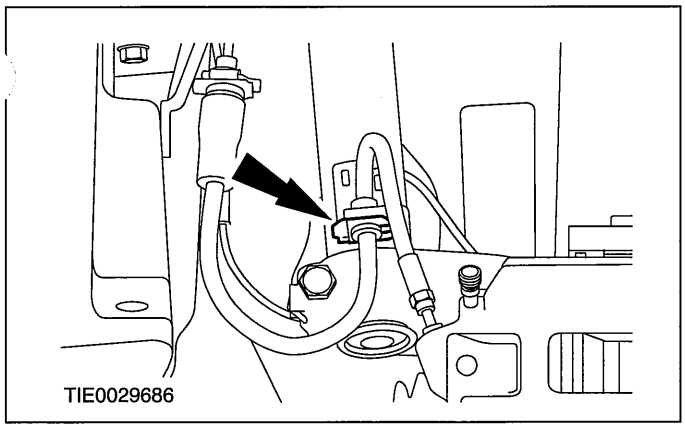


3. **NOTE:Use a 5 mm Allen key to prevent the ball joint from rotating.**

   **Detach the stabilizer bar connecting link from the strut and spring assembly.**

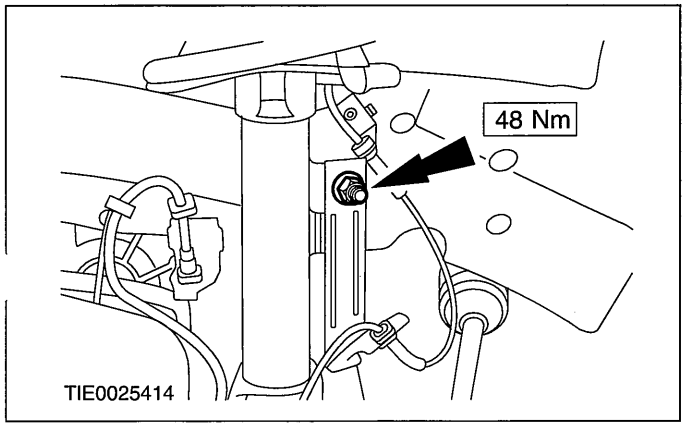


4. **⚠CAUTION:Suspend the brake caliper and anchor plate to prevent load being placed on the brake hose.**

   **Detach the brake caliper and anchor plate from the wheel knuckle.**

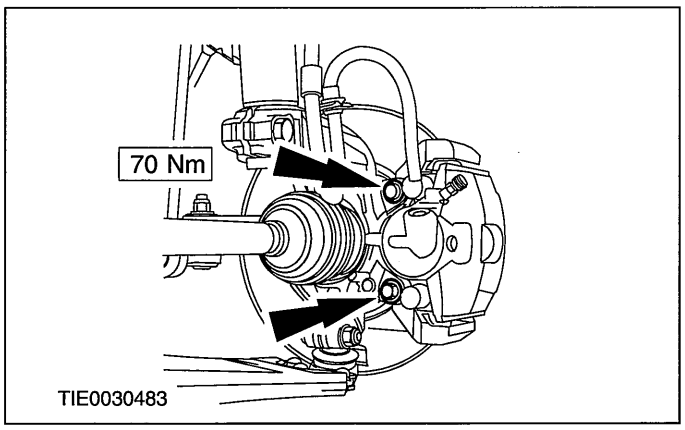


5. **Remove the brake disc.**
   - Remove and discard the retaining washer (if equipped).

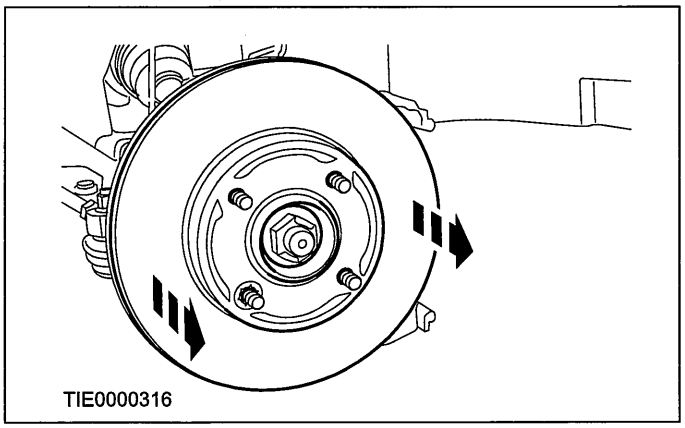


6. **⚠CAUTION:Protect the ball joint seal using a soft cloth to prevent damage.**

   **Detach the lower arm ball joint from the wheel knuckle.**

## REMOVAL AND INSTALLATION

- Remove the heat shield.

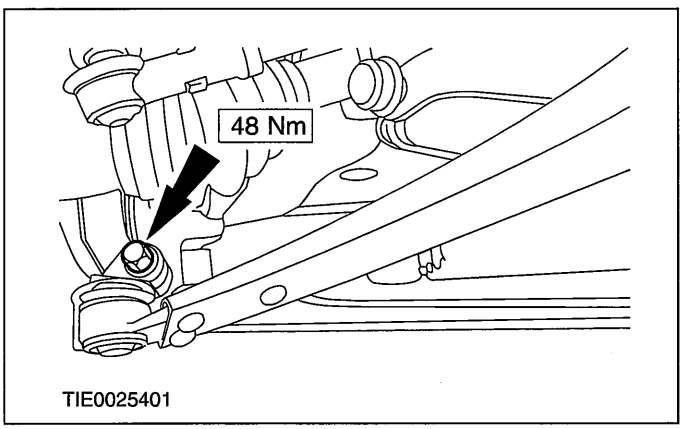


**7. Remove the wheel knuckle to strut and spring assembly pinch bolt.**

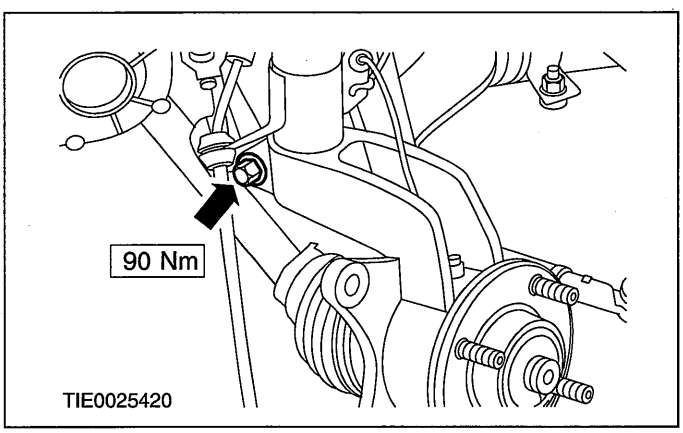


**8. NOTE:Support the halfshaft. The inner joint must not be bent more than 18 degrees. The outer joint must not be bent more than 45 degrees.**

**Using the special tool, detach the wheel knuckle from the strut and spring assembly.**

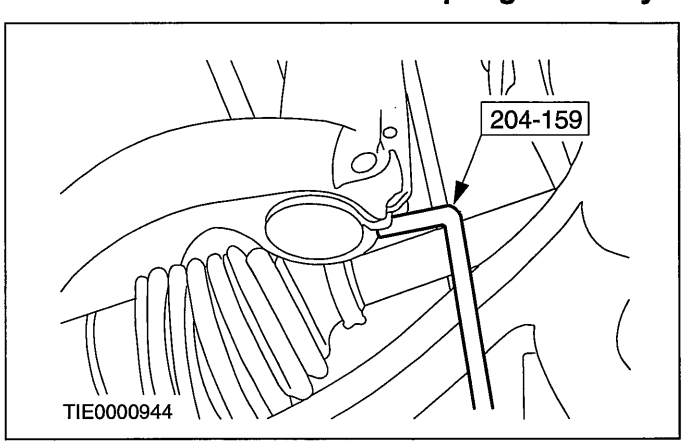


**9. ⚠CAUTION:With the aid of another technician, support the strut and spring assembly.**

**Remove the strut and spring assembly.**

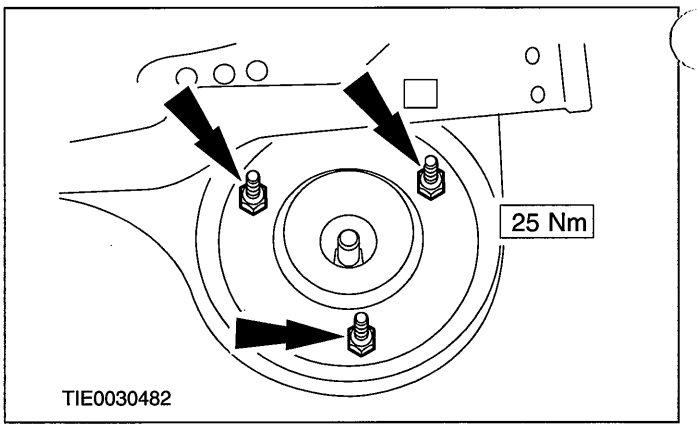


### Installation

**CAUTIONS:**

⚠ **Make sure the heat shield is installed to prevent damage to the ball joint.**

⚠ **The lower arm pinch bolt must be installed from the rear of the wheel knuckle.**

⚠ **Do not twist the brake hose when installing the brake caliper to prevent damage to the brake hose.**

⚠ **Make sure the brake hose is correctly located in the brake hose support bracket to prevent damage to the brake hose.**

⚠ **Make sure the brake hose retaining clip is located on the underside of the brake hose support bracket to prevent damage to the brake hose.**

**1. To install, reverse the removal procedure.**

## REMOVAL AND INSTALLATION

# Front Wheel Bearing(14 411 0)

### Special Tool(s)

| | |
|---|---|
| 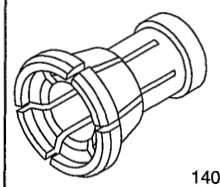 14038 | Collet for 205-295<br>204-158 (14-038) |
| 1403801 | Adapter for 204-158 (Thrust Pad)<br>204-158-01 (14-038-01) |
| 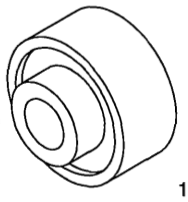 14040 | Installer, Front Wheel Bearing<br>204-160 (14-040) |
| 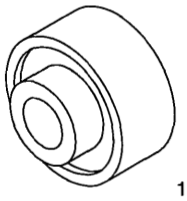 14040 | Adapter for 205-074<br>205-074-01 (15-064) |
| 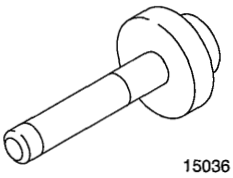 15036 | Installer, Rear Hub Oil Seal<br>205-075 (15-036) |
| 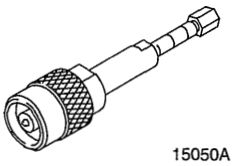 15050A | Remover, Bearing (Main Tool)<br>205-295 (15-050A) |

### Special Tool(s)

| | |
|---|---|
| 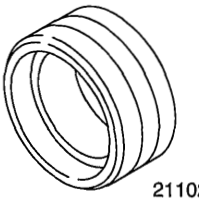 2110203 | Installer/Aligner, Crankshaft Rear Oil Seal<br>303-172-03 (21-102-03) |

| Materials | |
|---|---|
| **Name** | **Specification** |
| Engine oil | WSS-M2C913-A |

## Removal

1. **Remove the wheel knuckle.**

   **For additional information, refer to Wheel Knuckle in this section.**

2. **NOTE:When removing the wheel hub from the wheel knuckle the bearing will be destroyed. The bearing inner ring will be on the wheel hub and the bearing outer ring will be in the wheel knuckle.**

   **Using the special tool, remove the wheel hub.**

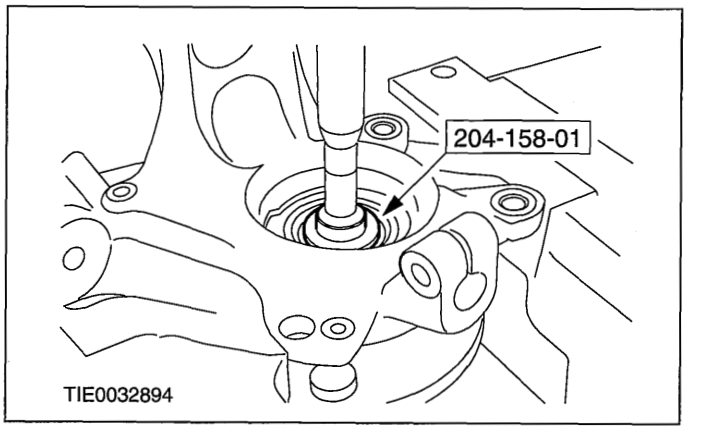


3. **CAUTIONS:**

   **⚠The special tools must be used to prevent damage to the wheel hub. If the wheel hub is damaged a new wheel hub must be installed.**

   **⚠Do not use heat to remove the bearing inner ring.**

## REMOVAL AND INSTALLATION

**Using the special tools, remove the bearing inner ring.**

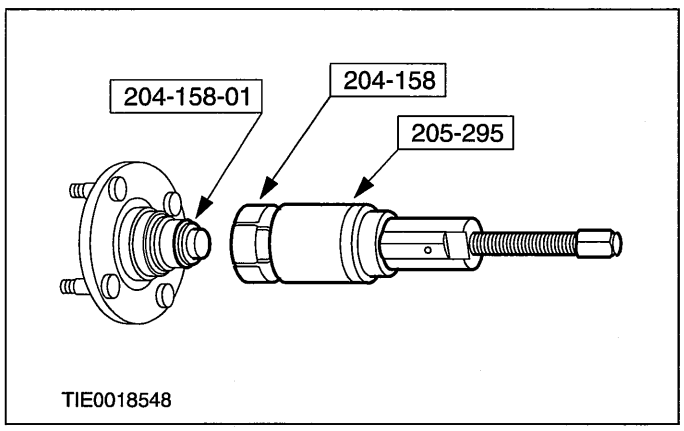


**4. Using the special tools, remove the bearing outer ring and speed sensor ring.**

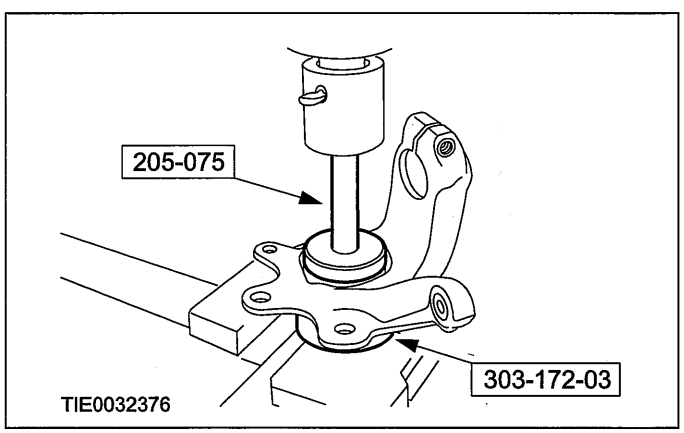


### Installation

**CAUTIONS:**

⚠ **Avoid any impact on the wheel speed sensor ring.**

⚠ **Make sure the wheel speed sensor ring is clean.**

⚠ **Avoid any contact between the wheel speed sensor ring and a magnetic surface.**

**1. CAUTIONS:**

⚠**Make sure the wheel bearing is installed into the wheel knuckle with the wheel speed sensor ring, colored black, towards the inner face of the wheel knuckle.**

⚠**Make sure the wheel bearing is completely installed in the wheel knuckle.**

**NOTE:**Lubricate the bore of the wheel knuckle with clean engine oil.

**Using the special tool, install the new wheel bearing.**

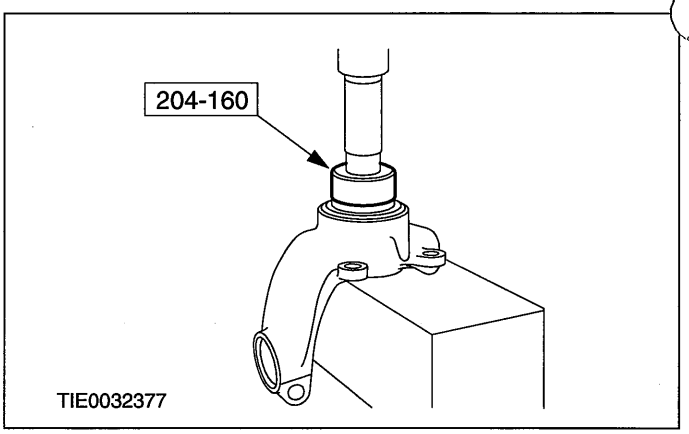


**2. Using the special tools, install the wheel hub.**

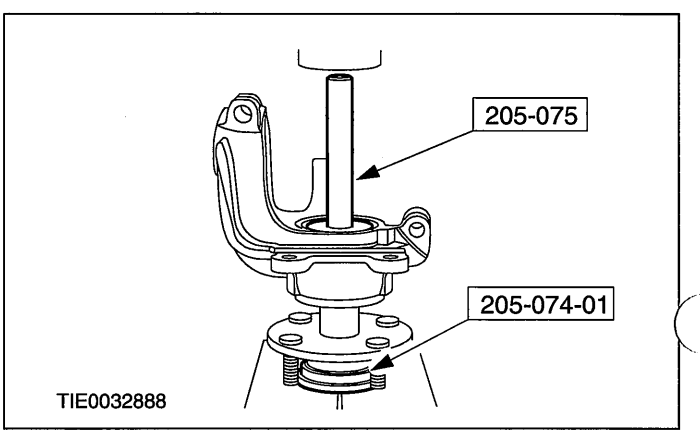


**3. Install the wheel knuckle.**

**For additional information, refer to Wheel Knuckle in this section.**

## DISASSEMBLY AND ASSEMBLY

# Front Strut and Spring Assembly(14 783 4)

**Special Tool(s)**

| | |
|---|---|
| 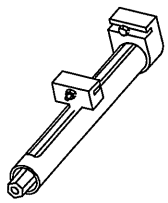 14042 | Compressor, Coil Spring 204-167 (14-042) |
| 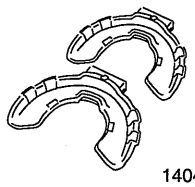 1404201 | Adaptors for 204-167 204-167-01 (14-042-01) |

## Disassembly

1. **▲WARNING:The spring is under extreme tension; care must be taken at all times. Failure to follow this instruction may result in personal injury.**

   **Using the special tools, compress the spring.**

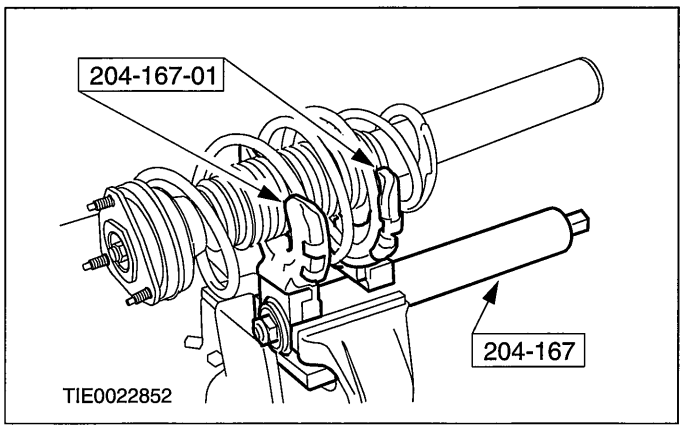


2. **⚠CAUTION:Use an Allen key to prevent the piston rod from rotating.**

   **Loosen the thrust bearing retaining nut.**

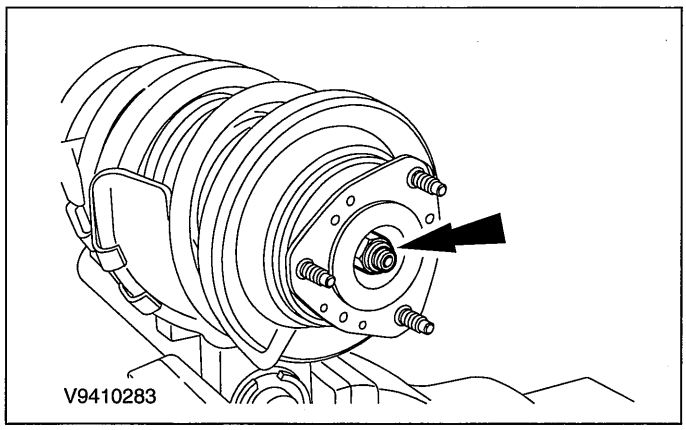


3. **NOTE:When access to the strut or spring only is required, remove items two through five as a complete assembly.**

   **Disassemble the strut and spring assembly.**

   1. Remove the thrust bearing retaining nut.
   2. Remove the top mount.
   3. Remove the thrust bearing and spring seat assembly.
   4. Remove the boot.
   5. Remove the bump stop.
   6. Remove the spring.

## DISASSEMBLY AND ASSEMBLY

7. Remove the insulator pad.

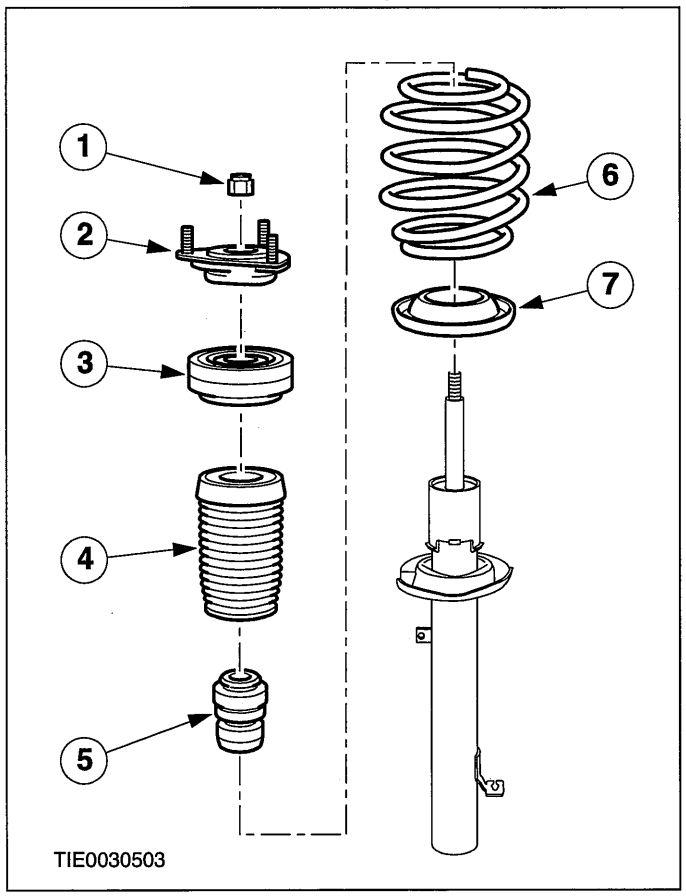


**To assemble, reverse the disassembly procedure.**

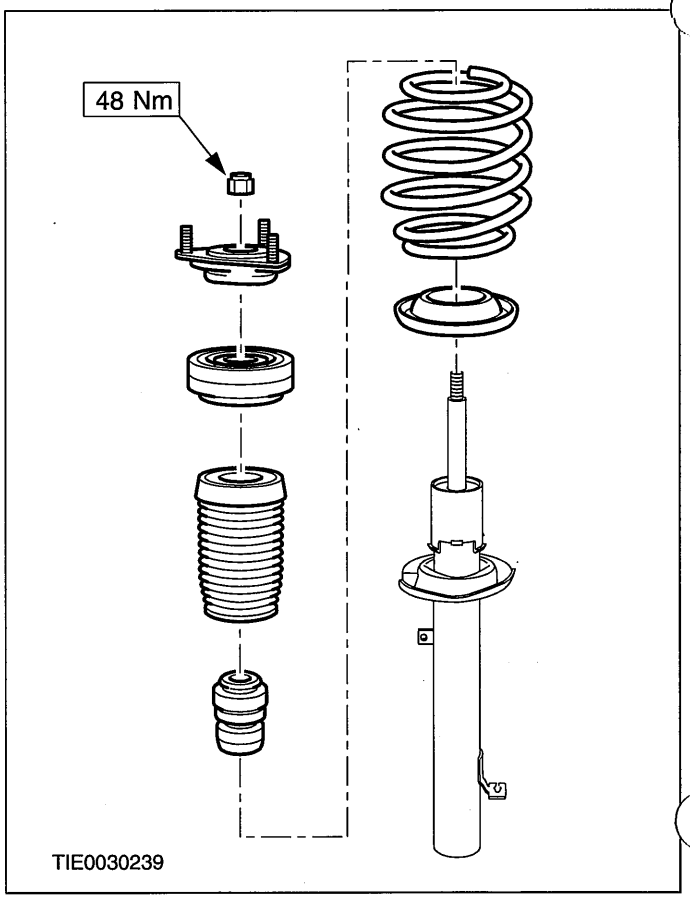


### Assembly

1. ⚠**CAUTION:The ends of the spring must locate correctly in the spring seats.**

# SECTION 204-02 Rear Suspension

## VEHICLE APPLICATION:2006.0 Fiesta

CONTENTS PAGE

**SPECIFICATIONS**

Specifications..... 204-02-2

**DESCRIPTION AND OPERATION**

Rear Suspension..... 204-02-3

**DIAGNOSIS AND TESTING**

Rear Suspension..... 204-02-5

**REMOVAL AND INSTALLATION**

Rear Shock Absorber..... (15 791 0) 204-02-6
Spring..... (15 621 0) 204-02-8
Beam Axle..... (15 231 0) 204-02-10
Wheel Spindle..... (15 366 0) 204-02-15
Rear Wheel Bearing..... 204-02-17
Trailing Arm Bushing..... (15 730 0) 204-02-20

## SPECIFICATIONS

### Torque Specifications

| Item | Nm | lb-ft | lb-in |
|---|---|---|---|
| Shock absorber lower mount retaining bolt | 115 | 85 | - |
| Shock absorber upper mount retaining bolts | 25 | 18 | - |
| Trailing arm bushing retaining bolts | 125 | 92 | - |
| Beam axle retaining bolts | 115 | 85 | - |
| Wheel spindle retaining bolts - Vehicles with rear drum brakes | 70 | 52 | - |
| Wheel spindle retaining bolts - Vehicles with rear disc brakes | 66 | 49 | - |
| Wheel hub retaining nut | 235 | 173 | - |
| Brake hose to brake caliper union | 15 | 11 | - |
| Brake tube to brake hose union | 15 | 11 | - |
| Wheel speed sensor retaining bolt | 9 | - | 80 |

## DESCRIPTION AND OPERATION

# Rear Suspension

### Overview

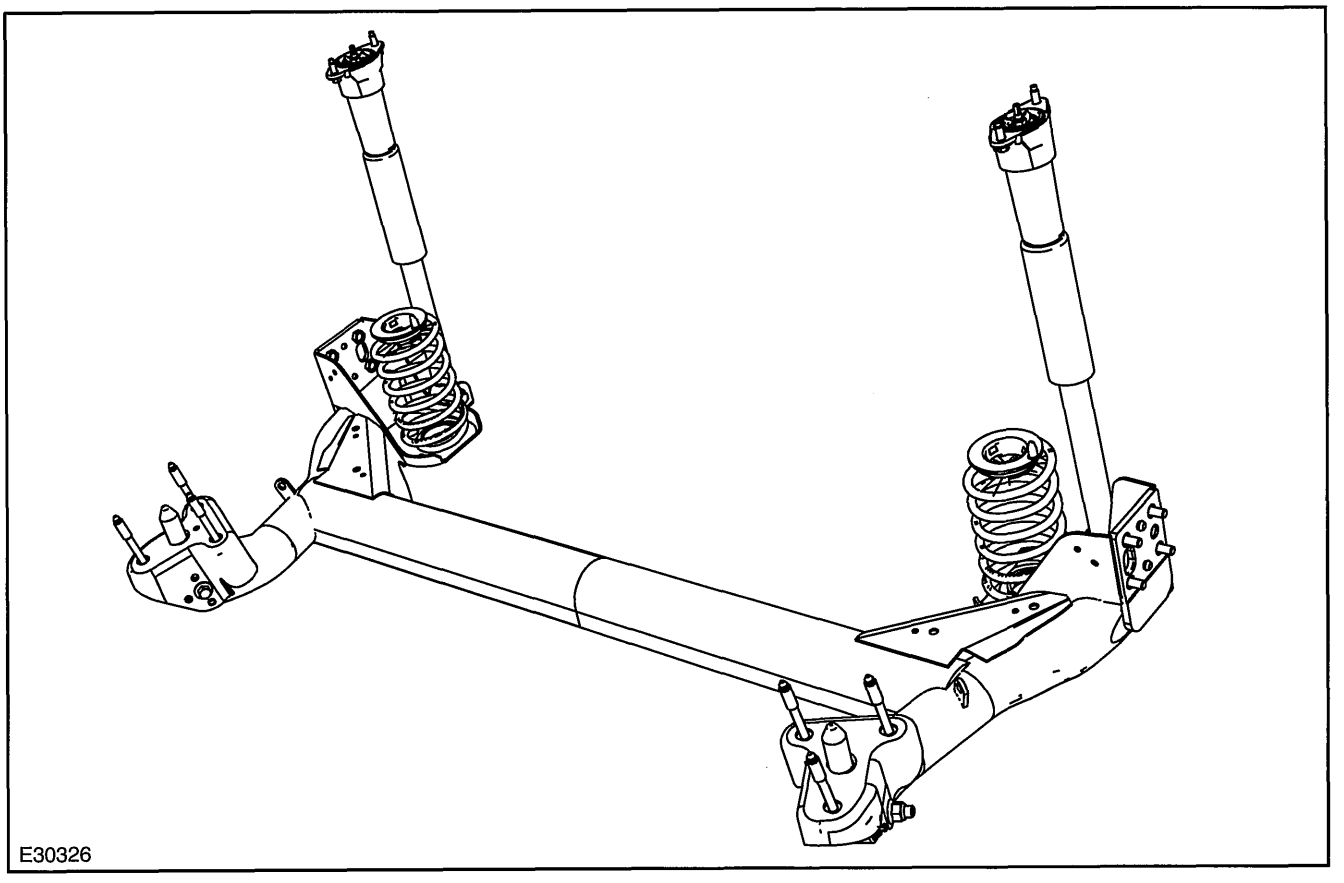


The rear suspension is a semi-independent suspension. The track has been increased by 71 mm to 1444 mm.

In addition, the diameter of the longitudinal members has been increased to increase stability and to reduce unwanted movements of the vehicle around the longitudinal axis.

## DESCRIPTION AND OPERATION

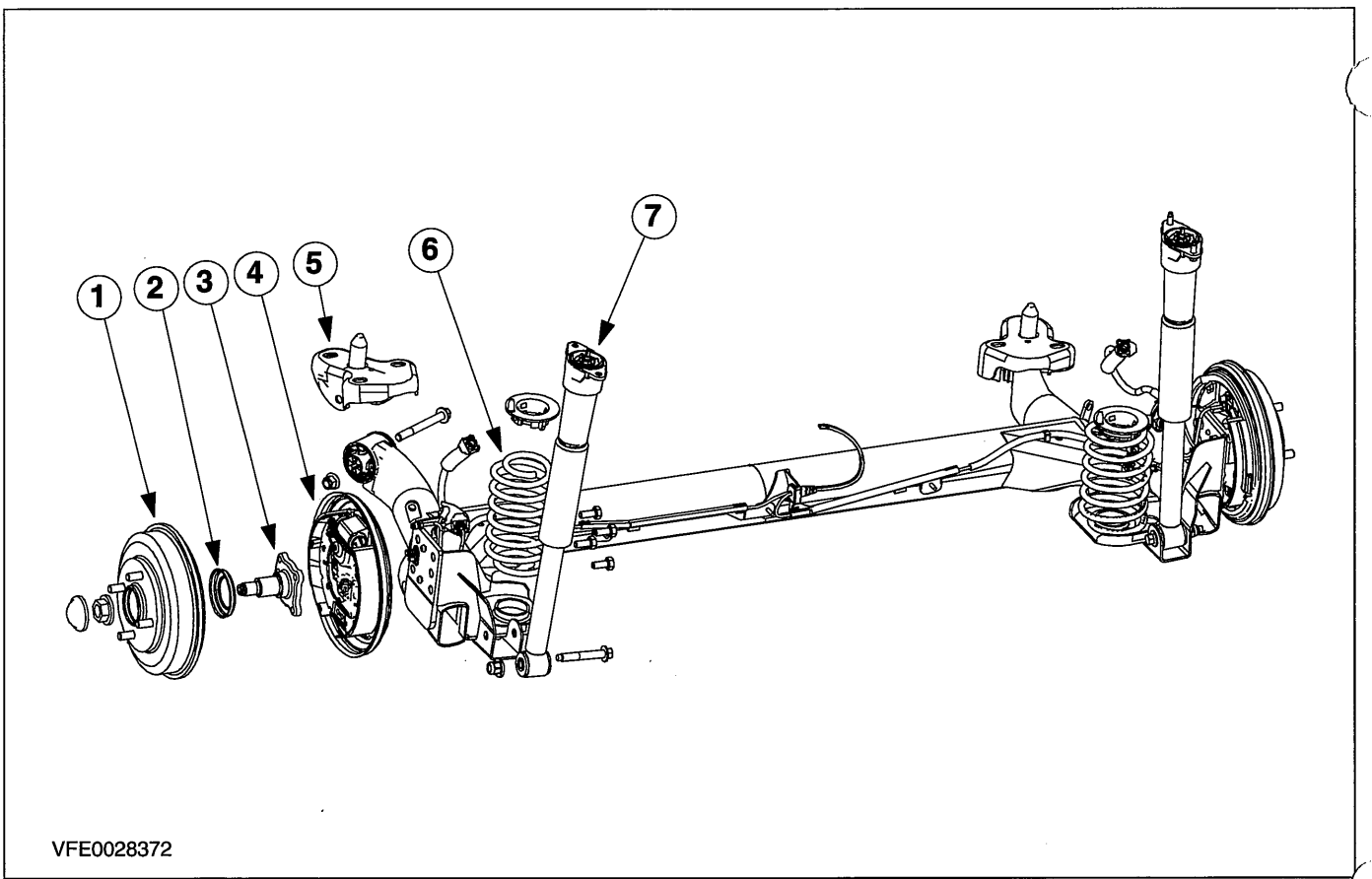


| Item | Description |
|---|---|
| 1 | Brake drum |
| 2 | Anti-lock brake system (ABS ) wheel sensor pick-up ring |
| 3 | Stub axle |
| 4 | Brake back plate assembly with brake |
| 5 | Bracket |
| 6 | Spring |
| 7 | Shock absorber |

A significant modification is the replacement of the previous Mc-Pherson suspension struts with separate spring and shock absorber elements. This results in more space in the area of the suspension strut turrets, thus increasing the volume of the luggage compartment. In addition, the forces from the spring and shock absorber elements are now dissipated separately and have been individually optimised.

The shock absorbers are single-tube gas shock absorbers.

It is important that the correct installation orientation is adhered to when assembling the support bearings, as otherwise the geometry of the rear suspension will not be correct. The installation orientation of the support bearing is indicated with an arrow.

## DIAGNOSIS AND TESTING

# Rear Suspension

REFER to Section 204-00 [Suspension System - General Information].

## REMOVAL AND INSTALLATION

# Rear Shock Absorber(15 791 0)

### General Equipment

| |
|---|
| Transmission jack |

## Removal

1. **Remove the wheel and tire. For additional information, refer to Section 204-04 [Wheels and Tires].**
2. **Detach the fender splash shield from the fender.**

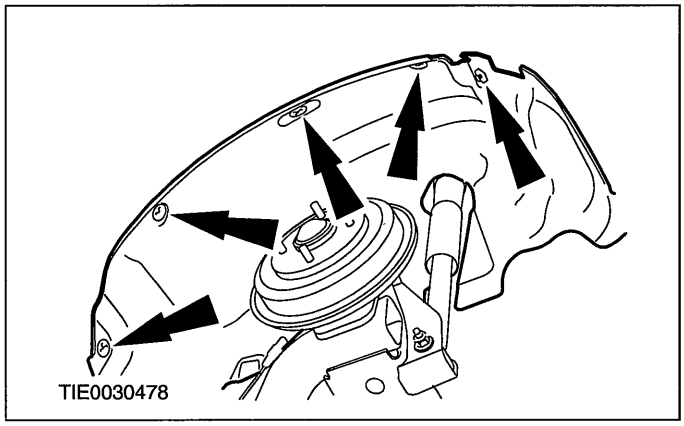


3. **Using a suitable transmission jack, support the beam axle.**
4. **Detach the shock absorber from the beam axle.**

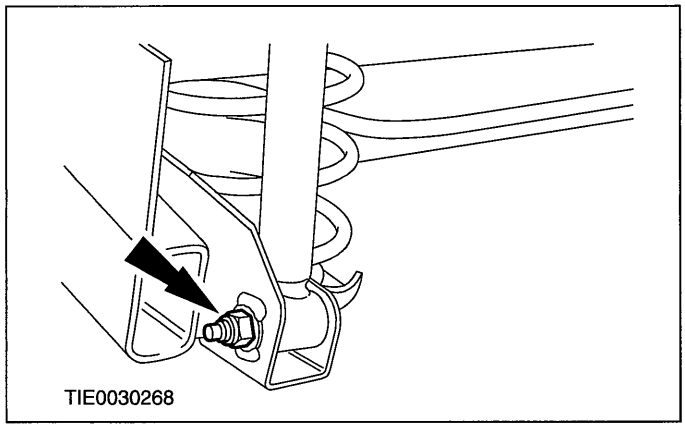


5. **Remove the shock absorber.**

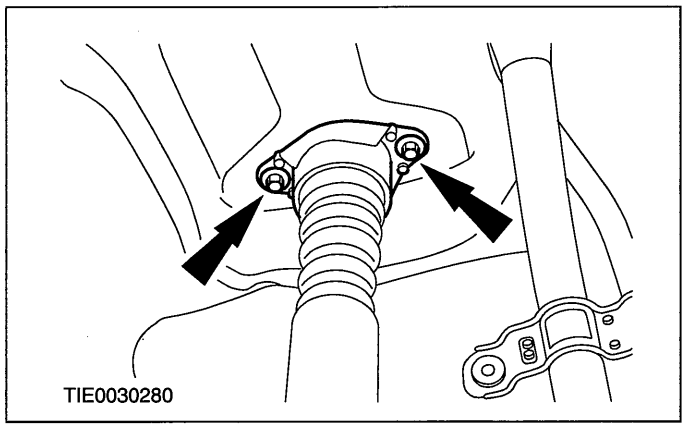


## Installation

1. **Attach the shock absorber to the body.**

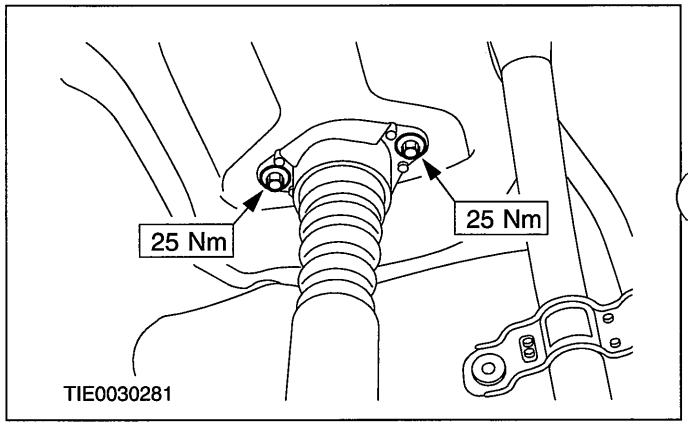


2. **NOTE:Do not fully tighten the shock absorber lower mounting bolt at this stage.**

   **Install the shock absorber.**

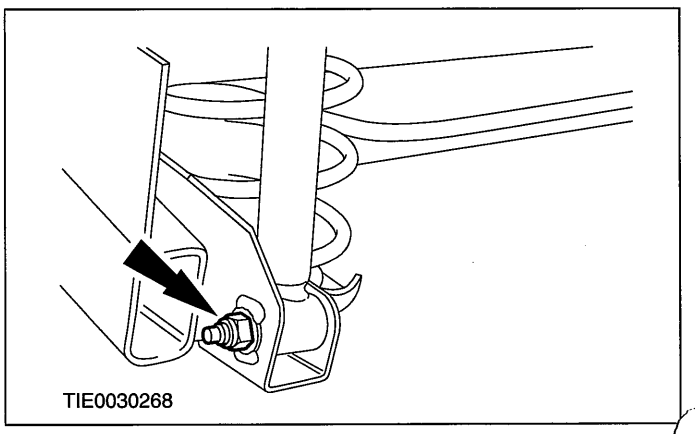

## REMOVAL AND INSTALLATION

3. Attach the fender splash shield to the fender.

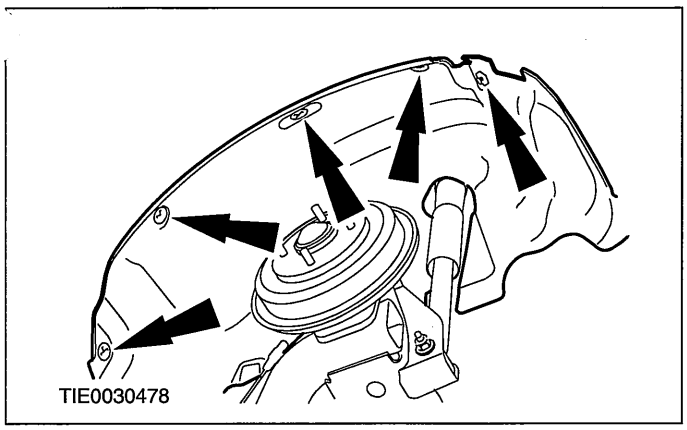


4. Install the wheel and tire. For additional information, refer to Section 204-04 [Wheels and Tires].
5. NOTE:The final tightening of the shock absorber lower mounting bolt should be carried out when the vehicle weight is on the road wheels.

   Tighten the shock absorber lower mounting bolt.

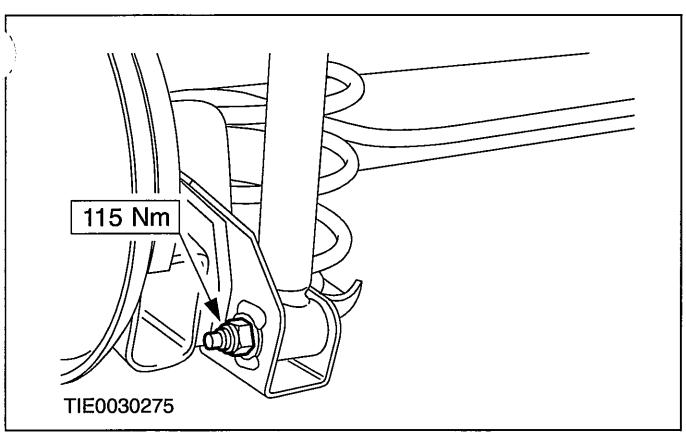

## REMOVAL AND INSTALLATION

# Spring(15 621 0)

### Special Tool(s)

| | |
|---|---|
| 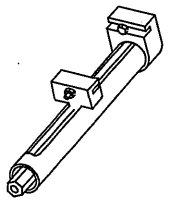 14042 | Compressor, Coil Spring 204-167 (14-042) |
| 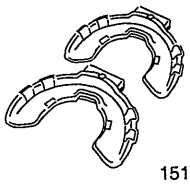 15111 | Adapters for 204-167 204-215 (15-111) |

## Removal

1. **Raise and support the vehicle. For additional information, refer to Section 100-02 [Jacking and Lifting].**
2. **▲WARNING:As the spring is under extreme tension care must be taken at all times. Failure to follow this instruction may result in personal injury.**

   **Using the special tools, compress the spring.**

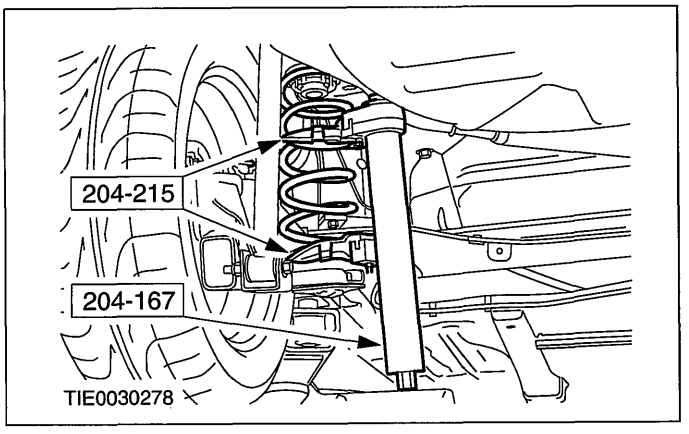


3. **Detach the shock absorber from the beam axle.**

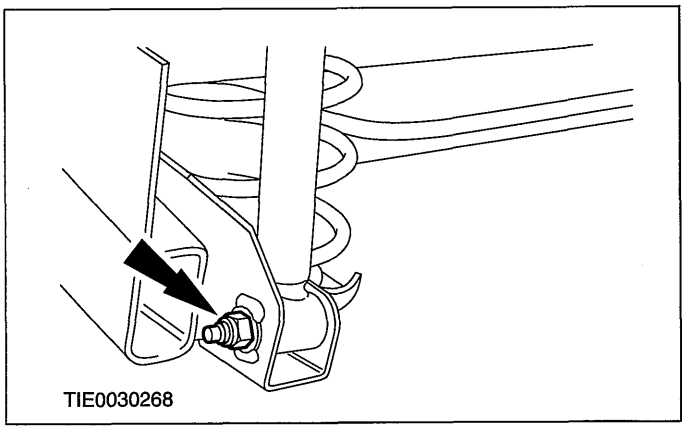


4. **▲WARNING:As the spring is under extreme tension care must be taken at all times. Failure to follow this instruction may result in personal injury.**

   **Remove the spring.**

## Installation

1. **NOTE:Make sure the top seat mounting is installed, and the spring ends butt correctly against the upper and lower spring seats.**

   **Install the spring.**
2. **NOTE:Do not fully tighten the shock absorber lower mounting bolt at this stage.**

   **Attach the shock absorber to the beam axle.**

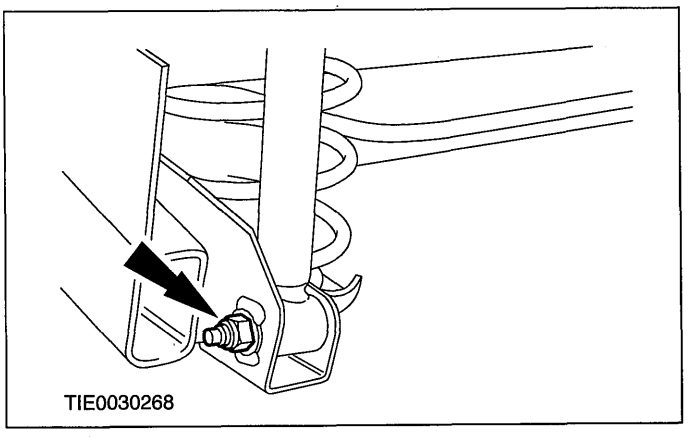


3. **Lower the vehicle.**
4. **NOTE:The final tightening of the shock absorber lower mounting bolt should be carried out when the vehicle weight is on the road wheels.**

## REMOVAL AND INSTALLATION

**Tighten the shock absorber lower mounting bolt.**

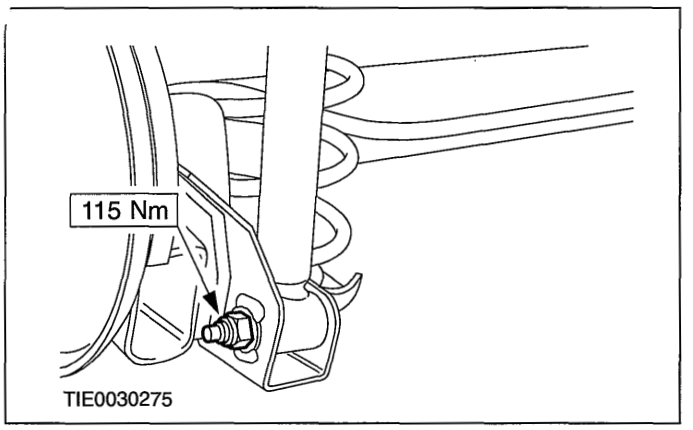

## REMOVAL AND INSTALLATION

# Beam Axle(15 231 0)

### General Equipment

| |
|---|
| Transmission jack |
| Securing strap |
| Electric hand drill |
| Blind rivet gun |

## Removal

Vehicles with rear drum brakes

1. **Release the parking brake.**
2. **Remove the rear wheels and tires.**

   **For additional information, refer to: Wheel and Tire (204-04 Wheels and Tires, Removal and Installation).**
3. **Detach the rear wheel speed sensor and brake hose retaining bracket from the beam axle on both sides.**
   - Remove the retaining bolt.

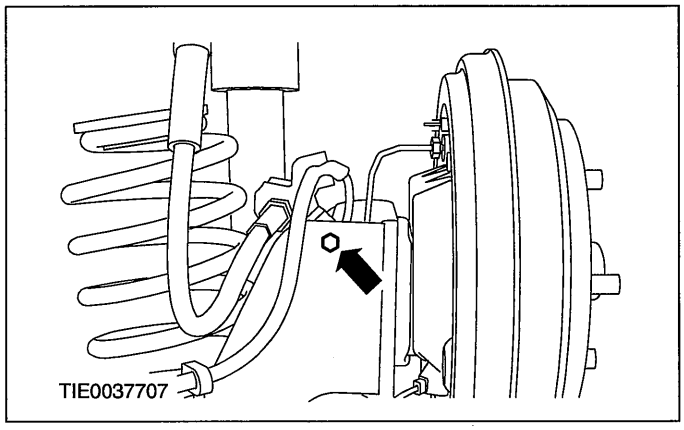
TIE0037707

4. **Disconnect the parking brake cable on both sides.**

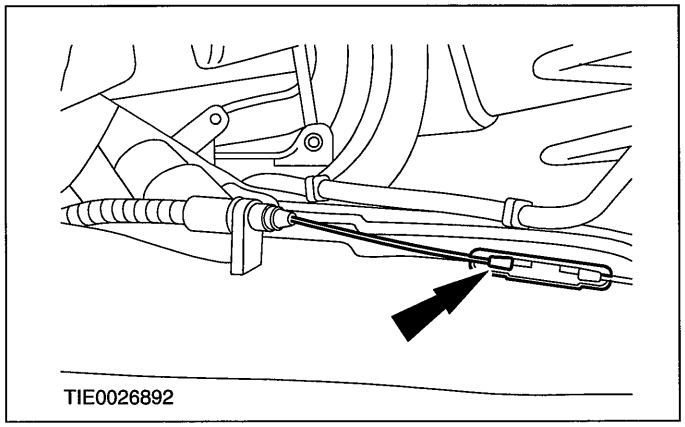
TIE0026892

5. **Detach the parking brake cable from the beam axle bracket on both sides.**

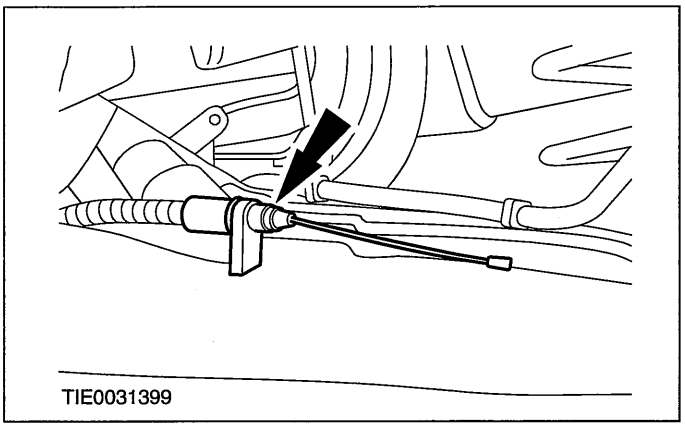
TIE0031399

6. **Remove the brake drum and wheel spindle assembly on both sides.**

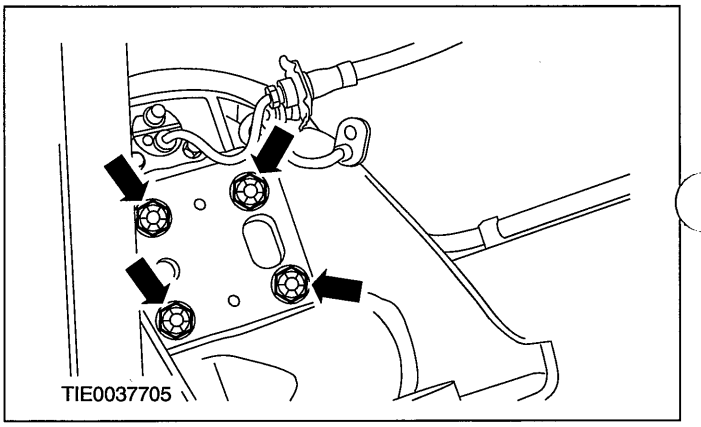
TIE0037705

7. **⚠CAUTION:Suspend the brake backing plate, wheel cylinder and brake shoes assembly to prevent load being placed on the brake hose.**

   **Detach the brake backing plate, wheel cylinder and brake shoes assembly from the beam axle on both sides.**

## REMOVAL AND INSTALLATION

- Using a suitable electric hand drill, remove the rivets.

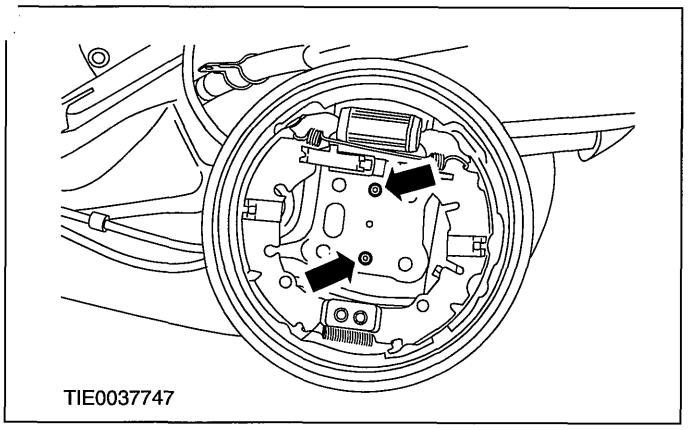
TIE0037747

Vehicles with rear disc brakes

8. **Remove the brake disc shield.**

   **For additional information, refer to: Brake Disc Shield (206-04 Rear Disc Brake, Removal and Installation).**

9. **Detach the parking brake cable from the beam axle bracket on both sides.**

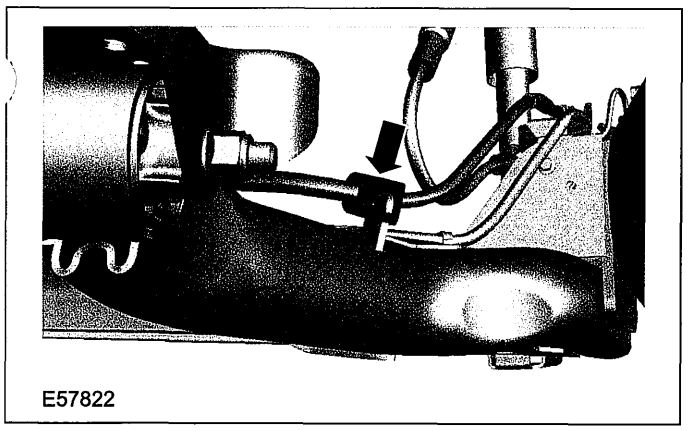
E57822

All vehicles

10. **Detach the parking brake cable from the beam axle on both sides.**

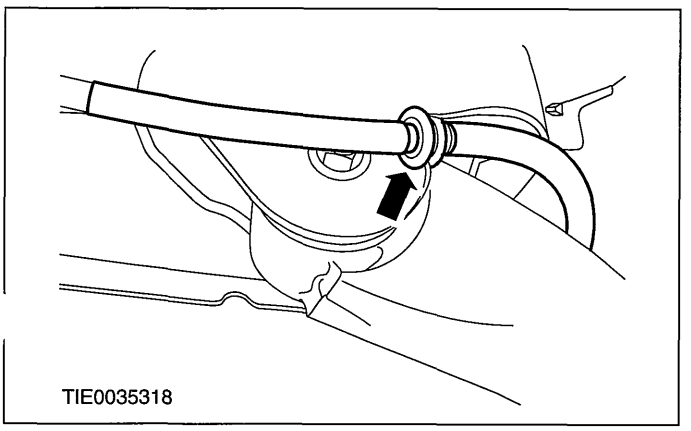
TIE0035318

11. **Remove the rear wheel speed sensor.**

    **For additional information, refer to: Rear Wheel Speed Sensor (206-09 Anti-Lock Control, Removal and Installation).**

12. **▲WARNING:Make sure that the beam axle is secured to the transmission jack. Failure to follow this instruction may result in personal injury.**

    **Using a suitable securing strap, secure the beam axle to a transmission jack.**

13. **Detach the shock absorber from the beam axle on both sides.**

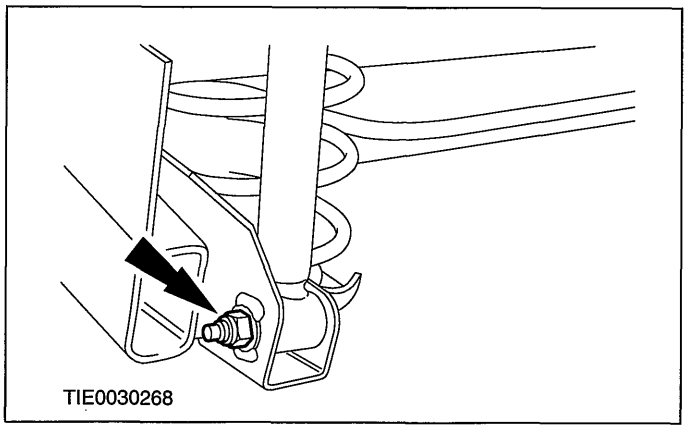
TIE0030268

14. **Detach the spring from the lower spring seat on both sides.**

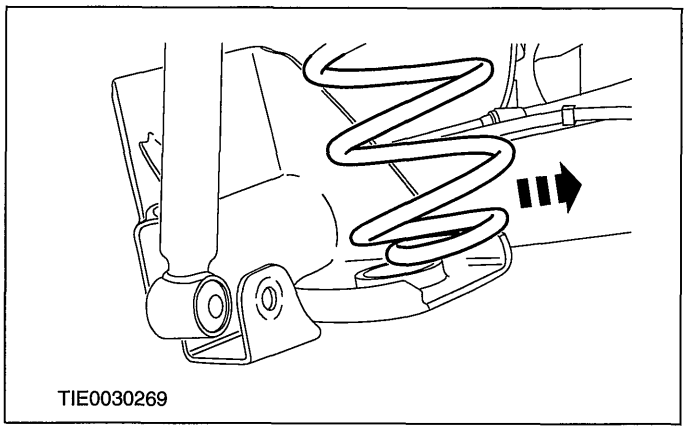
TIE0030269

15. **Remove the beam axle.**

## REMOVAL AND INSTALLATION

- Remove the beam axle retaining bolts on both sides.

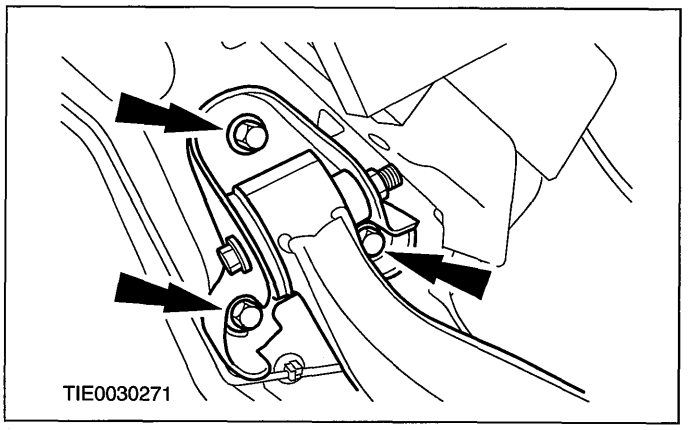


### Installation

All vehicles

**NOTE:**Final tightening of the beam axle components should be carried out when the vehicle weight is on the road wheels.

1. **Using a suitable transmission jack, locate the beam axle.**
2. **NOTE:Do not fully tighten the beam axle retaining bolts at this stage.**

   **Install the beam axle.**

   - Install the beam axle retaining bolts on both sides.

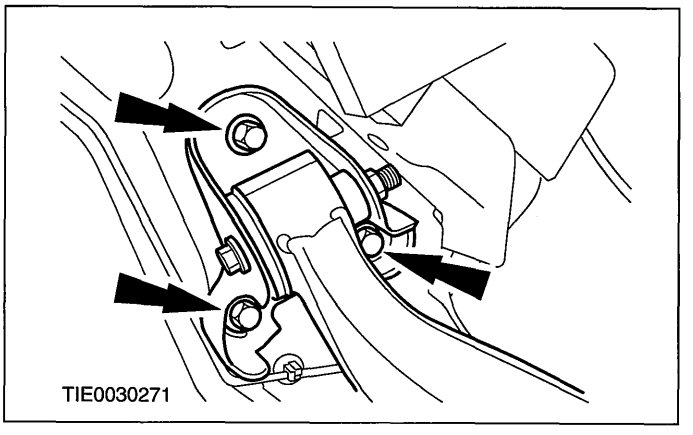


3. **Attach the spring to the lower spring seat on both sides.**

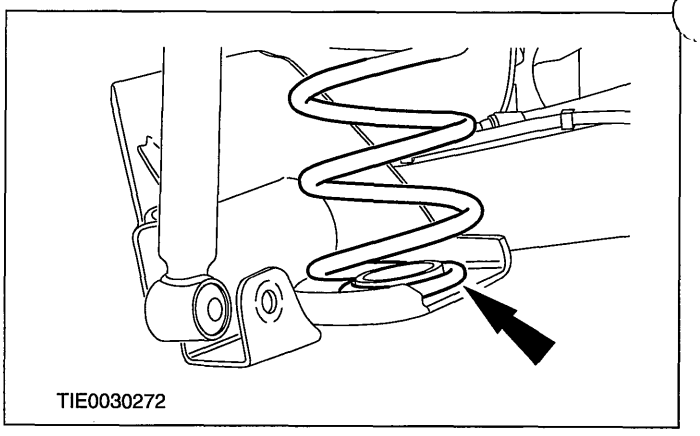


4. **NOTE:Do not fully tighten the shock absorber retaining bolts at this stage.**

   **Attach the shock absorber to the beam axle on both sides.**

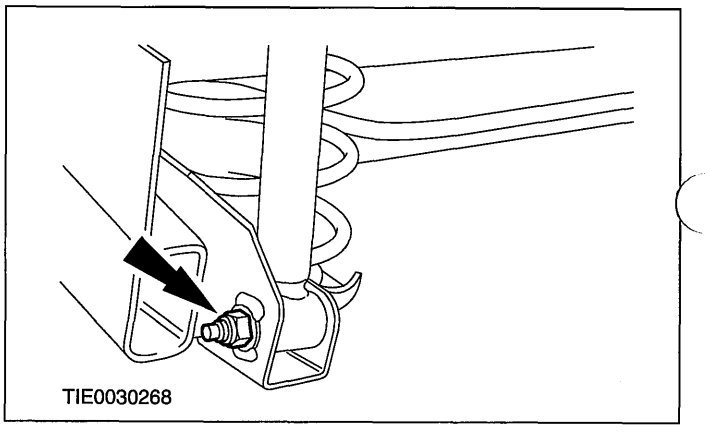


5. **Remove the securing strap.**
6. **Lower and remove the transmission jack.**
7. **Install the rear wheel speed sensor.**

   **For additional information, refer to: Rear Wheel Speed Sensor (206-09 Anti-Lock Control, Removal and Installation).**

## REMOVAL AND INSTALLATION

8. **Attach the parking brake cable to the beam axle on both sides.**

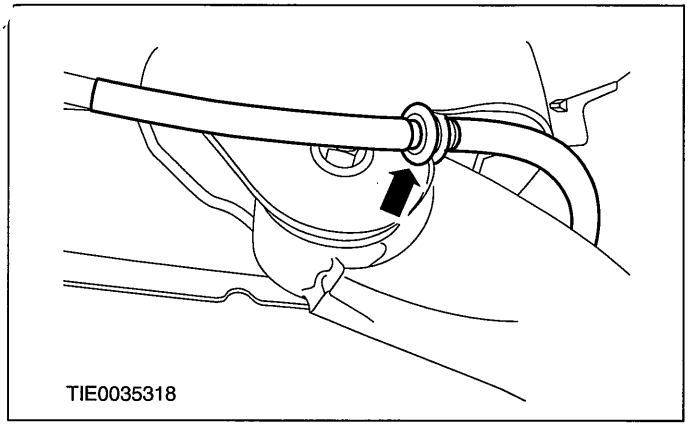
TIE0035318

Vehicles with rear disc brakes

9. **Attach the parking brake cable to the beam axle bracket on both sides.**

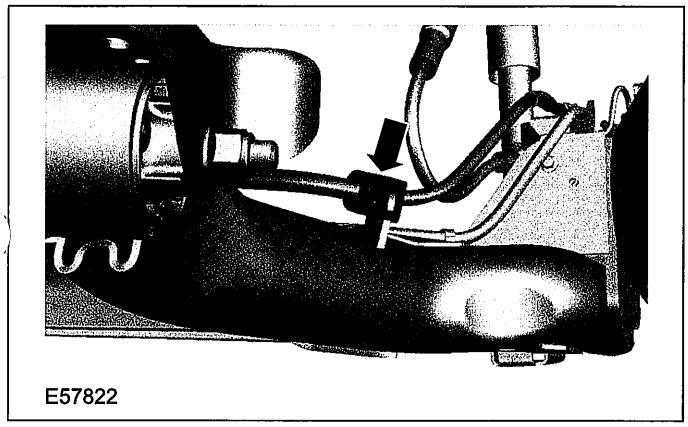
E57822

10. **Install the brake disc shield.**

    **For additional information, refer to: Brake Disc Shield (206-04 Rear Disc Brake, Removal and Installation).**

Vehicles with rear drum brakes

11. **Attach the brake backing plate, wheel cylinder and brake shoes assembly to the beam axle on both sides.**

- Using a suitable blind rivet gun, install new rivets.

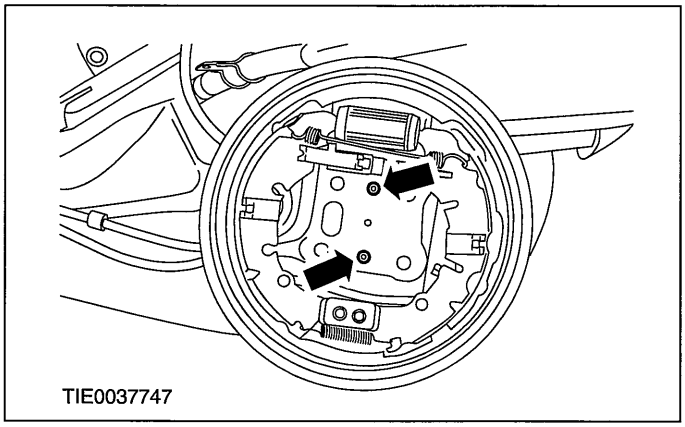
TIE0037747

12. **Install the brake drum and wheel spindle assembly on both sides.**

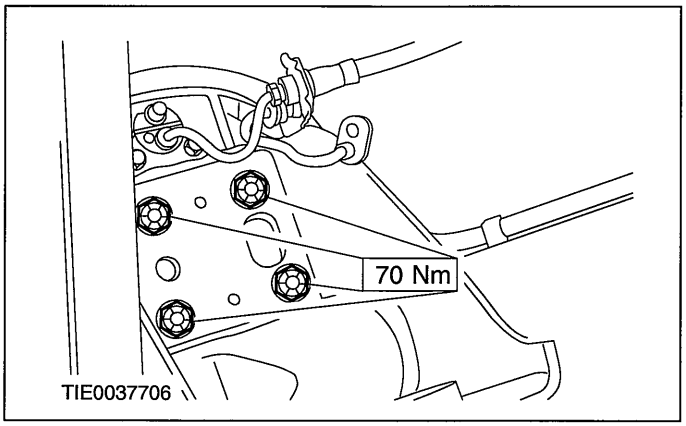

TIE0037706

13. **Attach the parking brake cable to the beam axle bracket on both sides.**

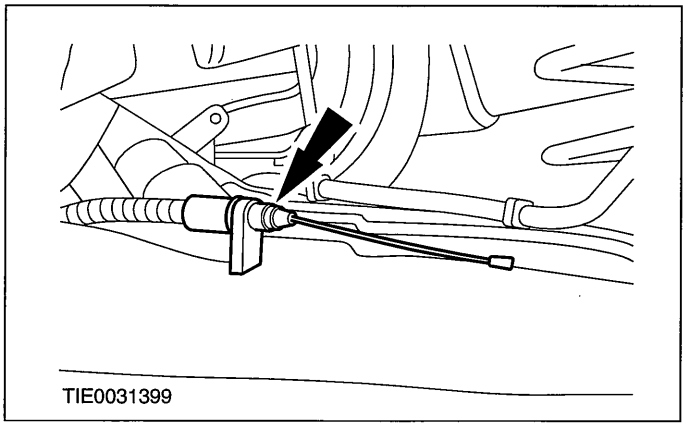
TIE0031399

## REMOVAL AND INSTALLATION

**14. Connect the parking brake cable on both sides.**

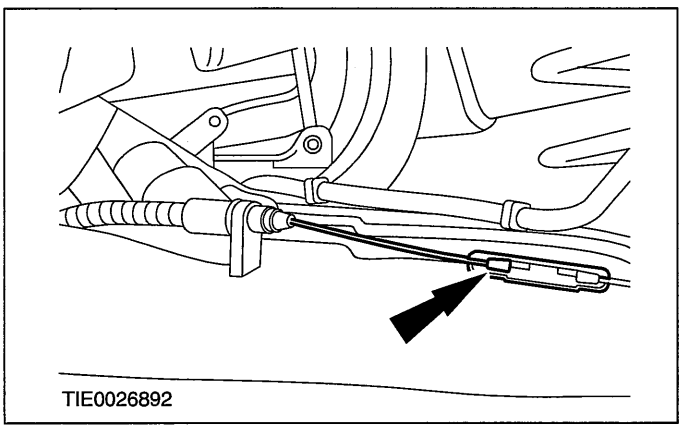


**15. Attach the rear wheel speed sensor and brake hose retaining bracket to the beam axle on both sides.**

- Install the retaining bolt.

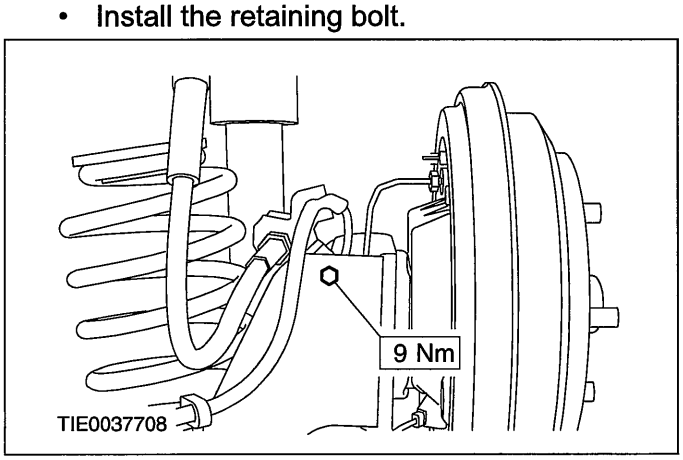


**16. Install the rear wheels and tires.**

**For additional information, refer to: Wheel and Tire (204-04 Wheels and Tires, Removal and Installation).**

All vehicles

**17. Tighten the beam axle retaining bolts on both sides.**

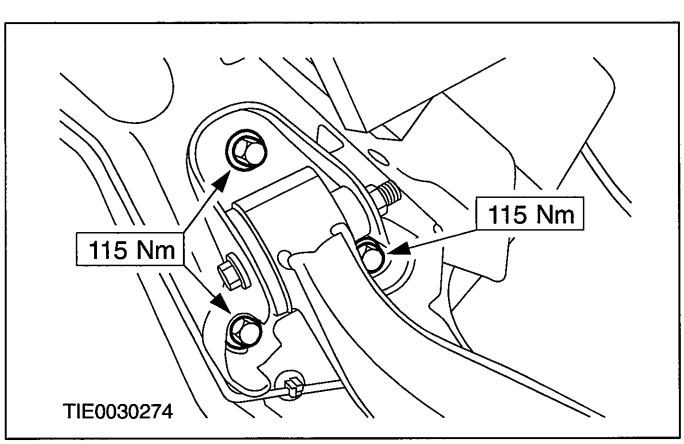


**18. Tighten the shock absorber lower mounting bolt on both sides.**

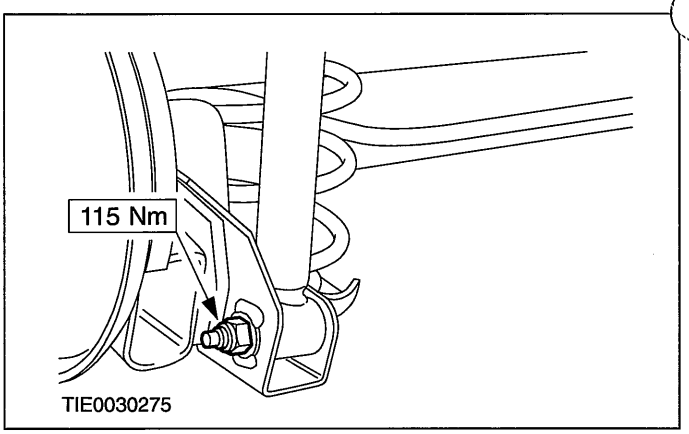


**19. Adjust the parking brake cable.**

**For additional information, refer to: Parking Brake Cable Adjustment - Vehicles With: Rear Drum Brakes (206-05 Parking Brake and Actuation, General Procedures).**

## REMOVAL AND INSTALLATION

# Wheel Spindle(15 366 0)

### Removal

All vehicles

**1. Remove the dust cap.**

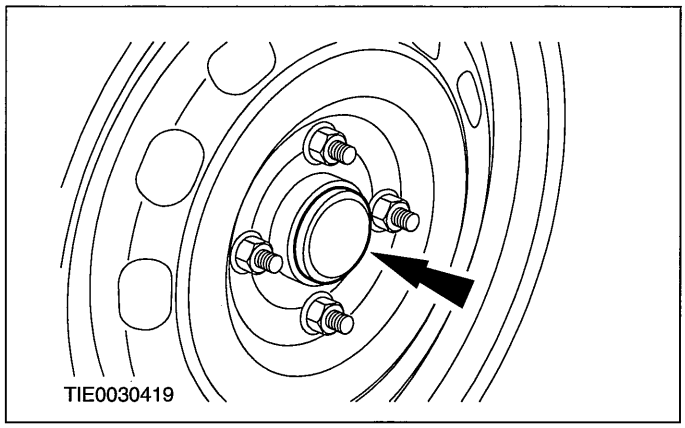


Vehicles with rear drum brakes

**2. Remove the brake drum.**

**For additional information, refer to: Brake Drum (206-02 Drum Brake, Removal and Installation).**

**3. Detach the wheel speed sensor from the wheel spindle.**

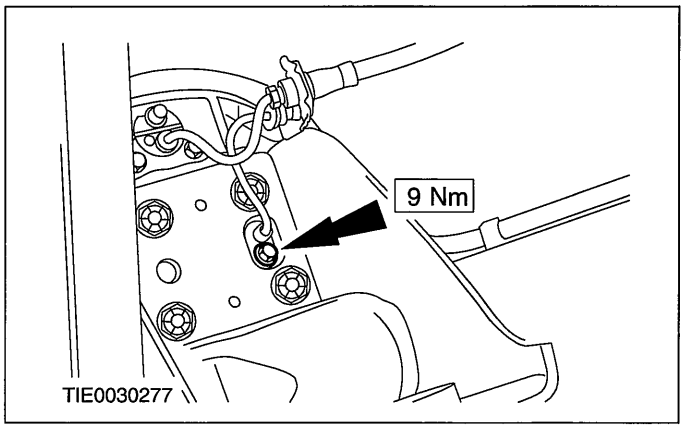


**4. Remove the wheel spindle.**

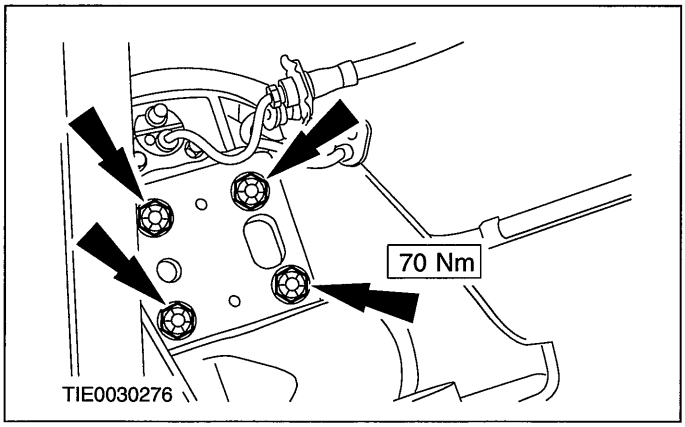


Vehicles with rear disc brakes

**5. Remove the brake disc.**

**For additional information, refer to: Brake Disc (206-04 Rear Disc Brake, Removal and Installation).**

**6. Remove the wheel hub.**

- Remove and discard the wheel hub retaining nut.

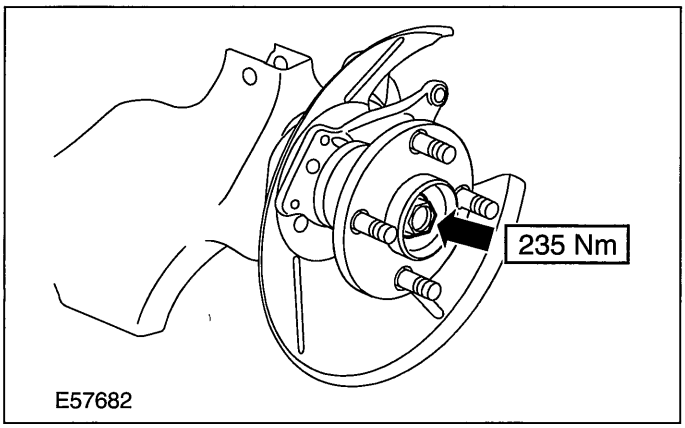

## REMOVAL AND INSTALLATION

7. **Detach the wheel speed sensor from the wheel spindle.**

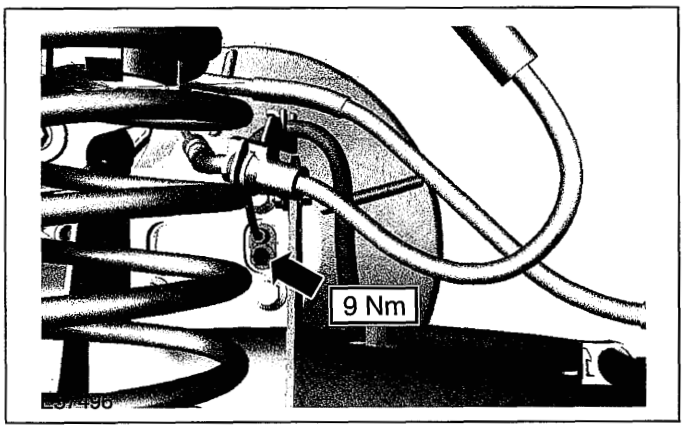


8. **Remove the wheel spindle.**

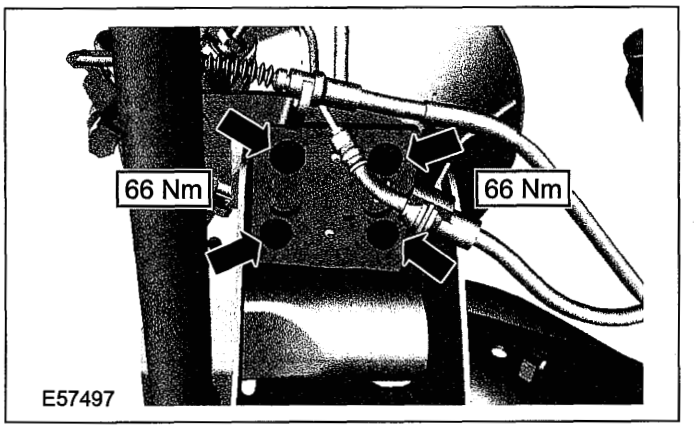


### Installation

**NOTE:** Install a new wheel hub retaining nut.

1. **To install, reverse the removal procedure.**

## REMOVAL AND INSTALLATION

# Rear Wheel Bearing

### Special Tool(s)

| | |
|---|---|
| 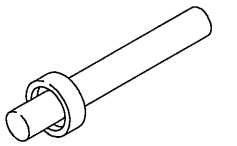 205062 | Installer, Differential Bearing 205-062 |
| 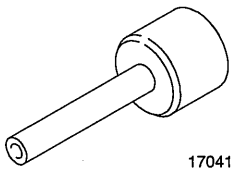 17041 | Installer, Input Shaft Seal 307-210 (17-041) |

### General Equipment

| |
|---|
| Soft faced hammer |
| Wooden block |

## Removal

⚠ **CAUTION:The brake drum and hub assembly removal in this procedure is for installing a new wheel bearing, not for access to brake system components.**

All vehicles

1. **Remove the dust cap.**

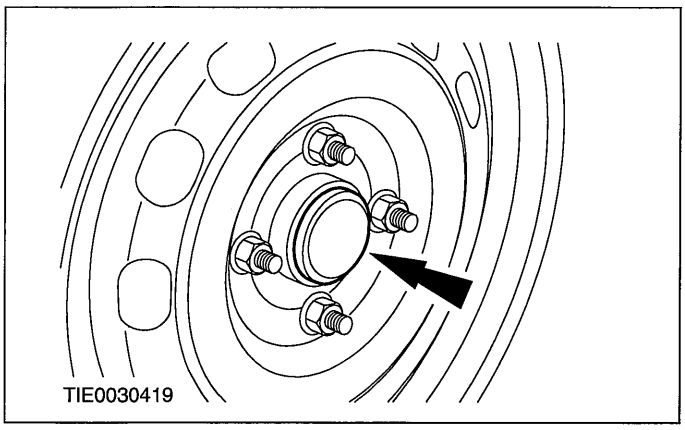


2. **Remove the wheel and tire.**

   **For additional information, refer to: Wheel and Tire (204-04 Wheels and Tires, Removal and Installation).**

Vehicles with rear drum brakes

3. **Release the parking brake.**
4. **Remove the brake drum and hub assembly.**
   - Remove and discard the wheel hub retaining nut.

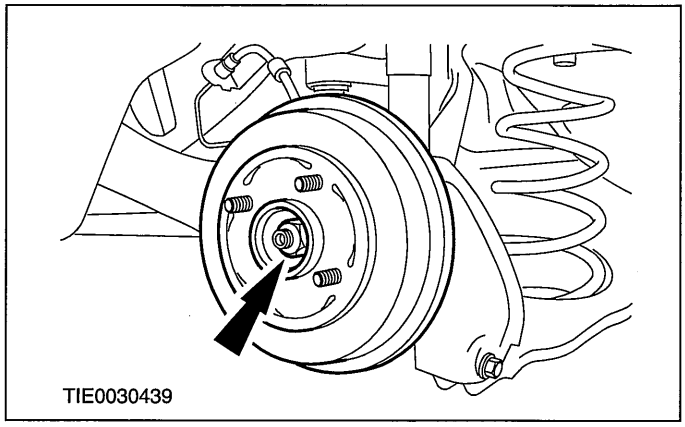


Vehicles with rear disc brakes

5. **Remove the brake disc.**

   **For additional information, refer to: Brake Disc (206-04 Rear Disc Brake, Removal and Installation).**
6. **Remove the wheel hub.**
   - Remove and discard the wheel hub retaining nut.

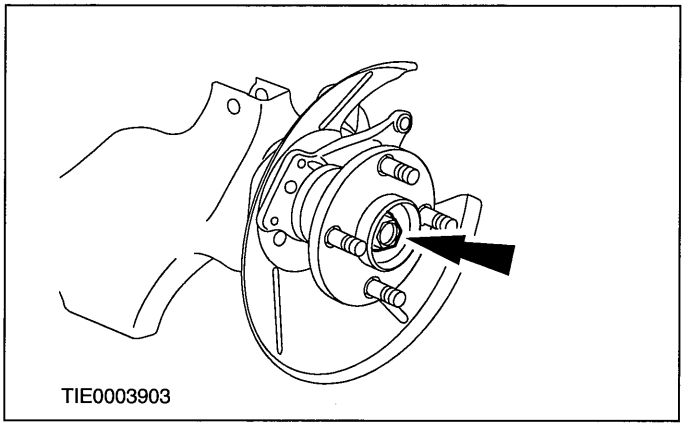

## REMOVAL AND INSTALLATION

All vehicles

7. **Remove and discard the wheel speed sensor ring (brake disc shown).**

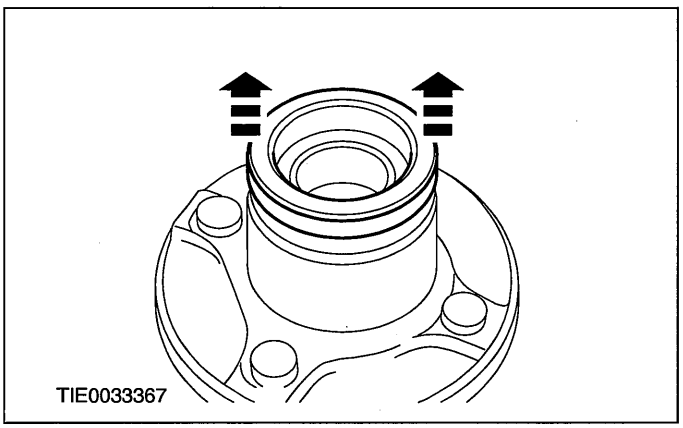


8. **Remove the circlip (brake disc shown).**

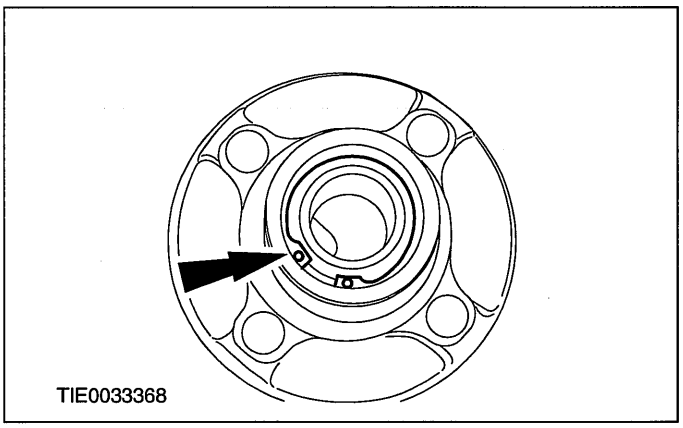


9. **Using the special tool, remove and discard the wheel bearing (brake disc shown).**

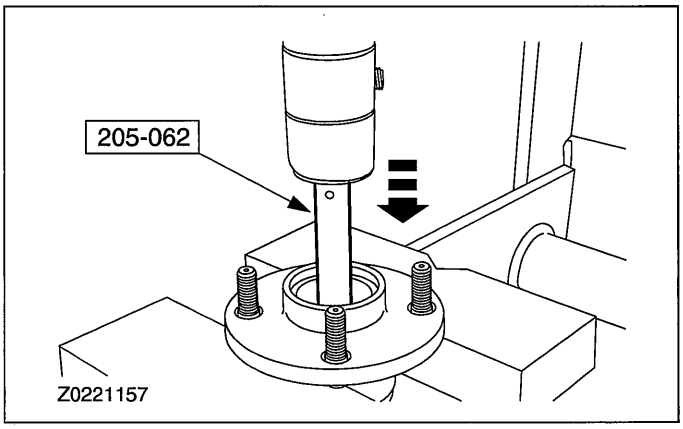


Installation

All vehicles

1. **⚠CAUTION:Support the wheel hub assembly on the wheel mounting face and not on the wheel nut studs.**

**Using the special tool, install the new wheel bearing (brake disc shown).**

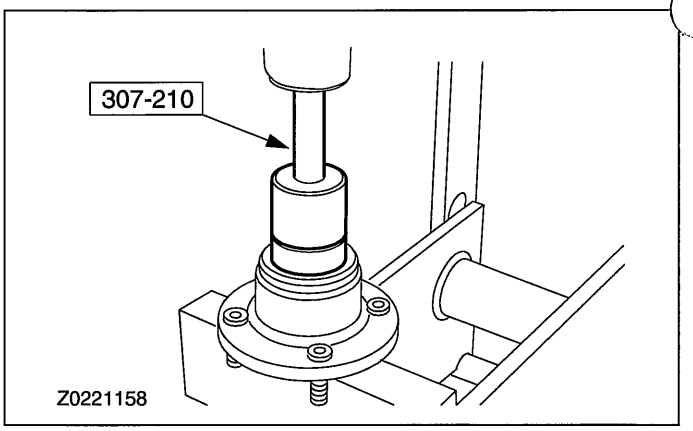


2. **Install the circlip (brake disc shown).**

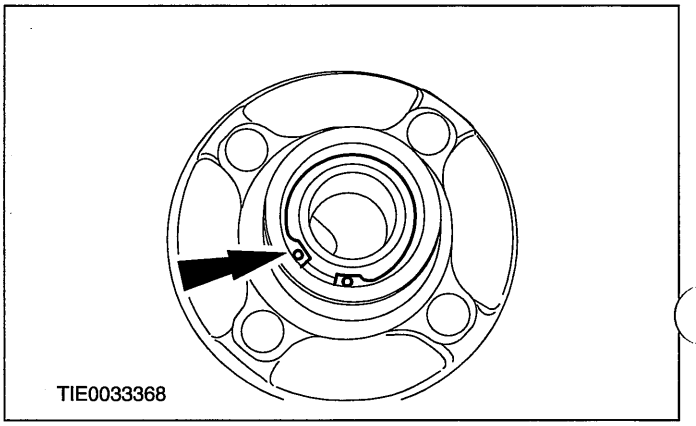


3. **CAUTIONS:**

**⚠Make sure the wheel speed sensor ring is not knocked, damaged and kept free from metal fragments.**

**⚠Protect the face of the wheel speed sensor ring with a non-ferrous flat block to prevent damage.**

**⚠Make sure the wheel hub or brake drum is adequately supported and do not allow it to rest on the wheel studs..**

**⚠Make sure the wheel speed sensor ring is pressed on slowly and squarely until fully seated.**

**⚠Do not exceed a maximum load of 10 kN.**

## REMOVAL AND INSTALLATION

**Using the special tool, install a new wheel speed sensor ring (brake disc shown).**

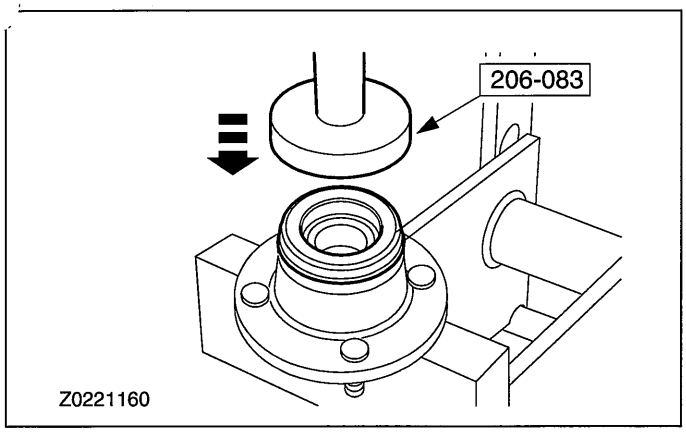


Vehicles with rear drum brakes

**4. CAUTIONS:**

**⚠Avoid impact on the wheel speed sensor ring.**

**⚠Make sure the wheel speed sensor ring is clean.**

**⚠Avoid any contact between the wheel speed sensor ring and a magnetic surface.**

**⚠Rotate the wheel hub assembly 10 times counter-clockwise when tightening the wheel hub retaining nut to prevent damage to the wheel bearing.**

**NOTE:** Install a new wheel hub retaining nut.

**Install the brake drum and hub assembly.**

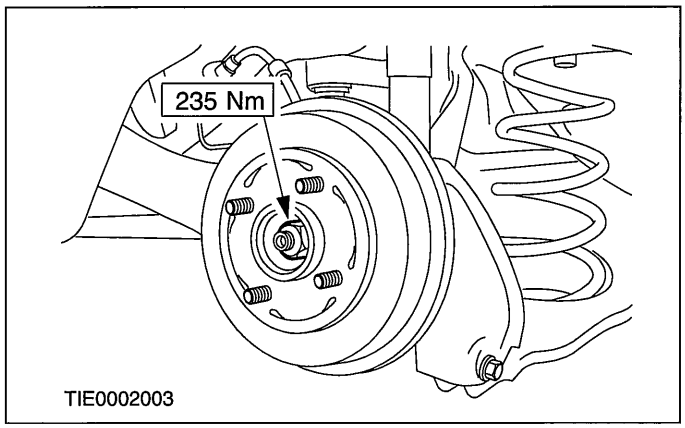


**5. Apply the parking brake.**

Vehicles with rear disc brakes

**6. CAUTIONS:**

**⚠Avoid impact on the wheel speed sensor ring.**

**⚠Make sure the wheel speed sensor ring is clean.**

**⚠Avoid any contact between the wheel speed sensor ring and a magnetic surface.**

**⚠Rotate the wheel hub assembly 10 times counter-clockwise when tightening the wheel hub retaining nut to prevent damage to the wheel bearing.**

**NOTE:** Install a new wheel hub retaining nut.

**Install the wheel hub retaining nut.**

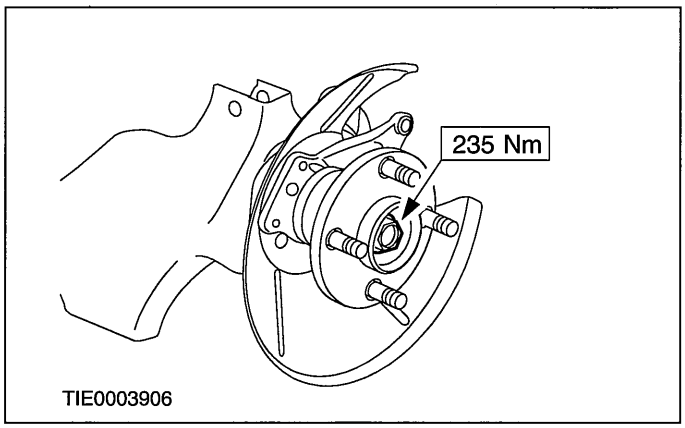


**7. Install the brake disc.**

**For additional information, refer to: Brake Disc (206-04 Rear Disc Brake, Removal and Installation).**

All vehicles

**8. Install the wheel and tire.**

**For additional information, refer to: Wheel and Tire (204-04 Wheels and Tires, Removal and Installation).**

**9. NOTE: If the dust cap is damaged a new dust cap must be installed.**

**Using a soft faced hammer and a wooden block, install the dust cap.**

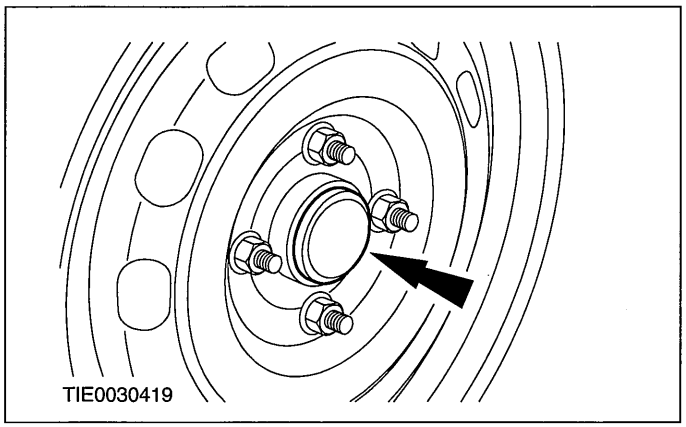

## REMOVAL AND INSTALLATION

# Trailing Arm Bushing(15 730 0)

### Special Tool(s)

| | |
|---|---|
| 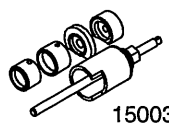 15003b | Remover/Installer, Rear Axle Housing Bushings 205-035 (15-003B) |
| 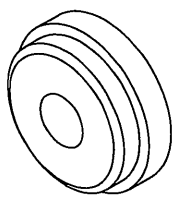 15064 | Adapter for 205-074 205-074-01 (15-064) |
| 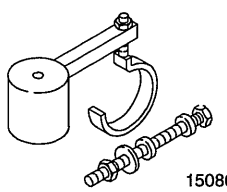 15086 | Remover/Installer, Pivot Bushing 205-297 (15-086) |
| 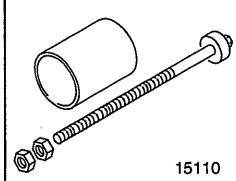 15110 | Remover/Installer, Pivot Bushing 205-342 (15-110) |
| 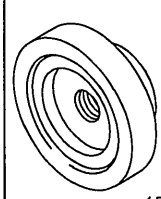 1511001 | Adapter for 205-342 205-342-01 (15-110-01) |
| 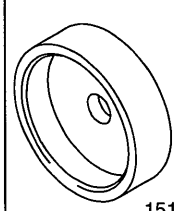 1511002 | Adapter for 205-342 205-342-02 (15-110-02) |

### Special Tool(s)

| | |
|---|---|
| 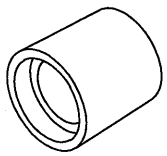 21171 | Receiving Cup, Axle Bushing 205-510 (15-116) |

### General Equipment

| |
|---|
| Transmission jack |

## Removal

1. **Raise and support the vehicle.**

   **For additional information, refer to: Jacking (100-02 Jacking and Lifting, Description and Operation) / Lifting (100-02 Jacking and Lifting, Description and Operation).**

2. **Disconnect the wheel speed sensor electrical connector.**

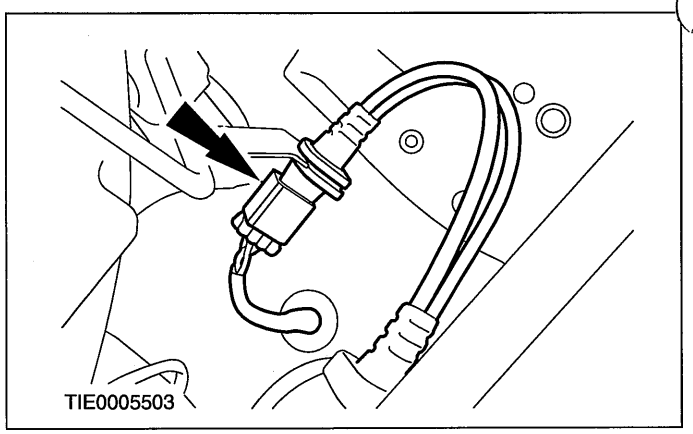


3. **Detach the parking brake cable from the beam axle on both sides.**

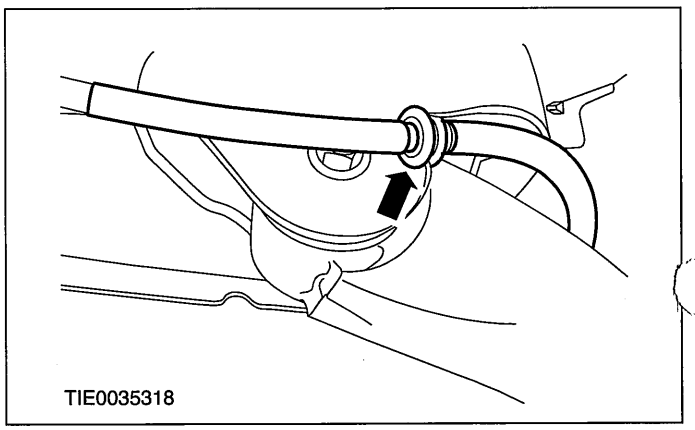

## REMOVAL AND INSTALLATION

4. **Using a suitable transmission jack, support the beam axle.**
5. **Remove the beam axle retaining bolts on both sides.**

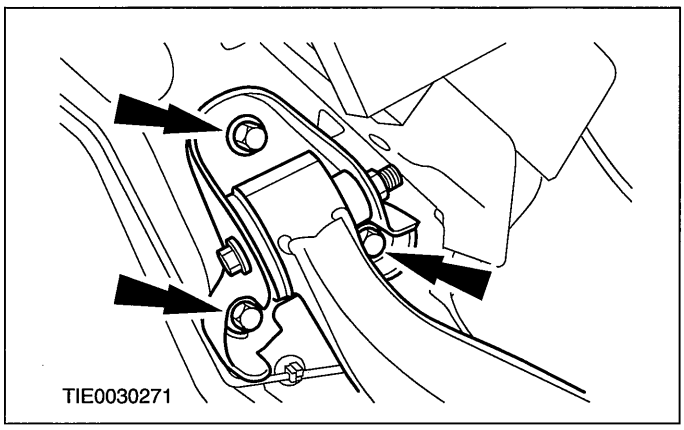


6. **Lower the beam axle sufficiently to gain access to the trailing arm bushing.**
7. **Mark the bushing housing adjacent to the locating tang on the bushing, to aid installation.**

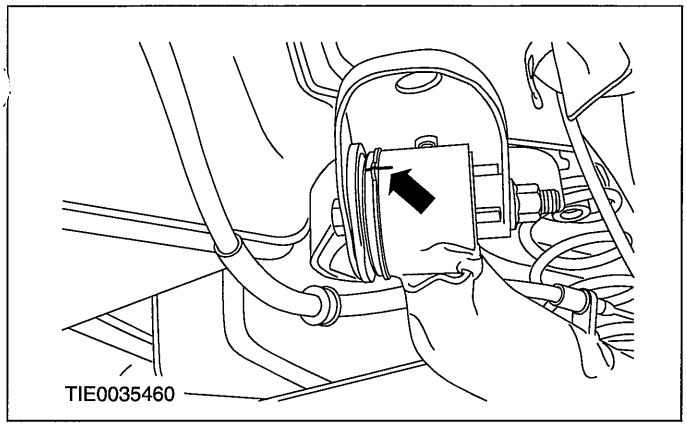


8. **Remove the trailing arm bushing retaining nut and bolt.**

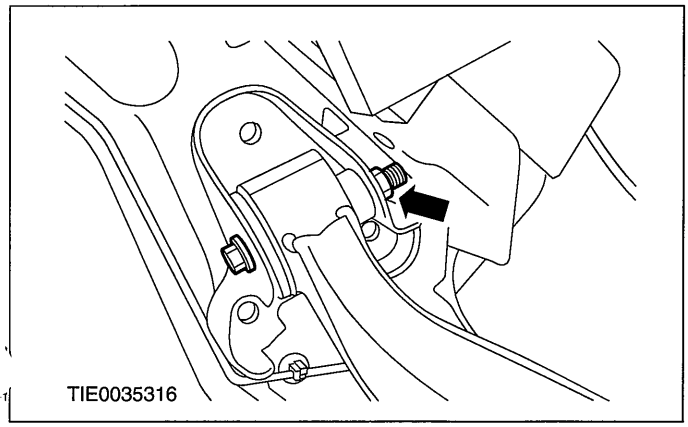


9. **Using the special tools, remove and discard the trailing arm bushing.**

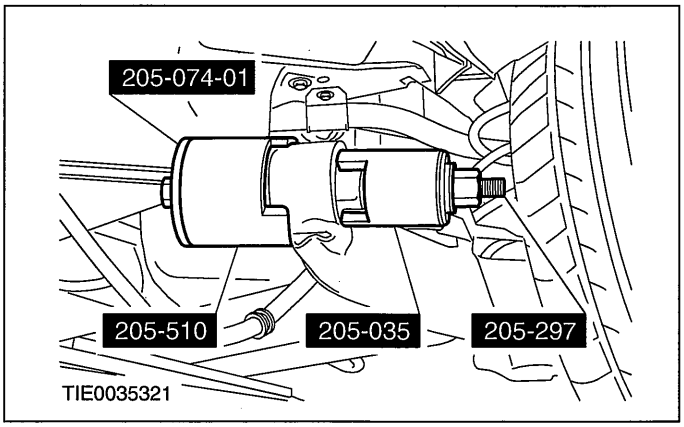


### Installation

1. **NOTE:Install a new trailing arm bushing.**

**NOTE:**Align the mark on the bushing housing with the locating tang on the trailing arm bushing.

**Using the special tools, install the new trailing arm bushing.**

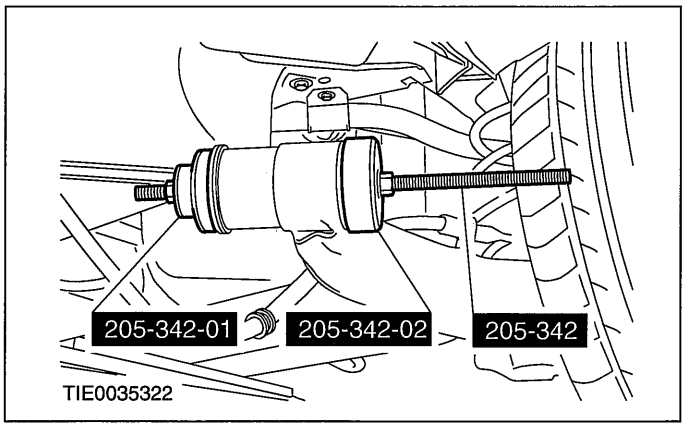


2. **Fabricate a 32 mm high by 60 mm long spacer.**

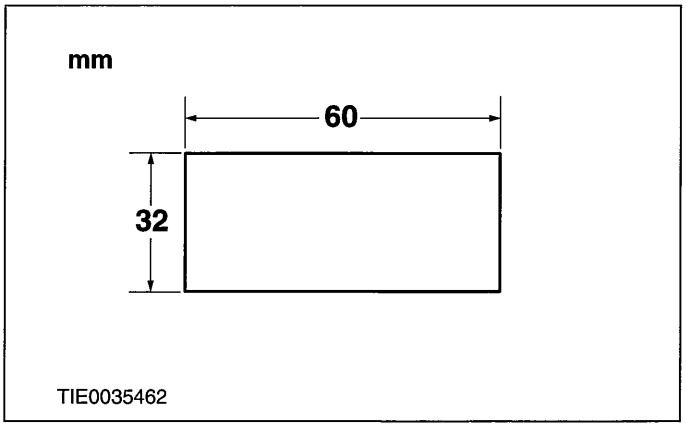

## REMOVAL AND INSTALLATION

3. **NOTE:Final tightening of the trailing arm bushing retaining nut and bolt must be carried out at the installation setting.**

**NOTE:**The spacer must be positioned exactly as illustrated.

**Using the fabricated spacer, set the beam axle bracket to the installation setting.**

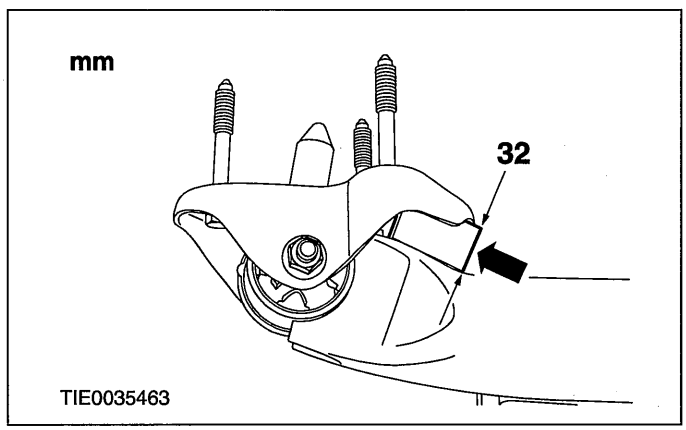


4. **NOTE:Final tightening of the trailing arm bushing retaining nut and bolt must be carried out at the installation setting.**

**Install the trailing arm bushing retaining nut and bolt.**

- Remove the spacer.

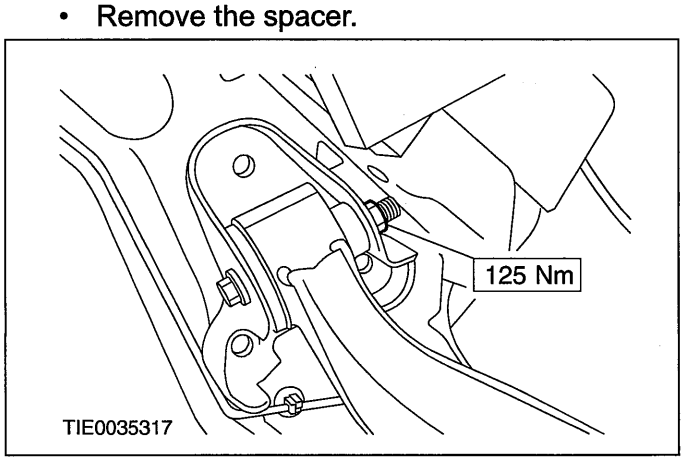


5. **Raise the beam axle.**

6. **Install the beam axle retaining bolts on both sides.**

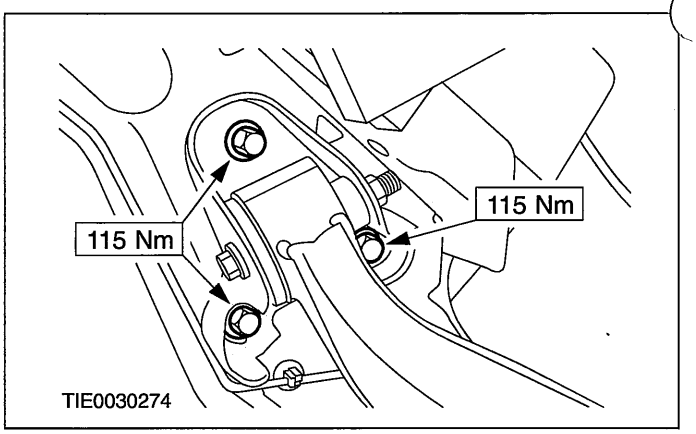


7. **Lower and remove the transmission jack.**

8. **Attach the parking brake cable to the beam axle on both sides.**

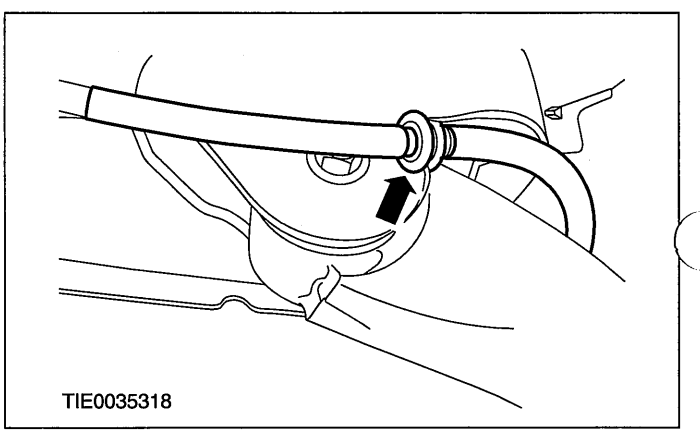


9. **Connect the wheel speed sensor electrical connector.**

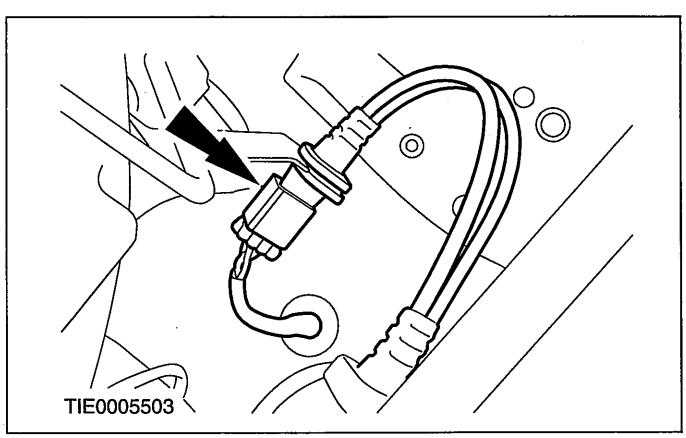


10. **Lower the vehicle.**

# SECTION 204-04 Wheels and Tires

## VEHICLE APPLICATION:2006.0 Fiesta

CONTENTS PAGE

**SPECIFICATIONS**

Specifications..... 204-04-2

**DIAGNOSIS AND TESTING**

Wheels and Tires..... 204-04-3
Inspection and Verification..... 204-04-3
Symptom Chart..... 204-04-4

**REMOVAL AND INSTALLATION**

Wheel and Tire..... 204-04-8

## SPECIFICATIONS

### Torque Specifications

| Description | Nm | lb-ft | lb-in |
|---|---|---|---|
| Wheel nuts | 90 | 66 | - |

### Wheel and Tire Assembly Runout Specifications

| Description | Alloy Wheel (mm) | Steel Wheel (mm) |
|---|---|---|
| Maximum lateral runout | 0.3 | 0.6 |
| Maximum radial runout | 0.3 | 0.5 |

## DIAGNOSIS AND TESTING

# Wheels and Tires

## Inspection and Verification

### Visual Inspection Chart

| Mechanical |
|---|
| Wheel(s) |
| Tire(s) |
| Tire pressure(s) * |
| Wheel nuts |
| Wheel studs |
| * Vehicles equipped with a tire pressure monitoring system must be inspected for correct operation using the diagnostic tool. |

To maximize tire performance, inspect the tires for signs of incorrect inflation and uneven wear which may indicate a need for balancing, rotation or suspension alignment. Tires should also be checked frequently for cuts, stone bruises, abrasions, blisters and for objects that may have become embedded in the tread. More frequent inspections are recommended when rapid or extreme temperature changes occur or when road surfaces are rough or occasionally littered with foreign material.

As a further visible check of tire condition, tread wear indicators are molded into the bottom of the tread grooves. When these indicator bands become visible, new tires must be installed.

### Tire Wear Diagnosis

Uneven wear is usually caused by either excessive camber or excessive toe on tires.

Sometimes incorrect toe settings or worn struts will cause severe `cupping' or `scalloped' tire wear on non-driven wheels.

Severely incorrect toe settings will also cause other unusual wear patterns.

### Tire Vibration Diagnosis

A tire vibration diagnostic procedure always begins with a road test. The road test and customer interview (if available) will provide much of the information needed to find the source of a vibration.

During the road test, drive the vehicle on a road that is smooth and free of undulations. If vibration is apparent, note and record the following:

- the speed at which the vibration occurs.
- what type of vibration occurs in each speed range.
  - mechanical or audible
- how the vibration is affected by changes in the following:
  - engine torque
  - vehicle speed
  - engine speed
- type of vibration - sensitivity:
  - torque sensitive
  - vehicle speed sensitive
  - engine speed sensitive

The following explanations help isolate the source of the vibration.

### Torque Sensitive

This means that the condition can be improved or made worse by accelerating, decelerating, coasting, maintaining a steady vehicle speed or applying engine torque.

### Vehicle Speed Sensitive

This means that the vibration always occurs at the same vehicle speed and is not affected by engine torque, engine speed or the transmission gear selected.

## DIAGNOSIS AND TESTING

### Engine Speed Sensitive

This means that the vibration occurs at varying vehicle speeds when a different transmission gear is selected. It can sometimes be isolated by increasing or decreasing engine speed with the transmission in NEUTRAL or by stall testing with the transmission in gear. If the condition is engine speed sensitive, the cause is probably not related to the tires.

If the road test indicates that there is tire whine, but no shake or vibration, the noise originates with the contact between the tire and the road surface.

A thumping noise usually means that the tire is flat or has soft spots making a noise as they slap the roadway. Tire whine can be distinguished from axle noise. Tire whine remains the same over a range of speeds.

A complete road test procedure is described in Section 100-04.

REFER to: Noise, Vibration and Harshness (NVH) (100-04 Noise, Vibration and Harshness, Diagnosis and Testing).

### Symptom Chart

| Symptom | Possible Sources | Action |
|---|---|---|
| • Tire(s) show excess wear on edge of tread | • Tire(s) under-inflated. | • ADJUST the tire pressure(s). |
| | • Vehicle overloaded. | • CORRECT as necessary. |
| | • Incorrect wheel alignment. | • ADJUST the wheel alignment. REFER to: (204-00 Suspension System - General Information) Specifications (Specifications), Front Toe Adjustment (General Procedures). |
| • Tire(s) show excess wear in center of tread | • Tire(s) over-inflated. | • ADJUST the tire pressure(s). |
| • Other excessive tire wear concerns | • Incorrect tire pressure(s). | • ADJUST the tire pressure(s). |
| | • Wheel and tire assemblies need rotating. | • ROTATE the wheel and tire assemblies. |
| | • Incorrect wheel alignment. | • ADJUST the wheel alignment. REFER to: (204-00 Suspension System - General Information) Specifications (Specifications), Front Toe Adjustment (General Procedures). |
| | • Vehicle overloaded. | • CORRECT as necessary. |
| | • Loose or leaking front strut and spring assembly. | • TIGHTEN or INSTALL new suspension components as necessary. REFER to: Shock Absorber and Spring Assembly (204-01 Front Suspension, Removal and Installation). |

## DIAGNOSIS AND TESTING

| Symptom | Possible Sources | Action |
|---|---|---|
| | • Wheel bearings worn. | • INSTALL new wheel bearings as necessary. REFER to:<br>Front Wheel Bearing (204-01 Front Suspension, Removal and Installation),<br>Rear Wheel Bearing (204-02 Rear Suspension, Removal and Installation). |
| | • Suspension components, bushings and ball joints. | • CHECK or INSTALL new suspension components as necessary. |
| | • Excessive lateral or radial runout of wheel or tire. | • BALANCE the wheel and tire assemblies. Using a suitable dial indicator gauge and holding fixture, CHECK lateral and radial runout of the wheel and tire assemblies. INSTALL new wheel and tire assemblies as necessary. REFER to: (204-04 Wheels and Tires)<br>Specifications (Specifications), Wheel and Tire (Removal and Installation). |
| • Wobble or shimmy affecting wheel runout | • Damaged wheel. | • INSPECT the wheel rims for damage. BALANCE the wheel and tire assemblies. Using a suitable dial indicator gauge and holding fixture, CHECK lateral and radial runout of the wheel and tire assemblies. INSTALL new wheel and tire assemblies as necessary. REFER to: (204-04 Wheels and Tires)<br>Specifications (Specifications), Wheel and Tire (Removal and Installation). |
| | • Front wheel bearing. | • CHECK or INSTALL new wheel bearings as necessary.<br>REFER to: Front Wheel Bearing (204-01 Front Suspension, Removal and Installation). |
| • Excessive vehicle vibration, rough steering | • Suspension components. | • CHECK or INSTALL new suspension components as necessary. |
| • Vehicle vibrations from wheels and tires | • Incorrect tire pressure(s). | • ADJUST the tire pressure(s). |

## DIAGNOSIS AND TESTING

| Symptom | Possible Sources | Action |
|---|---|---|
| | • Wheel or tire imbalance. | • BALANCE the wheel and tire assemblies. |
| | • Uneven tire wear. | • INSTALL a new tire(s) as necessary.<br>REFER to: Wheel and Tire (204-04 Wheels and Tires, Removal and Installation). |
| | • Brake disc imbalance. | • CHECK the brake disc for foreign material. |
| | • Water in tire(s). | • REMOVE the water. |
| | • Bent wheel. | • INSTALL a new wheel and tire assembly.<br>REFER to: Wheel and Tire (204-04 Wheels and Tires, Removal and Installation). |
| | • Incorrectly seated tire bead. | • SPIN the wheel on the vehicle. EXAMINE the area where the tire and the wheel meet. If that section of the tire appears to waver while being rotated, the tire bead may not be correctly seated on the wheel. REMOVE the tire and CLEAN the bead seat areas on both wheel and tire. |
| | • Excessive lateral or radial runout of wheel or tire. | • BALANCE the wheel and tire assemblies. Using a suitable dial indicator gauge and holding fixture, CHECK the lateral and radial runout of the wheel and tire assemblies. INSTALL new wheel and tire assemblies as necessary. REFER to: (204-04 Wheels and Tires)<br>Specifications (Specifications), Wheel and Tire (Removal and Installation). |
| | • Foreign material between wheel mounting face and hub mounting surface. | • CLEAN mounting surfaces. |
| | • Front wheel bearing. | • CHECK or INSTALL new wheel bearings as necessary.<br>REFER to: Front Wheel Bearing (204-01 Front Suspension, Removal and Installation). |

## DIAGNOSIS AND TESTING

| Symptom | Possible Sources | Action |
|---|---|---|
| • Rust streaks from the wheel stud holes in the wheel | • Wheel nuts. | • REMOVE the wheel and tire assembly. Inspect the wheel nuts and wheel and tire assembly for damage. INSTALL new wheel nuts and wheel and tire assemblies as necessary. REFER to: (204-04 Wheels and Tires) Specifications (Specifications), Wheel and Tire (Removal and Installation). |
| • Seized wheel nuts | • Corrosion. | • CAUTION: Do not permit lubricant to get on cone sets of stud holes or on cone angle of wheel nuts. If corrosion is slight, wire brush away. If corrosion is excessive, INSTALL new wheel studs and nuts. REFER to: (204-04 Wheels and Tires) Specifications (Specifications), Wheel and Tire (Removal and Installation). If the condition persists, LUBRICATE the first three threads of each wheel stud with a graphite-based lubricant. |
| | • Vehicle overloaded | • CORRECT as necessary. |

## REMOVAL AND INSTALLATION

# Wheel and Tire

## Removal

⚠ **CAUTION:Do not use heat to loosen a seized wheel nut. Heat may damage the wheel and wheel hub.**

1. **Loosen the wheel nuts.**
2. **Raise and support the vehicle. For additional information, refer to Section 100-02 [Jacking and Lifting].**
3. **Remove the wheel and tire assembly.**

## Installation

1. **▲WARNING:Remove the corrosion or dirt from the mounting surfaces of the wheel, wheel hub, brake drum or brake disc, as this may cause the wheel nuts to loosen and the wheel to come off while the vehicle is in motion. Failure to follow this instruction may result in personal injury.**

   **Clean the wheel hub and mounting surfaces.**
2. **Install the wheel and tire assembly.**
3. **Lower the vehicle.**
4. **Tighten the wheel nuts in a diagonally opposed pattern.**

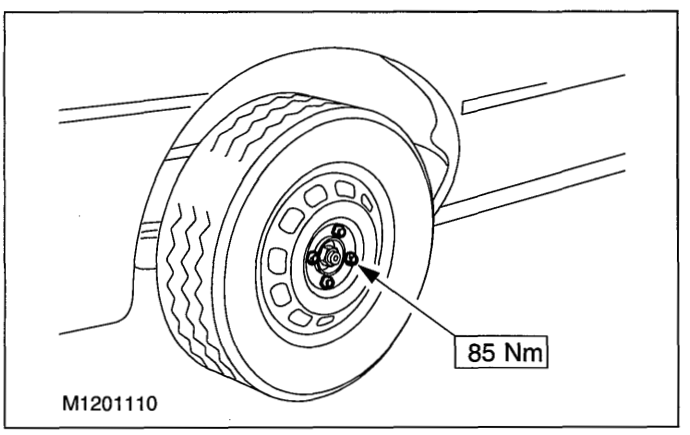

# SECTION 205-04 Front Drive Halfshafts

## VEHICLE APPLICATION:2006.0 Fiesta

CONTENTS PAGE


**SPECIFICATIONS**

Specifications ..... 205-04-2

**DESCRIPTION AND OPERATION**

Front Drive Halfshafts ..... 205-04-3
Driveshafts ..... 205-04-3

**DIAGNOSIS AND TESTING**

Front Drive Halfshafts ..... 205-04-4
Inspection and Verification ..... 205-04-4
Symptom Chart – Front Drive Halfshafts ..... 205-04-4

**REMOVAL AND INSTALLATION**

Front Halfshaft LH ..... (14 320 0) 205-04-6
Front Halfshaft RH ..... (14 321 0) 205-04-10
Intermediate Shaft ..... 205-04-13
Inner Constant Velocity (CV) Joint Boot ..... (14 336 0) 205-04-15
Outer Constant Velocity (CV) Joint Boot ..... (14 338 0) 205-04-18

# SPECIFICATIONS

## Lubricants, Fluids, Sealers and Adhesives

| Description | Specifications |
|---|---|
| Manual transmission fluid | WSD-M2C200-C |
| Grease, outer constant velocity (CV) joint | WSS-M1C259-A1 |
| Grease, inner constant velocity (CV) joint | WSS-M1C259-A1 |

## Constant Velocity (CV) Joint Boot Capacities

| Description | Grams |
|---|---|
| Outer constant velocity (CV) joint boot | 90 |
| Inner constant velocity (CV) joint boot | 100 |

## Torque Specifications

| Item | Nm | lb-ft | lb-in |
|---|---|---|---|
| Lower arm ball joint pinch bolt nut | 48 | 35 | - |
| Intermediate shaft center bearing cap retaining nuts | 25 | 18 | - |
| Wheel hub retaining nut | 290 | 214 | - |
| Strut and spring assembly top mount retaining nuts | 25 | 18 | - |
| CV joint boot clamps | 21 | 15 | - |

## DESCRIPTION AND OPERATION

# Front Drive Halfshafts

## Driveshafts

Conventional driveshafts are used on the front axle. For servicing purposes it is important to note that the inner tripod joints are pressed onto the shaft. This has made it possible to reduce noise levels when the vehicle is pulling away from standing.

The outer joint has not been approved for service repairs, so in the event of a fault it is necessary to replace the complete shaft and outer joint assembly. The inner joints are dismantled with the aid of a puller. The driveshaft needs to be removed first.

In order to install a new boot on the outer joint, it is first necessary to remove the driveshaft and then disassemble the inner joint. A special service kit is available in service for this purpose, consisting of the inner and outer boot and the necessary small parts.

The same amount of grease is used to pack the inner and outer joints.

The PAC nut used for securing the driveshaft to the wheel hub must **not** be reused.

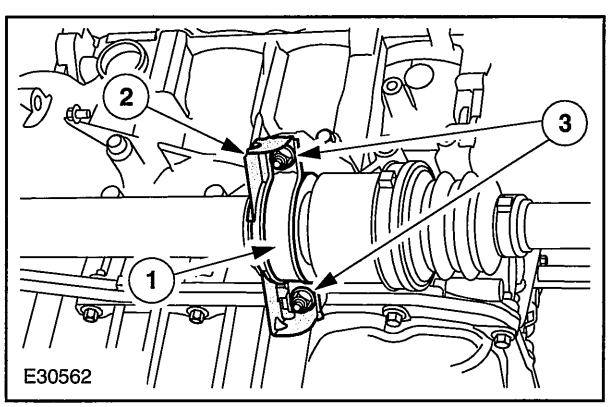


| Item | Description |
|---|---|
| 1 | Securing clip for bearings |
| 2 | Heat shield (only for vehicles with a petrol engine) |
| 3 | Securing pin |

It should also be noted that vehicles with a petrol engine have an additional heat shield on the bearing of the intermediate shaft of the right-hand driveshaft. This is required to prevent the grease in the bearing from overheating as a result of the closeness to the catalytic converter.

## DIAGNOSIS AND TESTING

# Front Drive Halfshafts

### Inspection and Verification

1. Verify the customer concern.
2. Visually inspect for obvious signs of mechanical or electrical damage.
3. If an obvious cause for an observed or reported concern is found, correct the cause (if possible) before proceeding to the next step.

### Symptom Chart – Front Drive Halfshafts

**Symptom Chart**

| Symptom | Possible Sources | Action |
|---|---|---|
| • Clicking, Popping or Grinding Noises While Turning | • Inadequate or contaminated lubricant in the inner or outer front drive halfshaft constant velocity (CV) joint. | • INSPECT, CLEAN and LUBRICATE as necessary.<br>REFER to Inner Constant Velocity (CV) Joint Boot - / Outer Constant Velocity (CV) Joint Boot - in this section. |
| | • Another component contacting front drive halfshaft assembly. | • INSPECT and REPAIR as necessary. |
| | • Wheel bearings, brakes, suspension or steering components. | • INSPECT and REPAIR as necessary. REFER to Section 204-00 [Suspension System - General Information] / 206-00 [Brake System - General Information] / 211-00 [Steering System - General Information]. |
| • Vibration at Highway Speeds | • Out of balance front wheels or tires. | • Balance wheels and tires as necessary. |
| | • Out-of-round tires. | • REPAIR or INSTALL new as necessary. |
| | • Incorrectly seated outer constant velocity (CV) joint in front wheel hub. | • REPAIR or INSTALL new as necessary.<br>REFER to Halfshaft LH - / Halfshaft RH - in this section. |
| • Shudder Vibration During Acceleration. | • Excessively high CV joint operating angles caused by incorrect ride height. | • CHECK the ride height, VERIFY correct spring rate. CHECK items under Halfshaft Joint Pullout. REPAIR or INSTALL new as necessary. |
| | • Excessively worn or damaged inner or outer front drive half-shaft constant velocity (CV) joint. | • INSPECT and INSTALL new as necessary.<br>REFER to Halfshaft LH - / Halfshaft RH - in this section. |

## DIAGNOSIS AND TESTING

| Symptom | Possible Sources | Action |
|---|---|---|
| • Halfshaft Joint Pullout | • Outer front drive halfshaft retainer circlip missing or not correctly seated differential side. | • INSPECT and REPAIR or INSTALL new as necessary.<br>REFER to Halfshaft LH - / Halfshaft RH - in this section. |
| | • Front suspension components worn or damaged. | • CHECK for worn bushings or bent components (front stabilizer bar, front suspension lower arm). REPAIR or INSTALL new as necessary. REFER to Section 204-01 [Front Suspension]. |
| | • Engine/transaxle assembly misalignment. | • CHECK engine mounts for damage or wear. REPAIR or INSTALL new as necessary. |
| | • Frame rail or strut tower out of position or damaged. | • CHECK underbody dimensions. REFER to Section 501-00 [Body System - General Information]. |

## REMOVAL AND INSTALLATION

# Front Halfshaft LH(14 320 0)

### Special Tool(s)

| | |
|---|---|
| 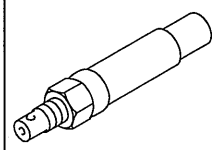 14041 | Installer, Halfshaft 204-161 (14-041) |
| 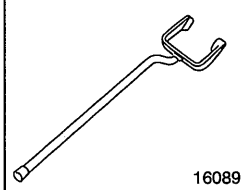 16089 | Remover, Halfshaft 308-256 (16-089) |

### General Equipment

| |
|---|
| Four leg puller |
| Tire Lever |

| Materials | |
|---|---|
| **Name** | **Specification** |
| Manual transmission fluid | WSD-M2C200-C |

## Removal

▲ **WARNING:Refer to the Material Safety Data Sheets for the Automatic Transmission Fluid E-AW. Failure to follow this instruction may result in personal injury. Certain Transmission and Power Steering fluids supplied to Ford contain additives which may cause skin irritation or other skin reactions after contact.**

**For additional information, refer to: Health and Safety Precautions (100-00 General Information, Description and Operation). See - Transmission Fluids.**

All vehicles

1. **Loosen the strut and spring assembly top mount retaining nuts by three turns.**

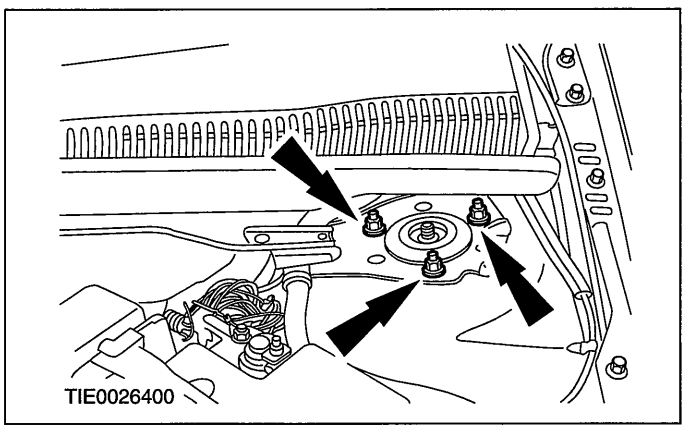


2. ⚠**CAUTION:Use a socket to loosen the wheel hub retaining nut to prevent damage.**

   **Remove the wheel hub retaining nut.**

   - Discard the wheel hub retaining nut.

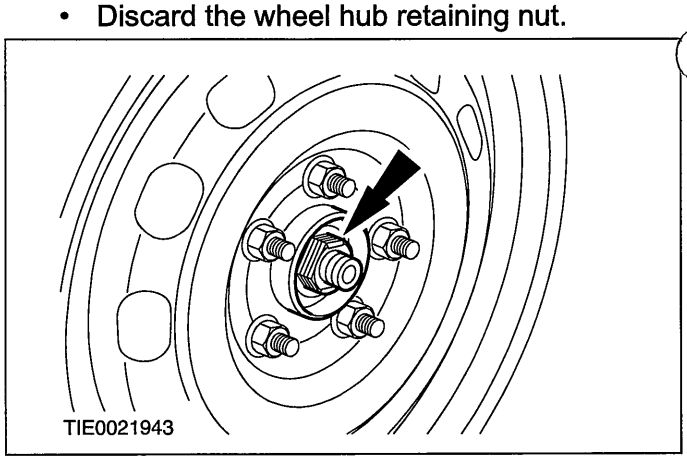


3. **Remove the wheel and tire.**

   **For additional information, refer to: Wheel and Tire (204-04 Wheels and Tires, Removal and Installation).**

4. ⚠**CAUTION:Protect the ball joint seal using a soft cloth to prevent damage.**

   **Detach the lower arm ball joint from the wheel knuckle.**

## REMOVAL AND INSTALLATION

- Remove the heat shield.

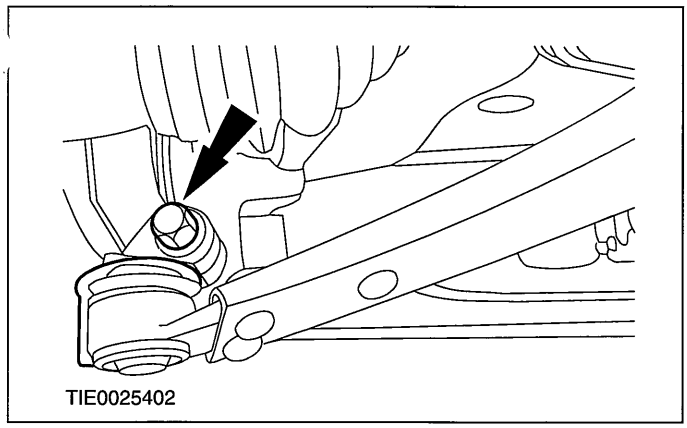
TIE0025402

5. ⚠**CAUTION:Support the halfshaft. The inner joint must not be bent more than 18 degrees. The outer joint must not be bent more than 45 degrees.**

**Using a suitable four leg puller, detach the halfshaft from the wheel hub.**

- Secure the halfshaft to one side.

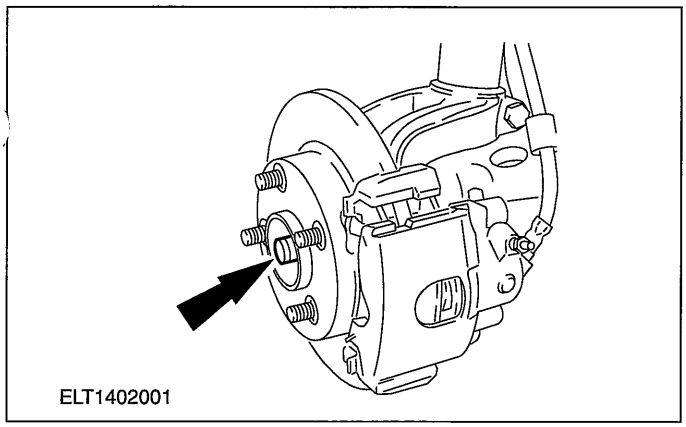
ELT1402001

Vehicles with automatic transaxle

6. **CAUTIONS:**

⚠**Support the halfshaft. The inner joint must not be bent more than 18 degrees. The outer joint must not be bent more than 45 degrees.**

⚠**Do not damage the halfshaft oil seal.**

**NOTE:**Plug the transaxle to prevent oil loss or dirt ingress.

For additional information, refer to: Health and Safety Precautions (100-00 General Information, Description and Operation).
See - Transmission Fluids.

**Using a suitable tire lever, remove the halfshaft.**

- Discard the snap ring.
- Allow the oil to drain into a suitable container.

For additional information, refer to: Health and Safety Precautions (100-00 General Information, Description and Operation).
See - Transmission Fluids.

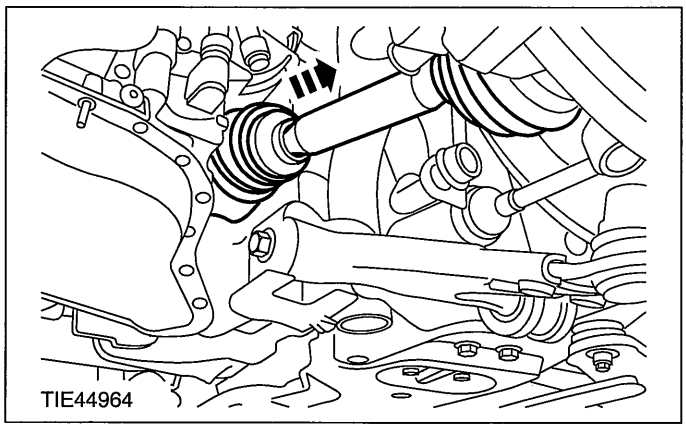
TIE44964

Vehicles with manual transaxle

7. **CAUTIONS:**

⚠**Support the halfshaft. The inner joint must not be bent more than 18 degrees. The outer joint must not be bent more than 45 degrees.**

⚠**Do not damage the halfshaft oil seal.**

**NOTE:**Plug the transaxle to prevent oil loss or dirt ingress.

**Using the special tool, remove the halfshaft.**

- Discard the snap ring.
- Allow the oil to drain into a suitable container.

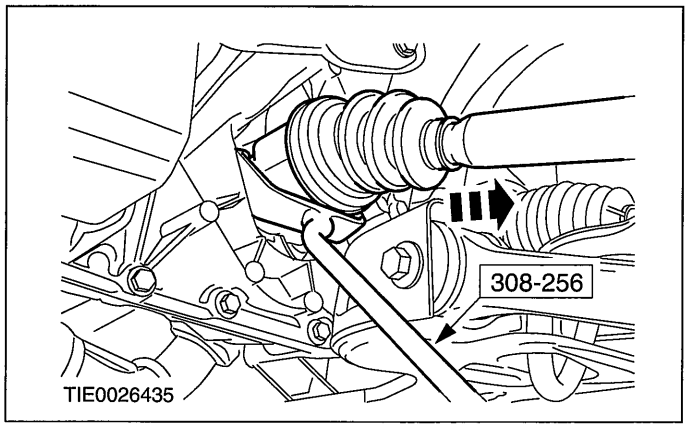

TIE0026435

## Installation

All vehicles

1. **CAUTIONS:**

## REMOVAL AND INSTALLATION

**⚠Support the halfshaft. The inner joint must not be bent more than 18 degrees. The outer joint must not be bent more than 45 degrees.**

**⚠Do not damage the halfshaft oil seal.**

**⚠Make sure the snap ring is correctly seated.**

**NOTE:**Install a new snap ring.

**Attach the left hand halfshaft to the transaxle.**

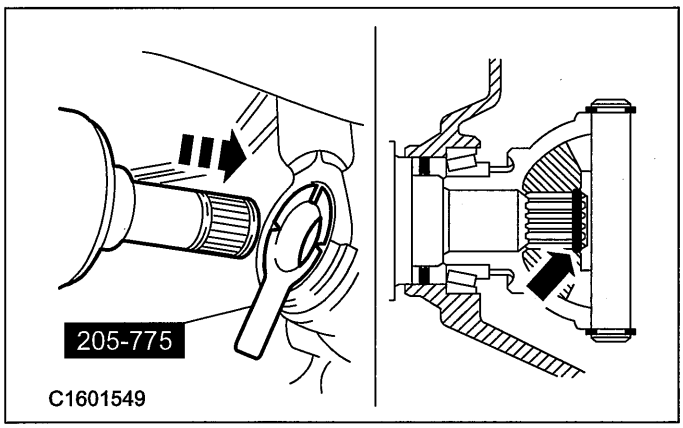


2. **⚠CAUTION:Make sure the halfshaft is completely installed into the wheel hub.**

**Using the special tool, install the halfshaft.**

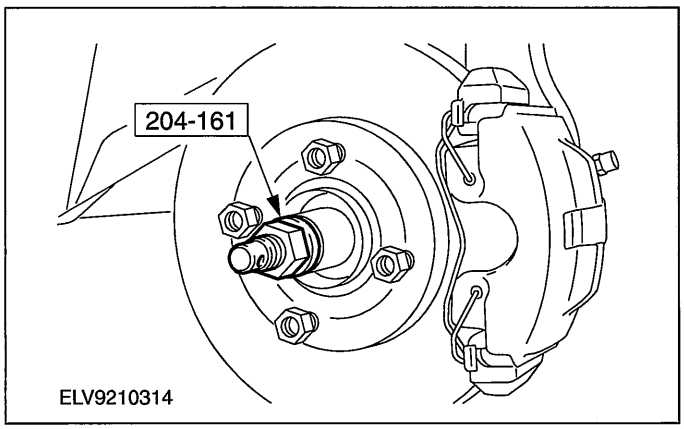


3. **NOTE:Install a new wheel hub retaining nut.**

**NOTE:**Do not fully tighten the wheel hub retaining nut at this stage.

**Install the wheel hub retaining nut.**

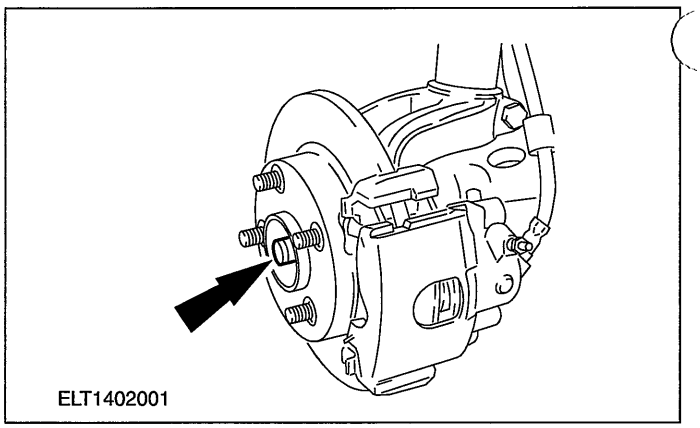


4. **⚠CAUTION:Make sure that the heat shield is installed to prevent damage to the ball joint.**

**Install the heat shield.**

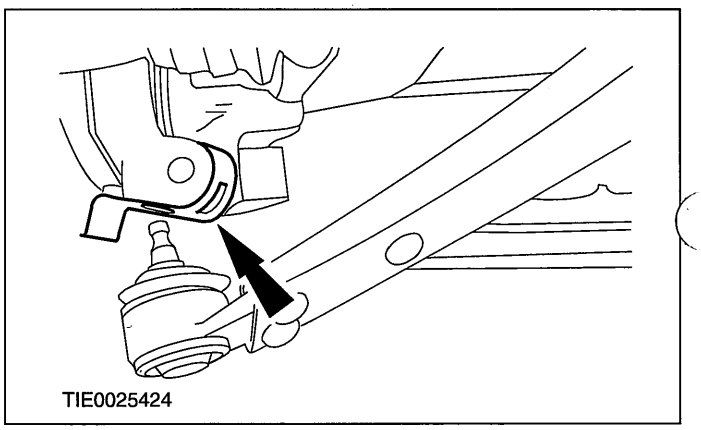


5. **⚠CAUTION:The lower arm pinch bolt must be installed from the rear of the wheel knuckle.**

**Attach the lower arm ball joint to the wheel knuckle.**

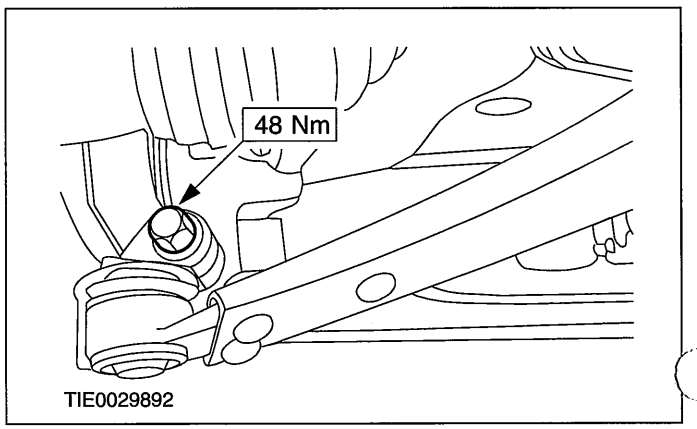

## REMOVAL AND INSTALLATION

6. **Install the wheel and tire.**

   **For additional information, refer to: Wheel and Tire (204-04 Wheels and Tires, Removal and Installation).**

7. **⚠CAUTION:Use a socket to tighten the wheel hub retaining nut to prevent damage.**

   **Tighten the wheel hub retaining nut.**

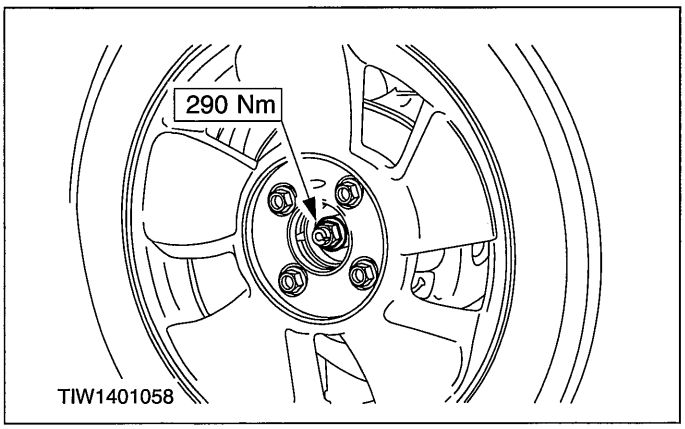


8. **Tighten the strut and spring assembly top mount retaining nuts.**

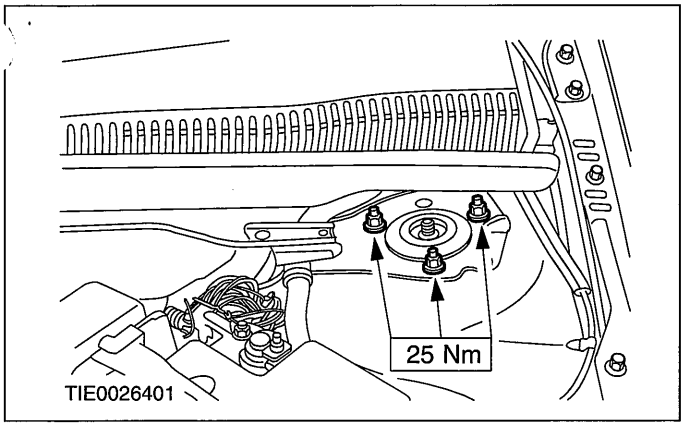


Vehicles with manual transaxle

9. **With the vehicle on a level surface, fill the transaxle with transmission fluid until the oil level is just below the bottom of the filler hole.**

Vehicles with automatic transaxle

10. **Check the transmission fluid level and top up with clean automatic transmission oil.**

    **For additional information, refer to: Transmission Fluid Drain and Refill (307-01 Automatic Transmission/Transaxle - Vehicles With: 4-Speed Automatic Transmission (AW81-40), General Procedures).**

## REMOVAL AND INSTALLATION

# Front Halfshaft RH(14 321 0)

### Special Tool(s)

| | |
|---|---|
| 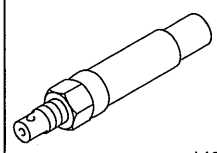 14041 | Installer, Halfshaft 204-161 (14-041) |

### General Equipment

| |
|---|
| Four leg puller |

## Removal

1. **Loosen the strut and spring assembly top mount retaining nuts by three turns.**

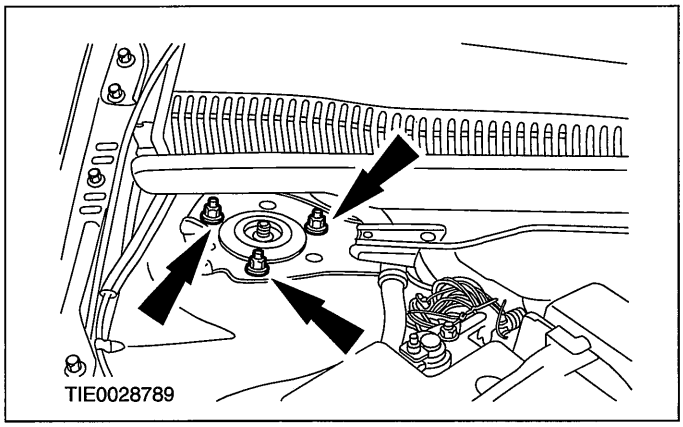
TIE0028789

2. **⚠CAUTION:Use a socket to loosen the wheel hub retaining nut to prevent damage.**

   **Remove the wheel hub retaining nut.**

   - Discard the wheel hub retaining nut.

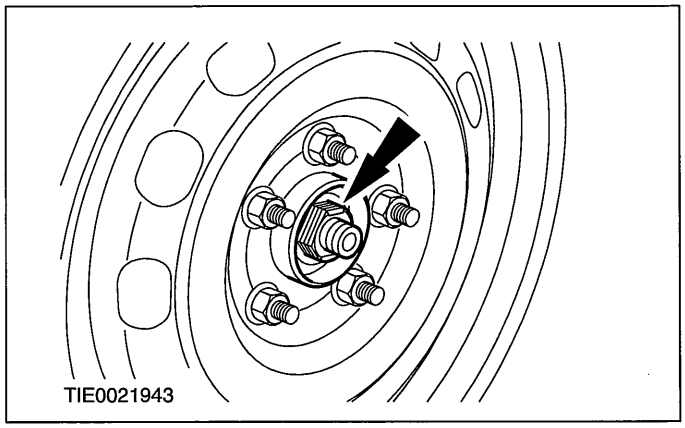
TIE0021943

3. **Remove the wheel and tire.**

   **For additional information, refer to: Wheel and Tire (204-04 Wheels and Tires, Removal and Installation).**

4. **⚠CAUTION:Protect the ball joint seal using a soft cloth to prevent damage.**

   **Detach the lower arm ball joint from the wheel knuckle.**

   - Remove the heat shield.

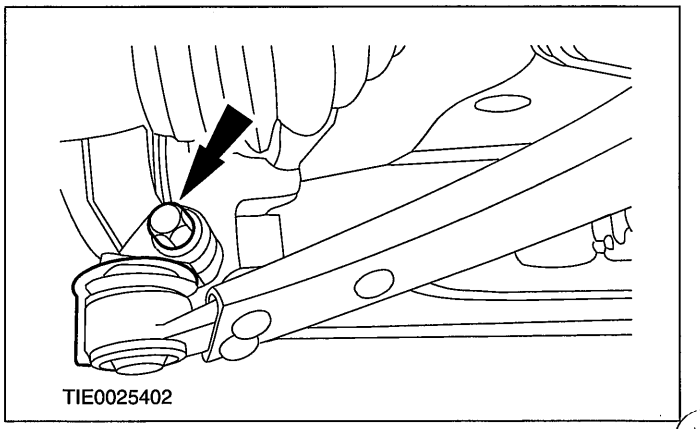
TIE0025402

5. **⚠CAUTION:Support the halfshaft. The inner joint must not be bent more than 18 degrees. The outer joint must not be bent more than 45 degrees.**

   **Using a suitable four leg puller, detach the halfshaft from the wheel hub.**

   - Secure the halfshaft to one side.

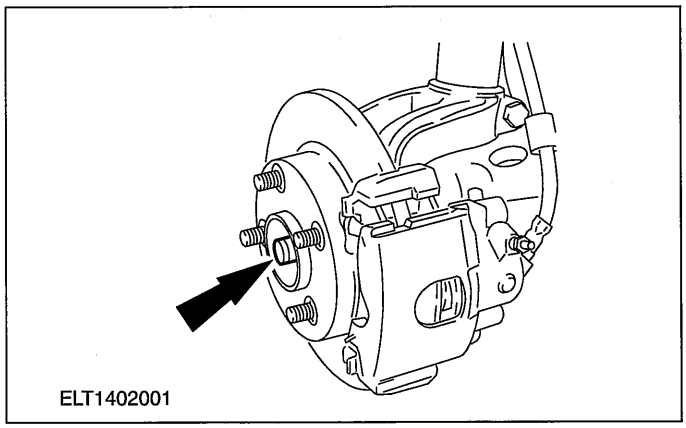
ELT1402001

6. **⚠CAUTION:Support the halfshaft. The inner joint must not be bent more than 18 degrees. The outer joint must not be bent more than 45 degrees.**

## REMOVAL AND INSTALLATION

**NOTE:**Do not damage the inner constant velocity (CV) joint boot.

**NOTE:**Discard the grease.

**Remove the halfshaft.**

- Remove and discard the constant velocity (CV) joint boot clamp.

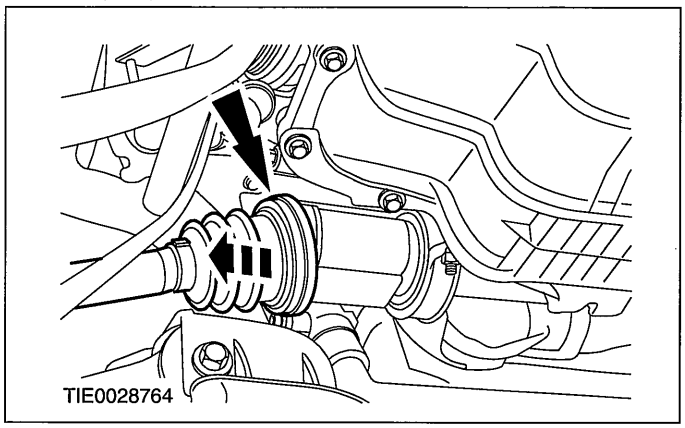


### Installation

1. **⚠CAUTION:The total amount of grease must not exceed 100 grams.**

   **Apply grease to the intermediate shaft.**

2. **⚠CAUTION:Support the halfshaft. The inner joint must not be bent more than 18 degrees. The outer joint must not be bent more than 45 degrees.**

   **Attach the halfshaft to the intermediate shaft.**

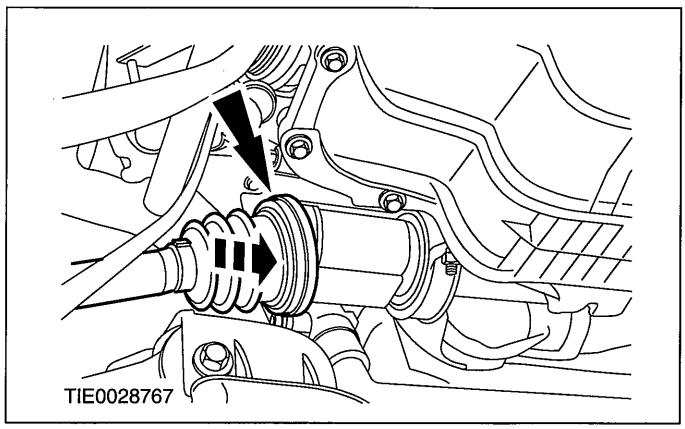


3. **NOTE:Do not damage the inner constant velocity (CV) joint boot.**

**NOTE:**Make sure that the intermediate shaft mating surface for the joint boot is clean.

**Install the inner constant velocity (CV) joint boot (halfshaft shown removed for clarity).**

1. Slide a small screwdriver under the boot seat to allow the air to escape.
2. Insert the constant velocity (CV) joint in as far as it will go, then pull it back approximately 20 mm.

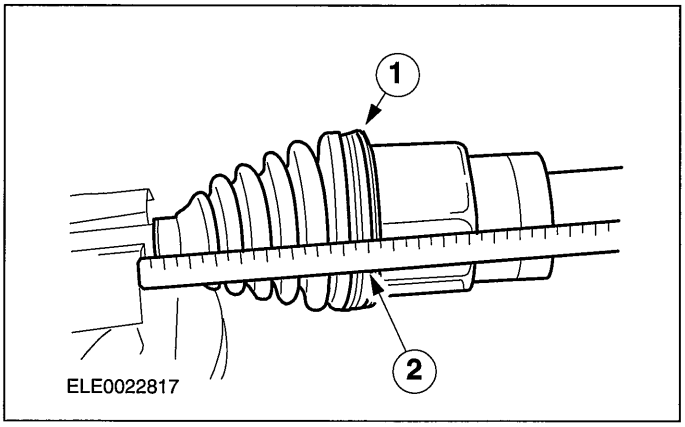


4. **NOTE:Install a new CV joint boot clamp.**

   **Using a suitable grip wrench, install the inner CV joint boot clamp.**

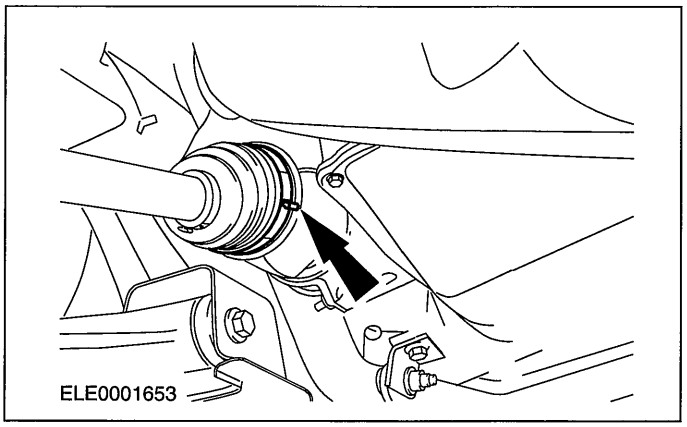


5. **⚠CAUTION:Make sure the halfshaft is completely installed into the wheel hub.**

   **Using the special tool, install the halfshaft.**

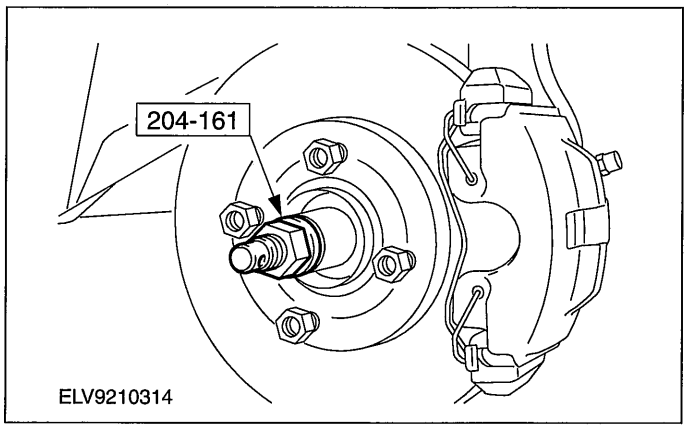


6. **NOTE:Install a new wheel hub retaining nut.**

## REMOVAL AND INSTALLATION

**NOTE:** Do not fully tighten the wheel hub retaining nut at this stage.

**Install the wheel hub retaining nut.**

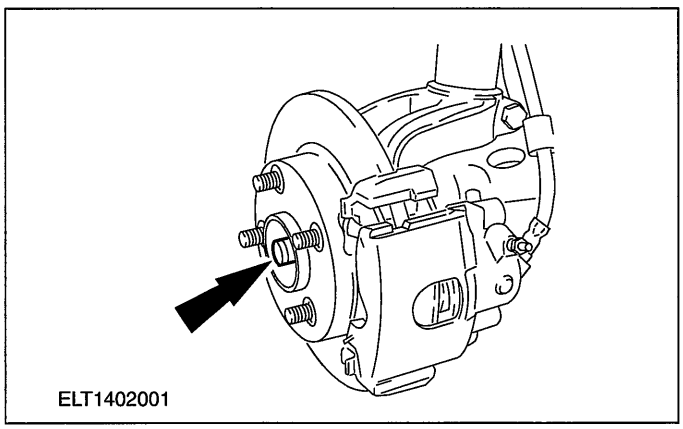
ELT1402001

7. **⚠CAUTION: Make sure that the heat shield is installed to prevent damage to the ball joint.**

   **Install the heat shield.**

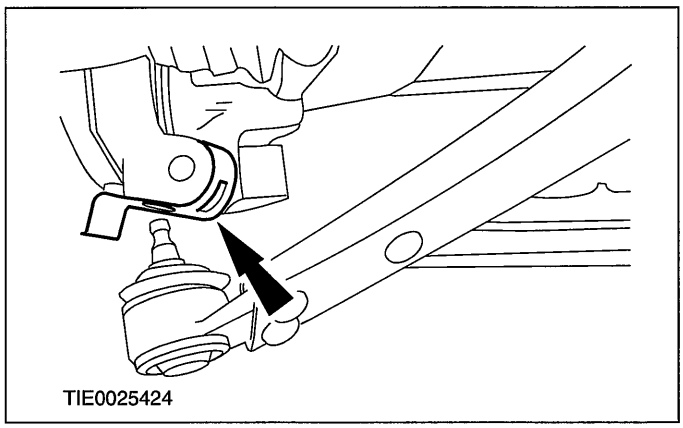
TIE0025424

8. **⚠CAUTION: The lower arm pinch bolt must be installed from the rear of the wheel knuckle.**

   **Attach the lower arm ball joint to the wheel knuckle.**

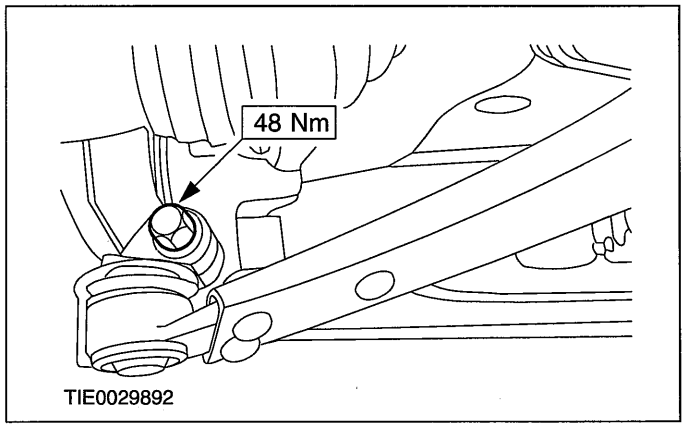

TIE0029892

9. **Install the wheel and tire.**

   **For additional information, refer to: Wheel and Tire (204-04 Wheels and Tires, Removal and Installation).**

10. **⚠CAUTION: Use a socket to tighten the wheel hub retaining nut to prevent damage.**

    **Tighten the wheel hub retaining nut.**

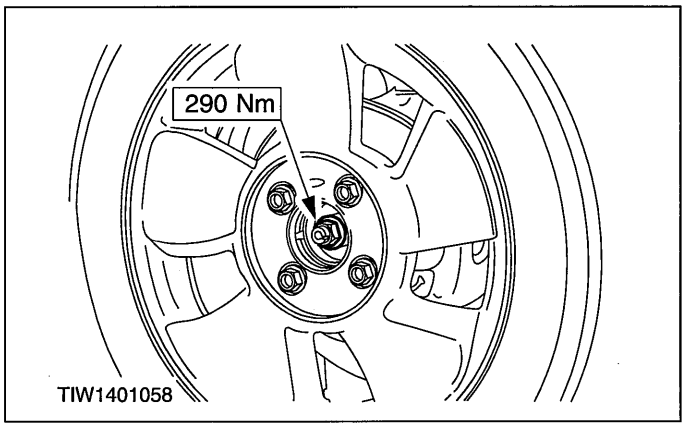

TIW1401058

11. **Tighten the strut and spring assembly top mount retaining nuts.**

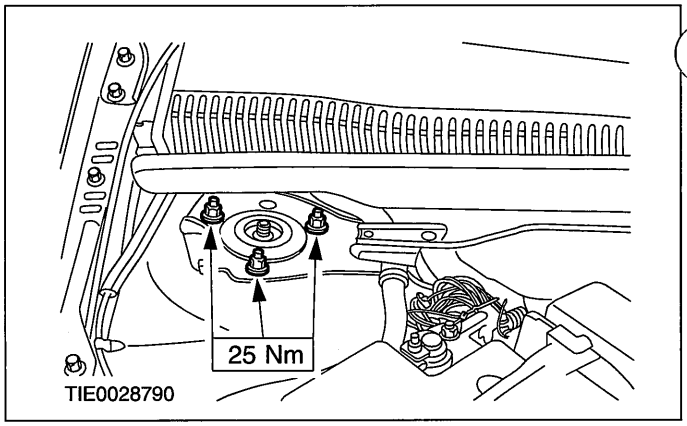

TIE0028790

## REMOVAL AND INSTALLATION

# Intermediate Shaft

| Materials | |
|---|---|
| **Name** | **Specification** |
| Manual transmission fluid | WSD-M2C200-C |

## Removal

**WARNING:Refer to the Material Safety Data Sheets for the Automatic Transmission Fluid E-AW. Failure to follow this instruction may result in personal injury. Certain Transmission and Power Steering fluids supplied to Ford contain additives which may cause skin irritation or other skin reactions after contact.**

**For additional information, refer to: Health and Safety Precautions (100-00 General Information, Description and Operation). See - Transmission Fluids.**

1. **Remove the right-hand halfshaft.**

   **For additional information, refer to: Front Halfshaft RH (205-04 Front Drive Halfshafts, Removal and Installation).**

2. **Remove the intermediate shaft center bearing cap.**
   1. Remove and discard the locknuts.
   2. Detach the heatshield from the bearing cap.
   3. Remove and discard the center bearing cap.

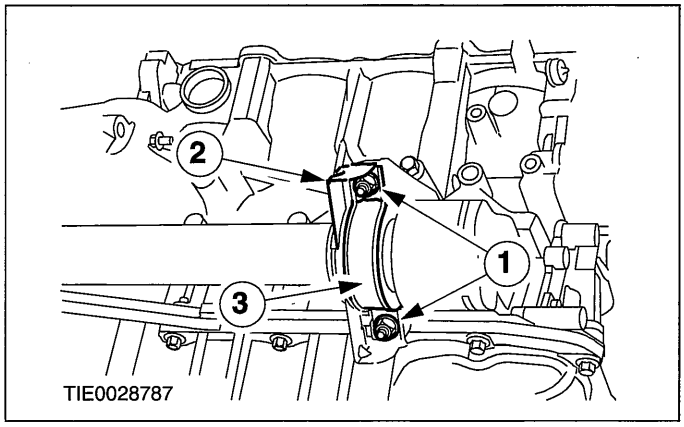


3. **CAUTION:Do not damage the halfshaft oil seal.**

**NOTE:**Plug the transaxle to prevent oil loss or dirt ingress.

For additional information, refer to: Health and Safety Precautions (100-00 General Information, Description and Operation).
See - Transmission Fluids.

**Remove the intermediate shaft.**

- Allow the oil to drain into a suitable container.

  For additional information, refer to: Health and Safety Precautions (100-00 General Information, Description and Operation).
  See - Transmission Fluids.
- Slide the heatshield off the intermediate shaft.

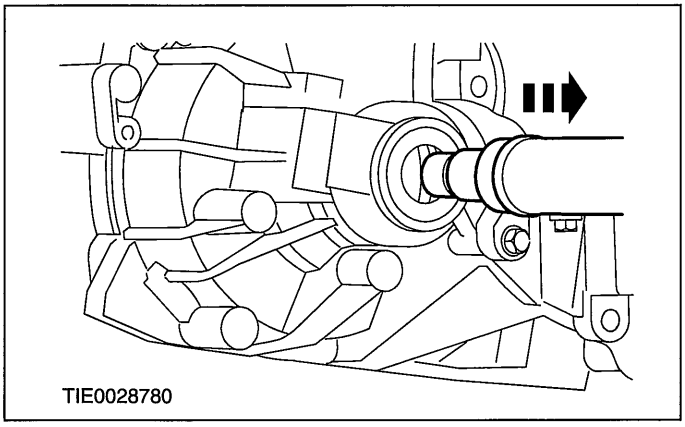


## Installation

### All vehicles

1. **CAUTION:Do not damage the halfshaft oil seal.**

   **Install the intermediate shaft.**

   - Slide the heatshield onto the intermediate shaft.

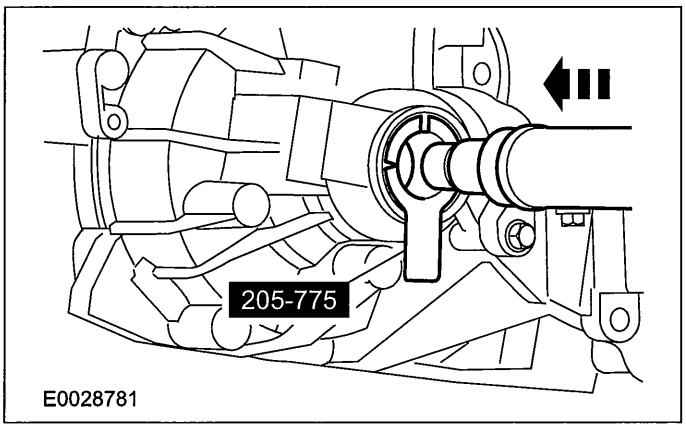

## REMOVAL AND INSTALLATION

2. **NOTE:Install a new intermediate shaft center bearing cap and locknuts.**

   **Install the intermediate shaft center bearing cap.**

   1. Install the center bearing cap.
   2. Attach the heatshield to the bearing cap.
   3. Install the locknuts.

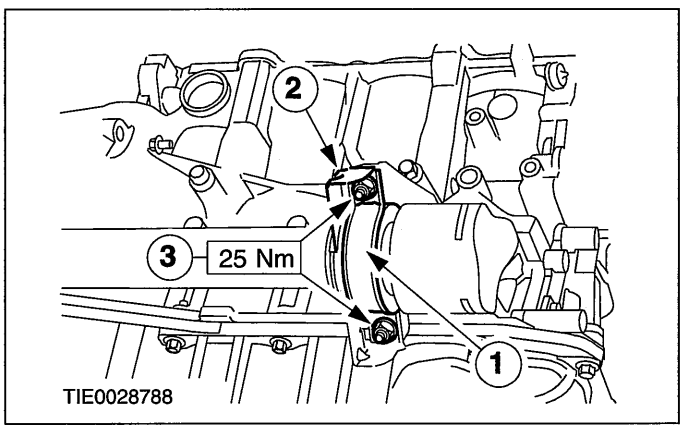


3. **Install the right-hand halfshaft.**

   **For additional information, refer to: Front Halfshaft RH (205-04 Front Drive Halfshafts, Removal and Installation).**

Vehicles with manual transaxle

4. **With the vehicle on the level surface, fill the transaxle with transmission fluid until the oil level is just below the bottom of the filler hole.**

Vehicles with automatic transaxle

5. **Check the transmission fluid level and top up with clean automatic transmission oil.**

   **For additional information, refer to: Transmission Fluid Drain and Refill (307-01 Automatic Transmission/Transaxle - Vehicles With: 4-Speed Automatic Transmission (AW81-40), General Procedures).**

## REMOVAL AND INSTALLATION

# Inner Constant Velocity (CV) Joint Boot(14 336 0)

### Special Tool(s)

| | |
|---|---|
| 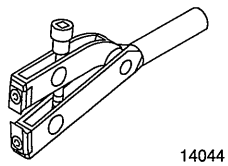 14044 | Clamping Tool, Boot Retaining Clamp 204-169 (14-044) |
| 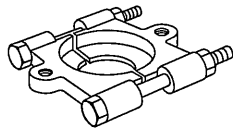 TI15091 | Remover, Bearing/Gear 205-310 (15-091 |
| 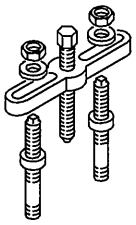 15092 | Remover, Bearing/Gear 205-311 (15-092) |
| 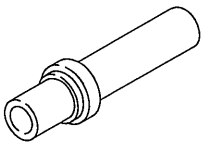 16016 | Installer, Extension Housing Bushing/Oil Seal 308-046 (16-016) |

| Materials | |
|---|---|
| **Name** | **Specification** |
| Grease | WSS-M1C259-A1 |

## Removal

1. **Remove the right-hand halfshaft.**

   **For additional information, refer to Halfshaft RH in this section.**

2. **Remove the left-hand halfshaft.**

   **For additional information, refer to Halfshaft LH in this section.**

3. **CAUTIONS:**

   **⚠Do not bent the inner constant velocity (CV) joint more than 18 degrees and the outer CV joint more than 45 degrees.**

   **⚠Use vise jaw protectors for all operations in a vise.**

**NOTE:** Secure the halfshaft in a vise.

**Detach the inner CV joint housing from the halfshaft.**

1. Remove and discard the CV joint boot retaining clamps.
2. Remove the CV joint housing and discard the grease.

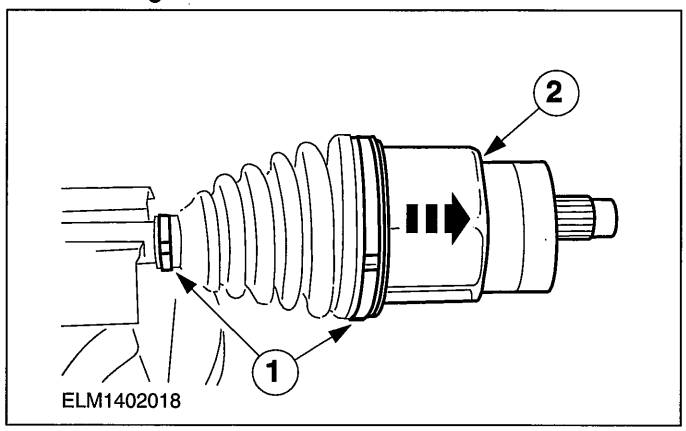


4. **Remove and discard the spider circlip.**

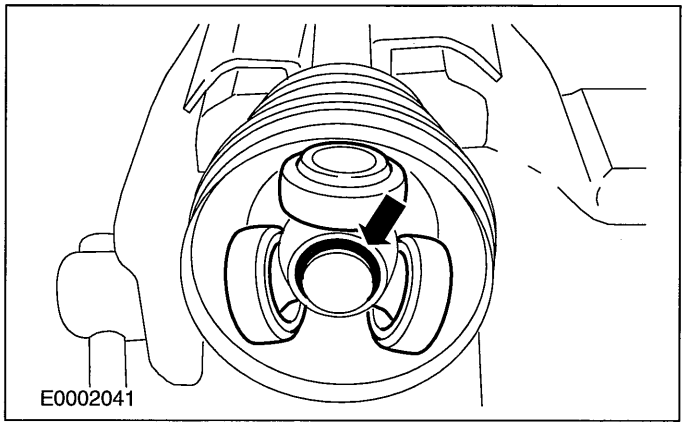


5. **Using the special tool, remove the spider.**

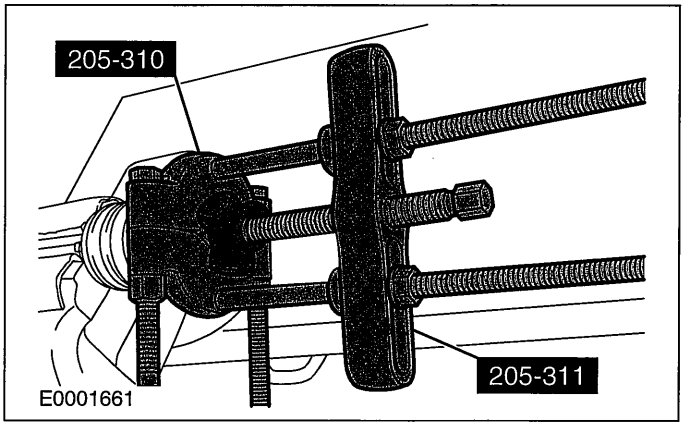

## REMOVAL AND INSTALLATION

6. **Remove the inner CV joint boot.**
   - Mark the halfshaft were the CV joint boot is located.

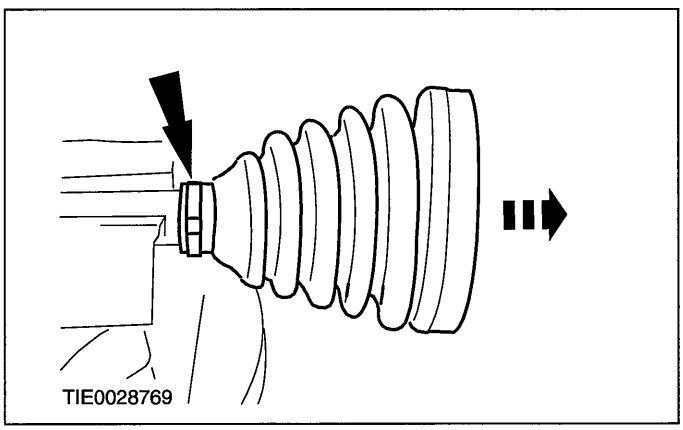


### Installation

1. **NOTE:Make sure that the inner constant velocity (CV) joint boot is installed to the marks on the halfshaft.**

   **Install the inner CV joint boot.**

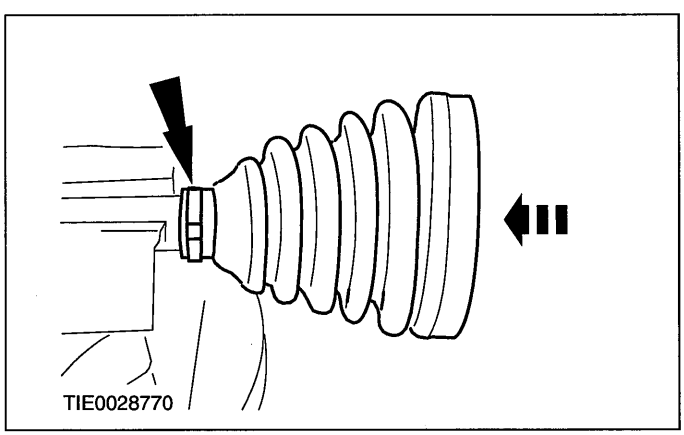


2. **NOTE:Install a new CV joint boot retaining clamp.**

   **Using the special tool, install the CV joint boot retaining clamp.**

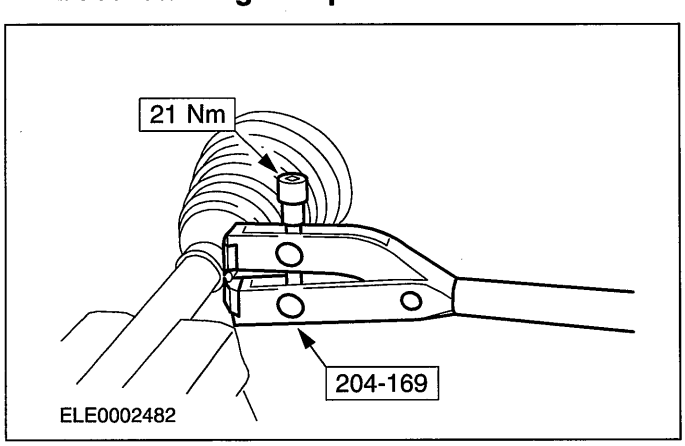


3. **NOTE:Install the spider with the chamfer facing towards the halfshaft.**

   **Using the special tool, install the spider.**

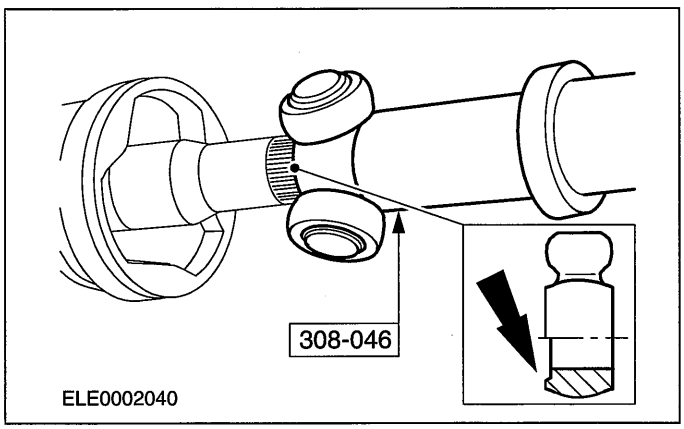


4. **NOTE:Install a new spider circlip.**

   **Install the spider circlip.**

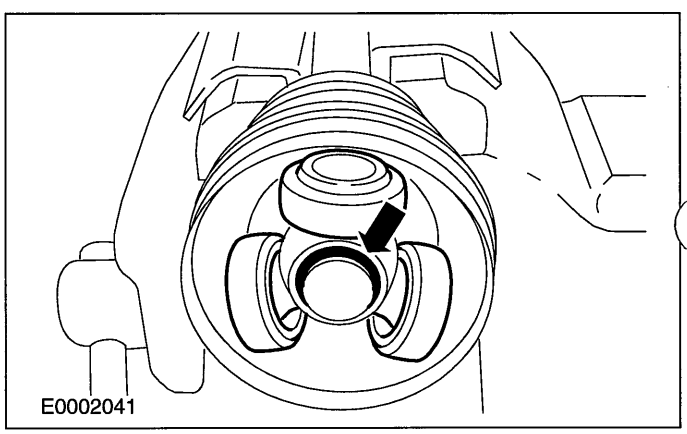


5. **⚠CAUTION:The total amount of grease in the inner CV joint must not exceed 85 grams.**

   **Apply grease to the inner CV joint boot.**

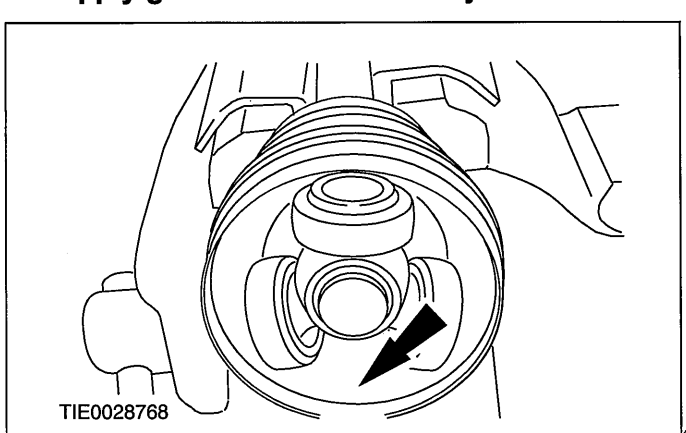


6. **Attach the inner CV joint housing to the halfshaft (left hand side shown for clarity).**

## REMOVAL AND INSTALLATION

1. Use a suitable screwdriver under the CV joint boot to allow air to escape.
2. Install the CV joint boot housing and pull it backwards 20 mm.

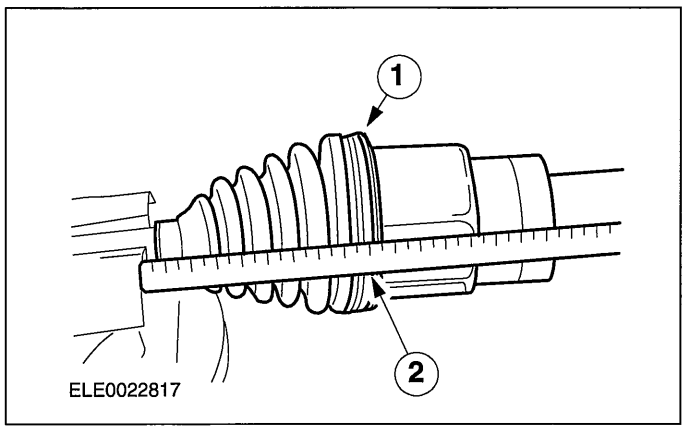


7. **NOTE:Install a new CV joint boot retaining clamp.**

**NOTE:**Make sure that the CV joint boot is clamped at the measured postion.

**Using a special tool, install the CV joint boot retaining clamp.**

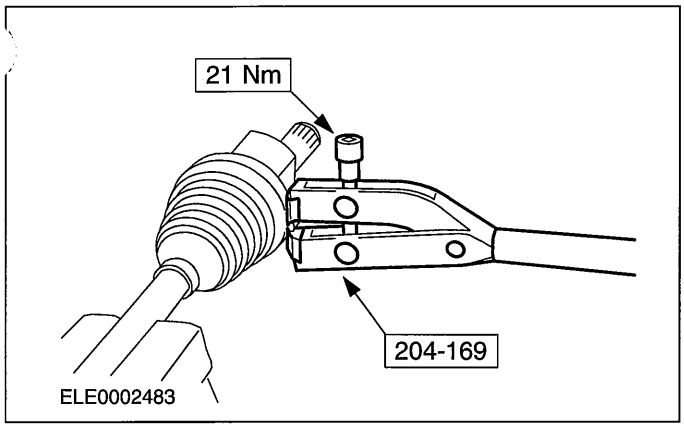


8. **Install the right-hand halfshaft.**

   **For additional information, refer to Halfshaft RH in this section.**

9. **Install the left-hand halfshaft.**

   **For additional information, refer to Halfshaft LH in this section.**

## REMOVAL AND INSTALLATION

# Outer Constant Velocity (CV) Joint Boot(14 338 0)

**Special Tool(s)**

| | |
|---|---|
| 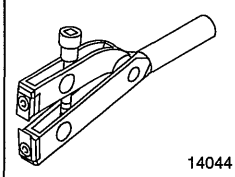 14044 | Clamping Tool, Boot Retaining Clamp 204-169 (14-044) |

| Materials | |
|---|---|
| **Name** | **Specification** |
| Grease | WSS-M1C259-A1 |

## Removal

1. **⚠CAUTION:The outer constant velocity (CV) joint is a press fit. Do not disassemble. Failure to follow this instruction may result in damage to the outer CV joint.**

   **Remove the inner CV joint boot.**

   **For additional information, refer to Inner Constant Velocity (CV) Joint Boot in this section.**

2. **CAUTIONS:**

   **⚠Do not bent the inner CV joint more than 18 degrees and the outer CV joint more than 45 degrees.**

   **⚠Use vise jaw protectors for all operations in a vise.**

**NOTE:**Secure the halfshaft in a vise.

**NOTE:**Mark the halfshaft were the CV joint boot is located.

**Remove the outer CV joint boot.**

- Remove and discard the CV joint boot retaining clamps.
- Remove and discard the grease.

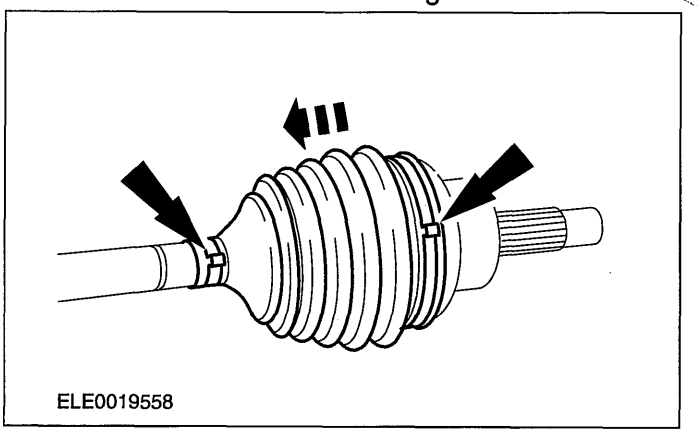


## Installation

1. **⚠CAUTION:The total amount of grease in the inner constant velocity (CV) joint must not exceed 85 grams.**

   **Apply grease to the outer CV joint boot.**

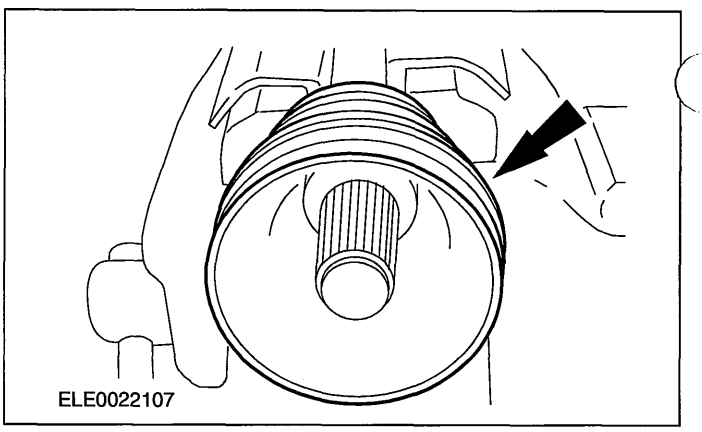


2. **Install the outer CV joint boot.**
   - Use a suitable screwdriver under the boot to allow air to escape.

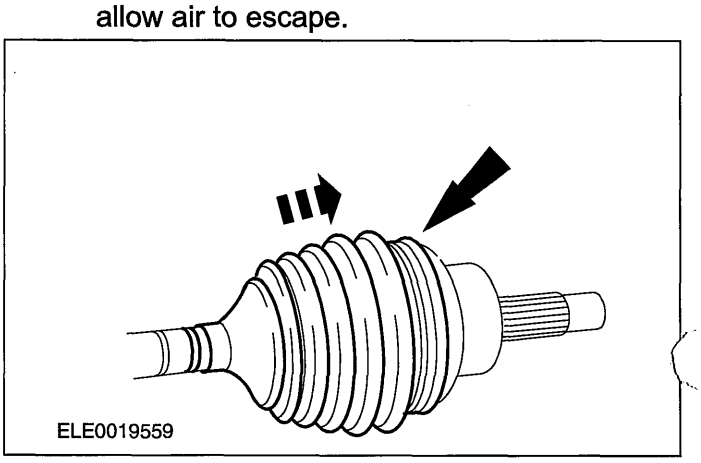

## REMOVAL AND INSTALLATION

3. **NOTE:Make sure that the outer CV joint boot is installed to the marks on the halfshaft.**

**NOTE:**Install a new inner CV joint boot retaining clamp.

**Using the special tool, install the inner CV joint boot retaining clamp.**

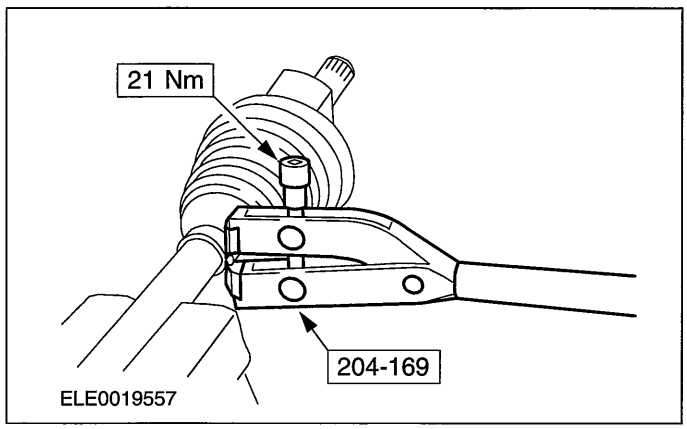


4. **NOTE:Install a new outer CV joint boot retaining clamp.**

**Using the special tool, install the outer CV joint boot retaining clamp.**

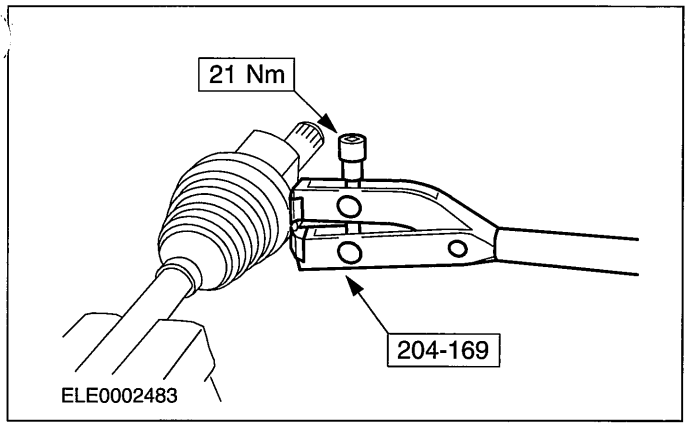


5. **Install the inner CV joint boot.**

**For additional information, refer to Inner Constant Velocity (CV) Joint Boot in this section.**

# SECTION 206-00 Brake System - General Information

## VEHICLE APPLICATION:2006.0 Fiesta

CONTENTS PAGE

### DESCRIPTION AND OPERATION

Brake System ..... 206-00-2
Overview ..... 206-00-2

### DIAGNOSIS AND TESTING

Brake System ..... 206-00-3
Inspection and Verification ..... 206-00-3
Road Test ..... 206-00-3
Pinpoint Tests ..... 206-00-10
Component Tests ..... 206-00-28
Brake System Check ..... 206-00-29
Brake Booster Functional Test ..... 206-00-29

### GENERAL PROCEDURES

Brake System Bleeding ..... (12 141 0) 206-00-32
Brake System Pressure Bleeding ..... (12 141 0) 206-00-33

## DESCRIPTION AND OPERATION

# Brake System

### Overview

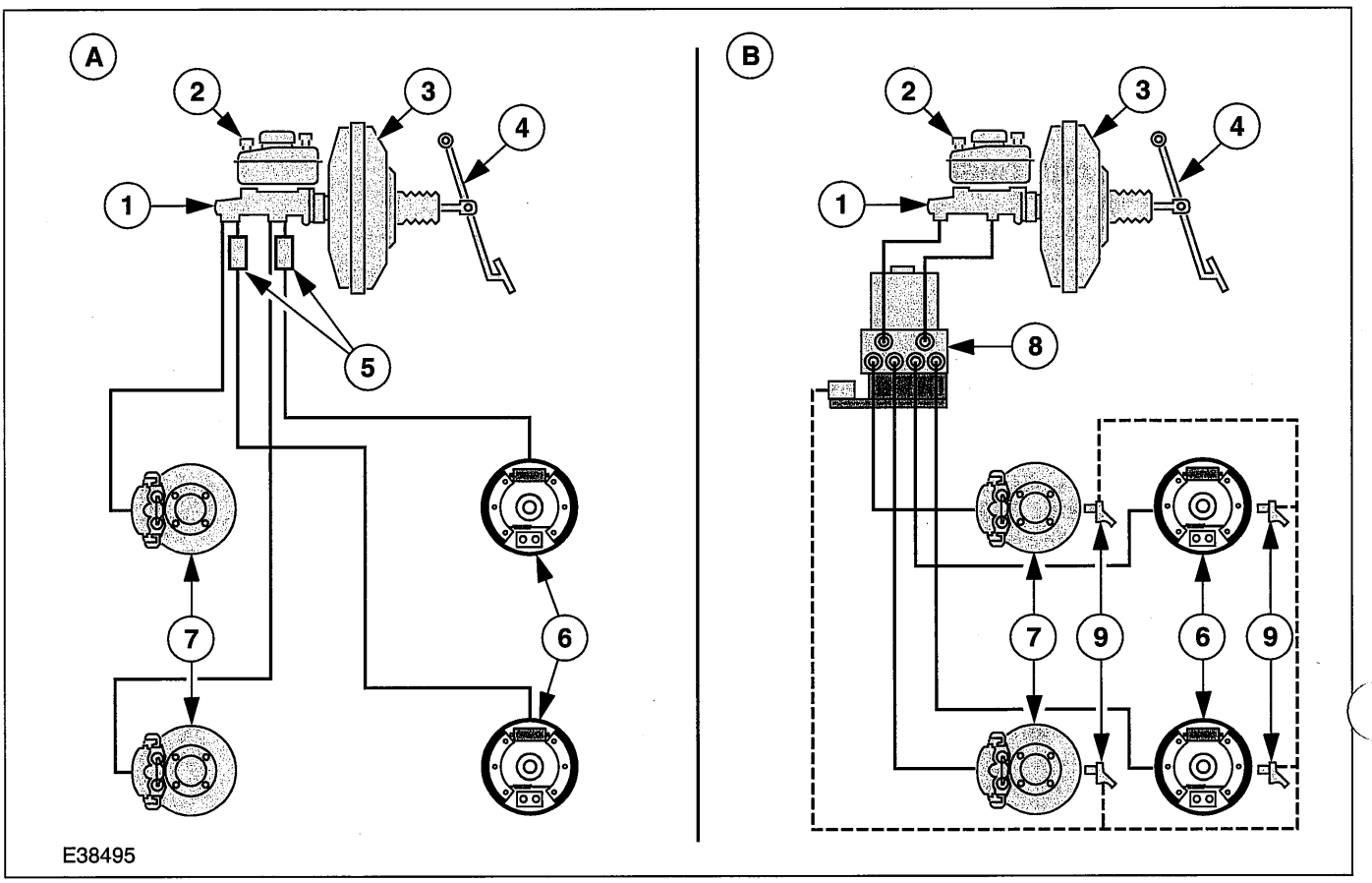


| Item | Description |
|---|---|
| A | Brake system without Anti-lock Brake System (ABS) |
| B | Brake system with ABS |
| 1 | Brake master cylinder |
| 2 | Reservoir |
| 3 | Brake servo |
| 4 | Brake pedal |
| 5 | Brake pressure reduction valve |
| 6 | Rear drum brake |
| 7 | Front disk brake |
| 8 | ABS hydraulic unit with integrated control unit |
| 9 | Wheel speed sensors |

Vehicles without ABS are equipped with brake pressure reduction valves for the rear wheel brakes. They are located in the corresponding brake circuits at the brake master cylinder.

Vehicles with ABS do not need brake pressure reduction valves because they are equipped with electronic brake distribution (EBD).

The handbrake is cable operated on the rear brakes.

On vehicles with a petrol engine the necessary vacuum for the brake booster is generated by the intake manifold.

On vehicles with a diesel engine, a vacuum pump driven by the engine provides the necessary vacuum for the brake booster.

## DIAGNOSIS AND TESTING

# Brake System

The brakes system operates by transferring effort applied to the brake pedal by the driver to the brakes at each wheel.

The braking effort is distributed to each wheel, using a hydraulic system. The system is assisted using a vacuum brake booster that reduces pedal effort and increases hydraulic pressure.

The parking brake operates on the rear wheels and is applied using a hand operated control.

## Inspection and Verification

**NOTE:**Before carrying out any diagnosis, make sure that the brake system warning indicator is functional.

1. Verify the customer concern.
2. Visually inspect for obvious signs of mechanical damage.

**Visual Inspection Chart**

| Mechanical |
|---|
| – Tire pressure<br>– Wheels and tires<br>– Fluid leak from brake line(s) |

3. If an obvious cause for an observed or reported concern is found, correct the case (if possible) before proceeding to the next step.
4. If the cause if not visually evident, verify the symptom and refer to the Symptom Chart.

## Road Test

Perform a road test to compare actual vehicle braking performance with the performance standards expected by the driver. The ability of the test driver to make valid comparisons and detect performance deficiencies will depend on experience.

The driver should have a thorough knowledge of the brake system operation and accepted general performance guidelines to make good comparisons and detect performance concerns.

An experienced technician will always establish a route that will be used for all brake diagnosis road tests. The road selected will be reasonably smooth and level. Gravel or bumpy roads are not suitable because the surface does not allow the tires to grip the road equally. Crowned roads should be avoided because of the large amount of weight shifted to the low set of wheels on this type of road. Once the route is established and consistently used, the road surface variable can be eliminated from the test results.

Before a road test, get a complete description of the customer concerns or suspected condition. From the description, the technician will be able to match possible causes with symptoms. Certain components will be identified as possible sources while others will be eliminated by the evidence. More importantly, the customer description can reveal unsafe conditions which should be checked or corrected before a road test. The description will also help form the basic approach to the road test by narrowing the concern to specific components, vehicle speed or conditions.

Begin the road test with a general brake performance check. Using the description of the concern, test the brakes at different vehicle speeds using both light and heavy pedal pressure. Determine if the concern is in the front or rear braking system. First use the foot brake and then the parking brake. If the condition (i.e. pull, vibration, pulsation) occurs only on operation of the parking brake, the concern is in the rear brake system. If the condition occurs when the foot brake is depressed, the concern is in the front brake system.

Avoid locking the brakes and sliding the tires. This condition will not indicate brake efficiency. A heavily braked but turning wheel will stop the vehicle in a shorter distance than locked wheels.

If the concern becomes evident during this check, make sure it fits the description given before the road test. If the concern is not evident, attempt to duplicate the condition using the information from the description.

If a concern exists, use the Brake System Symptom Chart in order to isolate it to a specific sub-system and condition description. From this description, a list of possible sources can be used to further narrow the cause to a specific component or condition.

## DIAGNOSIS AND TESTING

**Symptom Chart**

| Symptom | Possible Sources | Action |
|---|---|---|
| • Brakes pull or drift | • Worn or damaged brake shoes or brake pads and linings. | • INSTALL new brake shoes or brake pads. REFER to:<br>Brake Shoes (206-02 Drum Brake, Removal and Installation),<br>Brake Pads (206-03 Front Disc Brake, Removal and Installation),<br>Brake Pads (206-04 Rear Disc Brake, Removal and Installation). |
| | • Abnormal wear or distortion of brake discs. | • INSTALL a new brake discs.<br>REFER to: Brake Disc (206-04 Rear Disc Brake, Removal and Installation). |
| | • Incorrect rear brake adjustment. | • PERFORM a parking brake cable adjustment. REFER to: (206-05 Parking Brake and Actuation)<br>Parking Brake Cable Adjustment - Vehicles With: Rear Drum Brakes (General Procedures),<br>Parking Brake Cable Adjustment - Vehicles With: Rear Disc Brakes (General Procedures). |
| | • Incorrect wheel alignment adjustment. | • PERFORM a wheel alignment adjustment.<br>REFER to: Front Toe Adjustment (204-00 Suspension System - General Information, General Procedures). |
| | • Incorrect wheel bearing preload adjustment. | • ADJUST or INSTALL a new wheel bearing. REFER to:<br>Front Wheel Bearing (204-01 Front Suspension, Removal and Installation),<br>Rear Wheel Bearing (204-02 Rear Suspension, Removal and Installation). |
| | • Unequal air pressure in the tires. | • INFLATE the tires to the correct pressure. |

## DIAGNOSIS AND TESTING

| Symptom | Possible Sources | Action |
|---|---|---|
| | • Grease or fluid on the brake shoes or brake pads; glazed linings. | • INSTALL new brake shoes or brake pads. REFER to:<br>Brake Shoes (206-02 Drum Brake, Removal and Installation),<br>Brake Pads (206-03 Front Disc Brake, Removal and Installation),<br>Brake Pads (206-04 Rear Disc Brake, Removal and Installation). |
| | • Stuck or seized calipers. | • GO to Pinpoint Test A. |
| • Brake warning indicator always on | • Low brake fluid level. | • FILL the reservoir. CHECK the brake and clutch system for leaks including brake fluid in the brake booster. |
| | • Leaking brake master cylinder primary piston cup. | • INSTALL a new brake master cylinder. REFER to: (206-06 Hydraulic Brake Actuation)<br>Brake Master Cylinder - RHD (Removal and Installation),<br>Brake Master Cylinder - LHD (Removal and Installation). |
| | • Parking brake control not fully released. | • FREE UP and ADJUST the parking brake cable. REFER to: (206-05 Parking Brake and Actuation)<br>Parking Brake (Diagnosis and Testing),<br>Parking Brake Cable Adjustment - Vehicles With: Rear Drum Brakes (General Procedures),<br>Parking Brake Cable Adjustment - Vehicles With: Rear Disc Brakes (General Procedures).<br>INSTALL new components as necessary. |
| | • Shorted indicator circuit. | • GO to Pinpoint Test B. |

## DIAGNOSIS AND TESTING

| Symptom | Possible Sources | Action |
|---|---|---|
| • Vibration when the brakes are applied | • Grease or fluid on the brake shoes or brake pads; glazed linings. | • INSTALL new brake shoes or brake pads. REFER to:<br>Brake Shoes (206-02 Drum Brake, Removal and Installation),<br>Brake Pads (206-03 Front Disc Brake, Removal and Installation),<br>Brake Pads (206-04 Rear Disc Brake, Removal and Installation). |
| | • Worn or damaged brake shoes or brake pads. | • INSTALL new brake shoes or brake pads. REFER to:<br>Brake Shoes (206-02 Drum Brake, Removal and Installation),<br>Brake Pads (206-03 Front Disc Brake, Removal and Installation),<br>Brake Pads (206-04 Rear Disc Brake, Removal and Installation). |
| | • Loose caliper mounting bolt(s). | • TIGHTEN the caliper mounting bolt(s). REFER to:<br>Specifications (206-03 Front Disc Brake, Specifications),<br>Specifications (206-04 Rear Disc Brake, Specifications). |
| | • Insufficient grease on sliding parts. | • APPLY grease where necessary. |
| | • Damaged brake drum contact surface. | • INSTALL a new brake drum.<br>REFER to: Brake Drum (206-02 Drum Brake, Removal and Installation). |
| | • Loose or missing rear wheel spindle bolts. | • TIGHTEN or INSTALL new rear wheel spindle bolts.<br>REFER to: Specifications (204-02 Rear Suspension, Specifications).<br>• Go to Pinpoint Test C. |

## DIAGNOSIS AND TESTING

| Symptom | Possible Sources | Action |
|---|---|---|
| • Pedal goes down fast | • Leak in the hydraulic system. | • REPAIR the leak. CHECK the entire hydraulic system. FILL and BLEED the brake system. REFER to: (206-00 Brake System - General Information)<br>Brake System Bleeding (General Procedures),<br>Brake System Pressure Bleeding (General Procedures). |
| | • Air in the system. | • CHECK for leaks. BLEED the brake system. REFER to: (206-00 Brake System - General Information)<br>Brake System Bleeding (General Procedures),<br>Brake System Pressure Bleeding (General Procedures). |
| | • Worn brake master cylinder piston cups or scored cylinder bore. | • INSTALL a new brake master cylinder. REFER to: (206-06 Hydraulic Brake Actuation)<br>Brake Master Cylinder - RHD (Removal and Installation),<br>Brake Master Cylinder - LHD (Removal and Installation). |
| | • Brake disc brake `knock back' (Brake pads push the brake caliper piston back into brake caliper. Caused by excessive brake disc lateral runout or loose wheel bearings.) | • Install a new brake disc.<br>REFER to: Brake Disc (206-04 Rear Disc Brake, Removal and Installation). |
| | • Worn brake shoes or brake pads. | • INSTALL new brake shoes or brake pads. REFER to:<br>Brake Shoes (206-02 Drum Brake, Removal and Installation),<br>Brake Pads (206-03 Front Disc Brake, Removal and Installation),<br>Brake Pads (206-04 Rear Disc Brake, Removal and Installation).<br>• GO to Pinpoint Test D. |

## DIAGNOSIS AND TESTING

| Symptom | Possible Sources | Action |
|---|---|---|
| • Pedal eases down slowly | • Air in the system. | • BLEED the brake system. REFER to: (206-00 Brake System - General Information)<br>Brake System Bleeding (General Procedures),<br>Brake System Pressure Bleeding (General Procedures). |
| | • Malfunctioning brake master cylinder. | • GO to Pinpoint Test E. |
| • Pedal is low or feels spongy | • Worn brake shoes or brake pads. | • INSTALL new brake shoes or brake pads. REFER to:<br>Brake Shoes (206-02 Drum Brake, Removal and Installation),<br>Brake Pads (206-03 Front Disc Brake, Removal and Installation),<br>Brake Pads (206-04 Rear Disc Brake, Removal and Installation). |
| | • Hydraulic system. | • GO to Pinpoint Test F. |
| • Brake lockup during light brake pedal force | • Incorrect tire pressures. | • INFLATE the tires to the correct pressure. |
| | • Tires worn. | • INSTALL new tires. |
| | • Glazed or worn brake shoes or brake pads.<br>• Brake booster. | • INSTALL new brake shoes or brake pads. REFER to:<br>Brake Shoes (206-02 Drum Brake, Removal and Installation),<br>Brake Pads (206-03 Front Disc Brake, Removal and Installation),<br>Brake Pads (206-04 Rear Disc Brake, Removal and Installation).<br>• GO to Pinpoint Test G. |
| • Excessive or erratic pedal travel | • Worn brake shoes or brake pads. | • INSTALL new brake shoes or brake pads. REFER to:<br>Brake Shoes (206-02 Drum Brake, Removal and Installation),<br>Brake Pads (206-03 Front Disc Brake, Removal and Installation),<br>Brake Pads (206-04 Rear Disc Brake, Removal and Installation). |

## DIAGNOSIS AND TESTING

| Symptom | Possible Sources | Action |
|---|---|---|
| | • Brake discs. | • GO to Pinpoint Test H. |
| • Brake drag | • Brake booster.<br>• Incorrectly adjusted brake light switch.<br>• Brake pressure control valve.<br>• Seized brake caliper or wheel cylinder.<br>• Parking brake applied or malfunction.<br>• Seized parking brake cables.<br>• Seized brake caliper slide pins. | • GO to Pinpoint Test I.<br>• ADJUST the brake light switch. |
| • Excessive brake pedal effort | • Brake booster inoperative. | • PERFORM a brake booster functional test REFER to the component tests. |
| | • Worn or contaminated brake shoes or brake pads. | • INSTALL new brake shoes or brake pads. REFER to:<br>Brake Shoes (206-02 Drum Brake, Removal and Installation),<br>Brake Pads (206-03 Front Disc Brake, Removal and Installation),<br>Brake Pads (206-04 Rear Disc Brake, Removal and Installation).<br>• GO to Pinpoint Test J. |
| • Brake noise | • Worn brake shoes or brake pads. | • INSTALL new brake shoes or brake pads. REFER to:<br>Brake Shoes (206-02 Drum Brake, Removal and Installation),<br>Brake Pads (206-03 Front Disc Brake, Removal and Installation),<br>Brake Pads (206-04 Rear Disc Brake, Removal and Installation). |
| | • Brake booster. | • GO to Pinpoint Test K. |
| • Slow or incomplete brake pedal return | • Brake booster.<br>• Brake master cylinder. | • GO to Pinpoint Test L. |

# DIAGNOSIS AND TESTING

## Pinpoint Tests

### PINPOINT TEST A : BRAKES PULL OR DRIFT

| TEST CONDITIONS | DETAILS/RESULTS/ACTIONS |
|---|---|
| **A1: ROAD TEST THE VEHICLE** | |
| | 1 Road test the vehicle and apply the brake pedal.<br>• Does the vehicle pull or drift?<br>→ **Yes**<br>GO to A2.<br>→ **No**<br>Vehicle OK. |
| **A2: TIRE INSPECTION** | |
| | 1 Check for excessive wear or incorrect tire pressures.<br>• Are the tires in good condition?<br>→ **Yes**<br>GO to A3.<br>→ **No**<br>INFLATE the tires to the correct pressure. INSTALL new tires if excessively worn. TEST the system for normal operation. |
| **A3: BRAKE SHOE OR BRAKE PADS AND LINING INSPECTION** | |
| | 1 Inspect the brake shoes or brake pads for grease or fluid on the linings and or wear concerns.<br>• Are any concerns present?<br>→ **Yes**<br>INSTALL new brake shoes or brake pads. REFER to:<br>Brake Shoes (206-02 Drum Brake, Removal and Installation),<br>Brake Pads (206-03 Front Disc Brake, Removal and Installation),<br>Brake Pads (206-04 Rear Disc Brake, Removal and Installation).<br>TEST the system for normal operation.<br>→ **No**<br>GO to A4. |

## DIAGNOSIS AND TESTING

| TEST CONDITIONS | DETAILS/RESULTS/ACTIONS |
|---|---|
| **A4: CHECK PRESSURE CONTROL VALVE–RIGHT-HAND REAR** | |
| | 1 Install pressure gauges in the left-hand front and right-hand rear bleed nipples. Apply the brake to read 6895 kPa (1000 psi) at the left-hand front wheel.<br>– Read the pressure at right-hand rear wheel.<br>• Does the pressure gauge read between 4692-5164 kPa (680-750 psi) at the right-hand rear wheel?<br>→ **Yes**<br>INSPECT the brake calipers and INSTALL new components as required. GO to A5.<br>→ **No**<br>INSTALL a new right-hand rear brake pressure control valve. BLEED the brake system. REFER to: (206-00 Brake System - General Information)<br>Brake System Bleeding (General Procedures), Brake System Pressure Bleeding (General Procedures).<br>TEST the system for normal operation. |

## DIAGNOSIS AND TESTING

| TEST CONDITIONS | DETAILS/RESULTS/ACTIONS |
|---|---|
| **A5: CHECK PRESSURE CONTROL VALVE–LEFT-HAND REAR** | |
| | 1 Install pressure gauges in the right-hand front and left-hand rear bleed nipples. Apply the brake to read 6895 kPa (1000 psi) at the right-hand front wheel.<br>– Read the pressure at left-hand rear wheel.<br>• Does the pressure gauge read between 4692-5164 kPa (680-750 psi) at the left-hand rear wheel?<br>→ **Yes**<br>INSPECT the brake calipers and INSTALL new components as required. REFER to:<br>Brake Shoes (206-02 Drum Brake, Removal and Installation),<br>Brake Pads (206-03 Front Disc Brake, Removal and Installation),<br>Brake Pads (206-04 Rear Disc Brake, Removal and Installation).<br>TEST the system for normal operation.<br>→ **No**<br>INSTALL a new left-hand rear brake pressure control valve. BLEED the brake system. REFER to: (206-00 Brake System - General Information)<br>Brake System Bleeding (General Procedures),<br>Brake System Pressure Bleeding (General Procedures).<br>TEST the system for normal operation. |

### PINPOINT TEST B : BRAKE WARNING INDICATOR ALWAYS ON

| TEST CONDITIONS | DETAILS/RESULTS/ACTIONS |
|---|---|
| **B1: CHECK BRAKE WARNING INDICATOR** | |
| **NOTE:** The brake warning indicator should only illuminate when the ignition switch is in the START or RUN position and the parking brake is applied. | |
| | 1 Ignition switch in position II. |
| | 2 Release the parking brake.<br>– Check the fluid level in the reservoir is at the MAX mark.<br>• Does the brake warning indicator illuminate?<br>→ **Yes**<br>REFER to: Instrument Cluster - Vehicles Built Up To: 10/2005 (413-01 Instrument Cluster, Diagnosis and Testing).<br>→ **No**<br>GO to B2. |

## DIAGNOSIS AND TESTING

| TEST CONDITIONS | DETAILS/RESULTS/ACTIONS |
|---|---|
| **B2: CHECK BRAKE SYSTEM FOR LEAKAGE** | |
| | 1 Check the brake master cylinder reservoir sealing points and external brake and clutch system for leaks. Refer to the brake master cylinder component tests in this section.<br>• Does the system leak?<br>→ **Yes**<br>REPAIR as necessary. ADD fluid and BLEED the brake system. REFER to: (206-00 Brake System - General Information)<br>Brake System Bleeding (General Procedures), Brake System Pressure Bleeding (General Procedures).<br>TEST the system for normal operation.<br>→ **No**<br>GO to B3. |
| **B3: CHECK BRAKE WARNING SWITCH OR WIRING** | |
| | 1 Ignition switch in position II. |
| | 2 Remove the brake master cylinder reservoir filler cap or switch. Allow the float to rest at its lowest point.<br>• Does the brake warning indicator illuminate?<br>→ **Yes**<br>The switch or wiring is OK. TEST the system for normal operation.<br>→ **No**<br>REFER to: Instrument Cluster - Vehicles Built Up To: 10/2005 (413-01 Instrument Cluster, Diagnosis and Testing). |

### PINPOINT TEST C : VIBRATION WHEN BRAKES ARE APPLIED

| TEST CONDITIONS | DETAILS/RESULTS/ACTIONS |
|---|---|
| **C1: ROAD TEST THE VEHICLE** | |
| | 1 Road test the vehicle without applying the brakes at 40-80 km/h (25-50 mph).<br>• Is a vibration present?<br>→ **Yes**<br>REFER to: Noise, Vibration and Harshness (NVH) (100-04 Noise, Vibration and Harshness, Diagnosis and Testing).<br>After servicing, TEST the system for normal operation.<br>→ **No**<br>GO to C2. |

## DIAGNOSIS AND TESTING

| TEST CONDITIONS | DETAILS/RESULTS/ACTIONS |
|---|---|
| **C2: CHECK FOR REAR BRAKE VIBRATION** | |
| **NOTE:** With a manual release parking brake control, hold the parking brake control release button in the release position during parking brake control application. | |
| | 1 Road test the vehicle at 40-80 km/h (25-50 mph) with a medium application on the parking brake control.<br>• Is a vibration present?<br>→ **Yes**<br>CHECK the rear brake drums or discs for excessive wear. INSTALL new components as necessary. REFER to:<br>Brake Drum (206-02 Drum Brake, Removal and Installation),<br>Brake Shoes (206-02 Drum Brake, Removal and Installation),<br>Brake Pads (206-04 Rear Disc Brake, Removal and Installation),<br>Brake Disc (206-04 Rear Disc Brake, Removal and Installation).<br>TEST the system for normal operation.<br>→ **No**<br>GO to C3. |
| **C3: CHECK FOR FRONT BRAKE VIBRATION** | |
| | 1 Road test the vehicle at 40-80 km/h (25-50 mph) with light and medium application of the foot brake.<br>• Is a vibration present?<br>→ **Yes**<br>CHECK the front brake discs for excessive wear or cracks. INSTALL new components as necessary. REFER to: (206-03 Front Disc Brake)<br>Brake Pads (Removal and Installation),<br>Brake Caliper (Removal and Installation).<br>TEST the system for normal operation.<br>→ **No**<br>Vehicle OK. |

## DIAGNOSIS AND TESTING

### PINPOINT TEST D : PEDAL GOES DOWN FAST

| TEST CONDITIONS | DETAILS/RESULTS/ACTIONS |
|---|---|
| **D1: ROAD TEST THE VEHICLE** | |
| | 1 Road test the vehicle and apply the foot brake.<br>• Was the brake pedal effort normal?<br>→ **Yes**<br>Vehicle OK.<br>→ **No**<br>GO to D2. |
| **D2: CHECK BRAKE FLUID LEVEL** | |
| | 1 Check the brake master cylinder reservoir fluid level.<br>• Is the fluid level acceptable?<br>→ **Yes**<br>GO to D3.<br>→ **No**<br>CHECK the brake master cylinder reservoir sealing points for leaks. REFER to the brake master cylinder component tests in this section. ADD fluid and BLEED the brake system. REFER to: (206-00 Brake System - General Information)<br>Brake System Bleeding (General Procedures), Brake System Pressure Bleeding (General Procedures).<br>TEST the system for normal operation. |

## DIAGNOSIS AND TESTING

| TEST CONDITIONS | DETAILS/RESULTS/ACTIONS |
|---|---|
| **D3: PRESSURIZE THE SYSTEM** | |
| | 1 Pump the foot brake rapidly five times.<br>• Does the brake pedal height build up and then hold?<br>→ **Yes**<br>CHECK parking brake adjustment and ADJUST as necessary. REFER to: (206-05 Parking Brake and Actuation)<br>Parking Brake Cable Adjustment - Vehicles With: Rear Drum Brakes (General Procedures), Parking Brake Cable Adjustment - Vehicles With: Rear Disc Brakes (General Procedures).<br>If the condition still exists. BLEED the brake system. REFER to: (206-00 Brake System - General Information)<br>Brake System Bleeding (General Procedures), Brake System Pressure Bleeding (General Procedures).<br>TEST the system for normal operation.<br>→ **No**<br>GO to D4. |
| **D4: CHECK FOR BRAKE SYSTEM LEAKS** | |
| | 1 Check for external brake and clutch system leaks. REFER to the component tests.<br>• Are any leaks found?<br>→ **Yes**<br>REPAIR as necessary. ADD fluid and BLEED the brake system. REFER to: (206-00 Brake System - General Information)<br>Brake System Bleeding (General Procedures), Brake System Pressure Bleeding (General Procedures).<br>TEST the system for normal operation.<br>→ **No**<br>GO to D5. |

## DIAGNOSIS AND TESTING

| TEST CONDITIONS | DETAILS/RESULTS/ACTIONS |
|---|---|
| **D5: PERFORM A BRAKE MASTER CYLINDER BYPASS CONDITION CHECK** | |
| | 1 Test for a brake master cylinder bypass. REFER to the component tests.<br>• Was a concern found?<br>→ **Yes**<br>INSTALL a new brake master cylinder. REFER to: (206-06 Hydraulic Brake Actuation)<br>Brake Master Cylinder - RHD (Removal and Installation),<br>Brake Master Cylinder - LHD (Removal and Installation).<br>ADD fluid and BLEED the brake system. REFER to: (206-00 Brake System - General Information)<br>Brake System Bleeding (General Procedures),<br>Brake System Pressure Bleeding (General Procedures).<br>TEST the system for normal operation.<br>→ **No**<br>System OK. |

### PINPOINT TEST E : PEDAL EASES DOWN SLOWLY

| TEST CONDITIONS | DETAILS/RESULTS/ACTIONS |
|---|---|
| **E1: CHECK BRAKE PEDAL OPERATION** | |
| | 1 Check if the condition occurs when applying the brake pedal while the vehicle is moving.<br>• Does the condition occur with the vehicle stationary?<br>→ **Yes**<br>GO to E2.<br>→ **No**<br>REFER to the component tests. |

## DIAGNOSIS AND TESTING

| TEST CONDITIONS | DETAILS/RESULTS/ACTIONS |
|---|---|
| **E2: CHECK FOR BRAKE SYSTEM LEAKS** | |
| | 1 Check for external brake system leaks. Refer to the component tests.<br>• Are any leaks found?<br>→ **Yes**<br>REPAIR as necessary. ADD fluid and BLEED the brake system. REFER to: (206-00 Brake System - General Information)<br>Brake System Bleeding (General Procedures), Brake System Pressure Bleeding (General Procedures).<br>TEST the system for normal operation.<br>→ **No**<br>GO to E3. |
| **E3: PERFORM A BRAKE MASTER CYLINDER BYPASS TEST** | |
| | 1 Test for a brake master cylinder bypass. Refer to the component tests.<br>• Was a concern found?<br>→ **Yes**<br>INSTALL a new brake master cylinder. REFER to: (206-06 Hydraulic Brake Actuation)<br>Brake Master Cylinder - RHD (Removal and Installation), Brake Master Cylinder - LHD (Removal and Installation).<br>ADD fluid and BLEED the bake system. REFER to: (206-00 Brake System - General Information)<br>Brake System Bleeding (General Procedures), Brake System Pressure Bleeding (General Procedures).<br>TEST the system for normal operation.<br>→ **No**<br>System OK. TEST the system for normal operation. |

## DIAGNOSIS AND TESTING

### PINPOINT TEST F : PEDAL IS LOW OR FEELS SPONGY

| TEST CONDITIONS | DETAILS/RESULTS/ACTIONS |
|---|---|
| **F1: ROAD TEST THE VEHICLE** | |
| | 1 Road test the vehicle and apply the foot brake.<br>• Did the brake pedal feel spongy?<br>→ **Yes**<br>GO to F2.<br>→ **No**<br>Vehicle OK. |
| **F2: CHECK BRAKE FLUID LEVEL** | |
| | 1 Check the brake master cylinder reservoir fluid level.<br>• Is the fluid level OK?<br>→ **Yes**<br>GO to F3.<br>→ **No**<br>CHECK the brake master cylinder reservoir sealing points. REFER to the component tests. ADD fluid and BLEED the brake system. REFER to: (206-00 Brake System - General Information)<br>Brake System Bleeding (General Procedures), Brake System Pressure Bleeding (General Procedures).<br>TEST the system for normal operation. |
| **F3: CHECK FILLER CAP VENT** | |
| | 1 Check if the filler cap vent holes are clogged or dirty.<br>• Was a concern found?<br>→ **Yes**<br>CLEAN as necessary. TEST the system for normal operation.<br>→ **No**<br>GO to F4. |

## DIAGNOSIS AND TESTING

| TEST CONDITIONS | DETAILS/RESULTS/ACTIONS |
|---|---|
| **F4: BLEED THE BRAKE SYSTEM** | |
| | 1 Check for air in the brake system. Bleed the brake system. REFER to: (206-00 Brake System - General Information)<br>Brake System Bleeding (General Procedures), Brake System Pressure Bleeding (General Procedures).<br>• Is the condition still present?<br>→ **Yes**<br>GO to F5.<br>→ **No**<br>Vehicle OK. |
| **F5: CHECK FRONT WHEEL HUB RETAINING NUT** | |
| | 1 Check the front wheel hub retaining nut for looseness.<br>• Is the front wheel hub retaining nut loose?<br>→ **Yes**<br>INSTALL a new front wheel hub retaining nut.<br>REFER to: Specifications (204-01 Front Suspension, Specifications).<br>Do not reuse the front wheel hub retaining nut.<br>TEST the system for normal operation.<br>→ **No**<br>CHECK the parking bake adjustment. REFER to: (206-05 Parking Brake and Actuation)<br>Parking Brake Cable Adjustment - Vehicles With: Rear Drum Brakes (General Procedures), Parking Brake Cable Adjustment - Vehicles With: Rear Disc Brakes (General Procedures). |

### PINPOINT TEST G : BRAKE LOCK UP DURING LIGHT BRAKE PEDAL FORCE

| TEST CONDITIONS | DETAILS/RESULTS/ACTIONS |
|---|---|
| **G1: ROAD TEST THE VEHICLE** | |
| | 1 Road test the vehicle and apply the brake pedal lightly.<br>• Do the rear brakes lock up?<br>→ **Yes**<br>GO to G2. GO to Pinpoint Test G.<br>→ **No**<br>Vehicle OK. |

## DIAGNOSIS AND TESTING

| TEST CONDITIONS | DETAILS/RESULTS/ACTIONS |
|---|---|
| **G2: TIRE INSPECTION** | |
| | 1 Check for excessive tire wear or incorrect tire pressures.<br>• Are the tires in good order?<br>→ **Yes**<br>GO to G3. GO to Pinpoint Test G.<br>→ **No**<br>SUBSTITUTE known good tires. INFLATE to the correct pressure. TEST the system for normal operation. |
| **G3: BRAKE SHOES OR BRAKE PADS INSPECTION** | |
| | 1 Inspect the brake shoes or brake pads are correctly fitted and for grease or fluid contamination or wear concerns.<br>• Are there any concerns?<br>→ **Yes**<br>REPAIR or INSTALL new components as necessary. TEST the system for normal operation.<br>→ **No**<br>GO to G4. GO to Pinpoint Test G. |
| **G4: CHECK PRESSURE CONSCIOUS REDUCING VALVE–RIGHT-HAND REAR** | |
| | 1 Install pressure gauges in the left-hand front and right-hand rear bleed nipples. Apply the brake to read 6895 kPa (1000 psi) at the left-hand front wheel.<br>– Read the pressure at the right-hand rear wheel.<br>• Does the pressure gauge read between 4692-5164 kPa (680-750 psi) at the right-hand rear wheel?<br>→ **Yes**<br>TEST the brake booster. Go to Pinpoint Test I.<br>→ **No**<br>INSTALL a new right-hand rear brake pressure control valve. BLEED the brake system. REFER to: (206-00 Brake System - General Information)<br>Brake System Bleeding (General Procedures), Brake System Pressure Bleeding (General Procedures).<br>TEST the system normal operation. |

## DIAGNOSIS AND TESTING

| TEST CONDITIONS | DETAILS/RESULTS/ACTIONS |
|---|---|
| **G5: CHECK PRESSURE CONSCIOUS REDUCING VALVE–LEFT-HAND REAR** | |
| | 1 Install pressure gauges in the right-hand front and left-hand rear bleed nipples. Apply the brake to read 6895 kPa (1000 psi) at the right-hand front wheel.<br>– Read the pressure at the left-hand rear wheel.<br>• Does the pressure gauge read between 4692-5164 kPa (680-750 psi) at the left-hand rear wheel?<br>→ **Yes**<br>TEST the brake booster. Go to Pinpoint Test I.<br>→ **No**<br>INSTALL a new left-hand rear brake pressure control valve. BLEED the brake system. REFER to: (206-00 Brake System - General Information)<br>Brake System Bleeding (General Procedures), Brake System Pressure Bleeding (General Procedures).<br>TEST the system for normal operation. |

### PINPOINT TEST H : EXCESSIVE OR ERRATIC BRAKE PEDAL TRAVEL

| TEST CONDITIONS | DETAILS/RESULTS/ACTIONS |
|---|---|
| **H1: ROAD TEST THE VEHICLE** | |
| | 1 Road test the vehicle under rough road conditions. Apply the brakes slowly.<br>• Is the pedal travel OK?<br>→ **Yes**<br>Vehicle OK.<br>→ **No**<br>GO to H2. |

## DIAGNOSIS AND TESTING

| TEST CONDITIONS | DETAILS/RESULTS/ACTIONS |
|---|---|
| **H2: CHECK WHEEL BEARING** | |
| | 1 Check for loose front wheel bearings.<br>• Are the front wheel bearings loose?<br>→ **Yes**<br>CHECK the front wheel hub retaining nut.<br>INSTALL a new front wheel bearing(s) if worn or damaged,<br>REFER to: Front Wheel Bearing (204-01 Front Suspension, Removal and Installation).<br>TEST the system for normal operation.<br>→ **No**<br>CHECK the front brake disc(s) for thickness variances.<br>REFER to: Specifications (206-03 Front Disc Brake, Specifications).<br>INSTALL new components as necessary.<br>TEST the system for normal operation. |

### PINPOINT TEST I : BRAKES DRAG

| TEST CONDITIONS | DETAILS/RESULTS/ACTIONS |
|---|---|
| **I1: CHECK BRAKE BOOSTER** | |
| | 1 Check the brake booster push rod alignment and pedal travel.<br>• Is the push rod and pedal travel OK?<br>→ **Yes**<br>GO to I2.<br>→ **No**<br>INSTALL a new brake booster. REFER to: (206-07 Power Brake Actuation)<br>Brake Booster - LHD (Removal and Installation), Brake Booster - RHD (Removal and Installation).<br>TEST the system for normal operation. |

## DIAGNOSIS AND TESTING

| TEST CONDITIONS | DETAILS/RESULTS/ACTIONS |
|---|---|
| **I2: ROAD TEST THE VEHICLE** | |
| | 1 Road test the vehicle and apply the brakes.<br>• Are the brakes functioning correctly?<br>→ **Yes**<br>Vehicle OK.<br>→ **No**<br>INSPECT individual wheel cylinders or calipers for binding or sticking components. INSTALL new components as necessary. BLEED the brake system. REFER to: (206-00 Brake System - General Information)<br>Brake System Bleeding (General Procedures), Brake System Pressure Bleeding (General Procedures).<br>TEST the system for normal operation. |

### PINPOINT TEST J : EXCESSIVE BRAKE PEDAL EFFORT

| TEST CONDITIONS | DETAILS/RESULTS/ACTIONS |
|---|---|
| **J1: CHECK BRAKE APPLICATION** | |
| | 1 With the engine off, apply and release the brake pedal five times to deplete all vacuum from the brake booster. Apply the brake pedal, hold with light pressure. Start the engine.<br>• Does the brake pedal hold?<br>→ **Yes**<br>GO to J2.<br>→ **No**<br>GO to J6. |
| **J2: CHECK BRAKE BOOSTER FOR LEAKS** | |
| | 1 Run the engine at medium idle, release the accelerator pedal and turn the engine off. Wait 90 seconds and apply the brakes. Two or more brake applications should be power assisted.<br>• Does the brake booster work?<br>→ **Yes**<br>Vehicle OK.<br>→ **No**<br>GO to J3. |

## DIAGNOSIS AND TESTING

| TEST CONDITIONS | DETAILS/RESULTS/ACTIONS |
|---|---|
| **J3: CHECK BRAKE BOOSTER CHECK VALVE** | |
| | 1 Disconnect the vacuum hose, for the brake booster check valve at the intake manifold. Blow into the hose attached to the brake booster check valve.<br>• Does air pass through the valve?<br>→ **Yes**<br>INSTALL a new brake booster check valve. TEST the system for normal operation.<br>→ **No**<br>GO to J4. |
| **J4: CHECK BRAKE BOOSTER CHECK VALVE VACUUM** | |
| | 1 Disconnect the vacuum hose from the brake booster check valve. Run the engine at idle. Check the supply with a vacuum gauge.<br>• Is the vacuum pressure above 40.5 kPa (12 in-Hg) with the brake booster non-operational?<br>→ **Yes**<br>GO to J5.<br>→ **No**<br>REPAIR or INSTALL a new vacuum hose and fittings. TEST the system for normal operation. |
| **J5: CHECK BRAKE BOOSTER** | |
| | 1 Check the brake booster. GO to the component test procedure in this section.<br>• Is the brake booster OK?<br>→ **Yes**<br>GO to J6.<br>→ **No**<br>INSTALL a new brake booster. REFER to: (206-07 Power Brake Actuation)<br>Brake Booster - LHD (Removal and Installation), Brake Booster - RHD (Removal and Installation). TEST the system for normal operation. |

## DIAGNOSIS AND TESTING

| TEST CONDITIONS | DETAILS/RESULTS/ACTIONS |
|---|---|
| **J6: CHECK BRAKE PEDAL LINKAGE** | |
| | 1 Disconnect the actuator rod from the pedal pin and apply the brake pedal fully.<br>• Did the pedal move freely?<br>→ **Yes**<br>GO to J7.<br>→ **No**<br>REPAIR or INSTALL new brake pedal bushings. REFER to: (206-06 Hydraulic Brake Actuation)<br>Brake Pedal - LHD, Vehicles With: Manual Transaxle (Removal and Installation),<br>Brake Pedal - LHD, Vehicles With: 4-Speed Automatic Transmission (AW81-40), Vehicles With: Automated Gearshift (Removal and Installation),<br>Brake Pedal - RHD (Removal and Installation).<br>TEST the system for normal operation. |
| **J7: CHECK BRAKE PRESSURE CONTROL VALVE** | |
| | 1 Check the brake pressure control valve for contamination.<br>• Is the brake fluid contaminated?<br>→ **Yes**<br>INSTALL a new brake pressure control valve. FILL the brake master cylinder reservoir. BLEED the brake system. REFER to: (206-00 Brake System - General Information)<br>Brake System Bleeding (General Procedures),<br>Brake System Pressure Bleeding (General Procedures).<br>TEST the system for normal operation.<br>→ **No**<br>Vehicle OK. |

## DIAGNOSIS AND TESTING

### PINPOINT TEST K : BRAKE NOISE

| TEST CONDITIONS | DETAILS/RESULTS/ACTIONS |
|---|---|
| **K1: CHECK FOR PEDAL NOISE** | |
| | 1 Inspect the brake pads and brake shoes for excessive wear.<br>– Run the engine at idle for 10 seconds or longer. Apply the brake pedal and listen for noise. Compare results with a known good system.<br>• Was a noise present?<br>→ **Yes**<br>GO to K2.<br>→ **No**<br>Vehicle OK. |
| **K2: CHECK PUSH ROD ALIGNMENT** | |
| | 1 Check the brake booster push rod alignment and travel.<br>• Is the push rod OK?<br>→ **Yes**<br>BLEED the brake system. REFER to: (206-00 Brake System - General Information)<br>Brake System Bleeding (General Procedures), Brake System Pressure Bleeding (General Procedures).<br>TEST the system for normal operation.<br>→ **No**<br>INSTALL a new brake booster. REFER to: (206-07 Power Brake Actuation)<br>Brake Booster - LHD (Removal and Installation), Brake Booster - RHD (Removal and Installation).<br>TEST the system for normal operation. |

## DIAGNOSIS AND TESTING

### PINPOINT TEST L : SLOW OR INCOMPLETE BRAKE PEDAL RETURN

| TEST CONDITIONS | DETAILS/RESULTS/ACTIONS |
|---|---|
| **L1: CHECK FOR BRAKE PEDAL RETURN** | |
| | 1 Run the engine at fast idle while making several brake applications. Pull the brake pedal rearward with approximately 44.5 N (10 lbs) force. Release the brake pedal and measure the distance to the floor pan. Make a hard brake application. Release the brake pedal and measure the brake pedal to floor pan distance. The brake pedal should return to its original position.<br>• Did the brake pedal return to its original position?<br>→ **Yes**<br>Vehicle OK.<br>→ **No**<br>GO to L2. |
| **L2: CHECK FOR BRAKE PEDAL BINDING** | |
| | 1 Check the brake pedal for free operation.<br>• Is the brake pedal operating freely?<br>→ **Yes**<br>INSTALL a new brake booster. REFER to: (206-07 Power Brake Actuation)<br>Brake Booster - LHD (Removal and Installation), Brake Booster - RHD (Removal and Installation). TEST the system for normal operation.<br>→ **No**<br>REPAIR or INSTALL new brake pedal bushings. REFER to: (206-06 Hydraulic Brake Actuation)<br>Brake Pedal - LHD, Vehicles With: Manual Transaxle (Removal and Installation), Brake Pedal - LHD, Vehicles With: 4-Speed Automatic Transmission (AW81-40), Vehicles With: Automated Gearshift (Removal and Installation), Brake Pedal - RHD (Removal and Installation). TEST the system for normal operation. |

## Component Tests

### Hydraulic Leak Check

**NOTE:** There is a common clutch and brake fluid reservoir, therefore it is possible that a clutch leak can lead to reduction in the reservoir level.

It is possible that all evidence of fluid leakage may have washed off if the vehicle has been operated in rain or snow, as brake fluid is water-soluble. Refill the system, bleed then apply the brakes several times. Examine the system to verify that the reservoir fluid level is actually dropping. Locate

## DIAGNOSIS AND TESTING

and repair the external leak. If the fluid level drops and no external leak can be found, check for a brake master cylinder bore end seal leak.

## Brake System Check

### Brake Pedal Reserve Check

Where a low brake pedal or the feel of a bottomed-out condition exists, check for brake pedal reserve.

1. Operate the engine at idle with the transaxle in NEUTRAL.
2. Apply the brake pedal lightly three or four times.
3. Allow 15 seconds for vacuum to replenish the brake booster.

**NOTE:** This increased resistance may feel like something has bottomed out.

4. Apply the brake pedal until it stops moving downward or an increased resistance to the pedal travel occurs.
5. Hold the brake pedal in the applied position and raise the engine speed to approximately 2000 rpm.

**NOTE:** The additional movement of the brake pedal is the result of the increased engine intake manifold vacuum which exerts more force on the brake booster during engine rundown. This means that additional stroke is available in the brake master cylinder and the brake system is not bottoming out.

6. Release the accelerator pedal and observe that the brake pedal moves downward as the engine returns to idle speed.

## Brake Booster Functional Test

Inspect all hoses and connections. All unused vacuum connectors should be capped. Hoses and their connections should be correctly secured and in good condition with no holes and no collapsed areas. Inspect the check valve on the brake booster for damage.

### Brake Booster Operation Check

1. Check the hydraulic brake system for leaks or low fluid.
2. With the transaxle in NEUTRAL, stop the engine and apply the parking brake. Apply the brake pedal several times to exhaust all vacuum in the system.
3. With the engine turned off and all vacuum in the system exhausted, apply the brake pedal and hold it down. Start the engine. If the vacuum system is operating, the brake pedal will tend to move downward under constant foot pressure. If no motion is felt, the vacuum booster system is not functioning.
4. Remove the vacuum hose from the brake booster. Intake manifold vacuum should be available at the brake booster end of the hose with the engine at idle speed and the transaxle in NEUTRAL. Make sure that all unused vacuum outlets are correctly capped, hose connectors are correctly secured and vacuum hoses are in good condition. When it is established that manifold vacuum is available to the brake booster, connector the vacuum hose to the brake booster and repeat Step 3. If no downward movement of the brake pedal is felt, install a new brake booster. REFER to: (206-07 Power Brake Actuation)

   Brake Booster - LHD (Removal and Installation), Brake Booster - RHD (Removal and Installation).
5. Operate the engine a minimum of 10 seconds at fast idle. Stop the engine and let the vehicle stand for 10 minutes. Then, apply the brake pedal with approximately 89 N (20 lb) force. The pedal feel (brake application) should be the same as that noted with the engine operating. If the brake pedal feels hard (no power assist), install a new vacuum check valve and then repeat the test. If the brake pedal still feels hard, install a new brake booster. REFER to: (206-07 Power Brake Actuation)

   Brake Booster - LHD (Removal and Installation), Brake Booster - RHD (Removal and Installation). If the brake pedal movement feels spongy, bleed the brake system. REFER to: (206-00 Brake System - General Information)

   Brake System Bleeding (General Procedures), Brake System Pressure Bleeding (General Procedures).

### Brake Master Cylinder

Usually, the first and strongest indicator of anything wrong with the braking system is a feeling through the brake pedal. In diagnosing the condition of the brake master cylinder, check pedal feel as

## DIAGNOSIS AND TESTING

evidence of a brake concern. Check for the brake warning indicator illumination and the fluid level in the master cylinder reservoir.

### Normal Conditions

The following conditions are considered normal and are not indications that the brake master cylinder is in need of service.

- Modern brake systems are not designed to produce as hard a pedal effort as in the past. Complaints of light pedal efforts should be compared to pedal efforts of another vehicle, of the same model and year.
- During normal operation of the brake the fluid level in the reservoir will rise during brake application and fall during release. The net fluid level (i.e., after brake application and release) will remain unchanged.
- A trace of brake fluid will exists on the brake booster shell below the master cylinder mounting flange. This results from the normal lubricating action of the master cylinder bore end seal.
- The fluid level will fall with brake shoe and lining wear.

### Abnormal Conditions

**NOTE:**Prior to performing any diagnosis, make sure the brake system warning indicator is functional.

Changes in brake pedal feel or travel are indicators that something could be wrong with the braking system. The diagnostic procedure and techniques use brake pedal feel, warning indicator illumination and low brake fluid level as indicators in diagnosing braking system concerns. The following conditions are considered abnormal and indicate that the brake master cylinder is in need of service.

- The brake pedal goes down fast. This could be caused by an external or internal leak.
- The brake pedal eases down slowly. This could be caused by an external or internal leak.
- The brake pedal is low and or feels spongy. This condition may be caused by no fluid in the brake master cylinder reservoir, reservoir cap vent holes clogged or air in the hydraulic system.
- The brake pedal effort is excessive. This may be caused by a bind or obstruction in the pedal or linkage, clogged fluid control valve or insufficient booster vacuum.
- The rear brakes lock up during light pedal force. This may be caused by incorrect tire pressures, grease or fluid on the brake shoes and linings, damaged brake shoes and linings, incorrectly adjusted parking brake, or damaged or contaminated brake pressure control valves.
- The brake pedal effort is erratic. This condition could be caused by a brake booster malfunction, extreme caliper piston knock back or incorrectly installed brake shoes and linings.
- The brake warning indicator is ON. This may be caused by low fluid level, ignition wire routing too close to the fluid level indicator assembly, or float assembly damage.

### Bypass Condition Test

1. Check the fluid in brake master cylinder. Fill the brake master cylinder reservoir if low or empty.
2. Observe the fluid level in the brake master cylinder reservoir. If after several brake applications, the fluid level remains the same, measure the wheel turning torque required to rotate the wheels with the brakes applied as follows:

Place the transaxle in NEUTRAL and raise and support the vehicle. REFER to: (100-02 Jacking and Lifting)

Jacking (Description and Operation),
Lifting (Description and Operation).

Apply the brakes with a minimum of 445 N (100 lb) and hold for approximately 15 seconds. With the brakes still applied, exert a torque on the front wheels of 10.1 Nm (75 lb.ft). If either wheel rotates, install a new brake master cylinder. REFER to: (206-06 Hydraulic Brake Actuation)

Brake Master Cylinder - RHD (Removal and Installation),
Brake Master Cylinder - LHD (Removal and Installation).

### Non-Pressure Leaks

Any empty brake master cylinder reservoir condition may be caused by two types of non-pressure external leaks.

## DIAGNOSIS AND TESTING

Type 1: An external leak may occur at the master cylinder reservoir cap because of incorrect positioning of the gasket and cap. Reposition the cap and gasket.

Type 2: An external leak may occur at the reservoir mounting seals. Service such a leak by installing new seals.

## GENERAL PROCEDURES

# Brake System Bleeding(12 141 0)

### General Equipment

| |
|---|
| Worldwide Diagnostic System (WDS) |

### Bleeding

All Vehicles

**WARNING:Brake fluid contains polyglycol ethers and polyglycols. Avoid contact with the eyes. Wash hands thoroughly after handling. If brake fluid contacts the eyes, flush the eyes for 15 minutes with cold running water. Get medical attention if irritation persists. If taken internally, drink water and induce vomiting. Get medical attention immediately. Failure to follow these instructions may result in personal injury.**

**CAUTION:If brake fluid is spilt on the paintwork, the affected area must be immediately washed down with cold water.**

**NOTE:**Make sure that the vehicle is standing on a level surface.

**NOTE:**The system consists of separate circuits for each front and diagonally opposite rear wheel. Each circuit can be bled independently.

1. **CAUTION:The brake fluid reservoir must remain full with new, clean brake fluid at all times during bleeding.**

   **Install the bleed tube to the bleed nipple.**
2. **Immerse the end of the bleed tube in a bleed jar containing a small quantity of approved brake fluid.**
3. **Position the bleed jar base at least 300 mm above the bleed nipple to maintain fluid pressure and prevent air leaking past the threads of the bleed nipple.**
4. **Loosen the bleed nipple by one-half turn.**
5. **Operate the brake pedal fully (pumping brake fluid and air into the bleed jar) and allow the brake pedal to return to the rest position.**
6. **Fill the brake fluid reservoir to the MAX mark.**
7. **Continue operating the brake pedal until air-free fluid is being pumped into the bleed jar.**
8. **With the brake pedal fully depressed tighten the bleed nipple.**
9. **CAUTION:Make sure that the bleed nipple cap is installed after bleeding the brake line(s). This will prevent corrosion to the bleed nipple. Failure to follow this instruction may result in the bleed nipple becoming seized.**

   **Repeat the procedure for the remaining brake lines.**

Vehicles with anti-lock brakes

10. **NOTE:This step is only necessary when changing the brake fluid to remove the used brake fluid from the hydraulic control unit (HCU).**

    **Using WDS, bleed the brake system.**

## GENERAL PROCEDURES

# Brake System Pressure Bleeding(12 141 0)

### General Equipment

| |
|---|
| Worldwide Diagnostic System (WDS) |
| Brake/clutch system pressure bleeder/filler |

### Bleeding

All vehicles

▲ **WARNING:Brake fluid contains polyglycol ethers and polyglycols. Avoid contact with the eyes. Wash hands thoroughly after handling. If brake fluid contacts the eyes, flush the eyes for 15 minutes with cold running water. Get medical attention if irritation persists. If taken internally, drink water and induce vomiting. Get medical attention immediately. Failure to follow these instructions may result in personal injury.**

⚠ **CAUTION:If brake fluid is spilt on the paintwork, the affected area must be immediately washed down with cold water.**

**NOTE:**Make sure that the vehicle is standing on a level surface.

**NOTE:**The system consists of separate circuits for each front and diagonally opposite rear wheel. Each circuit can be bled independently.

1. **Fill the brake fluid reservoir to the MAX mark.**
2. **CAUTIONS:**

   ⚠**Make sure that the pressure within the brake system does not exceed 1 bar.**

   ⚠**Make sure that the pressure bleeding equipment is filled with new brake fluid to the correct specification.**

   **Using the brake/clutch system pressure bleeder/filler, pressure bleed the system in accordance with the manufacturer's instructions.**
3. ⚠**CAUTION:Make sure that the bleed nipple cap is installed after bleeding the brake line(s). This will prevent corrosion to the bleed nipple. Failure to follow this instruction may result in the bleed nipple becoming seized.**

   **Fill the brake fluid reservoir to the MAX mark as necessary.**

Vehicles with anti-lock brakes

4. **NOTE:This step is only necessary when changing the brake fluid to remove the used brake fluid from the hydraulic control unit (HCU).**

   **Using WDS, bleed the brake system.**

# SECTION 206-02 Drum Brake

## VEHICLE APPLICATION:2006.0 Fiesta

CONTENTS PAGE


**SPECIFICATIONS**

Specifications ..... 206-02-2
Drum Brake Specification ..... 206-02-2

**DESCRIPTION AND OPERATION**

Drum Brake ..... 206-02-3
Overview ..... 206-02-3

**DIAGNOSIS AND TESTING**

Drum Brake ..... 206-02-5

**REMOVAL AND INSTALLATION**

Brake Drum ..... (12 275 0) 206-02-6
Brake Shoes ..... (12 285 0) 206-02-7
Wheel Cylinder ..... (12 305 0) 206-02-9
Brake Backing Plate ..... (12 313 0) 206-02-10

# SPECIFICATIONS

## Lubricants, Fluids, Sealers and Adhesives

| | Specification |
|---|---|
| Silicon dielectric compound | ESA-M1C171-A |
| Grease - brake shoe adjuster | SAM-1C1024-A |
| Super DOT 4 brake fluid | ESD-M6C57-A |

## Drum Brake Specification

| | |
|---|---|
| New brake drum nominal diameter | 203 mm |
| Worn brake drum discard diameter * | 204 mm |
| Brake shoe width | 36 mm |
| Worn brake shoe lining discard thickness * | 1 mm |

* When the discard diameter/thickness has been reached, install a new brake drum/brake shoes.

## Torque Specifications

| Description | Nm | lb-ft | lb-in |
|---|---|---|---|
| Wheel hub retaining nut | 235 | 173 | - |
| Wheel spindle retaining bolts | 70 | 52 | - |
| Wheel speed sensor retaining bolt | 10 | - | 89 |
| Wheel cylinder retaining bolts | 10 | - | 89 |
| Brake hose to wheel cylinder union | 17 | 13 | - |

## DESCRIPTION AND OPERATION

# Drum Brake

### Overview

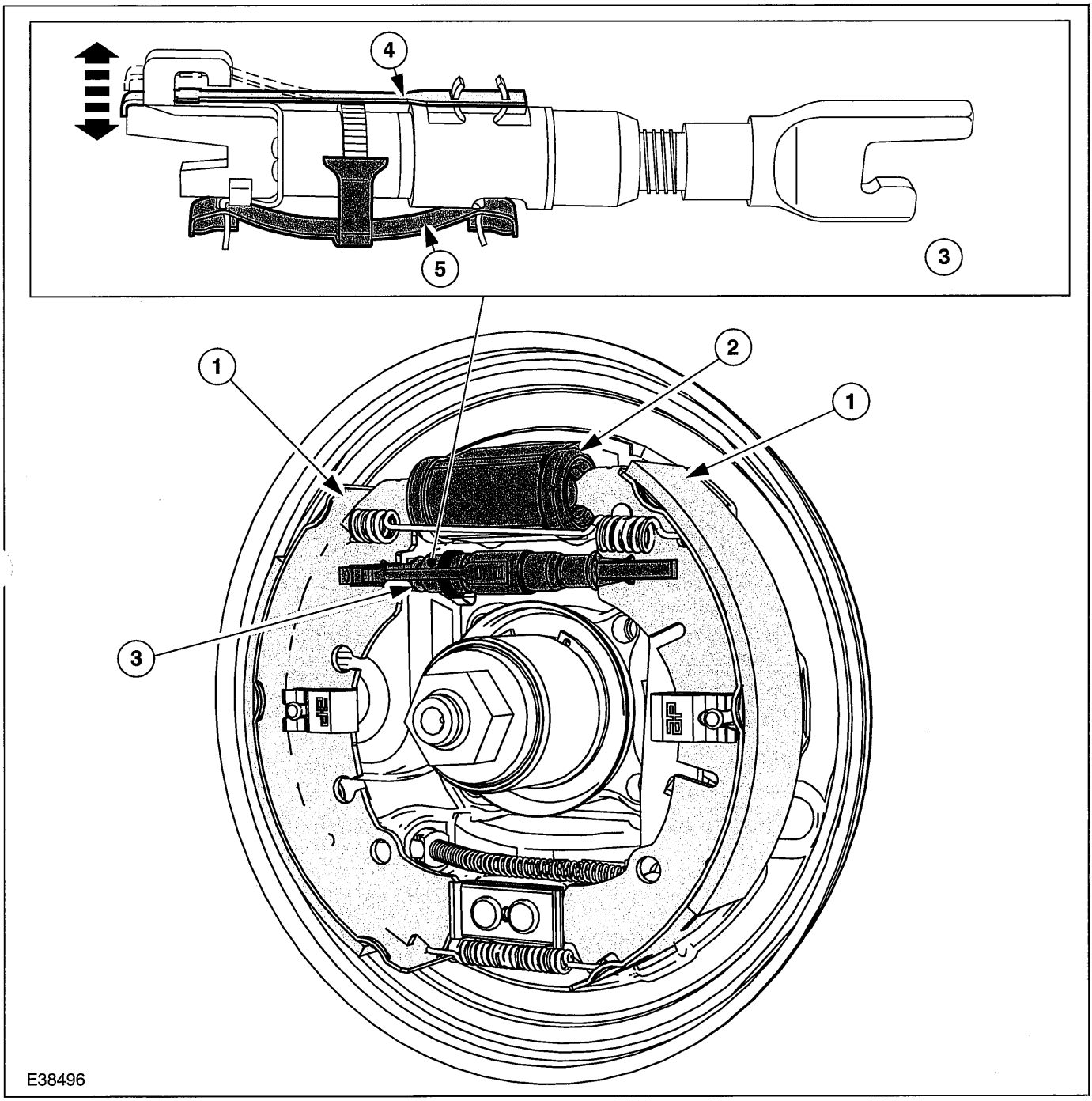


| Item | Description |
|---|---|
| 1 | Brake shoe |
| 2 | Brake cylinder |
| 3 | Automatic adjuster |
| 4 | Bi-metallic strip |
| 5 | Return spring |

The drum brake is equipped with an automatic adjuster which adjusts the brake shoes towards the brake drum when lining wear occurs.

The adjustment mechanism is equipped with a bi-metallic strip which prevents undesired adjustment of the brake shoes when the brakes are run hot.

## DESCRIPTION AND OPERATION

The heat generated during braking is passed to the bi-metallic strip. If the heat exceeds a critical point, the bi-metallic strip bends upwards into the corresponding nib and prevents further adjustment.

After the brake has cooled again, the bi-metallic strip returns to the initial position. Adjustment is now possible again.

## DIAGNOSIS AND TESTING

# Drum Brake

REFER to Section 206-00 [Brake System - General Information].

## REMOVAL AND INSTALLATION

# Brake Drum(12 275 0)

### Removal

1. **Remove the parking brake control trim panel.**

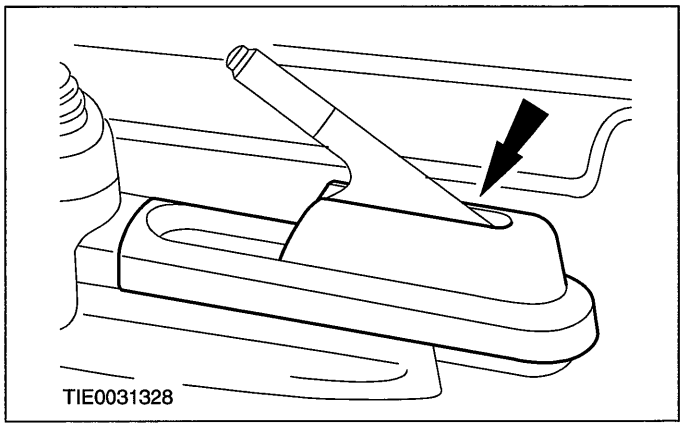


2. **Loosen the parking brake cable adjustment nut to the end of the thread.**
   - Discard the retaining clip.

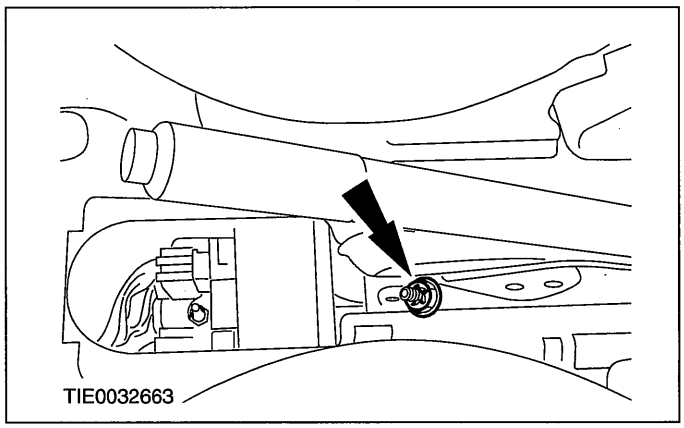


3. **Release the parking brake.**
4. **Remove the wheel and tire. For additional information, refer to Section 204-04 [Wheels and Tires].**
5. **NOTE:If the dust cap is damaged on removal a new dust cap must be installed during installation.**

   **Remove the dust cap.**

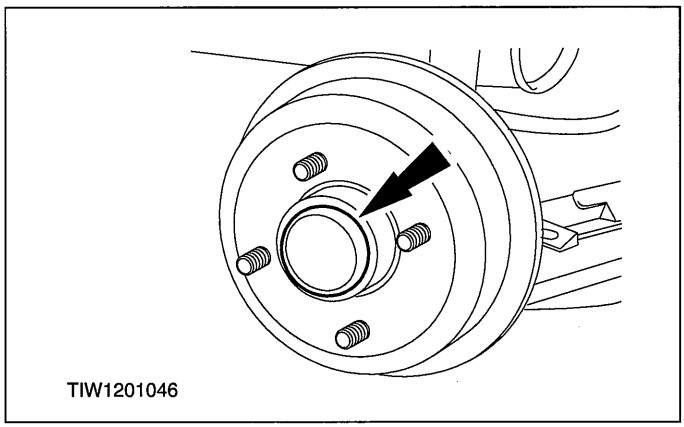


6. **Remove the brake drum.**
   1. Remove and discard the wheel hub retaining nut.
   2. Remove the drum.

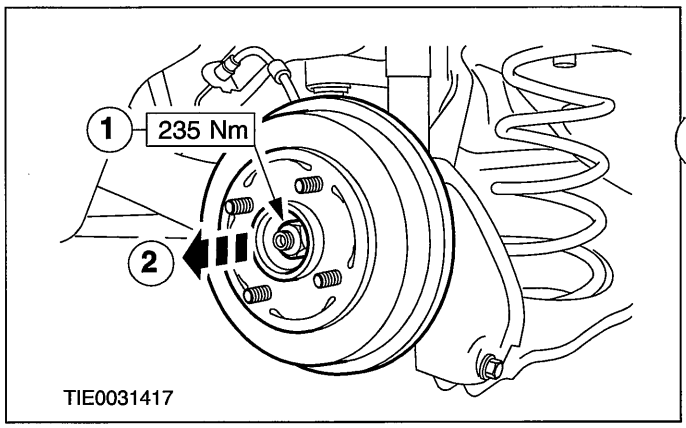


### Installation

1. **⚠CAUTION:Rotate the drum ten times in the opposite direction when tightening the wheel hub retaining nut to prevent damage to the bearing.**

**NOTE:**Install a new wheel hub retaining nut.

**NOTE:**Install a new parking brake cable retaining clip.

**To install, reverse the removal procedure.**

2. **Adjust the parking brake cable. For additional information, refer to Section 206-05 [Parking Brake and Actuation].**

## REMOVAL AND INSTALLATION

# Brake Shoes(12 285 0)

| Materials | |
|---|---|
| **Name** | **Specification** |
| Silicon dielectric compound | ESA-M1C171-A |
| Grease - brake shoe adjuster | SAM-1C1024-A |

## Removal

1. **Remove the parking brake control trim panel.**

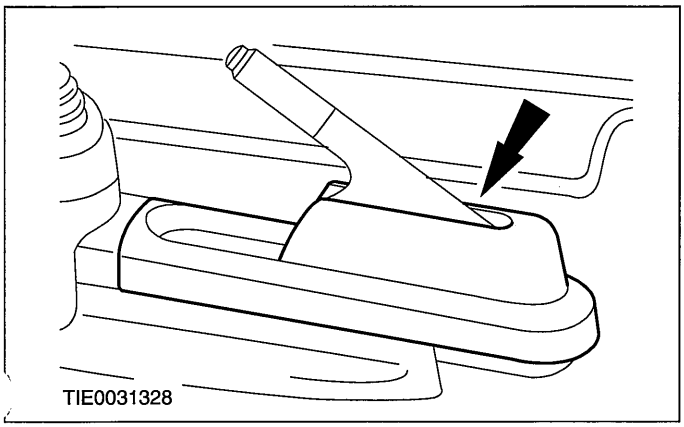


2. **Loosen the parking brake cable adjustment nut to the end of the thread.**
   - Discard the retaining clip.

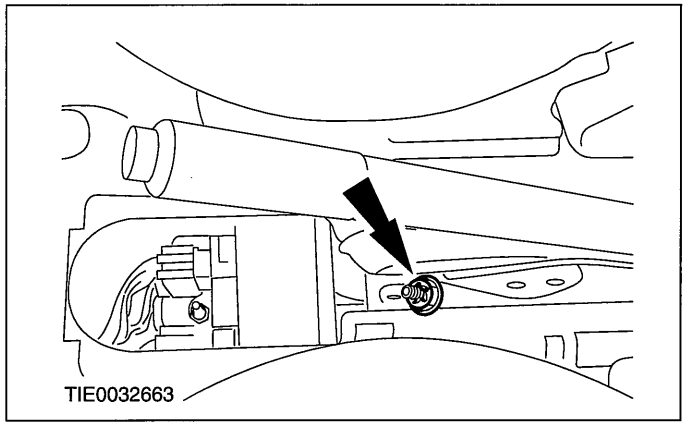


3. **Release the parking brake.**
4. **Remove the wheel and tire. For additional information, refer to Section 204-04 [Wheels and Tires].**
5. **Detach the wheel speed sensor from the backing plate.**

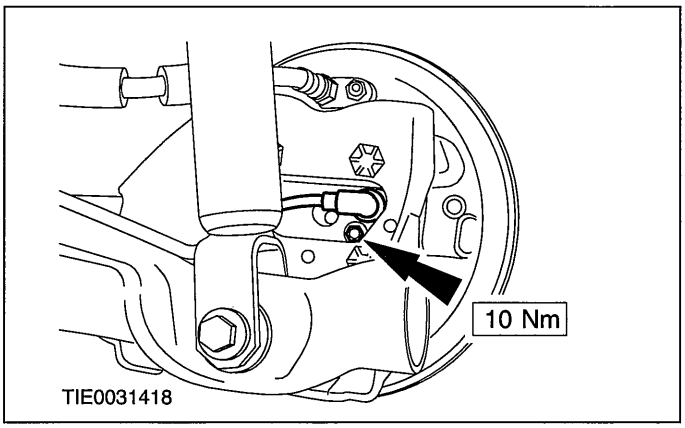


6. **Remove the brake drum.**

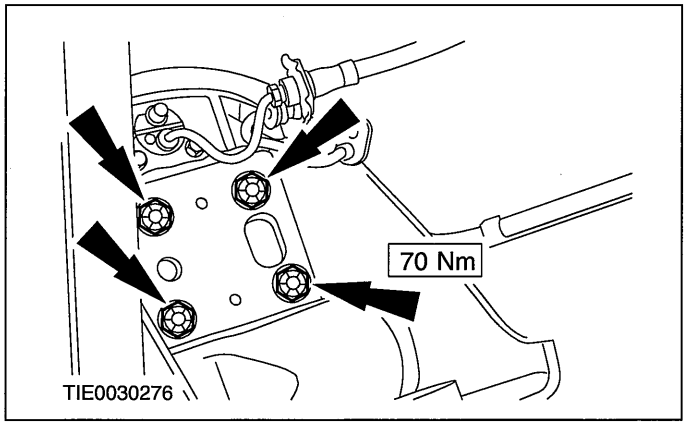


7. **Remove the hold down springs.**

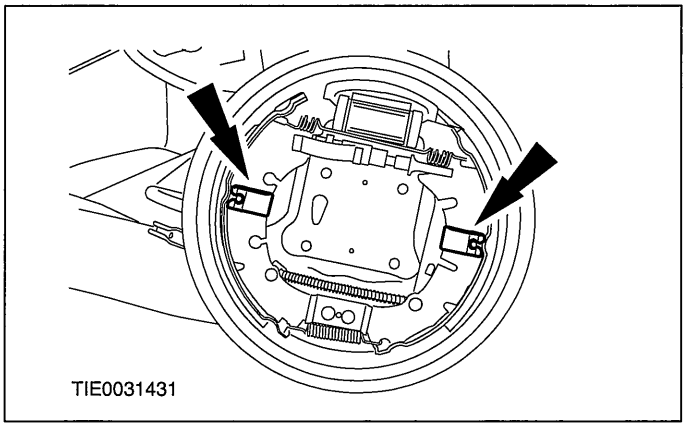


8. **⚠CAUTION:Do not damage the wheel cylinder boots.**

**NOTE:**Hold the wheel cylinder pistons in place with a rubber band.

## REMOVAL AND INSTALLATION

**Detach the brake shoes from the wheel cylinder.**

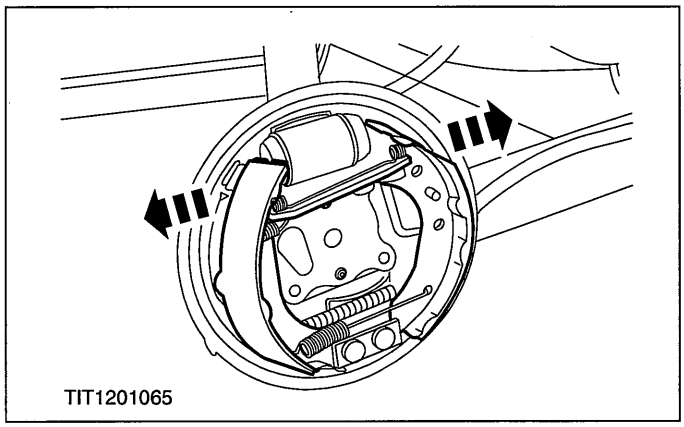


**9. Remove the brake shoe return springs.**

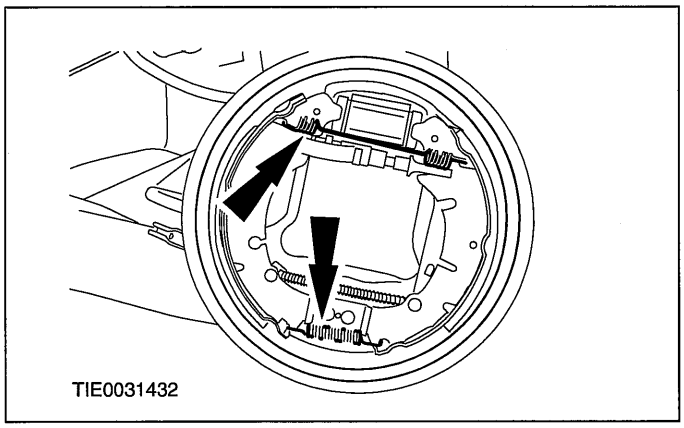


**10. Remove the brake shoe adjuster from the brake shoes.**

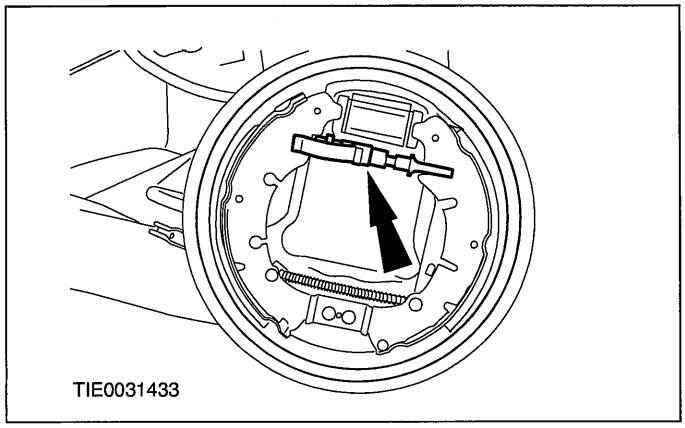


**11. Disconnect the parking brake cable from the brake shoe.**

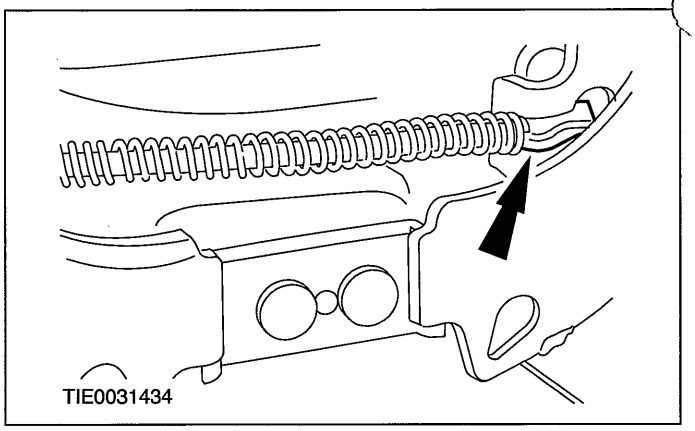


**12. Remove the brake shoes.**

### Installation

**1. NOTE:Make sure that the brake shoe adjuster is fully released.**

**NOTE:**Install a new parking brake cable retaining clip.

**To install, reverse the removal procedure.**

- Apply grease to the brake shoe adjuster strut.
- Clean the backing plate and apply silicon dieletic compound to the brake shoe contact points.

**2. Adjust the parking brake cable. For additional information, refer to Section 206-05 [Parking Brake and Actuation].**

## REMOVAL AND INSTALLATION

# Wheel Cylinder(12 305 0)

**General Equipment**

| |
|---|
| Brake hose clamp |

## Removal

⚠ **CAUTION:If brake fluid is spilt on the paintwork, the affected area must be immediately washed down with cold water.**

1. **Remove the brake shoes.**

   **For additional information, refer to Brake Shoes in this section.**

2. ⚠**CAUTION:Cap the brake tube to prevent fluid loss or dirt ingress.**

   **Disconnect the brake tube from the wheel cylinder.**

   1. Using a suitable brake hose clamp, clamp the brake hose.
   2. Disconnect the brake tube.

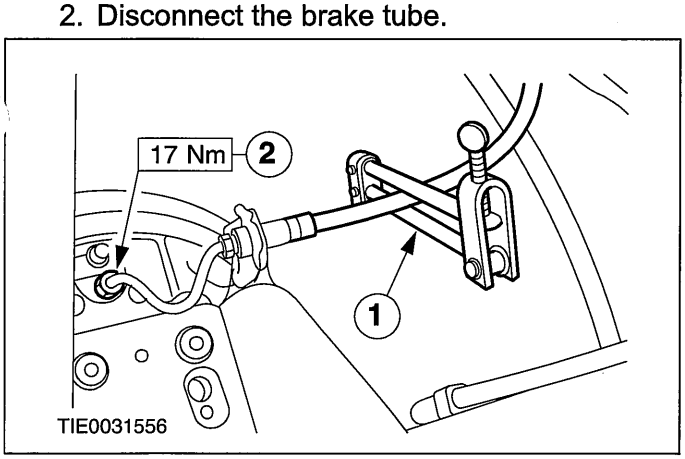


3. **Remove the wheel cylinder.**

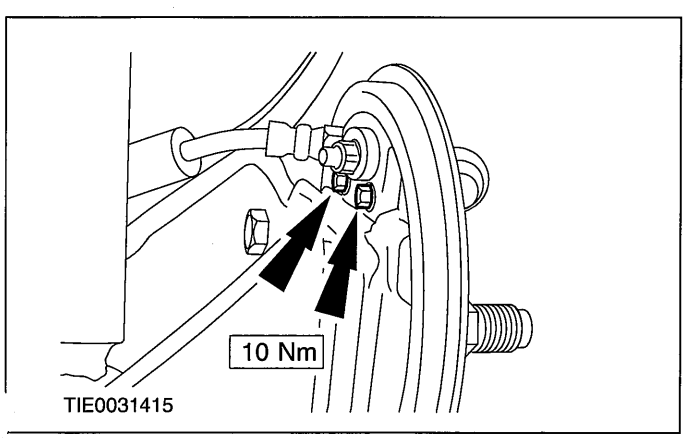


## Installation

1. **To install, reverse the removal procedure.**
2. **Bleed the brake system. For additional information, refer to Section 206-00 [Brake System - General Information].**

## REMOVAL AND INSTALLATION

# Brake Backing Plate(12 313 0)

**General Equipment**

| |
|---|
| Electric hand drill |
| Blind rivet gun-hand |

## Removal

1. **Remove the wheel cylinder.**

   **For additional information, refer to Wheel Cylinder in this section.**

2. **Detach the parking brake cable from the backing plate.**
   1. Depress the retaining clip.
   2. Detach the cable.

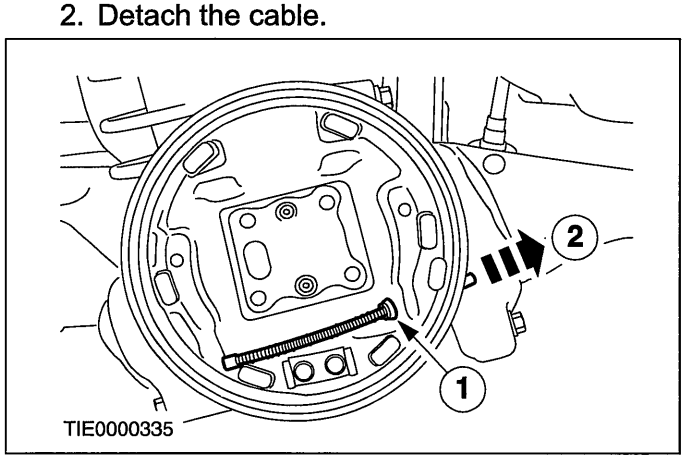


3. **Remove the brake backing plate.**
   - Using a suitable electric hand drill remove the rivets

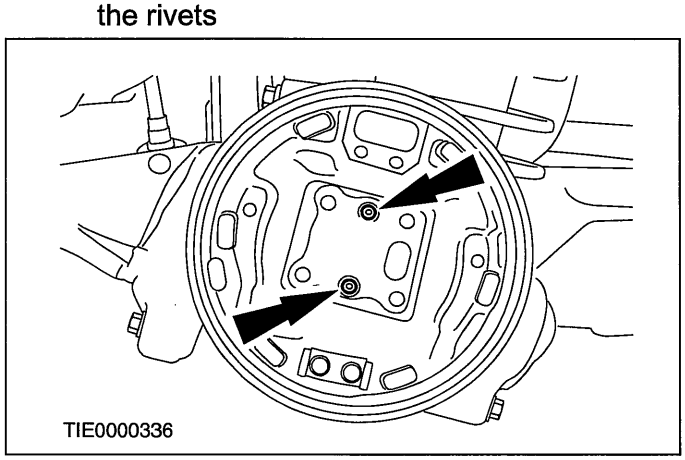


## Installation

1. **To install, reverse the removal procedure.**
   - Using a suitable blind rivet gun-hand, install new rivets.

# SECTION 206-03 Front Disc Brake

## VEHICLE APPLICATION:2006.0 Fiesta

CONTENTS PAGE

**SPECIFICATIONS**

Specifications..... 206-03-2
Front Disc Brake Specification..... 206-03-2

**DESCRIPTION AND OPERATION**

Front Disc Brake..... 206-03-3
Overview..... 206-03-3

**DIAGNOSIS AND TESTING**

Front Disc Brake..... 206-03-4

**REMOVAL AND INSTALLATION**

Brake Pads..... (12 234 0) 206-03-5
Brake Caliper..... (12 243 0) 206-03-7

# SPECIFICATIONS

## Lubricants, Fluids, Sealers and Adhesives

| | Specification |
|---|---|
| Brake Fluid - Super DOT 4 | ESD-M6C57-A |

## Front Disc Brake Specification

| Description | mm |
|---|---|
| Brake disc diameter | 258 |
| Brake disc diameter - Vehicles with 2.0L Duratec-HE | 278 |
| New brake disc nominal thickness | 22 |
| New brake disc nominal thickness - Vehicles with 2.0L Duratec-HE | 25 |
| Worn brake disc discard thickness * | 20 |
| Worn brake disc discard thickness - Vehicles with 2.0L Duratec-HE * | 23 |
| Maximum brake disc thickness variation | 0.025 |
| Worn brake pad discard thickness ** | 1.5 |
| Worn brake pad discard thickness - Vehicles with 2.0L Duratec-HE ** | 2.0 |

* When the discard thickness has been reached, install a new brake disc and new brake pads.

** When the discard thickness has been reached, install new brake pads.

## Torque Specifications

| Description | Nm | lb-ft | lb-in |
|---|---|---|---|
| Brake caliper anchor plate retaining bolts | 70 | 52 | - |
| Brake caliper anchor plate retaining bolts - Vehicles with 2.0L Duratec-HE | 80 | 59 | - |
| Brake caliper retaining bolts | 30 | 22 | - |
| Brake hose to brake caliper union | 17 | 13 | - |

## DESCRIPTION AND OPERATION

# Front Disc Brake

### Overview

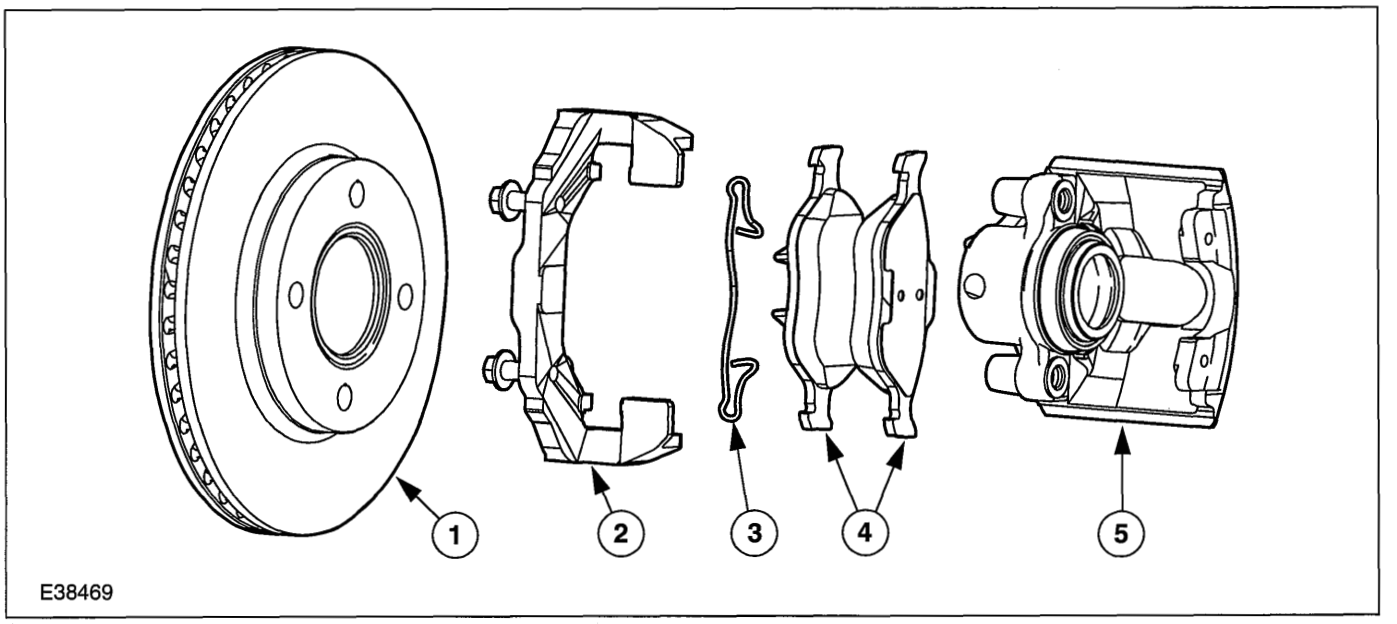


| Item | Description |
|---|---|
| 1 | Brake disc |
| 2 | Brake back plate assembly |
| 3 | Retaining spring clip |
| 4 | Brake pads |
| 5 | Brake caliper |

The front brake system has internally ventilated brake discs and a single-piston floating caliper.

The front disc brakes are the same on all vehicles, irrespective of the vehicle specifications.

Please refer to the "General Specifications" section for the dimensions of the brake discs.

The piston of the brake caliper has a diameter of 54 mm.

## DIAGNOSIS AND TESTING

# Front Disc Brake

REFER to Section 206-00 [Brake System - General Information].

## REMOVAL AND INSTALLATION

# Brake Pads(12 234 0)

### Special Tool(s)

| | |
|---|---|
| 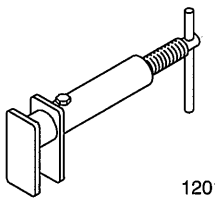 12014 | Retractor, Brake Caliper Piston 206-005 |

| Materials | |
|---|---|
| **Name** | **Specification** |
| Silicone Grease | ESE-M1C171-A |
| Brake Fluid - Super DOT4 | ESD-M6C57-A |

## Removal

⚠ **CAUTION:If brake fluid is spilt on the paintwork, the affected area must be immediately washed down with cold water.**

1. **Remove the wheel and tire.**

   **For additional information, refer to: Wheel and Tire (204-04 Wheels and Tires, Removal and Installation).**

2. **Remove the brake caliper retaining clip.**

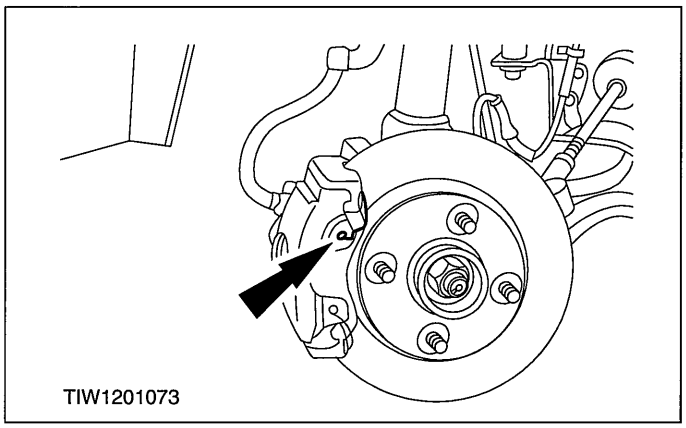
TIW1201073

3. **NOTE:Make a note of the position of the brake hose to aid installation.**

   **Detach the brake hose from the brake hose support bracket.**

- Remove the brake hose retaining clip.

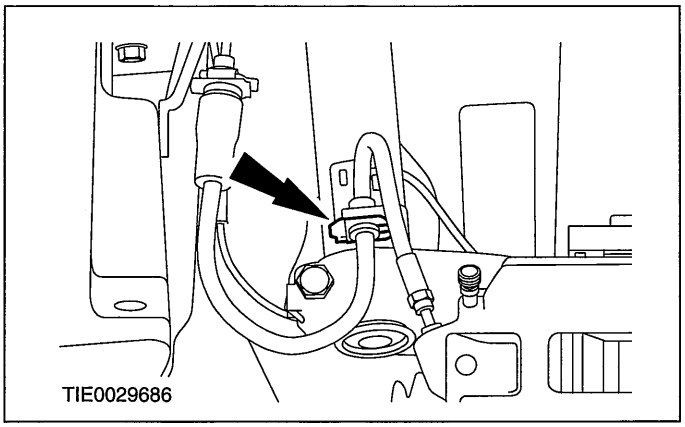
TIE0029686

4. ⚠**CAUTION:Suspend the brake caliper to prevent load being placed on the brake hose.**

   **Detach the brake caliper from the brake caliper anchor plate.**

   1. Remove the brake caliper retaining bolt covers (if equipped).
   2. Remove the brake caliper retaining bolts.

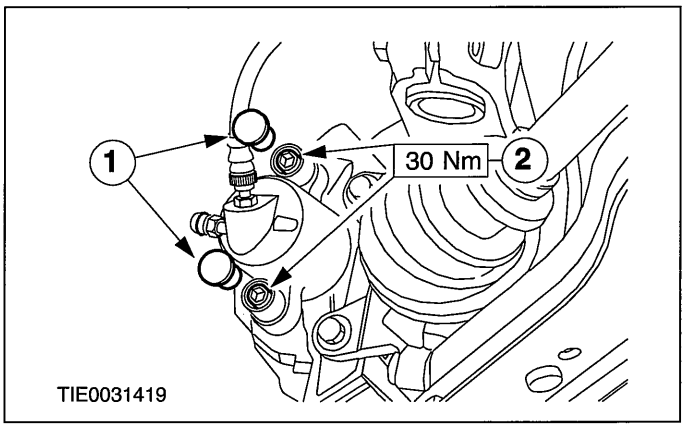

TIE0031419

5. **Remove the brake pads.**

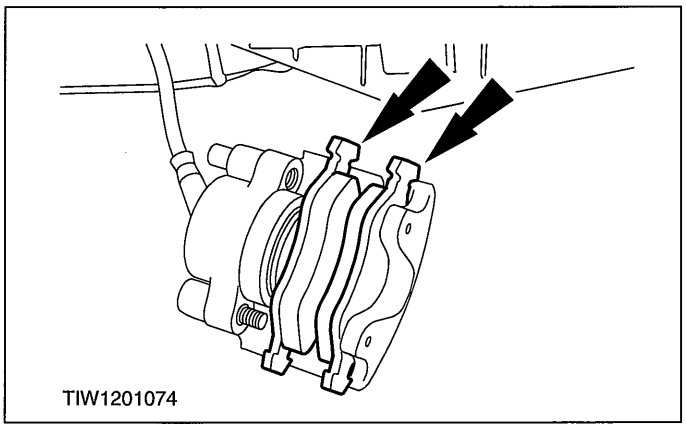
TIW1201074

## REMOVAL AND INSTALLATION

### Installation

1. **CAUTIONS:**

   **⚠When the brake caliper piston is retracted into the piston housing, brake fluid will be displaced into the brake fluid reservoir.**

   **⚠Support the brake caliper during brake caliper piston retraction.**

   **Using the special tool, retract the brake caliper piston.**

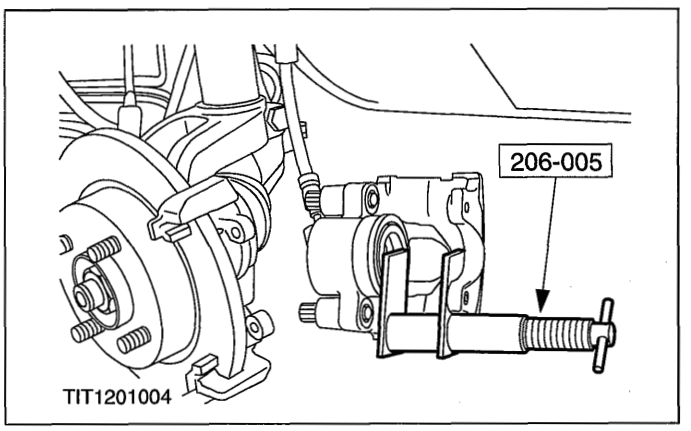


2. **CAUTIONS:**

   **⚠Do not twist the brake hose when installing the brake caliper to prevent damage to the brake hose.**

   **⚠Make sure that the brake hose is correctly located in the brake hose support bracket to prevent damage to the brake hose.**

   **⚠Make sure that the brake hose retaining clip is located on the underside of the brake hose support bracket to prevent damage to the brake hose.**

   **To install, reverse the removal procedure.**

   - Apply grease to the brake pad contact points.

3. **Fully depress and release the brake pedal.**
4. **Check the fluid level in the brake fluid reservoir and top up if necessary with brake fluid.**

## REMOVAL AND INSTALLATION

# Brake Caliper(12 243 0)

**General Equipment**

| |
|---|
| Brake hose clamp |

**Materials**

| Name | Specification |
|---|---|
| Silicone Grease | ESE-M1C171-A |

## Removal

⚠ **CAUTION:If brake fluid is spilt on the paintwork, the affected area must be immediately washed down with cold water.**

1. **Remove the wheel and tire.**

   **For additional information, refer to: Wheel and Tire (204-04 Wheels and Tires, Removal and Installation).**

2. **Remove the brake caliper retaining clip.**

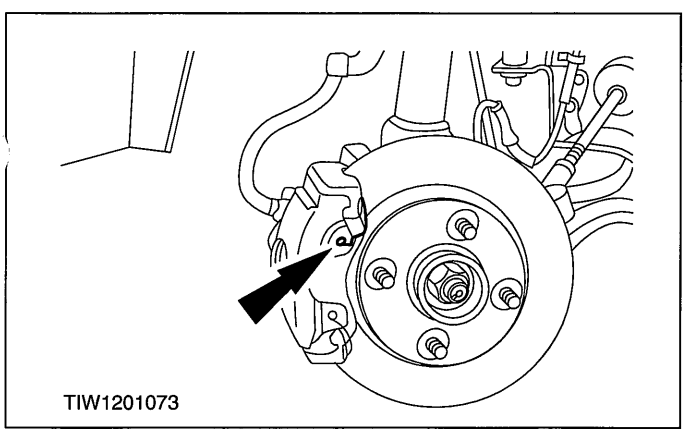


3. ⚠**CAUTION:Cap the brake hose to prevent fluid loss or dirt ingress.**

**NOTE:**Use a wrench to prevent the brake hose from rotating.

   **Disconnect the brake hose from the brake caliper.**

   1. Using a brake hose clamp, clamp the brake hose.
   2. Disconnect the brake hose.

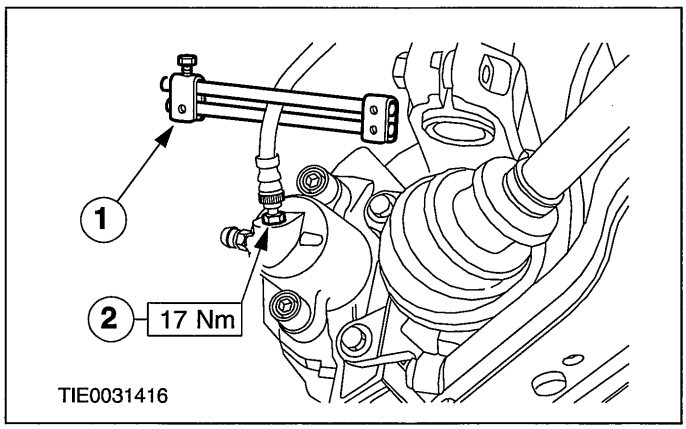


4. **Remove the brake caliper.**

   1. Remove the brake caliper retaining bolt covers (if equipped).
   2. Remove the brake caliper retaining bolts.

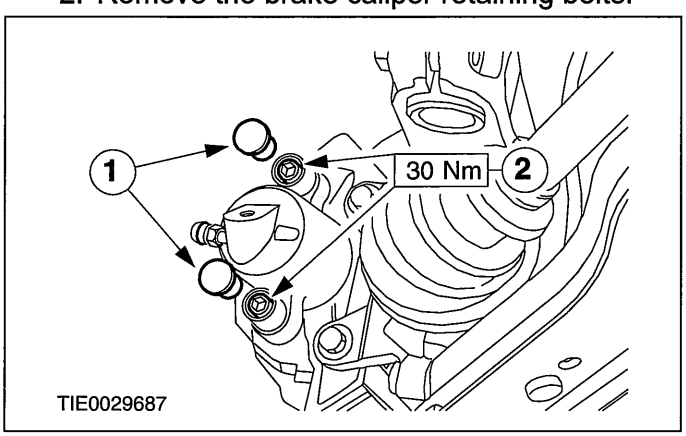


5. **Remove the brake pads.**

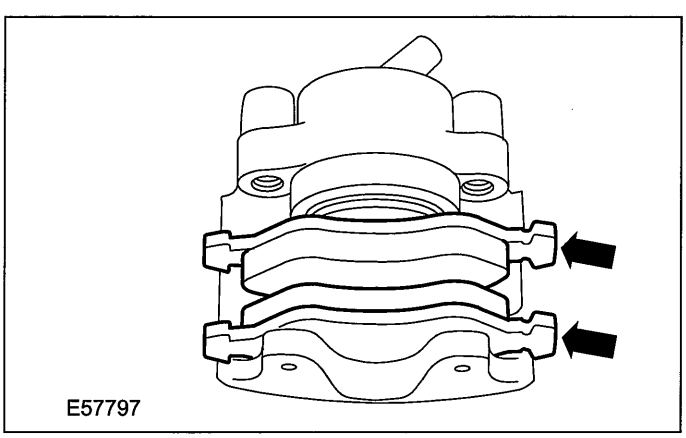


## Installation

1. ⚠**CAUTION:Do not twist the brake hose when connecting the brake hose to the brake caliper to prevent damage to the brake hose.**

## REMOVAL AND INSTALLATION

**To install, reverse the removal procedure.**

- Apply grease to the brake pad contact points.

2. **Bleed the brake system. For additional information, refer to: (206-00 Brake System - General Information)**

   **Brake System Bleeding (General Procedures),**
   **Brake System Pressure Bleeding (General Procedures).**

# SECTION 206-04 Rear Disc Brake

## VEHICLE APPLICATION:2006.0 Fiesta

CONTENTS PAGE

**SPECIFICATIONS**

Specifications..... 206-04-2
Brake Disc Specification..... 206-04-2

**DESCRIPTION AND OPERATION**

Rear Disc Brake..... 206-04-3

**DIAGNOSIS AND TESTING**

Rear Disc Brake..... 206-04-5

**REMOVAL AND INSTALLATION**

Brake Pads..... (12 238 0) 206-04-6
Brake Caliper..... (12 253 0) 206-04-8
Brake Disc..... (12 225 0) 206-04-10
Brake Disc Shield..... 206-04-11

## SPECIFICATIONS

### Lubricants, Fluids, Sealers and Adhesives

| Item | Specification |
|---|---|
| Brake Fluid - Super DOT 4 | ESD-M6C57-A |

### Brake Disc Specification

| Description | mm |
|---|---|
| Brake disc diameter | 280 |
| New brake disc nominal thickness | 10.15 |
| Worn brake disc discard thickness* | 8 |
| Maximum brake disc thickness variation | 0.02 |
| Worn brake pad discard thickness* | 1.50 |
| Brake caliper piston diameter | 34 |
| *When the discard thickness has been reached, install a new brake disc/brake pads. | |

### Torque Specifications

| Item | Nm | lb-ft | lb-in |
|---|---|---|---|
| Wheel spindle retaining bolts | 66 | 49 | - |
| Brake caliper anchor plate retaining bolts | 60 | 44 | - |
| Brake caliper retaining bolts | 35 | 26 | - |
| Brake tube to brake caliper union | 15 | 11 | - |

## DESCRIPTION AND OPERATION

# Rear Disc Brake

**Rear Wheel Hub and Disc Brake Assembly**

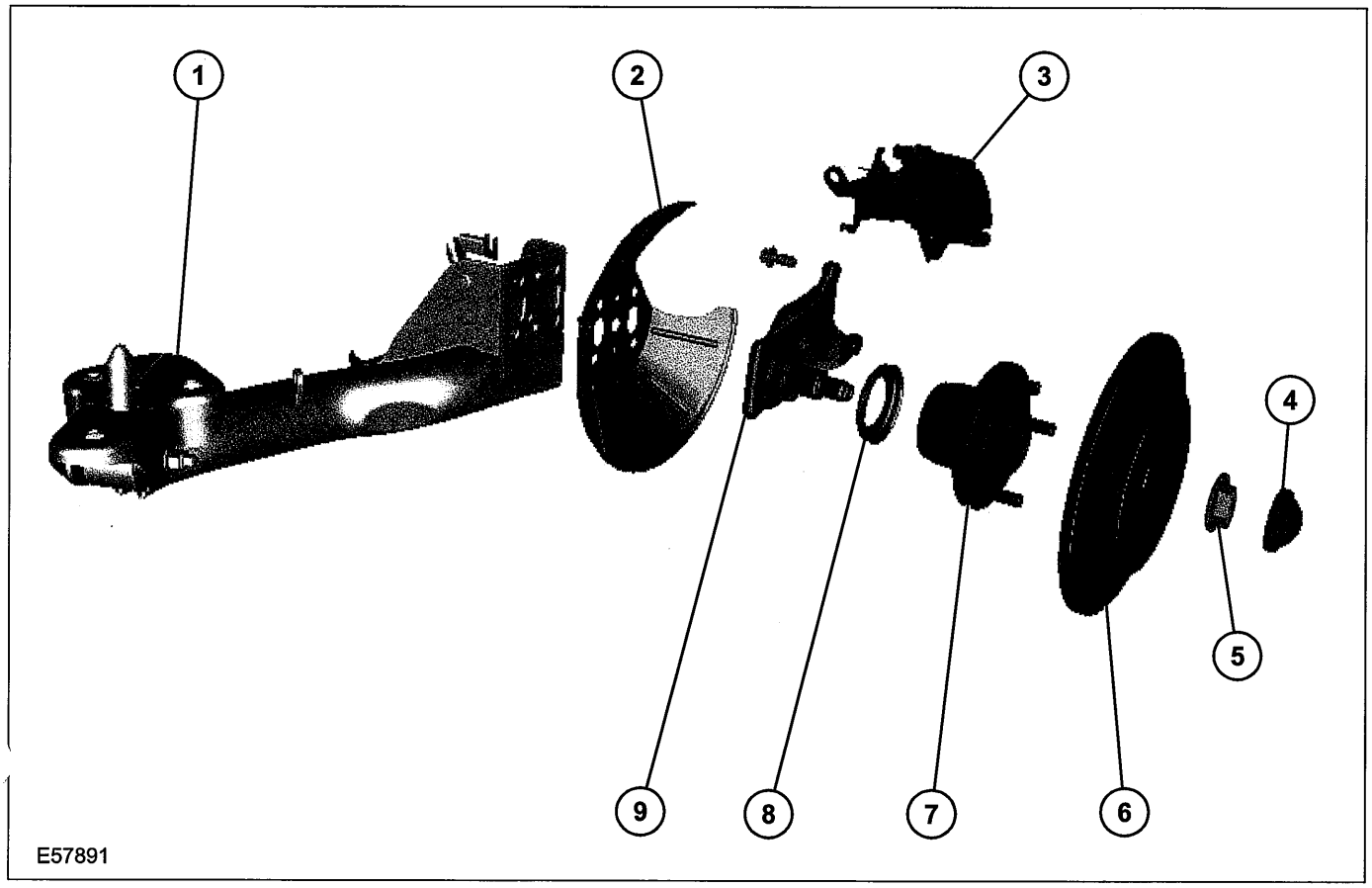


| Item | Description |
|---|---|
| 1 | Beam axle |
| 2 | Brake disc shield |
| 3 | Brake caliper and brake caliper anchor plate assembly |
| 4 | Dust cap |

| Item | Description |
|---|---|
| 5 | Wheel hub retaining nut |
| 6 | Brake disc |
| 7 | Wheel hub |
| 8 | Wheel speed sensor ring |
| 9 | Wheel spindle |

## DESCRIPTION AND OPERATION

### Brake Caliper and Brake Caliper Anchor Plate Assembly

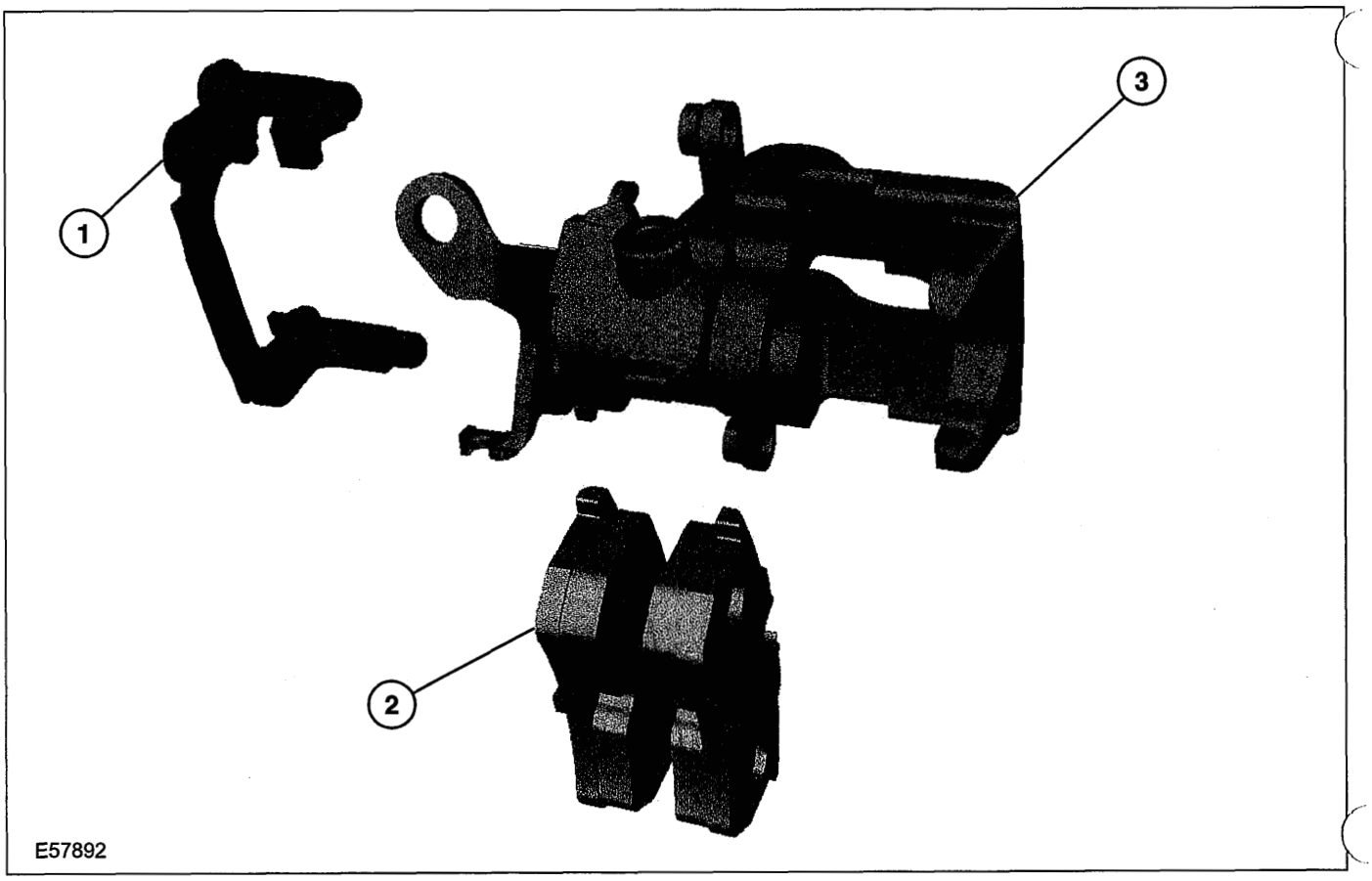


| Item | Description |
|---|---|
| 1 | Brake caliper anchor plate |
| 2 | Brake pads |
| 3 | Brake caliper |

## DIAGNOSIS AND TESTING

# Rear Disc Brake

REFER to: Brake System (206-00 Brake System - General Information, Diagnosis and Testing).

## REMOVAL AND INSTALLATION

# Brake Pads(12 238 0)

### Special Tool(s)

| | |
|---|---|
| 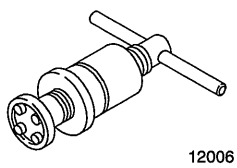 12006 | Retractor, Rear Brake Caliper Piston 206-012 |

| Materials | |
|---|---|
| **Name** | **Specification** |
| Brake Fluid - Super DOT4 | ESD-M6C57-A |

## Removal

⚠ **CAUTION:If brake fluid is spilt on the paintwork, the affected area must be immediately washed down with cold water.**

1. **Release the parking brake.**
2. **Remove the wheel and tire.**

   **For additional information, refer to: Wheel and Tire (204-04 Wheels and Tires, Removal and Installation).**
3. **Detach the brake hose from the brake hose support bracket.**

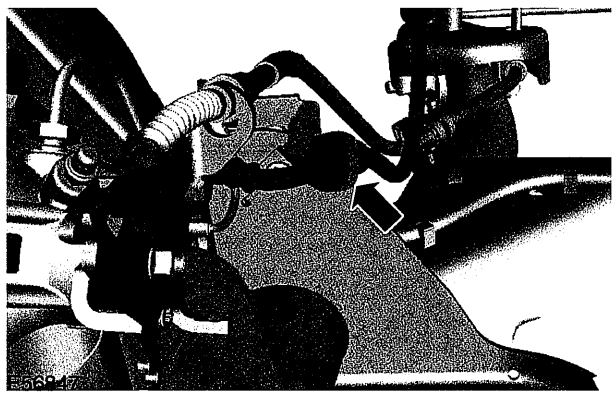

4. ⚠**CAUTION:Suspend the brake caliper to prevent load being placed on the brake hose.**

   **Detach the brake caliper from the brake caliper anchor plate.**

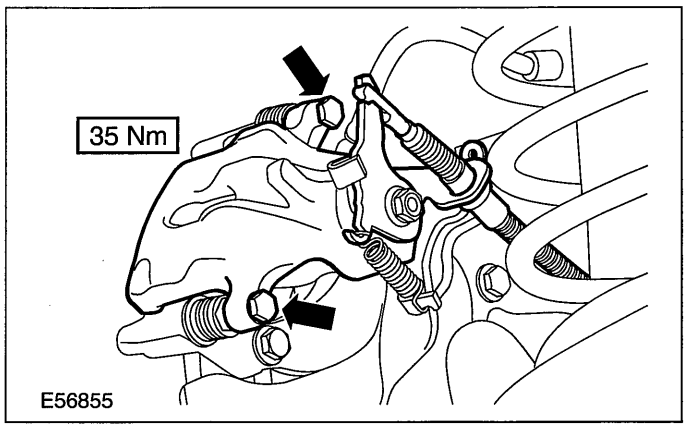


5. **Remove the brake pads.**

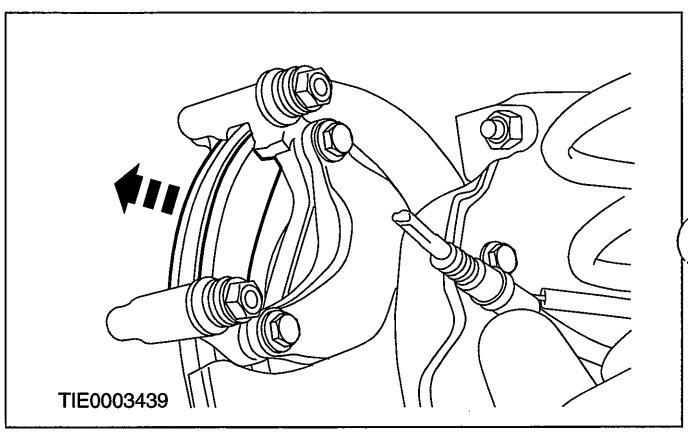


## Installation

1. **CAUTIONS:**

   ⚠**When the brake caliper piston is retracted into the brake caliper piston housing, brake fluid will be displaced into the brake fluid reservoir.**

   ⚠**Support the brake caliper during brake caliper piston retraction.**

## REMOVAL AND INSTALLATION

Using the special tool, retract the brake caliper piston.

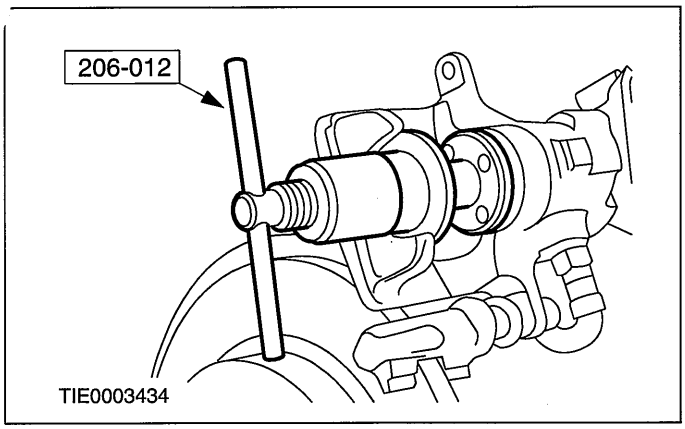


2. NOTE:Make sure that the brake pad contact points are clean and free from contamination.

   To install, reverse the removal procedure.

3. Fully depress and release the brake pedal.
4. Check the fluid level in the brake fluid reservoir and top up if necessary with brake fluid.

## REMOVAL AND INSTALLATION

# Brake Caliper(12 253 0)

### Special Tool(s)

| | |
|---|---|
| 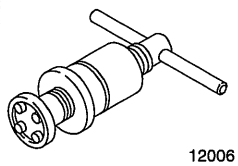 12006 | Retractor, Rear Brake Caliper Piston 206-012 |

### General Equipment

| |
|---|
| Brake hose clamp |

| Materials | |
|---|---|
| **Name** | **Specification** |
| Brake Fluid - Super DOT4 | ESD-M6C57-A |

## Removal

⚠ **CAUTION:If brake fluid is spilt on the paintwork, the affected area must be immediately washed down with cold water.**

1. **Release the parking brake.**
2. **Remove the wheel and tire.**

   **For additional information, refer to: Wheel and Tire (204-04 Wheels and Tires, Removal and Installation).**
3. **Detach the parking brake cable from the brake caliper.**
   1. Pull back the brake caliper lever.
   2. Disconnect the parking brake cable from the brake caliper lever.
   3. Detach the parking brake cable from the brake caliper.

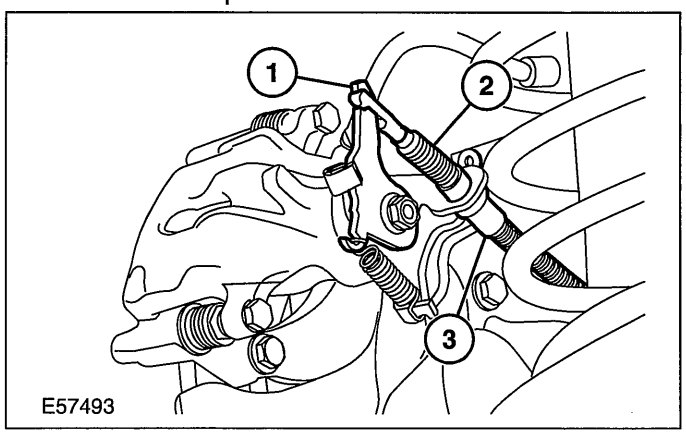


4. **Using a brake hose clamp, clamp the brake hose.**

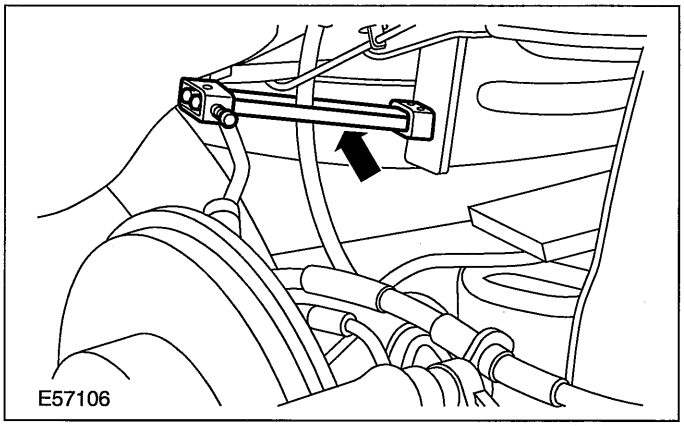


5. ⚠**CAUTION:Cap the brake hose to prevent fluid loss or dirt ingress.**

   **Disconnect the brake tube from the brake caliper.**

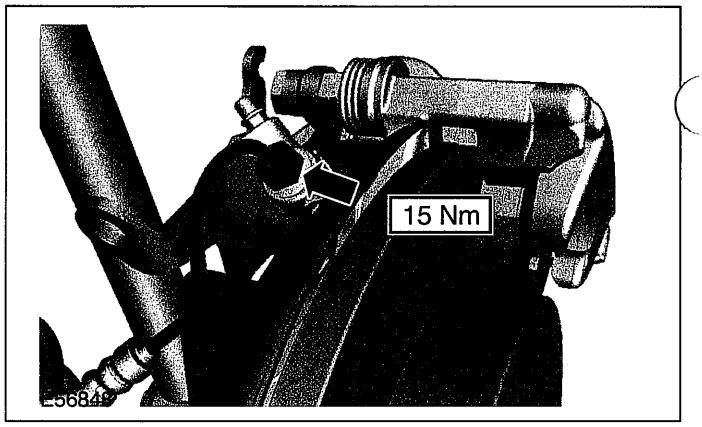


6. **Detach the brake caliper from the brake caliper anchor plate.**

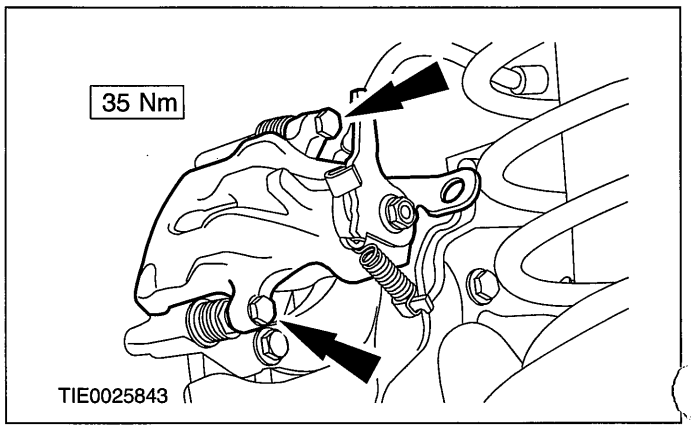

## REMOVAL AND INSTALLATION

7. **Remove the brake pads.**

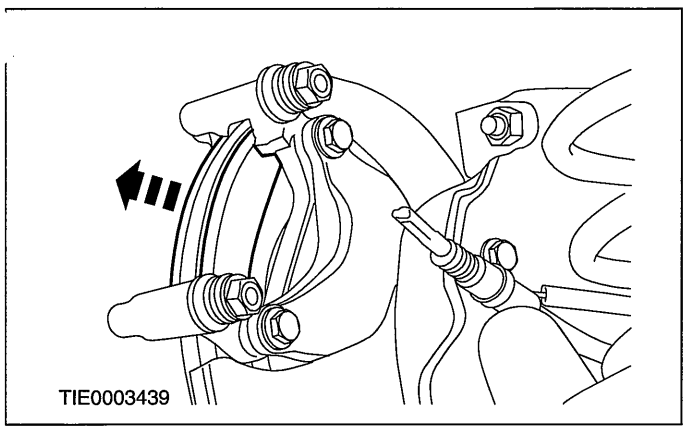


8. **Remove the brake caliper anchor plate.**

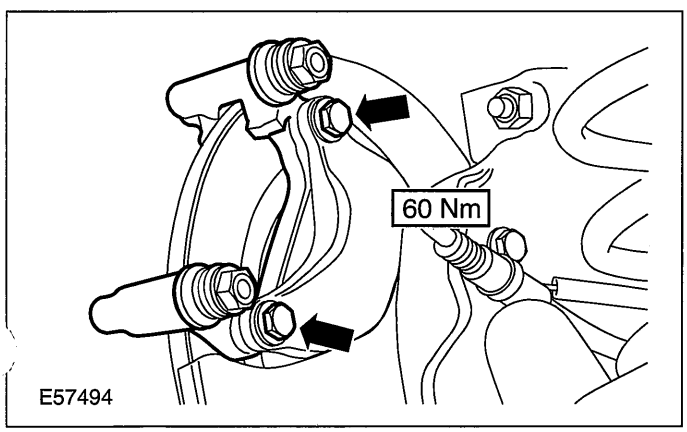


### Installation

1. **Using the special tool, retract the brake caliper piston.**

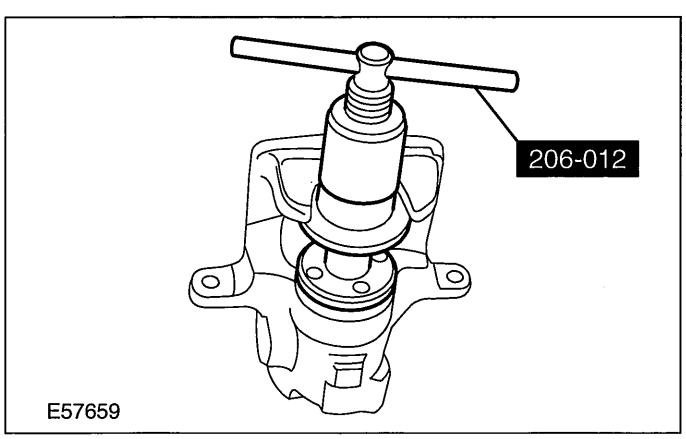


2. **NOTE:Make sure that the brake pad contact points are clean and free from contamination.**

   **To install, reverse the removal procedure.**

3. **Bleed the brake system. For additional information, refer to: (206-00 Brake System - General Information)**

   **Brake System Bleeding (General Procedures),**
   **Brake System Pressure Bleeding (General Procedures).**

## REMOVAL AND INSTALLATION

# Brake Disc(12 225 0)

### Removal

1. **Release the parking brake.**
2. **Remove the wheel and tire.**

   **For additional information, refer to: Wheel and Tire (204-04 Wheels and Tires, Removal and Installation).**
3. **Detach the brake hose from the brake hose support bracket.**

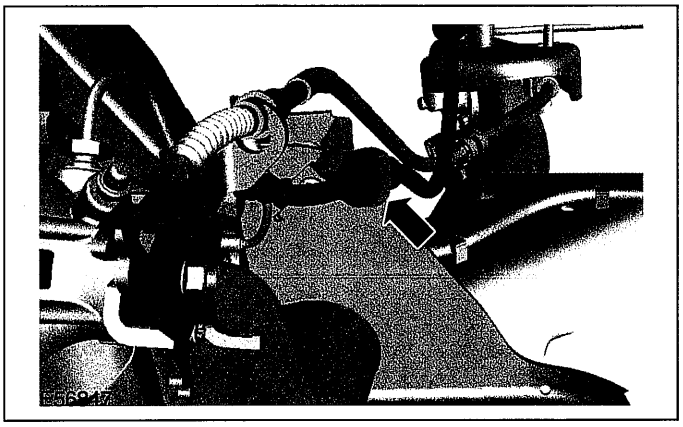

4. **⚠CAUTION:Suspend the brake caliper and brake caliper anchor plate assembly to prevent load being placed on the brake hose.**

   **Detach the brake caliper and brake caliper anchor plate assembly from the wheel spindle (parking brake cable shown removed for clarity).**

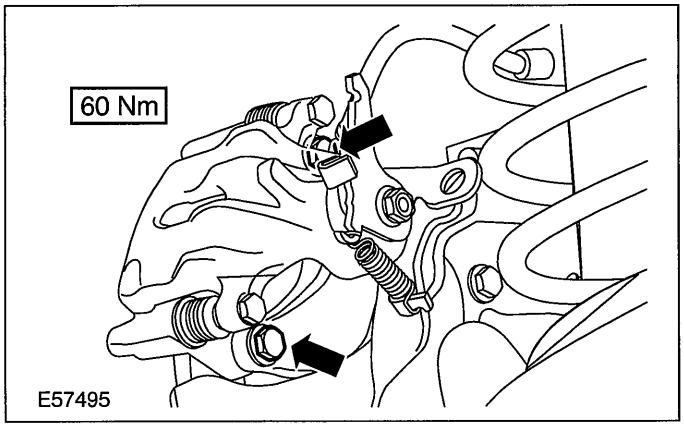


5. **Remove the brake disc.**

- Remove the brake disc retaining clip (if equipped).

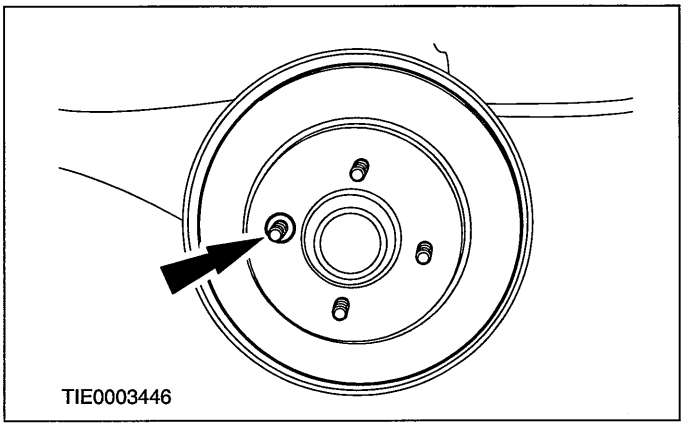


### Installation

1. **To install, reverse the removal procedure.**

## REMOVAL AND INSTALLATION

# Brake Disc Shield

### General Equipment

| |
|---|
| Electric hand drill |
| Blind rivet gun |

## Removal

1. **Remove the brake disc.**

   **For additional information, refer to: Brake Disc (206-04 Rear Disc Brake, Removal and Installation).**

2. **Detach the wheel speed sensor from the wheel spindle.**

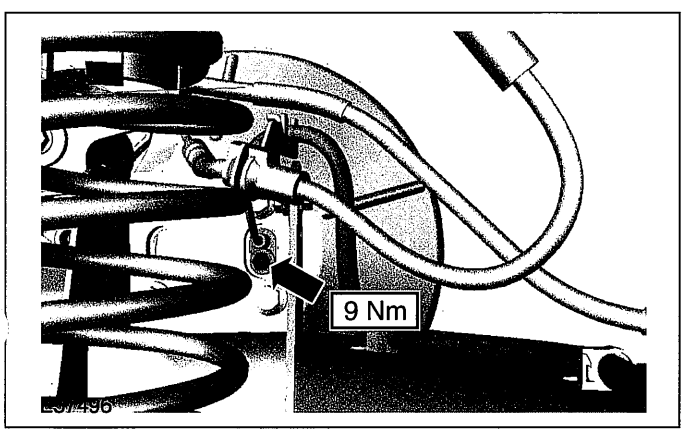


3. **Remove the wheel spindle and wheel hub assembly.**

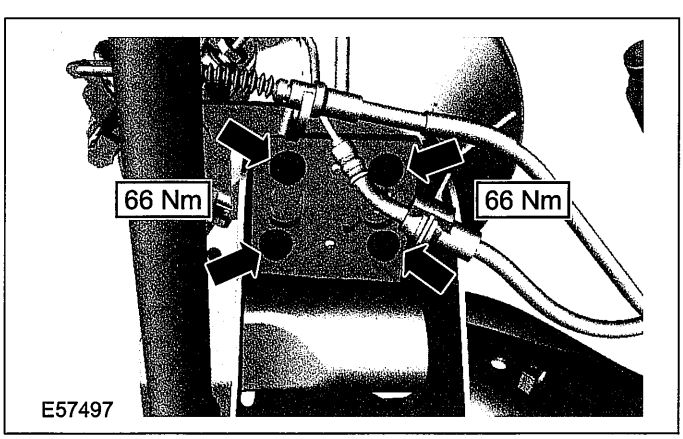


4. **Remove the brake disc shield.**

- Using an electric hand drill, remove the rivets.

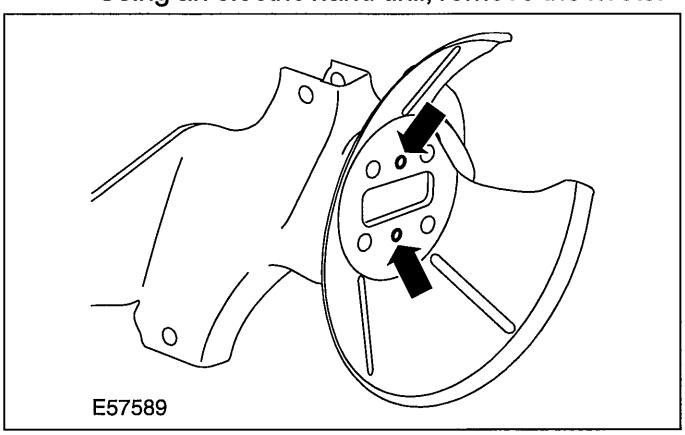


## Installation

1. **⚠CAUTION:Make sure that the mating faces are clean and free from rust and foreign material.**

**NOTE:**Using a blind rivet gun, install new rivets.

**To install, reverse the removal procedure.**

# SECTION 206-05 Parking Brake and Actuation

## VEHICLE APPLICATION:2006.0 Fiesta

CONTENTS PAGE


**SPECIFICATIONS**

Specifications ..... 206-05-2

**DESCRIPTION AND OPERATION**

Parking Brake ..... 206-05-3
Overview ..... 206-05-3

**DIAGNOSIS AND TESTING**

Parking Brake ..... 206-05-5
Inspection and Verification ..... 206-05-5
Symptom Chart ..... 206-05-5
Pinpoint Tests ..... 206-05-5

**GENERAL PROCEDURES**

Parking Brake Cable Adjustment — Vehicles With: Rear Drum Brakes ..... (12 662 0) 206-05-9
Parking Brake Cable Adjustment — Vehicles With: Rear Disc Brakes ..... (12 662 0) 206-05-11

**REMOVAL AND INSTALLATION**

Parking Brake Cable — Vehicles With: Rear Drum Brakes ..... (12 675 0) 206-05-13
Parking Brake Cable — Vehicles With: Rear Disc Brakes ..... (12 675 0) 206-05-15
Parking Brake Control ..... (12 664 0) 206-05-17

## SPECIFICATIONS

### Torque Specifications

| Description | Nm | lb-ft | lb-in |
|---|---|---|---|
| Parking brake cable adjustment nut | 4 | - | 35 |
| Parking brake control retaining nuts | 24 | 18 | - |

## DESCRIPTION AND OPERATION

# Parking Brake

### Overview

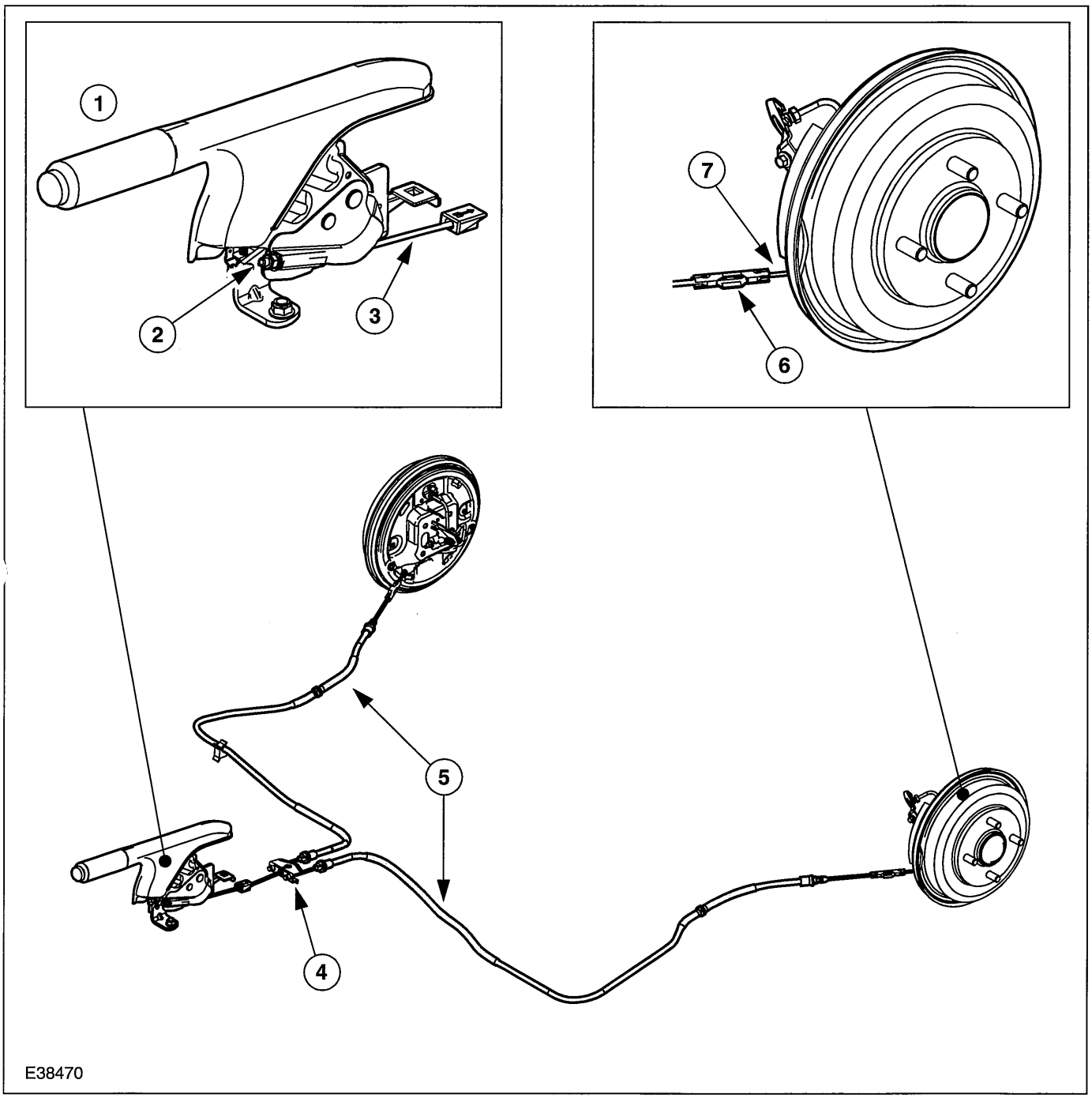


| Item | Description |
|---|---|
| 1 | Handbrake lever |
| 2 | Handbrake adjusting nut |
| 3 | Front handbrake cable |
| 4 | Equaliser |
| 5 | Handbrake cables |

| Item | Description |
|---|---|
| 6 | Sleeve connection |
| 7 | Rear handbrake cable |

# DESCRIPTION AND OPERATION

## Layout

The handbrake cable mechanism consists of three sections: the front handbrake cable, the two handbrake cables underneath the vehicle and the two rear handbrake cables leading to the brakes.

The front handbrake cable is connected to the handbrake lever via a threaded piece and a nut. This nut is used to adjust the handbrake cable.

The two handbrake cables underneath the vehicle are both connected via a threaded piece and a nut to the equaliser and therefore the front handbrake cable. They are connected to the rear handbrake cables via a sleeve connection.

The rear handbrake cables in turn link into the lever mechanism of the rear brakes.

## Function

When the handbrake lever is operated, the front handbrake cable acts via the equaliser onto the two handbrake cables underneath the vehicle. Via the sleeve connection pieces these then act onto the rear handbrake cables and, via the lever mechanism, onto the brake.

## DIAGNOSIS AND TESTING

# Parking Brake

## Inspection and Verification

1. Verify the customer concern by operating the parking brake system.
2. Visually inspect for obvious signs of mechanical or electrical damage.

**Visual Inspection Chart**

| Mechanical | Electrical |
|---|---|
| – Parking brake control<br>REFER to: Parking Brake Control (206-05, Removal and Installation).<br>– Cable and conduit<br>REFER to: Parking Brake Cable (206-05, Removal and Installation). | – Parking brake warning circuit.<br>REFER to: Instrument Cluster (413-01, Diagnosis and Testing). |

3. If an obvious cause for an observed or reported concern is found, correct the cause (if possible) before proceeding to the next step.
4. If the concern is not visually evident, verify the symptom and refer to the Symptom Chart.

## Symptom Chart

**Symptom Chart**

| Symptom | Possible Sources | Action |
|---|---|---|
| • The parking brake will not apply | • Parking brake control.<br>• Cable and conduit. | • GO to Pinpoint Test A. |
| • The parking brake will not release | • Parking brake control.<br>• Cable and conduit. | • GO to Pinpoint Test B. |

## Pinpoint Tests

**PINPOINT TEST A : THE PARKING BRAKE WILL NOT APPLY**

| TEST CONDITIONS | DETAILS/RESULTS/ACTIONS |
|---|---|
| **A1: CHECK FOR MISADJUSTED REAR PARKING BRAKE CABLE** | |
| | 1 Operate the parking brake control several times to adjust the cable.<br>• Does the parking brake now engage correctly?<br>→ **Yes**<br>Vehicle OK<br>→ **No**<br>GO to A2. |

## DIAGNOSIS AND TESTING

| TEST CONDITIONS | DETAILS/RESULTS/ACTIONS |
|---|---|
| **A2: CHECK FOR WORN BRAKE SHOES OR PADS** | |
| | 1 Inspect the brake shoes or pads for excessive wear.<br>REFER to: Specifications (206-00, Specifications)<br>/ Brake Shoes (206-02 Drum Brake, Removal and Installation)<br>/ Brake Pads (206-04, Removal and Installation).<br>• Are the brake shoe linings or brake pads OK?<br>→ **Yes**<br>GO to A3.<br>→ **No**<br>INSTALL new brake shoes or pads.<br>REFER to: Brake Shoes (206-02 Drum Brake, Removal and Installation)<br>/ Brake Pads (206-04, Removal and Installation).<br>TEST the system for normal operation. |
| **A3: CHECK FOR DAMAGED PARKING BRAKE CABLES** | |
| | 1 Inspect the parking brake cables and conduits for damage, rust or fraying.<br>• Are the parking brake cables and conduits OK?<br>→ **Yes**<br>CHECK for other causes such as loose parking brake control or conventional brake system components.<br>→ **No**<br>REPAIR or INSTALL cables and conduit as necessary. TEST the system for normal operation. |

## DIAGNOSIS AND TESTING

### PINPOINT TEST B : THE PARKING BRAKE WILL NOT RELEASE

| TEST CONDITIONS | DETAILS/RESULTS/ACTIONS |
|---|---|
| **B1: CHECK PARKING BRAKE CONTROL** | |
| | 1 Raise and support the vehicle on a lift with the parking brake fully applied.<br>REFER to: Lifting (100-02, Description and Operation).<br>– With the aid of another technician, release the parking brake and check the operation of the brake cables and levers.<br>• Did the parking brake release?<br>→ **Yes**<br>CHECK the other causes such as conventional brake system components. REPAIR or INSTALL new components as necessary.<br>→ **No**<br>GO to B2. |
| **B2: CHECK PARKING BRAKE CABLES** | |
| | 1 Loosen the parking brake cable tension.<br>– Rotate the rear wheels by hand.<br>• Did the rear wheels turn freely?<br>→ **Yes**<br>INSTALL a new parking brake control.<br>REFER to: Parking Brake Control (206-05, Removal and Installation).<br>TEST the system for normal operation.<br>→ **No**<br>GO to B3. |
| **B3: CHECK FRONT PARKING BRAKE CABLE** | |
| | 1 Disconnect the parking brake front cable and conduit from the rear brake cable and conduit at the equalizer.<br>– Rotate the rear wheels by hand.<br>• Did the rear wheels turn freely?<br>→ **Yes**<br>INSTALL a new front parking brake cable and conduit.<br>REFER to: Parking Brake Cable (206-05, Removal and Installation).<br>TEST the system for normal operation.<br>→ **No**<br>GO to B4. |

## DIAGNOSIS AND TESTING

| TEST CONDITIONS | DETAILS/RESULTS/ACTIONS |
|---|---|
| **B4: CHECK REAR PARKING BRAKE CABLES** | |
| | 1 Disconnect the parking brake at the rear brakes, one at a time.<br>– Rotate the wheel affected by the disconnected parking brake.<br>• Did the wheel turn freely?<br>→ **Yes**<br>INSTALL a new parking brake control lever on the rear drum brakes or caliper assembly on rear disc brakes.<br>REFER to: Brake Shoes (206-02 Drum Brake, Removal and Installation) / Brake Caliper (206-04, Removal and Installation).<br>TEST the system for normal operation.<br>→ **No**<br>REFER to: Brake System (206-00, Diagnosis and Testing). |

## GENERAL PROCEDURES

# Parking Brake Cable Adjustment — Vehicles With: Rear Drum Brakes(12 662 0)

1. **Remove the parking brake control trim panel.**

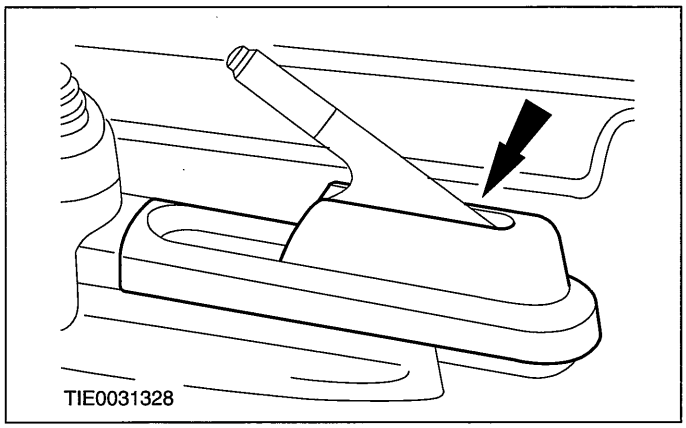


2. **Loosen the parking brake cable adjustment nut to the end of the thread.**
   - Discard the retaining clip.

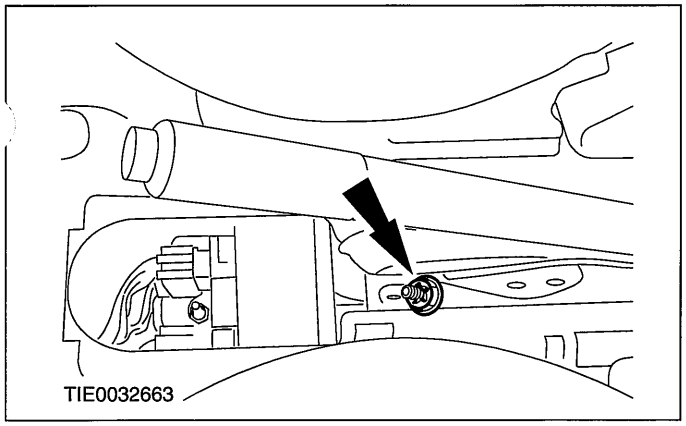


3. **Release the parking brake.**
4. **Make sure that the parking brake cable is correctly located.**
5. **NOTE:Prior to carrying out the adjustment to a new or relocated parking brake cable, settle the parking brake system.**

   **Settle the parking brake system in five stages.**
   - Stage 1: Raise the parking brake control four notches.
   - Stage 2: Tighten the adjustment nut until increased torque is detected.
   - Stage 3: Operate the parking brake control firmly ten times.
   - Stage 4: Loosen the adjustment nut to the end of the thread.
   - Stage 5: Depress the brake pedal firmly fifteen times.
6. **Release the parking brake.**
7. **Remove the brake backing plate inspection cover on both sides (left-hand side shown).**

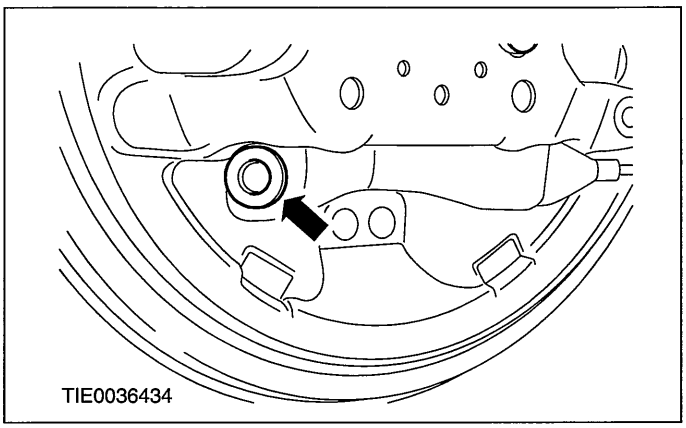


8. **NOTE:Make sure that the parking brake control is fully released.**

   **Adjust the parking brake cable in two stages**
   .
   - Stage 1: With the aid of another technician, tighten the parking brake cable adjustment nut until the parking brake levers operate (left-hand side shown).
   - Stage 2: When movement is observed on both levers, tighten the parking brake cable adjustment nut two full turns.

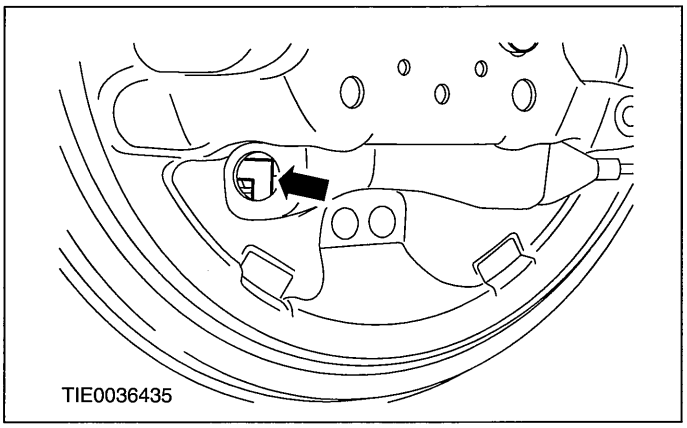

## GENERAL PROCEDURES

**9. Install the brake backing plate inspection cover on both sides (left-hand side shown).**

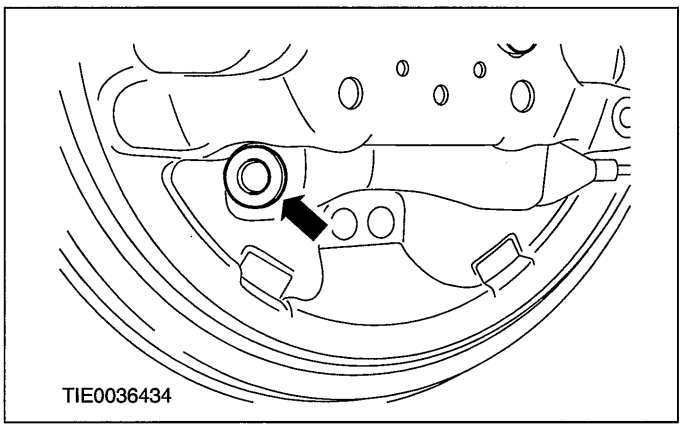


**10. Check the parking brake cable adjustment in two stages.**

- Stage 1: Raise and release the parking brake control and check that it returns to the fully released position. If the parking brake control does not fully release, repeat the adjustment procedure.
- Stage 2: Rotate the rear wheels and check for brake drag. If brake drag is felt, loosen the parking brake cable adjustment nut two full turns and repeat the adjustment procedure.

**11. Install a new parking brake cable adjustment nut retaining clip.**

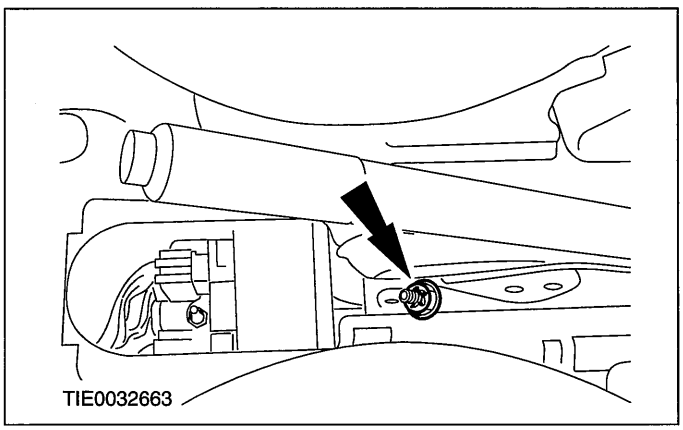


**12. Install the parking brake control trim panel.**

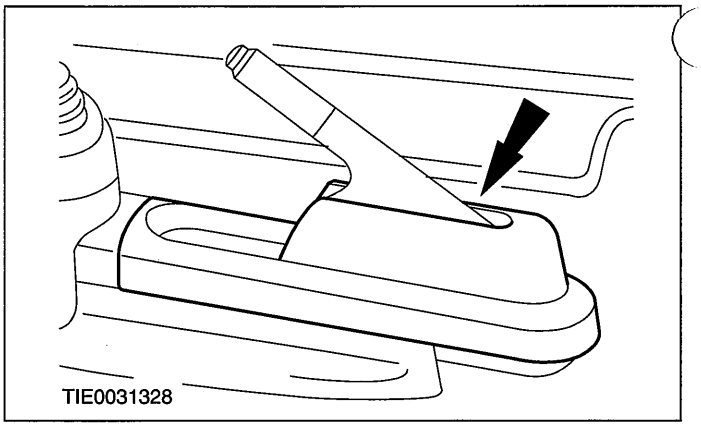

## GENERAL PROCEDURES

# Parking Brake Cable Adjustment — Vehicles With: Rear Disc Brakes(12 662 0)

1. **Remove the parking brake control trim panel.**

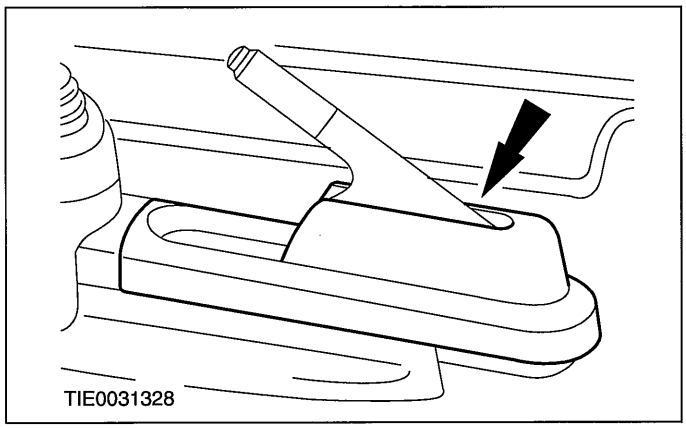


2. **Loosen the parking brake cable adjustment nut to the end of the thread.**
   - Discard the retaining clip.

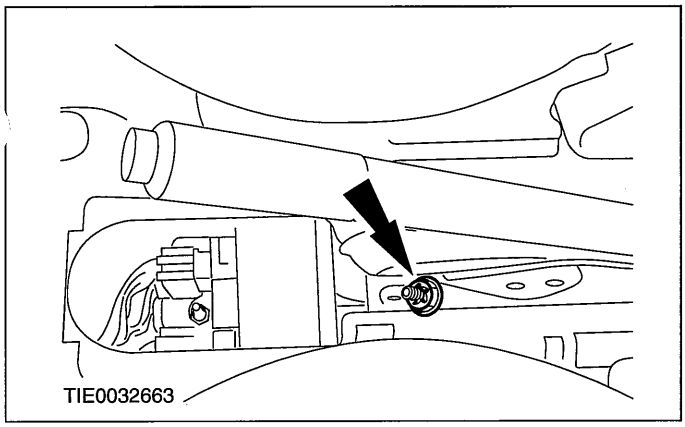


3. **Release the parking brake.**
4. **Make sure that the parking brake cable is correctly located.**
5. **NOTE:Prior to carrying out adjustment to a new or relocated parking brake cable, settle the parking brake system.**

   **Settle the parking brake system in 5 stages.**
   - Stage 1: Raise the parking brake control 4 notches.
   - Stage 2: Tighten the parking brake cable adjustment nut until increased torque is detected.
   - Stage 3: Operate the parking brake control firmly 10 times.
   - Stage 4: Loosen the parking brake cable adjustment nut to the end of the thread.
   - Stage 5: Depress the brake pedal firmly 15 times.
6. **Release the parking brake.**
7. **Raise and support the vehicle. For additional information, refer to: (100-02 Jacking and Lifting)**

   **Jacking (Description and Operation), Lifting (Description and Operation).**
8. **NOTE:Make sure that the parking brake control is fully released.**

   **Adjust the parking brake cable in 2 stages.**
   - Stage 1: With the aid of another technician, tighten the parking brake cable adjustment nut until both the parking brake actuating levers start to move (left-hand parking brake actuating lever shown).
   - Stage 2: Tighten the parking brake cable adjustment nut until the total movement between both the parking brake actuating levers and the stops, when added together, is between 0.5 mm and 2.0 mm (left-hand parking brake actuating lever shown).

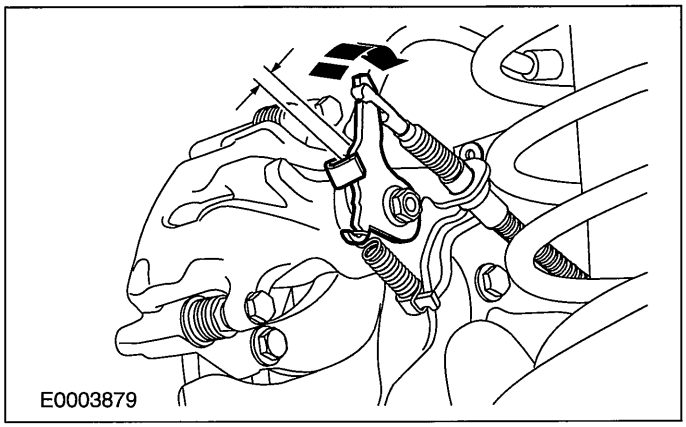


9. **Check the parking brake cable adjustment in 2 stages.**
   - Stage 1: Raise and release the parking brake control and check that it returns to the fully released position. If the parking brake control does not fully release, repeat the adjustment procedure.
   - Stage 2: Rotate the rear wheels and check for brake drag. If brake drag is felt, loosen the parking brake cable adjustment nut 2 full turns and repeat the adjustment procedure.
10. **Lower the vehicle.**

## GENERAL PROCEDURES

**11. Install a new parking brake cable adjustment nut retaining clip.**

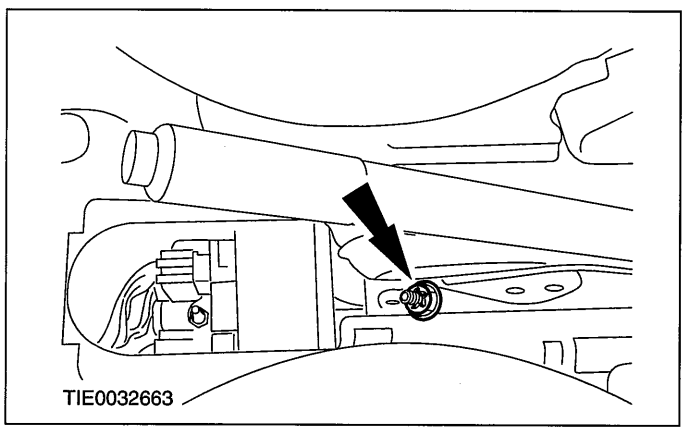


**12. Install the parking brake control trim panel.**

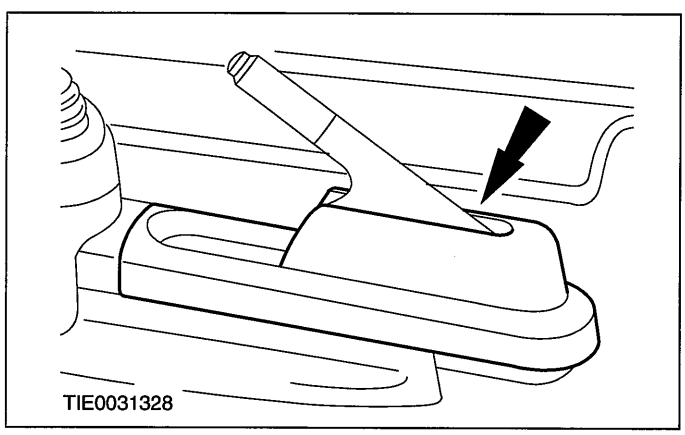

## REMOVAL AND INSTALLATION

# Parking Brake Cable — Vehicles With: Rear Drum Brakes(12 675 0)

| Materials | |
|---|---|
| **Name** | **Specification** |
| Lubricant | ESE-M99B144-B |

## Removal

1. **Release the parking brake.**
2. **Raise and support the vehicle. For additional information, refer to: (100-02 Jacking and Lifting)**

   **Jacking (Description and Operation), Lifting (Description and Operation).**
3. **⚠CAUTION:Take care when removing the exhaust hanger insulators to prevent damage.**

   **Detach the exhaust rear muffler from the exhaust hanger insulators.**

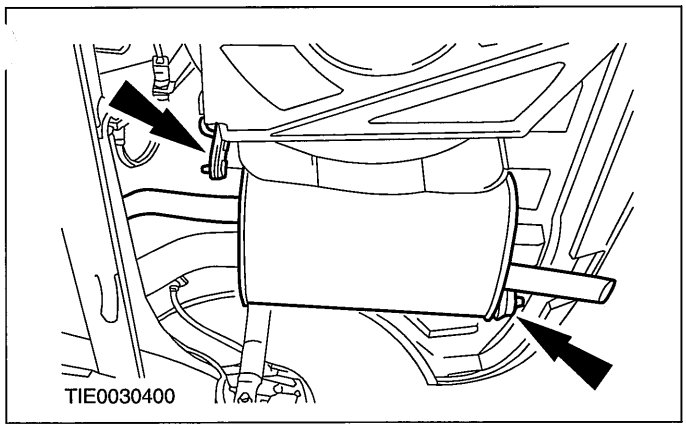
TIE0030400

4. **Detach the center section of the exhaust system heat shield from the floor panel.**

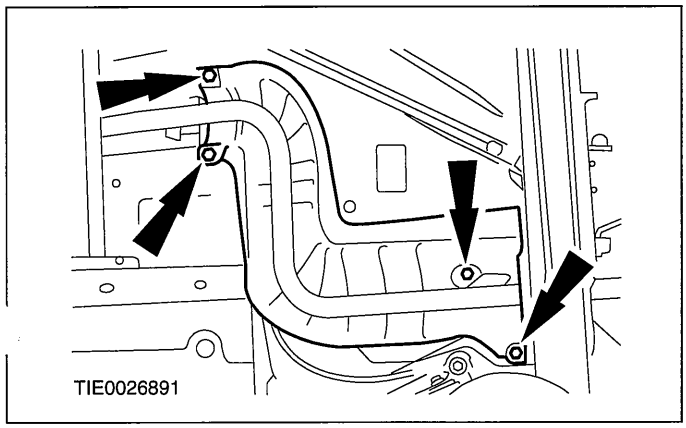
TIE0026891

5. **Disconnect the parking brake cable on both sides.**

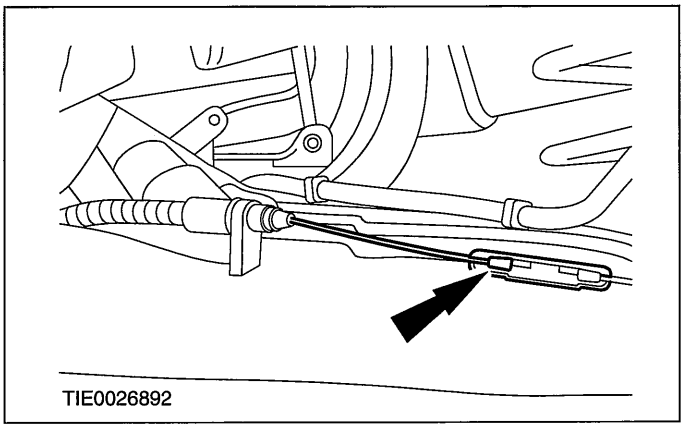
TIE0026892

6. **Detach the parking brake cable from the beam axle on both sides.**

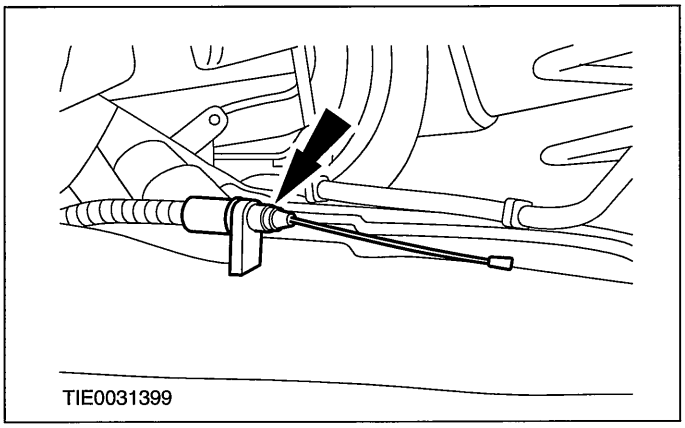
TIE0031399

7. **Detach the parking brake cables from the parking brake cable equalizer.**
   1. Detach the parking brake cables from the parking brake cable support bracket.
   2. Detach the parking brake cables from the parking brake cable equalizer.

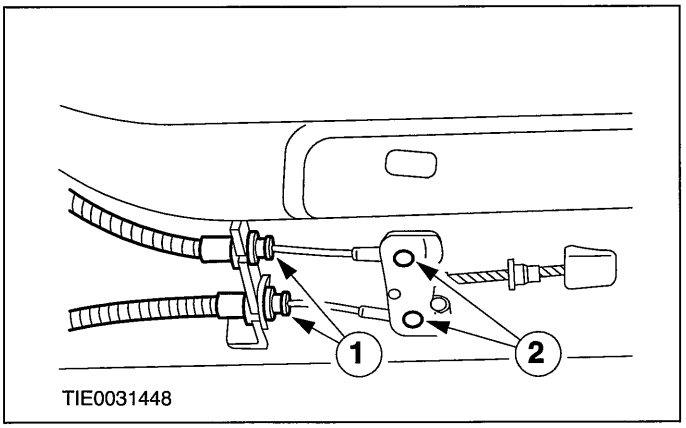

TIE0031448

## REMOVAL AND INSTALLATION

8. **Detach the parking brake cable from the beam axle bracket on both sides.**

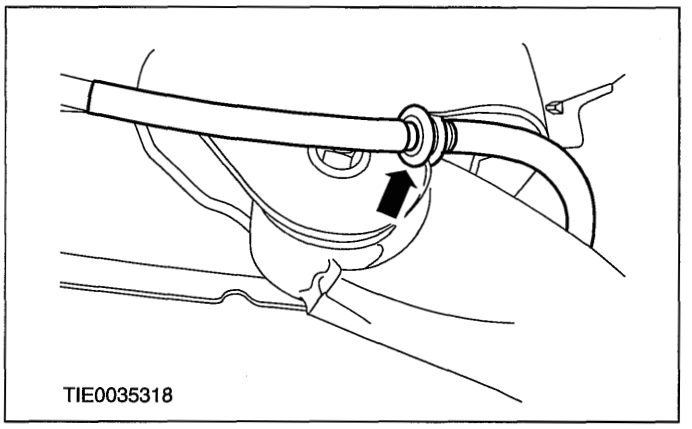


9. **Detach the parking brake cable from the floor panel crossmember on both sides.**

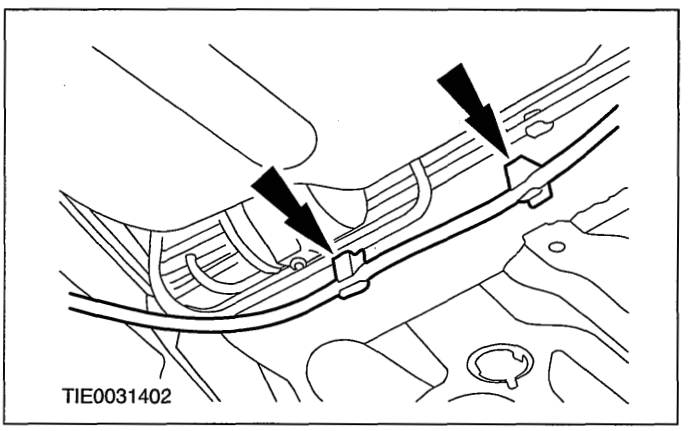


10. **Remove the parking brake cable.**

### Installation

1. ⚠**CAUTION:Take care when installing the exhaust hanger insulators to prevent damage.**

**NOTE:**Check the exhaust hanger insulators for damage. Install new exhaust hanger insulators if required.

**To install, reverse the removal procedure.**

2. **Adjust the parking brake.**

**For additional information, refer to: Parking Brake Cable Adjustment - Vehicles With: Rear Drum Brakes (206-05 Parking Brake and Actuation, General Procedures).**

## REMOVAL AND INSTALLATION

# Parking Brake Cable — Vehicles With: Rear Disc Brakes(12 675 0)

### Removal

1. **Release the parking brake.**
2. **Raise and support the vehicle. For additional information, refer to: (100-02 Jacking and Lifting)**

   **Jacking (Description and Operation), Lifting (Description and Operation).**
3. **Remove the floor panel crossmember.**

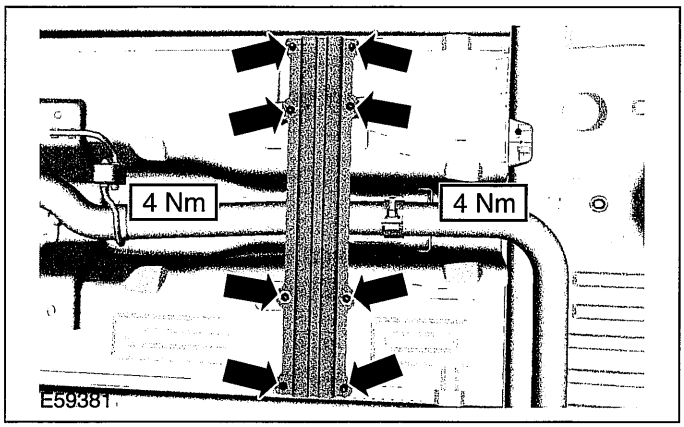


4. **⚠CAUTION:Take care when removing the exhaust hanger insulators to prevent damage.**

**NOTE:**Support the rear muffler.

**Detach the rear muffler from the exhaust hanger insulators.**

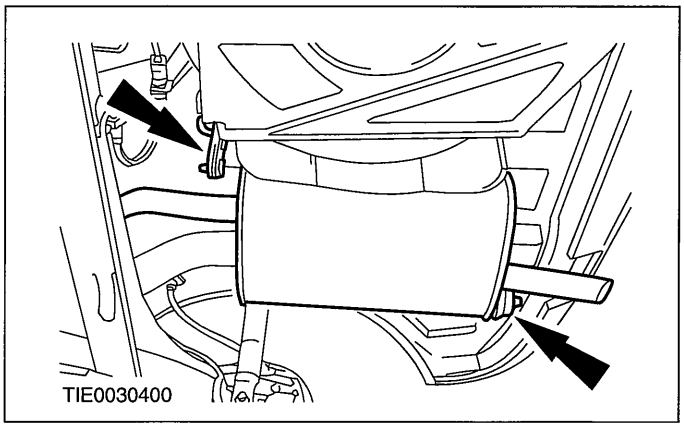


5. **Detach the center section of the exhaust system heat shield from the floor pan.**

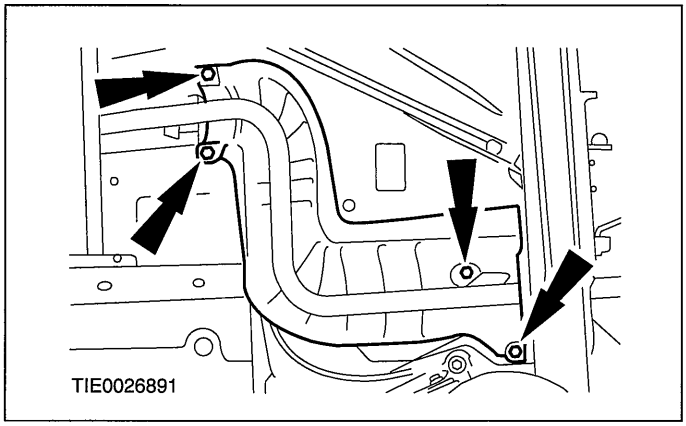


6. **Detach the parking brake cable from the brake caliper on both sides.**
   1. Pull back the parking brake actuating lever.
   2. Disconnect the parking brake cable from the parking brake actuating lever.
   3. Detach the parking brake cable from the brake caliper bracket.

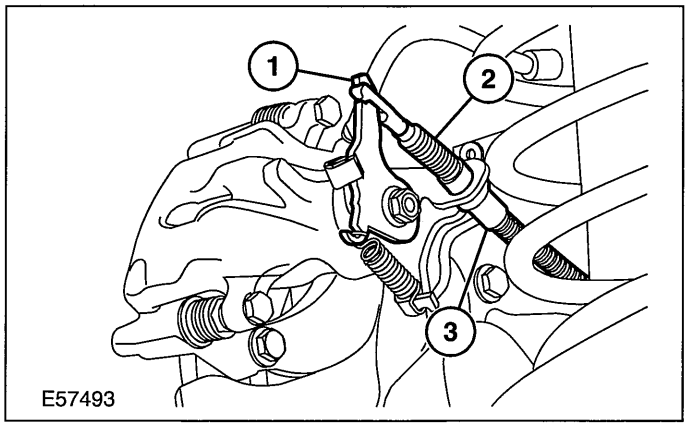


7. **⚠CAUTION:Do not apply excessive force when releasing the parking brake cable clip locking tangs from the parking brake cable clip support bracket. Failure to follow this instruction may result in damage to the clip.**

**NOTE:**The parking brake cable clip is secured to the parking brake cable support bracket by a locking tang on either side of the clip.

**Detach the parking brake cable from the beam axle on both sides.**

## REMOVAL AND INSTALLATION

- Release the locking tangs.

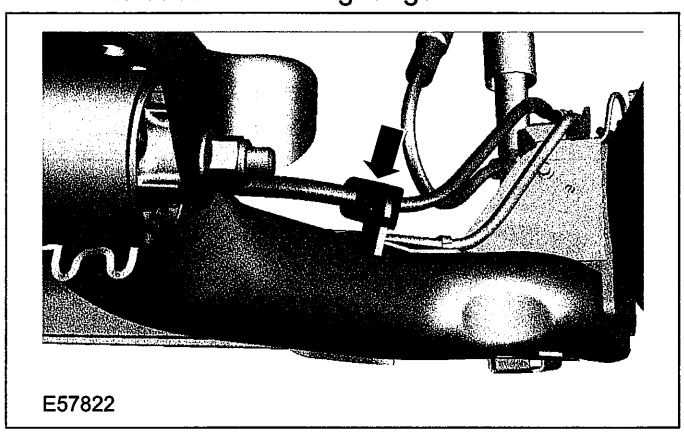
E57822

**8. Detach the parking brake cables from the parking brake cable equalizer.**

- Detach the parking brake cables from the parking brake cable support bracket.

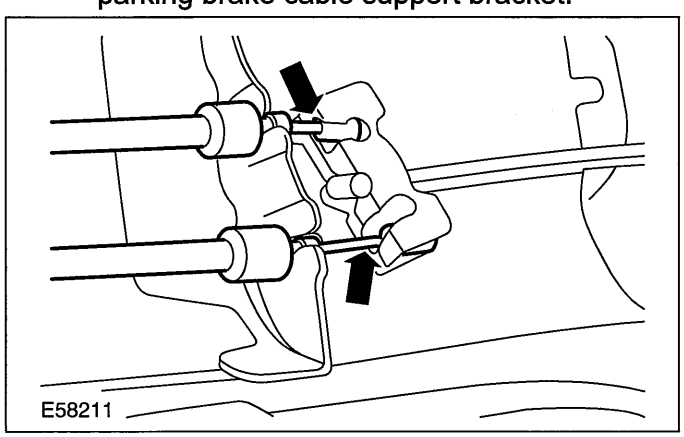
E58211

**9. Detach the parking brake cable from the beam axle bracket on both sides.**

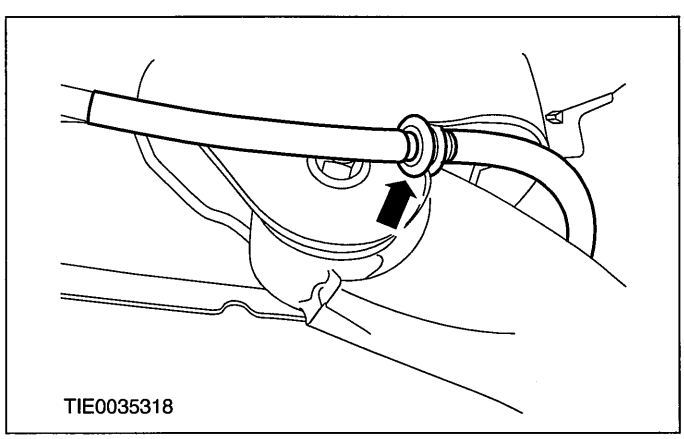
TIE0035318

**10. Detach the parking brake cable from the floor pan on both sides.**

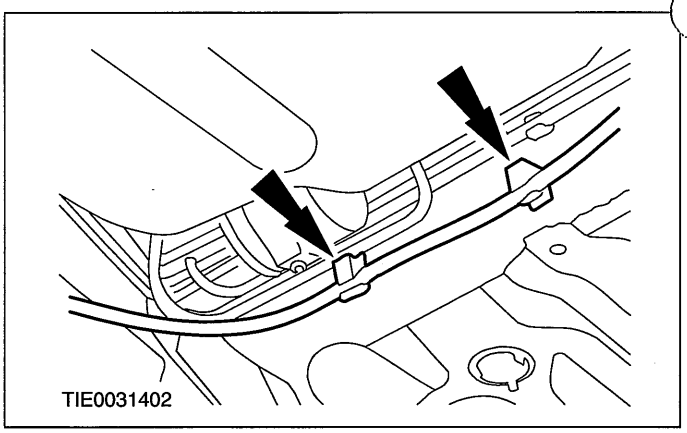
TIE0031402

**11. Remove the parking brake cable.**

### Installation

1. **⚠CAUTION:Take care when installing the exhaust hanger insulators to prevent damage.**

**NOTE:**Check the exhaust hanger insulators for damage. Install new exhaust hanger insulators if required.

**To install, reverse the removal procedure.**

2. **Adjust the parking brake.**

**For additional information, refer to: Parking Brake Cable Adjustment - Vehicles With: Rear Disc Brakes (206-05 Parking Brake and Actuation, General Procedures).**

## REMOVAL AND INSTALLATION

# Parking Brake Control(12 664 0)

### Removal

1. **Remove the parking brake control trim panel.**

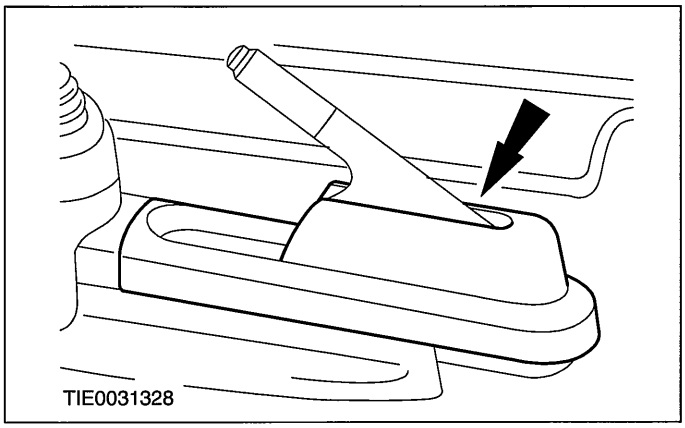


2. **Disconnect the parking brake warning indicator switch electrical connector.**

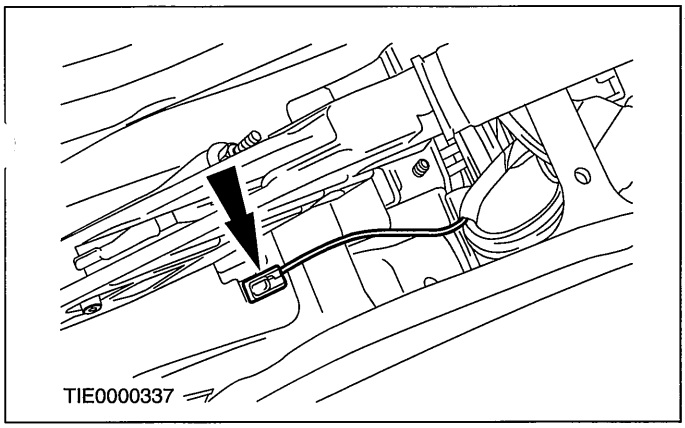


3. **Disconnect the parking brake cable from the parking brake control.**
   - Discard the retaining clip.

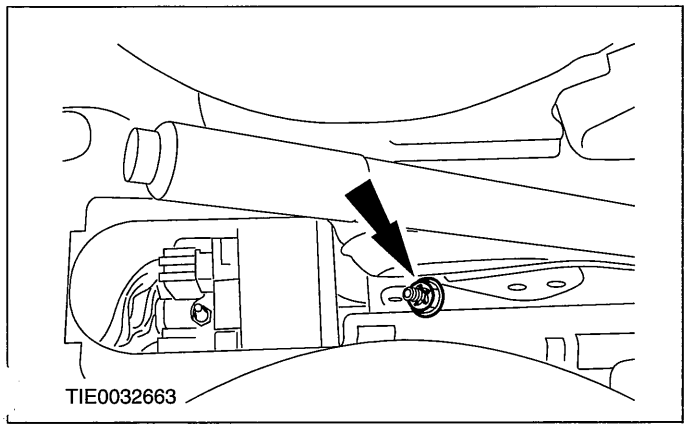


4. **Release the parking brake.**
5. **Remove the parking brake control.**

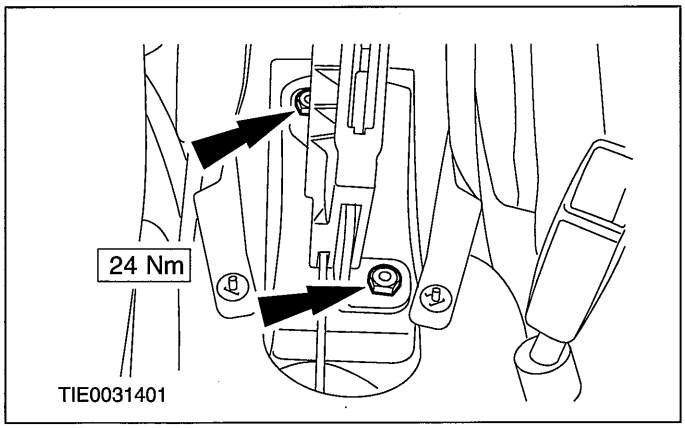


### Installation

1. **To install, reverse the removal procedure.**
2. **Adjust the parking brake.**

   **For additional information, refer to Parking Brake Cable Adjustment in this section.**

# SECTION 206-06 Hydraulic Brake Actuation

## VEHICLE APPLICATION:2006.0 Fiesta

CONTENTS PAGE

**SPECIFICATIONS**

Specifications..... 206-06-2

**DESCRIPTION AND OPERATION**

Hydraulic Brake Actuation — Vehicles Built Up To: 01/2004..... 206-06-3
Brake pedal..... 206-06-3

**DIAGNOSIS AND TESTING**

Hydraulic Brake Actuation..... 206-06-5

**REMOVAL AND INSTALLATION**

Brake Pedal — RHD..... (12 333 0) 206-06-6
Brake Master Cylinder — RHD..... (12 343 0) 206-06-8

## SPECIFICATIONS

### Lubricants, Fluids, Sealers and Adhesives

| Item | Specification |
|---|---|
| Super DOT 4 brake fluid | ESD-M6C57-A |

### Torque Specifications

| Description | Nm | lb-ft | lb-in |
|---|---|---|---|
| Brake master cylinder brake tube unions | 17 | 13 | - |
| Pressure conscious reducing valve unions | 26 | 19 | - |
| Brake master cylinder retaining nuts | 25 | 18 | - |
| Brake pedal cross-shaft mounting bracket nuts | 25 | 18 | - |

## DESCRIPTION AND OPERATION

# Hydraulic Brake Actuation — Vehicles Built Up To: 01/2004

### Brake pedal

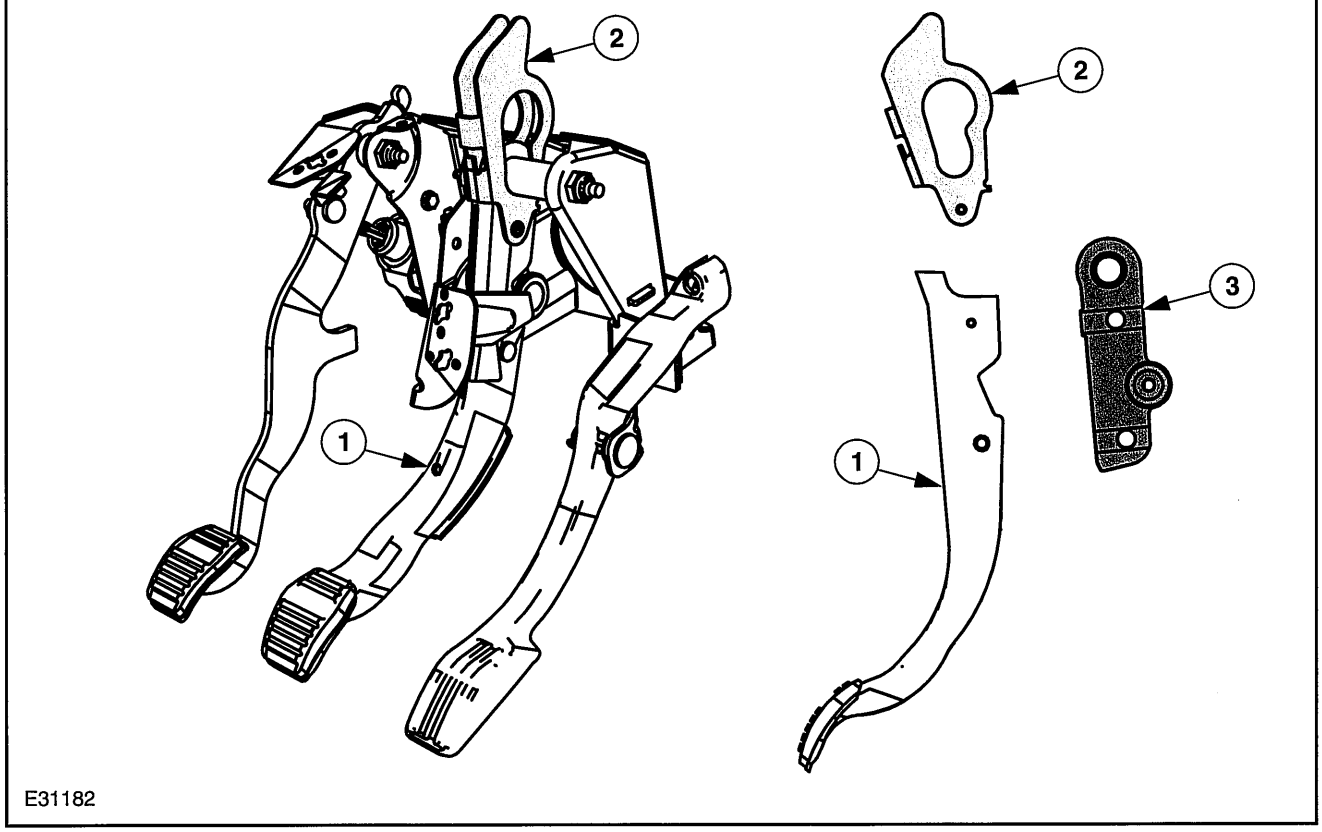


| Item | Description |
|---|---|
| 1 | U-shaped profile of the brake pedal |
| 2 | Latch |
| 3 | Carrier plate |

The brake pedal is equipped with a safety device which uncouples the brake pedal from the brake master cylinder in the event of a severe frontal collision to reduce injuries to the feet of the driver.

As a result, the pressure acting from the brake master cylinder on the brake pedal is interrupted and the brake pedal can be pushed to the floor.

The brake pedal is divided into 3 parts: a U-shaped profile, a latch and a carrier plate within the brake pedal.

## DESCRIPTION AND OPERATION

### Function

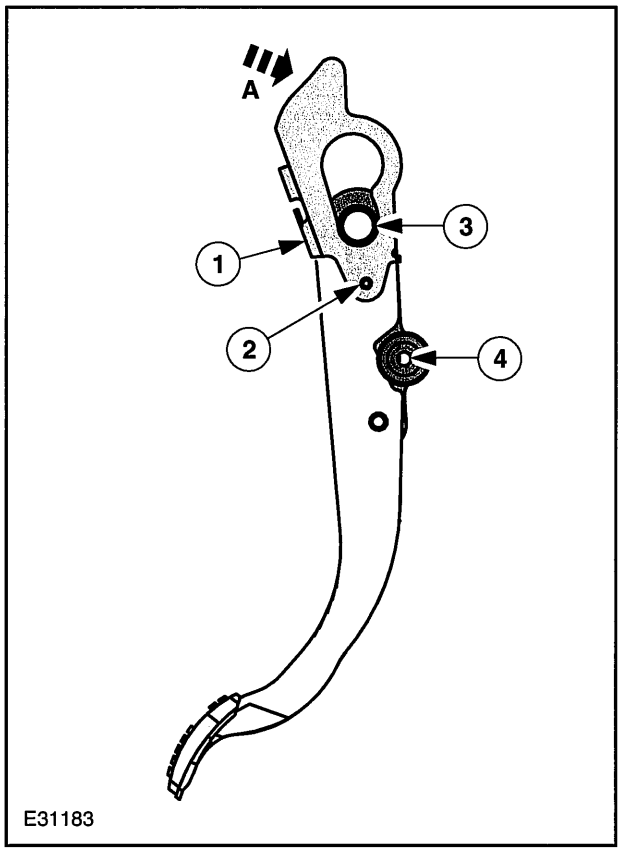


| Item | Description |
|---|---|
| A | Fascia/crash padding mounting |
| 1 | Connection point between the latch and the pedal |
| 2 | Retaining pin (plastic) |
| 3 | Mounting bore |
| 4 | Mounting for the brake servo actuation rod |

The complete pedal unit is mounted via a bore in the carrier plate.

The U-shaped profile of the brake pedal is held in position by the latch at a connection point.

In the event of a severe impact the entire pedal box is pushed into the footwell. As the pedal box is pushed into the footwell, the latch on the upper side of the brake pedal is pushed against the mounting of the fascia/crash padding.

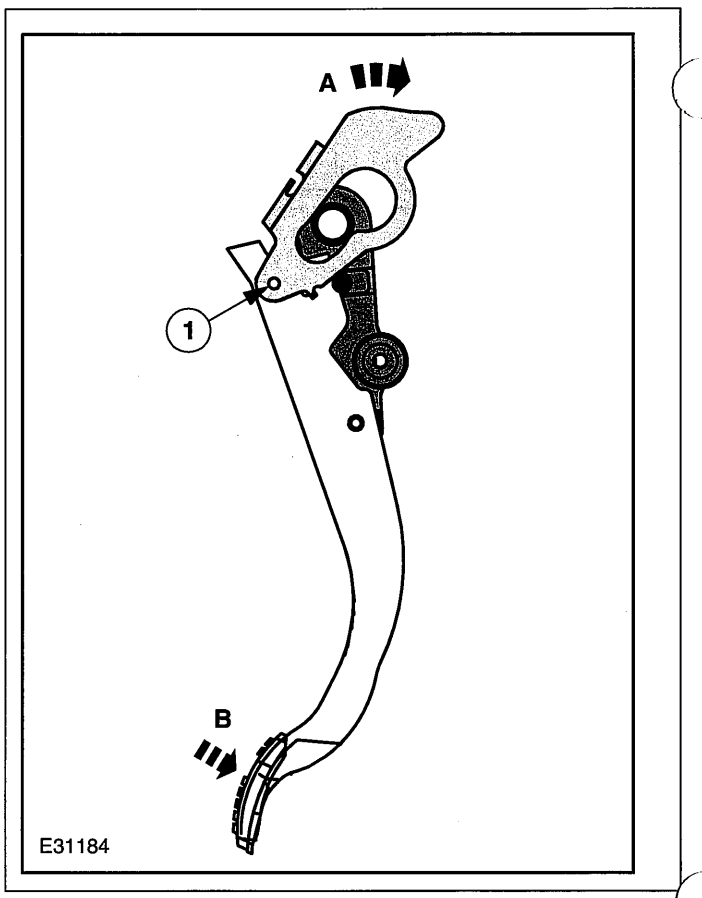


| Item | Description |
|---|---|
| A | Direction of motion of the latch |
| B | Direction of motion of the pedal |
| 1 | Sheared off retaining pin |

The latch is twisted around the mounting axis of the pedal, and in the process the retaining pin is cut through.

The connection point of the brake pedal is released, and no more force can be transmitted.

The carrier plate of the pedal is uncoupled from the U-shaped pedal and the pedal is left to swing free.

It is very important not to damage the retaining pin when working on the pedal box.

## DIAGNOSIS AND TESTING

# Hydraulic Brake Actuation

REFER to Section 206-00 [Brake System - General Information].

## REMOVAL AND INSTALLATION

# Brake Pedal — RHD(12 333 0)

### Removal

All vehicles

▲ **WARNING:In the event of a frontal impact to a vehicle equipped with a decoupler brake pedal in which damage to, or significant movement of, the instrument panel or the brake booster has occurred, a new brake pedal must be installed. Failure to follow this instruction may result in personal injury.**

1. **Remove the instrument panel lower panel.**
   1. Remove the lower retaining screws.
   2. Remove the upper retaining screws from the stowage compartment.
   3. Release the clip.

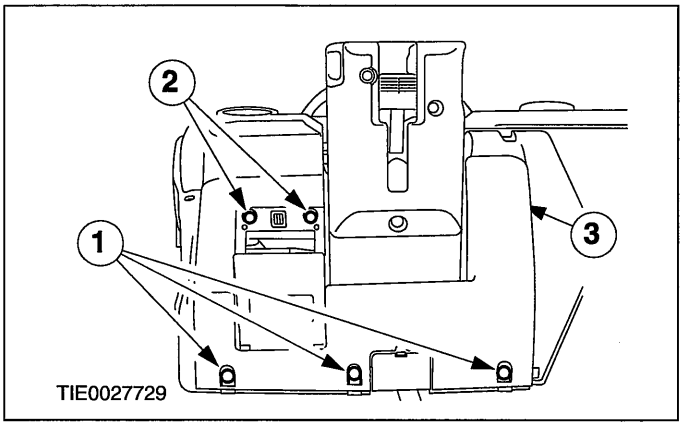


2. **Detach the brake booster actuating rod from the brake pedal (accelerator pedal shown removed for clarity).**
   1. Depress the clip.
   2. Remove the brake booster actuating rod pin.

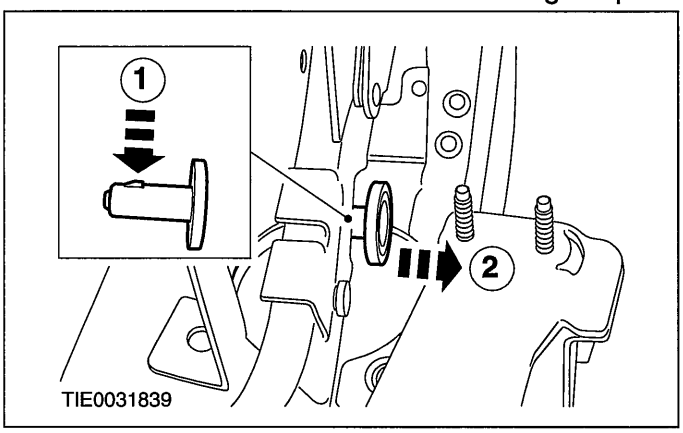


Vehicles with manual transaxle

3. **NOTE:From 02/2004 the brake pedal will not be equipped with the brake pedal decoupler mechanism.**

   **Remove the brake pedal.**
   1. Remove the pivot shaft nut.
   2. Slide out the pedal pivot shaft.
   3. Remove the brake pedal.

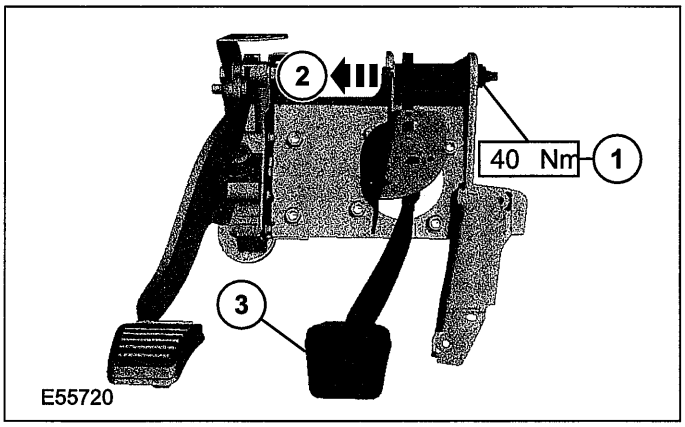


4. **Remove the brake pedal bushings.**

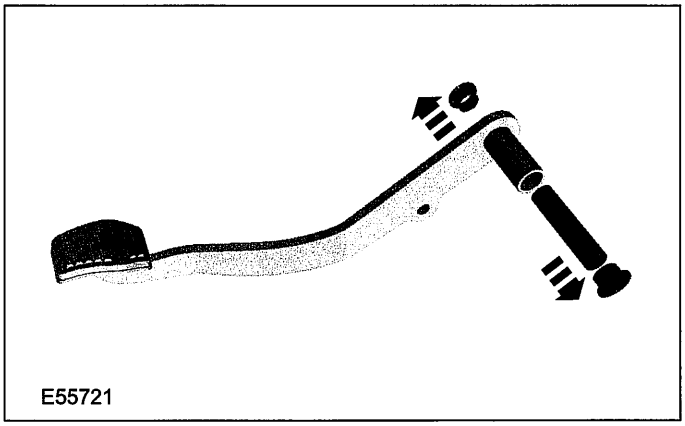


Vehicles with automatic transaxle

5. **NOTE:From 02/2004 the brake pedal will not be equipped with the brake pedal decoupler mechanism.**

   **Remove the brake pedal.**
   1. Remove the pivot shaft nut.
   2. Slide out the pedal pivot shaft.

## REMOVAL AND INSTALLATION

3. Remove the brake pedal.

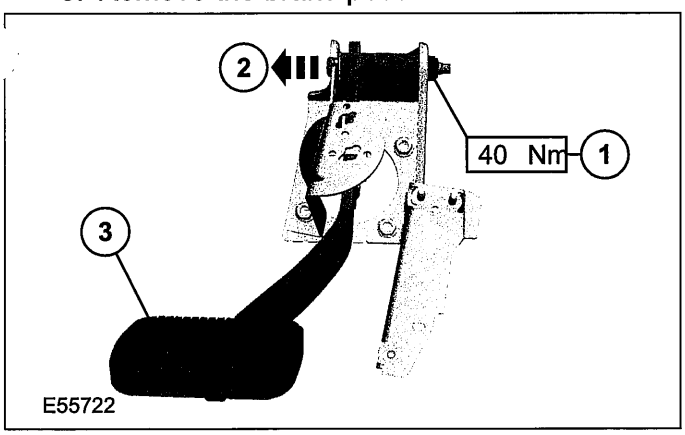


**6. Remove the brake pedal bushings.**

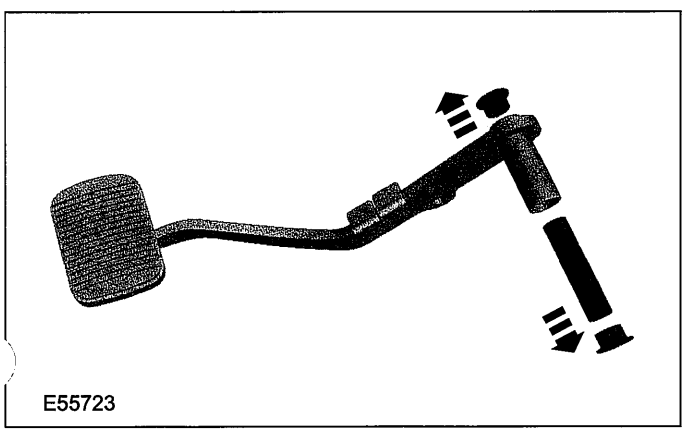


### Installation

1. **⚠CAUTION:Do not drop or knock the brake pedal. Failure to follow this instruction will cause damage to the brake pedal decoupler mechanism (if equipped).**

   **To install, reverse the removal procedure.**

## REMOVAL AND INSTALLATION

# Brake Master Cylinder — RHD(12 343 0)

## Removal

### All vehicles

⚠ **CAUTION:If brake fluid is spilt on the paintwork, the affected area must be immediately washed down with cold water.**

1. **Disconnect the brake vacuum pipe from the brake booster.**
   1. Unclip the brake vacuum pipe.
   2. Disconnect the brake vacuum pipe.

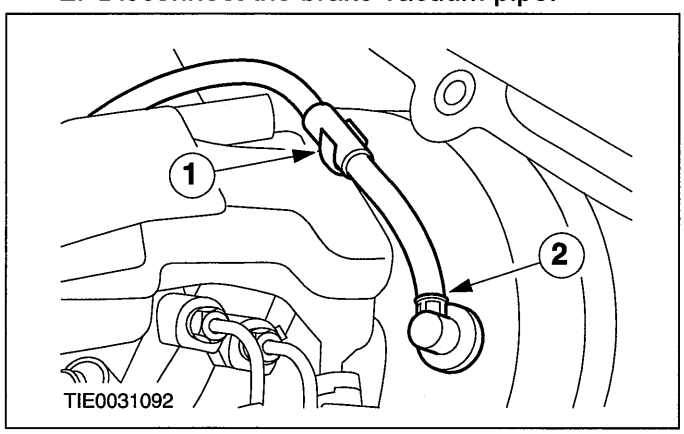


2. **Disconnect the battery ground cable. For additional information, refer to Section 414-01 [Battery, Mounting and Cables].**
3. **Remove the windshield wiper motor assembly. For additional information, refer to Section 501-16 [Wipers and Washers].**
4. ⚠**CAUTION:The brake fluid reservoir cap must not become contaminated.**

   **Remove the brake fluid reservoir cap.**
5. **NOTE:It will be necessary to carry out this step on both sides in order to completely drain the brake fluid reservoir.**

   **Drain the brake fluid reservoir.**
   1. Connect one end of a suitable piece of clear plastic pipe to the bleed nipple and place the other end into a suitable container.
   2. Loosen the bleed nipple.
   3. Depress the brake pedal until all the fluid is drained from the brake fluid reservoir.
   4. Tighten the bleed nipple.

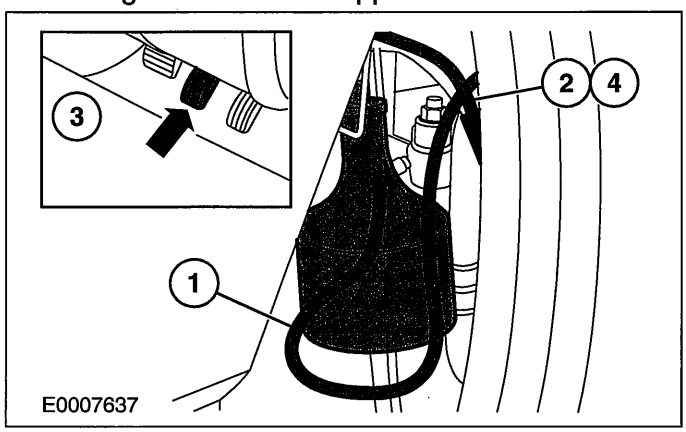


6. **Install the brake fluid reservoir cap.**
7. ⚠**CAUTION:Cap the brake tubes to prevent fluid loss or dirt ingress.**

   **Disconnect the brake tubes from the brake master cylinder.**

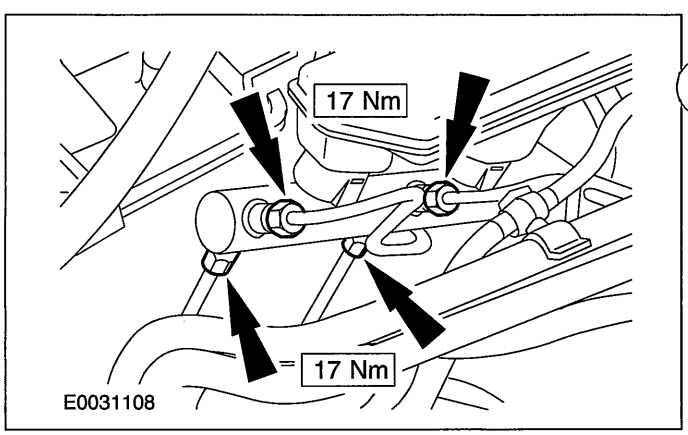


### Vehicles with anti-lock brakes

8. ⚠**CAUTION:Cap the brake tubes to prevent fluid loss or dirt ingress.**

## REMOVAL AND INSTALLATION

**Disconnect the brake tubes from the brake master cylinder.**

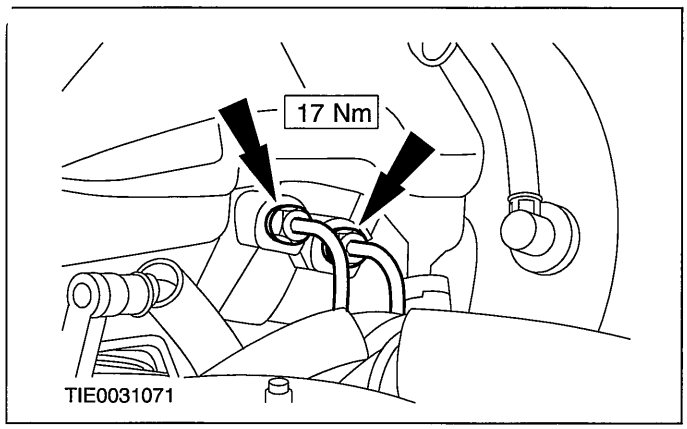


All vehicles

9. **⚠CAUTION:Cap the clutch master cylinder feed hose to prevent fluid loss or dirt ingress.**

   **Disconnect the clutch master cylinder feed hose from the brake fluid reservoir.**

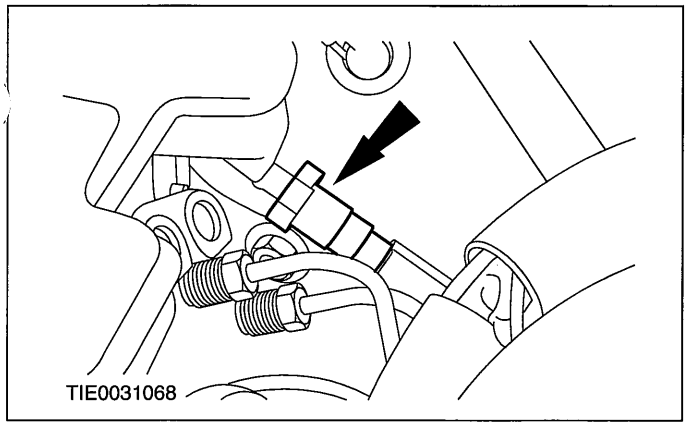


10. **Detach the brake master cylinder from the brake booster.**

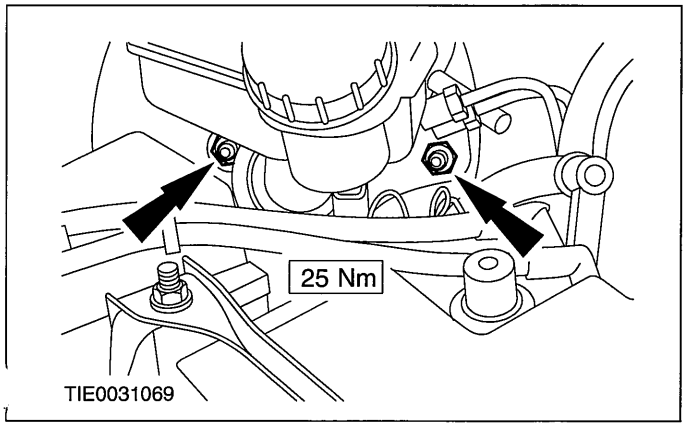


11. **Disconnect the low brake fluid warning indicator switch electrical connector.**

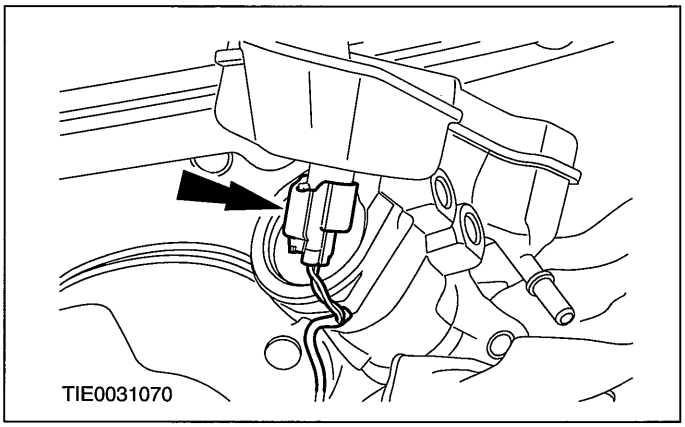


12. **Remove the brake master cylinder and brake fluid reservoir assembly.**

### Installation

⚠ **CAUTION:Make sure the brake master cylinder vacuum seal is correctly positioned before installation.**

1. **To install, reverse the removal procedure.**
2. **Bleed the brake system. For additional information, refer to Section 206-00 [Brake System - General Information].**

# SECTION 206-07 Power Brake Actuation

## VEHICLE APPLICATION:2006.0 Fiesta

CONTENTS PAGE

**SPECIFICATIONS**

Specifications ..... 206-07-2

**DESCRIPTION AND OPERATION**

Brake Booster ..... 206-07-3
Emergency brake assistant (EBA) ..... 206-07-3

**DIAGNOSIS AND TESTING**

Power Brake System ..... 206-07-7

**REMOVAL AND INSTALLATION**

Brake Booster — RHD ..... (12 451 0) 206-07-8

## SPECIFICATIONS

### Torque Specifications

| Description | Nm | lb-ft | lb-in |
|---|---|---|---|
| Brake booster retaining nuts | 25 | 18 | - |
| Brake master cylinder retaining nuts | 25 | 18 | - |

## DESCRIPTION AND OPERATION

# Brake Booster

### Emergency brake assistant (EBA)

As ABS braking systems have become widespread, it has emerged that because of incorrect use of the brakes, many drivers are losing the safety benefit which ABS provides.

Drivers are applying the brakes too timidly. Because of this, the Anti-lock Braking System (ABS) does not engage, and the maximum braking effect is not achieved.

The EBA recognises from the driver's manner of braking that an emergency situation is occurring, and automatically applies full braking power.

This occurs in a matter of milliseconds, which is faster than the driver could do it.

Furthermore, it was observed that after the first heavy application of the brake pedal, the driver releases the pressure on the pedal too early.

The EBA ensures that the ABS effect still continues when the pedal pressure would normally lie below the ABS range of control. The system is available as an option depending on market and vehicle variant.

Depending on driving manner, EBA results in a reduction in braking distance of 15% for experienced drivers, to over 40% for average drivers.

Because EBA decelerates the vehicle up to the wheel locking limit, emergency brake assist is only used in vehicles with ABS.

### Components

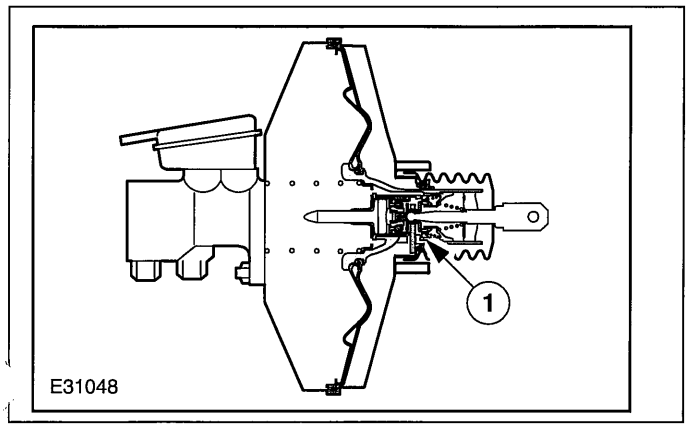


| Item | Description |
|---|---|
| 1 | EBA |

EBA operates purely mechanically, and is completely integral with the brake servo.

Brake servo units with and without EBA are externally identical. For identification purposes, brake servo units with EBA carry a white sticker showing a large letter "A".

The tandem master cylinder is the same for vehicles with or without EBA.

### Function

In normal braking situations, the brake servo with EBA operates in the same way as a conventional brake servo unit. This means that the driver can always modulate the brakes.

If an activation threshold defined by a characteristic curve is exceeded during braking, the EBA operates.

Determination of the activation threshold is based on the pedal movement parameters, which are a function of the pressure on the brake pedal and the speed of movement of the pedal.

The characteristic curve is separately defined for each vehicle model.

The mechanical EBA uses the fact that in a brake servo unit, the valve piston moves ahead of the control housing when a braking operation starts.

Because of this, there is a relative travel distance between the control housing and the valve piston which can vary depending on the force applied to the brake pedal and the pedal speed.

The relative travel distance is small when the pedal moves slowly with low force applied to it. The relative travel distance is larger when the pedal moves faster with higher force applied to it.

## DESCRIPTION AND OPERATION

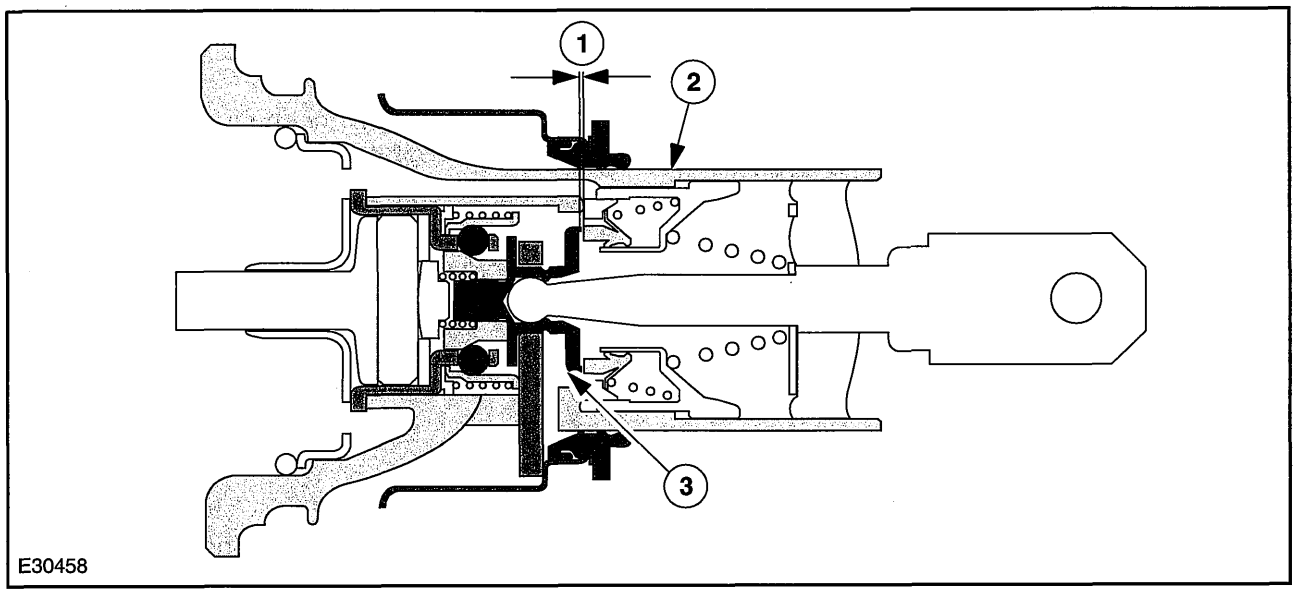


| Item | Description |
|---|---|
| 1 | Relative travel distance |
| 2 | Control housing |
| 3 | Valve piston |

**Normal braking**

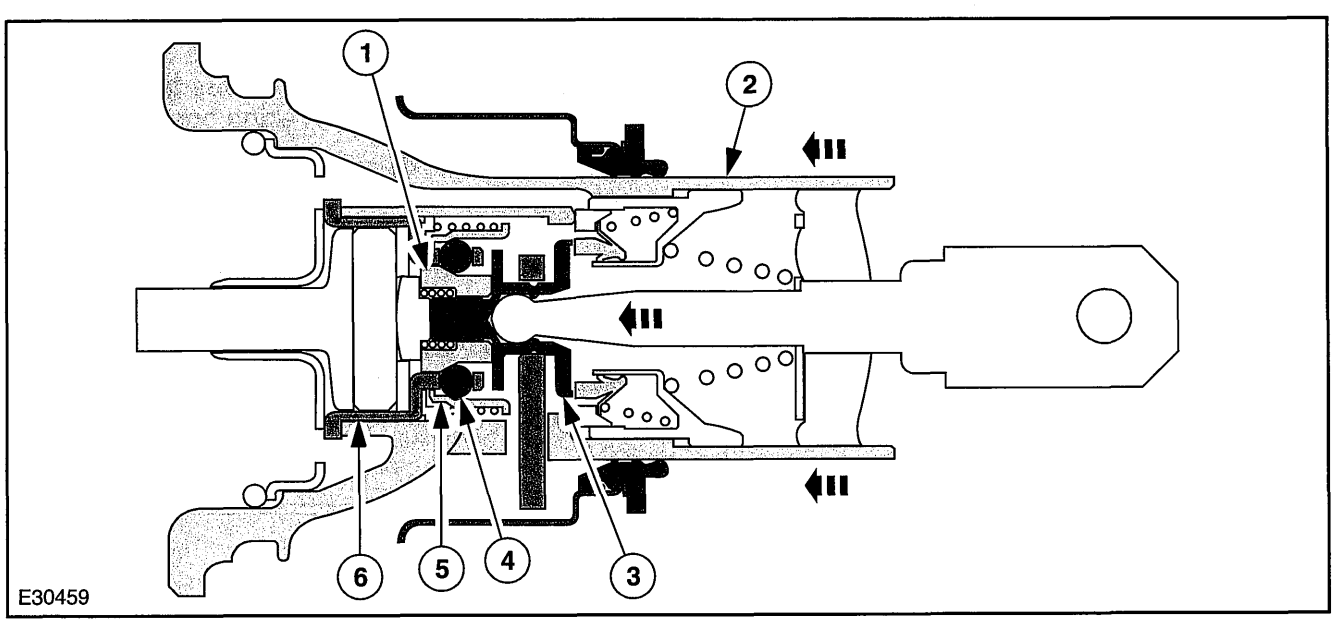

## DESCRIPTION AND OPERATION

| Item | Description |
|---|---|
| 1 | Ball sleeve |
| 2 | Control housing |
| 3 | Valve piston |
| 4 | Ball |
| 5 | Lock sleeve |
| 6 | Ball cage |

In a normal braking operation, pedal operation causes the relative travel distance to remain so small that the distance required for engagement is not exceeded.

The lock sleeve is held in its rest position by the force applied by the spring, the ball cage remains free to move axially and the balls remain free to move radially.

**Active brake assistant**

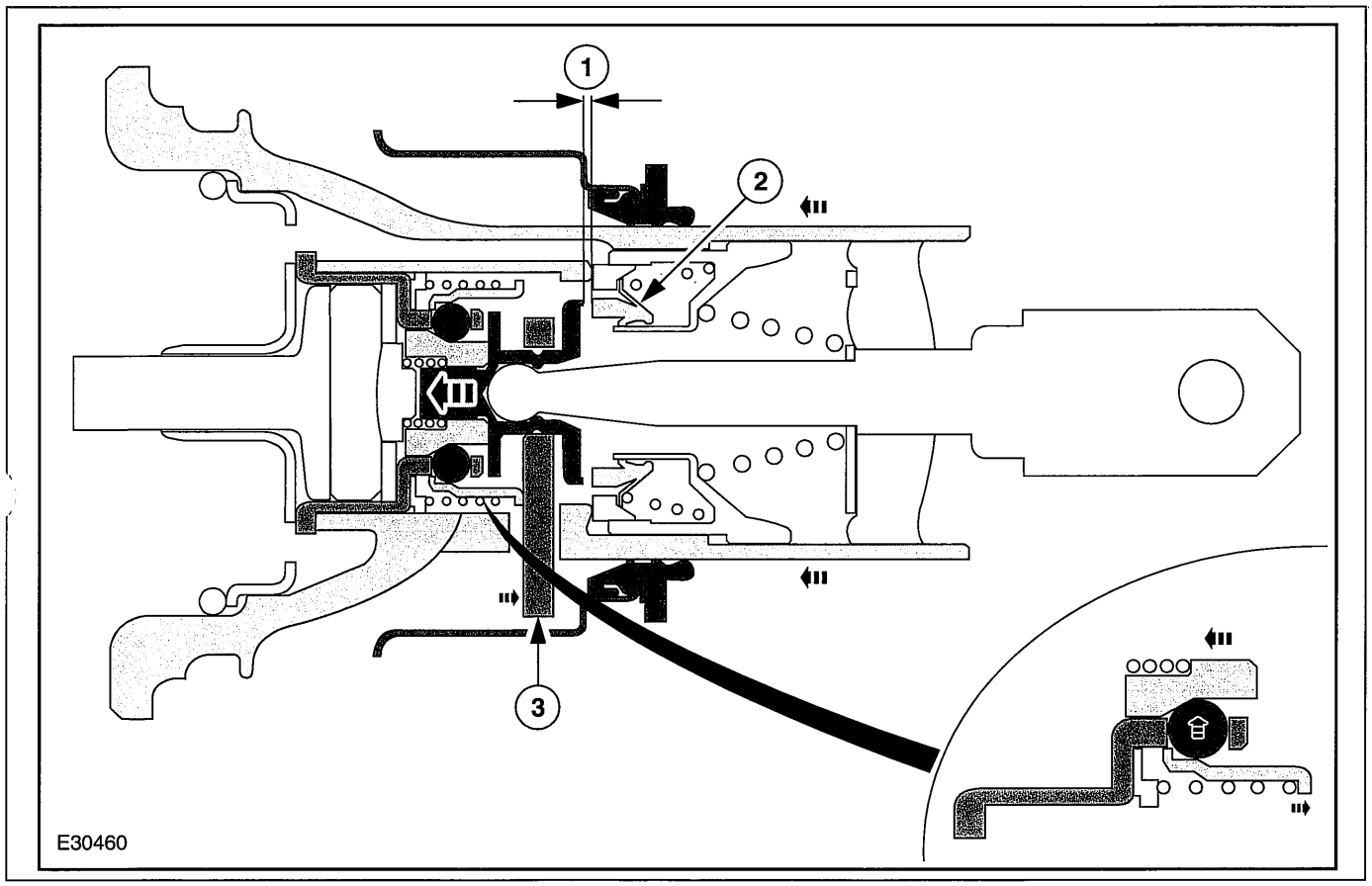


| Item | Description |
|---|---|
| 1 | Relative travel distance |
| 2 | Disc valve |
| 3 | Key |

If the activation threshold level is exceeded because of an emergency braking situation, i.e. the relative travel distance of the valve piston is so great that the balls are moved in over the slope of the ball sleeve, then the lock sleeve can move completely to its end position.

The balls are now locked, and the ball sleeve can no longer be moved in the closing direction of the disc valve.

The EBA is now active, the brake pressure is increased up to the wheel locking limit, and the brake pedal can be moved to its maximum pressure point without effort.

The brake pressure remains at the ABS control limit until the EBA is completely released again.

## DESCRIPTION AND OPERATION

**Release of the brake assistant**

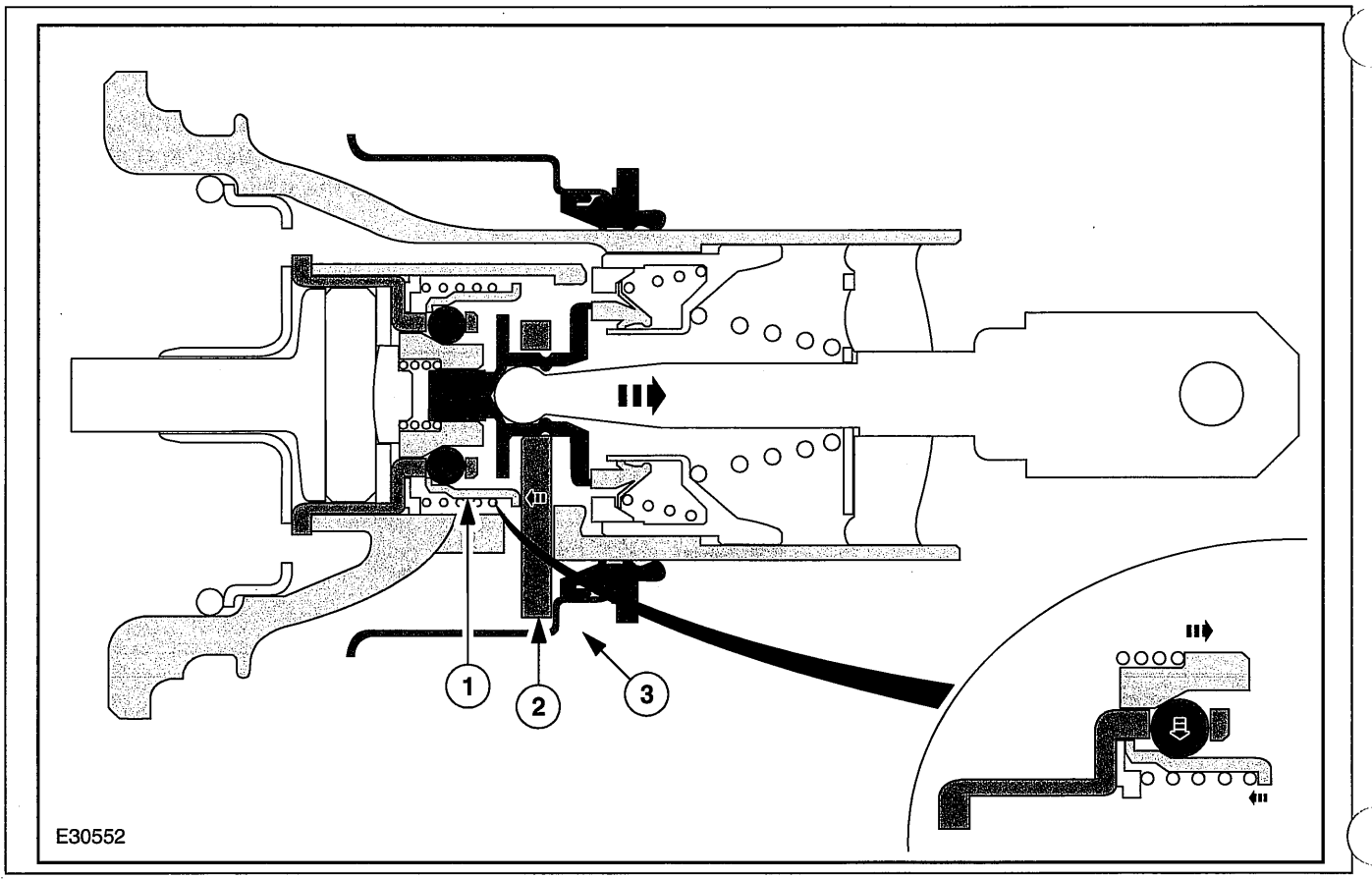


| Item | Description |
|---|---|
| 1 | Lock sleeve |
| 2 | Key |
| 3 | Vacuum cylinder |

To release EBA, the brake pedal must be fully released, i.e. it must be returned to its rest position.

When this occurs, the control housing together with the valve piston move back into the rest position. The key is pressed against the stop on the vacuum cylinder and by this the lock sleeve is slid back into its rest position.

The balls can again be moved outward by the ball sleeve, and the ball cage is again free to move axially and the balls free to move radially.

### Service

It is not possible to repair the EBA. A new brake servo unit must be installed.

## DIAGNOSIS AND TESTING

# Power Brake System

REFER to Section 206-00 [Brake System - General Information].

## REMOVAL AND INSTALLATION

# Brake Booster — RHD(12 451 0)

### Removal

1. **Remove the brake master cylinder.**

   **For additional information, refer to: Brake Master Cylinder - RHD (206-06 Hydraulic Brake Actuation, Removal and Installation).**

2. **Disconnect the brake vacuum pipe from the brake booster.**
   1. Unclip the brake vacuum pipe.
   2. Disconnect the brake vacuum pipe.

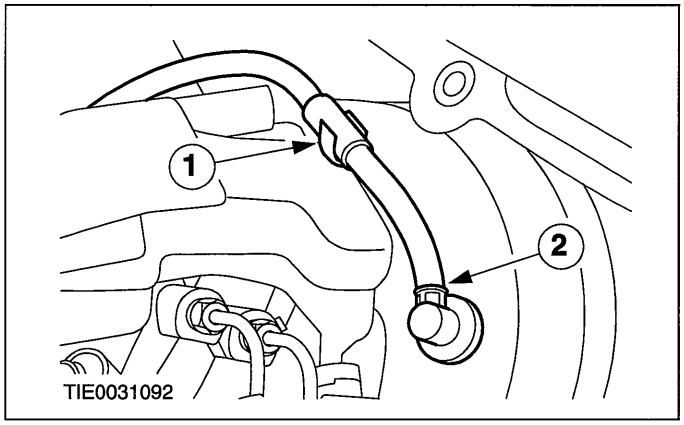


3. **Remove the instrument panel lower panel.**
   1. Remove the lower retaining screws.
   2. Remove the upper retaining screws from the stowage compartment.
   3. Release the retaining clip.

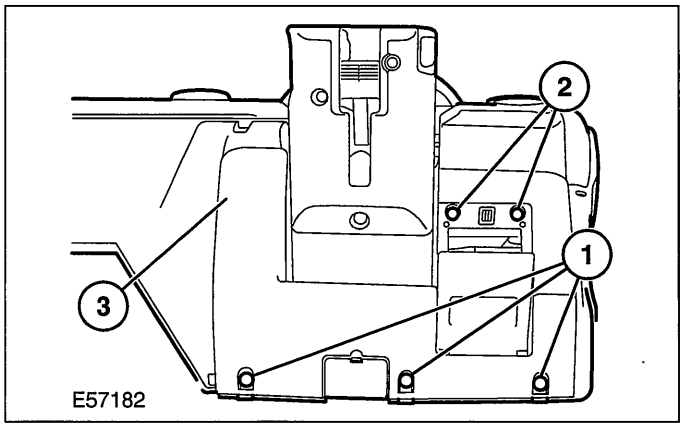


4. **Detach the brake booster actuating rod from the brake pedal (accelerator pedal shown removed for clarity).**
   1. Depress the clip.
   2. Remove the brake booster actuating rod pin.

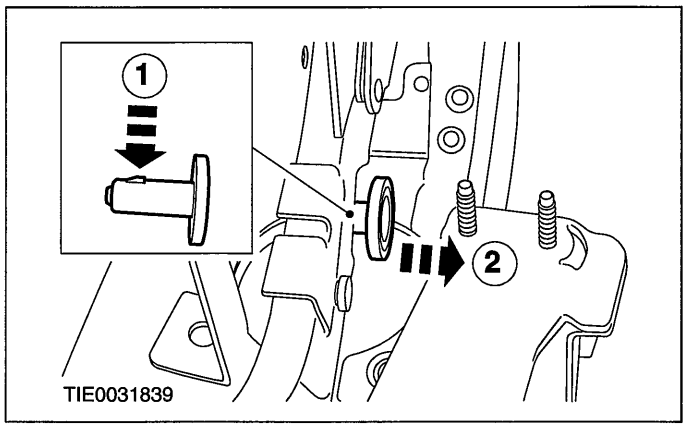


5. **Remove the brake booster.**
   - Discard the gasket.

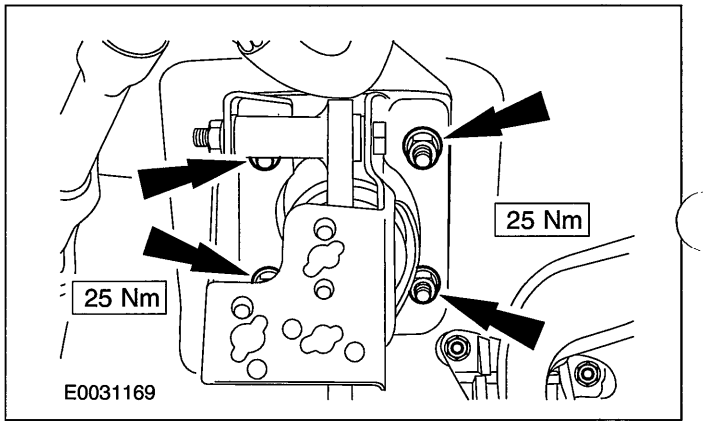


### Installation

1. **WARNINGS:**

   **▲Do not install an Emergency Brake Assist (EBA) brake booster to a vehicle that is not equipped with the Anti-lock Brake System (ABS). Failure to follow this instruction may result in personal injury.**

   **▲Do not use a damaged brake pedal. Failure to follow this instruction may result in personal injury.**

**CAUTIONS:**

⚠ **Make sure that the brake booster gasket is correctly positioned on the brake booster before installation.**

⚠ **Do not drop or knock the brake pedal. Failure to follow this instruction will cause damage to the brake pedal decoupler mechanism (if equipped).**

## REMOVAL AND INSTALLATION

**NOTE:**On vehicles equipped with EBA the brake booster is identified by a white sticker showing a large letter "A".

**NOTE:**Install a new brake booster gasket.

**To install, reverse the removal procedure.**

# SECTION 206-09A Anti-Lock Control

## VEHICLE APPLICATION:2006.0 Fiesta

CONTENTS PAGE


**SPECIFICATIONS**

Specifications ..... 206-09A-2

**DESCRIPTION AND OPERATION**

Anti-Lock Control ..... 206-09A-3
Overview ..... 206-09A-3
Function ..... 206-09A-3
Anti-Lock Control ..... 206-09A-5
MK70 Anti-lock Brake System (ABS) ..... 206-09A-5
MK60 ABS ..... 206-09A-5

**DIAGNOSIS AND TESTING**

Anti-Lock Control ..... 206-09A-7
Inspection and Verification ..... 206-09A-7

**REMOVAL AND INSTALLATION**

Hydraulic Control Unit (HCU) — Vehicles Built Up To: 05/2004 ..... 206-09A-8
Hydraulic Control Unit (HCU) — Vehicles Built From: 05/2004 ..... 206-09A-11
Anti-Lock Brake System (ABS) Module — Vehicles Built Up To: 05/2004 ..... 206-09A-14
Anti-Lock Brake System (ABS) Module — Vehicles Built From: 05/2004 ..... 206-09A-17
Rear Wheel Speed Sensor ..... (12 785 0) 206-09A-20
Rear Wheel Speed Sensor Ring ..... (12 788 0) 206-09A-22
Front Wheel Speed Sensor ..... (12 784 0) 206-09A-24

## SPECIFICATIONS

### Lubricants, Fluids, Sealers and Adhesives

| | Specifications |
|---|---|
| Super DOT 4 brake fluid | ESD–M6C 57–A |

### Torque Specifications

| Item | Nm | lb-ft | lb-in |
|---|---|---|---|
| Hydraulic control unit (HCU) to support bracket retaining bolts | 9 | - | 80 |
| HCU support bracket retaining bolts | 20 | 15 | - |
| Brake tube to HCU unions | 18 | 13 | - |
| Wheel speed sensor retaining bolts | 9 | - | 80 |
| Anti-lock brake system (ABS) module to HCU retaining bolts | 5 | - | 44 |

## DESCRIPTION AND OPERATION

# Anti-Lock Control

### Overview

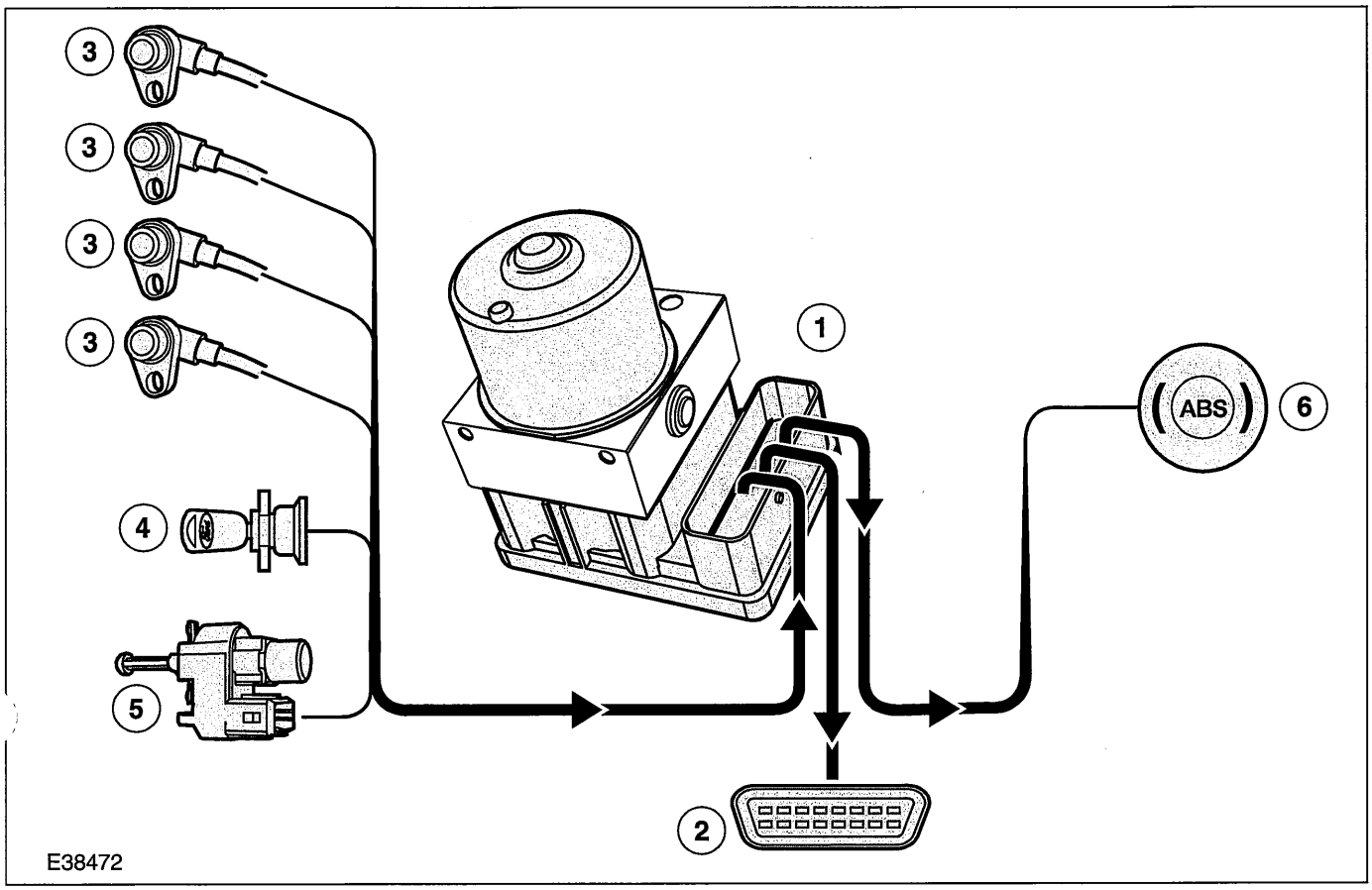


| Item | Description |
|---|---|
| 1 | Anti-lock brake system (ABS) hydraulic unit with integrated control unit |
| 2 | Data Link Connector (DLC) |
| 3 | Wheel speed sensors |
| 4 | Ignition lock |
| 5 | Stoplamp switch |
| 6 | ABS warning lamp in the instrument cluster |

In addition to the conventional brake system with two diagonally split brake circuits, the ABS consists of an ABS hydraulic unit with integrated control unit, four wheel sensors and the ABS warning lamp in the instrument cluster.

Electronic brake force distribution is integrated in the software of the ABS control unit, which electronically regulates and optimises the pressure applied to the wheel brakes on the front and rear axles in accordance with the operating conditions.

## Function

The ABS is a closed loop control system in the brake system which prevents the wheels from locking up under braking and therefore maintains steerability and driving stability in extreme situations.

### ABS control unit

The ABS control unit continuously compares stored physical deceleration values with those detected by the wheel sensors. This allows the lock-up tendency of each wheel to be detected separately.

If the ABS control unit detects that a wheel is threatening to lock up, then the corresponding hydraulic valves in the valve block are either closed or opened.

The ABS control unit then also passes on the vehicle speed signal obtained from the wheel sensors to the Powertrain Control Module (PCM).

## DESCRIPTION AND OPERATION

The warning lamp in the instrument cluster is actuated by the ABS control unit after switching on the ignition. It remains on up to the end of the ABS self-test, and is also actuated in the event of system errors.

It continuously monitors the system for possible faults and stores these as and when they occur. The corresponding trouble codes can be interrogated with the aid of WDS via the DLC .

The ABS control unit is directly connected via a diagnostic data link to the DLC.

### Valve block

The valve block contains four inlet valves and four outlet valves. There is one inlet valve and one outlet valve for each wheel.

When there is no electrical supply the inlet valves are open and the outlet valves are closed.

The valve block also contains the low-pressure reservoir and sound damping chambers.

### Pump motor

In the event of an ABS intervention the pump motor ensures that the pressure can be provided to the regulating channels independently of the brake master cylinder.

### ABS regulating cycle

An ABS regulating cycle has three phases:

Phase 1 - holding pressure

- The inlet valve is closed, and the brake pressure to the wheel brake cannot be increased any further, even if the actuation pressure (brake pedal) is increased further.

Phase 2 - pressure reduction

- The outlet valve is temporarily opened, and the brake pressure to the wheel brake is reduced in a controlled manner.

Phase 3 - pressure build-up

- The inlet valve is opened in stages, and the brake pressure is increased in a controlled manner to achieve the greatest possible deceleration.

## DESCRIPTION AND OPERATION

# Anti-Lock Control

### MK70 Anti-lock Brake System (ABS)

The MK70 ABS is similar to the MK60 in construction and design. The main differences are:

- New ABS control unit
- New hydraulic lines through a revised valve block
- New wiring harness and electrical connector (fewer occupied pins)

The MK70 ABS system will be installed from 05/2004 in vehicles which only have one ABS function.

Vehicles with ESP/Brake Traction Control System (BTCS) will continue to be equipped with the MK60.

### MK60 ABS

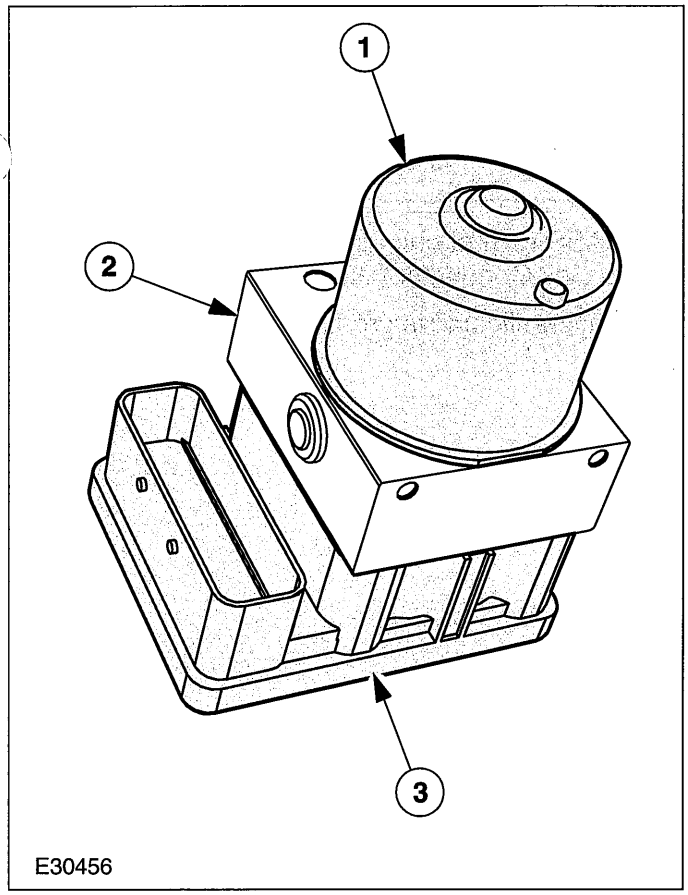


| Item | Description |
|---|---|
| 1 | Pump motor |
| 2 | Valve block |
| 3 | ABS control unit |

The MK60 ABS has been designed specifically for small to medium size vehicles. Compared to the MK20 ABS system, it has been possible to reduce the size of the hydraulic and electric components (e.g. hydraulic valves and solenoids) and the housing.

As a result, the overall weight of the ABS hydraulic unit has been significantly reduced.

The hydraulic unit consists of the pump motor, the valve block with 8 hydraulic valves and the electronic control unit.

The ABS control unit actuates the ABS warning lamp in the instrument cluster via the CAN databus.

The MK60 ABS is a 4/3 system. This means that the wheel speed is measured individually for each wheel (4 wheel speed sensors).

ABS controlled braking is provided individually for the front wheels and jointly for the two rear wheels (3 control channels; select-low control), i.e. the ABS control for the rear wheels is governed by the wheel closest to locking up.

## DESCRIPTION AND OPERATION

### Wheel speed sensors

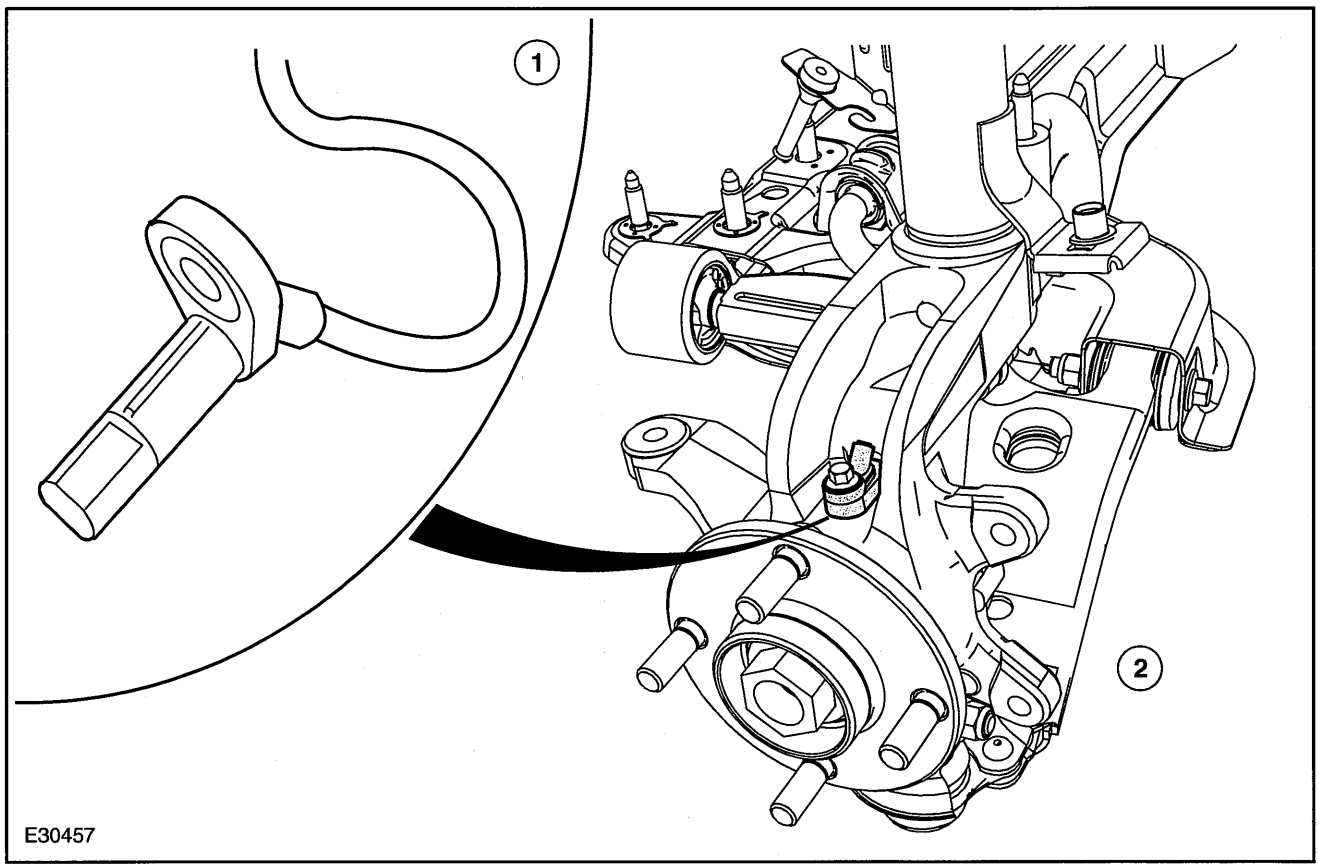


| Item | Description |
|---|---|
| 1 | Sensor |
| 2 | Installation position. |

**NOTE:** The wheel speed sensors must not be checked for voltage with an ohmmeter.

The wheel speed sensors are active sensors. They are supplied with a voltage from the ABS control unit after the ignition is switched on.

The pulses are picked up from a mechanically encoded ring, which is built into the wheel bearings on the front wheels while for the rear wheels it is a metal ring which is mounted on the stub axle.

The registered wheel speed is converted into a digital (square-wave) signal by the electronics integrated in the sensor and is then transmitted to the ABS control unit.

Data transmissions to the ABS control unit take place via a 2-stranded connecting cable.

It also supplies the vehicle speed signal, which is calculated from the wheel speed sensor signals. This is transmitted via the CAN bus to the Powertrain Control Module (PCM)

The ABS control unit can be diagnosed via the Data Link Connector (DLC).

The hydraulic unit is pre-filled for service.

## DIAGNOSIS AND TESTING

# Anti-Lock Control

Refer to Wiring Diagrams Section 206-09A, for schematic and connector information.

**General Equipment**

| |
|---|
| Worldwide diagnostic system (WDS) |

## Inspection and Verification

1. Verify the customer concern.
2. Visually inspect for obvious signs of mechanical or electrical damage.

**Visual Inspection Chart**

| Mechanical | Electrical |
|---|---|
| • Wheel speed sensor(s)<br>• Wheel speed sensor ring(s) | • Fuse(s)<br>• Electrical connector(s)<br>• Wiring harness(s). |

3. If an obvious cause for an observed or reported concern is found, correct the cause (if possible) before proceeding to the next step.
4. If the cause is not visually evident, connect the diagnostic tool to the data link connector and select the vehicle to be tested from the diagnostic tool menu.

## REMOVAL AND INSTALLATION

# Hydraulic Control Unit (HCU) — Vehicles Built Up To: 05/2004

| Materials | |
|---|---|
| Name | Specification |
| Super DOT 4 brake fluid | ESD-M6C57-A |

## Removal

⚠ **CAUTION:If brake fluid is spilt on the paintwork, the affected area must be immediately washed down with cold water.**

1. **Remove the brake master cylinder. For additional information, refer to Section 206-06 [Hydraulic Brake Actuation].**
2. **Detach the engine wiring harness electrical connector from the wheelhouse assembly.**

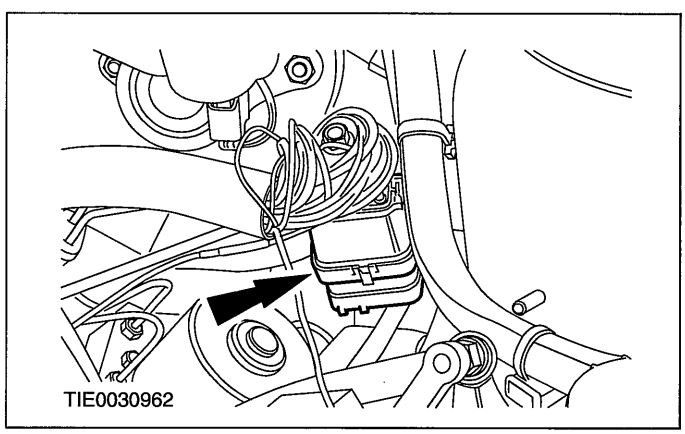


3. **CAUTIONS:**

   ⚠ **Cap the brake tubes to prevent fluid loss or dirt ingress.**

   ⚠ **Plug the hydraulic control unit (HCU) ports to prevent fluid loss or dirt ingress.**

**NOTE:**Make a note of the position of the brake tubes, to aid installation.

**Remove the brake master cylinder to hydraulic control unit (HCU) brake tubes.**

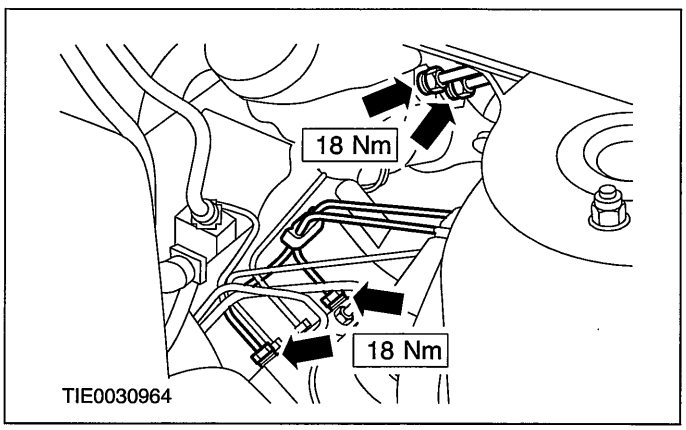


4. **CAUTIONS:**

   ⚠ **Cap the brake tubes to prevent fluid loss or dirt ingress.**

   ⚠ **Plug the HCU ports to prevent fluid loss or dirt ingress.**

**NOTE:**Make a note of the position of the brake tubes, to aid installation.

**Disconnect the brake tubes from the HCU.**

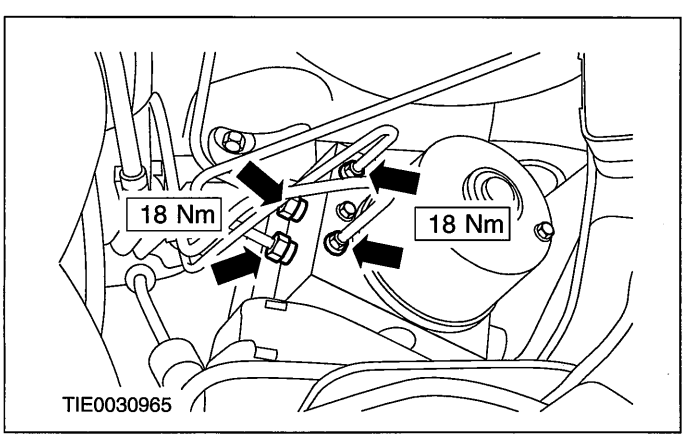

## REMOVAL AND INSTALLATION

5. Detach the brake tubes from the bulkhead.

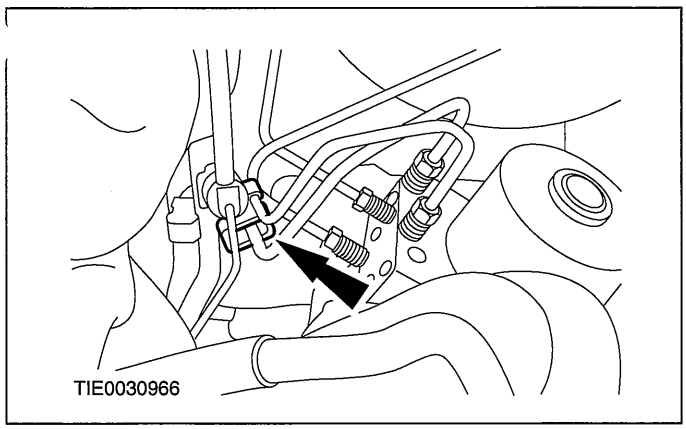


6. Disconnect the anti-lock brake system (ABS) module electrical connector.

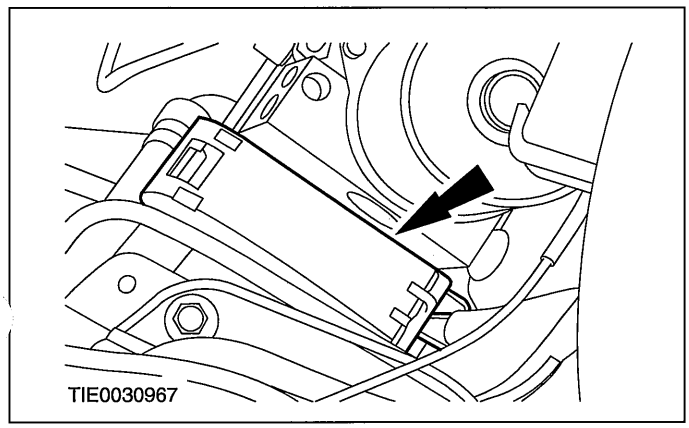


7. Raise and support the vehicle. For additional information, refer to Section 100-02 [Jacking and Lifting].
8. Remove the HCU and ABS module support bracket lower retaining bolt.

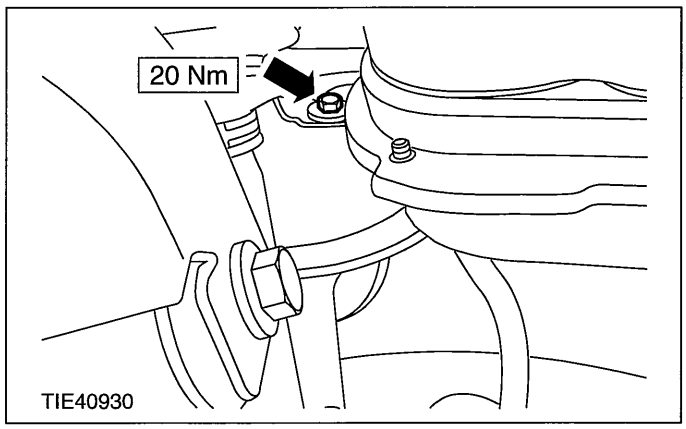


9. Lower the vehicle.
10. Remove the HCU and ABS module assembly and the support bracket.

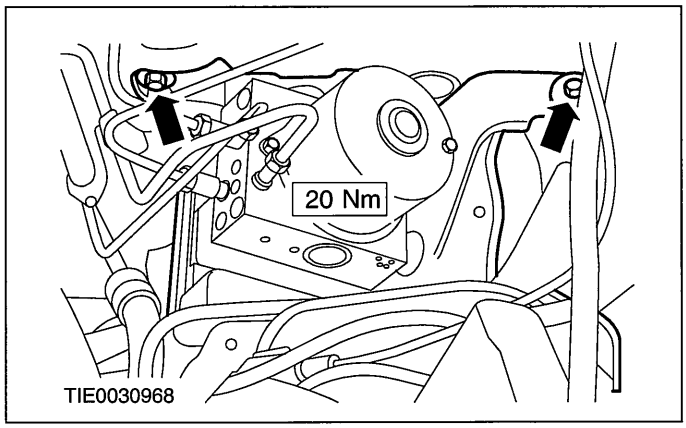


11. Detach the HCU and ABS module assembly from the support bracket.

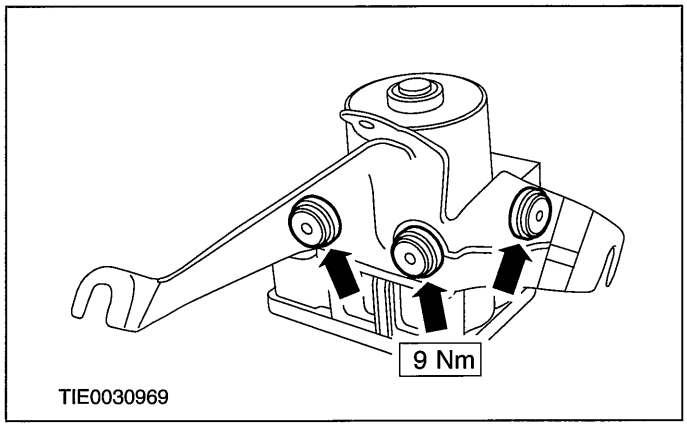


12. Remove the HCU to ABS module retaining bolts.

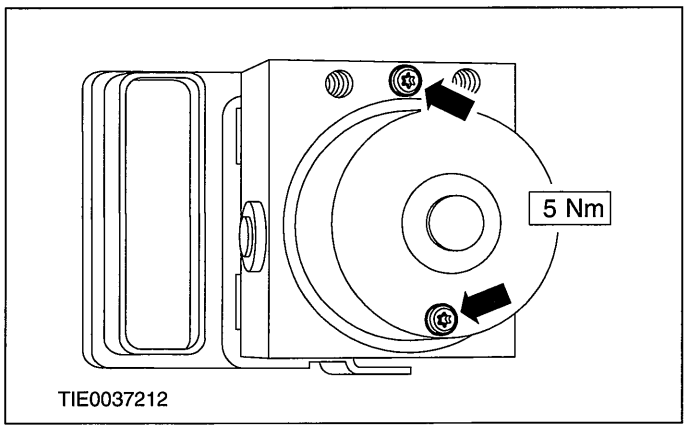


13. Remove the HCU.

### Installation

1. To install, reverse the removal procedure.

## REMOVAL AND INSTALLATION

2. Bleed the brake system. For additional information, refer to Section 206-00 [Brake System - General Information].

## REMOVAL AND INSTALLATION

# Hydraulic Control Unit (HCU) — Vehicles Built From: 05/2004

| Materials | |
|---|---|
| **Name** | **Specification** |
| Super DOT 4 brake fluid | ESD-M6C57-A |

## Removal

### All vehicles

⚠ **CAUTION:If brake fluid is spilt on the paintwork, the affected area must be immediately washed down with cold water.**

1. **Detach the engine wiring harness electrical connector from the wheelhouse assembly.**

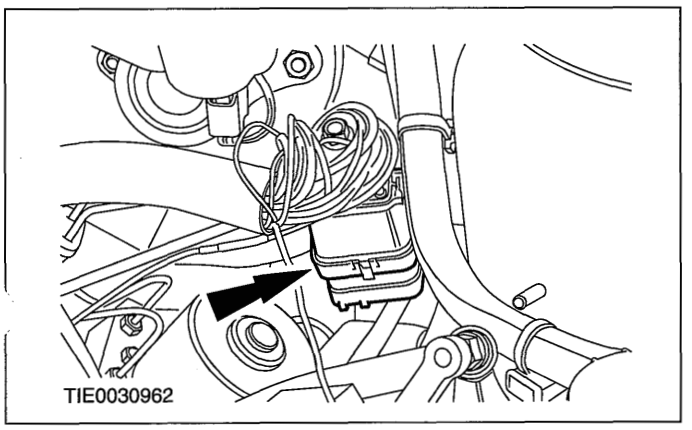


### Left-hand drive vehicles

2. **Remove the brake master cylinder.**

   **For additional information, refer to: Brake Master Cylinder - LHD (206-06 Hydraulic Brake Actuation, Removal and Installation).**

3. **CAUTIONS:**

   ⚠**Cap the brake tubes to prevent fluid loss or dirt ingress.**

   ⚠**Plug the hydraulic control unit (HCU) ports to prevent fluid loss or dirt ingress.**

**NOTE:**Make a note of the position of the brake tubes to aid installation.

**Remove the brake master cylinder to HCU brake tubes.**

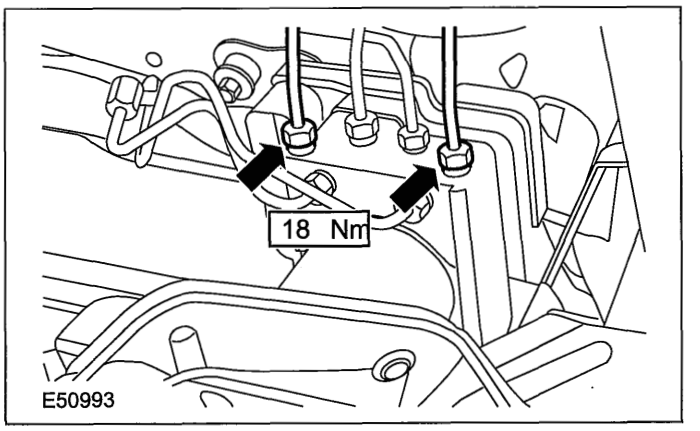


### Right-hand drive vehicles

4. **Remove the battery tray.**

   **For additional information, refer to: Battery Tray (414-01 Battery, Mounting and Cables, Removal and Installation).**

5. **CAUTIONS:**

   ⚠**Cap the brake tubes to prevent fluid loss or dirt ingress.**

   ⚠**Plug the hydraulic control unit (HCU) ports to prevent fluid loss or dirt ingress.**

**NOTE:**Make a note of the position of the brake tubes to aid installation.

**Disconnect the brake master cylinder to HCU brake tubes from the HCU.**

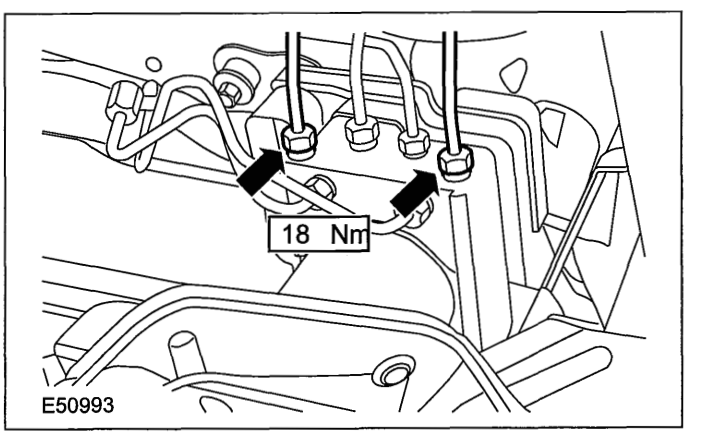


### All vehicles

6. **CAUTIONS:**

   ⚠**Cap the brake tubes to prevent fluid loss or dirt ingress.**

## REMOVAL AND INSTALLATION

**⚠Plug the HCU ports to prevent fluid loss or dirt ingress.**

**NOTE:**Make a note of the position of the brake tubes to aid installation.

**Disconnect the brake tubes from the HCU.**

- Detach the brake tubes from the bulkhead.

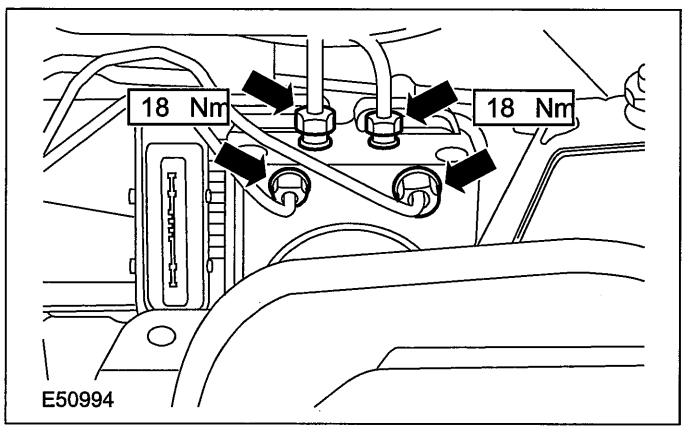


7. **⚠CAUTION:Cap the anti-lock brake system (ABS) module electrical connector and socket to prevent dirt and fluid ingress.**

   **Disconnect the ABS module electrical connector.**

   1. Depress the locking tangs.
   2. Release the retainer.

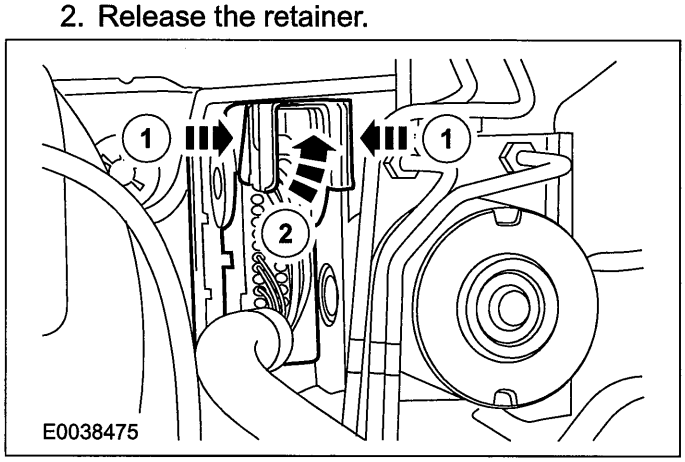


8. **Raise and support the vehicle. For additional information, refer to: (100-02 Jacking and Lifting)**

   **Jacking (Description and Operation), Lifting (Description and Operation).**

9. **Remove the HCU and ABS module support bracket lower retaining bolt.**

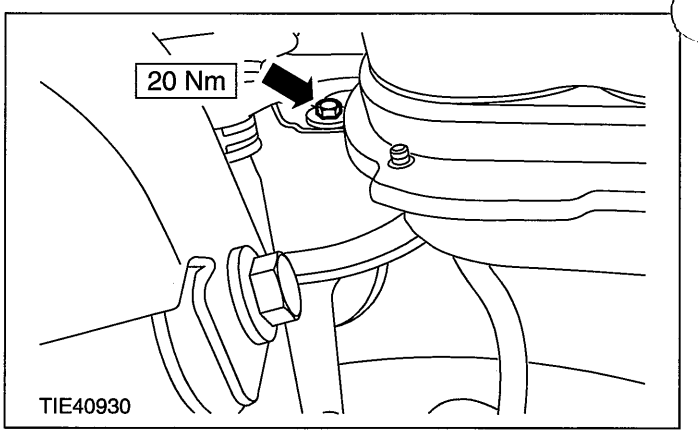


10. **Lower the vehicle.**
11. **Remove the HCU and ABS module assembly and the support bracket.**

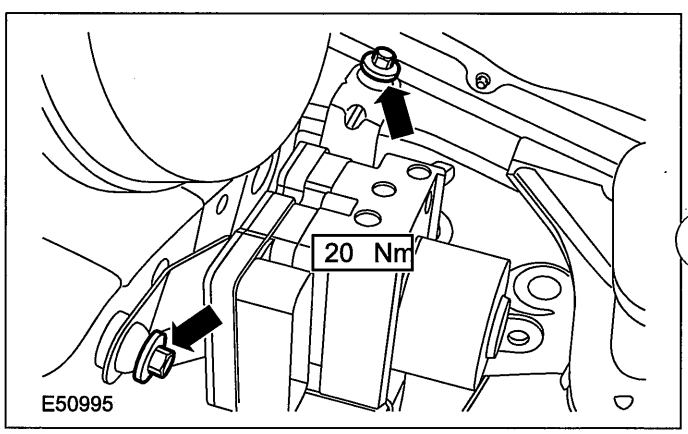


12. **Detach the HCU and ABS module assembly from the support bracket.**

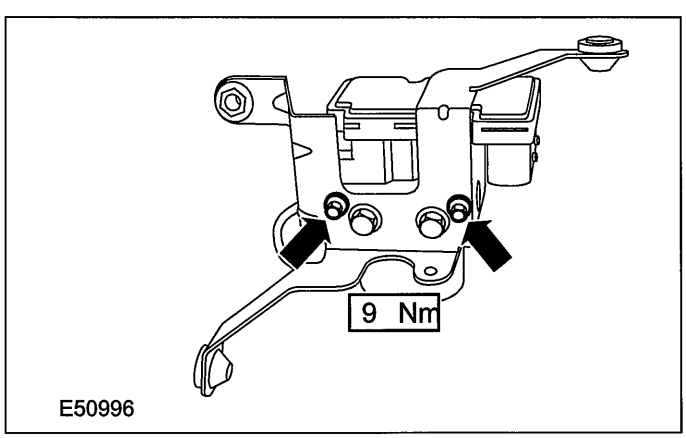

## REMOVAL AND INSTALLATION

13. **Remove the HCU.**

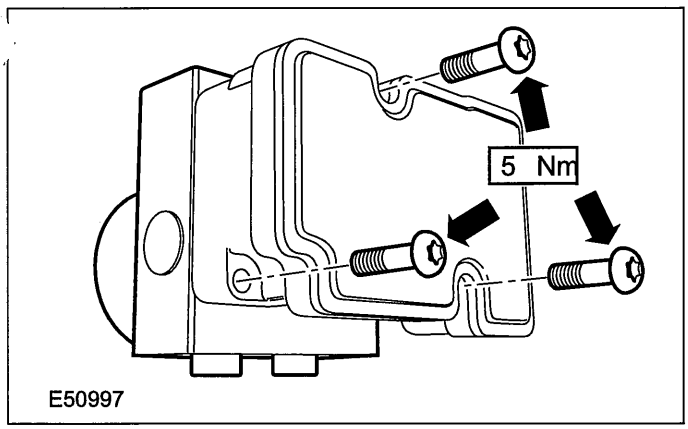


### Installation

1. **To install, reverse the removal procedure.**
2. **Bleed the brake system. For additional information, refer to: (206-00 Brake System - General Information)**

   **Brake System Bleeding (General Procedures),**
   **Brake System Pressure Bleeding (General Procedures).**

## REMOVAL AND INSTALLATION

# Anti-Lock Brake System (ABS) Module — Vehicles Built Up To: 05/2004

| Materials | |
|---|---|
| Name | Specification |
| Super DOT 4 brake fluid | ESD-M6C57-A |

## Removal

⚠ **CAUTION:If brake fluid is spilt on the paintwork, the affected area must be immediately washed down with cold water.**

1. **Remove the brake master cylinder. For additional information, refer to Section 206-06 [Hydraulic Brake Actuation].**
2. **Detach the engine wiring harness electrical connector from the wheelhouse assembly.**

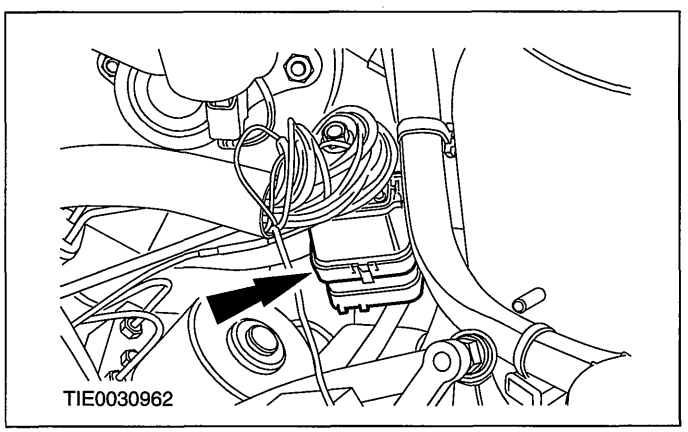


3. **CAUTIONS:**

   ⚠**Cap the brake tubes to prevent fluid loss or dirt ingress.**

   ⚠**Plug the hydraulic control unit (HCU) ports to prevent fluid loss or dirt ingress.**

**NOTE:**Make a note of the position of the brake tubes, to aid installation.

**Remove the brake master cylinder to hydraulic control unit (HCU) brake tubes.**

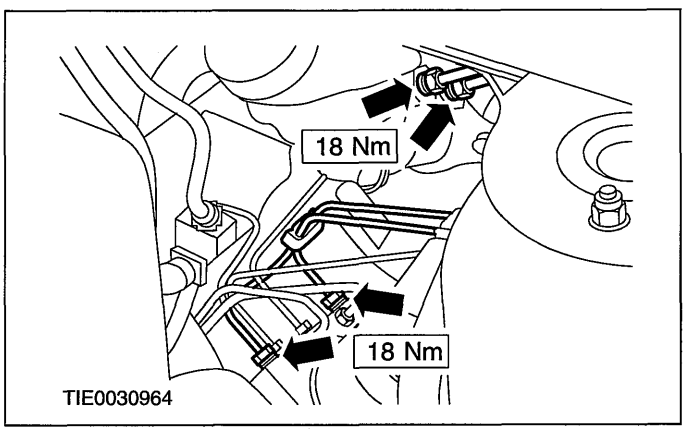


4. **CAUTIONS:**

   ⚠**Cap the brake tubes to prevent fluid loss or dirt ingress.**

   ⚠**Plug the HCU ports to prevent fluid loss or dirt ingress.**

**NOTE:**Make a note of the position of the brake tubes, to aid installation.

**Disconnect the brake tubes from the HCU.**

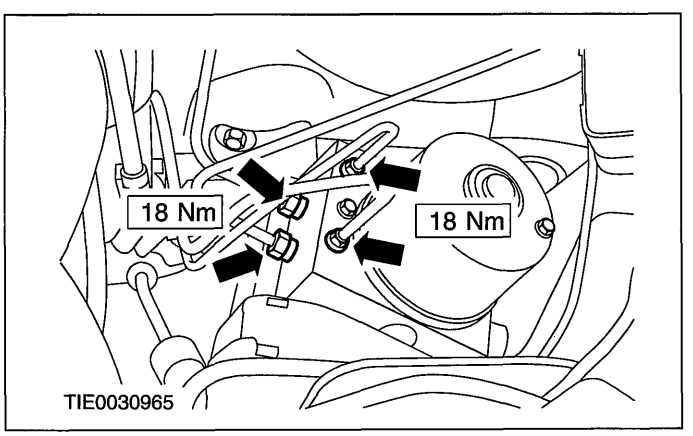

## REMOVAL AND INSTALLATION

5. Detach the brake tubes from the bulkhead.

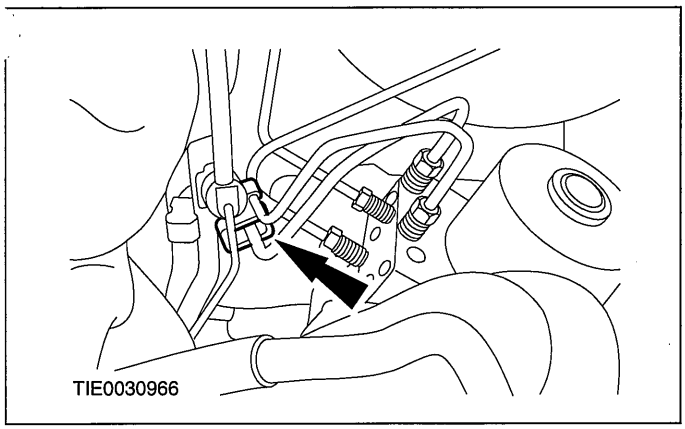


6. Disconnect the anti-lock brake system (ABS) module electrical connector.

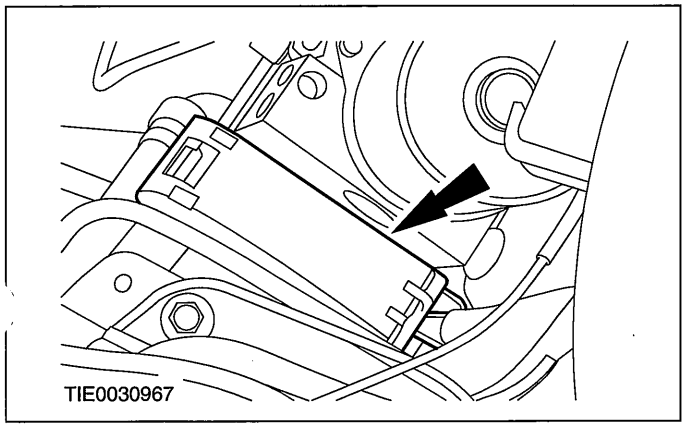


7. Raise and support the vehicle. For additional information, refer to Section 100-02 [Jacking and Lifting].
8. Remove the HCU and ABS module support bracket lower retaining bolt.

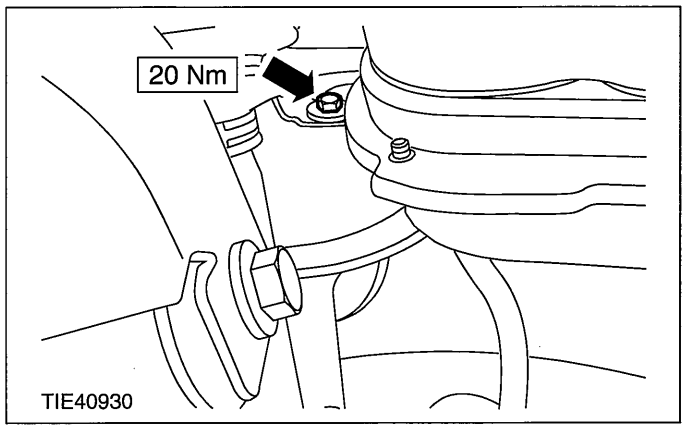


9. Lower the vehicle.
10. Remove the HCU and ABS module assembly and the support bracket.

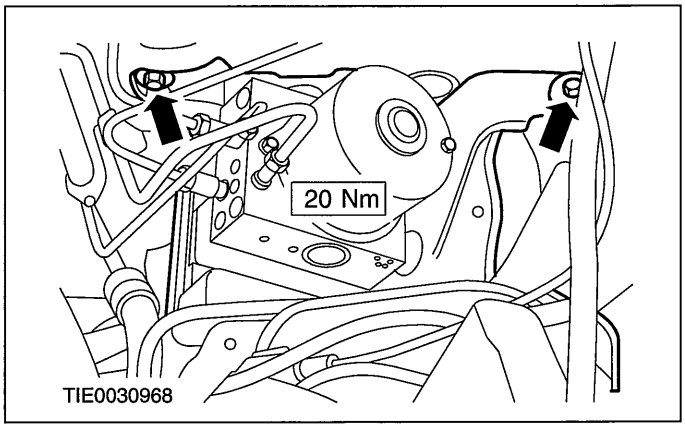


11. Detach the HCU and ABS module assembly from the support bracket.

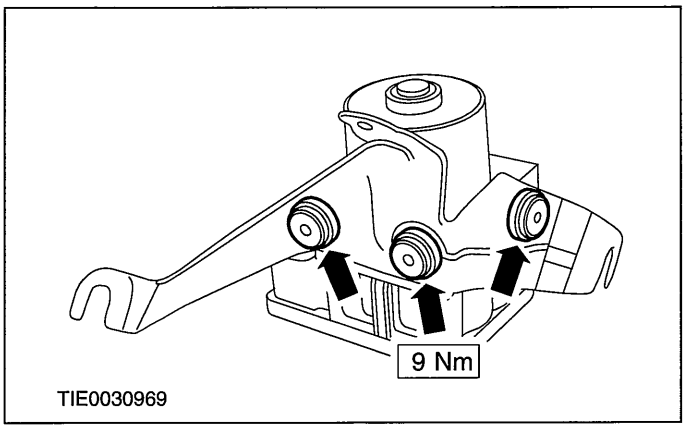


12. Remove the HCU to ABS module retaining bolts.

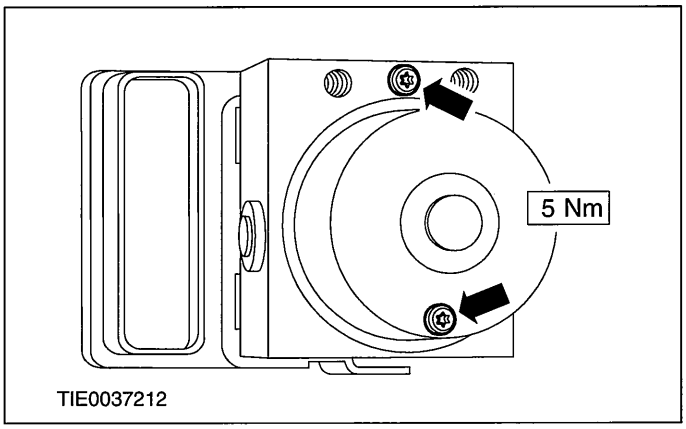


13. Remove the ABS module.

### Installation

1. To install, reverse the removal procedure.

## REMOVAL AND INSTALLATION

2. Bleed the brake system. For additional information, refer to Section 206-00 [Brake System - General Information].

## REMOVAL AND INSTALLATION

# Anti-Lock Brake System (ABS) Module — Vehicles Built From: 05/2004

| Materials | |
|---|---|
| Name | Specification |
| Super DOT 4 brake fluid | ESD-M6C57-A |

## Removal

All vehicles

⚠ **CAUTION:If brake fluid is spilt on the paintwork, the affected area must be immediately washed down with cold water.**

1. **Detach the engine wiring harness electrical connector from the wheelhouse assembly.**

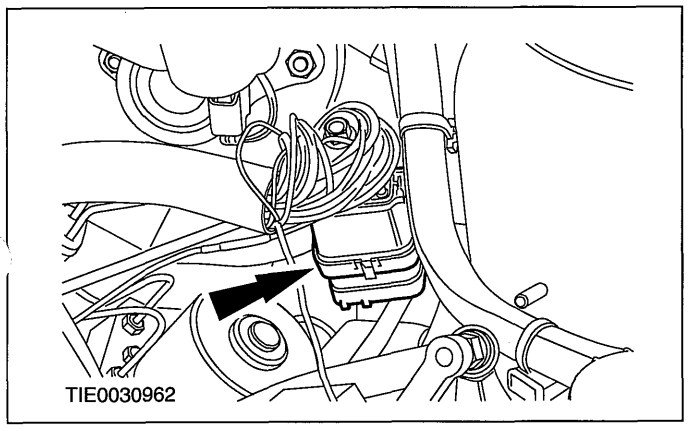


Left-hand drive vehicles

2. **Remove the brake master cylinder.**

   **For additional information, refer to: Brake Master Cylinder - LHD (206-06 Hydraulic Brake Actuation, Removal and Installation).**

3. **CAUTIONS:**

   ⚠**Cap the brake tubes to prevent fluid loss or dirt ingress.**

   ⚠**Plug the hydraulic control unit (HCU) ports to prevent fluid loss or dirt ingress.**

**NOTE:**Make a note of the position of the brake tubes to aid installation.

**Remove the brake master cylinder to HCU brake tubes.**

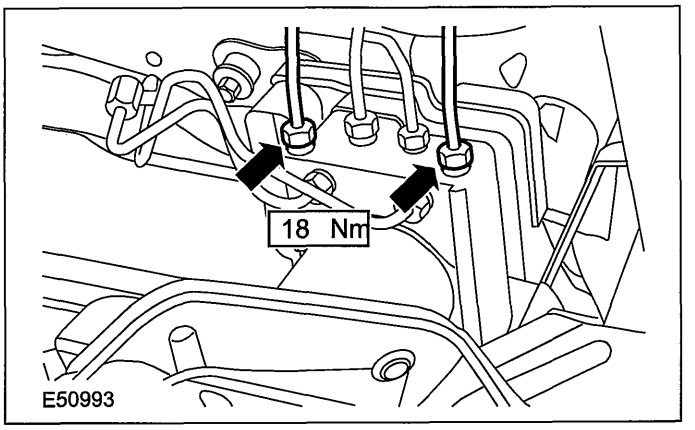


Right-hand drive vehicles

4. **Remove the battery tray.**

   **For additional information, refer to: Battery Tray (414-01 Battery, Mounting and Cables, Removal and Installation).**

5. **CAUTIONS:**

   ⚠**Cap the brake tubes to prevent fluid loss or dirt ingress.**

   ⚠**Plug the hydraulic control unit (HCU) ports to prevent fluid loss or dirt ingress.**

**NOTE:**Make a note of the position of the brake tubes to aid installation.

**Disconnect the brake master cylinder to HCU brake tubes from the HCU.**

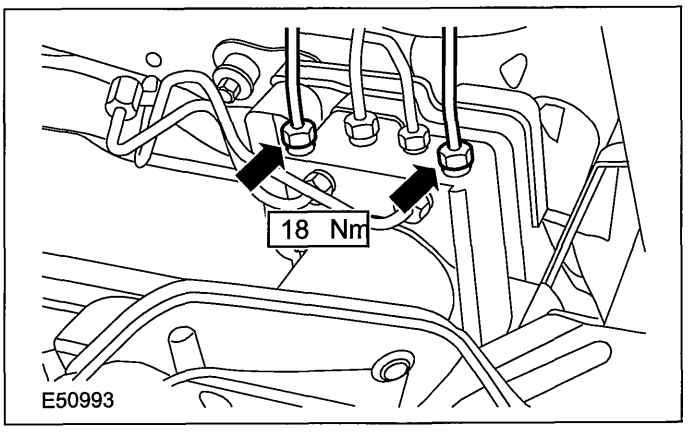


All vehicles

6. **CAUTIONS:**

## REMOVAL AND INSTALLATION

**⚠Cap the brake tubes to prevent fluid loss or dirt ingress.**

**⚠Plug the HCU ports to prevent fluid loss or dirt ingress.**

**NOTE:**Make a note of the position of the brake tubes to aid installation.

**Disconnect the brake tubes from the HCU.**

- Detach the brake tubes from the bulkhead.

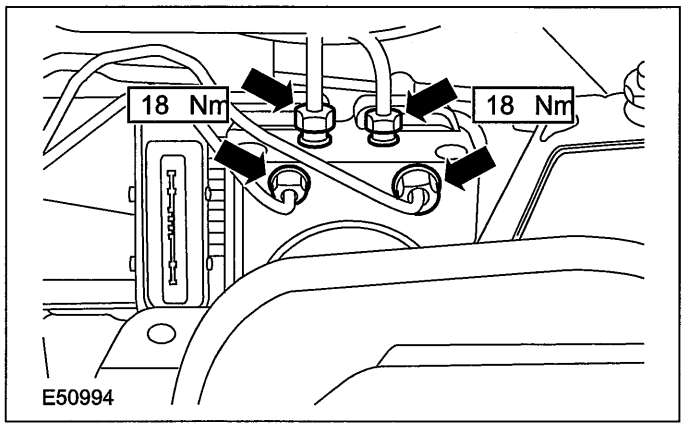


7. **⚠CAUTION:Cap the anti-lock brake system (ABS) module electrical connector and socket to prevent dirt and fluid ingress.**

   **Disconnect the ABS module electrical connector.**

   1. Depress the locking tangs.
   2. Release the retainer.

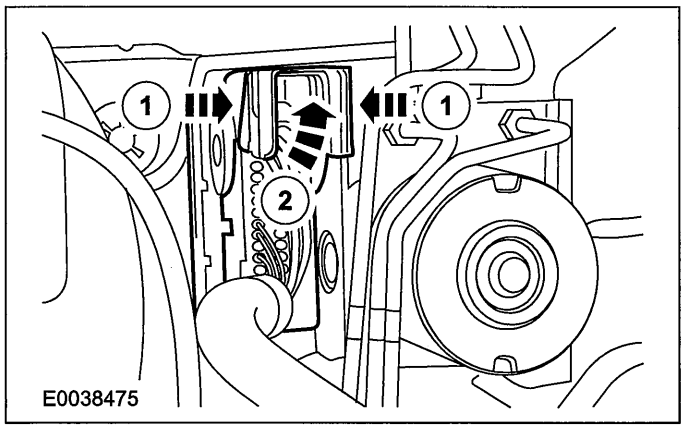


8. **Raise and support the vehicle. For additional information, refer to: (100-02 Jacking and Lifting)**

   **Jacking (Description and Operation), Lifting (Description and Operation).**

9. **Remove the HCU and ABS module support bracket lower retaining bolt.**

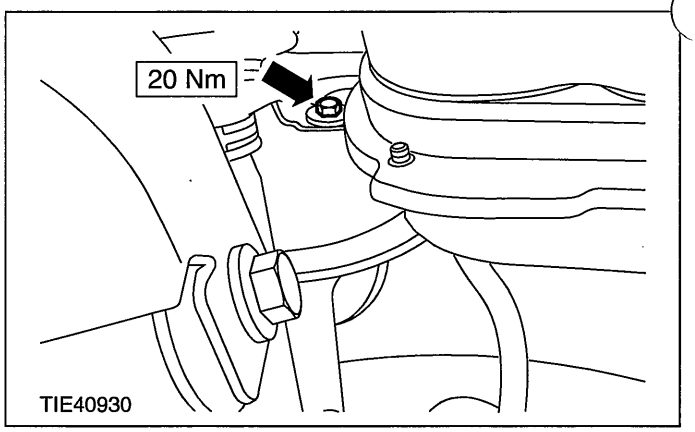


10. **Lower the vehicle.**
11. **Remove the HCU and ABS module assembly and the support bracket.**

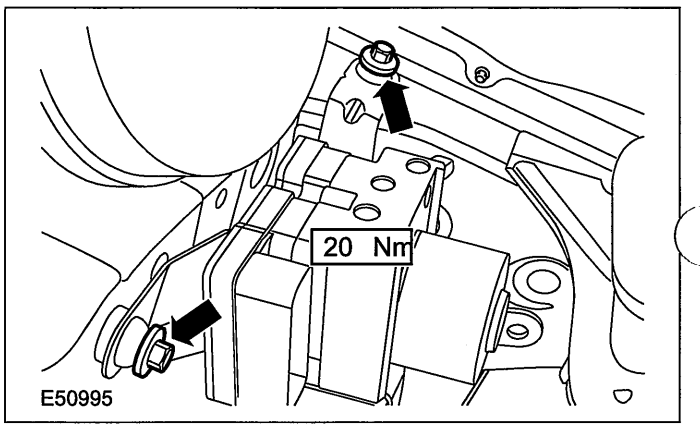


12. **Detach the HCU and ABS module assembly from the support bracket.**

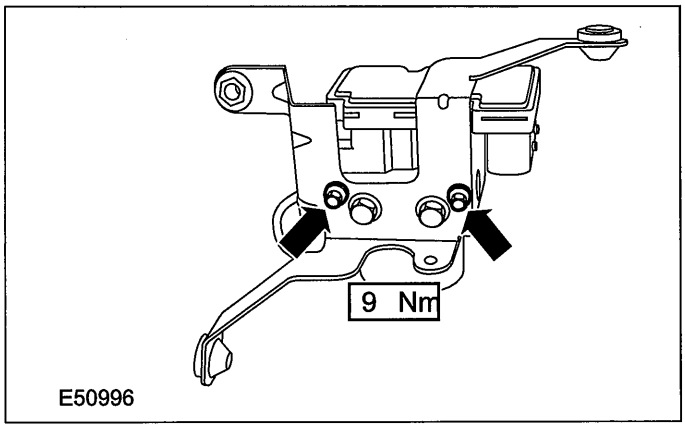

## REMOVAL AND INSTALLATION

**13. Remove the ABS module.**

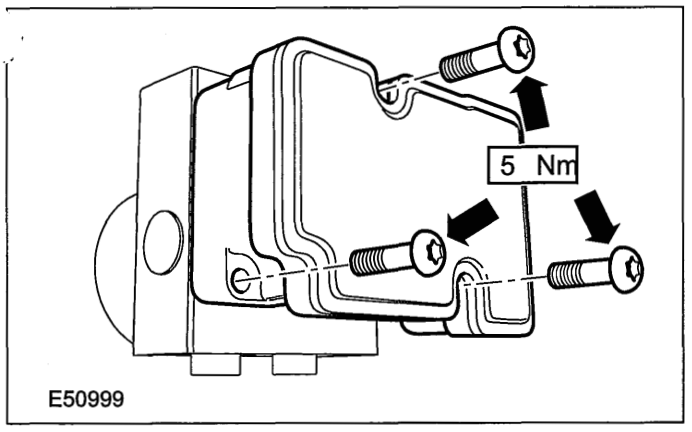


### Installation

1. **To install, reverse the removal procedure.**
2. **Bleed the brake system. For additional information, refer to: (206-00 Brake System - General Information)**

   **Brake System Bleeding (General Procedures),**
   **Brake System Pressure Bleeding (General Procedures).**

## REMOVAL AND INSTALLATION

# Rear Wheel Speed Sensor(12 785 0)

### Removal

All vehicles

1. **Raise and support the vehicle. For additional information, refer to: (100-02 Jacking and Lifting)**

   **Jacking (Description and Operation), Lifting (Description and Operation).**

Vehicles with rear drum brakes

2. **Detach the wheel speed sensor from the wheel spindle on both sides.**

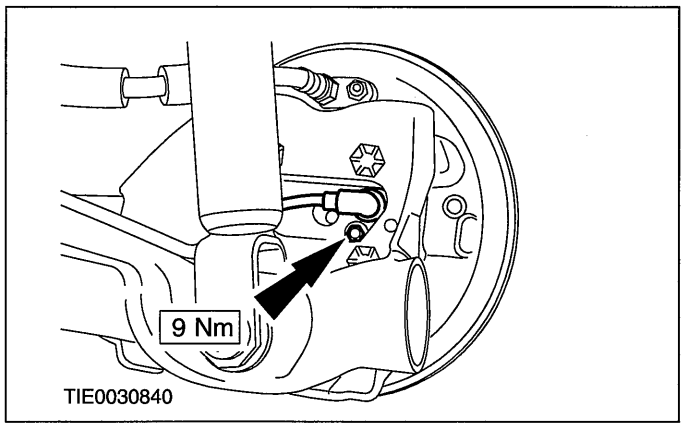


Vehicles with rear disc brakes

3. **Detach the wheel speed sensor from the wheel spindle on both sides.**

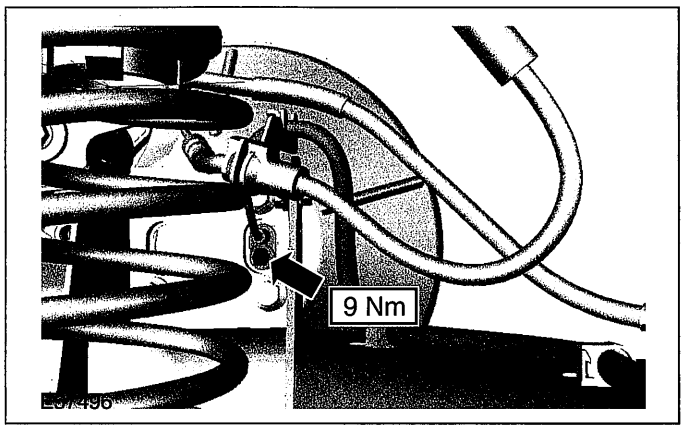


4. **Detach the wheel speed sensor wiring harness from the wheel speed sensor wiring harness support bracket on both sides.**

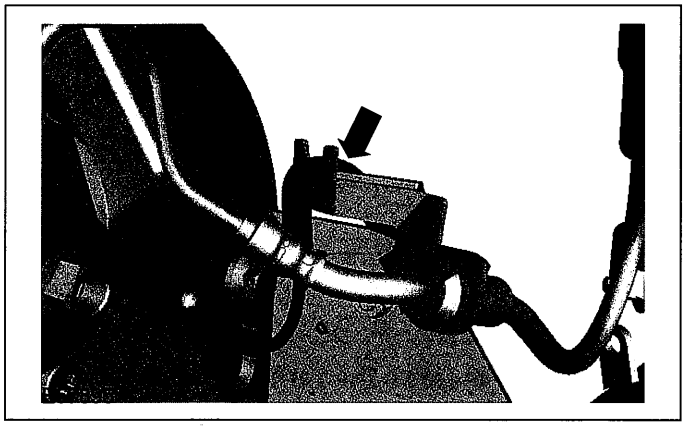

All vehicles

5. **Disconnect the wheel speed sensor electrical connector.**

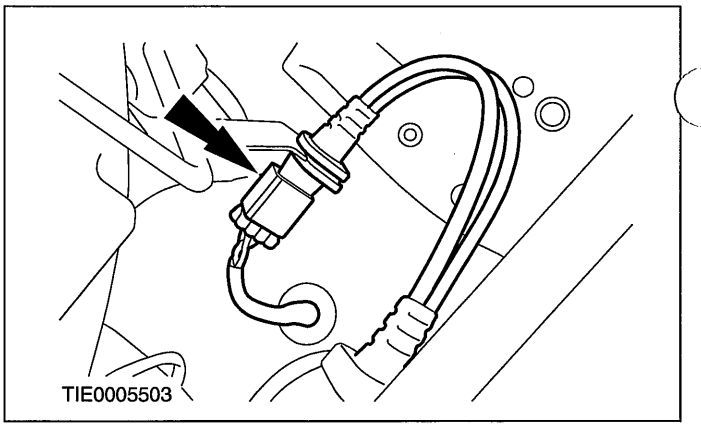


6. **Detach the wheel speed sensor support bracket and wheel speed sensor wiring harness from the beam axle.**
   - Discard the retaining clips.

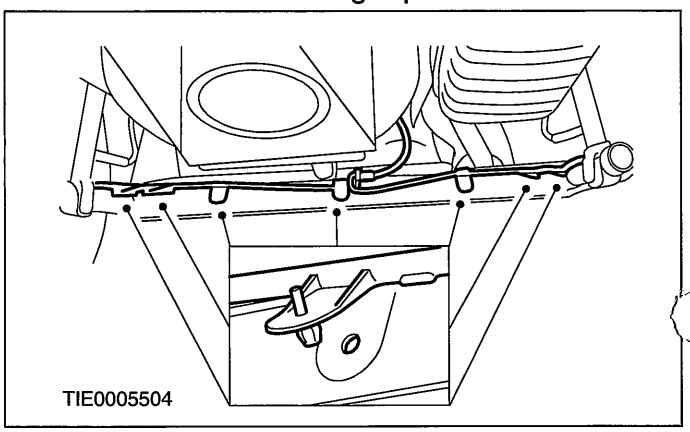

## REMOVAL AND INSTALLATION

7. **Detach the wheel speed sensor wiring harness from the wheel speed sensor support bracket.**
   - Discard the retaining clips.

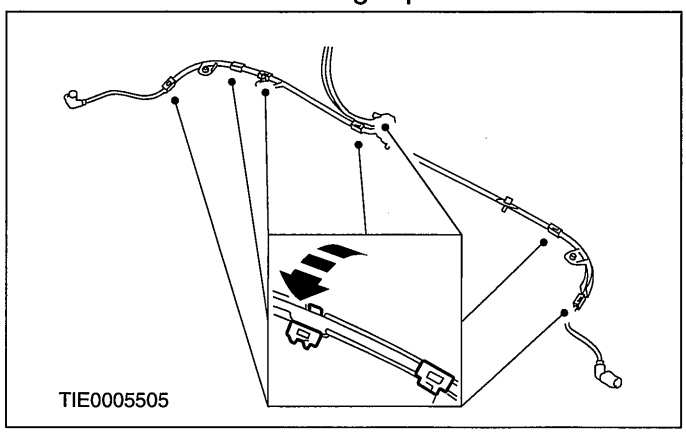


8. **Detach the wheel speed sensor wiring harness from the beam axle on both sides.**

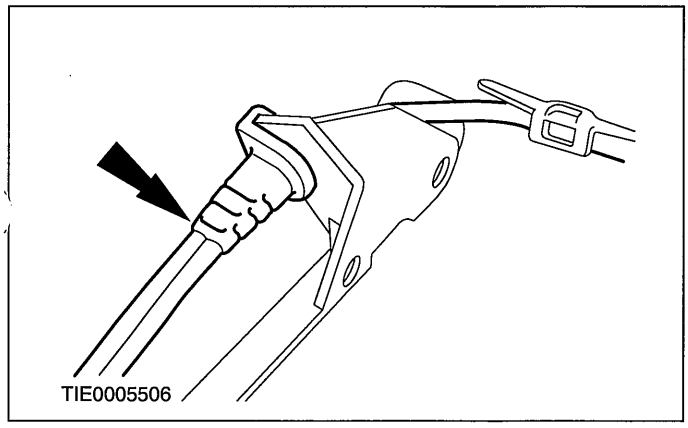


9. **Remove the rear wheel speed sensor.**

### Installation

1. **NOTE:Install new retaining clips.**

   **To install, reverse the removal procedure.**

## REMOVAL AND INSTALLATION

# Rear Wheel Speed Sensor Ring(12 788 0)

### Special Tool(s)

| | |
|---|---|
| 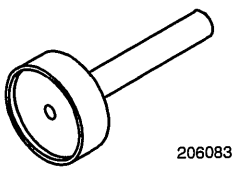 206083 | Installer, ABS Sensor Ring 206-083 |

### General Equipment

| |
|---|
| Soft faced hammer |

## Removal

### Vehicles with rear drum brakes

1. **Remove the brake drum.**

   **For additional information, refer to: Brake Drum (206-02 Drum Brake, Removal and Installation).**

### Vehicles with rear disc brakes

2. **Remove the dust cap.**

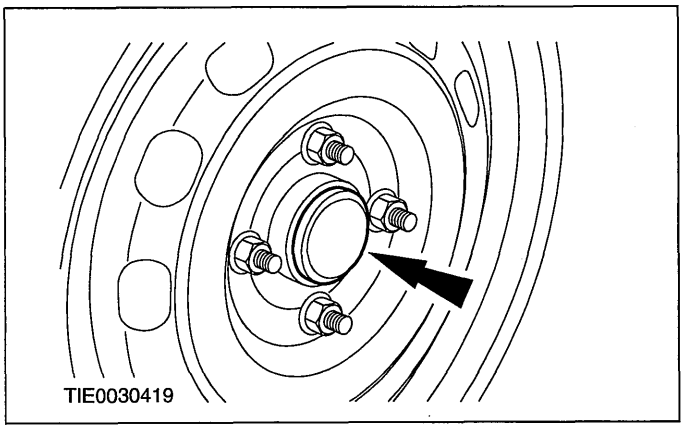


3. **Remove the brake disc.**

   **For additional information, refer to: Brake Disc (206-04 Rear Disc Brake, Removal and Installation).**

4. **Remove the wheel hub.**

- Remove and discard the wheel hub retaining nut.

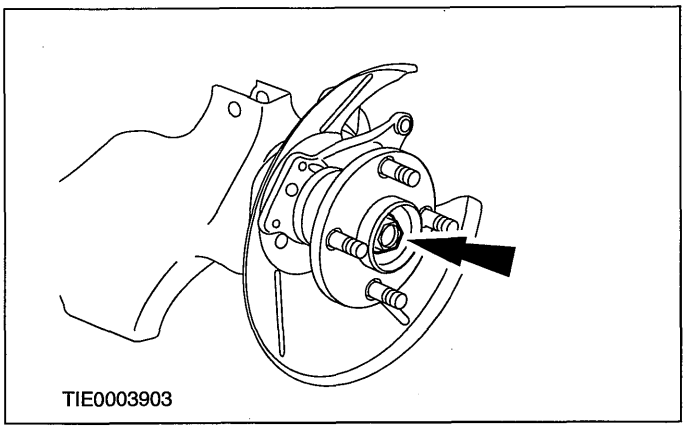


### All vehicles

5. **Remove and discard the wheel speed sensor ring (brake disc shown).**

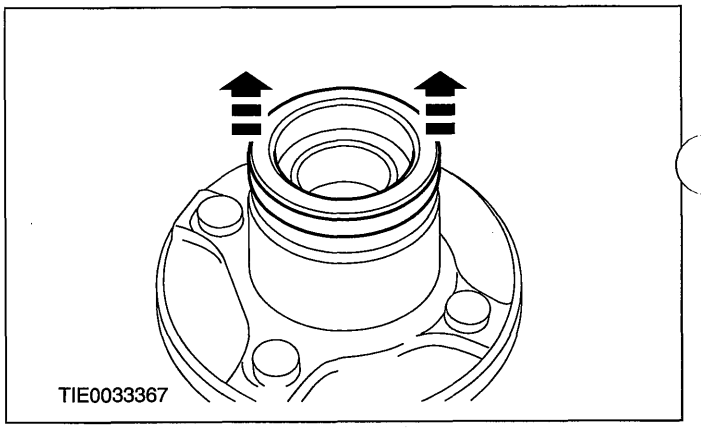


## Installation

### All vehicles

1. **CAUTIONS:**

   **⚠Make sure the wheel speed sensor ring is not knocked, damaged and kept free from metal fragments.**

   **⚠Protect the face of the wheel speed sensor ring with a non-ferrous flat block to prevent damage.**

   **⚠Make sure the wheel hub or brake drum is adequately supported and do not allow it to rest on the wheel studs.**

   **⚠Make sure the wheel speed sensor ring is pressed on slowly and squarely until fully seated.**

   **⚠Do not exceed a maximum load of 10 kN.**

## REMOVAL AND INSTALLATION

**Using the special tool, install a new wheel speed sensor ring (brake disc shown).**

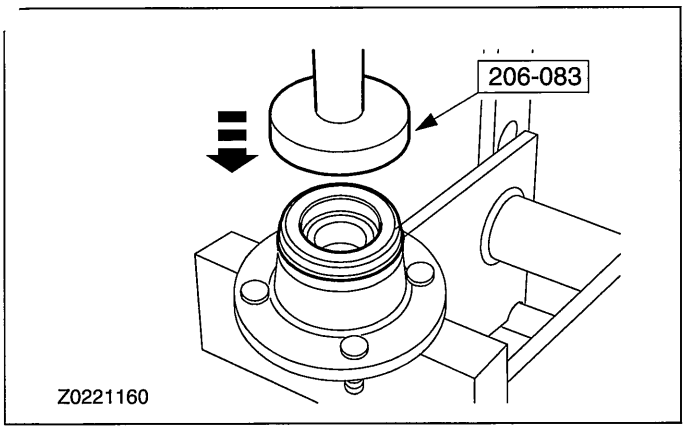


Vehicles with rear disc brakes

2. **CAUTIONS:**

   **⚠Avoid any impact on the wheel speed sensor ring.**

   **⚠Make sure the wheel speed sensor ring is clean.**

   **⚠Avoid any contact between the wheel speed sensor ring and a magnetic surface.**

   **⚠Rotate the hub assembly 10 times counter-clockwise when tightening the wheel hub retaining nut to prevent damage to the wheel bearing.**

**NOTE:** Install a new wheel hub retaining nut.

**Install the wheel hub.**

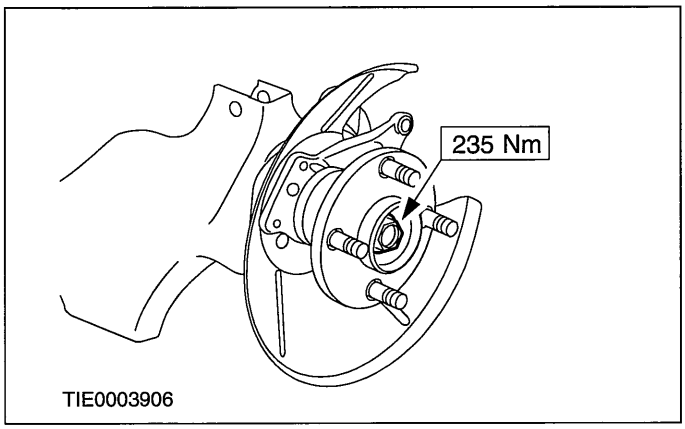


3. **Install the brake disc.**

   **For additional information, refer to: Brake Disc (206-04 Rear Disc Brake, Removal and Installation).**

4. **NOTE: If the dust cap is damaged a new dust cap must be installed.**

**Using a soft faced hammer and a wooden block, install the dust cap.**

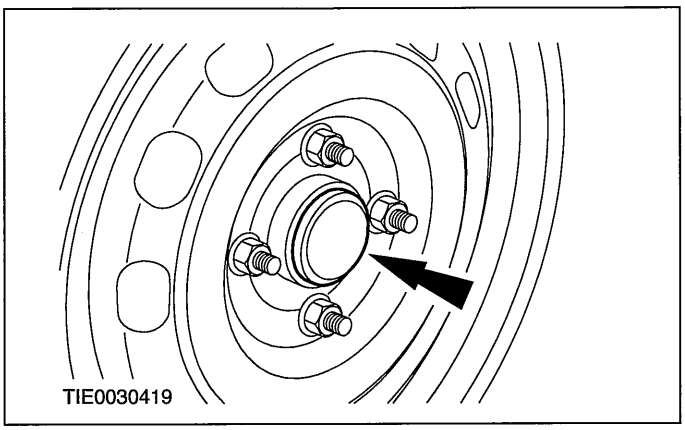


Vehicles with rear drum brakes

5. **CAUTIONS:**

   **⚠Avoid any impact on the wheel speed sensor ring.**

   **⚠Make sure the wheel speed sensor ring is clean.**

   **⚠Avoid any contact between the wheel speed sensor ring and a magnetic surface.**

   **Install the brake drum.**

   **For additional information, refer to: Brake Drum (206-02 Drum Brake, Removal and Installation).**

## REMOVAL AND INSTALLATION

# Front Wheel Speed Sensor(12 784 0)

### Removal

1. **Remove the wheel and tire.**

   **For additional information, refer to: Wheel and Tire (204-04 Wheels and Tires, Removal and Installation).**

2. **Detach the fender splash shield from the wheelhouse assembly.**

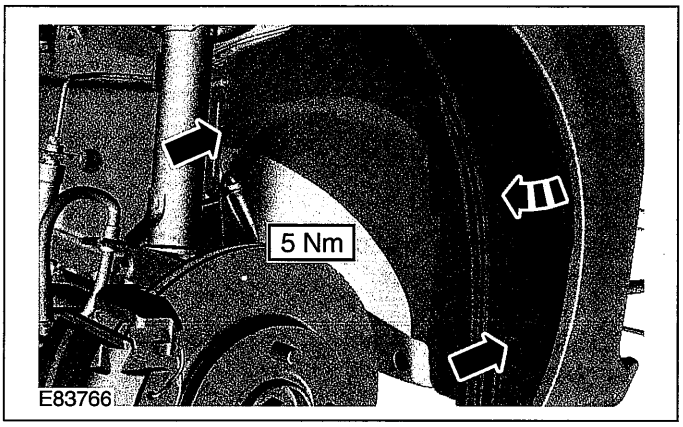


3. ⚠**CAUTION:Make sure that the area around the component is clean and free of foreign material.**

   1. Detach the wheel speed sensor electrical connector from the wheelhouse assembly.
   2. Disconnect the wheel speed sensor electrical connector.

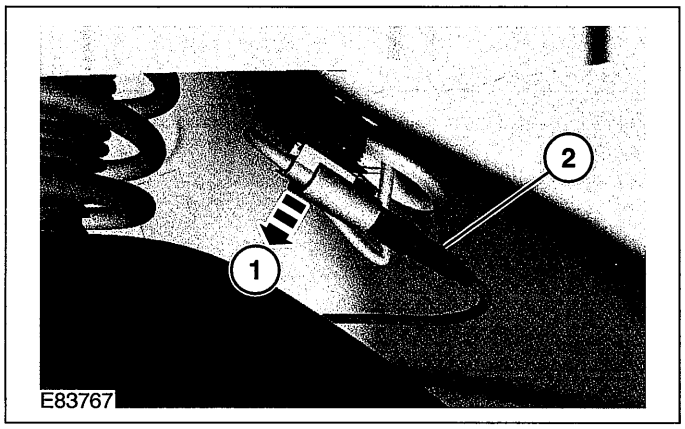


4. ⚠**CAUTION:Make sure that the area around the component is clean and free of foreign material.**

   **Remove the wheel speed sensor bolt.**

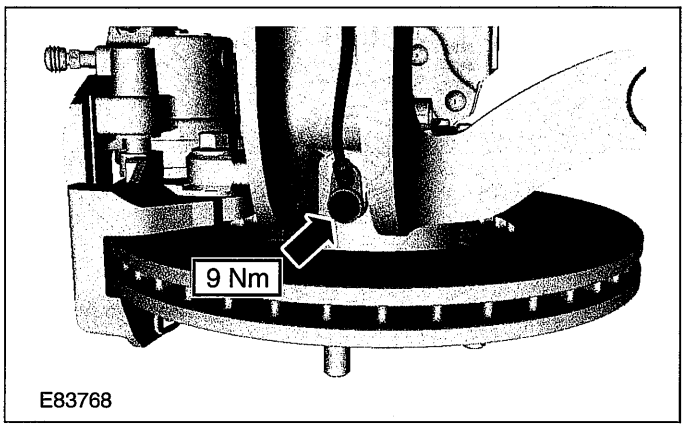


5. **NOTE:Make sure that all openings are sealed.**

**NOTE:**Note the position of the component before removal.

   **Remove the wheel speed sensor.**

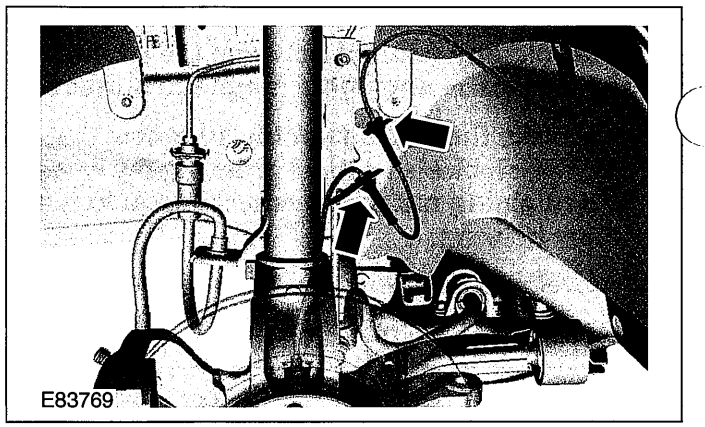


### Installation

1. ⚠**CAUTION:Make sure that the wheel speed sensor cable is not twisted and correctly located.**

**NOTE:**Make sure that the sensor housing is clean and free of foreign material.

**NOTE:**Make sure that the sensor is installed in the same location as when removed.

   **To install, reverse the removal procedure.**

# SECTION 206-09B Anti-Lock Control - Traction Control

## VEHICLE APPLICATION:2006.0 Fiesta

CONTENTS PAGE

**SPECIFICATIONS**

Specifications..... 206-09B-2

**DIAGNOSIS AND TESTING**

Anti-Lock Control - Traction Control..... 206-09B-3

**REMOVAL AND INSTALLATION**

Rear Wheel Speed Sensor Ring..... (12 788 0) 206-09B-4
Rear Wheel Speed Sensor..... (12 785 0) 206-09B-5
Hydraulic Control Unit (HCU)..... 206-09B-6
Anti-Lock Brake System (ABS) Module..... 206-09B-7

## SPECIFICATIONS

### Lubricants, Fluids, Sealers and Adhesives

| | Specifications |
|---|---|
| Super DOT 4 brake fluid | ESD-M6C57-A |

### Torque Specifications

| Item | Nm | lb-ft | lb-in |
|---|---|---|---|
| Hydraulic control unit (HCU) support bracket retaining bolts | 23 | 17 | - |
| HCU retaining bolts | 10 | - | 89 |
| Brake tube to HCU union | 13 | 10 | - |
| Wheel speed sensor retaining bolt | 9 | - | 80 |

## DIAGNOSIS AND TESTING

# Anti-Lock Control - Traction Control

REFER to Section 206-09A [Anti-Lock Control] / 206-09B [Anti-Lock Control - Traction Control] / 206-09C [Anti-Lock Control - Stability Assist].

## REMOVAL AND INSTALLATION

# Rear Wheel Speed Sensor Ring(12 788 0)

For additional information, refer to
Section 206-09A [Anti-Lock Control] / 206-09B [Anti-Lock Control - Traction Control] / 206-09C [Anti-Lock Control - Stability Assist].

## REMOVAL AND INSTALLATION

# Rear Wheel Speed Sensor(12 785 0)

### Removal

1. **For additional information, refer to Section 206-09A [Anti-Lock Control] / 206-09B [Anti-Lock Control - Traction Control] / 206-09C [Anti-Lock Control - Stability Assist].**

## REMOVAL AND INSTALLATION

# Hydraulic Control Unit (HCU)

### Removal

1. **NOTE:The traction control function is only available on vehicles equipped with the MK60 anti-lock brake system (ABS) and the stability assist program.**

   **For additional information, refer to: Hydraulic Control Unit (HCU) (206-09 Anti-Lock Control - Stability Assist, Removal and Installation).**

## REMOVAL AND INSTALLATION

# Anti-Lock Brake System (ABS) Module

## Removal

1. **NOTE:The traction control function is only available on vehicles equipped with the MK60 anti-lock brake system (ABS) and the stability assist program.**

   **For additional information, refer to: Stability Assist Module (206-09 Anti-Lock Control - Stability Assist, Removal and Installation).**

# SECTION 206-09C Anti-Lock Control - Stability Assist

## VEHICLE APPLICATION:2006.0 Fiesta

CONTENTS PAGE


**SPECIFICATIONS**

Specifications ..... 206-09C-2

**DIAGNOSIS AND TESTING**

Anti-Lock Control - Stability Assist ..... 206-09C-3

**REMOVAL AND INSTALLATION**

Hydraulic Control Unit (HCU) ..... 206-09C-4
Rear Wheel Speed Sensor ..... (12 785 0) 206-09C-7
Yaw Rate Sensor and Accelerometer ..... 206-09C-8
Steering Wheel Rotation Sensor ..... 206-09C-10
Rear Wheel Speed Sensor Ring ..... (12 788 0) 206-09C-11
Stability Assist Module ..... 206-09C-12

## SPECIFICATIONS

### Lubricants, Fluids, Sealers and Adhesives

| | Specifications |
|---|---|
| Super DOT 4 brake fluid | ESD-M6C57-A |

### Torque Specifications

| Description | Nm | lb-ft | lb-in |
|---|---|---|---|
| Hydraulic control unit (HCU) to support bracket retaining bolts | 9 | - | 80 |
| HCU support bracket retaining bolts | 20 | 15 | - |
| Brake tube to HCU unions | 18 | 13 | - |
| Wheel speed sensor retaining bolts | 9 | - | 80 |
| Stability assist module to HCU retaining bolts | 5 | - | 44 |
| Yaw rate sensor and accelerometer assembly retaining bolts | 5 | - | 44 |
| Yaw rate sensor and accelerometer assembly cover retaining bolts | 4 | - | 35 |

## DIAGNOSIS AND TESTING

# Anti-Lock Control - Stability Assist

REFER to Section 206-09A [Anti-Lock Control] / 206-09B [Anti-Lock Control - Traction Control] / 206-09C [Anti-Lock Control - Stability Assist].

## REMOVAL AND INSTALLATION

# Hydraulic Control Unit (HCU)

| Materials | |
|---|---|
| Name | Specification |
| Super DOT 4 brake fluid | ESD-M6C57-A |

## Removal

⚠ **CAUTION:If brake fluid is spilt on the paintwork, the affected area must be immediately washed down with cold water.**

1. **Remove the brake master cylinder. For additional information, refer to Section 206-06 [Hydraulic Brake Actuation].**
2. **Detach the engine wiring harness electrical connector from the wheelhouse assembly.**

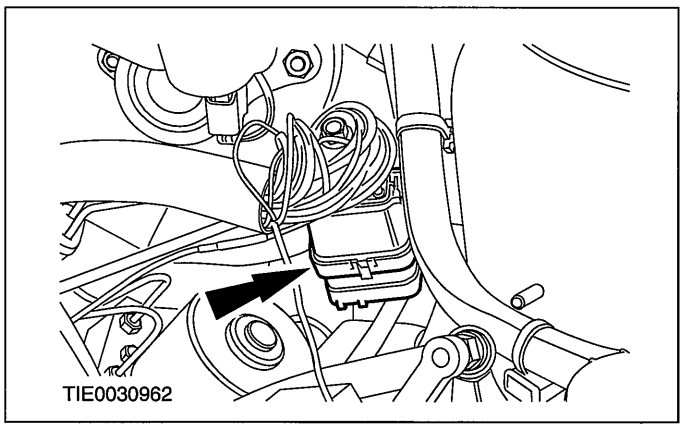


3. **CAUTIONS:**

   ⚠**Cap the brake tubes to prevent fluid loss or dirt ingress.**

   ⚠**Plug the hydraulic control unit (HCU) ports to prevent fluid loss or dirt ingress.**

**NOTE:**Make a note of the position of the brake tubes, to aid installation.

**Remove the brake master cylinder to hydraulic control unit (HCU) brake tubes.**

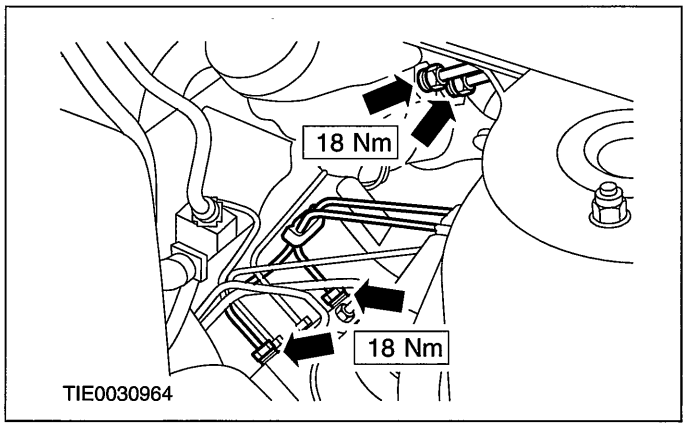


4. **CAUTIONS:**

   ⚠**Cap the brake tubes to prevent fluid loss or dirt ingress.**

   ⚠**Plug the HCU ports to prevent fluid loss or dirt ingress.**

**NOTE:**Make a note of the position of the brake tubes, to aid installation.

**Disconnect the brake tubes from the HCU.**

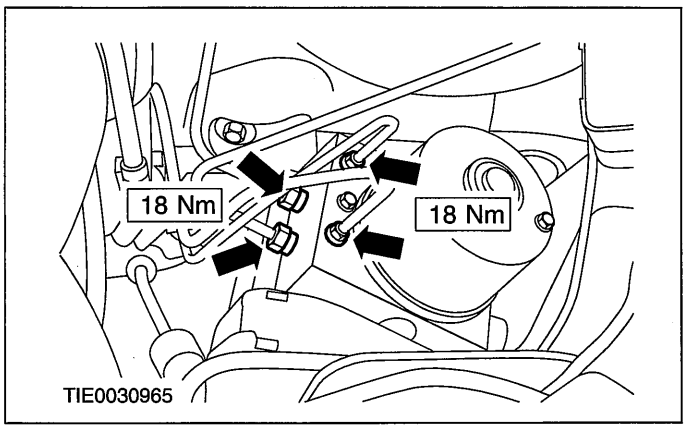

## REMOVAL AND INSTALLATION

5. Detach the brake tubes from the bulkhead.

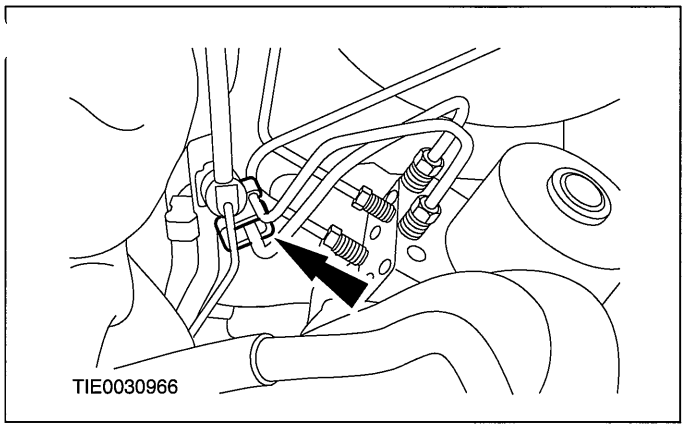


6. Disconnect the stability assist module electrical connector.

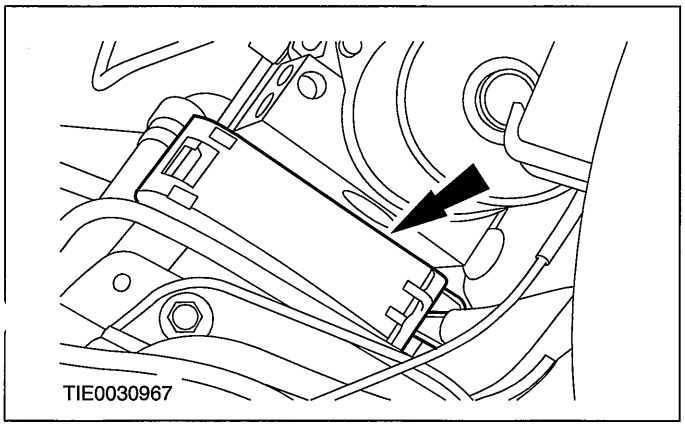


7. Raise and support the vehicle. For additional information, refer to Section 100-02 [Jacking and Lifting].
8. Remove the HCU and stability assist module support bracket lower retaining bolt.

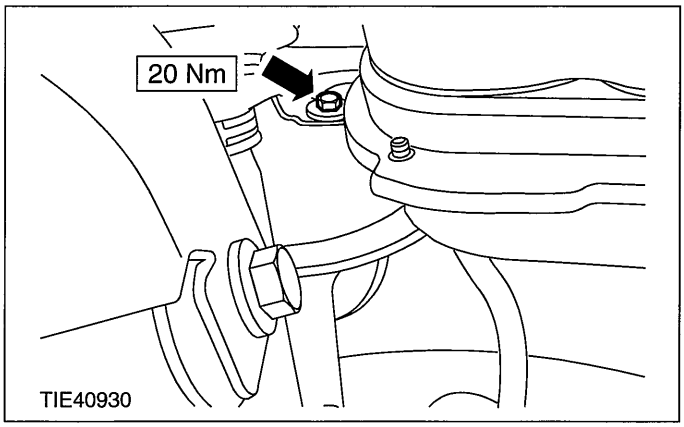


9. Lower the vehicle.
10. Remove the HCU and stability assist module assembly and the support bracket.

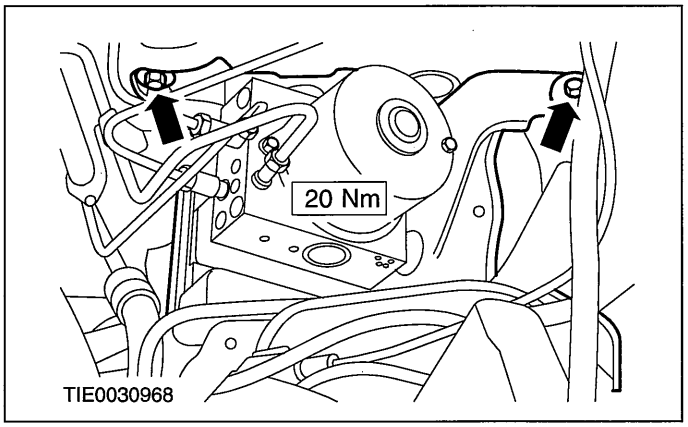


11. Detach the HCU and stability assist module assembly from the support bracket.

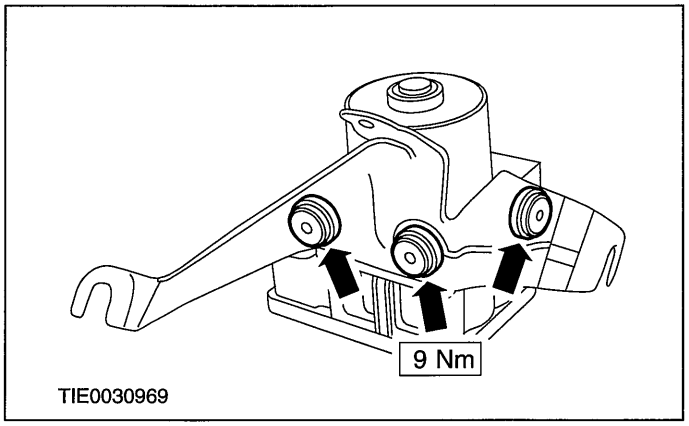


12. Remove the HCU to stability assist module retaining bolts.

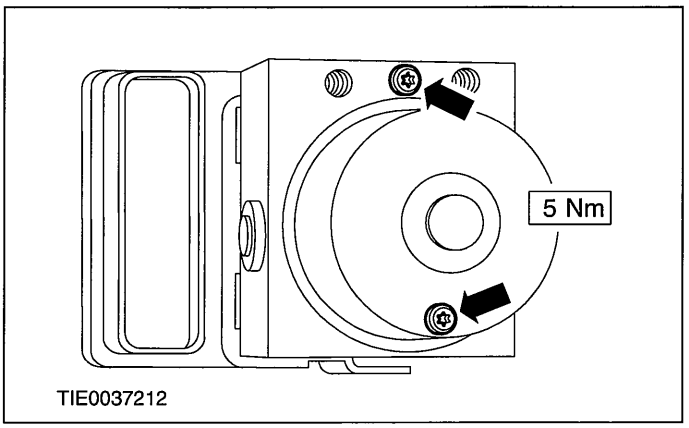


13. Remove the HCU.

### Installation

1. To install, reverse the removal procedure.

## REMOVAL AND INSTALLATION

2. Bleed the brake system. For additional information, refer to Section 206-00 [Brake System - General Information].

## REMOVAL AND INSTALLATION

# Rear Wheel Speed Sensor(12 785 0)

### Removal

1. **For additional information, refer to Section 206-09A [Anti-Lock Control] / 206-09B [Anti-Lock Control - Traction Control] / 206-09C [Anti-Lock Control - Stability Assist].**

## REMOVAL AND INSTALLATION

# Yaw Rate Sensor and Accelerometer

## Removal

**NOTE:** The yaw rate sensor and accelerometer are one assembly and cannot be seperated.

1. **Remove the left-hand front seat. For additional information, refer to Section 501-10 [Seating].**
2. **Remove the scuff plate trim panels.**

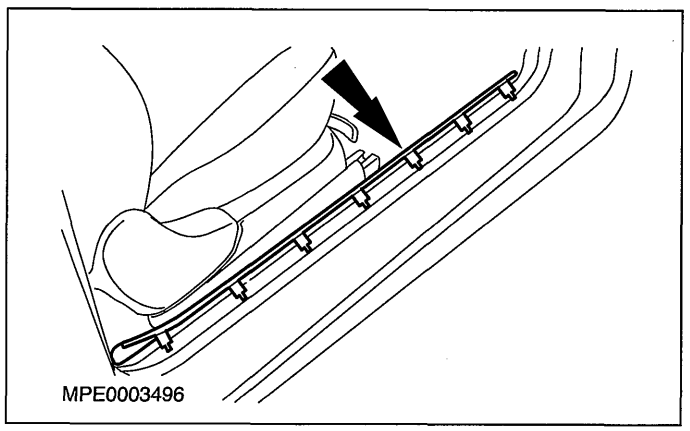


3. **Remove the B-pillar trim panel. For additional information, refer to Section 501-05 [Interior Trim and Ornamentation].**
4. **Locally detach the carpet.**

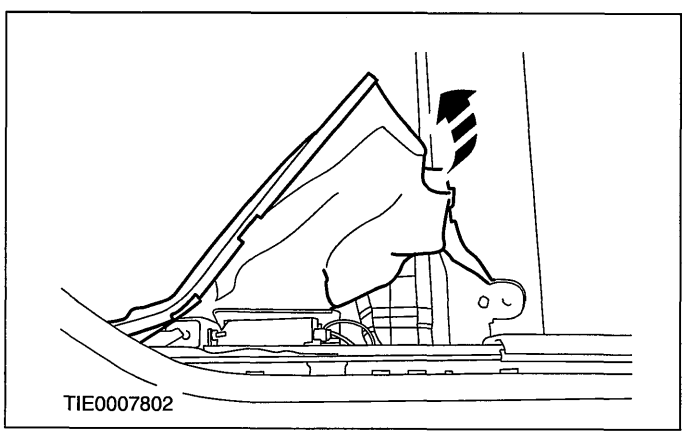


5. **NOTE: Make a note of the position of the bolts, to aid installation.**

   **Remove the yaw rate sensor and accelerometer assembly cover.**

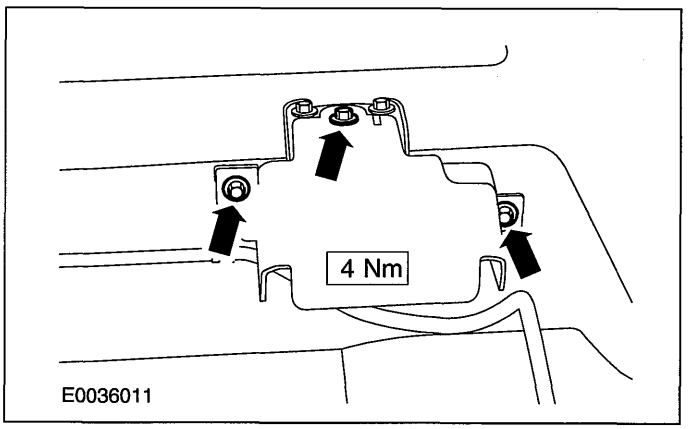


6. **NOTE: Make a note of the position of the bolts, to aid installation.**

   **Remove the yaw rate sensor and accelerometer assembly.**

   1. Disconnect the electrical connector.
   2. Remove the bracket retaining bolts.

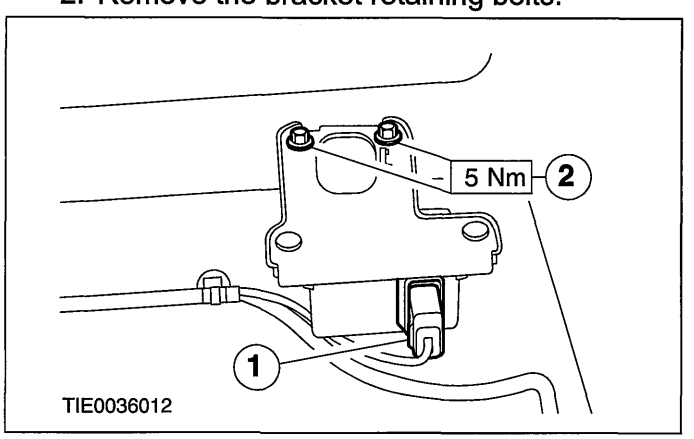


## Installation

1. **WARNINGS:**

   **▲Do not use a damaged yaw rate sensor and accelerometer assembly. Failure to follow this instruction may result in personal injury.**

   **▲Make sure the yaw rate sensor and accelerometer assembly is correctly positioned. Failure to follow this instruction may result in personal injury.**

## REMOVAL AND INSTALLATION

**CAUTIONS:**

⚠ **The yaw rate sensor and accelerometer assembly will be damaged if dropped.**

⚠ **Make sure the correct bolts are used for the yaw rate sensor and accelerometer assembly. Failure to follow this instruction will result in damaged threads.**

⚠ **Make sure the correct bolts are used for the yaw rate sensor and accelerometer assembly cover. Failure to follow this instruction will result in damaged threads.**

**To install, reverse the removal procedure.**

## REMOVAL AND INSTALLATION

# Steering Wheel Rotation Sensor

## Removal

1. **NOTE:The steering wheel rotation sensor and the clockspring cannot be separated.**

   **Remove the clockspring. For additional information, refer to Section 501-20A [Safety Belt System] / 501-20B [Supplemental Restraint System].**

## Installation

1. **▲WARNING:The stability assist program must be re-configured following installation. Failure to follow this instruction may result in personal injury.**

   **Install the clockspring. For additional information, refer to Section 501-20A [Safety Belt System] / 501-20B [Supplemental Restraint System].**

## REMOVAL AND INSTALLATION

# Rear Wheel Speed Sensor Ring(12 788 0)

### Removal

1. **For additional information, refer to Section 206-09A [Anti-Lock Control] / 206-09B [Anti-Lock Control - Traction Control] / 206-09C [Anti-Lock Control - Stability Assist].**

## REMOVAL AND INSTALLATION

# Stability Assist Module

| Materials | |
|---|---|
| Name | Specification |
| Super DOT 4 brake fluid | ESD-M6C57-A |

## Removal

**CAUTION:If brake fluid is spilt on the paintwork, the affected area must be immediately washed down with cold water.**

1. **Remove the brake master cylinder. For additional information, refer to Section 206-06 [Hydraulic Brake Actuation].**
2. **Detach the engine wiring harness electrical connector from the wheelhouse assembly.**

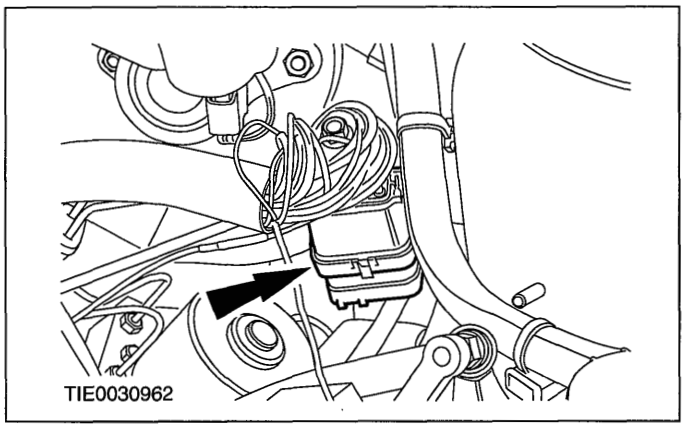


3. **CAUTIONS:**

   **Cap the brake tubes to prevent fluid loss or dirt ingress.**

   **Plug the hydraulic control unit (HCU) ports to prevent fluid loss or dirt ingress.**

**NOTE:**Make a note of the position of the brake tubes, to aid installation.

**Remove the brake master cylinder to hydraulic control unit (HCU) brake tubes.**

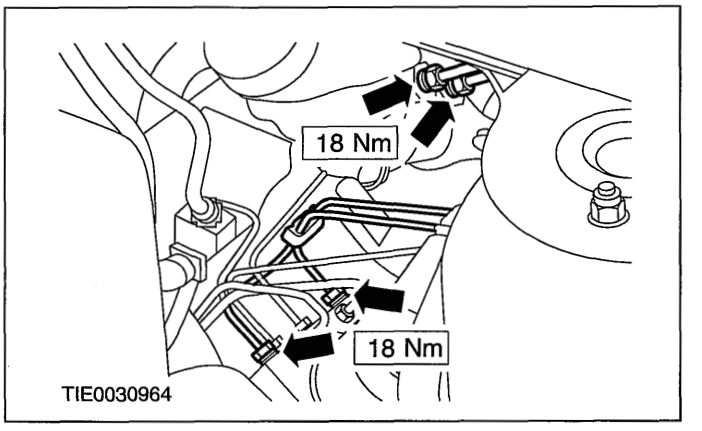


4. **CAUTIONS:**

   **Cap the brake tubes to prevent fluid loss or dirt ingress.**

   **Plug the HCU ports to prevent fluid loss or dirt ingress.**

**NOTE:**Make a note of the position of the brake tubes, to aid installation.

**Disconnect the brake tubes from the HCU.**

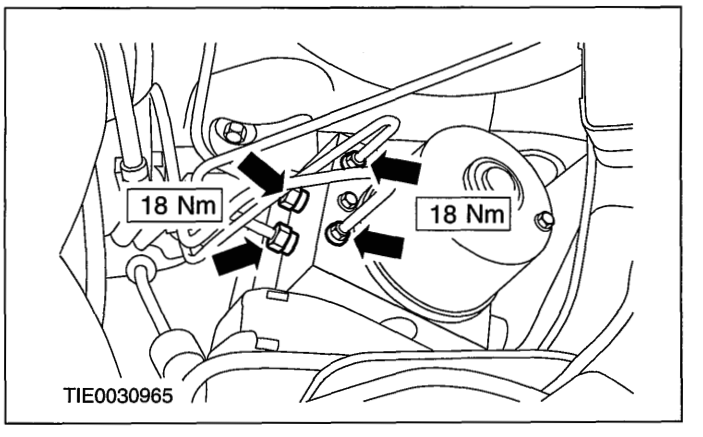

## REMOVAL AND INSTALLATION

5. Detach the brake tubes from the bulkhead.

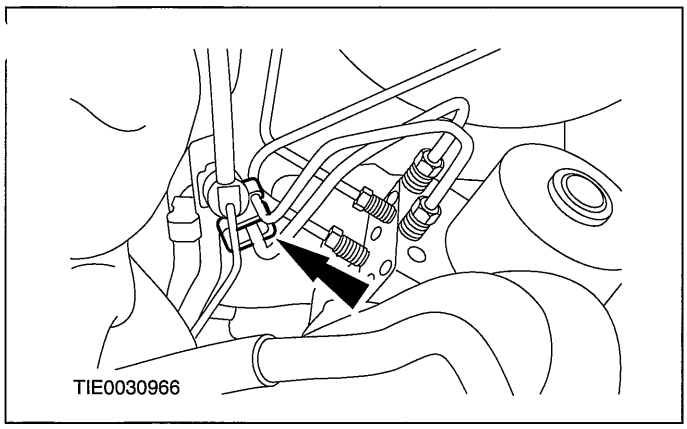


6. Disconnect the stability assist module electrical connector.

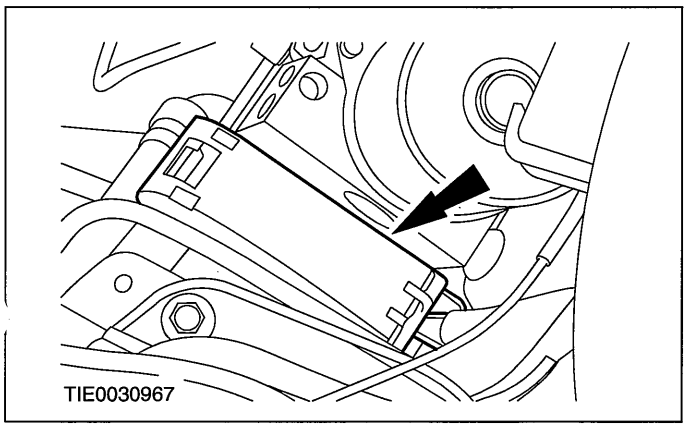


7. Raise and support the vehicle. For additional information, refer to Section 100-02 [Jacking and Lifting].
8. Remove the HCU and stability assist module support bracket lower retaining bolt.

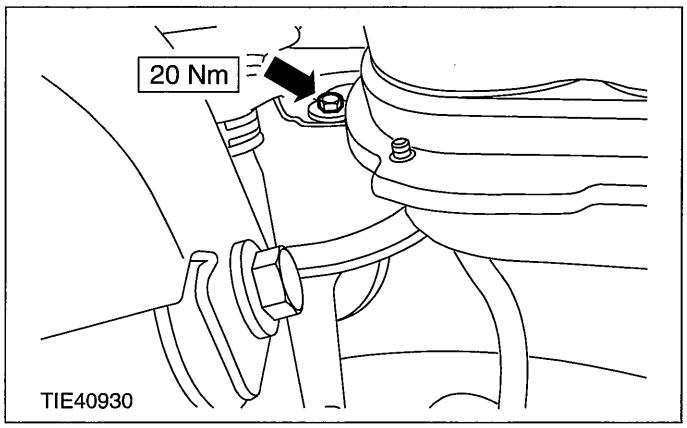


9. Lower the vehicle.
10. Remove the HCU and stability assist module assembly and the support bracket.

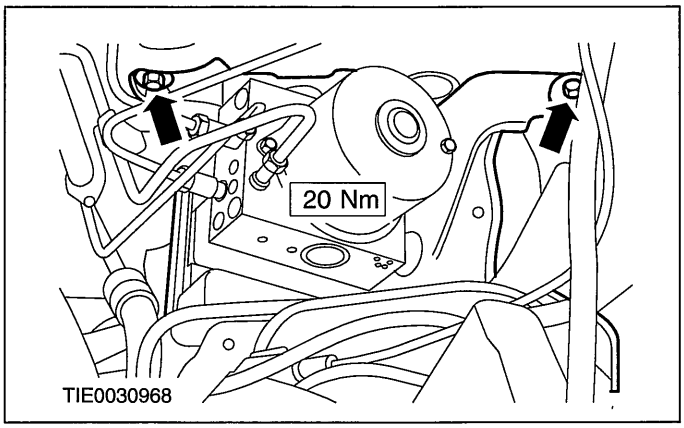


11. Detach the HCU and stability assist module assembly from the support bracket.

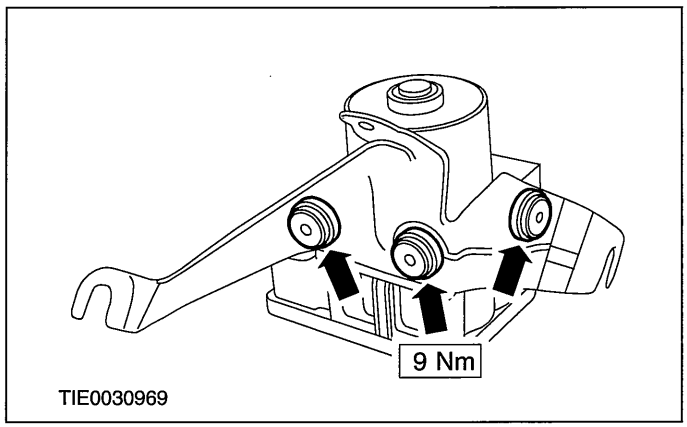


12. Remove the HCU to stability assist module retaining bolts.

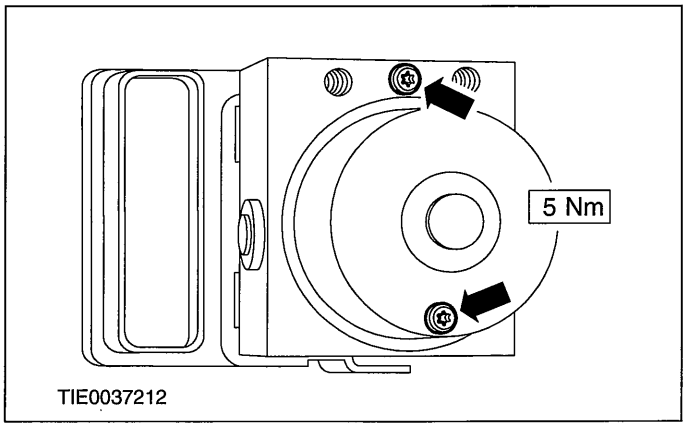


13. Remove the stability assist module.

### Installation

1. To install, reverse the removal procedure.

## REMOVAL AND INSTALLATION

2. Bleed the brake system. For additional information, refer to Section 206-00 [Brake System - General Information].

# SECTION 211-00 Steering System - General Information

## VEHICLE APPLICATION:2006.0 Fiesta

CONTENTS PAGE


**SPECIFICATIONS**

Specifications ..... 211-00-2

**DESCRIPTION AND OPERATION**

Steering System ..... 211-00-3
Overview ..... 211-00-3

**DIAGNOSIS AND TESTING**

Steering System ..... 211-00-5
Principles of Operation ..... 211-00-5
Inspection and Verification ..... 211-00-5
Components Tests ..... 211-00-14
Steering Gear Checks After a Collision ..... 211-00-18

**GENERAL PROCEDURES**

Power Steering System Filling ..... (13 002 0) 211-00-20
Power Steering System Bleeding ..... (13 416 1) 211-00-21
Power Steering System Flushing — 1.25L Duratec-16V (Sigma)/1.4L Duratec-16V (Sigma)/1.6L Duratec-16V (Sigma) ..... (13 001 0) 211-00-23
Power Steering System Flushing — 2.0L Duratec-HE (MI4) ..... (13 001 0) 211-00-26

## SPECIFICATIONS

### Lubricants, Fluids, Sealers and Adhesives

| Description | Specifications |
|---|---|
| Power steering fluid | WSA-M2C195-A |
| Hydraulic fluid, vehicles with 1.6L Duratorq-TDCi (DV) Diesel | WSS-M2C204-A2 |

### Turning Circle

| Description | Meters |
|---|---|
| Wall to wall | 10.37 |
| Wall to wall, vehicles with 2.0L Duratec-HE (MI4) | 11.65 |

### Steering Wheel Alignment

| Description | Degrees |
|---|---|
| Maximum allowable steering wheel misalignment | ± 3.00° |

### Turning Effort

| Description | Nm | lb-in |
|---|---|---|
| Turning effort | 8 | 71 |

## DESCRIPTION AND OPERATION

# Steering System

### Overview

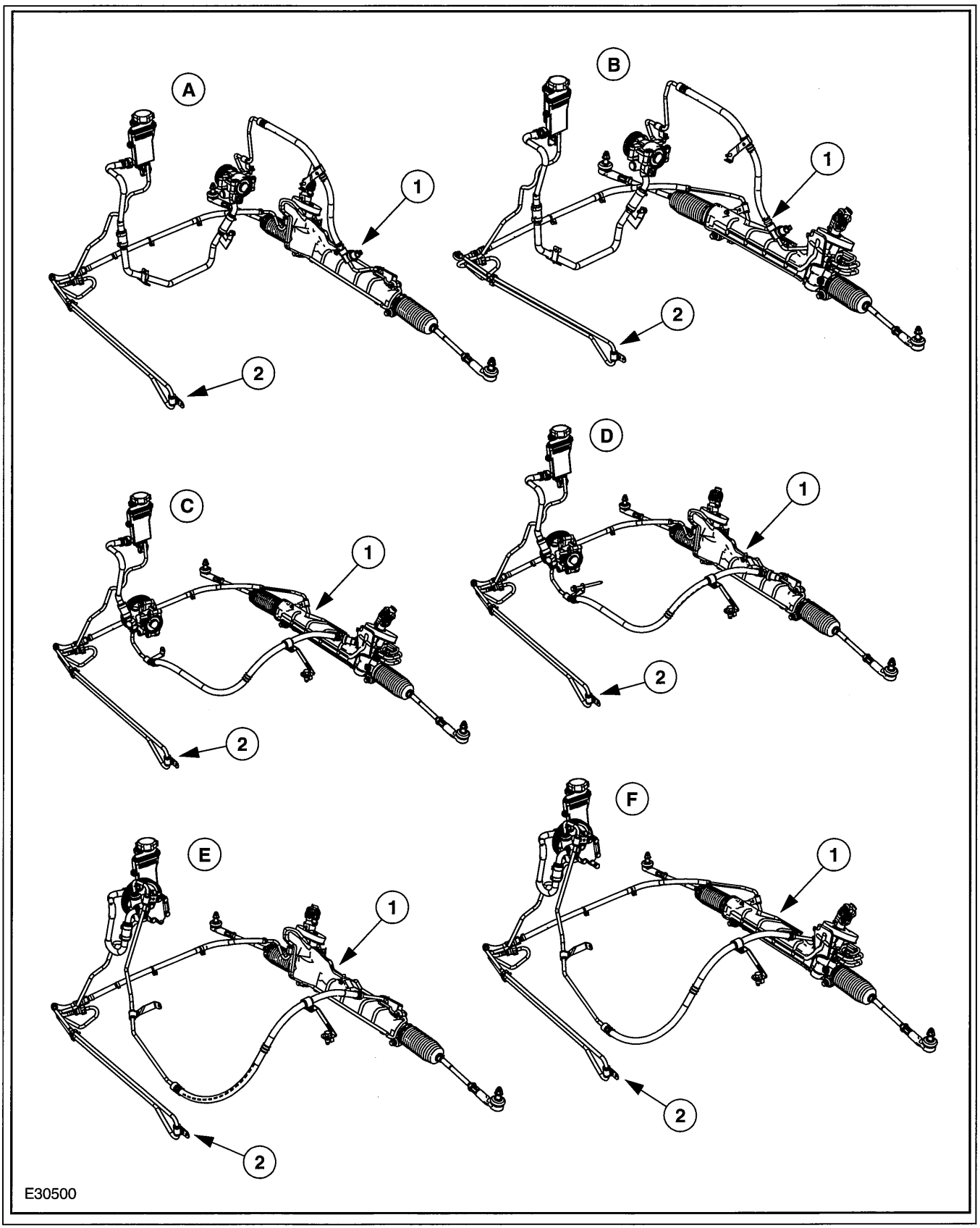

## DESCRIPTION AND OPERATION

| Item | Description |
|---|---|
| A | RHD with Duratec 16V engine and Air Conditioning (A/C) |
| B | LHD with Duratec 16V engine and A/C |
| C | RHD with Duratec 16V engine without A/C |
| D | LHD with Duratec 16V engine without A/C |
| E | RHD with 1.4L Duratorq TDCi engine |
| F | LHD with 1.4L Duratorq TDCi engine |
| 1 | Steering gear |
| 2 | Additional cooling loop |

Independent of the equipment level, all vehicles have conventional power-assisted rack and pinion steering with an additional cooling loop.

The steering gear is supplied with hydraulic fluid by a hydraulic pump.

The hydraulic pump is driven by the accessory drive belt and has a separate reservoir.

Vehicles with petrol engines have a Power Steering Pressure (PSP) switch in the pressure line, which opens as the power steering load increases, thus signalling to the Powertrain Control Module (PCM) that it should increase the idle speed.

## DIAGNOSIS AND TESTING

# Steering System

### Special Tool(s)

| | |
|---|---|
| 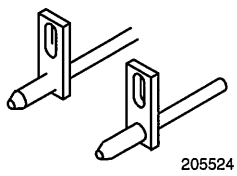 205524 | Alignment Pins, Subframe 205-524 |
| 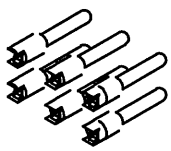 501073 | Simulator, Driver and Passenger Air Bags and Side Air Curtains 501-073A |

### General Equipment

| |
|---|
| Worldwide Diagnostic System (WDS) |

## Principles of Operation

The steering wheel rotational movement is transferred to the steering gear through the steering column shaft. The steering gear converts this rotational movement, through the action of the rack and pinion gear into lateral movement. This movement in turn is transferred to the wheel knuckles through the tie-rods and tie-rod ends.

Hydraulic fluid under pressure is supplied to the steering gear by the power steering pump. As the steering wheel is rotated, the hydraulic fluid is allowed to pass through the steering gear valve to one side of a double acting piston, dependent on which direction the steering wheel is rotated. The fluid moves the piston, which forms part of the steering gear, giving power assistance to the effort required to rotate the steering wheel.

Vehicles with petrol engines, due to the extra load on the engine imposed by the power steering pump, have a power steering pressure (PSP) switch. The switch, which is normally closed, sends a signal to the powertrain control module (PCM) during low speed parking manoeuvres. The PCM responds by maintaining the engine idle speed.

## Inspection and Verification

1. Verify the customer concern.
2. Visually inspect for obvious signs of mechanical or electrical damage.

### Visual Inspection Chart

| Mechanical | Electrical |
|---|---|
| • Tire pressure(s)<br>• Accessory drive belt<br>• Tie-rod ends<br>• Tie-rod(s)<br>• Steering gear housing<br>• Front strut and spring assemblies<br>• Front suspension lower arm ball joints<br>• Front suspension lower arm bushings<br>• Pinch bolt on steering column shaft flexible coupling<br>• Wheels and tires<br>• Power steering line fluid leaks<br>• Steering gear bellows | • Power steering pressure (PSP) switch |

3. If an obvious cause for an observed or reported concern is found, correct the cause (if possible) before proceeding to the next step.
4. If the cause is not visually evident, verify the symptom and refer to the Symptom Chart.

### Symptom Chart

| Symptom | Possible Sources | Action |
|---|---|---|
| • Drift left or right | • Vehicle attitude incorrect (front or rear is high or low). | • CHECK for abnormal loading, coil spring sag or non-standard springs. |

## DIAGNOSIS AND TESTING

| Symptom | Possible Sources | Action |
|---|---|---|
| | • Incorrect wheel alignment. | • CHECK the wheel alignment and adjust if necessary. REFER to: (204-00 Suspension System - General Information) Specifications (Specifications), Front Toe Adjustment (General Procedures). |
| | • Incorrect front axle cross-member alignment. | • Using the special tool, CHECK the front axle crossmember alignment. |
| | • Damaged or worn front wheel bearings. | • CHECK and INSTALL new front wheel bearings as necessary. REFER to: Front Wheel Bearing (204-01 Front Suspension, Removal and Installation). |
| | • Brake system. | • CHECK the brake system. REFER to: Brake System (206-00 Brake System - General Information, Diagnosis and Testing). |
| | • Steering linkage. | • CARRY OUT the steering linkage component test. REFER to Steering Linkage Component Test in this procedure. |
| | • Steering gear. | • CARRY OUT the steering linkage component test. REFER to Steering Linkage Component Test in this procedure. |
| | • Wheels and tires. | • CHECK the wheels and tires. REFER to: Wheels and Tires (204-04 Wheels and Tires, Diagnosis and Testing). |
| • Steering wheel off center | • Vehicle attitude incorrect (front or rear is high or low). | • CHECK for abnormal loading, coil spring sag or non-standard springs. |
| | • Incorrect wheel alignment. | • CHECK the wheel alignment and adjust if necessary. REFER to: (204-00 Suspension System - General Information) Specifications (Specifications), Front Toe Adjustment (General Procedures). |

## DIAGNOSIS AND TESTING

| Symptom | Possible Sources | Action |
|---|---|---|
| | • Front suspension lower arm ball joint. | • CHECK and INSTALL new suspension components as necessary.<br>REFER to: Suspension System (204-00 Suspension System - General Information, Diagnosis and Testing). |
| | • Steering linkage. | • CARRY OUT the steering linkage component test. REFER to Steering Linkage Component Test in this procedure. |
| | • Steering gear. | • CARRY OUT the steering linkage component test. REFER to Steering Linkage Component Test in this procedure. |
| • Vibration | • Incorrect wheel alignment. | • CHECK the wheel alignment and adjust if necessary. REFER to: (204-00 Suspension System - General Information)<br>Specifications (Specifications), Front Toe Adjustment (General Procedures). |
| | • Wheels and tires. | • CHECK the wheels and tires. BALANCE or INSTALL new wheels and tires as necessary.<br>REFER to: Wheel and Tire (204-04 Wheels and Tires, Removal and Installation). |
| | • Damaged or worn front wheel bearings. | • CHECK and INSTALL new front wheel bearings as necessary.<br>REFER to: Front Wheel Bearing (204-01 Front Suspension, Removal and Installation). |
| | • Front strut and spring assemblies. | • CHECK and INSTALL new suspension components as necessary.<br>REFER to: Suspension System (204-00 Suspension System - General Information, Diagnosis and Testing). |

## DIAGNOSIS AND TESTING

| Symptom | Possible Sources | Action |
|---|---|---|
| | • Damaged front suspension lower arm(s). | • CHECK and INSTALL new suspension components as necessary.<br>REFER to: Suspension System (204-00 Suspension System - General Information, Diagnosis and Testing). |
| | • Steering linkage. | • CARRY OUT the steering linkage component test. REFER to Steering Linkage Component Test in this procedure. |
| • Steering effort is high/low | • Loose or worn accessory drive belt. | • CHECK the accessory drive belt. REFER to: (303-05 Accessory Drive)<br>Power Steering Pump Belt - 1.4L Duratec-16V (Sigma)/1.6L Duratec-16V (Sigma), Vehicles With: Air Conditioning (Removal and Installation),<br>Accessory Drive Belt - 1.3L Duratec-8V (Rocam) (Removal and Installation),<br>Accessory Drive Belt - 1.4L Duratec-16V (Sigma)/1.6L Duratec-16V (Sigma), Vehicles Without: Air Conditioning (Removal and Installation),<br>Accessory Drive Belt - 1.4L Duratorq-TDCi (DV) Diesel (Removal and Installation),<br>Accessory Drive Belt - 2.0L Duratec-HE (MI4) (Removal and Installation). |

## DIAGNOSIS AND TESTING

| Symptom | Possible Sources | Action |
|---|---|---|
| | • Power steering lines restriction. | • CHECK the power steering lines for damage, kinks or restrictions. INSTALL new components as necessary. REFER to: (211-02 Power Steering)<br>Power Steering Pump to Steering Gear Pressure Line - 1.25L Duratec-16V (Sigma)/1.4L Duratec-16V (Sigma)/1.6L Duratec-16V (Sigma), Vehicles With: Air Conditioning (Removal and Installation),<br>Power Steering Pump to Steering Gear Pressure Line - 1.25L Duratec-16V (Sigma)/1.4L Duratec-16V (Sigma)/1.6L Duratec-16V (Sigma), Vehicles Without: Air Conditioning (Removal and Installation),<br>Power Steering Pump to Steering Gear Pressure Line - 1.3L Duratec-8V (Rocam) (Removal and Installation),<br>Power Steering Pump to Steering Gear Pressure Line - 1.4L Duratorq-TDCi (DV) Diesel (Removal and Installation),<br>Power Steering Pump to Steering Gear Pressure Line - 2.0L Duratec-HE (MI4) RHD (Removal and Installation),<br>Steering Gear to Power Steering Fluid Reservoir Return Line - 2.0L Duratec-HE (MI4) RHD (Removal and Installation),<br>Steering Gear to Fluid Cooler Return Hose (Removal and Installation). |
| | • Power steering fluid aeration. | • BLEED the power steering system.<br>REFER to: Power Steering System Bleeding (211-00 Steering System - General Information, General Procedures). |

## DIAGNOSIS AND TESTING

| Symptom | Possible Sources | Action |
|---|---|---|
| | • Steering column. | • CHECK if the floor covering is obstructing the steering gear pinion.<br>• CHECK the installation of the steering gear bulkhead floor seal.<br>• CARRY OUT the steering column universal joint component test. REFER to Steering Column Universal Joint Component Test in this procedure. |
| | • Steering linkage. | • CARRY OUT the steering linkage component test. REFER to Steering Linkage Component Test in this procedure. |
| | • Steering gear. | • CARRY OUT the steering linkage component test. REFER to Steering Linkage Component Test in this procedure. |
| | • Worn power steering pump. | • INSTALL a new power steering pump. REFER to: (211-02 Power Steering)<br>Power Steering Pump - 1.3L Duratec-8V (Rocam) (Removal and Installation),<br>Power Steering Pump - 1.25L Duratec-16V (Sigma)/1.4L Duratec-16V (Sigma)/1.6L Duratec-16V (Sigma), Vehicles With: Air Conditioning (Removal and Installation),<br>Power Steering Pump - 1.25L Duratec-16V (Sigma)/1.4L Duratec-16V (Sigma)/1.6L Duratec-16V (Sigma), Vehicles Without: Air Conditioning (Removal and Installation),<br>Power Steering Pump - 1.4L Duratorq-TDCi (DV) Diesel (Removal and Installation),<br>Power Steering Pump - 2.0L Duratec-HE (MI4) (Removal and Installation). |

## DIAGNOSIS AND TESTING

| Symptom | Possible Sources | Action |
|---|---|---|
| • Excessive noise | • Power steering operation noise. | • CARRY OUT the Power Steering Operation Noise Check.<br>REFER to: Noise, Vibration and Harshness (NVH) (100-04 Noise, Vibration and Harshness, Diagnosis and Testing). |
| | • Power steering fluid aeration. | • BLEED the power steering system.<br>REFER to: Power Steering System Bleeding (211-00 Steering System - General Information, General Procedures). |

## DIAGNOSIS AND TESTING

| Symptom | Possible Sources | Action |
|---|---|---|
| | • Power steering lines. | • CHECK the power steering line clamps are secure. REFER to: (211-02 Power Steering)<br>Power Steering Pump to Steering Gear Pressure Line - 1.25L Duratec-16V (Sigma)/1.4L Duratec-16V (Sigma)/1.6L Duratec-16V (Sigma), Vehicles With: Air Conditioning (Removal and Installation),<br>Power Steering Pump to Steering Gear Pressure Line - 1.25L Duratec-16V (Sigma)/1.4L Duratec-16V (Sigma)/1.6L Duratec-16V (Sigma), Vehicles Without: Air Conditioning (Removal and Installation),<br>Power Steering Pump to Steering Gear Pressure Line - 1.3L Duratec-8V (Rocam) (Removal and Installation),<br>Power Steering Pump to Steering Gear Pressure Line - 1.4L Duratorq-TDCi (DV) Diesel (Removal and Installation),<br>Power Steering Pump to Steering Gear Pressure Line - 2.0L Duratec-HE (MI4) RHD (Removal and Installation),<br>Steering Gear to Power Steering Fluid Reservoir Return Line - 2.0L Duratec-HE (MI4) RHD (Removal and Installation),<br>Steering Gear to Fluid Cooler Return Hose (Removal and Installation).<br>• CHECK the power steering lines for clearance from the vehicle body, front axle cross-member and steering gear.<br>• CHECK the steering gear transfer lines for clearance from the steering gear. |
| | • Steering gear bushings worn or perished. | • CHECK and INSTALL new components as necessary.<br>REFER to: Steering Gear Bushing (211-02 Power Steering, Removal and Installation). |

## DIAGNOSIS AND TESTING

| Symptom | Possible Sources | Action |
|---|---|---|
| | • Loose steering gear retaining bolts. | • CHECK and INSTALL new steering gear retaining bolts as necessary.<br>REFER to: Specifications (211-02 Power Steering, Specifications). |
| | • Worn power steering pump. | • INSTALL a new power steering pump. REFER to: (211-02 Power Steering)<br>Power Steering Pump - 1.3L Duratec-8V (Rocam) (Removal and Installation),<br>Power Steering Pump - 1.25L Duratec-16V (Sigma)/1.4L Duratec-16V (Sigma)/1.6L Duratec-16V (Sigma), Vehicles With: Air Conditioning (Removal and Installation),<br>Power Steering Pump - 1.25L Duratec-16V (Sigma)/1.4L Duratec-16V (Sigma)/1.6L Duratec-16V (Sigma), Vehicles Without: Air Conditioning (Removal and Installation),<br>Power Steering Pump - 1.4L Duratorq-TDCi (DV) Diesel (Removal and Installation),<br>Power Steering Pump - 2.0L Duratec-HE (MI4) (Removal and Installation). |
| | • Worn tie-rod. | • CARRY OUT the tie-rod component test. REFER to Tie-Rod Component Test in this procedure. |
| • Steering does not vary with increased wheel rotation | • Worn tie-rod ends. | • INSTALL new components as necessary.<br>REFER to: Tie Rod End (211-03 Steering Linkage, Removal and Installation). |
| | • Worn front suspension bushings. | • CHECK and INSTALL new components as necessary.<br>REFER to: Suspension System (204-00 Suspension System - General Information, Diagnosis and Testing). |

## DIAGNOSIS AND TESTING

| Symptom | Possible Sources | Action |
|---|---|---|
| | • Worn front suspension lower arm ball joints. | • CARRY OUT the suspension ball joint inspection component test.<br>REFER to: Suspension System (204-00 Suspension System - General Information, Diagnosis and Testing). |
| | • Steering gear bushings worn or perished. | • CHECK and INSTALL new components as necessary.<br>REFER to: Steering Gear Bushing (211-02 Power Steering, Removal and Installation). |
| | • Loose steering gear retaining bolts. | • CHECK and INSTALL new steering gear retaining bolts as necessary.<br>REFER to: Specifications (211-02 Power Steering, Specifications). |
| | • Loose steering column retaining bolts. | • CHECK and INSTALL new steering column retaining bolts as necessary.<br>REFER to: Specifications (211-04 Steering Column, Specifications). |
| | • Loose steering column to steering gear pinion retaining bolt. | • CHECK and INSTALL a new steering column to steering gear pinion retaining bolt as necessary.<br>REFER to: Specifications (211-02 Power Steering, Specifications). |
| | • Excessive steering gear backlash. | • CARRY OUT the steering linkage component test. REFER to Steering Linkage Component Test in this procedure. |
| • Engine stalls when parking with engine speed at idle | • Power steering pressure (PSP) switch or circuit. | • For additional information, refer to WDS. |

## Components Tests

### Steering Linkage

1. Grasp the steering wheel firmly and move it up and down and to the left and right without turning the steering wheel, to check for steering column bearing wear, steering column universal joint free play, steering wheel or steering column looseness. The steering column cannot be repaired. Install a new steering column.

REFER to: Steering Column (211-04 Steering Column, Removal and Installation).

## DIAGNOSIS AND TESTING

2. With the road wheels in the straight ahead position, gently turn the steering wheel to the left and the right to check free play in the steering linkage.
3. There should be no excessive free play at the steering wheel rim. If there is excessive free play, CHECK the tie-rod inner and outer ball joints, REFER to Tie-Rod Component Test in this procedure. CHECK the steering column universal joint, REFER to Steering Column Universal Joint Component Test in this procedure. If there is no free play in the tie-rod and the steering column, install a new steering gear.

   REFER to: Steering Gear (211-02 Power Steering, Removal and Installation).

### Tie-Rod

⚠ **CAUTION:The steering gear boots must be handled carefully to avoid damage. Use new steering gear boot clamps when installing the steering gear boots.**

**NOTE:**Noises such as knocks, which may appear to originate from the steering linkage, may also be generated by front suspension components.

1. Raise and support the vehicle. REFER to: (100-02 Jacking and Lifting)

   Jacking (Description and Operation), Lifting (Description and Operation).

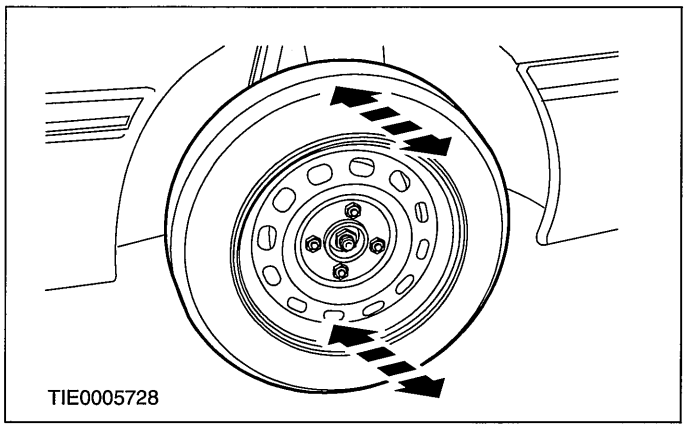
TIE0005728

2. Firmly grasp the road wheel and apply a rocking motion to check for any free play in the wheel bearing or suspension components.

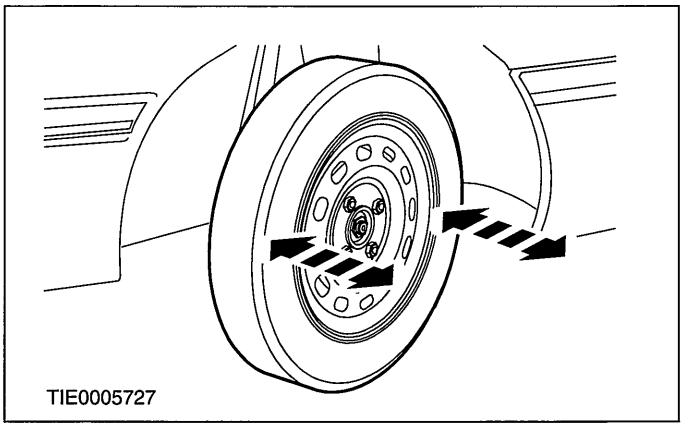
TIE0005727

3. ⚠**CAUTION:To prevent damage to the steering linkage, turn the steering wheel to move the steering linkage to the steering lock stop.**

   Turn the steering wheel to position the steering linkage against the right-hand steering lock stop.

4. **NOTE:To isolate the steering gear design clearance, check the right-hand tie-rod with the steering held against the right-hand steering lock stop.**

   With the aid of another technician holding the steering against the right-hand steering lock stop, firmly grasp the right-hand road wheel and apply a rocking motion to check for any free play in the tie-rod.

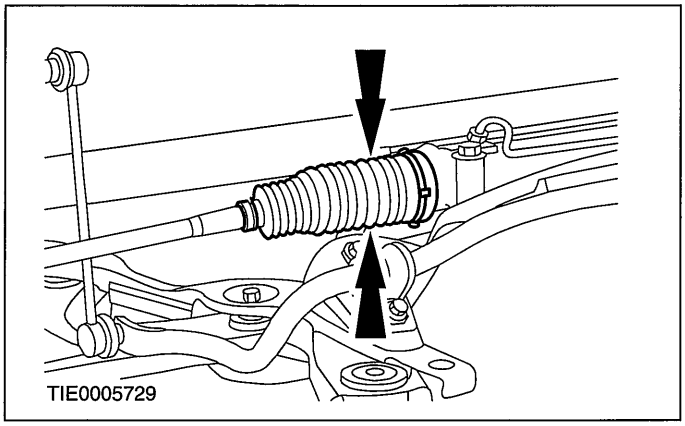
TIE0005729

5. Detach the steering gear boot from the steering gear body and check for free play at the tie-rod inner ball joint.
6. If there is free play at the tie-rod inner ball joint, install a new tie-rod.

   REFER to: Tie Rod (211-03 Steering Linkage, Removal and Installation).
7. If there is free play at the tie-rod end, install a new tie-rod end.

   REFER to: Tie Rod End (211-03 Steering Linkage, Removal and Installation).

## DIAGNOSIS AND TESTING

8. **⚠CAUTION:To prevent damage to the steering linkage, turn the steering wheel to move the steering linkage to the steering lock stop.**

   Turn the steering wheel to position the steering linkage against the left-hand steering lock stop.

9. **NOTE:To isolate the steering gear design clearance, check the left-hand tie-rod with the steering held against the left-hand steering lock stop.**

   With the aid of another technician holding the steering against the left-hand steering lock stop, firmly grasp the left-hand road wheel and apply a rocking motion to check for any free play in the tie-rod.

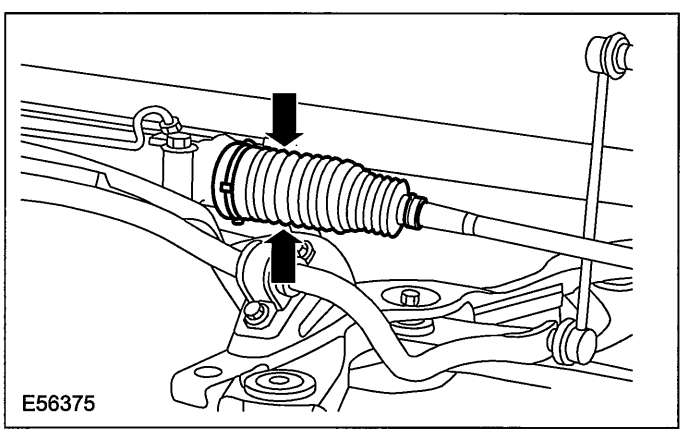


10. Detach the steering gear boot from the steering gear body and check for free play at the tie-rod inner ball joint.
11. If there is free play at the tie-rod inner ball joint, install a new tie-rod.

    REFER to: Tie Rod (211-03 Steering Linkage, Removal and Installation).
12. If there is free play at the tie-rod end, install a new tie-rod end.

    REFER to: Tie Rod End (211-03 Steering Linkage, Removal and Installation).

### Turning Effort Test

**NOTE:**Before carrying out this test, make sure that the suspension components are serviceable.

**NOTE:**Before carrying out this test, make sure that the steering column is serviceable.

**NOTE:**Before carrying out this test, make sure that the front toe adjustment and tire pressures are correct.

1. Park the vehicle on a dry, even surface and apply the parking brake.
2. Remove the driver air bag module.

   REFER to: Driver Air Bag Module (501-20 Supplemental Restraint System, Removal and Installation).
3. Remove the driver air bag module wiring harness from the driver air bag module.

   REFER to: Driver Air Bag Module Wiring Harness (501-20 Supplemental Restraint System, Removal and Installation).
4. Connect the driver air bag module wiring harness to the clockspring.
5. Connect the air bag simulators to the driver air bag module wiring harness in place of the driver air bag module at the top of the steering column.
6. Start the engine and turn the steering wheel from lock to lock several times until the power steering fluid has reached normal operating temperature.
7. Using a suitable torque wrench and socket, check the steering wheel turning effort.
8. If the steering wheel turning effort is greater than the specification, install a new power steering pump. REFER to:

   Specifications (211-00 Steering System - General Information, Specifications),
   Power Steering Pump - 1.3L Duratec-8V (Rocam) (211-02 Power Steering, Removal and Installation),
   Power Steering Pump - 1.25L Duratec-16V (Sigma)/1.4L Duratec-16V (Sigma)/1.6L Duratec-16V (Sigma), Vehicles With: Air Conditioning (211-02 Power Steering, Removal and Installation),
   Power Steering Pump - 1.25L Duratec-16V (Sigma)/1.4L Duratec-16V (Sigma)/1.6L Duratec-16V (Sigma), Vehicles Without: Air Conditioning (211-02 Power Steering, Removal and Installation),
   Power Steering Pump - 1.4L Duratorq-TDCi (DV) Diesel (211-02 Power Steering, Removal and Installation),
   Power Steering Pump - 2.0L Duratec-HE (MI4) (211-02 Power Steering, Removal and Installation).
9. Disconnect the air bag simulators from the driver air bag module wiring harness.
10. Disconnect the driver air bag module wiring harness from the clockspring.

## DIAGNOSIS AND TESTING

11. Install a new driver air bag module wiring harness to the drive air bag module.

    REFER to: Driver Air Bag Module Wiring Harness (501-20 Supplemental Restraint System, Removal and Installation).

12. Install the driver air bag module.

    REFER to: Driver Air Bag Module (501-20 Supplemental Restraint System, Removal and Installation).

### Steering Column Shaft Universal Joint

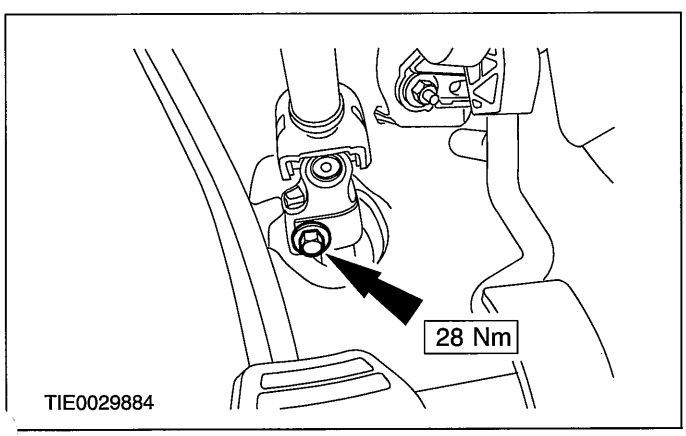


1. **▲WARNING:Install a new steering column shaft to steering gear pinion retaining bolt. Failure to follow this instruction may result in personal injury.**

   Detach the steering column shaft from the steering gear pinion.

   - Discard the steering column shaft to steering gear pinion retaining bolt.

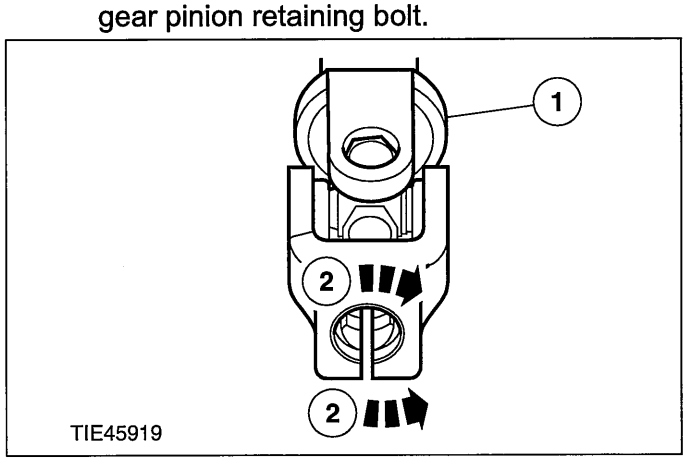


2. Check for smooth movement of the steering column shaft universal joint.
   1. Hold the steering column shaft universal joint yoke.
   2. Articulate the free yoke in a figure of eight movement.
   - If the movement is not smooth or resistance is felt, renew the steering column.

     REFER to: Steering Column (211-04 Steering Column, Removal and Installation).

3. Hold both of the steering column shaft universal joint yokes and then twist them clockwise and counterclockwise.
   - If any movement is felt, install a new steering column.

     REFER to: Steering Column (211-04 Steering Column, Removal and Installation).

## DIAGNOSIS AND TESTING

# Steering Gear Checks After a Collision

### General Equipment

| |
|---|
| Feeler gauge |
| Straight edge |

**Items to be observed when checking the steering system**

The following list of steering gear conditions and the methods of testing should be taken into account when carrying out checks to the steering system:

- If the steering gear has no faults after completing the following checks, do not install a new steering gear.
- Surface corrosion and marks on the tie-rod are acceptable.
- When checking for turning effort torque peaks in the steering gear, turn the steering wheel from steering lock stop to steering lock stop in approximately 15 seconds.
- A steady increase of turning effort torque from steering center to steering lock stop is acceptable.
- When checking for power steering fluid leaks, turn the steering wheel to the steering lock stop in approximately 10 seconds.
- Noises from the power steering, for example the power steering pump relief valve, are acceptable.

STEERING GEAR HOUSING

1. Raise and support the vehicle.

   REFER to: Lifting (100-02 Jacking and Lifting, Description and Operation).
2. Visually inspect the steering gear housing for cracks and damage. If the steering gear housing is cracked or damaged, install a new steering gear.

   REFER to: Steering Gear (211-02 Power Steering, Removal and Installation).

TIE-RODS

1. Using a straight edge and feeler gauge, check the tie-rods to see if they are straight. If the distance between the tie-rod and straight edge is greater than 0.5 mm, install a new steering gear.

   REFER to: Steering Gear (211-02 Power Steering, Removal and Installation).
2. Check the tightening torque of the tie-rod end to wheel knuckle nut.

   REFER to: Tie Rod End (211-03 Steering Linkage, Removal and Installation).
3. Check the tightening torque of the tie-rod end locking nut.

   REFER to: Tie Rod End (211-03 Steering Linkage, Removal and Installation).

CHECK FOR TURNING EFFORT TORQUE PEAKS IN THE STEERING GEAR

1. Lower and support the vehicle making sure that the road wheels are just clear of the floor.
2. With the ignition switch in position I, slowly turn the steering wheel from steering lock stop to steering lock stop. If a turning effort torque peak or judder is felt while turning the steering wheel, detach the tie-rods from the wheel knuckles.
3. Slowly turn the steering wheel from steering lock stop to steering lock stop. If a turning effort torque peak or judder is felt while turning the steering wheel, install a new steering gear.

   REFER to: Steering Gear (211-02 Power Steering, Removal and Installation).

CHECK FOR POWER STEERING FLUID LEAKS

1. Lower the vehicle.
2. Run the engine at a fast idle and slowly turn the steering wheel to the left-hand steering lock stop. Hold the steering wheel in this position for 5 seconds with a turning effort torque of 15 Nm at the steering wheel rim.
3. Turn the steering wheel away from the left-hand steering lock stop for 30 seconds.
4. Run the engine at a fast idle and slowly turn the steering wheel to the right-hand steering lock stop. Hold the steering wheel in this position for 5 seconds with a turning effort torque of 15 Nm at the steering wheel rim.

## DIAGNOSIS AND TESTING

5. Turn the steering wheel away from the right-hand steering lock stop.
6. Check for power steering fluid leaks at the steering gear housing and the power steering line connections to the steering gear. If there is a power steering fluid leak at the steering gear, install a new steering gear.

   REFER to: Steering Gear (211-02 Power Steering, Removal and Installation).

## GENERAL PROCEDURES

# Power Steering System Filling(13 002 0)

### Special Tool(s)

| | |
|---|---|
| 13016 | Adapter, Power Steering Bleeding 211-189 (13-016) |
| 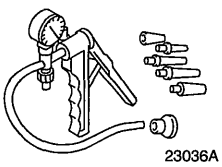 23036A | Hand Vacuum Pump/Pressure Pump 416-D001 (23-036A) |

### Refill

1. **NOTE:When filling the power steering fluid reservoir, make sure that the power steering fluid is clean and not agitated prior to use. The power steering fluid should be poured slowly into the reservoir to minimize the possibility of aeration. The power steering fluid level should be checked with the power steering fluid cold.**

   **Fill the power steering fluid reservoir to the MAX mark with the appropriate power steering fluid.**

   **For additional information, refer to: Specifications (211-00 Steering System - General Information, Specifications).**

2. **Raise and support the vehicle making sure that the road wheels are just clear of the floor. For additional information, refer to: (100-02 Jacking and Lifting)**

   **Jacking (Description and Operation), Lifting (Description and Operation).**

3. **NOTE:Do not start the engine at this stage.**

**NOTE:**Make sure that the power steering fluid in the power steering fluid reservoir does not fall below the MIN mark, as air could enter the system.

   **Slowly turn the steering wheel from lock to lock and add power steering fluid until the power steering fluid in the power steering fluid reservoir stops dropping.**

4. **NOTE:Make sure that the power steering fluid in the power steering fluid reservoir does not fall below the MIN mark, as air could enter the system.**

   **Start the engine and slowly turn the steering wheel from lock to lock and add power steering fluid until the power steering fluid in the power steering fluid reservoir stops dropping.**

5. **Switch the engine OFF and using the special tools, create a vacuum of 62cm-Hg - 75cm-Hg for 30 seconds.**

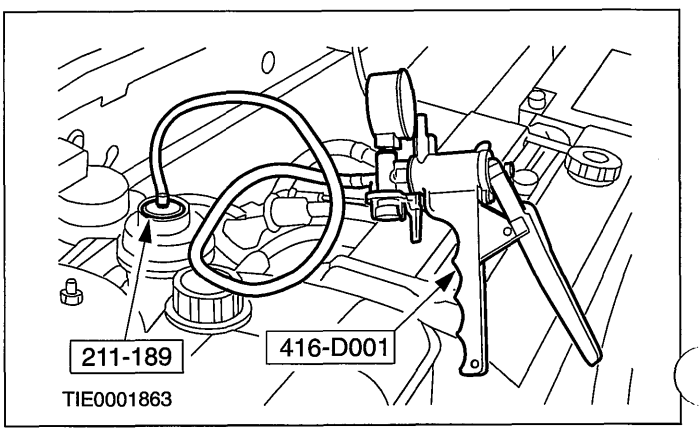


6. **Observe the vacuum gauge reading.**
   - If the vacuum decreases by more than 5cm-Hg in 5 minutes, the system should be checked for leaks.

7. **Remove the special tools. Fill the power steering fluid reservoir to the MAX mark with the appropriate power steering fluid as necessary.**

   **For additional information, refer to: Specifications (211-00 Steering System - General Information, Specifications).**

8. **Lower the vehicle.**

## GENERAL PROCEDURES

# Power Steering System Bleeding(13 416 1)

### Special Tool(s)

| | |
|---|---|
| 13016 | Adapter, Power Steering Bleeding 211-189 (13-016) |
| 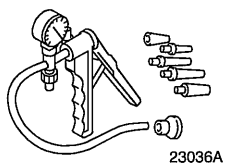 23036A | Hand Vacuum Pump/Pressure Pump 416-D001 (23-036A) |

### Bleeding

1. **NOTE:When filling the power steering fluid reservoir, make sure that the power steering fluid is clean and not agitated prior to use. The power steering fluid should be poured slowly into the reservoir to minimize the possibility of aeration. The power steering fluid level should be checked with the power steering fluid cold.**

   **Fill the power steering fluid reservoir to the MAX mark with the appropriate power steering fluid.**

   **For additional information, refer to: Specifications (211-00 Steering System - General Information, Specifications).**

2. **Raise and support the vehicle making sure that the road wheels are just clear of the floor. For additional information, refer to: (100-02 Jacking and Lifting)**

   **Jacking (Description and Operation), Lifting (Description and Operation).**

3. **NOTE:Do not start the engine at this stage.**

**NOTE:**Make sure that the power steering fluid in the power steering fluid reservoir does not fall below the MIN mark, as air could enter the system.

   **Slowly turn the steering wheel from lock to lock and add power steering fluid until the power steering fluid in the power steering fluid reservoir stops dropping.**

4. **Check the power steering fluid level. Fill the power steering fluid reservoir to the MAX mark with the appropriate power steering fluid.**

   **For additional information, refer to: Specifications (211-00 Steering System - General Information, Specifications).**

5. **NOTE:When bleeding the power steering system the vacuum will decrease. Using the special tools, maintain a sufficient vacuum of 38cm-Hg. If the vacuum decreases by more than 5cm-Hg in 5 minutes, the system should be checked for leaks.**

   **Using the special tools, bleed the power steering system in the following sequence.**

   1. Slowly turn the steering wheel from lock to lock once; then turn the steering wheel to the right, just off the stop.
   2. Using the special tools, create a vacuum of 38cm-Hg. Maintain the vacuum until the air is evacuated from the system (minimum of five minutes).
   3. Release the vacuum.
   4. Repeat the power steering bleeding procedure, turning the steering wheel to the left, just off the stop.

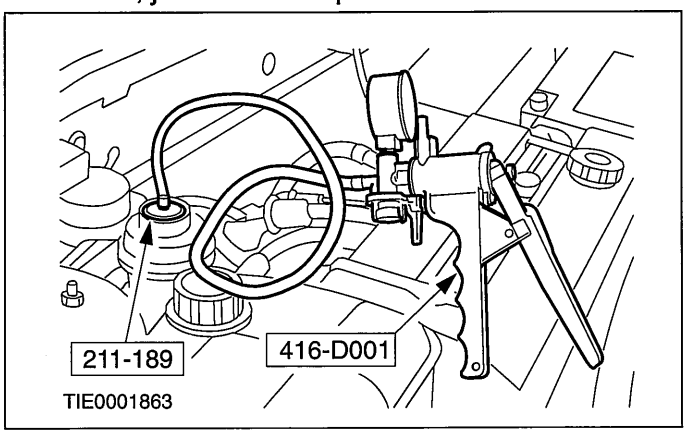


6. **Remove the special tools. Fill the power steering fluid reservoir to the MAX mark with the appropriate power steering fluid as necessary.**

   **For additional information, refer to: Specifications (211-00 Steering System - General Information, Specifications).**

7. **NOTE:Make sure that the power steering fluid in the power steering fluid reservoir does not fall below the MIN mark, as air could enter the system.**

## GENERAL PROCEDURES

**Start the engine and slowly turn the steering wheel from lock to lock and add power steering fluid until the power steering fluid in the power steering fluid reservoir does not drop.**

8. **Switch OFF the engine and examine the power steering hose connections, steering gear boots, power steering valve body and power steering pump for external leaks.**
9. **Check the power steering fluid level. Fill the power steering fluid reservoir to the MAX mark with the appropriate power steering fluid.**

   **For additional information, refer to: Specifications (211-00 Steering System - General Information, Specifications).**
10. **NOTE:When bleeding the power steering system the vacuum will decrease. Using the special tools, maintain a sufficient vacuum of 38cm-Hg. If the vacuum decreases by more than 5cm-Hg in 5 minutes, the system should be checked for leaks.**

**Using the special tools, bleed the power steering system in the following sequence.**

1. Start the engine and slowly turn the steering wheel from lock to lock once; then turn the steering wheel to the right, just off the stop.
2. Switch OFF the engine.
3. Using the special tools, create a vacuum of 38cm-Hg. Maintain the vacuum until the air is evacuated from the system (minimum of five minutes).
4. Release the vacuum.
5. Repeat the power steering bleeding procedure, turning the steering wheel to the left, just off the stop.

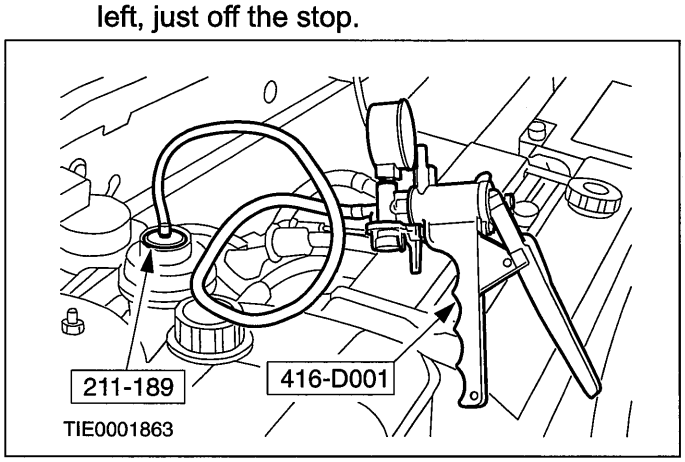


11. **Remove the special tools. Fill the power steering fluid reservoir to the MAX mark with the appropriate power steering fluid as necessary.**

    **For additional information, refer to: Specifications (211-00 Steering System - General Information, Specifications).**
12. **Start the engine, turn the steering wheel from lock to lock. If excessive noise is apparent, repeat the power steering bleeding procedure.**
13. **Lower the vehicle.**
14. **If the noise level is still unacceptable, leave the vehicle standing overnight then repeat the power steering system bleeding procedure.**

## GENERAL PROCEDURES

# Power Steering System Flushing — 1.25L Duratec-16V (Sigma)/1.4L Duratec-16V (Sigma)/1.6L Duratec-16V (Sigma)(13 001 0)

**Special Tool(s)**

| | |
|---|---|
| 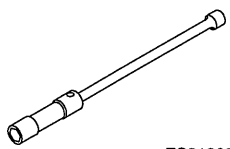 ES21202 | Socket, Spark Plug 303-499 (21-202) |

1. **Raise and support the vehicle. For additional information, refer to: (100-02 Jacking and Lifting)**

   **Jacking (Description and Operation), Lifting (Description and Operation).**

2. **Disconnect the crankshaft position (CKP) sensor electrical connector.**

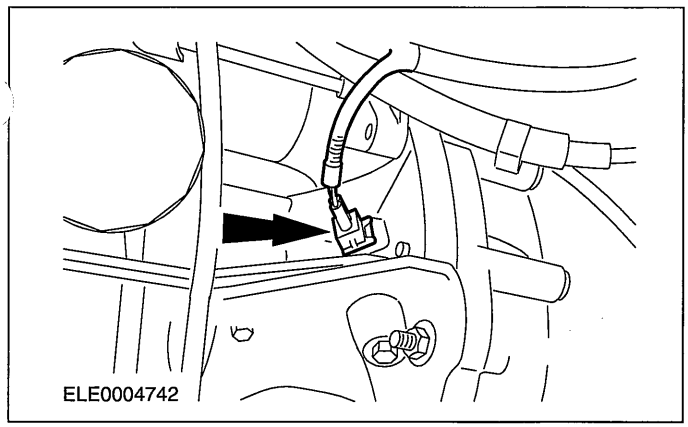


3. **NOTE:Using a suitable blanking cap, cap the end of the hose from the power steering fluid reservoir.**

   **Disconnect the power steering fluid reservoir return hose quick release coupling.**

   1. Press the power steering fluid reservoir return hose quick release coupling locking tangs.
   2. Disconnect the power steering fluid reservoir return hose quick release coupling.
   - Allow the fluid to drain into a suitable container.

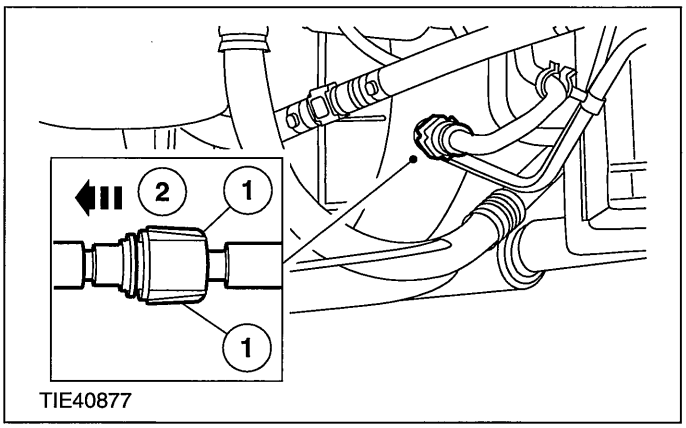


4. **Place the end of the power steering fluid reservoir return hose into a suitable container.**
5. **Lower the vehicle until the wheels are clear of the floor to allow the steering wheel to be rotated from lock to lock.**
6. **Remove the air cleaner.**
   1. Disconnect the air cleaner outlet pipe.
   2. Disconnect the air cleaner inlet pipe.
   3. Remove the retaining bolts.

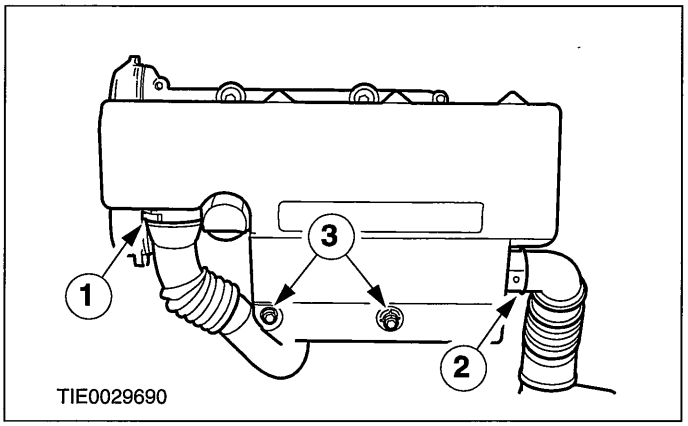

## GENERAL PROCEDURES

**7. Disconnect the spark plug wires.**

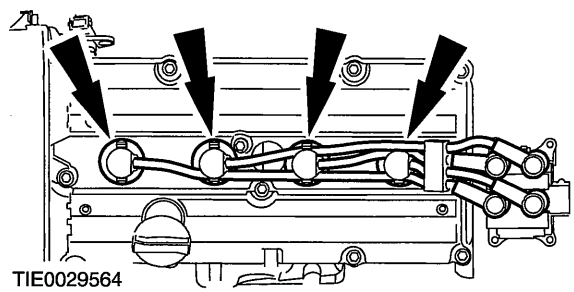


**8. Using the special tool, remove the spark plugs.**

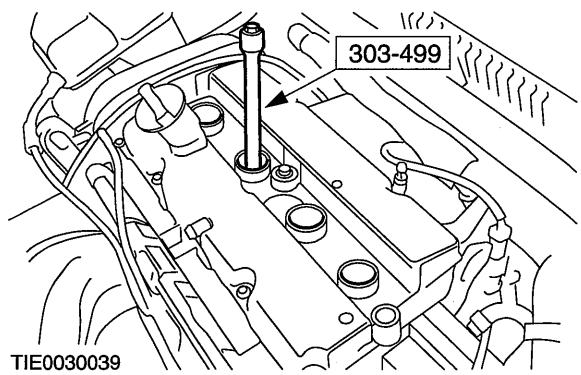


**9. NOTE:When filling the power steering fluid reservoir, make sure that the power steering fluid is clean and not agitated prior to use. The fluid should be poured slowly into the reservoir to minimize the possibility of aeration. The fluid level should be checked with the fluid cold.**

**Fill the power steering reservoir to the MAX mark with the appropriate fluid.**

**For additional information, refer to: Specifications (211-00 Steering System - General Information, Specifications).**

**10. ⚠CAUTION:Do not continuously crank the engine for more than 30 seconds, as damage to the starter motor may result.**

**NOTE:**When flushing the power steering system, make sure that the power steering fluid in the reservoir does not fall below the minimum mark.

**While cranking the engine for no more than 30 seconds turn the steering wheel from lock to lock.**

- With the aid of another technician add 1 liter of clean power steering fluid.

**11. Wait 60 seconds to allow the starter motor to cool.**

**12. ⚠CAUTION:Do not continuously crank the engine for more than 30 seconds, as damage to the starter motor may result.**

**NOTE:**When flushing the power steering system, make sure that the power steering fluid in the reservoir does not fall below the minimum mark.

**While cranking the engine for a further 30 seconds turn the steering wheel from lock to lock.**

- With the aid of another technician add a further 1 liter of clean power steering fluid.

**13. When all the fluid has been used, turn the ignition switch to the OFF position.**

**14. Using the special tool, install the spark plugs.**

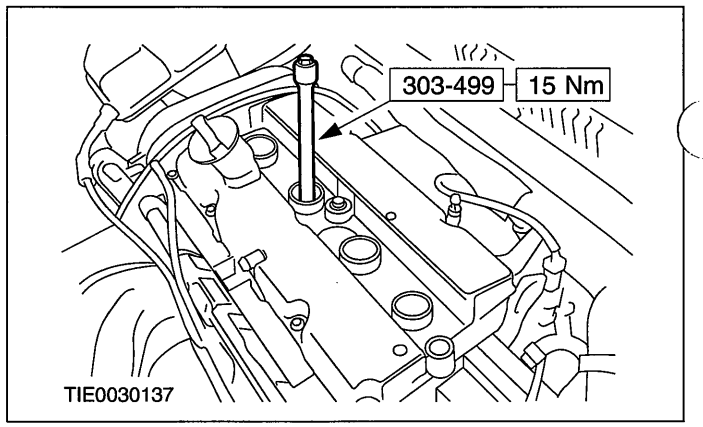


**15. Connect the spark plug wires.**

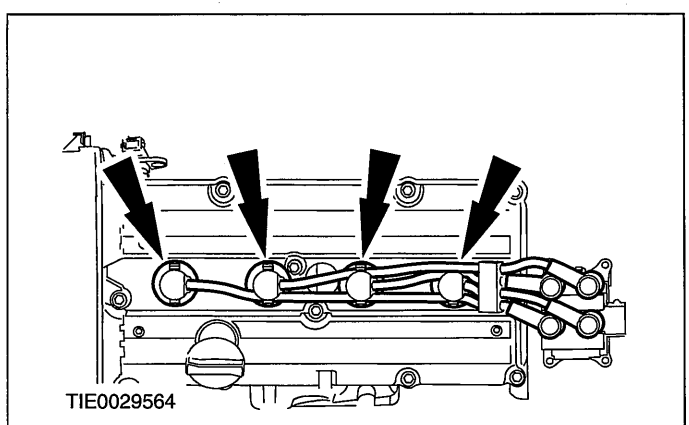


**16. Install the air cleaner.**

1. Install the retaining bolts.
2. Connect the air cleaner inlet pipe.

## GENERAL PROCEDURES

3. Connect the air cleaner outlet pipe.

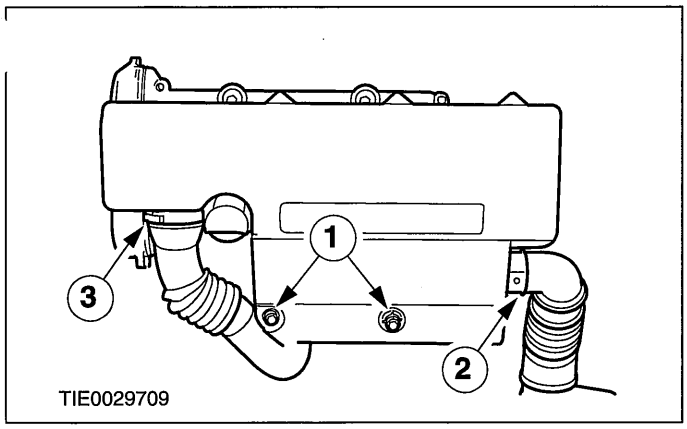


**17. Raise and support the vehicle. For additional information, refer to: (100-02 Jacking and Lifting)**

**Jacking (Description and Operation), Lifting (Description and Operation).**

**18. NOTE:Make sure that the collar on the hose is inserted fully into the quick release coupling.**

**Remove the blanking cap and connect the power steering fluid reservoir return hose quick release coupling.**

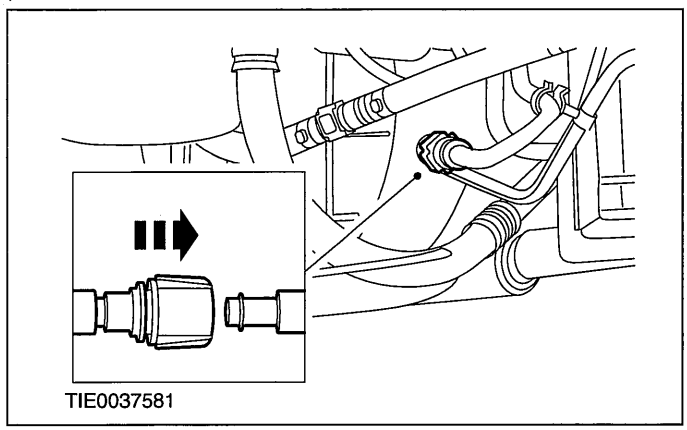


**19. Connect the CKP sensor electrical connector.**

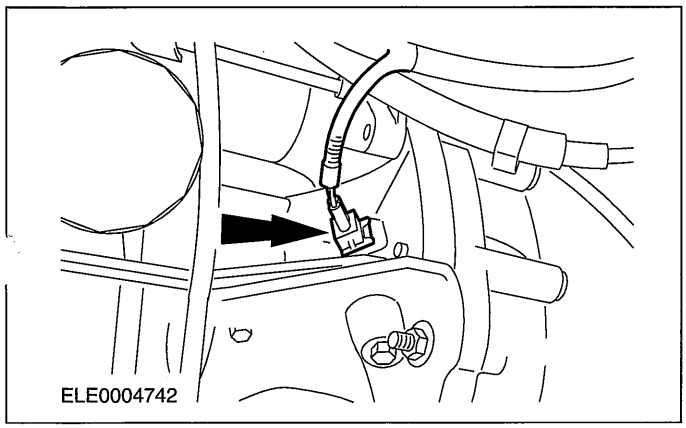


**20. Lower the vehicle.**

**21. Fill and bleed the power steering system. For additional information, refer to: (211-00 Steering System - General Information)**

**Power Steering System Filling (General Procedures),**
**Power Steering System Bleeding (General Procedures).**

## GENERAL PROCEDURES

# Power Steering System Flushing — 2.0L Duratec-HE (MI4)(13 001 0)

### Special Tool(s)

| | |
|---|---|
| 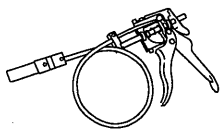 24003 | Remover/Installer, Hose Clamp 303-397 |
| 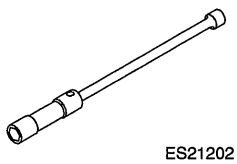 ES21202 | Socket, Spark Plug 303-499 |
| 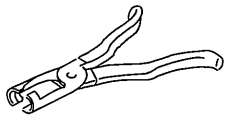 21211 | Pliers, Valve Stem Seal 303-508 |

1. **NOTE:Cap the power steering fluid reservoir to prevent fluid loss or dirt ingress.**

   **Using the special tool, disconnect the steering gear to power steering fluid reservoir return line from the power steering fluid reservoir.**

   - Allow the fluid to drain into a container.

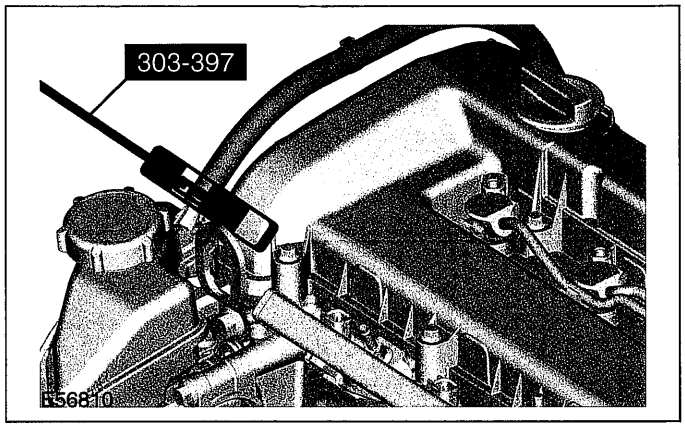


2. **Place the end of the steering gear to power steering fluid reservoir return line into a container.**

3. **Disconnect the crankshaft position (CKP) sensor electrical connector.**

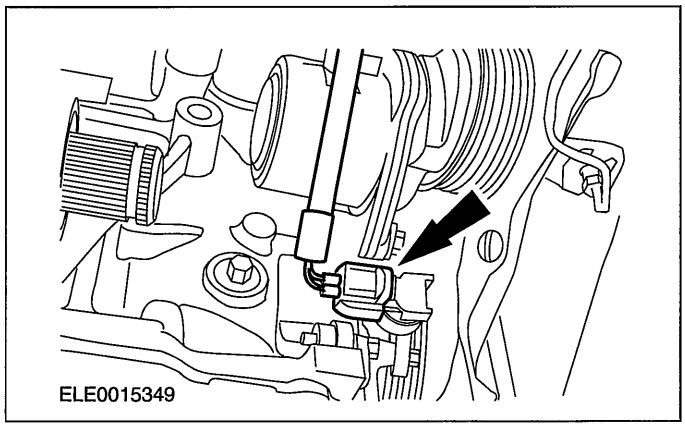


4. **Using the special tool, disconnect the spark plug wires.**

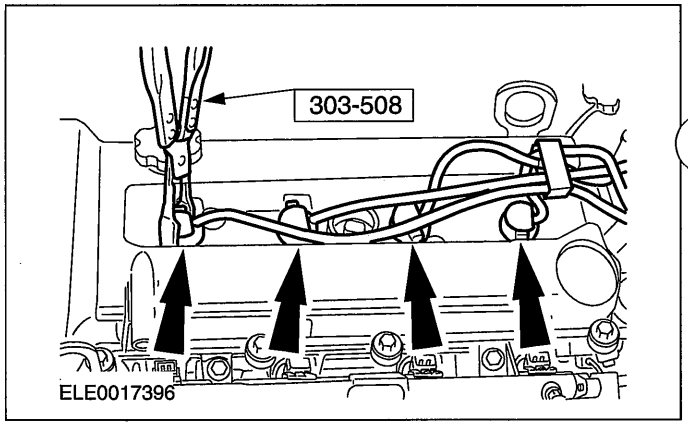


5. **Using the special tool, remove the spark plugs.**

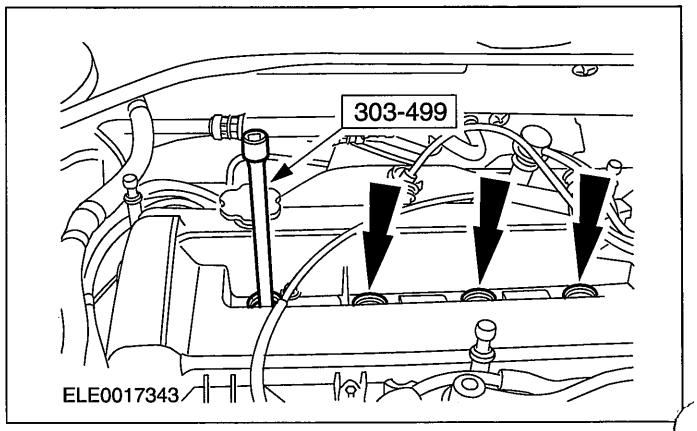

## GENERAL PROCEDURES

6. **Raise the vehicle until the road wheels are clear of the floor. Support the vehicle. For additional information, refer to: (100-02 Jacking and Lifting)**

   **Jacking (Description and Operation), Lifting (Description and Operation).**

7. **NOTE:When filling the power steering fluid reservoir, make sure that the steering fluid is clean and not agitated prior to use. The steering fluid must be poured slowly into the power steering fluid reservoir to minimize the possibility of aeration. The steering fluid level must be checked with the steering fluid cold.**

   **Fill the power steering fluid reservoir to the MAX mark with the appropriate steering fluid.**

   **For additional information, refer to: Specifications (211-00 Steering System - General Information, Specifications).**

8. **CAUTIONS:**

   **⚠Do not continuously crank the engine for more than 30 seconds.**

   **⚠When flushing the power steering system, make sure that the steering fluid in the power steering fluid reservoir does not fall below the MIN mark.**

**NOTE:**When filling the power steering fluid reservoir, make sure that the steering fluid is clean and not agitated prior to use. The steering fluid must be poured slowly into the power steering fluid reservoir to minimize the possibility of aeration.

**While cranking the engine turn the steering wheel from lock to lock.**

- With the aid of another technician, add 1 liter of clean steering fluid to the power steering fluid reservoir.

9. **Wait 60 seconds to allow the starter motor to cool.**

10. **CAUTIONS:**

    **⚠Do not continuously crank the engine for more than 30 seconds.**

    **⚠When flushing the power steering system, make sure that the steering fluid in the power steering fluid reservoir does not fall below the MIN mark.**

**NOTE:**When filling the power steering fluid reservoir, make sure that the steering fluid is clean and not agitated prior to use. The steering fluid must be poured slowly into the power steering fluid reservoir to minimize the possibility of aeration.

**While cranking the engine turn the steering wheel from lock to lock.**

- With the aid of another technician, add a further 1 liter of clean steering fluid to the power steering fluid reservoir.

11. **When the clean steering fluid has been added to the power steering fluid reservoir, turn the ignition switch to the OFF position.**

12. **Lower the vehicle.**

13. **Using the special tool, connect the steering gear to power steering fluid reservoir return line to the power steering fluid reservoir.**

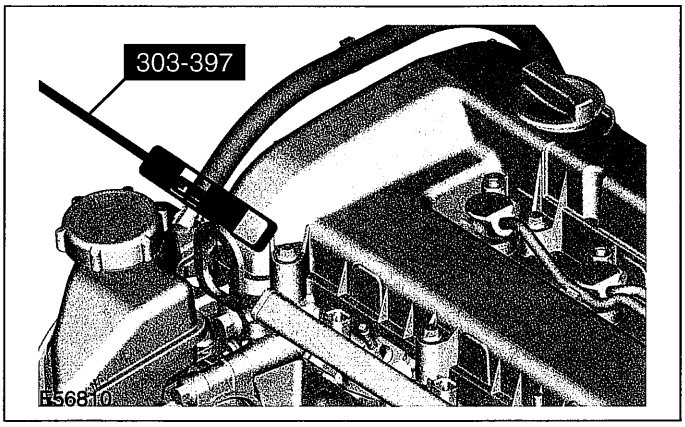


14. **Using the special tool, install the spark plugs.**

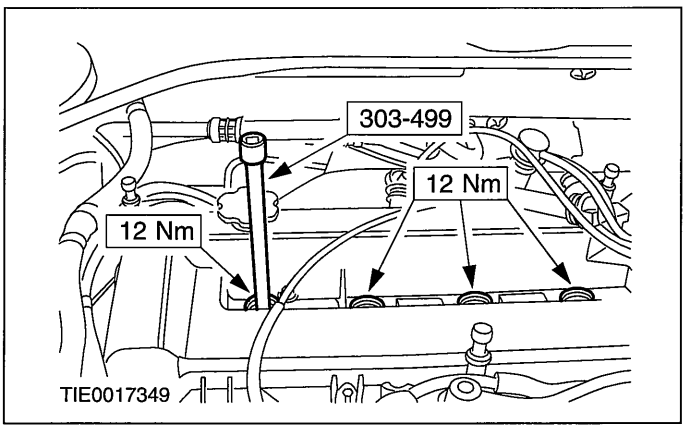

## GENERAL PROCEDURES

15. Using the special tool, connect the spark plug wires.

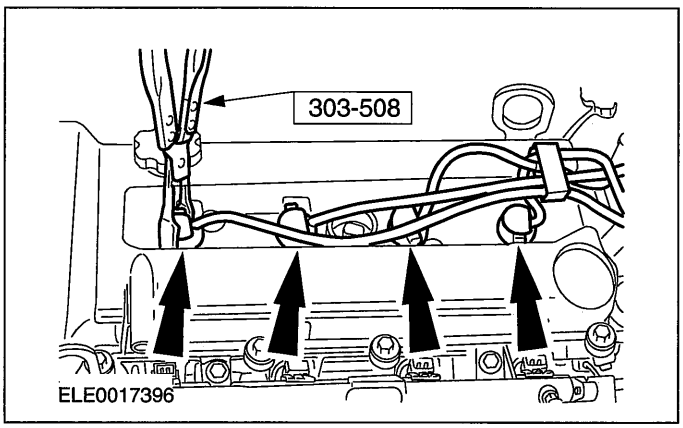


16. Connect the CKP sensor electrical connector.

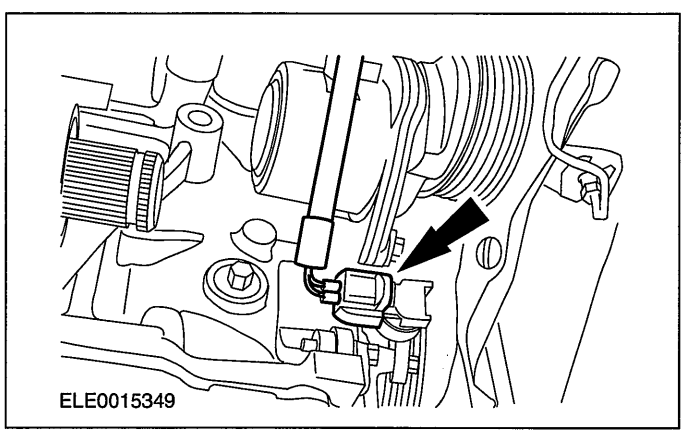


17. NOTE:When filling the power steering fluid reservoir, make sure that the steering fluid is clean and not agitated prior to use. The steering fluid must be poured slowly into the power steering fluid reservoir to minimize the possibility of aeration. The steering fluid level must be checked with the steering fluid cold.

    Fill the power steering fluid reservoir to the MAX mark with the appropriate steering fluid.

    For additional information, refer to: Specifications (211-00 Steering System - General Information, Specifications).

18. Start the engine and slowly turn the steering wheel from lock to lock.
19. Switch OFF the engine.
20. NOTE:When filling the power steering fluid reservoir, make sure that the steering fluid is clean and not agitated prior to use. The steering fluid must be poured slowly into the power steering fluid reservoir to minimize the possibility of aeration. The steering fluid level must be checked with the steering fluid cold.

    Check the steering fluid level. Fill the power steering fluid reservoir to the MAX mark with the appropriate steering fluid as necessary.

    For additional information, refer to: Specifications (211-00 Steering System - General Information, Specifications).

# SECTION 211-02 Power Steering

## VEHICLE APPLICATION:2006.0 Fiesta

CONTENTS PAGE

**SPECIFICATIONS**

Specifications ..... 211-02-2

**DIAGNOSIS AND TESTING**

Power Steering ..... 211-02-4

**REMOVAL AND INSTALLATION**

Power Steering Pump — 1.25L Duratec-16V (Sigma)/1.4L Duratec-16V (Sigma)/1.6L Duratec-16V (Sigma), Vehicles With: Air Conditioning ..... (13 434 0) 211-02-5
Power Steering Pump — 1.25L Duratec-16V (Sigma)/1.4L Duratec-16V (Sigma)/1.6L Duratec-16V (Sigma), Vehicles Without: Air Conditioning ..... (13 434 0) 211-02-8
Power Steering Pump — 2.0L Duratec-HE (MI4) ..... 211-02-10
Power Steering Pump to Steering Gear Pressure Line — 1.25L Duratec-16V (Sigma)/1.4L Duratec-16V (Sigma)/1.6L Duratec-16V (Sigma), Vehicles With: Air Conditioning ..... (13 440 0) 211-02-14
Power Steering Pump to Steering Gear Pressure Line — 1.25L Duratec-16V (Sigma)/1.4L Duratec-16V (Sigma)/1.6L Duratec-16V (Sigma), Vehicles Without: Air Conditioning ..... (13 440 0) 211-02-17
Power Steering Pump to Steering Gear Pressure Line — 2.0L Duratec-HE (MI4) RHD ..... 211-02-20
Steering Gear to Power Steering Fluid Reservoir Return Line — 2.0L Duratec-HE (MI4) RHD ..... 211-02-30
Steering Gear ..... (13 116 0) 211-02-38
Steering Gear to Fluid Cooler Return Hose ..... (13 439 0) 211-02-46
Power Steering Fluid Cooler ..... (13 444 0) 211-02-48
Steering Gear Bushing ..... 211-02-49

## SPECIFICATIONS

### Torque Specifications

| Description | Nm | lb-ft | lb-in |
|---|---|---|---|
| Steering gear mounting bolts | 48 | 35 | - |
| Power steering line to steering gear valve body clamp retaining bolt | 18 | 13 | - |
| Power steering line bracket to steering gear retaining bolt | 14 | 10 | - |
| Power steering line to cylinder head support bracket retaining bolt (Duratec) | 25 | 18 | - |
| Power steering line to accessory drive belt support bracket retaining bolt (Duratec) | 25 | 18 | - |
| Power steering lines to transaxle bracket retaining bolt - vehicles with 1.6L Duratorq-TDCi (DV) Diesel | 10 | - | 89 |
| Power steering supply hose to engine block (rear) | 25 | 18 | - |
| Power steering line to transmission housing retaining bolt | 30 | 22 | - |
| Power steering line to engine block (front) - vehicles with 1.4L Duratorq-TDCi (DV) Diesel without air conditioning | 25 | 18 | - |
| Power steering line to power steering pump union - vehicles with 1.3L Duratec-8V (Rocam) | 40 | 30 | - |
| Power steering line to power steering pump union - vehicles with 1.4L Duratec-16V (Sigma), 1.6L Duratec-16V (Sigma) or 2.0L Duratec-HE (MI4) | 65 | 48 | - |
| Power steering line to power steering pump union - vehicles with 1.4L Duratorq-TDCi (DV) Diesel | 40 | 30 | - |
| Power steering line to power steering pump union - vehicles with 1.6L Duratorq-TDCi (DV) Diesel | 33 | 24 | - |
| Power steering pump to steering gear pressure line support bracket to inlet manifold retaining nut - vehicles with 2.0L Duratec-HE (MI4) | 11 | 8 | - |
| Power steering pump retaining bolts - vehicles with 1.3L Duratec-8V (Rocam) | 25 | 18 | - |
| Power steering pump retaining bolts - vehicles with 1.4L Duratec-16V (Sigma), 1.6L Duratec-16V (Sigma) or 2.0L Duratec-HE (MI4) | 25 | 18 | - |
| Power steering pump retaining bolts - vehicles with 1.4L Duratorq-TDCi (DV) Diesel | 23 | 17 | - |
| Power steering pump retaining nuts - vehicles with 1.6L Duratorq-TDCi (DV) Diesel | 9 | - | 80 |
| Power steering fluid cooler line to front bumper left-hand retaining bolt | 3.5 | - | 31 |
| Power steering fluid cooler line to front bumper right-hand retaining bolt | 9 | - | 80 |

## SPECIFICATIONS

| Description | Nm | lb-ft | lb-in |
|---|---|---|---|
| Power steering fluid reservoir retaining screws - vehicles with 2.0L Duratec-HE (MI4) | 9 | - | 80 |
| Steering gear to power steering fluid reservoir return line support bracket to generator retaining nut - vehicles with 2.0L Duratec-HE (MI4) | 11 | 8 | - |
| Tie-rod end retaining nut | 48 | 35 | - |
| Steering column shaft to steering gear pinion retaining bolt | 28 | 21 | - |
| Exhaust heat shield to steering gear retaining bolts | 14 | 10 | - |
| Exhaust flexible pipe to muffler and tailpipe assembly retaining nuts - vehicles with 1.6L Duratorq-TDCi (DV) Diesel | 47 | 35 | - |
| Stabilizer bar link to stabilizer bar retaining nut | 48 | 35 | - |
| Front crossmember rear retaining bolts | 115 | 85 | - |
| Front crossmember inner and outer retaining bolts | 175 | 129 | - |
| Front crossmember front retaining bolts | 70 | 52 | - |
| Engine support insulator retaining bolts | 48 | 35 | - |

## DIAGNOSIS AND TESTING

# Power Steering

REFER to Section 211-00 [Steering System - General Information].

## REMOVAL AND INSTALLATION

# Power Steering Pump — 1.25L Duratec-16V (Sigma)/1.4L Duratec-16V (Sigma)/1.6L Duratec-16V (Sigma), Vehicles With: Air Conditioning(13 434 0)

**Special Tool(s)**

| | |
|---|---|
| 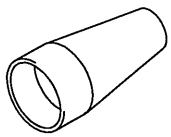 13015 | Expander, Teflon Seal<br>211-188 (13-015) |
| 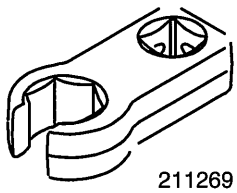 211269 | Wrench, Hydraulic Line Union Nut<br>211-269 (13-027) |
| 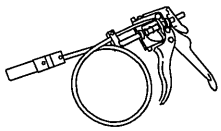 24003 | Remover/Installer, Hose Clamp<br>303-397 (24-003) |

## Removal

1. **Detach the coolant expansion tank from the wheelhouse assembly and position it to one side.**
   1. Remove the retaining bolt.
   2. Release the retaining clip.

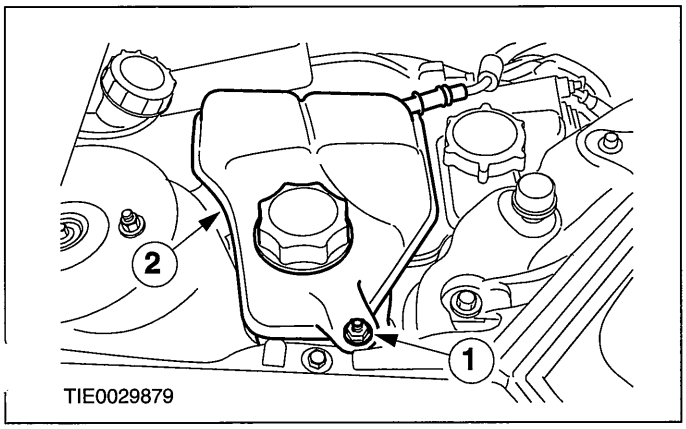


2. **Detach the power steering line from the power steering pump mounting bracket.**

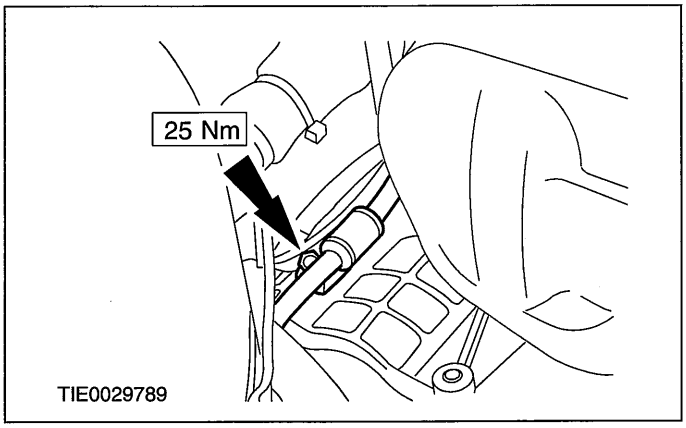


3. **Detach the power steering line bracket from the cylinder head.**

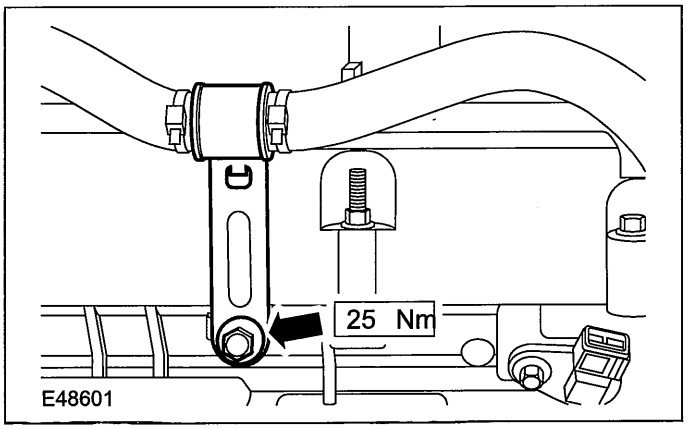


4. **Remove the accessory drive belt.**

   **For additional information, refer to: Power Steering Pump Belt - 1.4L Duratec-16V (Sigma)/1.6L Duratec-16V (Sigma), Vehicles With: Air Conditioning (303-05 Accessory Drive, Removal and Installation).**

5. **Disconnect the power steering fluid reservoir return hose quick release coupling, from either the power steering fluid cooler or the power steering reservoir return hose.**
   1. Press the power steering fluid reservoir return hose quick release coupling locking tangs.
   2. Disconnect the power steering fluid reservoir return hose quick release coupling.

## REMOVAL AND INSTALLATION

- Allow the fluid to drain into a suitable container.

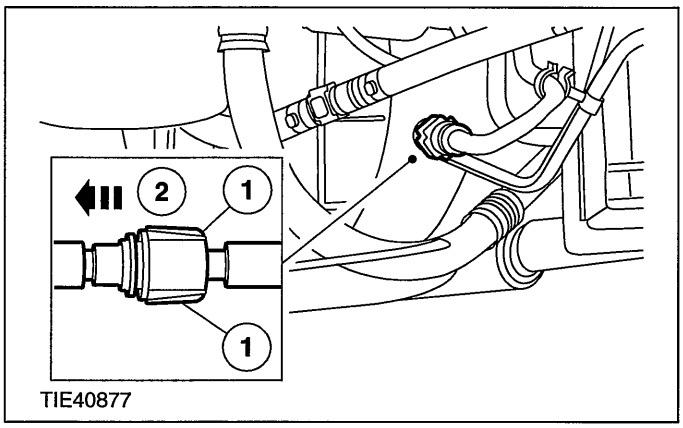


6. **Using the special tool, disconnect the power steering fluid supply hose from the power steering pump.**
   - Allow the fluid to drain into a suitable container.

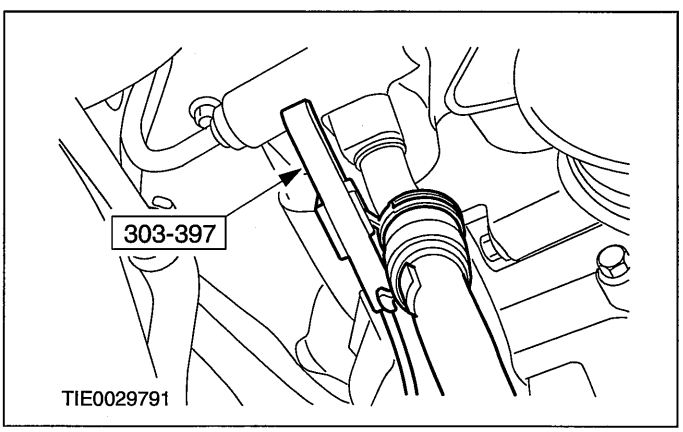


7. **⚠CAUTION:Do not disconnect the power steering pump pressure adapter from the power steering pump.**

   **Using the special tool, disconnect the power steering line from the power steering pump pressure adapter.**
   - Allow the fluid to drain into a suitable container.
   - Discard the O-ring seal.

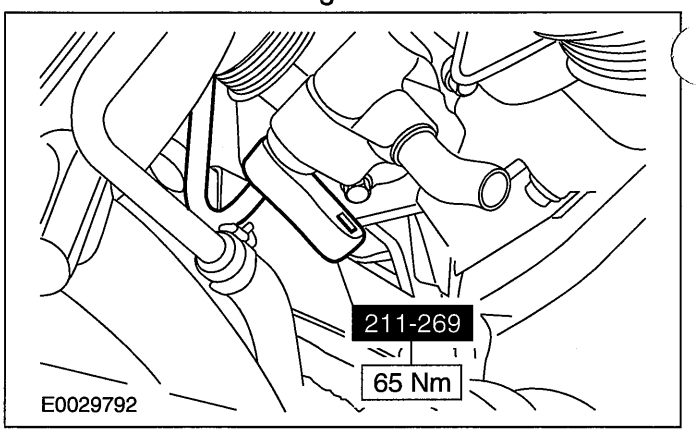


8. **Remove the power steering pump.**

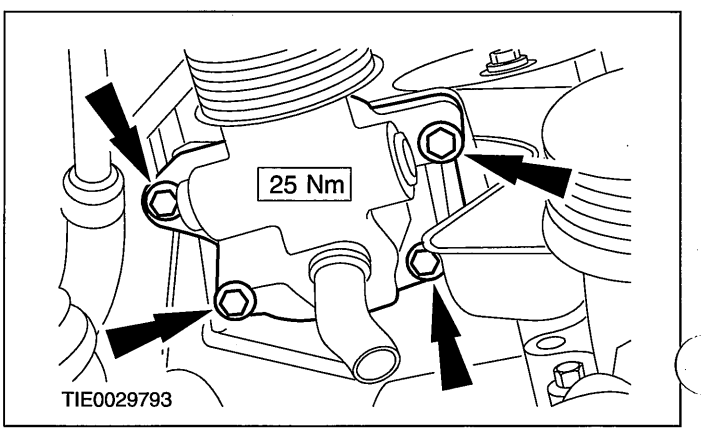


### Installation

1. **NOTE:If installing a new power steering pump, the power steeing line union supplied with the new pump should be removed and retained for further use.**

   **Using the special tool, install a new O-ring seal onto the power steering line to power steering pump union.**
   1. Push the O-ring seal onto the special tool.
   2. Locate the special tool onto the union and install the O-ring seal.

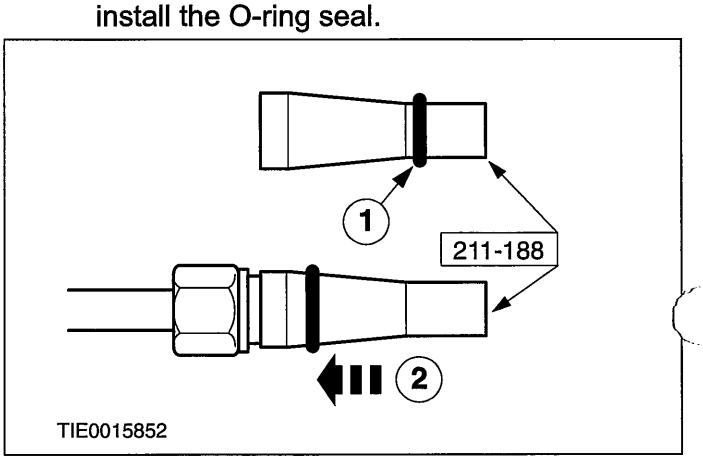

## REMOVAL AND INSTALLATION

2. NOTE:Make sure the collar on the hose is inserted fully into the quick release coupling.

   To install, reverse the removal procedure.

3. Fill and bleed the power steering system.

   For additional information, refer to: Power Steering System Filling (211-00 Steering System - General Information, General Procedures)
   / Power Steering System Bleeding (211-00 Steering System - General Information, General Procedures).

## REMOVAL AND INSTALLATION

# Power Steering Pump — 1.25L Duratec-16V (Sigma)/1.4L Duratec-16V (Sigma)/1.6L Duratec-16V (Sigma), Vehicles Without: Air Conditioning(13 434 0)

**Special Tool(s)**

| | |
|---|---|
| 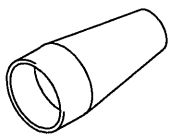 13015 | Expander, Teflon Seal<br>211-188 (13-015) |
| 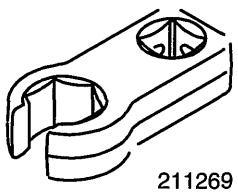 211269 | Wrench, Hydraulic Line Union Nut<br>211-269 (13-027) |
| 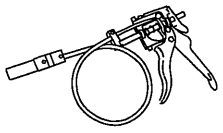 24003 | Remover/Installer, Hose Clamp<br>303-397 (24-003) |

## Removal

1. **Remove the accessory drive belt.**

   **For additional information, refer to: Accessory Drive Belt - 1.4L Duratec-16V (Sigma)/1.6L Duratec-16V (Sigma), Vehicles Without: Air Conditioning (303-05 Accessory Drive, Removal and Installation).**

2. **Disconnect the power steering fluid reservoir return hose quick release coupling, from either the power steering fluid cooler or the power steering reservoir return hose.**
   1. Press the power steering fluid reservoir return hose quick release coupling locking tangs.
   2. Disconnect the power steering fluid reservoir return hose quick release coupling.
   - Allow the fluid to drain into a suitable container.

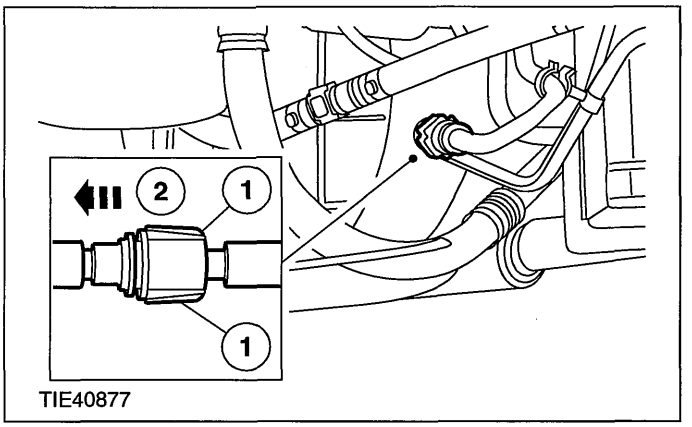

TIE40877

3. **Using the special tool, disconnect the power steering fluid supply hose from the power steering pump.**
   - Allow the fluid to drain into a suitable container.

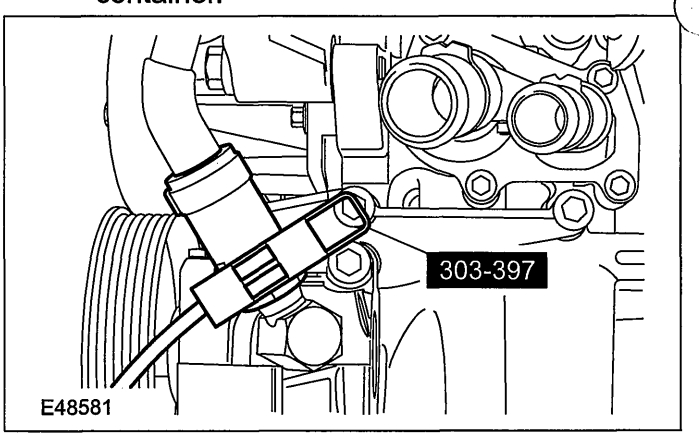

E48581

4. **⚠CAUTION:Do not disconnect the power steering pump pressure adapter from the power steering pump.**

   **Using the special tool, disconnect the power steering line from the power steering pump pressure adapter.**
   - Allow the fluid to drain into a suitable container.

## REMOVAL AND INSTALLATION

- Discard the O-ring seal.

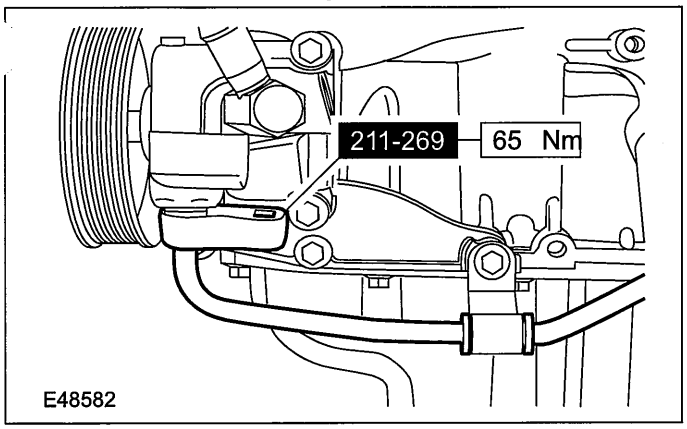


**5. Detach the power steering line bracket from the engine block.**

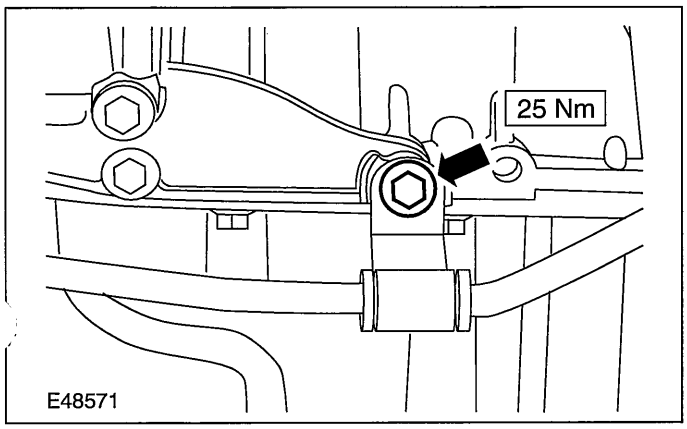


**6. Remove the power steering pump.**

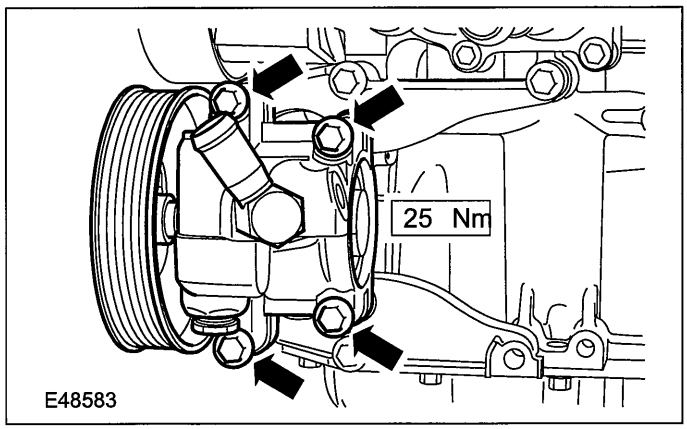


### Installation

**1. NOTE:If installing a new power steering pump, the power steeing pressure line union supplied with the new pump should be removed and retained for further use.**

**Using the special tool, install a new O-ring seal onto the power steering line to power steering pump union.**

1. Push the O-ring seal onto the special tool.
2. Locate the special tool onto the union and install the O-ring seal.

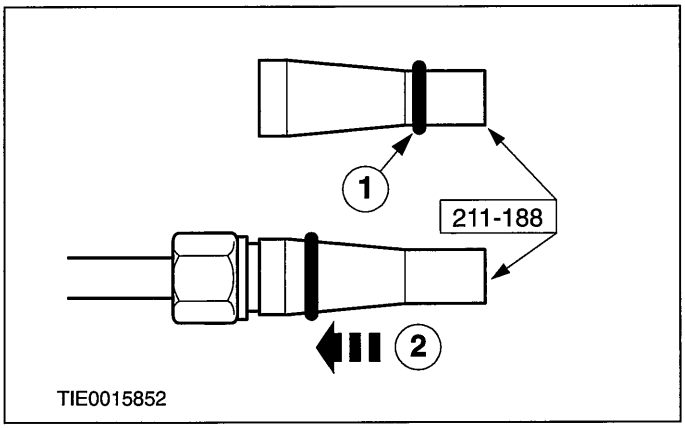


**2. NOTE:Make sure the collar on the hose is inserted fully into the quick release coupling.**

**To install, reverse the removal procedure.**

**3. Fill and bleed the power steering system.**

**For additional information, refer to: Power Steering System Filling (211-00 Steering System - General Information, General Procedures)**
**/ Power Steering System Bleeding (211-00 Steering System - General Information, General Procedures).**

## REMOVAL AND INSTALLATION

# Power Steering Pump — 2.0L Duratec-HE (MI4)

**Special Tool(s)**

| | |
|---|---|
| 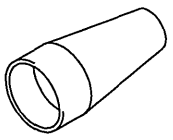 13015 | Expander, Teflon Seal 211-188 |
| 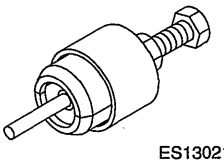 ES13021 | Remover, Power Steering Pump Pulley 211-198 |
| 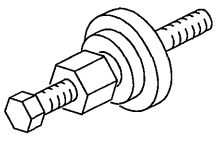 21192 | Installer, Camshaft Pulley 303-458 |
| 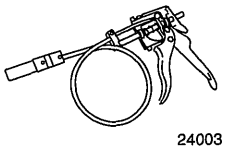 24003 | Remover/Installer, Cooling Hose Clamp 303-397 |

1. **Remove the right-hand headlamp assembly.**

   **For additional information, refer to: Headlamp Assembly (417-01 Exterior Lighting, Removal and Installation).**

2. **Remove the accessory drive belt.**

   **For additional information, refer to: Accessory Drive Belt - 2.0L Duratec-HE (MI4) (303-05 Accessory Drive, Removal and Installation).**

3. **Detach the power steering pump to steering gear pressure line from the intake manifold.**

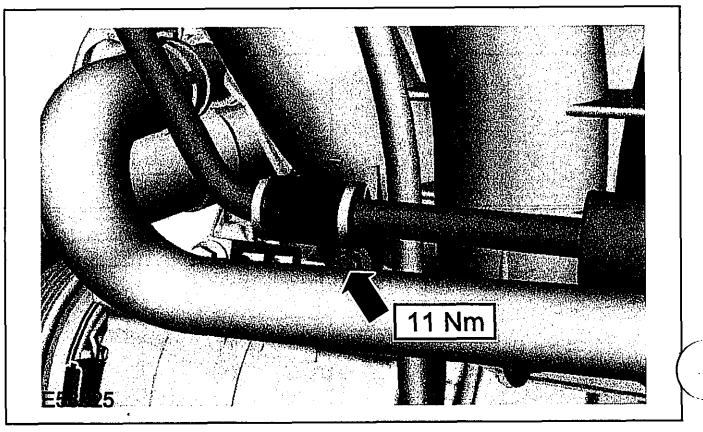


4. **Lower the vehicle.**
5. **Remove the components in the order indicated in the following illustration(s) and table(s).**

## REMOVAL AND INSTALLATION

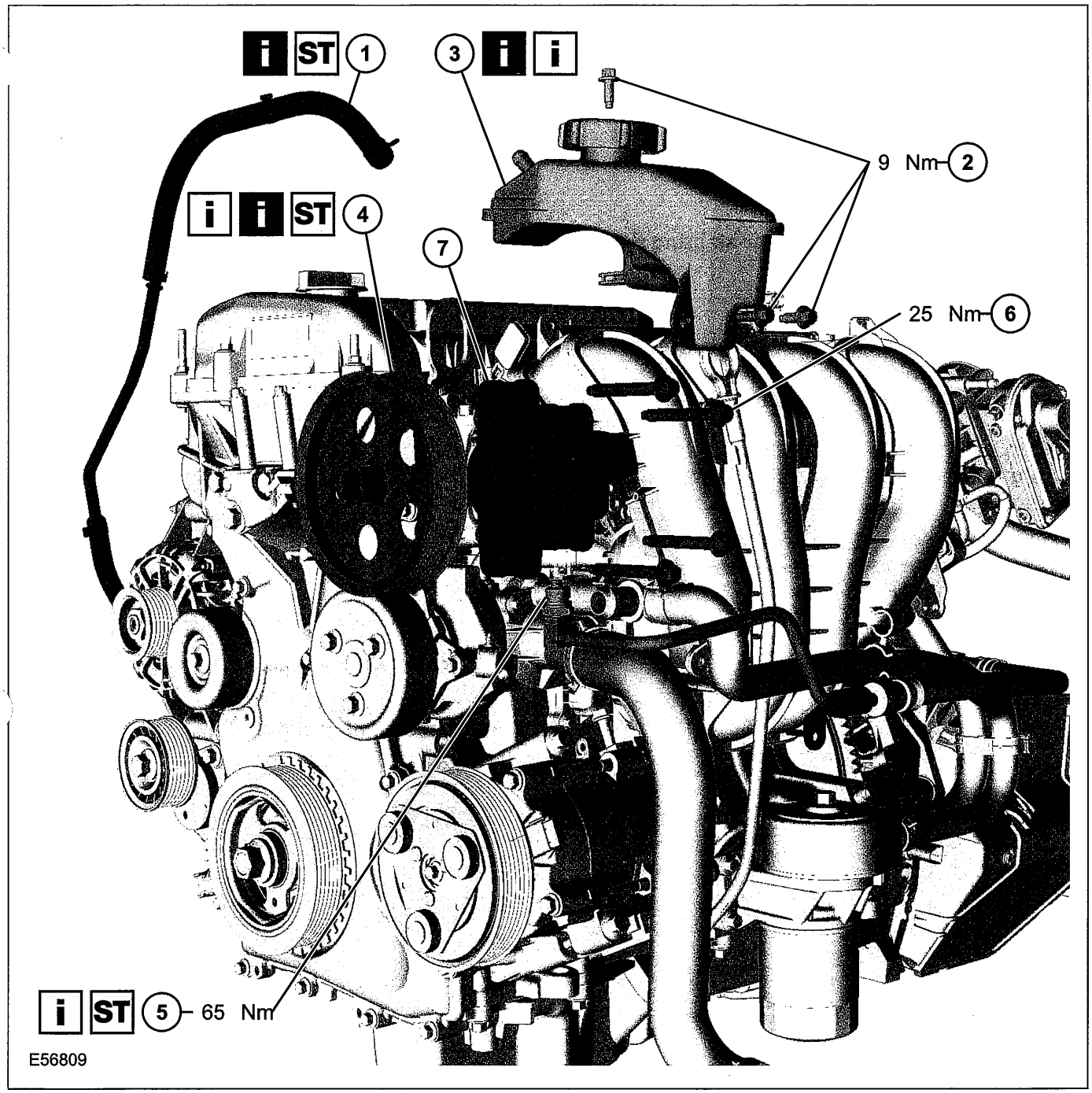


| Item | Description |
|---|---|
| 1 | Steering gear to power steering fluid reservoir return line<br>See Removal Detail |
| 2 | Power steering fluid reservoir retaining bolts |
| 3 | Power steering fluid reservoir<br>See Removal Detail<br>See Installation Detail |
| 4 | Power steering pump pulley<br>See Removal Detail<br>See Installation Detail |

| Item | Description |
|---|---|
| 5 | Power steering pump to steering gear pressure line union<br>See Installation Detail |
| 6 | Power steering pump retaining bolts |
| 7 | Power steering pump |

**6. To install, reverse the removal procedure.**

## REMOVAL AND INSTALLATION

7. **Fill and bleed the power steering system. For additional information, refer to: (211-00 Steering System - General Information)**

   **Power Steering System Filling (General Procedures),**

   **Power Steering System Bleeding (General Procedures).**

# Removal Details

**Item 1 Steering gear to power steering fluid reservoir return line**

1. **CAUTIONS:**

   **⚠Cap the steering gear to power steering fluid reservoir return line to prevent power steering fluid loss or dirt ingress.**

   **⚠Cap the power steering fluid reservoir to prevent power steering fluid loss or dirt ingress.**

   **Using the special tool, disconnect the steering gear to power steering fluid reservoir return line from the power steering fluid reservoir.**

   - Allow the power steering fluid to drain into a container.

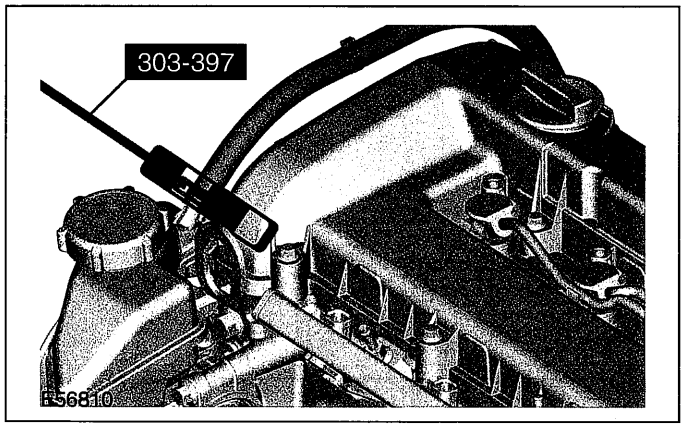


**Item 3 Power steering fluid reservoir**

1. **⚠CAUTION:Cap the power steering fluid reservoir to prevent power steering fluid loss or dirt ingress.**

   **Remove and discard the power steering fluid reservoir O-rings.**

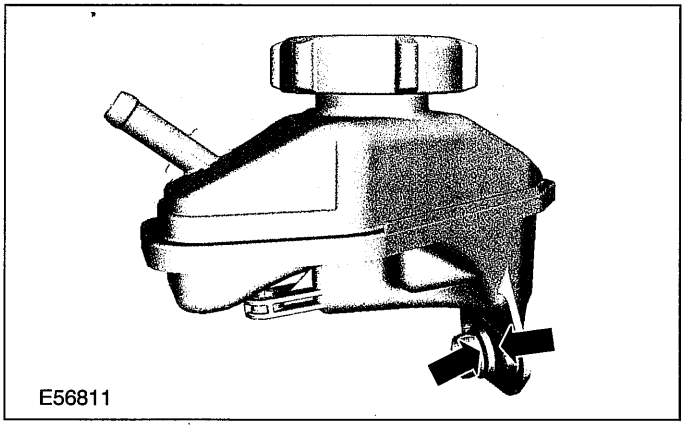


**Item 4 Power steering pump pulley**

1. **Using the special tool, remove the power steering pump pulley.**

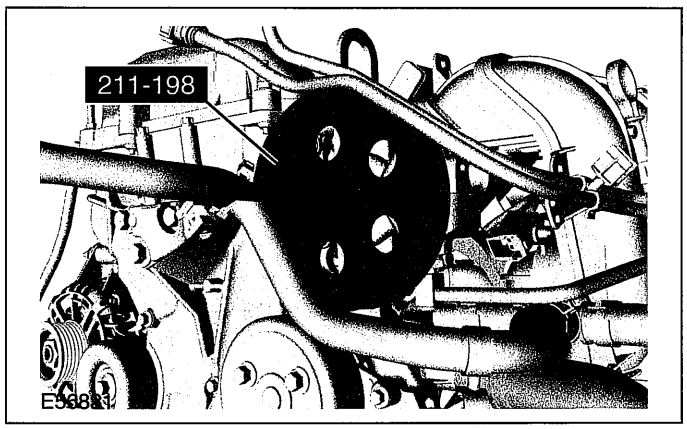


# Installation Details

**Item 5 Power steering pump to steering gear pressure line union**

1. **⚠CAUTION:Care must be taken to prevent dirt ingress.**

   **Using the special tool, install a new Teflon seal onto the power steering pump to steering gear pressure line union.**

   1. Push the new Teflon seal onto the special tool.

## REMOVAL AND INSTALLATION

2. Locate the special tool onto the power steering pump to steering gear pressure line union and install the Teflon seal.

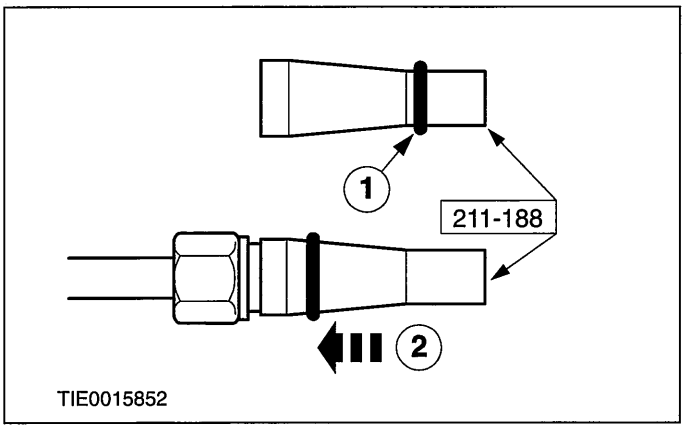


### Item 4 Power steering pump pulley

1. **Using the special tool, install the power steering pump pulley.**

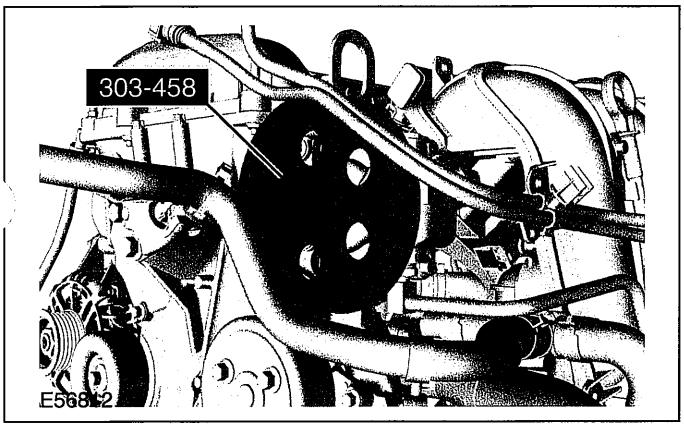


### Item 3 Power steering fluid reservoir

1. **Install new power steering fluid reservoir O-rings.**

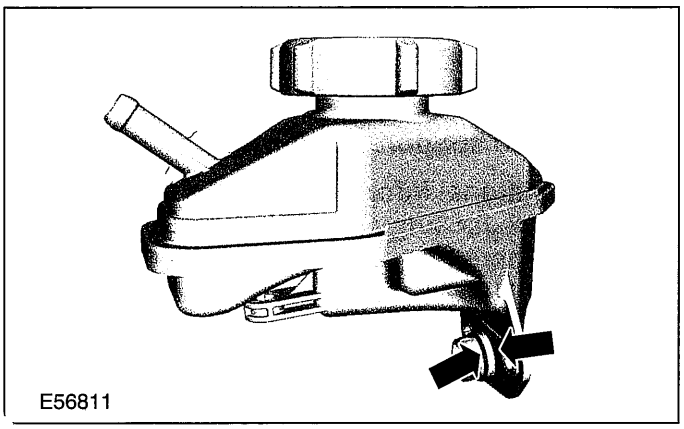

## REMOVAL AND INSTALLATION

# Power Steering Pump to Steering Gear Pressure Line — 1.25L Duratec-16V (Sigma)/1.4L Duratec-16V (Sigma)/1.6L Duratec-16V (Sigma), Vehicles With: Air Conditioning(13 440 0)

**Special Tool(s)**

| | |
|---|---|
| 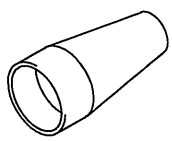 13015 | Expander, Teflon Seal 211-188 (13-015) |
| 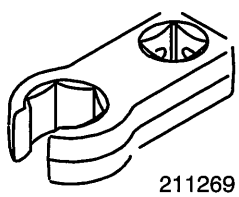 211269 | Socket, Hydraulic Line Union Nut 211-269 (13-027) |

## Removal

All vehicles

1. **Detach the coolant expansion tank from the wheelhouse assembly and position it to one side.**
   1. Remove the retaining bolt.
   2. Release the retaining clip.

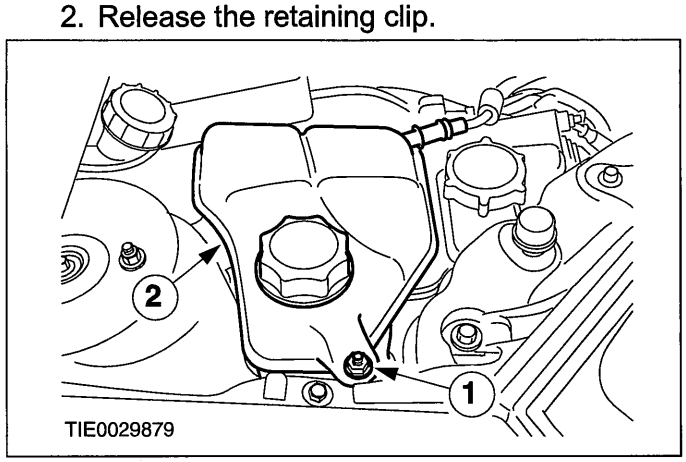


2. **NOTE:Note the position of the power steering line to aid installation.**

**Detach the power steering line bracket from the power steering pump mounting bracket.**

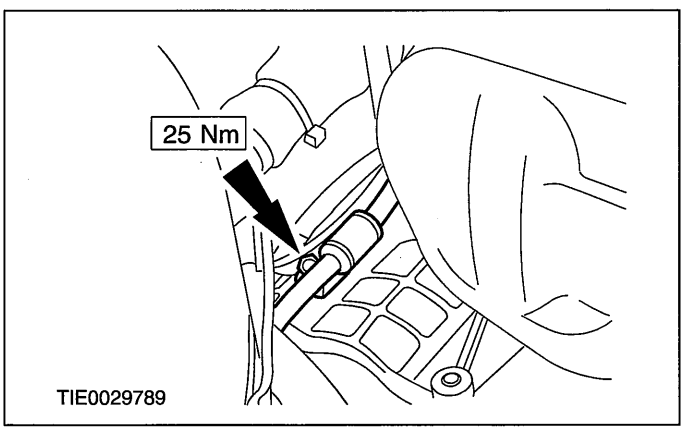


3. **NOTE:Note the position of the power steering line to aid installation.**

   **Detach the power steering line brackets from the cylinder head.**

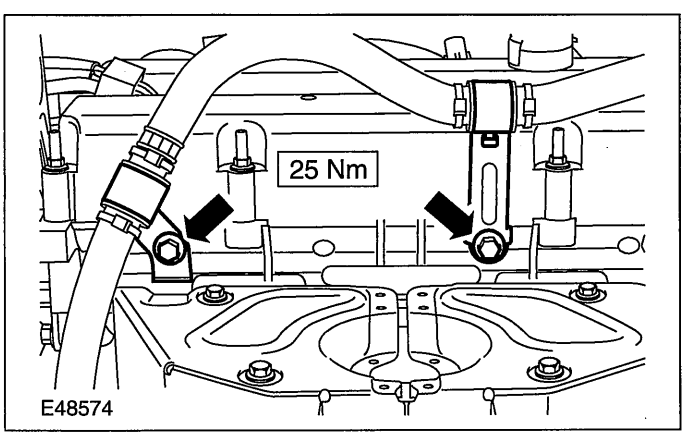


4. **Raise and support the vehicle.**

   **For additional information, refer to: Jacking (100-02 Jacking and Lifting, Description and Operation)**
   **/ Lifting (100-02 Jacking and Lifting, Description and Operation).**

5. **⚠CAUTION:Do not disconnect the power steering pump pressure adapter from the power steering pump.**

   **Using the special tool, disconnect the power steering line from the power steering pump pressure adapter.**

## REMOVAL AND INSTALLATION

- Allow the fluid to drain into a suitable container.
- Discard the O-ring seal.

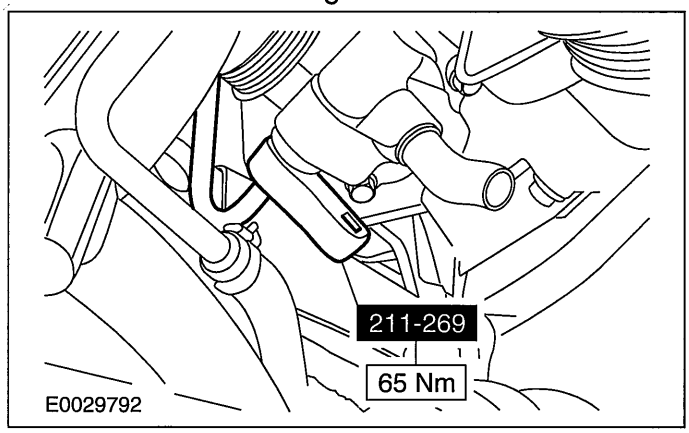


**6. Disconnect the power steering pressure (PSP) switch electrical connector.**

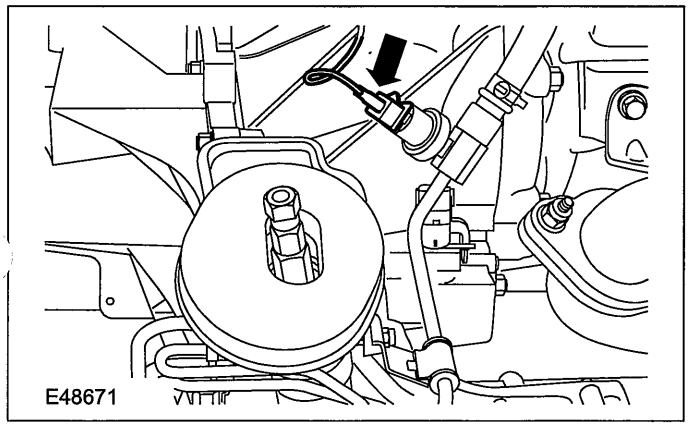


Left-hand drive vehicles

**7. Detach the steering gear return hose from the pressure line.**

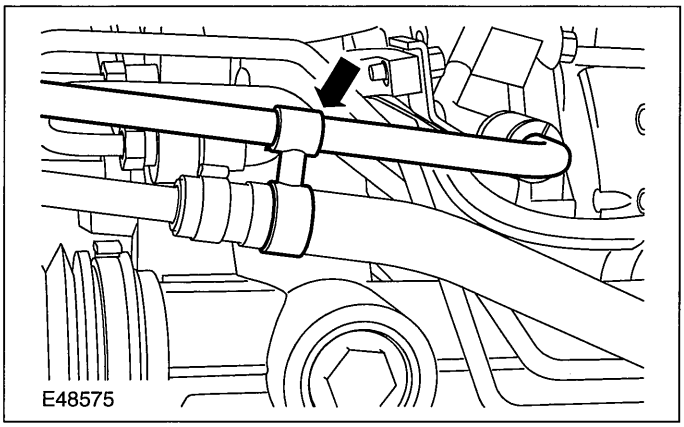


**8. NOTE:Note the position of the power steering line to aid installation.**

**Detach the power steering line from the steering gear.**

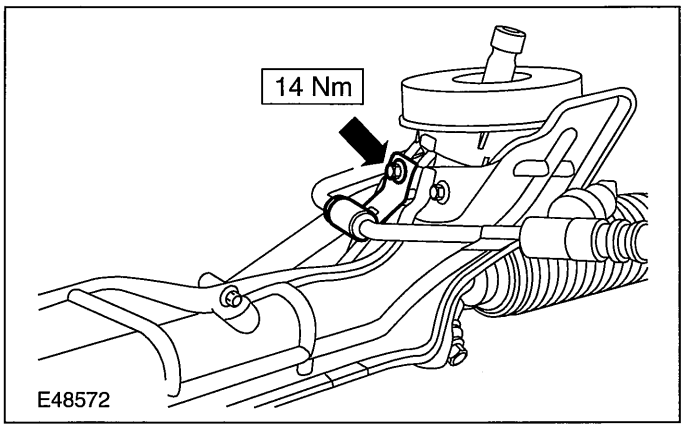


Right-hand drive vehicles

**9. NOTE:Note the position of the power steering line to aid installation.**

**Detach the power steering line from the steering gear.**

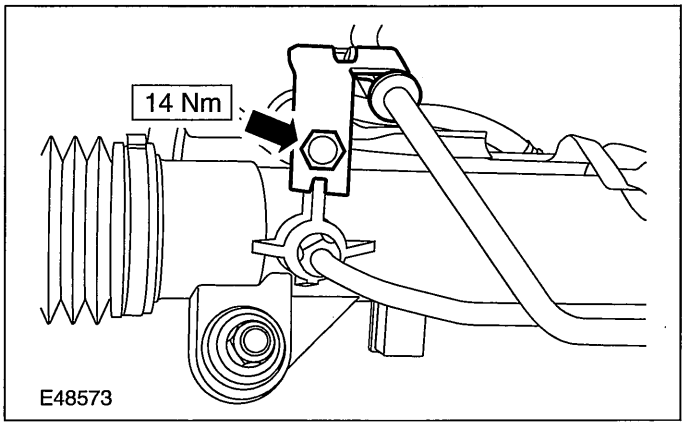


All vehicles

**10. Disconnect the power steering lines from the steering gear valve body.**

1. Remove the retaining bolt.
2. Rotate the clamp plate.
   - Allow the fluid to drain into a suitable container.

## REMOVAL AND INSTALLATION

- Discard the O-ring seals.

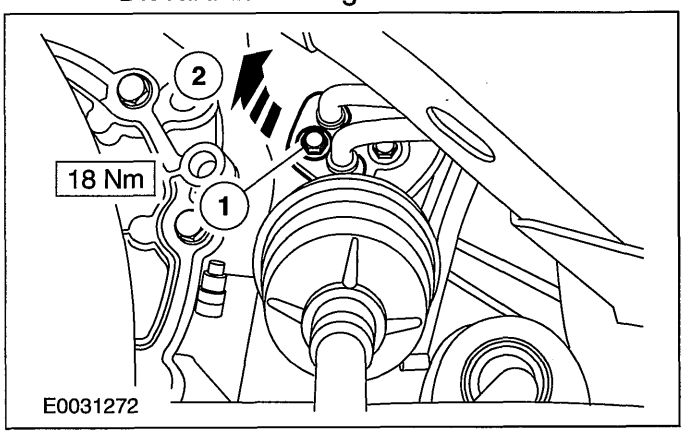


**11. NOTE:Note the position of the power steering line to aid installation.**

**Remove the power steering pump to steering gear pressure line.**

### Installation

**1. If a new fluid line is being installed, push the new line into the new union until it clips into place.**

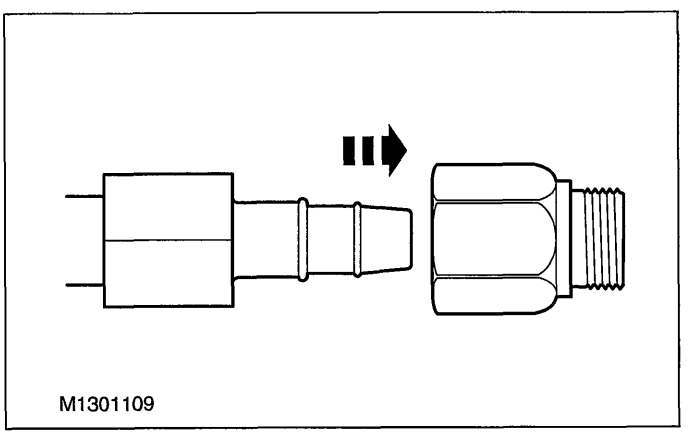


**2. Using the special tool, install a new O-ring seal onto the power steering line to power steering pump union.**

1. Push the new O-ring seal onto the special tool.
2. Locate the special tool onto the union and install the O-ring seal.

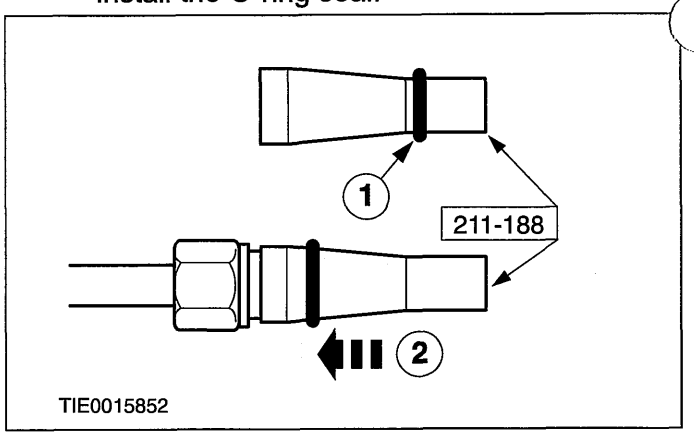


**3. Install new O-ring seals onto the power steering lines.**

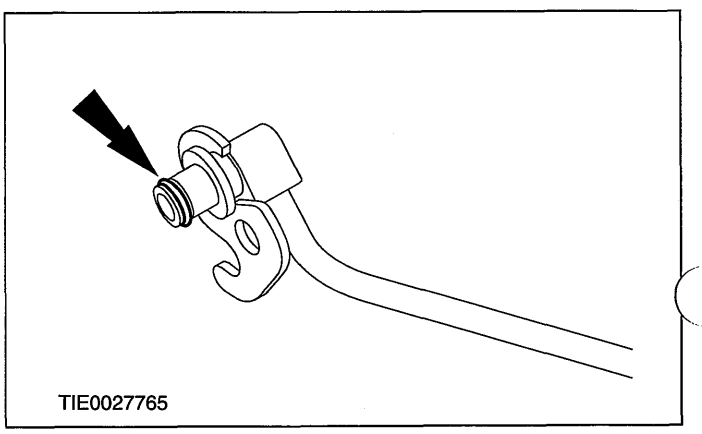


**4. To install, reverse the removal procedure.**

**5. Fill and bleed the power steering system.**

**For additional information, refer to: Power Steering System Filling (211-00 Steering System - General Information, General Procedures)**
**/ Power Steering System Bleeding (211-00 Steering System - General Information, General Procedures).**

## REMOVAL AND INSTALLATION

# Power Steering Pump to Steering Gear Pressure Line — 1.25L Duratec-16V (Sigma)/1.4L Duratec-16V (Sigma)/1.6L Duratec-16V (Sigma), Vehicles Without: Air Conditioning(13 440 0)

**Special Tool(s)**

| | |
|---|---|
| 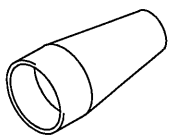 13015 | Expander, Teflon Seal 211-188 (13-015) |
| 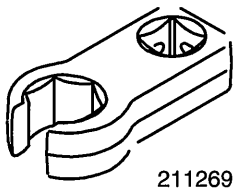 211269 | Socket, Hydraulic Line Union Nut 211-269 (13-027) |

## Removal

Vehicles with manual transaxle

1. **NOTE:Note the position of the power steering line to aid installation.**

   **Detach the power steering line bracket from the transaxle.**

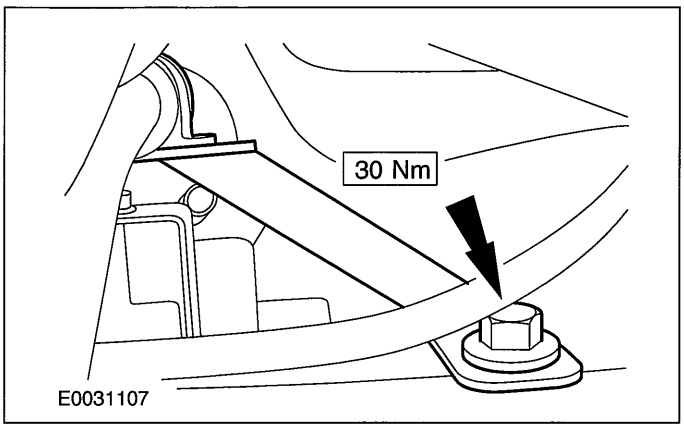


Vehicles with automatic transaxle

2. **NOTE:Note the position of the power steering line to aid installation.**

   **Detach the power steering line brackets from the transaxle.**

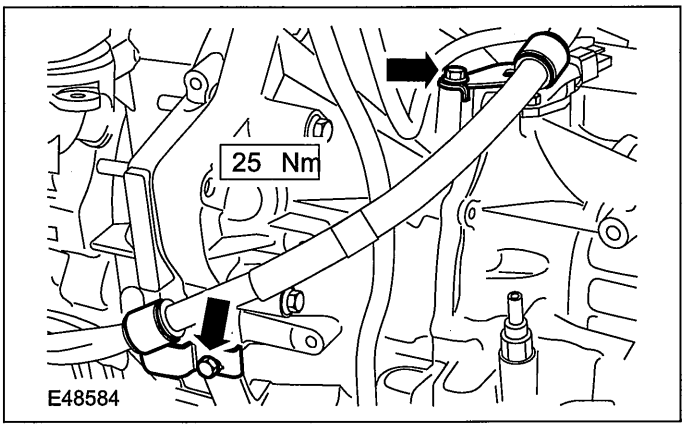


All vehicles

3. **Raise and support the vehicle.**

   **For additional information, refer to: Jacking (100-02 Jacking and Lifting, Description and Operation) / Lifting (100-02 Jacking and Lifting, Description and Operation).**

4. **⚠CAUTION:Do not disconnect the power steering pump pressure adapter from the power steering pump.**

   **Using the special tool, disconnect the power steering line from the power steering pump pressure adapter.**

   - Allow the fluid to drain into a suitable container.
   - Discard the O-ring seal.

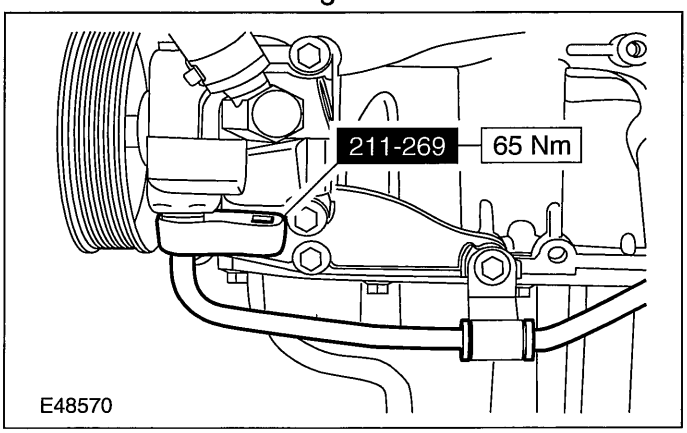

## REMOVAL AND INSTALLATION

5. **NOTE:Note the position of the power steering line to aid installation.**

   **Detach the power steering line bracket from the engine block.**

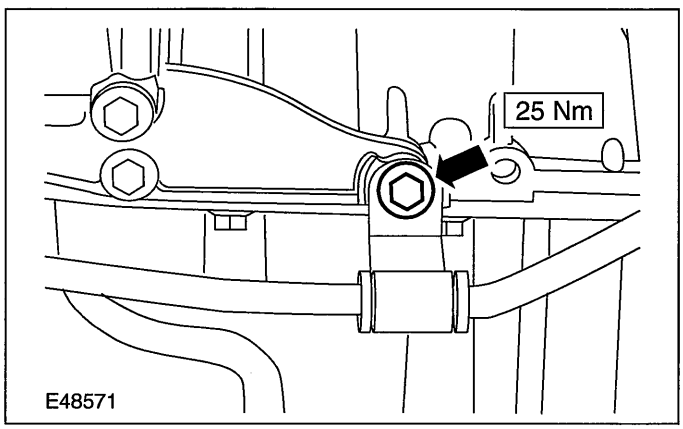


6. **Disconnect the power steering pressure (PSP) switch electrical connector.**

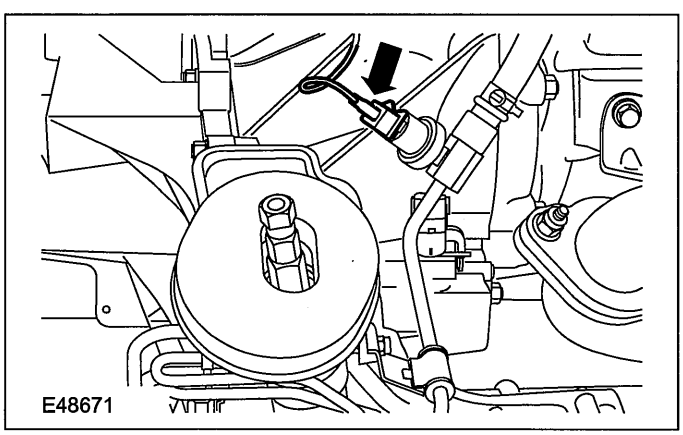


Left-hand drive vehicles

7. **Detach the steering gear return hose from the pressure line.**

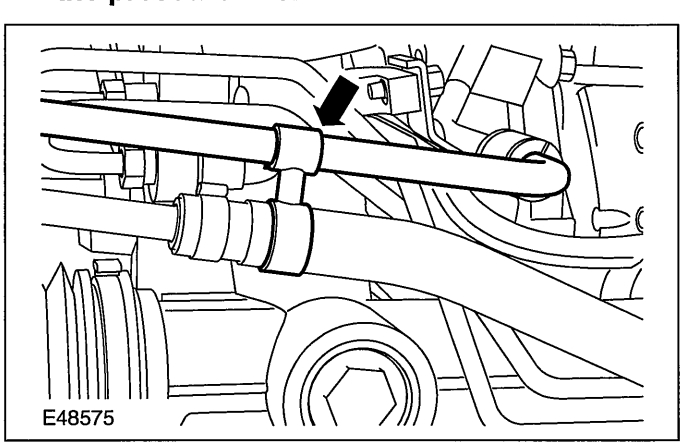


8. **NOTE:Note the position of the power steering line to aid installation.**

   **Detach the power steering line bracket from the steering gear.**

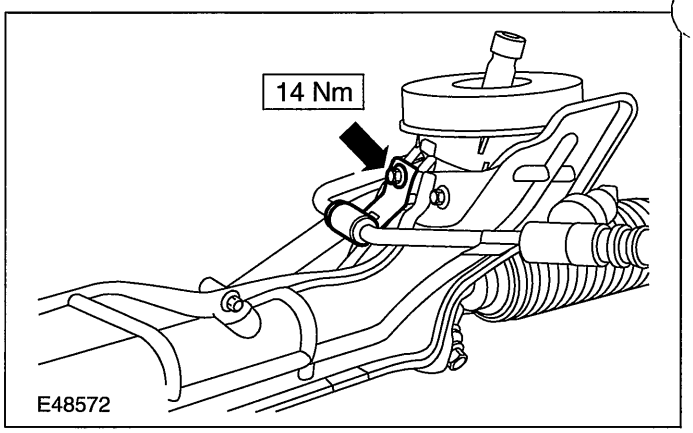


Right-hand drive vehicles

9. **NOTE:Note the position of the power steering line to aid installation.**

   **Detach the power steering line bracket from the steering gear.**

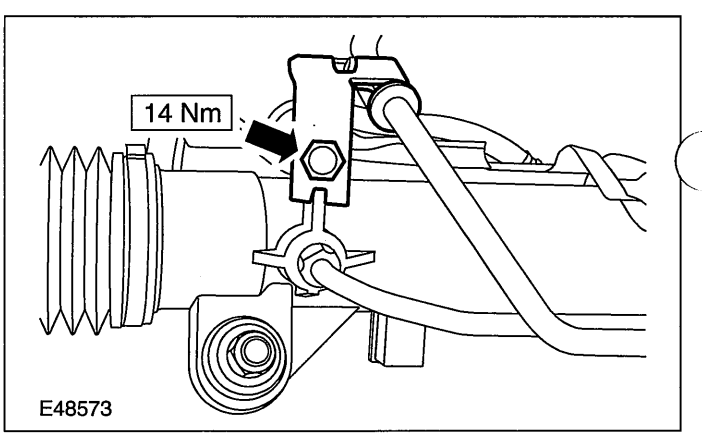


All vehicles

10. **Disconnect the power steering lines from the steering gear valve body.**
    1. Remove the retaining bolt.
    2. Rotate the clamp plate.
    - Allow the fluid to drain into a suitable container.

## REMOVAL AND INSTALLATION

- Discard the O-ring seals.

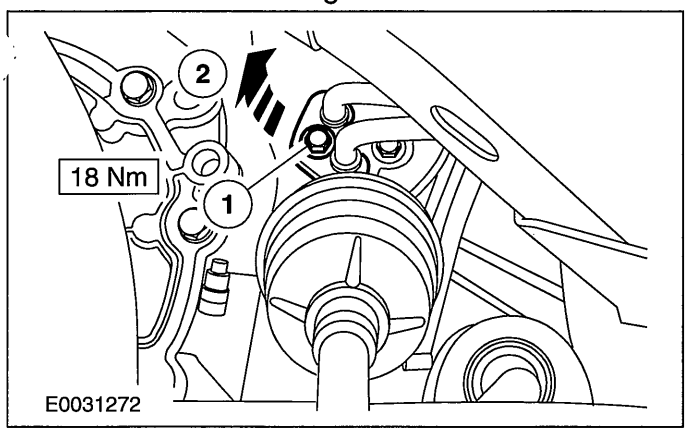


**11. NOTE:Note the position of the power steering line to aid installation.**

**Remove the power steering pump to steering gear pressure line.**

### Installation

**1. If a new fluid line is being installed, push the new line into the new union until it clips into place.**

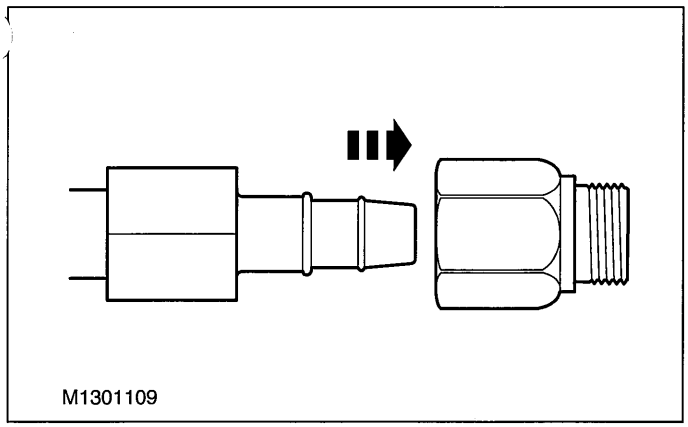


**2. Using the special tool, install a new O-ring seal onto the power steering line to power steering pump union.**

1. Push the new O-ring seal onto the special tool.
2. Locate the special tool onto the union and install the O-ring seal.

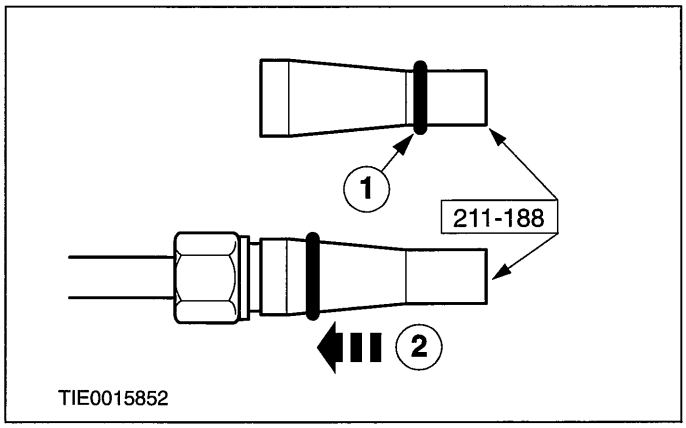


**3. Install new O-ring seals onto the power steering lines.**

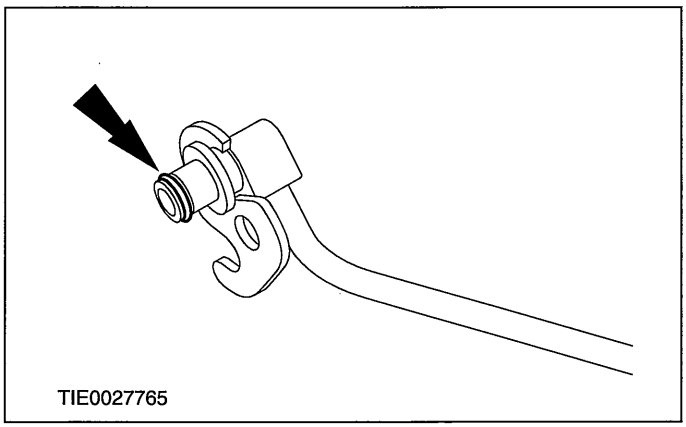


**4. To install, reverse the removal procedure.**

**5. Fill and bleed the power steering system.**

**For additional information, refer to: Power Steering System Filling (211-00 Steering System - General Information, General Procedures)**
**/ Power Steering System Bleeding (211-00 Steering System - General Information, General Procedures).**

## REMOVAL AND INSTALLATION

# Power Steering Pump to Steering Gear Pressure Line — 2.0L Duratec-HE (MI4) RHD

### Special Tool(s)

| | |
|---|---|
| 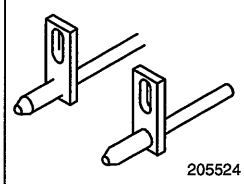 205524 | Alignment Pins, Subframe 205-524 |
| 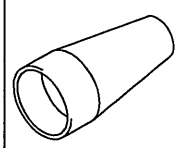 13015 | Expander, Teflon Seal 211-118 |
| 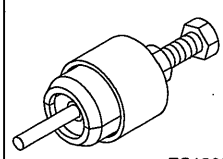 ES13021 | Remover, Power Steering Pump Pulley 211-198 |
| 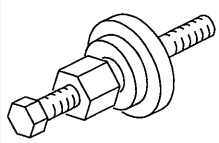 21192 | Installer, Camshaft Pulley 303-458 |

### General Equipment

| |
|---|
| Transmission jack |

| Materials | |
|---|---|
| **Name** | **Specification** |
| Grease | SA-M1C9107-A |

1. **Remove the right-hand headlamp assembly.**

   **For additional information, refer to: Headlamp Assembly (417-01 Exterior Lighting, Removal and Installation).**

2. **Remove the air cleaner.**

   **For additional information, refer to: Air Cleaner - 2.0L Duratec-HE (MI4) (303-12 Intake Air Distribution and Filtering, Removal and Installation).**

3. **Remove the air cleaner intake pipe resonator.**
   1. Remove the air cleaner intake pipe duct retaining bolts.
   2. Remove the air cleaner intake pipe and air cleaner intake pipe duck assembly.
   3. Detach the air cleaner intake pipe resonator from the radiator grille opening panel.

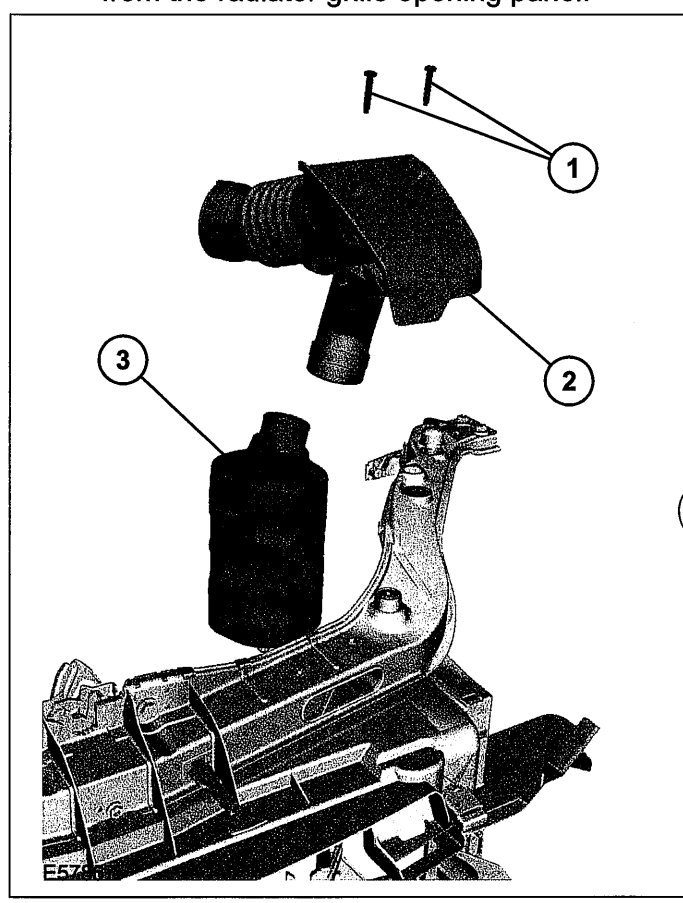


4. **Remove the battery tray.**

   **For additional information, refer to: Battery Tray - 2.0L Duratec-HE (MI4) (414-01 Battery, Mounting and Cables, Removal and Installation).**

5. **NOTE:Make sure that the road wheels are in the straight ahead position.**

## REMOVAL AND INSTALLATION

**Centralize the steering and lock it in position.**

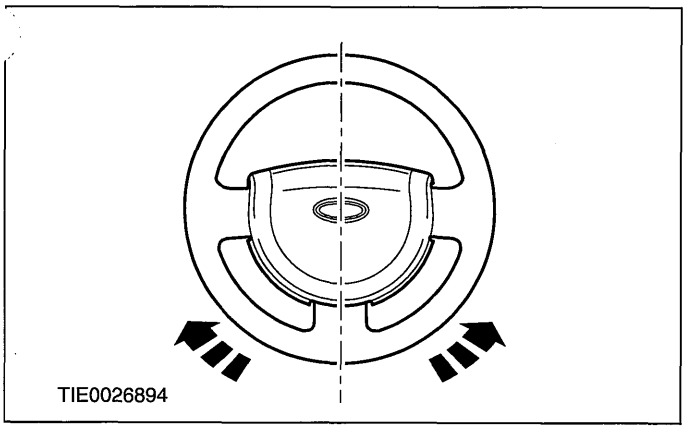


6. **Detach the steering column shaft from the steering gear pinion.**

- Remove and discard the steering column shaft to steering gear pinion retaining bolt.

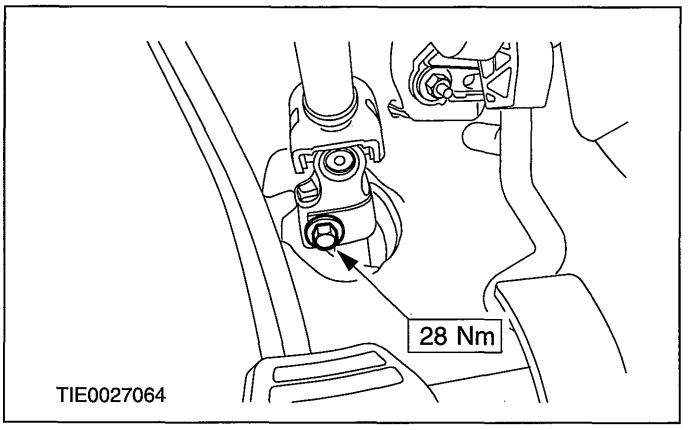


7. **Remove the accessory drive belt.**

   **For additional information, refer to: Accessory Drive Belt - 2.0L Duratec-HE (MI4) (303-05 Accessory Drive, Removal and Installation).**

8. **Lower the vehicle.**
9. **Remove the components in the order indicated in the following illustration(s) and table(s).**

## REMOVAL AND INSTALLATION

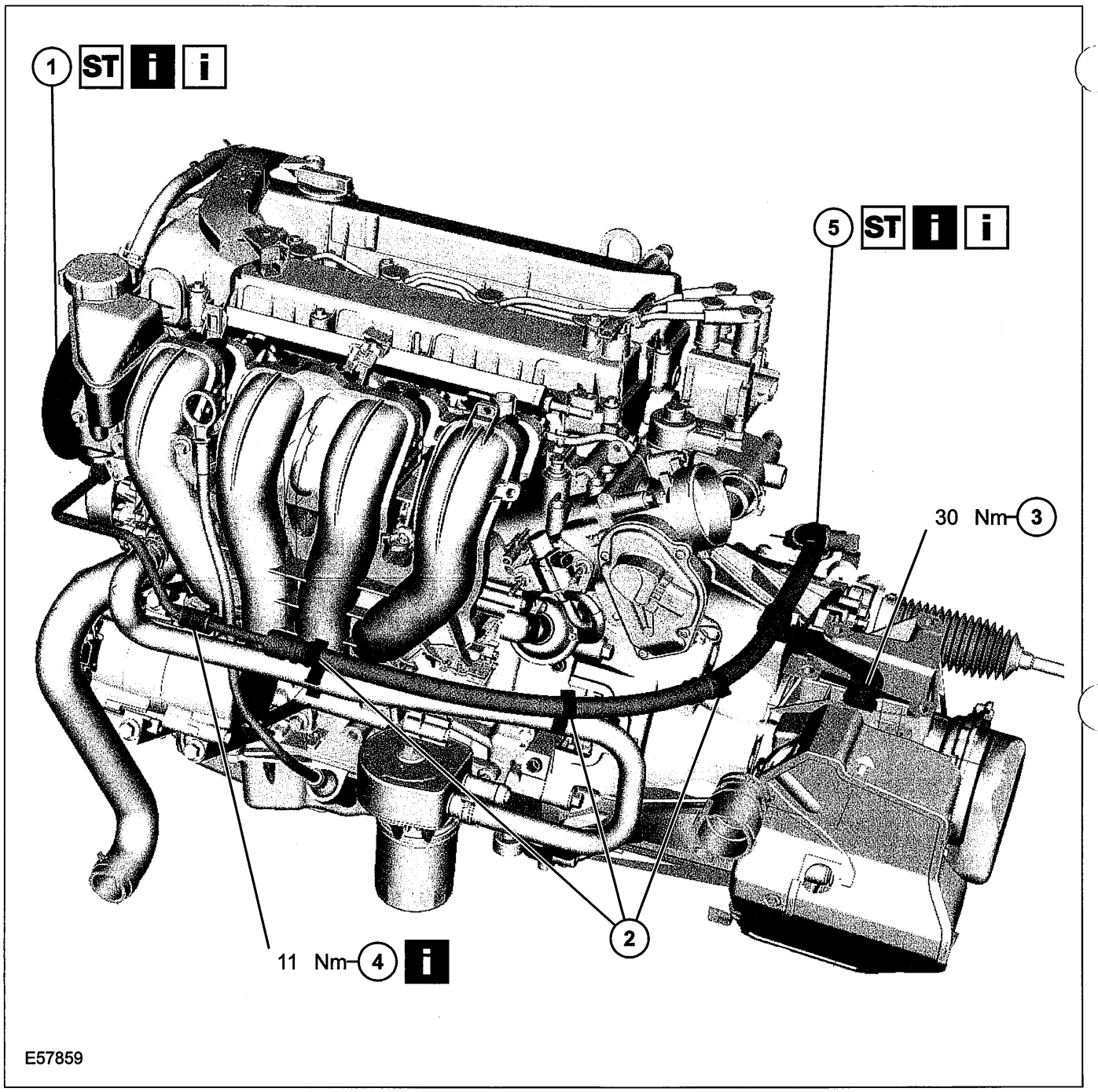


| Item | Description |
|---|---|
| 1 | Power steering pump pulley<br>See Removal Detail<br>See Installation Detail |
| 2 | Power steering pump to steering gear pressure line retaining clips |
| 3 | Power steering pump to steering gear pressure line bracket to transaxle retaining bolt |
| 4 | Power steering pump to steering gear pressure line bracket to intake manifold retaining bolt |

| Item | Description |
|---|---|
| | See Removal Detail |
| 5 | Power steering pump to steering gear pressure line<br>See Removal Detail<br>See Installation Detail |

**10. To install, reverse the removal procedure.**

## REMOVAL AND INSTALLATION

11. **Fill and bleed the power steering system. For additional information, refer to: (211-00 Steering System - General Information)**

    **Power Steering System Filling (General Procedures),**
    **Power Steering System Bleeding (General Procedures).**

# Removal Details

**Item 1 Power steering pump pulley**

1. **Using the special tool, remove the power steering pump pulley.**

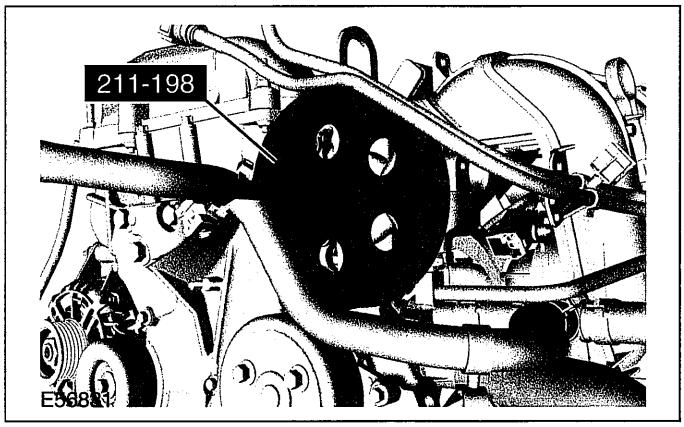


2. **CAUTIONS:**

   **⚠Cap the power steering pump outlet port to prevent fluid loss or dirt ingress.**

   **⚠Cap the power steering pump to steering gear pressure line to prevent fluid loss or dirt ingress.**

   **Disconnect the power steering pump to steering gear pressure line from the power steering pump.**

   - Remove and discard the power steering pump to steering gear pressure line union O-ring seal.

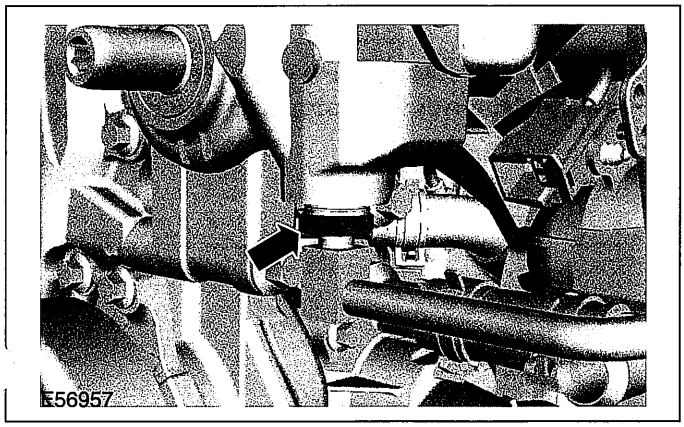


**Item 4 Power steering pump to steering gear pressure line bracket to intake manifold retaining bolt**

1. **Raise and support the vehicle. For additional information, refer to: (100-02 Jacking and Lifting)**

   **Jacking (Description and Operation),**
   **Jacking (Description and Operation).**

2. **Detach the power steering pump to steering gear pressure line from the intake manifold.**

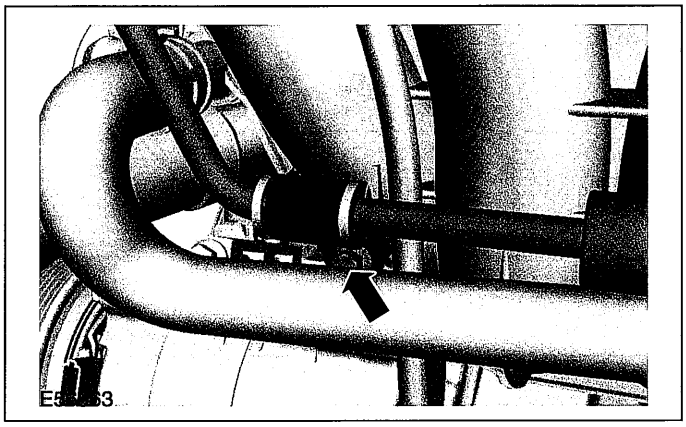

**Item 5 Power steering pump to steering gear pressure line**

1. **Remove the front wheels and tires.**

   **For additional information, refer to: Wheel and Tire (204-04 Wheels and Tires, Removal and Installation).**

## REMOVAL AND INSTALLATION

2. **Disconnect the power steering pressure (PSP) switch electrical connector.**

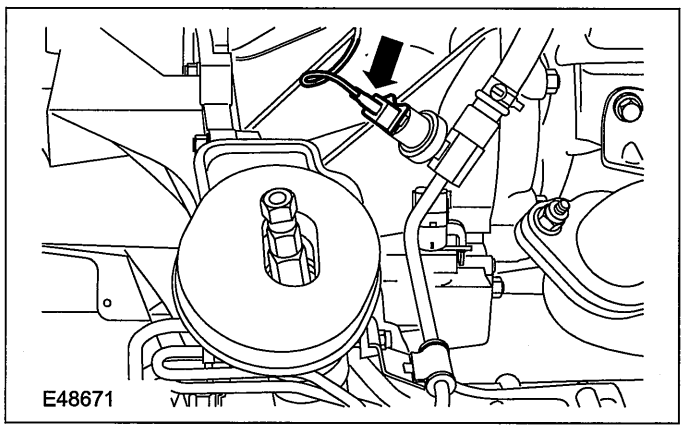


3. **Detach the steering gear heat shield from the steering gear.**

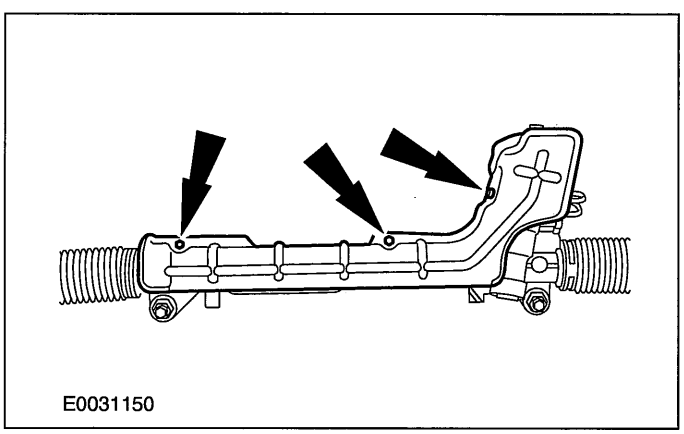


4. **NOTE:Note the position of the power steering pump to steering gear pressure line to aid installation.**

   **Detach the power steering pump to steering gear pressure line from the steering gear.**

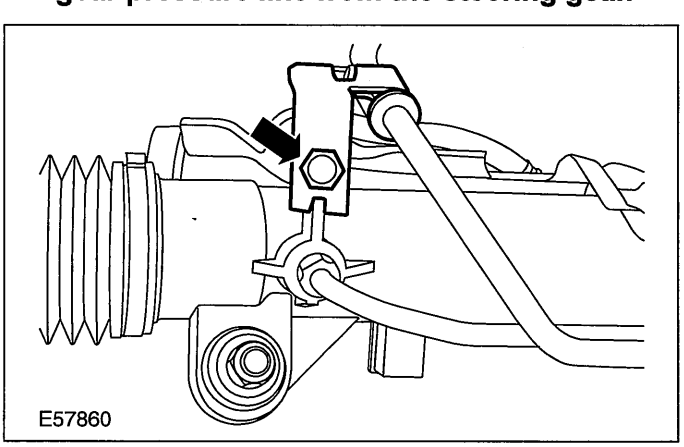


5. **⚠CAUTION:Over bending of the exhaust flexible pipe may cause damage resulting in failure.**

   **Support the exhaust flexible pipe with a support wrap or splint.**

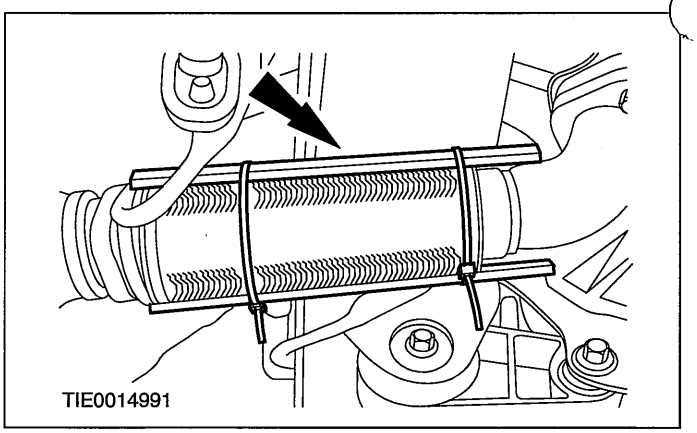


6. **⚠CAUTION:Twisting the exhaust flexible pipe more than two degrees may cause damage resulting in failure.**

**NOTE:**Use a pry-bar to prevent the exhaust flexible pipe from twisting when removing the exhaust flexible pipe to catalytic converter retaining nuts.

   **Remove the exhaust flexible pipe to catalytic converter retaining nuts.**

   - Discard the exhaust flexible pipe to catalytic converter gasket and retaining nuts.

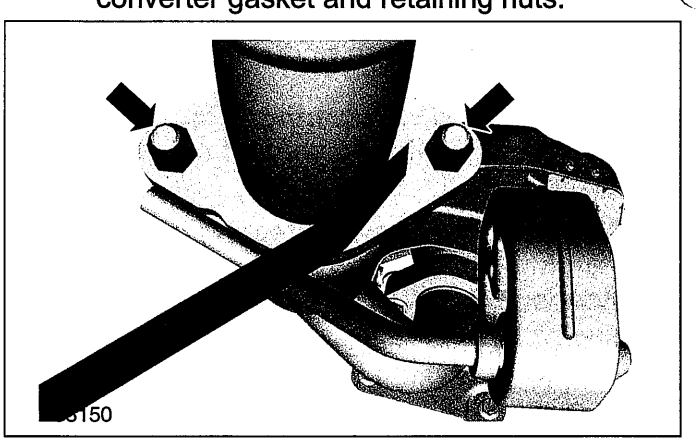

7. **⚠CAUTION:Take care when removing the exhaust hanger insulator to prevent damage.**

## REMOVAL AND INSTALLATION

**Remove the exhaust hanger insulator.**

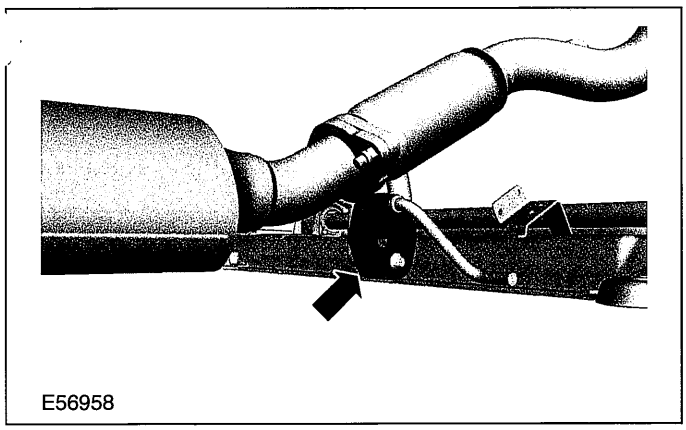


8. **NOTE:Use a 5 mm Allen key to prevent the stabilizer bar link ball joint from rotating.**

   **Detach the stabilizer bar link from the stabilizer bar on both sides.**

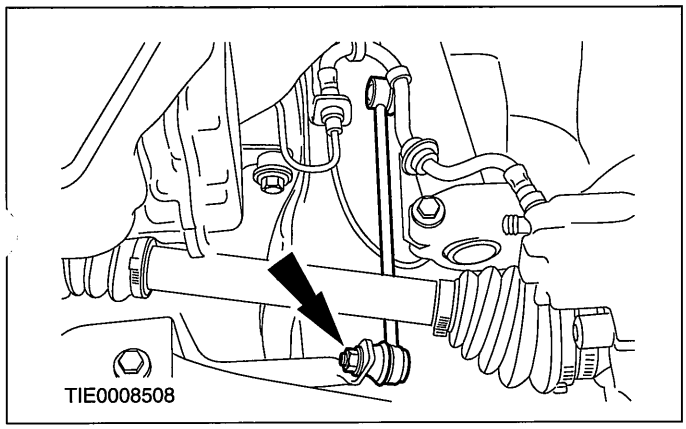


9. **Remove the engine support insulator.**

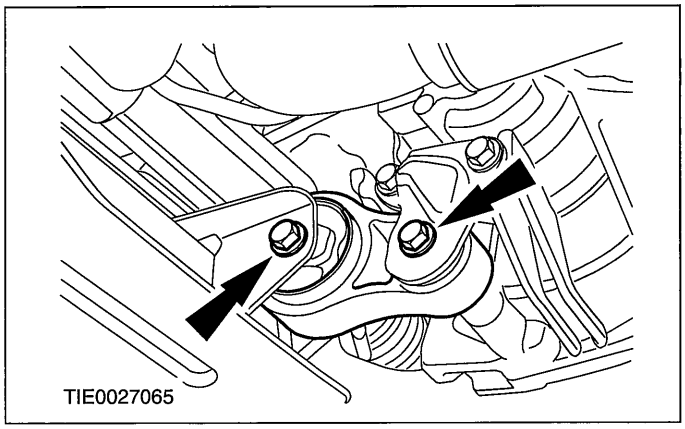


10. **Using a transmission jack and a wooden block, support the front axle crossmember.**

11. **Remove the front axle crossmember retaining bolts on both sides.**

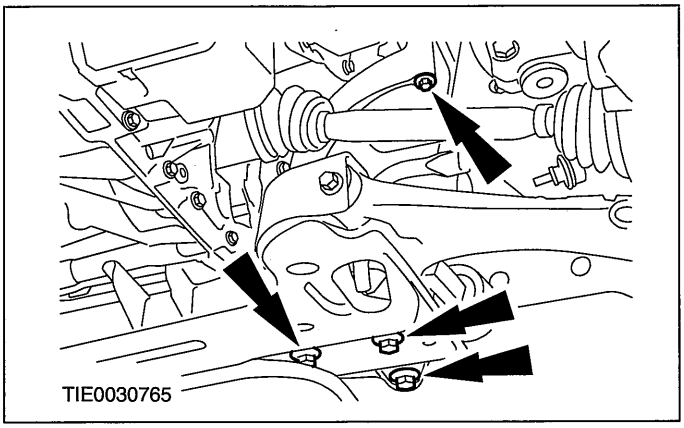


12. **Lower the front axle crossmember approximately 100 mm.**

13. **Detach the steering gear to power steering fluid reservoir return line from the power steering pump to steering gear pressure line.**

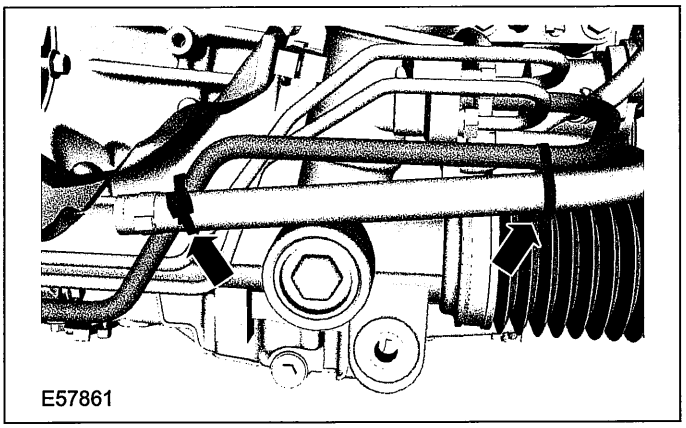


14. **⚠CAUTION:Cap the steering gear valve body inlet port and outlet port to prevent fluid loss or dirt ingress.**

    **Disconnect the power steering lines from the steering gear valve body.**

    1. Remove the power steering lines clamp plate retaining bolt.
    2. Rotate the power steering lines clamp plate.

## REMOVAL AND INSTALLATION

- Allow the power steering fluid to drain into a container.

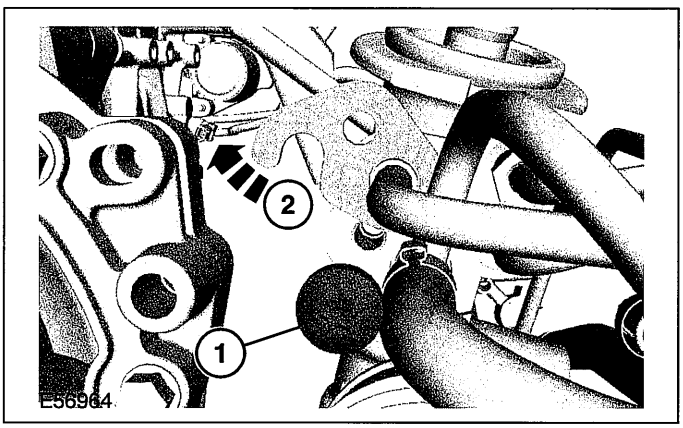


**15. Remove and discard the power steering lines O-ring seals.**

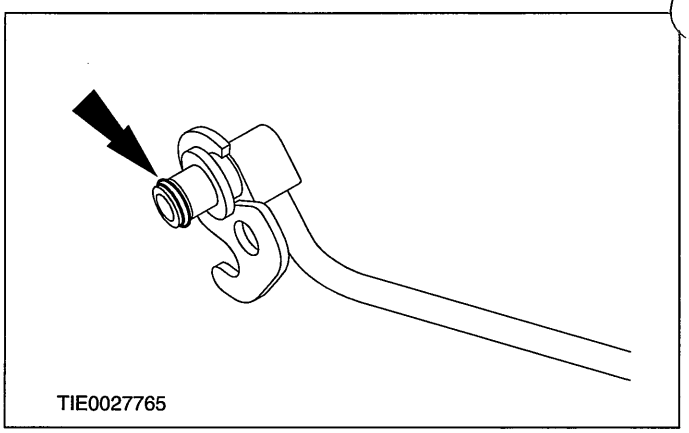


# Installation Details

**Item 5 Power steering pump to steering gear pressure line**

**1. Install new power steering lines O-ring seals.**

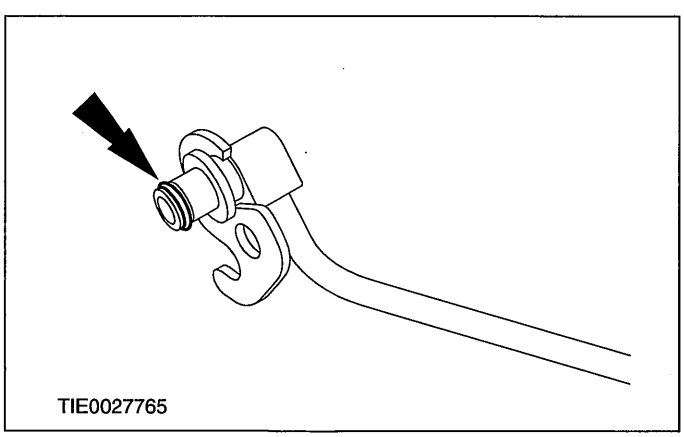


**2. Connect the power steering lines to the steering gear valve body.**

1. Rotate the power steering lines clamp plate.
2. Install the power steering lines clamp plate retaining bolt.

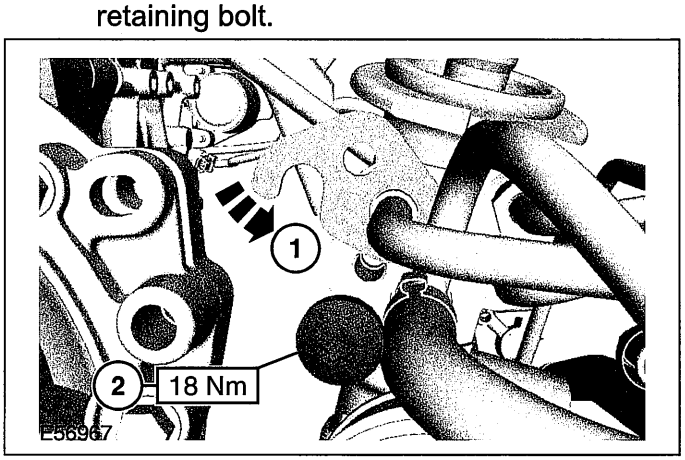


**3. Attach the steering gear to power steering fluid reservoir return line to the power steering pump to steering gear pressure line.**

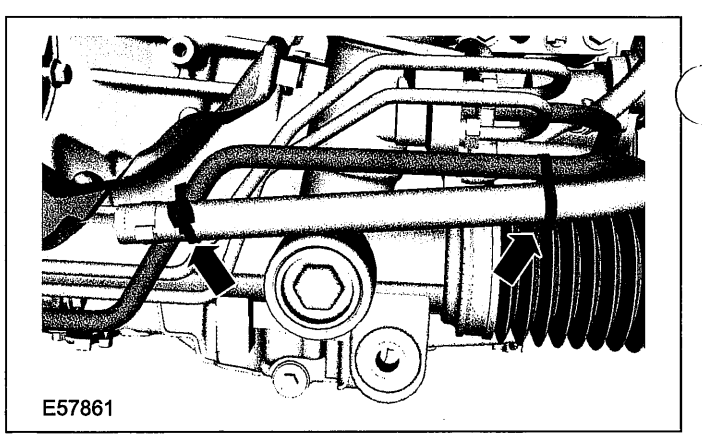


**4. NOTE:Use the front axle crossmember rear inner retaining bolts to locate the special tool.**

**NOTE:**Do not fully tighten the front axle crossmember rear inner retaining bolts at this stage.

## REMOVAL AND INSTALLATION

**Using the transmission jack, wooden block and the special tool, position and align the front axle crossmember.**

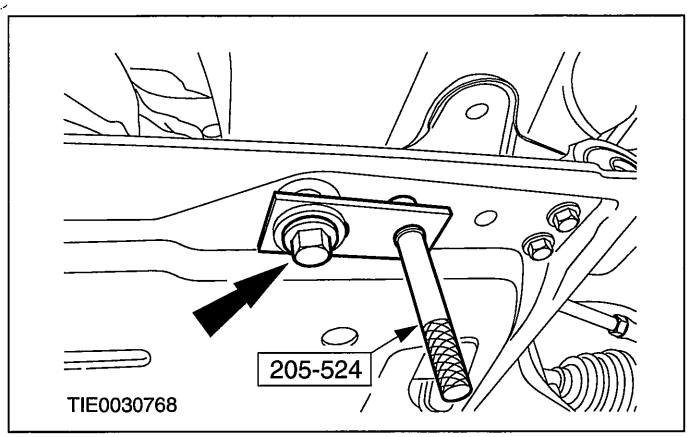


5. **⚠CAUTION:While tightening the front axle crossmember front retaining bolt and the front axle crossmember rear outer retaining bolts, make sure that the front axle crossmember does not move.**

   **Install the front axle crossmember front retaining bolt and the front axle crossmember rear outer retaining bolts on both sides.**

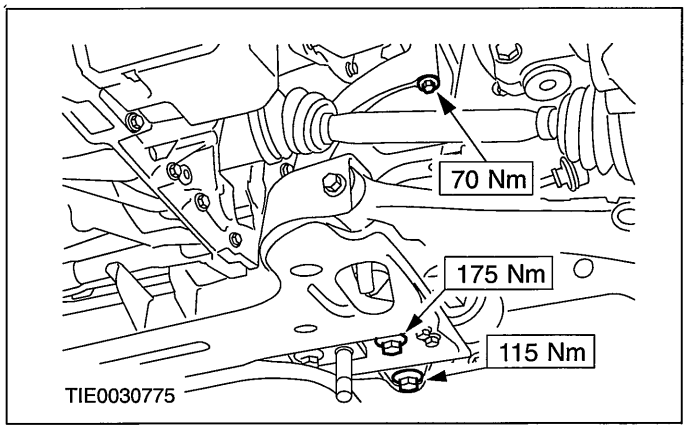


6. **Remove the front axle crossmember rear inner retaining bolts and the special tools.**

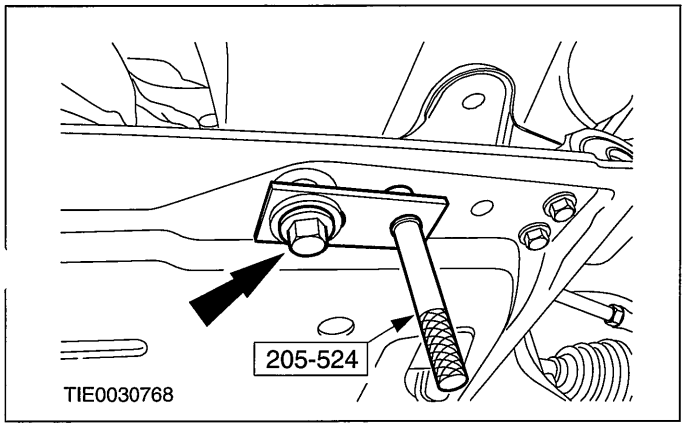


7. **Install the front axle crossmember rear inner retaining bolts on both sides.**

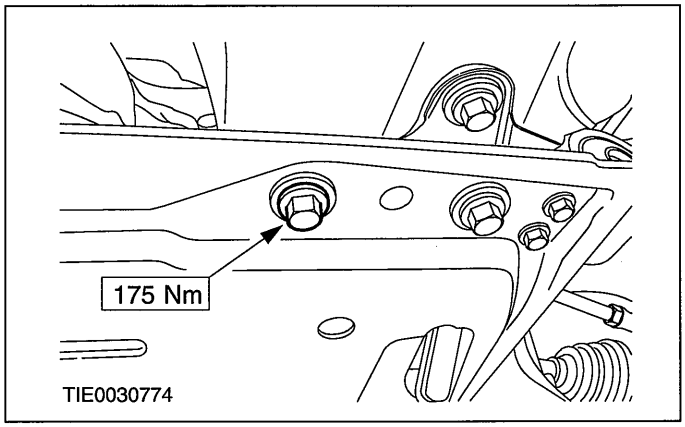


8. **Lower and remove the transmission jack and the wooden block.**
9. **Install the engine support insulator.**

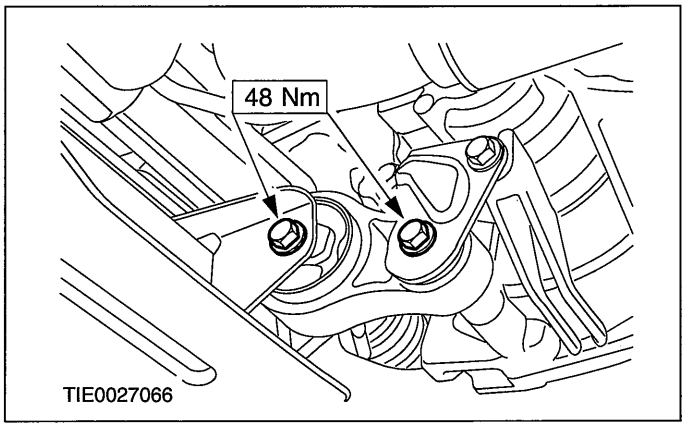


10. **NOTE:Use a 5 mm Allen key to prevent the stabilizer bar link ball joint from rotating.**

    **Attach the stabilizer bar link to the stabilizer bar on both sides.**

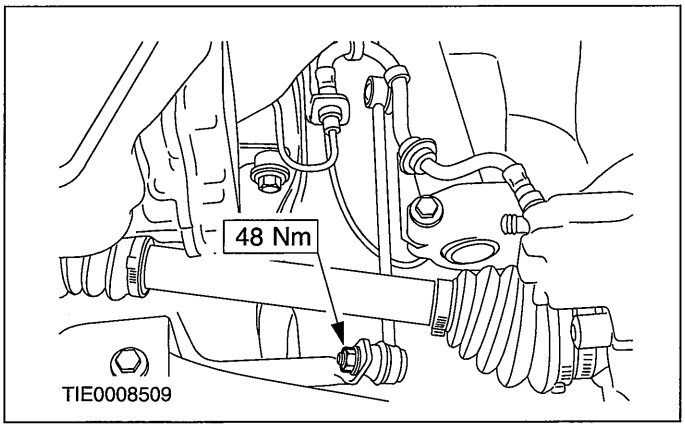


11. **⚠CAUTION:Take care when installing the exhaust hanger insulator to prevent damage.**

## REMOVAL AND INSTALLATION

**Check the exhaust hanger insulator for damage. Install a new exhaust hanger insulator if required.**

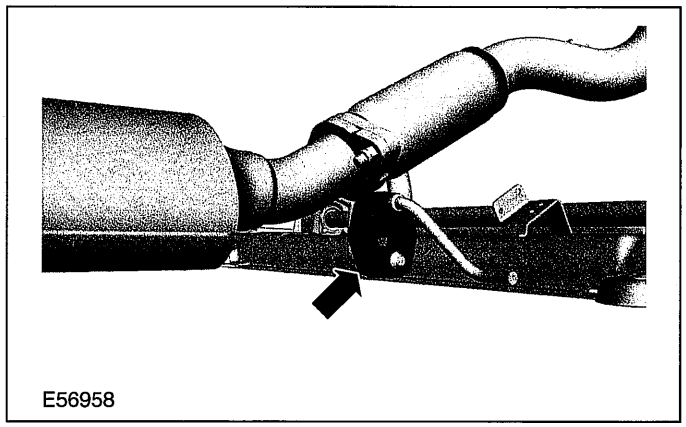


12. **⚠CAUTION:Twisting the exhaust flexible pipe more than two degrees may cause damage resulting in failure.**

**NOTE:**Use a pry-bar to prevent the exhaust flexible pipe from twisting when installing the exhaust flexible pipe to catalytic converter retaining nuts.

**NOTE:**Install a new exhaust flexible pipe to catalytic converter gasket and retaining nuts.

**Install the exhaust flexible pipe to catalytic converter retaining nuts.**

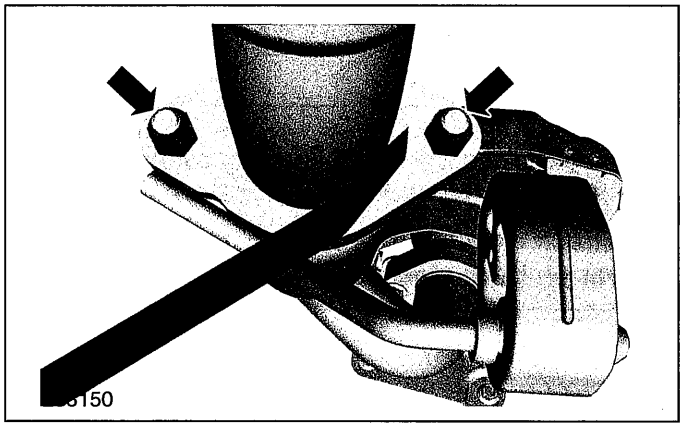


13. **⚠CAUTION:Over bending of the exhaust flexible pipe may cause damage resulting in failure.**

**Remove the exhaust flexible pipe support wrap or splint.**

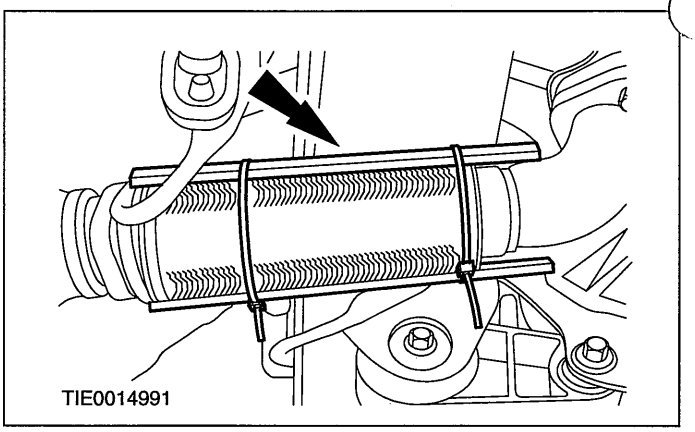


14. **Attach the power steering pump to steering gear pressure line to the steering gear.**

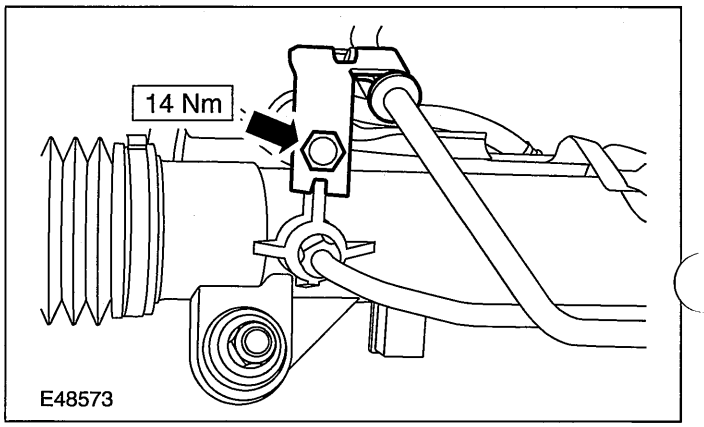


15. **Detach the steering gear heat shield from the steering gear.**

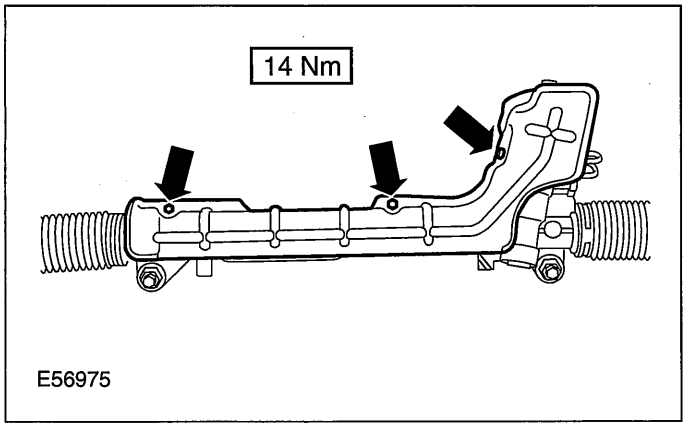

## REMOVAL AND INSTALLATION

**16. Connect the PSP switch electrical connector.**

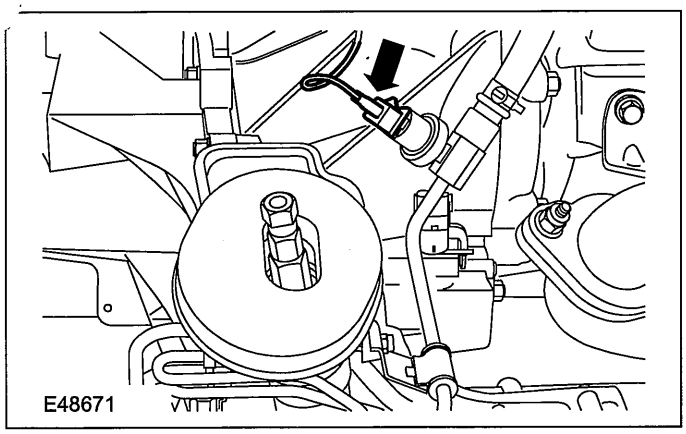


**17. Install the front wheels and tires.**

**For additional information, refer to: Wheel and Tire (204-04 Wheels and Tires, Removal and Installation).**

### Item 1 Power steering pump pulley

**1. NOTE:This step is only required if installing a new power steering pump to steering gear pressure line.**

**Push the new power steering pump to steering gear pressure line into the new power steering pump to steering gear pressure line union until it clips into place.**

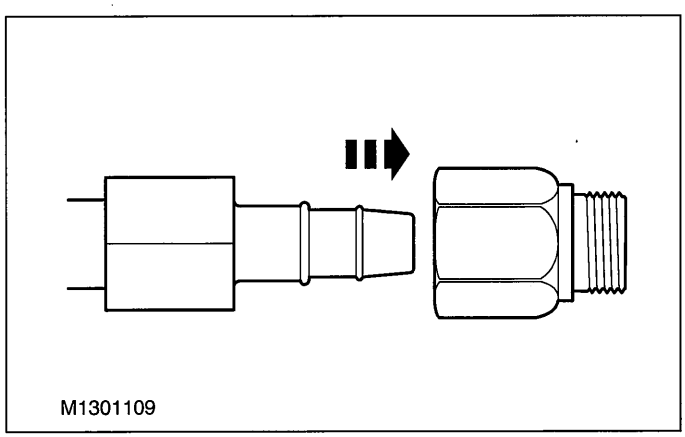


**2. ⚠CAUTION:Care must be taken to prevent dirt ingress.**

**Using the special tool, install a new O-ring seal onto the power steering pump to steering gear pressure line union.**

1. Push the O-ring seal onto the special tool.
2. Locate the special tool onto the power steering pump to steering gear pressure line union and install the O-ring seal.

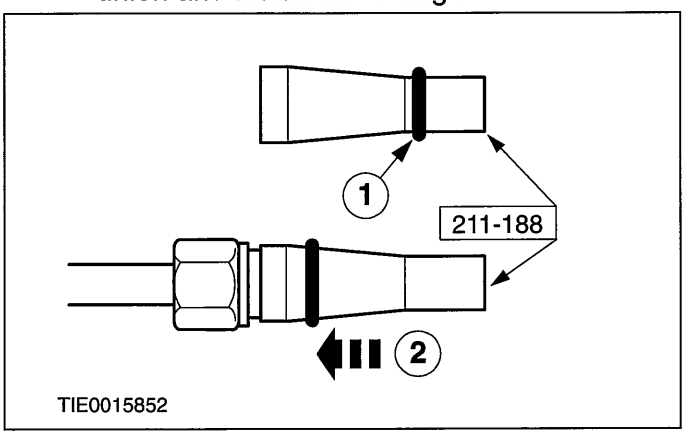


**3. Connect the power steering pump to steering gear pressure line to the power steering pump.**

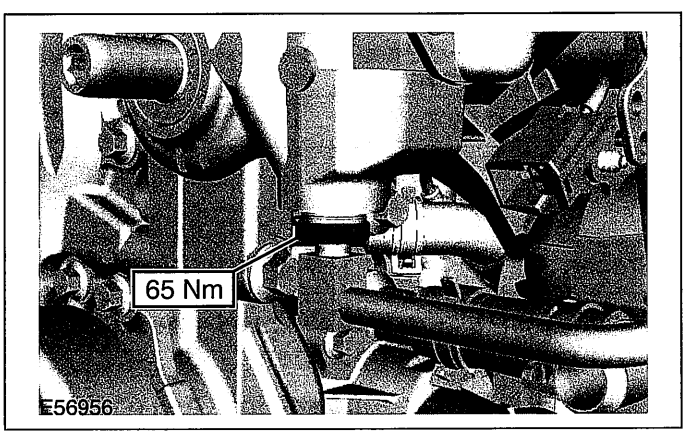


**4. Using the special tool, install the power steering pump pulley.**

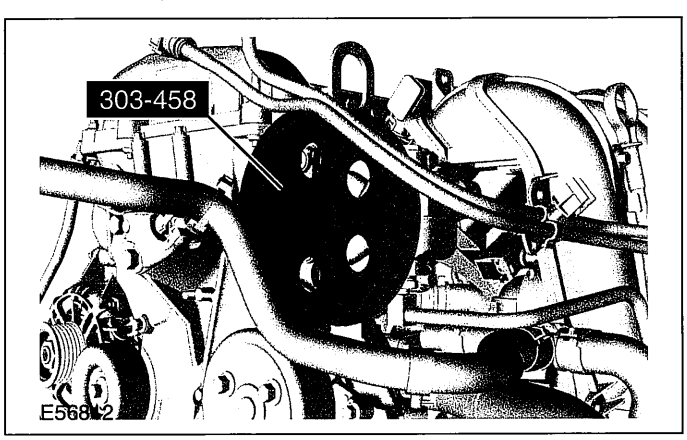

## REMOVAL AND INSTALLATION

# Steering Gear to Power Steering Fluid Reservoir Return Line — 2.0L Duratec-HE (MI4) RHD

### Special Tool(s)

| | |
|---|---|
| 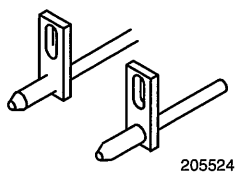 205524 | Alignment Pins, Subframe 205-524 |
| 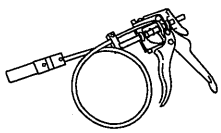 24003 | Remover/Installer, Hose Clamp 303-397 |

### General Equipment

| |
|---|
| Transmission jack |

| Materials | |
|---|---|
| **Name** | **Specification** |
| Grease | SA-M1C9107-A |

1. **NOTE:Make sure that the road wheels are in the straight ahead position.**

   **Centralize the steering and lock it in position.**

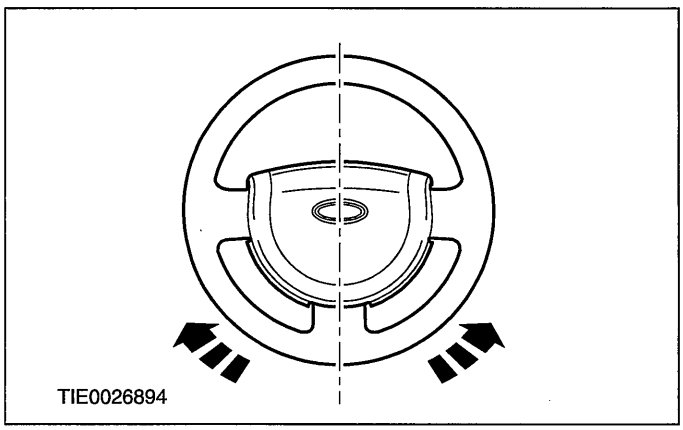


2. **Detach the steering column shaft from the steering gear pinion.**
   - Discard the steering column shaft to steering gear pinion retaining bolt.

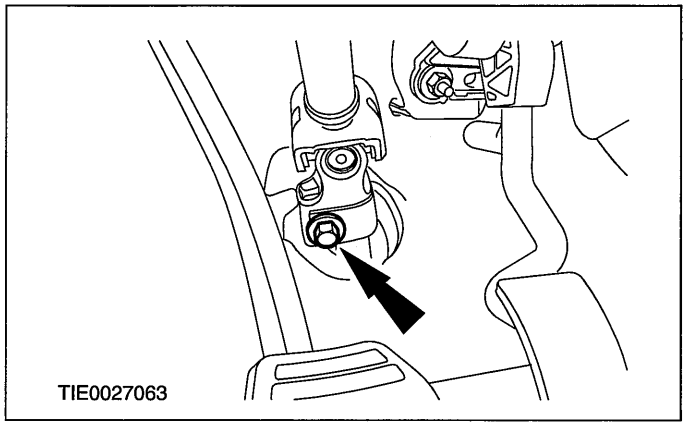


3. **Remove the front wheels and tires.**

   **For additional information, refer to: Wheel and Tire (204-04 Wheels and Tires, Removal and Installation).**
4. **Lower the vehicle.**
5. **Remove the components in the order indicated in the following illustration(s) and table(s).**

## REMOVAL AND INSTALLATION

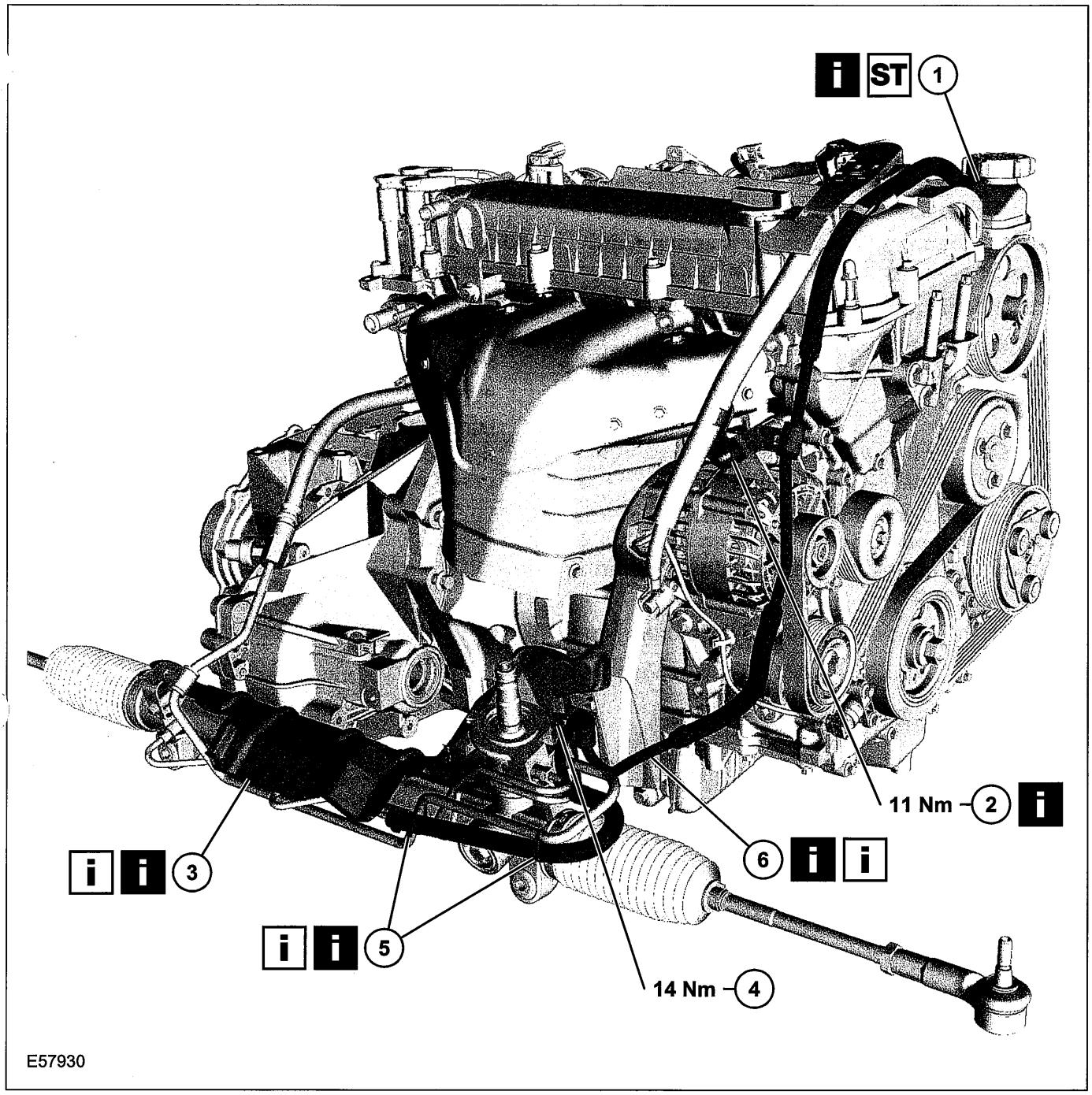


| Item | Description |
|---|---|
| 1 | Steering gear to power steering fluid reservoir return line upper retaining clip<br>See Removal Detail |
| 2 | Steering gear to power steering fluid reservoir return line support bracket to generator retaining nut<br>See Removal Detail |
| 3 | Steering gear heat shield<br>See Removal Detail<br>See Installation Detail |

| Item | Description |
|---|---|
| 4 | Steering gear to power steering fluid reservoir return line support bracket to steering gear retaining bolt |
| 5 | Cable ties<br>See Removal Detail<br>See Installation Detail |
| 6 | Steering gear to power steering fluid reservoir return line<br>See Removal Detail<br>See Installation Detail |

**6. To install, reverse the removal procedure.**

## REMOVAL AND INSTALLATION

7. **Fill and bleed the power steering system. For additional information, refer to: (211-00 Steering System - General Information)**

   **Power Steering System Filling (General Procedures),**
   **Power Steering System Bleeding (General Procedures).**

# Removal Details

**Item 1 Steering gear to power steering fluid reservoir return line upper retaining clip**

1. **CAUTIONS:**

   **⚠Cap the steering gear to power steering fluid reservoir return line to prevent fluid loss or dirt ingress.**

   **⚠Cap the power steering fluid reservoir to prevent fluid loss or dirt ingress.**

   **Using the special tool, disconnect the steering gear to power steering fluid reservoir return line from the power steering fluid reservoir.**

   - Allow the power steering fluid to drain into a container.

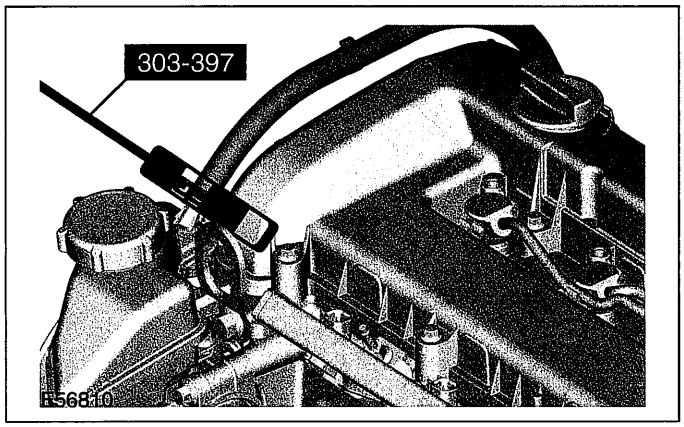


2. **Detach the steering gear to power steering fluid reservoir return line from the generator wiring harness shield.**

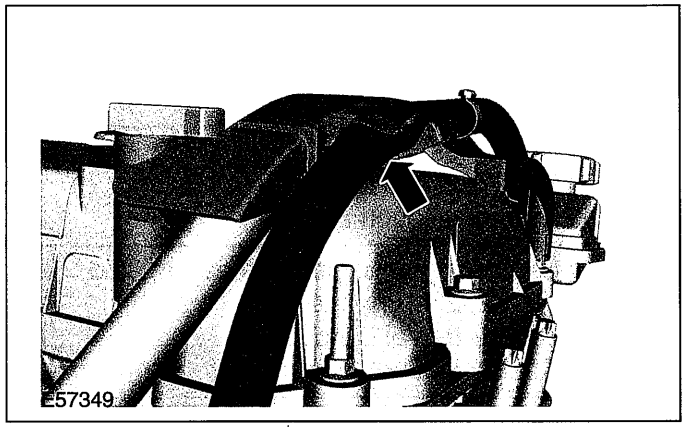


**Item 2 Steering gear to power steering fluid reservoir return line support bracket to generator retaining nut**

1. **NOTE:Note the position of the steering gear to power steering fluid reservoir return line support bracket to aid installation.**

   **Detach the generator wiring harness from the steering gear to power steering fluid reservoir return line support bracket.**

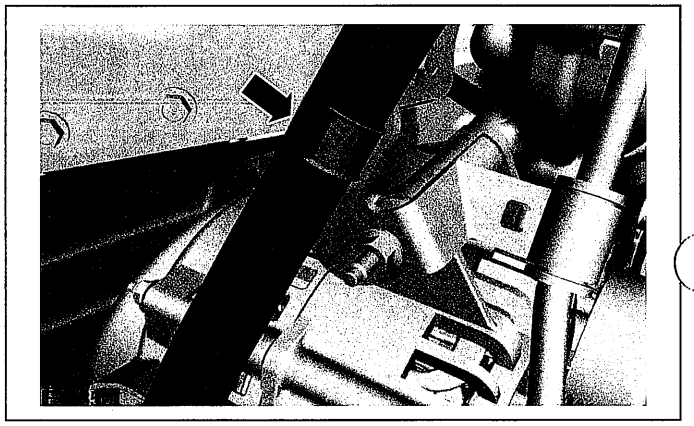

**Item 3 Steering gear heat shield**

1. **Raise and support the vehicle. For additional information, refer to: (100-02 Jacking and Lifting)**

   **Jacking (Description and Operation),**
   **Lifting (Description and Operation).**

2. **Detach the steering gear heat shield from the steering gear.**

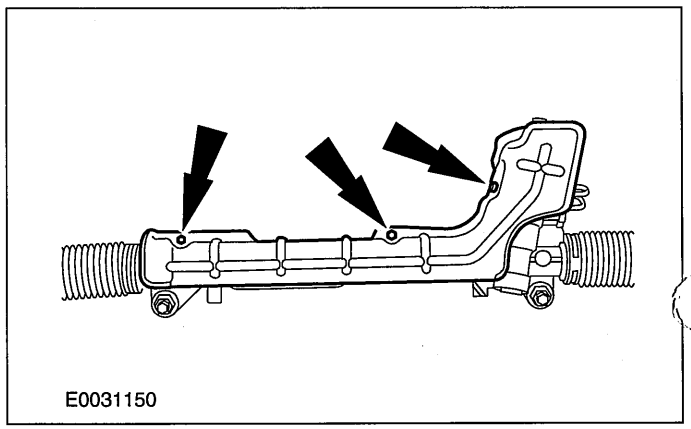

## REMOVAL AND INSTALLATION

### Item 5 Cable ties

1. **⚠CAUTION:Over bending of the exhaust flexible pipe may cause damage resulting in failure.**

   **Support the exhaust flexible pipe with a support wrap or splint.**

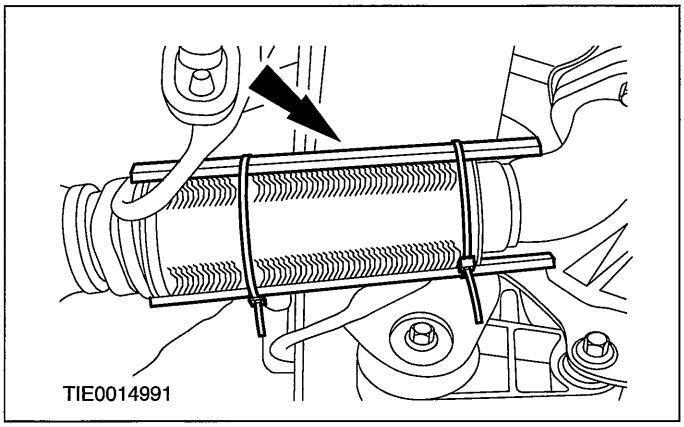


2. **⚠CAUTION:Twisting the exhaust flexible pipe more than two degrees may cause damage resulting in failure.**

**NOTE:**Use a pry-bar to prevent the exhaust flexible pipe from twisting when removing the catalytic converter to muffler and tailpipe assembly retaining nuts.

   **Remove the exhaust flexible pipe to catalytic converter retaining nuts.**

   - Discard the exhaust flexible pipe to catalytic converter gasket and retaining nuts.

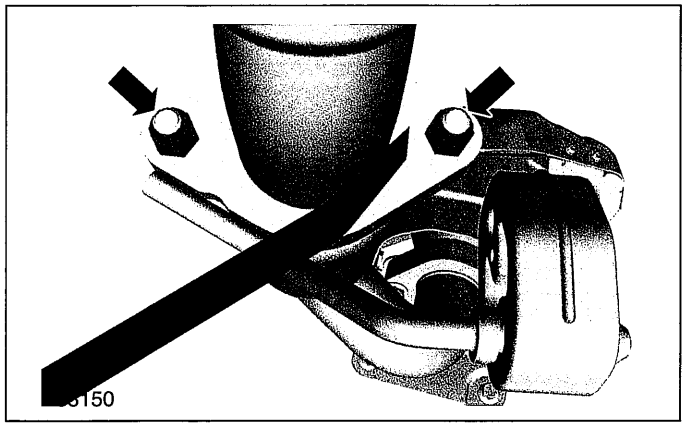


3. **⚠CAUTION:Take care when removing the exhaust hanger insulator to prevent damage.**

   **Remove the exhaust hanger insulator.**

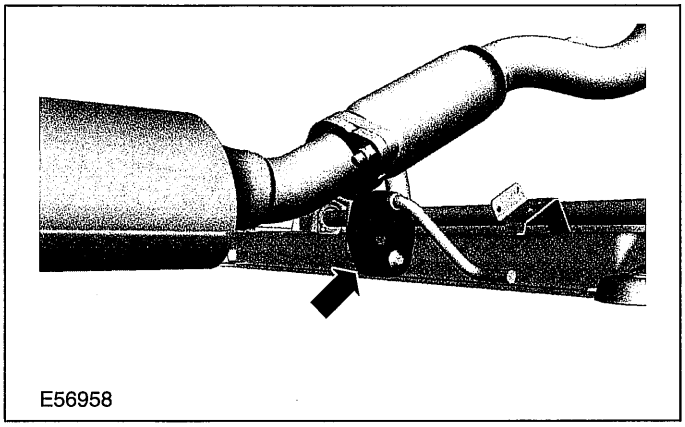


4. **NOTE:Use a 5 mm Allen key to prevent the stabilizer bar link ball joint from rotating.**

   **Detach the stabilizer bar link from the stabilizer bar on both sides.**

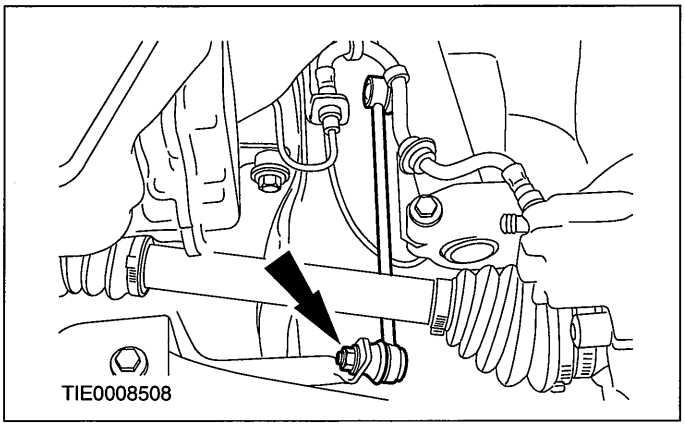


5. **Remove the engine support insulator.**

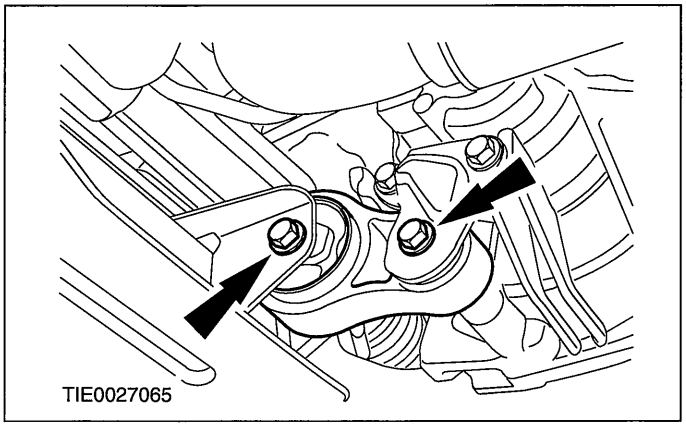


6. **Using a transmission jack and a wooden block, support the front axle crossmember.**

## REMOVAL AND INSTALLATION

**7. Remove the front axle crossmember retaining bolts on both sides.**

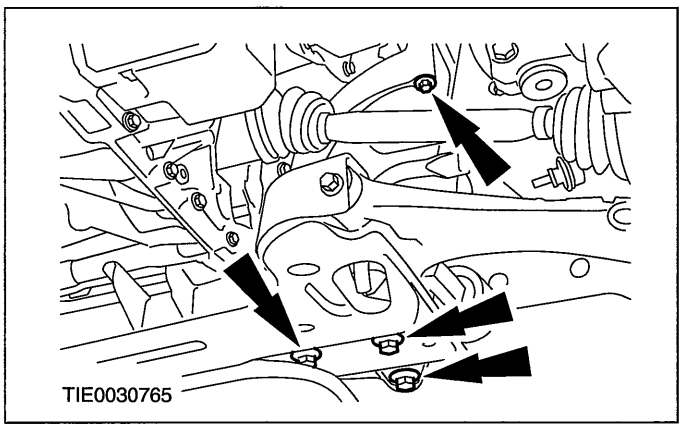


**8. Lower the front axle crossmember approximately 100 mm.**

**9. Detach the steering gear to power steering fluid reservoir return line from the power steering pump to steering gear pressure line.**

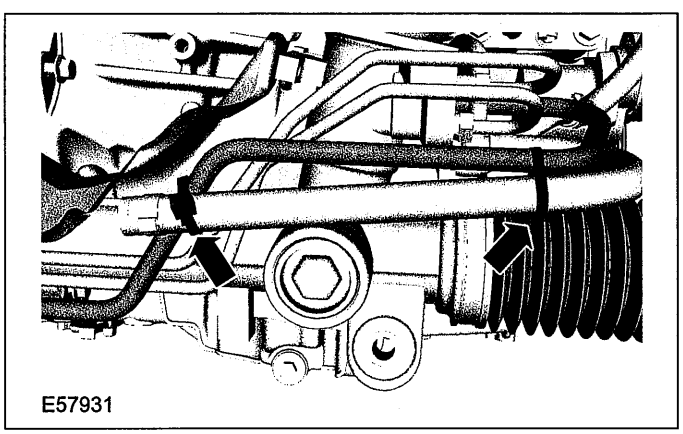


**Item 6 Steering gear to power steering fluid reservoir return line**

1. **⚠CAUTION:Cap the steering gear valve body inlet port and outlet port to prevent fluid loss or dirt ingress.**

# Installation Details

**Disconnect the power steering lines from the steering gear valve body.**

1. Remove the power steering lines clamp plate retaining bolt.
2. Rotate the power steering lines clamp plate.

- Allow the power steering fluid to drain into a container.

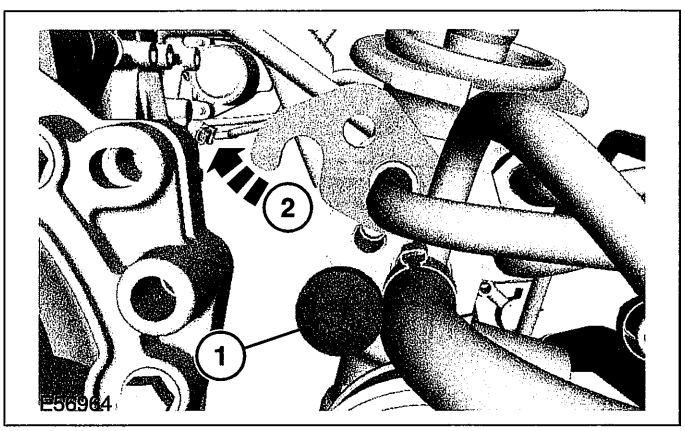


**2. Remove and discard the power steering lines O-ring seals.**

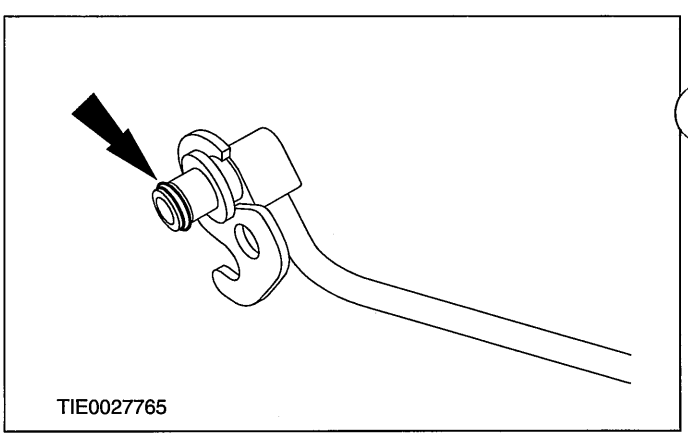

## REMOVAL AND INSTALLATION

### Item 6 Steering gear to power steering fluid reservoir return line

1. **Install new O-ring seals onto the power steering lines.**

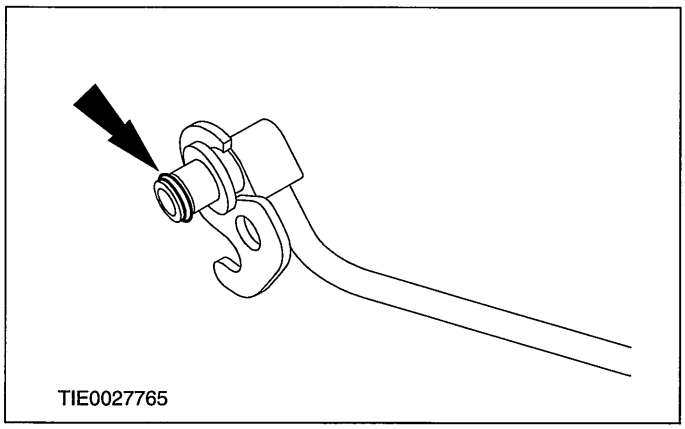


2. **Connect the power steering lines to the steering gear valve body.**
   1. Rotate the power steering lines clamp plate.
   2. Install the power steering lines clamp plate retaining bolt.

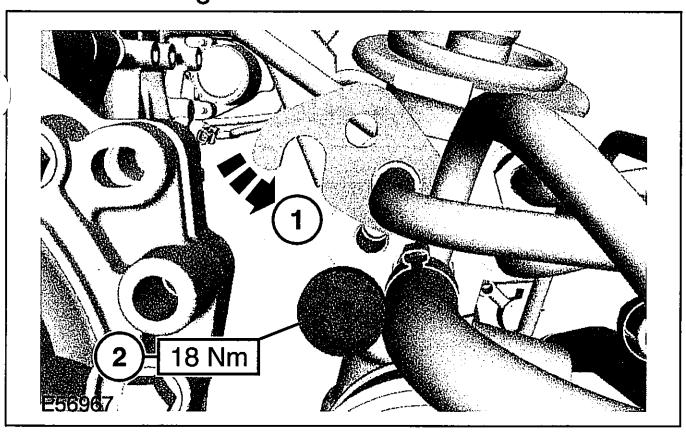


### Item 5 Cable ties

1. **Attach the steering gear to power steering fluid reservoir return line to the power steering pump to steering gear pressure line.**

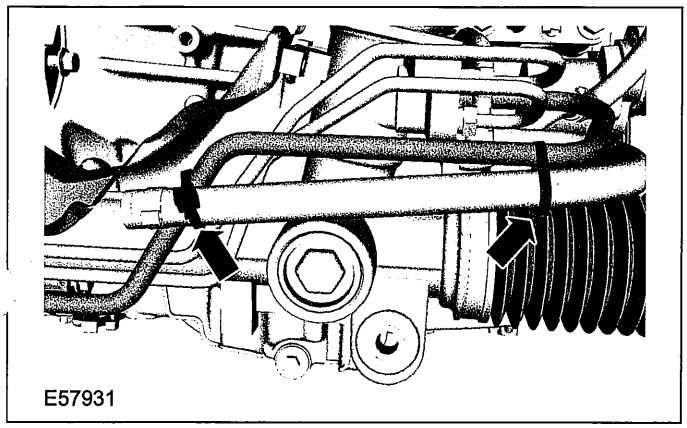


2. **NOTE:Use the front axle crossmember rear inner retaining bolts to locate the special tools.**

**NOTE:**Do not fully tighten the front axle crossmember rear inner retaining bolts at this stage.

**Using a transmission jack, wooden block and the special tools, position and align the front axle crossmember.**

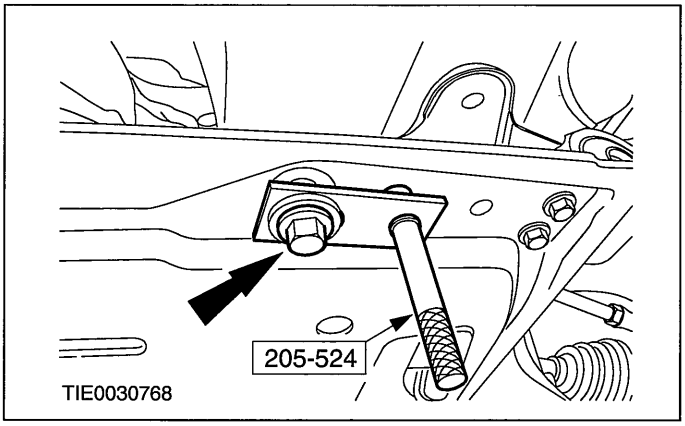


3. **⚠CAUTION:While tightening the front axle crossmember front retaining bolts and the front axle crossmember rear outer retaining bolts, make sure that the front axle crossmember does not move.**

**Install the front axle crossmember front retaining bolts and the front axle crossmember rear outer retaining bolts on both sides.**

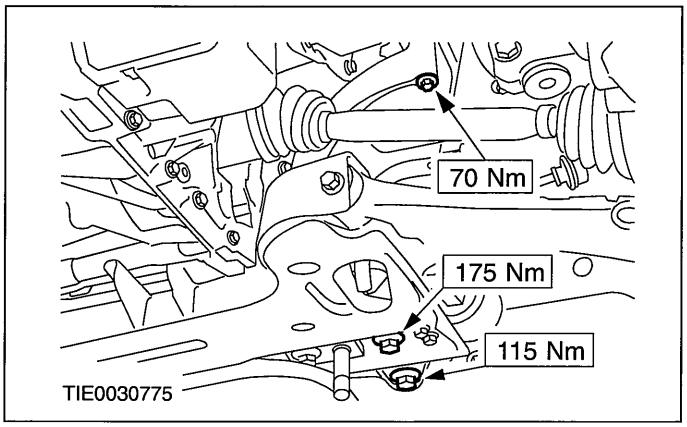

## REMOVAL AND INSTALLATION

4. **Remove the front axle crossmember rear inner retaining bolt and the special tool on both sides.**

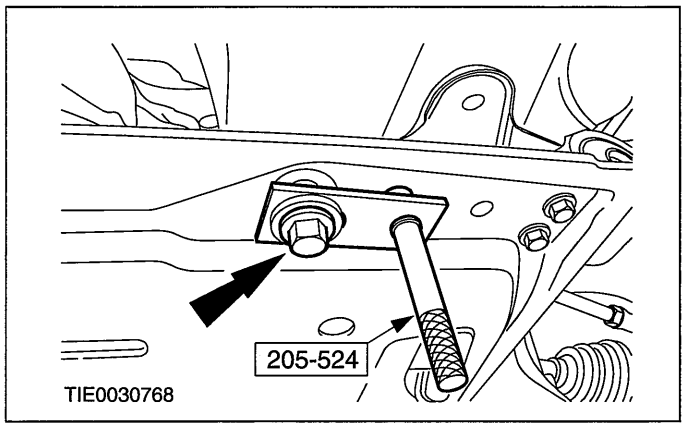


5. **Install the front axle crossmember rear inner retaining bolts on both sides.**

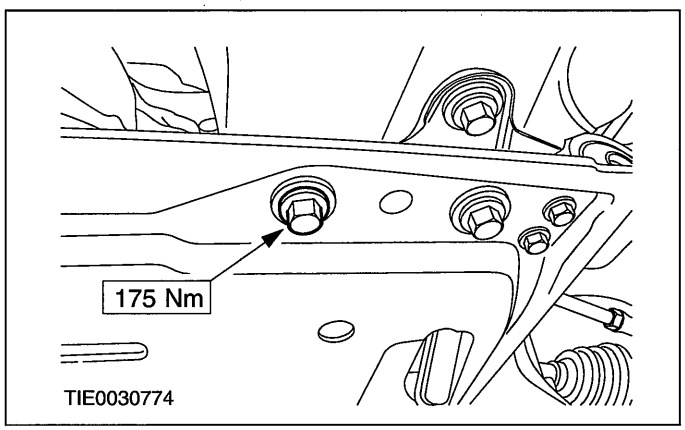


6. **Lower and remove the transmission jack and wooden block.**
7. **Install the engine support insulator.**

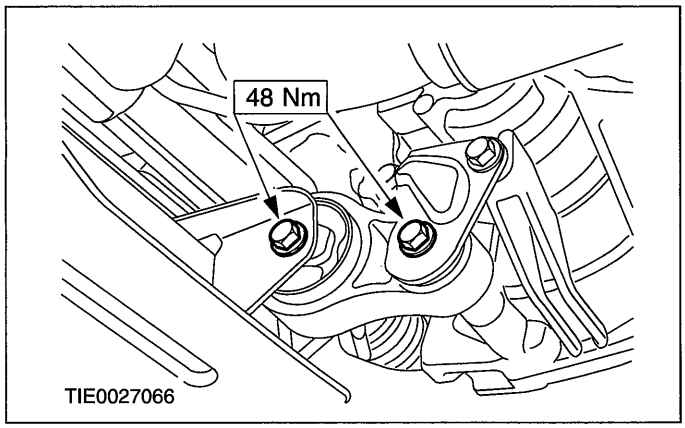


8. **NOTE:Use a 5 mm Allen key to prevent the stabilizer bar link ball joint from rotating.**

**Attach the stabilizer bar link to the stabilizer bar on both sides.**

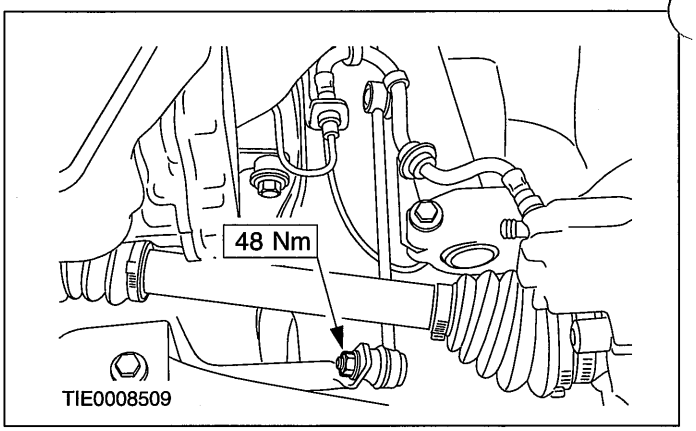


9. **⚠CAUTION:Twisting the exhaust flexible pipe more than two degrees may cause damage resulting in failure.**

**NOTE:**Use a pry-bar to prevent the exhaust flexible pipe from twisting when installing the exhaust flexible pipe to catalytic converter retaining nuts.

**NOTE:**Install a new exhaust flexible pipe to catalytic converter gasket and retaining nuts.

**Install the exhaust flexible pipe to catalytic converter retaining nuts.**

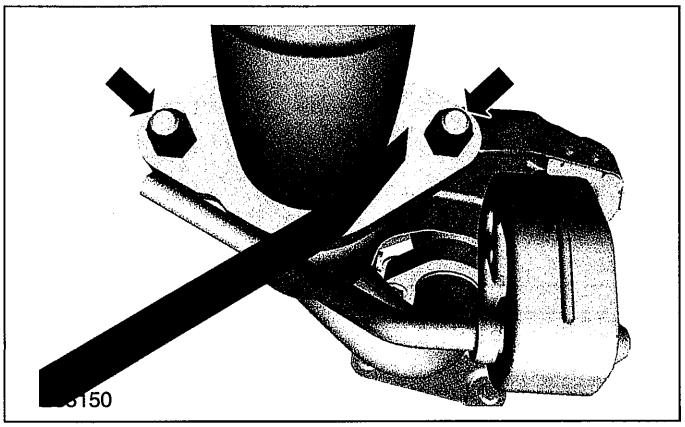

10. **⚠CAUTION:Take care when installing the exhaust hanger insulator to prevent damage.**

**NOTE:**Check the exhaust hanger insulator for damage. Install a new exhaust hanger insulator if required.

## REMOVAL AND INSTALLATION

**Install the exhaust hanger insulator.**

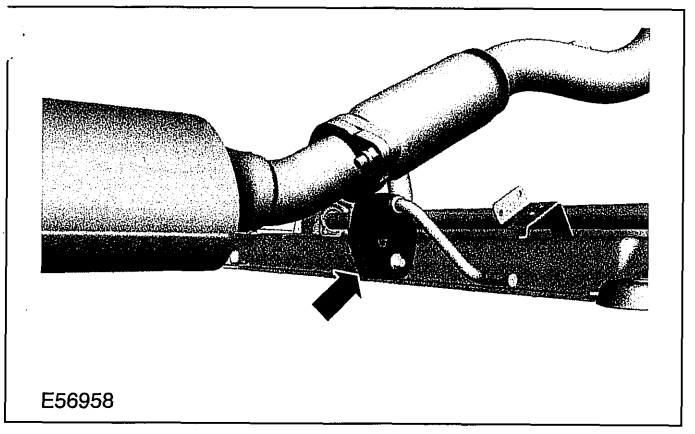


11. ⚠**CAUTION:Over bending of the exhaust flexible pipe may cause damage resulting in failure.**

**Remove the exhaust flexible pipe support wrap or splint.**

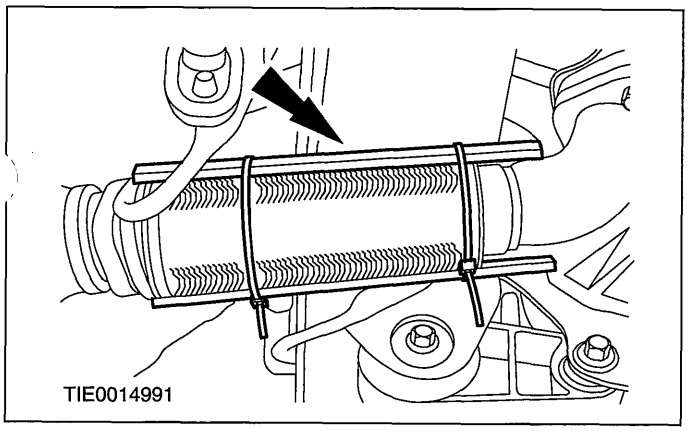


### Item 3 Steering gear heat shield

1. **Attach the steering gear heat shield to the steering gear.**

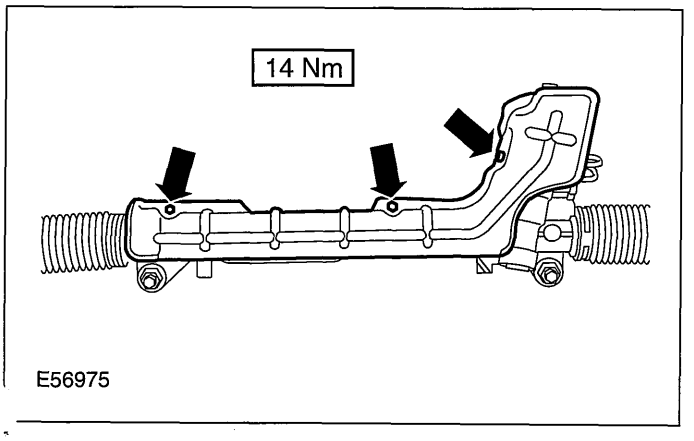

## REMOVAL AND INSTALLATION

# Steering Gear(13 116 0)

### Special Tool(s)

| | |
|---|---|
| 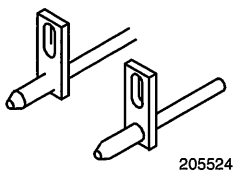 205524 | Alignment Pins, Subframe 205-524 (15-122) |
| 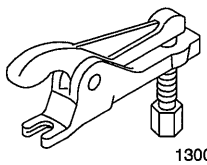 13006 | Separator, Ball Joint 211-020 (13-006) |

### General Equipment

| |
|---|
| Transmission jack |

| Materials | |
|---|---|
| **Name** | **Specification** |
| Grease | SA-M1C9107-A |

## Removal

All vehicles

1. **NOTE:Make sure that the road wheels are in the straight ahead position.**

   **Centralize the steering and lock it in position.**

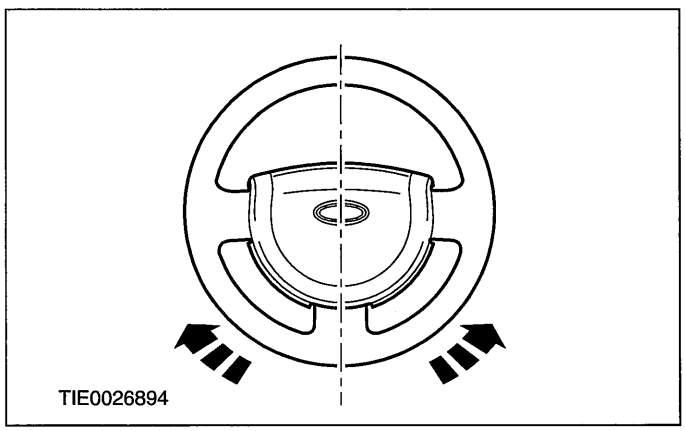


2. **Detach the steering column shaft from the steering gear pinion.**

   - Discard the retaining bolt.

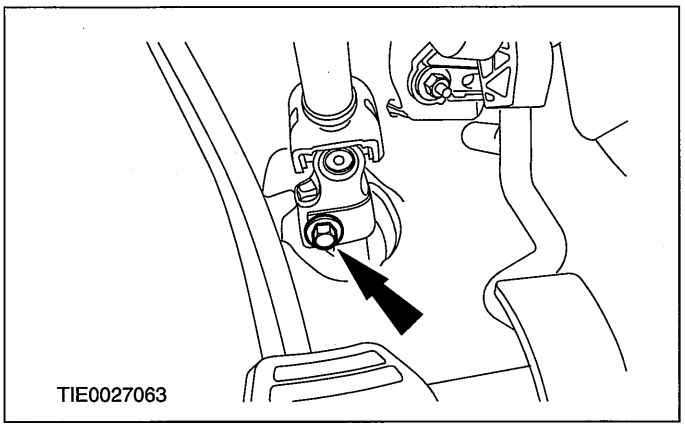


3. **Remove the wheels and tires.**

   **For additional information, refer to: Wheel and Tire (204-04 Wheels and Tires, Removal and Installation).**

4. **Disconnect the power steering fluid reservoir return hose quick release coupling.**

   1. Press the power steering fluid reservoir return hose quick release coupling locking tangs.
   2. Disconnect the power steering fluid reservoir return hose quick release coupling.

   - Allow the fluid to drain into a suitable container.

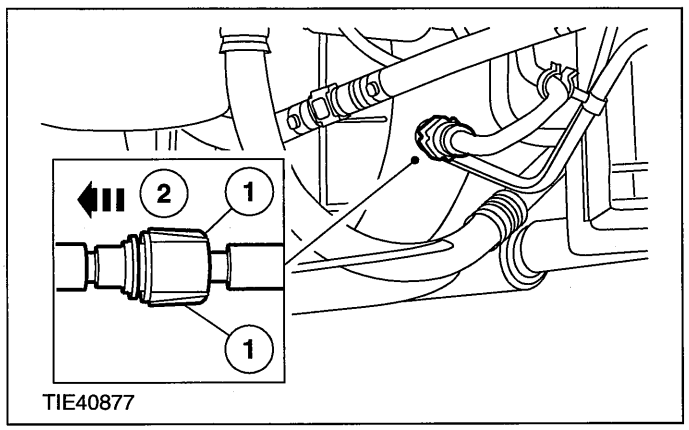


5. **⚠CAUTION:Over bending of the exhaust flexible pipe may cause damage resulting in failure.**

## REMOVAL AND INSTALLATION

**Support the exhaust flexible pipe with a support wrap or splint.**

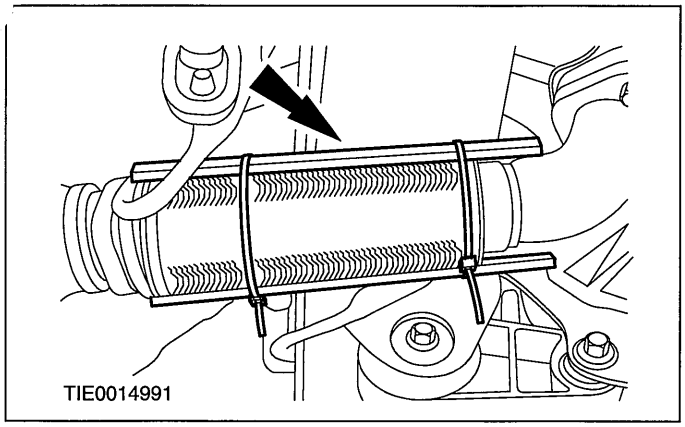


6. ⚠**CAUTION:Take care when removing the exhaust hanger insulator to prevent damage.**

**Remove the exhaust hanger insulator.**

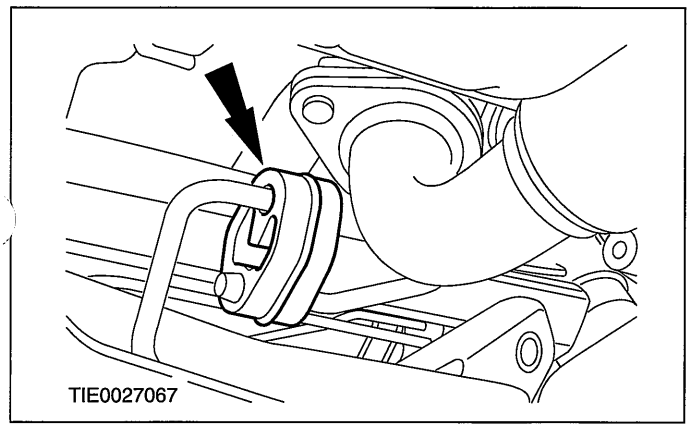


Vehicles with 1.25L, 1.4L or 1.6L engine

7. **Detach the exhaust flexible pipe from the catalytic converter.**
   - Discard the exhaust flexible pipe to catalytic converter gasket and retaining nuts.

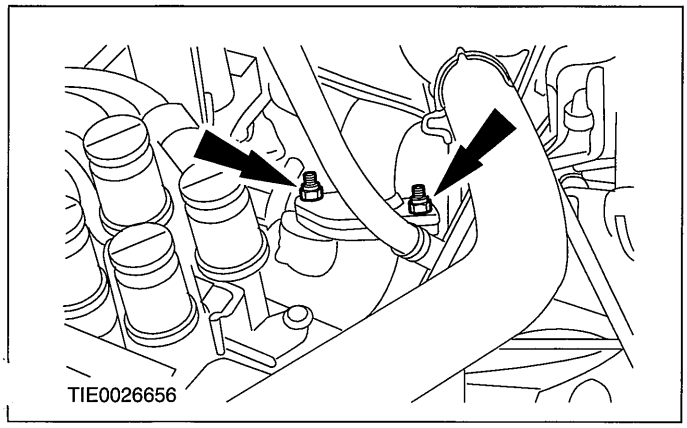


Vehicles with diesel engine

8. **Detach the exhaust flexible pipe from the muffler and tailpipe assembly.**
   - Discard the exhaust flexible pipe to muffler and tail pipe assembly retaining nuts.

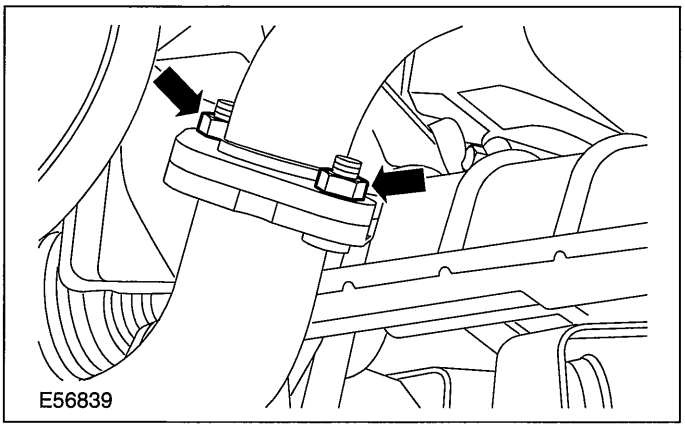


Vehicles with 2.0L engine

9. **Detach the exhaust flexible pipe from the catalytic converter.**
   - Discard the exhaust flexible pipe to catalytic converter gasket and retaining nuts.

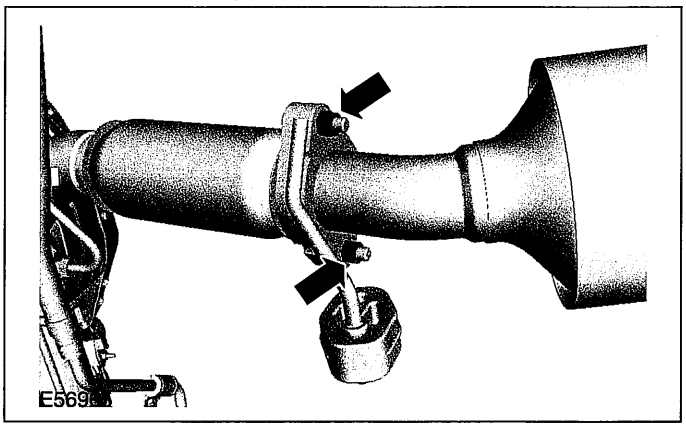

All vehicles

10. ⚠**CAUTION:Leave the tie-rod end retaining nuts in place to protect the ball joint studs.**

**NOTE:**Use a 5 mm Allen key to prevent the ball joint stud from rotating.

## REMOVAL AND INSTALLATION

**Loosen the tie-rod end retaining nut on both sides.**

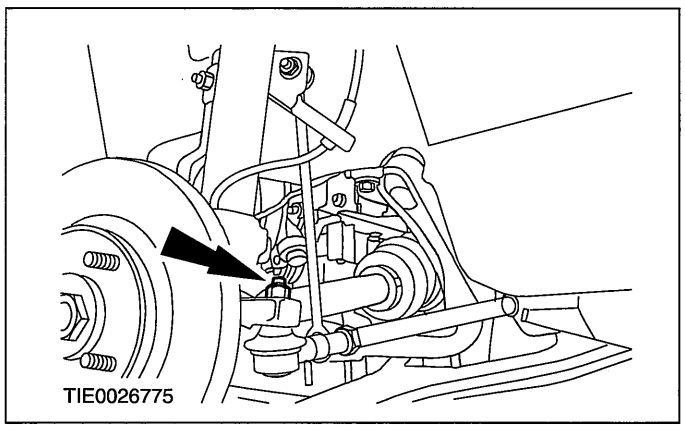


**11. ⚠CAUTION:Protect the ball joint seal using a soft cloth to prevent damage.**

**Using the special tool, detach the tie-rod end from the wheel knuckle on both sides.**

1. Release the tie-rod end.
2. Remove and discard the tie-rod end retaining nut.

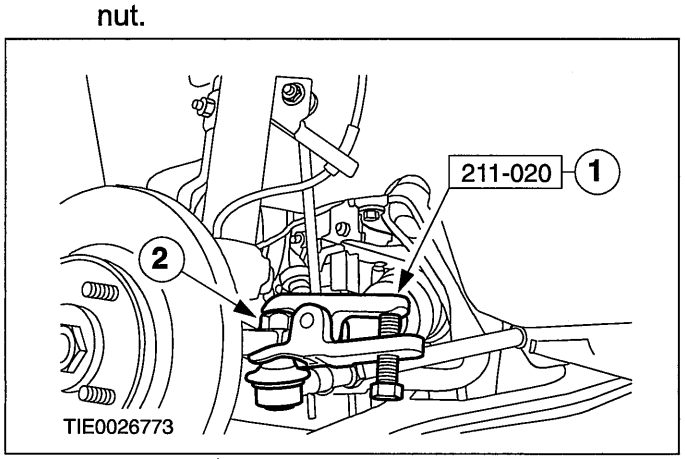


**12. NOTE:Use a 5 mm Allen key to prevent the stabilizer bar connecting link ball joint stud from rotating.**

**Detach the stabilizer bar connecting link from the stabilizer bar on both sides.**

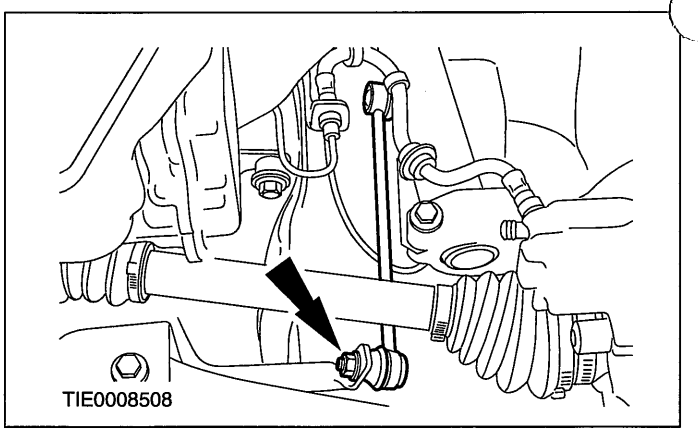


**13. Remove the engine support insulator.**

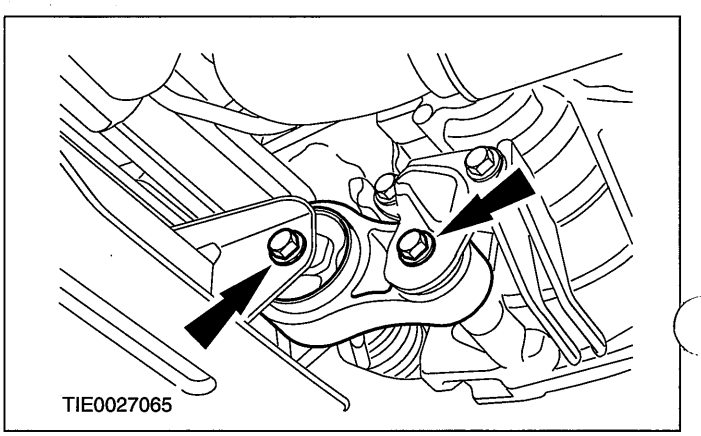


**14. Detach the power steering line from the steering gear (left-hand drive shown).**

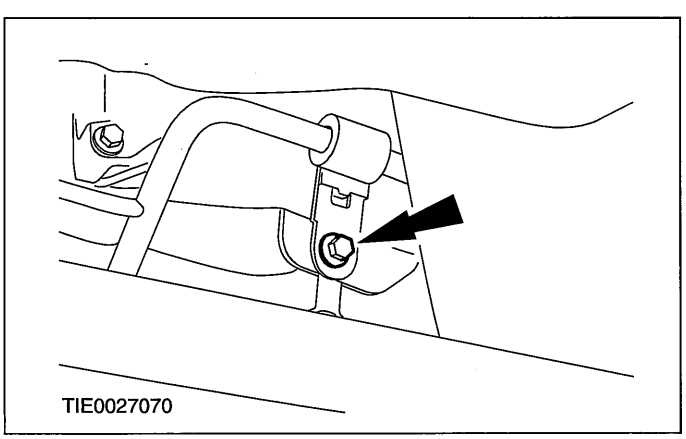

## REMOVAL AND INSTALLATION

15. **Detach the power steering lines from the steering gear (left-hand drive shown).**

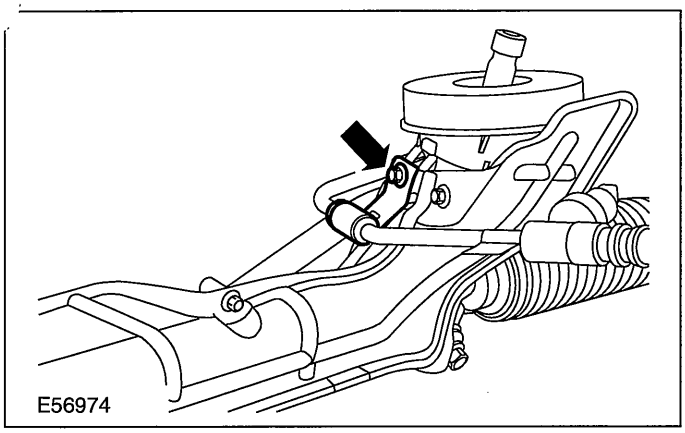


16. **Disconnect the power steering lines from the steering gear valve body.**
    1. Remove the retaining bolt.
    2. Rotate the clamp plate.
    - Allow the fluid to drain into a suitable container.
    - Discard the O-ring seals.

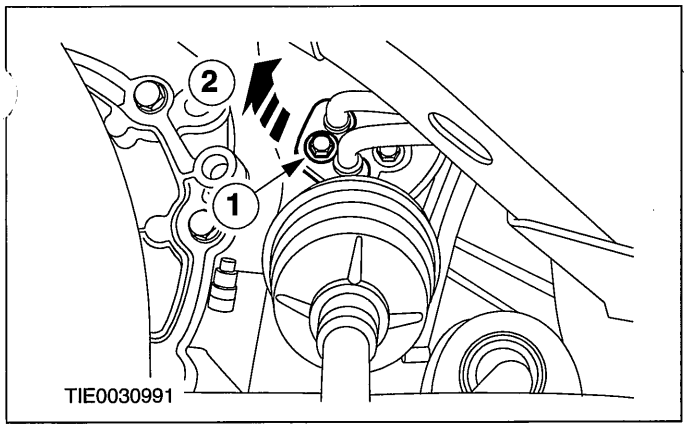


17. **Using a transmission jack and a wooden block, support the front axle crossmember.**
18. **Remove the front axle crossmember retaining bolts on both sides.**

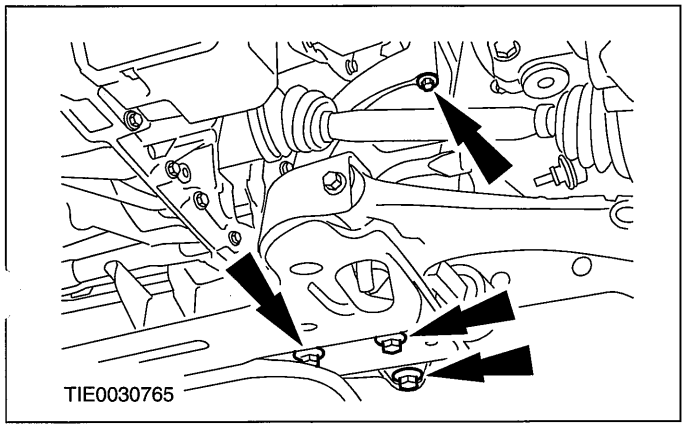


19. **Lower the front axle crossmember to gain access to the steering gear.**
20. **Remove the steering gear.**

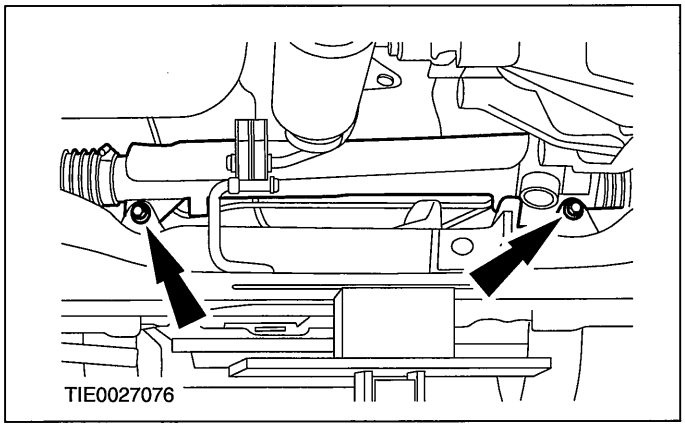


21. **Remove and discard the steering gear bulkhead floor seal.**

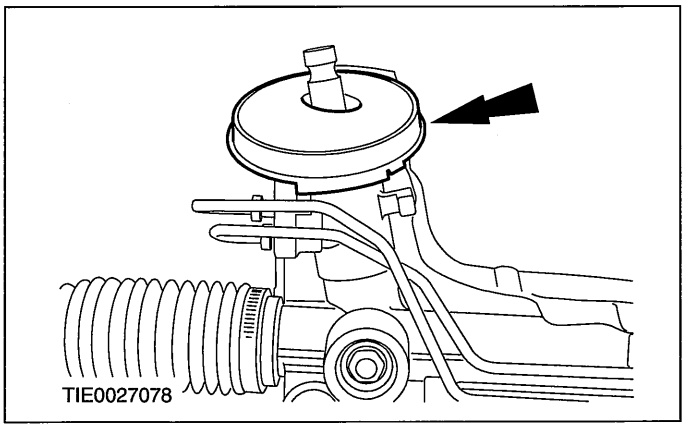


22. **Remove the exhaust heat shield.**

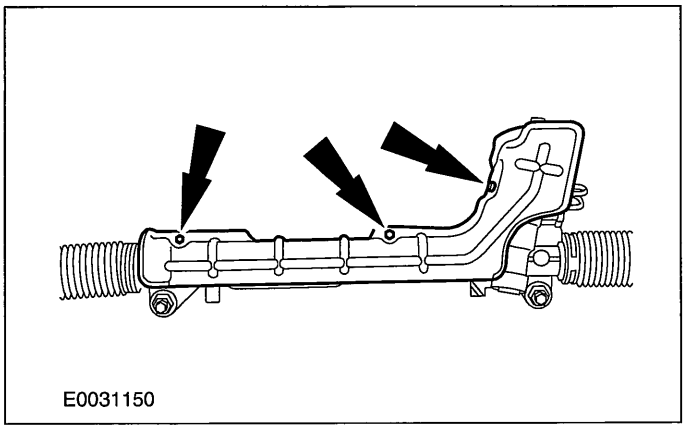

## REMOVAL AND INSTALLATION

### Installation

All vehicles

1. **Install the exhaust heat shield.**

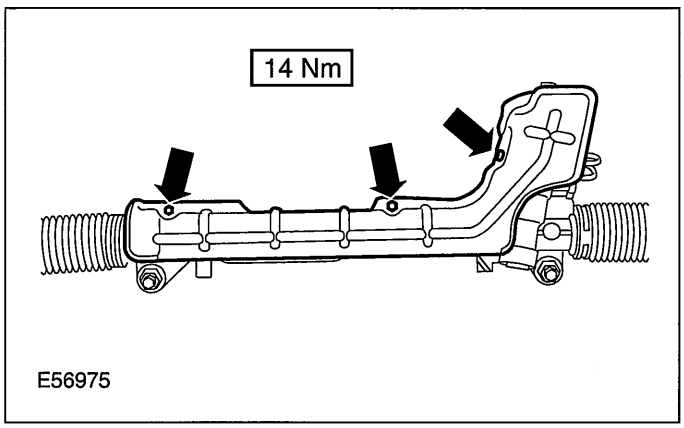


2. **Install a new steering gear bulkhead floor seal.**

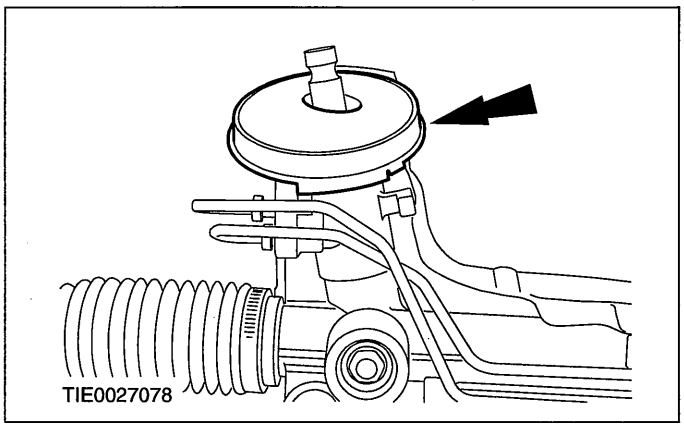


3. **Install the steering gear.**

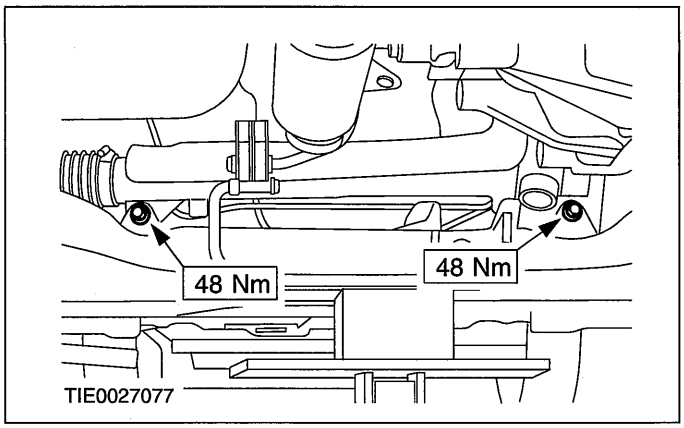


4. **NOTE:Use the front axle crossmember inner retaining bolts to locate the special tools.**

**Using a transmission jack, wooden block and the special tools, position and align the front axle crossmember.**

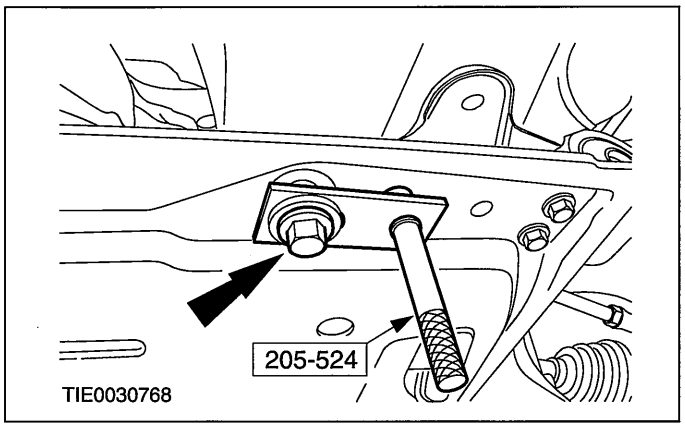


5. **⚠CAUTION:While tightening the front axle crossmember retaining bolts, make sure that the crossmember does not move.**

   **Install the front axle crossmember retaining bolts on both sides.**

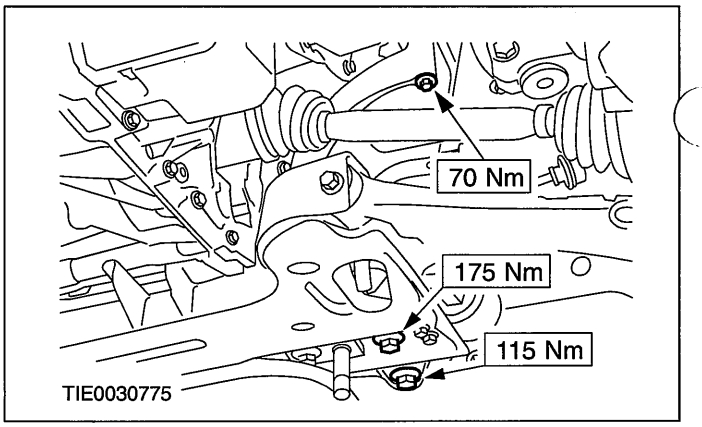


6. **Remove the special tools.**
7. **Install the front axle crossmember inner retaining bolts on both sides.**

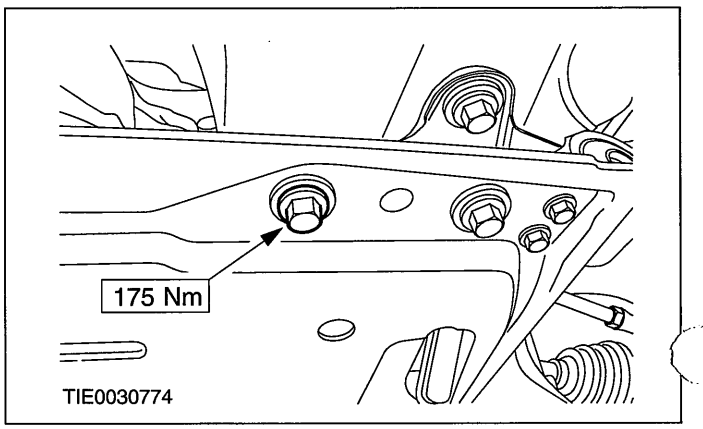

## REMOVAL AND INSTALLATION

8. **Remove the transmission jack and wooden block.**
9. **NOTE:Install new O-ring seals.**

   **Connect the power steering lines to the steering gear valve body.**

   1. Rotate the clamp plate.
   2. Install the retaining bolt.

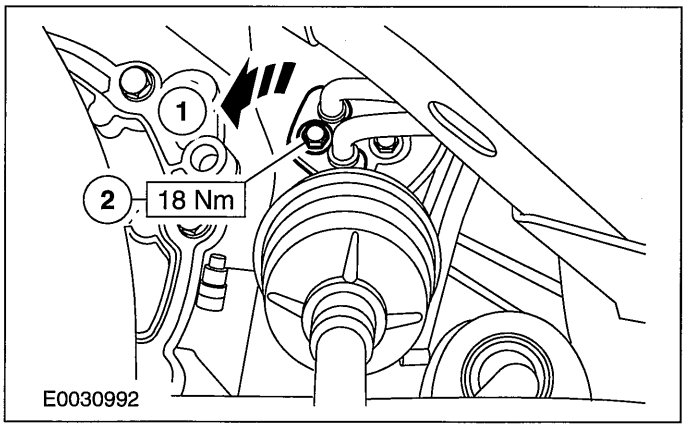


10. **Attach the power steering lines to the steering gear (left-hand drive shown).**

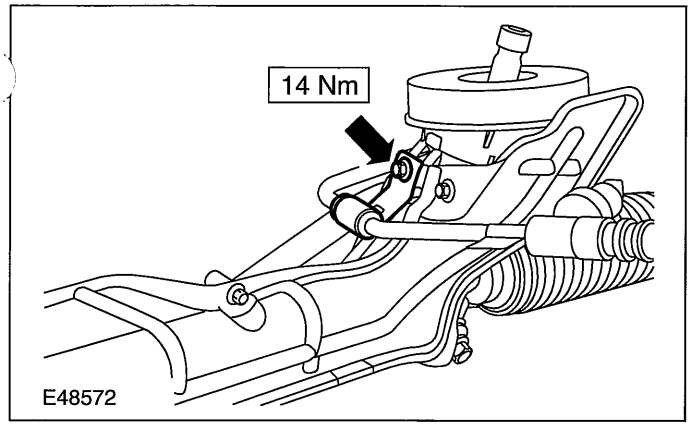


11. **Attach the power steering line to the steering gear (left-hand drive shown).**

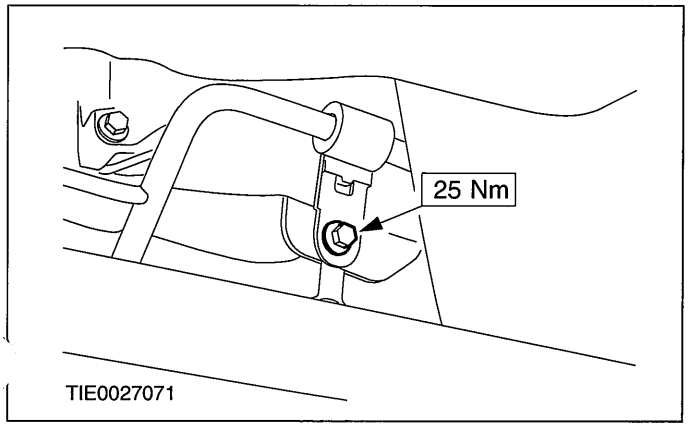


12. **Install the engine support insulator.**

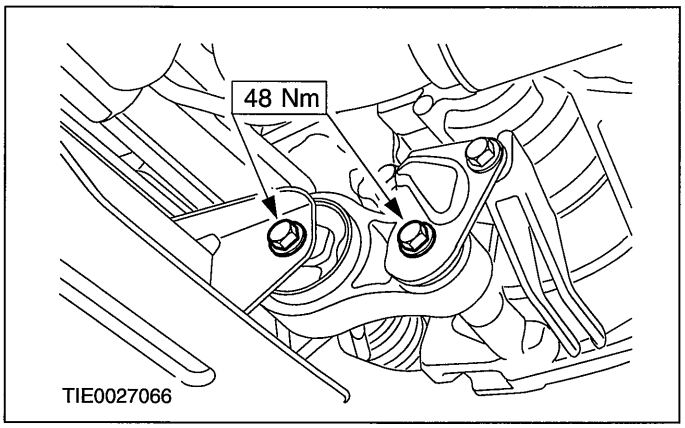


Vehicles with 2.0L engine

13. **NOTE:Coat the exhaust flexible pipe studs with grease.**

**NOTE:**Install a new exhaust flexible pipe to catalytic converter gasket and retaining nuts.

**Attach the exhaust flexible pipe to the catalytic converter.**

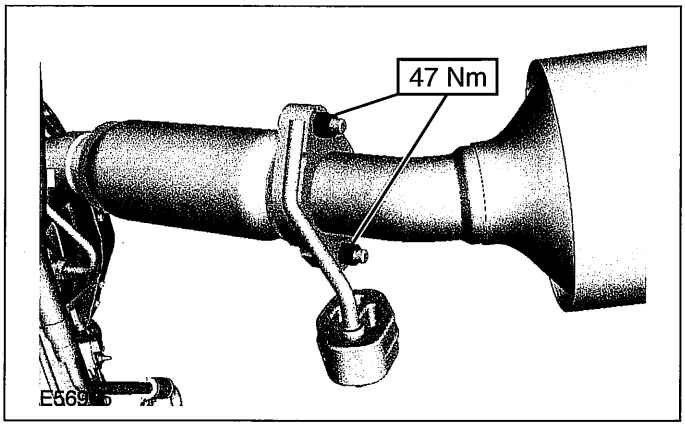


Vehicles with diesel engine

14. **NOTE:Coat the exhaust flexible pipe studs with grease.**

**NOTE:**Install new exhaust flexible pipe to muffler and tailpipe assembly retaining nuts.

## REMOVAL AND INSTALLATION

**Attach the exhaust flexible pipe to the muffler and tailpipe assembly.**

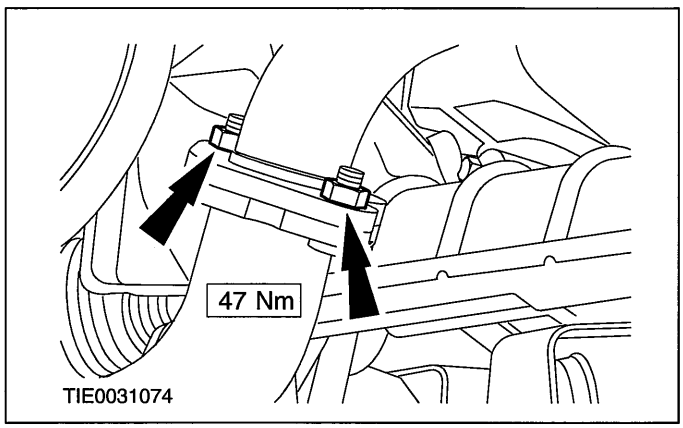


Vehicles with 1.25L, 1.4L or 1.6L engine

15. **NOTE:Coat the exhaust flexible pipe studs with grease.**

**NOTE:**Install a new exhaust flexible pipe to catalytic converter gasket and retaining nuts.

**Attach the exhaust flexible pipe to the catalytic converter.**

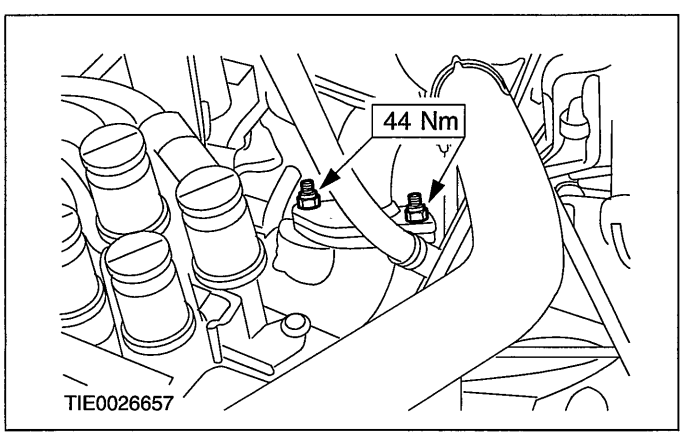


All vehicles

16. **⚠CAUTION:Take care when installing the exhaust hanger insulator to prevent damage.**

**Check the exhaust hanger insulator for damage. Install a new exhaust hanger insulator if required..**

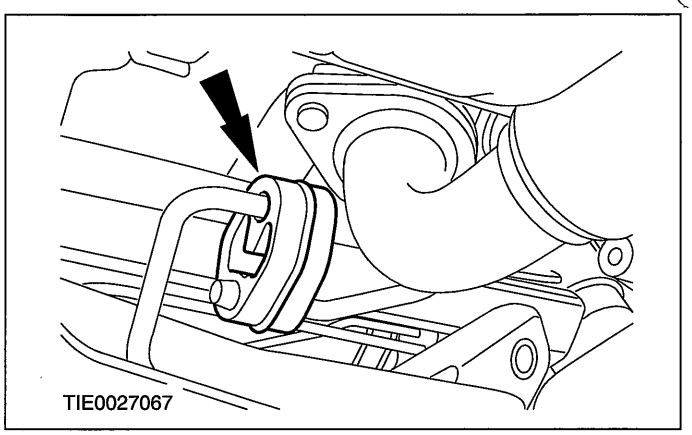


17. **⚠CAUTION:Over bending of the exhaust flexible pipe may cause damage resulting in failure.**

**Remove the exhaust flexible pipe support wrap or splint.**

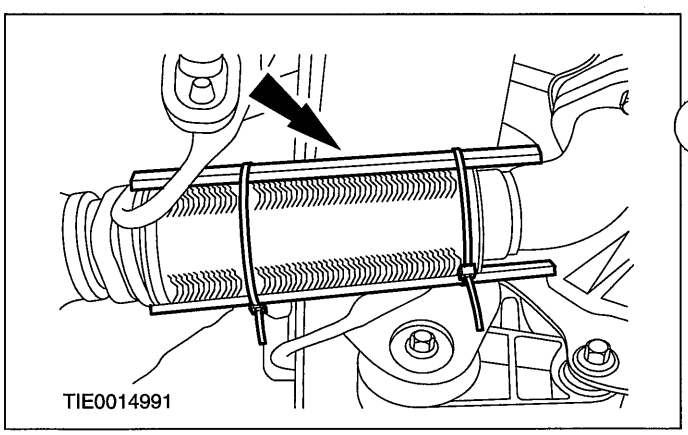


18. **▲WARNING:Install new tie-rod end retaining nuts. Failure to follow this instruction may result in personal injury.**

**NOTE:**Use a 5 mm Allen key to prevent the tie-rod end ball joint stud from rotating.

## REMOVAL AND INSTALLATION

Attach the tie-rod end to the wheel knuckle on both sides.

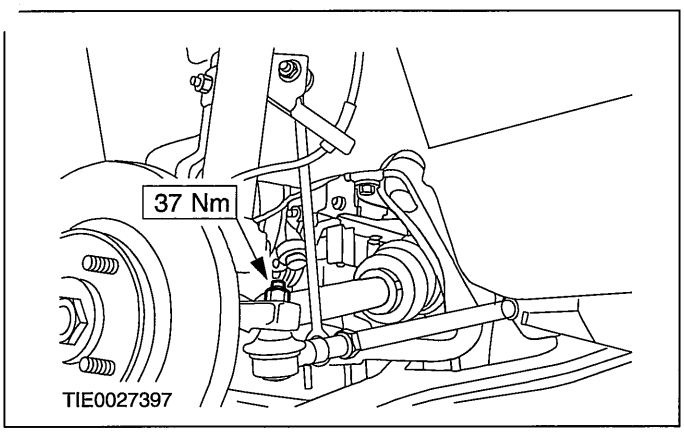


19. NOTE:Use a 5mm Allen key to prevent the stabilizer bar connecting link ball joint stud from rotating.

    Attach the stabilizer bar connecting link to the stabilizer bar on both sides.

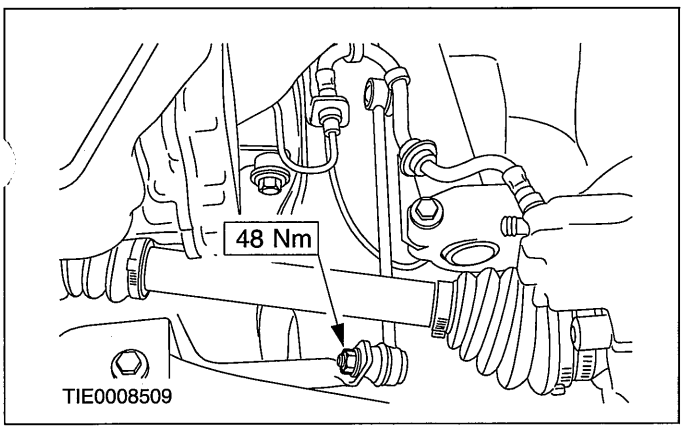


20. NOTE:Make sure that the collar on the hose is inserted fully into the quick release coupling.

    Connect the power steering fluid reservoir return hose quick release coupling.

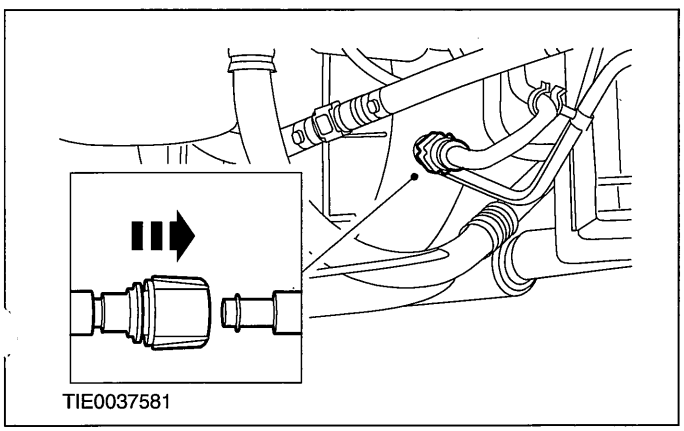


21. Install the wheels and tires.

    For additional information, refer to: Wheel and Tire (204-04 Wheels and Tires, Removal and Installation).

22. ▲WARNING:Install a new steering column to steering gear pinion retaining bolt. Failure to follow this instruction may result in personal injury.

    Attach the steering column shaft to the steering gear pinion.

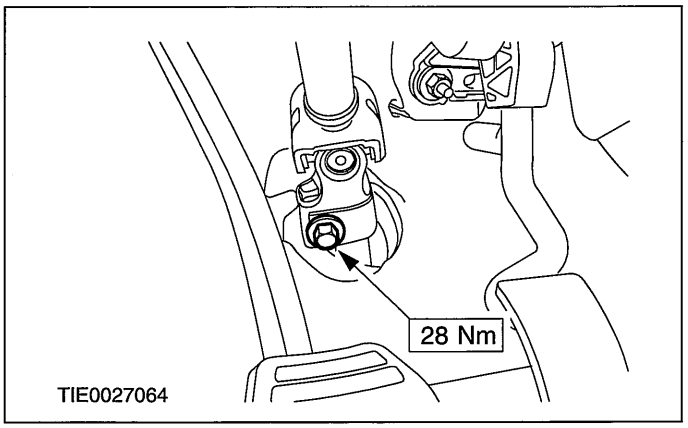


23. Fill and bleed the power steering system. For additional information, refer to: (211-00 Steering System - General Information)

    Power Steering System Filling (General Procedures),
    Power Steering System Filling - 1.6L Duratorq-TDCi (DV) Diesel (General Procedures),
    Power Steering System Bleeding (General Procedures),
    Power Steering System Bleeding - 1.6L Duratorq-TDCi (DV) Diesel (General Procedures).

24. Check the toe setting and adjust as necessary. For additional information, refer to: (204-00 Suspension System - General Information)

    Specifications (Specifications),
    Front Toe Adjustment (General Procedures).

## REMOVAL AND INSTALLATION

# Steering Gear to Fluid Cooler Return Hose(13 439 0)

### Removal

All vehicles

1. **Remove the front right-hand wheel and tire.**

   **For additional information, refer to: Wheel and Tire (204-04 Wheels and Tires, Removal and Installation).**

2. **Disconnect the steering gear to power steering fluid cooler return hose quick release coupling, from either the power steering fluid cooler or the power steering reservoir return hose.**

   1. Press the power steering fluid cooler hose quick release coupling locking tangs.
   2. Disconnect the power steering fluid cooler hose quick release coupling.
   - Allow the fluid to drain into a suitable container.

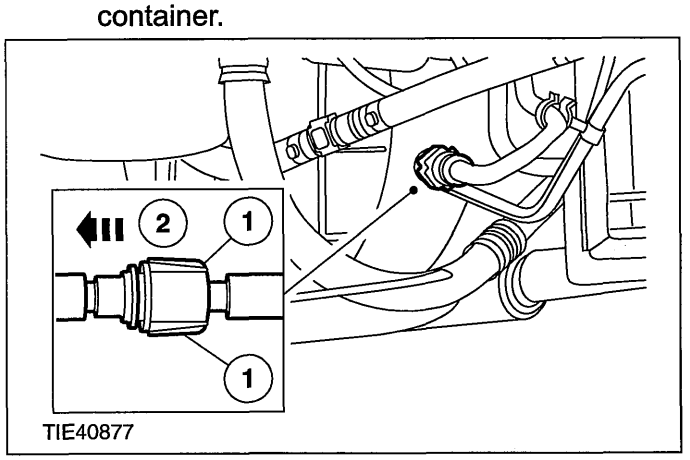

TIE40877

3. **NOTE:Note the position of the steering gear to power steering fluid cooler return hose to aid installation.**

   **Detach the steering gear to power steering fluid cooler return hose clips from the crankshaft pulley splash shield.**

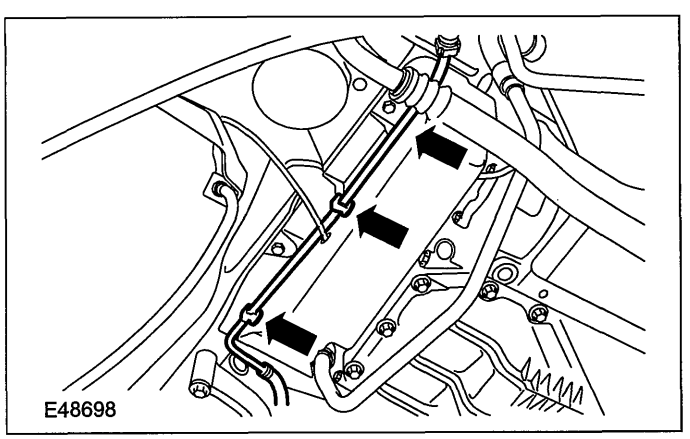
E48698

Left-hand drive vehicles

4. **NOTE:Note the position of the steering gear to power steering fluid cooler return hose to aid installation.**

   **Detach the steering gear to power steering fluid cooler return hose bracket from the steering gear.**

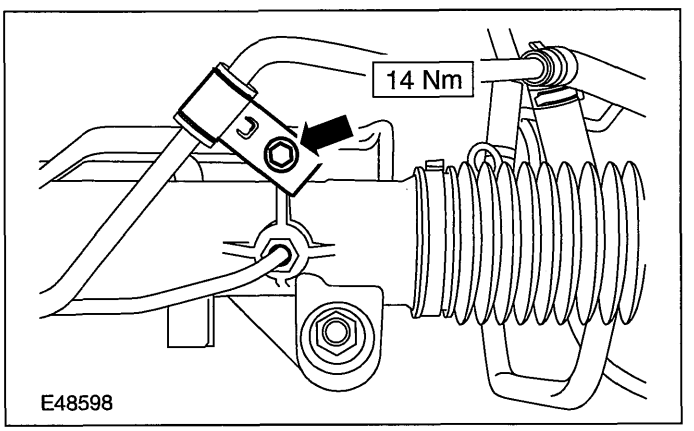

E48598

5. **Detach the steering gear to power steering fluid cooler return hose clips from the steering gear.**

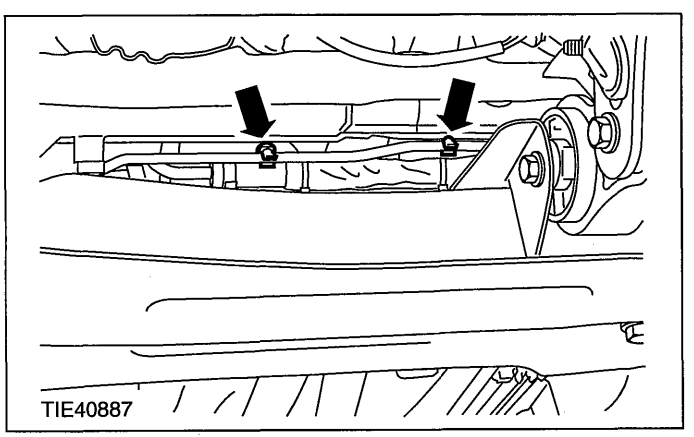
TIE40887

## REMOVAL AND INSTALLATION

6. **Detach the steering gear to power steering fluid cooler return hose from the power steering line.**

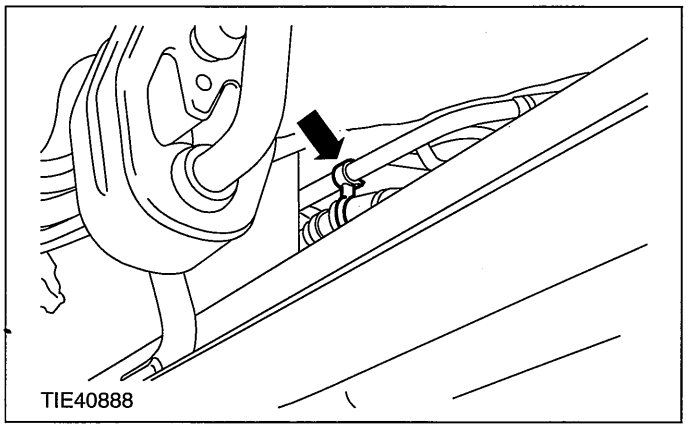


Right-hand drive vehicles

7. **Remove the steering gear heat shield.**

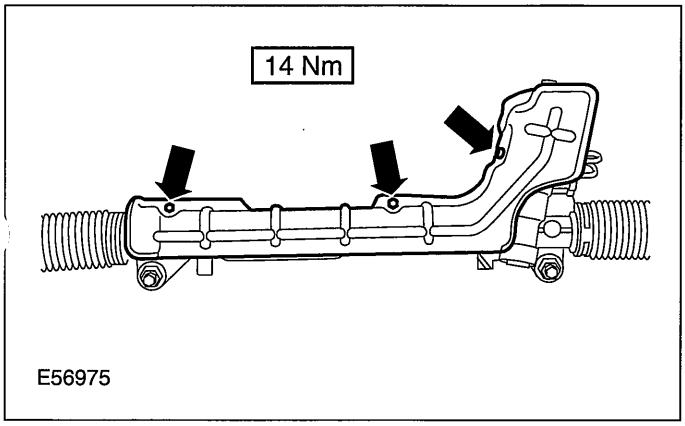


8. **NOTE:Note the position of the steering gear to power steering fluid cooler return hose to aid installation.**

   **Detach the steering gear to power steering fluid cooler return hose bracket from the steering gear.**

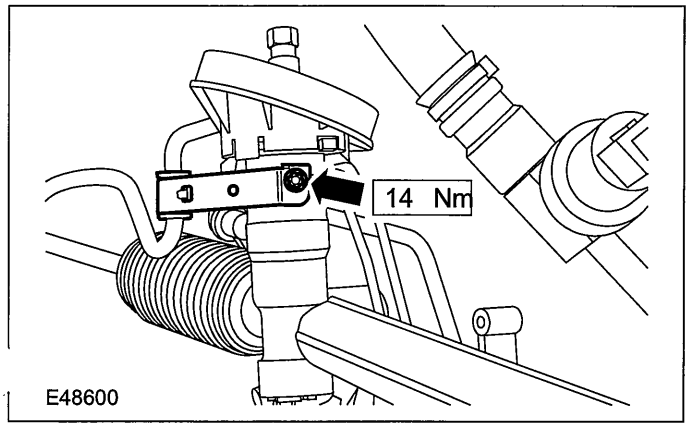


All vehicles

9. **Disconnect the power steering lines from the steering gear valve body.**
   1. Remove the retaining bolt.
   2. Rotate the clamp plate.
   - Allow the fluid to drain into a suitable container.
   - Discard the O-ring seals.

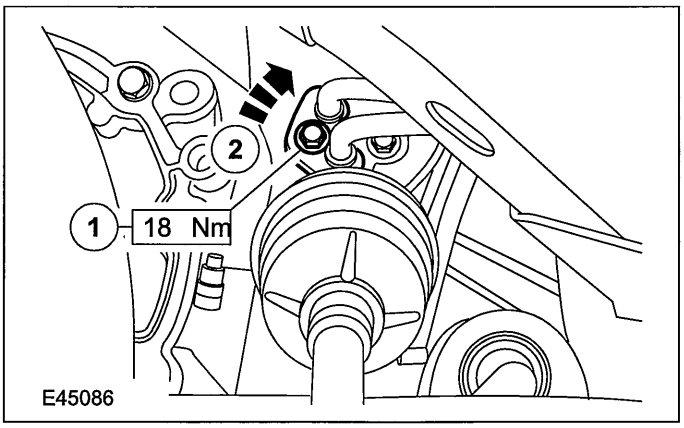


10. **Remove the steering gear to power steering fluid cooler return hose.**

### Installation

1. **NOTE:Make sure that the collar on the hose is fully inserted into the quick release coupling.**

**NOTE:**Check the power steering lines to steering gear valve body O-ring seals for damage or fatigue. Install new O-ring seals as necessary.

**To install, reverse the removal procedure.**

2. **Fill and bleed the power steering system. For additional information, refer to: (211-00 Steering System - General Information)**

   **Power Steering System Filling (General Procedures),**
   **Power Steering System Bleeding (General Procedures).**

## REMOVAL AND INSTALLATION

# Power Steering Fluid Cooler(13 444 0)

### Removal

1. **Raise and support the vehicle. For additional information, refer to: (100-02 Jacking and Lifting)**

   **Jacking (Description and Operation), Lifting (Description and Operation).**

2. **Disconnect the power steering fluid cooler quick release couplings.**
   1. Press the power steering fluid cooler hose quick release coupling locking tangs.
   2. Disconnect the power steering fluid cooler hose quick release coupling.
   - Allow the fluid to drain into a suitable container.

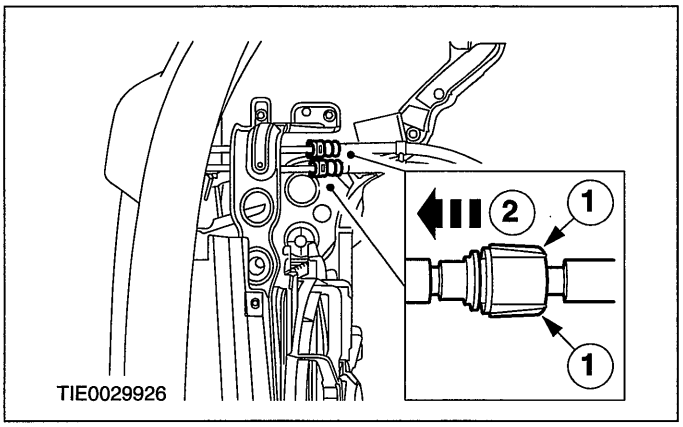


3. **Remove the radiator splash shield.**

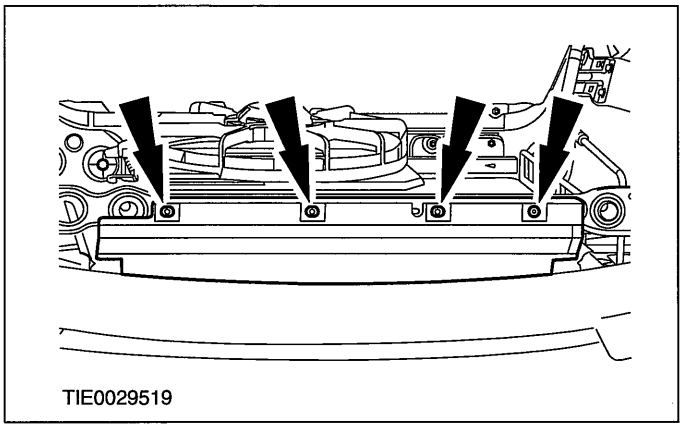


4. **Lower the vehicle.**
5. **Remove the power steering fluid cooler.**
   1. Remove the retaining bolt.
   2. Lower the power steering fluid cooler.

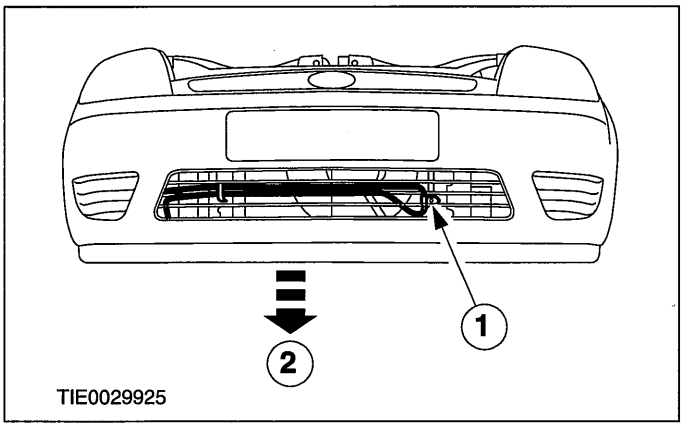


### Installation

1. **NOTE:Make sure that the collar on the hose is inserted fully into the quick release coupling.**

   **To install, reverse the removal procedure.**

2. **Fill and bleed the power steering system. For additional information, refer to: (211-00 Steering System - General Information)**

   **Power Steering System Filling (General Procedures),**
   **Power Steering System Bleeding (General Procedures).**

## REMOVAL AND INSTALLATION

# Steering Gear Bushing

### Special Tool(s)

| | |
|---|---|
| 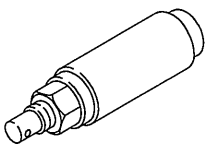 14037 | Installer, Wheel Hub 204-148 (14-037) |
| 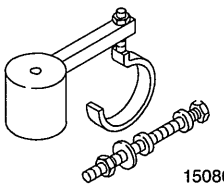 15086 | Remover/Installer, Pivot Bushing 205-297 (15-086) |

| Materials | |
|---|---|
| **Name** | **Specification** |
| Rubber Suspension Insulator Lubricant | E25J-19553-A |

## Removal

1. **Remove the steering gear.**

   **For additional information, refer to Steering Gear in this section.**

2. **CAUTIONS:**

   ⚠**Make sure vise jaw protectors are used.**

   ⚠**Clamp the steering gear reinforcement boss. Do not clamp the steering gear body.**

   **Secure the steering gear in a vise.**

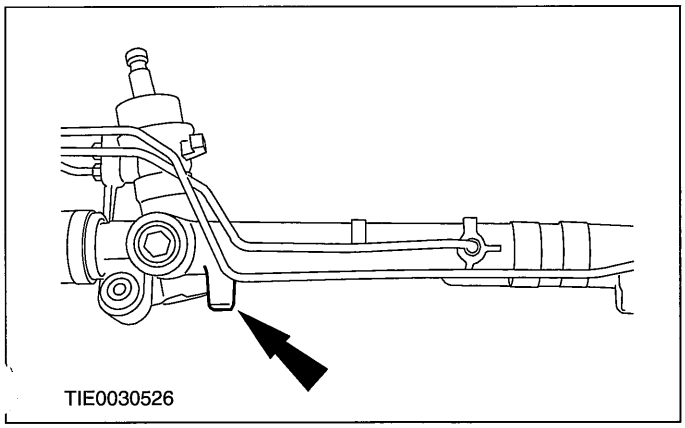


3. **Using the special tools remove the steering gear insulator bushing on both sides.**

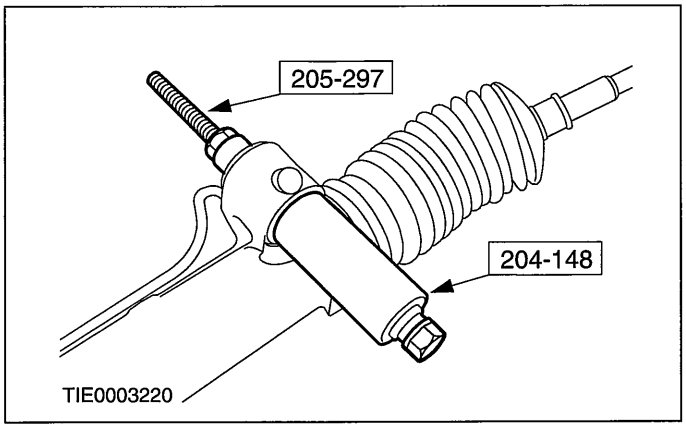


## Installation

1. **Lubricate the steering bushing with Rubber Suspension Insulator Lubricant prior to installation.**
2. **Using the special tools install the steering gear insulator bushing on both sides.**

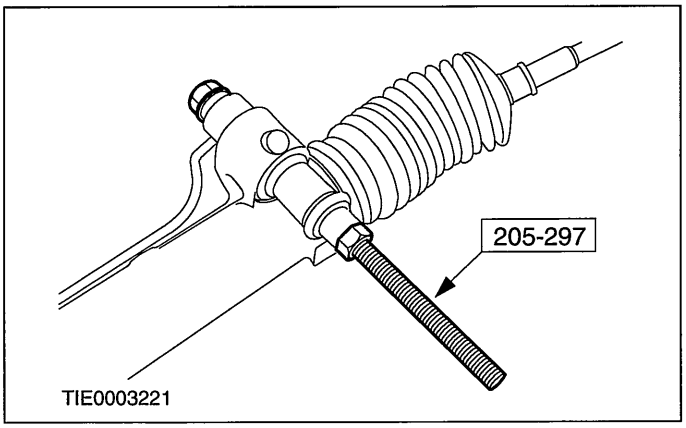


3. **Install the steering gear.**

   **For additional information, refer to Steering Gear in this section.**

# SECTION 211-03 Steering Linkage

## VEHICLE APPLICATION:2006.0 Fiesta

CONTENTS PAGE

**SPECIFICATIONS**

Specifications..... 211-03-2

**DIAGNOSIS AND TESTING**

Steering Linkage..... 211-03-3

**REMOVAL AND INSTALLATION**

Tie Rod End..... (13 273 0) 211-03-4
Steering Gear Boot..... (13 134 0) 211-03-6
Tie Rod..... (13 263 0) 211-03-8

## SPECIFICATIONS

### Torque Specifications

| Description | Nm | lb-ft | lb-in |
|---|---|---|---|
| Tie-rod to steering gear | 110 | 81 | - |
| Tie-rod end locknut | 63 | 46 | - |
| Tie-rod end retaining nut | 48 | 35 | - |

## DIAGNOSIS AND TESTING

# Steering Linkage

REFER to Section 211-00 [Steering System - General Information].

## REMOVAL AND INSTALLATION

# Tie Rod End(13 273 0)

**Special Tool(s)**

| | |
|---|---|
| 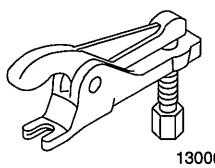 13006 | Separator, Ball Joint 211-020 (13-006) |

## Removal

1. **Remove the wheel and tire.For additional information, refer to Section 204-00 [Suspension System - General Information].**
2. ⚠**CAUTION:Leave the tie-rod end retaining nut in place to protect the ball joint stud.**

**NOTE:**Use a 5 mm Allen key to prevent the ball joint stud from rotating.

**Loosen the tie-rod end locknut and the tie-rod end retaining nut.**

1. Loosen the locknut.
2. Loosen the retaining nut.

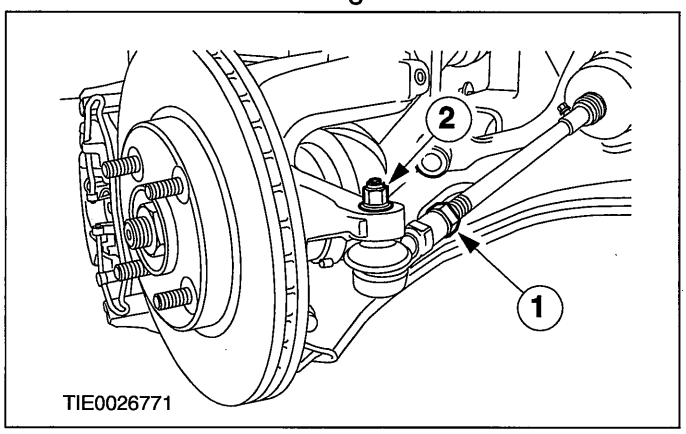

TIE0026771

3. ⚠**CAUTION:Protect the ball joint seal using a soft cloth to prevent damage.**

**Using the special tool, detach the tie-rod end from the wheel knuckle.**

1. Release the tie-rod end.
2. Remove and discard the tie-rod end retaining nut.

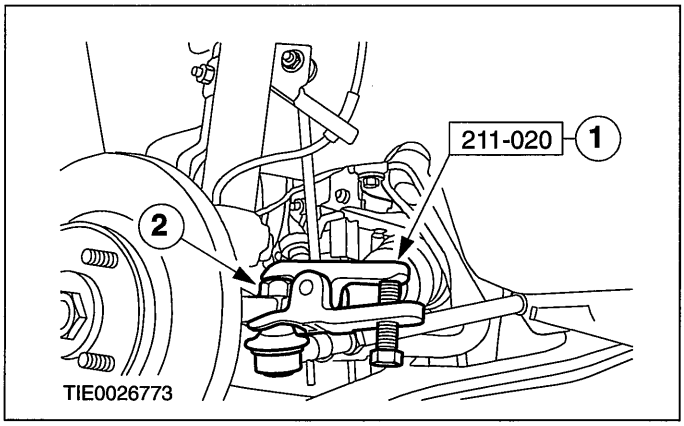

TIE0026773

4. **NOTE:Make a note of the number of turns used to remove the tie-rod end.**

**Remove the tie-rod end.**

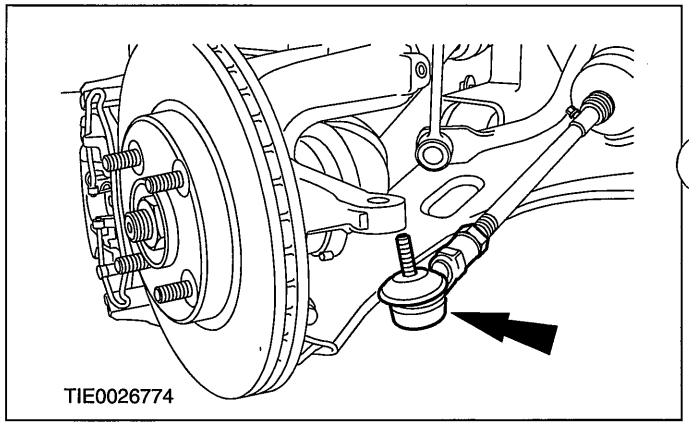
TIE0026774

## Installation

1. **NOTE:Install the tie-rod end using the same number of turns used to remove it.**

**Install the tie-rod end.**

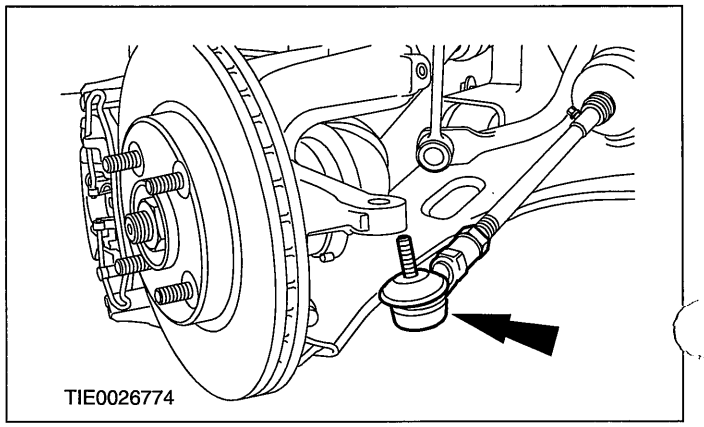
TIE0026774

## REMOVAL AND INSTALLATION

2. **▲WARNING:Install a new tie-rod end retaining nut. Failure to follow this instruction may result in personal injury.**

**NOTE:**Use a 5 mm Allen key to prevent the ball joint stud from rotating.

**Attach the tie-rod end to the wheel knuckle.**

1. Tighten the retaining nut.
2. Tighten the locknut.

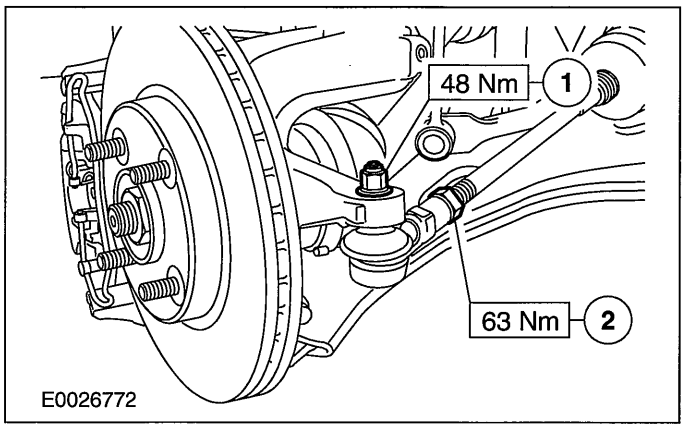


3. **Install the wheel and tire.For additional information, refer to Section 204-00 [Suspension System - General Information].**
4. **Check the toe setting and adjust as necessary. For additional information, refer to Section 204-00 [Suspension System - General Information].**

## REMOVAL AND INSTALLATION

# Steering Gear Boot(13 134 0)

**General Equipment**

| |
|---|
| Pincers |

| **Materials** | |
|---|---|
| **Name** | **Specification** |
| Grease | ESB-M1C119-B |

## Removal

1. **Remove the tie-rod end.**

   **For additional information, refer to Tie-Rod End in this section.**

2. **Remove the tie-rod end locknut.**

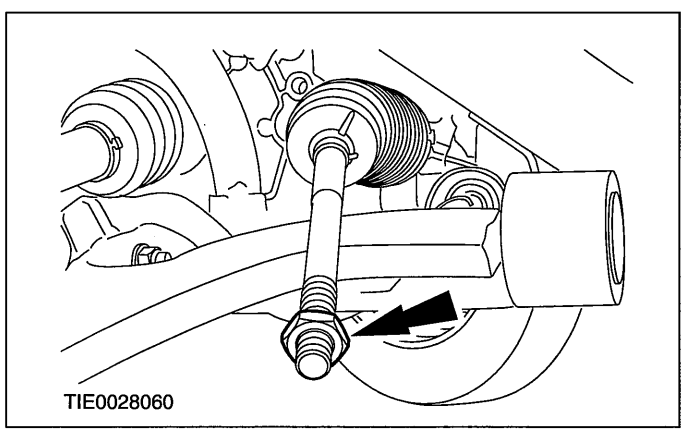


3. **NOTE:Make sure the tie-rod is clean before removing the steering gear boot.**

   **Remove the steering gear boot.**

   - Discard the clamps.

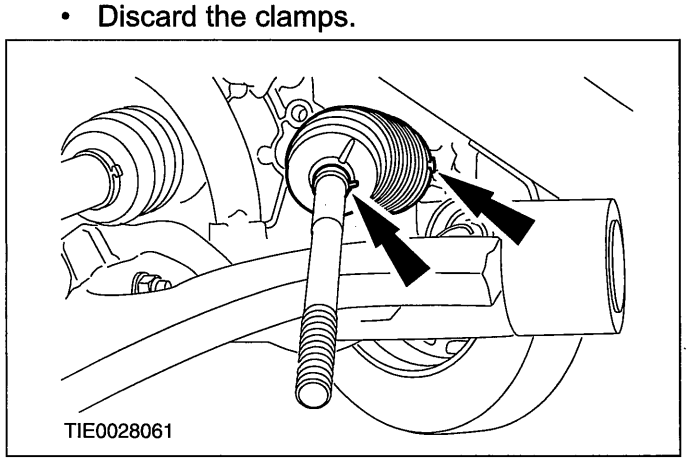


## Installation

1. **NOTE:Lubricate the steering gear boot.**

   **Install the steering gear boot.**

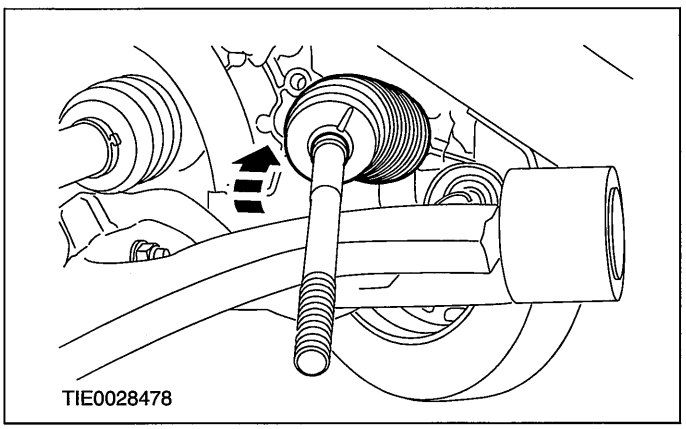


2. **Using a suitable pair of pincers, install a new steering gear boot inner clamp.**

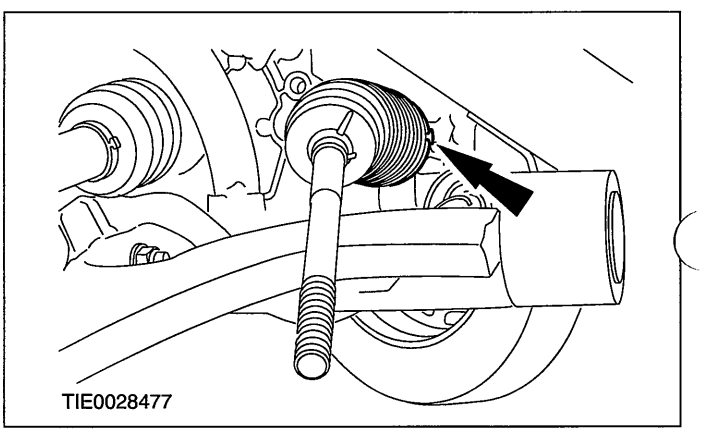


3. **NOTE:Make sure the steering gear boot outer clamp is located over the recess in the tie-rod.**

   **Using a suitable pair of pincers, install a new steering gear boot outer clamp.**

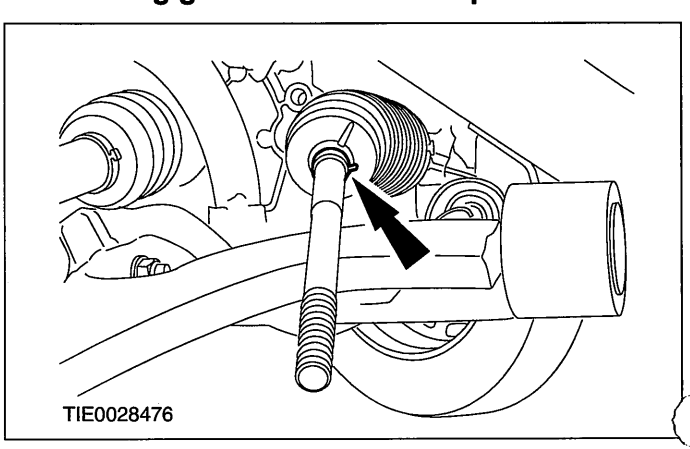

## REMOVAL AND INSTALLATION

4. Install the tie-rod end locknut.

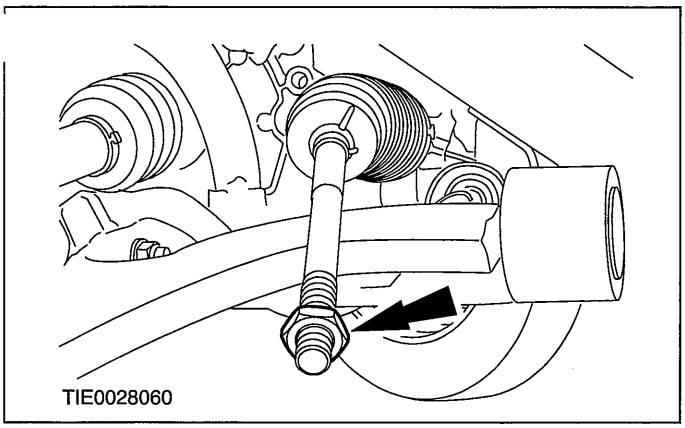


5. Install the tie-rod end.

   For additional information, refer to Tie-Rod End in this section.

## REMOVAL AND INSTALLATION

# Tie Rod(13 263 0)

### Special Tool(s)

| | |
|---|---|
| 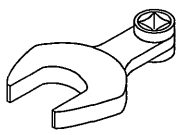 13025 | Socket, Tie-Rod End, Steering Gear 211-245 (13-025) |

### General Equipment

| |
|---|
| Pipe wrench |
| Vise jaw protectors |
| Pincers |

### Materials

| Name | Specification |
|---|---|
| Grease | ESB-M1C119-B |

## Removal

1. **Remove the steering gear. For additional information, refer to Section 211-02 [Power Steering].**
2. **NOTE:Make a note of the number of turns used to remove the tie-rod end.**

   **Remove the tie-rod end and the tie-rod end locknut.**

   1. Remove the tie-rod end.
   2. Remove the tie-rod end locknut.

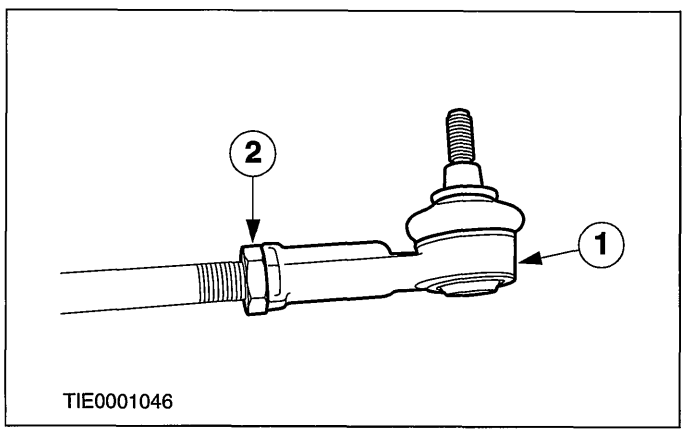

TIE0001046

3. **Remove and discard the steering gear boot clamps.**

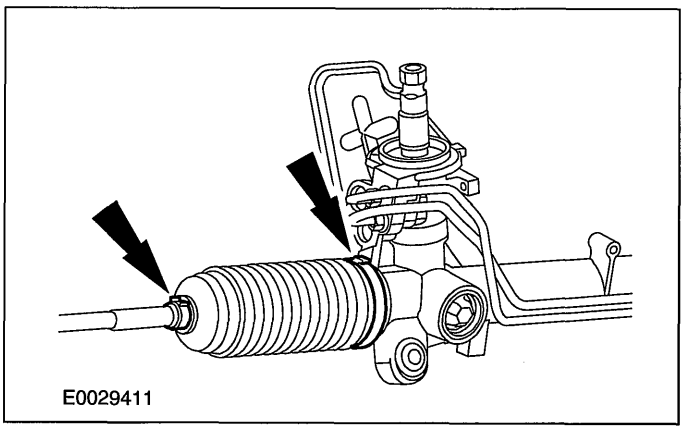
E0029411

4. **Remove and discard the steering gear boot.**

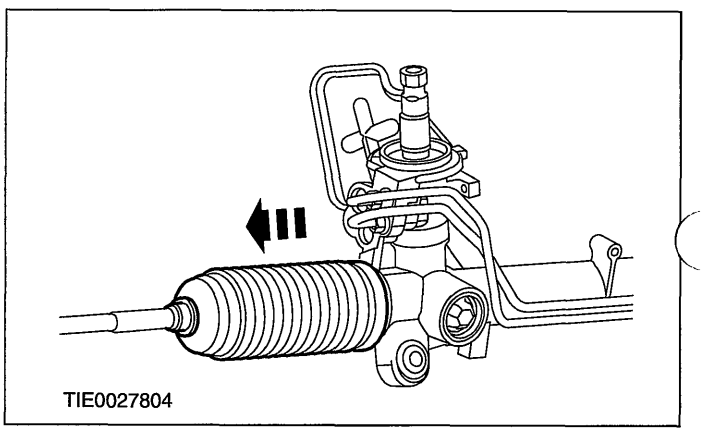
TIE0027804

5. **Rotate the steering gear pinion to expose the rack.**

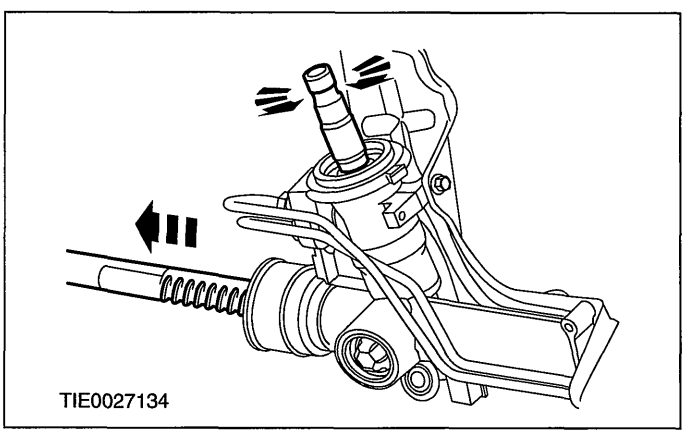
TIE0027134

6. **CAUTIONS:**

   **⚠Do not clamp the steering rack on exposed hydraulic sealing surfaces.**

   **⚠Make sure vise jaw protectors are used.**

## REMOVAL AND INSTALLATION

**⚠To counter the extensive torque forces required to remove the tie-rod, clamp the steering rack teeth in a suitable vise. Do not clamp the steering gear body.**

**Secure the steering rack in a vise and using a suitable pipe wrench remove the tie-rod.**

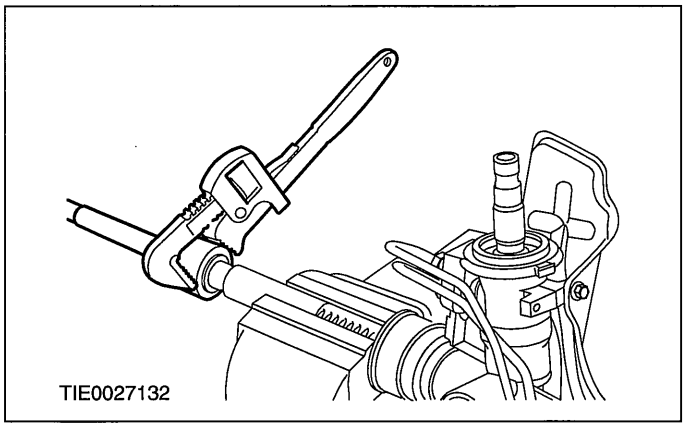


### Installation

1. **Using the special tool, install the tie-rod.**

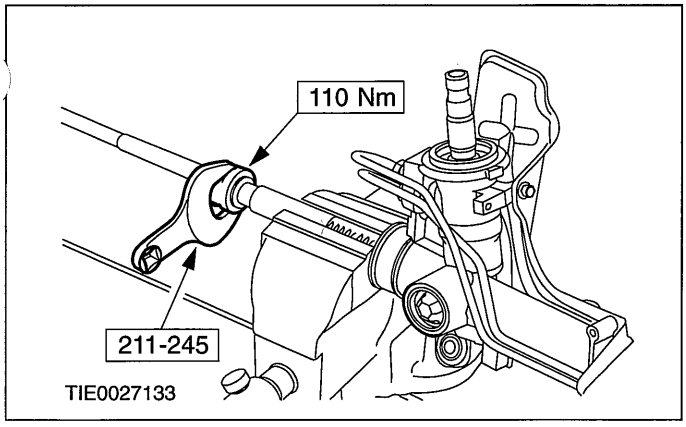


2. **NOTE:Lubricate the steering gear boot.**

   **Install a new steering gear boot.**

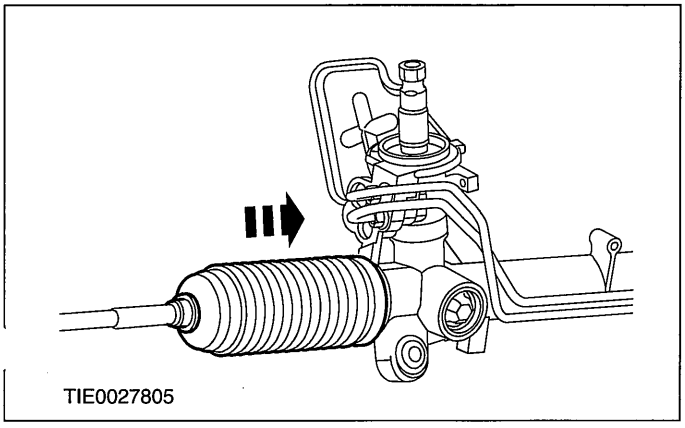


3. **Using a suitable pair of pincers, install a new steering gear boot inner clamp.**

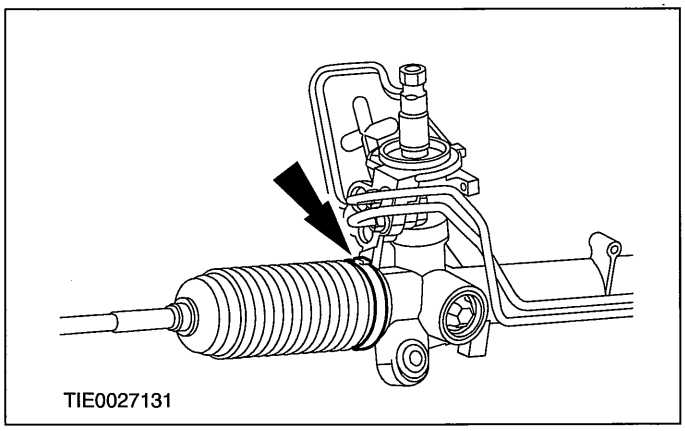


4. **NOTE:Make sure the steering gear boot outer clamp is located over the recess in the tie-rod.**

   **Using a suitable pair of pincers, install a new steering gear boot outer clamp.**

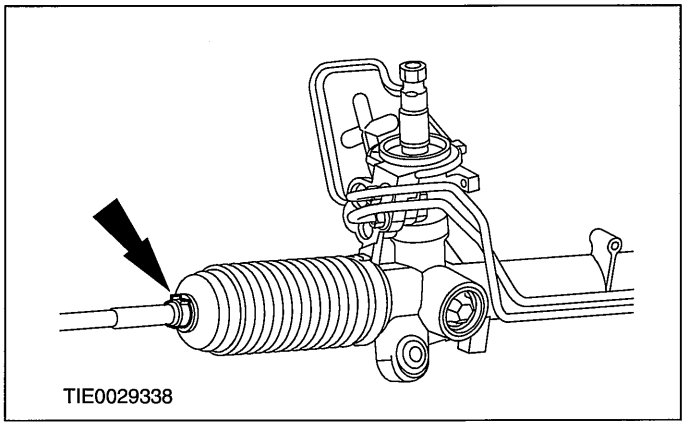


5. **NOTE:Install the tie-rod end using the same number of turns used to remove it.**

   **Install the tie-rod end and the tie tie-rod end locknut.**

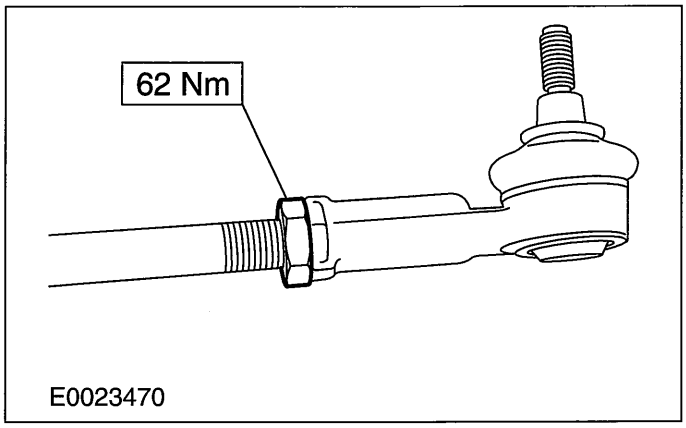

## REMOVAL AND INSTALLATION

6. Install the steering gear. For additional information, refer to Section 211-02 [Power Steering].

# SECTION 211-04 Steering Column

## VEHICLE APPLICATION:2006.0 Fiesta

CONTENTS PAGE

**SPECIFICATIONS**

Specifications..... 211-04-2

**DIAGNOSIS AND TESTING**

Steering Column..... 211-04-3

**REMOVAL AND INSTALLATION**

Steering Wheel..... (13 524 0) 211-04-4
Steering Column..... (13 542 0) 211-04-5

**DISASSEMBLY AND ASSEMBLY**

Steering Column..... (13 543 4) 211-04-8

## SPECIFICATIONS

### Torque Specifications

| Description | Nm | lb-ft | lb-in |
|---|---|---|---|
| Steering wheel retaining bolt | 45 | 33 | - |
| Steering column retaining nuts | 24 | 18 | - |
| Steering column shaft to steering gear pinion retaining bolt | 28 | 21 | - |

## DIAGNOSIS AND TESTING

# Steering Column

REFER to Section 211-00 [Steering System - General Information].

## REMOVAL AND INSTALLATION

# Steering Wheel(13 524 0)

### Removal

1. **Remove the driver air bag module.**

   **For additional information, refer to: Driver Air Bag Module (501-20 Supplemental Restraint System, Removal and Installation).**

2. **NOTE:Make sure that the road wheels are in the straight ahead position.**

   **Centralize the steering and lock it in position.**

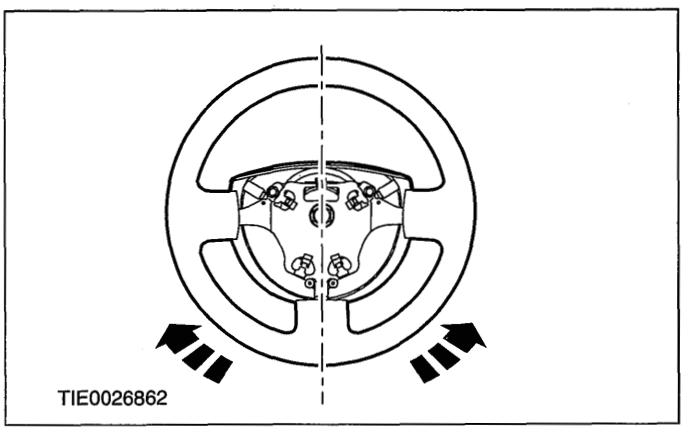


3. **Remove the steering wheel.**

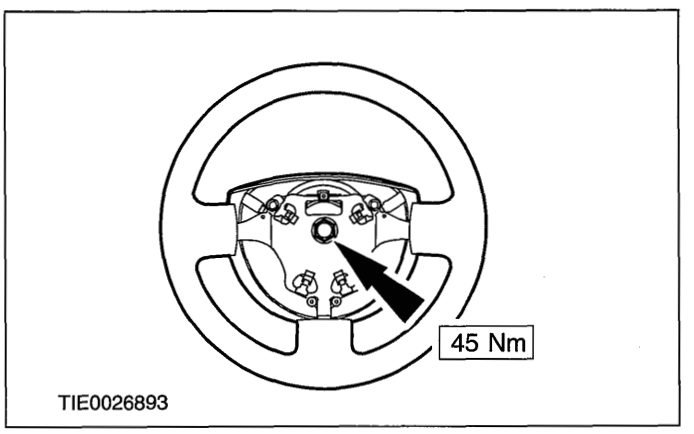


### Installation

1. **To install, reverse the removal procedure.**

## REMOVAL AND INSTALLATION

# Steering Column(13 542 0)

### Removal

1. **Remove the driver air-bag module.**

   **For additional information, refer to: Driver Air Bag Module (501-20 Supplemental Restraint System, Removal and Installation).**

2. **Remove the instrument panel lower panel.**
   1. Remove the lower retaining screws.
   2. Remove the upper retaining screws from the stowage compartment.
   3. Release the clip.

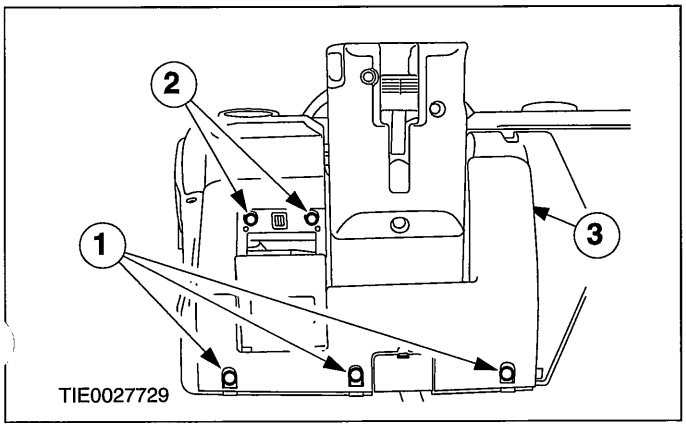

TIE0027729

3. **Detach the audio control switch from the steering column lower shroud (if equipped).**
   - Using a thin bladed screwdriver, release the locking tang.

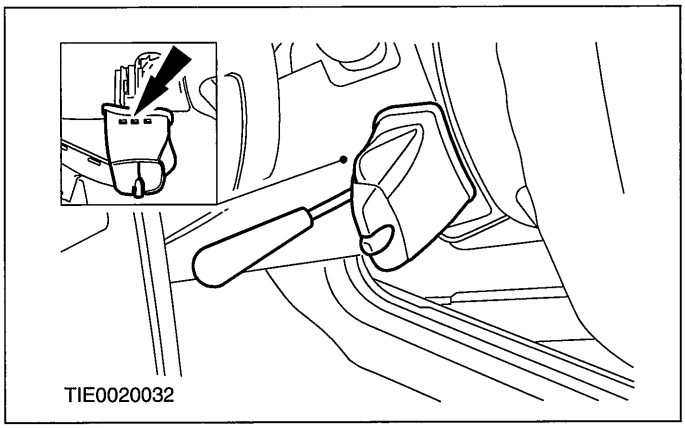
TIE0020032

4. **Remove the audio control switch (if equipped).**
   - Disconnect the electrical connector.

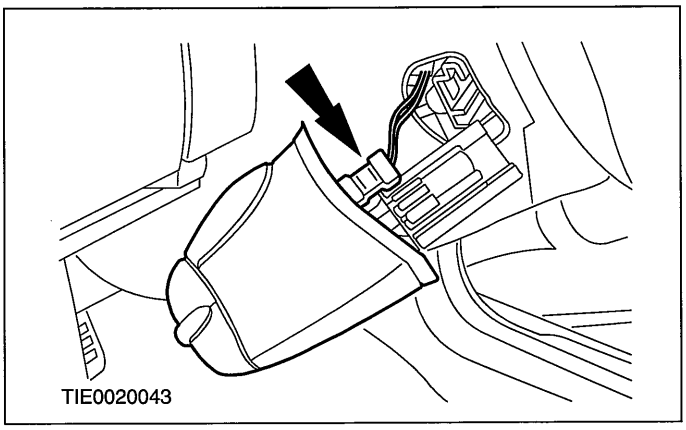
TIE0020043

5. **NOTE:Turn the steering wheel to gain access to the steering column upper shroud retaining clips.**

   **Detach the steering column upper shroud from the steering column lower shroud (steering wheel shown removed for clarity).**
   1. Using a thin bladed screwdriver, release the two clips, (one each side).
   2. Detach the shroud.

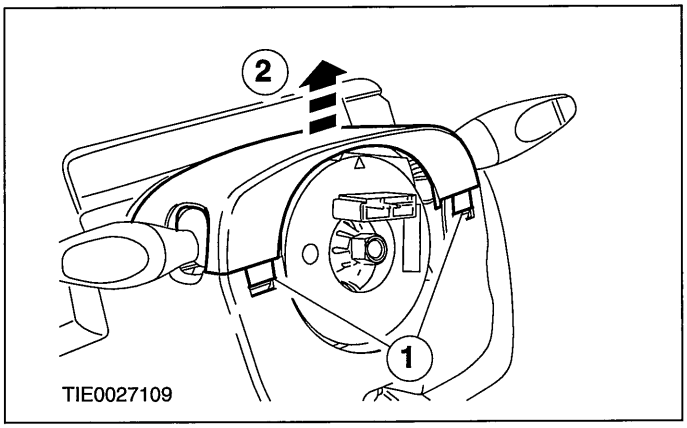

TIE0027109

6. **Remove the steering column lower shroud (steering wheel shown removed for clarity).**
   1. Remove the retaining screws.

## REMOVAL AND INSTALLATION

2. Release the steering column locking lever.

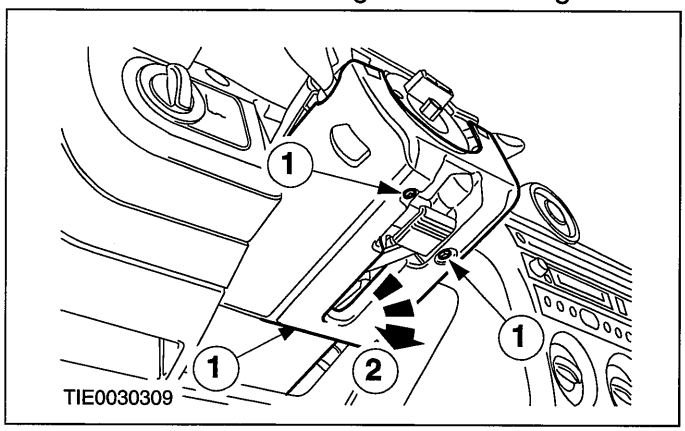


7. **NOTE:Make sure that the road wheels are in the straight ahead position.**

   **Centralize the steering and lock it in position.**

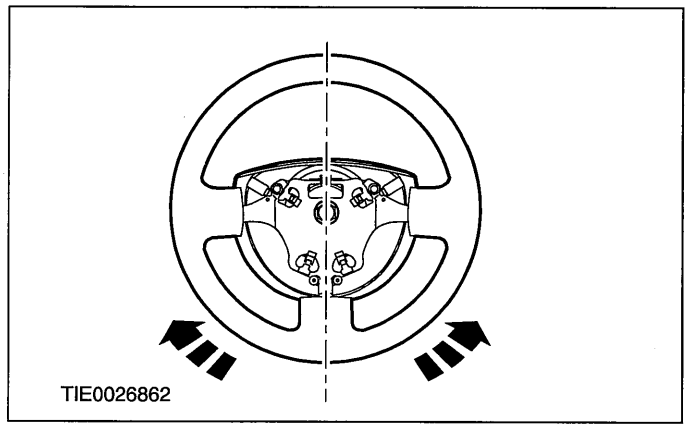


8. **Detach the steering column shaft from the steering gear pinion.**
   - Discard the retaining bolt.

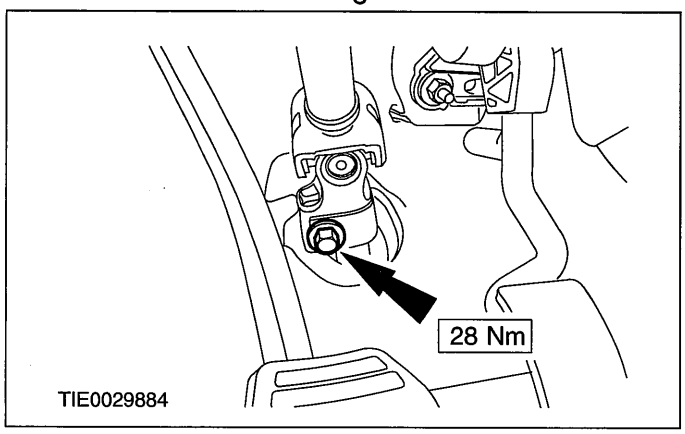


9. **Disconnect the ignition switch and turn signal electrical connectors.**
   - Depress the locking tangs.

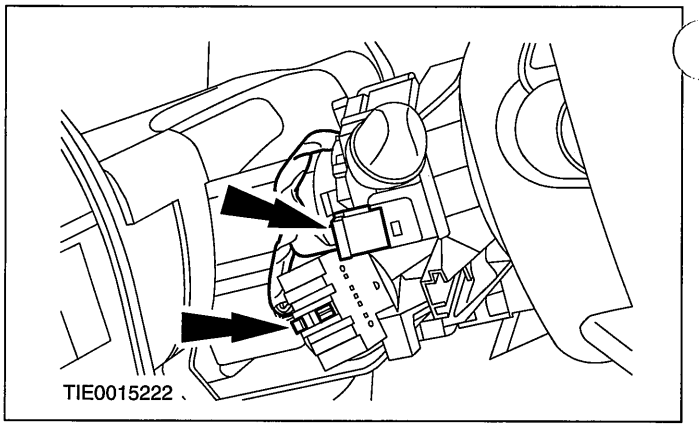


10. **Disconnect the passive anti-theft system (PATS) transceiver, windshield wiper/washer switch and clockspring electrical connectors.**
    - Depress the locking tangs.

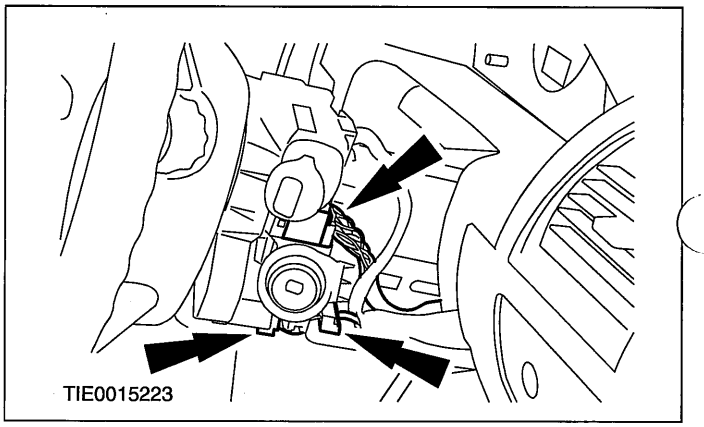


11. **Remove the steering column.**
    - Discard the retaining nuts.

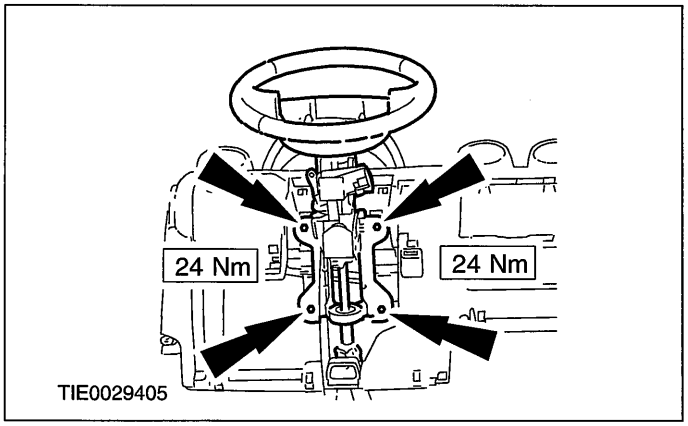


### Installation

1. **WARNINGS:**

## REMOVAL AND INSTALLATION

**▲Install a new steering column shaft to steering gear pinion retaining bolt. Failure to follow this instruction may result in personal injury.**

**▲Make sure that the steering column locking lever is in the locked position. Failure to follow this instruction may result in personal injury.**

**▲Install new steering column retaining nuts. Failure to follow this instruction may result in personal injury.**

**To install, reverse the removal procedure.**

## DISASSEMBLY AND ASSEMBLY

# Steering Column(13 543 4)

## Disassembly

All vehicles

**1. Remove the steering wheel.**

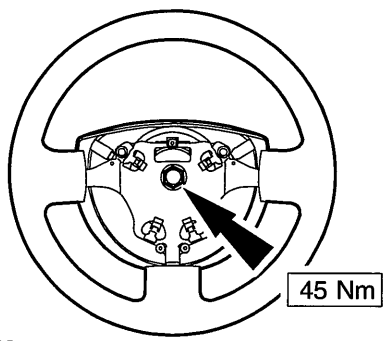


TIE0026893

**2. ⚠CAUTION:Make sure the clockspring is not allowed to rotate. Secure in the central position with a piece of suitable tape.**

**Remove the multifunction switches.**

1. Depress the locking tangs.
2. Lift the switches upwards.

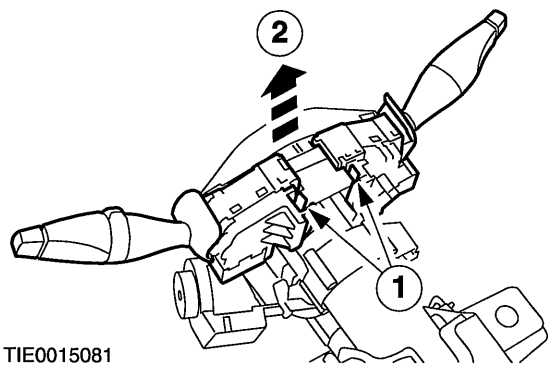


TIE0015081

**3. Remove the clockspring.**

1. Remove the retaining screw.
2. Release the locking tangs.

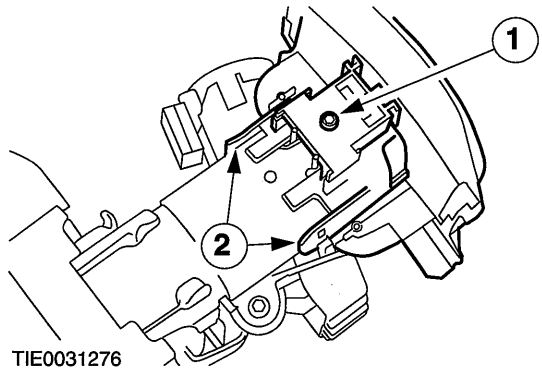


TIE0031276

**4. Remove the ignition switch.**

- Release the locking tangs.

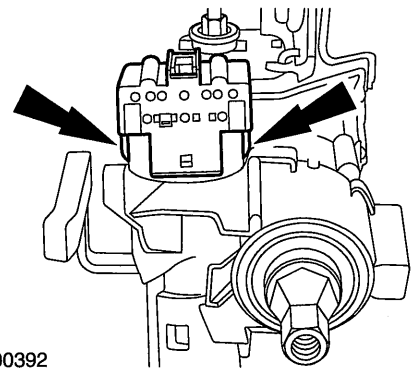

TIE0000392

**5. Remove the passive anti-theft system (PATS) transceiver.**

- Release the locking tangs.

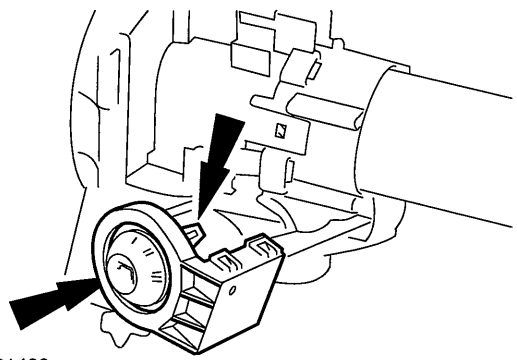

TIE0031489

Left-hand drive vehicles

**6. Remove the ignition lock cylinder.**

1. Insert and turn the ignition key to position 1.

## DISASSEMBLY AND ASSEMBLY

2. Using a thin bladed screwdriver, depress the detent.

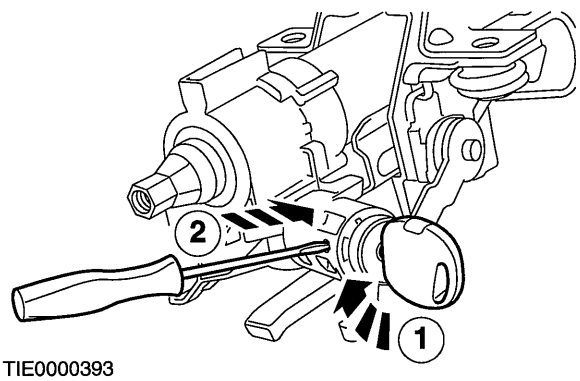

TIE0000393

### Right-hand drive vehicles

**7. Remove the ignition lock cylinder.**

1. Insert and turn the ignition key to position 1.
2. Using a thin bladed screwdriver, depress the detent on both sides.

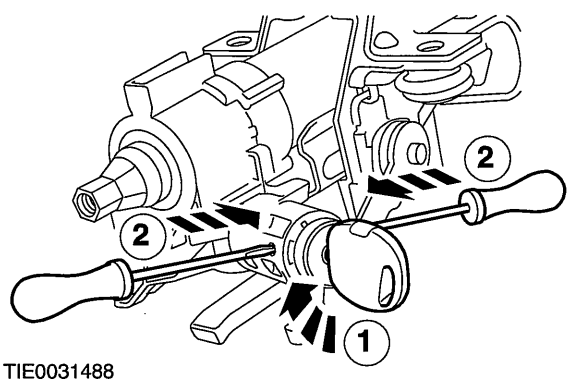

TIE0031488

### Assembly

**1. To assemble, reverse the disassembly procedure.**

# SECTION 211-05 Steering Column Switches

## VEHICLE APPLICATION:2006.0 Fiesta

CONTENTS PAGE

### REMOVAL AND INSTALLATION

Ignition Switch..... (36 424 0) 211-05-2

## REMOVAL AND INSTALLATION

# Ignition Switch(36 424 0)

### Removal

1. **Disconnect the battery ground cable. For additional information, refer to Section 414-01 [Battery, Mounting and Cables].**
2. **Detach the audio control switch from the steering column lower shroud (if equipped).**
   - Using a thin bladed screwdriver, release the locking tang.

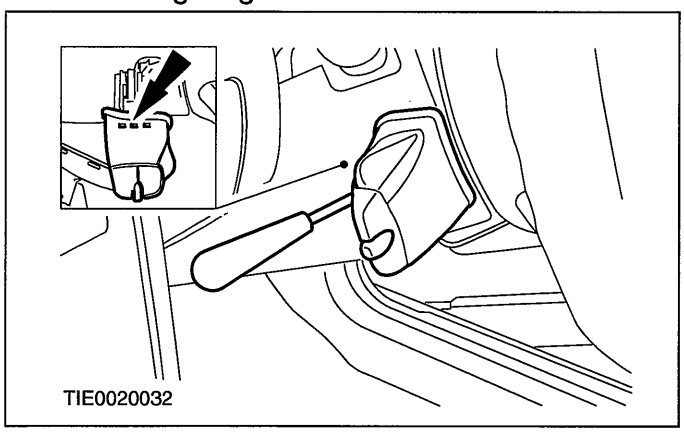


3. **Remove the audio control switch (if equipped).**
   - Disconnect the electrical connector.

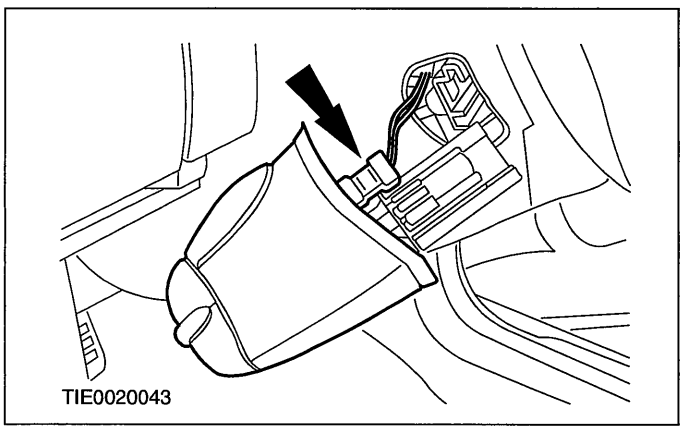


4. **NOTE:Turn the steering wheel to access the steering column upper shroud retaining clips.**

   **Detach the steering column upper shroud from the steering column lower shroud (steering wheel shown removed for clarity).**
   1. Using a thin bladed screwdriver, release the two clips (one each side).
   2. Detach the shroud.

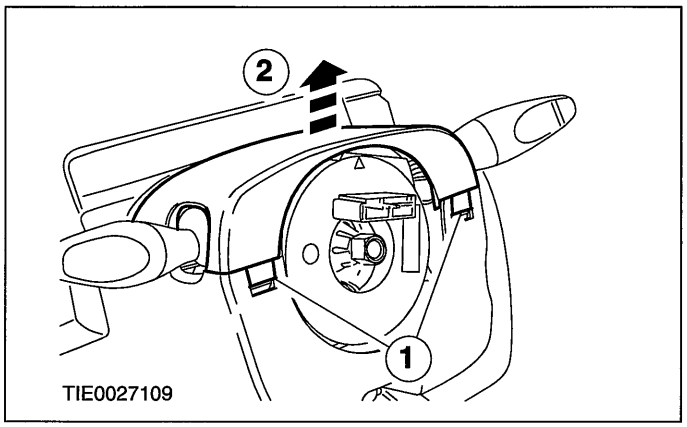


5. **Remove the steering column lower shroud (steering wheel shown removed for clarity).**
   1. Release the steering column locking lever.
   2. Remove the retaining screws.

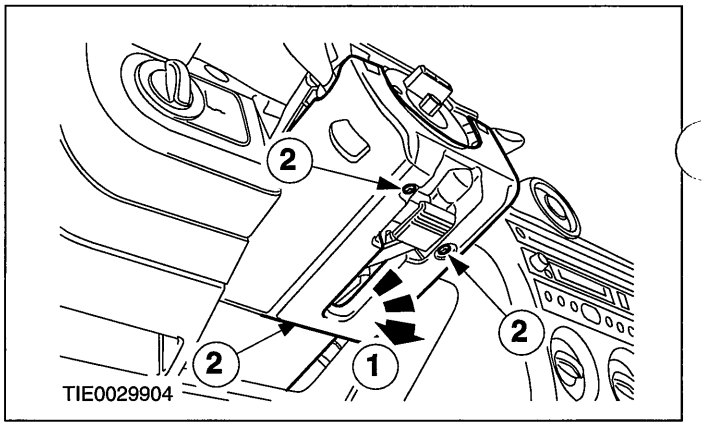


6. **Disconnect the ignition switch electrical connector.**

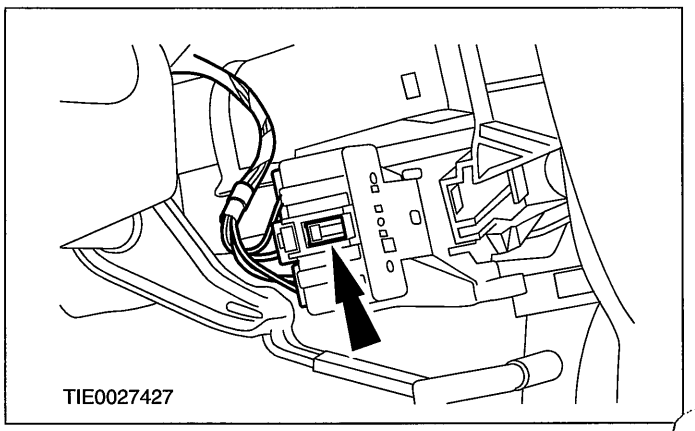


7. **Remove the ignition switch.**

## REMOVAL AND INSTALLATION

- Depress the locking tangs.

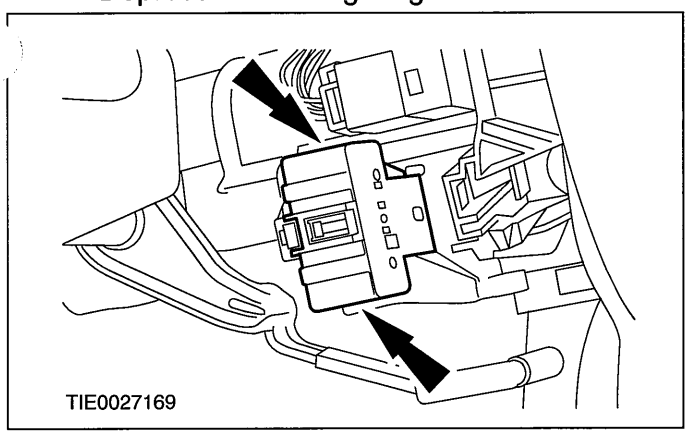


### Installation

**1. To install, reverse the removal procedure.**

# SECTION 303-00 Engine System - General Information

## VEHICLE APPLICATION:2006.0 Fiesta

CONTENTS PAGE

### DESCRIPTION AND OPERATION


Engine ..... 303-00-3
Engine/transmission combinations ..... 303-00-3


### DIAGNOSIS AND TESTING


Engine ..... 303-00-4
Engine - Oil Leaks ..... 303-00-14
Ultraviolet (UV) Testing ..... 303-00-14
Measure the compression pressure ..... 303-00-14
Measure the compression pressure (Engine - 1.4L Duratorq-TDCi (DV) Diesel) ..... 303-00-15
Measure the compression pressure (Engine - 1.6L Duratorq-TDCi (DV) Diesel) ..... 303-00-17
Measure the compression pressure (Engine - 1.25L Duratec-16V (Sigma)/1.4L Duratec-16V (Sigma)/1.6L Duratec-16V (Sigma)) ..... 303-00-20
Measure the compression pressure (Engine - 1.3L Duratec-8V (Rocam)) ..... 303-00-22
Measure the compression pressure (Engine - 2.0L Duratec-HE (MI4)) ..... 303-00-23
Measure the oil pressure (Engine - 1.4L Duratorq-TDCi (DV) Diesel) ..... 303-00-25
Measure the oil pressure (Engine - 1.6L Duratorq-TDCi (DV) Diesel) ..... 303-00-26
Measure the oil pressure (Engine - 1.25L Duratec-16V (Sigma)/1.4L Duratec-16V (Sigma)/1.6L Duratec-16V (Sigma)) ..... 303-00-27
Measure the oil pressure (Engine - 1.3L Duratec-8V (Rocam)) ..... 303-00-28
Measure the oil pressure (Engine - 2.0L Duratec-HE (MI4)) ..... 303-00-30
Valve train analysis - static (engine off) ..... 303-00-31


### GENERAL PROCEDURES


Camshaft Bearing Journal Diameter ..... 303-00-32
Camshaft Bearing Journal Clearance ..... 303-00-33
Camshaft End Play ..... 303-00-34
Camshaft Surface Inspection ..... 303-00-35
Camshaft Lobe Lift ..... 303-00-36
Crankshaft Main Bearing Journal Diameter ..... 303-00-37
Crankshaft End Play ..... 303-00-38
Cylinder Bore Taper ..... 303-00-39
Piston Inspection ..... 303-00-40
Piston Pin to Bore Diameter ..... 303-00-41
Piston Diameter ..... 303-00-42
Piston Ring End Gap ..... 303-00-43
Piston Ring-to-Groove Clearance ..... 303-00-44
Piston Pin Diameter ..... 303-00-45
Connecting Rod Large End Bore ..... 303-00-46
Valve Stem Diameter ..... 303-00-47
Flywheel Inspection ..... 303-00-48
Flywheel Inspection — Vehicles With: Dual Mass Flywheel ..... 303-00-49
Cylinder Head Distortion ..... 303-00-50
Cylinder Block Distortion ..... 303-00-51

Exhaust Manifold Cleaning and Inspection..... 303-00-52
Bearing Inspection..... 303-00-53
Valve Seat Inspection..... 303-00-

## DESCRIPTION AND OPERATION

# Engine

### Engine/transmission combinations

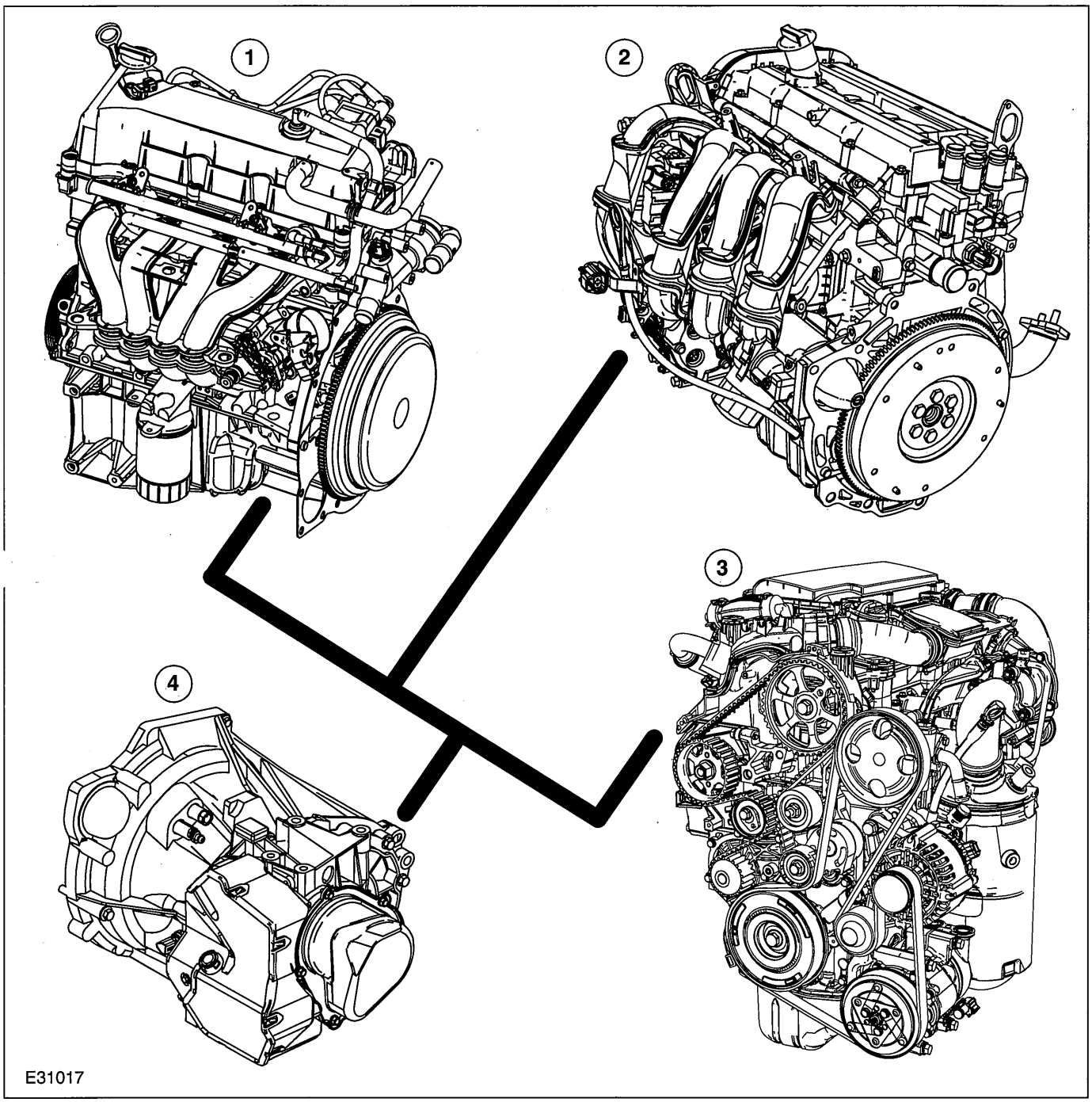


| Item | Description |
|---|---|
| 1 | 1.3L Duratec 8V engine |
| 2 | 1.4/1.6L Duratec 16V engine |
| 3 | 1.4L Duratorq TDCi turbodiesel engine |
| 4 | iB5 manual transmission |

## DIAGNOSIS AND TESTING

# Engine

### Special Tool(s)

| | |
|---|---|
| 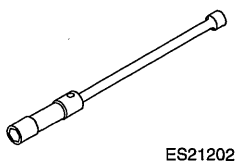 ES21202 | Socket, Spark Plug 303-499 |
| 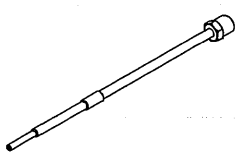 E47332 | Compression Test Adapter 303-1052 |
| 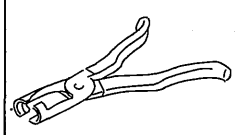 21211 | Pliers, Valve Stem Seal 303-508 |

| Materials | |
|---|---|
| **Name** | **Specification** |
| Adhesive - Loctite 243 | WSK-M2G349-A7 |

1. Verify the customer concern by operating the system.
2. Visually inspect for obvious signs of mechanical or electrical damage.

### Visual Inspection Chart

| Mechanical | Electrical |
|---|---|
| – Coolant leaks<br>– Oil leaks<br>– Fuel system leaks<br>– Visibly damaged or worn parts<br>– Loose or missing nuts or bolts | – Fuse(s)<br>– Loose or corroded connector(s)<br>– Powertrain control module<br>– Damaged or worn switch(es) |

3. If an obvious cause for an observed or reported concern is found, correct the cause (if possible) before proceeding to the next step.
4. If the cause is not visually evident, verify the symptom and refer to the Symptom Chart.

### Symptom Chart

| Symptom | Possible Sources | Action |
|---|---|---|
| • Loss of oil | • Oil leaks on components that are either coated in oil themselves or on components local to them. | • CHECK for evidence of oil leaks on components. Use an ultraviolet (UV) leak tester if an oil leak is not evident. INSTALL new gaskets or components as required. |
| | • Internal or external leak at the oil cooler. | • CHECK the coolant expansion tank for a film of oil on the coolant surface. INSTALL a new oil cooler or oil cooler gasket. |
| | • Leak at the crankshaft seal. | • INSTALL a new crankshaft seal. |
| | • Leaks from oil carrying components or basic engine. | • CHECK for cracks in oil carrying components of the basic engine by means of a UV leak test. INSTALL new components or seals as necessary. |

## DIAGNOSIS AND TESTING

| Symptom | Possible Sources | Action |
|---|---|---|
| • Oil consumption | • Use of the wrong type of engine oil. | • DETERMINE the last type of engine oil used and compare with the specification. Change the engine oil to the specification. |
| | • Faulty positive crankcase ventilation (PCV) system.<br>- Hoses or ventilation or breather valves are blocked. This causes excessive pressure in the crankcase which causes more oil to enter the combustion chamber.<br>- PCV oil separator is faulty and engine oil can enter the combustion chamber through the intake manifold. | • CHECK if the PCV system is operating correctly and repair as necessary. REFER to:<br>Engine Emission Control (303-08 Engine Emission Control - 1.3L Duratec-8V (Rocam)/1.25L Duratec-16V (Sigma)/1.4L Duratec-16V (Sigma)/1.6L Duratec-16V (Sigma), Diagnosis and Testing),<br>Engine Emission Control (303-08 Engine Emission Control - 2.0L Duratec-HE (MI4), Diagnosis and Testing),<br>Engine Emission Control - Vehicles With: Vacuum Exhaust Gas Recirculation (EGR) Valve (303-08 Engine Emission Control - 1.4L Duratorq-TDCi (DV) Diesel, Diagnosis and Testing),<br>Engine Emission Control (303-08 Engine Emission Control - 1.6L Duratorq-TDCi (DV) Diesel, Description and Operation). |
| | • Turbocharger seals (diesel engine only). | • INSTALL a new turbocharger. REFER to:<br>Turbocharger (303-04 Fuel Charging and Controls - Turbocharger - 1.4L Duratorq-TDCi (DV) Diesel, Removal and Installation),<br>Turbocharger - 1.6L Duratorq-TDCi (DV) Diesel (303-04 Fuel Charging and Controls - Turbocharger - 1.6L Duratorq-TDCi (DV) Diesel, Removal and Installation). |

## DIAGNOSIS AND TESTING

| Symptom | Possible Sources | Action |
|---|---|---|
| | • Damaged gaskets or mating surfaces.<br>- Cylinder head gasket is damaged or mating face are warped.<br>- Valve stem oil seals are worn and engine oil can enter the combustion chamber between the valve stem and the valve stem guide. | • CHECK the gaskets and mating surfaces for damage.<br>Remove the cylinder head.<br>CHECK the mating faces, cylinder head gasket and the evenness of the cylinder head and engine block mating faces.<br>INSTALL new valve seals.REFER to:<br>Valve Seals (303-01 Engine - 1.25L Duratec-16V (Sigma)/1.4L Duratec-16V (Sigma)/1.6L Duratec-16V (Sigma), In-vehicle Repair),<br>Valve Seals (303-01 Engine - 1.3L Duratec-8V (Rocam), In-vehicle Repair),<br>Valve Seals (303-01 Engine - 2.0L Duratec-HE (MI4), In-vehicle Repair),<br>Valve Seals (303-01 Engine - 1.4L Duratorq-TDCi (DV) Diesel, In-vehicle Repair),<br>Valve Seals (303-01 Engine - 1.6L Duratorq-TDCi (DV) Diesel, In-vehicle Repair). |
| | • Piston ring or cylinder liner wear. | • INSTALL new components as necessary. |
| | • Damaged cylinder liners or excessive clearance of engine components.<br>- Pistons<br>- Piston rings (clearance in groove and end gap)<br>- Cylinder liners | • CHECK the running surfaces and clearances of the individual engine components. INSTALL new components as necessary. INSTALL a new cylinder block if necessary.<br>• CHECK the pistons.<br>REFER to: Piston Inspection (303-00 Engine System - General Information, General Procedures).<br>• CHECK the piston rings.<br>REFER to: (303-00 Engine System - General Information)<br>Piston Ring-to-Groove Clearance (General Procedures),<br>Piston Ring End Gap (General Procedures). |

## DIAGNOSIS AND TESTING

| Symptom | Possible Sources | Action |
|---|---|---|
| • Coolant consumption | • Cooling system components. | • CHECK the coooling system. REFER to:<br>Engine Cooling (303-03 Engine Cooling - 1.3L Duratec-8V (Rocam)/1.25L Duratec-16V (Sigma)/1.4L Duratec-16V (Sigma)/1.6L Duratec-16V (Sigma), Diagnosis and Testing),<br>Engine Cooling (303-03 Engine Cooling - 2.0L Duratec-HE (MI4), Diagnosis and Testing),<br>Engine Cooling (303-03 Engine Cooling - 1.4L Duratorq-TDCi (DV) Diesel, Diagnosis and Testing),<br>Engine Cooling (303-03 Engine Cooling - 1.6L Duratorq-TDCi (DV) Diesel, Diagnosis and Testing). |
| | • Oil cooler. | • INSTALL a new oil cooler. |
| | • Damaged gaskets or warped mating faces. | • CHECK the cylinder head gasket for damage. CHECK the cylinder head for distortion. |
| | • Cracks or fractures in engine components surrounded by coolant, such as cylinder liners and cylinder head combustion chamber. | • DETERMINE the damaged engine component(s) and install new component(s) as necessary. |
| • Engine will not crank | • Battery or cables. | • CHECK the battery, bracket and cables.<br>REFER to: Battery (414-01 Battery, Mounting and Cables, Diagnosis and Testing). |
| | • Starter motor or cables. | • CHECK the starting system.<br>REFER to: Starting System (303-06 Starting System, Diagnosis and Testing). |
| • Engine cranks but will not start | • Fuel tank is empty. | • CHECK the fuel level. |

## DIAGNOSIS AND TESTING

| Symptom | Possible Sources | Action |
|---|---|---|
| | • Water in fuel (diesel engine only). | • Drain the water from the fuel system. Engine - 1.4L Duratorq-TDCi (DV) Diesel/Engine - 1.6L Duratorq-TDCi (DV) Diesel.<br>REFER to: Fuel System - 1.4L Duratorq-TDCi (DV) Diesel/1.6L Duratorq-TDCi (DV) Diesel (310-00 Fuel System - General Information, Diagnosis and Testing). |
| | • Fuel filter blocked. | • INSTALL a new fuel filter. REFER to: (310-01 Fuel Tank and Lines)<br>Fuel Filter - 1.4L Duratorq-TDCi (DV) Diesel (Removal and Installation),<br>Fuel Filter - 1.6L Duratorq-TDCi (DV) Diesel (Removal and Installation). |
| | • Engine intake air system. | • CHECK the intake air system.<br>REFER to: Intake Air Distribution and Filtering (303-12 Intake Air Distribution and Filtering, Diagnosis and Testing). |
| | • Glow plug faulty (diesel engine only). | • CHECK the glow plugs. INSTALL new glow plugs as necessary. REFER to:<br>Glow Plug (303-07 Glow Plug System - 1.4L Duratorq-TDCi (DV) Diesel, Removal and Installation),<br>Glow Plugs (303-07 Glow Plug System - 1.6L Duratorq-TDCi (DV) Diesel, Removal and Installation). |
| | • Engine management system. | • CHECK the engine management system.<br>REFER to: Electronic Engine Controls (303-14 Electronic Engine Controls, Diagnosis and Testing). |

## DIAGNOSIS AND TESTING

| Symptom | Possible Sources | Action |
|---|---|---|
| | • Ignition system (petrol engines only). | • CHECK the ignition system. REFER to:<br>Engine Ignition (303-07 Engine Ignition, Diagnosis and Testing),<br>Engine Ignition (303-07 Engine Ignition - 2.0L Duratec-HE (MI4), Diagnosis and Testing). |
| | • Incorrect valve timing. | • CHECK and adjust the valve timing. REFER to:<br>Timing Belt (303-01 Engine - 1.25L Duratec-16V (Sigma)/1.4L Duratec-16V (Sigma)/1.6L Duratec-16V (Sigma), In-vehicle Repair),<br>Timing Chain (303-01 Engine - 1.3L Duratec-8V (Rocam), In-vehicle Repair),<br>Crankshaft Pulley (303-01 Engine - 2.0L Duratec-HE (MI4), In-vehicle Repair),<br>Timing Belt (303-01 Engine - 1.4L Duratorq-TDCi (DV) Diesel, In-vehicle Repair),<br>Timing Belt (303-01 Engine - 1.6L Duratorq-TDCi (DV) Diesel, In-vehicle Repair). |
| | • Broken or damaged timing belt/timing chain or pulley/sprocket. | • CHECK the timing belt/timing chain and sprockets/pulleys. INSTALL new components as necessary. REFER to:<br>Timing Belt (303-01 Engine - 1.25L Duratec-16V (Sigma)/1.4L Duratec-16V (Sigma)/1.6L Duratec-16V (Sigma), In-vehicle Repair),<br>Timing Belt (303-01 Engine - 1.6L Duratorq-TDCi (DV) Diesel, In-vehicle Repair),<br>Timing Chain (303-01 Engine - 1.3L Duratec-8V (Rocam), In-vehicle Repair),<br>Timing Chain (303-01 Engine - 2.0L Duratec-HE (MI4), In-vehicle Repair),<br>Timing Belt (303-01 Engine - 1.4L Duratorq-TDCi (DV) Diesel, In-vehicle Repair). |

## DIAGNOSIS AND TESTING

| Symptom | Possible Sources | Action |
|---|---|---|
| • Very poor power output or fuel consumption too high or engine running rough | • Fuel system. | • CHECK the fuel system. REFER to:<br>Fuel Charging and Controls (303-04 Fuel Charging and Controls - 1.25L Duratec-16V (Sigma)/1.4L Duratec-16V (Sigma)/1.6L Duratec-16V (Sigma), Diagnosis and Testing),<br>Fuel Charging and Controls (303-04 Fuel Charging and Controls - 1.3L Duratec-8V (Rocam), Diagnosis and Testing),<br>Fuel Charging and Controls (303-04 Fuel Charging and Controls - 1.4L Duratorq-TDCi (DV) Diesel, Diagnosis and Testing),<br>Fuel Charging and Controls (303-04 Fuel Charging and Controls - 1.6L Duratorq-TDCi (DV) Diesel, Diagnosis and Testing). |
| | • Engine intake air system. | • CHECK the intake air system.<br>REFER to: Intake Air Distribution and Filtering (303-12 Intake Air Distribution and Filtering, Diagnosis and Testing). |
| | • Exhaust system blocked. | • CHECK the exhaust system.<br>REFER to: Exhaust System (309-00 Exhaust System, Description and Operation). |
| | • Engine management system. | • CHECK the engine management system.<br>REFER to: Electronic Engine Controls (303-14 Electronic Engine Controls, Diagnosis and Testing). |
| | • Fault in ignition system (petrol engines only). | • CHECK the ignition system. REFER to:<br>Engine Ignition (303-07 Engine Ignition, Diagnosis and Testing),<br>Engine Ignition (303-07 Engine Ignition - 2.0L Duratec-HE (MI4), Diagnosis and Testing). |

## DIAGNOSIS AND TESTING

| Symptom | Possible Sources | Action |
|---|---|---|
| | • Turbocharger (diesel engine only). | • CHECK the turbocharger. REFER to:<br>Turbocharger (303-04 Fuel Charging and Controls - Turbocharger - 1.4L Duratorq-TDCi (DV) Diesel, Diagnosis and Testing),<br>Turbocharger (303-04 Fuel Charging and Controls - Turbocharger - 1.6L Duratorq-TDCi (DV) Diesel, Diagnosis and Testing). |
| | • Incorrect valve timing. Timing belt/timing sprocket or pulley/sprocket damaged. | • CHECK and adjust the valve timing. REFER to:<br>Timing Belt (303-01 Engine - 1.25L Duratec-16V (Sigma)/1.4L Duratec-16V (Sigma)/1.6L Duratec-16V (Sigma), In-vehicle Repair),<br>Timing Chain (303-01 Engine - 1.3L Duratec-8V (Rocam), In-vehicle Repair),<br>Crankshaft Pulley (303-01 Engine - 2.0L Duratec-HE (MI4), In-vehicle Repair),<br>Timing Belt (303-01 Engine - 1.4L Duratorq-TDCi (DV) Diesel, In-vehicle Repair),<br>Timing Belt (303-01 Engine - 1.6L Duratorq-TDCi (DV) Diesel, In-vehicle Repair). |
| | • Ignition timing incorrect (petrol engines only). | • CHECK the electronic engine controls.<br>REFER to: Electronic Engine Controls (303-14 Electronic Engine Controls, Diagnosis and Testing). |

## DIAGNOSIS AND TESTING

| Symptom | Possible Sources | Action |
|---|---|---|
| • Noisy running | • Engine auxiliary components loose or damaged. | • CHECK engine auxiliary components for damage or looseness. REFER to:<br>Timing Belt (303-01 Engine - 1.25L Duratec-16V (Sigma)/1.4L Duratec-16V (Sigma)/1.6L Duratec-16V (Sigma), In-vehicle Repair),<br>Timing Chain (303-01 Engine - 1.3L Duratec-8V (Rocam), In-vehicle Repair),<br>Timing Chain (303-01 Engine - 2.0L Duratec-HE (MI4), In-vehicle Repair),<br>Timing Belt (303-01 Engine - 1.4L Duratorq-TDCi (DV) Diesel, In-vehicle Repair),<br>Timing Belt (303-01 Engine - 1.6L Duratorq-TDCi (DV) Diesel, In-vehicle Repair). |
| • Noisy running, misfiring, back-firing or knocking | • Incorrect fuel | • DETERMINE which type of fuel was last put in the tank (note the country specific fuel specifications). |
| | • Water in fuel or fuel contaminated. | • CHECK the fuel system for water or other contamination. |
| | • Valve timing incorrect, timing belt/chain or pulley/sprocket damaged. | • CHECK and adjust the valve timing. REFER to:<br>Timing Belt (303-01 Engine - 1.25L Duratec-16V (Sigma)/1.4L Duratec-16V (Sigma)/1.6L Duratec-16V (Sigma), In-vehicle Repair),<br>Timing Chain (303-01 Engine - 1.3L Duratec-8V (Rocam), In-vehicle Repair),<br>Crankshaft Pulley (303-01 Engine - 2.0L Duratec-HE (MI4), In-vehicle Repair),<br>Timing Belt (303-01 Engine - 1.4L Duratorq-TDCi (DV) Diesel, In-vehicle Repair),<br>Timing Belt (303-01 Engine - 1.6L Duratorq-TDCi (DV) Diesel, In-vehicle Repair). |

## DIAGNOSIS AND TESTING

| Symptom | Possible Sources | Action |
|---|---|---|
| • Noisy running or valve train noise | • Valve clearance too large due to faulty valve tappets or worn valve train components. | • INSTALL new hydraulic lash adjusters or adjust the valve clearance. REFER to:<br>Valve Clearance Adjustment (303-01 Engine - 1.25L Duratec-16V (Sigma)/1.4L Duratec-16V (Sigma)/1.6L Duratec-16V (Sigma), General Procedures),<br>Camshaft Followers (303-01 Engine - 1.3L Duratec-8V (Rocam), In-vehicle Repair),<br>Valve Clearance Adjustment (303-01 Engine - 2.0L Duratec-HE (MI4), General Procedures),<br>Hydraulic Lash Adjuster (303-01 Engine - 1.4L Duratorq-TDCi (DV) Diesel, In-vehicle Repair),<br>Camshaft (303-01 Engine - 1.6L Duratorq-TDCi (DV) Diesel, In-vehicle Repair). |
| | • Timing belt or timing chain damaged. | • INSTALL a new timing belt or timing chain. REFER to:<br>Timing Belt (303-01 Engine - 1.25L Duratec-16V (Sigma)/1.4L Duratec-16V (Sigma)/1.6L Duratec-16V (Sigma), In-vehicle Repair),<br>Timing Chain (303-01 Engine - 1.3L Duratec-8V (Rocam), In-vehicle Repair),<br>Timing Chain (303-01 Engine - 2.0L Duratec-HE (MI4), In-vehicle Repair),<br>Timing Belt (303-01 Engine - 1.4L Duratorq-TDCi (DV) Diesel, In-vehicle Repair),<br>Timing Belt (303-01 Engine - 1.6L Duratorq-TDCi (DV) Diesel, In-vehicle Repair). |

## DIAGNOSIS AND TESTING

| Symptom | Possible Sources | Action |
|---|---|---|
| | • Timing belt or timing chain incorrectly tensioned. | • CHECK the timing belt or timing chain tension. INSTALL a new timing belt or timing chain as necessary. REFER to:<br>Timing Belt (303-01 Engine - 1.25L Duratec-16V (Sigma)/1.4L Duratec-16V (Sigma)/1.6L Duratec-16V (Sigma), In-vehicle Repair),<br>Timing Chain (303-01 Engine - 1.3L Duratec-8V (Rocam), In-vehicle Repair),<br>Timing Chain (303-01 Engine - 2.0L Duratec-HE (MI4), In-vehicle Repair),<br>Timing Belt (303-01 Engine - 1.4L Duratorq-TDCi (DV) Diesel, In-vehicle Repair),<br>Timing Belt (303-01 Engine - 1.6L Duratorq-TDCi (DV) Diesel, In-vehicle Repair). |
| • Noisy running or engine noise | • Engine components<br>- Pistons<br>- Piston rings<br>- Connecting rod big end, main bearing or thrust bearing journals<br>- Connecting rods bent or damaged. | • CHECK the engine components for wear or damage. Make sure all components are within specification. INSTALL new components as necessary. |

## Engine - Oil Leaks

**NOTE:**Before installing new gaskets or seals, make sure that the fault is clearly established.

If the oil leak cannot be identified clearly by a visual inspection, carry out an ultraviolet (UV) test:

## Ultraviolet (UV) Testing

1. Clean the engine and transmission with a suitable cleaning fluid.
2. Pour the UV-test fluid in accordance with the quantity specified by the manufacturer through the oil filler neck into the engine and install the oil filler cap.

▲ **WARNING:Vehicles with manual transaxle, shift the transaxle into Neutral. Failure to follow this instruction may result in personal injury.**

3. Start the engine and let it run for about five minutes.
4. Switch off the engine.

**NOTE:**If no leak can be found, road test the vehicle under various loads and check the engine for leaks again.

5. Check the engine for oil leaks using a suitable UV lamp.
6. Rectify any leaks found and check the engine for oil leaks.

## Measure the compression pressure

**NOTE:**The powertrain control module (PCM) receives an error message when the fuel pump relay is removed or electrical components are disconnected. This error message must be deleted from the fault memory using WDS after completing the compression test.

**NOTE:**Valve clearance must be set correctly before performing a compression test. Make sure the engine is at the normal operating temperature.

## DIAGNOSIS AND TESTING

**NOTE:** The varying design of compression checking devices and fluctuating starter motor speeds normally only allows for a comparison to be made of the compression pressures in all cylinders.

### Measure the compression pressure (Engine - 1.4L Duratorq-TDCi (DV) Diesel)

1. Remove the air cleaner.

   REFER to: Air Cleaner - 1.4L Duratorq-TDCi (DV) Diesel (303-12 Intake Air Distribution and Filtering, Removal and Installation).

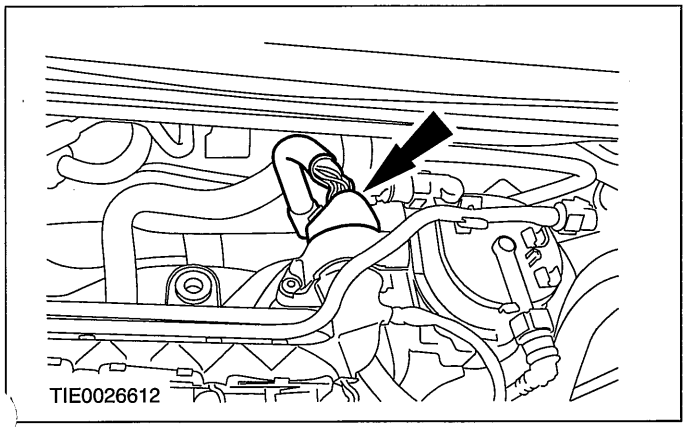


2. Disconnect the fuel injector wiring harness main connector.

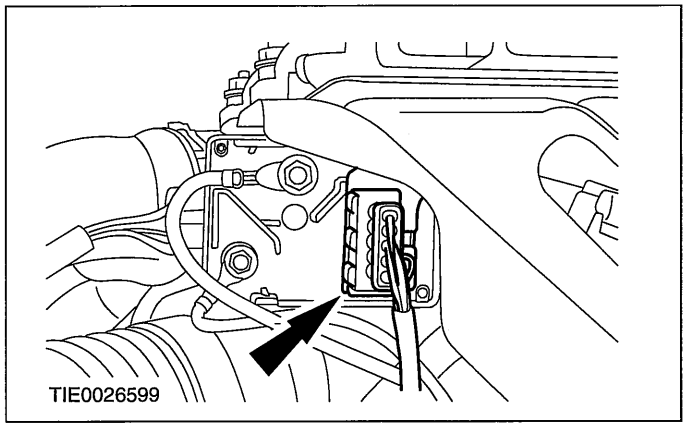


3. Disconnect the glow plug relay electrical connector.

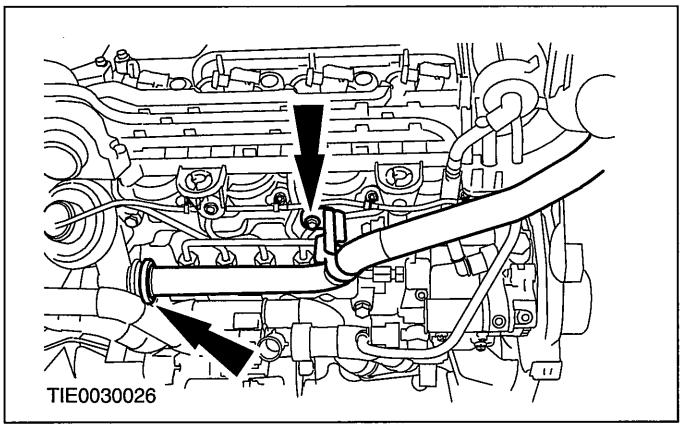


4. Detach the exhaust gas recirculation (EGR) tube from the cylinder block and from the EGR valve (if equipped).

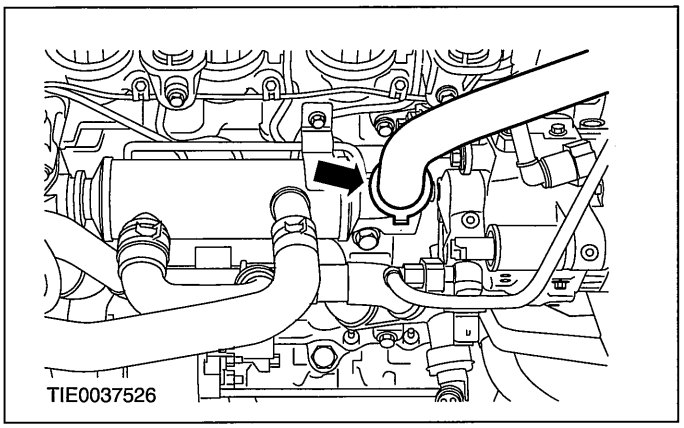


5. Detach the EGR tube from the EGR cooler (if equipped).

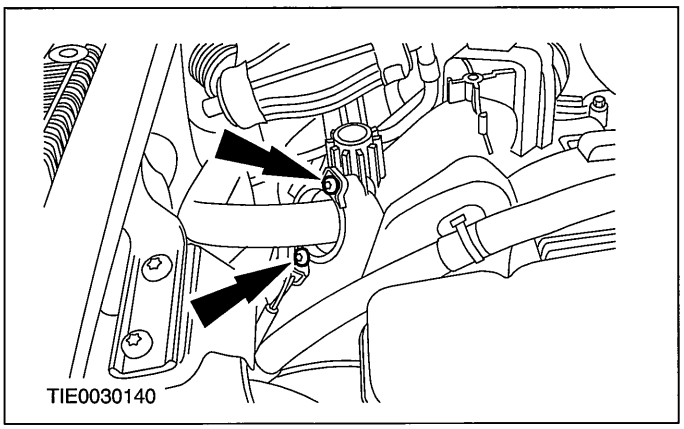


6. Remove the EGR tube from the intake manifold assembly.

## DIAGNOSIS AND TESTING

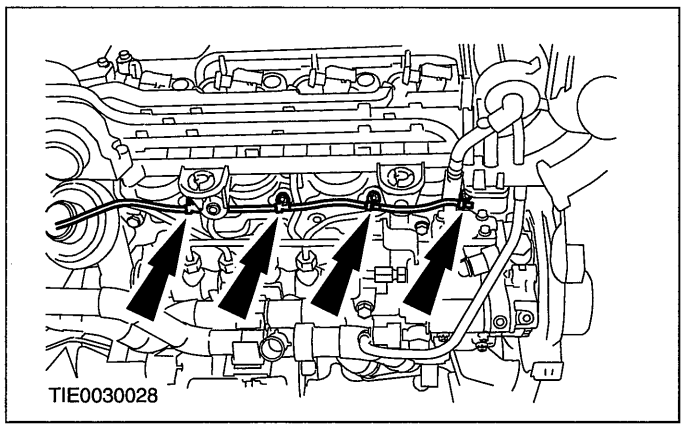


7. Disconnect the glow plug electrical connectors.

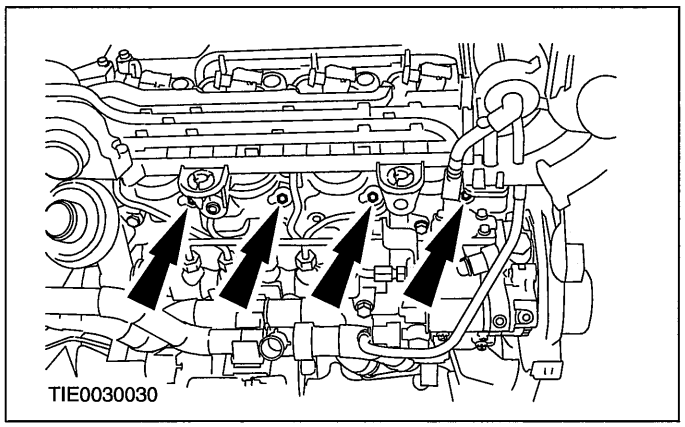


8. Remove the glow plugs.

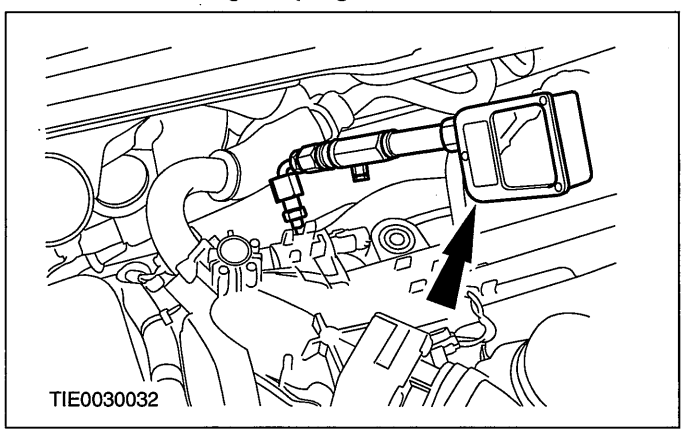


9. Install a suitable compression pressure recorder with a suitable adapter into the glow plug bore.

**NOTE:** Operate the starter motor until the reading on the compression tester stops rising.

10. Carry out the measurement in accordance with the instructions supplied with the measuring device on every cylinder using a suitable compression pressure recorder with a suitable adapter.

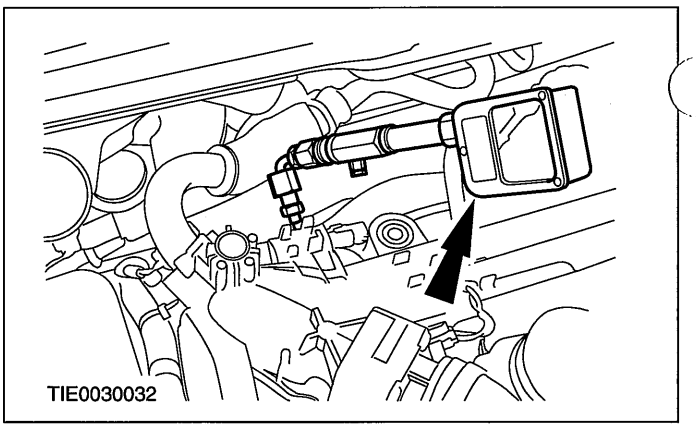


11. Detach the compression tester and adapter.

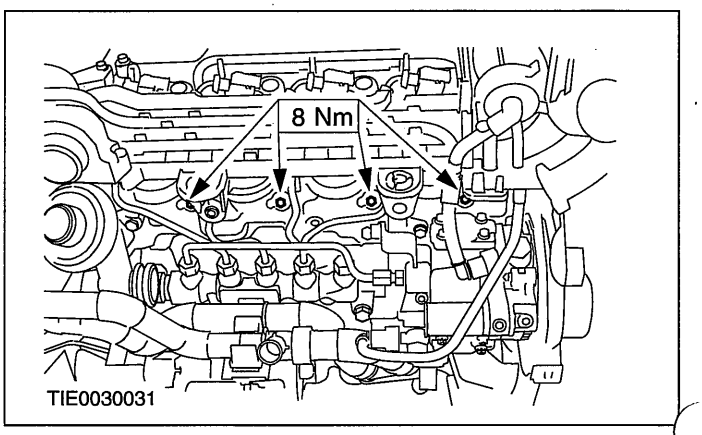


12. Install the glow plugs.

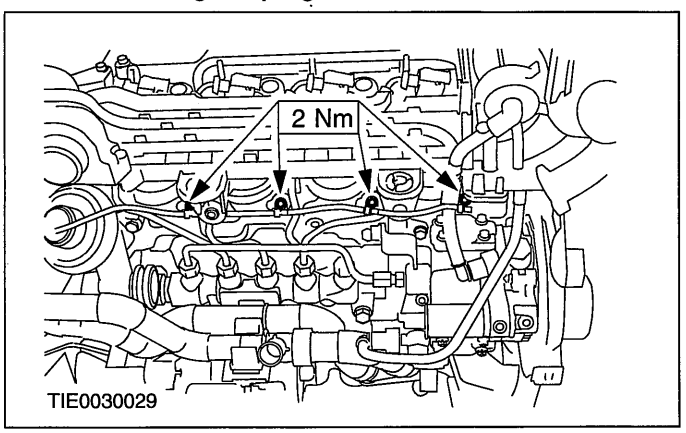


13. Connect the glow plug electrical connectors.

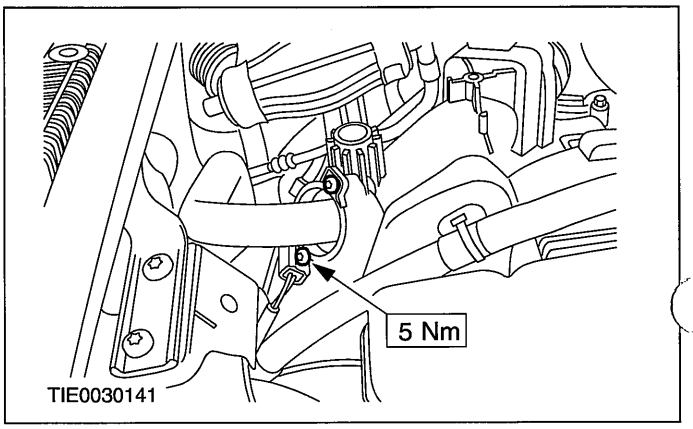

## DIAGNOSIS AND TESTING

14. **NOTE:Check the EGR tube O-ring seal. Install a new seal if necessary.**

    Install the EGR tube to the intake manifold assembly.

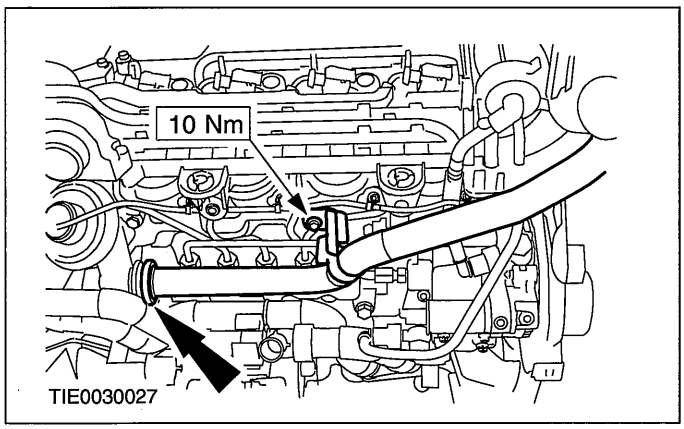


15. Attach the EGR tube to the cylinder block and to the EGR valve (if equipped).

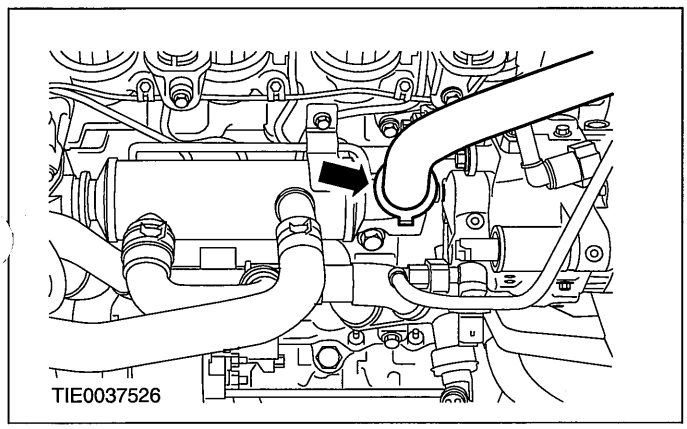


16. Attach the EGR tube to the EGR cooler (if equipped).

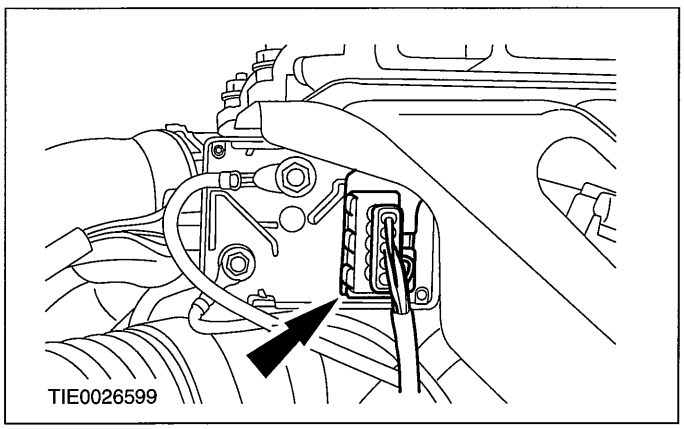


17. Connect the glow plug relay electrical connector.

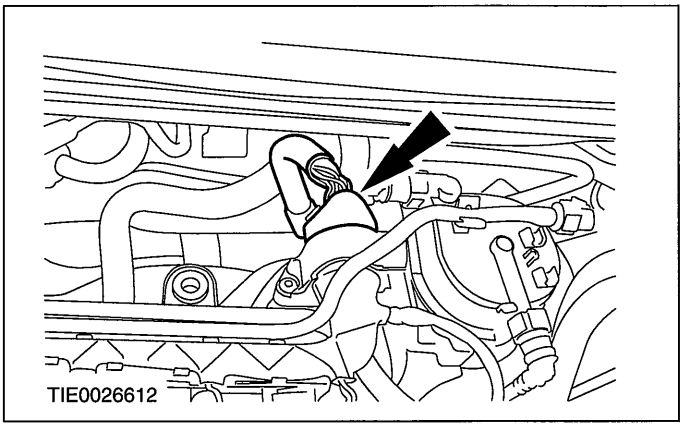


18. Connect the fuel injector wiring harness main connector.
19. Install the air cleaner.

    REFER to: Air Cleaner - 1.4L Duratorq-TDCi (DV) Diesel (303-12 Intake Air Distribution and Filtering, Removal and Installation).
20. Using worldwide diagnostic system (WDS), clear the fault codes from the PCM.

## Measure the compression pressure (Engine - 1.6L Duratorq-TDCi (DV) Diesel)

**WARNINGS:**

▲ **Do not smoke or carry lighted tobacco or open flame of any type when working on or near any fuel related components. Highly flammable mixtures are always present and can ignite. Failure to follow these instructions may result in personal injury.**

▲ **Do not carry out any repairs to the fuel injection system without checking that the fuel pressure has dropped to zero and that the fuel temperature has either reached ambient temperature or is below 30° C, whichever is the greater. Failure to follow these instructions may result in personal injury.**

1. Using datalogger in world wide diagnostic system (WDS), check that the fuel pressure has dropped to zero and that the fuel temperature has either reached ambient temperature or is below 30°C, whichever is the greater.
2. Raise and support the vehicle. REFER to: (100-02 Jacking and Lifting)

   Jacking (Description and Operation), Lifting (Description and Operation).

## DIAGNOSIS AND TESTING

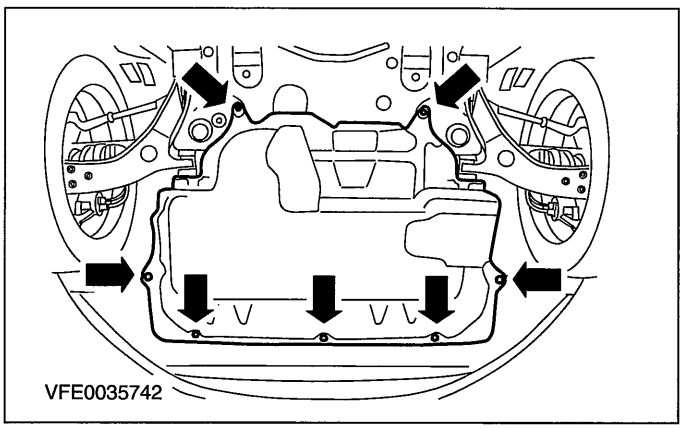


3. Remove the engine undershield.

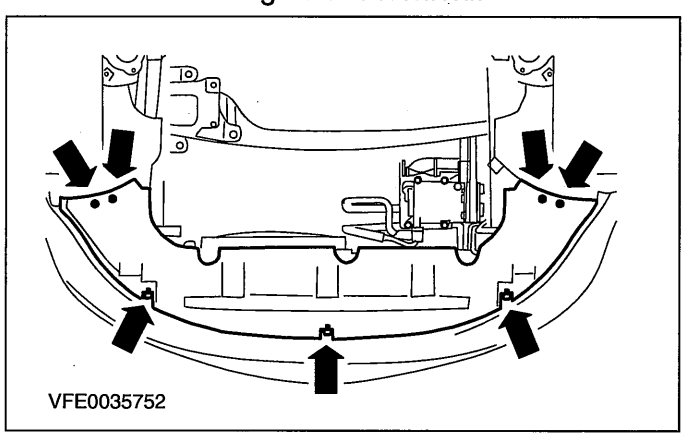


4. Remove the radiator undershield.

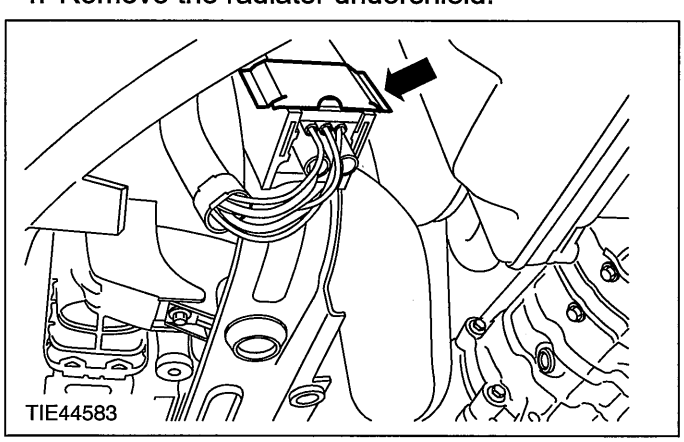


5. Remove the glow plug relay.
6. Lower the vehicle.

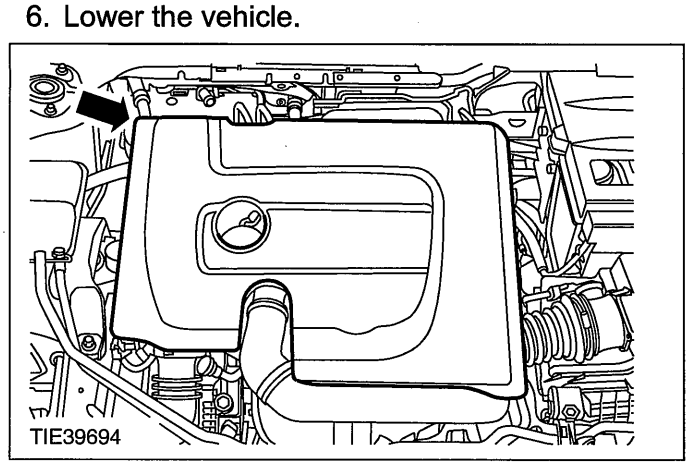


7. Remove the engine upper cover.

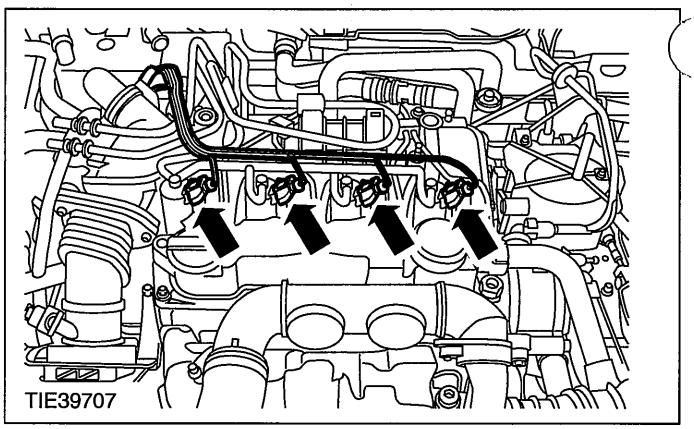


8. **⚠CAUTION:Do not disconnect the fuel injection pump electrical connectors and crank the engine.**

   Disconnect the fuel injector electrical connectors.

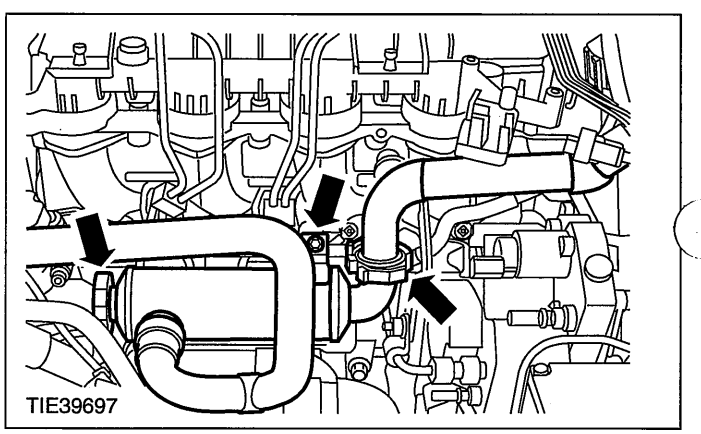


9. Detach the exhaust gas recirculation (EGR) cooler (if equipped) and position it to one side.

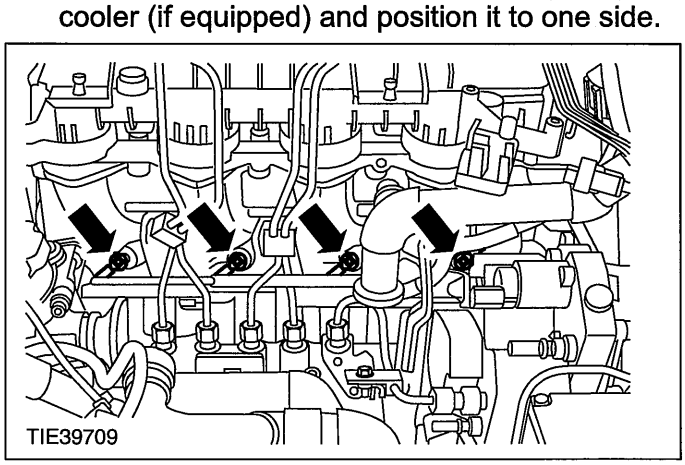


10. Remove the glow plug power supply.

## DIAGNOSIS AND TESTING

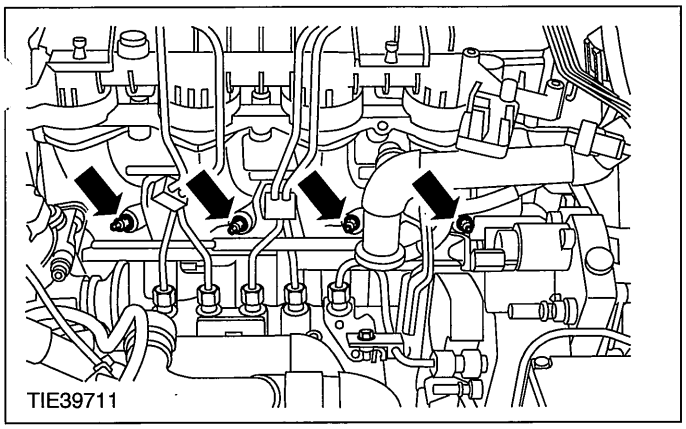


11. Remove the glow plugs.

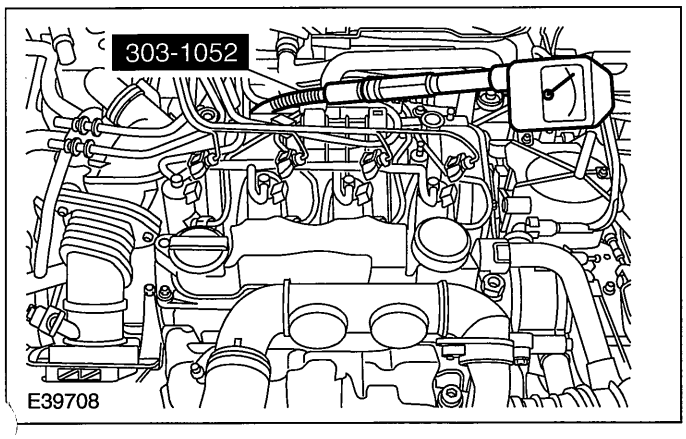


12. Install the special tool and a suitable compression tester into the glow plug bore.

**NOTE:** Crank the engine with the starter motor until the reading on the compression tester stops rising.

13. Carry out the measurement on all cylinders, following the measuring equipment manufacturer's instructions.
14. Detach the compression tester and the special tool.

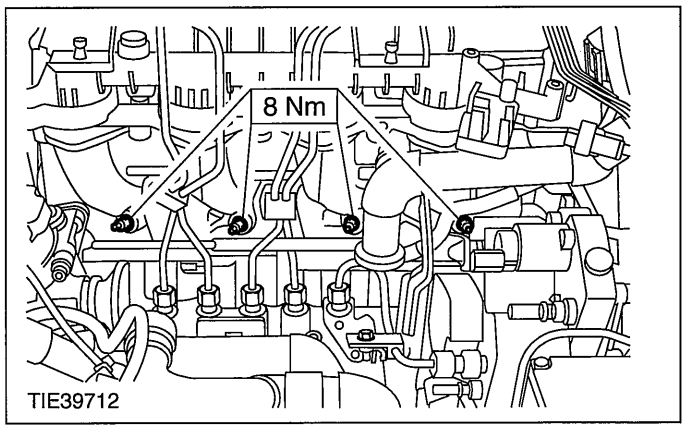


15. Install the glow plugs.

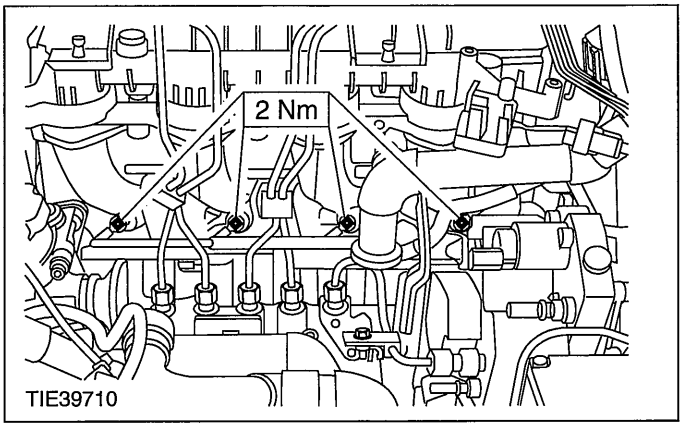


16. Install the glow plug power supply.

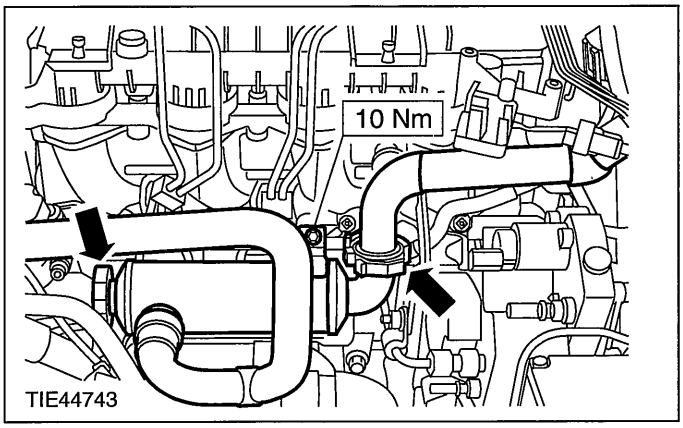


17. Attach the EGR cooler (if equipped).

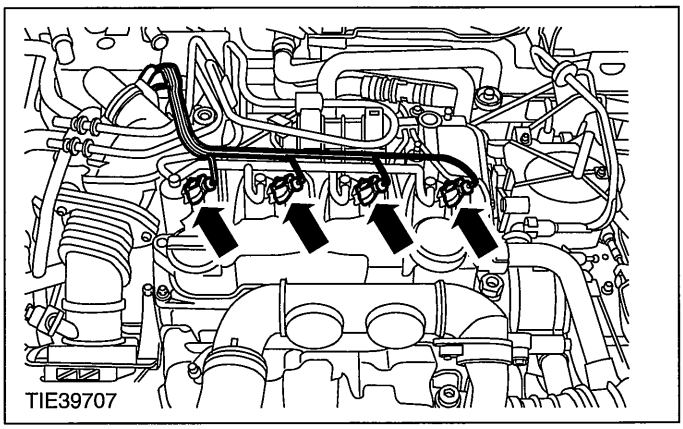


18. Connect the fuel injector electrical connectors.

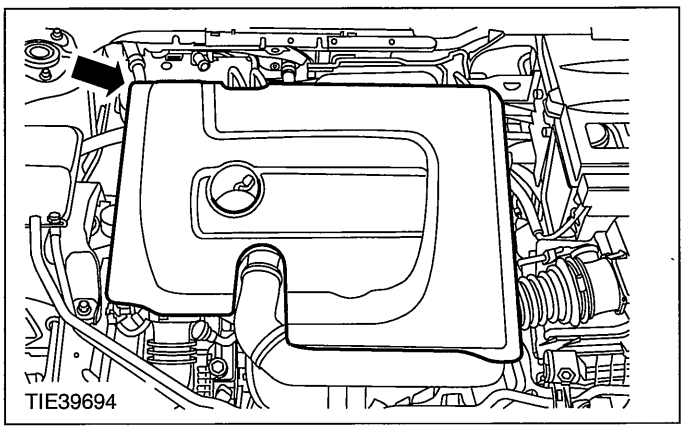

## DIAGNOSIS AND TESTING

19. Install the engine upper cover.
20. Raise and support the vehicle. REFER to: (100-02 Jacking and Lifting)

    Jacking (Description and Operation), Lifting (Description and Operation).

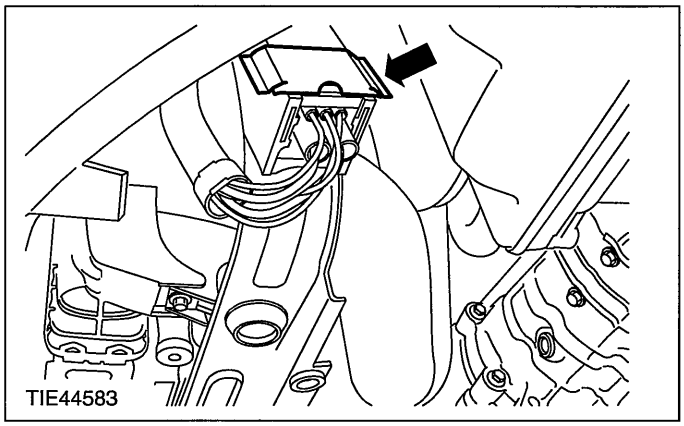
TIE44583

21. Install the glow plug relay.

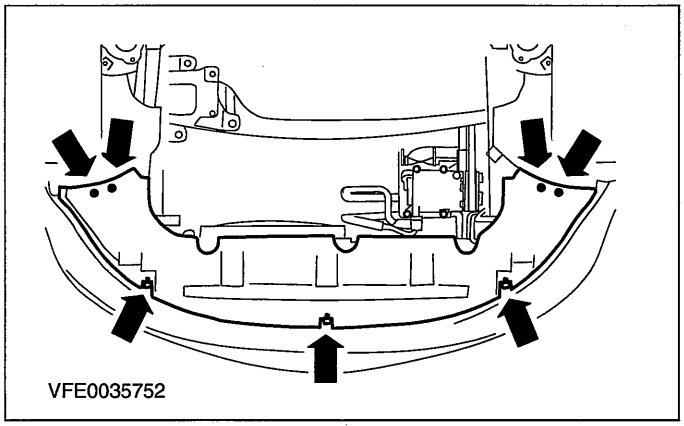
VFE0035752

22. Install the radiator undershield.

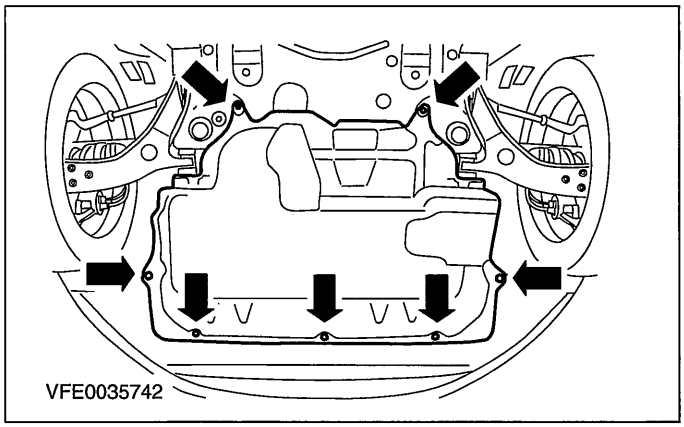
VFE0035742

23. Install the engine undershield.
24. Lower the vehicle.
25. Reset the PCM fault memory.

## Measure the compression pressure (Engine - 1.25L Duratec-16V (Sigma)/1.4L Duratec-16V (Sigma)/1.6L Duratec-16V (Sigma))

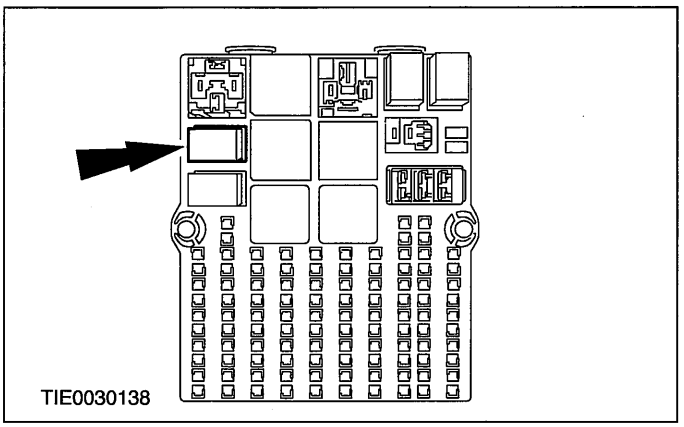
TIE0030138

1. Open the central junction box (CJB) and remove the fuel pump relay.

**NOTE:** The engine will start, run for a few seconds and then stop.

2. Start the engine.
3. Remove the air cleaner.

   REFER to: Air Cleaner - 1.25L Duratec-16V (Sigma)/1.4L Duratec-16V (Sigma)/1.6L Duratec-16V (Sigma) (303-12 Intake Air Distribution and Filtering, Removal and Installation).

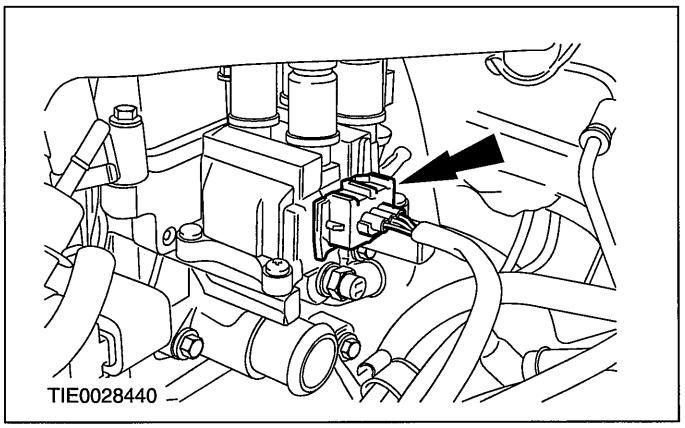
TIE0028440

4. Disconnect the electronic ignition (EI) coil connector from the EI coil.

## DIAGNOSIS AND TESTING

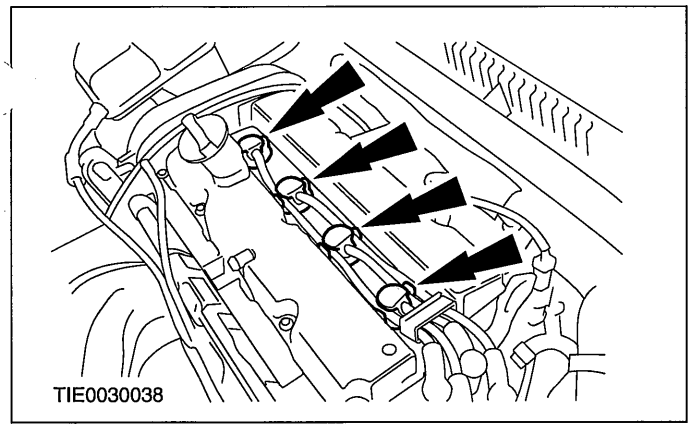


**NOTE:** Twist the spark plug connectors slightly before disconnecting them. Pull on the connector and not on the cable.

5. Disconnect the spark plug connectors.

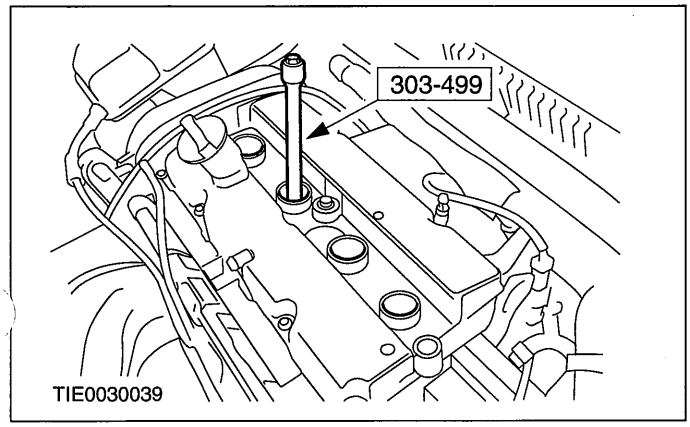


6. Using the special tool, remove the spark plugs.

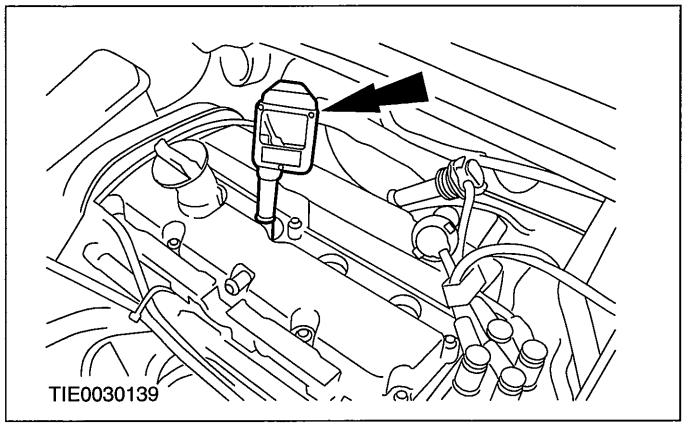


**NOTE:** Operate the starter motor with wide open throttle until the reading on the compression tester stops rising.

7. Carry out the measurement in accordance with the instructions supplied with the measuring device on every cylinder using a suitable compression pressure recorder with the suitable adapter.

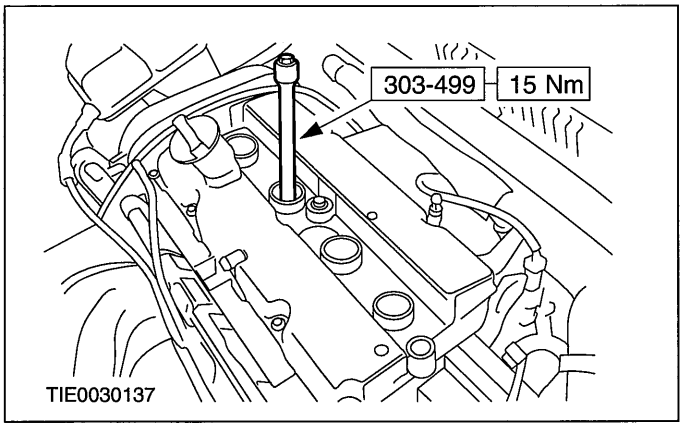


8. Using the special tool, install the spark plugs.

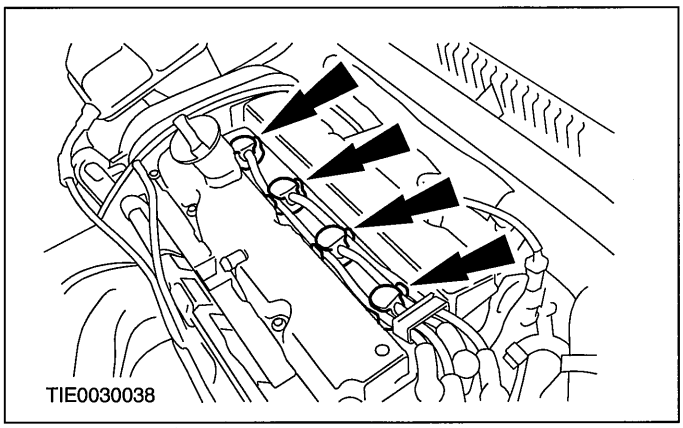


9. Connect the spark plug connectors.

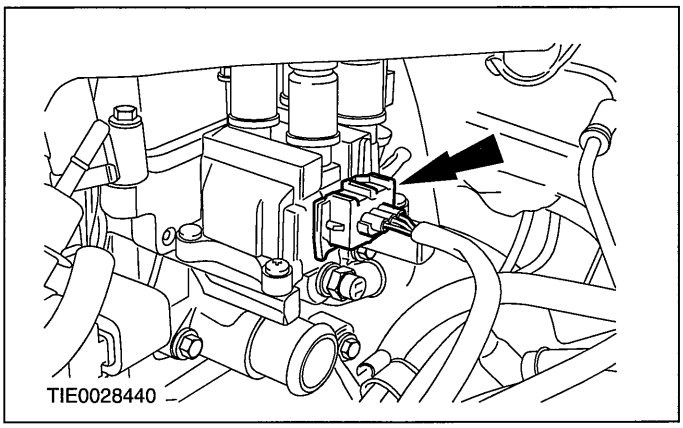


10. Connect the EI coil electrical connector to the EI coil.

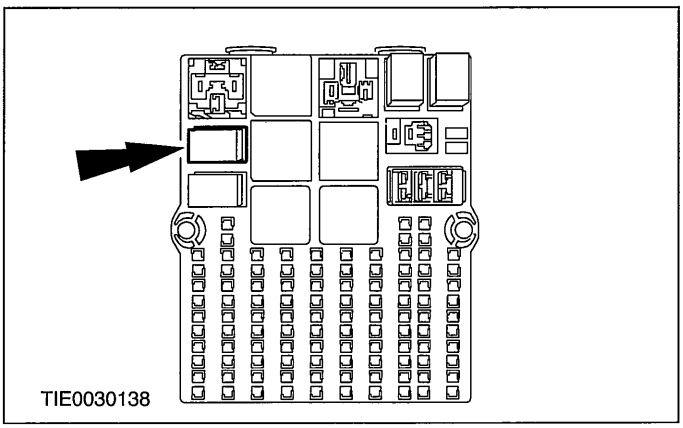

## DIAGNOSIS AND TESTING

11. Install the fuel pump relay.
12. Install the air cleaner.

    REFER to: Air Cleaner - 1.25L Duratec-16V (Sigma)/1.4L Duratec-16V (Sigma)/1.6L Duratec-16V (Sigma) (303-12 Intake Air Distribution and Filtering, Removal and Installation).
13. Using worldwide diagnostic system (WDS), clear the fault codes from the PCM.

### Measure the compression pressure (Engine - 1.3L Duratec-8V (Rocam))

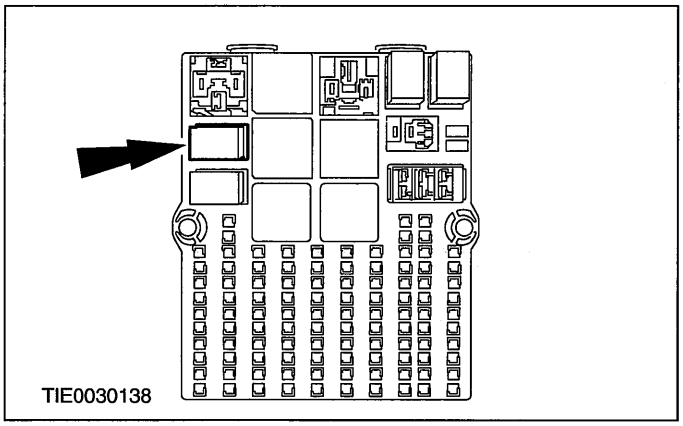
TIE0030138

1. Open the central junction box (CJB) and remove the fuel pump relay.

**NOTE:** The engine will start, run for a few seconds and then stop.

2. Start the engine.
3. Remove the air cleaner.

    REFER to: Air Cleaner - 1.3L Duratec-8V (Rocam) (303-12 Intake Air Distribution and Filtering, Removal and Installation).

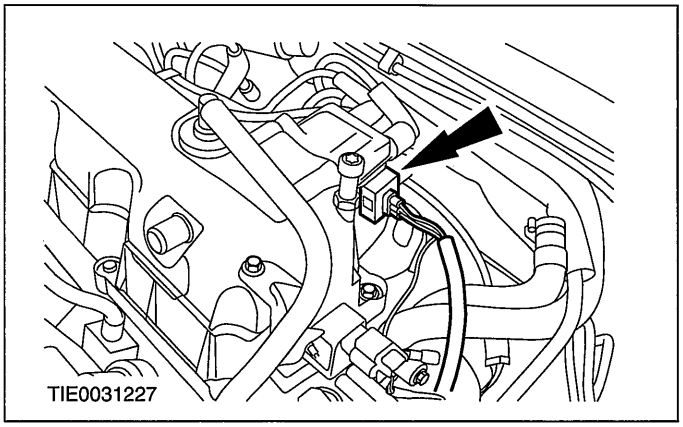
TIE0031227

4. Disconnect the electronic ignition (EI) coil electrical connector from the EI coil.

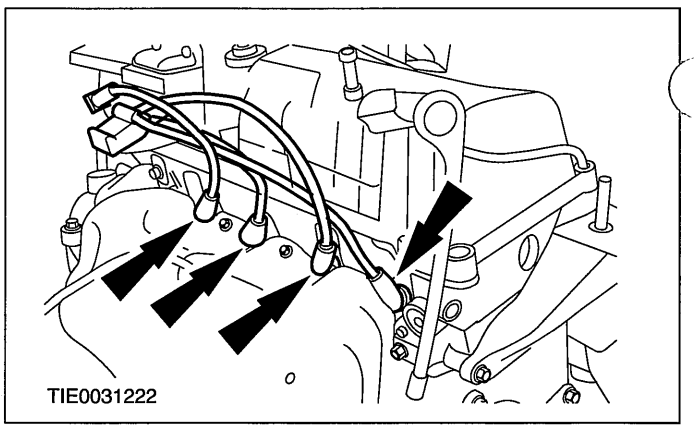
TIE0031222

**NOTE:** Twist the spark plug connectors slightly before disconnecting them. Pull on the connector and not on the cable.

5. Disconnect the spark plug connectors.

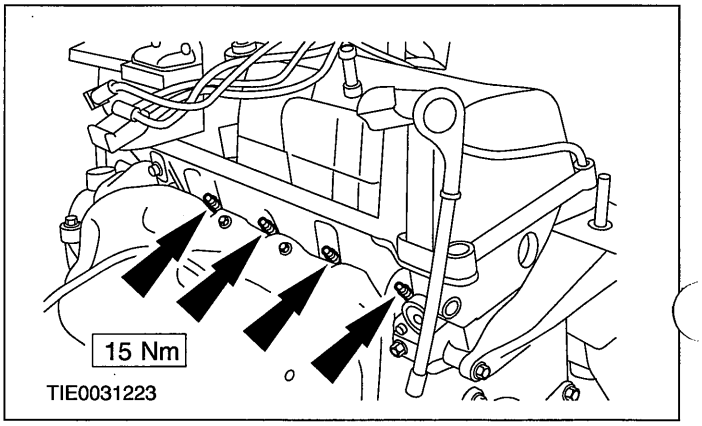

TIE0031223

6. Remove the spark plugs.

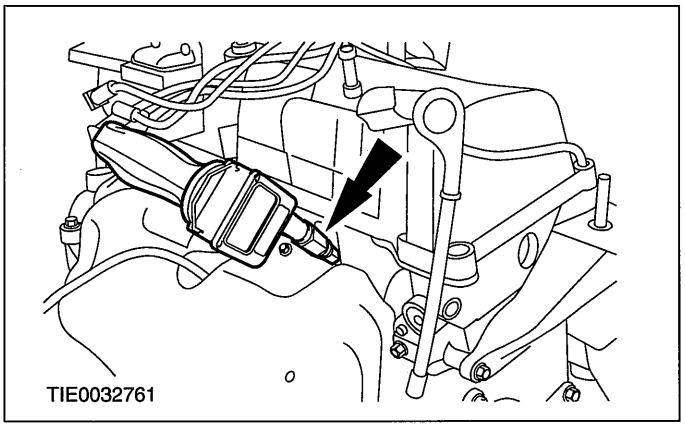
TIE0032761

**NOTE:** Operate the starter motor with wide open throttle until the reading on the compression tester stops rising.

7. Carry out the measurement in accordance with the instructions supplied with the measuring device on every cylinder using a suitable compression pressure recorder with the suitable adapter.

## DIAGNOSIS AND TESTING

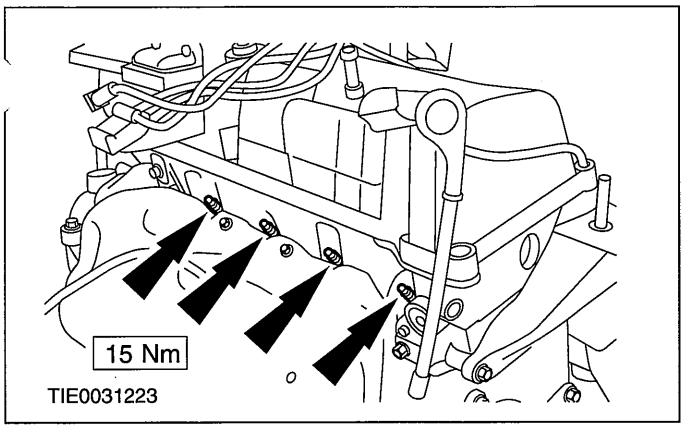


8. Install the spark plugs.

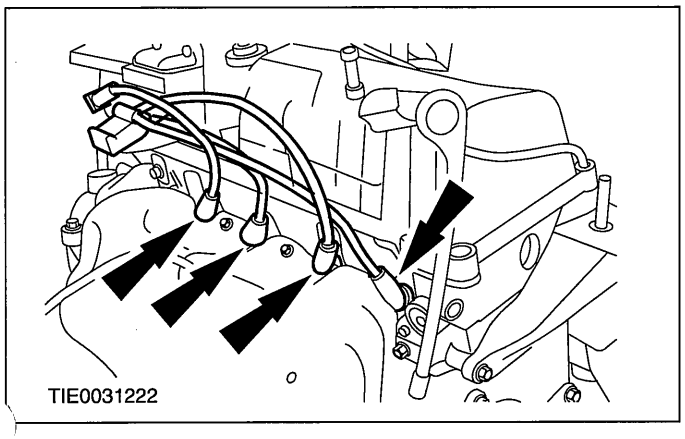


9. Connect the spark plug connectors.

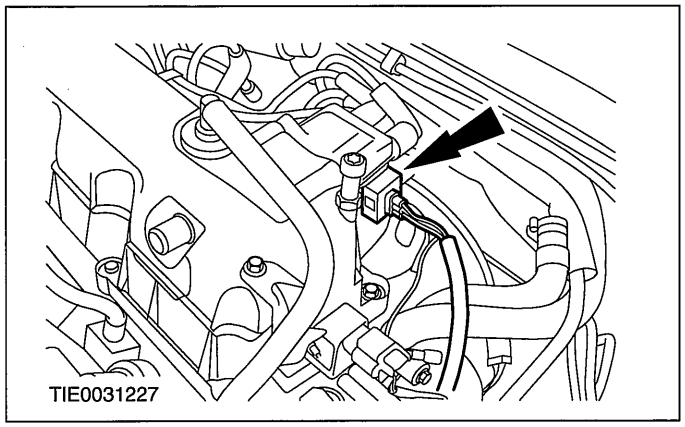


10. Connect the EI coil electrical connector to the EI coil.

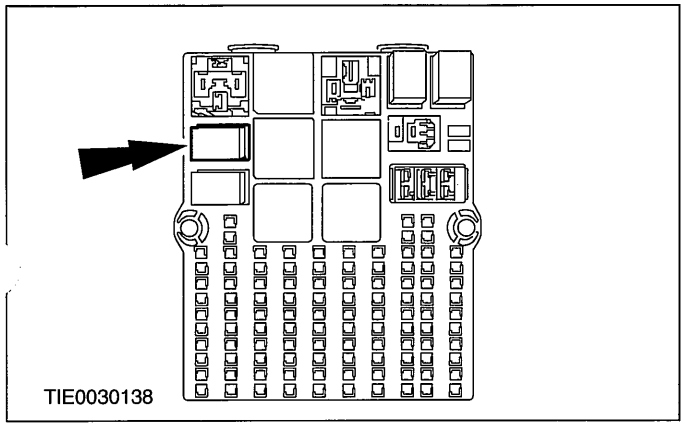


11. Install the fuel pump relay.
12. Install the air cleaner.

    REFER to: Air Cleaner - 1.3L Duratec-8V (Rocam) (303-12 Intake Air Distribution and Filtering, Removal and Installation).

13. Using worldwide diagnostic system (WDS), clear the fault codes from the PCM.

## Measure the compression pressure (Engine - 2.0L Duratec-HE (MI4))

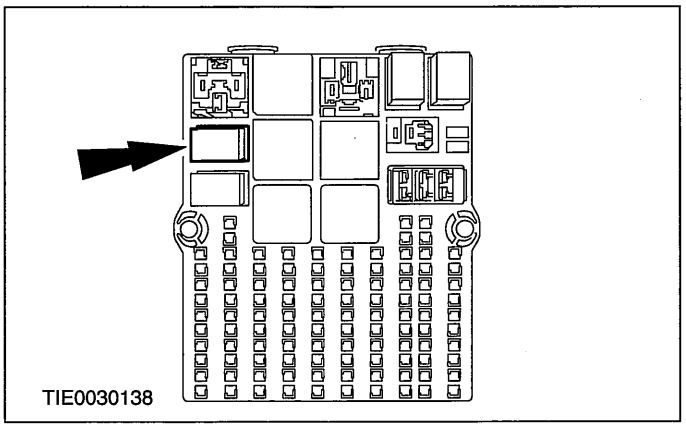


1. Open the central junction box (CJB) and remove the fuel pump relay.

**NOTE:** The engine will start, run for a few seconds and then stop.

2. Start the engine.
3. Remove the air cleaner.

    REFER to: Air Cleaner - 2.0L Duratec-HE (MI4) (303-12 Intake Air Distribution and Filtering, Removal and Installation).

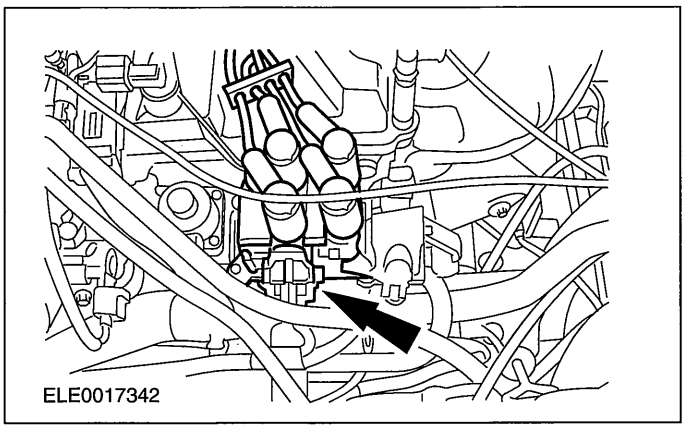


4. Disconnect the electronic ignition (EI) coil electrical connector from the EI coil.

## DIAGNOSIS AND TESTING

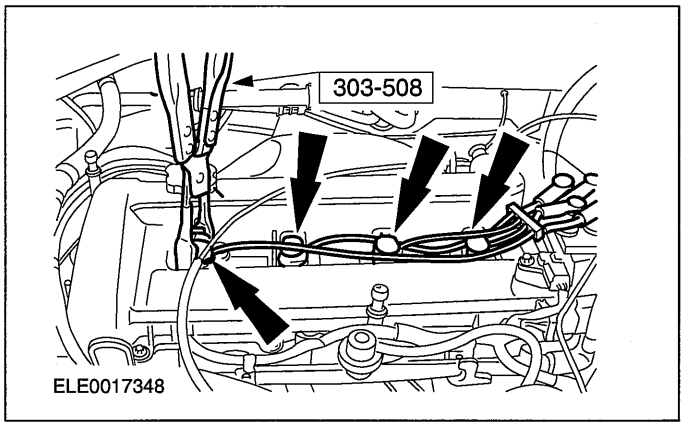


**NOTE:** Twist the spark plug connectors slightly before disconnecting them. Pull on the connector and not on the cable.

5. Using the special tool, remove the spark plug connectors.

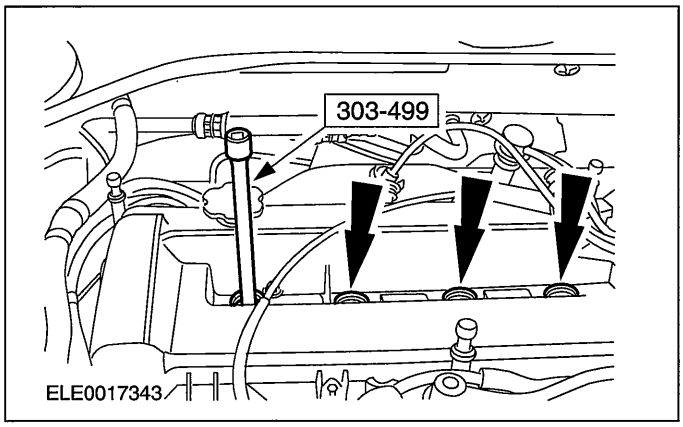


6. Using the special tool, remove the spark plugs.

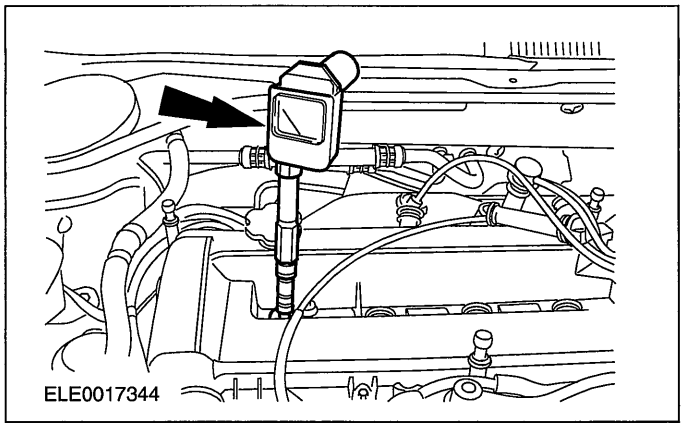


**NOTE:** Operate the starter motor with wide open throttle until the pointer on the measuring device stops rising.

7. Carry out the measurement in accordance with the instructions supplied with the measuring device on every cylinder using compression pressure recorder 623.000.101 with the suitable adapter.

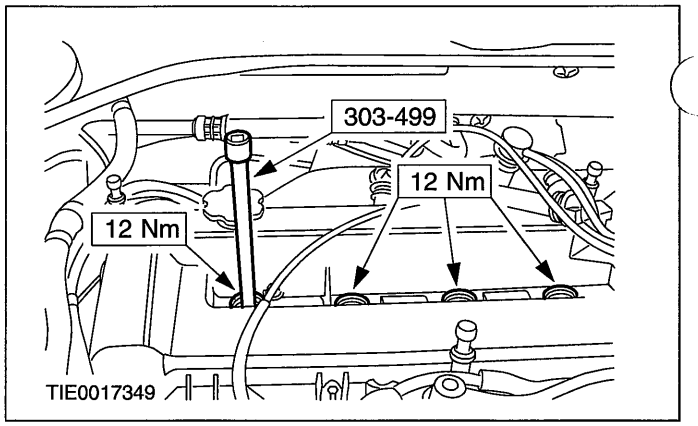


8. Using the special tool, install the spark plugs.

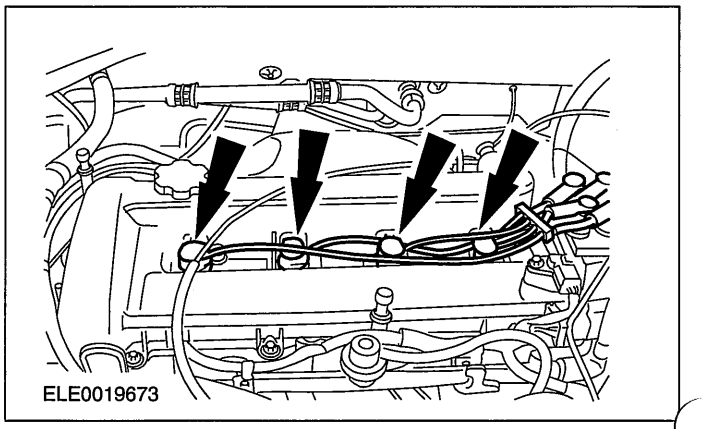


9. Install the spark plug connectors.

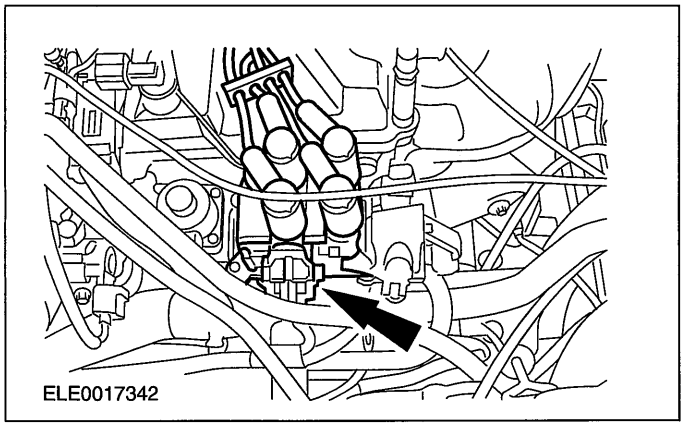


10. Connect the EI coil electrical connector to the EI coil.

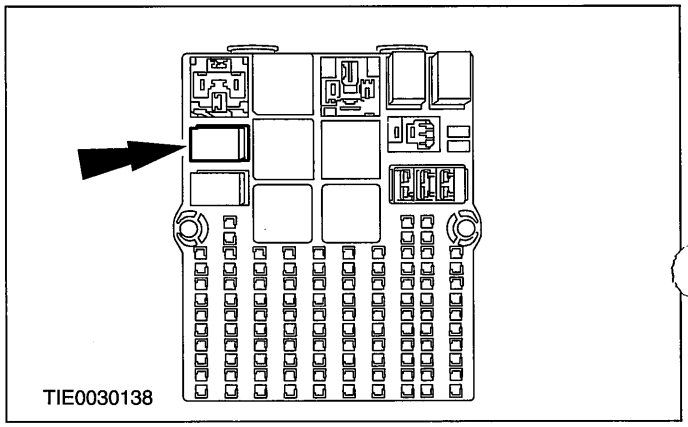

## DIAGNOSIS AND TESTING

11. Install the fuel pump relay.
12. Install the air cleaner.

    REFER to: Air Cleaner - 2.0L Duratec-HE (MI4) (303-12 Intake Air Distribution and Filtering, Removal and Installation).
13. Reset the PCM fault memory.

### Measure the oil pressure (Engine - 1.4L Duratorq-TDCi (DV) Diesel)

**NOTE:**The oil pressure depends on various factors (engine speed, oil temperature, oil viscosity, extent of oil filter contamination).

**NOTE:**Measure the oil pressure at the specified engine speed.

1. Raise and support the vehicle. REFER to: (100-02 Jacking and Lifting)

   Jacking (Description and Operation), Lifting (Description and Operation).

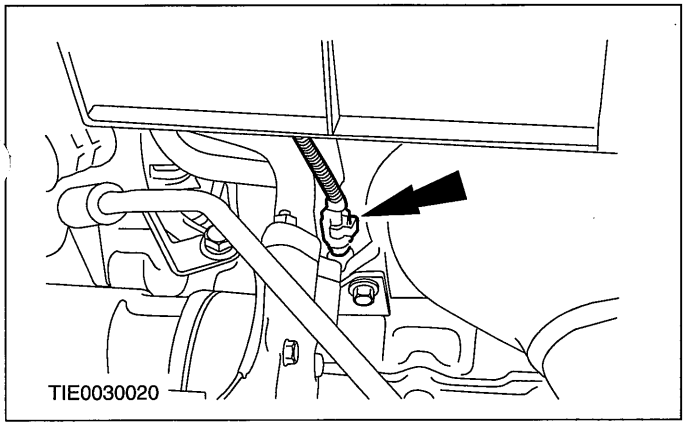


2. Disconnect the oil pressure switch electrical connector from the oil pressure switch.

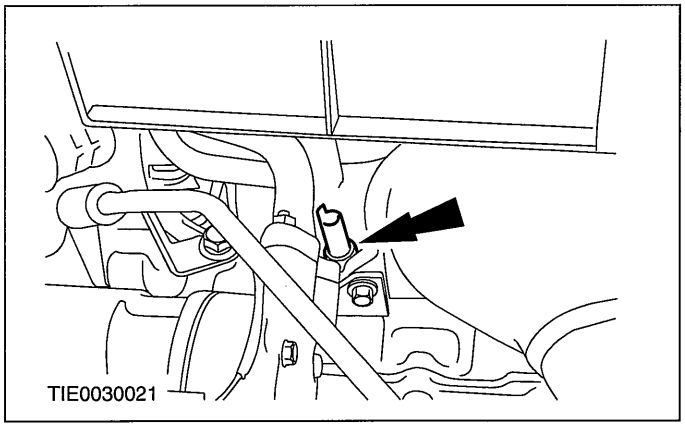


3. Remove the oil pressure switch.
   - Discard the washer.

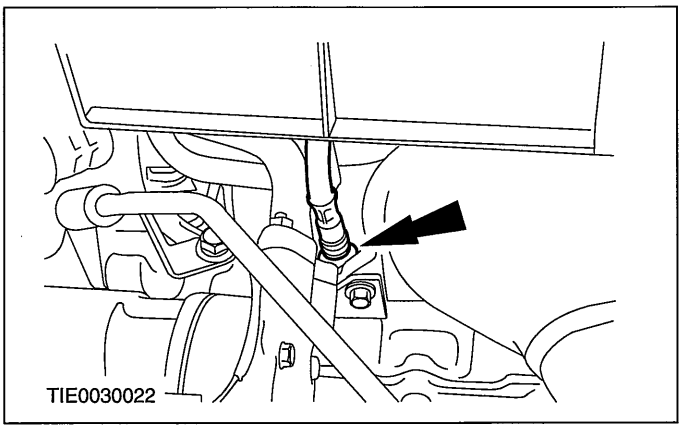


4. Attach the oil pressure gauge with the oil pressure gauge connector, and position it to allow reading from above.
5. Lower the vehicle.

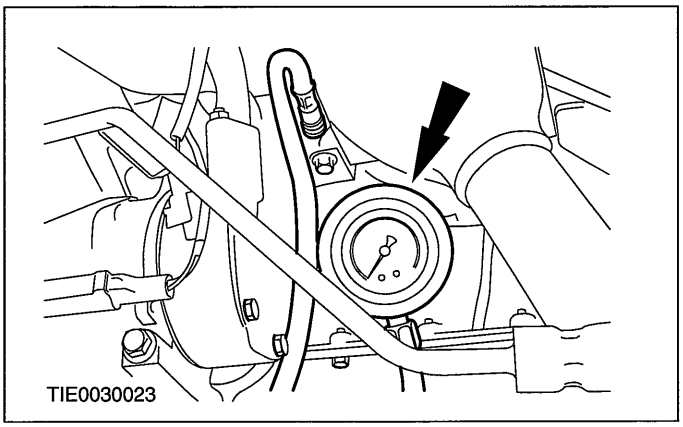


6. **NOTE:Measure the oil pressure at an oil temperature of 110°C.**

**NOTE:**Oil pressure at 2000 rpm: 2.3 to 3.7 bar.

Measure the oil pressure.

7. Raise and support the vehicle. Engine - 1.4L Duratorq-TDCi (DV) Diesel

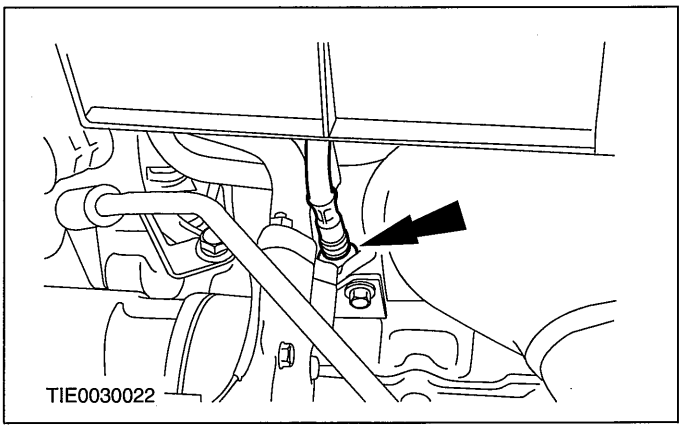


8. Remove the oil pressure gauge and the oil pressure gauge connector.

## DIAGNOSIS AND TESTING

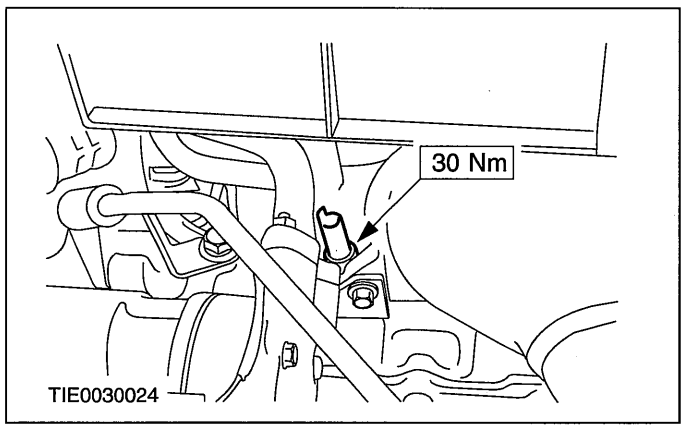


9. **NOTE:Install a new oil pressure switch washer.**

   Install the oil pressure switch.

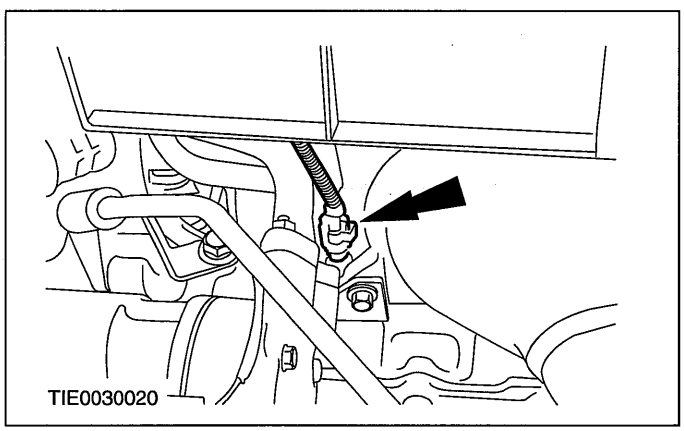


10. Connect the oil pressure switch electrical connector to the oil pressure switch.
11. Lower the vehicle.

### Measure the oil pressure (Engine - 1.6L Duratorq-TDCi (DV) Diesel)

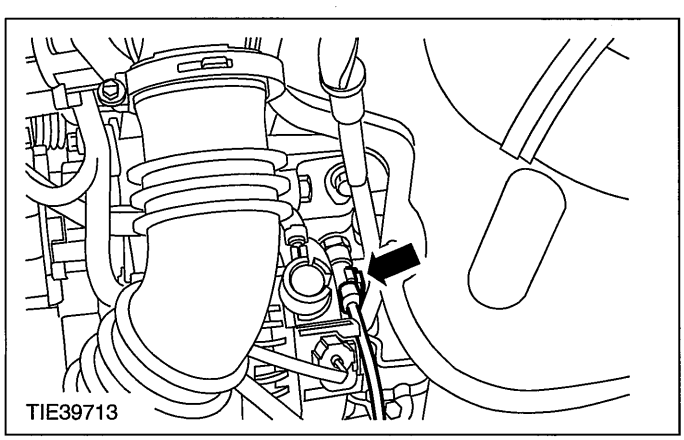


1. Disconnect the oil pressure switch electrical connector from the oil pressure switch.

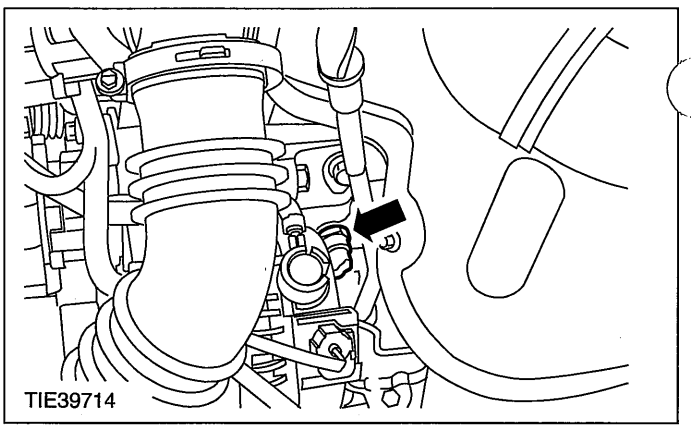


2. Remove the oil pressure switch.

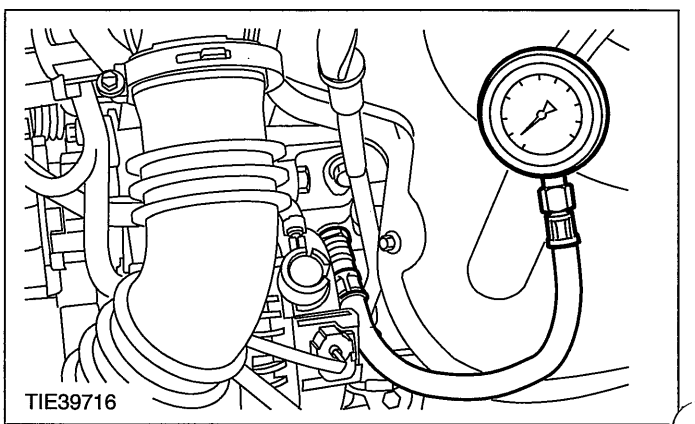


3. Attach the oil pressure gauge with the oil pressure gauge connector.
4. **NOTE:Measure the oil pressure at the specified engine speed. Measure the oil pressure at an oil temperature of 125°C.**

**NOTE:**Measure the oil pressure at idle speed and at 2000 rpm.

   Check the oil pressure.

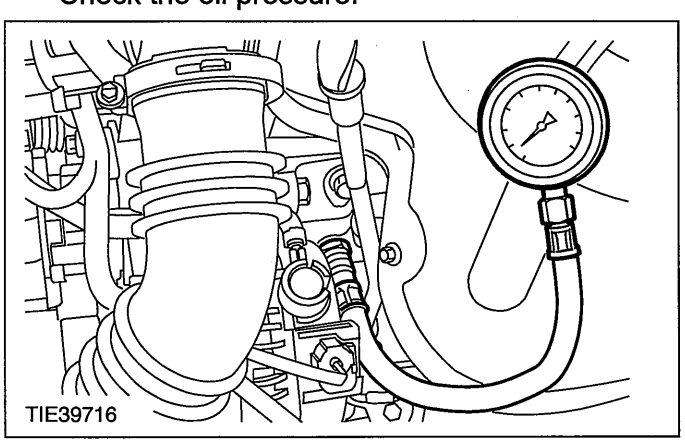


5. Detach the oil pressure gauge and the oil pressure gauge connector.
6. Coat the oil pressure switch with adhesive.

## DIAGNOSIS AND TESTING

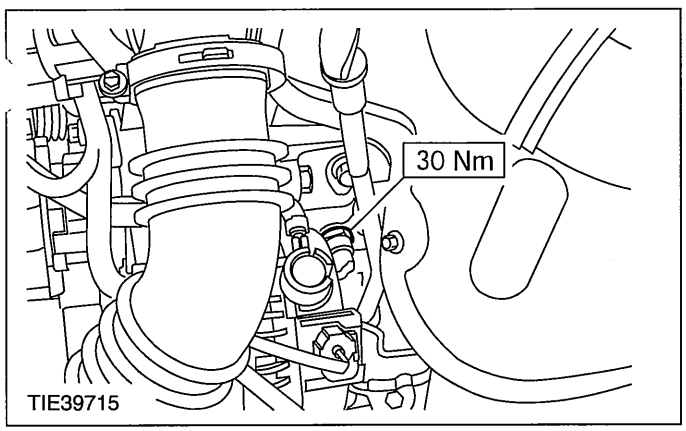


7. Install the oil pressure switch.

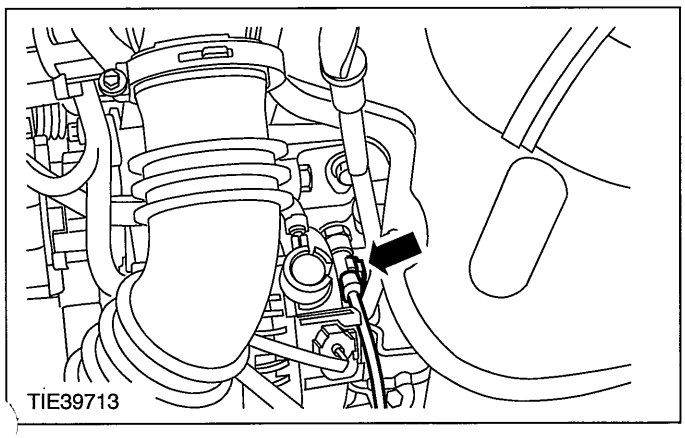


8. Connect the oil pressure switch electrical connector to the oil pressure switch.

### Measure the oil pressure (Engine - 1.25L Duratec-16V (Sigma)/1.4L Duratec-16V (Sigma)/1.6L Duratec-16V (Sigma))

**NOTE:** The oil pressure depends on various factors (engine speed, oil temperature, oil viscosity, extent of oil filter contamination).

**NOTE:** Measure the oil pressure at the specified engine speed.

1. Raise and support the vehicle. REFER to: (100-02 Jacking and Lifting)

   Jacking (Description and Operation), Lifting (Description and Operation).

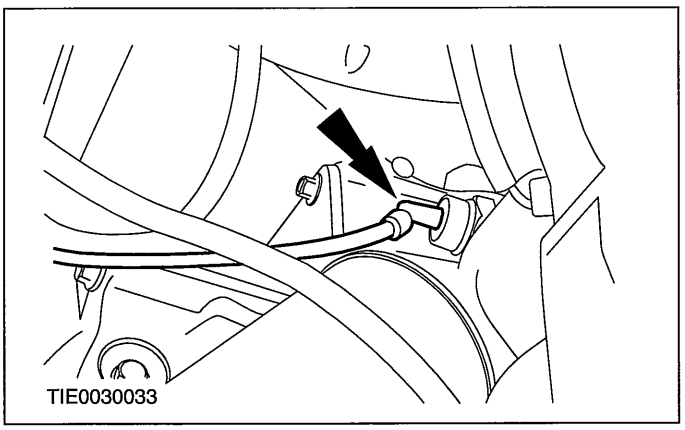


2. Disconnect the oil pressure switch electrical connector from the oil pressure switch.

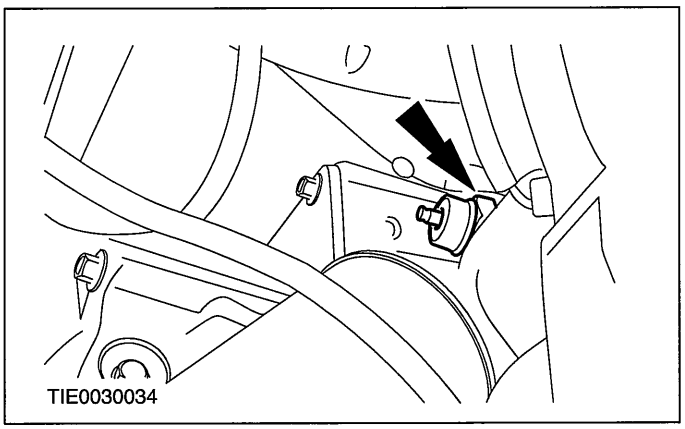


3. Remove the oil pressure switch.

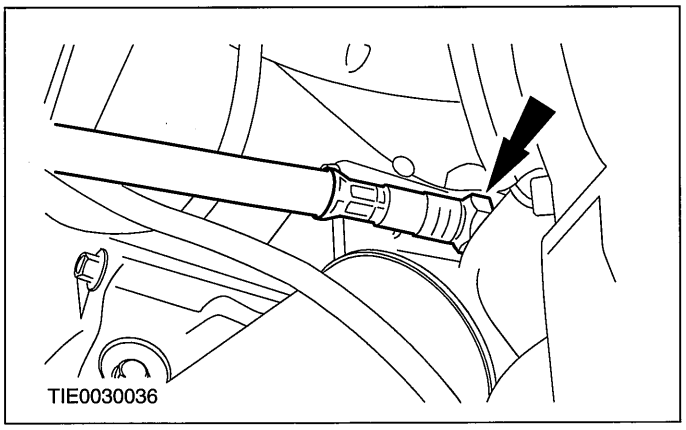


4. Attach the oil pressure gauge with the oil pressure gauge connector to the oil pressure switch bore, and position it to allow reading from above.
5. Lower the vehicle.

## DIAGNOSIS AND TESTING

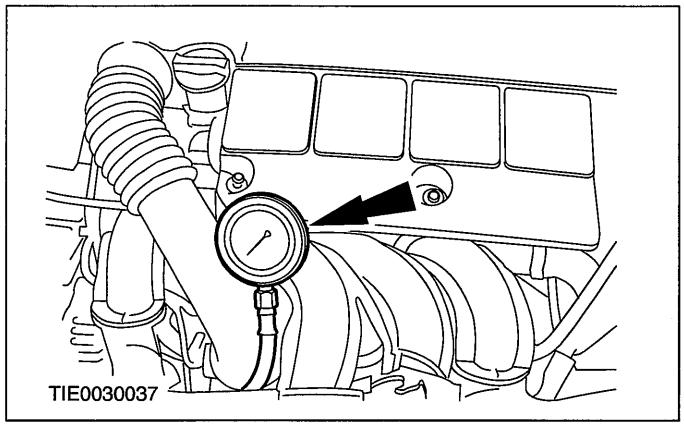


6. **NOTE:Measure the oil pressure at an oil temperature of 80°C.**

**NOTE:**Oil pressure at 2000 rpm: 3.5 bar.

Measure the oil pressure.

7. Raise and support the vehicle. REFER to: (100-02 Jacking and Lifting)

   Jacking (Description and Operation), Lifting (Description and Operation).

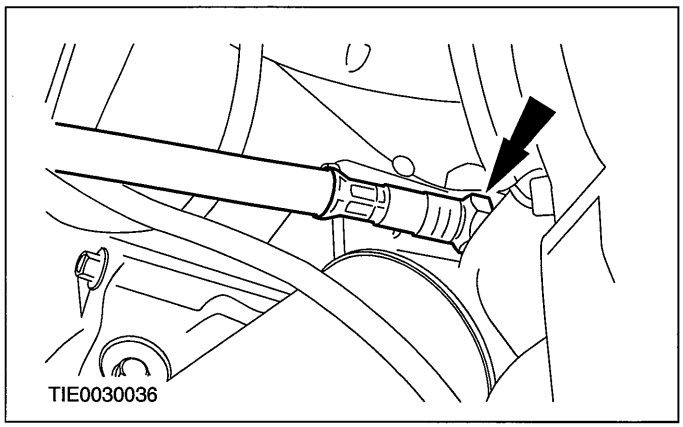


8. Detach the oil pressure gauge and connector from the oil pressure switch bore.
9. Coat the oil pressure switch with adhesive.

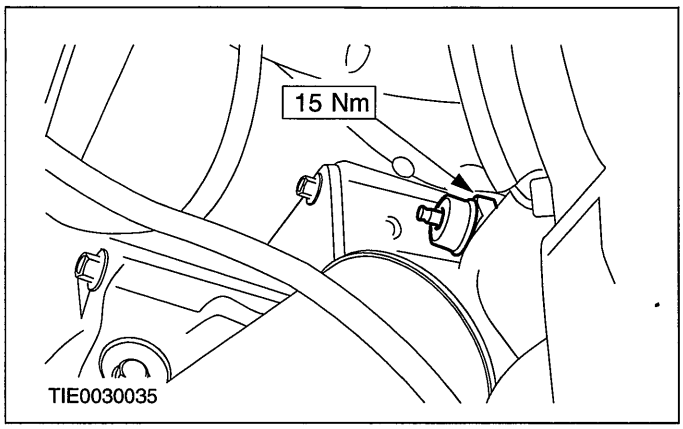


10. Install the oil pressure switch.

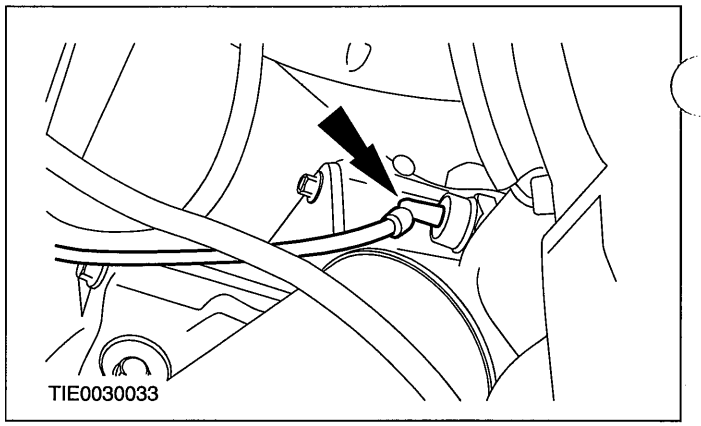


11. Connect the oil pressure switch electrical connector to the oil pressure switch.
12. Lower the vehicle.

## Measure the oil pressure (Engine - 1.3L Duratec-8V (Rocam))

**NOTE:**The oil pressure depends on various factors (engine speed, oil temperature, oil viscosity, extent of oil filter contamination).

**NOTE:**Measure the oil pressure at the specified engine speed.

1. Raise and support the vehicle. REFER to: (100-02 Jacking and Lifting)

   Jacking (Description and Operation), Lifting (Description and Operation).

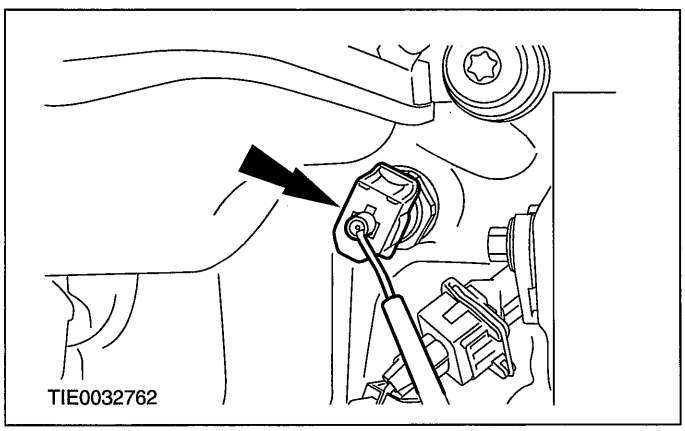


2. Disconnect the oil pressure switch electrical connector from the oil pressure switch.

## DIAGNOSIS AND TESTING

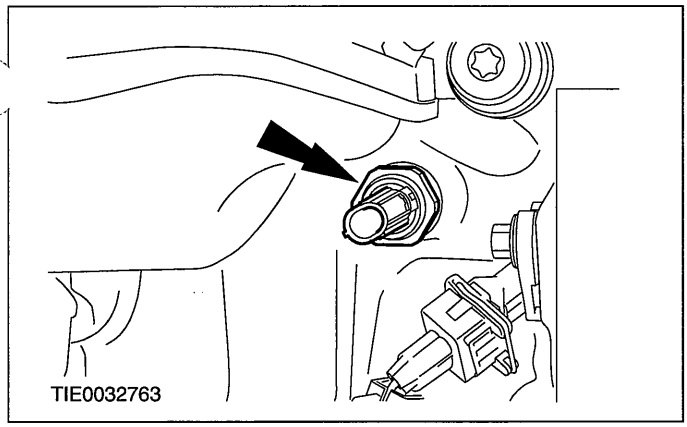


3. Remove the oil pressure switch.

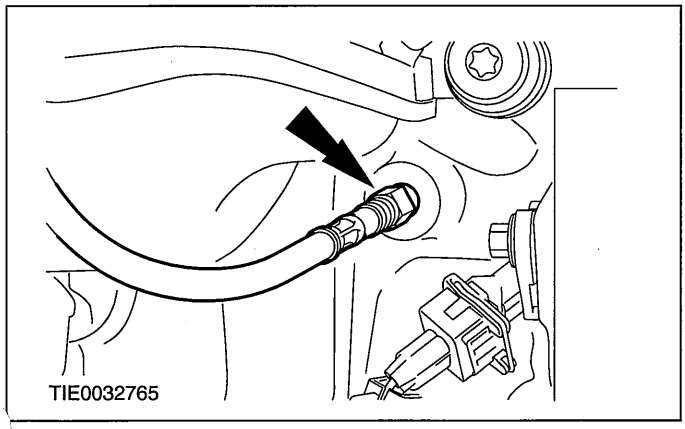


4. Attach the oil pressure gauge with the oil pressure gauge connector to the oil pressure switch bore, and position it to allow reading from above.
5. Lower the vehicle.

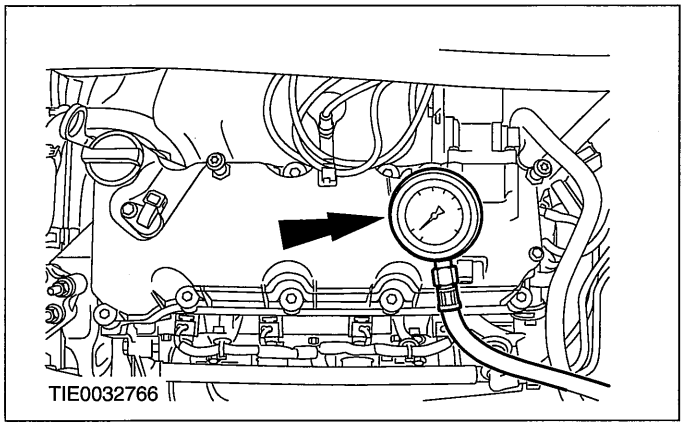


6. **NOTE:Measure the oil pressure at an oil temperature of 80°C.**

**NOTE:**Oil pressure at idle speed (750 rpm): 0.95 bar.

**NOTE:**Oil pressure at 2500 rpm: 2.7 bar.

Measure the oil pressure.

7. Raise and support the vehicle. REFER to: (100-02 Jacking and Lifting)

   Jacking (Description and Operation), Lifting (Description and Operation).

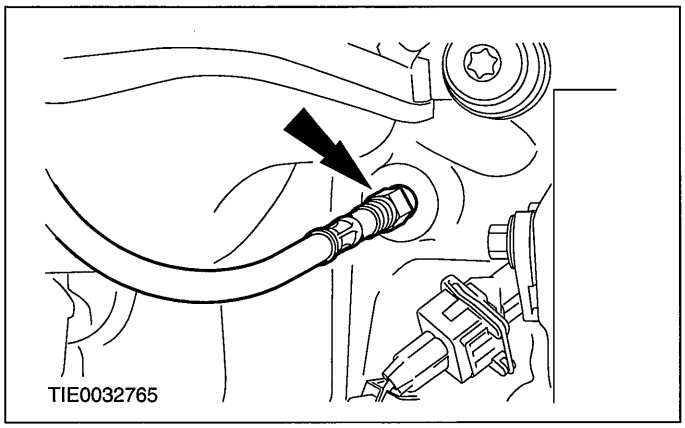


8. Detach the oil pressure gauge and connector from the oil pressure switch bore.
9. Coat the oil pressure switch with sealant adhesive.

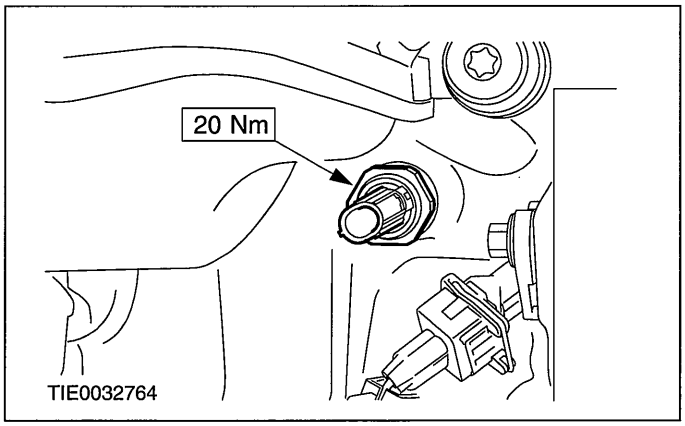


10. Install the oil pressure switch.

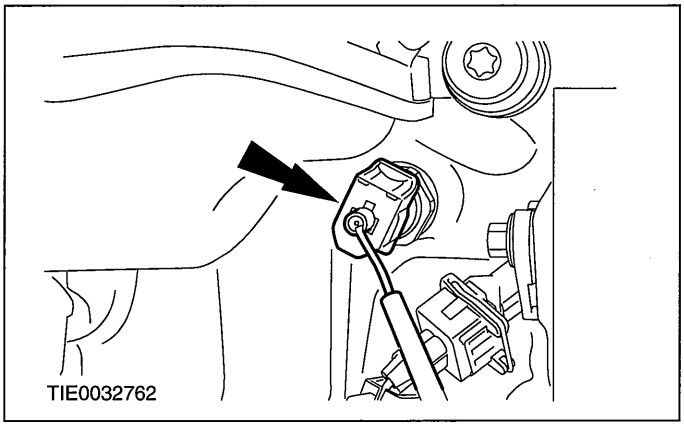


11. Connect the oil pressure switch electrical connector to the oil pressure switch.
12. Lower the vehicle.

## DIAGNOSIS AND TESTING

### Measure the oil pressure (Engine - 2.0L Duratec-HE (MI4))

1. Raise and support the vehicle. REFER to: (100-02 Jacking and Lifting)

   Jacking (Description and Operation), Lifting (Description and Operation).

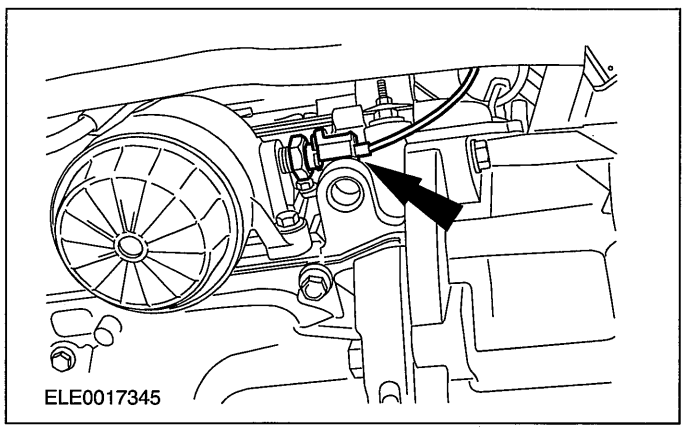
ELE0017345

2. Disconnect the oil pressure switch electrical connector from the oil pressure switch.

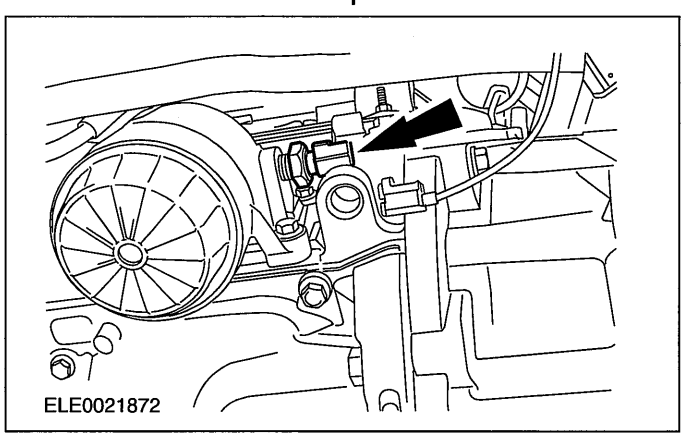
ELE0021872

3. Remove the oil pressure switch.

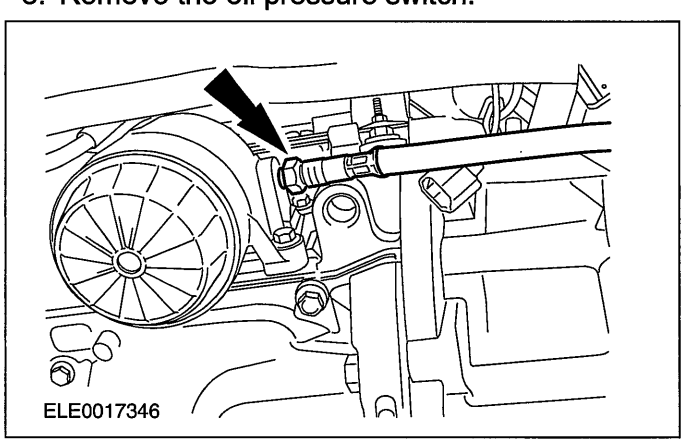
ELE0017346

4. Attach the oil pressure gauge (GV 2134) with the oil pressure gauge connector to the oil pressure switch bore, and position it to allow reading from above.
5. Lower the vehicle.

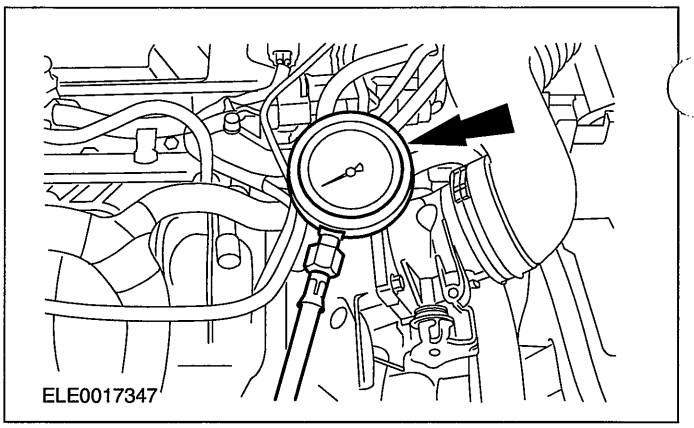
ELE0017347

6. **NOTE:Oil pressure at 2000 rpm: 3.5 bar.**

   Measure the oil pressure.
7. Raise and support the vehicle. REFER to: (100-02 Jacking and Lifting)

   Jacking (Description and Operation), Lifting (Description and Operation).

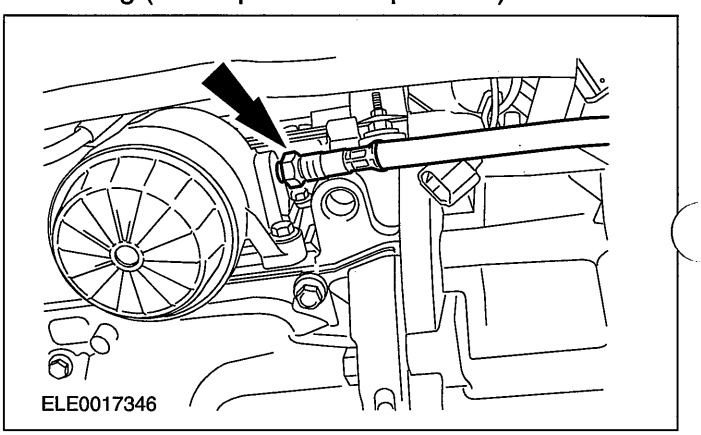
ELE0017346

8. Detach the oil pressure gauge and connector from the oil pressure switch bore.
9. Coat the oil pressure switch with adhesive.

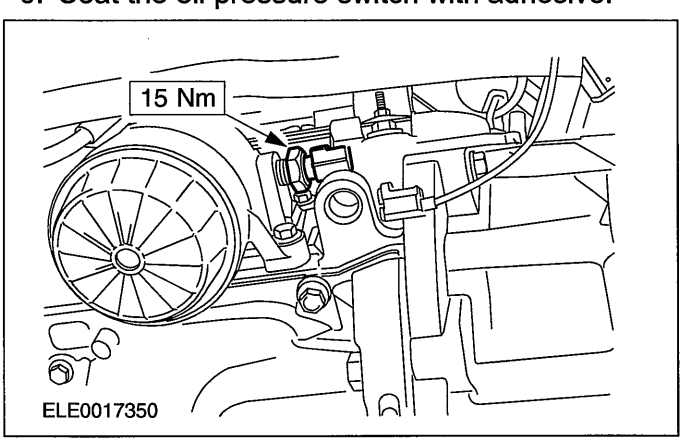

ELE0017350

10. Install the oil pressure switch.

## DIAGNOSIS AND TESTING

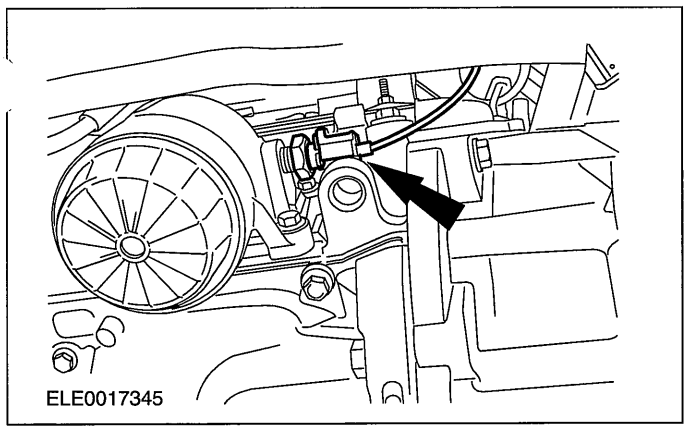


11. Connect the oil pressure switch electrical connector to the oil pressure switch.
12. Lower the vehicle.

## Valve train analysis - static (engine off)

Remove the valve cover.

Check all components of the valve train for damage and wear. Make sure that only original components are installed and that all nuts and bolts are tightened to the specified torque.

## GENERAL PROCEDURES

# Camshaft Bearing Journal Diameter

1. **Determine the diameter of the camshaft journals.**
   - Using a micrometer measure the diameter at 90 degrees intervals to determine if the journals are out-of-round.
   - Measure at two different points on the journal to determine if there is any tapering.
   - If the measurements are out of the specified range, install a new camshaft.

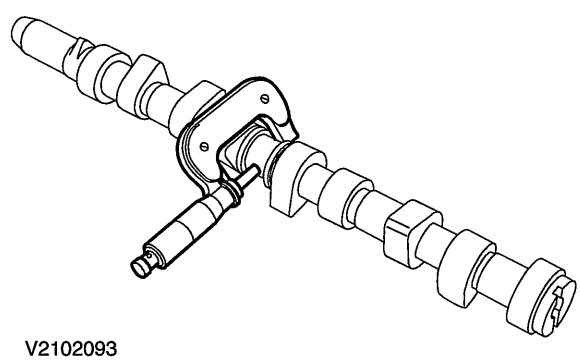

V2102093

## GENERAL PROCEDURES

# Camshaft Bearing Journal Clearance

1. **NOTE:Make sure that the following stages are followed exactly. The tappets or followers must be removed to carry out this measurement.**

**NOTE:**Make sure that the camshaft is to specification.

**NOTE:**The bearing caps and journals should be free from engine oil and dirt.

**Position on a width of plastigage on the bearing cap.**

- Insert the camshaft, without lubrication, into the cylinder head.
- Position a plastigage strip, which should be equal to the width of the bearing cap, on the bearing journal.

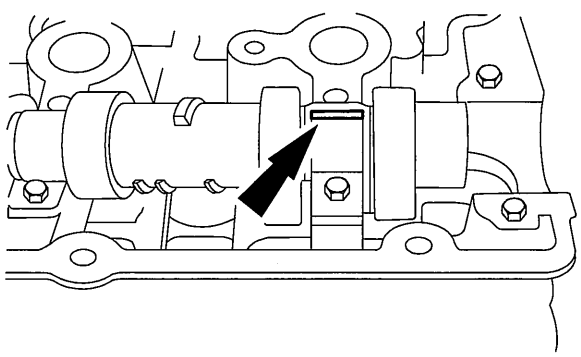

ELE0000649

2. **Following the tightening specification, install the camshaft bearing caps. Refer to the corresponding Section 303-01.**
3. **NOTE:Do not strike the bearing caps.**

   **Remove the camshaft bearing caps, refer to the corresponding Section 303-01.**
4. **Using the Plastigage, read off the measurement.**
   - Compare the width of plastigage with the plastigage scale.
   - The value that is read off is the bearing clearance.

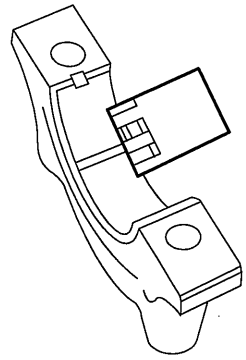

ELE0000597

## GENERAL PROCEDURES

# Camshaft End Play

1. **NOTE:Make sure that the camshaft is to specification.**

   **Using a Dial Indicator Gauge, measure the end play.**

   - Slide the camshaft in both directions. Read and note the maximum and minimum values on the Dial Indicator Gauge.
     - End play = maximum value minus minimum value
   - If the measurement is out of specification, install new components.

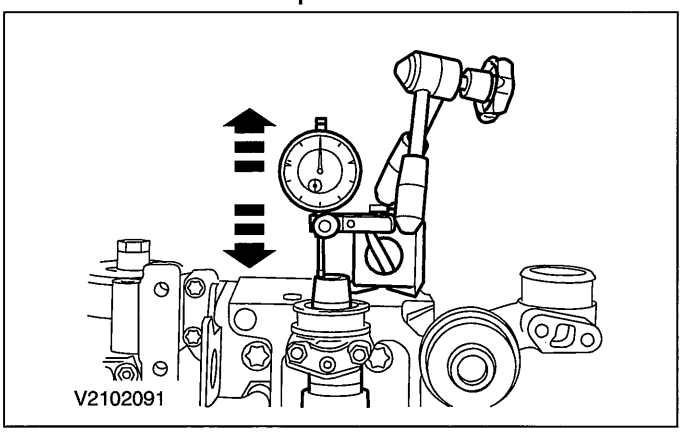

## GENERAL PROCEDURES

# Camshaft Surface Inspection

1. **Inspect the camshaft lobes for pitting or damage in the active area. Minor pitting is acceptable outside the active area.**

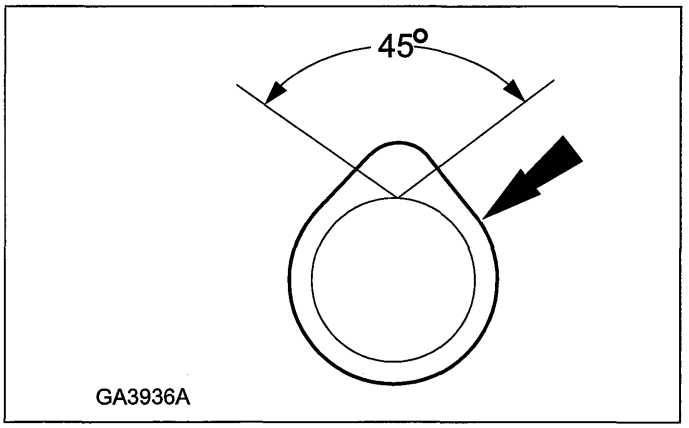

## GENERAL PROCEDURES

# Camshaft Lobe Lift

**1. Determine the cam lift.**

- Using a micrometer measure the cam in two directions.
- The difference between the two measurements is the cam lift.

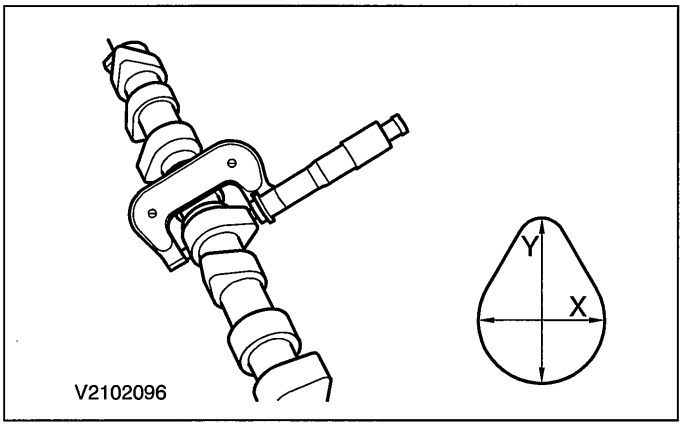

## GENERAL PROCEDURES

# Crankshaft Main Bearing Journal Diameter

### General Equipment

| |
|---|
| Micrometer |

1. **Measure the diameter of the main bearing journals and the big-end bearing journals.**
   - Repeat the measurement with the micrometer offset by 90°, in order to determine any eccentricity which may be present.
   - Measure the journal at two different positions to determine any conicity which may be present.

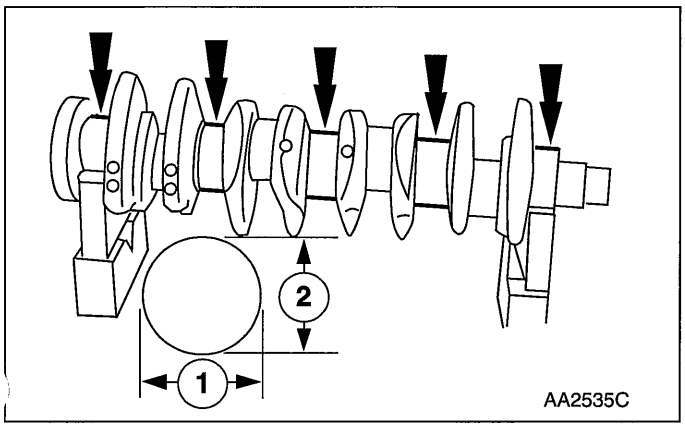

## GENERAL PROCEDURES

# Crankshaft End Play

### General Equipment

| |
|---|
| Dial indicator |
| Dial indicator fixture |

### 1. Determine the end float

- Place on the dial indicator and bracket .
- Determine the end float by raising the crankshaft with the aid of a screwdriver.
- If necessary, correct the end float by using new thrust half washers.

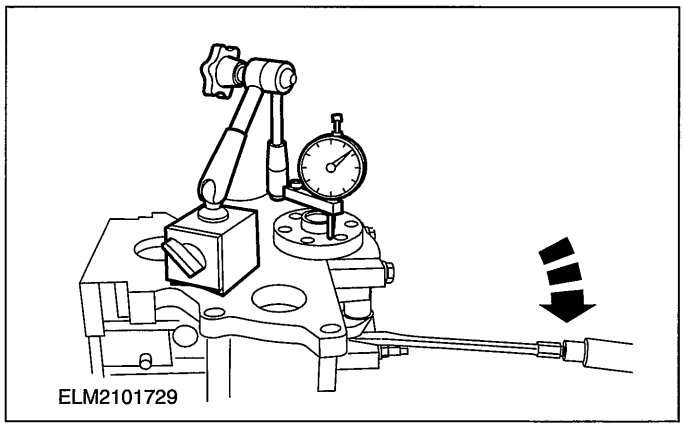

## GENERAL PROCEDURES

# Cylinder Bore Taper

1. **NOTE:The main bearing caps or lower crankcase must be in place and tightened to the specified torque; however, the bearing shells should not be installed.**

   **Measure the cylinder bore with an internal micrometer.**

   - Carry out the measurements in different directions and at different heights to determine if there is any out-of-roundness or tapering.
   - If the measurement is out of the specified range, install a new block or hone out the cylinder block (if aplicable/allowed).

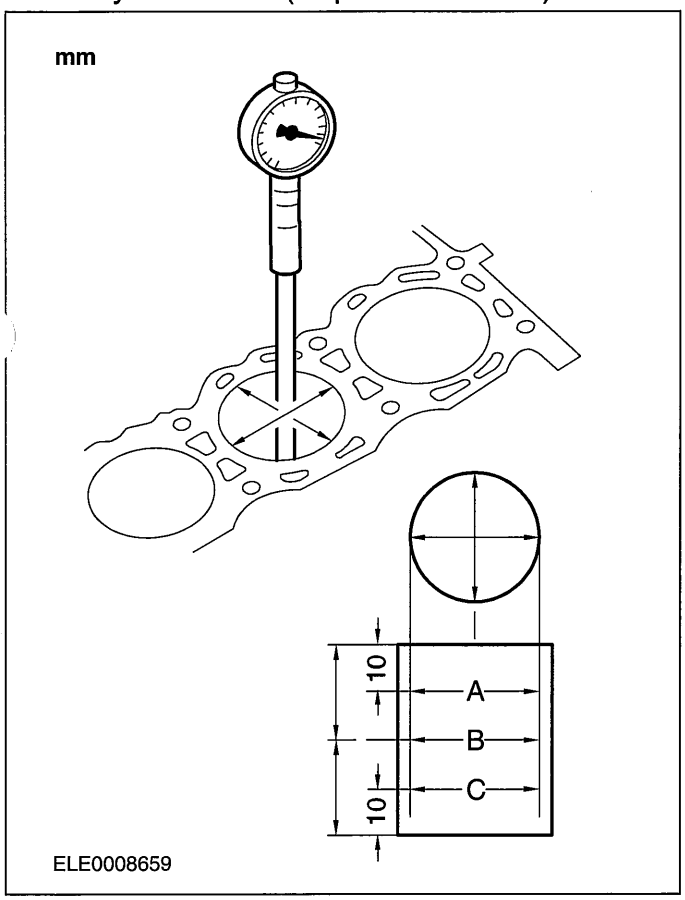

## GENERAL PROCEDURES

# Piston Inspection

1. ⚠**CAUTION:Do not use any aggressive cleaning fluid or a wire brush to clean the piston.**

   **Carry out a visual inspection.**

   - Clean the piston skirt, pin bush, ring grooves and crown and check for wear or cracks.
   - If there are signs of wear on the piston skirt, check whether the connecting rod is twisted or bent.

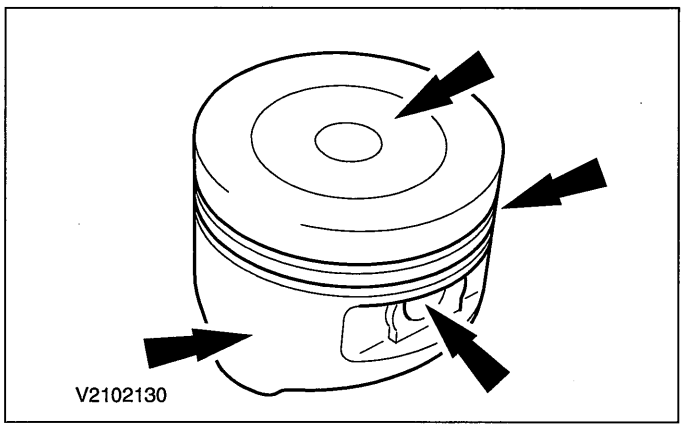

## GENERAL PROCEDURES

# Piston Pin to Bore Diameter

1. **NOTE:The piston and piston pin form a matched pair. Do not mix up the components.**

   **Measure the diameter of the piston pin bore.**

   - Measure the diameter in two directions.
   - If the values are not to specification, install both a new piston and a new piston pin.

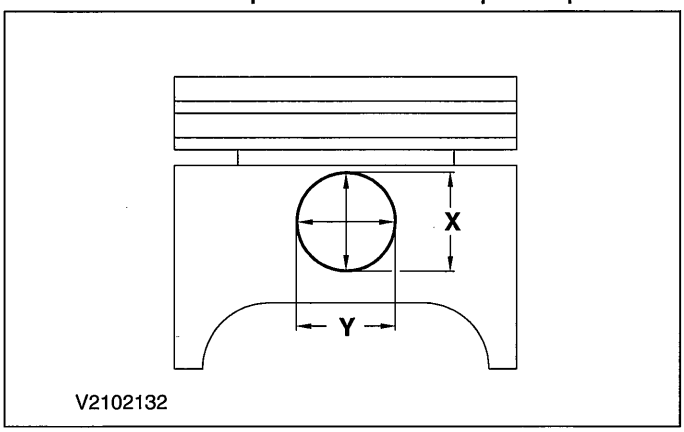

## GENERAL PROCEDURES

# Piston Diameter

### General Equipment

| |
|---|
| Micrometer |

1. **NOTE:Mark the piston to make sure the piston is installed correctly.**

   **Using a Micrometer measure the piston diameter.**

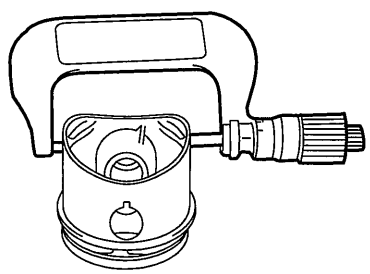

IAV2102103

## GENERAL PROCEDURES

# Piston Ring End Gap

1. **⚠CAUTION:Do not mix up the piston rings. Install the piston rings in the same position and location.**

   **Take the piston ring and use a piston without rings to push the piston ring about 30 mm into the cylinder bore.**

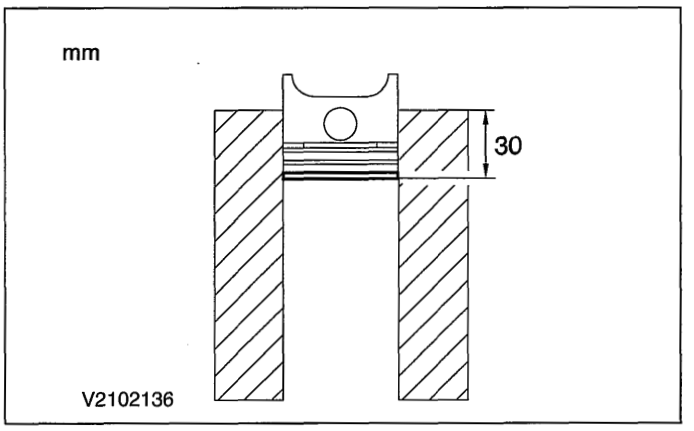


2. **Using the Feeler Gauge, measure the piston ring gap.**

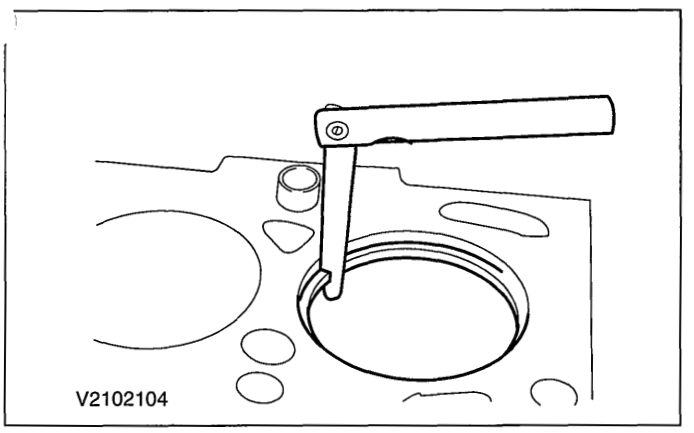

## GENERAL PROCEDURES

# Piston Ring-to-Groove Clearance

### General Equipment

| |
|---|
| Feeler Gauge |

1. **NOTE:The piston ring must protrude from the piston groove. To determine the piston ring clearance, insert the Feeler Gauge right to the back of the groove, behind the wear ridge.**

   **Using the Feeler Gauge , measure the piston ring clearance.**

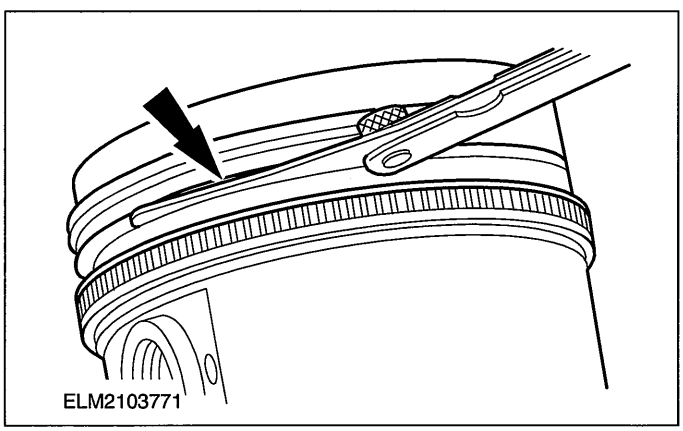

## GENERAL PROCEDURES

# Piston Pin Diameter

1. **NOTE:The piston and piston pin are a matched pair. Do not mix up the components.**

   **Measure the piston pin diameter.**

   - Measure the diameter in two directions.
   - If the values are not to specification, install a new piston and a new piston pin.

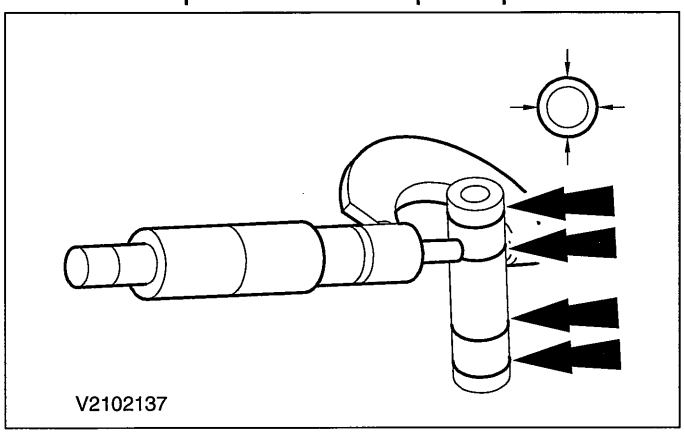

## GENERAL PROCEDURES

# Connecting Rod Large End Bore

1. **Measure the bearing bore in two directions. The difference is the connecting rod bore out-of-round. Verify the out-of-round and the bearing bore is within specification.**

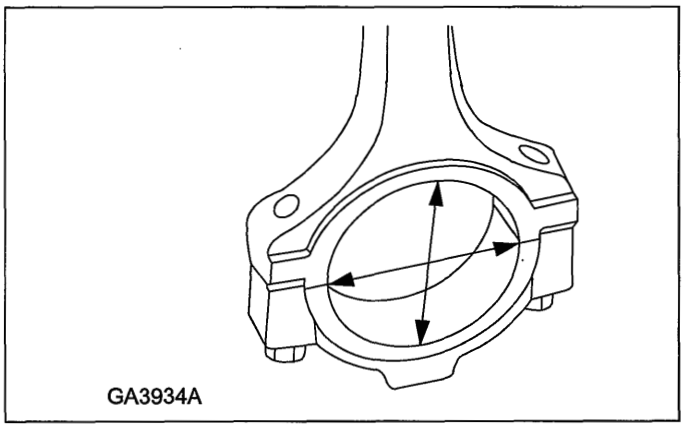

## GENERAL PROCEDURES

# Valve Stem Diameter

1. **Using a micrometer measure the diameter of the valve stems.**
   - If the measurements are not to specification, install a new valve.

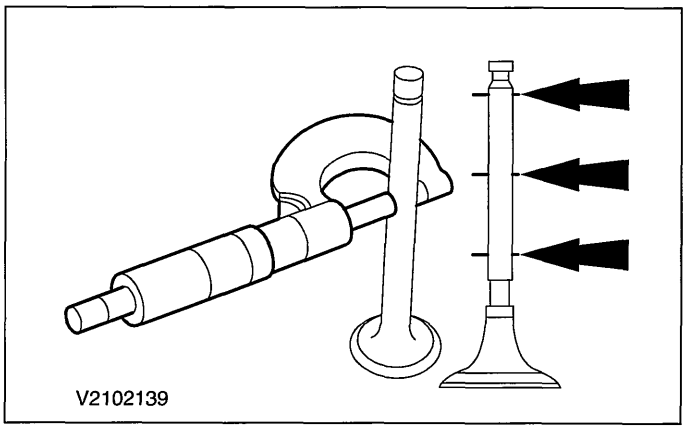

## GENERAL PROCEDURES

# Flywheel Inspection

1. **Inspect the flywheel. If there is evidence of the following, install a new flywheel.**
   1. Cracks.
   2. Worn ring gear teeth.
   3. Chipped or cracked ring gear teeth.

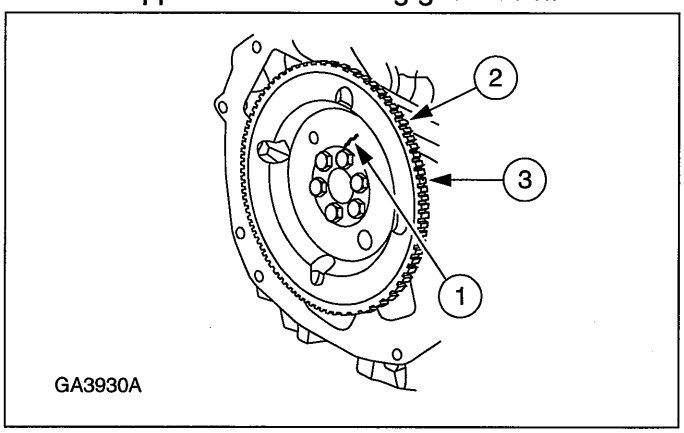

## GENERAL PROCEDURES

# Flywheel Inspection — Vehicles With: Dual Mass Flywheel

1. **Inspection details for the dual mass flywheel are contained in the Diagnosis and Testing procedure.For additional information, refer to: (308-00 Manual Transmission/Transaxle and Clutch - General Information)**

   **Manual Transmission and Clutch - Vehicles With: MT-75 (Diagnosis and Testing),**
   **Manual Transaxle and Clutch - Vehicles With: VXT-75 (Diagnosis and Testing),**
   **Manual Transmission and Clutch - Vehicles With: MT82 (Diagnosis and Testing).**

## GENERAL PROCEDURES

# Cylinder Head Distortion

### General Equipment

| |
|---|
| Feeler gauge |
| Straight edge |

1. **Using a straight edge and feeler gauge, measure the cylinder head distortion.**
   - Measure the mating face distortion.
   - Refer to Specifications in the appropriate engine section.

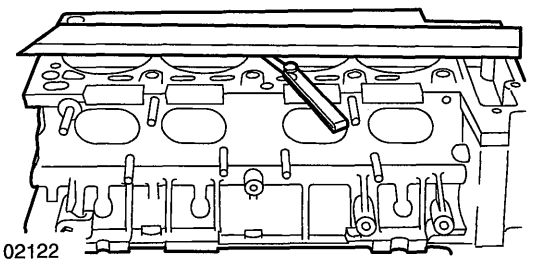

## GENERAL PROCEDURES

# Cylinder Block Distortion

1. **Using a Straight Edge and a Feeler Gauge, measure the cylinder block/cylinder head distortion.**
   - Measure the mating face distortion.
   - If the value is not to specification rework the mating face (if allowed).

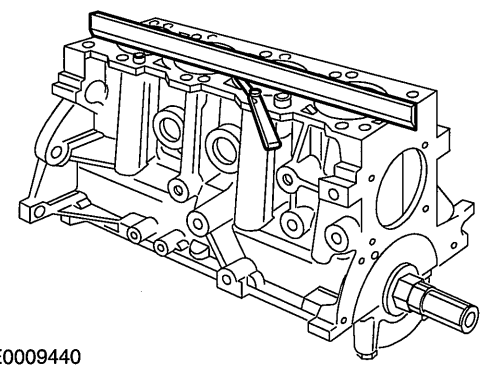

ELE0009440

## GENERAL PROCEDURES

# Exhaust Manifold Cleaning and Inspection

1. **Inspect the cylinder head joining flanges of the exhaust manifold for evidence of exhaust gas leaks.**
2. **Inspect the exhaust manifold for cracks, damaged gasket surfaces, or other damage that would make it unfit for further use.**

## GENERAL PROCEDURES

# Bearing Inspection

**1. Inspect bearings for the following defects.**

1. Cratering - fatigue failure
2. Spot polishing - incorrect seating.
3. Imbedded dirt engine oil.
4. Scratching - dirty engine oil.
5. Base exposed - poor lubrication.
6. Both edges worn - journal damaged.
7. One edge worn - journal tapered or bearing not seated.

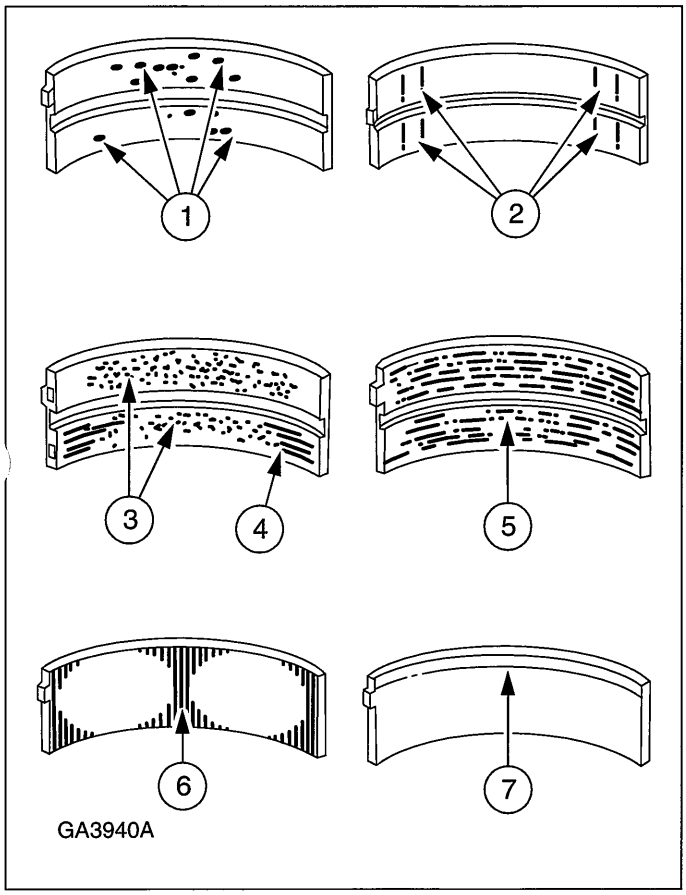

## GENERAL PROCEDURES

# Valve Seat Inspection

### General Equipment

| |
|---|
| Valve seat width scale |

**1. Measure the width of the valve seat.**

- Measure the valve seat width using the Valve seat width scale.
- If the value is not to specification rework the valve seat.

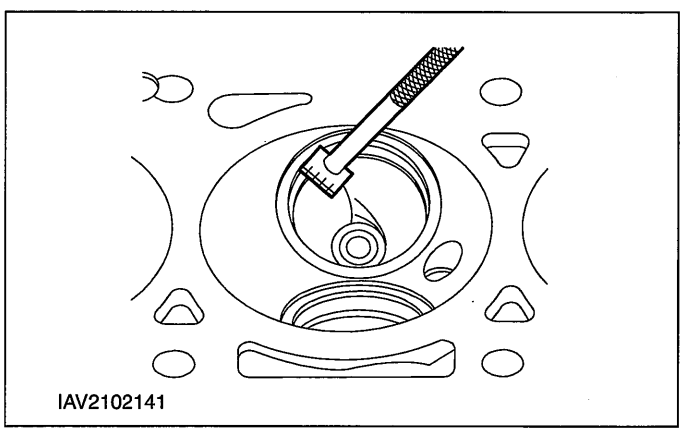

# SECTION 303-01A Engine — 1.25L Duratec-16V (Sigma)/1.4L Duratec-16V (Sigma)/1.6L Duratec-16V (Sigma)

## VEHICLE APPLICATION:2006.0 Fiesta

CONTENTS PAGE

### SPECIFICATIONS


Specifications ..... 303-01A-3
- Engine Data - 1.25L ..... 303-01A-3
- Engine Data - 1.4L ..... 303-01A-3
- Engine Data - 1.6L ..... 303-01A-3
- Oil pressure ..... 303-01A-4
- Engine Oil Capacity - 1.25L/1.4L ..... 303-01A-4
- Engine Oil Capacity - 1.6L ..... 303-01A-4
- Valve Clearance - 1.25L/1.4L ..... 303-01A-4
- Valve Clearance - 1.6L ..... 303-01A-4
- Cylinder block - 1.25L ..... 303-01A-5
- Cylinder block - 1.4L ..... 303-01A-5
- Cylinder block - 1.6L ..... 303-01A-5
- Cylinder head ..... 303-01A-5
- Piston -1.25L ..... 303-01A-5
- Piston -1.4L ..... 303-01A-5
- Piston - 1.6L ..... 303-01A-6


### DESCRIPTION AND OPERATION


Engine ..... 303-01A-9
- 1.4L/1.6L Duratec 16V engine ..... 303-01A-9


### DIAGNOSIS AND TESTING


Engine ..... 303-01A-12


### GENERAL PROCEDURES


Valve Clearance Adjustment ..... 303-01A-13


### IN-VEHICLE REPAIR


| | | |
|---|---|---|
| Crankshaft Front Seal | (21 467 0) | 303-01A-14 |
| Valves | (21 215 4) | 303-01A-16 |
| Intake Manifold | (21 183 0) | 303-01A-19 |
| Valve Cover | (21 141 0) | 303-01A-28 |
| Valve Seals | (21 238 0) | 303-01A-30 |
| Camshafts | (21 284 0) | 303-01A-33 |
| Camshaft Seal | (21 288 0) | 303-01A-35 |
| Timing Belt | (21 304 0) | 303-01A-37 |
| Exhaust Manifold | (21 187 0) | 303-01A-47 |
| Cylinder Head | (21 163 0) | 303-01A-54 |
| Oil Pan | (21 154 0) | 303-01A-64 |

Oil Pump ..... (21 714 0) 303-01A-66
Crankshaft Rear Seal ..... (21 468 4) 303-01A-68

**REMOVAL**

Engine ..... 303-01A-70
Engine — Vehicles With: Automatic Transaxle ..... 303-01A-82

**DISASSEMBLY**

Engine ..... (21 134 8) 303-01A-95

**DISASSEMBLY AND ASSEMBLY OF SUBASSEMBLIES**

Cylinder Head ..... (21 165 6) 303-01A-105

**ASSEMBLY**

Engine ..... (21 134 8) 303-01A-108

**INSTALLATION**

Engine ..... 303-01A-122
Engine — Vehicles With: Automatic Transaxle ..... 303-01A-134

## SPECIFICATIONS

### Engine Data - 1.25L

| Description | |
|---|---|
| Code - Stage III | FUJB/M7JA |
| Code - Stage IV | FUJA/M7JB |
| Firing order | 1-3-4-2 |
| Bore | 71.9 mm |
| Stroke | 76.5 mm |
| Displacement | 1242 cc |
| Compression ratio | 10:1 |
| Power output at 5700 rpm (Engine codes M7JA/M7JB) | 51 kW (70 PS) |
| Power output at 5700 rpm (Engine codes FUJA/FUJB) | 55 kW (75 PS) |
| Torque at 3500 rpm | 110 Nm |
| Maximum permissible engine speed continuous | 5950 rpm |
| Maximum permissible engine speed intermittent | 6175 rpm |
| Idle speed | 750 rpm |
| Maximum oil consumption | 0.5L/1000km |

### Engine Data - 1.4L

| Description | |
|---|---|
| Code | FXJA/FXJB |
| Firing order | 1-3-4-2 |
| Bore | 76.0 mm |
| Stroke | 76.5 mm |
| Displacement | 1388 cc |
| Compression ratio | 11:1 |
| Power output at 5700 rpm | 59 kW (80 PS) |
| Torque at 3500 rpm | 124 Nm |
| Maximum permissible engine speed continuous | 6450 rpm |
| Maximum permissible engine speed intermittent | 6800 rpm |
| Idle speed | 750 rpm |
| Maximum oil consumption | 0.5L/1000km |

### Engine Data - 1.6L

| Description | |
|---|---|
| Engine code | FYJA/FYJB |
| Firing order | 1-3-4-2 |
| Bore | 79.0 mm |
| Stroke | 81.4 mm |

## SPECIFICATIONS

| Description | |
|---|---|
| Displacement | 1595 cc |
| Compression ratio | 11:1 |
| Power output at 6000 rpm | 74 kW (100 PS) |
| Torque at 4000 rpm | 146 Nm |
| Maximum permissible engine speed continuous | 6450 rpm |
| Maximum permissible engine speed intermittent | 6800 rpm |
| Idle speed | 750 rpm |
| Maximum oil consumption | 0.5L/1000km |

### Oil pressure

| Description | bar |
|---|---|
| Oil pressure (minimum, oil temperature 80°C) at 800 rpm | 1.0 |
| Oil pressure (minimum, oil temperature 80°C) at 2000 rpm | 2.5 |
| Pressure relief valve opening pressure | 4 |

### Engine Oil Capacity - 1.25L/1.4L

| Description | Liters |
|---|---|
| Initial fill including oil filter | 4.25 |
| Service fill including oil filter (EFL500) | 3.75 |
| Service fill including oil filter (EFL10) | 3.80 |
| Service fill excluding oil filter | 3.50 |

### Engine Oil Capacity - 1.6L

| Description | Liters |
|---|---|
| Initial fill including oil filter (EFL600) | 4.50 |
| Initial fill including oil filter (EFL10) | 4.30 |
| Service fill including oil filter (EFL600) | 4.25 |
| Service fill including oil filter (EFL10) | 4.10 |
| Service fill excluding oil filter | 3.75 |

### Valve Clearance - 1.25L/1.4L

| Description | mm |
|---|---|
| Valve clearance (engine cold), intake | 0.17 - 0.23 |
| Valve clearance (engine cold), exhaust | 0.27 - 0.33 |

### Valve Clearance - 1.6L

| Description | mm |
|---|---|
| Valve clearance (engine cold), intake | 0.17 - 0.23 |
| Valve clearance (engine cold), exhaust | 0.31- 0.37 |

## SPECIFICATIONS

### Cylinder block - 1.25L

| Description | mm |
|---|---|
| Cylinder bore diameter, class 1 | 71.900 - 71.910 |
| Cylinder bore diameter, class 2 | 71.910 - 71.920 |
| Cylinder bore diameter, class 3 | 71.920 - 71.930 |
| Crankshaft end float | 0.300 - 0.800 |

### Cylinder block - 1.4L

| Description | mm |
|---|---|
| Cylinder bore diameter, class 1 | 76.000 - 76.010 |
| Cylinder bore diameter, class 2 | 76.010 - 76.020 |
| Cylinder bore diameter, class 3 | 76.020 - 76.030 |
| Crankshaft end float | 0.300 - 0.800 |

### Cylinder block - 1.6L

| Description | mm |
|---|---|
| Cylinder bore diameter, class 1 | 79.000 - 79.010 |
| Cylinder bore diameter, class 2 | 79.010 - 79.020 |
| Cylinder bore diameter, class 3 | 79.020 - 79.030 |
| Crankshaft end float | 0.300 - 0.800 |

### Cylinder head

| Description | mm |
|---|---|
| Maximum distortion (mating face) | 0.03 |

### Piston -1.25L

| Description | mm |
|---|---|
| Piston diameter, class 1 (uncoated) | 71.875 - 71.885 |
| Piston diameter, class 2 (uncoated) | 71.885 - 71.895 |
| Piston diameter, class 3 (uncoated) | 71.895 - 71.905 |
| Piston ring gaps, upper | 0.170 - 0.270 |
| Piston ring gaps, middle | 0.700 - 0.900 |
| Piston ring gaps, lower | 0.200 - 0.900 |
| Piston ring end float, upper | 0.040 - 0.080 |
| Piston ring end float, middle | 0.025 - 0.070 |

### Piston -1.4L

| Description | mm |
|---|---|
| Piston diameter, class 1 (uncoated) | 75.960 - 75.970 |
| Piston diameter, class 2 (uncoated) | 75.970 - 75.980 |
| Piston diameter, class 3 (uncoated) | 75.980 - 75.990 |

## SPECIFICATIONS

| Description | mm |
|---|---|
| Piston ring gaps, upper | 0.170 - 0.270 |
| Piston ring gaps, middle | 0.700 - 0.900 |
| Piston ring gaps, lower | 0.200 - 0.900 |
| Piston ring end float, upper | 0.040 - 0.080 |
| Piston ring end float, middle | 0.025 - 0.070 |

### Piston - 1.6L

| Description | mm |
|---|---|
| Piston diameter, class 1 (coated) | 78.975 - 79.005 |
| Piston diameter, class 2 (coated) | 78.985 - 79.015 |
| Piston diameter, class 3 (coated) | 78.995 - 79.025 |
| Piston ring gaps, upper | 0.180 - 0.280 |
| Piston ring gaps, middle | 0.700 - 0.900 |
| Piston ring gaps, lower | 0.200 - 0.900 |
| Piston ring end float, upper | 0.040 - 0.080 |
| Piston ring end float, middle | 0.025 - 0.070 |

### Lubricants, Fluids, Sealers and Adhesives

| Item | Specification |
|---|---|
| Ford Formula E SAE 5W-30 Engine Oil | WSS-M2C913-B |
| Sealant, oil pan contact surface to oil seal carrier, oil pan to cylinder block, oil pan to oil pump | WSE-M4G323-A4 |
| Oil pressure switch sealer (Loctite 243) | WSK-M2G349-A7 |
| Sealant, camshaft bearing cap to cylinder head | WSK-M2G348-A2 |
| Silicone grease | ESE-M1C171-AA |

### Torque Specifications

| Description | Nm | lb-ft | lb-in |
|---|---|---|---|
| Exhaust flexible pipe to catalytic converter retaining nuts | 44 | 33 | - |
| Lower arm to wheel knuckle pinch bolt | 48 | 35 | - |
| Intermediate shaft center bearing bracket to cylinder block retaining bolts | 24 | 18 | - |
| Starter motor cable retaining nut | 12 | 9 | - |
| Exhaust manifold heat shield retaining bolts | 12 | 9 | - |
| Ground cable to transaxle retaining bolt | 47 | 35 | - |
| Ground cable to automatic transaxle | 25 | 18 | |
| Coolant expansion tank retaining bolts | 8 | - | 71 |

## SPECIFICATIONS

| Description | Nm | lb-ft | lb-in |
|---|---|---|---|
| Engine front mount bracket to cylinder block retaining bolts | 55 | 41 | - |
| Engine front mount retaining nuts and bolts | 48 | 35 | - |
| Engine rear mount center retaining nut | 90 | 66 | - |
| Engine rear mount outer retaining nuts | 48 | 35 | - |
| Engine support insulator retaining bolts | 48 | 35 | - |
| Power steering line support bracket retaining bolts | 25 | 18 | - |
| Power steering line to power steering pump | 40 | 30 | - |
| Air conditioning (A/C) compressor to cylinder block retaining bolts | 25 | 18 | - |
| Generator to cylinder block top rear and lower retaining bolts | 47 | 35 | - |
| Water pump retaining bolts | 9 | - | 80 |
| Water pump pulley retaining bolts | 27 | 20 | - |
| Oil pump to cylinder block retaining bolts | 9 | - | 80 |
| Oil pan to cylinder block retaining bolts | 20 | 15 | - |
| Oil level indicator tube bracket retaining bolt | 4 | - | 35 |
| Engine oil drain plug | 28 | 21 | - |
| Oil pump pickup pipe to cylinder block retaining bolts | 9 | - | 80 |
| Oil pressure switch | 15 | 11 | - |
| Cylinder head bolts | a) | - | - |
| Valve cover retaining bolts | a) | - | - |
| Intake manifold to cylinder head retaining bolts | 18 | 13 | - |
| Exhaust manifold to cylinder head | a) | - | - |
| Exhaust manifold to cylinder block | 47 | 35 | - |
| Camshaft position (CMP) sensor | 9 | - | 80 |
| Timing belt rear cover retaining bolts | 9 | - | 80 |
| Spark plugs | 15 | 11 | - |
| Engine rear lifting eye retaining bolts | 20 | 15 | - |
| Coolant distribution housing retaining bolts | 20 | 15 | - |
| Ignition coil to coolant distribution housing | 6 | - | 53 |
| Camshaft bearing cap retaining bolts | a) | - | - |
| Timing belt upper cover to cylinder block retaining bolts | 9 | - | 80 |
| Timing belt lower cover to cylinder block retaining bolts | 9 | - | 80 |

## SPECIFICATIONS

| Description | Nm | lb-ft | lb-in |
|---|---|---|---|
| Timing belt tensioner two bolts fixing | 20 | 15 | - |
| Timing belt tensioner central bolt fixing | 25 | 18 | - |
| Camshaft pulley retaining bolt | 60 | 44 | - |
| Crankshaft position (CKP) sensor bracket to cylinder block retaining bolts | 9 | - | 80 |
| Crankshaft rear oil seal carrier retaining bolts | 9 | - | 80 |
| Cylinder block blanking plug | 20 | 15 | - |
| Crankshaft pulley retaining bolt | a) | - | - |
| Engine coolant temperature (ECT) sensor | 18 | 13 | - |
| Exhaust manifold studs | 10 | - | 89 |
| Fuel rail to intake manifold | 15 | 11 | - |
| Knock sensor (KS) retaining bolt | 20 | 15 | - |
| Positive crankcase ventilation (PCV) cover retaining bolts | 9 | - | 80 |
| Thermostat housing retaining bolts | 9 | - | 80 |
| Flywheel to crankshaft retaining bolts | a) | - | - |
| Transaxle retaining bolts | 47 | 35 | - |
| Torque converter retaining nuts | 27 | 20 | |
| Selector lever cable bracket to transaxle | 20 | 15 | |
| Intermediate shaft center bearing cap retaining nuts | 25 | 18 | - |
| Ground cable to cylinder head retaining bolt | 18 | 13 | - |
| Suspension strut and spring assembly top mount retaining nuts | 25 | 18 | - |
| a) Refer to procedure in this section. | | | |

## DESCRIPTION AND OPERATION

# Engine

## 1.4L/1.6L Duratec 16V engine

### Overview

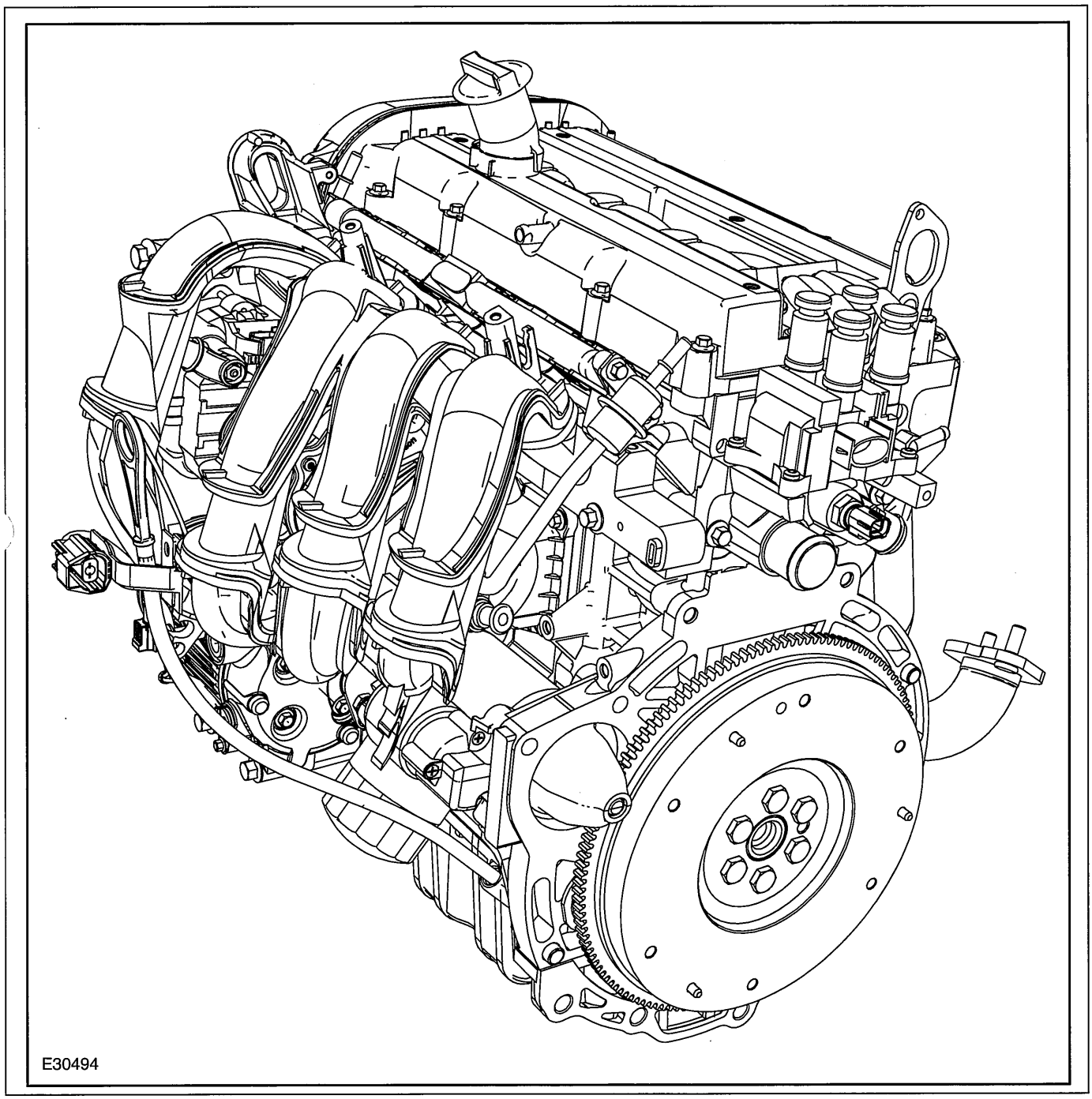


The 1.4L and 1.6L Duratec 16V inline engines have already been installed on Focus vehicles under the name of the Zetec-SE engine.

Details of this engine have been modified. The routing of the pipes in the intake manifold has been revised, and for the first time the throttle valve is electronically controlled.

The intake air routing and the air cleaner housing have also been changed. The pistons and piston rings have been modified. The cylinder head cover is made of plastic.

In addition, the auxiliary drive belt is an elastic multi-groove belt without a separate tensioning roller.

# DESCRIPTION AND OPERATION

## Engine

Cross-mounted 16-valve DOHC engines with 59 kW (80 PS) and 74 kW (100 PS) respectively.

Valve train with mechanical bucket tappets

Cylinder block and cylinder head made of an aluminium alloy

Auxiliary drive via a self-tensioning belt without a belt tensioner

## Engine management

Sequential multi-port fuel injection (SFI)

temperature and manifold absolute pressure (T-MAP) sensor in conjunction with a Siemens powertrain control module (PCM).

Knock control

PCM with 84 pins and integrated passive anti-theft system (PATS) immobiliser.

## Engine emission control

European emissions level IV

European on-board diagnosis (EOBD) for the monitoring of emissions-relevant components.

## Diagnosis

WDS diagnosis CD B17.

Instrument cluster (engine indicator lamp)

## Torque/power

The Duratec 16V engines are characterised by their high level of running refinement, low emission levels and balanced development of power.

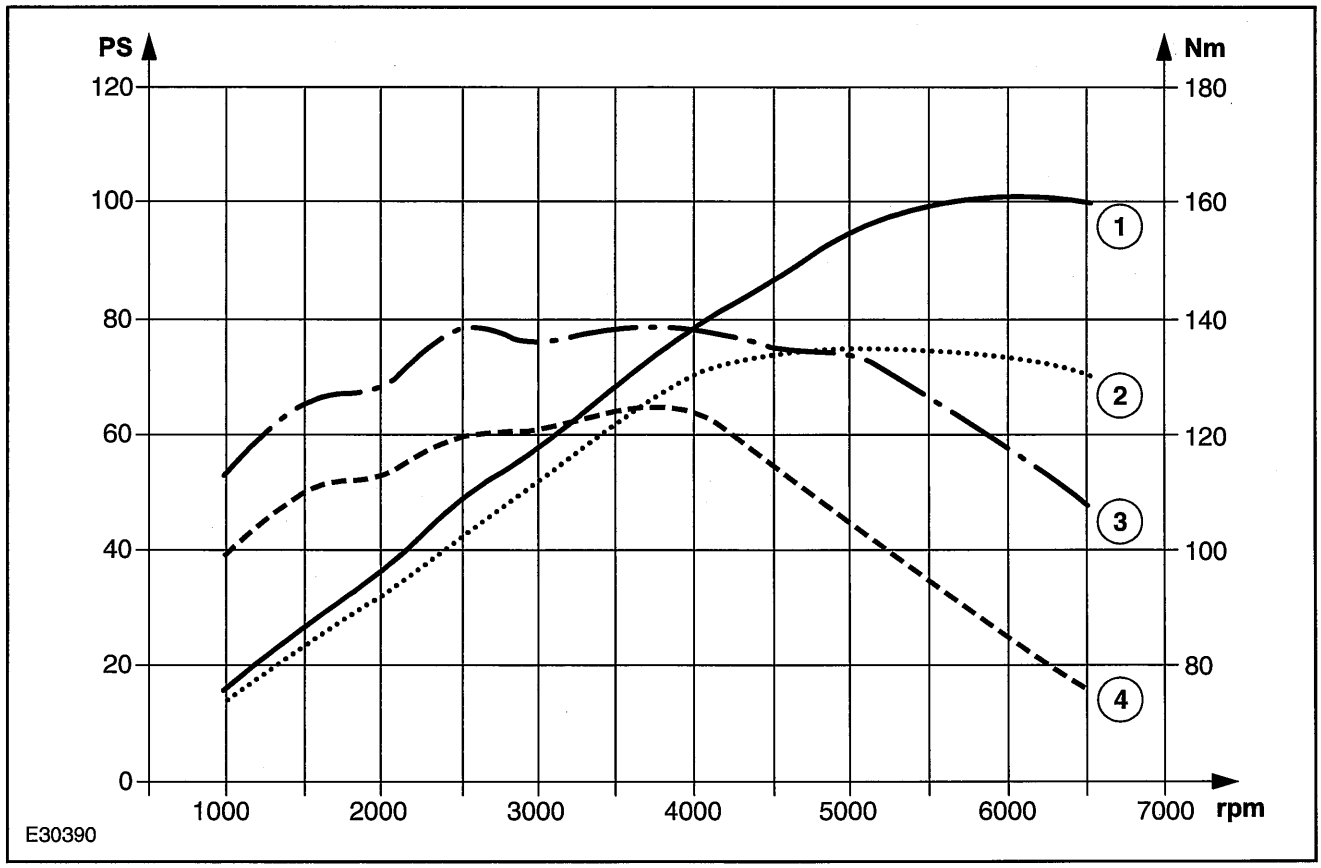


| Item | Description |
|---|---|
| 1 | Power curve for the 1.6L-Duratec 16V engine |
| 2 | Power curve for the 1.4L-Duratec 16V engine |

| Item | Description |
|---|---|
| 3 | Torque curve for the 1.6L-Duratec 16V engine |
| 4 | Torque curve for the 1.4L-Duratec 16V engine |

## DESCRIPTION AND OPERATION

### Valve train

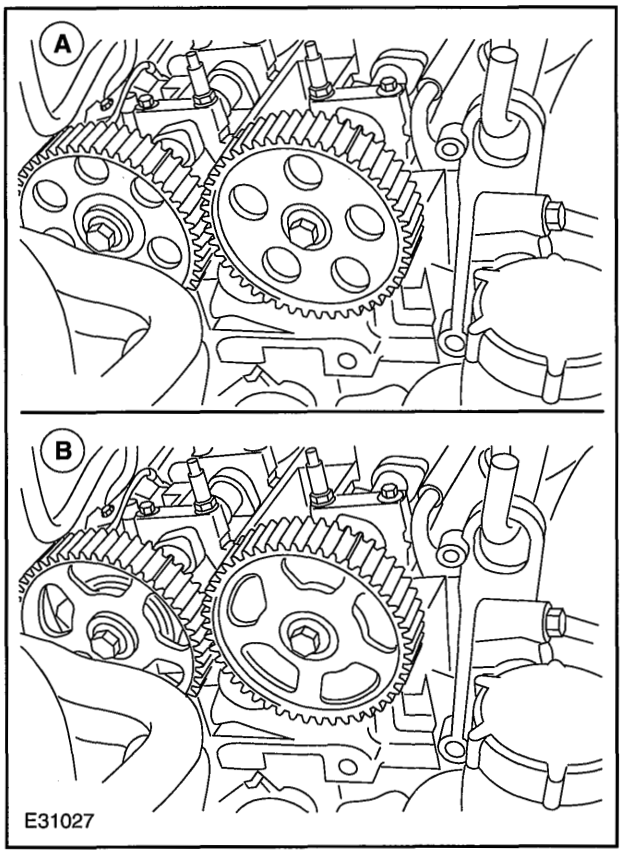


| Item | Description |
|---|---|
| A | Camshaft timing belt pulleys, 1.4/1.6L Zetec SE engine |
| B | Camshaft timing belt pulleys, 1.4/1.6L Duratec 16V engine |

As a significant modification of the valve train, the camshaft timing belt pulleys are now made of reinforced plastic. The design has also been changed in the process.

The basic procedure for installing the camshaft timing belt pulleys remains the same.

It should however be noted that plastic sleeves are located above the stud on Special Tool 205-072 (15-030 A) in order to protect the camshaft timing belt pulley against damage.

## DIAGNOSIS AND TESTING

# Engine

REFER to Section 303-00 [Engine System - General Information].

## GENERAL PROCEDURES

# Valve Clearance Adjustment

**General Equipment**

| |
|---|
| Feeler gauges |

1. **Remove the valve cover.**

   **For additional information, refer to Valve Cover in this section.**

2. **⚠CAUTION:Only turn the engine in the normal direction of rotation.**

   **Turn the engine until piston No. 1 is at top dead center (TDC).**

3. **NOTE:Note down each cylinder number and the valve clearances measured.**

   **Using a suitable set of feeler gauges, measure the valve clearances.**

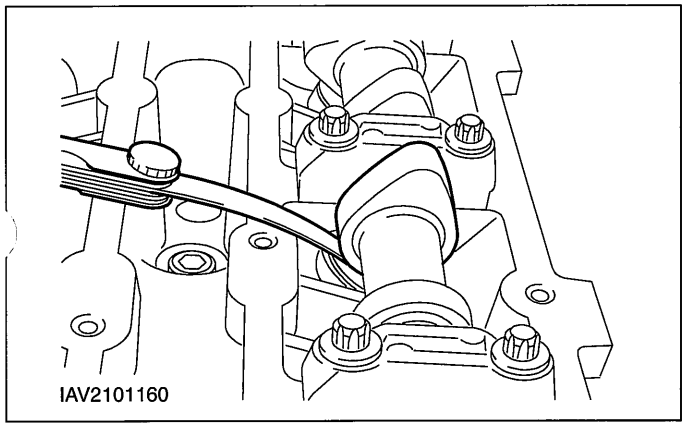


4. **⚠CAUTION:Only turn the engine in the normal direction of rotation.**

   **Turn the engine until each piston is at TDC and measure the valve clearances.**

5. **NOTE:Only carry out the following steps when the valve clearance(s) require adjustment.**

   **For additional information, refer to Specifications in this section.**

   **Remove the camshafts.**

   **For additional information, refer to Camshafts in this section.**

6. **NOTE:The number on the tappet indicates the tappet thickness.**

   **Determine the tappet thickness required:**

   1. Remove the tappet and read the thickness from the underside.
   2. Tappet thickness required = thickness of currently installed tappet + the measured valve clearance - the required valve clearance.

      For additional information, refer to Specifications in this section.
   3. Install the correct tappet.

7. **NOTE:Do not install the timing belt at this stage.**

   **Install the camshafts.**

   **For additional information, refer to Camshafts in this section.**

8. **NOTE:Turn the camshafts to measure the valve clearances.**

   **Measure the valve clearances and repeat this procedure as necessary until all valve clearances are within the specified tolerance.**

9. **Install the timing belt.**

   **For additional information, refer to Timing Belt in this section.**

10. **Install the valve cover.**

    **For additional information, refer to Valve Cover in this section.**

## IN-VEHICLE REPAIR

# Crankshaft Front Seal(21 467 0)

### Special Tool(s)

| | |
|---|---|
| 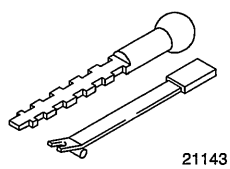 21143 | Remover, Crankshaft Oil Seal 303-293 (21-143) |
| 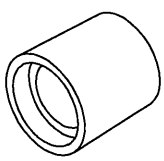 21171 | Installer, Crankshaft Oil Seal 303-395 (21-171) |

| Materials | |
|---|---|
| **Name** | **Specification** |
| Engine Oil | WSS-M2C912-A1 |

## Removal

1. **Remove the timing belt.**

   **For additional information, refer to: Timing Belt (303-01 Engine - 1.25L Duratec-16V (Sigma)/1.4L Duratec-16V (Sigma)/1.6L Duratec-16V (Sigma), In-vehicle Repair).**

2. **Remove the crankshaft timing pulley.**

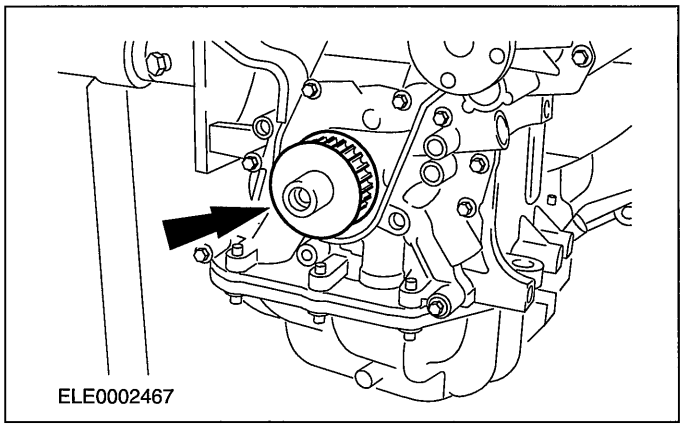


3. **Using the special tool, remove the crankshaft front oil seal.**

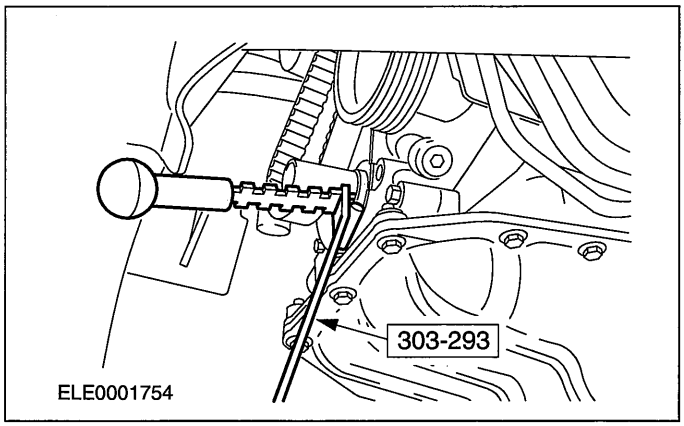


## Installation

1. **Coat the crankshaft front oil seal lip with clean engine oil.**
2. **Using the special tool, install the crankshaft front oil seal.**

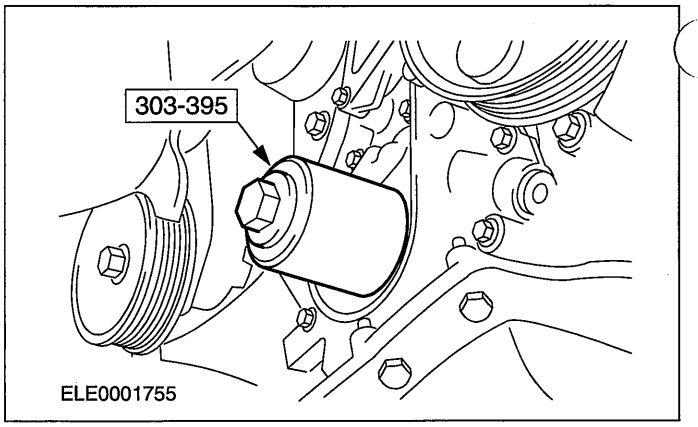


3. **Install the crankshaft timing pulley.**

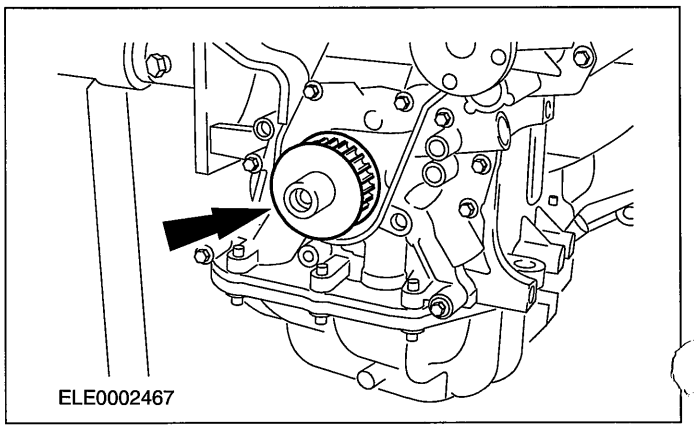

## IN-VEHICLE REPAIR

4. Install the timing belt.

   For additional information, refer to: Timing Belt (303-01 Engine - 1.25L Duratec-16V (Sigma)/1.4L Duratec-16V (Sigma)/1.6L Duratec-16V (Sigma), In-vehicle Repair).

## IN-VEHICLE REPAIR

# Valves(21 215 4)

### Special Tool(s)

| | |
|---|---|
| 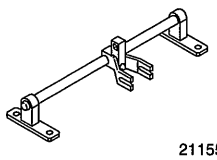 21155 | Compressor, Valve Spring 303-361 (21-155) |
| 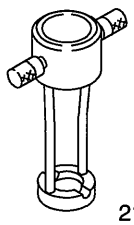 2115504 | Adaptor for 303-361 303-361-04 (21-155-04) |
| 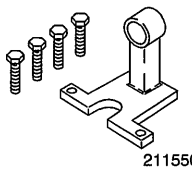 2115505 | Adaptor for 303-361- 303-361-05 (21-155-05) |
| 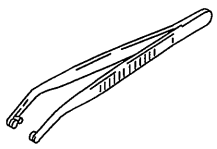 21156 | Installer, Valve Stem Collets 303-362 (21-156) |
| 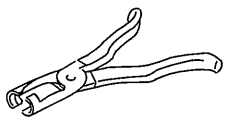 21211 | Pliers, Valve Stem Oil Seals 303-508 (21-211) |

| Materials | |
|---|---|
| **Name** | **Specification** |
| Engine Oil | WSS-M2C912-A1 |

## Removal

1. **Remove the cylinder head.**

   **For additional information, refer to Cylinder head in this section.**

2. **⚠CAUTION:Keep the valve tappets in order for reassembly.**

   **Remove the valve tappets.**

3. **NOTE:Insert wooden wedges in the combustion chamber recesses in the cylinder head so that the valves are held in place for removal.**

   **Install the special tools.**

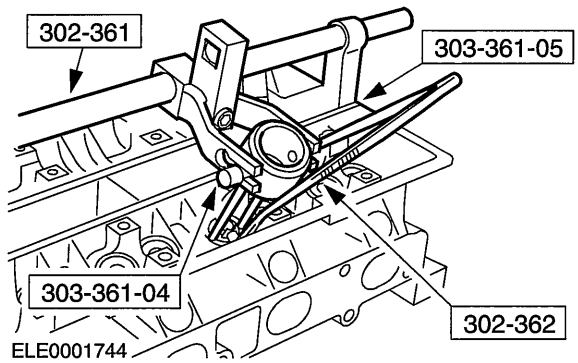


4. **Remove the valve springs.**
   - Compress the valve springs.
   - Remove the valve collets.
   - Remove the valve spring retainers and the valve springs.

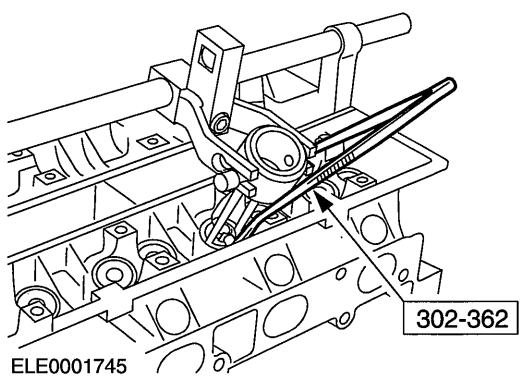


5. **Using the special tool, remove the valve seals.**

## IN-VEHICLE REPAIR

- Discard the valve seals.

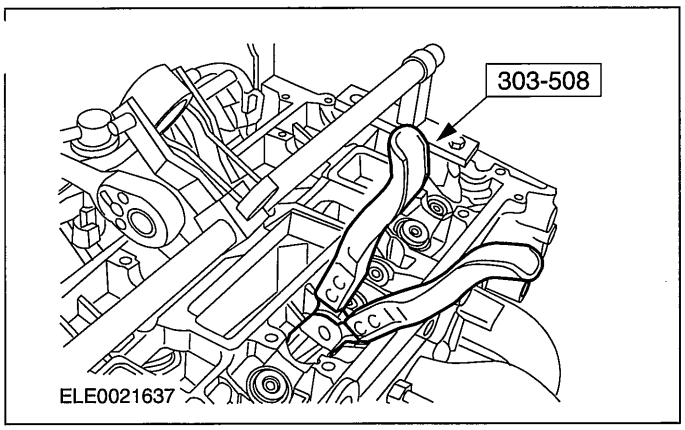


**6. Remove the valves.**

### Installation

**1. Coat the valve stem with clean engine oil.**

**2. Install the valves.**

**3. Install a valve stem mounting sleeve over the valve collet groove (valve shown removed for clarity).**

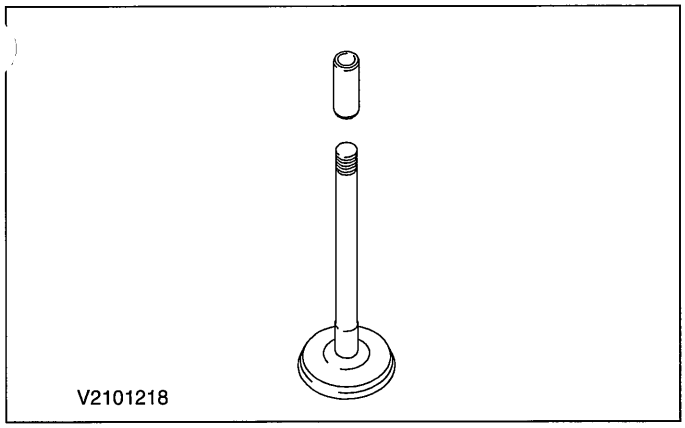


**4. ⚠CAUTION:The valve seal for the intake valve is green. The valve seal for the exhaust valve is brown.**

**NOTE:**Insert wooden wedges in the combustion chamber recesses in the cylinder head so that the valves are held in place for installation.

**NOTE:**Install new valves seals.

**NOTE:**Coat the valve seal lip and the valve stem with clean engine oil.

**Using the special tool, install the valve seals.**

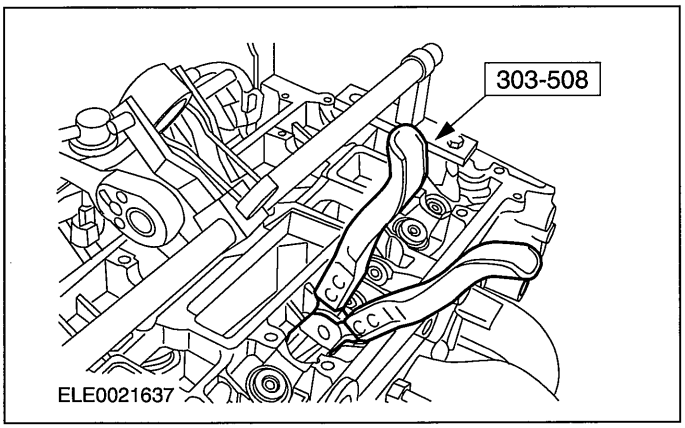


**5. Using the special tool, install the valve springs.**

- Install the valve spring retainers and the valve springs.
- Compress the valve springs.
- Install the valve collets.

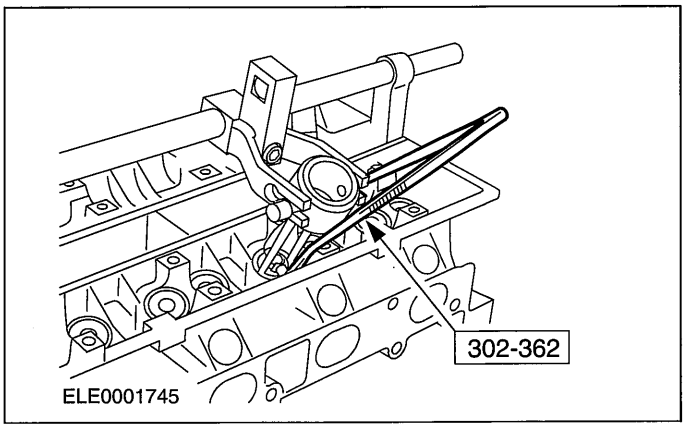


**6. Remove the special tools.**

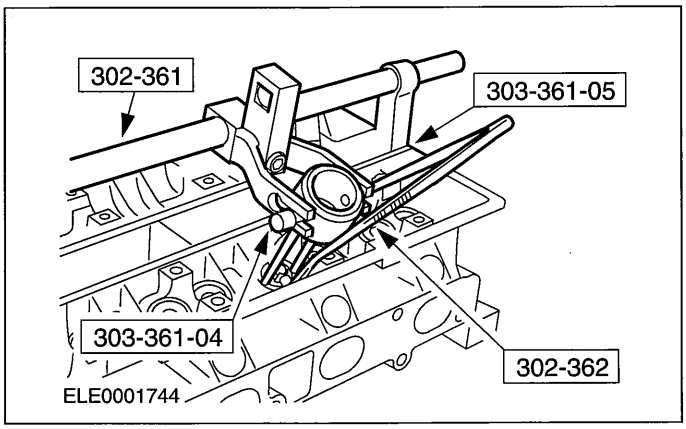


**7. ⚠CAUTION:The valve tappets must be installed in their original locations.**

**Install the valve tappets.**

## IN-VEHICLE REPAIR

8. Install the cylinder head.

   For additional information, refer to Cylinder head in this section.

## IN-VEHICLE REPAIR

# Intake Manifold(21 183 0)

## Removal

**WARNING:Do not smoke or carry lighted tobacco or open flame of any type when working on or near any fuel related components. Highly flammable mixtures are always present and may ignite. Failure to follow these instructions may result in personal injury.**

1. **Release the fuel system pressure. For additional information, refer to Section 310-00 [Fuel System - General Information].**
2. **Disconnect the battery ground cable. For additional information, refer to Section 414-01 [Battery, Mounting and Cables].**
3. **Remove the air cleaner. For additional information, refer to Section 303-12 [Intake Air Distribution and Filtering].**
4. **Detach the power steering fluid reservoir from the bracket and position it to one side.**

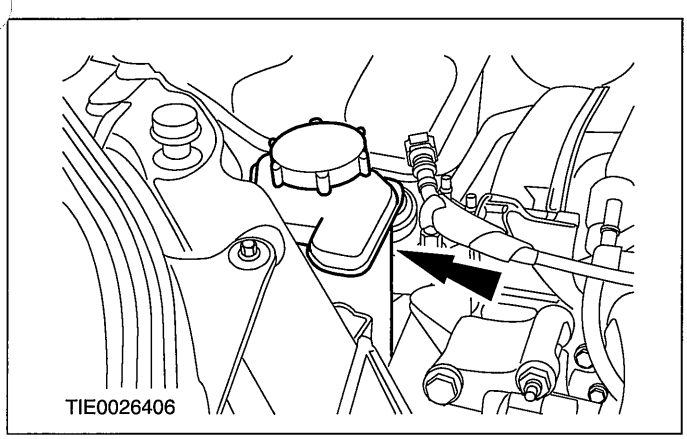


5. **Remove the accessory drive belt. For additional information, refer to Section 303-05 [Accessory Drive].**
6. **Remove the intake manifold lower retaining bolt.**

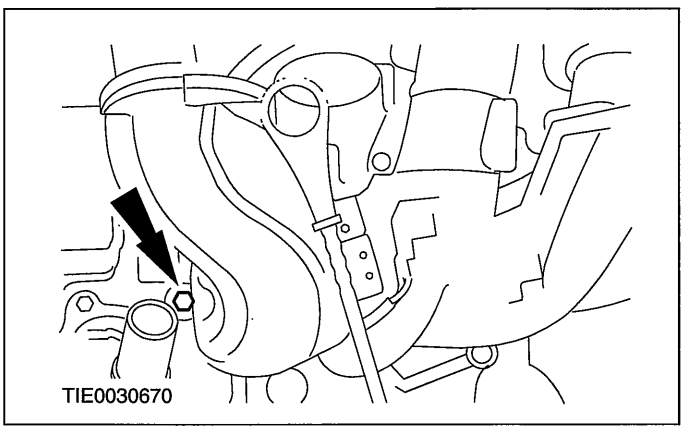


7. **Disconnect the engine wiring harness electrical connector.**

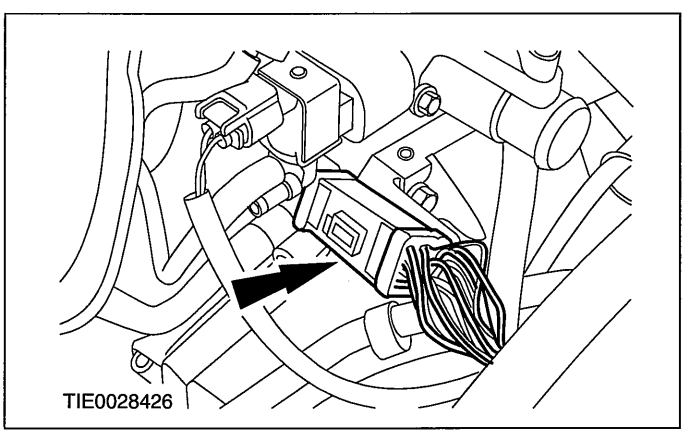


8. **Disconnect the positive crankcase ventilation (PCV) hose from the PCV.**

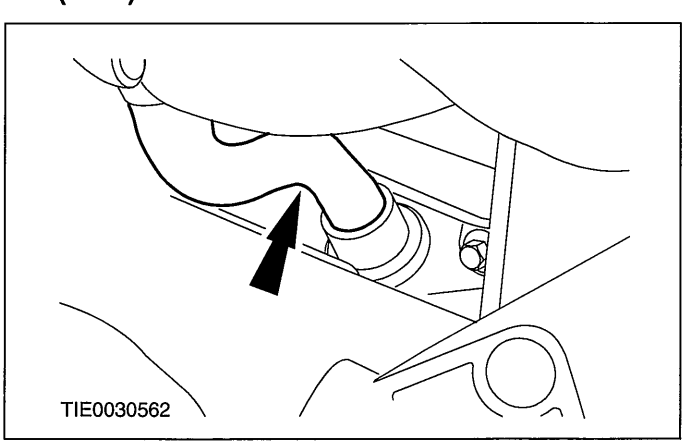

## IN-VEHICLE REPAIR

9. Disconnect the brake booster vacuum line from the intake manifold.

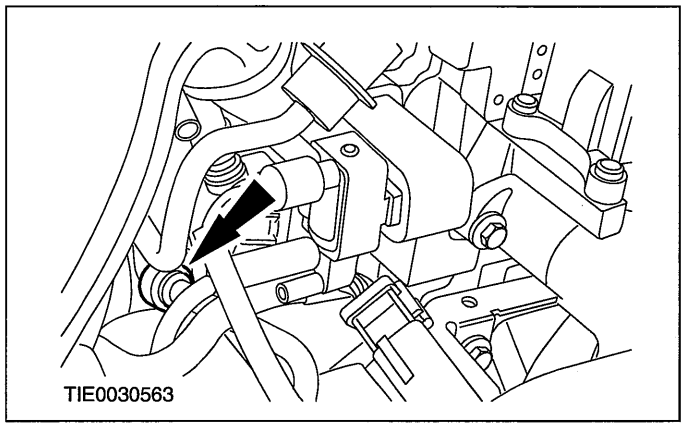


10. Disconnect the evaporate emission (EVAP) hose from the EVAP valve.

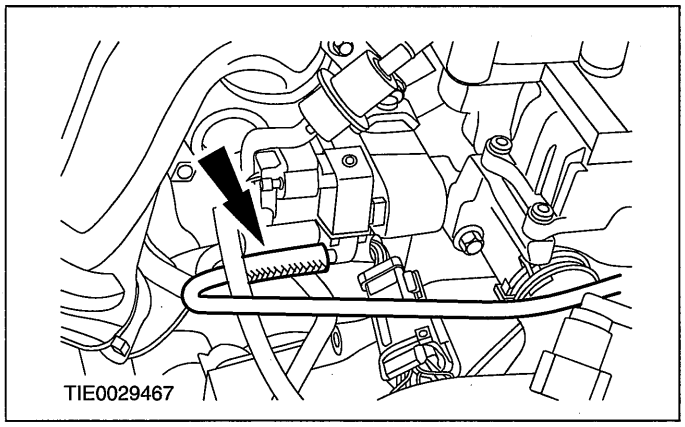


11. Disconnect the knock sensor (KS) electrical connector.

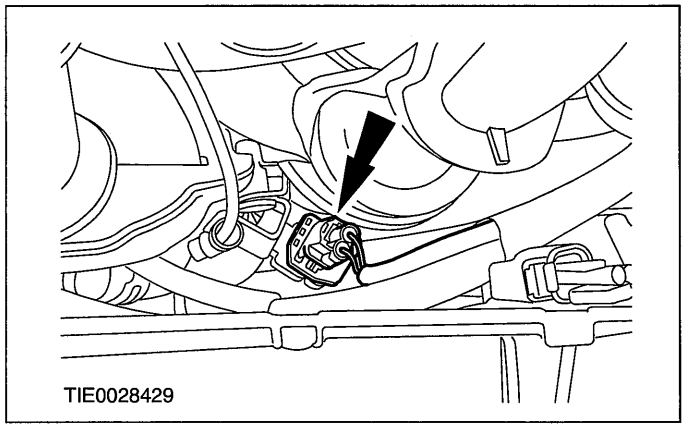


12. Detach the oil level indicator tube from the intake manifold.

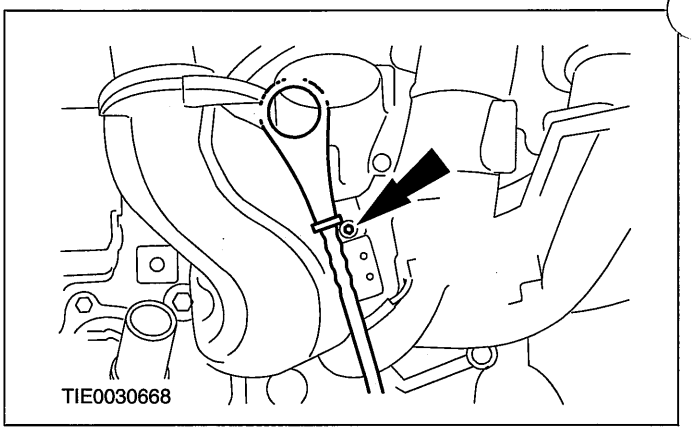


13. Disconnect the temperature and manifold absolute pressure (T-MAP) sensor electrical connector.

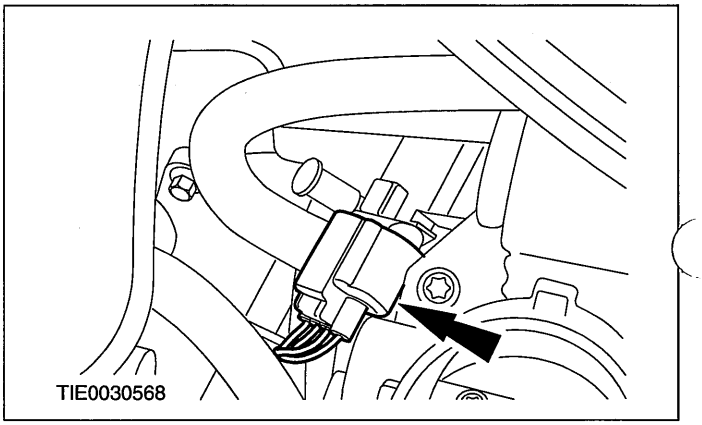


14. Disconnect the throttle plate control motor (DC-ISC) electrical connector.

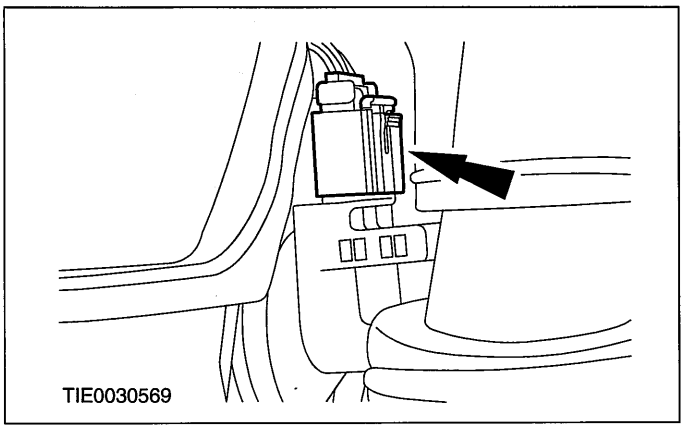

## IN-VEHICLE REPAIR

**15. Disconnect the generator electrical connector.**

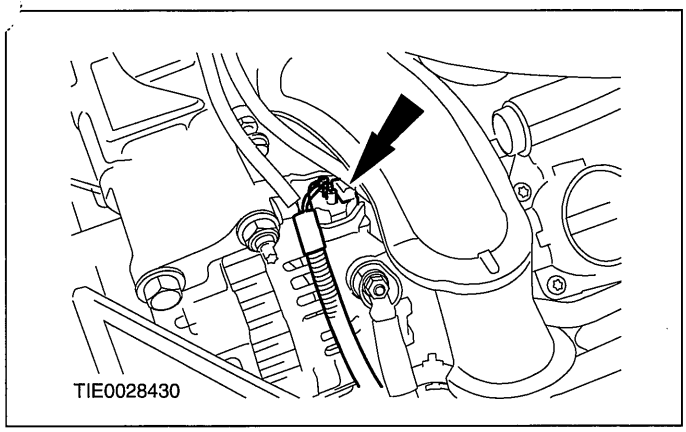


**16. Detach the generator from the engine.**

1. Remove the bolts.
2. Remove the nut and the stud.

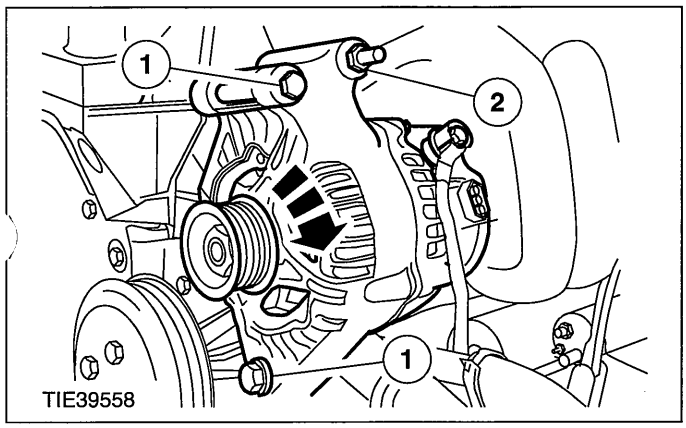


**17. Disconnect the fuel injector electrical connectors and position it with the engine wiring harness to one side.**

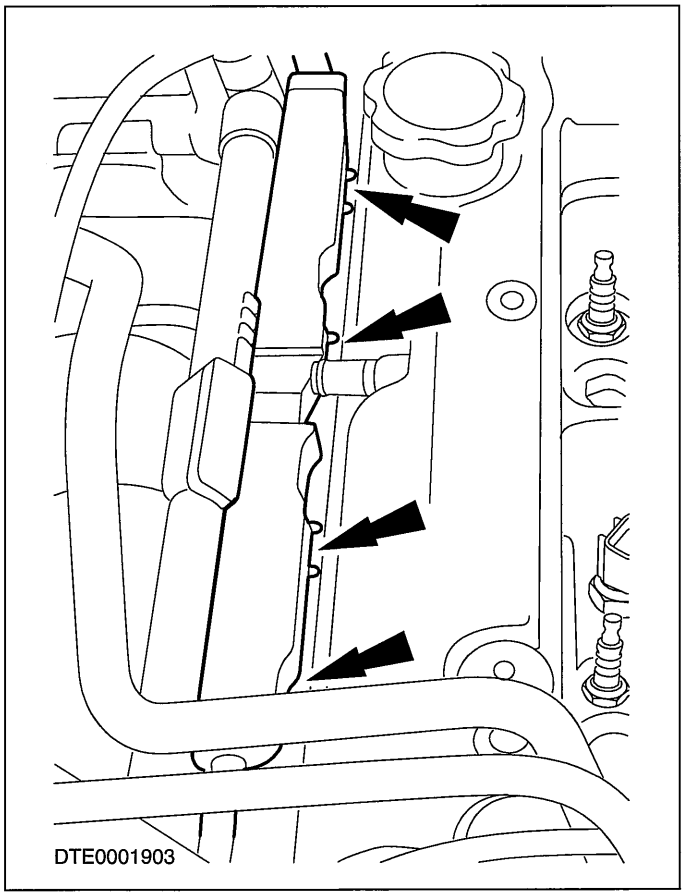


**18. Disconnect the engine coolant temperature (ECT) sensor electrical connector.**

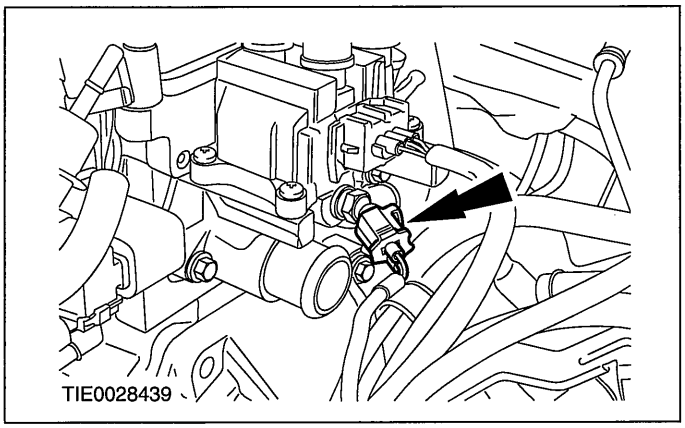

## IN-VEHICLE REPAIR

**19. Disconnect the fuel supply line quick release coupling. For additional information, refer to Section 310-00 [Fuel System - General Information].**

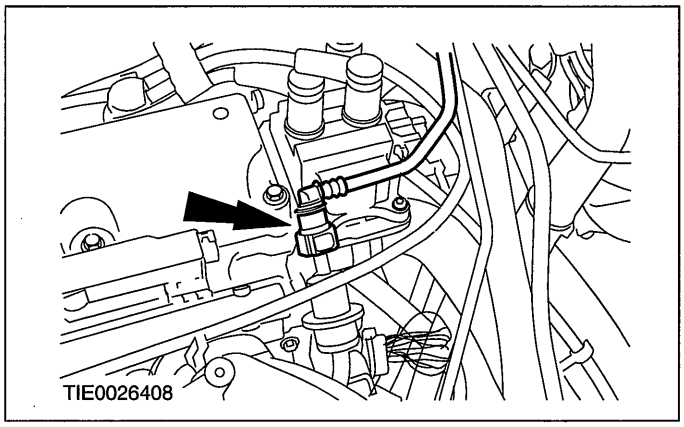


**20. Disconnect the fuel return line quick release coupling. For additional information, refer to Section 310-00 [Fuel System - General Information].**

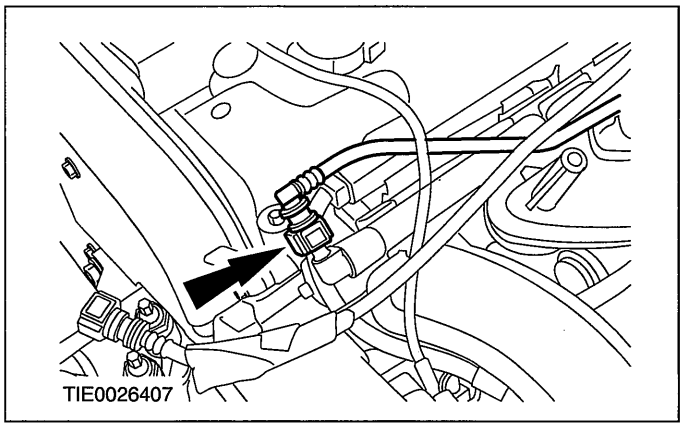


**21. Detach the fuel line from the intake manifold and position it to one side.**

- Remove the cable tie.

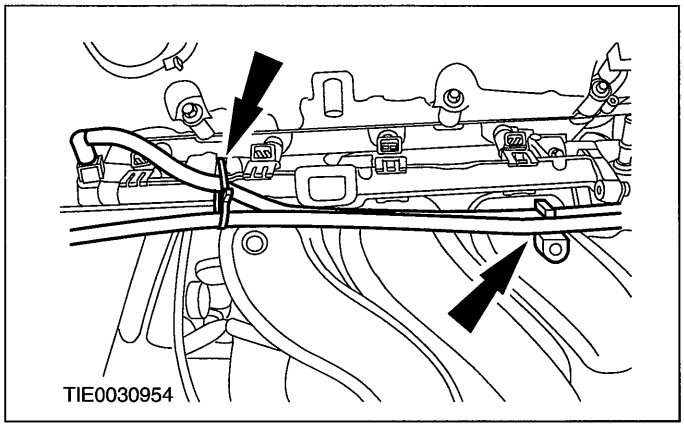


**22. Remove the fuel supply manifold.**

- Discard the O-ring seals.

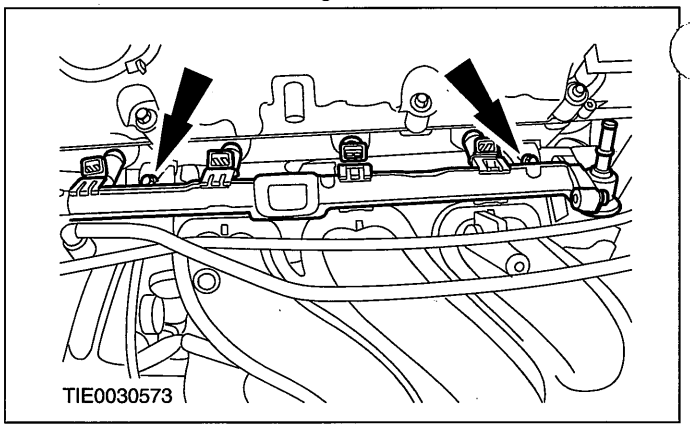


**23. Detach the wiring harness and the coolant hose from the intake manifold.**

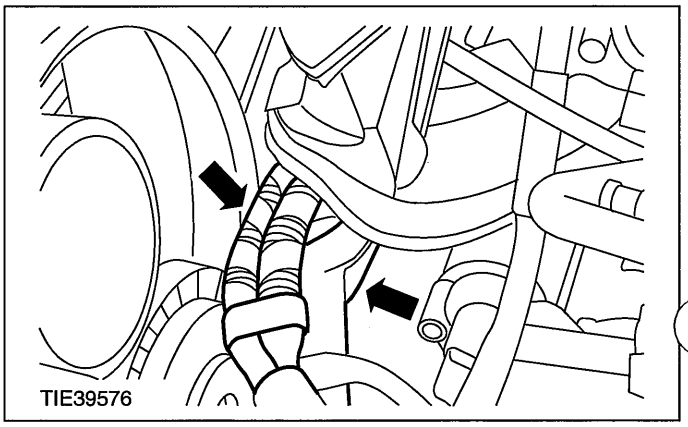


**24. Detach the wiring harness from the intake manifold.**

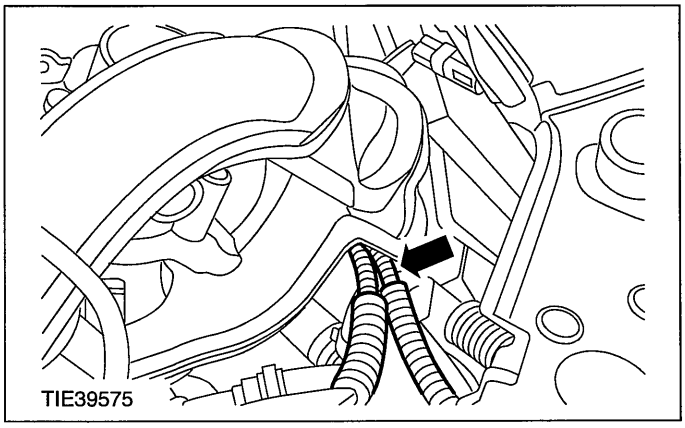


**25. Remove the intake manifold.**

## IN-VEHICLE REPAIR

- Discard the gaskets.

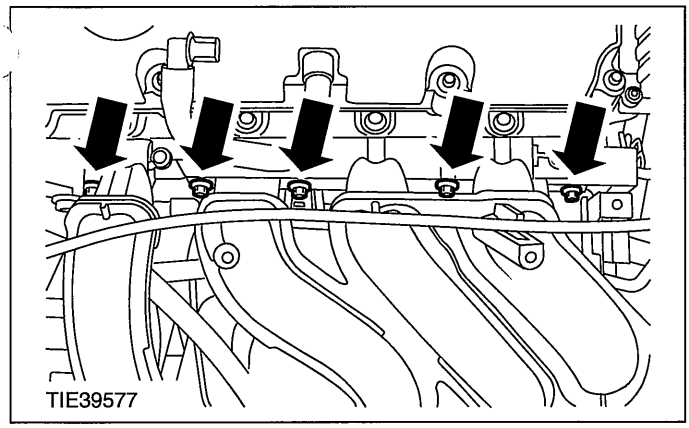


### Installation

1. **NOTE:Install new intake manifold gaskets.**
   **Install the intake manifold.**

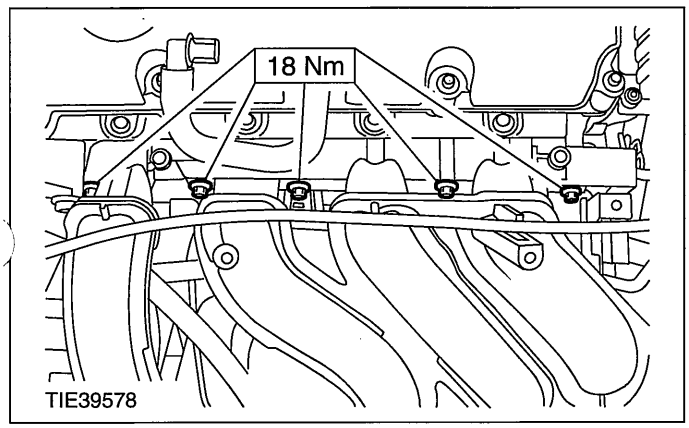


2. **Attach the wiring harness to the intake manifold.**

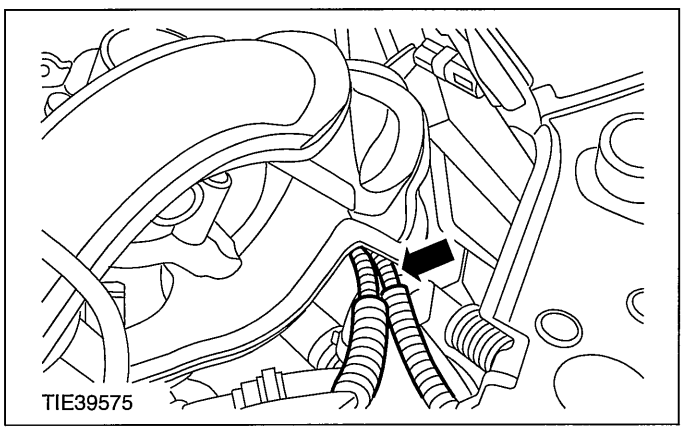


3. **Attach the wiring harness and the coolant hose to the intake manifold.**

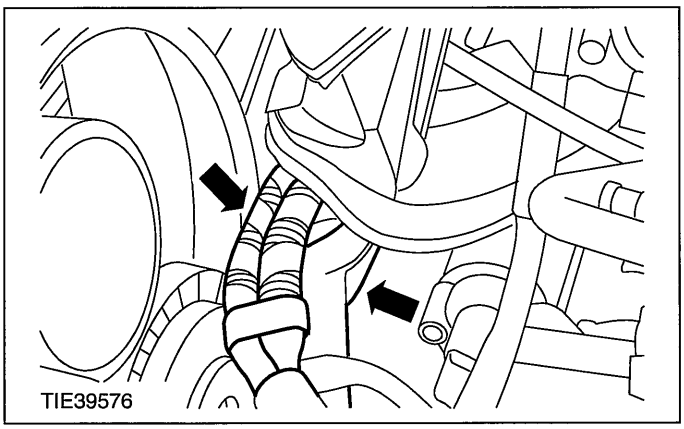


4. **NOTE:Install new injector O-ring seals.**
   **NOTE:**Coat the O-ring seals with clean engine oil.
   **Install the fuel supply manifold.**

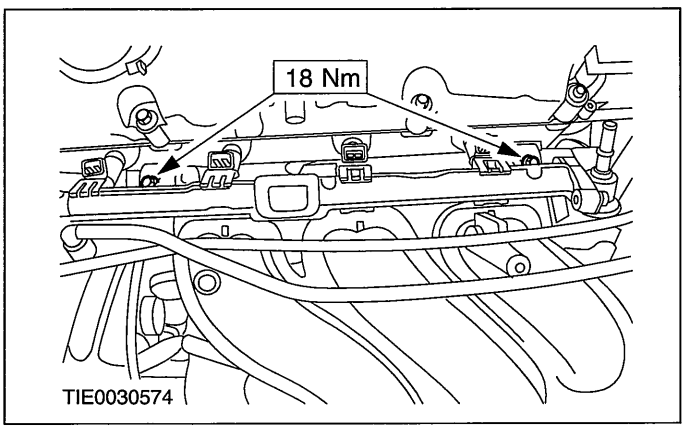


5. **Connect the fuel return line quick release coupling. For additional information, refer to Section 310-00 [Fuel System - General Information].**

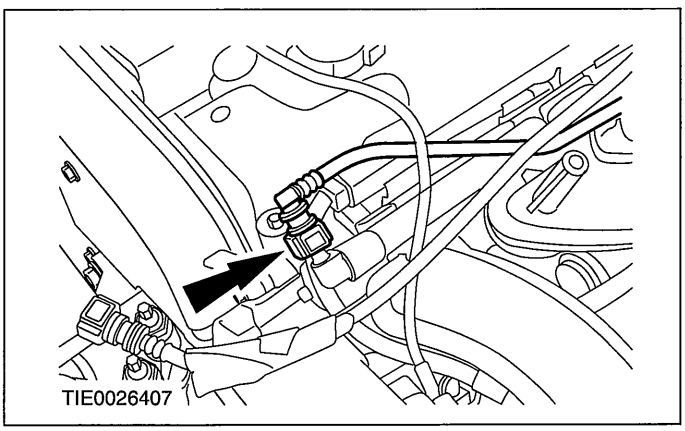

## IN-VEHICLE REPAIR

6. **Connect the fuel supply line quick release coupling. For additional information, refer to Section 310-00 [Fuel System - General Information].**

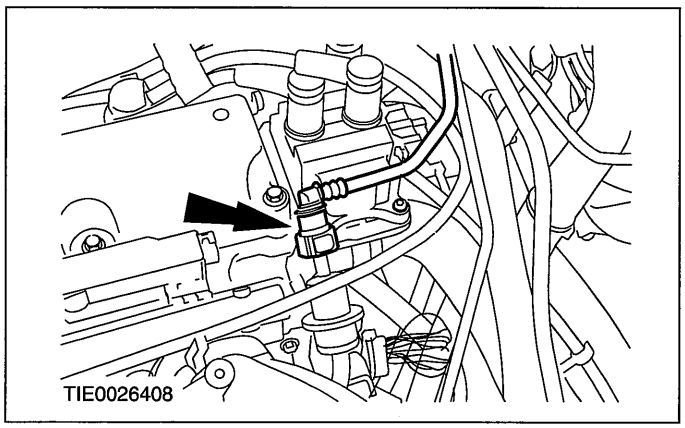


7. **Attach the fuel line to the intake manifold.**
   - Install the cable tie.

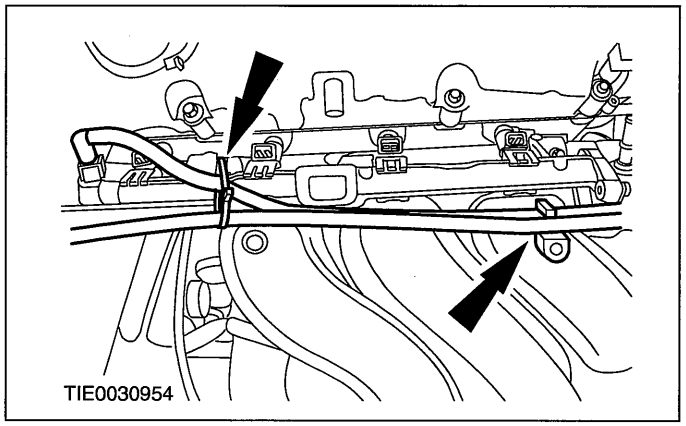


8. **Connect the fuel injector electrical connectors.**

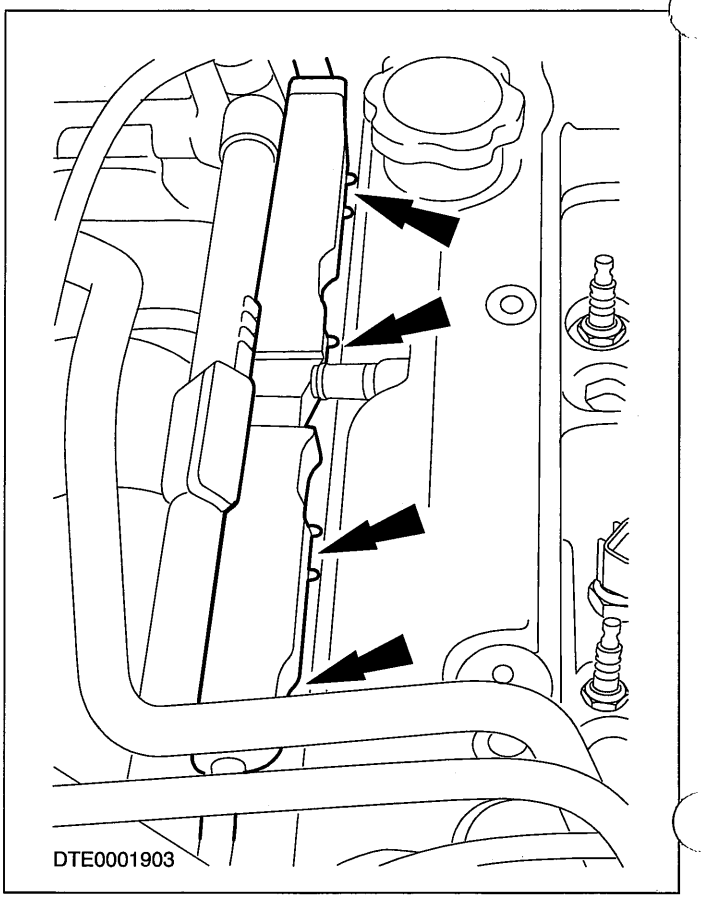


9. **Connect the engine coolant temperature (ECT) sensor electrical connector.**

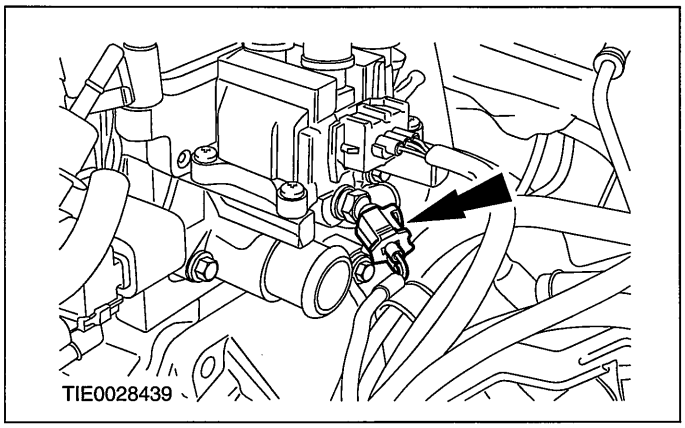


10. **Attach the generator to the engine.**
    1. Install the stud and nut.

## IN-VEHICLE REPAIR

2. Install the bolts.

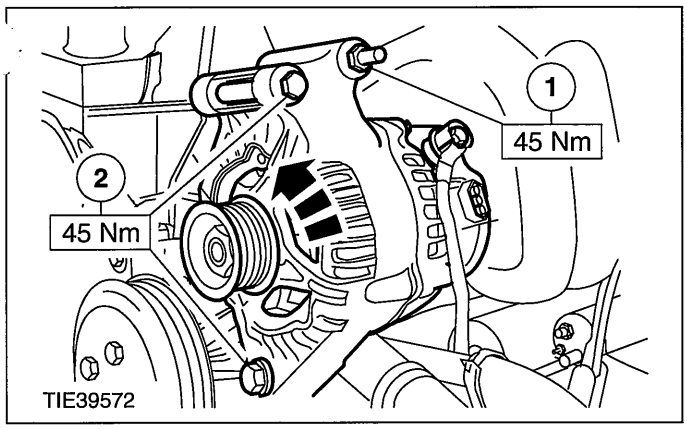


**11. Connect the generator electrical connector.**

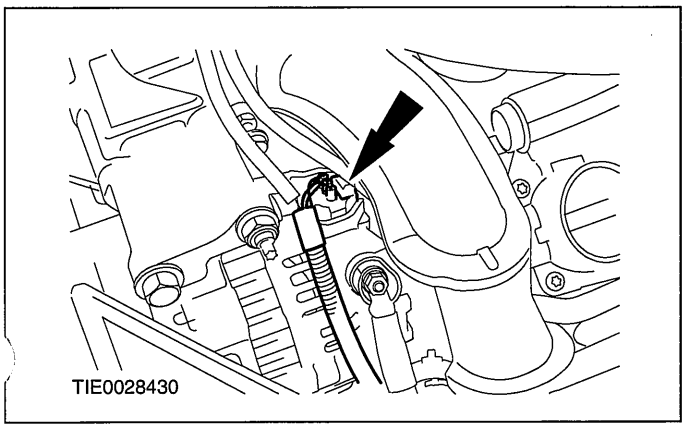


**12. Connect the throttle plate control motor (DC-ISC) electrical connector.**

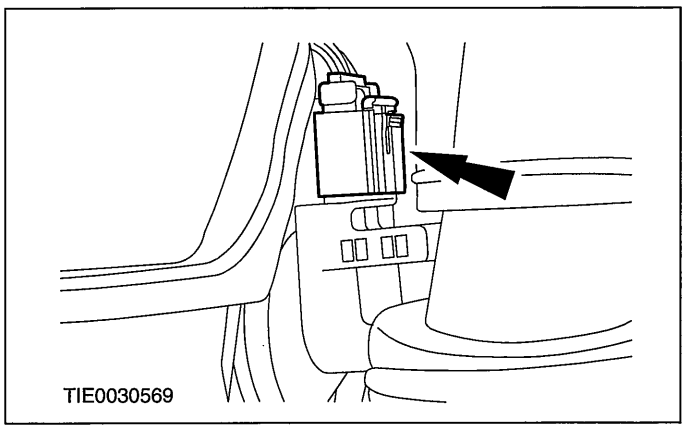


**13. Connect the temperature and manifold absolute pressure (T-MAP) sensor electrical connector.**

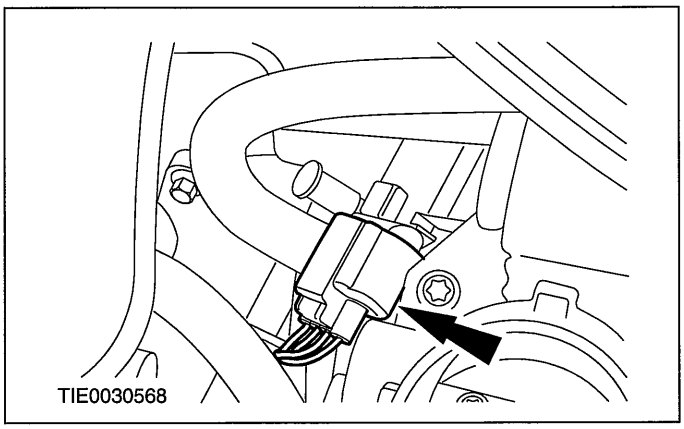


**14. Attach the oil level indicator tube to the intake manifold.**

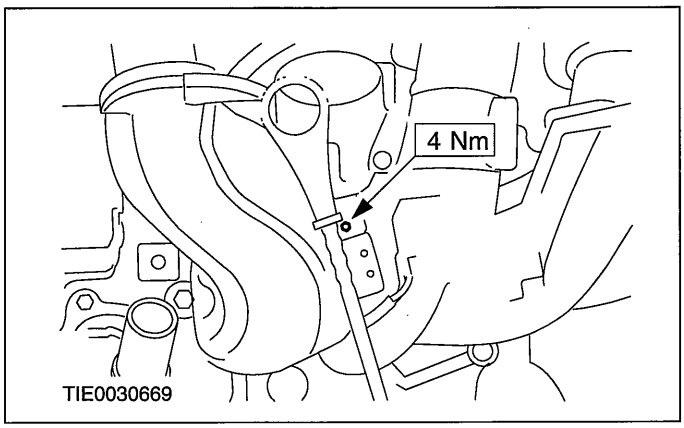


**15. Connect the knock sensor (KS) electrical connector.**

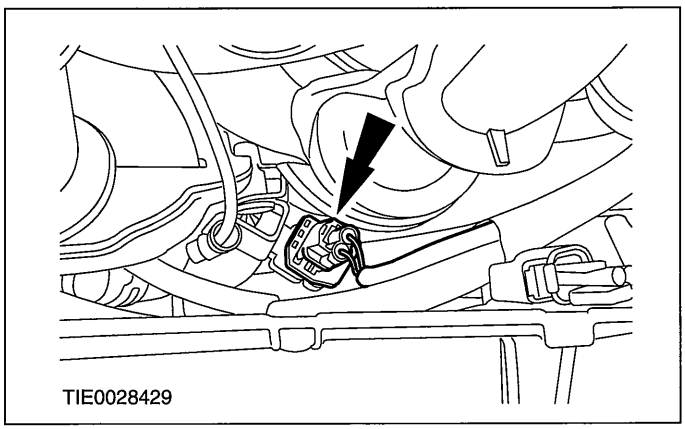

## IN-VEHICLE REPAIR

16. Connect the evaporate emission (EVAP) hose to the EVAP valve.

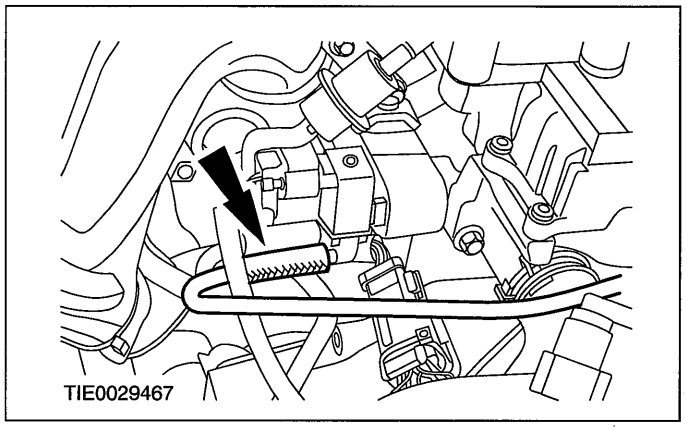


17. Connect the brake booster vacuum line to the intake manifold.

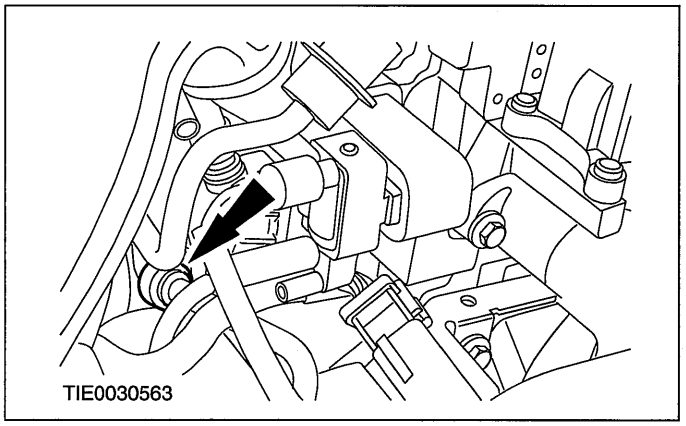


18. Connect the positive crankcase ventilation (PCV) hose to the PCV.

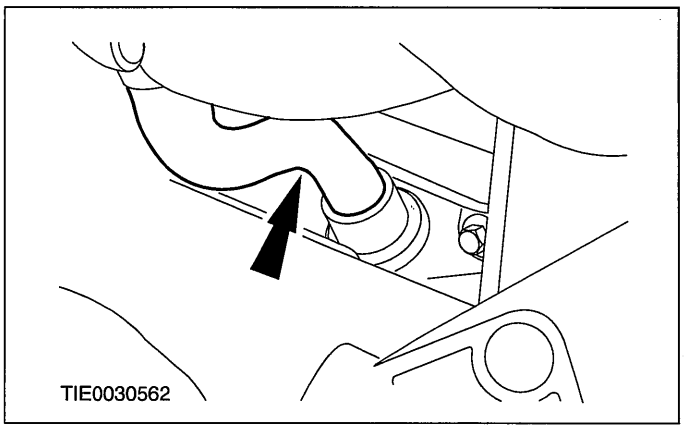


19. Connect the engine wiring harness electrical connector.

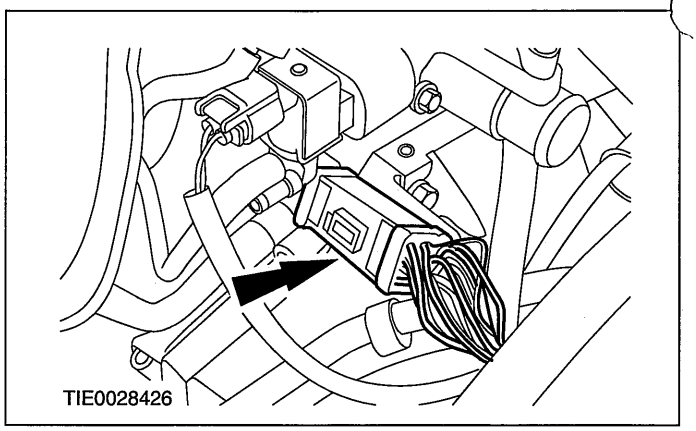


20. Install the intake manifold lower retaining bolt and the generator bracket retaining bolts.

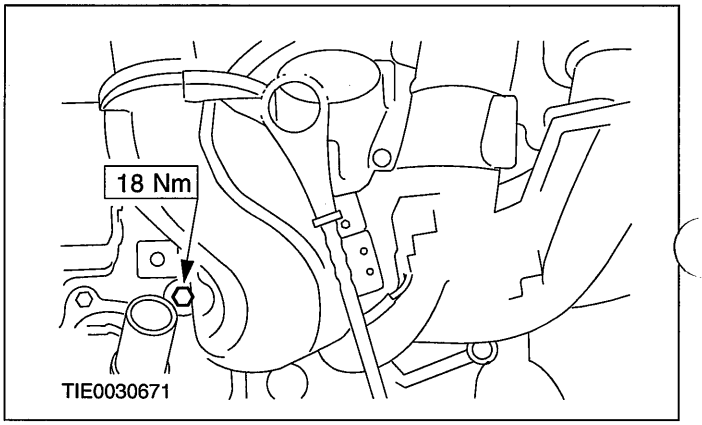


21. Install the accessory drive belt. For additional information, refer to Section 303-05 [Accessory Drive].

22. Attach the power steering fluid reservoir to the bracket.

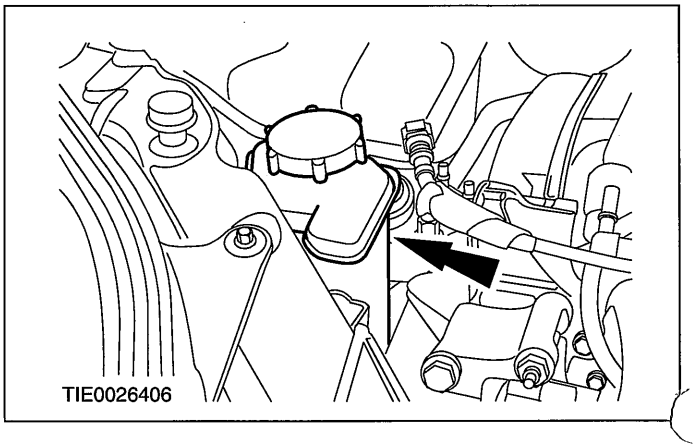


23. Install the air cleaner. For additional information, refer to Section 303-12 [Intake Air Distribution and Filtering].

## IN-VEHICLE REPAIR

24. Connect the battery ground cable. For additional information, refer to Section 414-01 [Battery, Mounting and Cables].

## IN-VEHICLE REPAIR

# Valve Cover(21 141 0)

| Materials | |
|---|---|
| Name | Specification |
| Silicone grease | ESE-M1C171-AA |

## Removal

**WARNING:Do not smoke or carry lighted tobacco or open flame of any type when working on or near any fuel related components. Highly flammable mixtures are always present and may ignite. Failure to follow these instructions may result in personal injury.**

1. **Disconnect the battery ground cable. For additional information, refer to Section 414-01 [Battery, Mounting and Cables].**
2. **Remove the air cleaner. For additional information, refer to Section 303-12 [Intake Air Distribution and Filtering].**
3. **Disconnect the spark plug electrical connectors and detach the wires from the valve cover.**

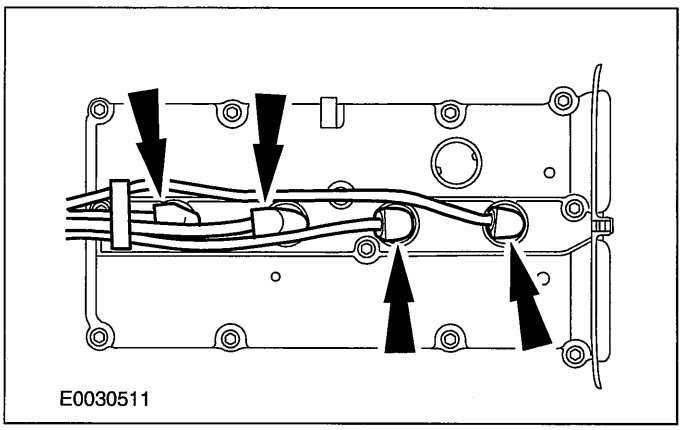


4. **Remove the valve cover.**

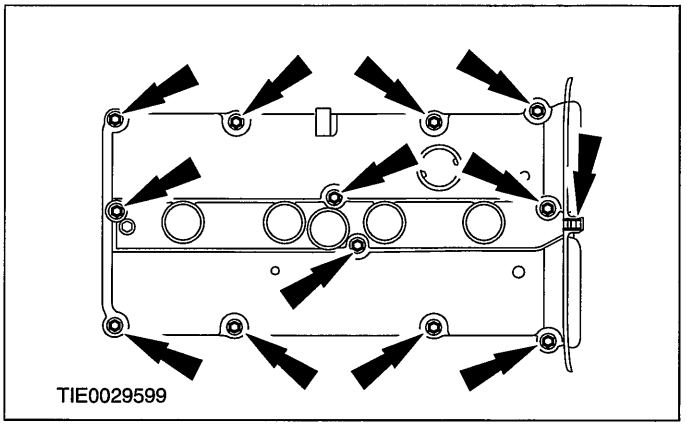


## Installation

1. **NOTE:Check the valve cover gasket for damage and install a new valve cover gasket if necessary.**

**NOTE:**Install the stud bolts to positions 5 and 6.

**Install the valve cover.**

- Tighten the bolts in the sequence shown in three stages.
- Stage 1: Tighten bolt 1 by 3 to 4 turns.
- Stage 2: Tigthen bolts 1 through 13 to 3 Nm.
- Stage 3: Tigthen bolts 1 through 13 to 9 Nm.

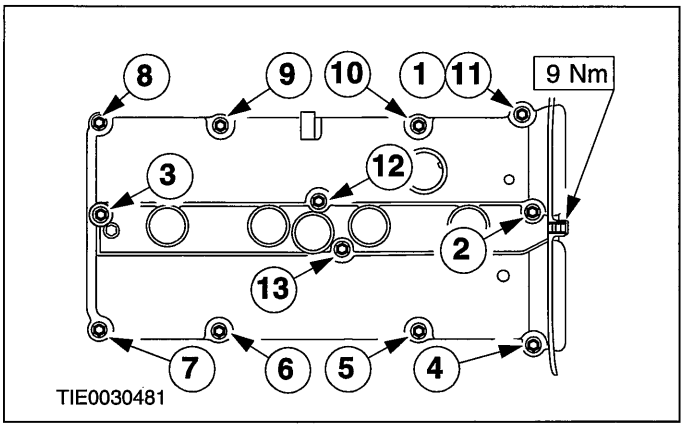


2. **CAUTION:Use a suitable blunt object to avoid damage to the spark plug connector gasket. Coat the inside of the spark plug connector with silicone grease to depth of 5-10 mm.**

## IN-VEHICLE REPAIR

**Connect the spark plug electrical connectors and attach the wires to the valve cover.**

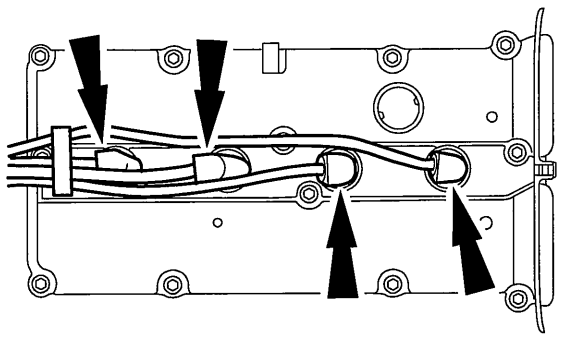

E0030511

3. **Install the air cleaner. For additional information, refer to Section 303-12 [Intake Air Distribution and Filtering].**
4. **Connect the battery ground cable. For additional information, refer to Section 414-01 [Battery, Mounting and Cables].**

## IN-VEHICLE REPAIR

# Valve Seals(21 238 0)

### Special Tool(s)

| | |
|---|---|
| 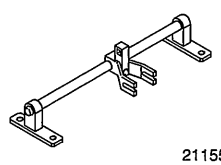 21155 | Compressor, Valve Spring 303-361 (21-155) |
| 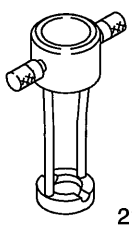 2115504 | Adapter for 303-361 303-361-04 (21-155-04) |
| 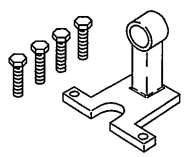 2115505 | Adapter for 303-361 303-361-05 (21-155-05) |
| 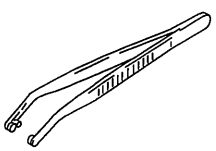 21156 | Installer, Valve Stem Collets 303-362 (21-156) |
| 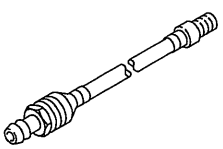 21157 | Adapter, Air Supply (Cylinder Head) 303-363 (21-157) |
| 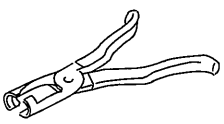 21211 | Pliers, Valve Stem Oil 303-508 (21-211) |

| Materials | |
|---|---|
| **Name** | **Specification** |
| Engine oil | WSS-M2C912-A1 |

## Removal

1. **Remove the camshafts.**

   **For additional information, refer to Camshafts in this section.**

2. **Remove the engine rear lifting eye.**

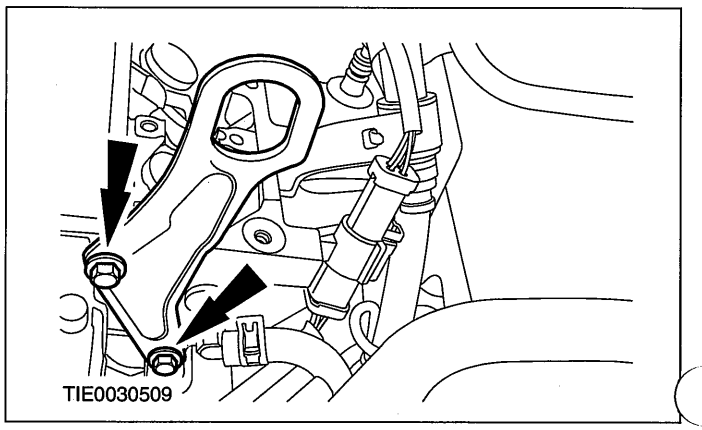


3. ⚠**CAUTION:Keep the valve tappets in order for reassembly.**

   **Remove the valve tappets.**

4. **Install the special tools.**

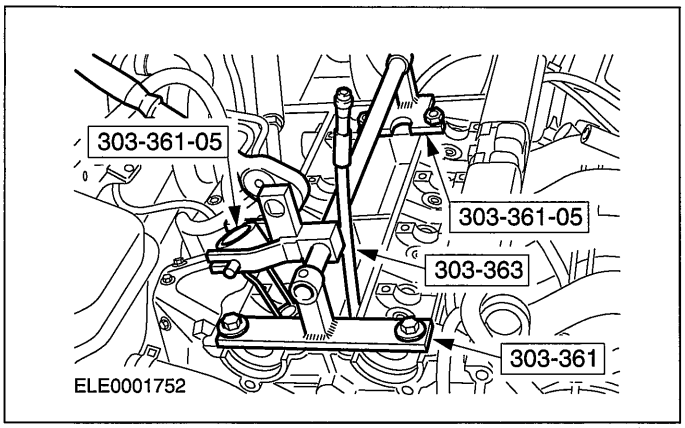


5. **Apply 7 to 10 bar of compressed air into the cylinder.**
6. **Using the special tool, remove the valve springs.**
   - Compress the valve spring.
   - Remove the valve collets.

## IN-VEHICLE REPAIR

- Remove the valve spring retainer and the valve springs.

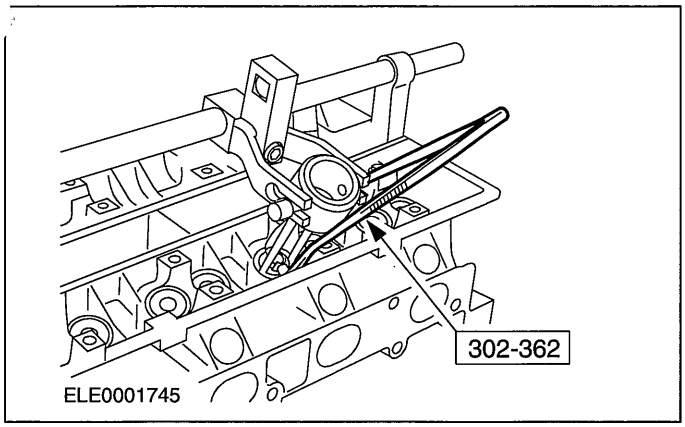


7. **Using the special tool, remove the valve seals.**
   - Discard the valve seals.

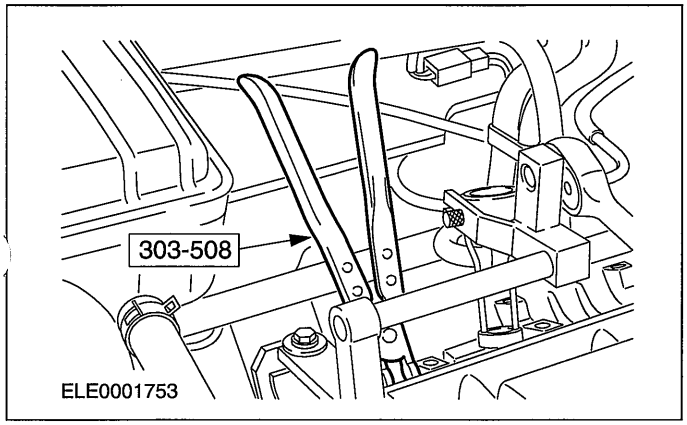


### Installation

1. **Install a valve stem mounting sleeve over the valve collet groove (valve shown removed for clarity).**

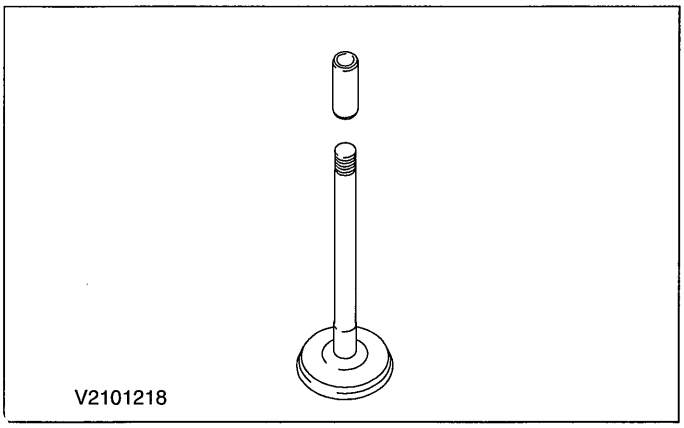


2. ⚠**CAUTION:The intake valve seal are colored green, and the exhaust valve seals are colored brown.**

**NOTE:**Install new valve seals.

**NOTE:**Coat the valve seal lip and the valve stem with clean engine oil.

**Using the special tool, install the valve seal.**

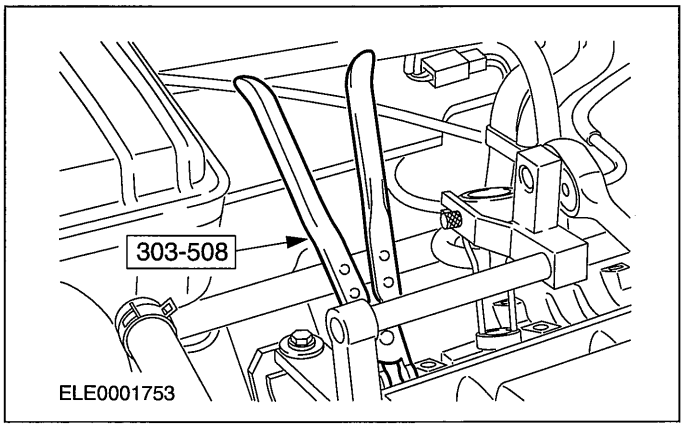


3. **Remove the mounting sleeve.**
4. **Using the special tool, install the valve springs.**
   - Install the valve spring retainer and the valve springs.
   - Compress the valve spring.
   - Install the valve collets.

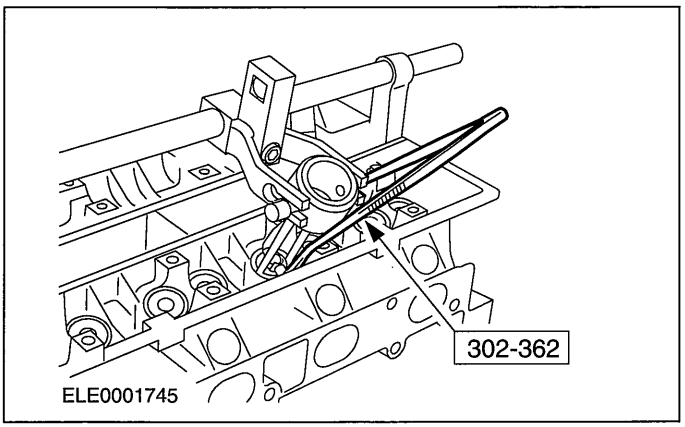


5. **Remove the special tools.**

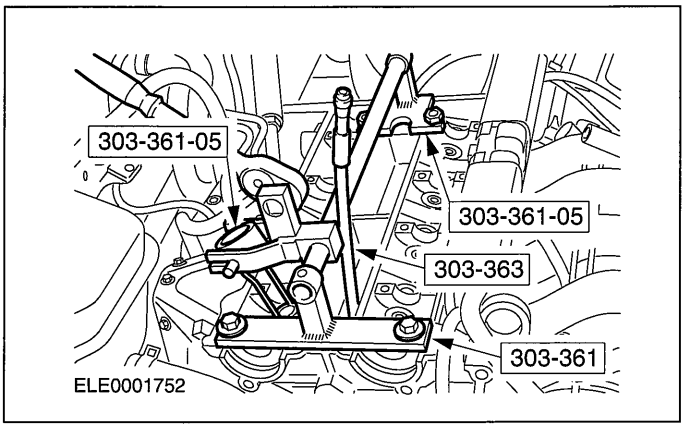

## IN-VEHICLE REPAIR

6. ⚠CAUTION:The valve tappets must be installed in their original locations.

   Install the valve tappets.

7. Install the engine rear lifting eye.

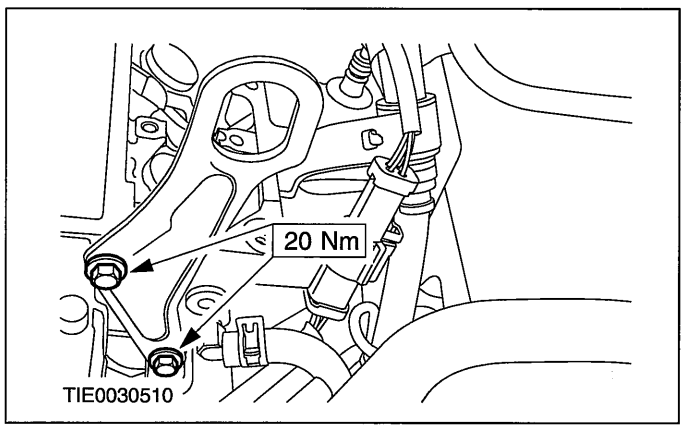


8. Install the camshafts.

   For additional information, refer to Camshafts in this section.

## IN-VEHICLE REPAIR

# Camshafts(21 284 0)

### Special Tool(s)

| | |
|---|---|
| 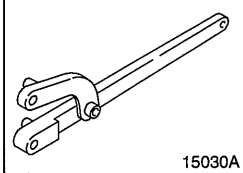 15030A | Universal Flange Holding Wrench 205-072 |
| 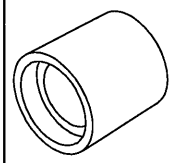 21171 | Installer, Crankshaft Seal 303-395 |

| Materials | |
|---|---|
| **Name** | **Specification** |
| Sealant | WSK-M2G348-A2 |
| Engine Oil | WSS-M2C912-A1 |

## Removal

1. **Remove the timing belt.**

   **For additional information, refer to: Timing Belt (303-01 Engine - 1.25L Duratec-16V (Sigma)/1.4L Duratec-16V (Sigma)/1.6L Duratec-16V (Sigma), In-vehicle Repair).**

2. **⚠CAUTION:Install a hose (order no. E890438S) to the special tool studs, to prevent damage to the camshaft pulleys.**

   **Remove the camshaft pulleys.**

   - Discard the retaining bolts.

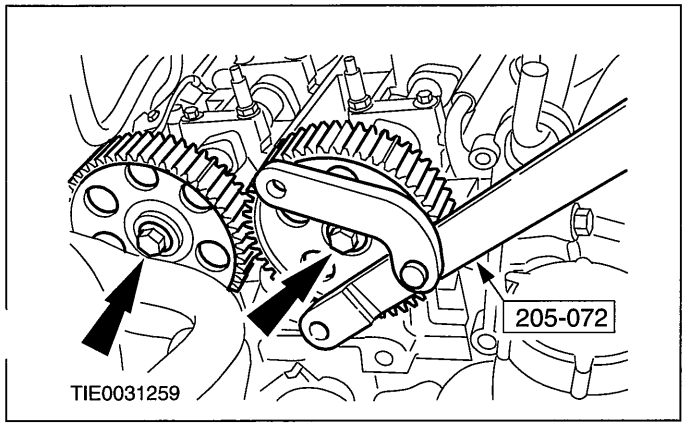


3. **⚠CAUTION:Keep the camshaft bearing caps in order for installation.**

   **Remove the camshafts.**

   - Slacken each camshaft bearing cap retaining bolt in the sequence shown by one turn until the camshaft is released.
   - Remove the camshaft bearing caps.
   - Remove and discard the camshaft seals.

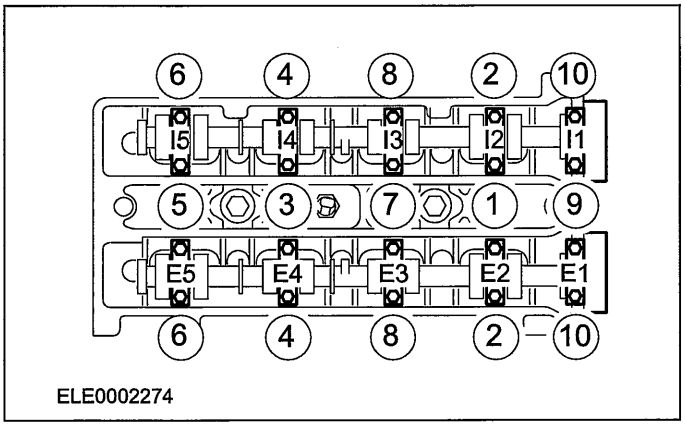


## Installation

1. **Apply sealant to the points indicated on the camshaft bearing cap no. 1 and to the mating surface of the cylinder head.**

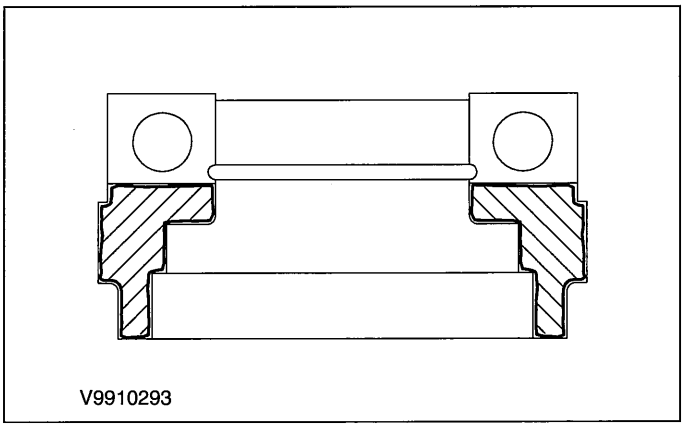


2. **Coat the camshafts and the camshaft bearing caps with clean engine oil.**

3. **⚠CAUTION:Position the camshafts in place so that none of the cams are at full lift.**

**NOTE:**The camshaft bearing cap numbering starts at the timing belt end with E1 on the exhaust side and with I1 on the intake side.

**NOTE:**The exhaust camshaft has an additional cam for the camshaft position (CMP) sensor.

## IN-VEHICLE REPAIR

**Install the camshafts and camshaft bearing caps.**

- Tighten the camshaft bearing cap retaining bolts in the sequence shown in three stages.
- Stage 1: One half turn on each bolt until all of the camshaft bearing caps are in contact with the cylinder head.
- Stage 2: 7 Nm.
- Stage 3: 45 degrees.

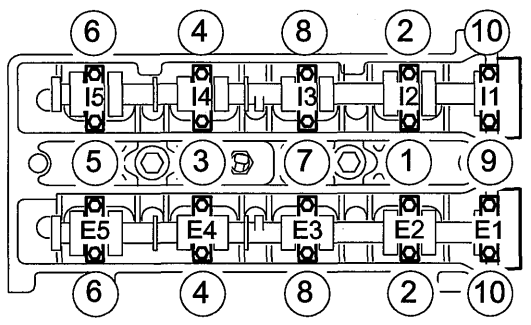

ELE0002274

4. **Adjust the valve clearances.**

   **For additional information, refer to: Valve Clearance Adjustment (303-01 Engine - 1.25L Duratec-16V (Sigma)/1.4L Duratec-16V (Sigma)/1.6L Duratec-16V (Sigma), General Procedures).**

5. **NOTE:Install new camshaft seals.**

**NOTE:**Coat the camshaft journals and camshaft seal lip with clean engine oil.

**Using the special tool, install the camshaft seals.**

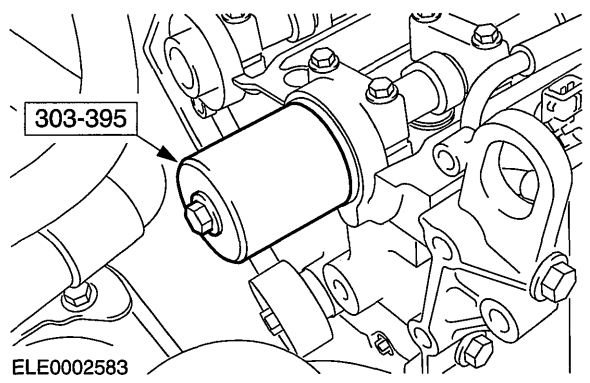

ELE0002583

6. **NOTE:Do not fully tighten the camshaft pulley retaining bolts at this stage. Make sure the camshaft pulleys turn on the camshafts.**

   **Install the camshaft pulleys.**

7. **Install the timing belt.**

   **For additional information, refer to: Timing Belt (303-01 Engine - 1.25L Duratec-16V (Sigma)/1.4L Duratec-16V (Sigma)/1.6L Duratec-16V (Sigma), In-vehicle Repair).**

## IN-VEHICLE REPAIR

# Camshaft Seal(21 288 0)

### Special Tool(s)

| | |
|---|---|
| 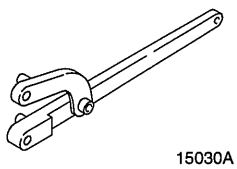 15030A | Universal Flange Holding Wrench 205-072 |
| 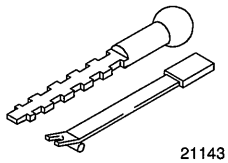 21143 | Remover, Crankshaft Seal 303-293 |
| 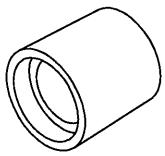 21171 | Installer, Crankshaft Seal 303-395 |

| Materials | |
|---|---|
| **Name** | **Specification** |
| Engine Oil | WSS-M2C912-A1 |

## Removal

1. **Remove the timing belt.**

   **For additional information, refer to: Timing Belt (303-01 Engine - 1.25L Duratec-16V (Sigma)/1.4L Duratec-16V (Sigma)/1.6L Duratec-16V (Sigma), In-vehicle Repair).**

2. **⚠CAUTION:Install a hose (order no. E890438S) to the special tool studs, to prevent damage to the camshaft pulleys.**

   **Remove the camshaft pulleys.**

   - Discard the retaining bolts.

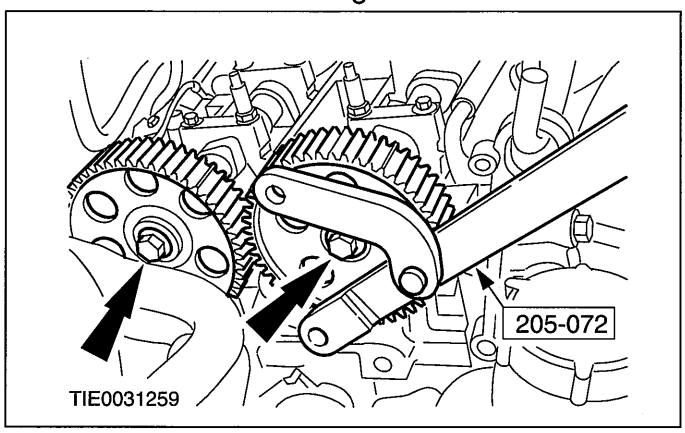


3. **Using the special tool, remove the camshaft seal.**

   - Discard the oil seal.

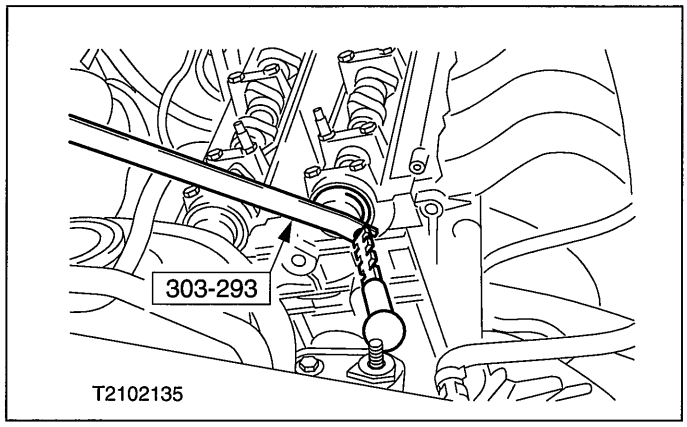


## Installation

1. **NOTE:Install a new camshaft seal.**

**NOTE:**Coat the camshaft journals and camshaft seal with clean engine oil.

**Using the special tool, install the camshaft oil seal.**

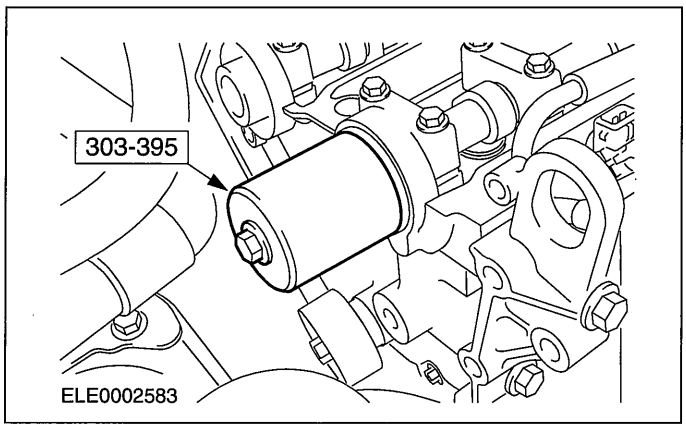

## IN-VEHICLE REPAIR

2. **NOTE:Do not fully tighten the camshaft pulleys retaining bolts at this stage. Make sure the camshaft pulleys turn on the camshafts.**

**NOTE:**Install new camshaft pulley retaining bolts.

**Install the camshaft timing pulleys.**

3. **Install the timing belt.**

**For additional information, refer to: Timing Belt (303-01 Engine - 1.25L Duratec-16V (Sigma)/1.4L Duratec-16V (Sigma)/1.6L Duratec-16V (Sigma), In-vehicle Repair).**

## IN-VEHICLE REPAIR

# Timing Belt(21 304 0)

### Special Tool(s)

| | |
|---|---|
| 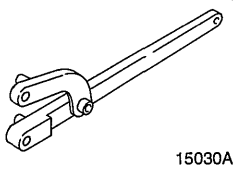 15030A | Universal Flange Holding Wrench 205-072 |
| 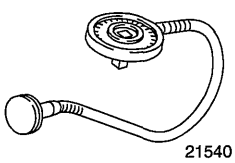 21540 | Gauge, Bolt Angle 303-174 |
| 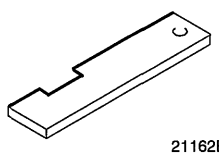 21162B | Alignment Plate, Camshaft 303-376B |
| 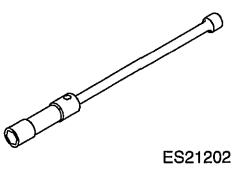 ES21202 | Socket, Spark Plug 303-499 |
| 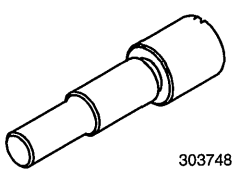 303748 | Locking Tool, Crankshaft 303-748 |
| 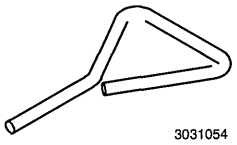 3031054 | Locking Tool, Timing Belt Tensioner 303-1054 |

### General Equipment

| |
|---|
| Trolley jack |

### General Equipment

| |
|---|
| Wooden block |

### Materials

| Name | Specification |
|---|---|
| High-Temperature Grease | ESD-M1C220-A |

## Removal

All vehicles

1. **Remove the valve cover.**

   **For additional information, refer to: Valve Cover (303-01A Engine - 1.25L Duratec-16V (Sigma)/1.4L Duratec-16V (Sigma)/1.6L Duratec-16V (Sigma), In-vehicle Repair).**

2. **Loosen the coolant pump pulley retaining bolts.**

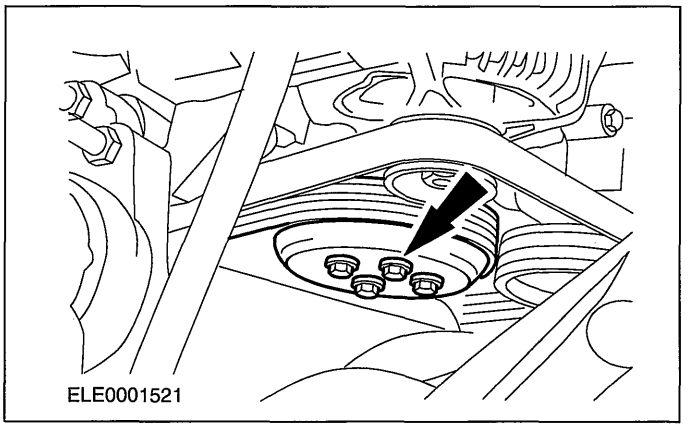


3. **Remove the accessory drive belt.**

   **For additional information, refer to: Accessory Drive Belt - 1.4L Duratec-16V (Sigma)/1.6L Duratec-16V (Sigma), Vehicles With: Air Conditioning (303-05 Accessory Drive, Removal and Installation).**

## IN-VEHICLE REPAIR

**4. Remove the crankshaft pulley.**

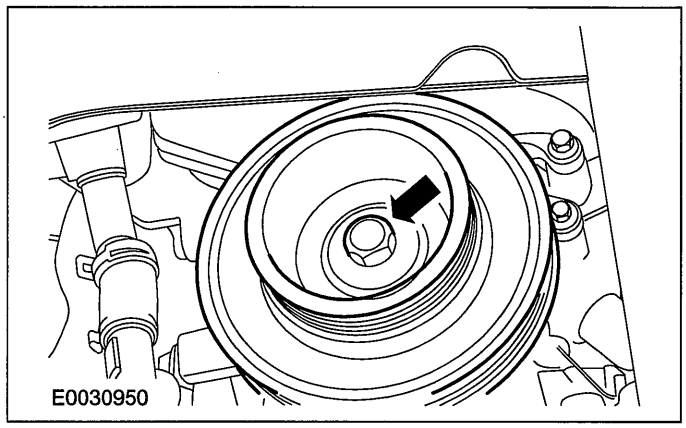


**5. Remove the coolant pump pulley.**

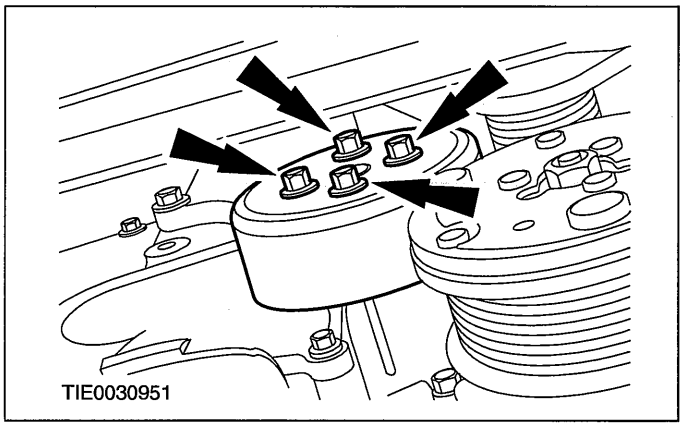


**6. Remove the timing belt cover retaining bolts.**

1. Remove the timing belt upper cover retaining bolts.
2. Remove the timing belt lower cover retaining bolts.

- Remove the lower cover.

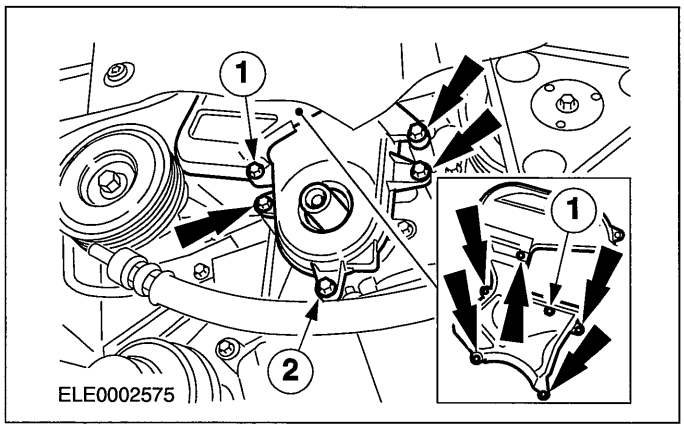


**7. Lower the vehicle.**

**8. Detach the power steering fluid reservoir from the bracket and position it to one side.**

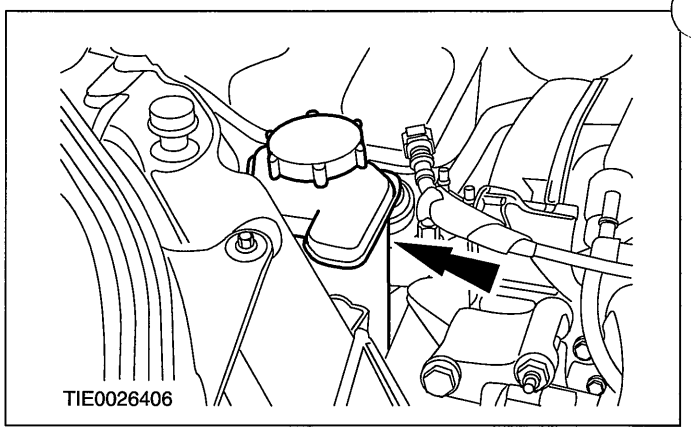


**9. Detach the coolant expansion tank from the bracket and position it to one side.**

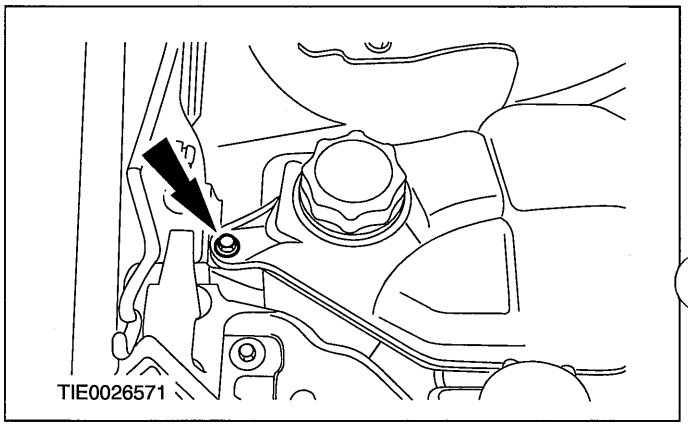


**10. Disconnect the generator electrical connector.**

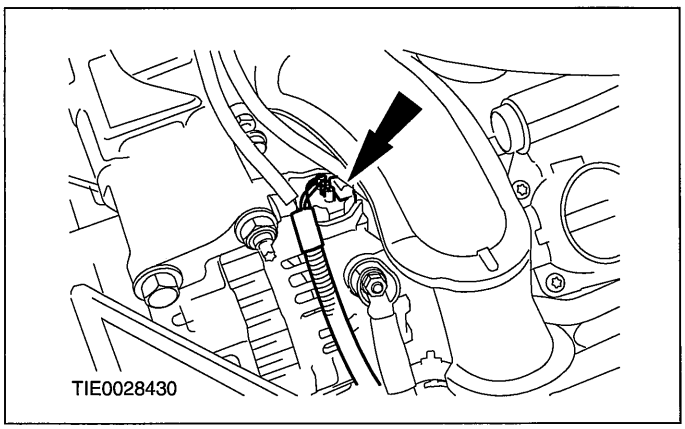


**11. Detach the generator from the engine.**

1. Loosen the bolt.
2. Remove the bolt.

## IN-VEHICLE REPAIR

3. Remove the nut and the stud.

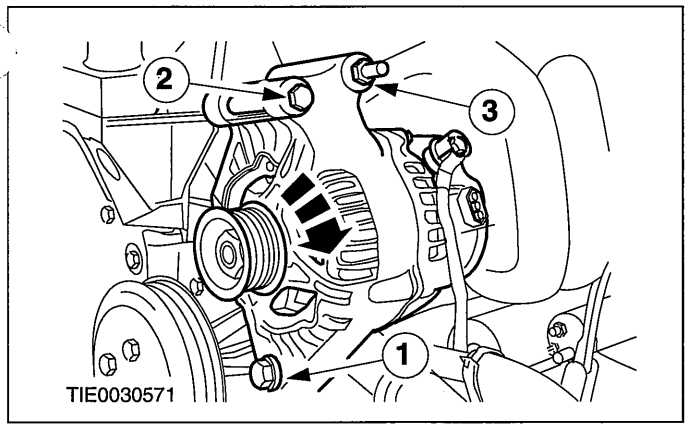


12. **⚠CAUTION:Do not support the engine directly on the oil pan.**

**Place the trolley jack with a wooden block under the engine and raise it slightly until the engine front mount is free from strain.**

13. **Remove the engine front mount.**
    - Discard the nuts.

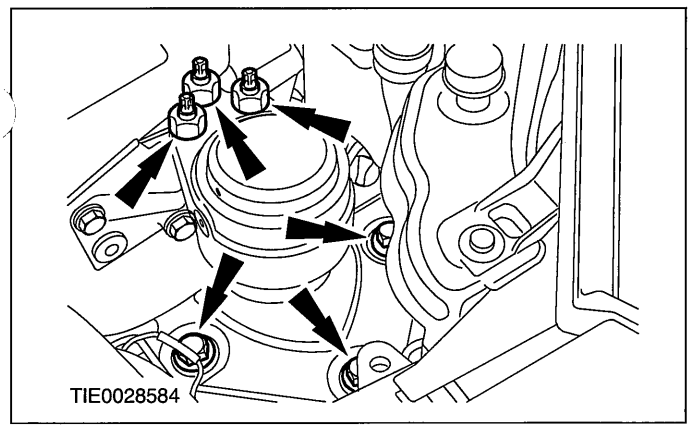


14. **Remove the timing belt upper cover.**

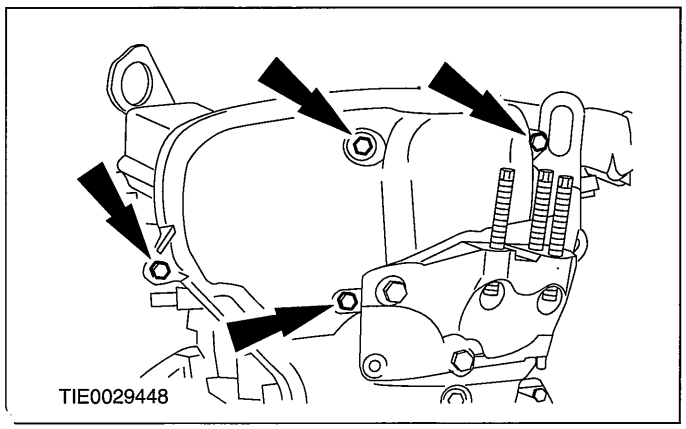


15. **Remove the engine front mount bracket.**

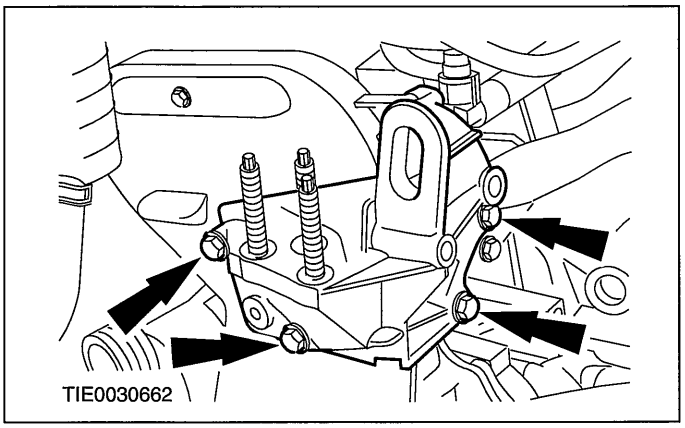


16. **Using the special tool, remove the spark plugs.**

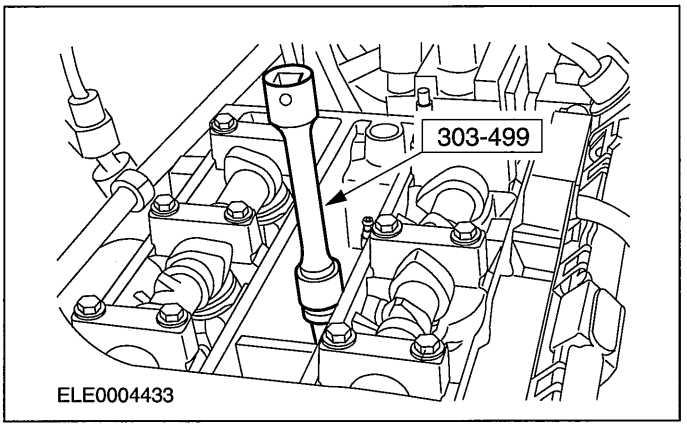


Engines with eccentric cam timing belt tensioner

17. **Slacken the timing belt tensioner and remove the timing belt.**
    - Discard the timing belt.

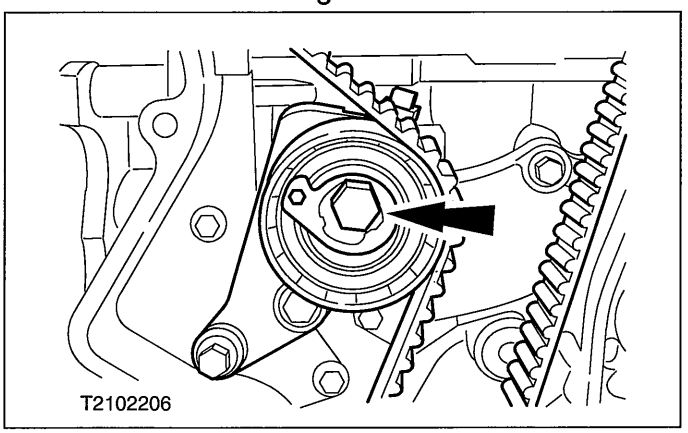

## IN-VEHICLE REPAIR

**18. Remove the timing belt tensioner.**

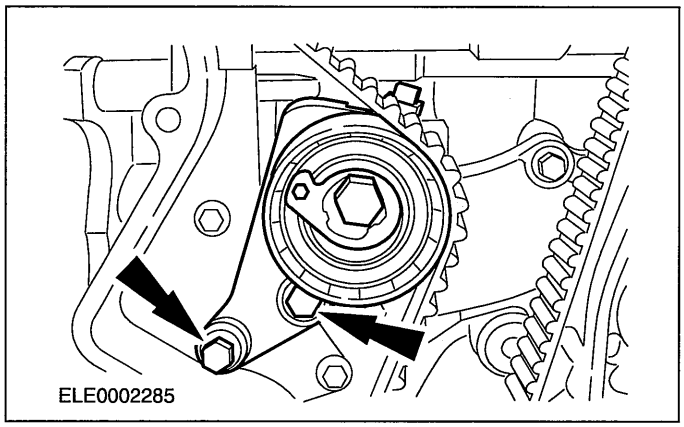


Engines with slotted bracket timing belt tensioner

**19. Remove the timing belt tensioner and the timing belt.**

- Discard the timing belt.

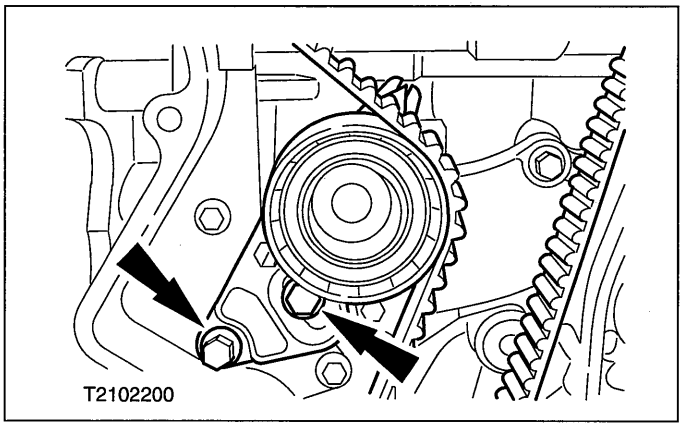


Vehicles built 09/2003 onwards

**20. Remove the timing belt.**

- Detension the timing belt and lock the timing belt tensioner with the special tool.
- Discard the timing belt.

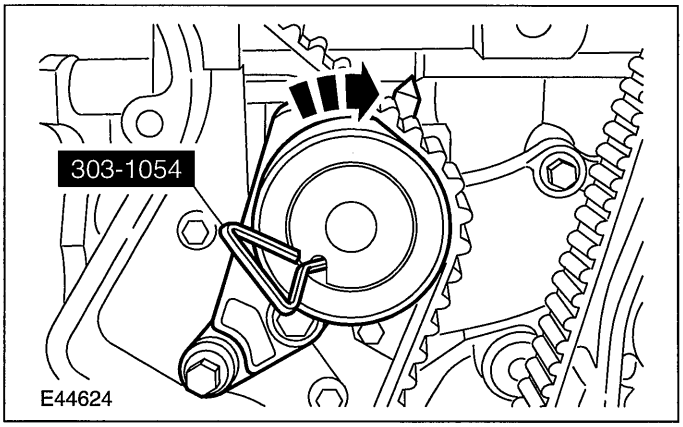


**21. Remove the timing belt tensioner.**

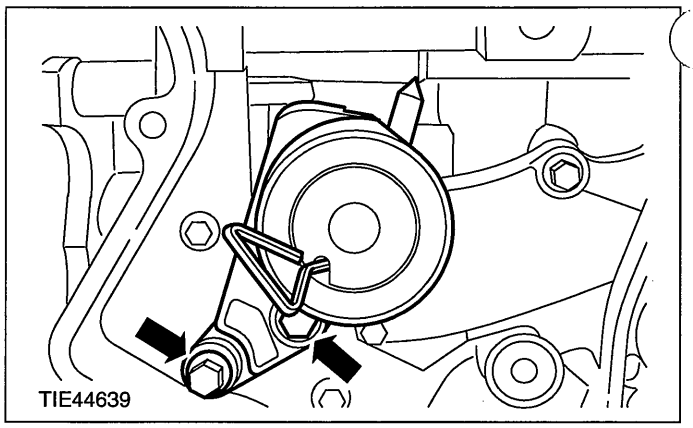


Vehicles built 04/2005 onwards

**22. Remove the timing belt.**

- Detension the timing belt and lock the timing belt tensioner with the special tool.
- Discard the timing belt.

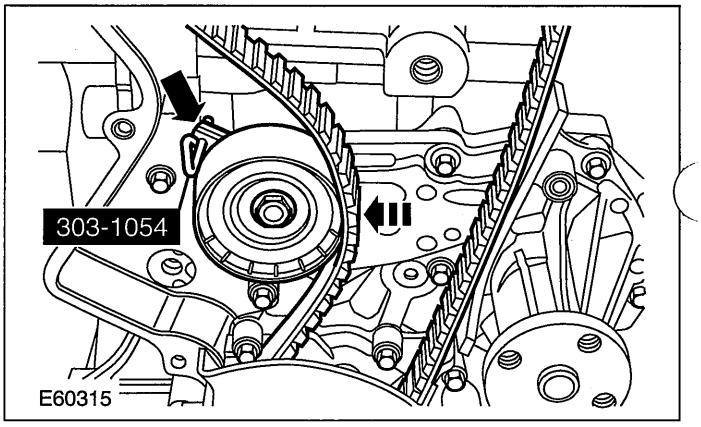


## Installation

All vehicles

**1. Set the crankshaft to approximately 20 degrees before TDC.**

**2. ⚠CAUTION:Install a hose (order no. E890438S) to the special tool studs, to prevent damage to the camshaft pulleys.**

**NOTE:**Make sure the camshaft pulleys turn on the camshafts.

**Loosen the camshaft pulley retaining bolts.**

## IN-VEHICLE REPAIR

- Discard the retaining bolts.

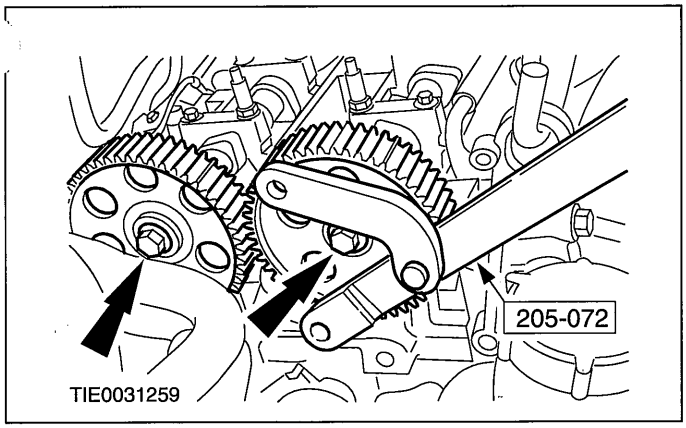


**3. Turn the camshafts to TDC on cylinder number 1 and install the special tool.**

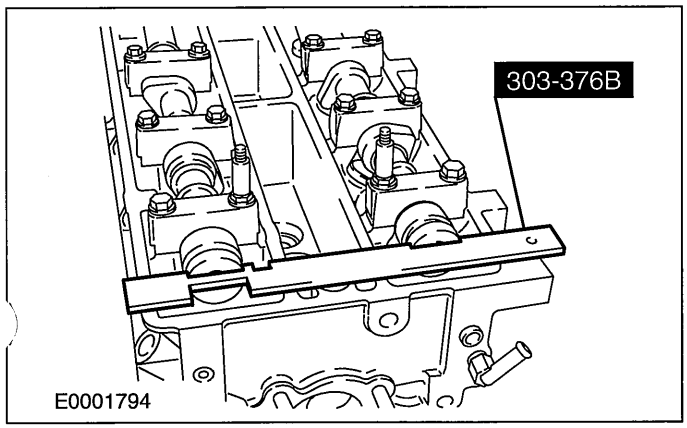


**4. Remove the blanking plug and install the special tool.**

- Carefully turn the crankshaft against the special tool.

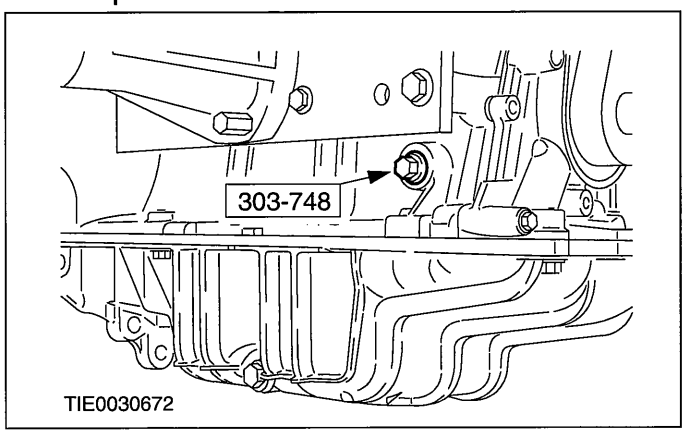


**5. NOTE:Install a new timing belt.**

**NOTE:**Install the timing belt, beginning with the crankshaft timing pulley working counterclockwise.

**Install the timing belt.**

**6. Measuring the depth of the threaded hole in the crankshaft.**

- Depth of the threaded = 42 mm: Use an M12x29 mm crankshaft pulley center bolt.
- Depth of the threaded = 52 mm: Use an M12x44,5 mm crankshaft pulley center bolt.

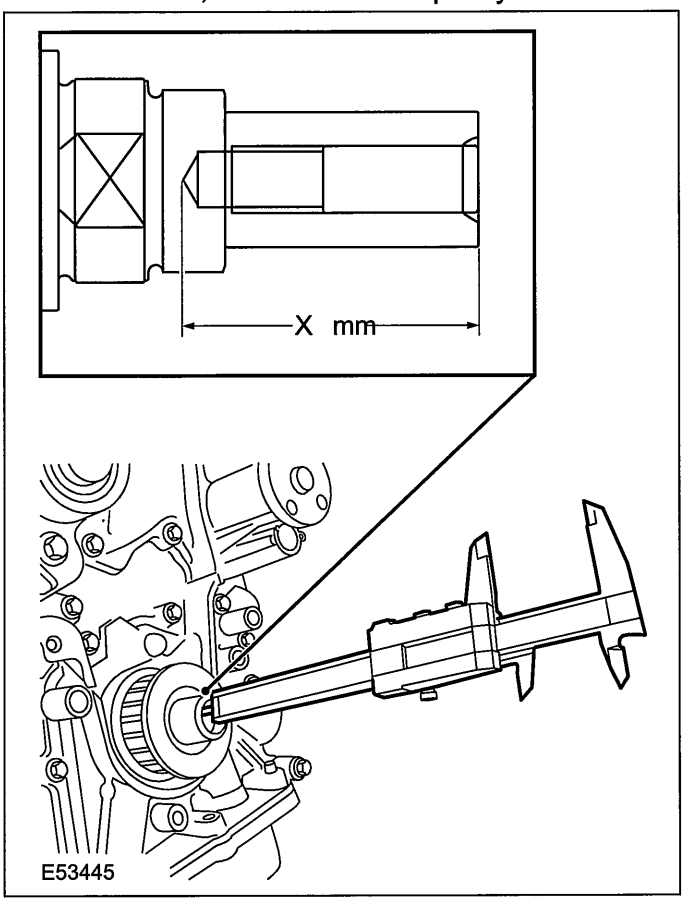


**7. Attach the timing belt lower cover.**

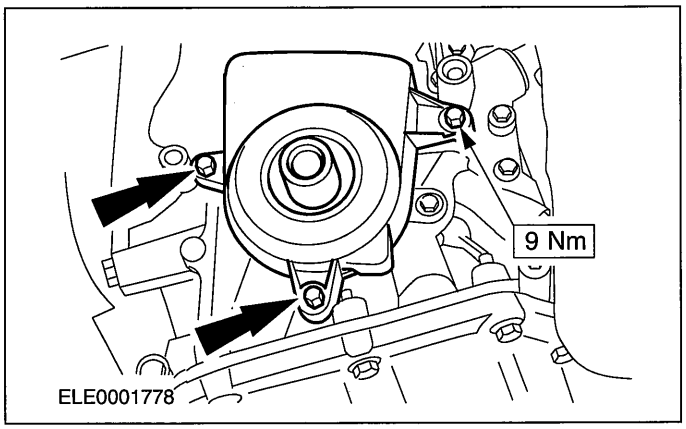


**8. NOTE:Install a new crankshaft pulley retaining bolt.**

**Install the crankshaft pulley.**

- Tighten the crankshaft pulley retaining bolt in two stages.
- Stage 1: 45 Nm.

## IN-VEHICLE REPAIR

- Stage 2: 90 degrees.

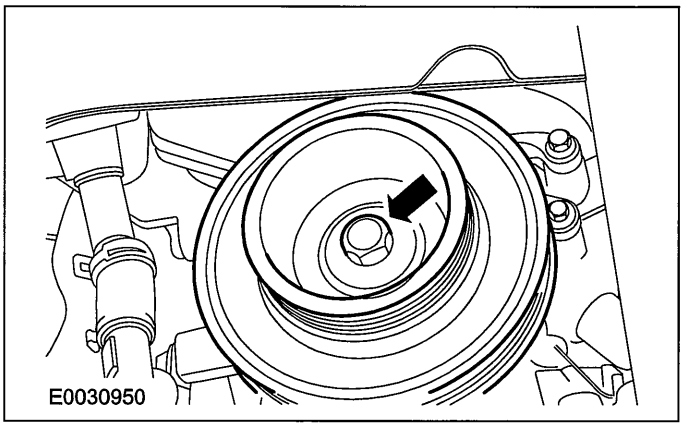


Engines with eccentric cam timing belt tensioner

**9. Install the timing belt tensioner.**

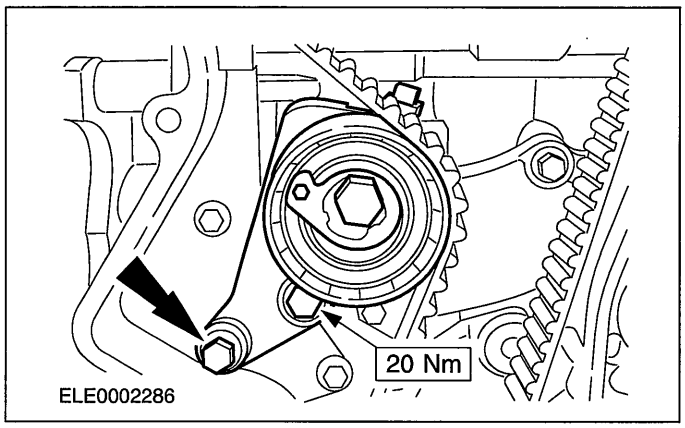


**10. Tension the timing belt.**

- Tension the timing belt by turning the tensioner counterclockwise until the arrow points at the mark and tighten the bolt.

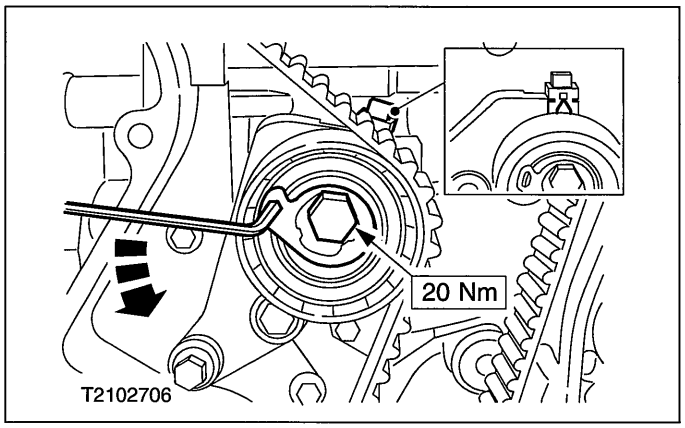


Engines with slotted bracket timing belt tensioner

**11. Install the timing belt tensioner and tension the timing belt.**

- Screw in the bolts finger tight.
- Tension the timing belt by turning the tensioner clockwise until the arrow points in line with the center of the rectangular hole and tighten the bolt.

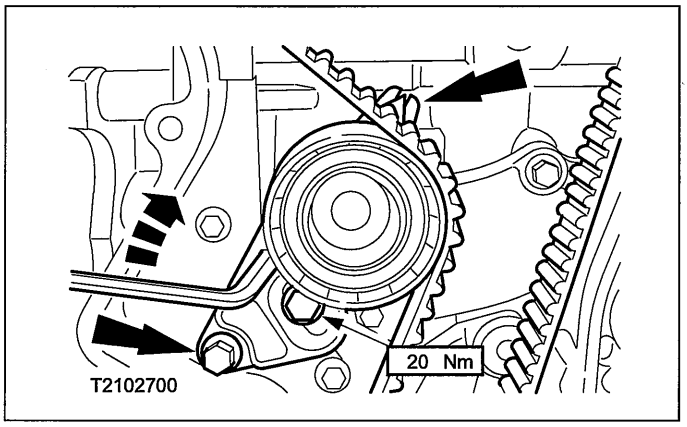


Vehicles built 09/2003 onwards

**12. ▲WARNING:Do not remove the special tool, until the timing belt is correctly positioned. Failure to follow this instruction may result in personal injury, or may damage the timing belt tensioner.**

**Install the timing belt tensioner.**

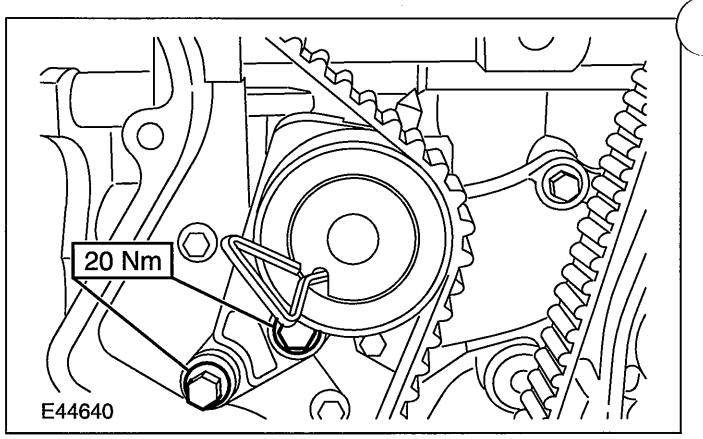


**13. Tension the timing belt.**

- Remove the special tool.

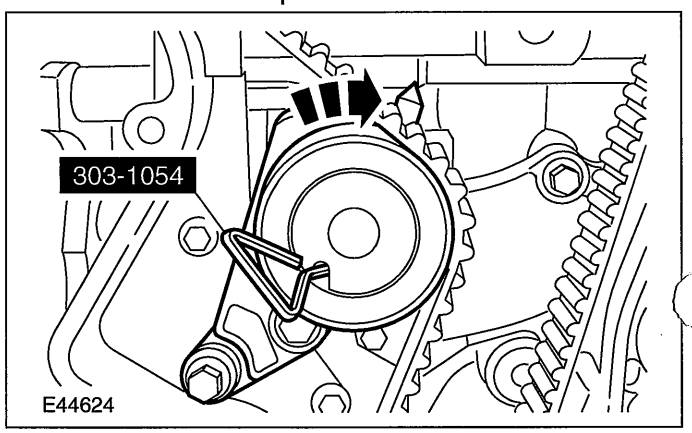

## IN-VEHICLE REPAIR

Vehicles built 04/2005 onwards

14. **WARNING:Do not remove the special tool, until the timing belt is correctly positioned. Failure to follow this instruction may result in personal injury, or may damage the timing belt tensioner.**

**Tension the timing belt.**

- Remove the special tool.

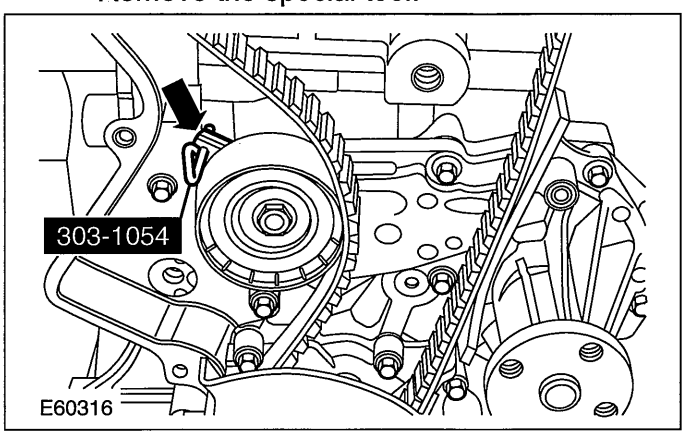


All vehicles

15. **CAUTIONS:**

**Install a hose (order no. E890438S) to the special tool studs, to prevent damage to the camshaft pulleys.**

**Do not tighten the camshaft pulley bolts against the timing plate.**

**NOTE:**The camshafts must remain at TDC.

**NOTE:**Install new camshaft pulley retaining bolts.

**Using the special tool, tighten the camshaft pulleys.**

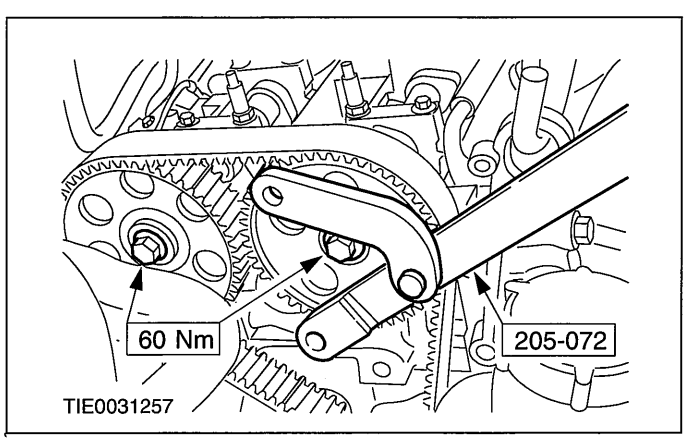


16. **Remove special tool.**

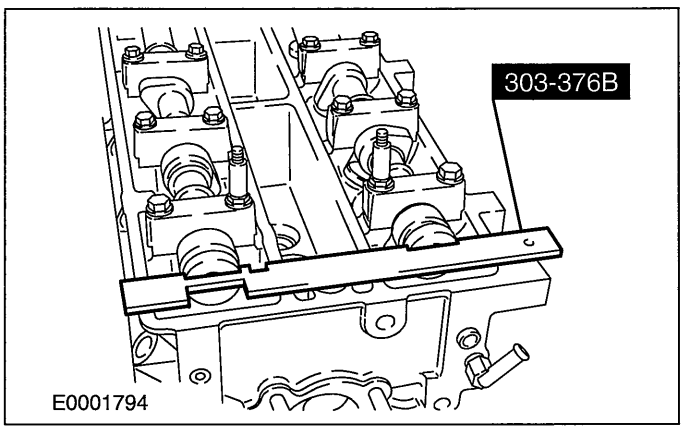


17. **Remove the special tool.**

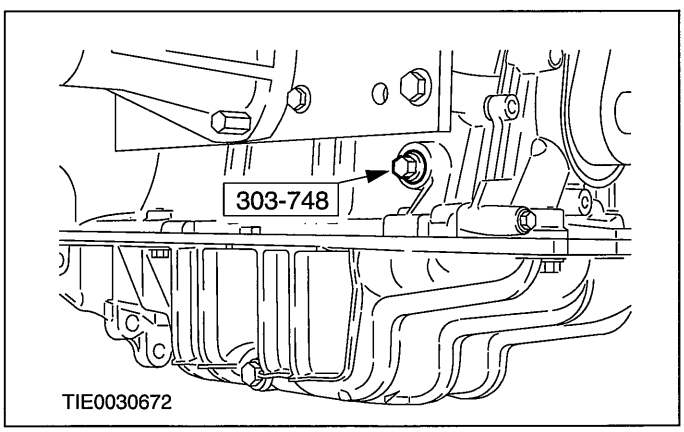


18. **NOTE:Only turn the engine in its normal direction of rotation.**

**Turn the engine two revolutions.**

19. **Install the special tool.**

- Carefully turn the crankshaft against the special tool.

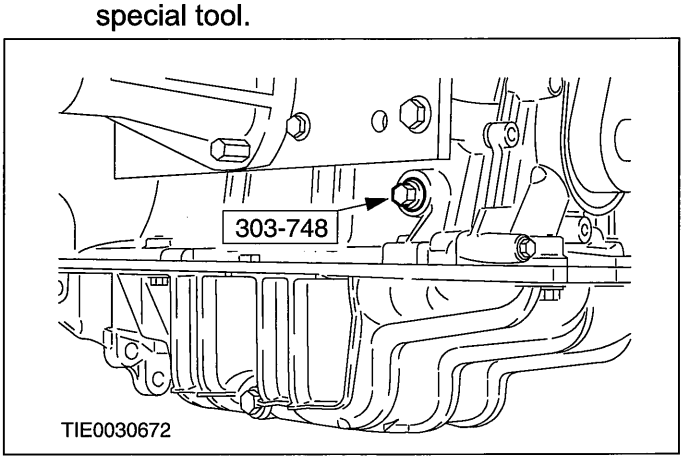


20. **Check the valve timing.**

- If necessary loosen the camshaft pulleys and correct the camshaft alignment.

## IN-VEHICLE REPAIR

- Remove the special tool.

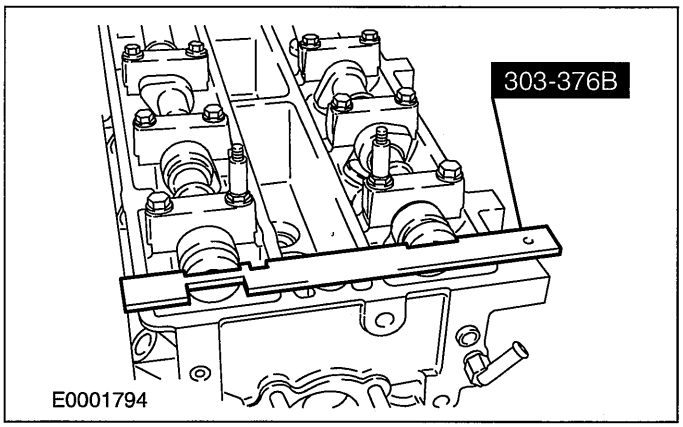


**21. Remove the special tool.**

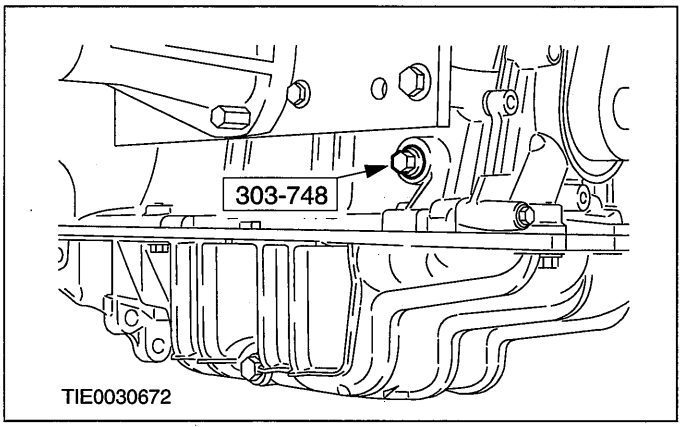


**22. Install the blanking plug.**

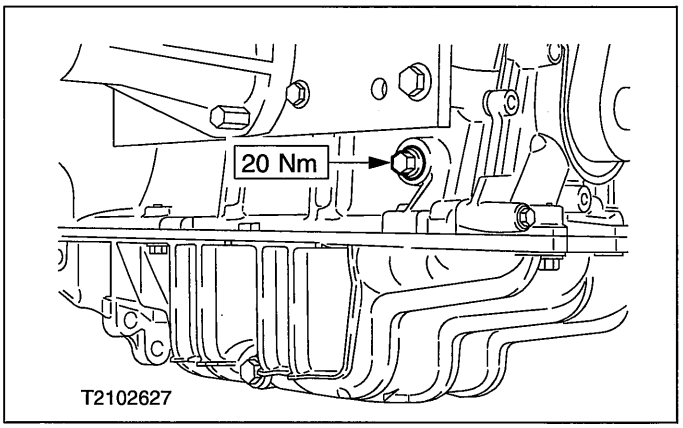


**23. Using the special tool, install the spark plugs.**

- Apply grease to the spark plug threads.

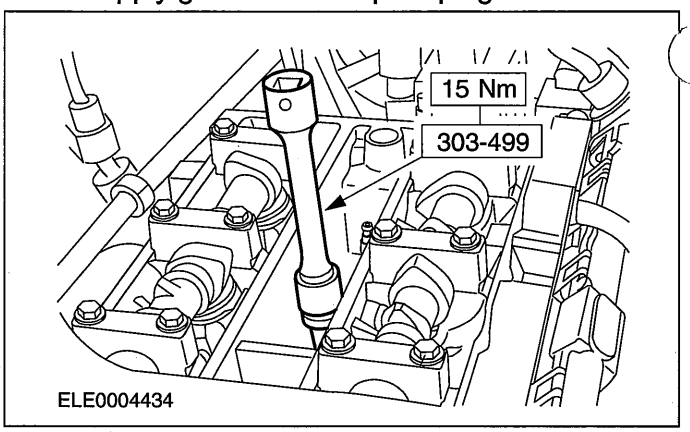


**24. Install the engine front mount bracket.**

- Tighten the bolts in the indicated order in three stages.
- Stage 1: Hand tighten bolt 1.
- Stage 2: Tighten bolts 2 to 55 Nm.
- Stage 3: Tighten bolt 3 to 55 Nm.

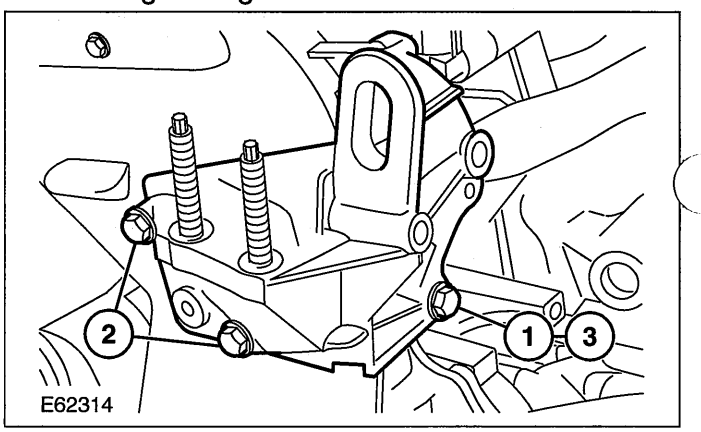


**25. Install the timing belt upper cover.**

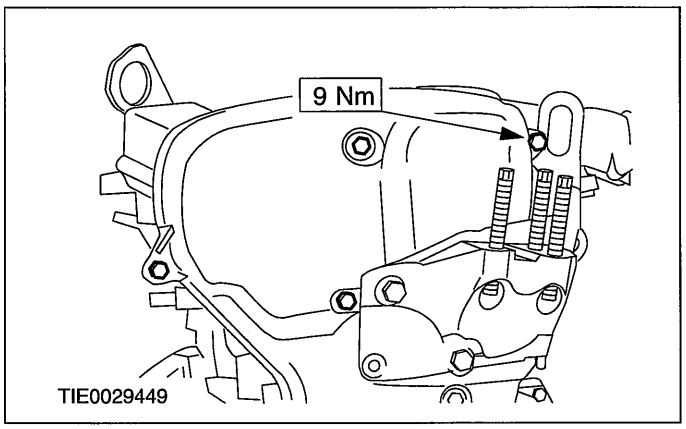


**26. NOTE:Install new engine front mount retaining nuts.**

## IN-VEHICLE REPAIR

**Install the engine front mount.**

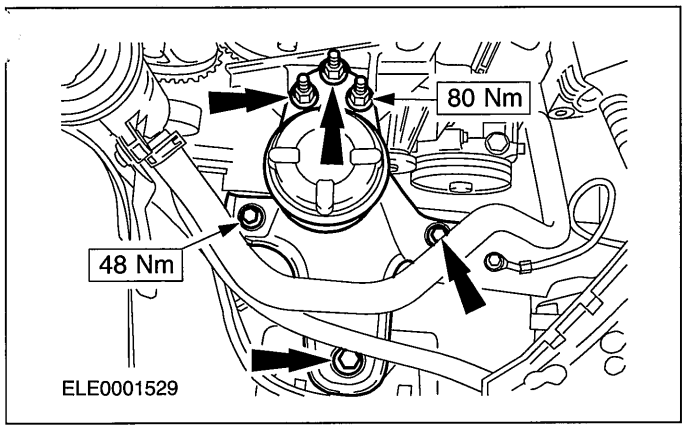


**27. Remove the trolley jack.**

**28. Attach the generator.**

1. Install the stud and nut.
2. Install the bolt.
3. Tighten the bolt.

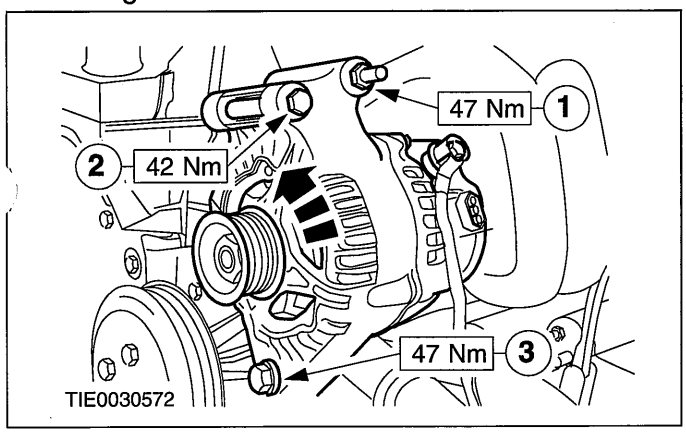


**29. Connect the generator electrical connector.**

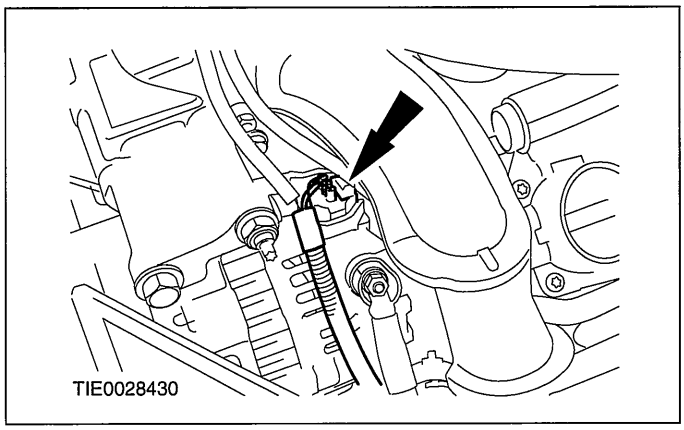


**30. Raise and support the vehicle.**

**For additional information, refer to: Lifting (100-02 Jacking and Lifting, Description and Operation).**

**31. Install the timing belt upper cover retaining bolts.**

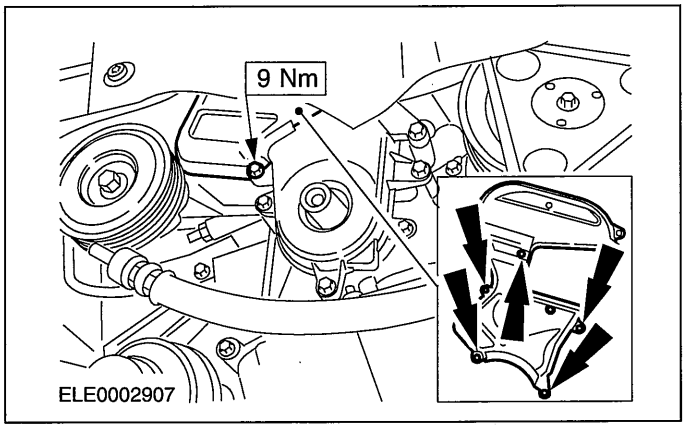


**32. NOTE:Do not tighten the coolant pump pulley retaining bolts at this stage.**

**Install the coolant pump pulley.**

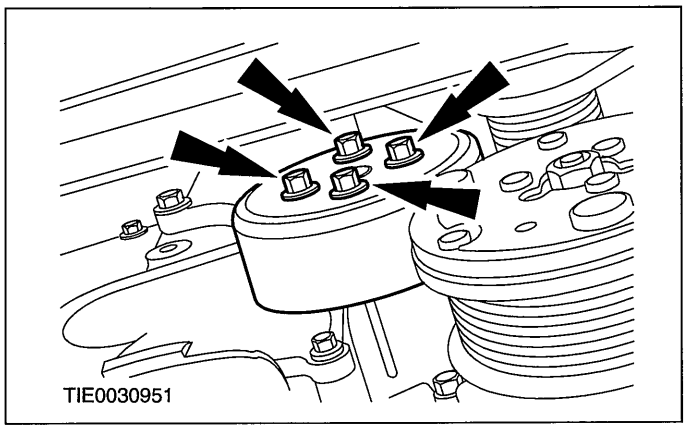


**33. Install the accessory drive belt.**

**For additional information, refer to: Accessory Drive Belt - 1.4L Duratec-16V (Sigma)/1.6L Duratec-16V (Sigma), Vehicles With: Air Conditioning (303-05 Accessory Drive, Removal and Installation).**

## IN-VEHICLE REPAIR

34. Tighten the coolant pump pulley retaining bolts.

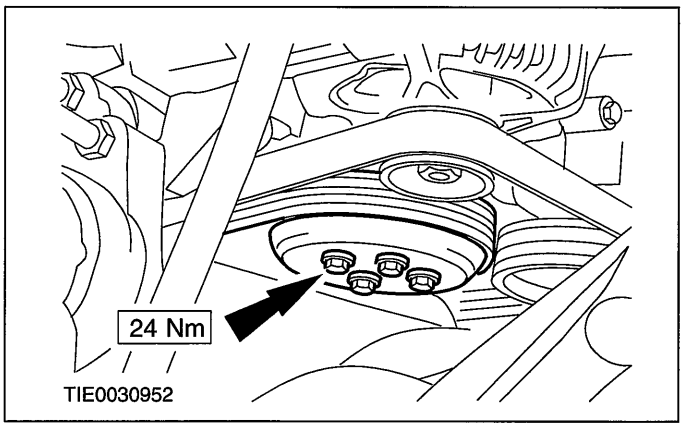


35. Install the valve cover.

    For additional information, refer to: Valve Cover (303-01A Engine - 1.25L Duratec-16V (Sigma)/1.4L Duratec-16V (Sigma)/1.6L Duratec-16V (Sigma), In-vehicle Repair).

36. Attach the power steering fluid reservoir to the bracket.

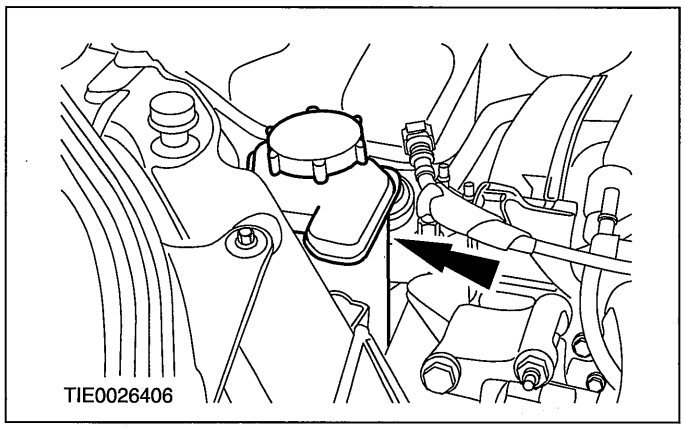


37. Attach the coolant expansion tank to the bracket.

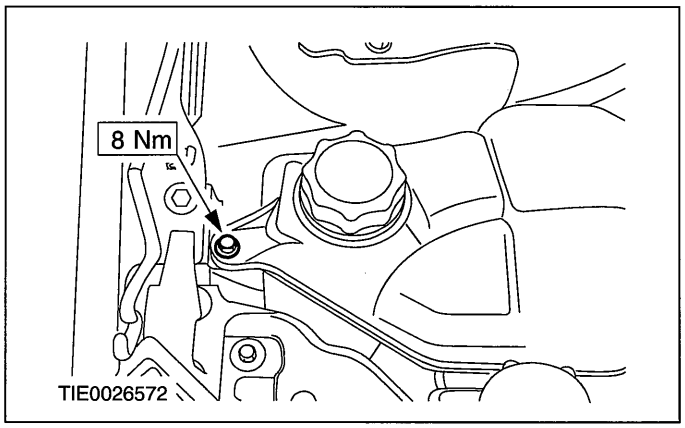

## IN-VEHICLE REPAIR

# Exhaust Manifold(21 187 0)

### Special Tool(s)

| | |
|---|---|
| 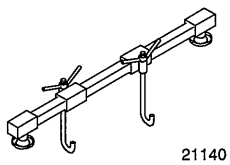 21140 | Support Bar, Engine 303-290A (21-140A) |
| 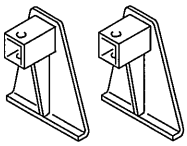 2114001 | Adapter for 303-290A 303-290-01 (21-140-01) |
| 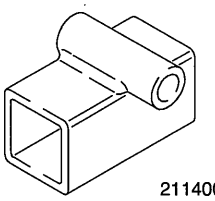 2114002 | Adapter for 303-290A 303-290-02 (21-140-02) |
| 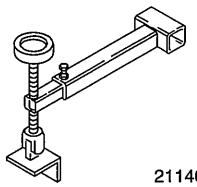 2114003 | Adapter for 303-290A 303-290-03A (21-140-03A) |
| 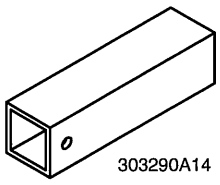 303290A14 | Adapter for 303-290A 303-290A-14 |

### General Equipment

| |
|---|
| Exhaust wrap |

## Removal

1. **Disconnect the battery ground cable.**

   **For additional information, refer to: Battery Disconnect (414-01 Battery, Mounting and Cables, General Procedures).**

2. **Remove the air cleaner.**

   **For additional information, refer to: Air Cleaner - 1.25L Duratec-16V (Sigma)/1.4L Duratec-16V (Sigma)/1.6L Duratec-16V (Sigma) (303-12 Intake Air Distribution and Filtering, Removal and Installation).**

3. **Raise and support the vehicle.**

   **For additional information, refer to: Lifting (100-02 Jacking and Lifting, Description and Operation).**

4. **⚠CAUTION:Over bending of the exhaust flexible pipe may cause damage resulting in failure.**

   **Support the exhaust flexible pipe with a support wrap or suitable splint.**

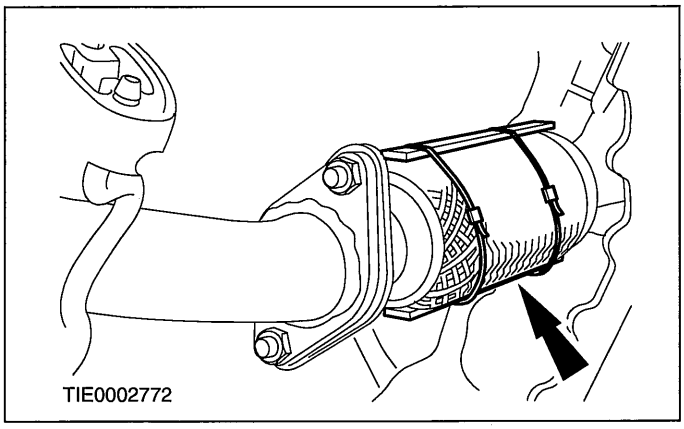


5. **Detach the exhaust flexible pipe from the catalytic converter.**
   - Discard the gasket and the nuts.

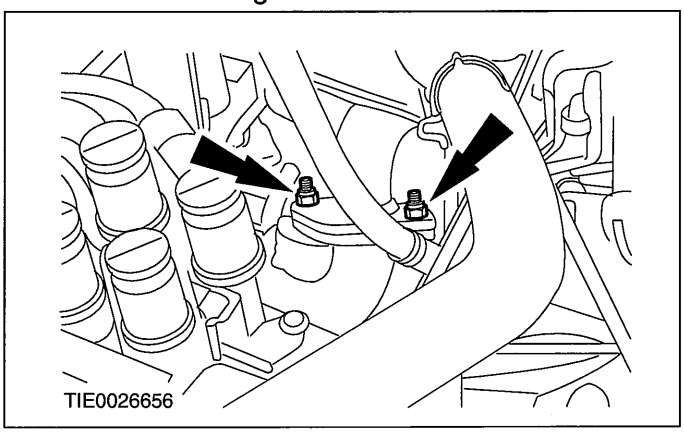


6. **Detach the exhaust system insulators from the exhaust brackets and position it to one side.**

## IN-VEHICLE REPAIR

7. **Remove the engine support insulator retaining bolt.**

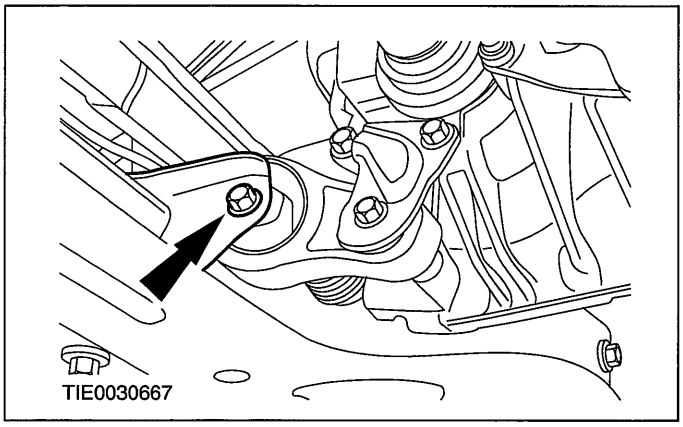


8. **Remove the exhaust manifold lower heat shield left-hand retaining bolts.**

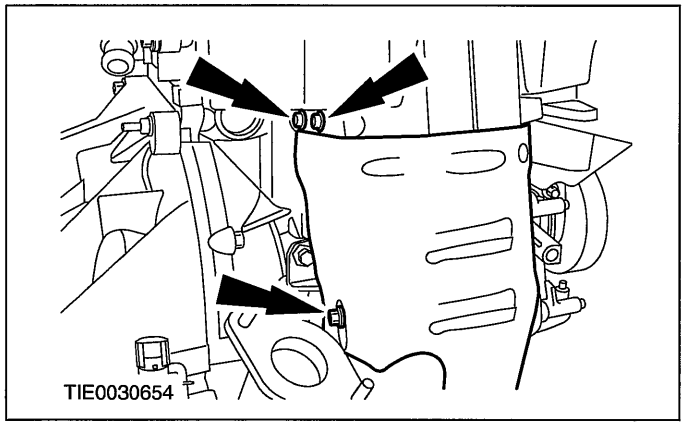


9. **Remove the exhaust manifold lower heat shield right-hand retaining bolts.**
   - Remove the lower heat shield.

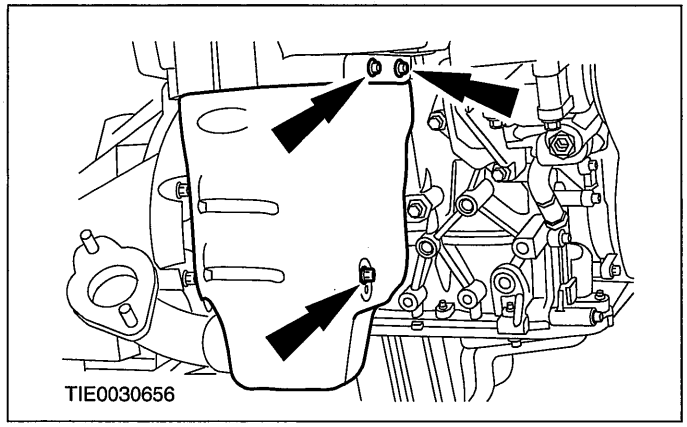


10. **Lower the vehicle.**

11. **Disconnect the heated oxygen (HO2S) sensor electrical connector.**

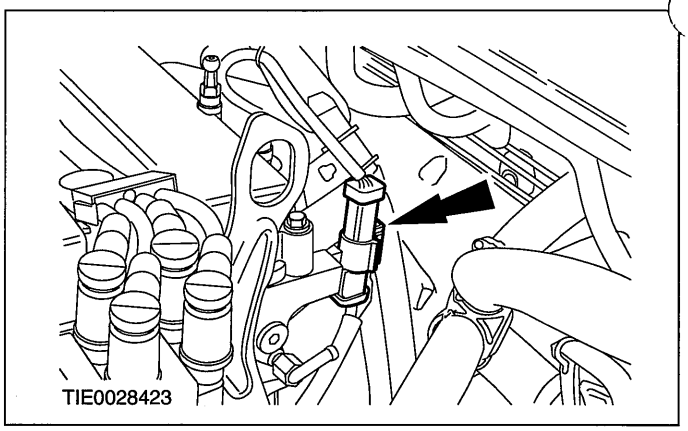


12. **Disconnect the catalyst monitor sensor electrical connector.**

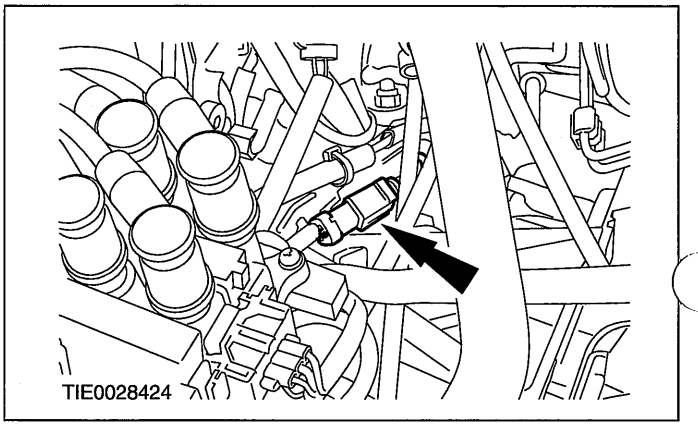


13. **Detach the power steering line support bracket from the cylinder head.**

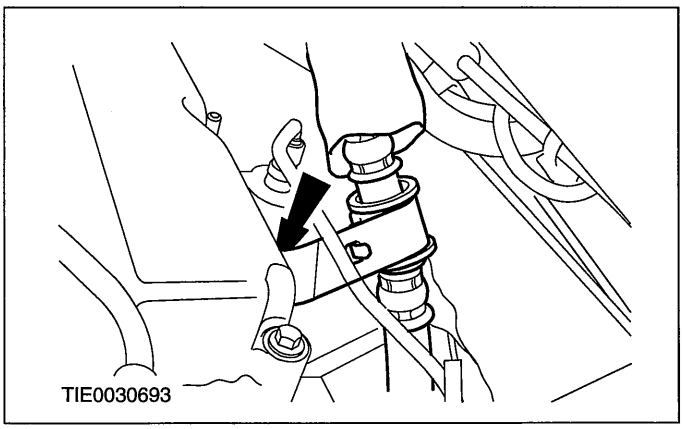

## IN-VEHICLE REPAIR

**14. Detach the power steering fluid reservoir from the bracket and position it to one side.**

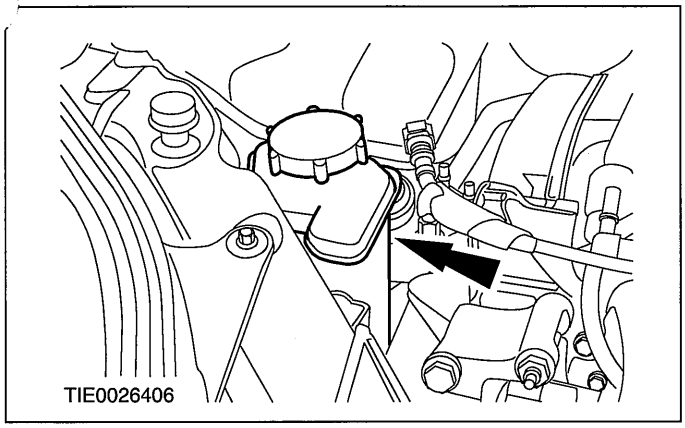


**15. Detach the coolant expansion tank from the bracket and position it to one side.**

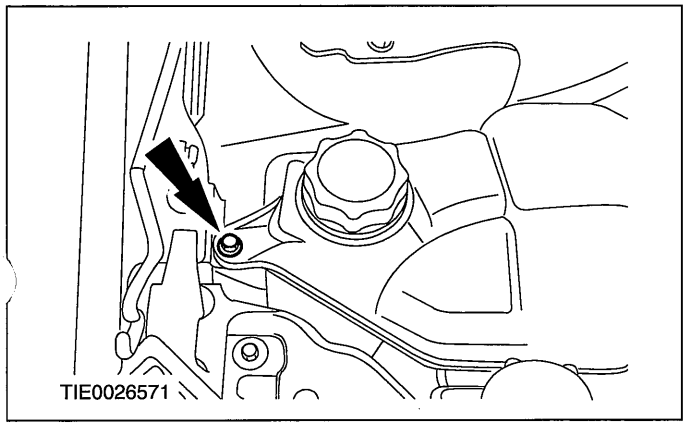


**16. Install the special tools.**

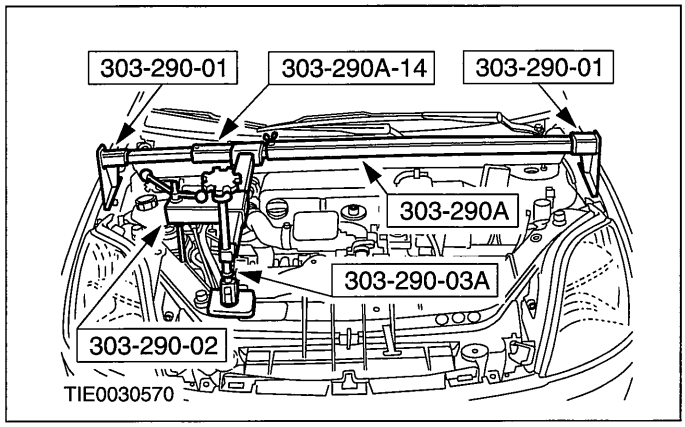


**17. Remove the engine front mount.**

- Discard the nuts.

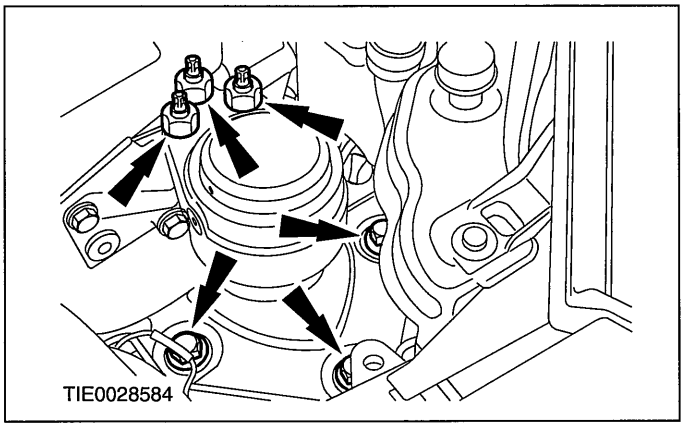


**18. Using the special tools lower the engine.**

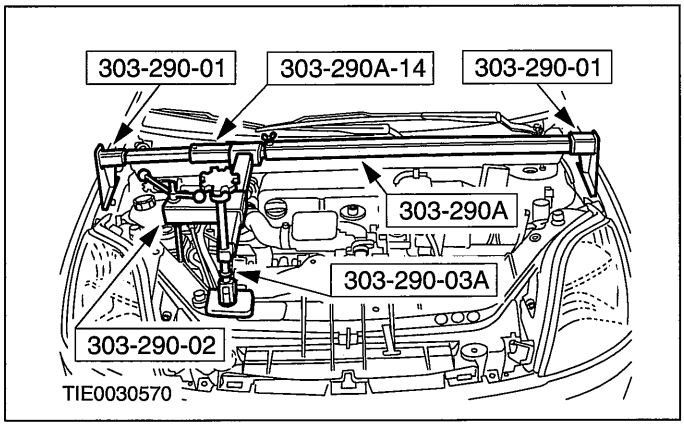


**19. Remove the exhaust manifold upper heat shield.**

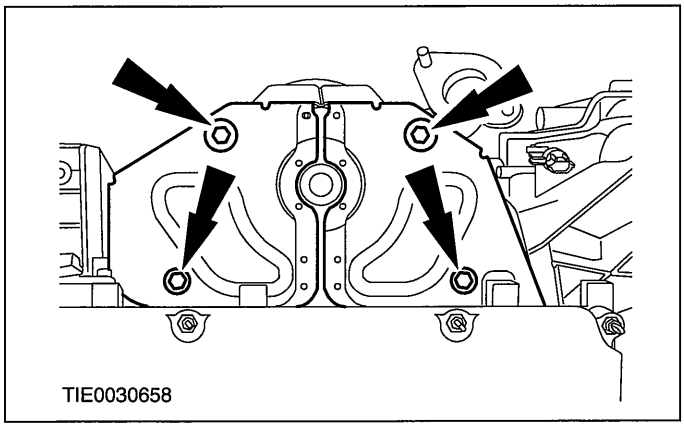


**20. Remove the exhaust manifold retaining bolts and the nuts.**

## IN-VEHICLE REPAIR

- Discard the nuts.

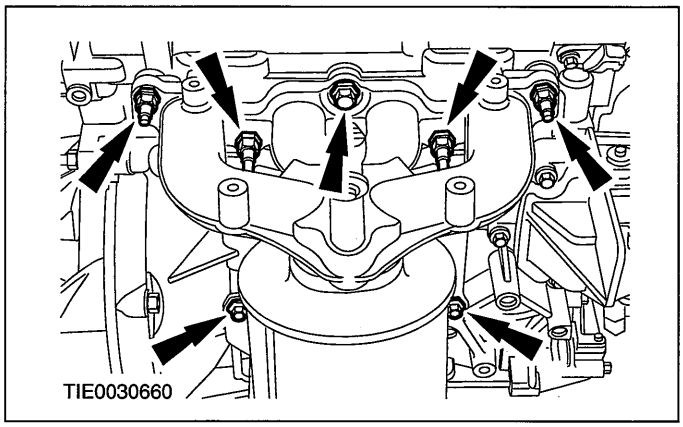


**21. Raise and support the vehicle.**

**For additional information, refer to: Lifting (100-02 Jacking and Lifting, Description and Operation).**

**22. Remove the exhaust manifold.**

- Discard the gasket.

### Installation

**1. NOTE:Install a new exhaust manifold gasket.**

**Attach the exhaust manifold to the cylinder head.**

**2. Lower the vehicle.**

**3. NOTE:Install a new exhaust manifold gasket and new exhaust manifold retaining nuts.**

**NOTE:**Do not fully tighten the nuts and bolt at this stage.

**Install the exhaust manifold.**

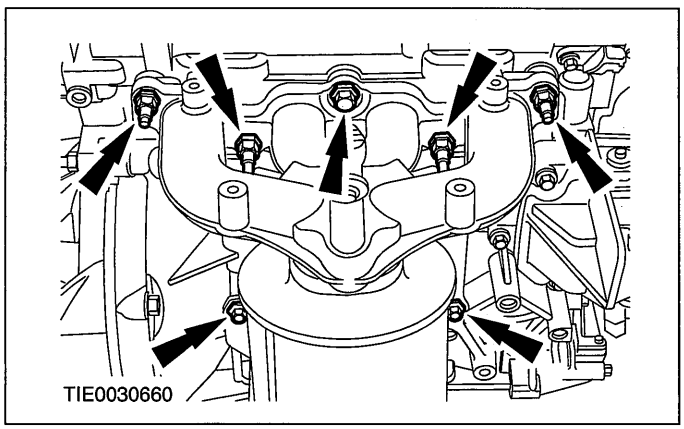


**4. Tighten the exhaust manifold upper retaining nuts and bolt in the sequence shown in two stages.**

- Stage 1: 20 Nm.
- Stage 2: 55 Nm.

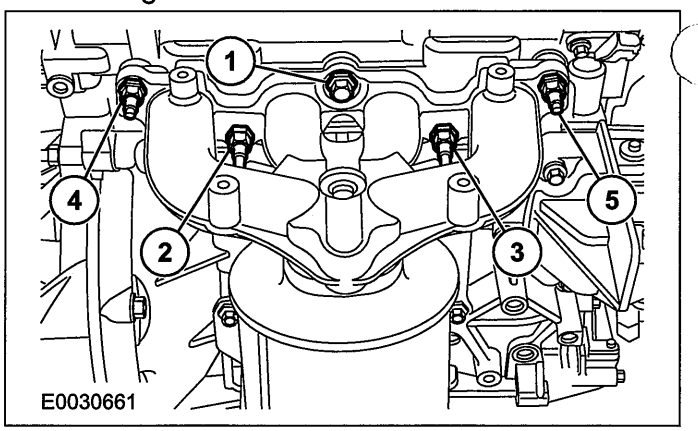


**5. Tighten the exhaust manifold lower retaining bolts.**

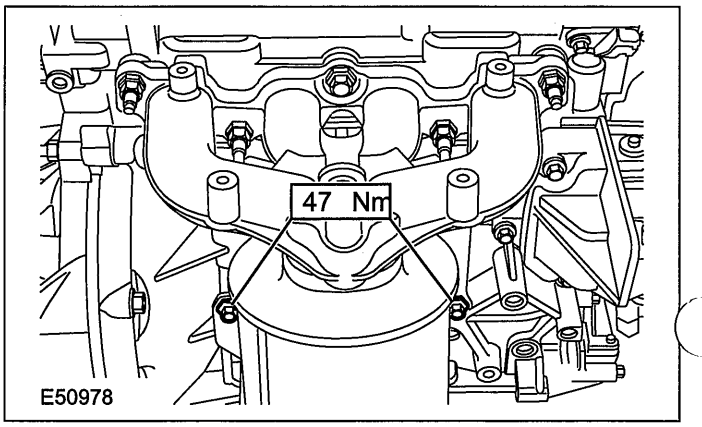


**6. Install the exhaust manifold upper heat shield.**

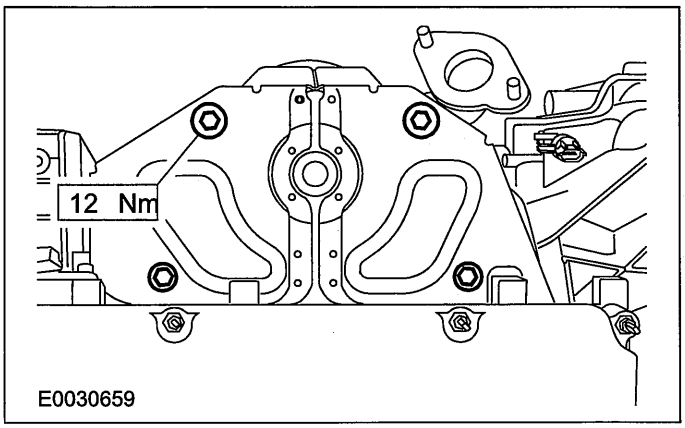

## IN-VEHICLE REPAIR

7. Using the special tools, raise the engine.

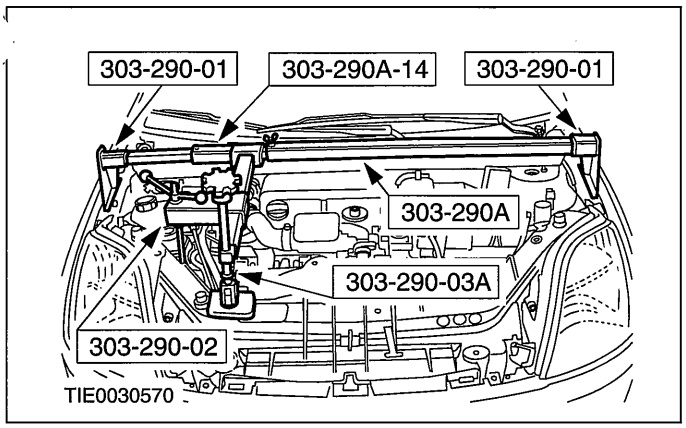


8. NOTE:Install new engine front mount retaining nuts.

   Install the engine front mount.

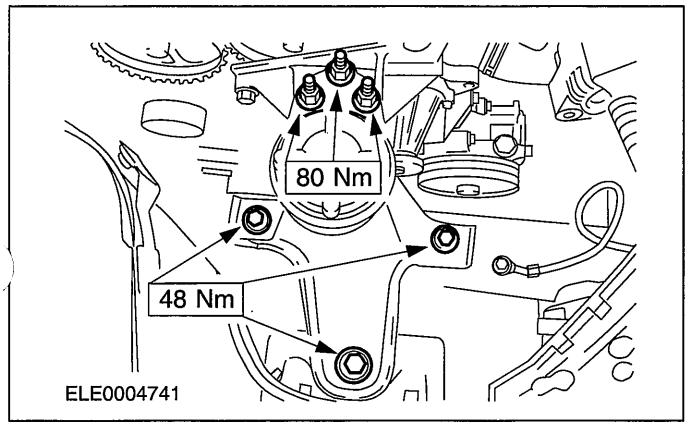


9. Remove the special tools.

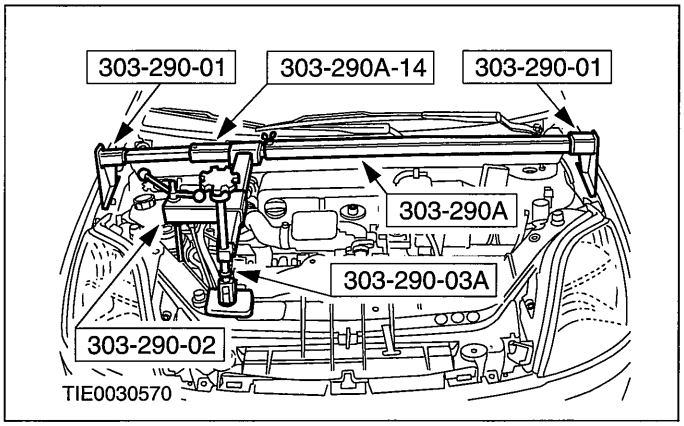


10. Attach the coolant expansion tank to the bracket.

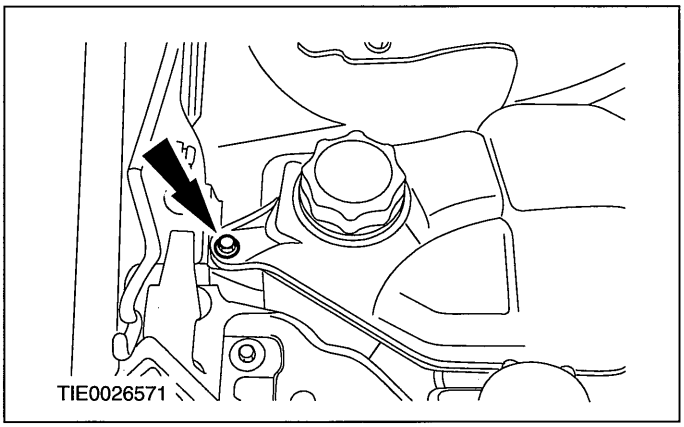


11. Attach the power steering fluid reservoir to the bracket.

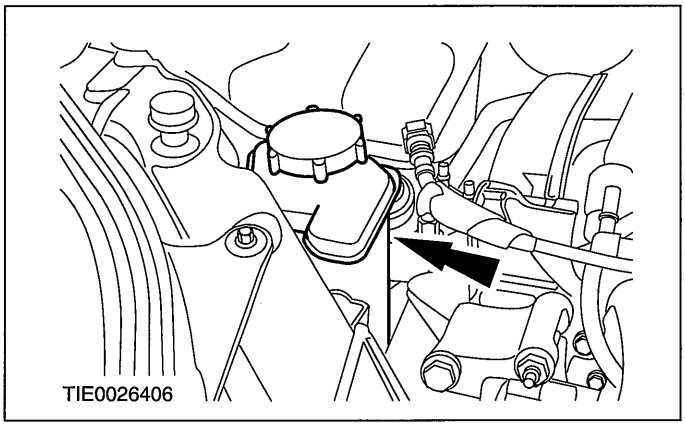


12. Attach the power steering line bracket to the cylinder head.

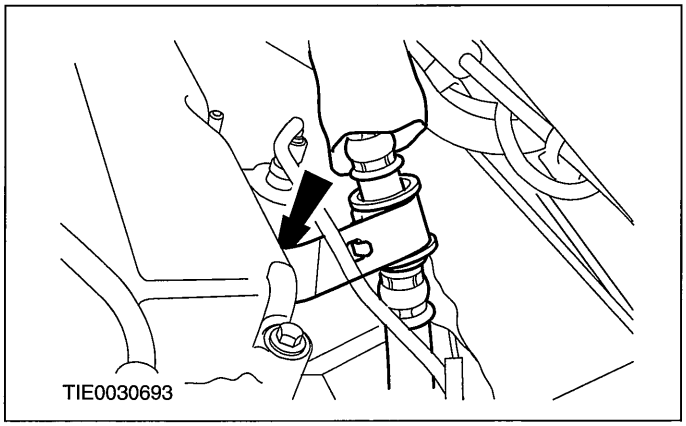

## IN-VEHICLE REPAIR

13. Connect the catalyst monitor sensor electrical connector.

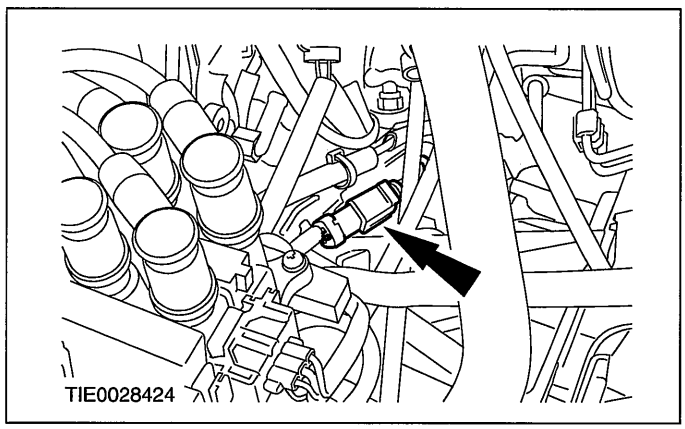


14. Connect the heated oxygen (HO2S) sensor electrical connector.

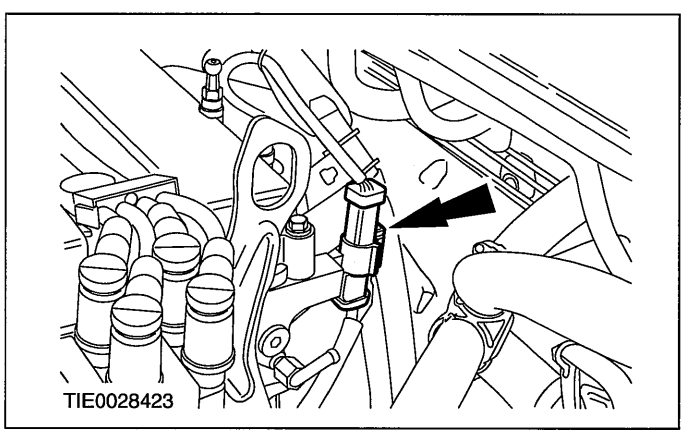


15. Raise and support the vehicle.

    For additional information, refer to: Lifting (100-02 Jacking and Lifting, Description and Operation).

16. Position the exhaust manifold lower heat shield and install the right-hand retaining bolt.

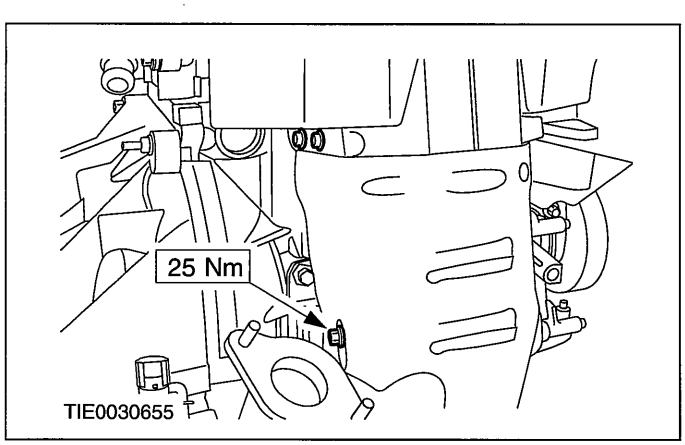


17. Install the exhaust manifold lower heat shield left-hand retaining bolts.

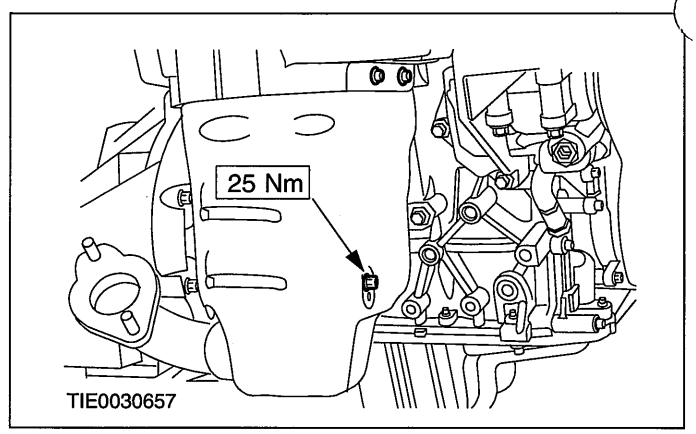


18. Install the engine support insulator retaining bolt.

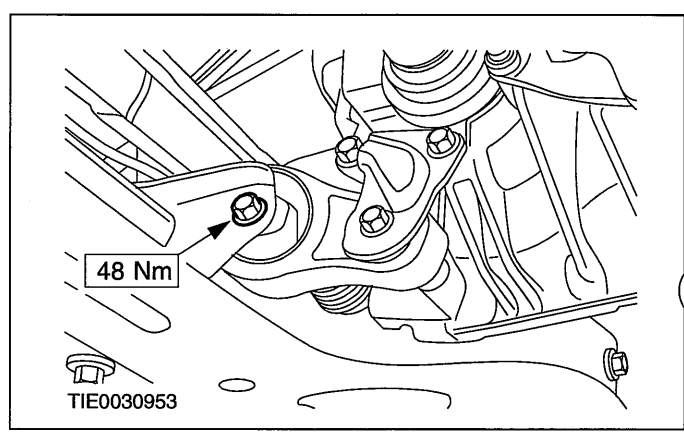


19. Attach the exhaust system insulators to the exhaust brackets.
20. NOTE:Install a new exhaust manifold gasket and new nuts.

    Attach the exhaust flexible pipe to the catalytic converter.

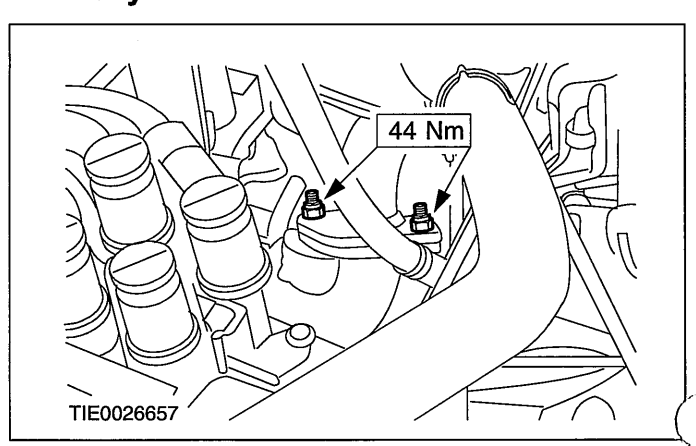


21. Remove the exhaust flexible pipe support wrap or splint.

## IN-VEHICLE REPAIR

22. Lower the vehicle.
23. Install the air cleaner.

    For additional information, refer to: Air Cleaner - 1.25L Duratec-16V (Sigma)/1.4L Duratec-16V (Sigma)/1.6L Duratec-16V (Sigma) (303-12 Intake Air Distribution and Filtering, Removal and Installation).
24. Connect the battery ground cable.

    For additional information, refer to: Battery Disconnect (414-01 Battery, Mounting and Cables, General Procedures).

## IN-VEHICLE REPAIR

# Cylinder Head(21 163 0)

### Special Tool(s)

| | |
|---|---|
| 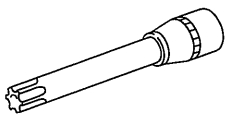 21167 | Socket, Cylinder Head Bolts 303-392 (21-167) |
| 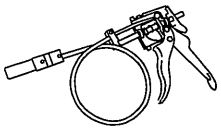 24003 | Remover/Installer, Hose Clamp 303-397 (24-003) |

| Materials | |
|---|---|
| **Name** | **Specification** |
| Engine oil | WSS-M2C912-A1 |

## Removal

1. **Release the fuel system pressure.**

   **For additional information, refer to: Fuel System Pressure Release (310-00 Fuel System - General Information, General Procedures).**

2. **Drain the cooling system.**

   **For additional information, refer to: Cooling System Draining, Filling and Bleeding (303-03 Engine Cooling - 1.4L Duratorq-TDCi (DV) Diesel, General Procedures).**

3. **Remove the camshaft.**

   **For additional information, refer to: Camshafts (303-01 Engine - 1.25L Duratec-16V (Sigma)/1.4L Duratec-16V (Sigma)/1.6L Duratec-16V (Sigma), In-vehicle Repair).**

4. **Detach the exhaust flexible pipe from the catalytic converter.**

   - Discard the gasket and the nuts.

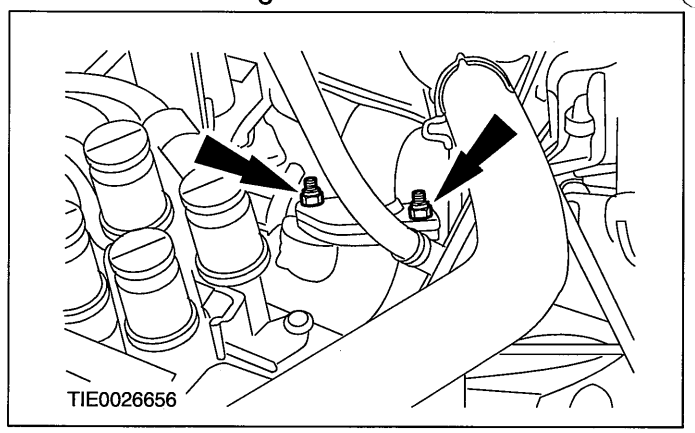


5. **Raise and support the vehicle.**

   **For additional information, refer to: Lifting (100-02 Jacking and Lifting, Description and Operation).**

6. **Using a suitable splint or wrap support the exhaust flexible pipe.**

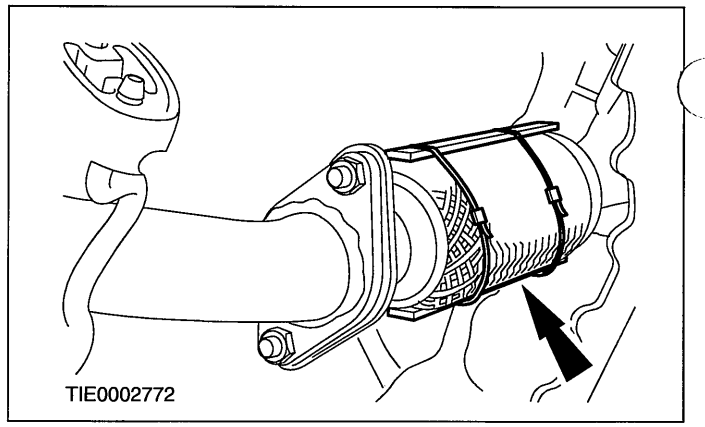


7. **Remove the exhaust manifold lower heat shield left-hand retaining bolts.**

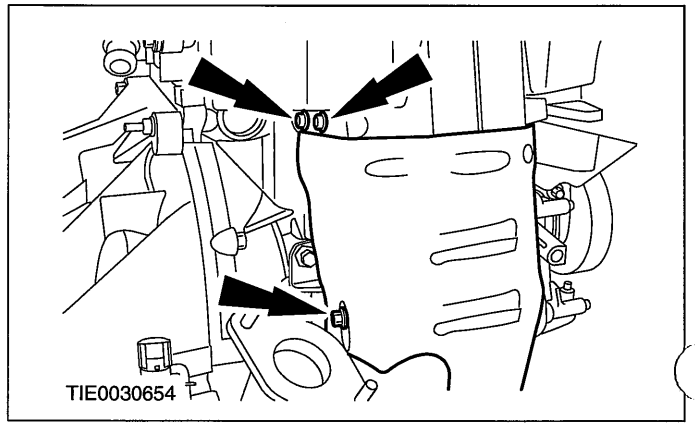


8. **Remove the exhaust manifold lower heat shield right-hand retaining bolts.**

## IN-VEHICLE REPAIR

- Remove the lower heat shield.

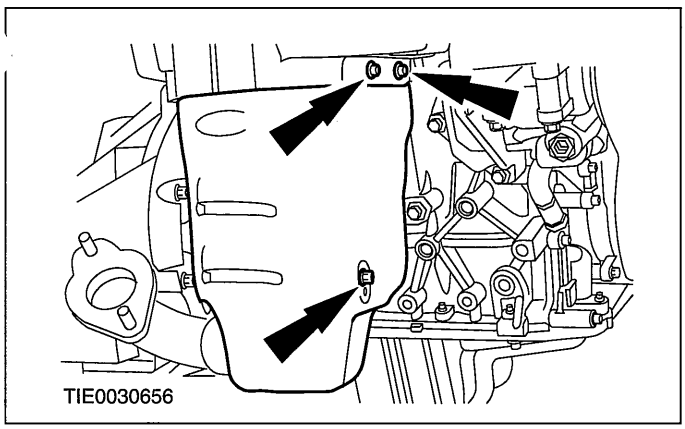


**9. Remove the intake manifold retaining bolt.**

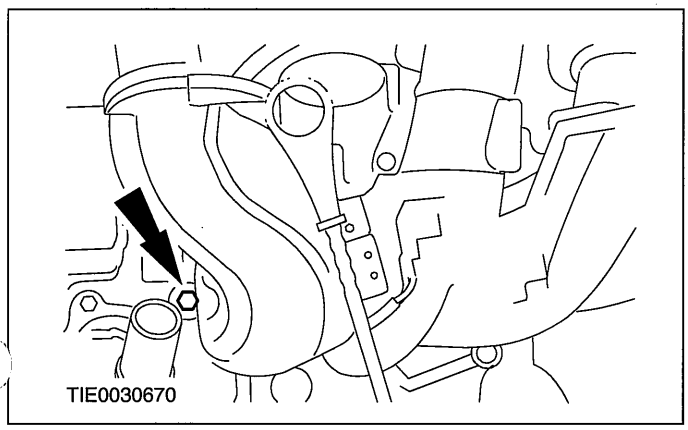


**10. Lower the vehicle.**

**11. Disconnect the vacuum hose from the fuel pressure regulator.**

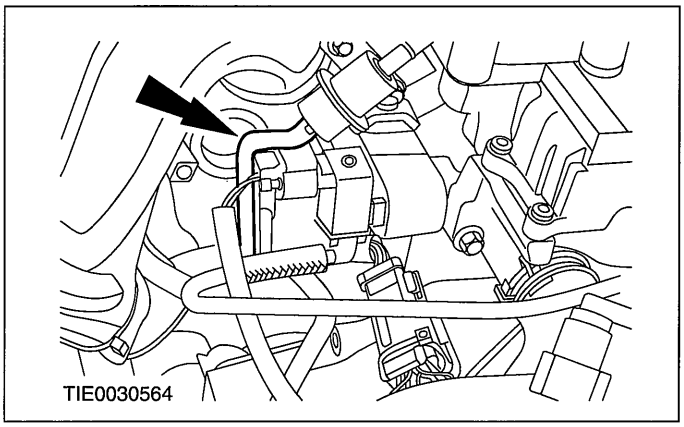


**12. Disconnect the brake booster vacuum line from the intake manifold.**

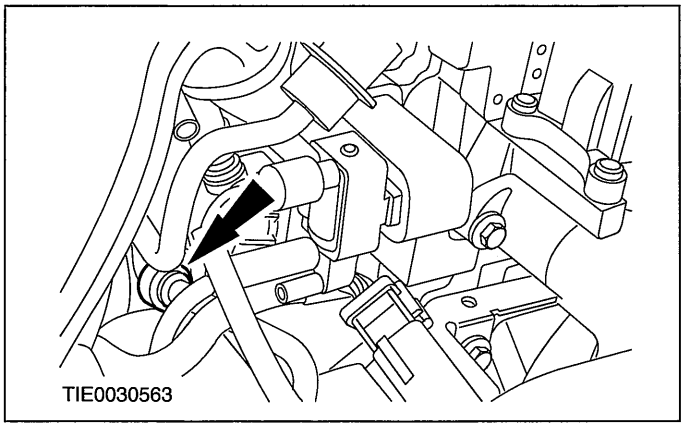


**13. Disconnect the positive crankcase ventilation (PCV) hose from the PCV.**

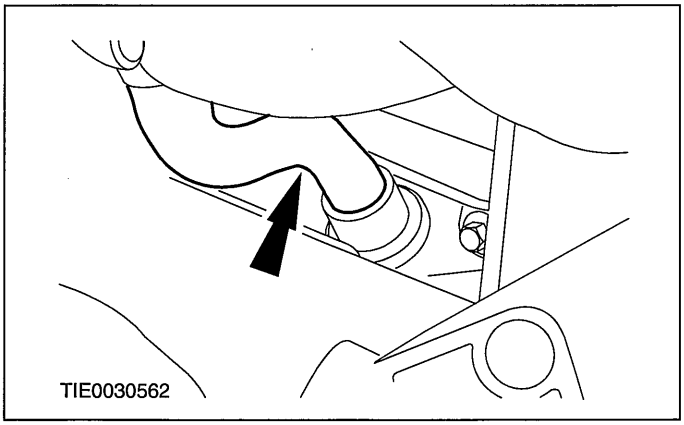


**14. Disconnect the generator electrical connector.**

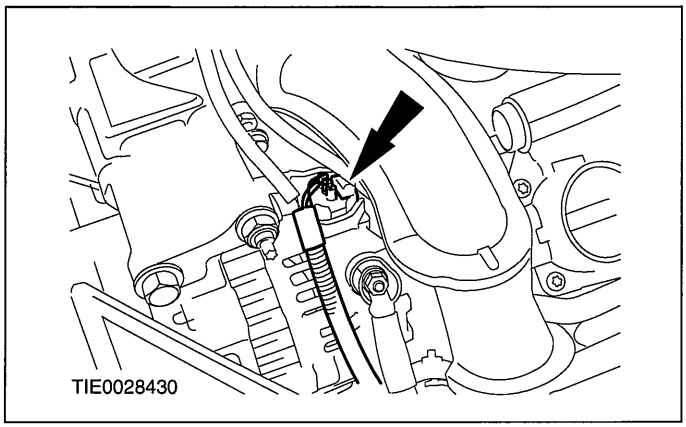

## IN-VEHICLE REPAIR

15. Disconnect the evaporative emissions (EVAP) hose from the EVAP valve.

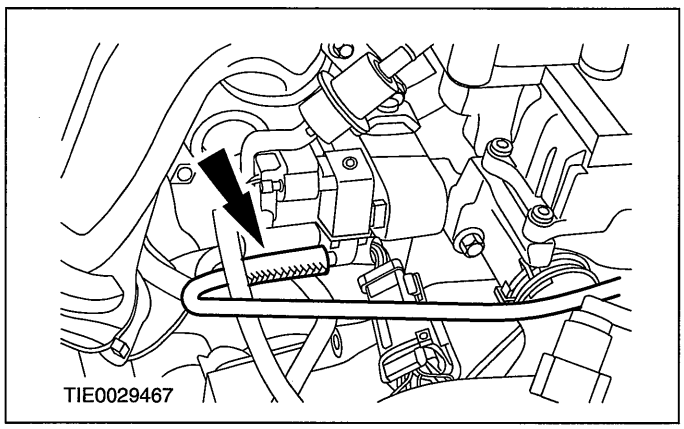


16. Disconnect the engine wiring harness electrical connector.

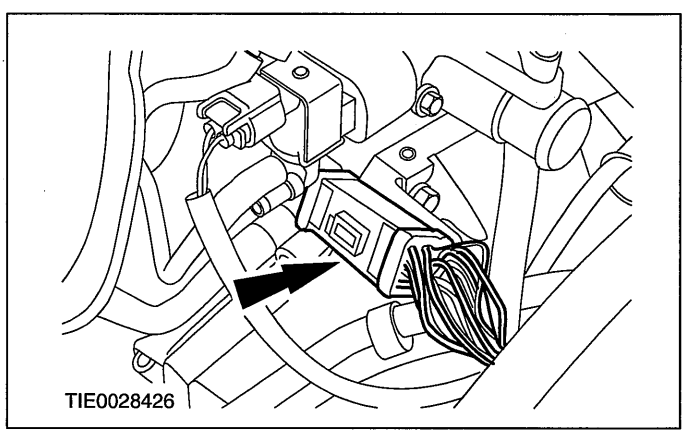


17. Disconnect the EVAP valve electrical connector.

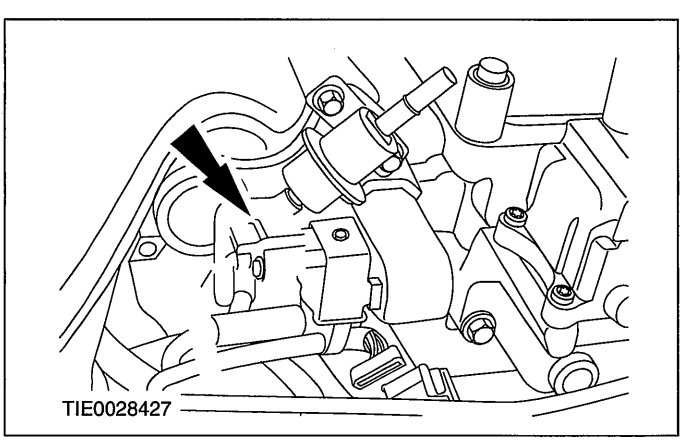


18. Disconnect the fuel supply line quick release coupling.

For additional information, refer to: Quick Release Coupling (310-00 Fuel System - General Information, General Procedures).

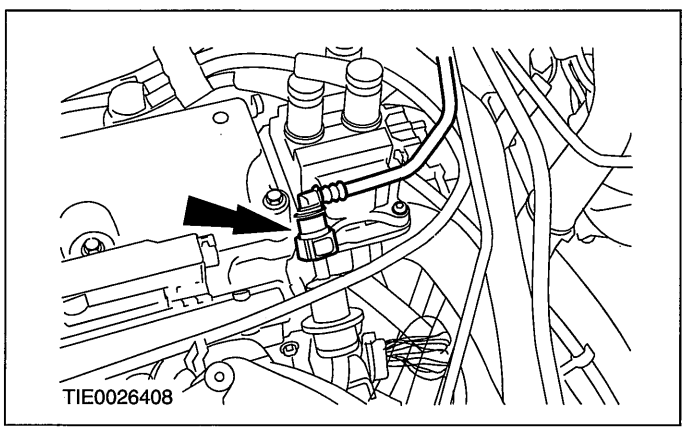


19. Disconnect the fuel return line quick release coupling.

For additional information, refer to: Quick Release Coupling (310-00 Fuel System - General Information, General Procedures).

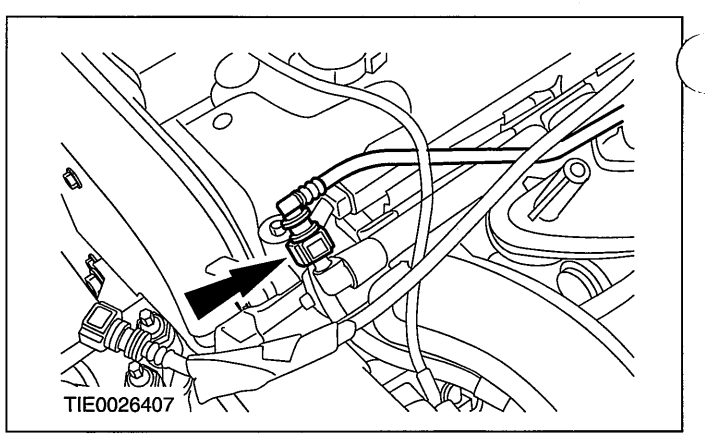


20. Using the special tool, disconnect the coolant hose from the coolant distribution assembly.

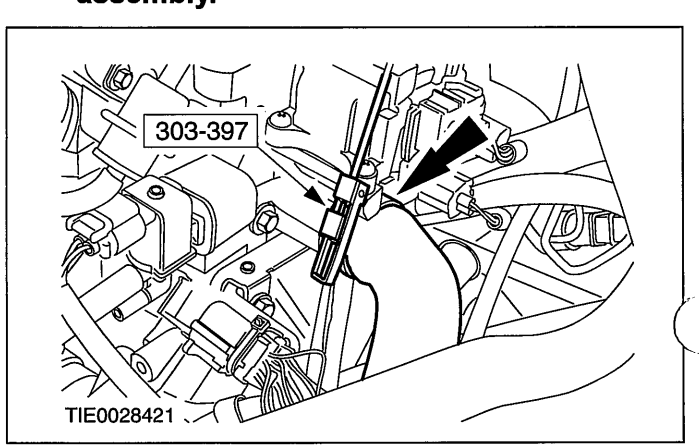

## IN-VEHICLE REPAIR

**21. Using the special tool, disconnect the coolant hose from the coolant distribution assembly.**

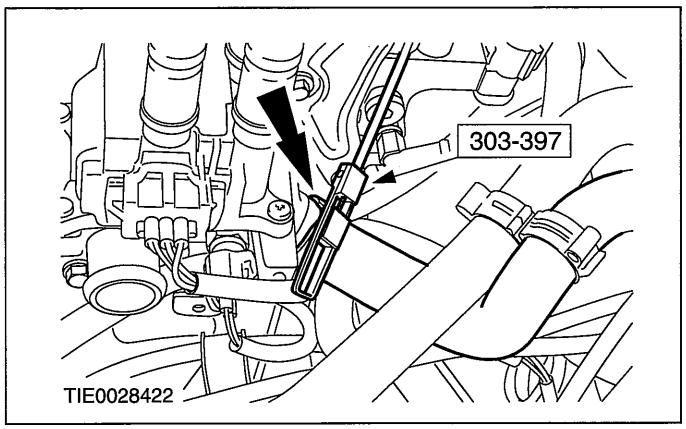


**22. Using the special tool, detach the degas hose from the cylinder head.**

- Using the special tool, detach the degas hose from the cylinder head.

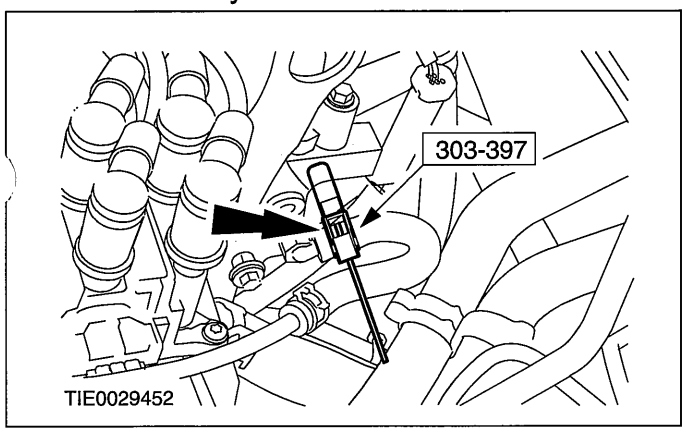


**23. Disconnect the engine coolant temperature (ECT) electrical connector.**

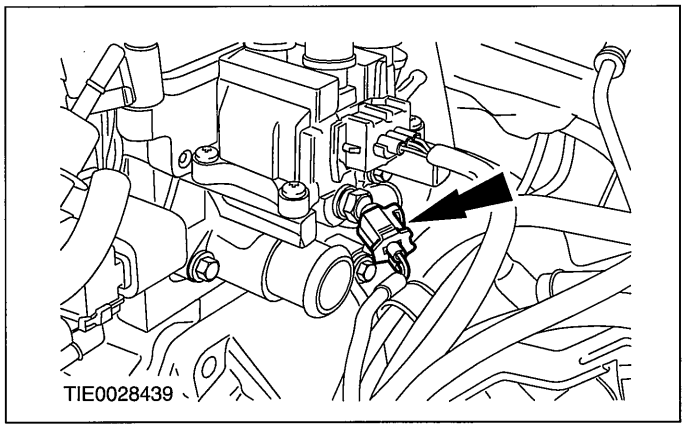


**24. Disconnect the electronic ignition (EI) coil electrical connector.**

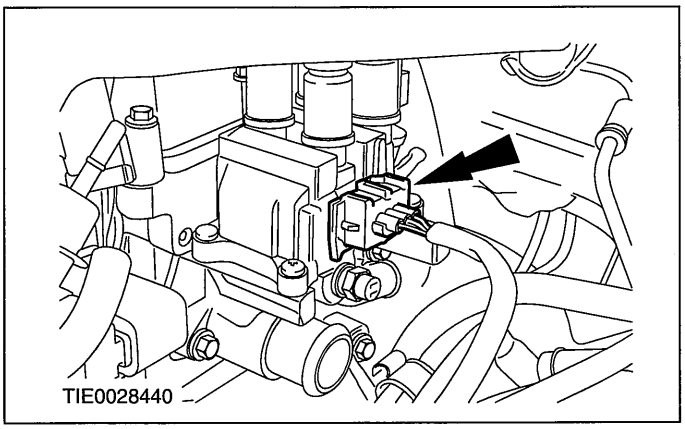


**25. Disconnect the heated oxygen (HO2S) sensor electrical connector.**

- Detach the electrical connector from the bracket.

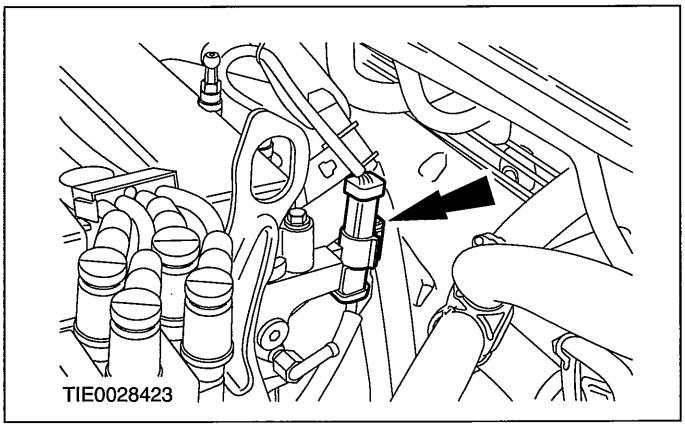


**26. Detach the power steering line bracket from the cylinder head.**

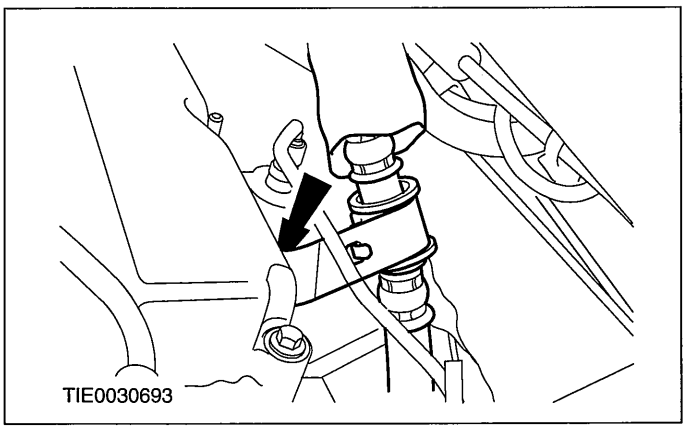

## IN-VEHICLE REPAIR

**27. Remove the exhaust manifold upper heat shield**

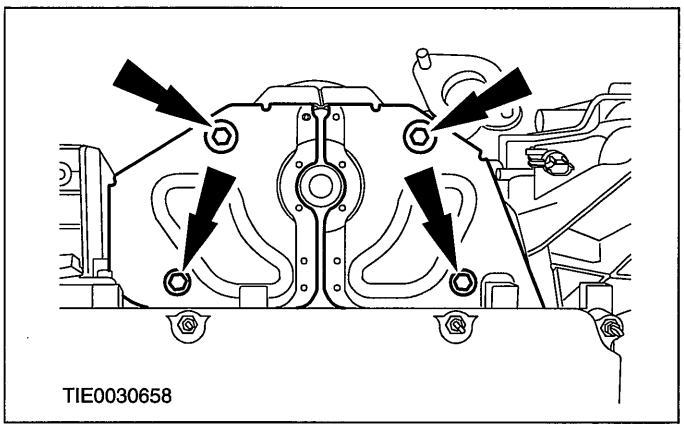


**28. Detach the exhaust manifold and position it to one side.**

- Discard the nuts and the exhaust manifold gasket.

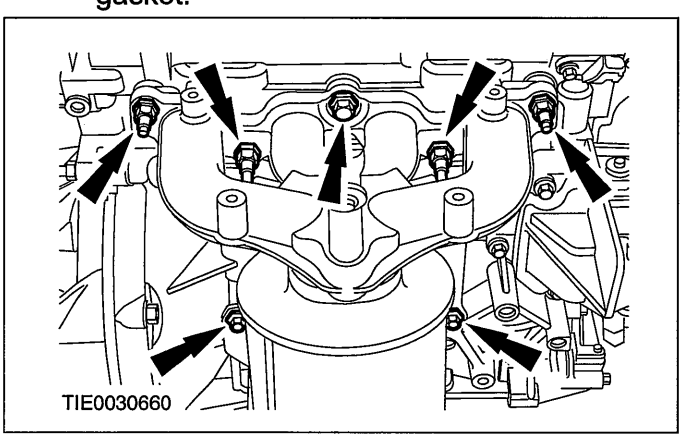


**29. Remove the timing belt rear cover (engine shown removed for clarity).**

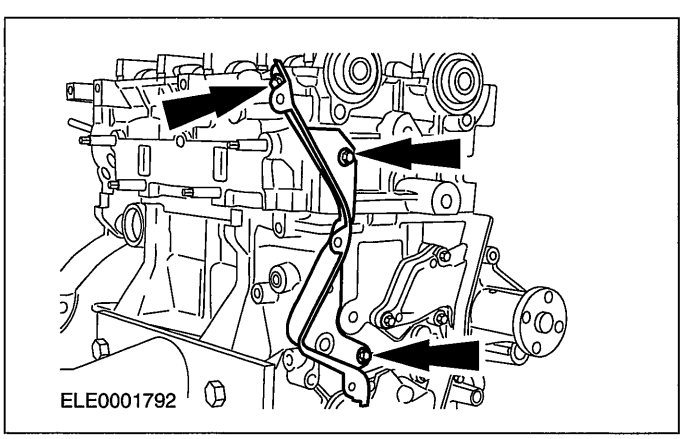


**30. Detach the oil level indicator tube from the intake manifold.**

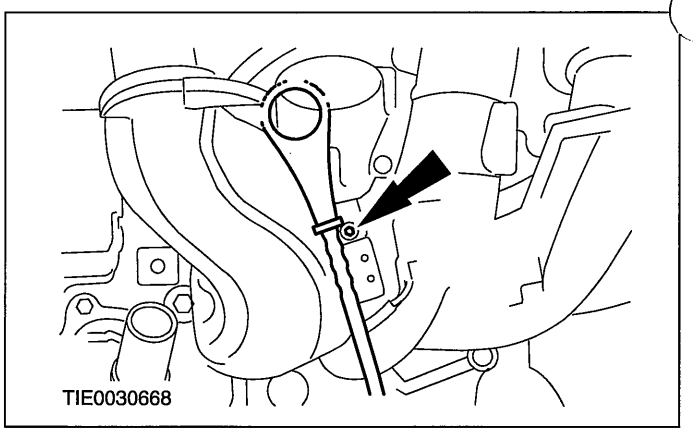


**31. CAUTIONS:**

**⚠The cylinder head must have cooled to below 30°C before removal.**

**⚠Position the cylinder head on a soft surface.**

**⚠Remove the cylinder head bolts in the sequence shown.**

**Using the special tool, remove the cylinder head bolts.**

- Discard the cylinder head gasket.

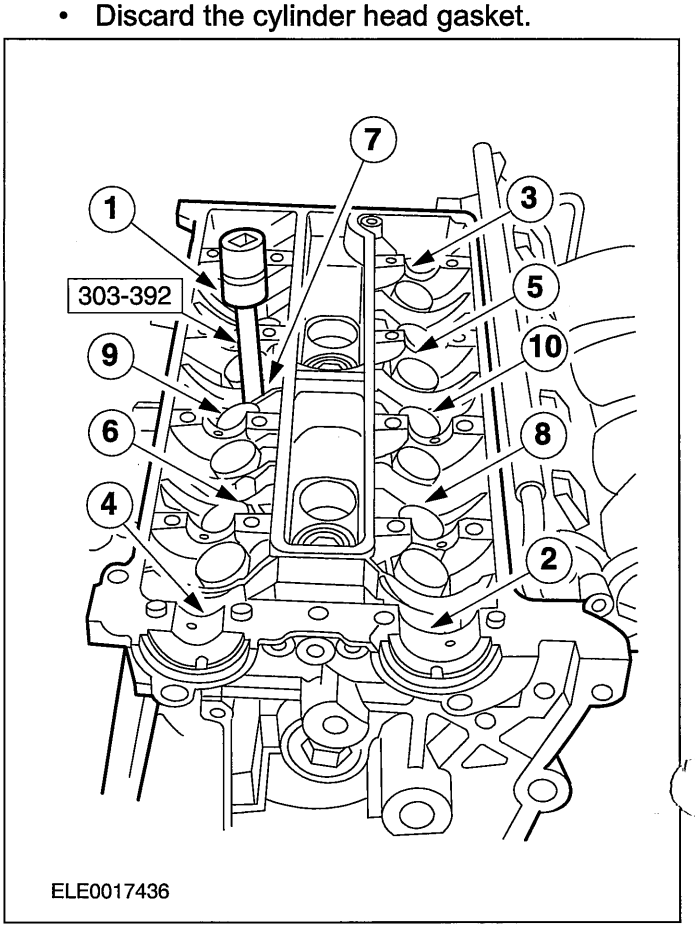

## IN-VEHICLE REPAIR

### Installation

1. ⚠**CAUTION:The thickness of the new cylinder head gasket must be the same as that of the old one (hole marked).**

**NOTE:**Install a new cylinder head gasket.

**NOTE:**Position the cylinder head into the two guide sleeves.

**Using the special tool, install the cylinder head.**

- Tighten the cylinder head bolts in the sequence shown in three stages.
- Stage 1: 15 Nm.
- Stage 2: 30 Nm.
- Stage 3: 90 degrees.

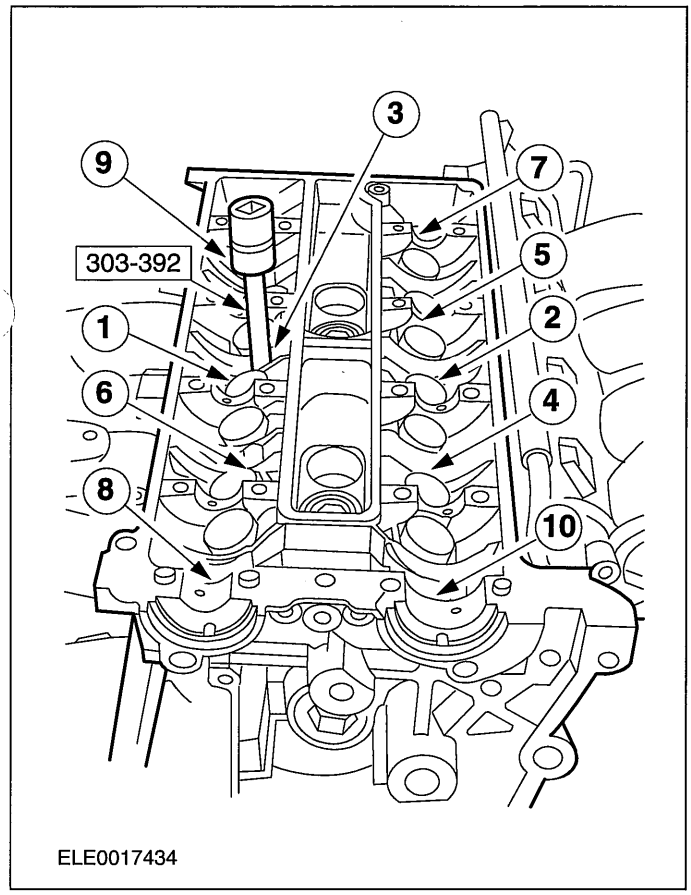


2. **Attach the oil level indicator tube to the intake manifold.**

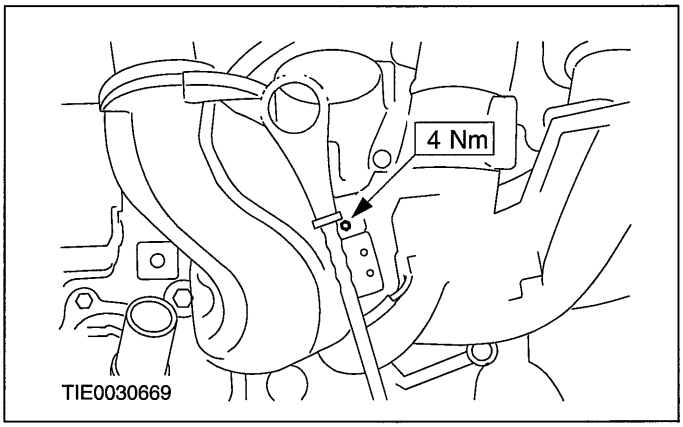


3. **Install the timing belt rear cover (engine shown removed for clarity).**

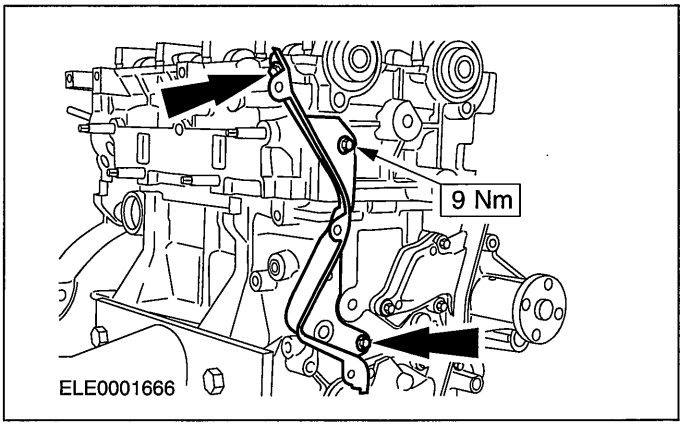


4. **NOTE:Install a new exhaust manifold gasket and new exhaust manifold retaining nuts.**

**NOTE:**Do not fully tighten the nuts and bolt at this stage.

**Install the exhaust manifold.**

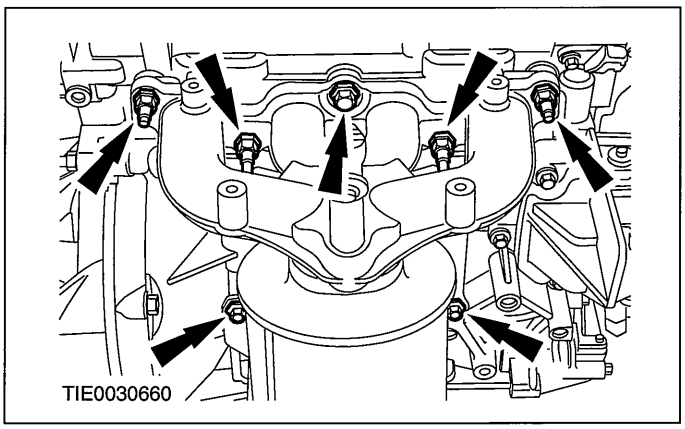


5. **Tighten the exhaust manifold upper retaining nuts and bolt in the sequence shown in two stages.**

## IN-VEHICLE REPAIR

- Stage 1: 20 Nm.
- Stage 2: 55 Nm.

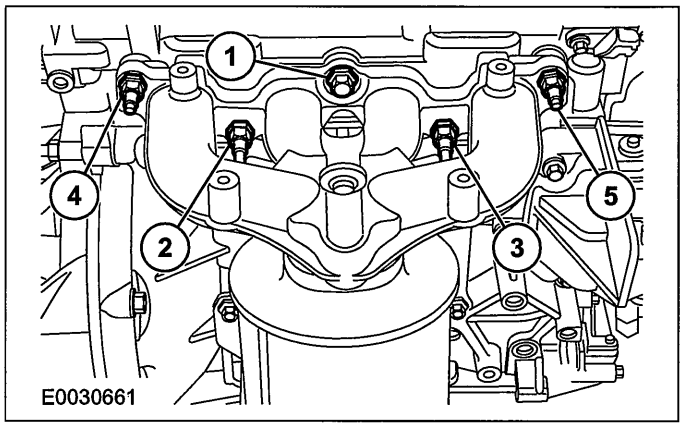


6. **Tighten the exhaust manifold lower retaining bolts.**

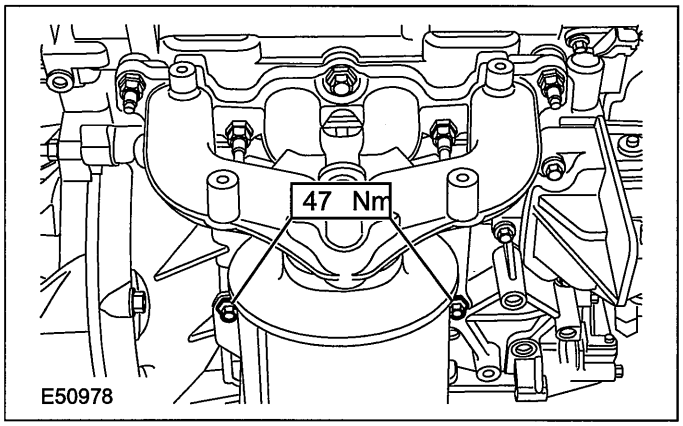


7. **Install the exhaust manifold upper heat shield.**

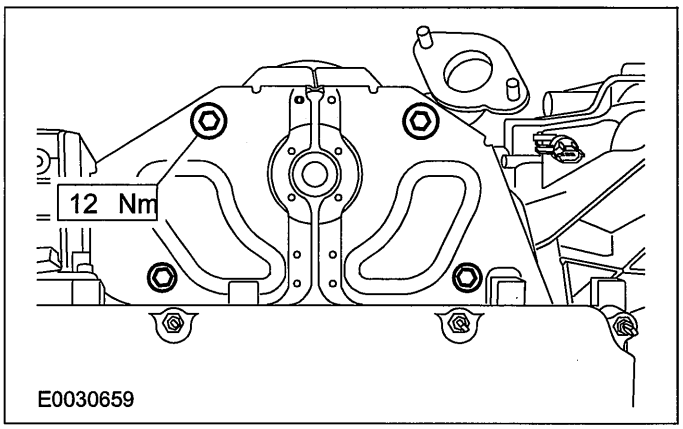


8. **Attach the power steering line bracket to the cylinder head.**

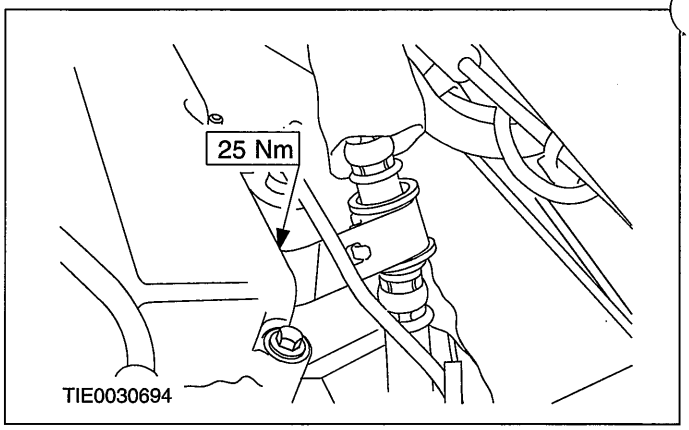


9. **Connect the heated oxygen (HO2S) sensor electrical connector.**
   - Attach the electrical connector to the bracket.

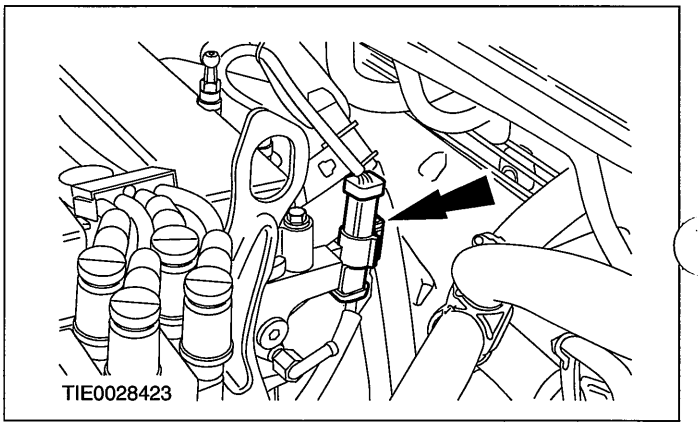


10. **Connect the electronic ignition (EI) coil electrical connector.**

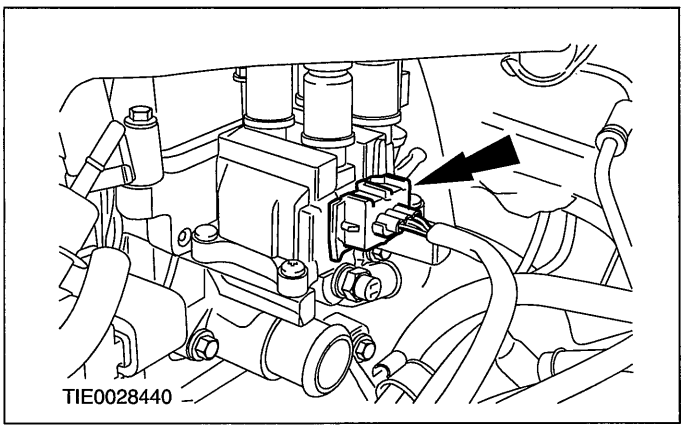

## IN-VEHICLE REPAIR

11. Connect the engine coolant temperature (ECT) sensor electrical connector.

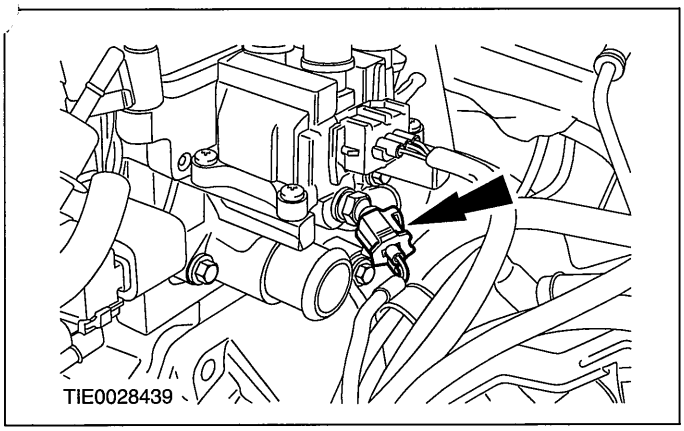


12. Using the special tool, connect the degas hose to the cylinder head.

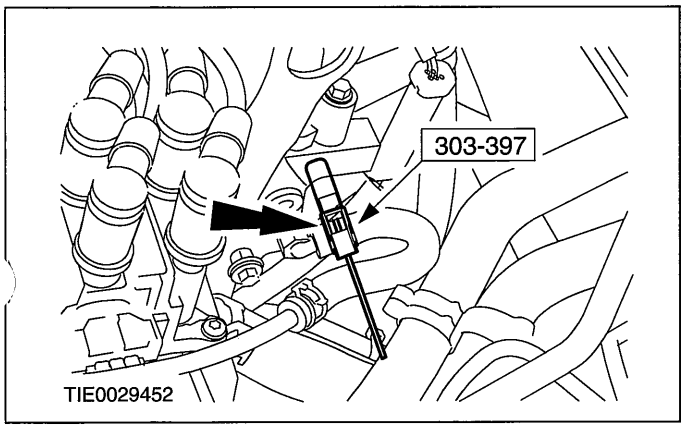


13. Using the special tool, connect the coolant hose to the coolant distribution assembly.

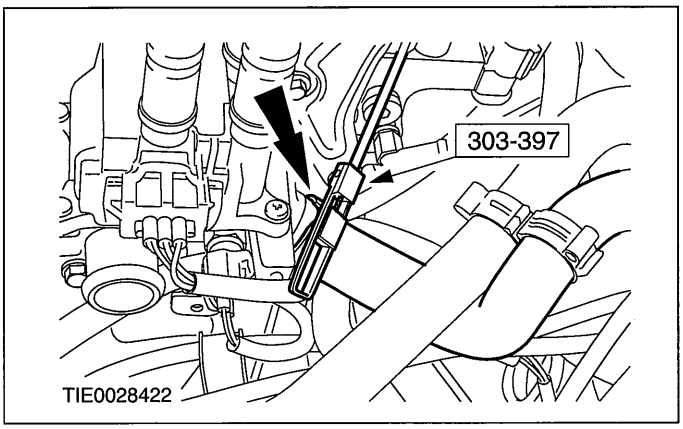


14. Using the special tool, connect the coolant hose to the coolant distribution assembly.

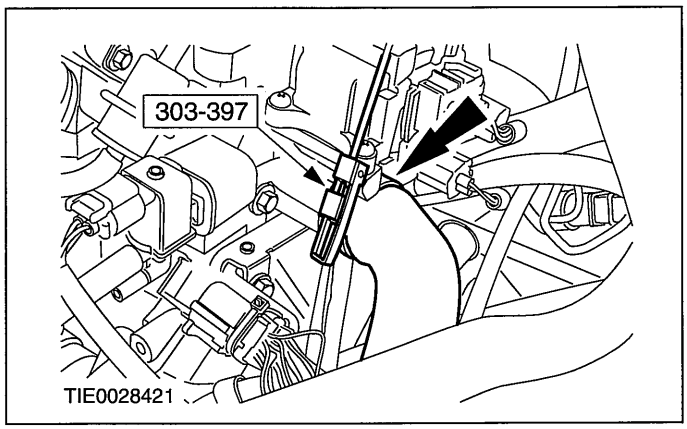


15. Connect the fuel return line quick release coupling.

For additional information, refer to: Quick Release Coupling (310-00 Fuel System - General Information, General Procedures).

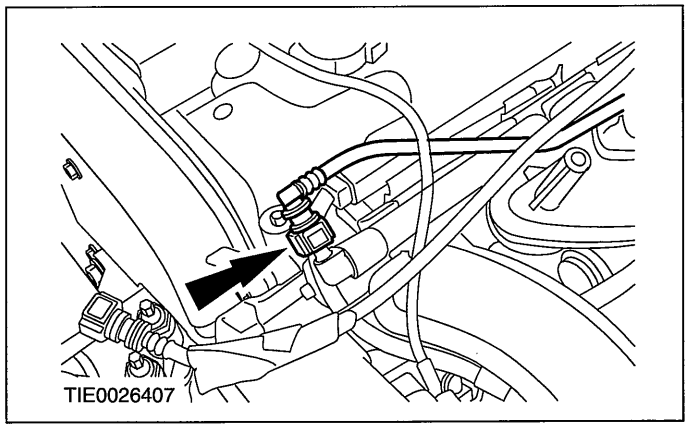


16. Connect the fuel supply line quick release coupling.

For additional information, refer to: Quick Release Coupling (310-00 Fuel System - General Information, General Procedures).

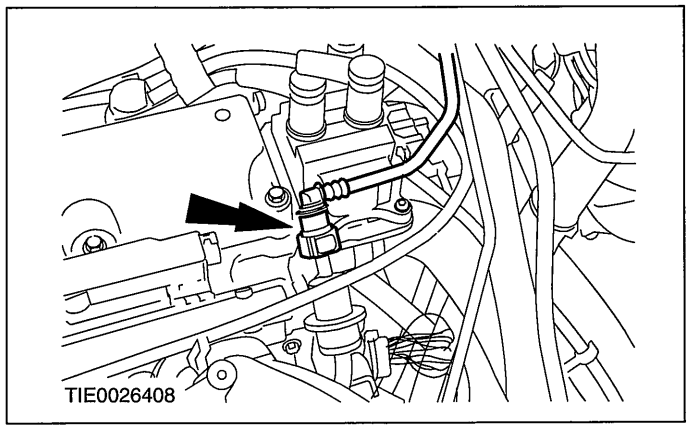

## IN-VEHICLE REPAIR

17. Connect the evaporate emission (EVAP) valve electrical connector.

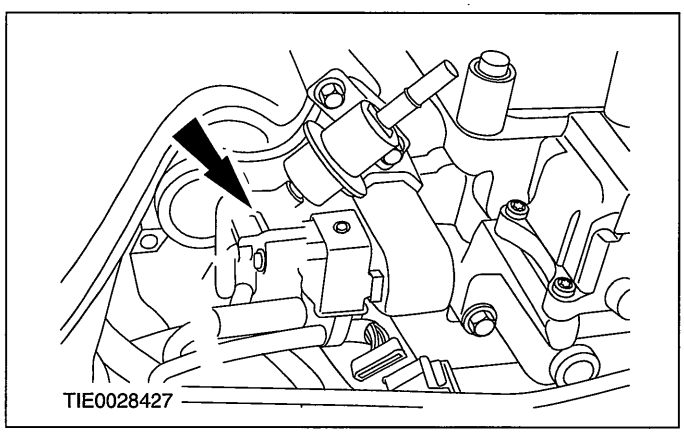


18. Connect the engine wiring harness electrical connector.

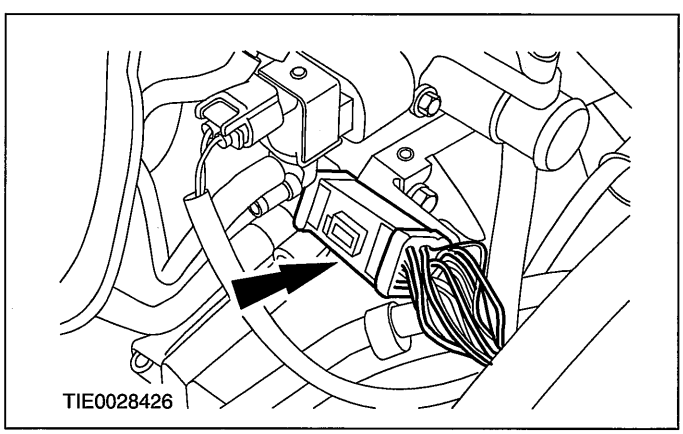


19. Connect the EVAP hose to the EVAP valve.

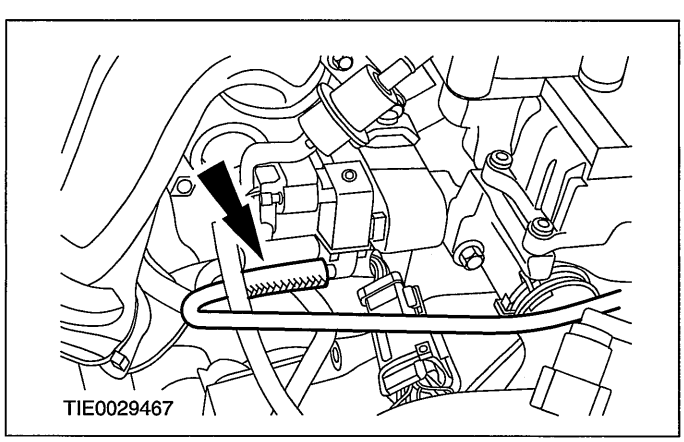


20. Connect the vacuum hose to the fuel pressure regulator.

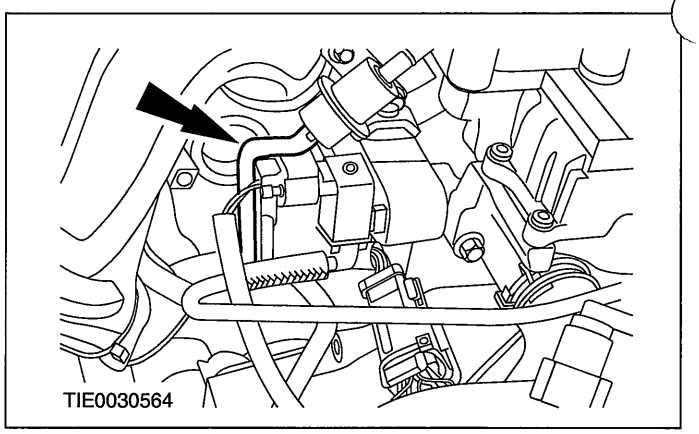


21. Connect the generator electrical connector.

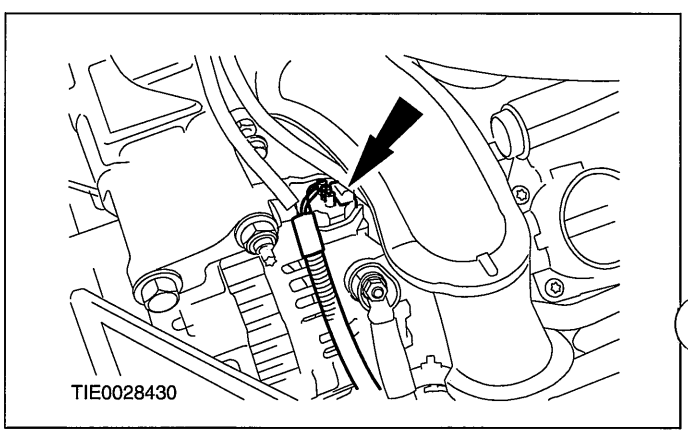


22. Connect the positive crankcase ventilation (PCV) hose to the PCV.

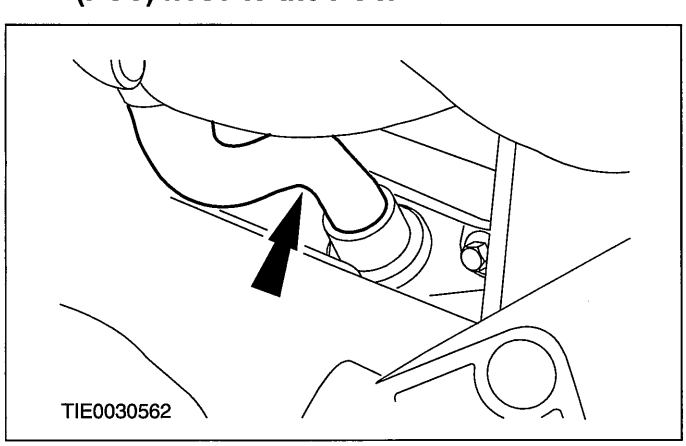

## IN-VEHICLE REPAIR

23. Connect the brake booster vacuum line to the intake manifold.

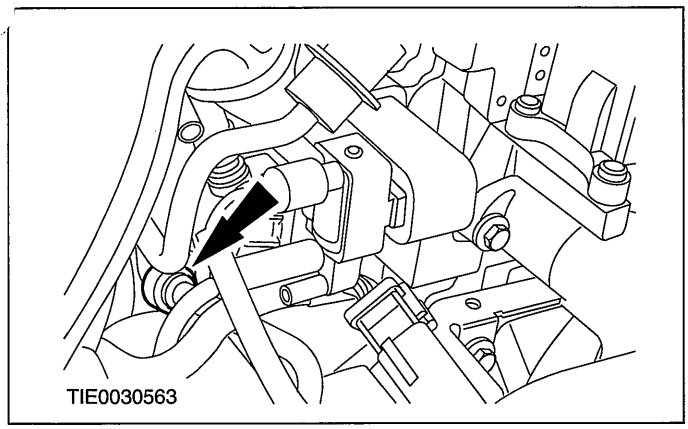


24. Raise and support the vehicle.

    For additional information, refer to: Lifting (100-02 Jacking and Lifting, Description and Operation).

25. Install the intake manifold retaining bolt.

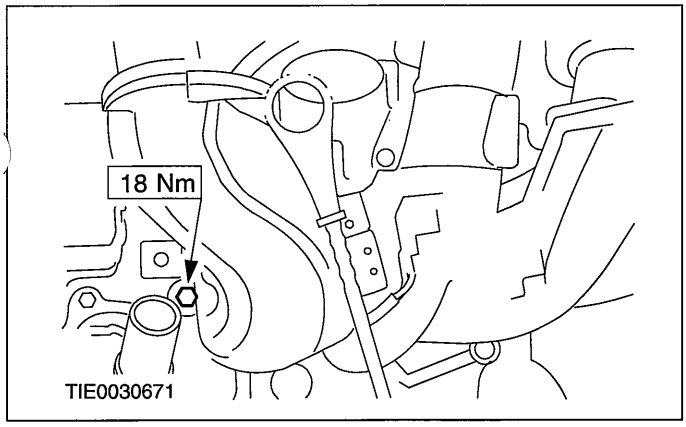


26. Position the exhaust manifold lower heat shield and install the right-hand retaining bolts.

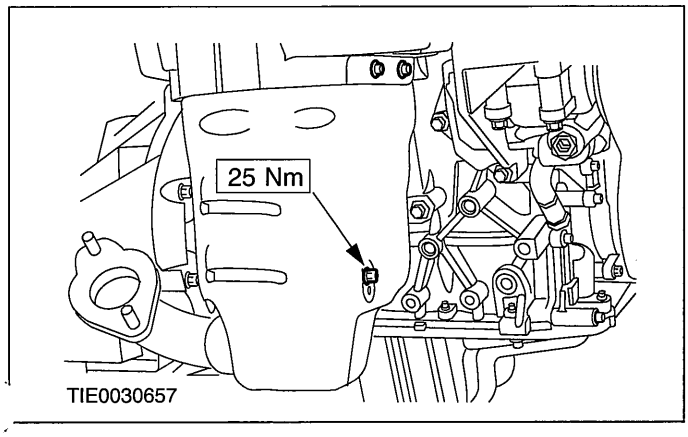


27. Install the exhaust manifold lower heat shield left-hand retaining bolts.

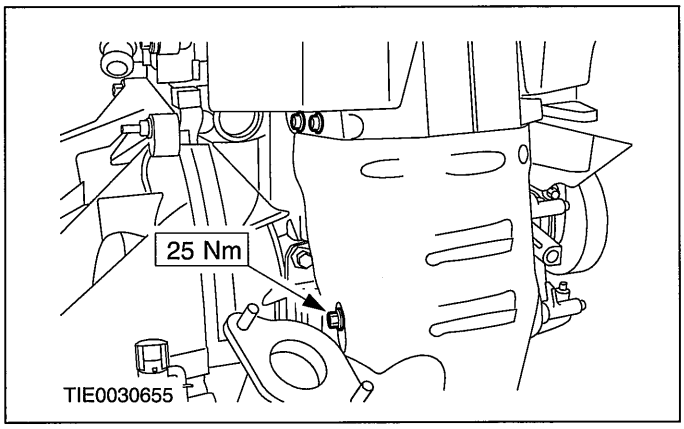


28. NOTE:Install a new flexible pipe gasket and new nuts.

    Attach the flexible pipe to the catalytic converter

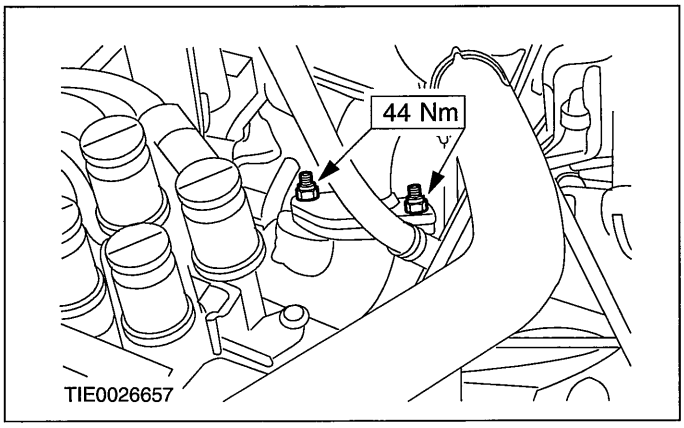


29. Remove the exhaust flexible pipe support.
30. Install the camshaft.

    For additional information, refer to: Camshafts (303-01 Engine - 1.25L Duratec-16V (Sigma)/1.4L Duratec-16V (Sigma)/1.6L Duratec-16V (Sigma), In-vehicle Repair).

31. NOTE:Install a new oil filter.

    Change the engine oil.

32. Fill and bleed the cooling system.

    For additional information, refer to: Cooling System Draining, Filling and Bleeding (303-03 Engine Cooling - 1.4L Duratorq-TDCi (DV) Diesel, General Procedures).

## IN-VEHICLE REPAIR

# Oil Pan(21 154 0)

### Special Tool(s)

| | |
|---|---|
| 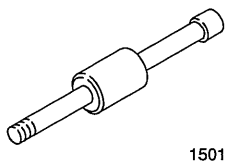 15011 | Slide Hammer 205-047 (15-011) |
| 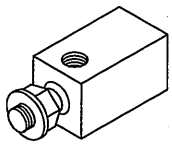 21227 | Adapter for 205-047 303-633 (21-227) |

### General Equipment

| |
|---|
| Five M8 x 20 mm studs |

### Materials

| Name | Specification |
|---|---|
| Engine oil | WSS-M2C912-A1 |
| Loctite 7070 | |
| Sealant | WSE-M4G323-A4 |

## Removal

1. **Raise and support the vehicle. For additional information, refer to Section 100-02 [Jacking and Lifting].**
2. **Drain the engine and remove the oil pan retaining bolts.**
   1. Remove the oil drain plug.
   2. Remove the oil pan retaining bolts.

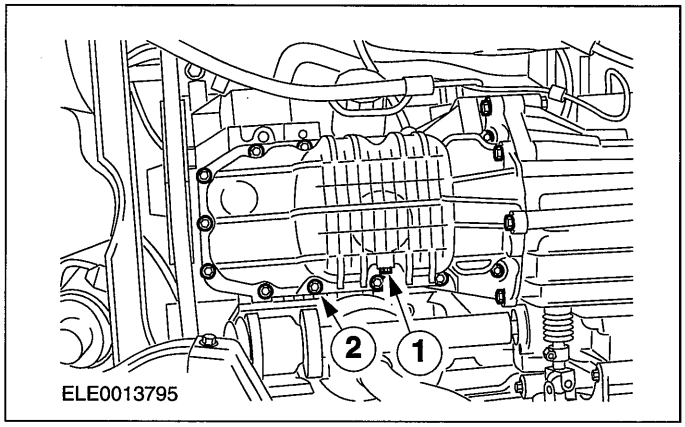


3. **⚠CAUTION:In order to prevent damage to the sealing surfaces, only use the designated special tool to remove the oil pan. Do not use a chisel or a screwdriver for removal.**

**NOTE:**Tighten the lock nut against the oil pan and use several taps to release the oil pan from the cylinder block.

**Using the special tool, remove the oil pan.**

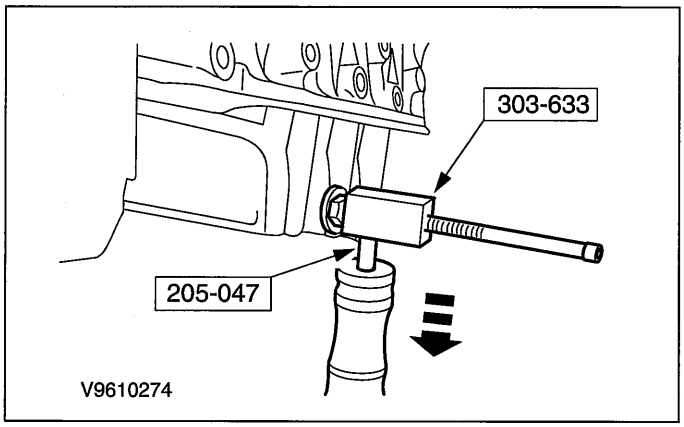


## Installation

1. **CAUTIONS:**

   **⚠The oil pump gasket projects over the cylinder block sealing surface and must not be damaged.**

   **⚠Do not damage the rubber sealing surface of the crankshaft rear oil seal carrier.**

   **Using Loctite 7070, clean the engine cylinder block and oil pan mating faces.**

2. **⚠CAUTION:The crankcase may be damaged if sealant enters the blind holes.**

   **Install five M8 x 20 mm studs into the blind holes where shown.**

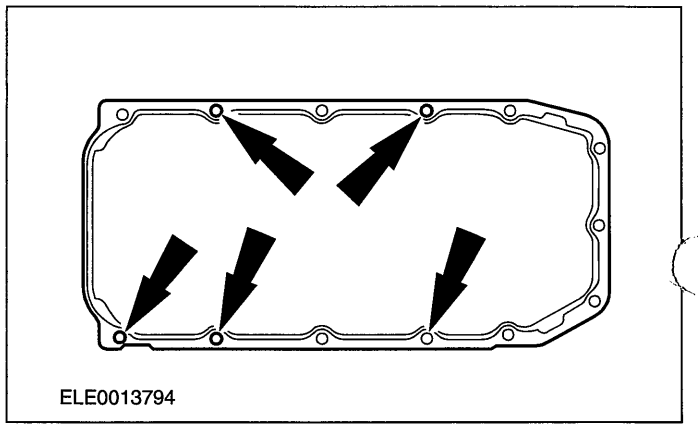

## IN-VEHICLE REPAIR

3. **NOTE:Install the oil pan within ten minutes of applying sealant and tighten the bolts within a further 5 minutes.**

   **Apply a 3-4 mm diameter bead of sealant to the oil pan flange.**

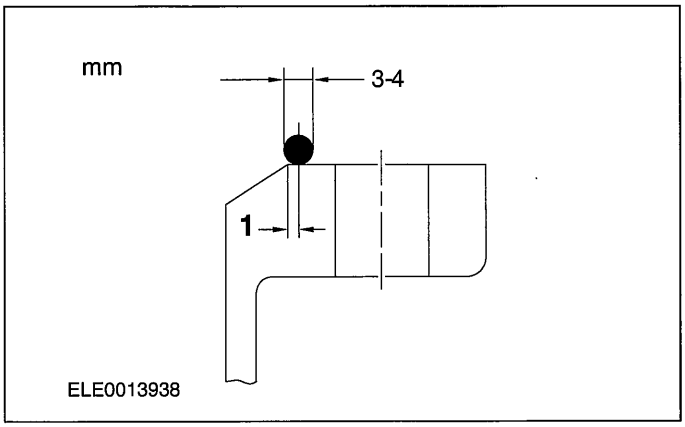


4. **NOTE:Align the oil pan flush with the cylinder block at the transaxle end.**

   **Install the oil pan.**

   - Tighten the oil pan retaining bolts in the sequence shown in two stages.
     - Stage 1: 10 Nm.
     - Stage 2: 20 Nm.
   - Remove the studs and install retaining bolts.

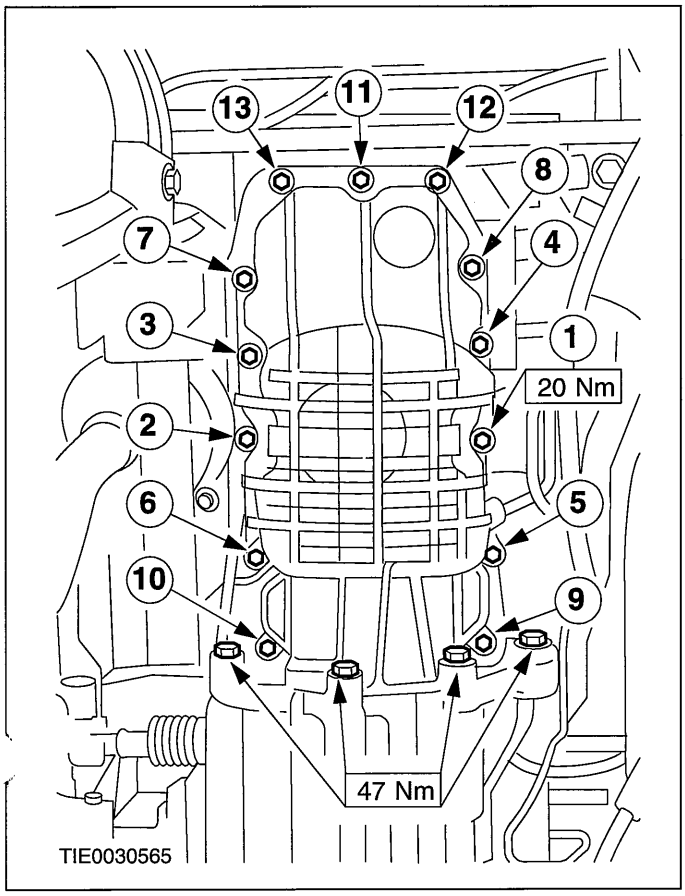


5. **NOTE:Check the oil drain plug seal for damage and install a new drain plug if necessary.**

   **Install the oil drain plug.**

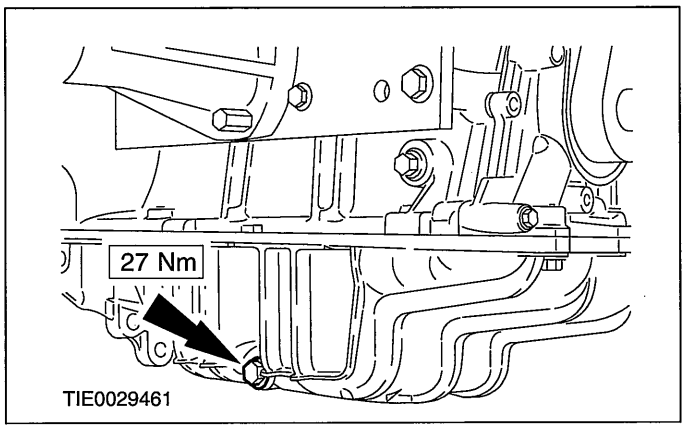


6. **Fill the engine with engine oil.**

## IN-VEHICLE REPAIR

# Oil Pump(21 714 0)

### Special Tool(s)

| | |
|---|---|
| 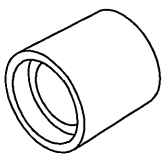 21171 | Installer, Crankshaft Oil Seal 303-395 (21-171) |

## Removal

1. **Remove the timing belt.**

   **For additional information, refer to Timing Belt in this section.**

2. **Remove the crankshaft timing belt pulley.**

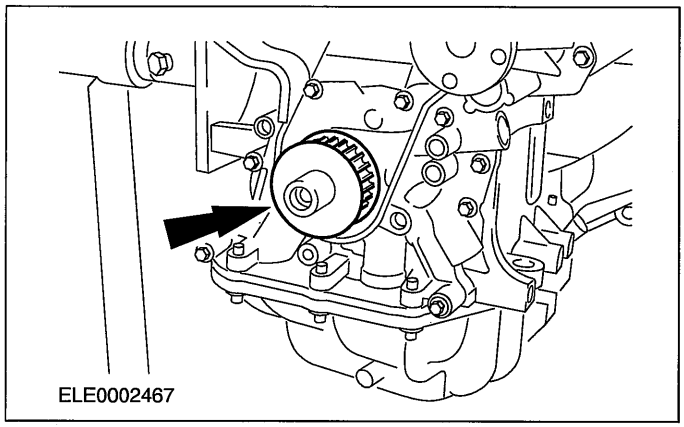


3. **Detach the air conditioning (A/C) compressor from the cylinder block and position it to one side.**

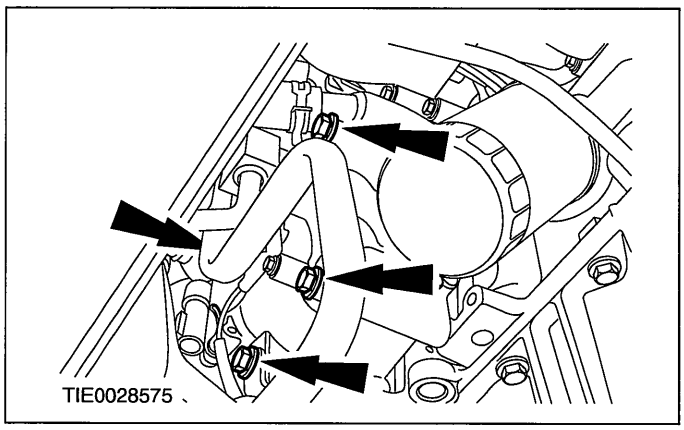


4. **Remove the oil pan.**

   **For additional information, refer to Oil Pan in this section.**

5. **Detach the oil pick-up tube from the oil pump and remove the oil pump (engine shown removed for clarity).**
   - Discard the gaskets.
   - Remove and discard the crankshaft front oil seal.

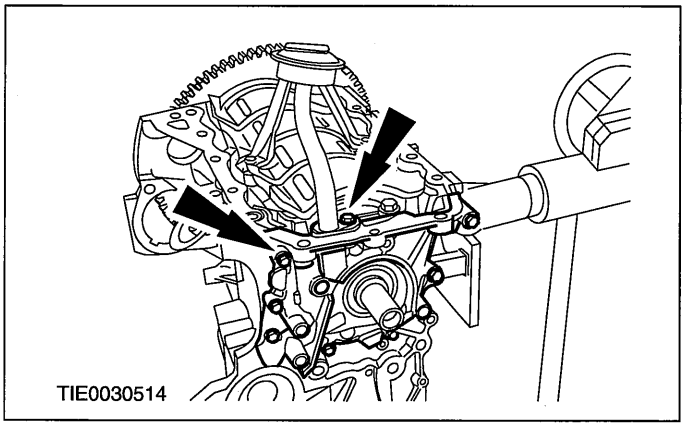


## Installation

1. **NOTE:Install a new oil pump gasket.**

   **Install the oil pump (engine shown removed for clarity).**

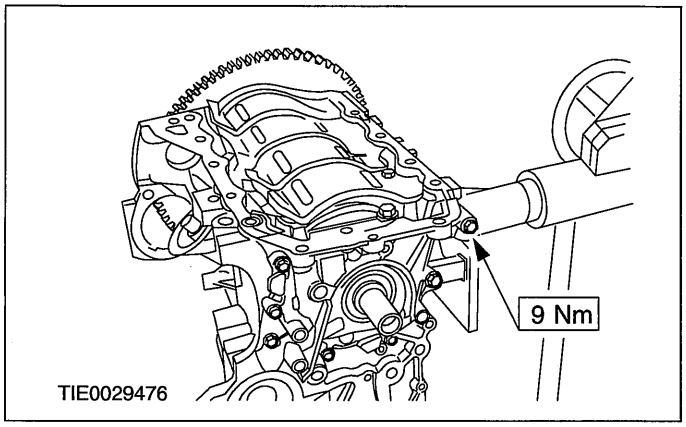


2. **NOTE:Install a new oil pump intake pipe gasket.**

## IN-VEHICLE REPAIR

Attach the oil pick-up tube to the oil pump (engine shown removed for clarity).

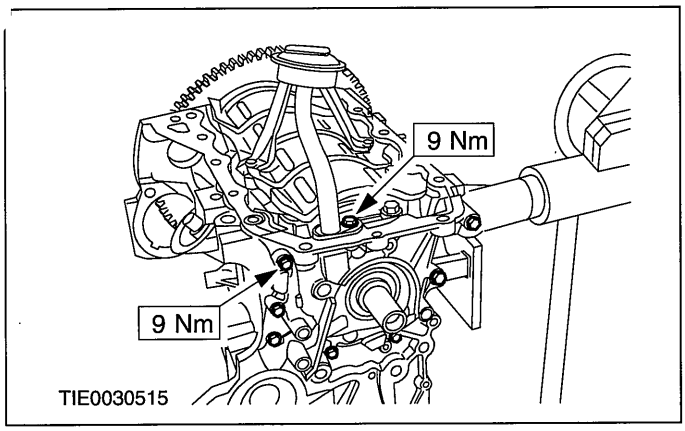


3. NOTE:Install a new crankshaft front oil seal.

   Using the special tool, install the crankshaft front oil seal.

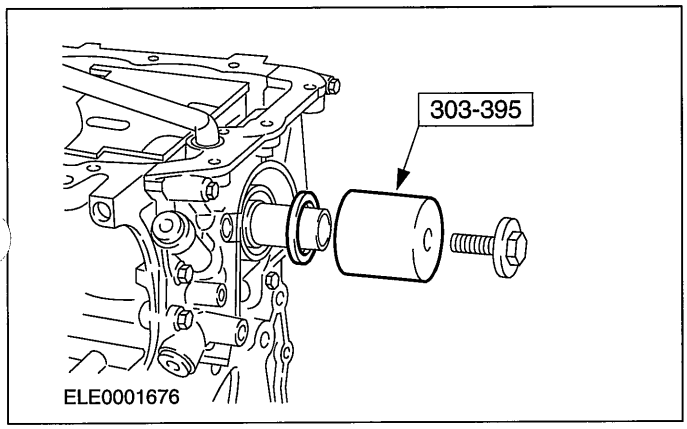


4. Install the oil pan.

   For additional information, refer to Oil Pan in this section.

5. Attach the air conditioning (A/C) compressor to the cylinder block.

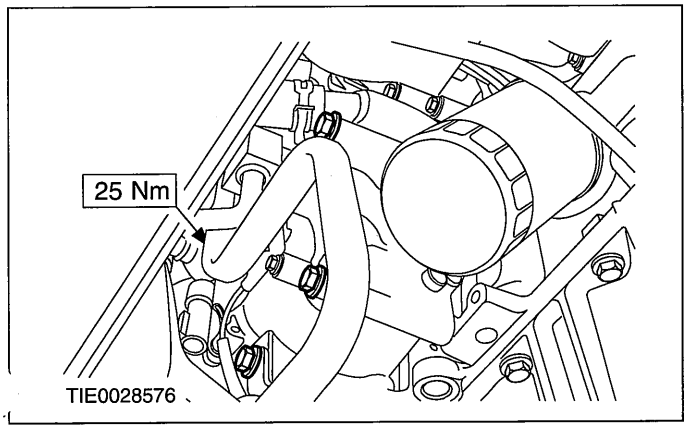


6. Install the crankshaft timing belt pulley.

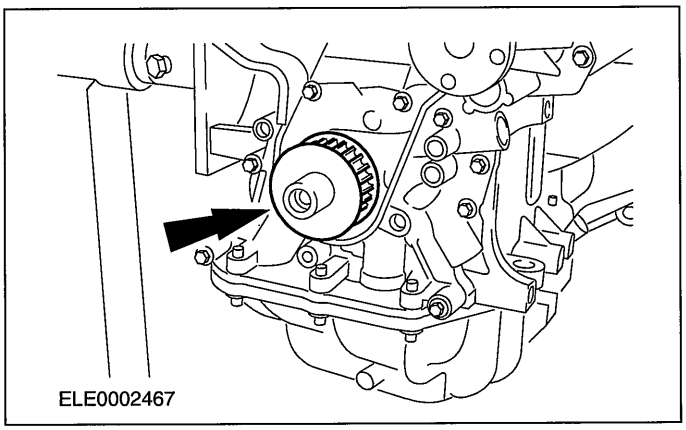


7. Install the timing belt.

   For additional information, refer to Timing Belt in this section.

## IN-VEHICLE REPAIR

# Crankshaft Rear Seal(21 468 4)

### Special Tool(s)

| | |
|---|---|
| 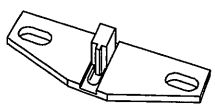 21168 | Locking Tool, Flywheel 303-393 (21-168) |
| 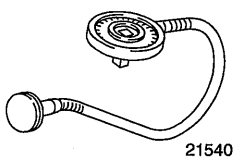 21540 | Gauge, Bolt Angle 303-174 (21-540) |

## Removal

### Vehicles with manual transaxle

1. **Remove the clutch disc and pressure plate.**

   **For additional information, refer to: Clutch Disc and Pressure Plate (308-01 Clutch, Removal and Installation).**

2. **Using the special tool, remove the flywheel.**
   - Discard the bolts.

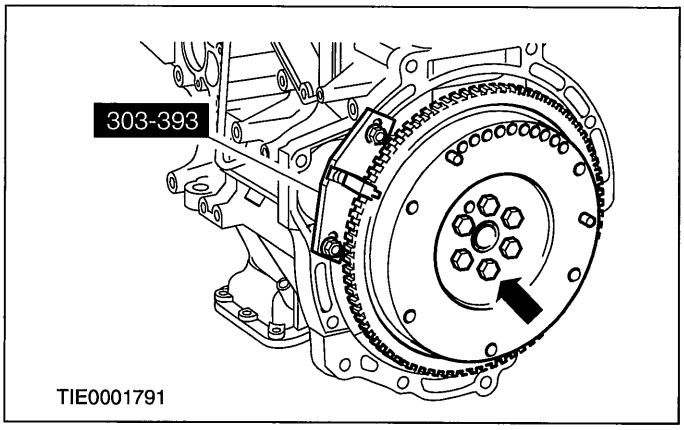


### Vehicles with automatic transaxle

3. **Using the special tool, remove the flexplate.**
   - Discard the bolts.

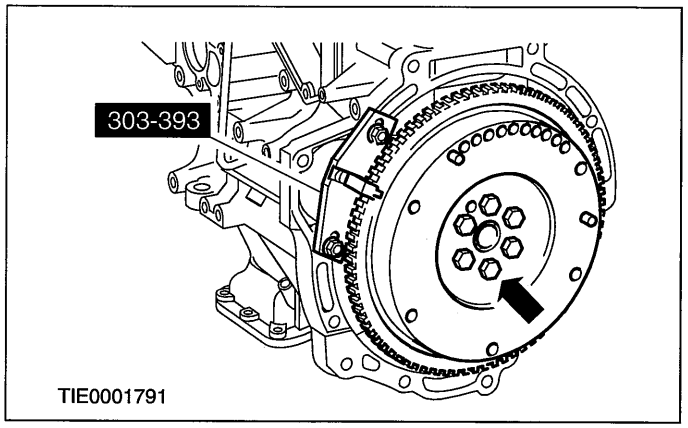


### All vehicles

4. **Remove the crankshaft rear oil seal carrier.**
   - Discard the crankshaft rear oil seal carrier.

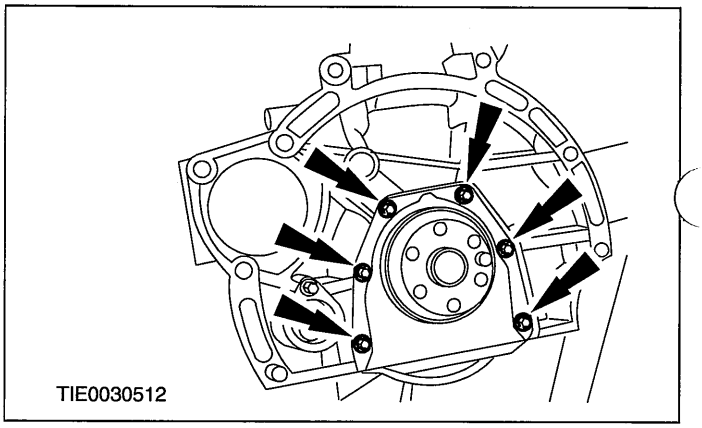


## Installation

### All vehicles

1. **Clean the crankshaft journal.**
2. **NOTE:Install a new crankshaft rear oil seal carrier.**

**NOTE:**A new crankshaft rear oil seal carrier is supplied with an alignment sleeve which must be removed following installation.

**NOTE:**Do not lubricate the oil seal or crankshaft journal.

## IN-VEHICLE REPAIR

**Install the crankshaft rear oil seal carrier.**

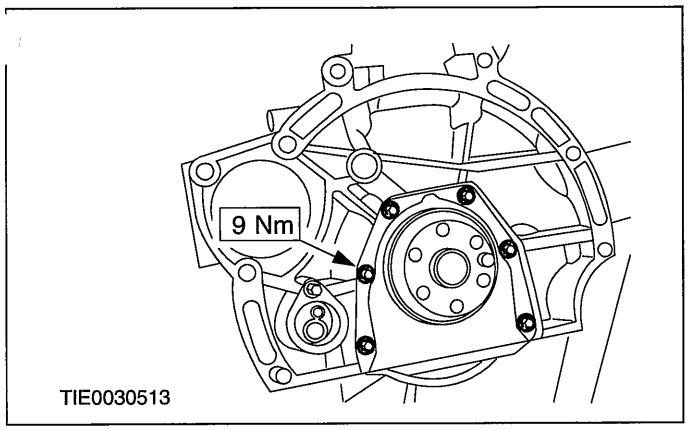


Vehicles with manual transaxle

3. **NOTE:Position of location stud for the flywheel.**

**NOTE:**Install new flywheel retaining bolts.

**Using the special tool, install the flywheel.**

- Tighten the bolts in the sequence shown in two stages:
- Stage 1: 30 Nm.
- Stage 2: 80 degrees.

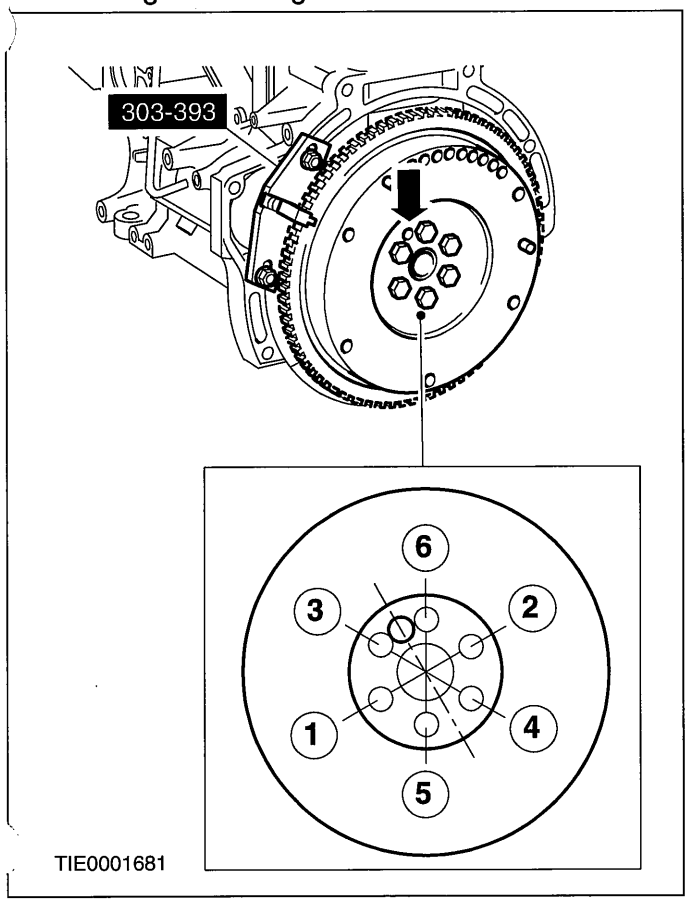


4. **Install the clutch disc and pressure plate.**

**For additional information, refer to: Clutch Disc and Pressure Plate (308-01 Clutch, Removal and Installation).**

Vehicles with automatic transaxle

5. **NOTE:Position of location stud for the flexplate.**

**NOTE:**Install new flexplate retaining bolts.

**Using the special tool, install the flexplate.**

- Tighten the bolts in the sequence shown in two stages:
- Stage 1: 30 Nm.
- Stage 2: 80 degrees.

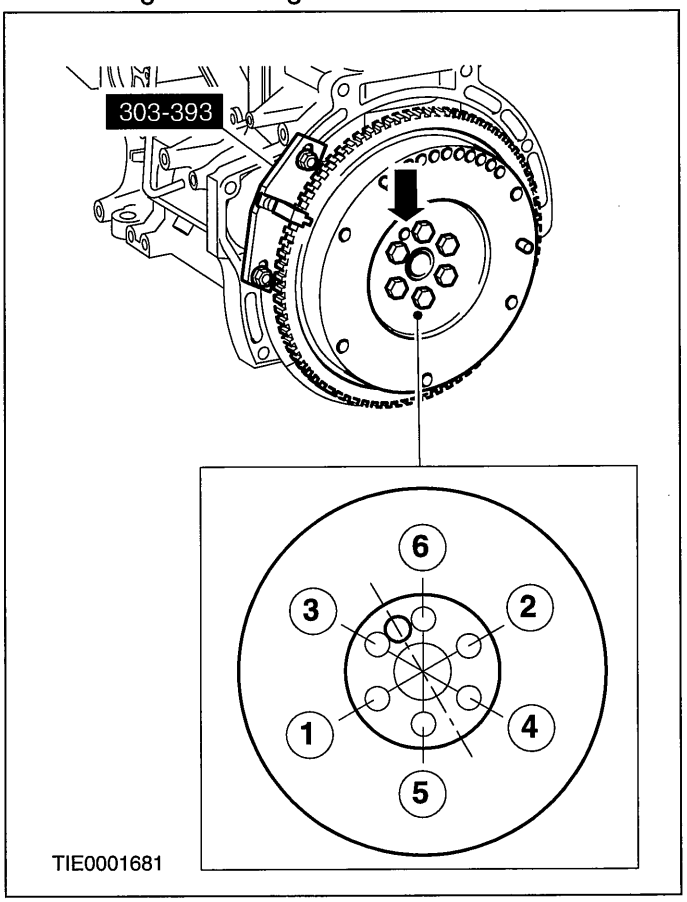


6. **Remove the special tool.**

## REMOVAL

# Engine

### Special Tool(s)

| | |
|---|---|
| 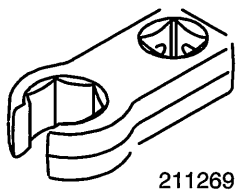 211269 | Wrench, Hydraulic Line Union Nut 211-269 (13-027) |
| 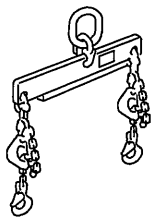 21068A | Lifting Bracket, Engine 303-122 (21-068A) |
| 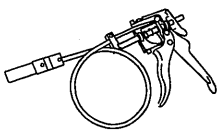 24003 | Remover/Installer, Hose Clamp 303-397 (24-003) |
| 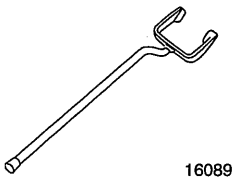 16089 | Remover, Halfshaft 308-256 (16-089) |

### General Equipment

| |
|---|
| Engine hoist |
| Securing straps |
| Workshop table |

## Removal

### All vehicles

▲ **WARNING:Do not smoke or carry lighted tobacco or open flame of any type when working on or near any fuel related components. Highly flammable mixtures are always present and may ignite. Failure to follow these instructions may result in personal injury.**

1. **Release the fuel system pressure.**

   **For additional information, refer to: Fuel System Pressure Release (310-00 Fuel System - General Information, General Procedures).**

2. **Remove the air cleaner.**

   **For additional information, refer to: Cooling System Draining, Filling and Bleeding (303-03 Engine Cooling - 1.4L Duratorq-TDCi (DV) Diesel, General Procedures).**

3. **Drain the cooling system.**

   **For additional information, refer to: Cooling System Draining, Filling and Bleeding (303-03 Engine Cooling - 1.4L Duratorq-TDCi (DV) Diesel, General Procedures).**

4. **Remove the front wheels and tires.**

   **For additional information, refer to: Wheel and Tire (204-04 Wheels and Tires, Removal and Installation).**

5. **Disconnect the powertrain control module (PCM) electrical connector.**

   **For additional information, refer to: Powertrain Control Module (PCM) - 1.25L Duratec-16V (Sigma)/1.4L Duratec-16V (Sigma)/1.6L Duratec-16V (Sigma) (303-14 Electronic Engine Controls, Removal and Installation).**

6. **Loosen the strut and spring assembly top mount nuts by three turns on both sides.**

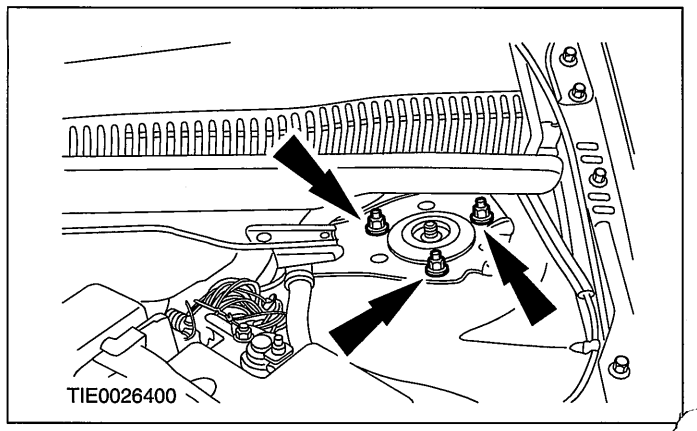

## REMOVAL

7. **Disconnect the fuel return line quick release coupling.**

   **For additional information, refer to: Quick Release Coupling (310-00 Fuel System - General Information, General Procedures).**

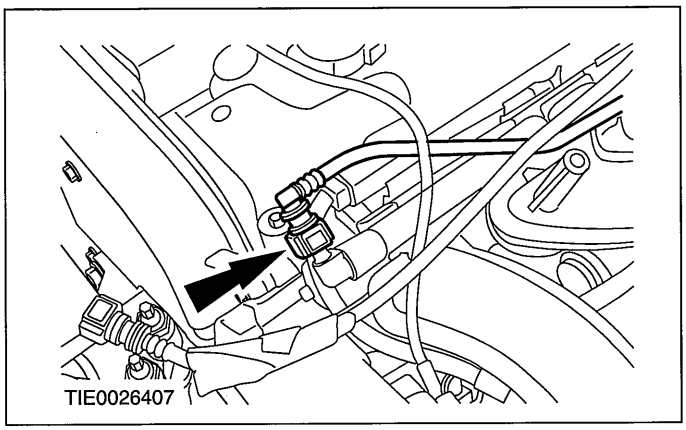


8. **Disconnect the fuel supply line quick release coupling.**

   **For additional information, refer to: Quick Release Coupling (310-00 Fuel System - General Information, General Procedures).**

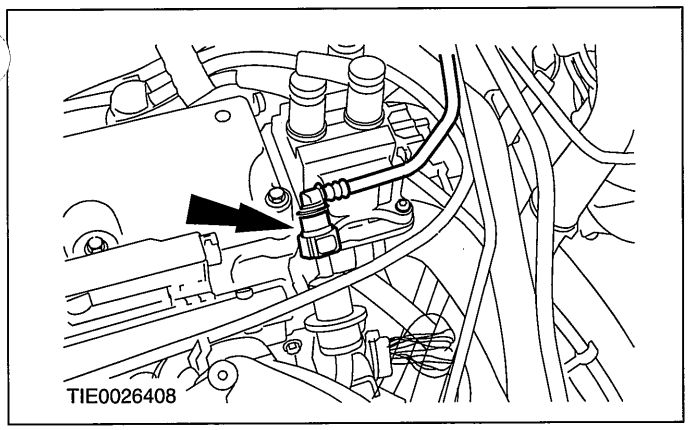


9. **Detach the fuel line and the degas line from the intake manifold.**
   - Remove the cable tie.

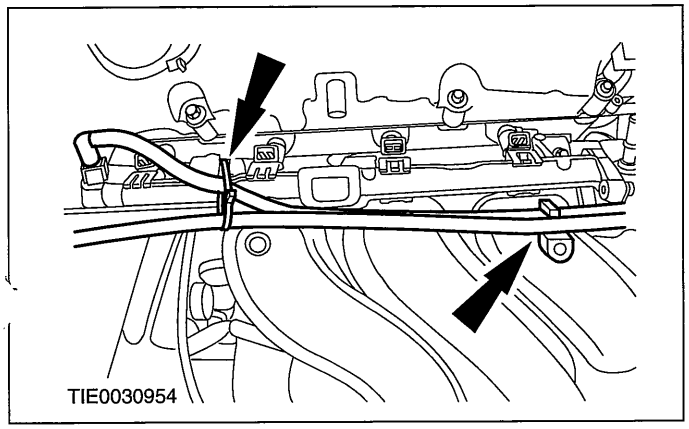


10. **Detach the power steering fluid reservoir from the bracket and position it to one side.**

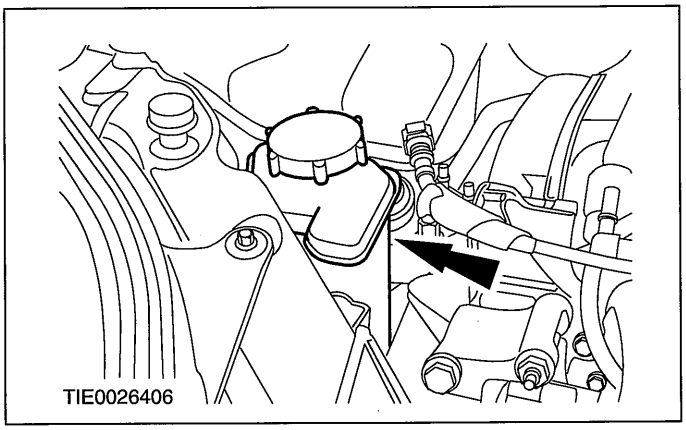


11. **Using the special tool, disconnect the degas hose from the cylinder head.**

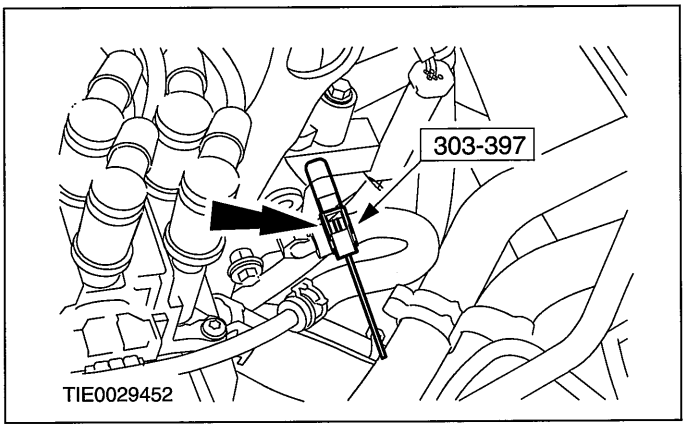


12. **Detach the coolant expansion tank from the bracket and position it to one side.**

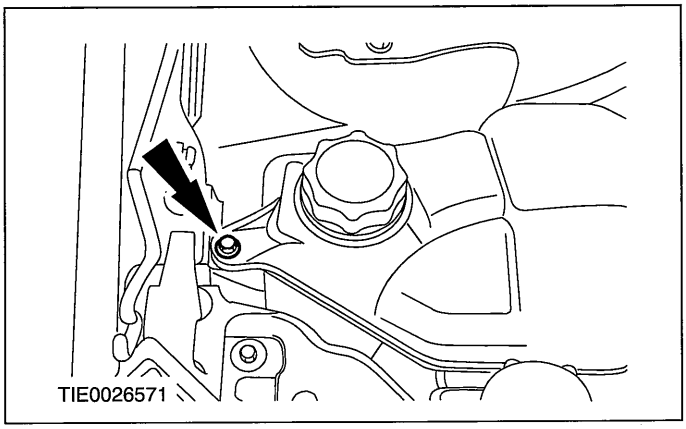

## REMOVAL

13. Using the special tool, disconnect the coolant hose from the coolant distribution housing.

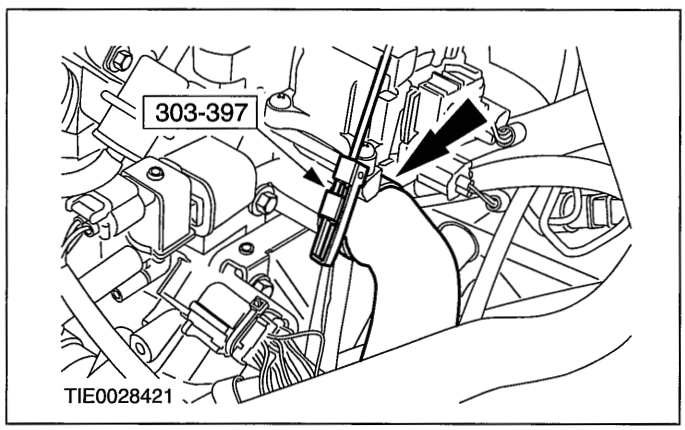


14. Using the special tool, disconnect the hose from the coolant distribution housing.

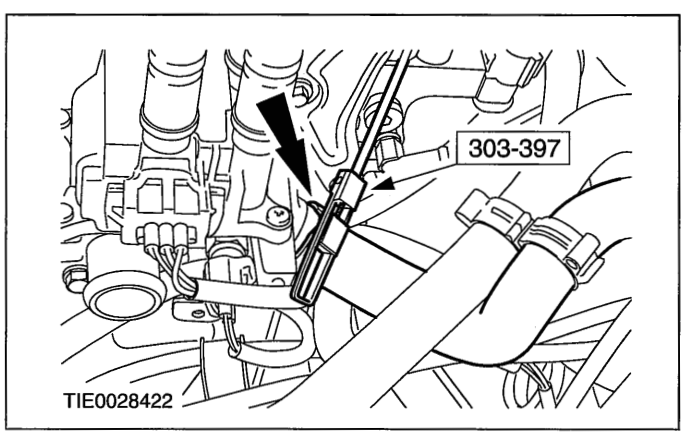


15. Disconnect the heated oxygen (HO2S) sensor electrical connector.

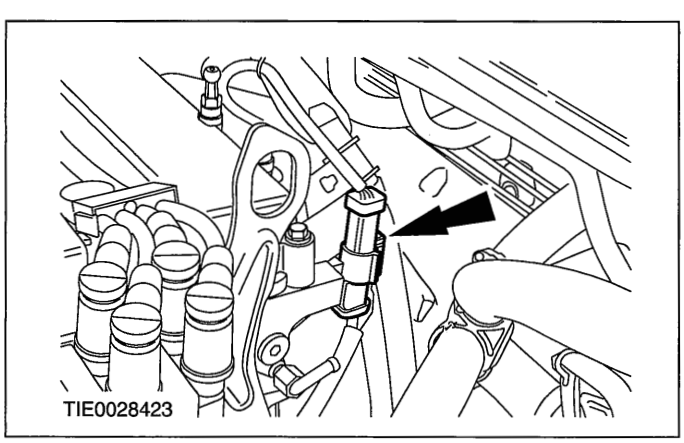


16. Disconnect the catalyst monitor sensor electrical connector.

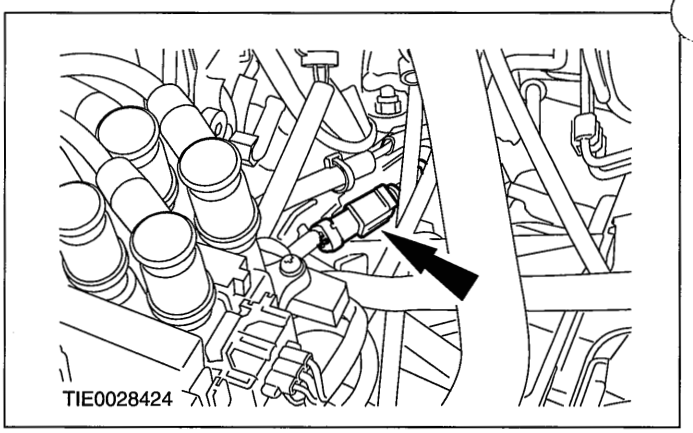


17. Disconnect the power steering pressure (PSP) switch electrical connector.

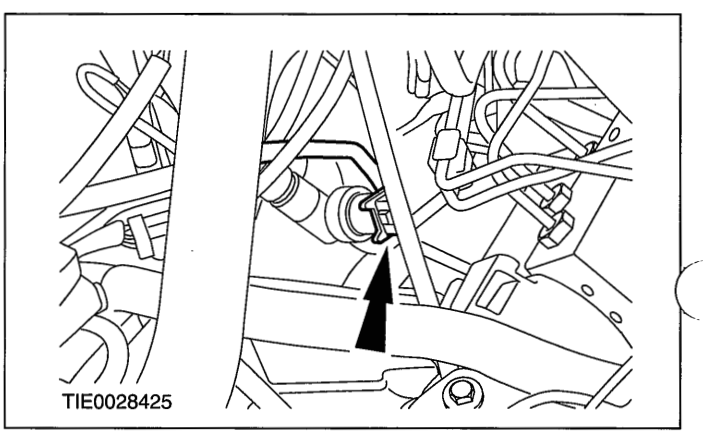


18. Disconnect the engine wiring harness electrical connector.

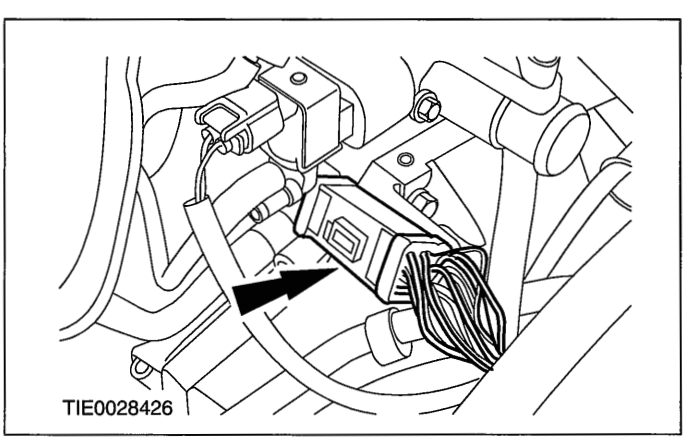

## REMOVAL

19. Disconnect the EVAP electrical connector.

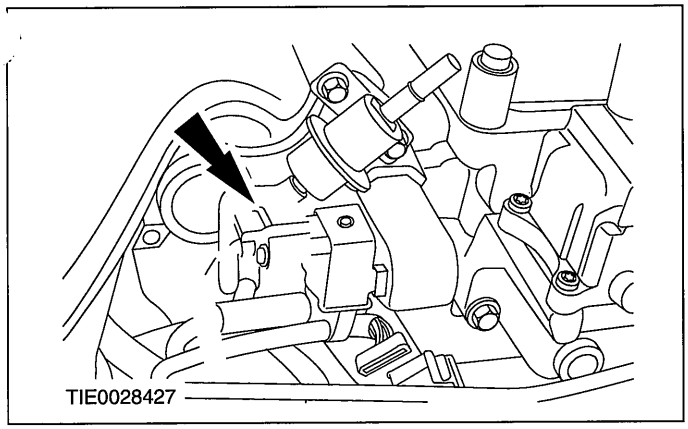


20. Disconnect the low pressure evaporate emission (EVAP) hose from the EVAP valve.

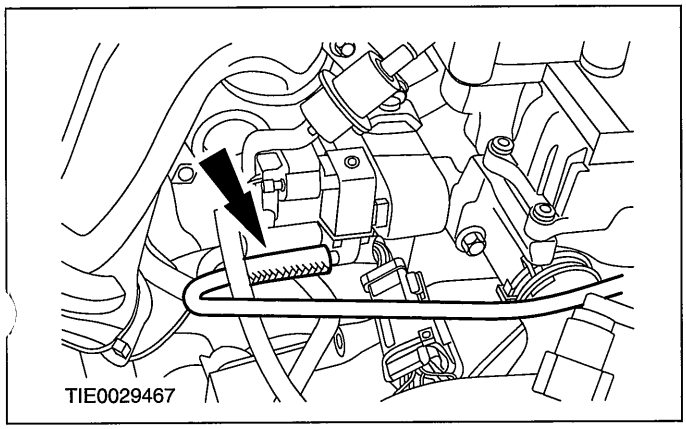


21. Detach the brake booster vacuum line from the intake manifold.

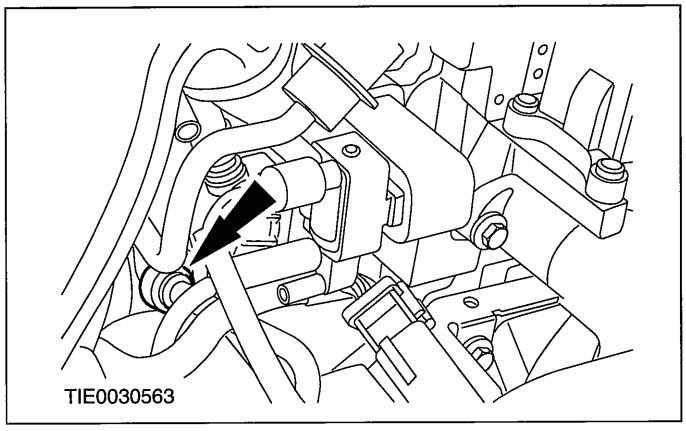


22. Disconnect the knock sensor (KS) electrical connector.

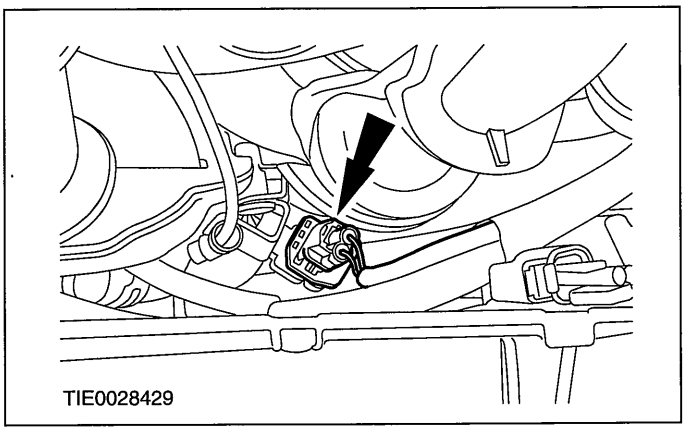


23. Disconnect the generator electrical connectors.

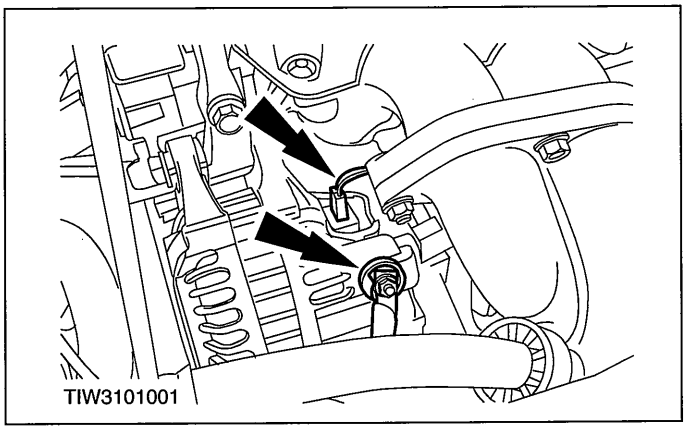


24. Remove the right-hand headlamp assembly.

    For additional information, refer to: Headlamp Assembly (417-01 Exterior Lighting, Removal and Installation).

25. Disconnect the air conditioning (A/C) lower-pressure cut-off switch electrical connector.

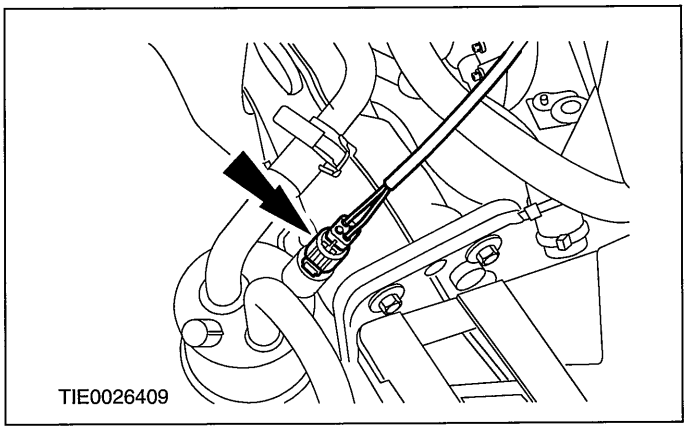

## REMOVAL

26. Remove the engine wiring harness support bracket.

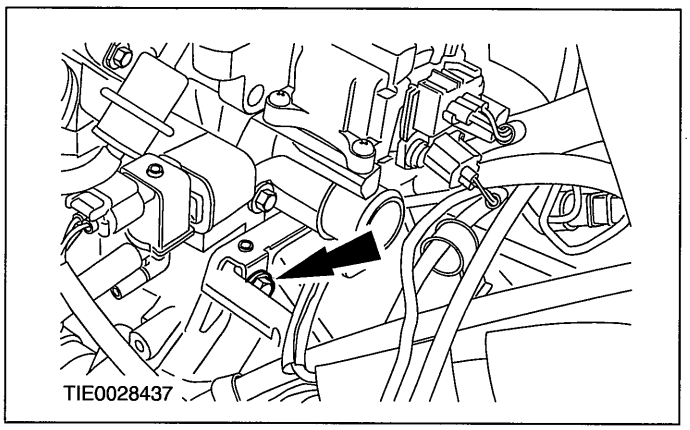


27. Disconnect the engine coolant temperature (ECT) electrical connector.

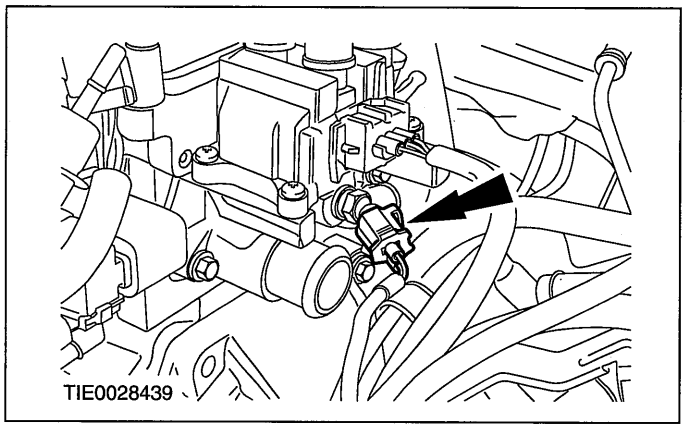


28. Disconnect the electronic ignition (EI) coil electrical connector.

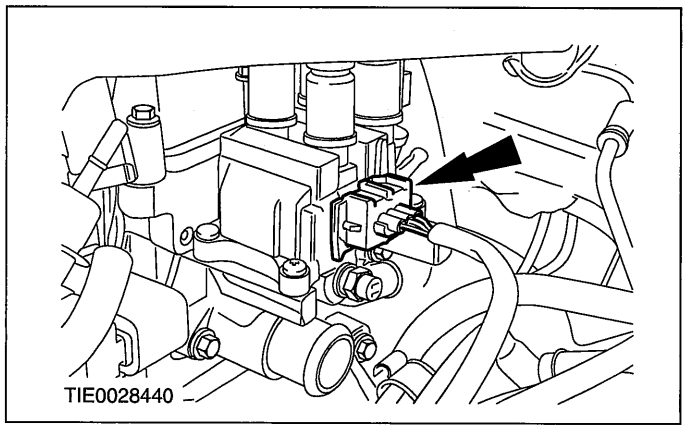


29. Detach the power steering line support bracket from the cylinder head.

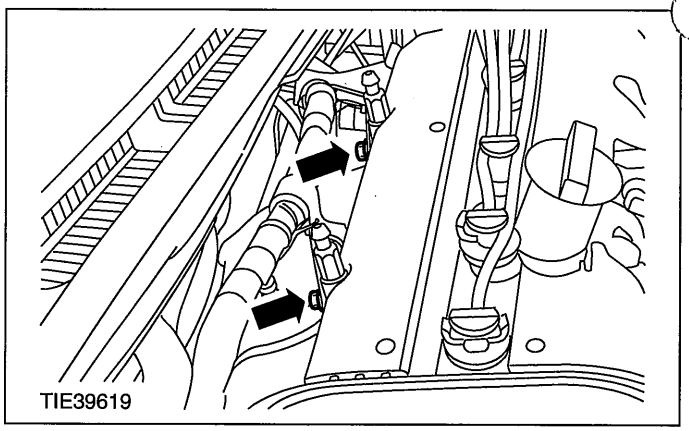


30. Detach the power steering line from the power steering pump mounting bracket.

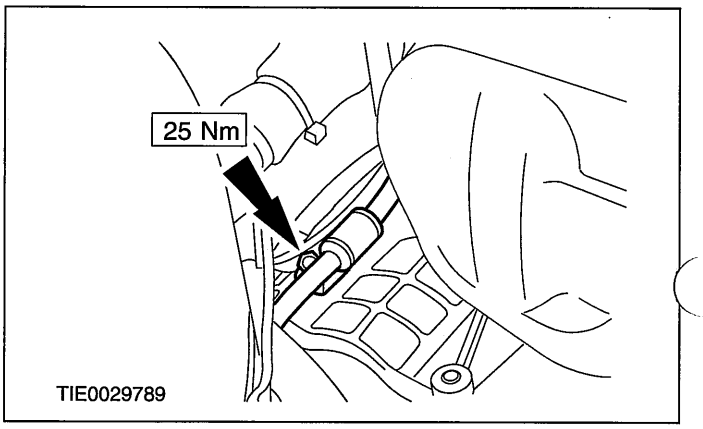


31. Disconnect the engine ground cable.

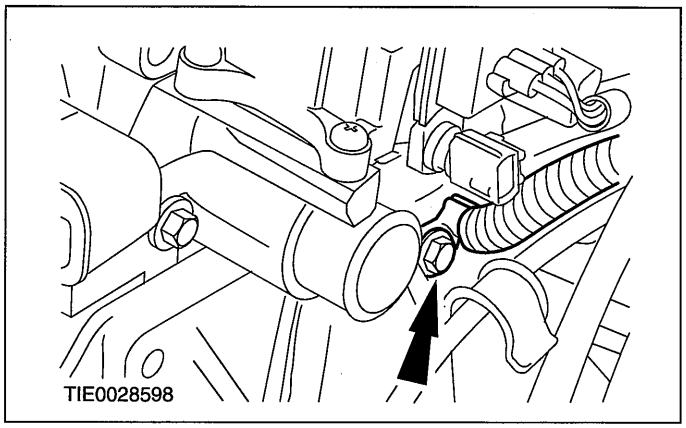


32. Raise and support the vehicle.

For additional information, refer to: Lifting (100-02 Jacking and Lifting, Description and Operation).

## REMOVAL

33. Disconnect the A/C compressor clutch electrical connector.

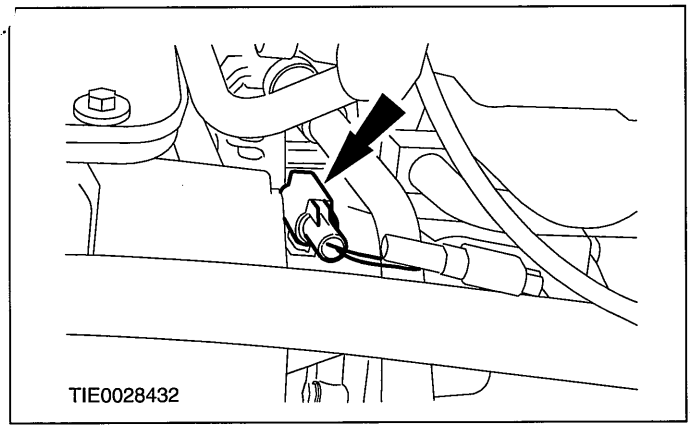


34. Disconnect the A/C high-pressure cut-off switch electrical connector.

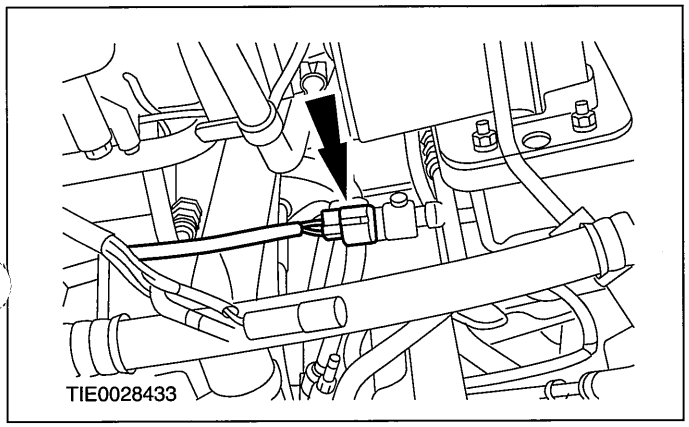


35. Disconnect the oil pressure switch electrical connector.

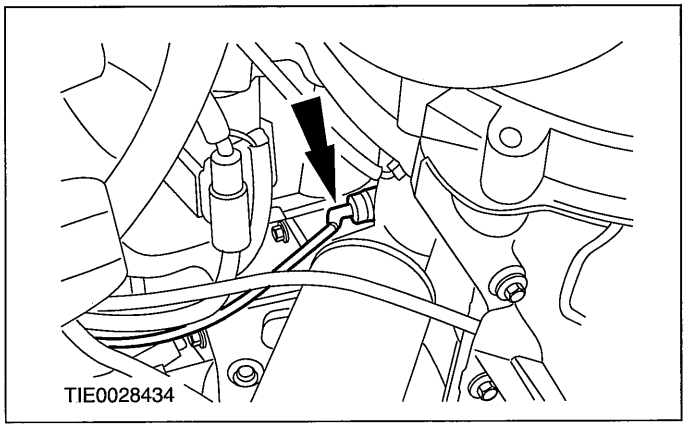


36. Disconnect the crankshaft position (CKP) sensor electrical connector.

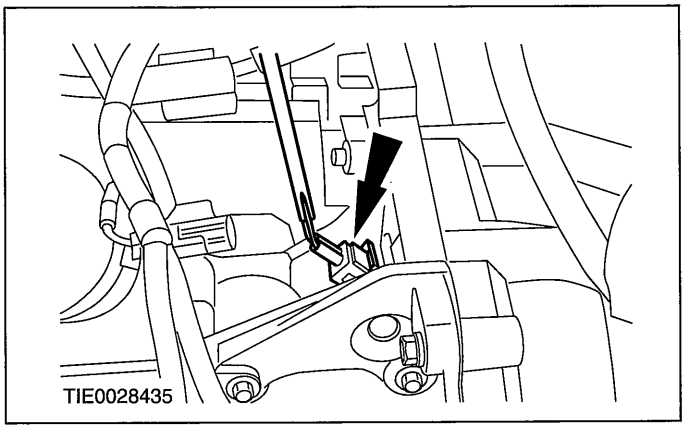


37. Disconnect the reversing lamp switch electrical connector.

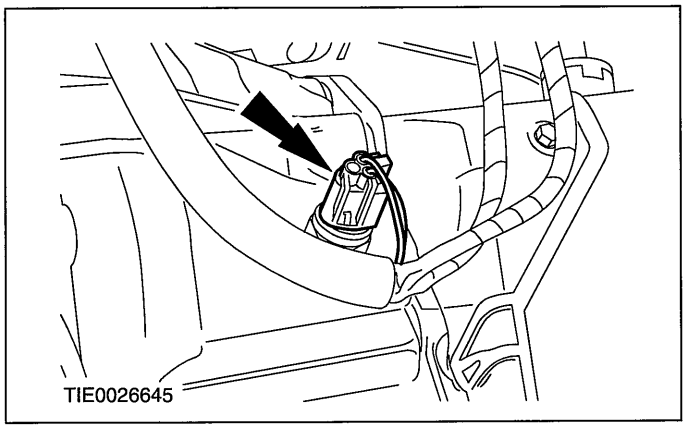


38. Disconnect the ignition switch to starter motor solenoid and battery to starter motor solenoid cables.

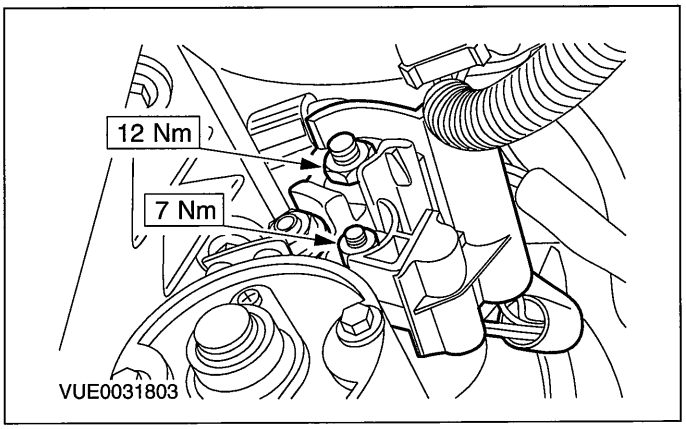


39. ⚠CAUTION:Over bending of the exhaust flexible pipe may cause damage resulting in failure.

## REMOVAL

**Support the exhaust flexible pipe with a suitable support wrap or suitable splint.**

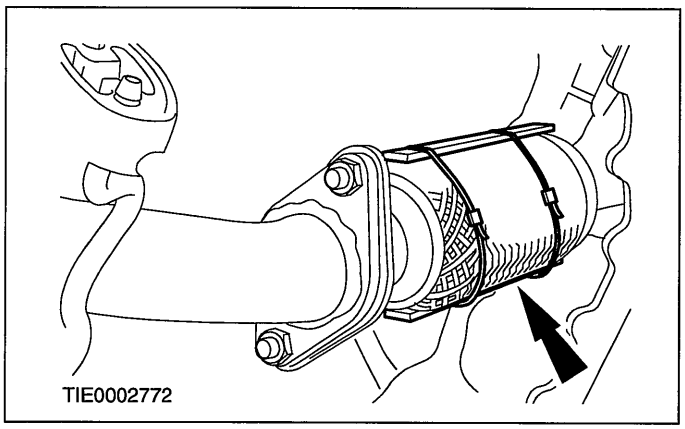


**40. Detach the exhaust flexible pipe from the catalytic converter.**

- Discard the nuts and the gasket.

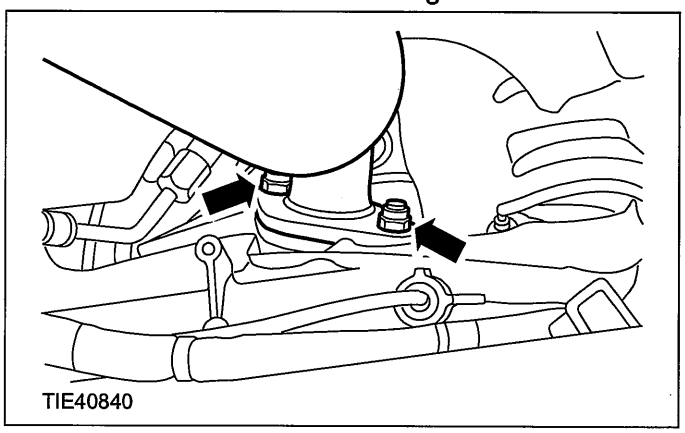


**41. Remove the accessory drive belt.**

**For additional information, refer to: Accessory Drive Belt - 1.4L Duratec-16V (Sigma)/1.6L Duratec-16V (Sigma), Vehicles With: Air Conditioning (303-05 Accessory Drive, Removal and Installation).**

**42. Detach the A/C compressor from the cylinder block and position it to one side.**

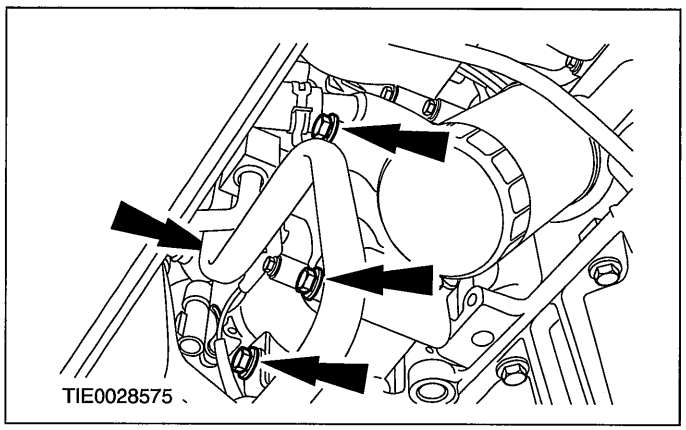


**43. Detach the power steering line support bracket from the engine block.**

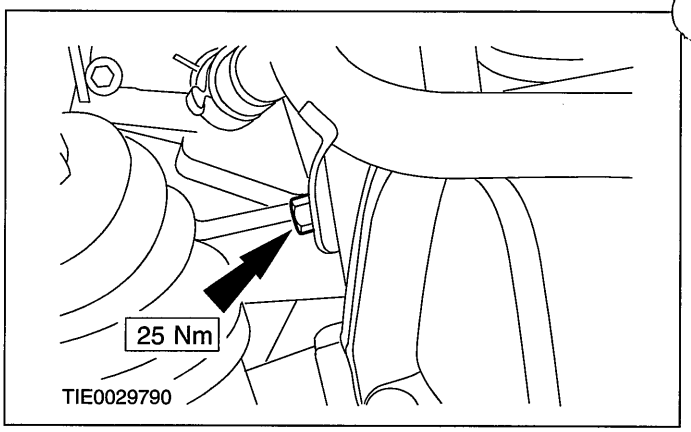


**44. Disconnect the power steering line from the steering pump.**

- Allow the fluid to drain into a suitable container.

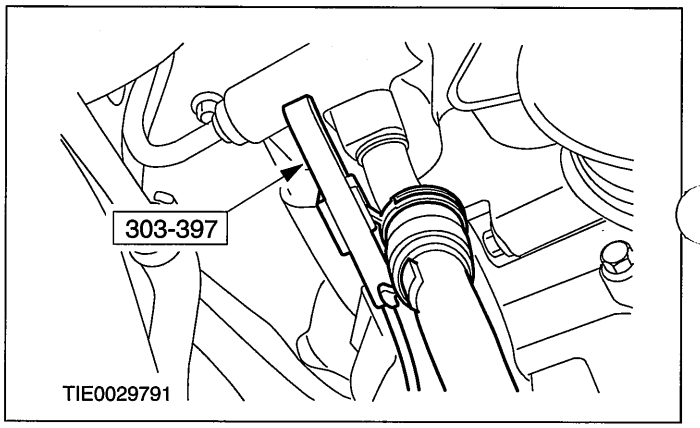


**45. Using the special tool, detach the power steering line from the power steering pump.**

- Allow the fluid to drain into a suitable container.

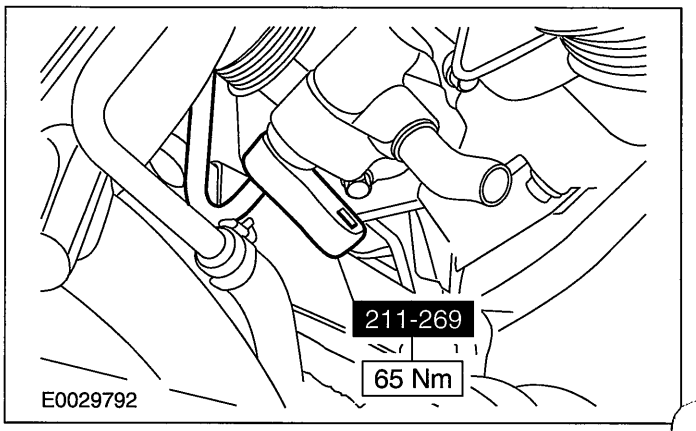

## REMOVAL

**46. Disconnect the cooling fan motor and cooling fan resistor electrical connectors.**

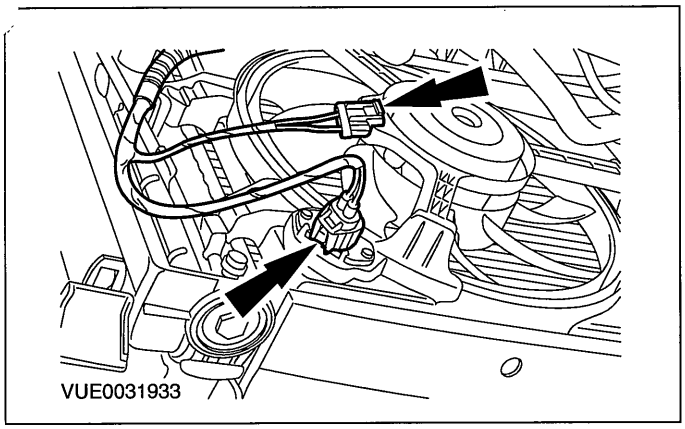


**47. Remove the cooling fan motor and shroud.**

1. Release the cooling fan motor and shroud from the retaining brackets.
2. Push the cooling fan motor and shroud upwards and then downwards to remove.

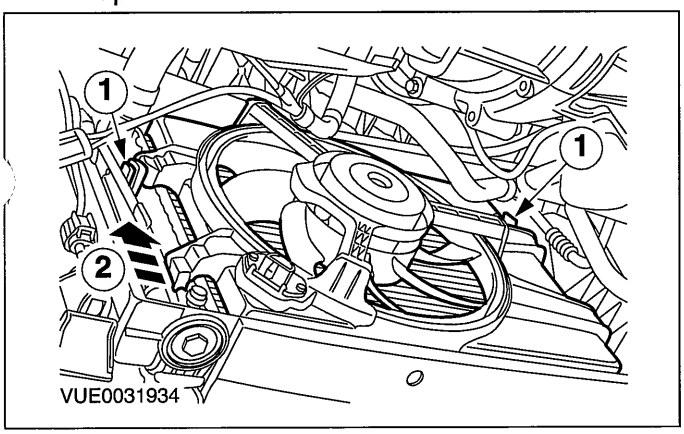


**48. Using the special tool, disconnect the coolant hose from the radiator.**

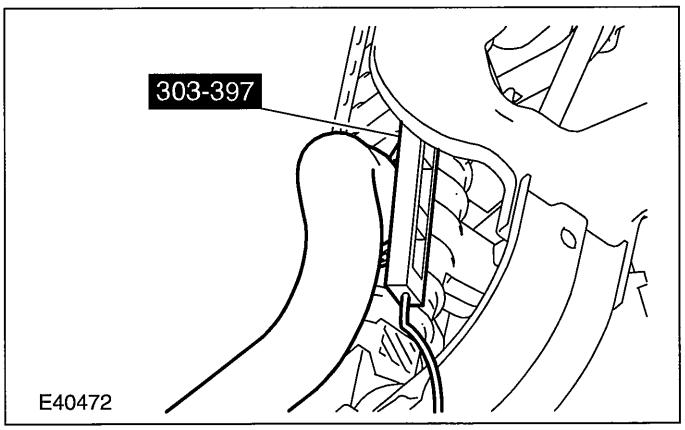


**49. Using the special tool, disconnect the coolant hose from the distribution pipe**

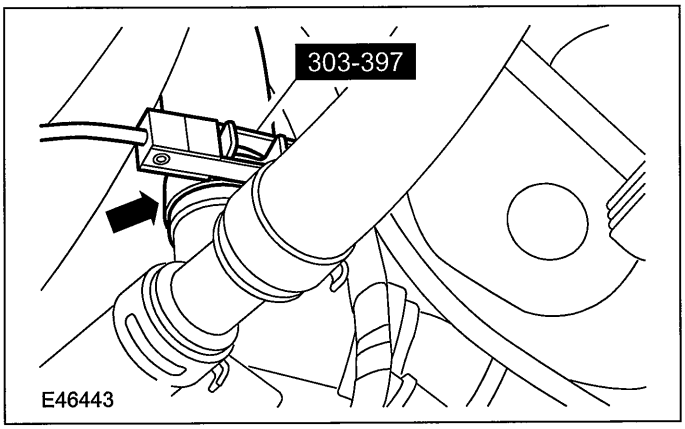


**50. Detach the lower arm from the wheel knuckle on both sides (right-hand side shown).**

- Remove the heat shield.

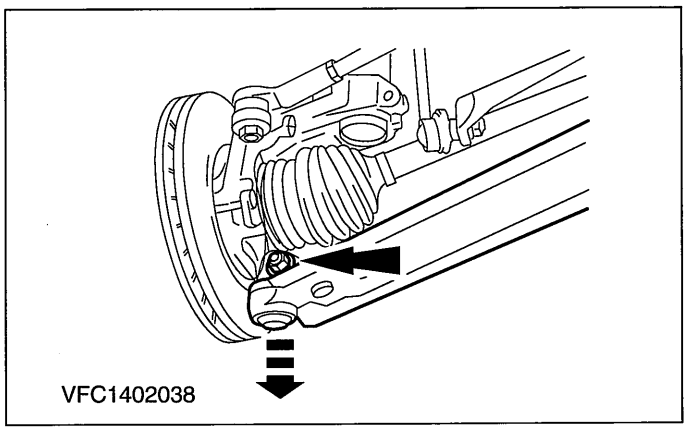


**51. CAUTIONS:**

**⚠Support the halfshaft. The inner joint must not be bent more than 18 degrees. The outer joint must not be bent more than 45 degrees.**

**⚠Do not damage the halfshaft oil seal.**

**NOTE:**Plug the transaxle to prevent oil loss or dirt ingress.

**Using the special tool, detach the left-hand halfshaft from the transaxle and secure it to one side.**

- Allow the oil to drain into a suitable container.

## REMOVAL

- Discard the snap ring.

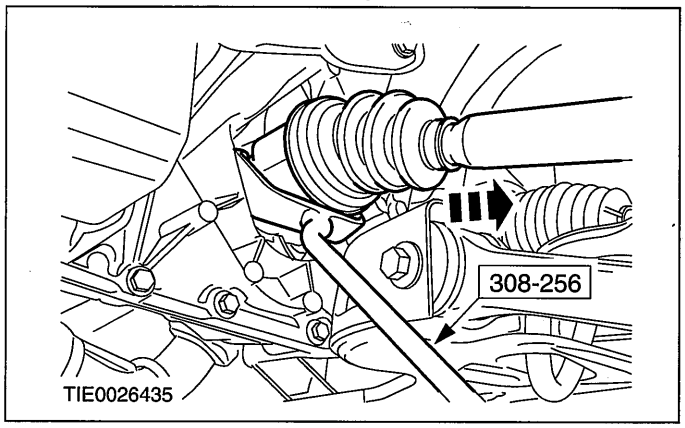


**52. CAUTIONS:**

**⚠Support the halfshaft. The inner joint must not be bent more than 18 degrees. The outer joint must not be bent more than 45 degrees.**

**⚠Do not damage the halfshaft oil seal.**

**NOTE:** Plug the transaxle to prevent oil loss or dirt ingress.

**Detach the right-hand halfshaft and the intermediate shaft from the transaxle and secure it to one side.**

- Discard the center bearing cap and locknuts.
- Allow the oil to drain into a suitable container.

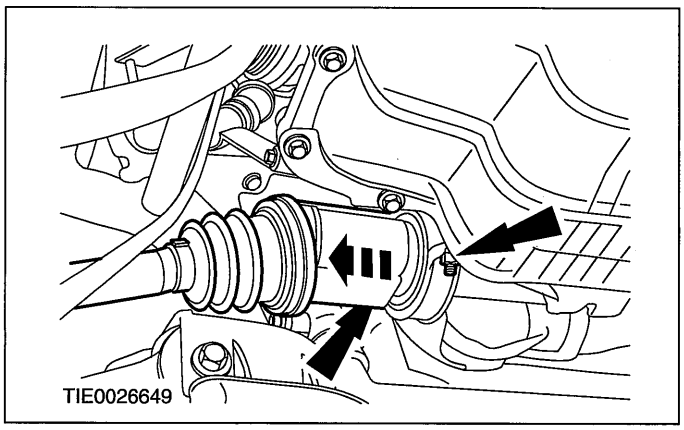


**53. Remove the engine support insulator.**

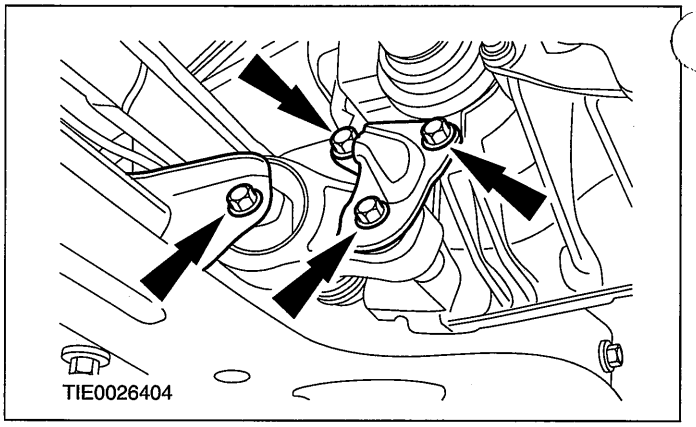


Vehicles with automated gearshift

**54. Remove the gearshift actuator cover.**

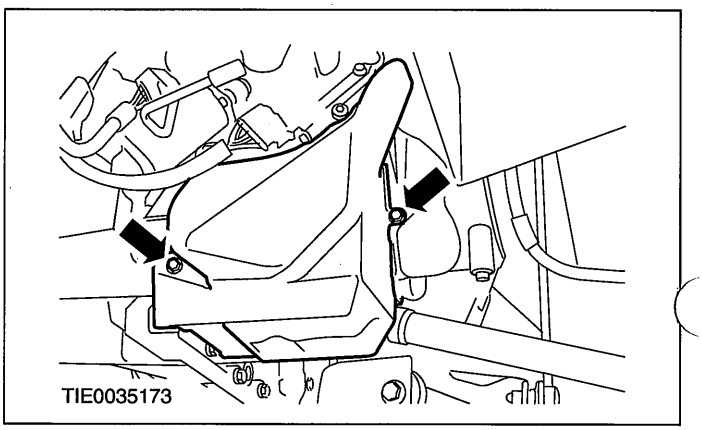


**55. Disconnect the gearshift actuator electrical connector (colored black).**

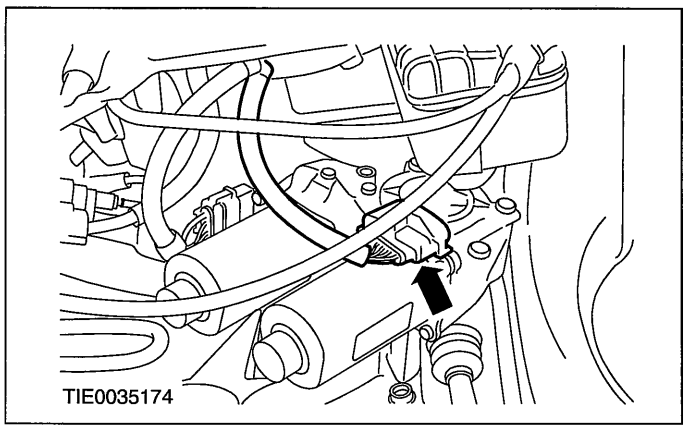

## REMOVAL

**56. Disconnect the gearshift actuator electrical connector (colored gey).**

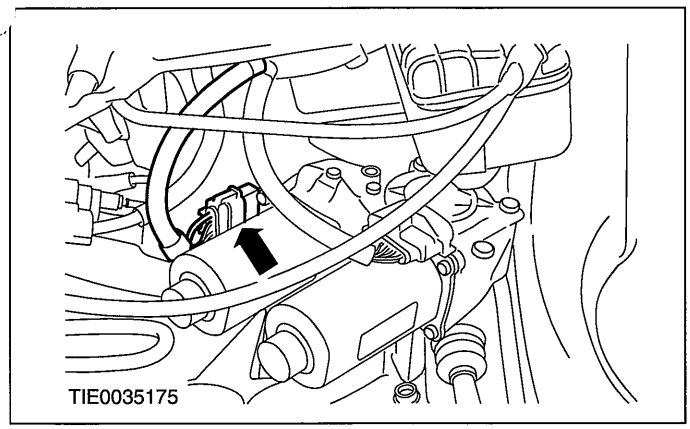


**57. ⚠CAUTION:If brake fluid is spilt on the paintwork, the affected area must be immediately washed down with cold water.**

**Disconnect the clutch slave cylinder supply line.**

- Remove the spring clip.

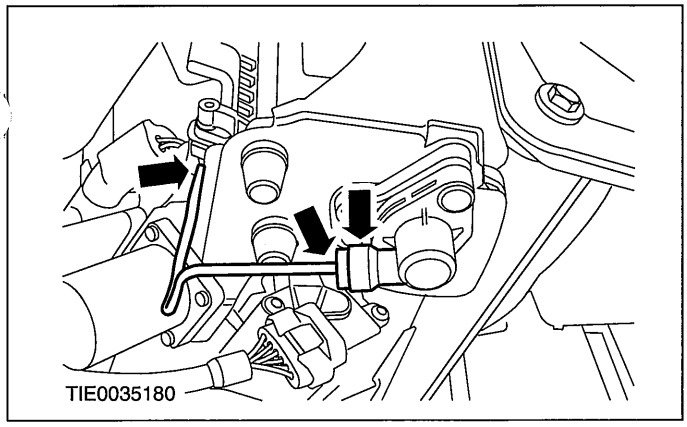


Vehicles without automated gearshift

**58. ⚠CAUTION:If brake fluid is spilt on the paintwork, the affected area must be immediately washed down with cold water.**

**Disconnect the clutch slave cylinder supply line.**

- Remove the spring clip.

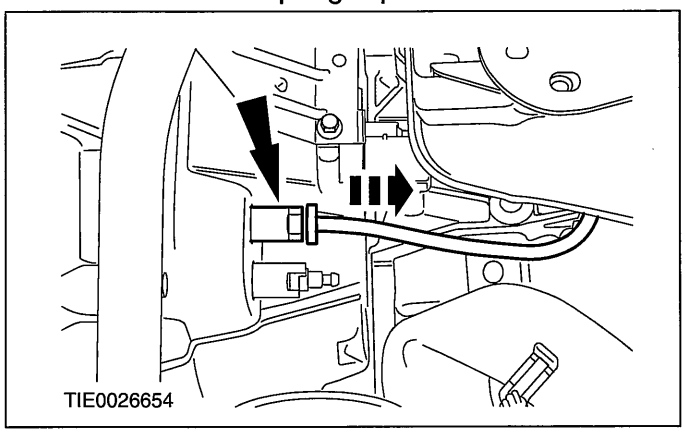


**59. Remove the gearshift cables cover.**

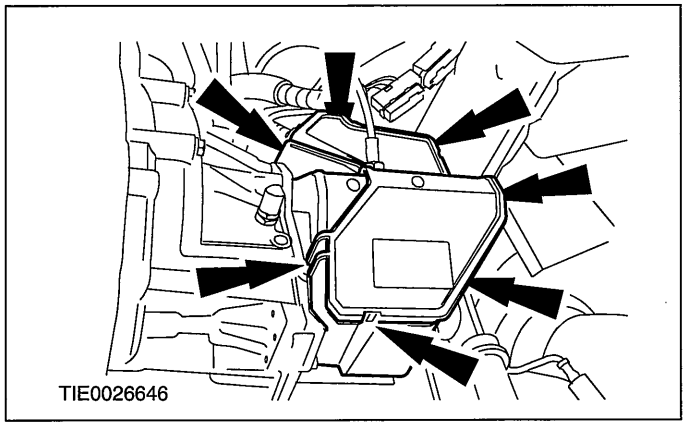


**60. Detach the gearshift cables from the transaxle.**

- Detach the gearshift cables and the selector cable from the selector levers.
- Turn the abutment sleeve clockwise and detach the cables from the bracket.

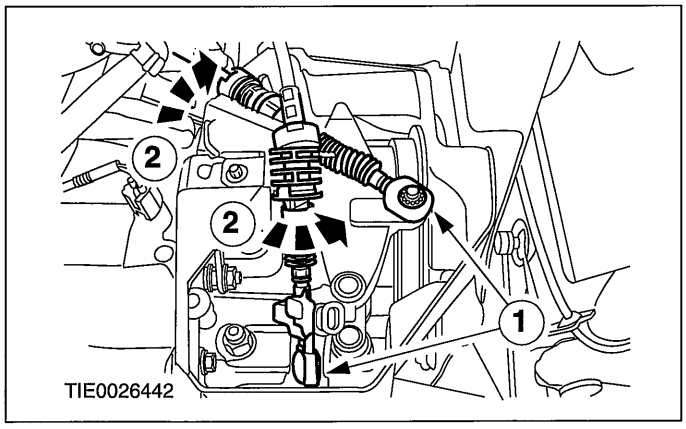


All vehicles

**61. ⚠CAUTION:Do not support the engine directly on the oil pan.**

## REMOVAL

**NOTE:** Using suitable securing straps, secure the engine and the transaxle on a workshop table.

**Using suitable wooden blocks support the engine and transaxle assembly.**

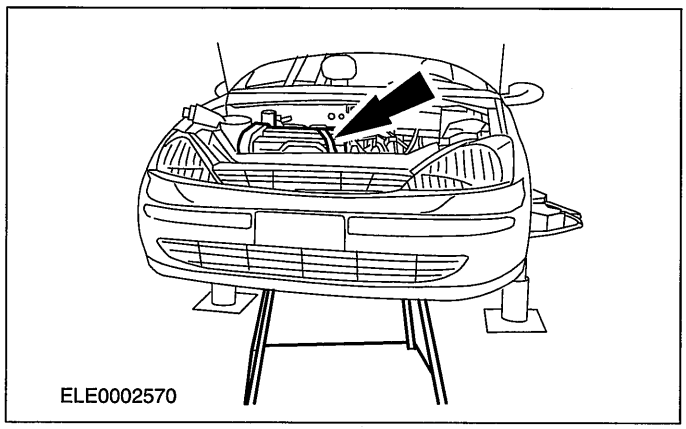


**62. Remove the battery tray support bracket.**

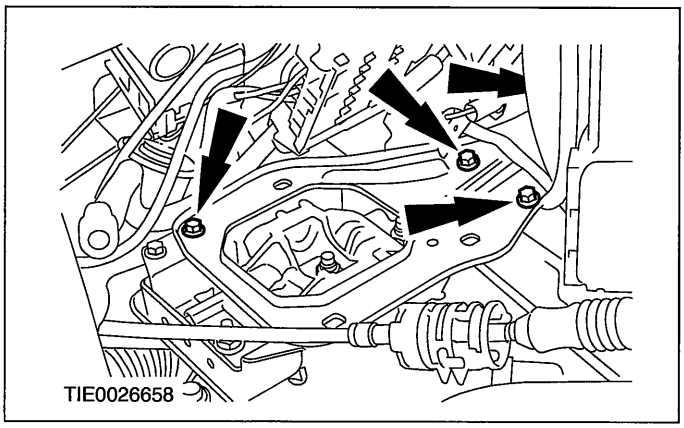


**63. Remove the engine rear mount.**

- Discard the nuts.

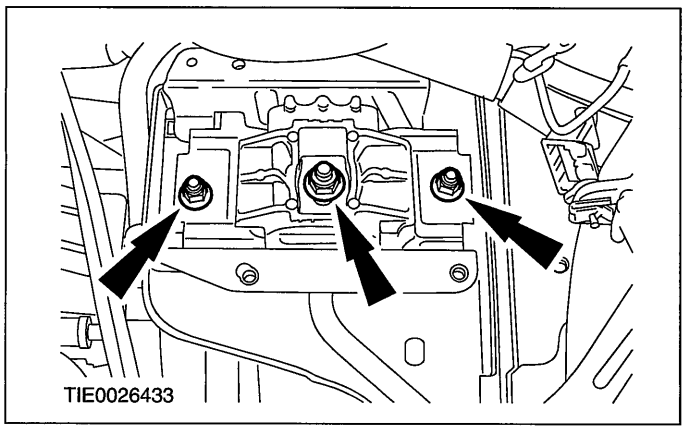


**64. Remove the engine front mount.**

- Discard the nuts.

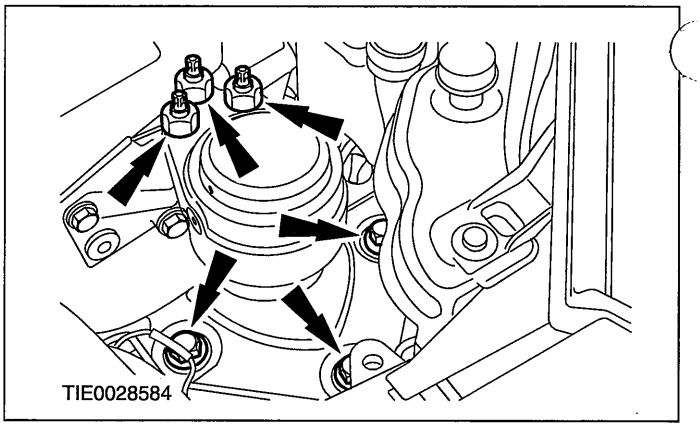


**65. Raise the vehicle and remove the engine and transaxle assembly.**

**66. Using the special tool, attach the engine and transaxle assembly to the engine hoist.**

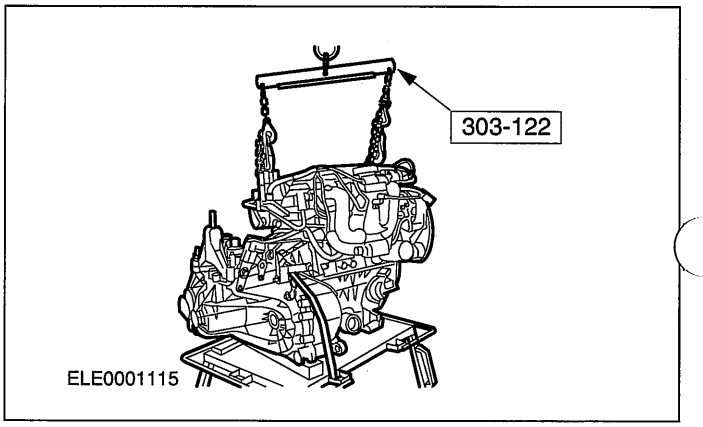


**67. Remove the starter motor and the transaxle left-hand retaining bolt.**

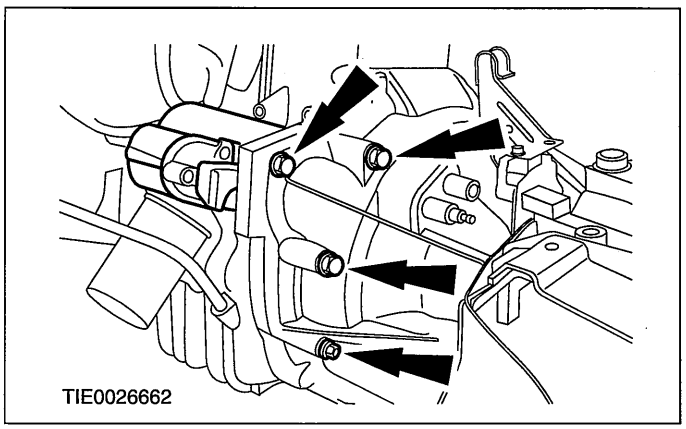

## REMOVAL

68. Remove the transaxle right-hand retaining bolt.

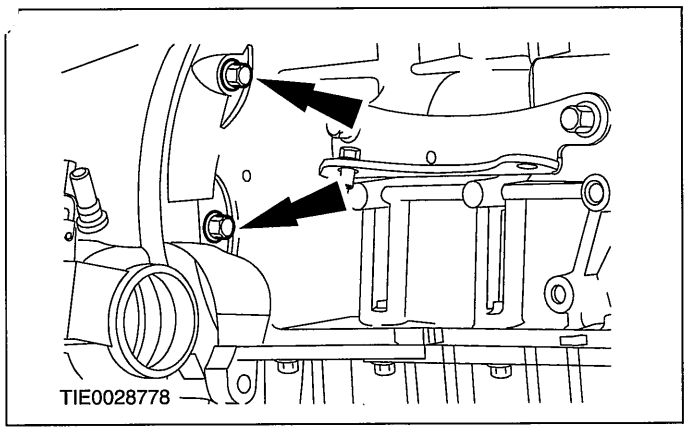


69. Remove the transaxle lower retaining bolts.

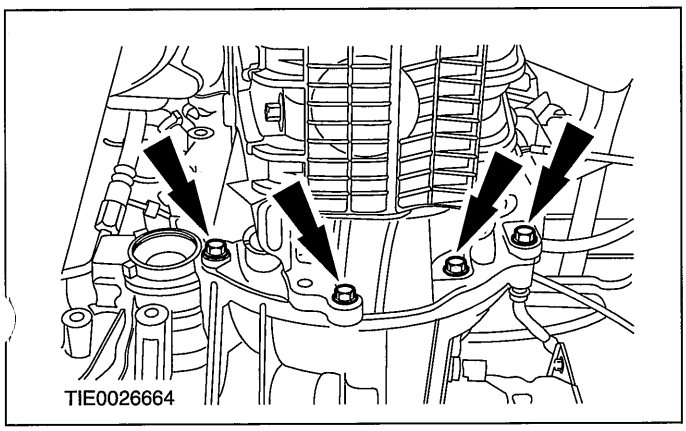


70. Remove the transaxle from the engine.

## REMOVAL

# Engine — Vehicles With: Automatic Transaxle

**Special Tool(s)**

| | |
|---|---|
| 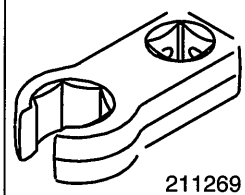 211269 | Wrench, Hydraulic Line Union Nut 211-269 (13-027) |
| 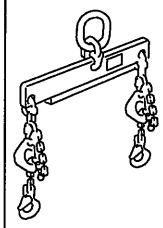 21068A | Lifting Bracket, Engine 303-122 (21-068A) |
| 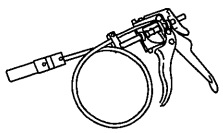 24003 | Remover/Installer, Hose Clamp 303-397 (24-003) |

**General Equipment**

| |
|---|
| Engine hoist |
| Securing straps |
| Workshop table |

All vehicles

**WARNINGS:**

▲ **Refer to the Material Safety Data Sheets for the Automatic Transmission Fluid E-AW. Failure to follow this instruction may result in personal injury. Certain Transmission and Power Steering fluids supplied to Ford contain additives which may cause skin irritation or other skin reactions after contact.**

**For additional information, refer to: Health and Safety Precautions (100-00 General Information, Description and Operation). See - Transmission Fluids.**

▲ **Do not smoke or carry lighted tobacco or open flame of any type when working on or near any fuel related components. Highly flammable vapors are always present and may ignite. Failure to follow these instructions may result in personal injury.**

1. **Release the fuel system pressure.**

   **For additional information, refer to: Fuel System Pressure Release (310-00 Fuel System - General Information, General Procedures).**

2. **Remove the air cleaner.**

   **For additional information, refer to: Air Cleaner - 1.25L Duratec-16V (Sigma)/1.4L Duratec-16V (Sigma)/1.6L Duratec-16V (Sigma) (303-12 Intake Air Distribution and Filtering, Removal and Installation).**

3. **Drain the cooling system.**

   **For additional information, refer to: Cooling System Draining, Filling and Bleeding - 1.25L Duratec-16V (Sigma)/1.4L Duratec-16V (Sigma)/1.6L Duratec-16V (Sigma)/1.3L Duratec-8V (Rocam) (303-03A, General Procedures).**

4. **Remove the front wheels and tires.**

   **For additional information, refer to: Wheel and Tire (204-04 Wheels and Tires, Removal and Installation).**

5. **Disconnect the powertrain control module (PCM) electrical connector.**

   **For additional information, refer to: Powertrain Control Module (PCM) - 1.25L Duratec-16V (Sigma)/1.4L Duratec-16V (Sigma)/1.6L Duratec-16V (Sigma) (303-14 Electronic Engine Controls, Removal and Installation).**

6. **Loosen the strut and spring assembly top mount nuts by three turns on both sides.**

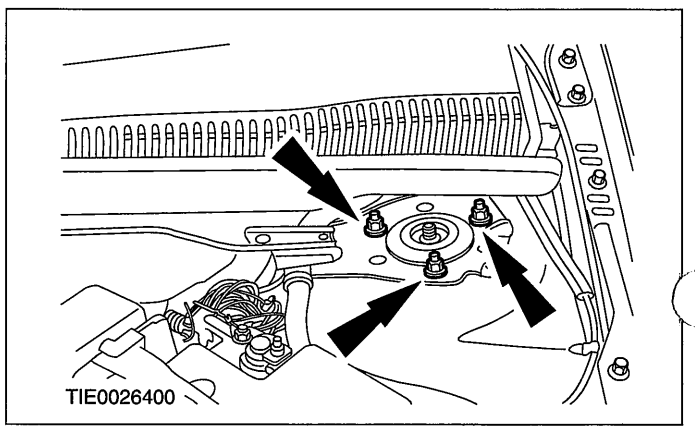

## REMOVAL

7. **Disconnect the fuel return line quick release coupling.**

   **For additional information, refer to: Quick Release Coupling (310-00 Fuel System - General Information, General Procedures).**

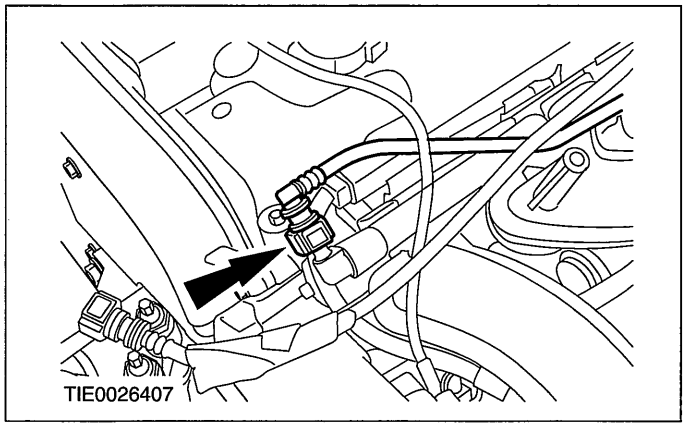


8. **Disconnect the fuel supply line quick release coupling.**

   **For additional information, refer to: Quick Release Coupling (310-00 Fuel System - General Information, General Procedures).**

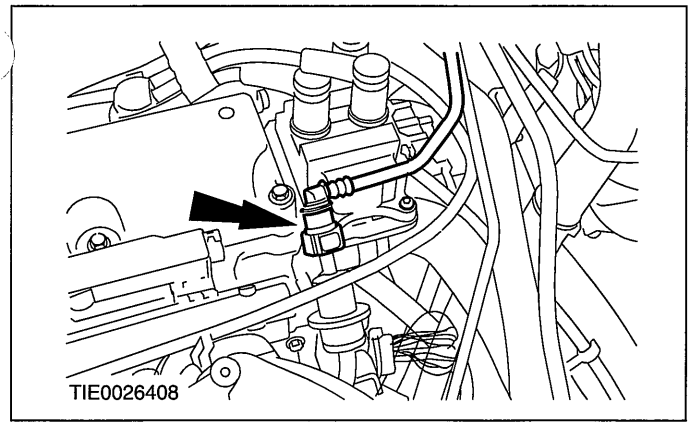


9. **Detach the fuel line and the degas line from the intake manifold.**
   - Remove the cable tie.

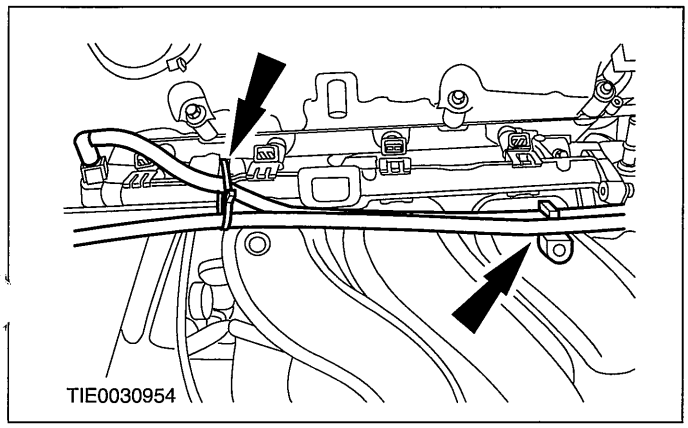


10. **Detach the power steering fluid reservoir from the bracket and position it to one side.**

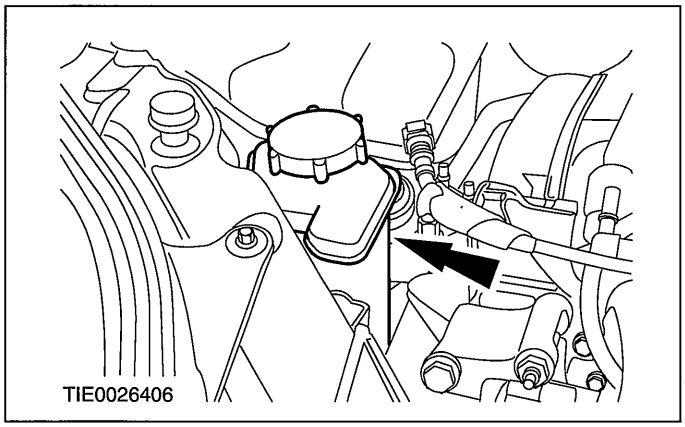


11. **Using the special tool, disconnect the degas hose from the cylinder head.**

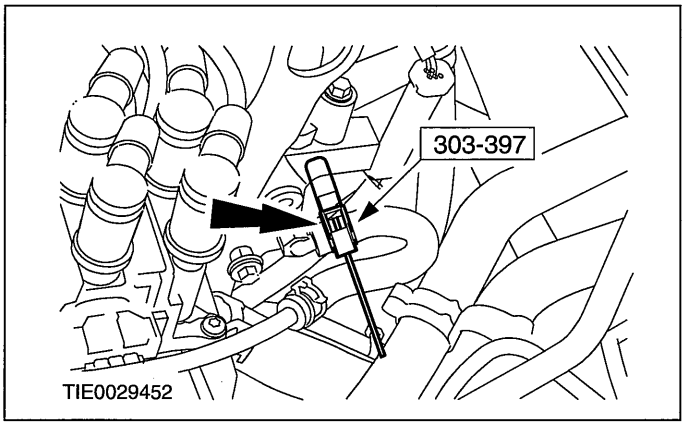


12. **Detach the coolant expansion tank from the bracket and position it to one side.**

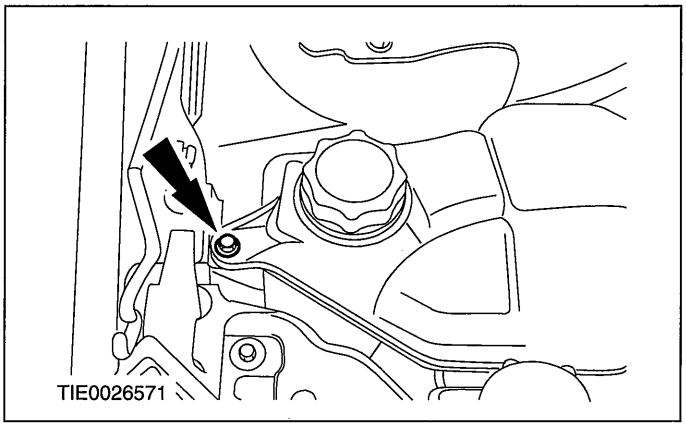

## REMOVAL

13. Disconnect the low pressure evaporate emission (EVAP) hose from the EVAP valve.

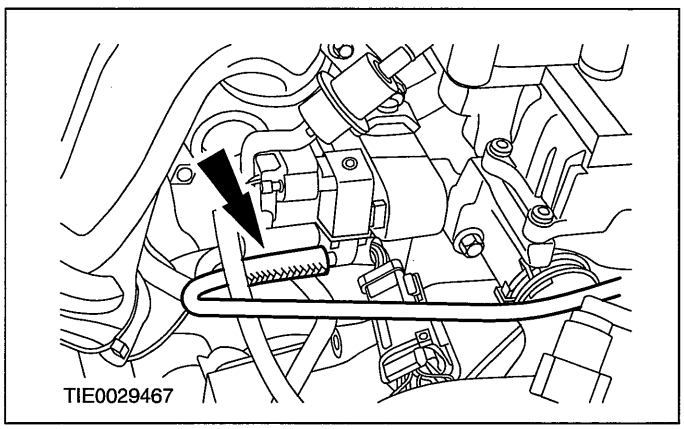


14. Detach the brake booster vacuum line from the intake manifold.

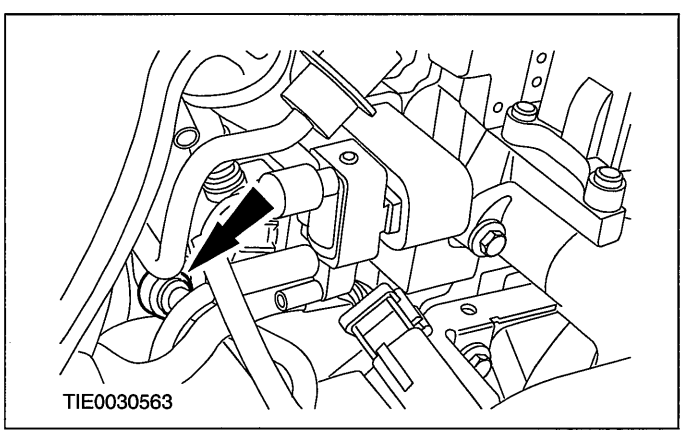


15. Using the special tool, disconnect the coolant hose from the coolant distribution housing.

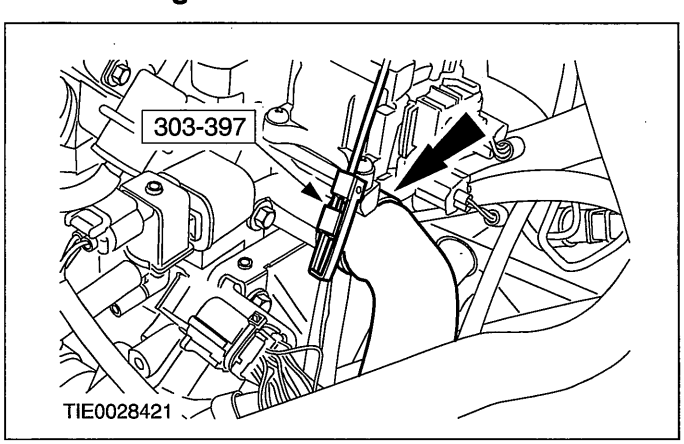


16. Using the special tool, disconnect the coolant hose from the coolant distribution housing.

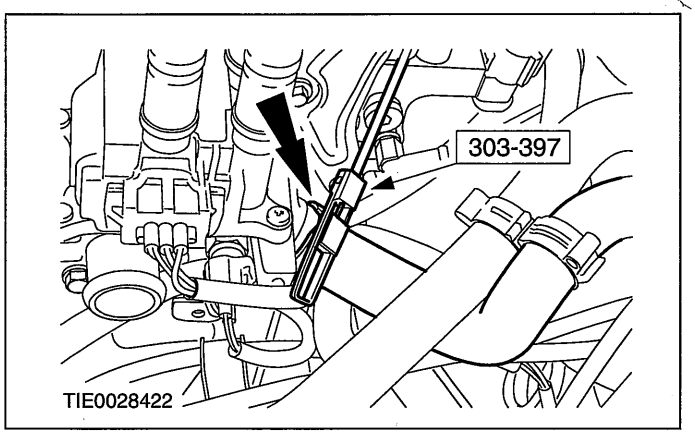


17. Disconnect the heated oxygen (HO2S) sensor electrical connector.

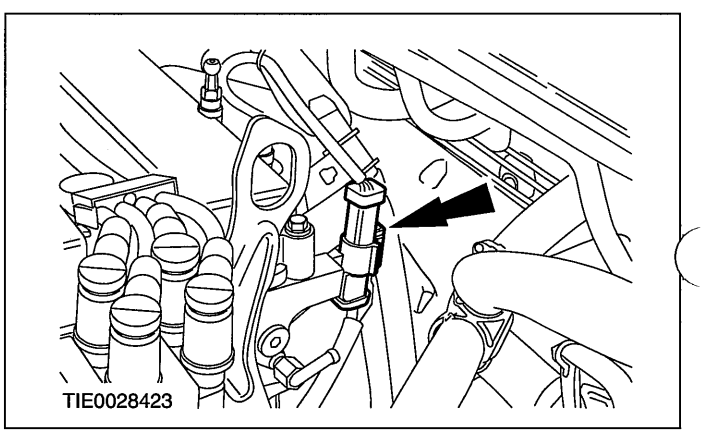


18. Disconnect the catalyst monitor sensor electrical connector.

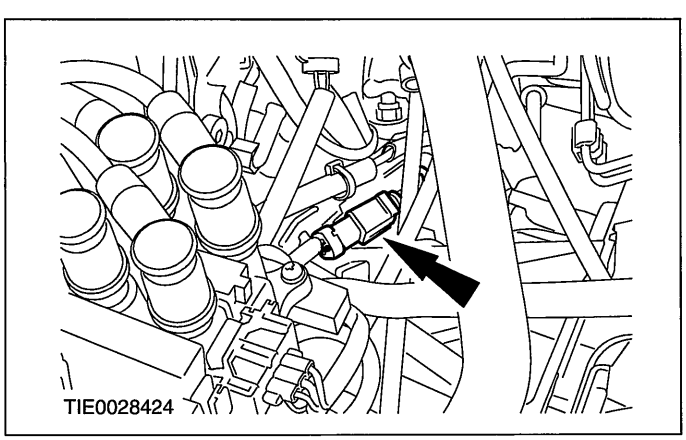

## REMOVAL

19. Disconnect the power steering pressure (PSP) switch electrical connector.

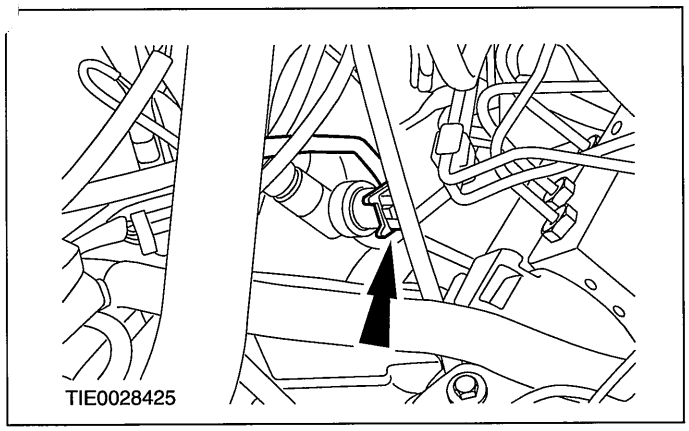


20. Detach the power steering line support bracket from the cylinder head.

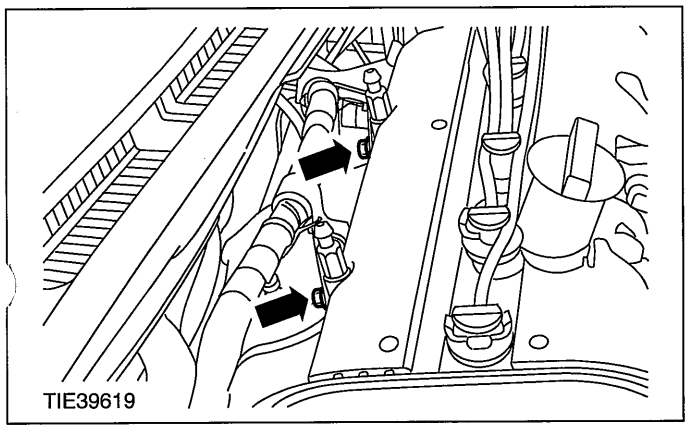


21. Detach the power steering line from the power steering pump mounting bracket.

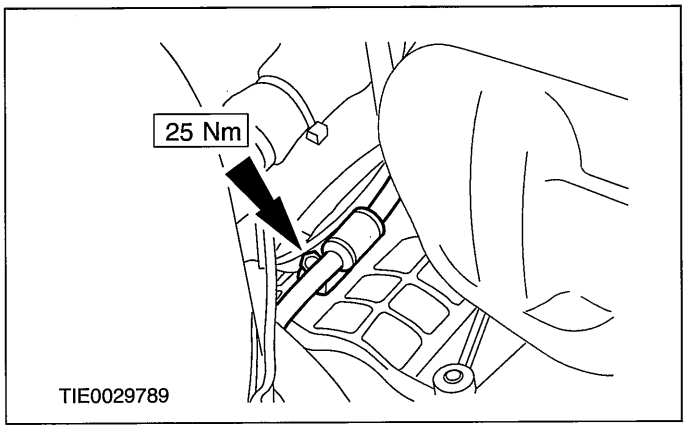


22. Disconnect the engine wiring harness electrical connector.

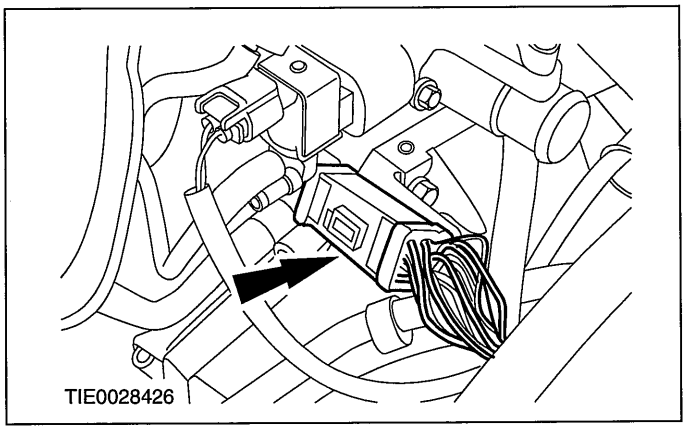


23. Disconnect the EVAP electrical connector.

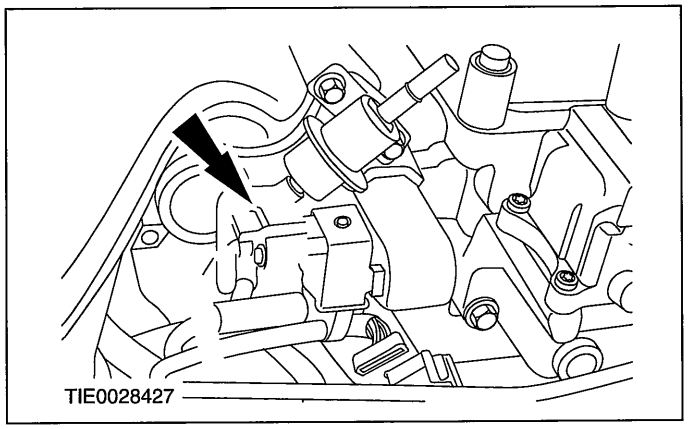


24. Disconnect the knock sensor (KS) electrical connector.

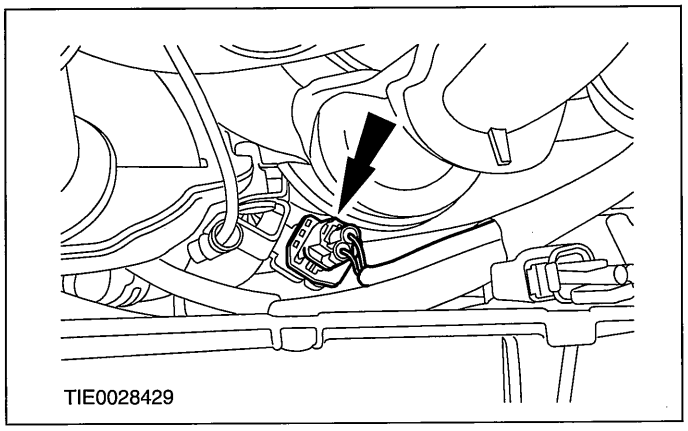

## REMOVAL

25. Disconnect the generator electrical connectors.

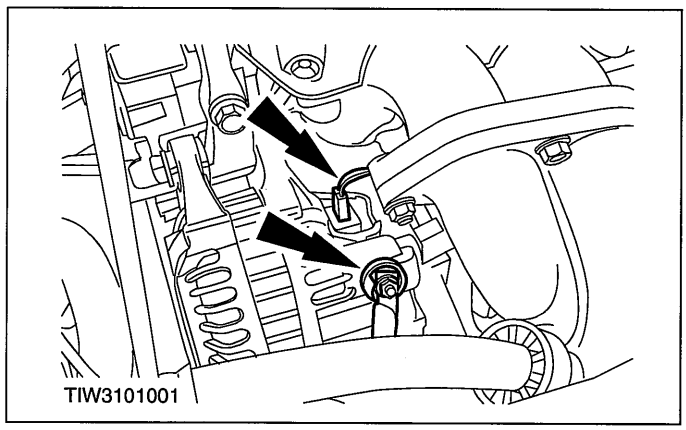


26. Remove the right-hand headlamp assembly.

    For additional information, refer to: Headlamp Assembly (417-01 Exterior Lighting, Removal and Installation).

27. Disconnect the engine coolant temperature (ECT) electrical connector.

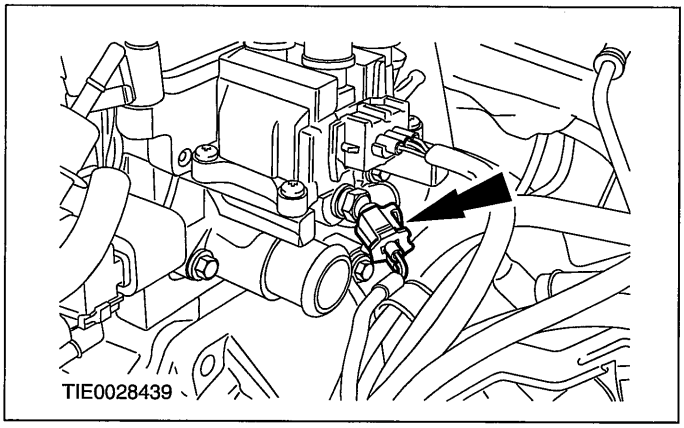


28. Disconnect the electronic ignition (EI) coil electrical connector.

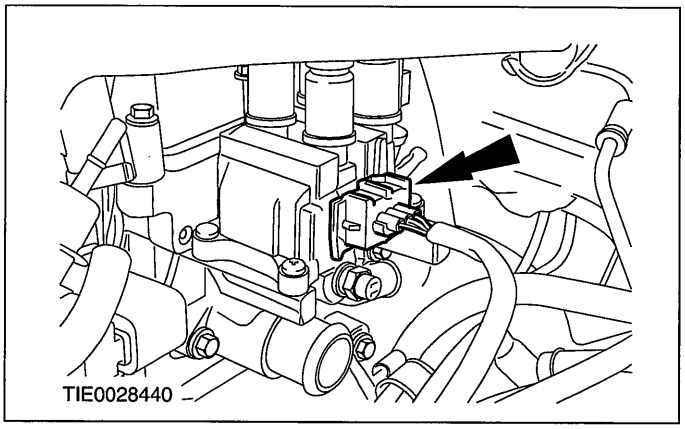


29. Detach the engine ground cable from the transaxle.

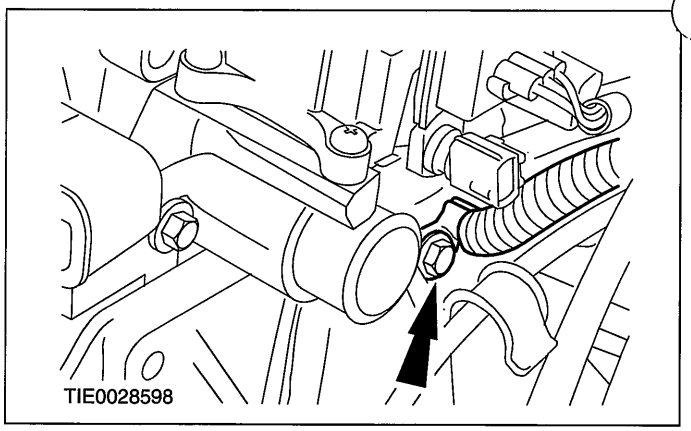


30. Remove the engine wiring harness support brackets.

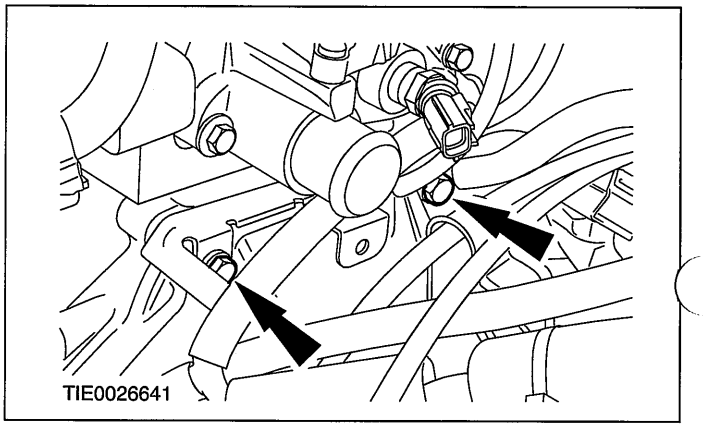


31. Disconnect the turbine shaft speed (TSS) sensor electrical connector.

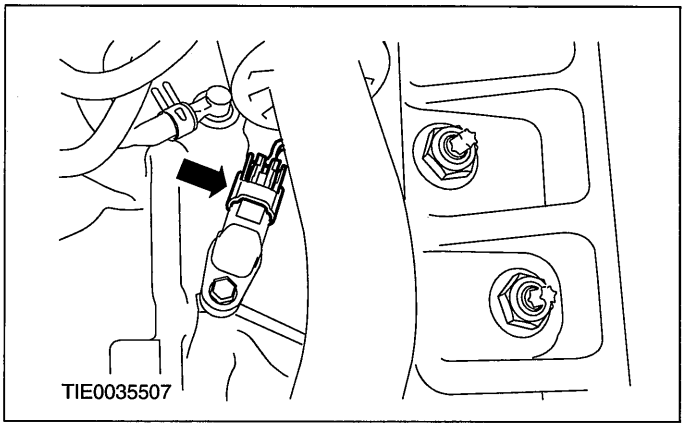

## REMOVAL

32. Detach the ground cable from the transaxle.

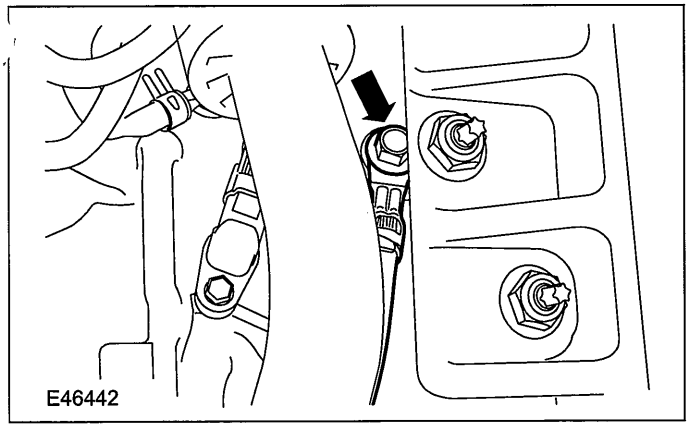


33. Disconnect the transaxle breather hose.

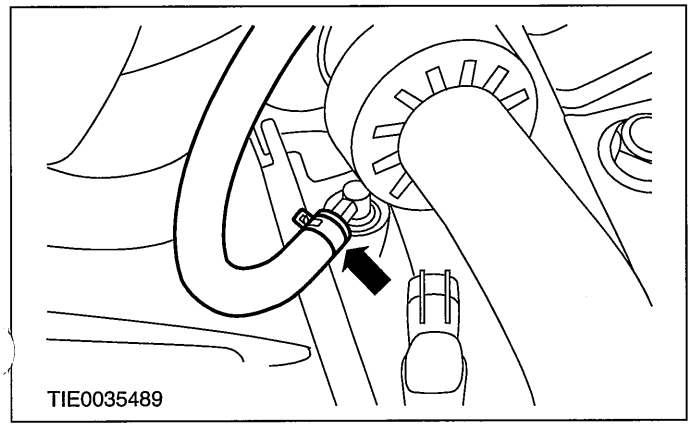


34. Disconnect the transaxle wiring harness electrical connector.

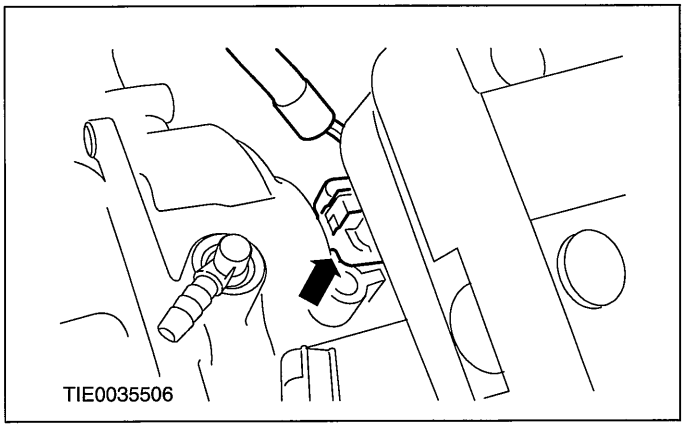


35. Disconnect the transmission range (TR) sensor electrical connector.

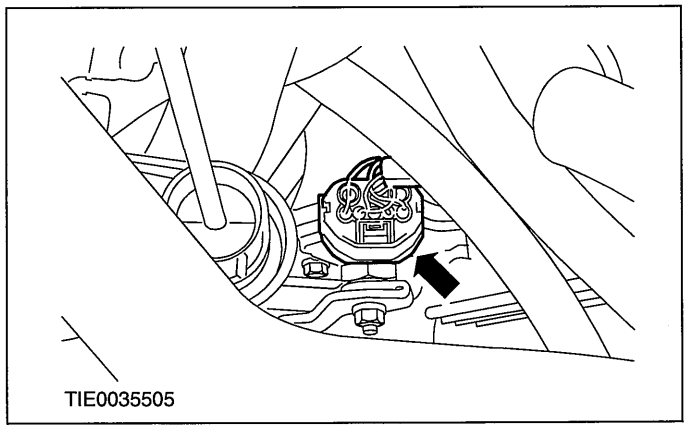


36. Detach the selector lever cable from the transaxle.

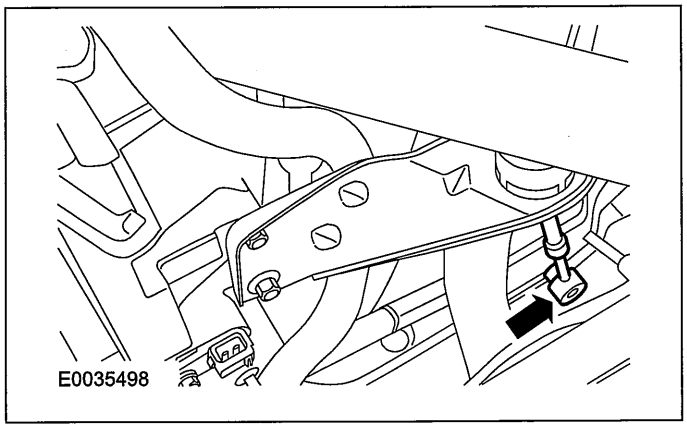


37. Detach the selector lever retaining bracket from the transaxle.

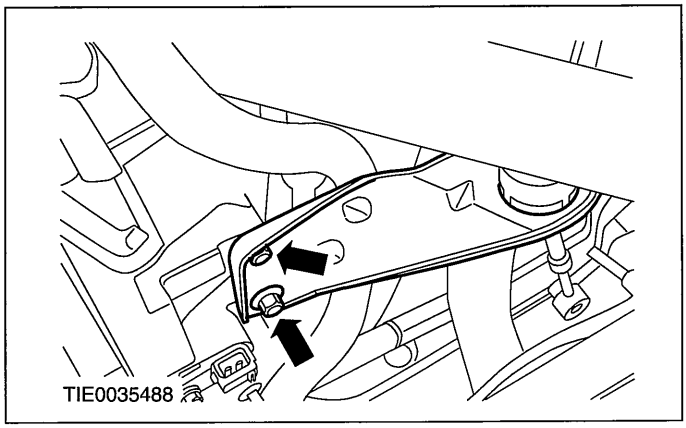

## REMOVAL

38. **Disconnect the vehicle speed (VSS) sensor electrical connector.**

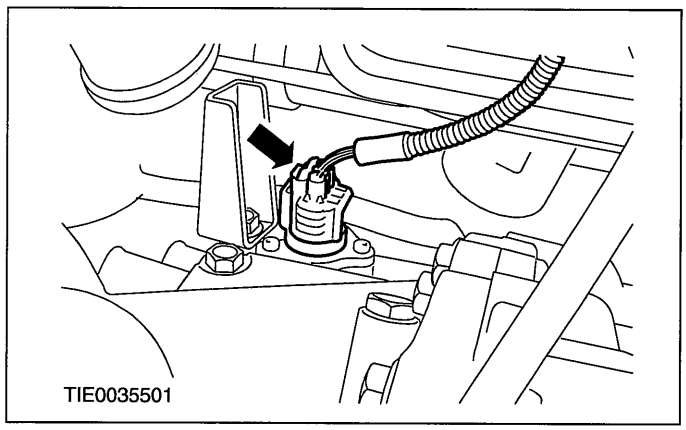


39. **NOTE:Mark the position of the transmission fluid cooler supply line and the transmission fluid cooler return line.**

**Disconnect the transmission fluid cooler lines from the transaxle.**

**For additional information, refer to: Health and Safety Precautions (100-00 General Information, Description and Operation). See - Transmission Fluids.**

- Allow the fluid to drain into a suitable container.

  For additional information, refer to: Health and Safety Precautions (100-00 General Information, Description and Operation). See - Transmission Fluids.

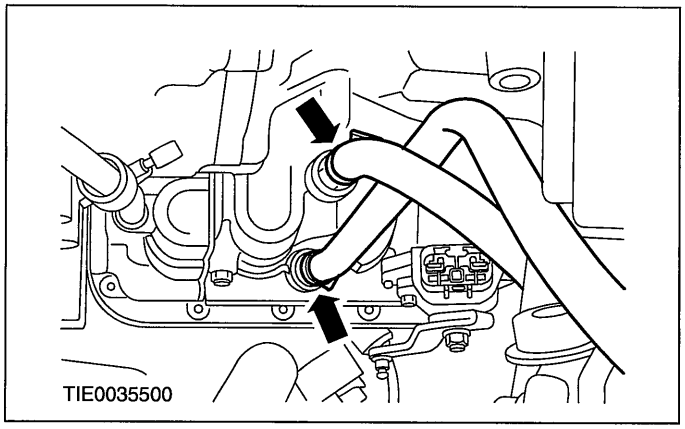


40. **Disconnect the oil pressure switch electrical connector.**

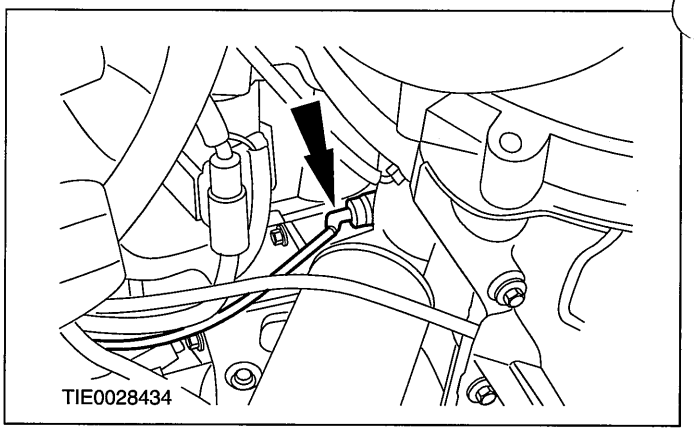


41. **Raise and support the vehicle.**

**For additional information, refer to: Lifting (100-02 Jacking and Lifting, Description and Operation).**

42. **Disconnect the crankshaft position (CKP) sensor electrical connector.**

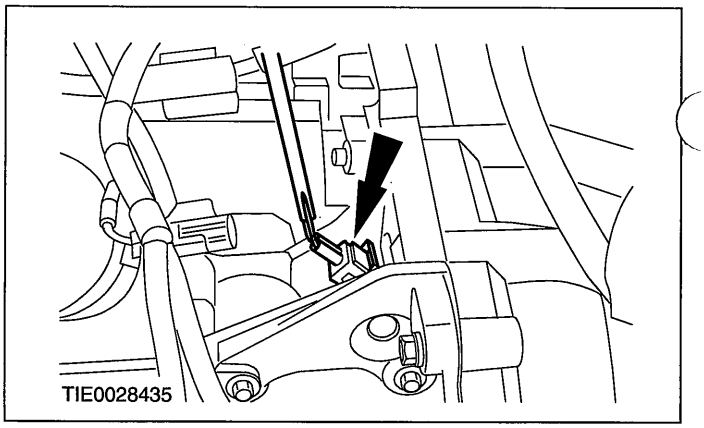


43. **Disconnect the ignition switch to starter motor solenoid and battery to starter motor solenoid cables.**

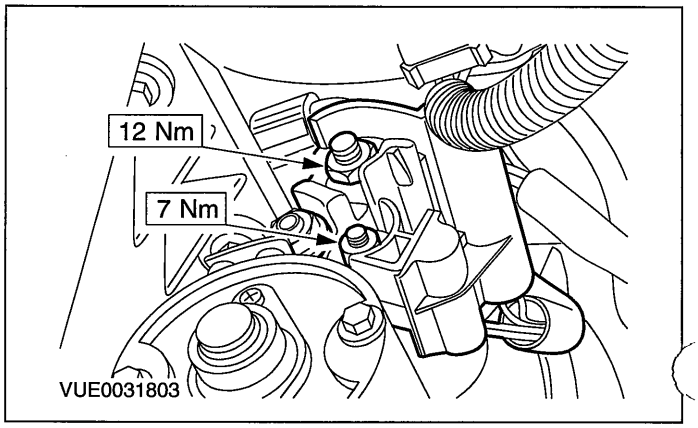

## REMOVAL

44. ⚠**CAUTION:Over bending of the exhaust flexible pipe may cause damage resulting in failure.**

**Support the exhaust flexible pipe with a suitable support wrap or suitable splint.**

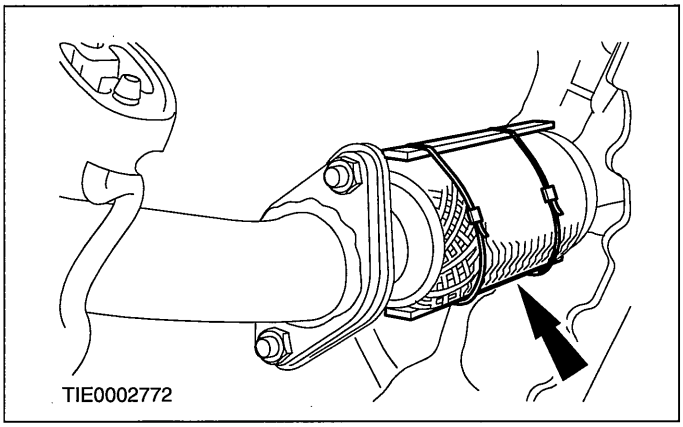
TIE0002772

45. **Detach the exhaust flexible pipe from the catalytic converter.**
    - Discard the nuts and the gasket.

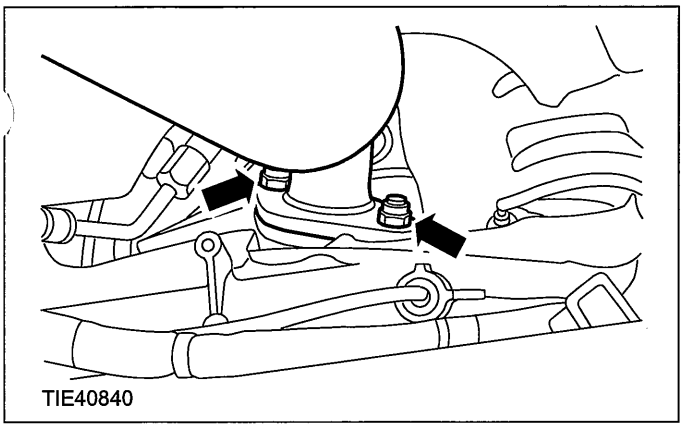
TIE40840

46. **Remove the accessory drive belt.**

**For additional information, refer to:**
**Accessory Drive Belt - 1.4L Duratec-16V (Sigma)/1.6L Duratec-16V (Sigma), Vehicles With: Air Conditioning (303-05 Accessory Drive, Removal and Installation)**
**/ Accessory Drive Belt - 1.4L Duratec-16V (Sigma)/1.6L Duratec-16V (Sigma), Vehicles Without: Air Conditioning (303-05 Accessory Drive, Removal and Installation).**

Vehicles with air conditioning

47. **Disconnect the air conditioning (A/C) low-pressure cutoff switch electrical connector.**

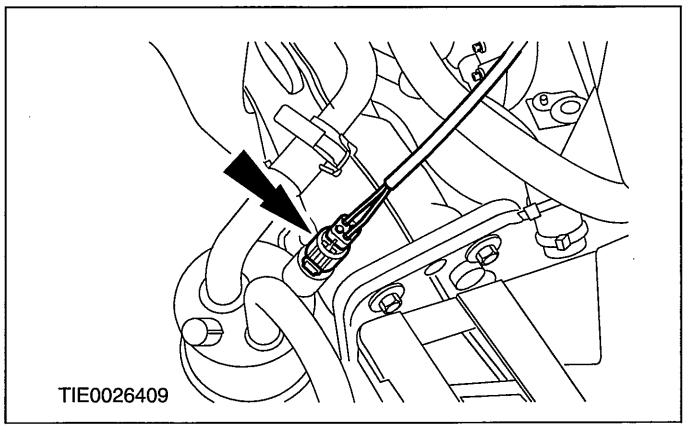
TIE0026409

48. **Disconnect the A/C compressor clutch electrical connector.**

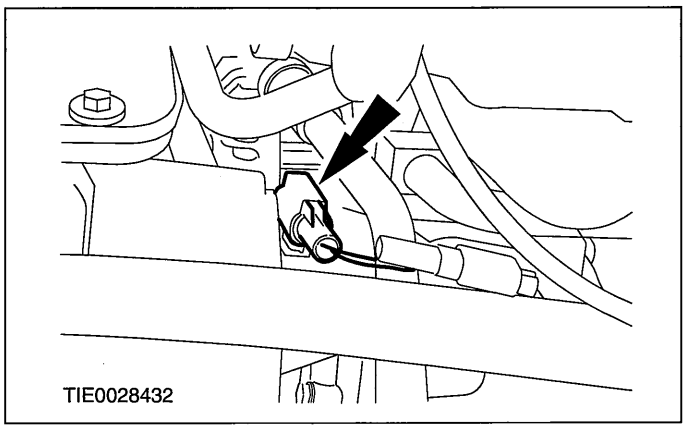
TIE0028432

49. **Disconnect the A/C high-pressure cutoff switch electrical connector.**

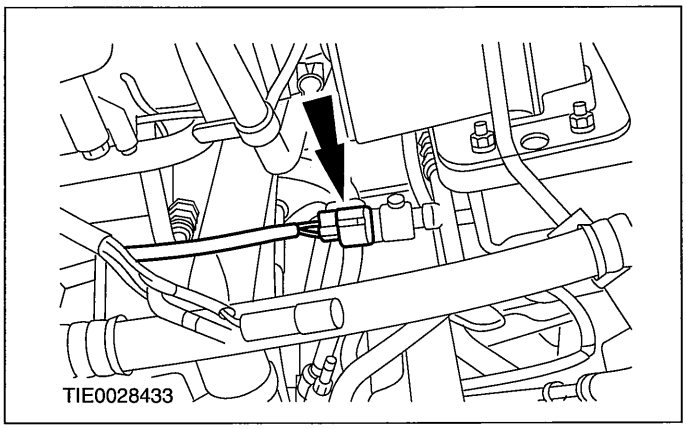
TIE0028433

## REMOVAL

**50. Detach the A/C compressor from the cylinder block and position it to one side.**

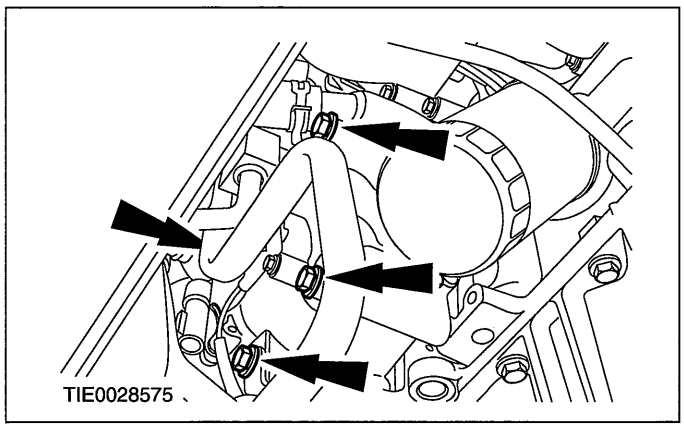


All vehicles

**51. Detach the power steering line support bracket from the engine block.**

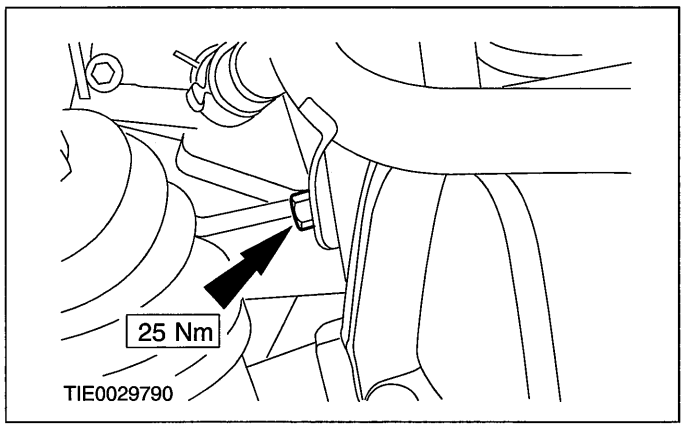


**52. Disconnect the power steering line from the steering pump.**

**For additional information, refer to: Health and Safety Precautions (100-00 General Information, Description and Operation). See - Transmission Fluids.**

- Allow the fluid to drain into a suitable container.

  For additional information, refer to: Health and Safety Precautions (100-00 General Information, Description and Operation). See - Transmission Fluids.

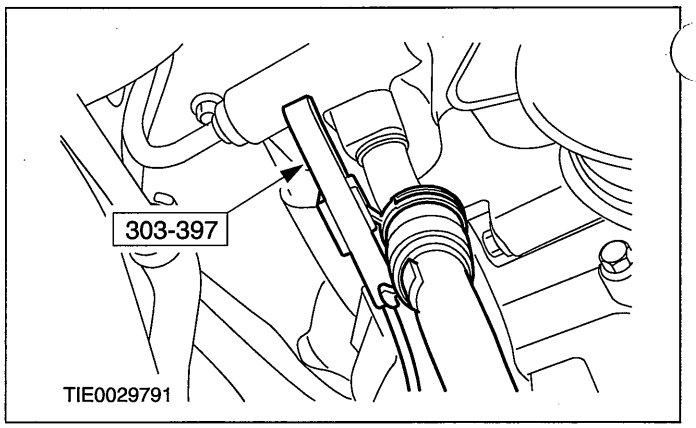


**53. Using the special tool, detach the power steering line from the power steering pump.**

**For additional information, refer to: Health and Safety Precautions (100-00 General Information, Description and Operation). See - Transmission Fluids.**

- Allow the fluid to drain into a suitable container.

  For additional information, refer to: Health and Safety Precautions (100-00 General Information, Description and Operation). See - Transmission Fluids.

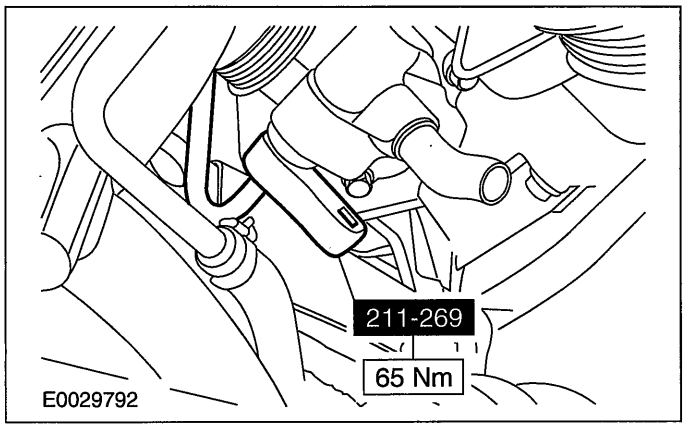

## REMOVAL

**54. Disconnect the cooling fan motor and cooling fan resistor electrical connectors.**

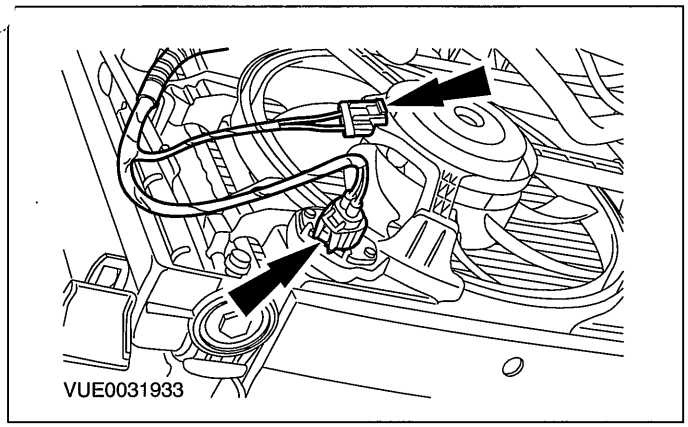


**55. Remove the cooling fan motor and shroud.**

1. Release the cooling fan motor and shroud from the retaining brackets.
2. Push the cooling fan motor and shroud upwards and then downwards to remove.

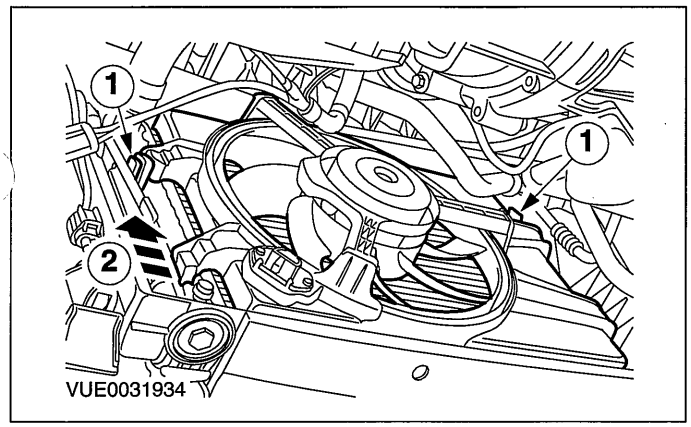


**56. Using the special tool, disconnect the coolant hose from the radiator.**

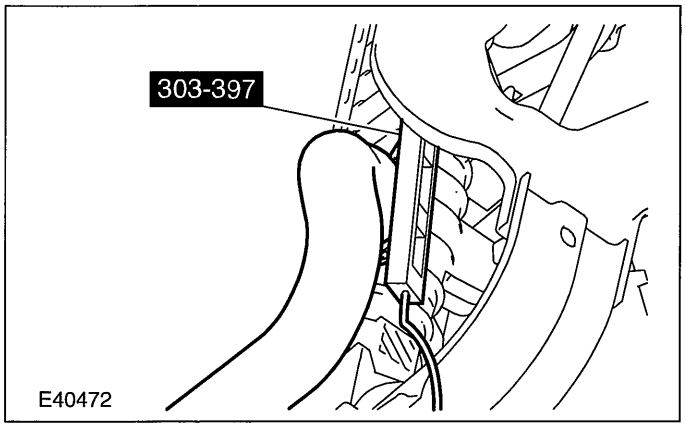


**57. Using the special tool, disconnect the coolant hose from the distribution pipe.**

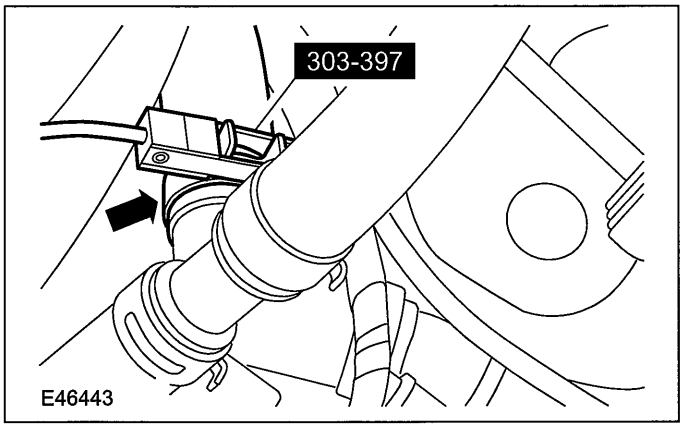


**58. Detach the lower arm from the wheel knuckle on both sides.**

- Remove the heat shield.

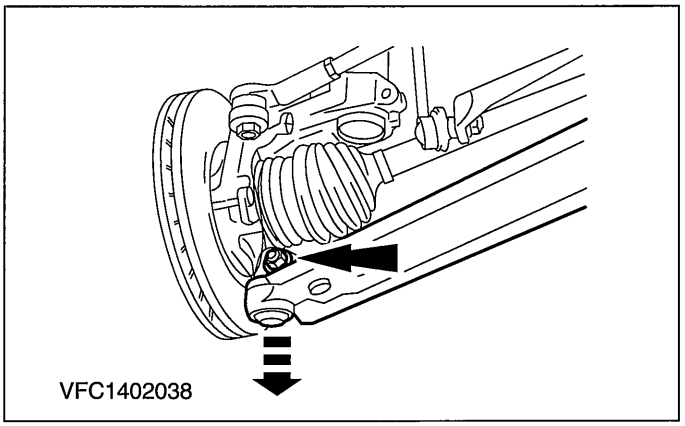


**59. CAUTIONS:**

**⚠Support the halfshaft. The inner joint must not be bent more than 18 degrees. The outer joint must not be bent more than 45 degrees.**

**⚠Do not damage the halfshaft seal.**

**NOTE:**Plug the transaxle to prevent fluid loss or dirt ingress.

For additional information, refer to: Health and Safety Precautions (100-00 General Information, Description and Operation).

See - Transmission Fluids.

**Using a suitable tire lever, detach the left-hand halfshaft from the transaxle and secure it to one side.**

## REMOVAL

- Allow the fluid to drain into a suitable container.

  For additional information, refer to: Health and Safety Precautions (100-00 General Information, Description and Operation).
  See - Transmission Fluids.
- Discard the snap ring.

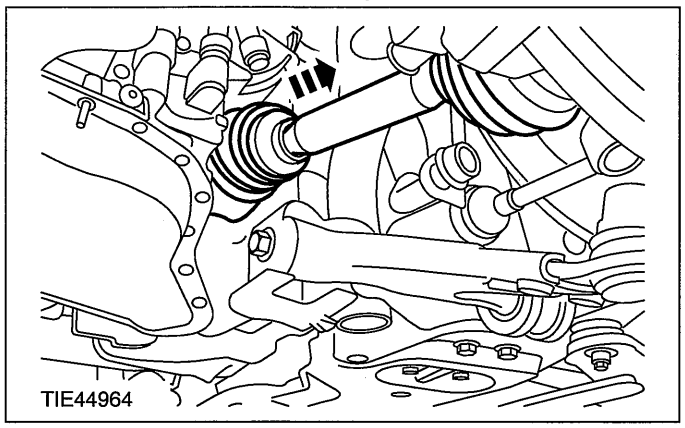


**60. CAUTIONS:**

**⚠Support the halfshaft. The inner joint must not be bent more than 18 degrees. The outer joint must not be bent more than 45 degrees.**

**⚠Do not damage the halfshaft seal.**

**NOTE:**Plug the transaxle to prevent fluid loss or dirt ingress.

For additional information, refer to: Health and Safety Precautions (100-00 General Information, Description and Operation).
See - Transmission Fluids.

**Detach the right-hand halfshaft and the intermediate shaft from the transaxle and secure it to one side.**

- Discard the center bearing cap and locknuts.
- Allow the fluid to drain into a suitable container.

  For additional information, refer to: Health and Safety Precautions (100-00 General Information, Description and Operation).
  See - Transmission Fluids.

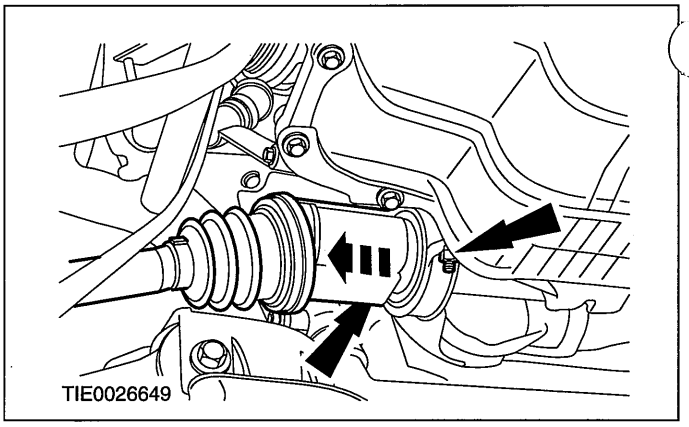


**61. Remove the engine support insulator.**

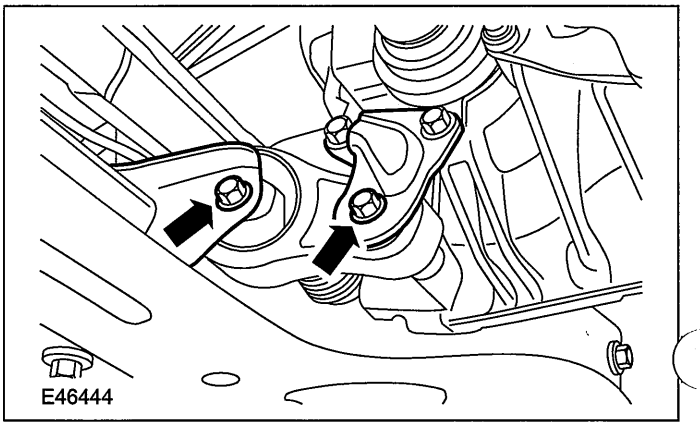


**62. ⚠CAUTION:Do not support the engine directly on the oil pan.**

**NOTE:**Using suitable securing straps, secure the engine and the transaxle on a workshop table.

**Using suitable wooden blocks, support the engine and transaxle assembly.**

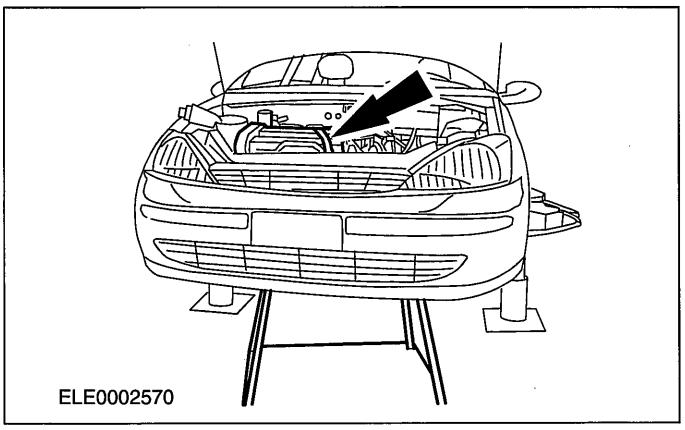


**63. Remove the engine rear mount nut.**

## REMOVAL

- Discard the nut.

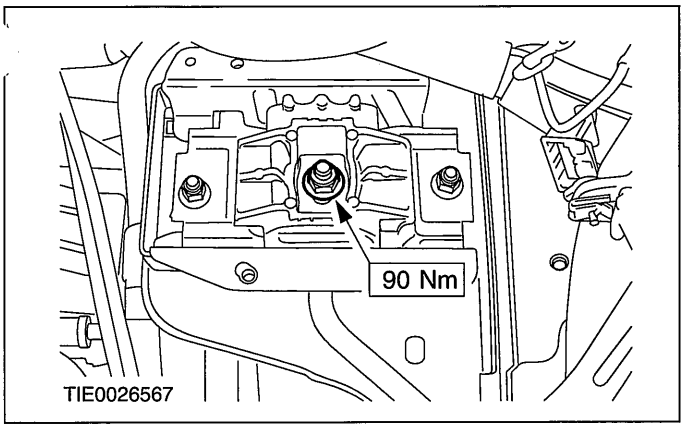


**64. Remove the engine front mount.**

- Discard the nuts.

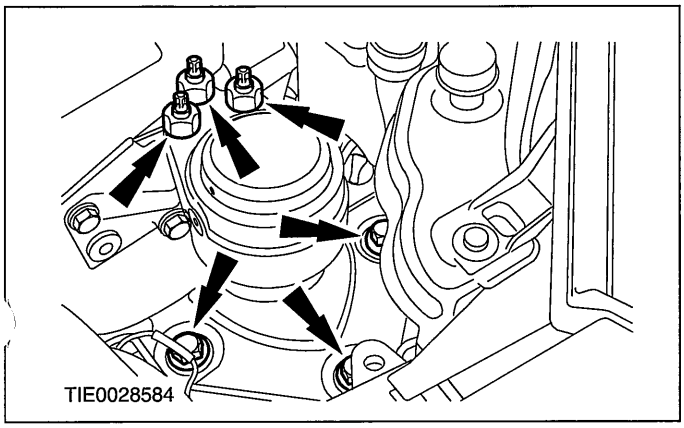


**65. Raise the vehicle and remove the engine and transaxle assembly.**

**66. Using the special tool, attach the engine and transaxle assembly to the engine hoist.**

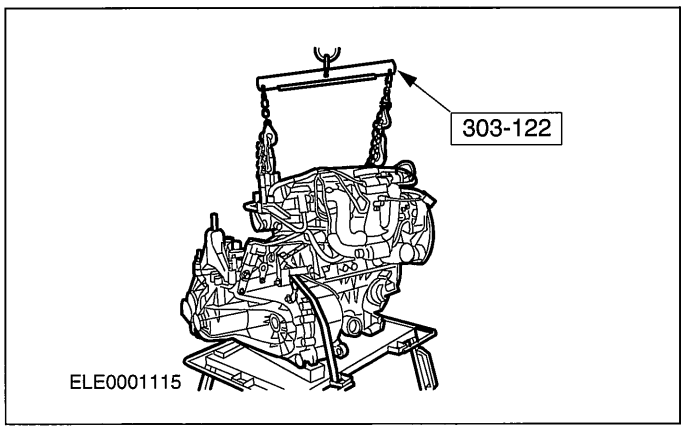


**67. Remove the starter motor.**

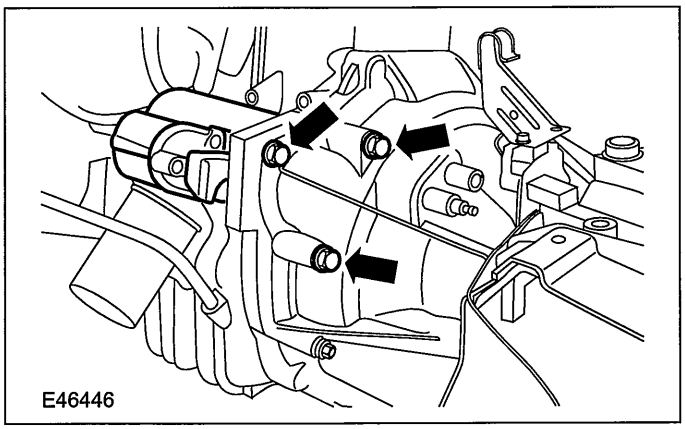


**68. Remove the torque converter retaining nuts.**

- Rotate the torque converter to gain access to the remaining nuts.
- Discard the nuts.

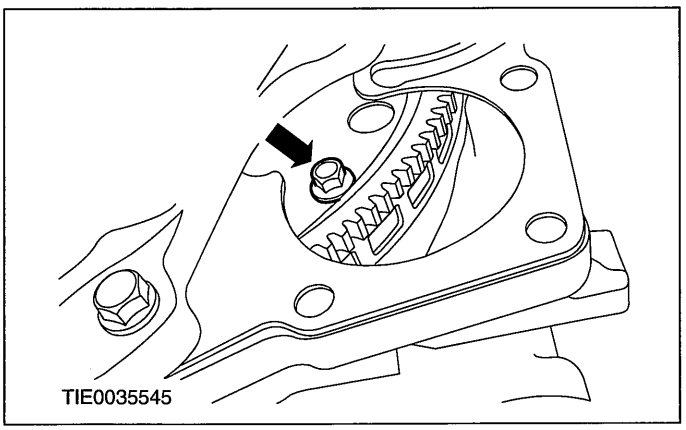


**69. Remove the transaxle right-hand retaining bolts.**

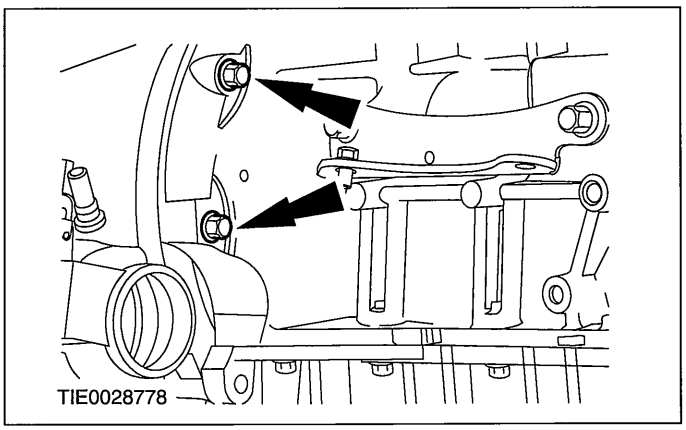

## REMOVAL

70. Remove the transaxle lower retaining bolts.

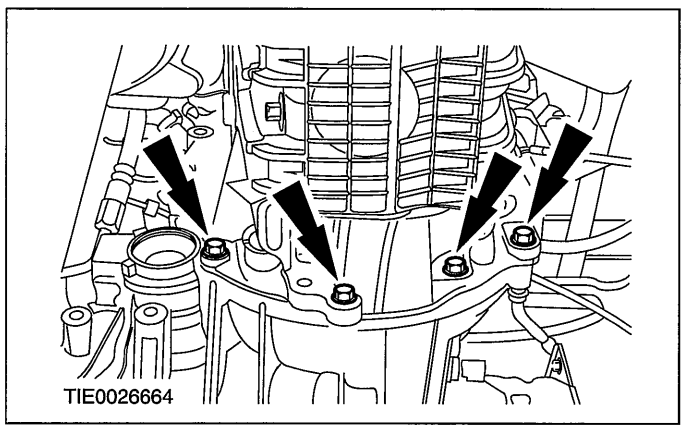


71. ▲WARNING:Make sure the torque converter remains in the converter housing.

Remove the transaxle from the engine.

## DISASSEMBLY

# Engine(21 134 8)

### Special Tool(s)

| | |
|---|---|
| 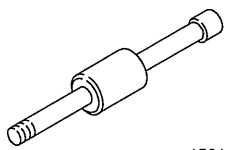 15011 | Slide Hammer<br>205-047 (15-011) |
| 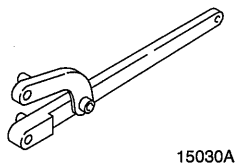 15030A | Universal Flange Holding Wrench<br>205-072 (15-030A) |
| 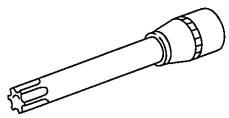 21167 | Socket, Cylinder Head Bolt<br>303-392 (21-167) |
| 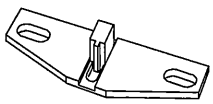 21168 | Locking Tool, Flywheel<br>303-393 (21-168) |
| 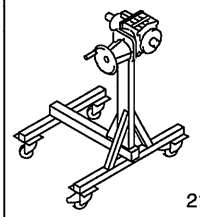 21187 | Mounting Stand<br>303-435 (21-187) |
| 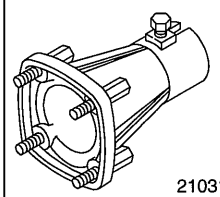 21031B | Mounting Bracket for 303-435<br>303-435-06 (21-031B) |

### Special Tool(s)

| | |
|---|---|
| 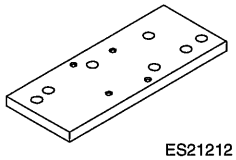 ES21212 | Mounting Plate for<br>303-435-06<br>303-435-14A (21-212A) |
| 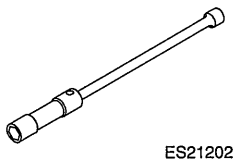 ES21202 | Socket, Spark Plug<br>303-499 (21-202) |
| 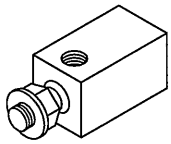 21227 | Adapter for 205-047<br>303-633 (21-227) |
| 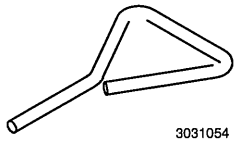 3031054 | Locking Tool, Timing Belt Tensioner<br>303-1054 |

### General Equipment

| |
|---|
| Securing straps |
| Engine hoist |
| Oil filter strap wrench |

All vehicles

**1. Remove the engine wiring harness.**

## DISASSEMBLY

2. **Remove the exhaust manifold lower heat shield left-hand retaining bolts.**

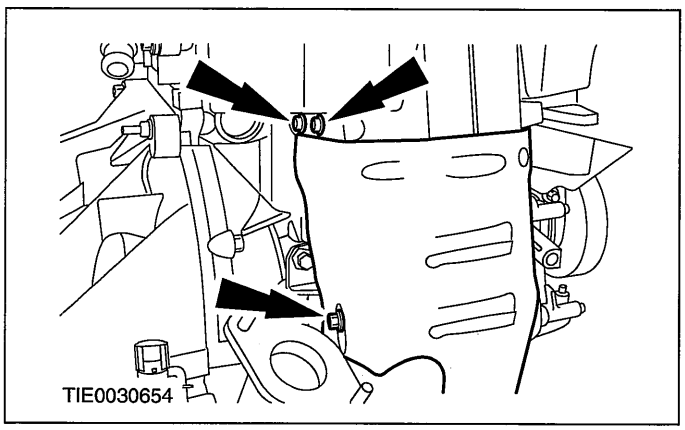


3. **Remove the exhaust manifold lower heat shield right-hand retaining bolts.**

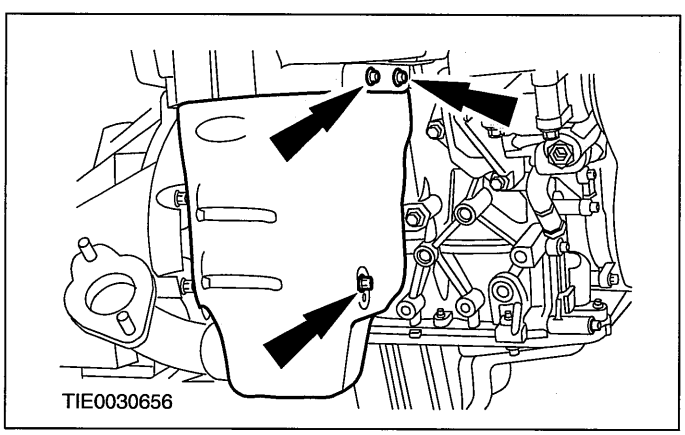


4. **Remove the exhaust manifold upper heat shield.**

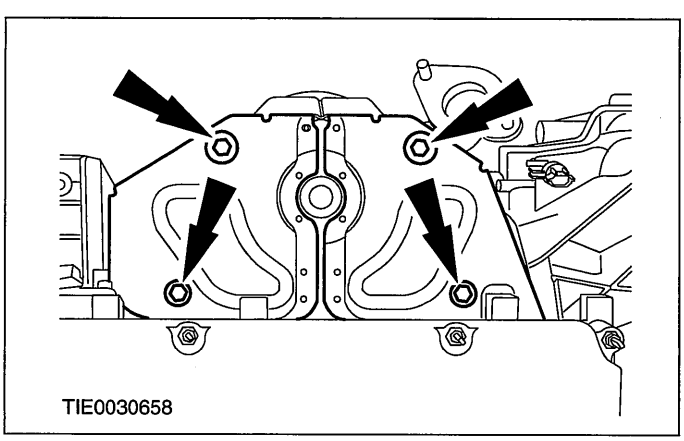


5. **Remove the exhaust manifold.**

- Discard the gasket.

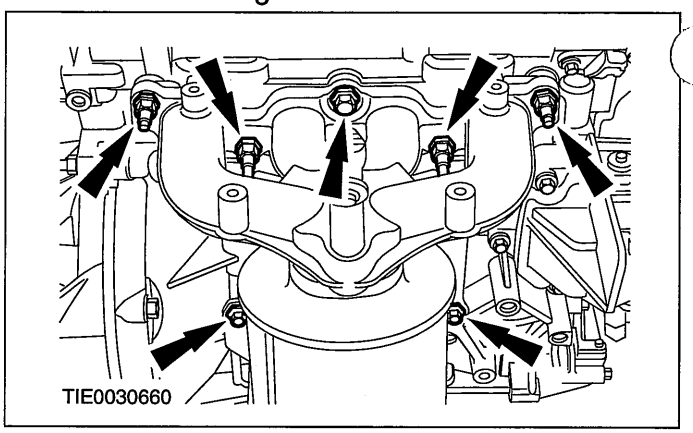


6. **Install the mounting plate to the engine.**

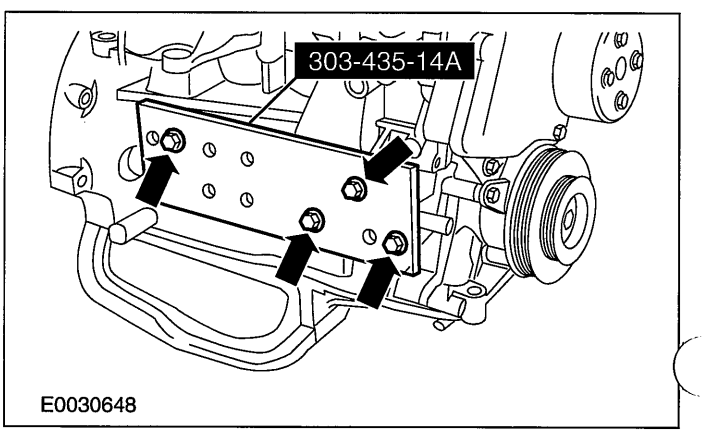


7. **Install the mounting bracket to the mounting plate.**

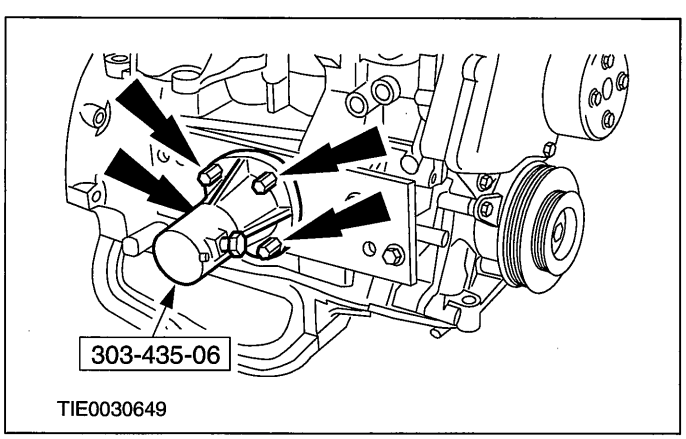

## DISASSEMBLY

**8. Install the engine to the mounting stand.**

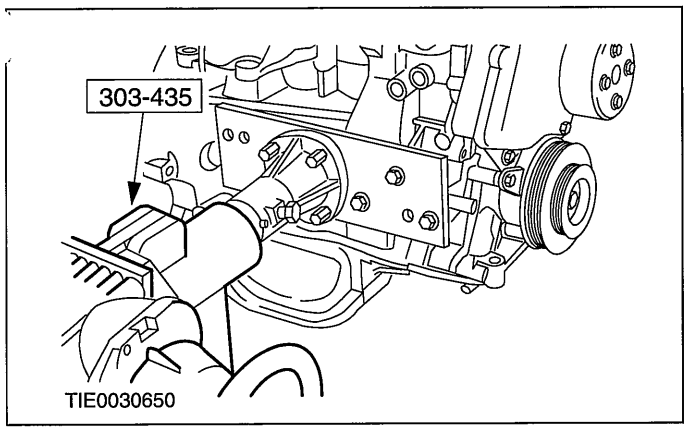


**9. Drain the engine oil.**

- Allow the oil to drain into a suitable container.

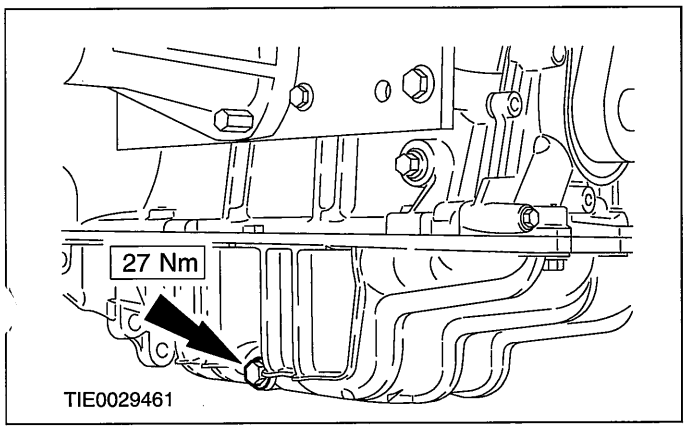


**10. Using a suitable oil filter strap wrench, remove the oil filter.**

- Discard the oil filter.

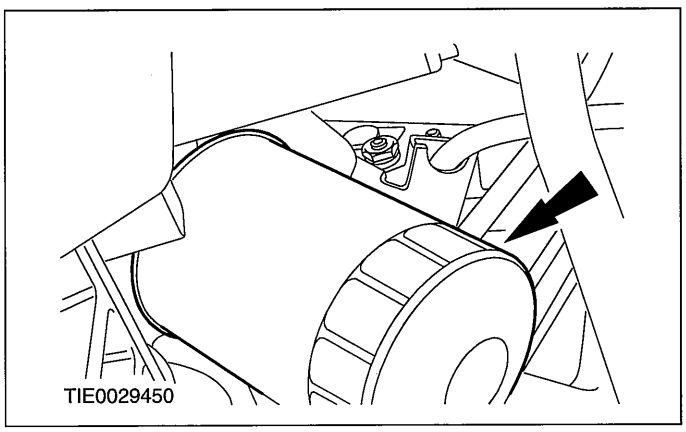


**11. Remove the oil pressure switch.**

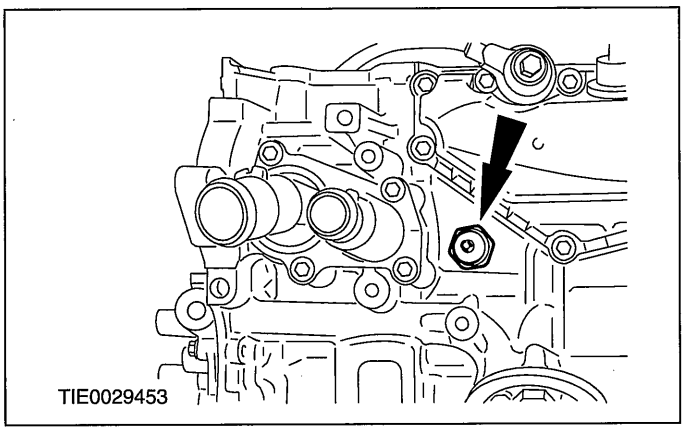


**12. Remove the generator.**

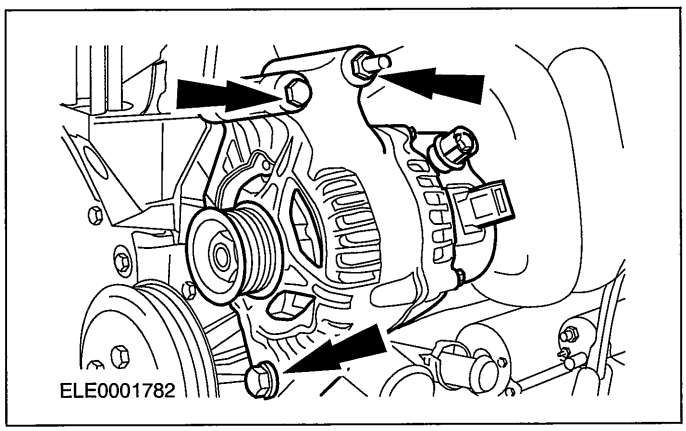


**13. Remove the coolant pump pulley.**

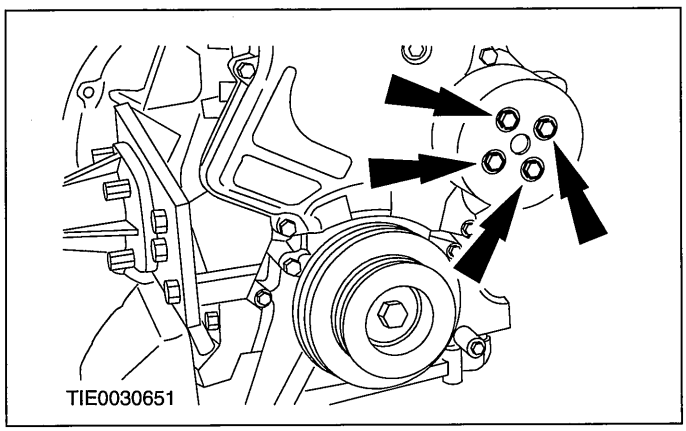

## DISASSEMBLY

14. Remove the timing belt upper cover.

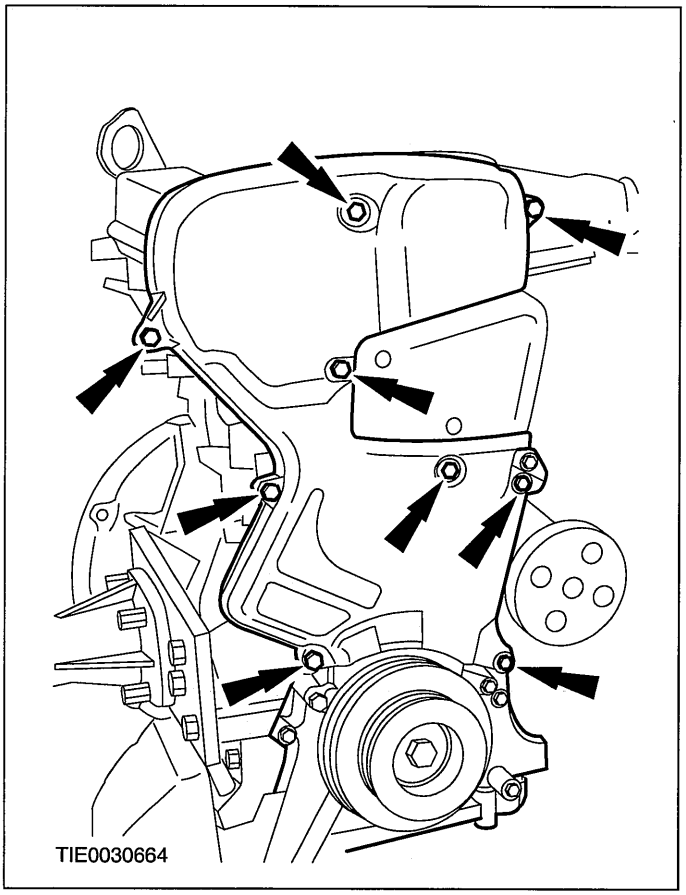


15. Remove the engine front mount bracket.

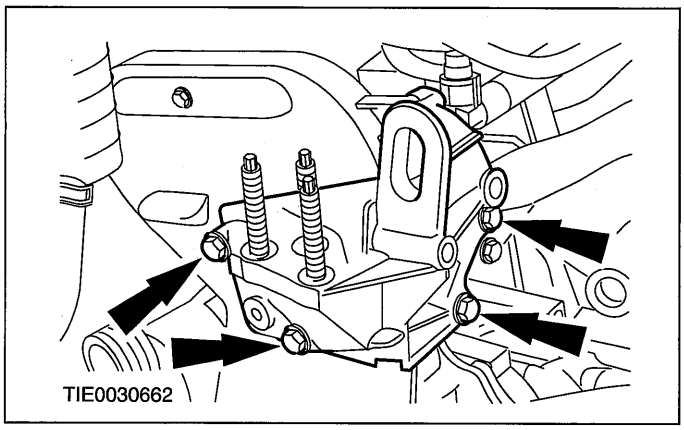


16. Remove the fuel supply and return lines.

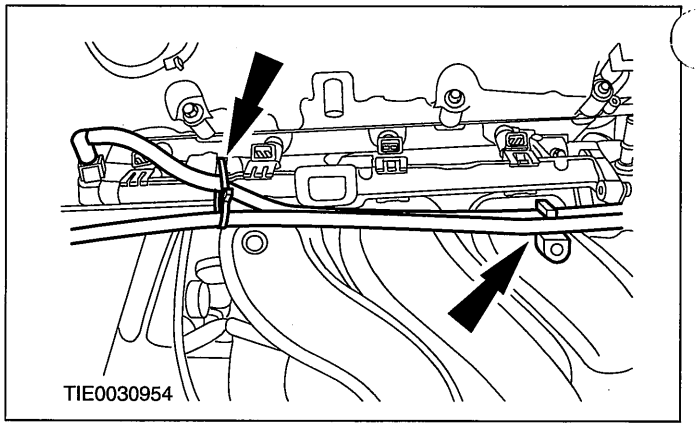


17. Disconnect the spark plug electrical connectors and detach the wires from the valve cover.

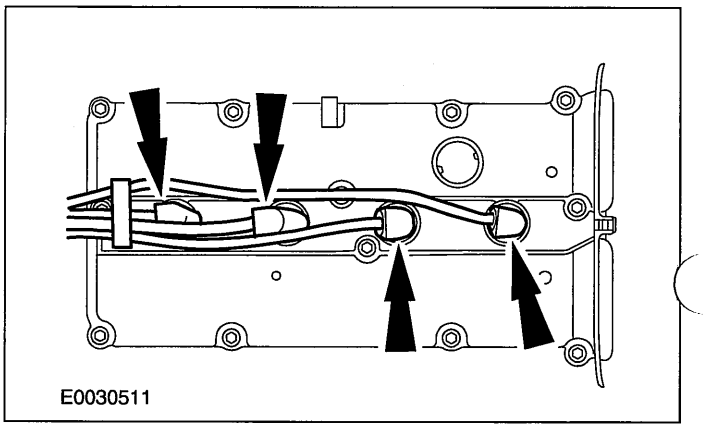


18. Remove the valve cover.

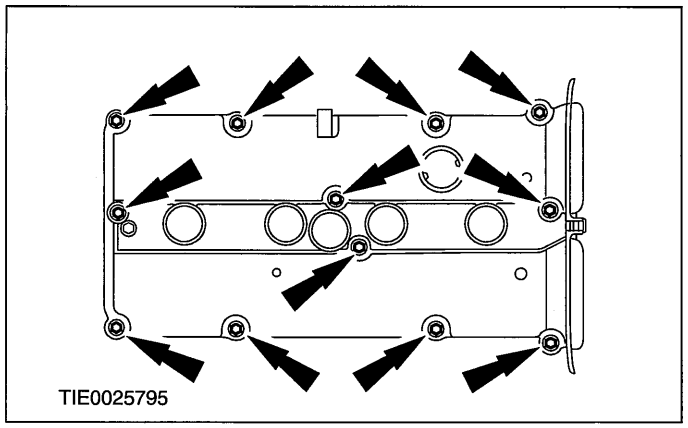

## DISASSEMBLY

19. **Using the special tool, remove the spark plugs.**

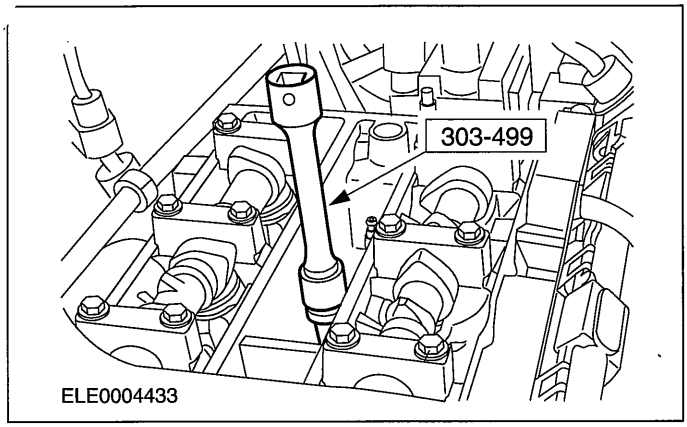


20. **Set the crankshaft to approximately 20 degrees before TDC.**
21. **Using the special tool, lock the crankshaft.**

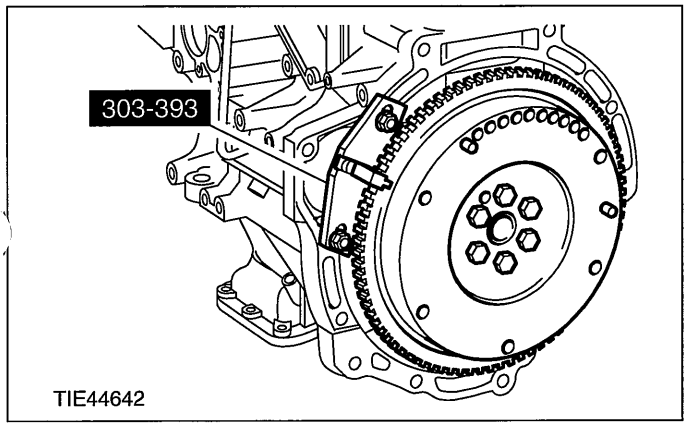


22. **Remove the crankshaft pulley.**
    - Discard the bolt.

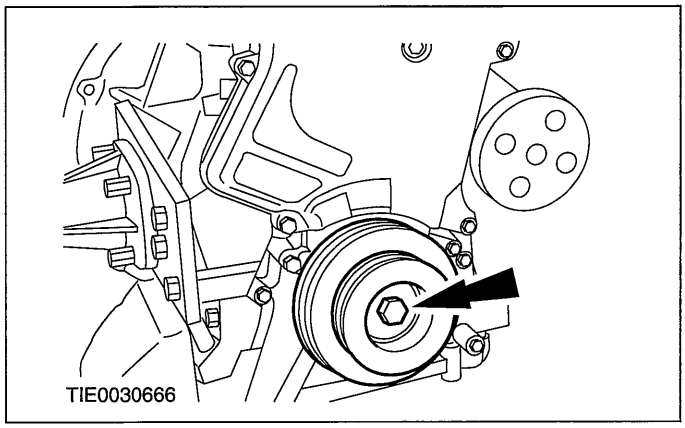


23. **Remove the timing belt lower cover.**

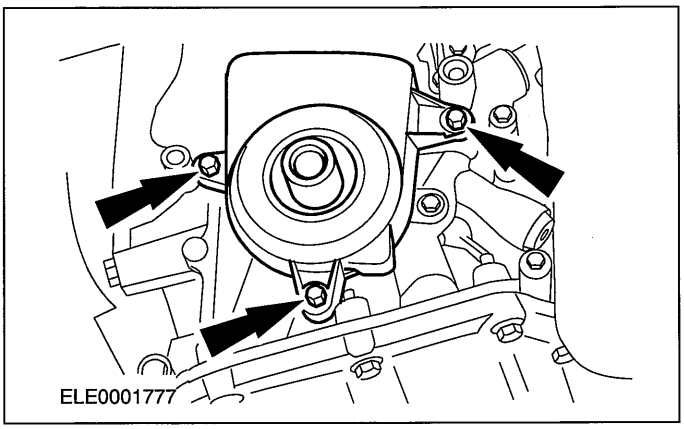


Engines with eccentric cam timing belt tensioner

24. **Slacken the timing belt tensioner and remove the timing belt.**
    - Discard the timing belt.

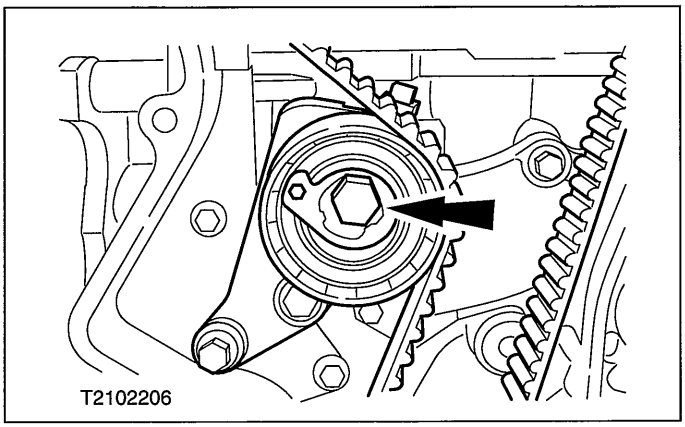


25. **Remove the timing belt tensioner.**

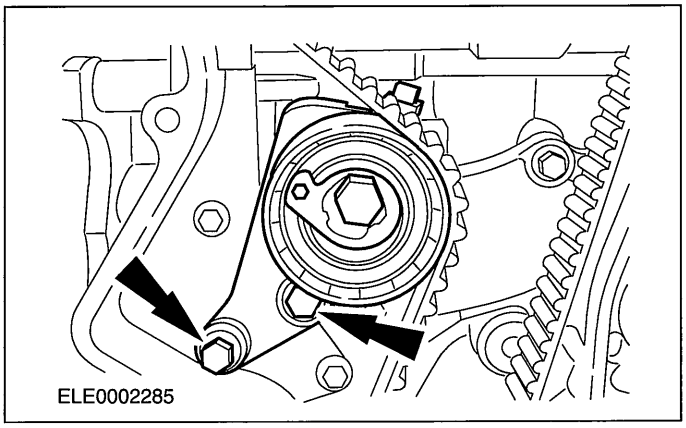


Engines with slotted bracket timing belt tensioner

26. **Remove the timing belt tensioner and the timing belt.**

## DISASSEMBLY

- Discard the timing belt.

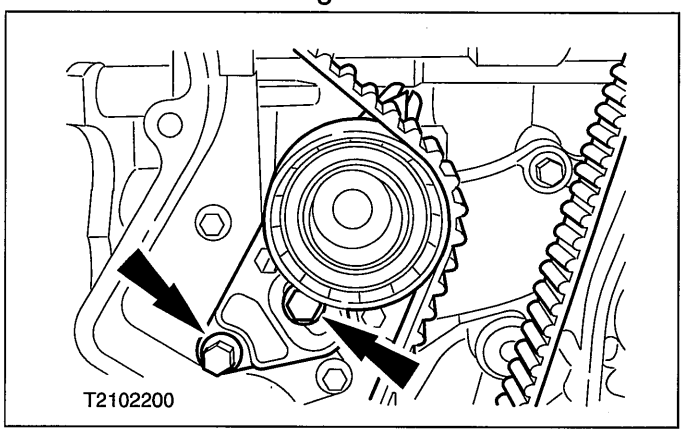


Vehicles built 09/2003 onwards

**27. Remove the timing belt.**

- Tension the timing belt tensioner by pulling the timing belt and lock it with the special tool.
- Discard the timing belt.

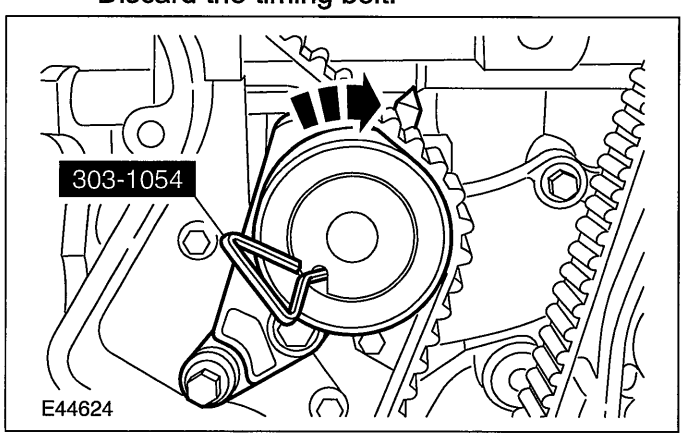


**28. Remove the timing belt tensioner.**

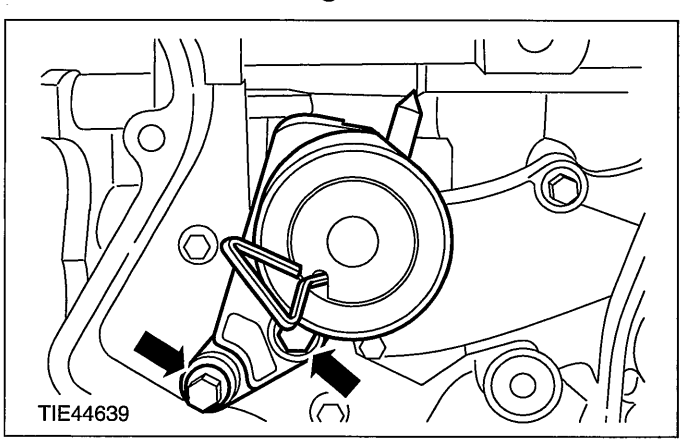


Vehicles built 04/2005 onwards

**29. Remove the timing belt.**

- Tension the timing belt tensioner by pulling the timing belt and lock it with the special tool.
- Discard the timing belt.

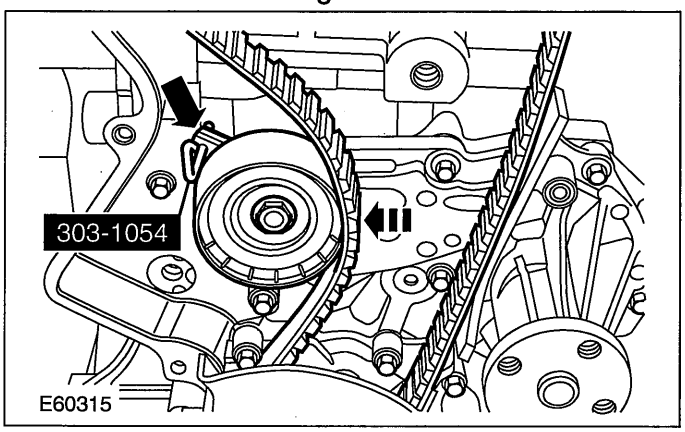


**30. Remove the timing belt tensioner.**

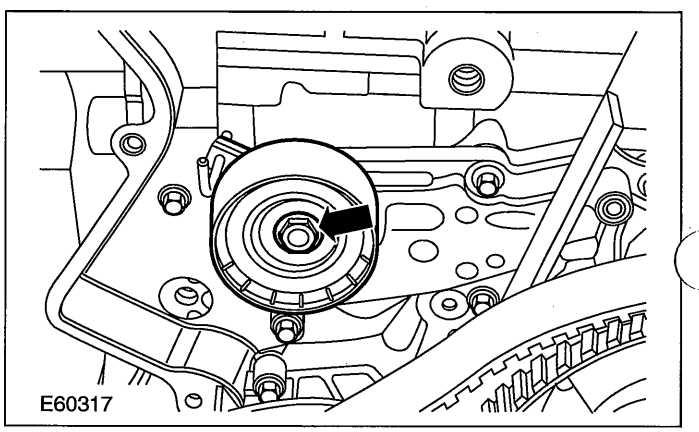


All vehicles

**31. ⚠CAUTION:Install a hose (order no. E890438S) to the special tool studs, to prevent damage to the camshaft sprockets.**

**Remove the camshaft pulleys.**

- Discard the retaining bolts.

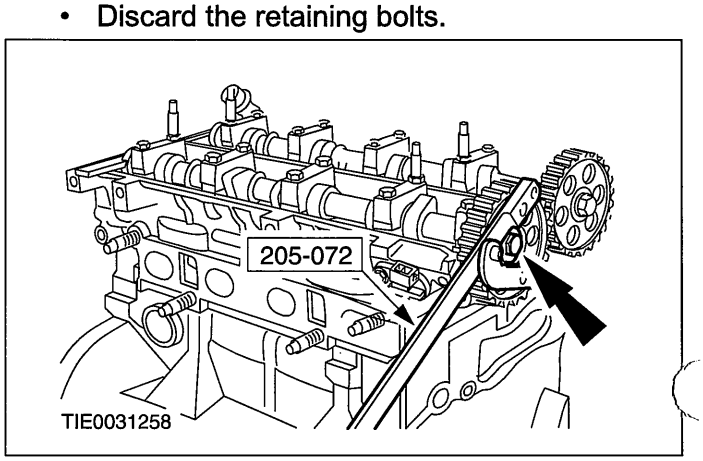

## DISASSEMBLY

**32. Remove the crankshaft timing belt pulley.**

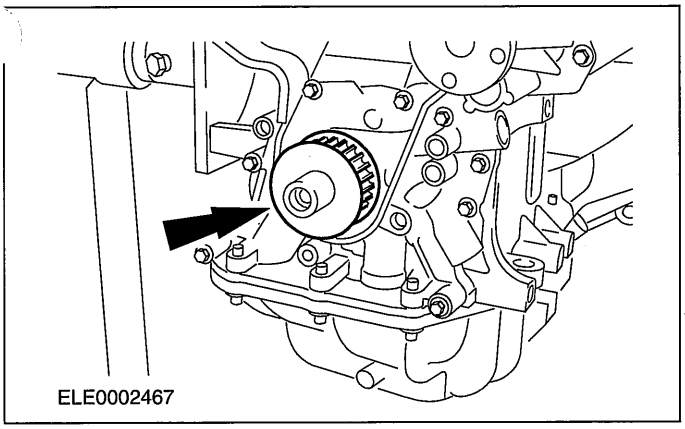


**33. Remove the timing belt rear cover.**

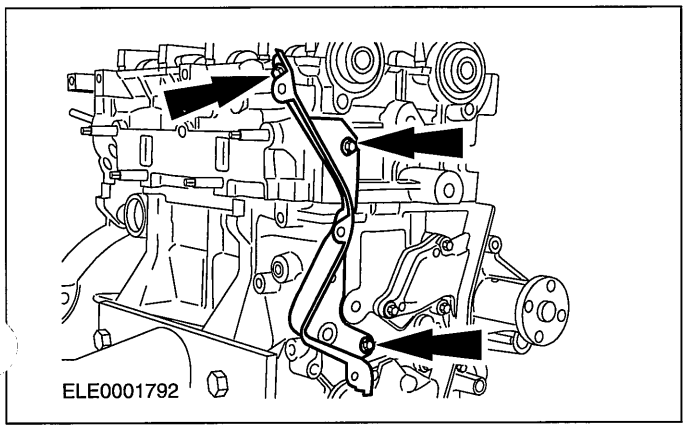


**34. ⚠CAUTION:Keep the camshaft bearing caps and the camshafts in order for installation.**

**Remove the camshafts.**

- Slacken each camshaft bearing cap retaining bolt in the sequence shown by one turn until the camshaft is released.
- Remove the camshaft bearing caps.
- Remove and discard the camshaft seals.

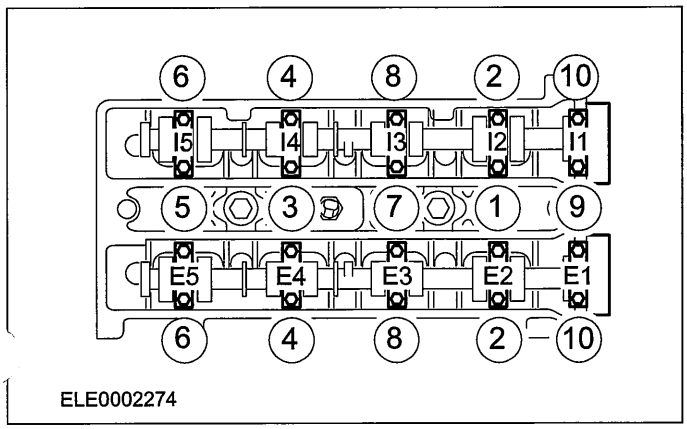


**35. Disconnect the positive crankcase ventilation (PCV) hose from the PCV cover.**

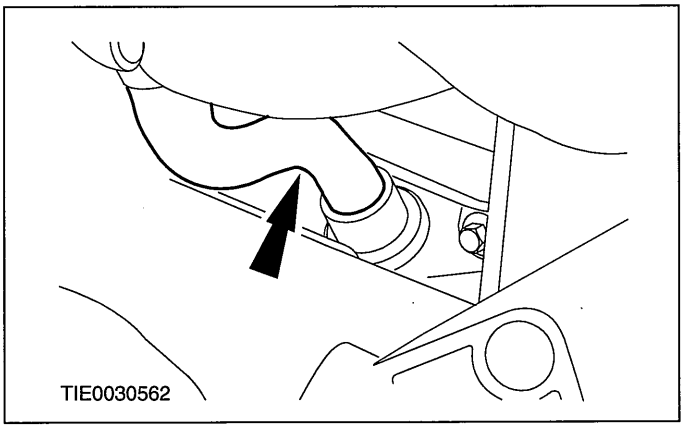


**36. Detach the oil level indicator and tube from the intake manifold.**

- Detach the knock sensor (KS) electrical connector from the oil level indicator tube.

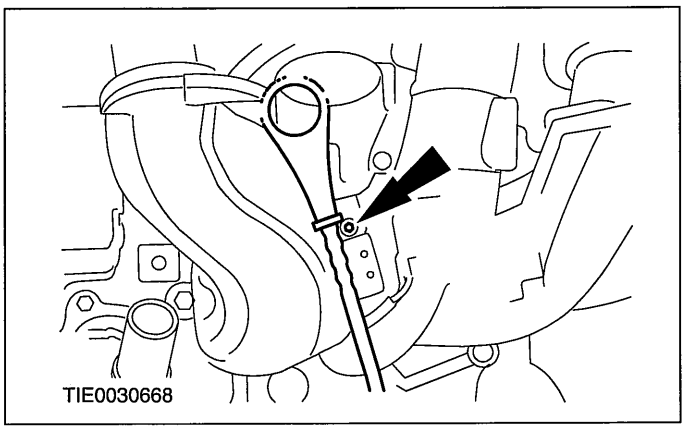


**37. Remove the intake manifold lower bolt.**

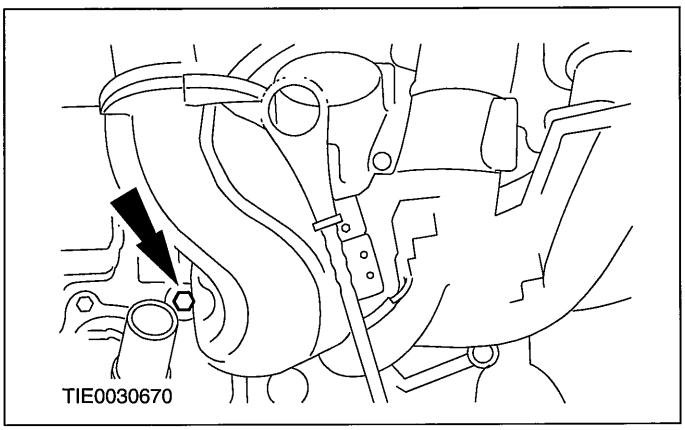


**38. CAUTIONS:**

**⚠Place the cylinder head on a suitable soft surface.**

**⚠Remove the cylinder head bolts in the sequence shown.**

## DISASSEMBLY

**Using the special tool, remove the cylinder head.**

- Discard the gasket.

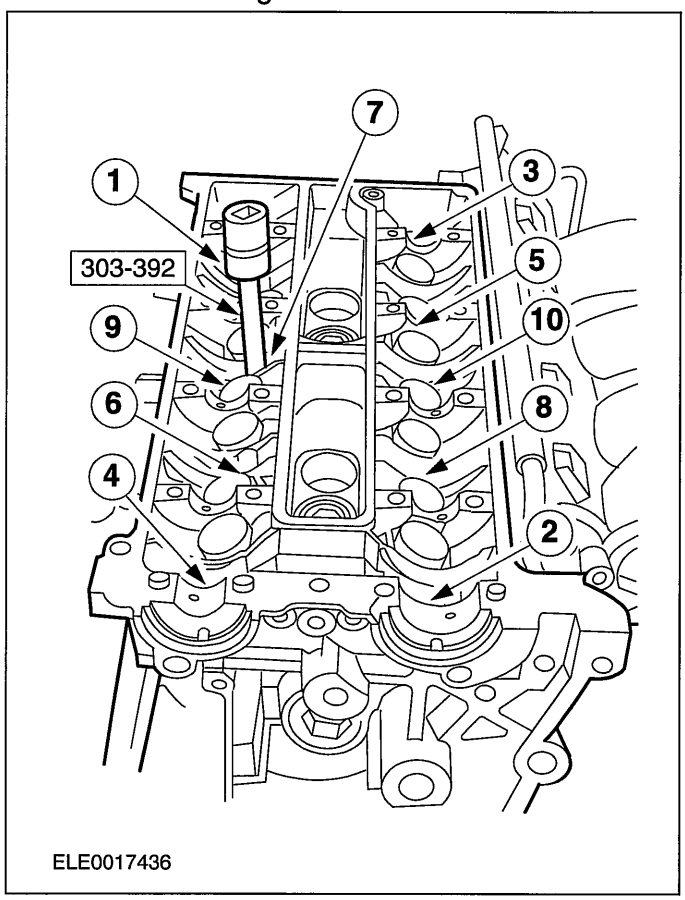


**39. ⚠CAUTION:Do not damage the coolant pump impeller.**

**Remove the coolant pump.**

- Discard the gasket.

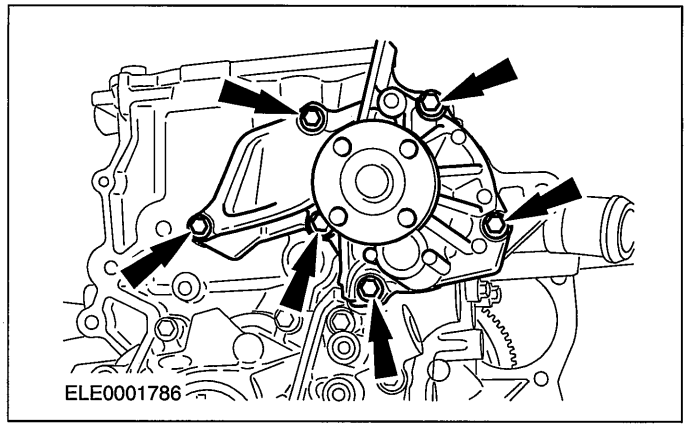


**40. Remove the thermostat housing.**

- Discard the gasket.

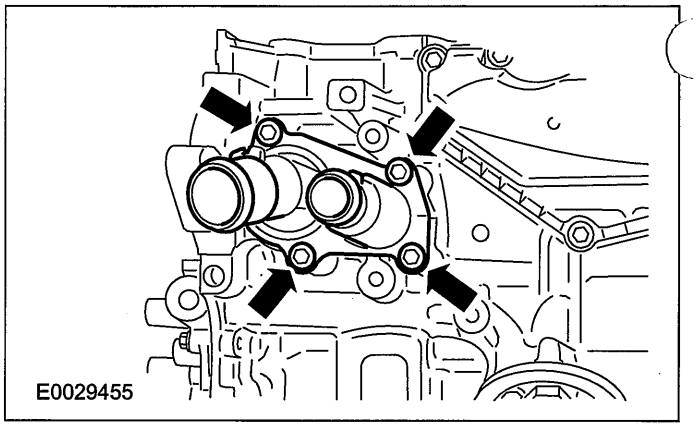


**41. Remove the KS.**

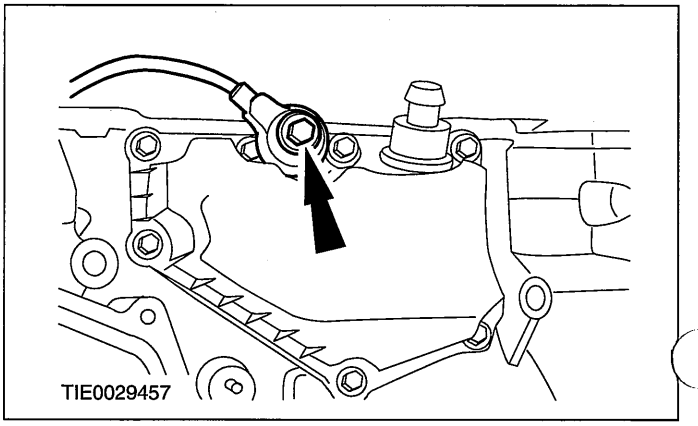


**42. Remove the the PCV cover.**

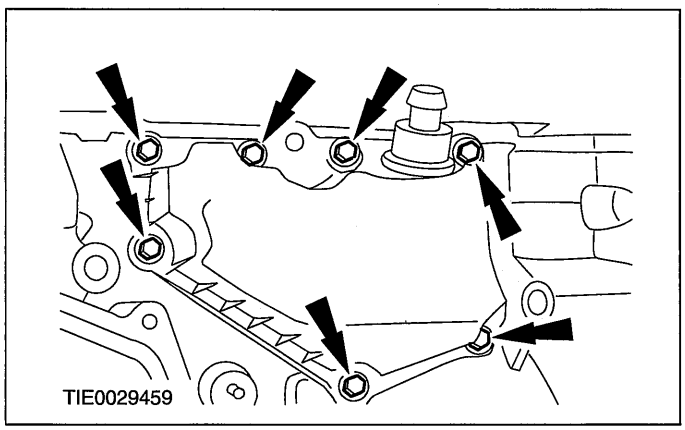

## DISASSEMBLY

**43. Remove the oil pan retaining bolts.**

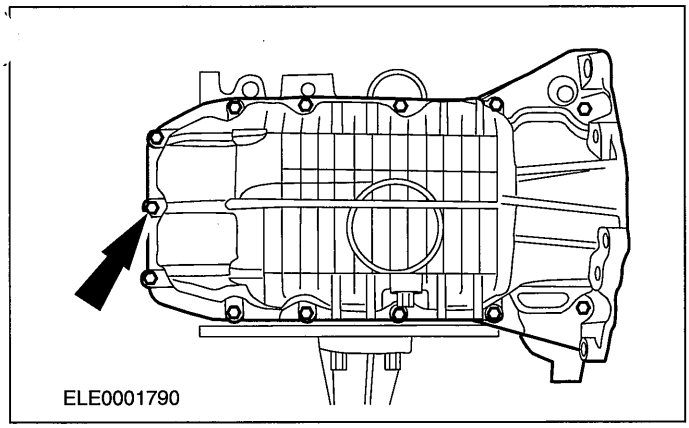


**44. ⚠CAUTION:In order to prevent damage to the sealing surfaces, only use the designated special tool to remove the oil pan. Do not use a chisel or screwdriver for removal.**

**NOTE:**Tighten the lock nut against the oil pan and use several taps to release the oil pan from the cylinder block.

**Using the special tools, remove the oil pan.**

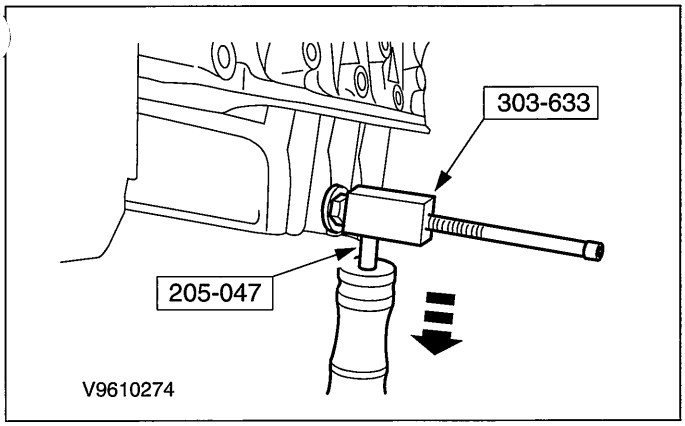


**45. Remove the oil pump pickup pipe.**

- Discard the gasket.

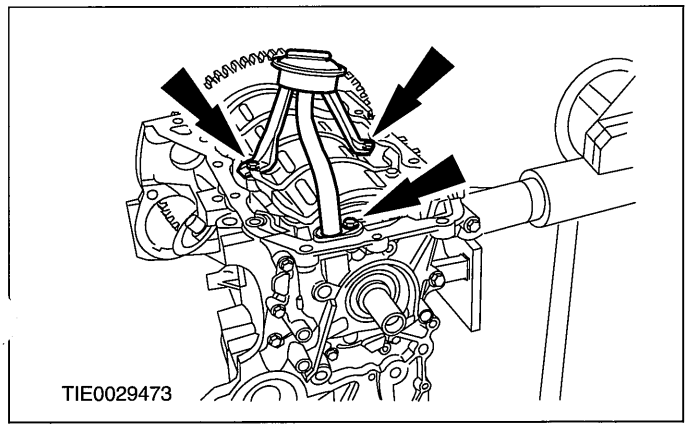


**46. Remove the oil pump.**

- Discard the gasket.
- Discard the crankshaft front seal.

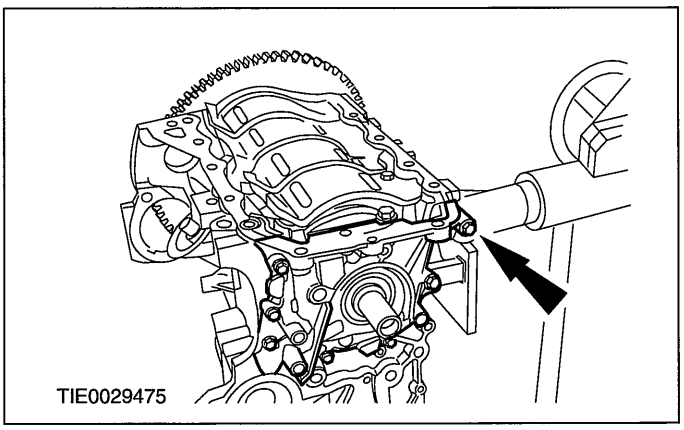


Vehicles with manual transaxle

**47. Remove the clutch disc and pressure plate.**

**For additional information, refer to: Clutch Disc and Pressure Plate (308-01 Clutch, Removal and Installation).**

**48. Using the special tool, remove the flywheel.**

- Discard the bolts.

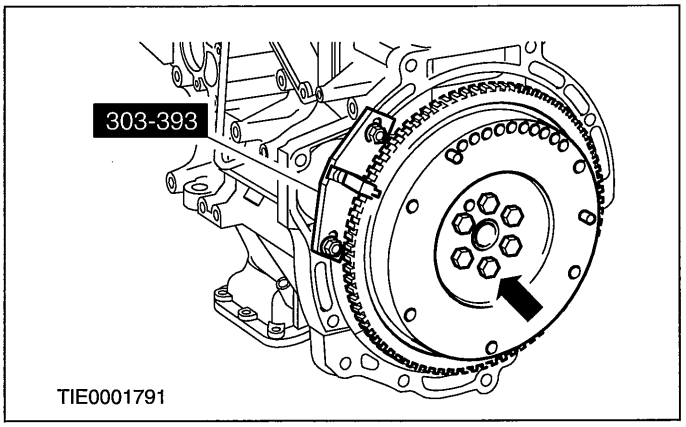


Vehicles with automatic transaxle

**49. Using the special tool, remove the flexplate.**

- Discard the bolts.

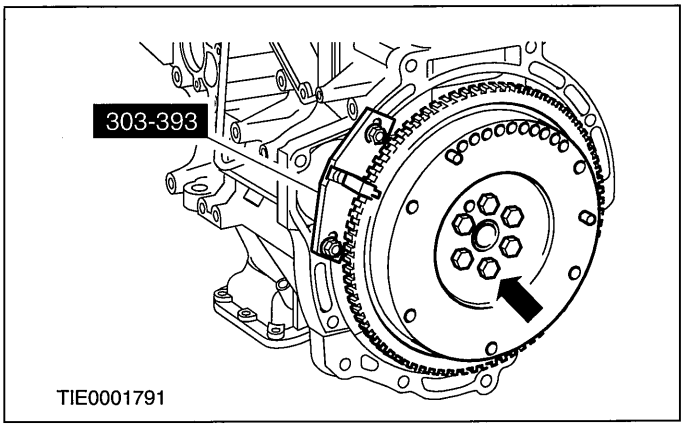

## DISASSEMBLY

All vehicles

**50. Remove the crankshaft position (CKP) sensor.**

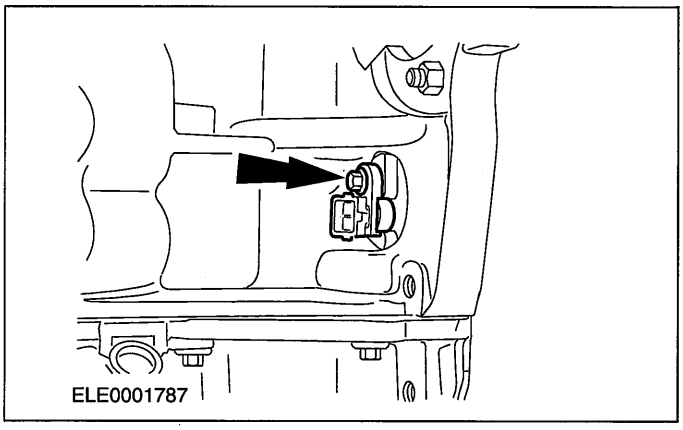


**51. Remove the CKP sensor bracket.**

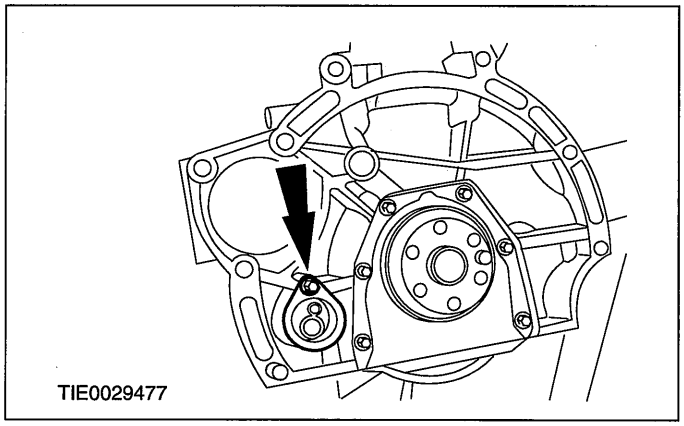


**52. Remove the crankshaft rear seal carrier.**

- Discard the crankshaft rear seal carrier.

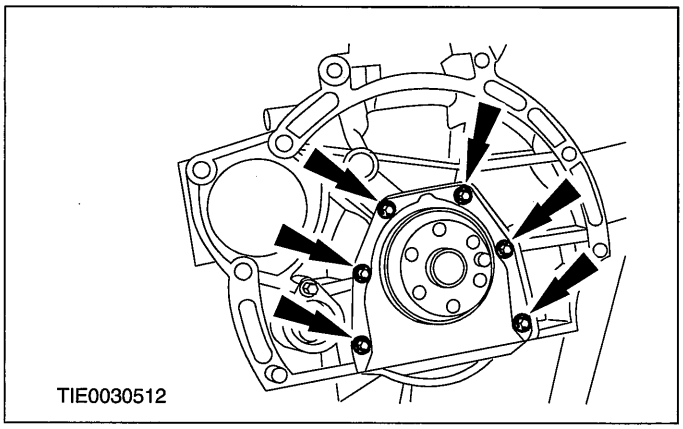


**53. Detach the cylinder block (short block) from the mounting stand.**

- Remove the special tools.

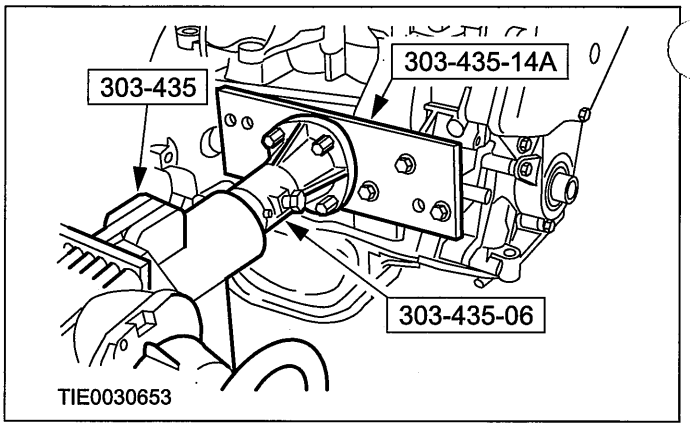

## DISASSEMBLY AND ASSEMBLY OF SUBASSEMBLIES

# Cylinder Head(21 165 6)

## Disassembly

1. **Disconnect the temperature and manifold absolute pressure (T-MAP) sensor electrical connector.**

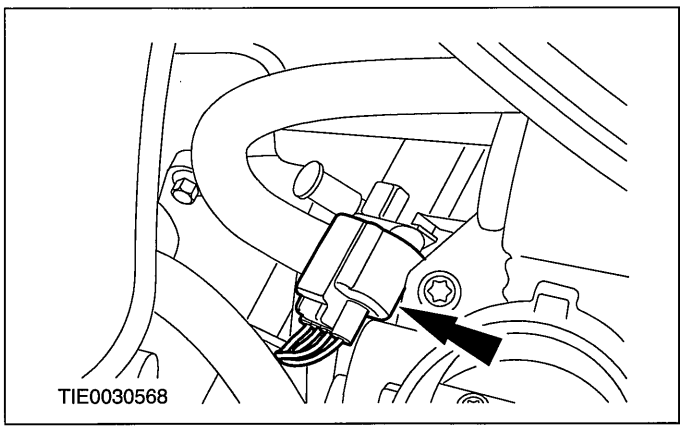


2. **Disconnect the throttle plate control motor (DC-ISC) electrical connector.**

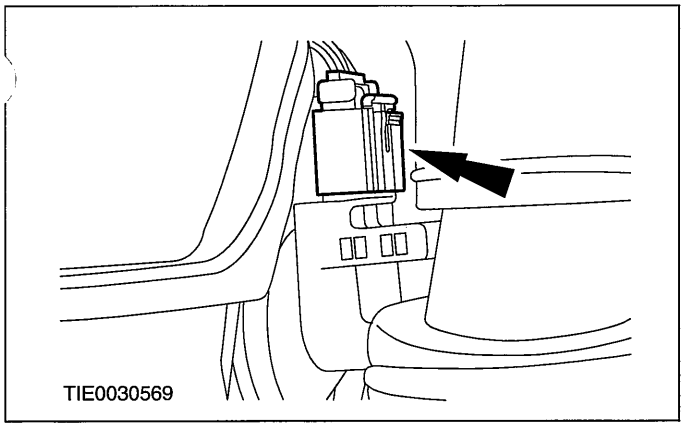


3. **Disconnect the fuel injector electrical connectors.**

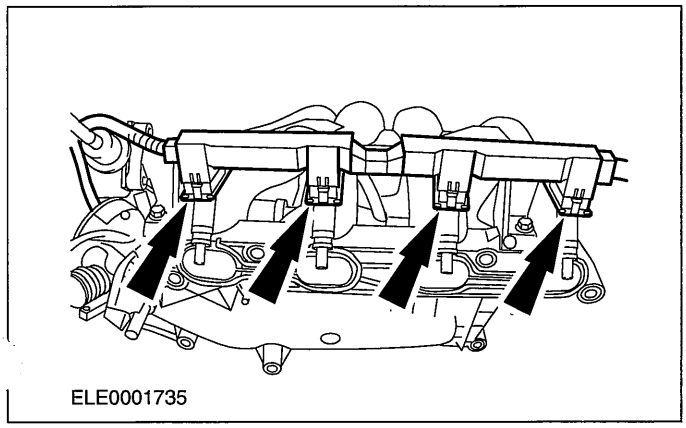


4. **Remove the engine wiring harness.**

5. **Remove the fuel supply manifold.**
   - Discard the O-ring seals.

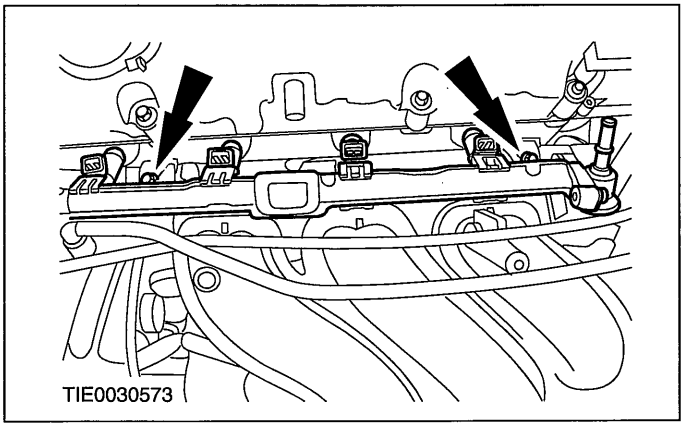


6. **Remove the intake manifold.**
   - Discard the gaskets.

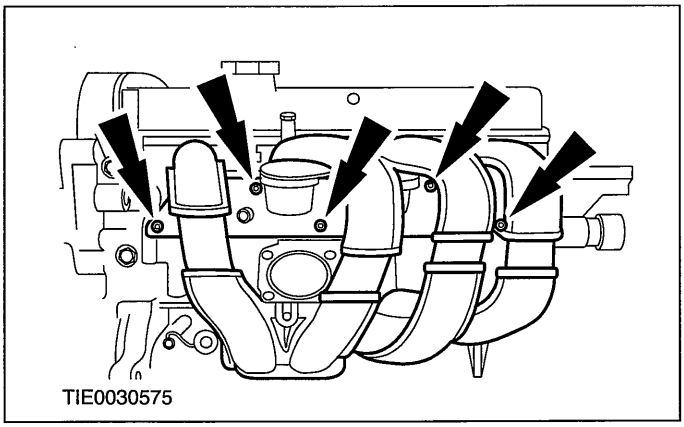


7. **Remove the engine rear lifting eye.**

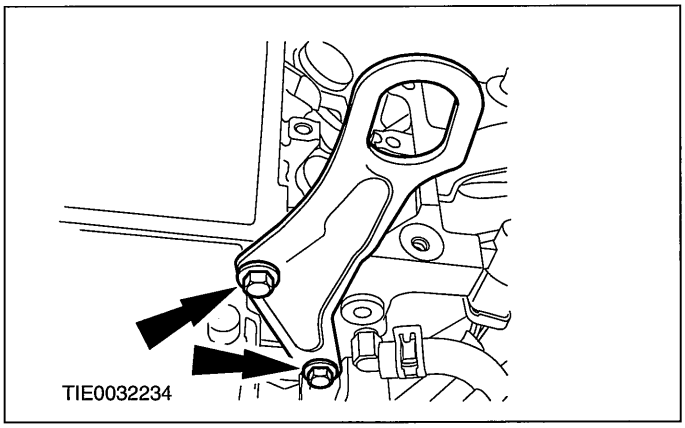


8. **Remove the coolant distribution housing and the ignition coil (EI).**

## DISASSEMBLY AND ASSEMBLY OF SUBASSEMBLIES

- Discard the gasket.

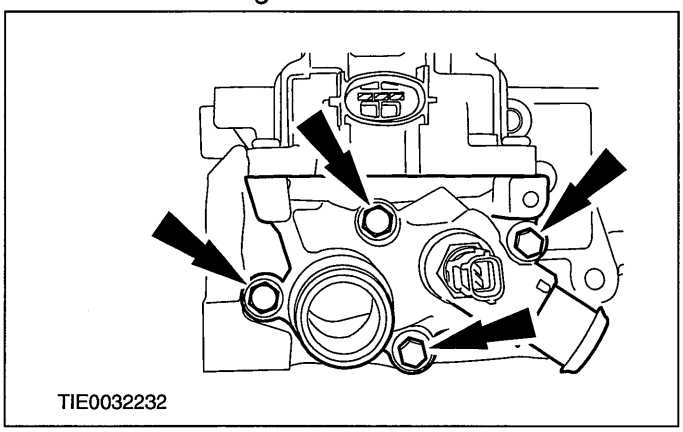


**9. Remove the camshaft position (CMP) sensor.**

- Discard the O-ring seal.

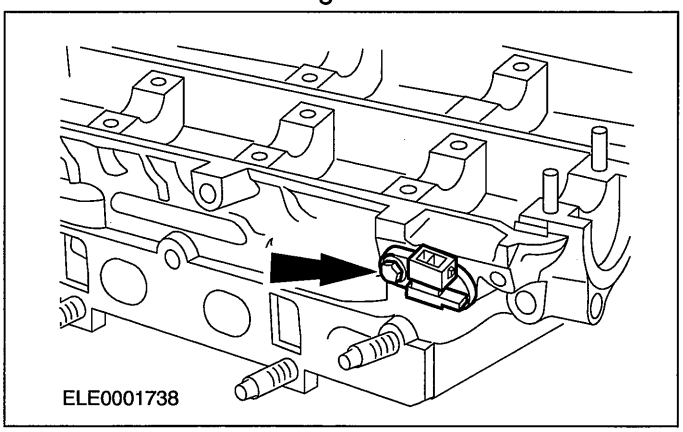


### Assembly

**1. NOTE:A new cylinder head is supplied without exhaust manifold studs.**

**Install the exhaust manifold studs if necessary.**

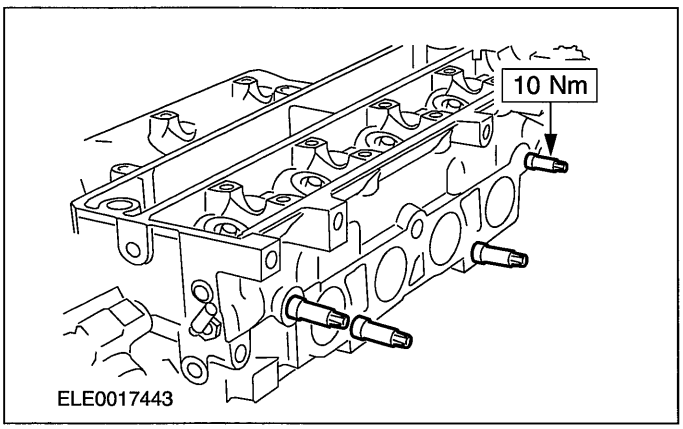


**2. NOTE:Install a new camshaft position (CMP) O-ring seal.**

**Install the CMP sensor.**

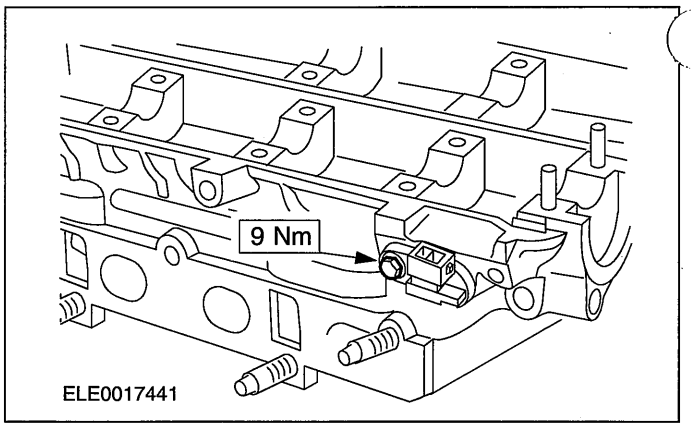


**3. NOTE:Install a new coolant distribution housing gasket.**

**Install the coolant distribution housing and the ignition coil (EI).**

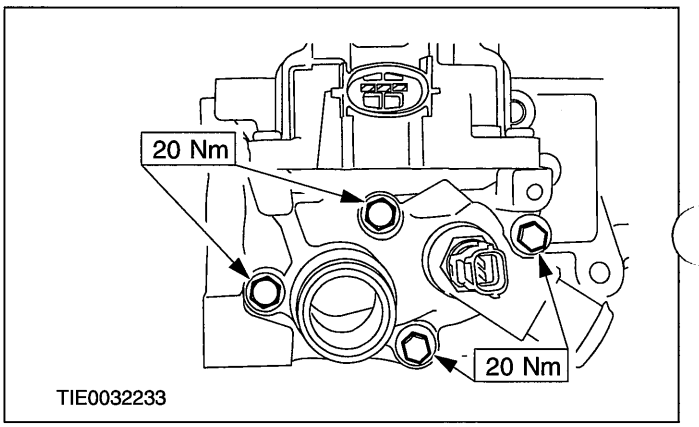


**4. Install the engine rear lifting eye.**

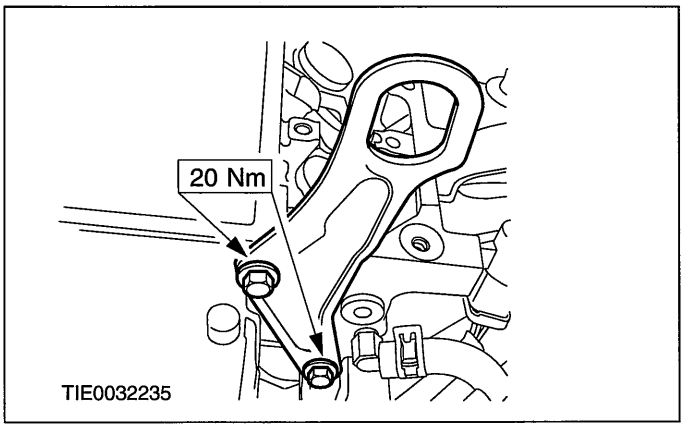


**5. NOTE:Install new intake manifold gaskets.**

## DISASSEMBLY AND ASSEMBLY OF SUBASSEMBLIES

**Install the intake manifold.**

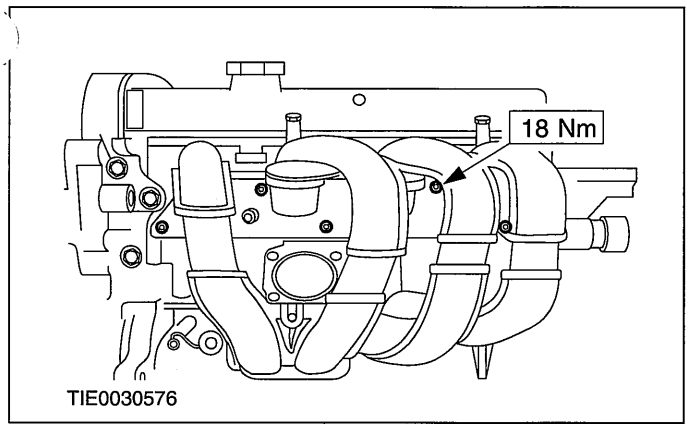


6. **NOTE:Install new fuel supply manifold O-ring seals.**

   **Install the fuel supply manifold.**

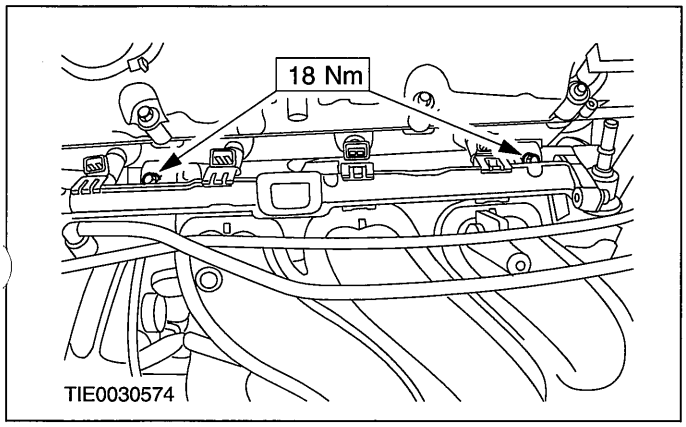


7. **Install the engine wiring harness.**
8. **Connect the fuel injector electrical connectors.**

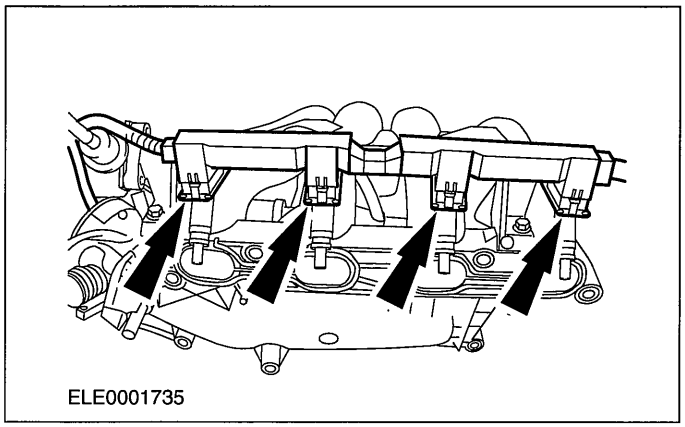


9. **Connect the throttle plate control motor (DC-ISC) electrical connector.**

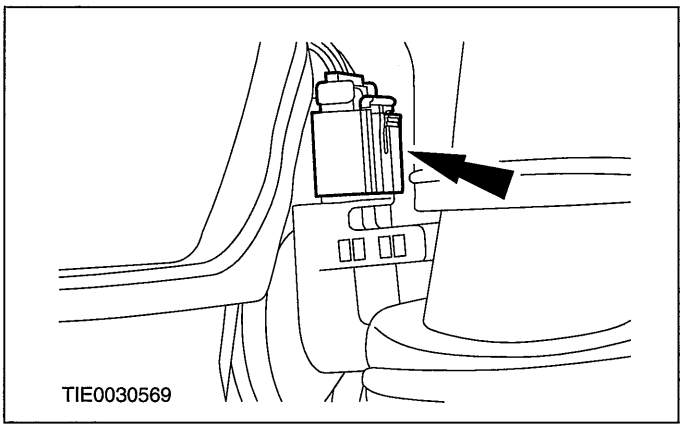


10. **Connect the temperature and manifold absolute pressure (T-MAP) sensor electrical connector.**

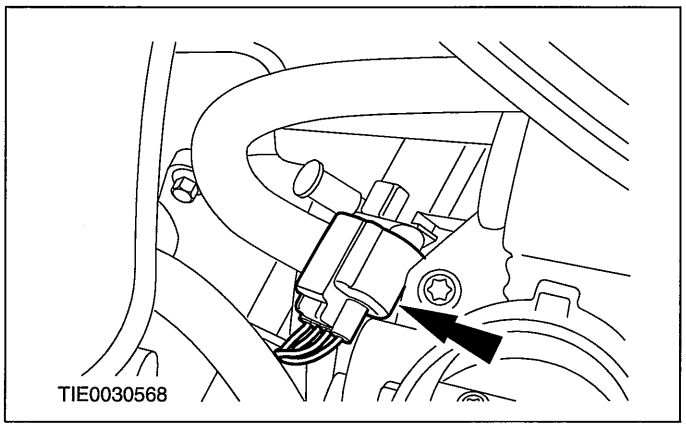

## ASSEMBLY

# Engine(21 134 8)

### Special Tool(s)

| | |
|---|---|
| 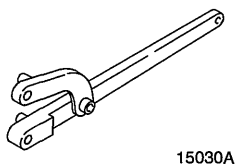 15030A | Universal Flange Holding Wrench 205-072 (15-030A) |
| 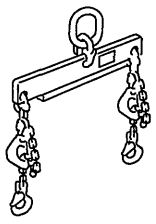 21068A | Lifting Bracket, Engine 303-122 (21-068A) |
| 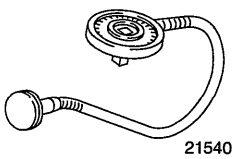 21540 | Gauge, Bolt Angle 303-174 (21-540) |
| 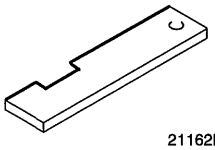 21162B | Alignment Plate, Camshaft 303-376B (21-162B) |
| 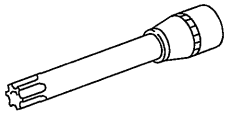 21167 | Socket, Cylinder Head Bolt 303-392 (21-167) |
| 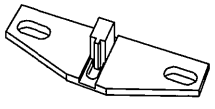 21168 | Locking Tool, Flywheel 303-393 (21-168) |

### Special Tool(s)

| | |
|---|---|
| 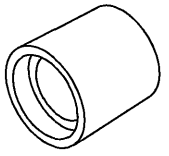 21171 | Installer, Crankshaft Seal 303-395 (21-171) |
| 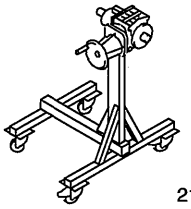 21187 | Mounting Stand 303-435 (21-187) |
| 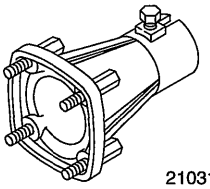 21031B | Mounting Bracket for 303-435 303-435-06 (21-031B) |
| 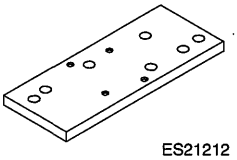 ES21212 | Mounting Plate for 303-435-06 303-435-14A (21-212A) |
| 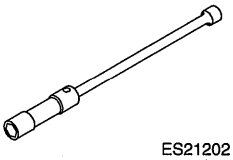 ES21202 | Socket, Spark Plug 303-499 (21-202) |
| 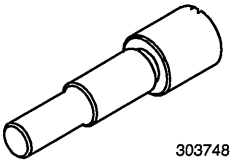 303748 | Locking Tool, Crankshaft 303-748 (21-259) |

## ASSEMBLY

### Special Tool(s)

| | |
|---|---|
| 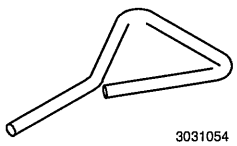 3031054 | Locking Tool, Timing Belt Tensioner 303-1054 |

### General Equipment

| |
|---|
| Five M8 x 20 mm studs |
| Engine hoist |

### Materials

| Name | Specification |
|---|---|
| Engine Oil - 5W-30 | WSS-M2C913-B |
| Silicone Sealant | WSE-M4G323-A4 |
| Adhesive - Loctite 243 | WSK-M2G349-A7 |
| Gasket Eliminator Sealant | WSK-M2G348-A5 |
| High-Temperature Grease | ESD-M1C220-A |

All vehicles

1. **Attach the cylinder block (short block) to the mounting stand.**
   - Install the special tools.

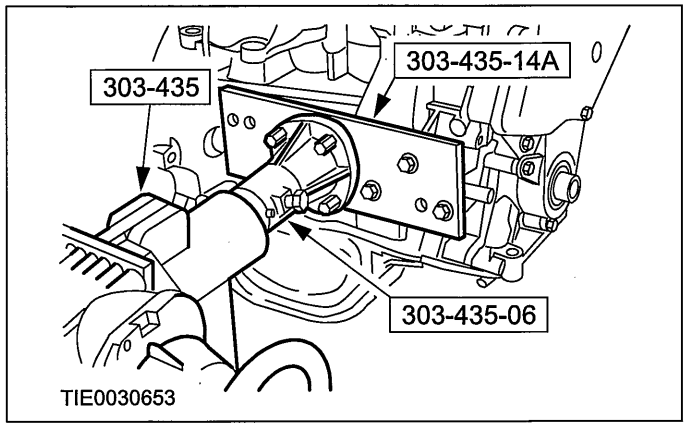


2. **NOTE:Install a new crankshaft rear seal carrier.**

**NOTE:**A new crankshaft rear seal carrier is supplied with an alignment sleeve which must be removed following installation.

**NOTE:**Do not lubricate the seal lip.

**Install the crankshaft rear seal carrier.**

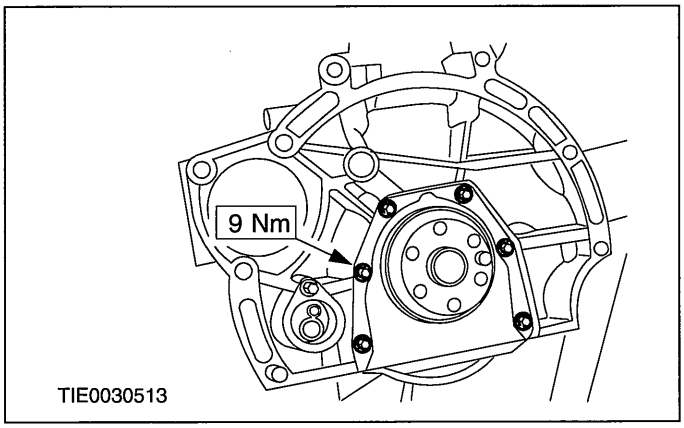


3. **Install the crankshaft position (CKP) sensor bracket.**

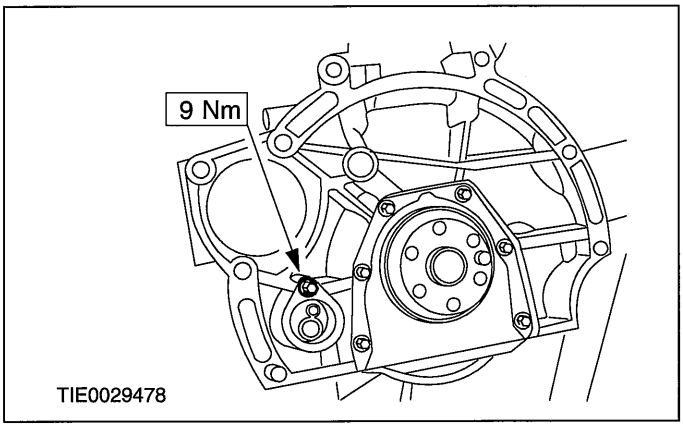


4. **Install the CKP sensor.**

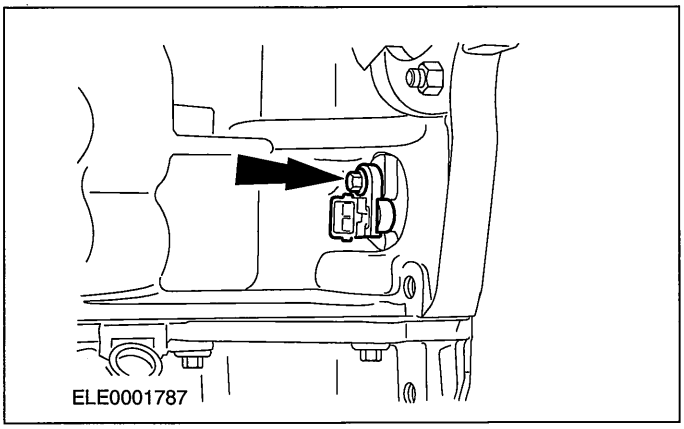


Vehicles with manual transaxle

5. **NOTE:Install new flywheel retaining bolts.**

   **Using the special tool, install the flywheel.**
   - Tighten the bolts in the sequence shown in two stages.
   - Stage 1: 30 Nm.

## ASSEMBLY

- Stage 2: 80 degrees.

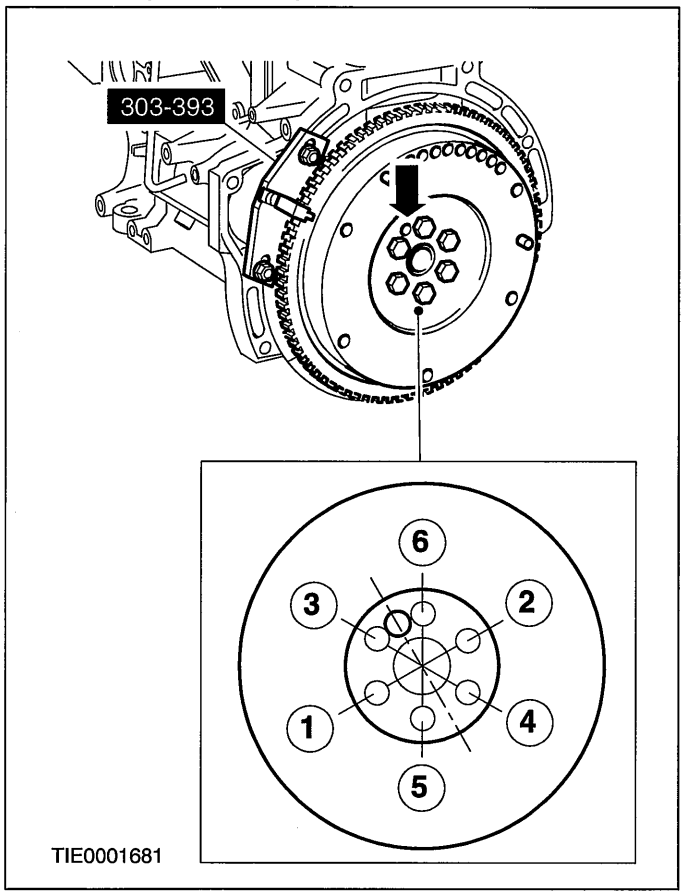


6. **Install the clutch disc and pressure plate.**

   **For additional information, refer to: Clutch Disc and Pressure Plate (308-01 Clutch, Removal and Installation).**

7. **Remove the special tool from the flywheel.**

Vehicles with automatic transaxle

8. **NOTE:Install new flexplate retaining bolts.**

   **Using the special tool, install the flexplate.**

   - Tighten the bolts in the sequence shown in two stages.
   - Stage 1: 30 Nm.
   - Stage 2: 80 degrees.

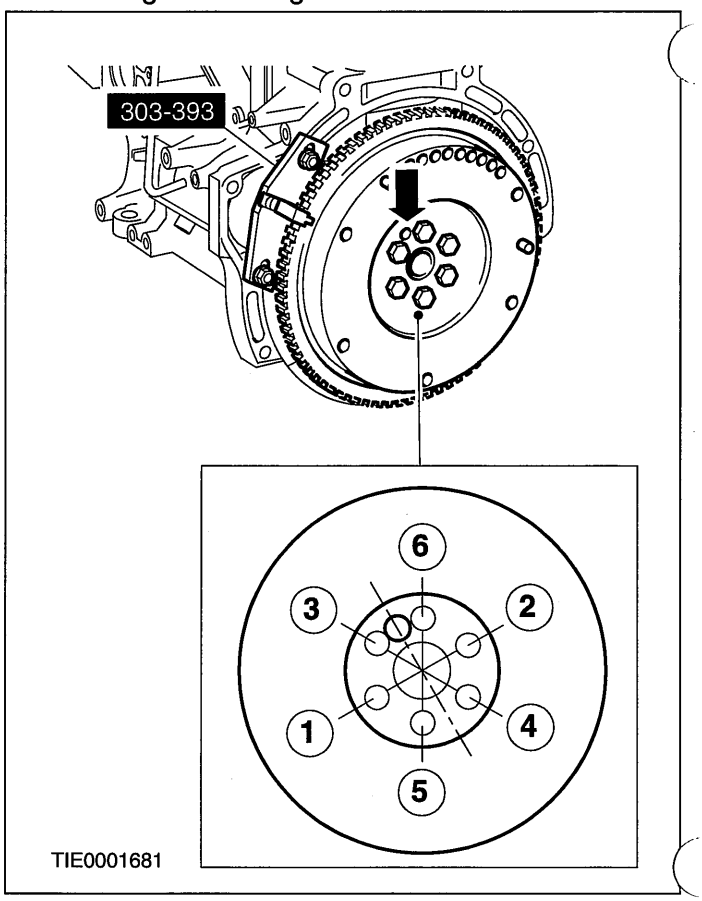


9. **Remove the special tool from the flexplate.**

All vehicles

10. **NOTE:Install a new oil pump gasket.**

    **Install the oil pump.**

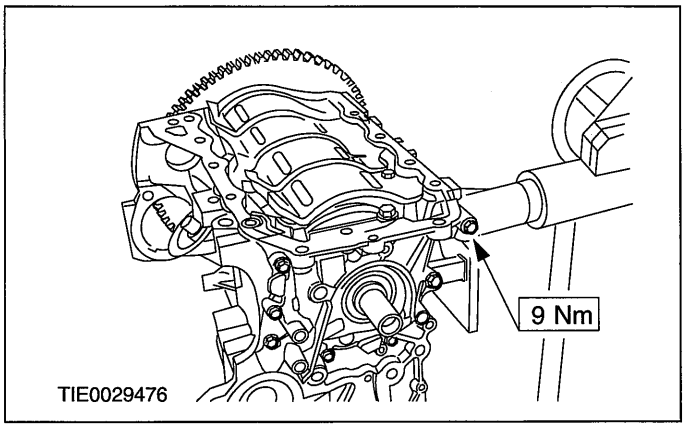


11. **NOTE:Install a new pickup pipe gasket.**

## ASSEMBLY

**Install the oil pump pickup pipe.**

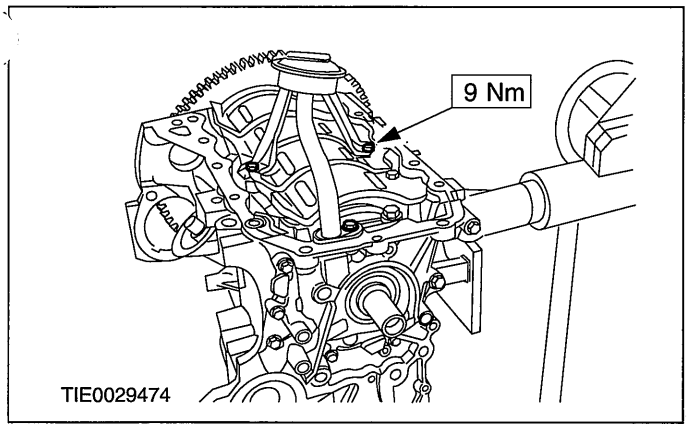


12. **Coat the crankshaft front seal lip with clean engine oil.**
13. **NOTE:Install a new crankshaft front seal.**

    **Using the special tool, install the crankshaft front seal.**

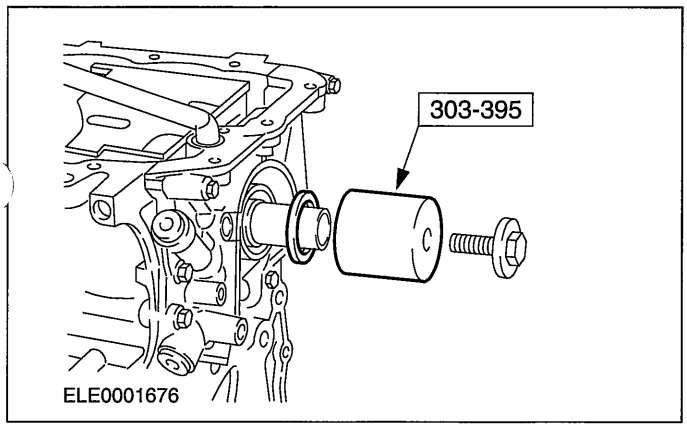


14. **⚠CAUTION:The crankcase may be damaged if sealant enters the blind holes.**

    **Install five M8 x 20 mm studs into the blind holes as shown.**

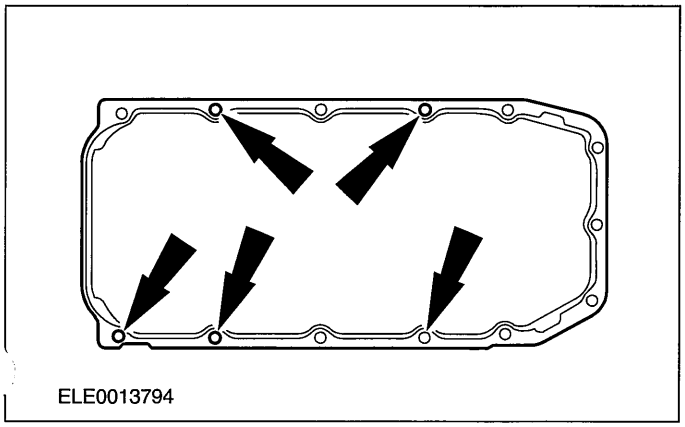


15. **NOTE:Attach the oil pan within ten minutes of applying sealant and tighten the bolts within a further five minutes.**

    **Apply a 3 to 4 mm diameter thick bead of sealant to the oil pan flange.**

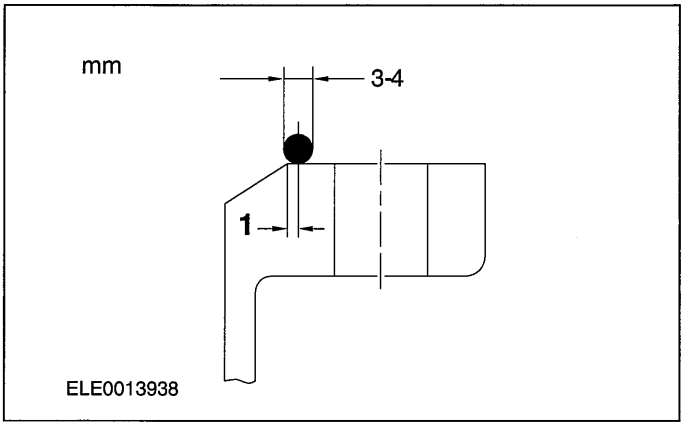


16. **NOTE:Align the oil pan so that the cylinder block is flush with the oil pan on the flywheel side.**

    **Install the oil pan, loosely install the retaining bolts.**

    - Remove the studs and install retaining bolts.
    - Tighten the oil pan retaining bolts in the sequence shown in two stages.
    - Stage 1: 10 Nm.
    - Stage 2: 20 Nm.

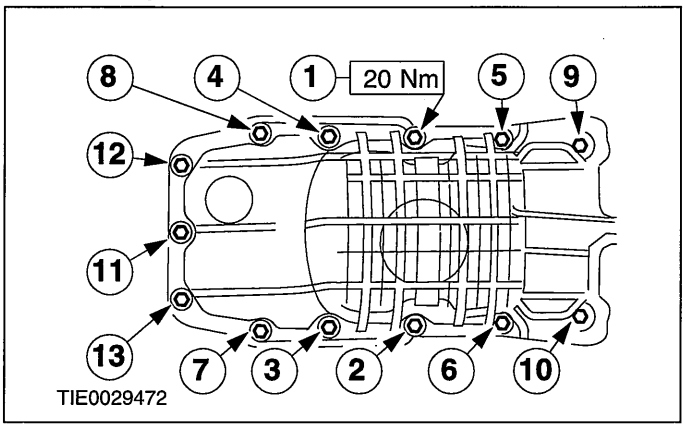


17. **NOTE:Inspect the oil pan drain plug seal for damage. Install a new drain plug and seal if required.**

## ASSEMBLY

**Install the drain plug.**

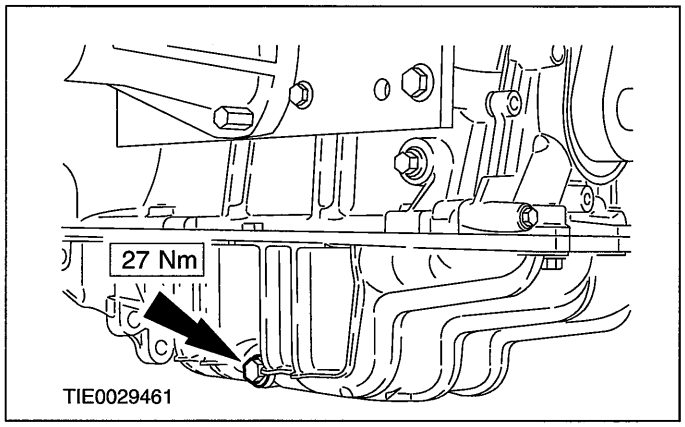


18. **Install the positive crankcase ventilation (PCV) cover.**

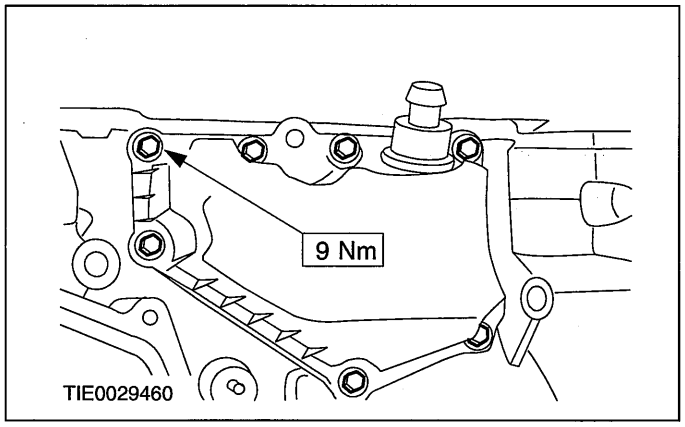


19. **⚠CAUTION:The knock sensor (KS) cable must not touch the cylinder head or the PCV cover. Position the KS cable at approximately the 10 o'clock position.**

**Install the KS.**

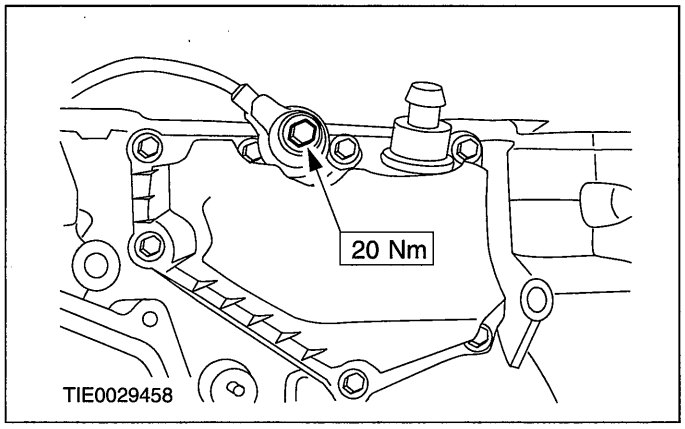


20. **NOTE:Install a new thermostat housing gasket.**

**Install the thermostat housing.**

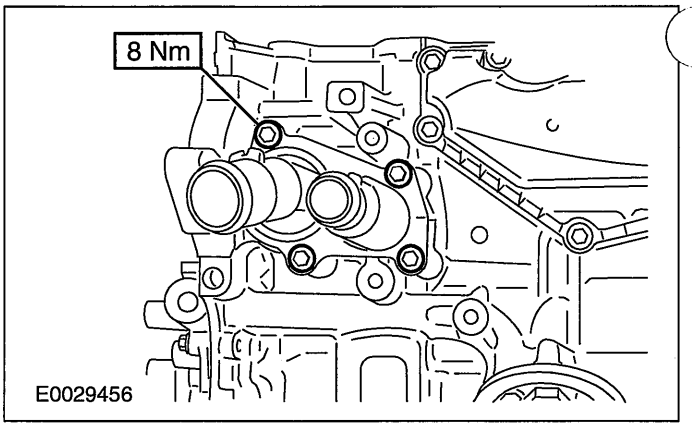


21. **Install the oil pressure switch.**
    - Apply adhesive to the oil pressure switch threads.

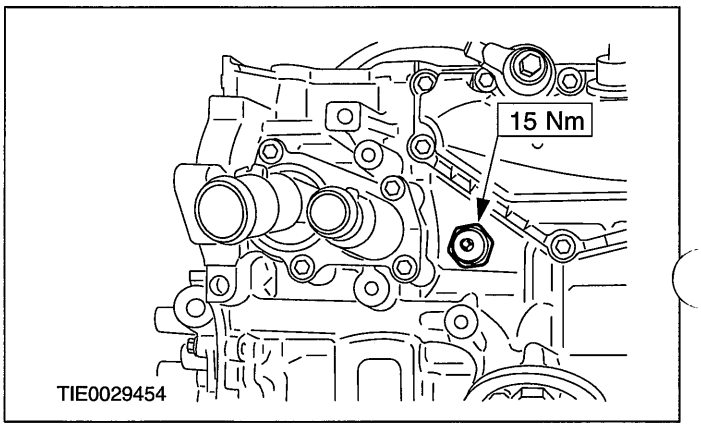


22. **⚠CAUTION:Do not damage the coolant pump impeller.**

**NOTE:**Install a new coolant pump gasket.

**Install the coolant pump.**

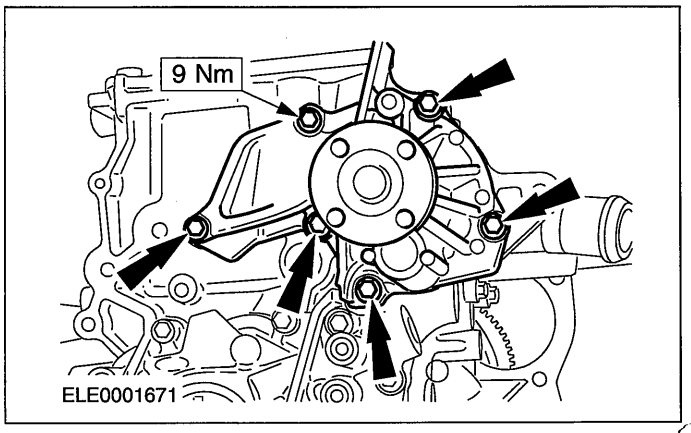


23. **Turn the crankshaft to approximately 25 mm before top dead center (BTDC) on cylinder number 1.**

## ASSEMBLY

24. **⚠CAUTION:The thickness of the new cylinder head gasket must be the same as that of the old one (hole marked).**

**NOTE:**Install a new cylinder head gasket.

**NOTE:**Position the cylinder head onto the two guide sleeves.

**Using the special tool, install the cylinder head.**

- Tighten the cylinder head bolts in the sequence shown in three stages.
- Stage 1: 15 Nm.
- Stage 2: 30 Nm.
- Stage 3: 90 degrees.

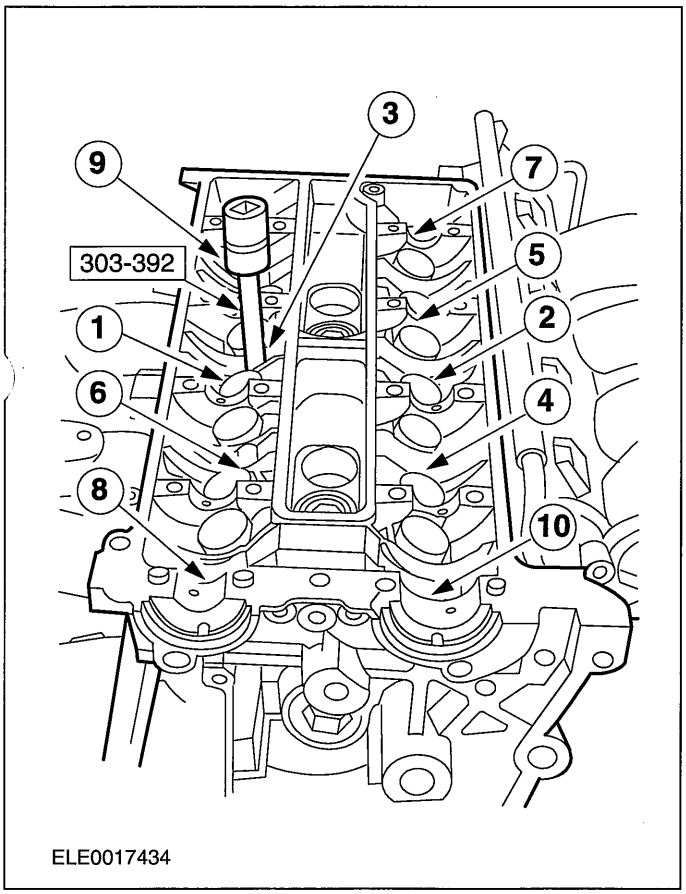


25. **Install the intake manifold lower retaining bolt.**

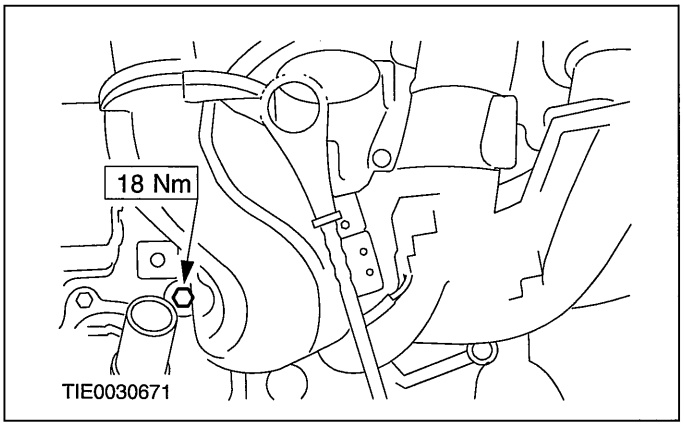


26. **Attach the oil level indicator tube to the intake manifold.**

- Attach the KS electrical connector to the oil level indicator tube.

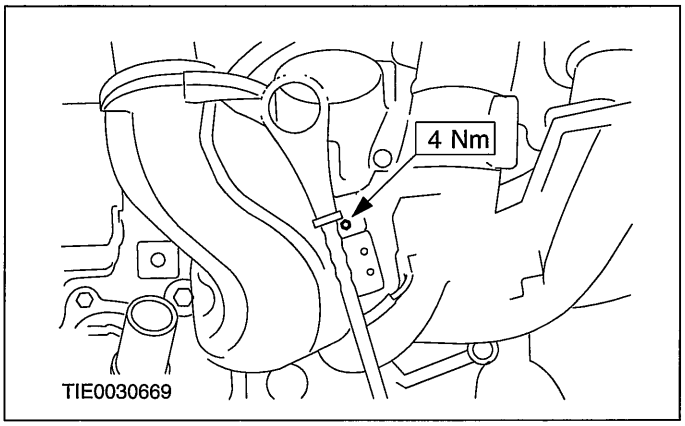


27. **Connect the PCV hose to the PCV cover.**

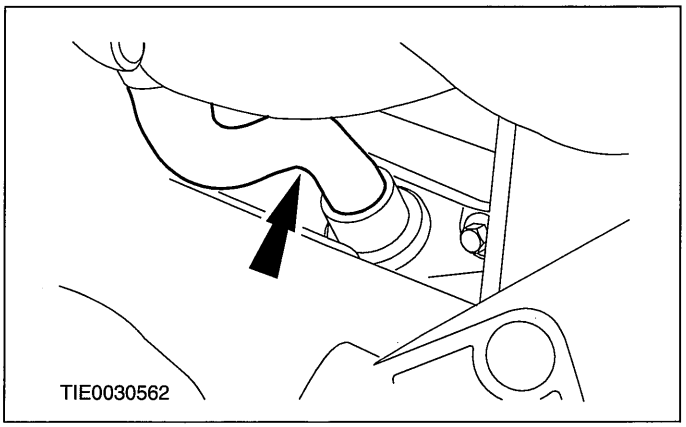


28. **NOTE:Identification numbers are provided on the outer face of the camshaft bearing caps.**

## ASSEMBLY

**Apply sealant to the points indicated on the camshaft bearing cap no. 1 and to the mating surface of the cylinder head.**

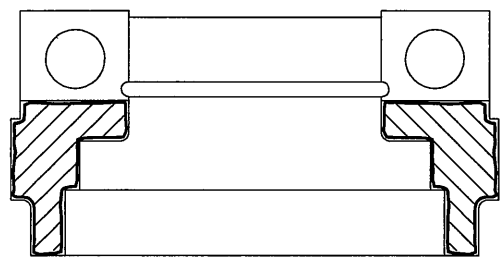

V9910293

29. **Coat the camshafts and the camshaft bearing caps with clean engine oil.**

30. **⚠CAUTION:Position the camshafts in place so that none of the cams are at full lift.**

**NOTE:**The camshaft bearing cap numbering starts at the timing belt end with E1 on the exhaust side and with I1 on the intake side.

**NOTE:**The exhaust camshaft has an additional cam for the camshaft position (CMP) sensor.

**Install the camshafts and camshaft bearing caps.**

- Tighten the camshaft bearing cap retaining bolts in the sequence shown in three stages.
- Stage 1: One half turn on each bolt until all of the camshaft bearing caps are in contact with the cylinder head.
- Stage 2: 7 Nm.
- Stage 3: 45 degrees.

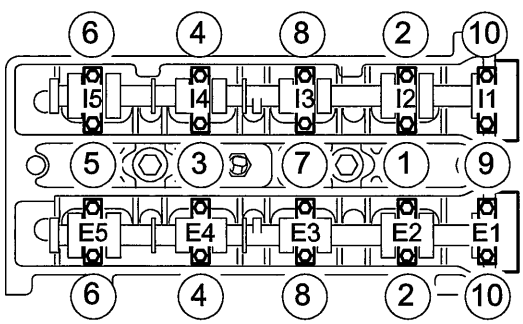


ELE0002274

31. **Coat the camshaft journals and seal lips with clean engine oil.**

32. **NOTE:Install new camshaft seals.**

**Using the special tool, install the camshaft seals.**

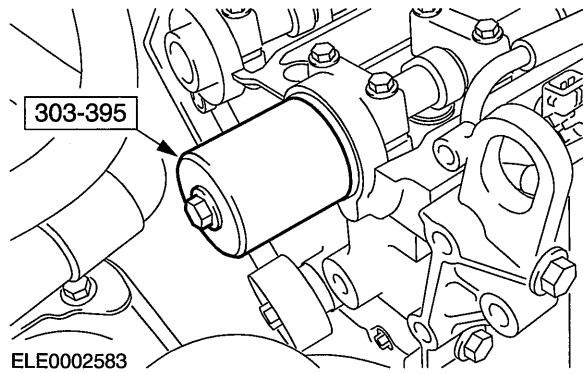


ELE0002583

33. **Install the timing belt rear cover.**

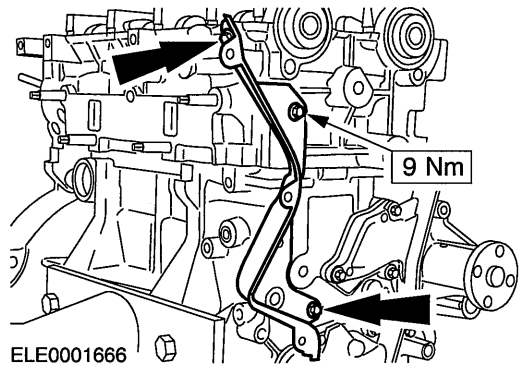


ELE0001666

34. **Set the crankshaft to approximately 20 degrees before TDC.**

35. **Turn the camshafts to top dead center (TDC) on cylinder number 1 and install the special tool.**

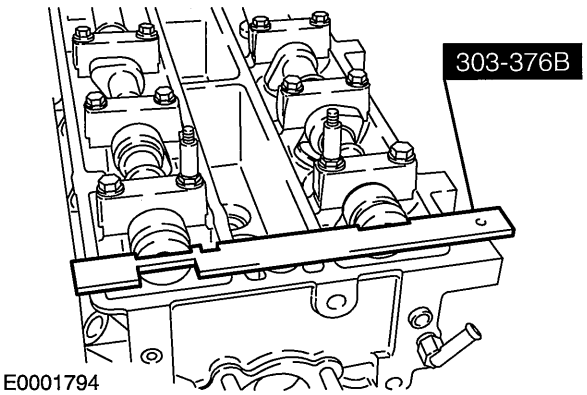


E0001794

36. **NOTE:Do not fully tighten the camshaft timing pulley retaining bolts at this stage. Make sure the camshaft pulleys turn on the camshafts.**

**NOTE:**Install new camshaft pulley retaining bolts.

## ASSEMBLY

**Install the camshaft timing pulleys.**

**37. Install the crankshaft timing belt pulley.**

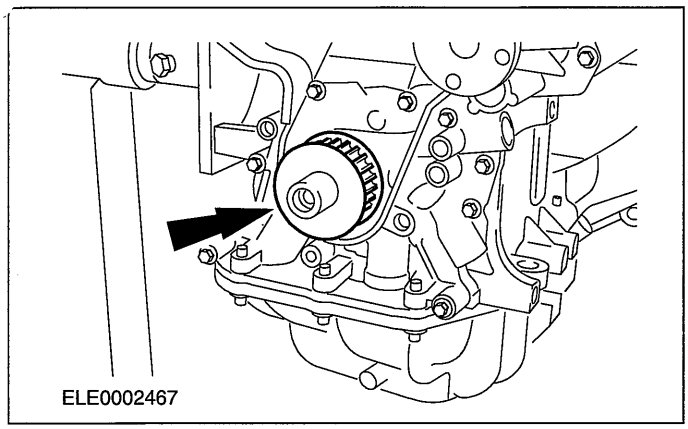


**38. NOTE:Install a new timing belt.**

**NOTE:**Install the timing belt, beginning with the crankshaft timing pulley working counterclockwise.

**Install the timing belt.**

**39. Remove the blanking plug and install the special tool.**

- Carefully turn the crankshaft against the special tool.

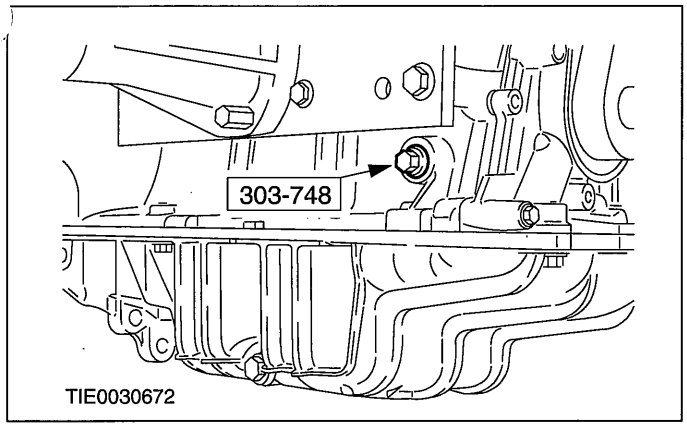


**40. Measuring the depth of the threaded hole in the crankshaft.**

- Depth of the threaded = 42 mm: Use an M12x29 mm crankshaft pulley center bolt.
- Depth of the threaded = 52 mm: Use an M12x44,5 mm crankshaft pulley center bolt.

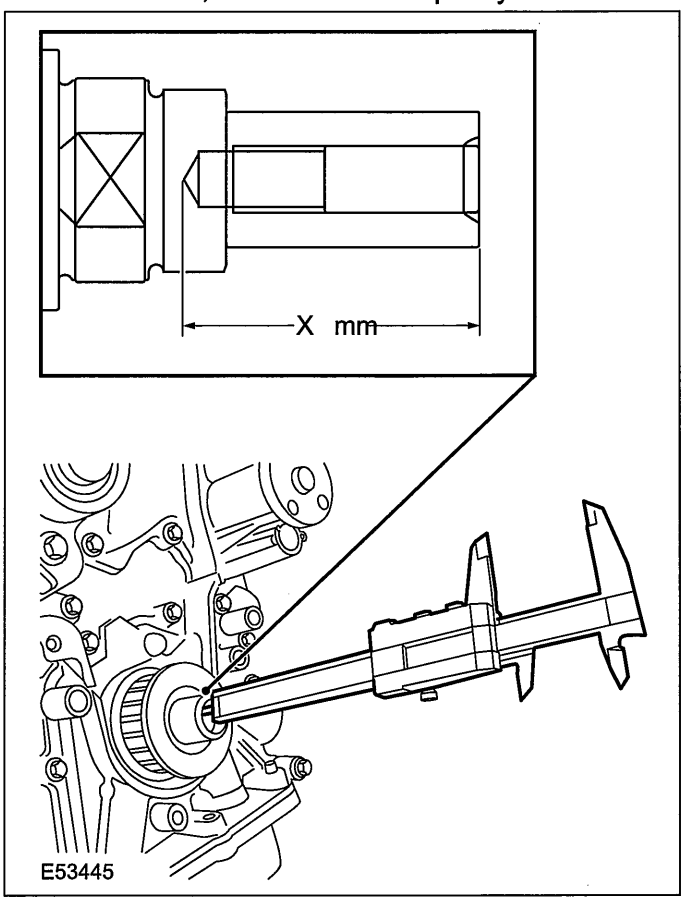


**41. Install the timing belt lower cover.**

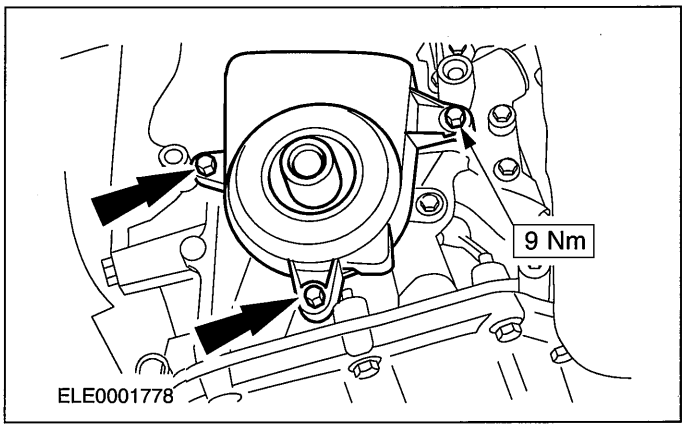


**42. NOTE:Install a new crankshaft pulley retaining bolt.**

**Install the crankshaft pulley.**

- Tighten the crankshaft pulley retaining bolt in two stages.
- Stage 1: 45 Nm.

## ASSEMBLY

- Stage 2: 90 degrees.

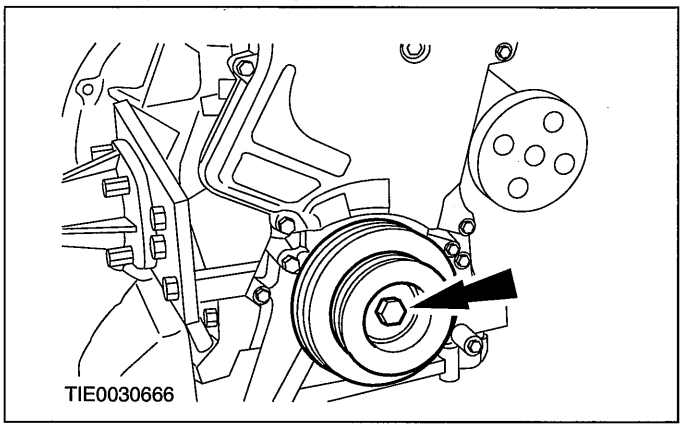


Engines with eccentric cam timing belt tensioner

**43. Install the timing belt tensioner.**

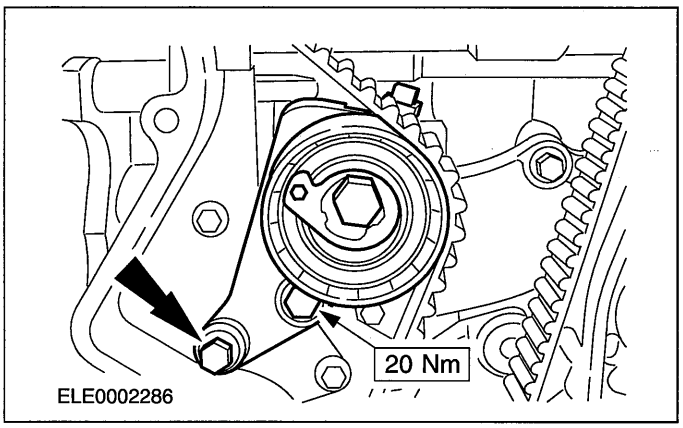


**44. Tension the timing belt.**

- Tension the timing belt by turning the tensioner counterclockwise until the arrow points at the mark and tighten the bolt.

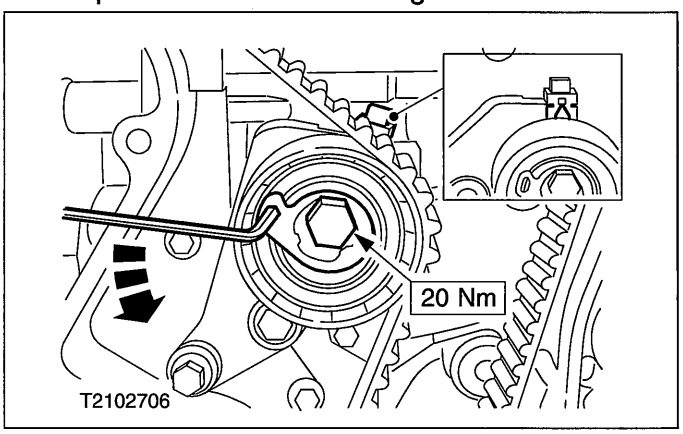


Engines with slotted bracket timing belt tensioner

**45. Install the timing belt tensioner and tension the timing belt.**

- Install the bolts finger tight.
- Tension the timing belt by turning the tensioner clockwise until the arrow points in line with the center of the rectangular hole and tighten the bolts.

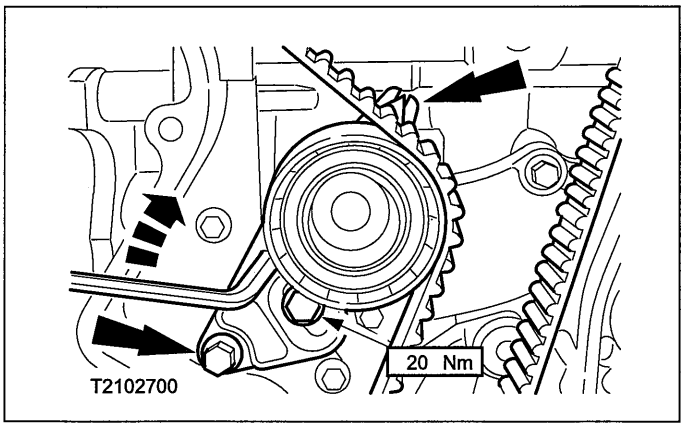


Vehicles built 09/2003 onwards

**46. ▲WARNING:Do not remove the special tool, until the timing belt is correctly positioned. Failure to follow this instruction may result in personal injury, or may damage the timing belt tensioner.**

**Install the timing belt tensioner.**

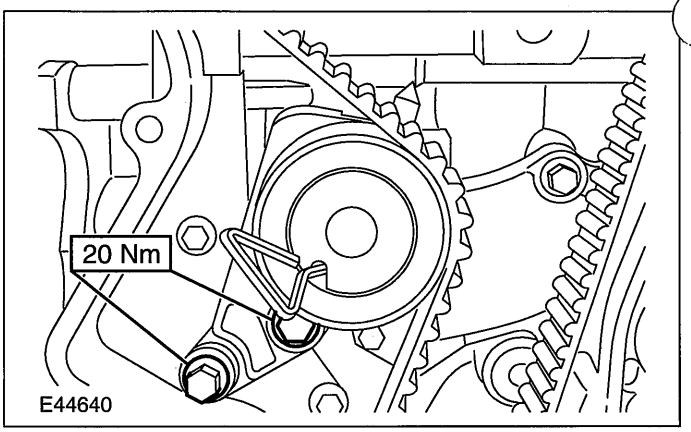


**47. Tension the timing belt.**

- Remove the special tool.

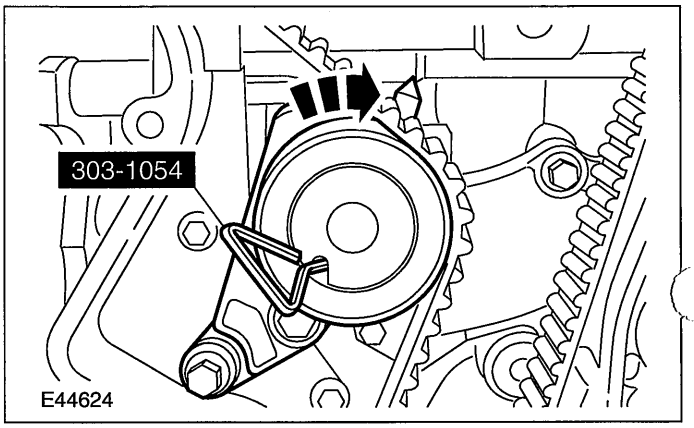

## ASSEMBLY

Vehicles built 04/2005 onwards

48. **▲WARNING:Do not remove the special tool, until the timing belt is correctly positioned. Failure to follow this instruction may result in personal injury, or may damage the timing belt tensioner.**

**Install the timing belt tensioner.**

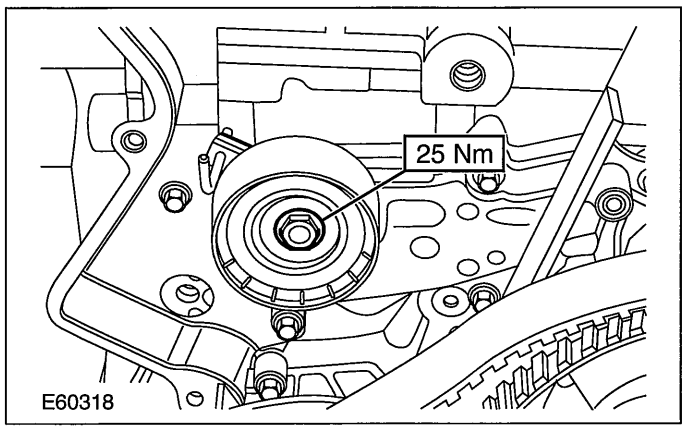


49. **Tension the timing belt.**
   - Remove the special tool.

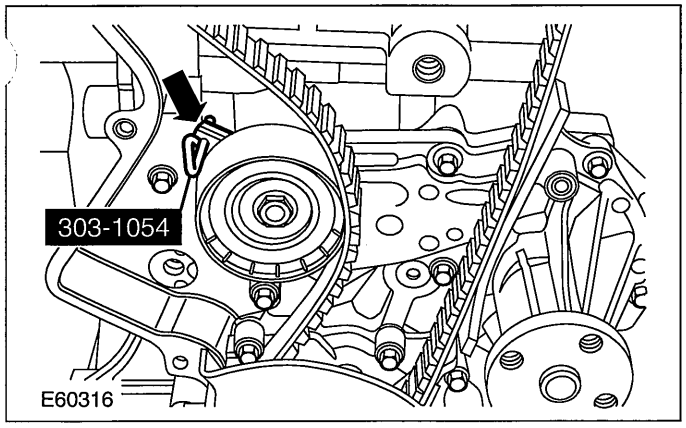


All vehicles

50. **CAUTIONS:**

**⚠Install a hose (order no. E890438S) to the special tool studs, to prevent damage to the camshaft pulleys.**

**⚠Do not tighten the camshaft pulley bolts against the timing plate.**

**Using the special tool, tighten the camshaft pulleys.**

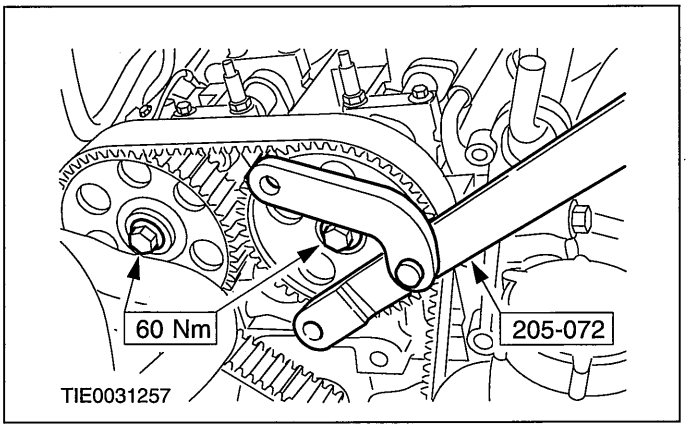


51. **Remove the special tool.**

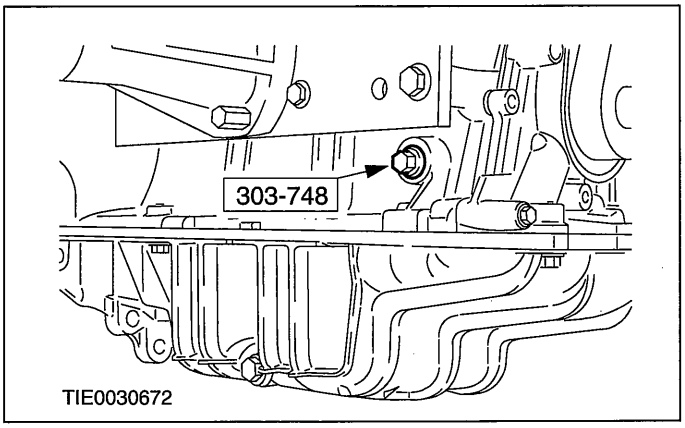


52. **Remove the special tool.**

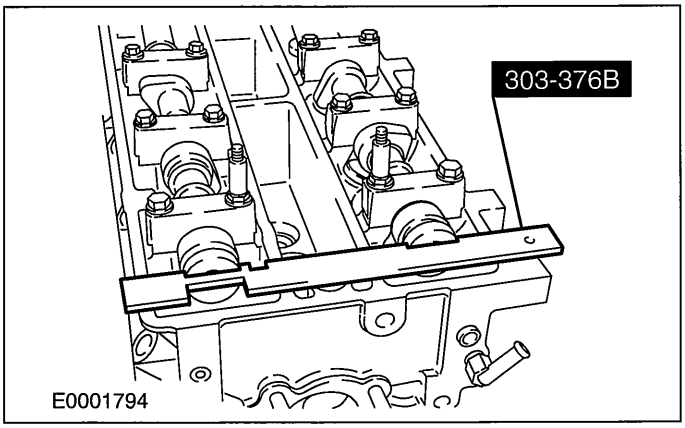


53. **NOTE:Only turn the crankshaft in its normal direction of rotation.**

**Turn the crankshaft two revolutions.**

54. **Install the special tool.**

## ASSEMBLY

- Carefully turn the crankshaft against the special tool.

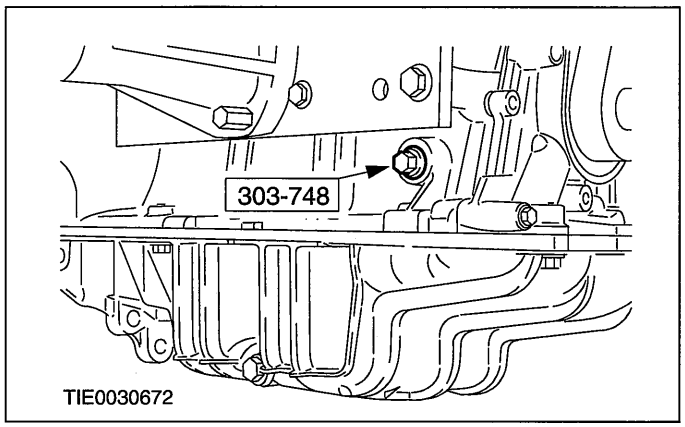


**55. Check the valve timing.**

- If necessary loosen the camshaft pulleys and correct the camshaft alignment.

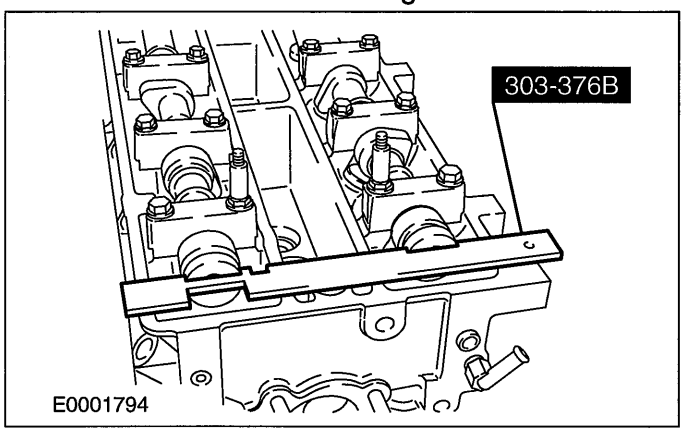


**56. Remove the special tools.**

**57. Install the blanking plug.**

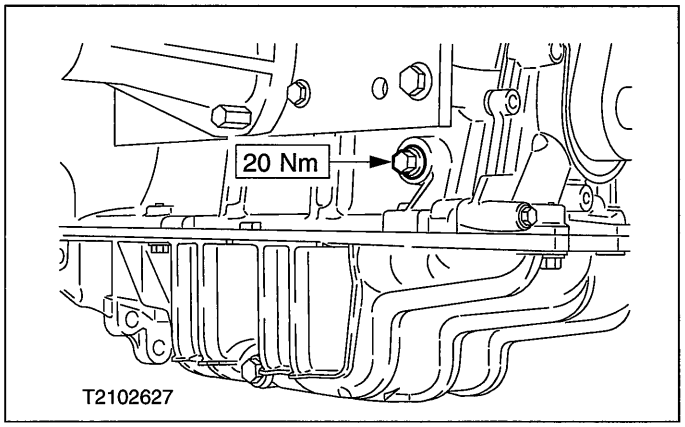


**58. Check the valve clearances, adjust if necessary.**

**For additional information, refer to: Valve Clearance Adjustment (303-01 Engine - 1.25L Duratec-16V (Sigma)/1.4L Duratec-16V (Sigma)/1.6L Duratec-16V (Sigma), General Procedures).**

**59. Using the special tool, install the spark plugs.**

- Apply grease to the spark plug threads.

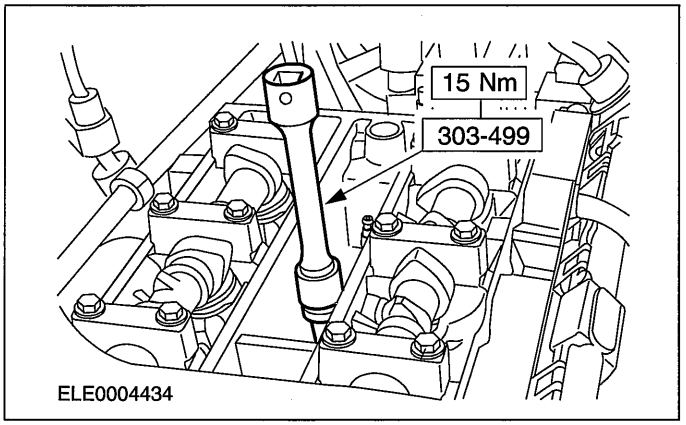


**60. NOTE:Install the stud bolts to positions 5 and 6.**

**Install the valve cover.**

- Tighten the bolts in the sequence shown in three stages.
- Stage 1: Tighten bolt 1 by 3 to 4 turns.
- Stage 2: Tighten bolts 1 through 13 to 3 Nm.
- Stage 3: Tighten bolts 1 through 13 to 9 Nm.

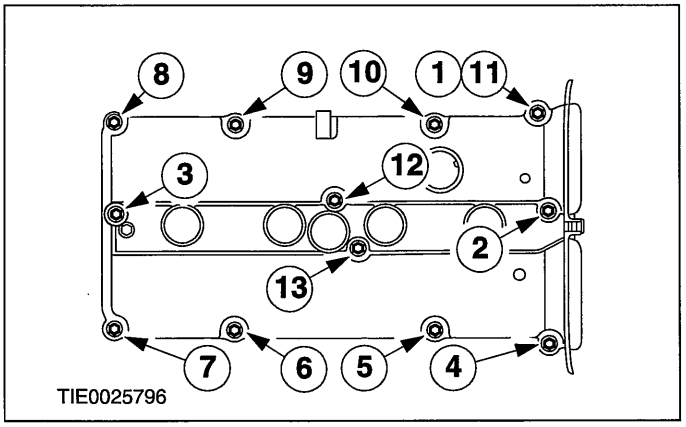


**61. ⚠CAUTION: Use a suitable blunt object to avoid damage to the spark plug connector gasket. Coat the inside of the spark plug connector with silicone grease to a depth of 5-10 mm.**

## ASSEMBLY

**Connect the spark plug electrical connectors and attach the wires to the valve cover.**

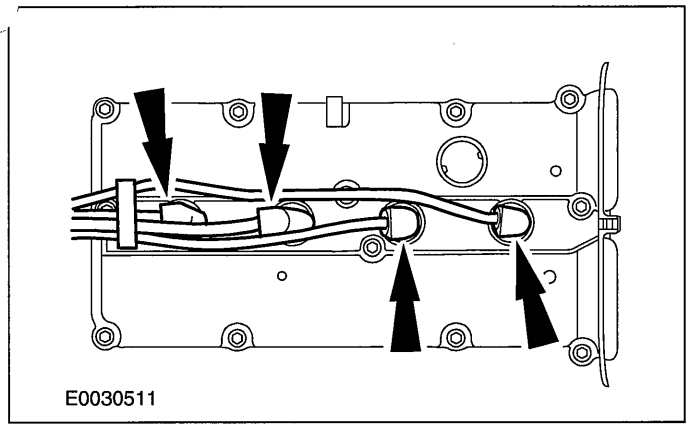


**62. Install the engine front mount bracket.**

- Tighten the bolts in the indicated order in three stages.
- Stage 1: Hand tighten bolt 1.
- Stage 2: Tighten bolts 2 to 55 Nm.
- Stage 3: Tighten bolt 3 to 55 Nm.

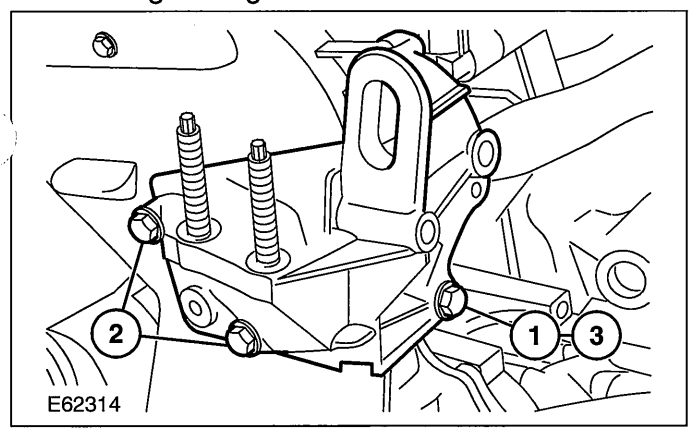


**63. Install the timing belt upper cover.**

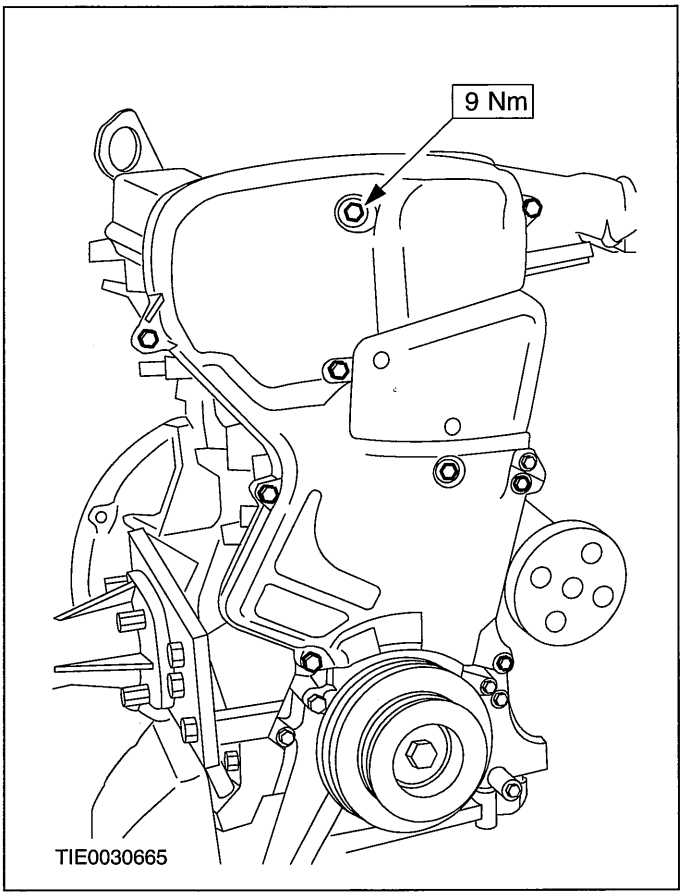


**64. Install the coolant pump pulley.**

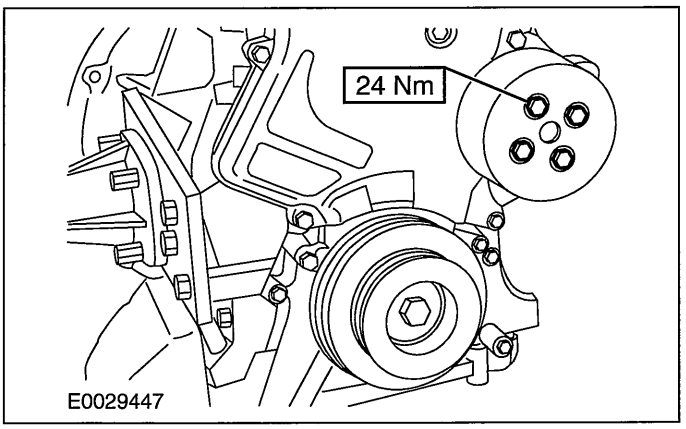

## ASSEMBLY

**65. Install the generator.**

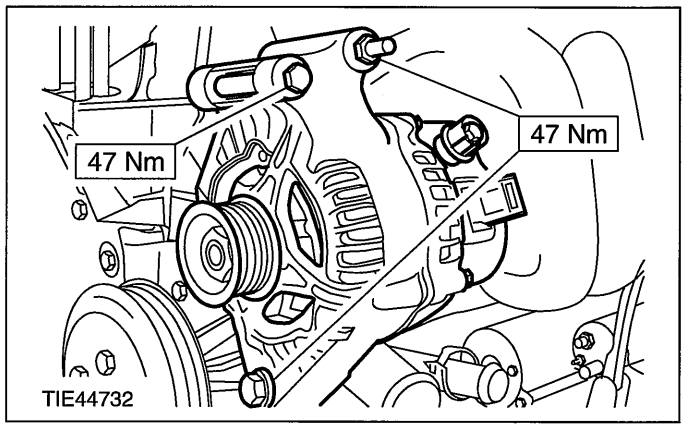


**66. NOTE:Install a new oil filter.**

**Install the oil filter.**

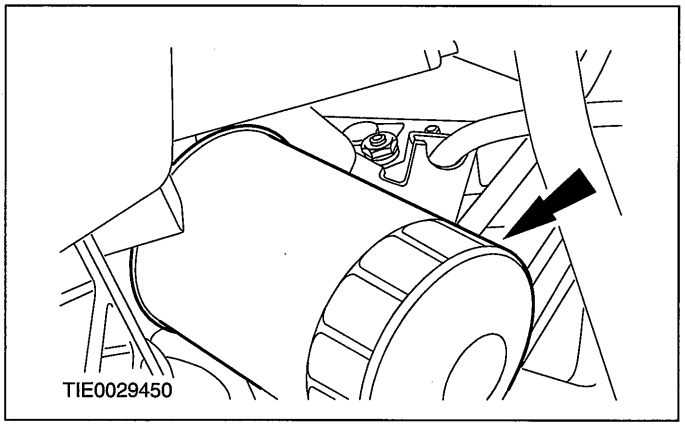


**67. Install the engine wiring harness.**

**68. Using the special tool attach the engine to an engine hoist.**

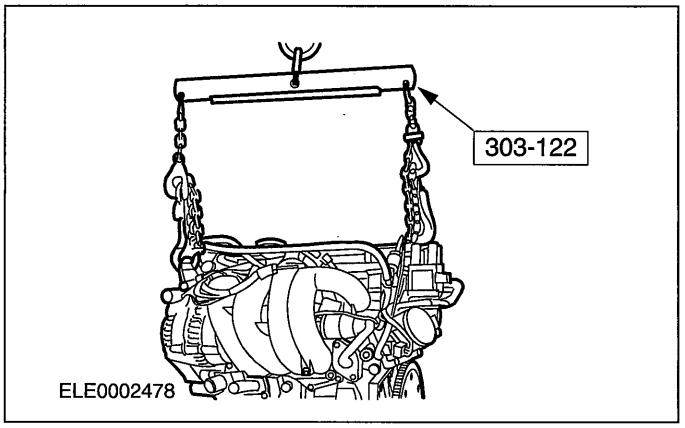


**69. Remove the special tools.**

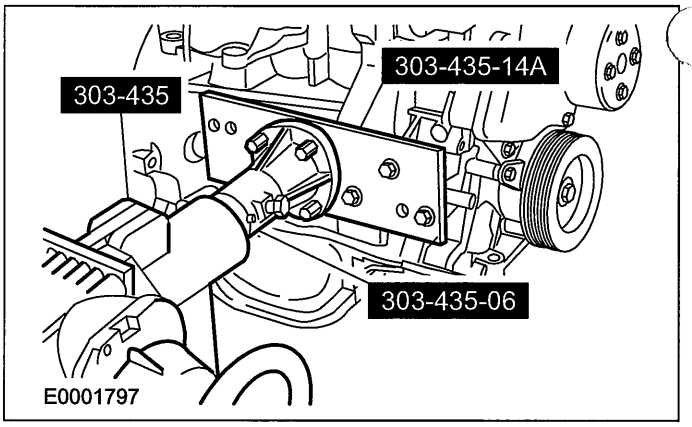


**70. NOTE:Install a new exhaust manifold gasket and new exhaust manifold retaining nuts.**

**NOTE:**Do not fully tighten the nuts and bolt at this stage.

**Install the exhaust manifold.**

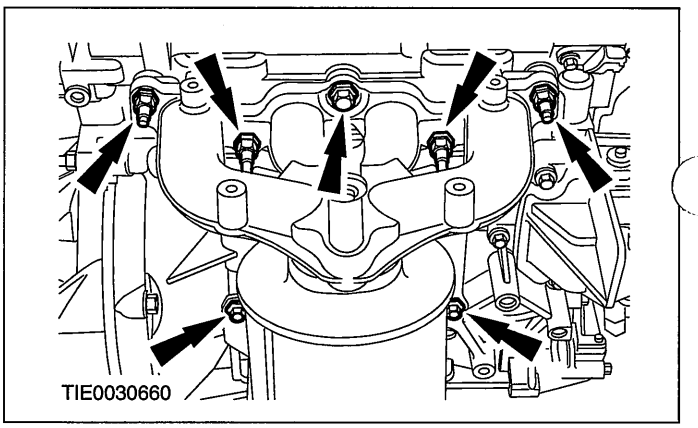


**71. Tighten the exhaust manifold upper retaining nuts and bolt in the sequence shown in two stages.**

- Stage 1: 20 Nm.
- Stage 2: 55 Nm.

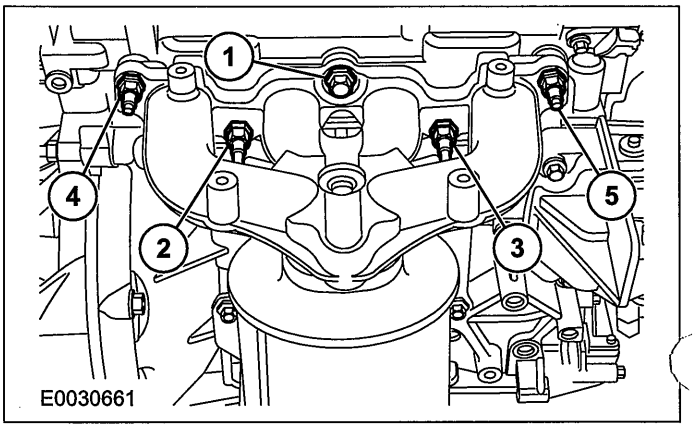

## ASSEMBLY

72. Tighten the exhaust manifold lower retaining bolts.

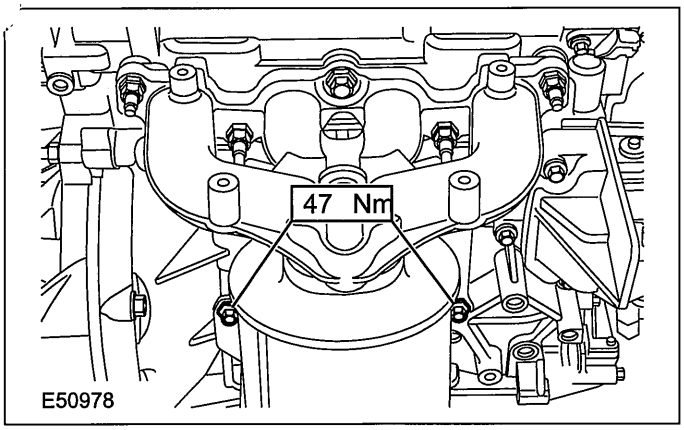


73. Install the exhaust manifold upper heat shield.

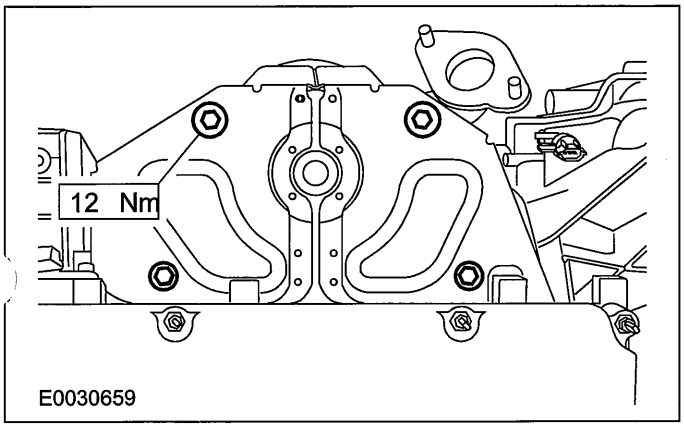


74. Install the exhaust manifold lower heat shield right-hand retaining bolts.

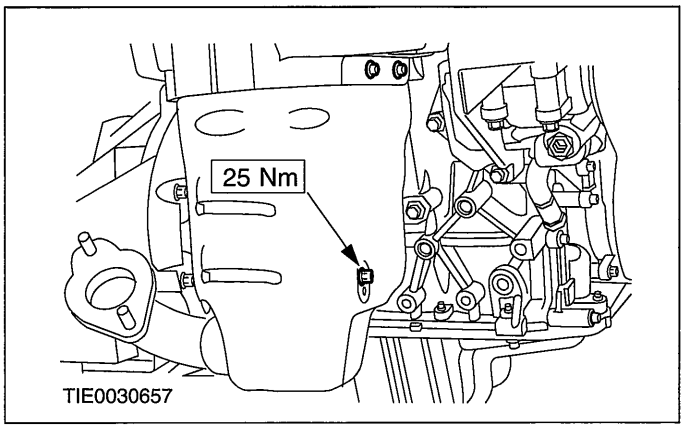


75. Install the exhaust manifold lower heat shield left-hand retaining bolts.

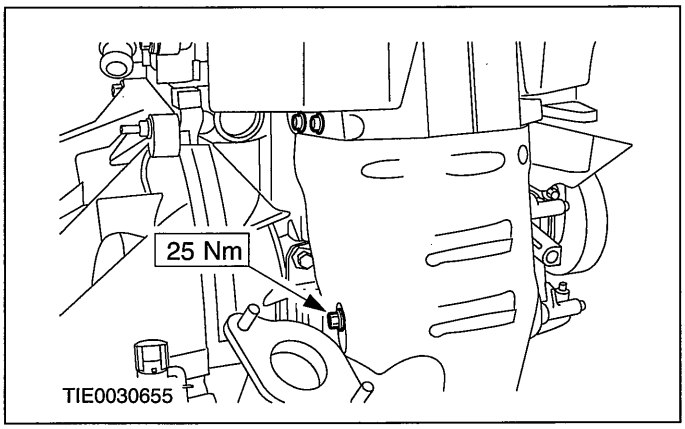

## INSTALLATION

# Engine

### Special Tool(s)

| | |
|---|---|
| 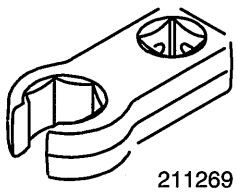 211269 | Wrench, Hydraulic Line Union Nut 211-269 (13-027) |
| 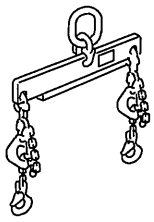 21068A | Lifting Bracket, Engine 303-122 (21-068A) |
| 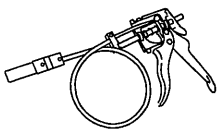 24003 | Remover/Installer, Hose Clamp 303-397 (24-003) |

### General Equipment

| |
|---|
| Securing straps |
| Workshop table |
| Engine hoist |

## Installation

All vehicles

**WARNING:Do not smoke or carry lighted tobacco or open flame of any type when working on or near any fuel related components. Highly flammable mixtures are always present and may ignite. Failure to follow these instructions may result in personal injury.**

1. **CAUTION:Make sure that the two locating dowels are installed.**

   **Install the transaxle to the engine.**

2. **Install the transaxle lower retaining bolts.**

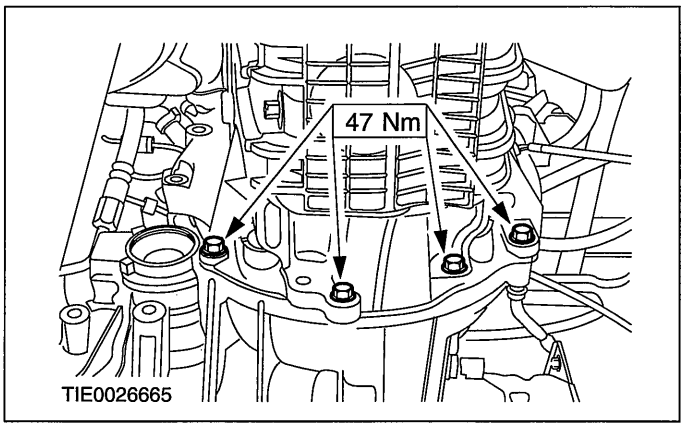


3. **WARNING:Support the engine and transaxle assembly on wooden blocks and secure it with suitable securing straps.**

   **Using the special tool and the engine hoist position the engine and transaxle assembly on the workshop table.**

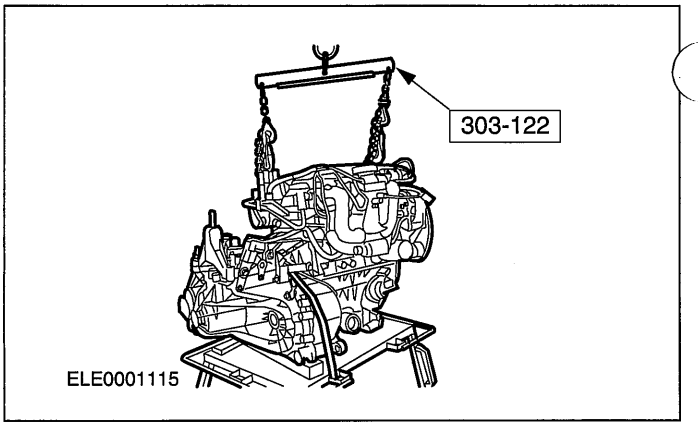


4. **Install the transaxle right-hand retaining bolt.**

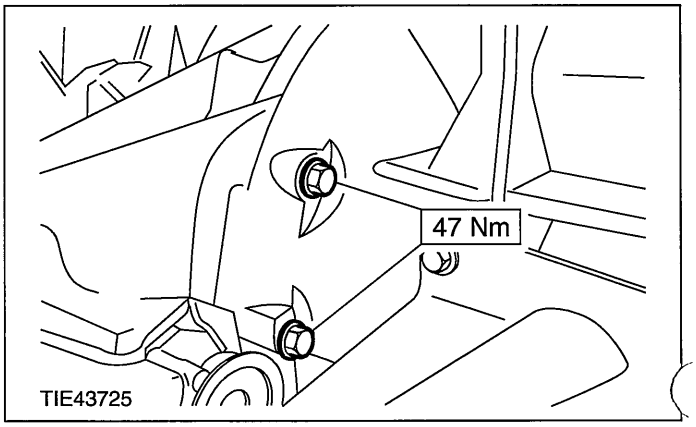

## INSTALLATION

5. **Install the starter motor and the transaxle left-hand retaining bolt.**

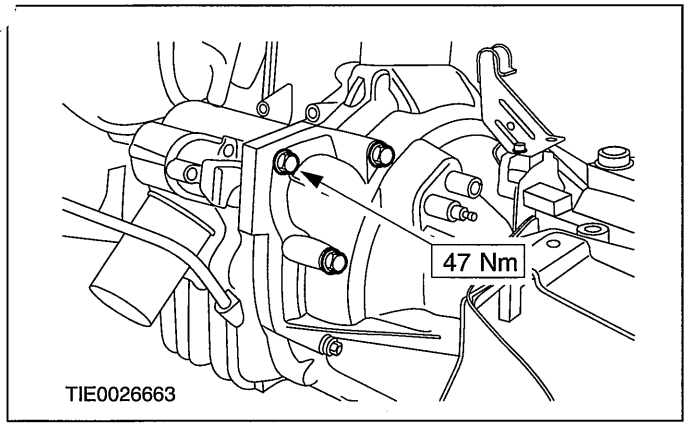


6. **Raise and support the vehicle.**

   **For additional information, refer to: Lifting (100-02 Jacking and Lifting, Description and Operation).**

7. **Position the engine and transaxle assembly in the engine compartment.**
   - Carefully lower the vehicle.

8. **NOTE:Install new engine front mount retaining nuts.**

**NOTE:**Do not tighten the engine front mount retaining bolts and nuts at this stage.

**Install the engine front mount.**

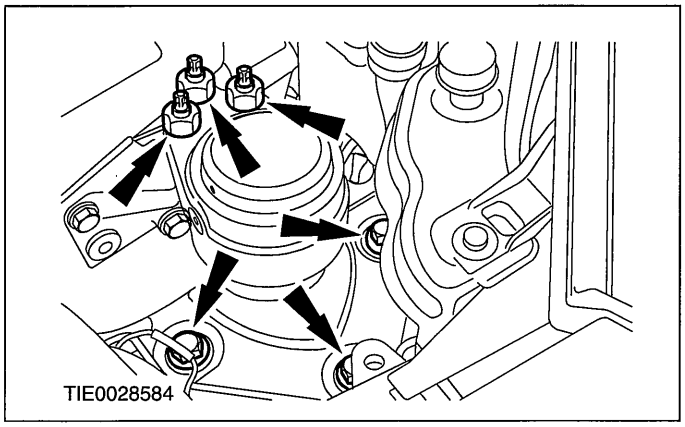


9. **NOTE:Install new engine rear mount retaining nuts.**

**NOTE:**Do not tighten the engine rear mount center retaining nut at this stage.

**Install the engine rear mount.**

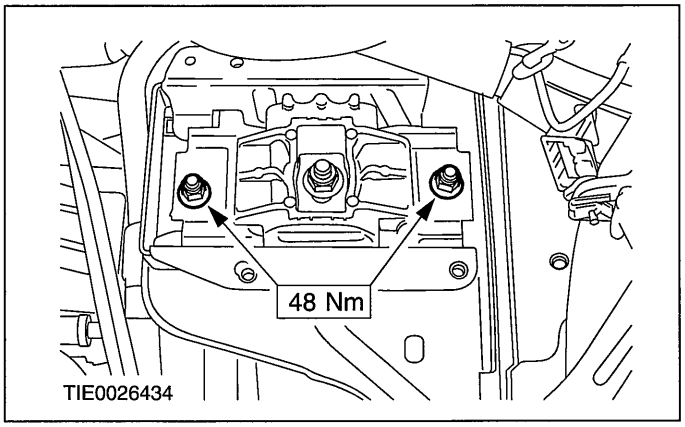


10. **Install the battery tray support bracket.**

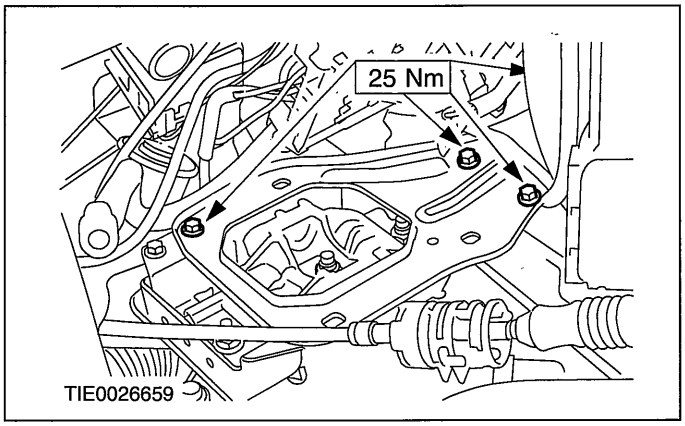


11. **Install the engine rear support insulator.**

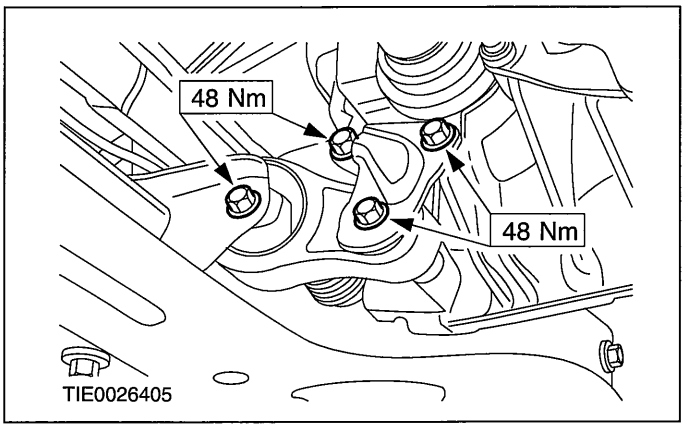


12. **CAUTIONS:**

   **⚠Support the halfshaft. The inner joint must not be bent more than 18 degrees. The outer joint must not be bent more than 45 degrees.**

   **⚠Do not damage the halfshaft oil seal.**

**NOTE:**Install a new center bearing cap and locknuts.

## INSTALLATION

**Attach the right-hand halfshaft and the intermediate shaft to the transaxle.**

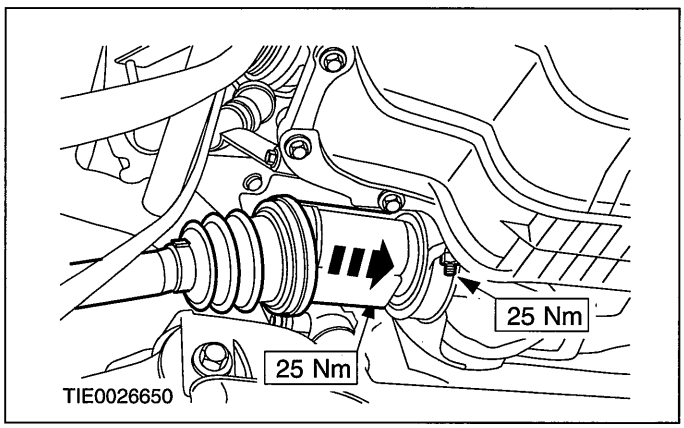


13. **CAUTIONS:**

    **⚠Support the halfshaft. The inner joint must not be bent more than 18 degrees. The outer joint must not be bent more than 45 degrees.**

    **⚠Do not damage the halfshaft oil seal.**

    **⚠Make sure the snap ring is correctly seated.**

**NOTE:** Install a new snap ring.

**Attach the left-hand halfshaft to the transaxle.**

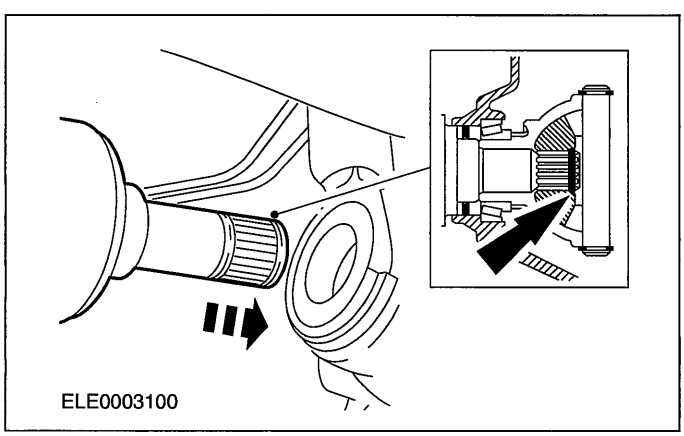


14. **Attach the lower arm to the wheel knuckle on both sides (right-hand side shown).**

- Install the heat shield.

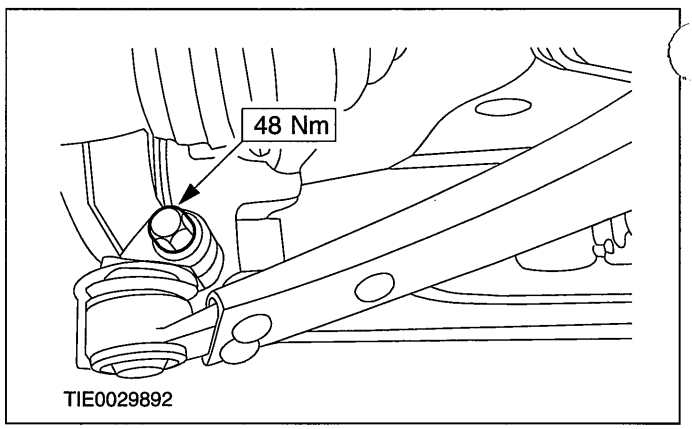


15. **Using the special tool, connect the coolant hose to the distribution pipe**

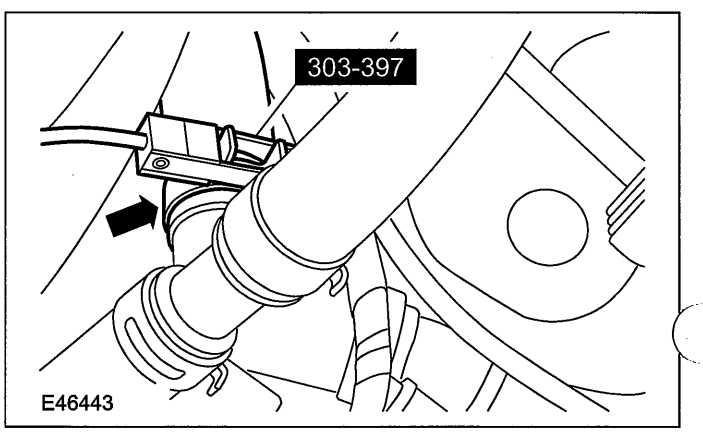


16. **Using the special tool, connect the coolant hose to the radiator.**

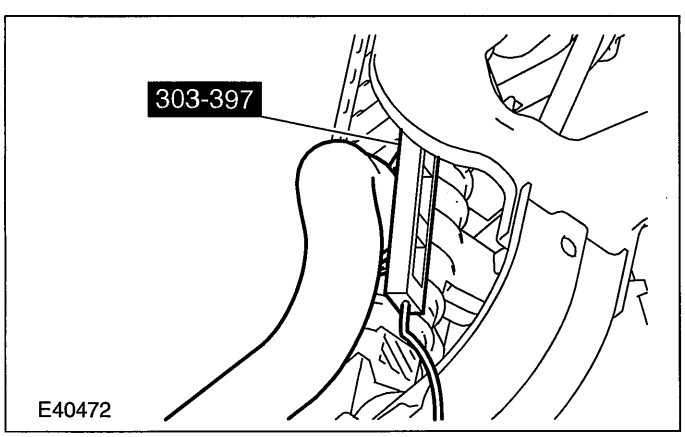

## INSTALLATION

17. **Connect the A/C high-pressure cut-off switch electrical connector.**

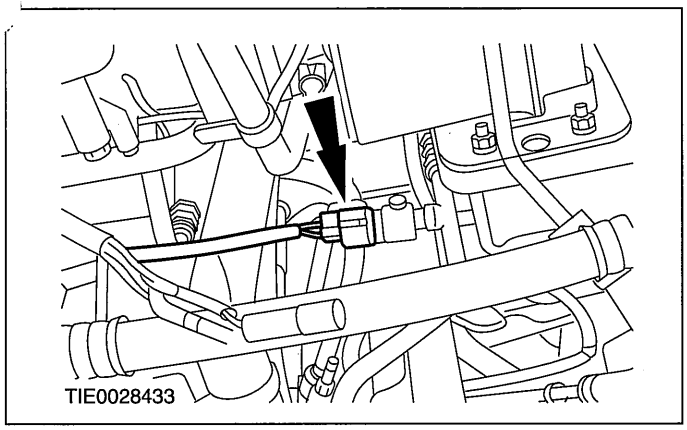


18. **Install the cooling fan motor and shroud.**
    1. Push the cooling fan motor and shroud upwards and then downwards to install.
    2. Install the cooling fan motor and shroud to the retaining brackets.

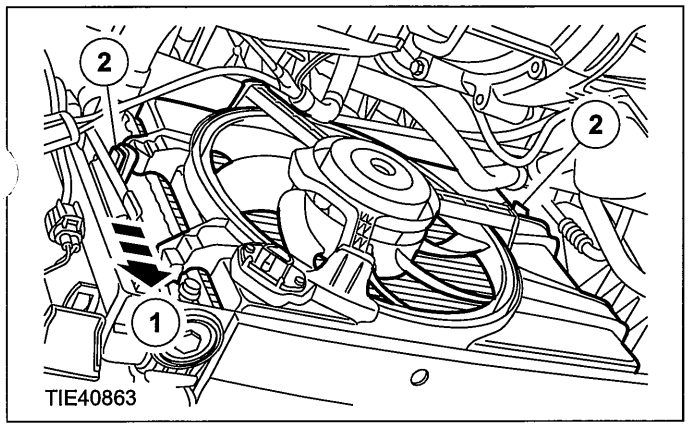


19. **Connect the cooling fan motor and cooling fan resistor electrical connectors.**

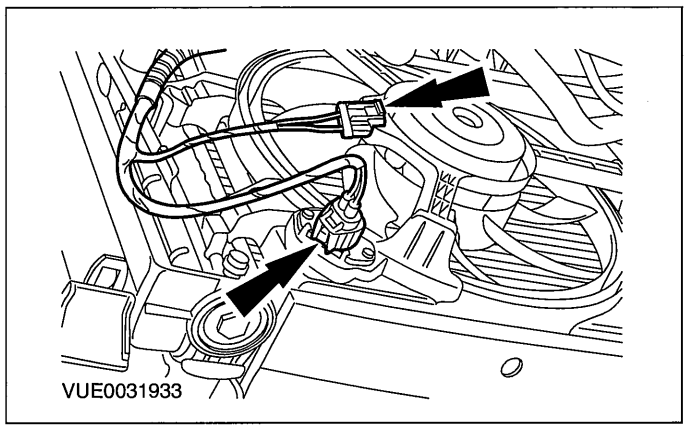


20. **Using the special tool, attach the power steering line to the power steering pump.**

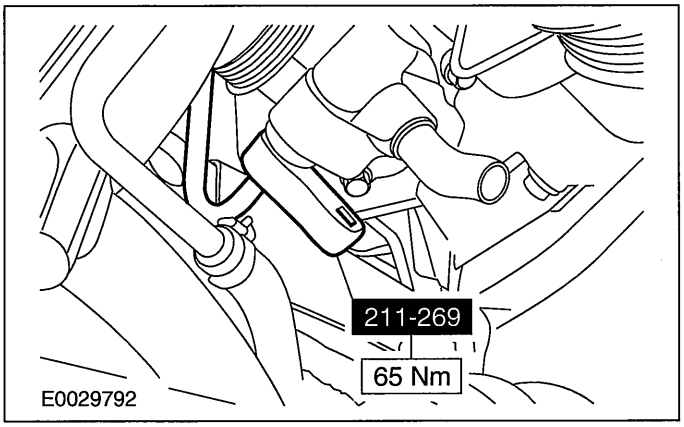


21. **Connect the power steering line to the steering pump.**

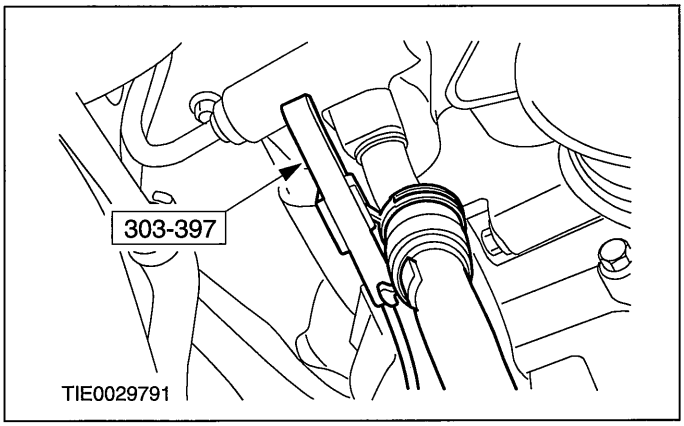


22. **Attach the power steering line support bracket to the engine block.**

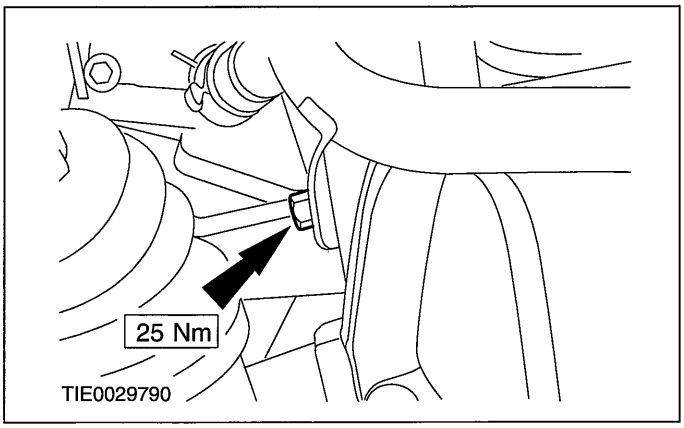

## INSTALLATION

23. Attach the air conditioning (A/C) compressor to the cylinder block.

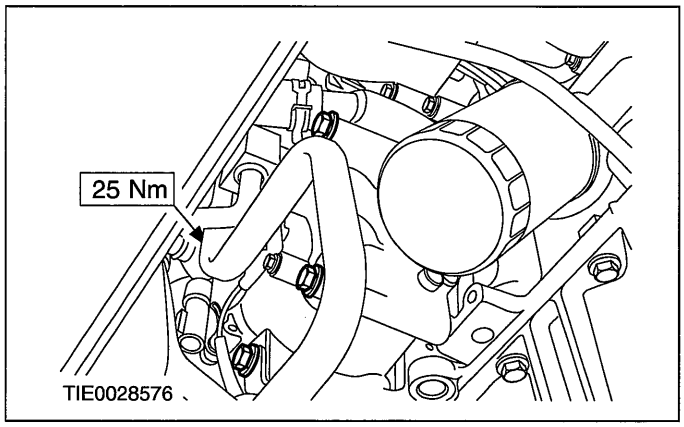


24. Connect the A/C compressor clutch electrical connector.

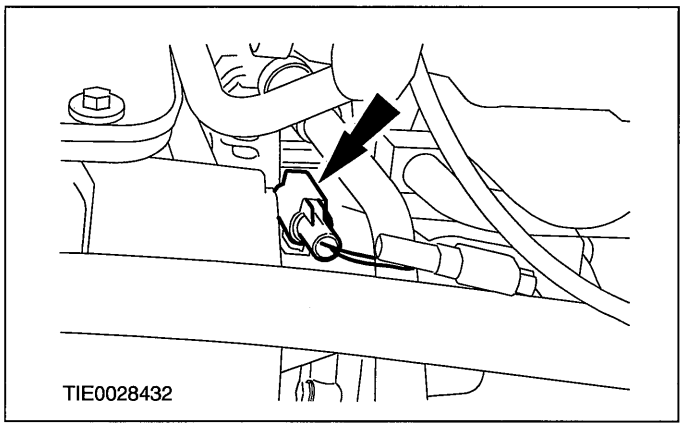


25. Install the accessory drive belt.

    For additional information, refer to: Accessory Drive Belt - 1.4L Duratec-16V (Sigma)/1.6L Duratec-16V (Sigma), Vehicles With: Air Conditioning (303-05 Accessory Drive, Removal and Installation).

26. Connect the starter motor electrical connectors.

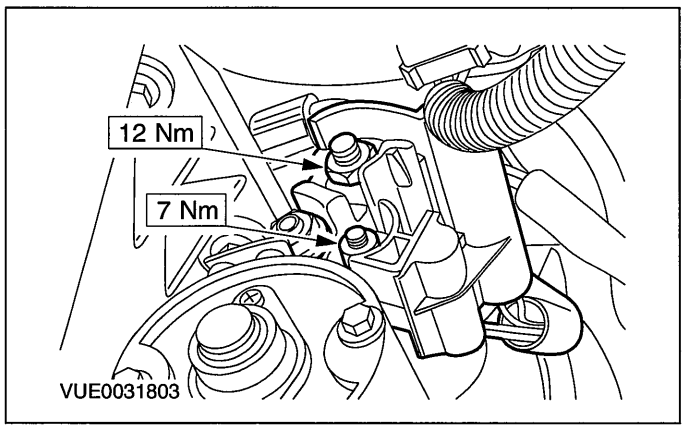


27. Connect the reversing lamp switch electrical connector.

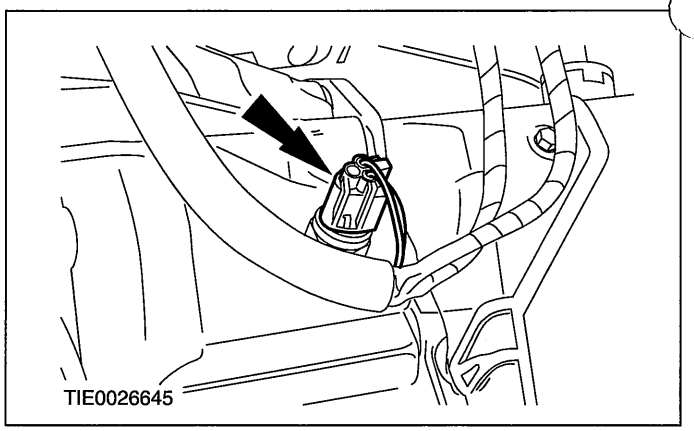


28. Connect the crankshaft position (CKP) sensor electrical connector.

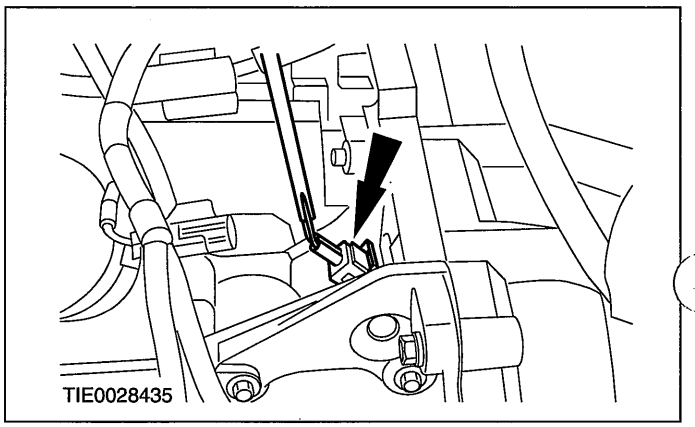


29. Connect the oil pressure switch electrical connector.

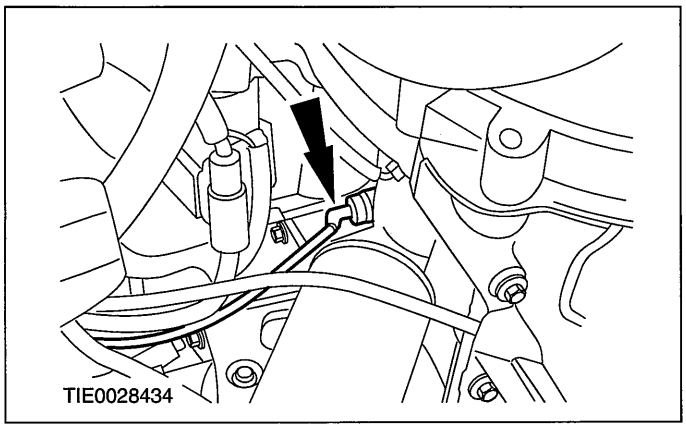


30. NOTE:Install new exhaust flange nuts and a new exhaust flange gasket.

## INSTALLATION

**Attach the exhaust flexible pipe to the catalytic converter.**

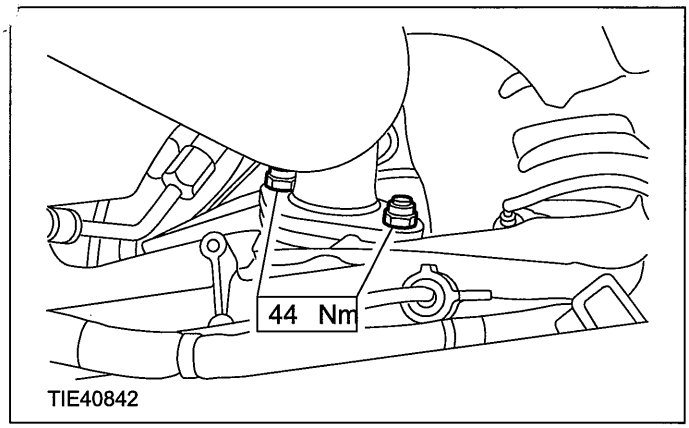


**31. Remove the exhaust flexible pipe support.**

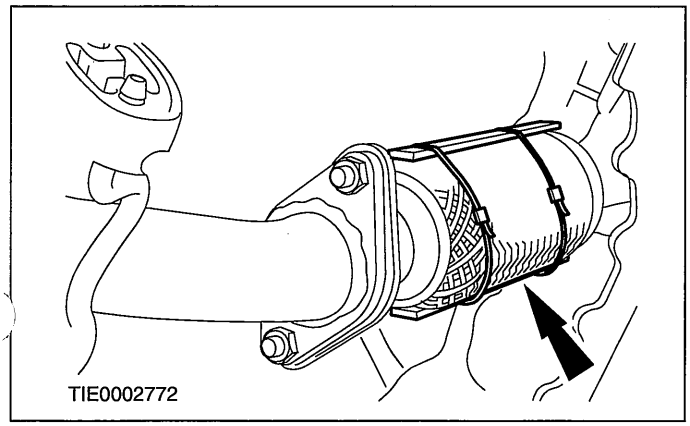


Vehicles without automated gearshift

**32. ⚠CAUTION:If brake fluid is spilt on the paintwork, the affected area must be immediately washed down with cold water.**

**NOTE:**Make sure the spring clip is correctly seated.

**Connect the clutch slave cylinder supply line.**

- Install the spring clip.

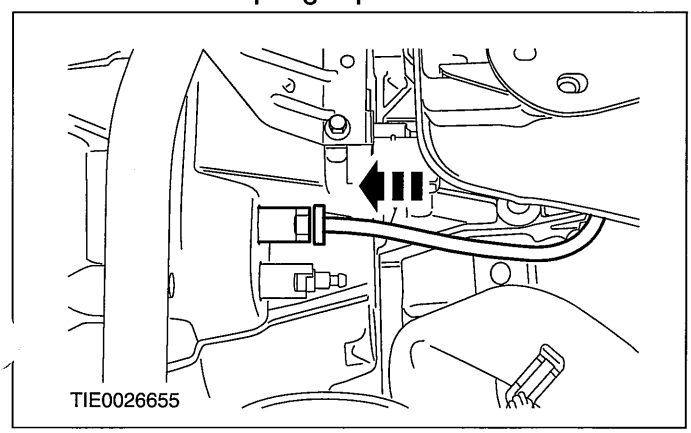


**33. Attach the gearshift cables to the bracket and turn the abutment sleeves counterclockwise.**

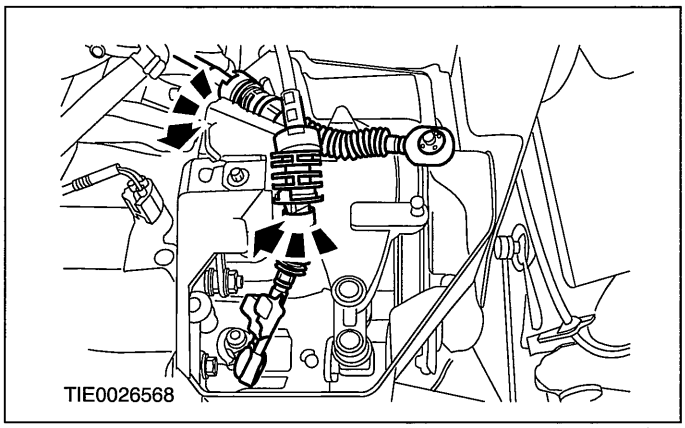


**34. NOTE:Do not install the air cleaner at this stage.**

**Adjust the gearshift cable.**

**For additional information, refer to: Gearshift Cable Adjustment (308-00 Manual Transmission/Transaxle and Clutch - General Information, General Procedures).**

**35. NOTE:Do not install the air cleaner at this stage.**

**Bleed the hydraulic clutch system.**

**For additional information, refer to: Clutch System Bleeding (308-00 Manual Transmission/Transaxle and Clutch - General Information, General Procedures).**

Vehicles with automated gearshift

**36. Connect the gearshift actuator electrical connector (colored grey).**

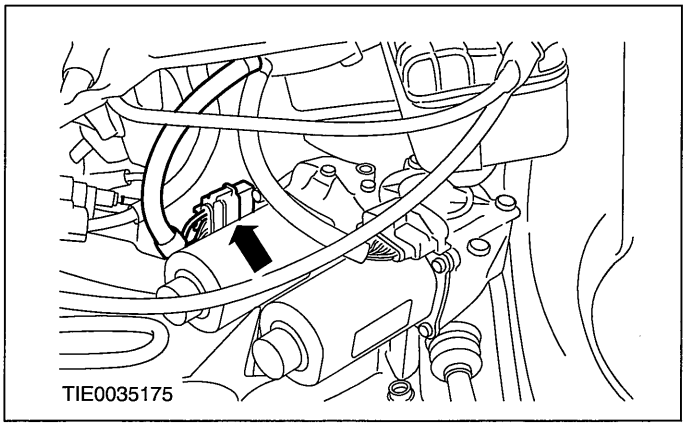

## INSTALLATION

37. **Connect the gearshift actuator electrical connector (colored black).**

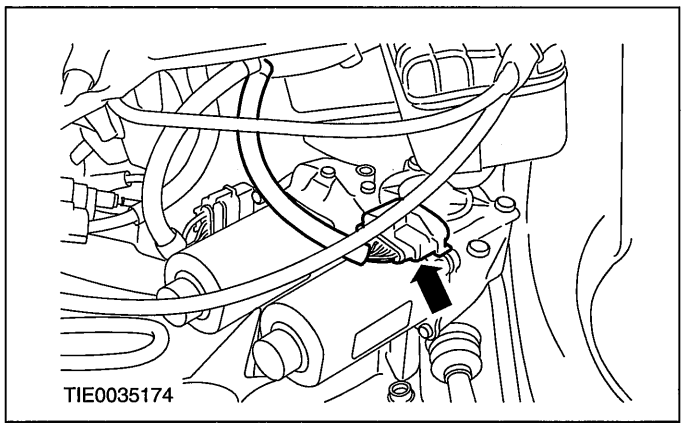


38. **Install the gearshift actuator cover.**

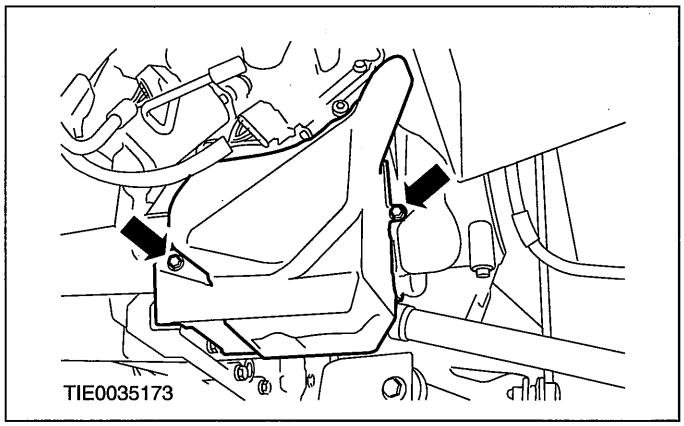


39. **Connect the clutch slave cylinder supply line.**
    - Install the spring clip.

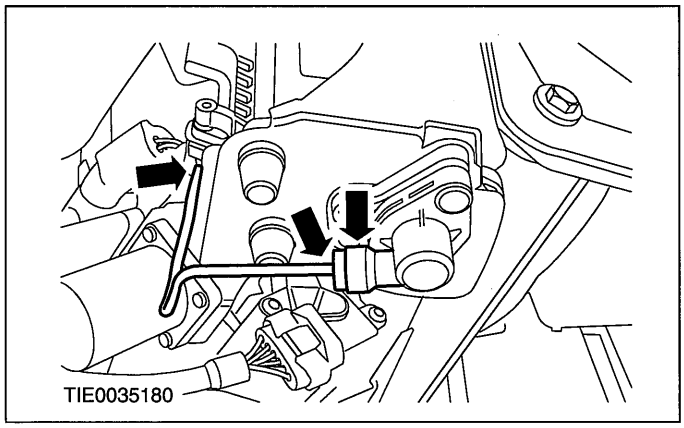


40. **Bleed the hydraulic clutch system.**

    **For additional information, refer to: Clutch System Bleeding - Vehicles With: Automated Gearshift (308-00 Manual Transmission/Transaxle and Clutch - General Information, General Procedures).**

All vehicles

41. **Lower the vehicle.**
42. **Tighten the engine front mount retaining nuts and bolts.**

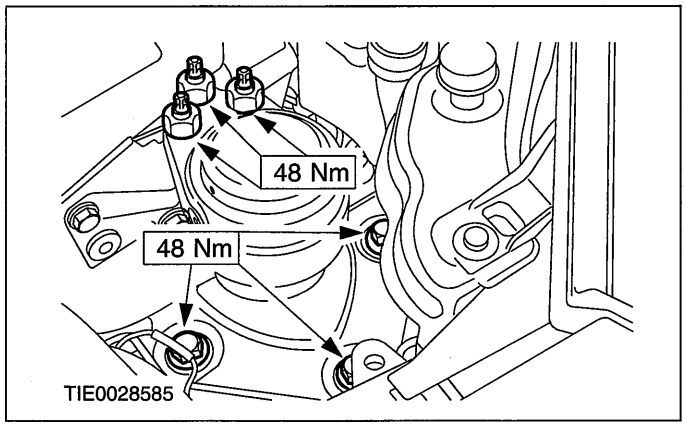


43. **NOTE:Install a new engine rear mount center retaining nut.**

    **Tighten the engine rear mount center retaining nut.**

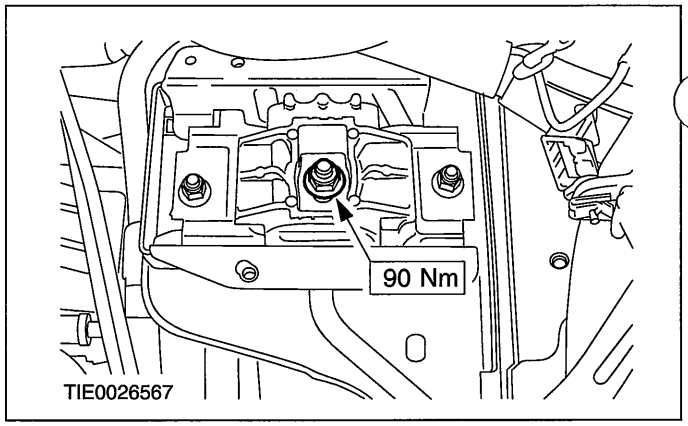


44. **Attach the power steering line support bracket to the cylinder head.**

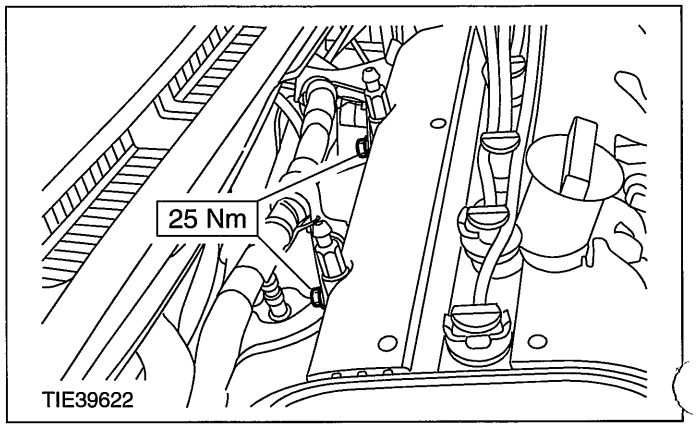

## INSTALLATION

45. **Attach the power steering line to the power steering pump mounting bracket.**

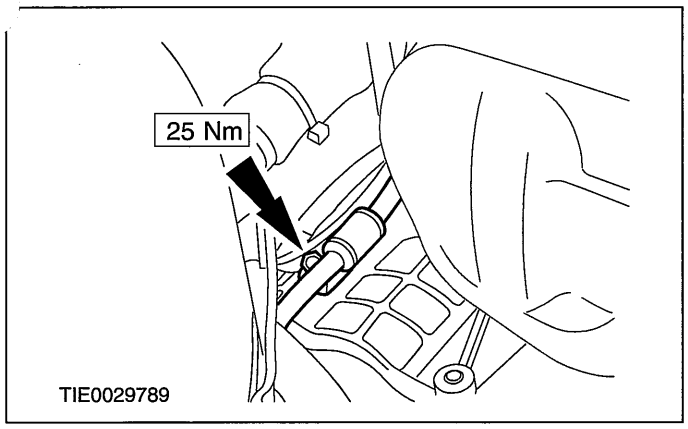


46. **Install the engine wiring harness support brackets.**
    - Connect the engine ground cable.

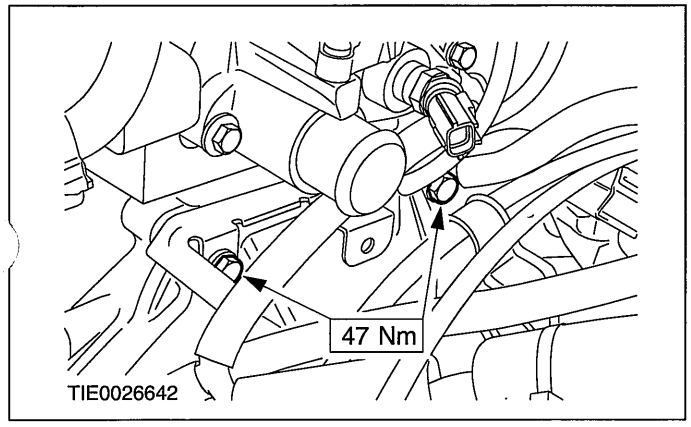


47. **Connect the electronic ignition (EI) coil electrical connector.**

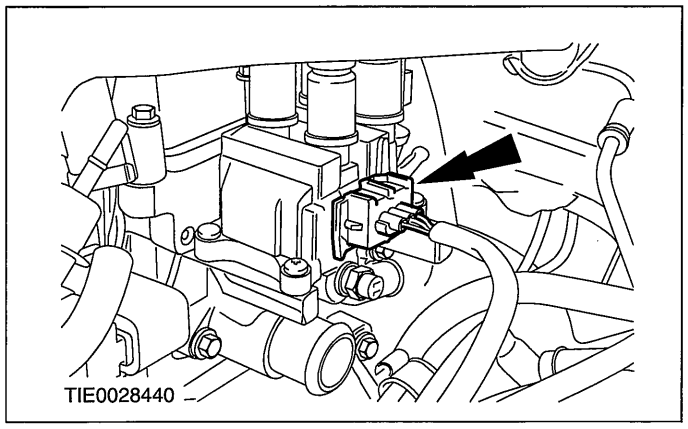


48. **Connect the engine coolant temperature (ECT) sensor electrical connector.**

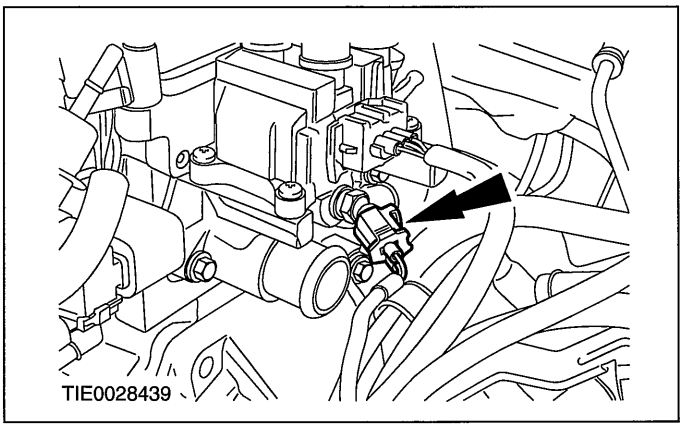


49. **Connect the generator electrical connectors.**

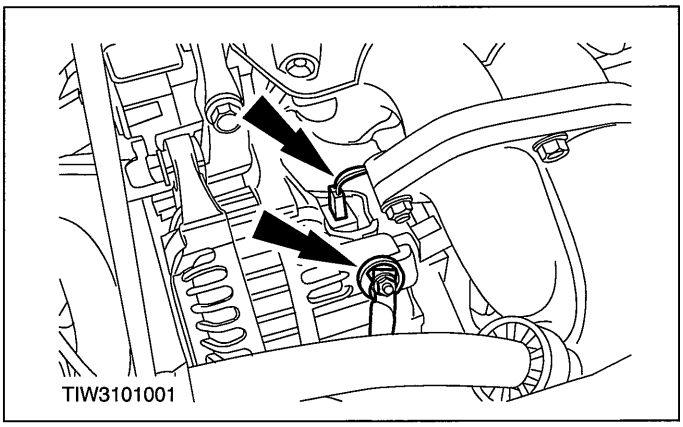


50. **Connect the air conditioning (A/C) lower-pressure cut-off switch electrical connector.**

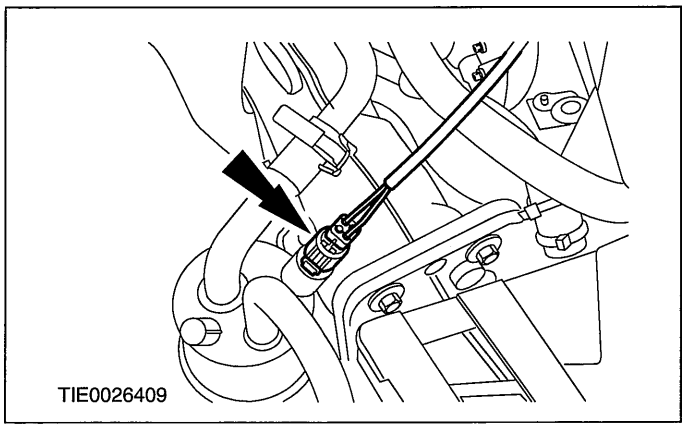


51. **Install the right-hand headlamp assembly.**

    **For additional information, refer to: Headlamp Assembly (417-01 Exterior Lighting, Removal and Installation).**

## INSTALLATION

52. Connect the knock sensor (KS) electrical connector.

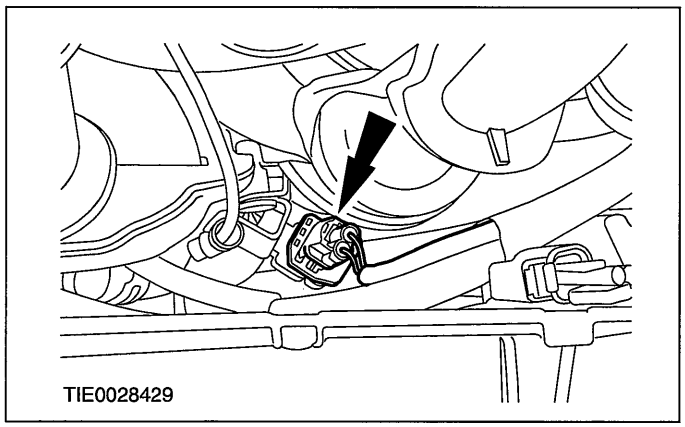


53. Connect the evaporative emission (EVAP) electrical connector.

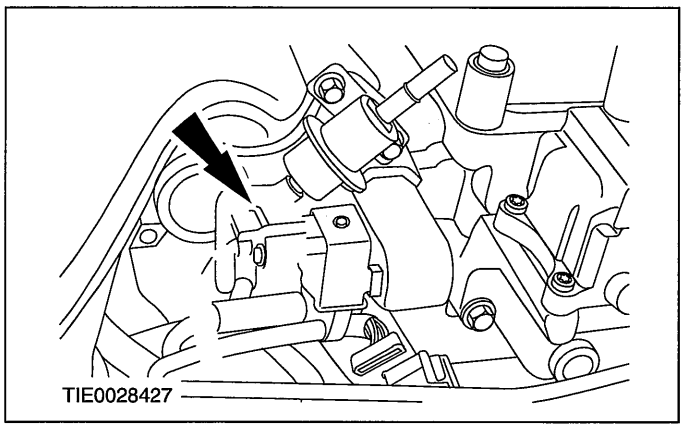


54. Connect the engine wiring harness electrical connector.

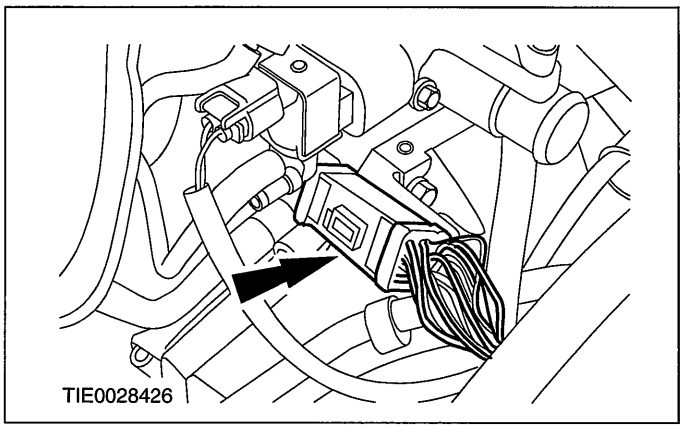


55. Connect the power steering pressure (PSP) switch electrical connector.

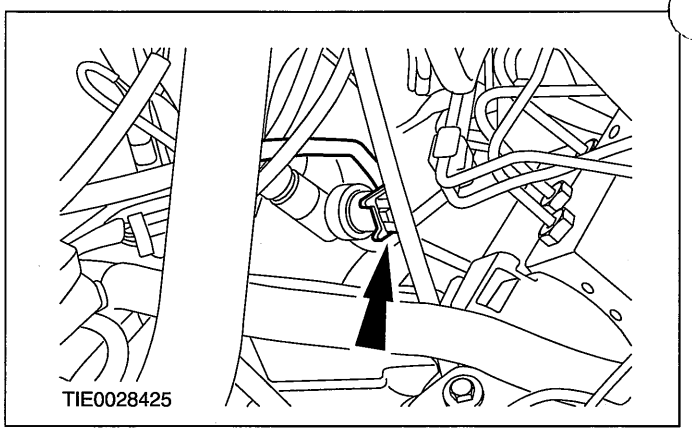


56. Connect the catalyst monitor sensor electrical connector.

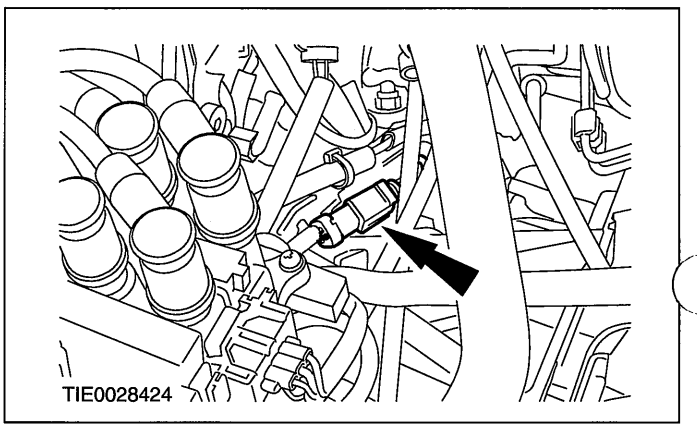


57. Connect the heated oxygen sensor (HO2S) electrical connector.

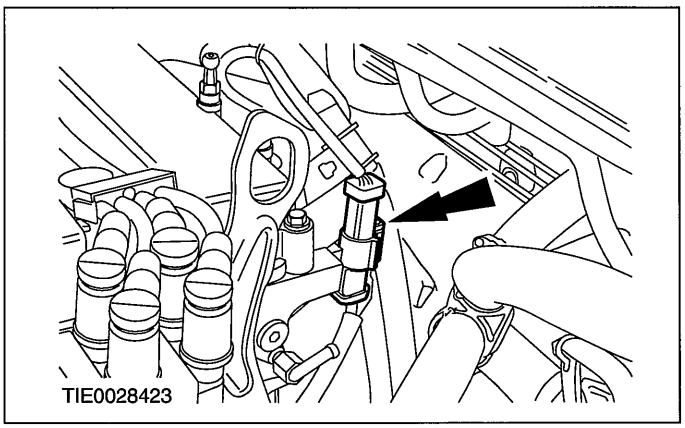

## INSTALLATION

58. Using the special tool, connect the coolant hose to the coolant distribution housing.

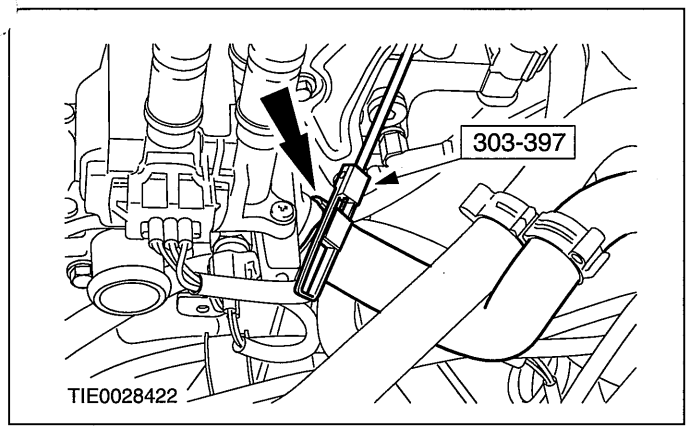


59. Using the special tool, connect the coolant hose to the coolant distribution housing.

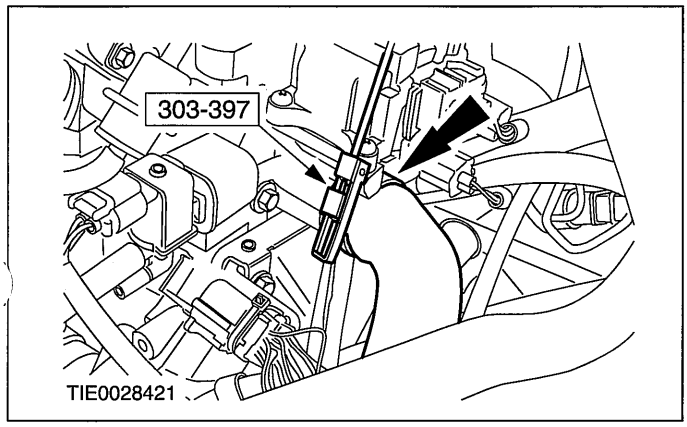


60. Attach the brake booster vacuum line to the intake manifold.

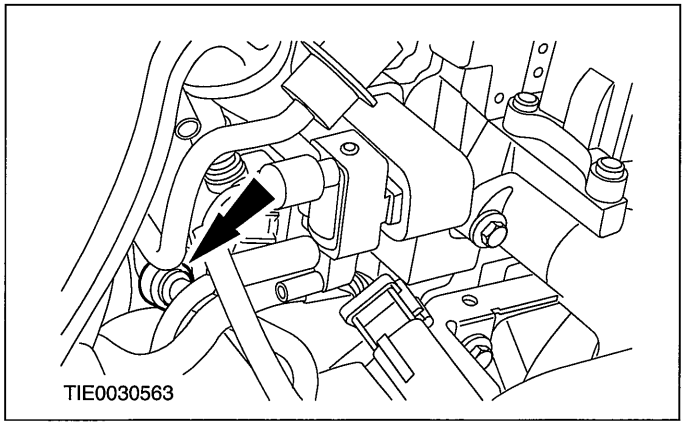


61. Connect the low-pressure EVAP hose.

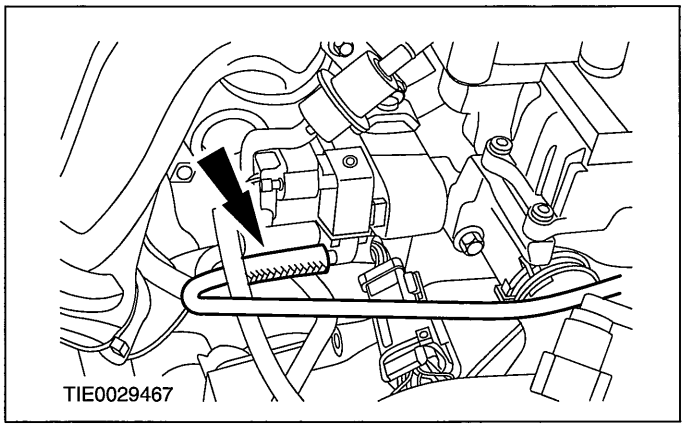


62. Connect the fuel supply line quick release coupling.

For additional information, refer to: Quick Release Coupling (310-00 Fuel System - General Information, General Procedures).

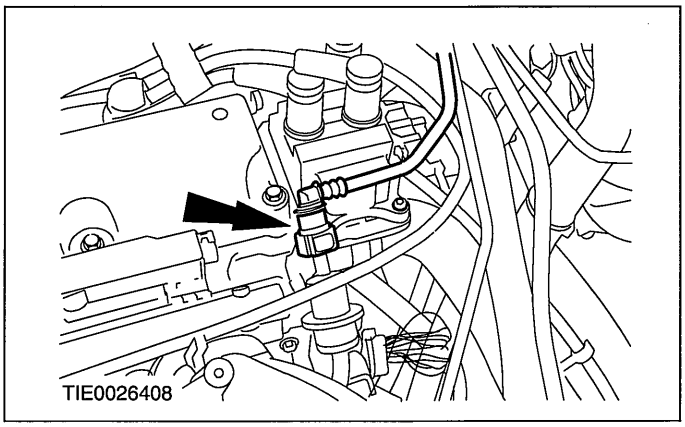


63. Connect the fuel return line quick release coupling.

For additional information, refer to: Quick Release Coupling (310-00 Fuel System - General Information, General Procedures).

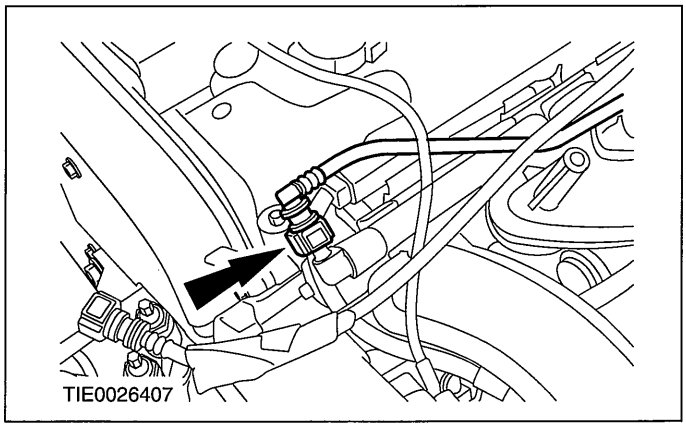

## INSTALLATION

64. **Attach the coolant expansion tank to the bracket.**

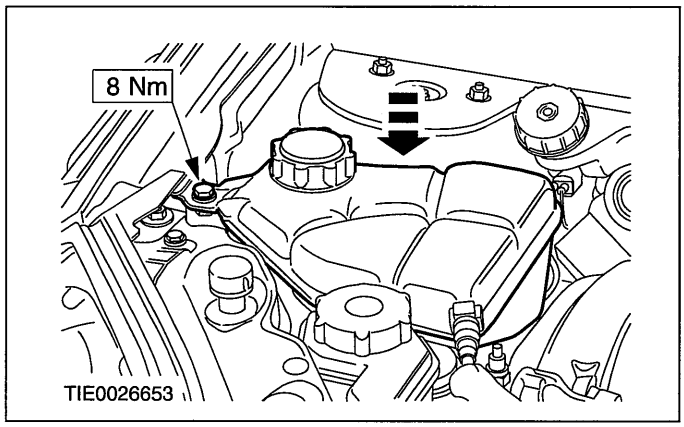


65. **Using the special tool, connect the degas hose to the cylinder head.**

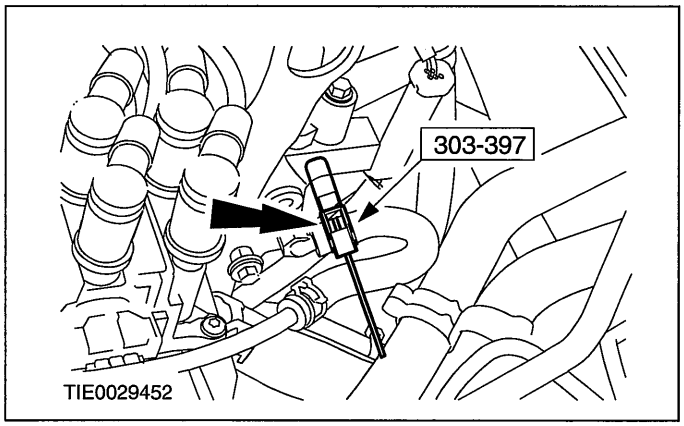


66. **Attach the fuel line and the degas line to the intake manifold.**
    - Install the cable tie.

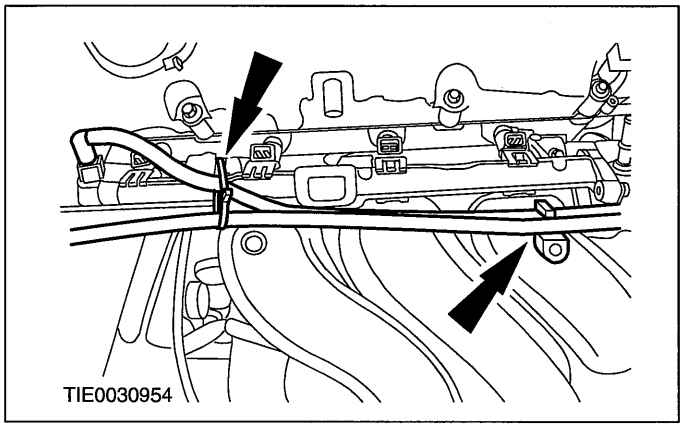


67. **Attach the power steering fluid reservoir to the bracket.**

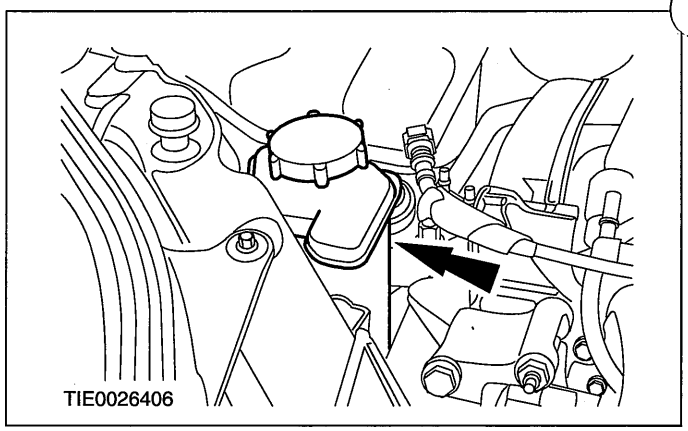


68. **Tighten the strut and spring assembly top mount nuts on both sides.**

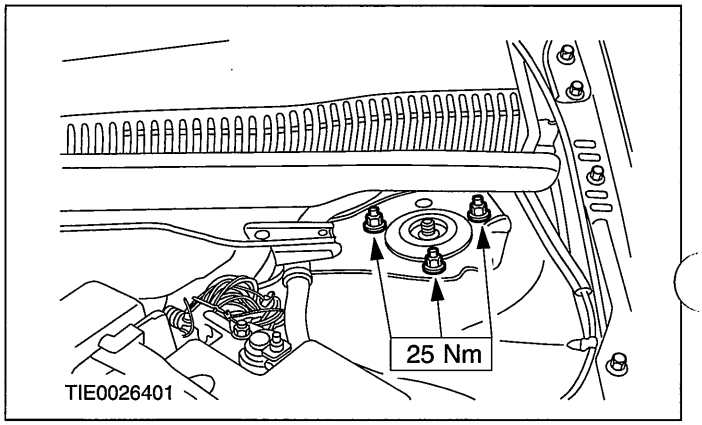


69. **Connect the powertrain control module (PCM) electrical connector.**

    **For additional information, refer to: Powertrain Control Module (PCM) - 1.25L Duratec-16V (Sigma)/1.4L Duratec-16V (Sigma)/1.6L Duratec-16V (Sigma) (303-14 Electronic Engine Controls, Removal and Installation).**

70. **Install the air cleaner.**

    **For additional information, refer to: Air Cleaner - 1.25L Duratec-16V (Sigma)/1.4L Duratec-16V (Sigma)/1.6L Duratec-16V (Sigma) (303-12 Intake Air Distribution and Filtering, Removal and Installation).**

71. **Install the front wheels and tires.**

    **For additional information, refer to: Wheel and Tire (204-04 Wheels and Tires, Removal and Installation).**

## INSTALLATION

72. Fill the engine cooling system.

    For additional information, refer to: Cooling System Draining, Filling and Bleeding - 1.25L Duratec-16V (Sigma)/1.3L Duratec-8V (Rocam)/1.4L Duratec-16V (Sigma)/1.6L Duratec-16V (Sigma) (303-03A Engine Cooling - 1.25L Duratec-16V (Sigma)/1.3L Duratec-8V (Rocam)/1.4L Duratec-16V (Sigma)/1.6L Duratec-16V (Sigma), General Procedures).

## INSTALLATION

# Engine — Vehicles With: Automatic Transaxle

### Special Tool(s)

| | |
|---|---|
| 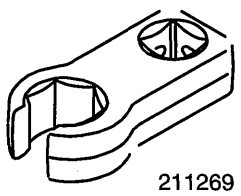 211269 | Wrench, Hydraulic Line Union Nut 211-269 (13-027) |
| 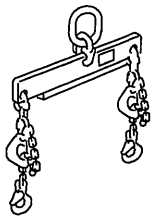 21068A | Lifting Bracket, Engine 303-122 (21-068A) |
| 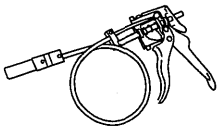 24003 | Remover/Installer, Hose Clamp 303-397 (24-003) |

### General Equipment

| |
|---|
| Straight edge |
| Securing straps |
| Workshop table |
| Engine hoist |

All vehicles

**WARNING:Do not smoke or carry lighted tobacco or open flame of any type when working on or near any fuel related components. Highly flammable vapors are always present and may ignite. Failure to follow these instructions may result in personal injury.**

1. **CAUTION:The torque converter must remain at the correct installation depth throughout the whole installation procedure.**

**NOTE:**The torque converter hub must engage fully in the oil pump drive gear.

**Check the installation depth of the torque converter.**

1. Lay a straight edge on the transaxle flange.
2. Check the installation depth between the transaxle flange and the torque converter centering spigot.

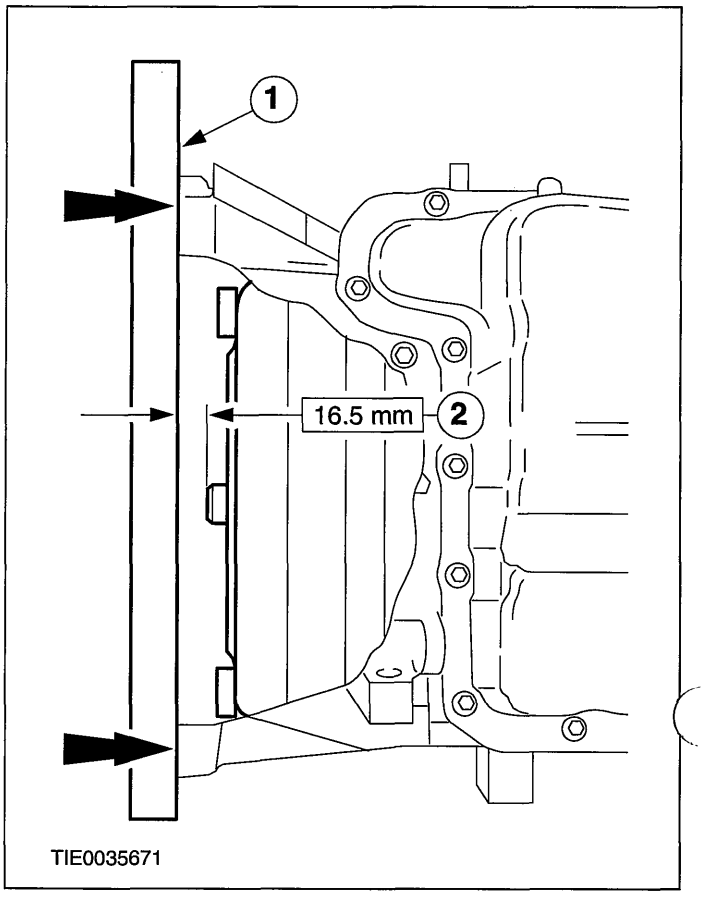


2. **CAUTION:Make sure that the two locating dowels are installed.**

**NOTE:**Make sure the torque converter centering spigot engages in the flexplate and the transaxle engages on the engine flange dowels.

**Install the transaxle to the engine.**

3. **Install the transaxle lower retaining bolts.**

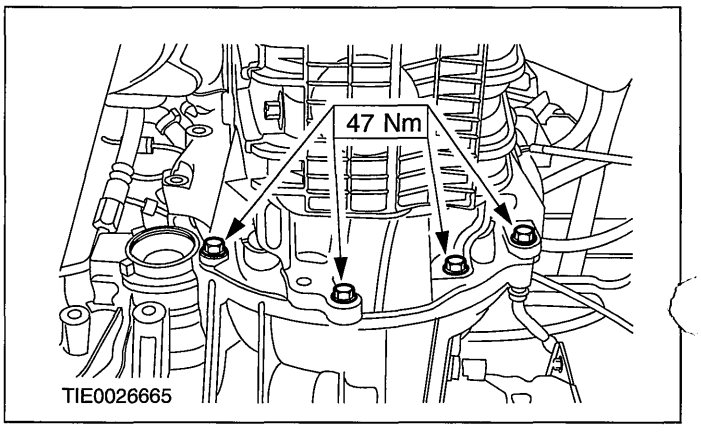

## INSTALLATION

4. **▲WARNING:Support the engine and transaxle assembly on wooden blocks and secure it with suitable securing straps.**

   **Using the special tool and the engine hoist position the engine and transaxle assembly on the workshop table.**

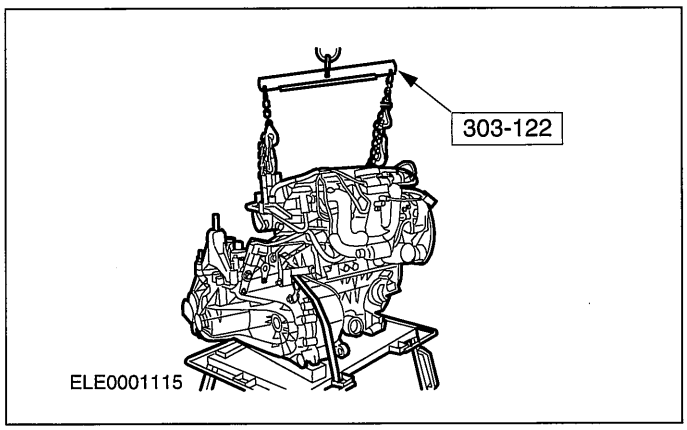


5. **Install the transaxle right-hand retaining bolts.**

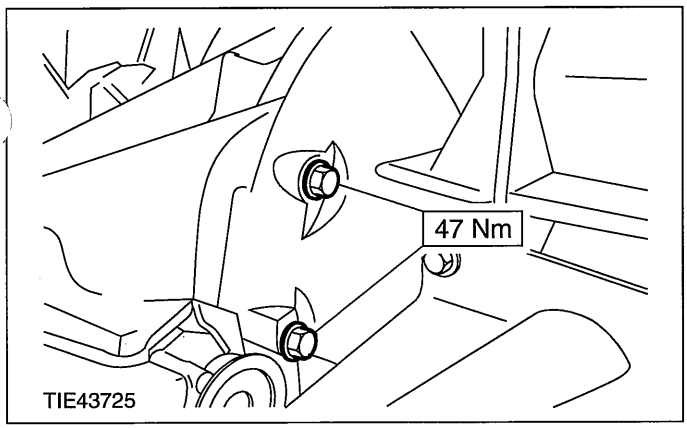


6. **NOTE:Install new torque converter retaining nuts.**

   **Install the torque converter retaining nuts.**

   - Rotate the torque converter to gain access to the remaining studs.

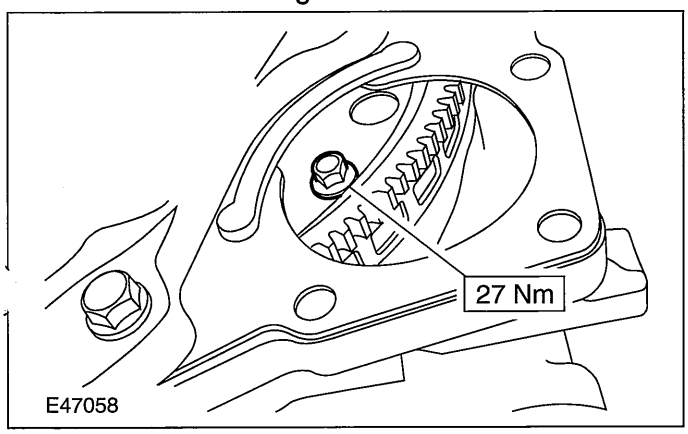


7. **Install the starter motor.**

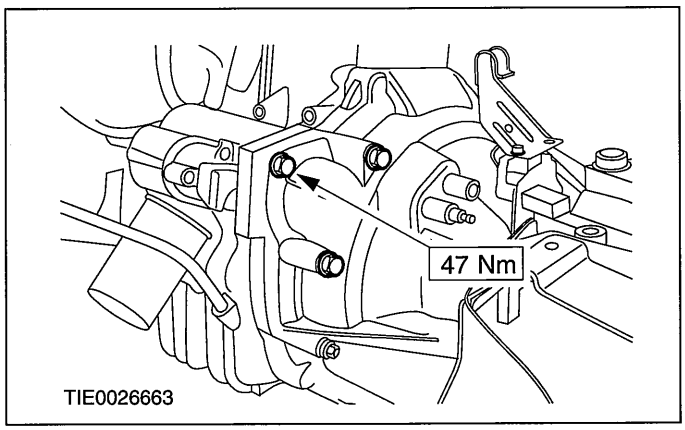


8. **Raise and support the vehicle.**

   **For additional information, refer to: Lifting (100-02 Jacking and Lifting, Description and Operation).**

9. **Position the engine and transaxle assembly in the engine compartment.**

   - Carefully lower the vehicle.

10. **NOTE:Install new engine front mount retaining nuts.**

**NOTE:**Do not tighten the engine front mount retaining bolts and nuts at this stage.

**Install the engine front mount.**

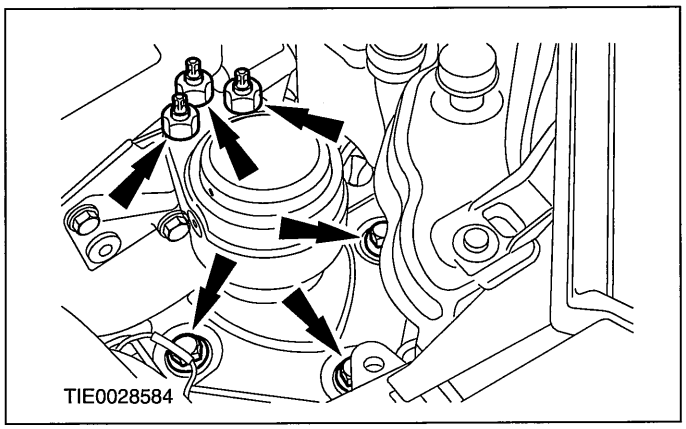


11. **NOTE:Install new engine rear mount center retaining nut.**

**NOTE:**Do not tighten the engine rear mount center retaining nut at this stage.

## INSTALLATION

**Install the engine rear mount center retaining nut.**

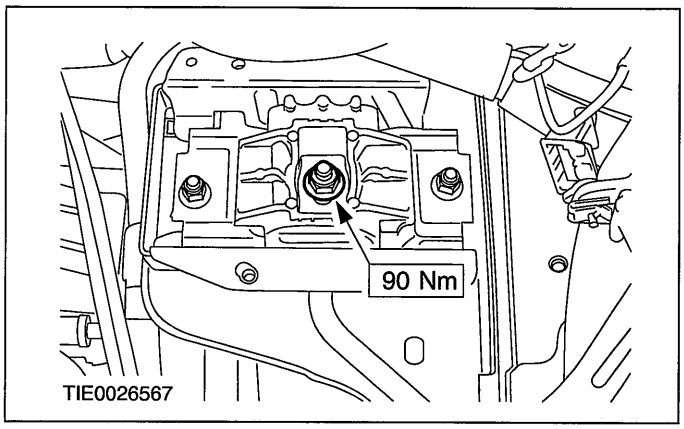


**12. Install the engine support insulator.**

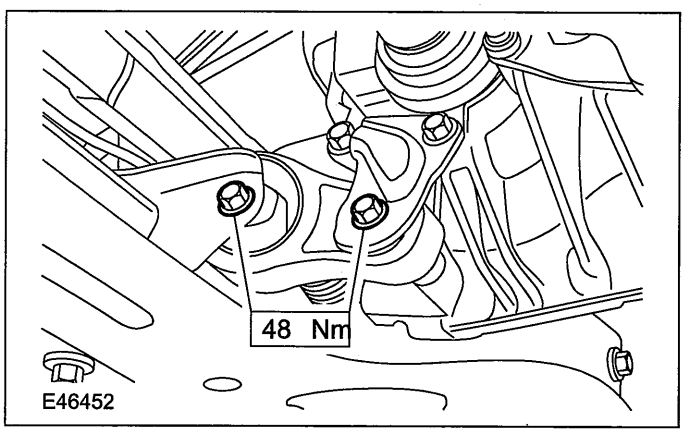


**13. CAUTIONS:**

**⚠Support the halfshaft. The inner joint must not be bent more than 18 degrees. The outer joint must not be bent more than 45 degrees.**

**⚠Do not damage the halfshaft seal.**

**NOTE:**Install a new center bearing cap and locknuts.

**Attach the right-hand halfshaft and the intermediate shaft to the transaxle.**

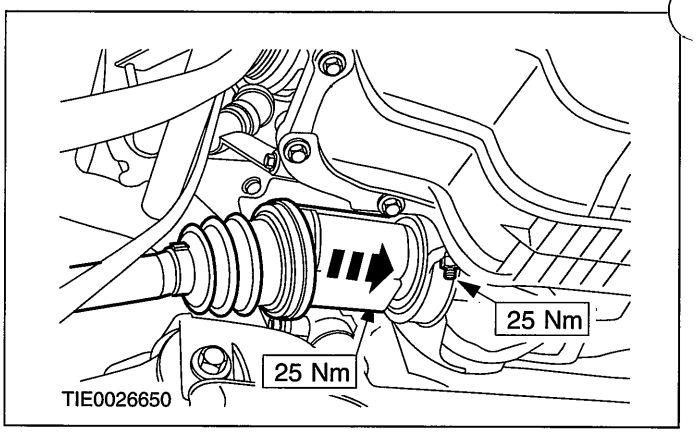


**14. CAUTIONS:**

**⚠Support the halfshaft. The inner joint must not be bent more than 18 degrees. The outer joint must not be bent more than 45 degrees.**

**⚠Do not damage the halfshaft seal.**

**⚠Make sure the snap ring is correctly seated.**

**NOTE:**Install a new snap ring.

**Attach the left-hand halfshaft to the transaxle.**

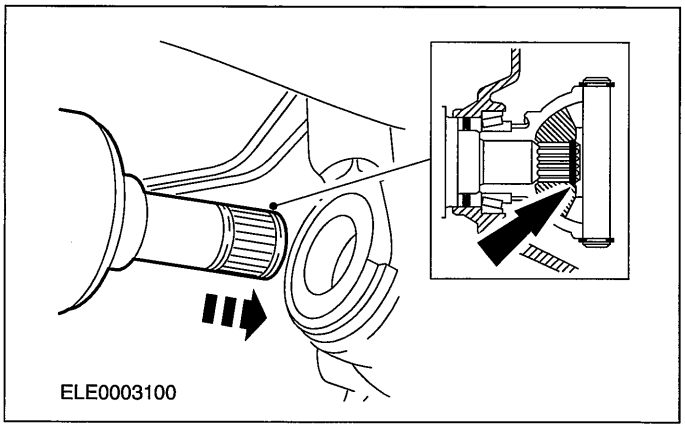


**15. Attach the lower arm to the wheel knuckle on both sides (right-hand side shown).**

## INSTALLATION

- Install the heat shield.

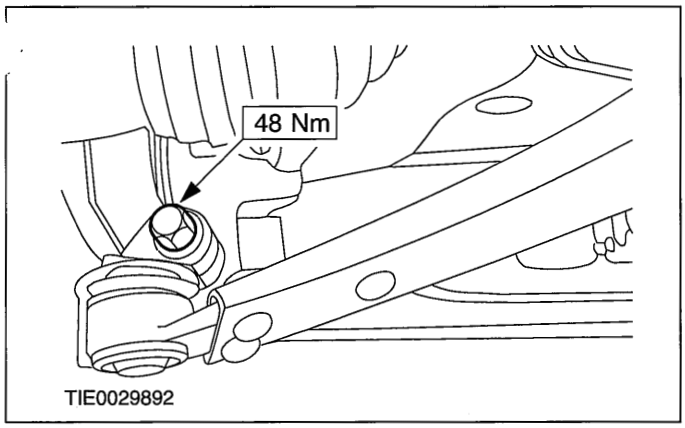


**16. Using the special tool, connect the coolant hose to the distribution pipe.**

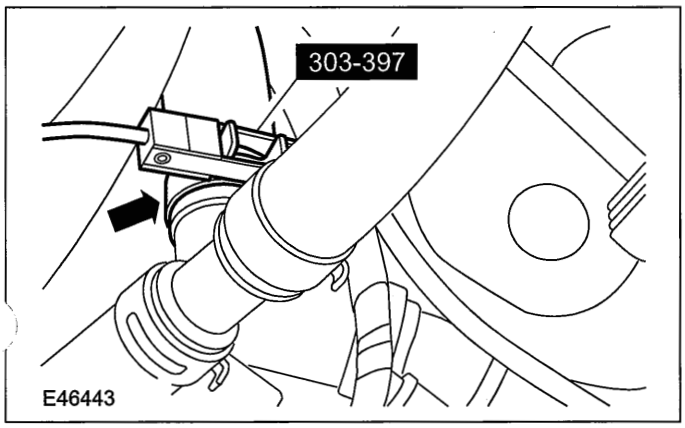


**17. Using the special tool, connect the coolant hose to the radiator.**

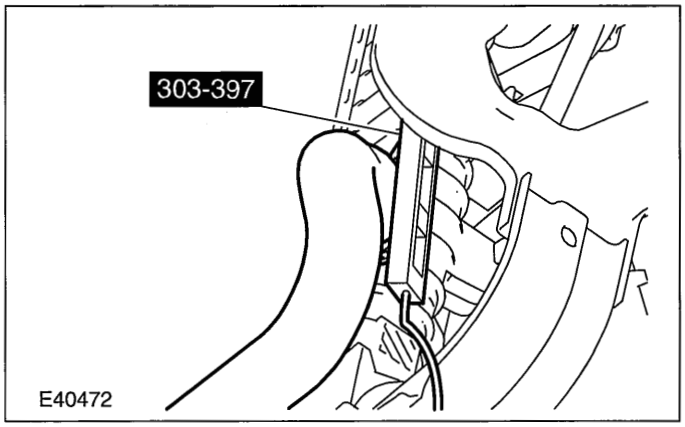


**18. Install the cooling fan motor and shroud.**

1. Push the cooling fan motor and shroud upwards and then downwards to install.
2. Install the cooling fan motor and shroud to the retaining brackets.

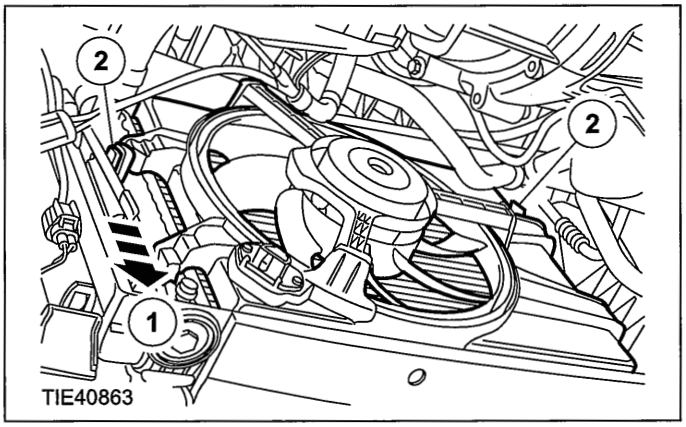


**19. Connect the cooling fan motor and cooling fan resistor electrical connectors.**

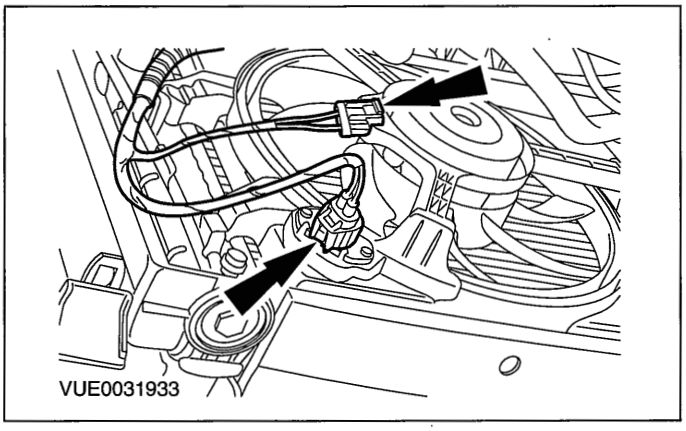


**20. Using the special tool, attach the power steering line to the power steering pump.**

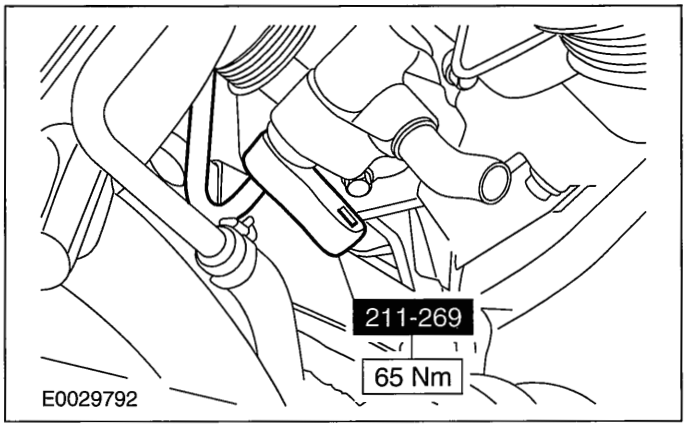

## INSTALLATION

21. Connect the power steering line to the steering pump.

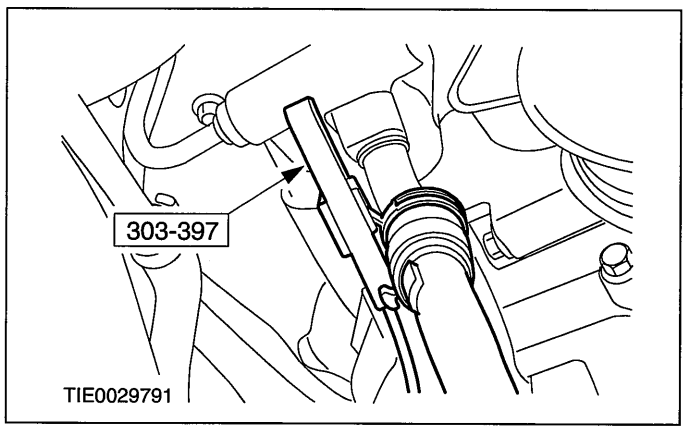


22. Attach the power steering line support bracket to the engine block.

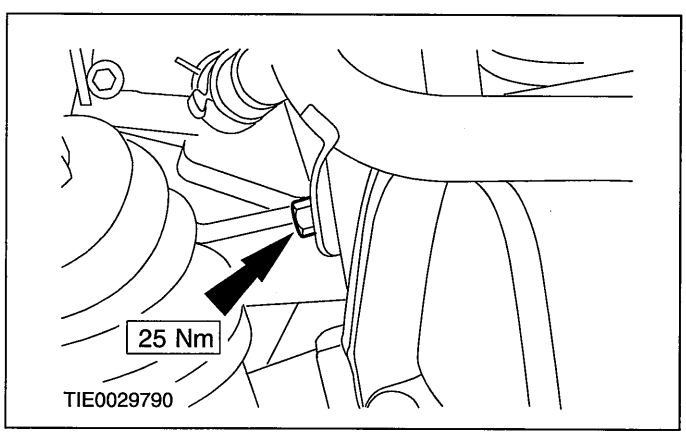


23. NOTE:Install new exhaust flange nuts and a new exhaust flange gasket.

Attach the exhaust flexible pipe to the catalytic converter.

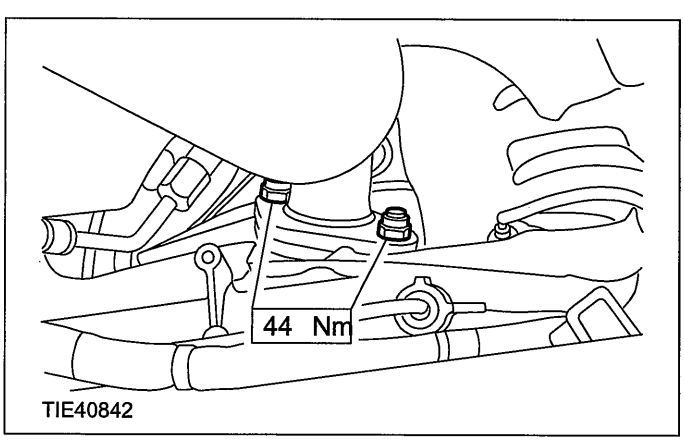


24. Remove the exhaust flexible pipe support.

25. Connect the ignition switch to starter motor solenoid and battery to starter motor solenoid cables.

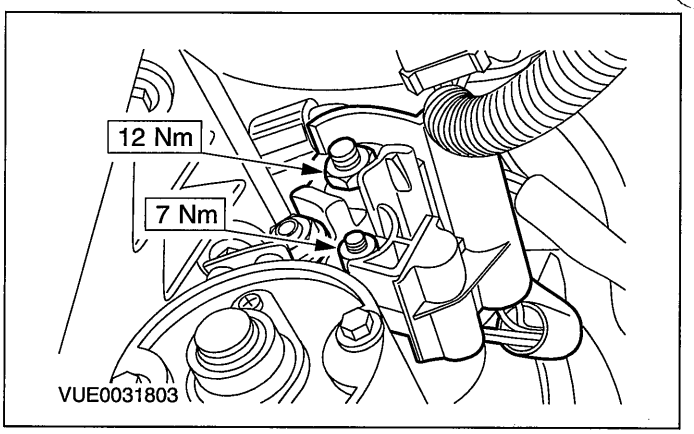


26. Connect the crankshaft position (CKP) sensor electrical connector.

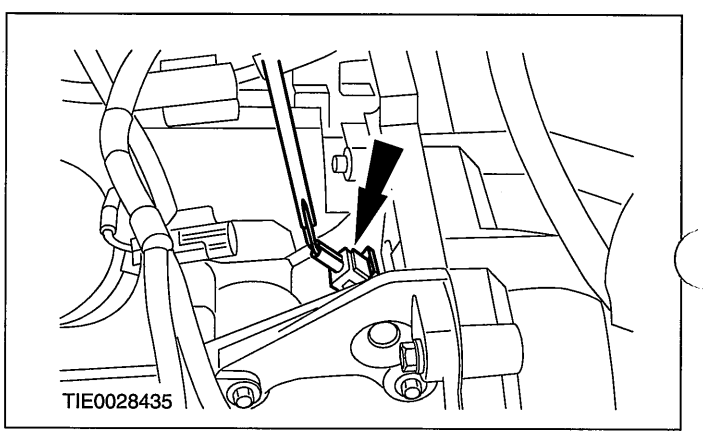


27. Connect the oil pressure switch electrical connector.

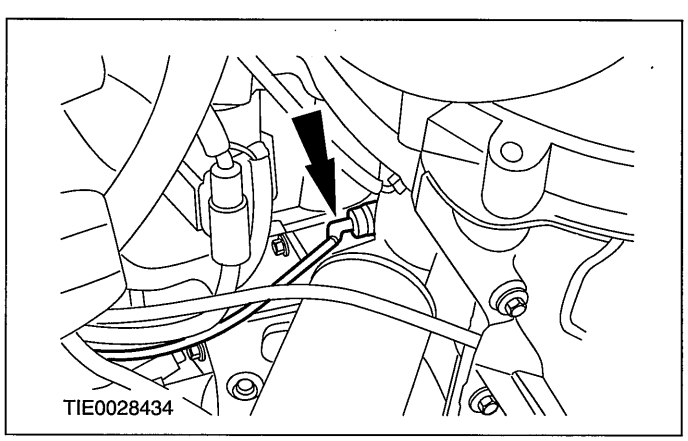

## INSTALLATION

Vehicles with air conditioning

**28. Attach the air conditioning (A/C) compressor to the cylinder block.**

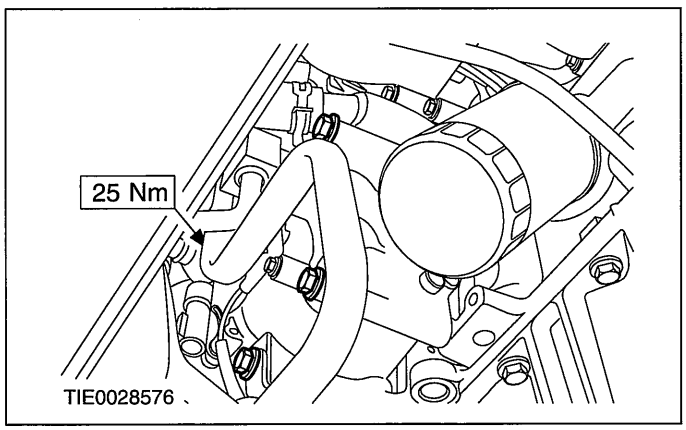


**29. Connect the A/C high-pressure cutoff switch electrical connector.**

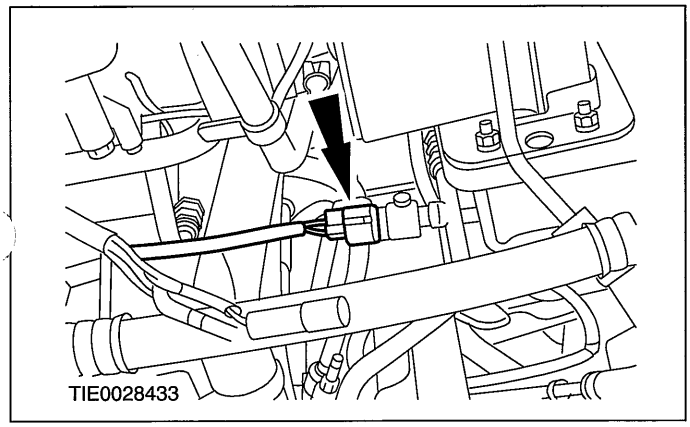


**30. Connect the A/C compressor clutch electrical connector.**

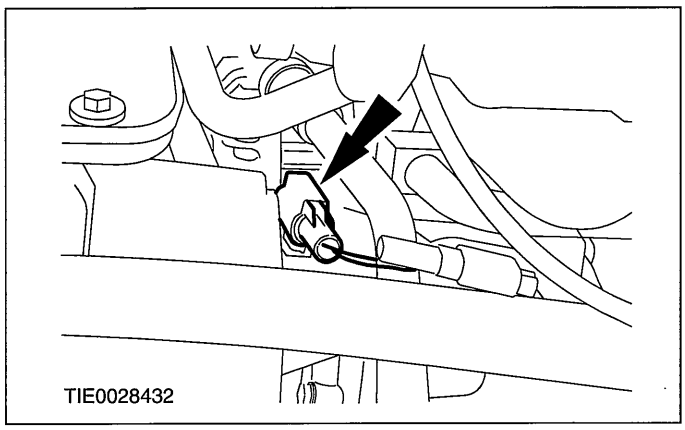


**31. Connect the air conditioning (A/C) low-pressure cutoff switch electrical connector.**

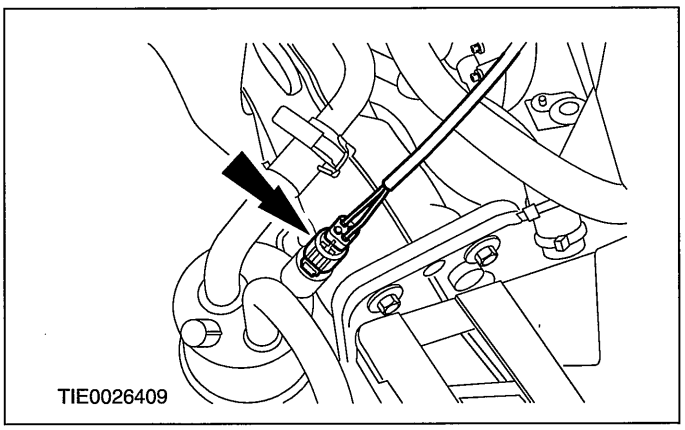


All vehicles

**32. Install the accessory drive belt.**

**For additional information, refer to:**
**Accessory Drive Belt - 1.4L Duratec-16V (Sigma)/1.6L Duratec-16V (Sigma), Vehicles With: Air Conditioning (303-05 Accessory Drive, Removal and Installation)**
**/ Accessory Drive Belt - 1.4L Duratec-16V (Sigma)/1.6L Duratec-16V (Sigma), Vehicles Without: Air Conditioning (303-05 Accessory Drive, Removal and Installation).**

**33. Lower the vehicle.**

**34. Tighten the engine front mount retaining nuts and bolts.**

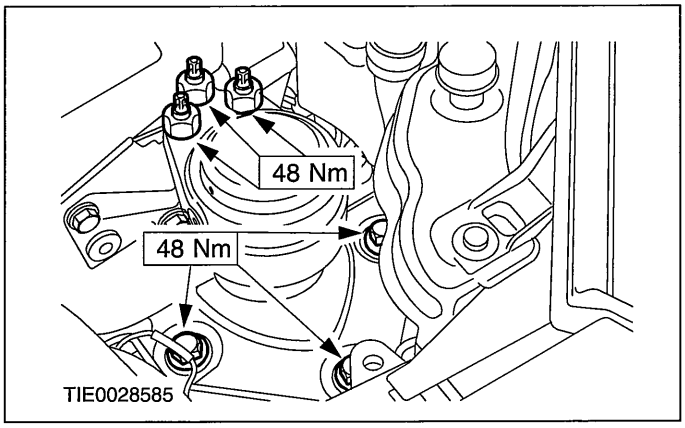

## INSTALLATION

35. Tighten the engine rear mount center retaining nut.

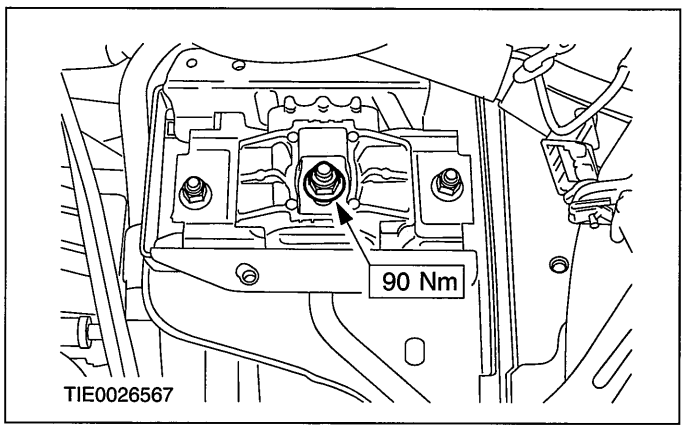


36. Connect the transmission fluid cooler line to the transaxle.

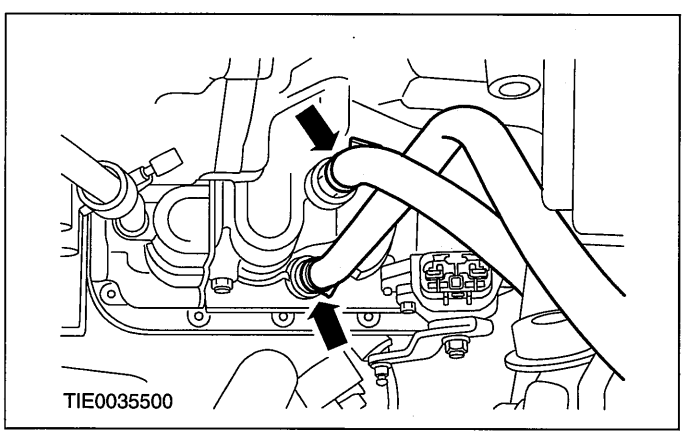


37. Connect the vehicle speed (VSS) sensor electrical connector.

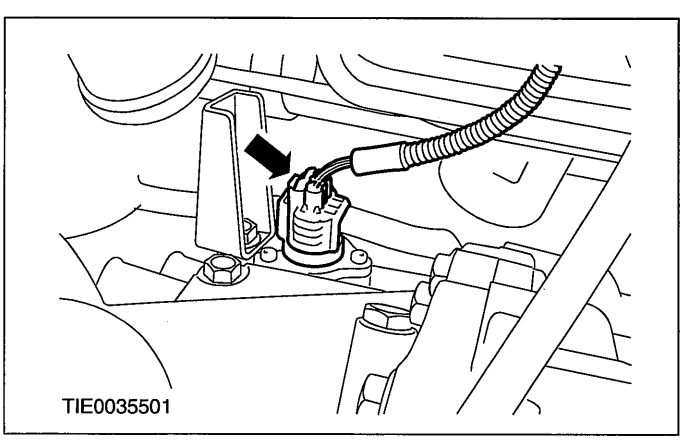


38. Connect the power steering pressure (PSP) switch electrical connector.

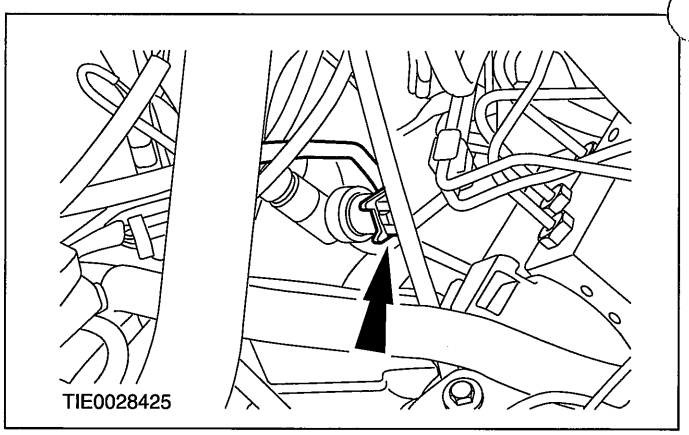


39. Attach the selector lever cable retaining bracket to the transaxle.

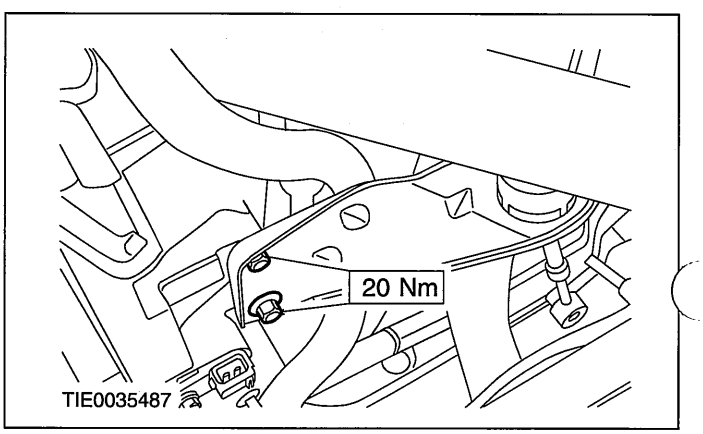


40. Attach the selector lever cable to the transaxle.

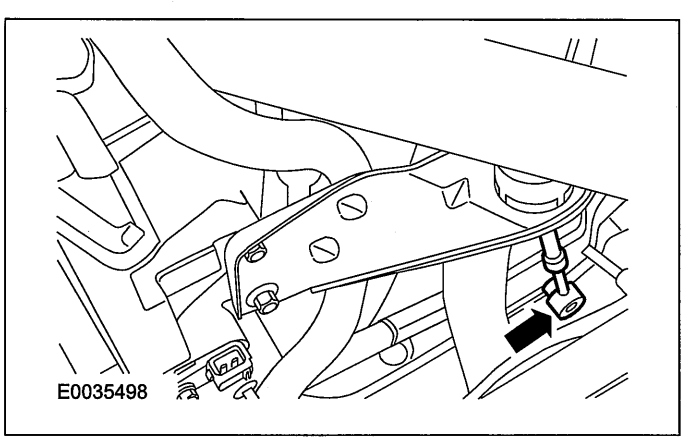


41. Adjust the selector lever cable.

For additional information, refer to: Selector Lever Cable Adjustment (307-05 Automatic Transmission/Transaxle External Controls - Vehicles With: 4-Speed Automatic Transmission (AW81-40), General Procedures).

## INSTALLATION

42. Connect the transmission range (TR) sensor elecrtrical connector.

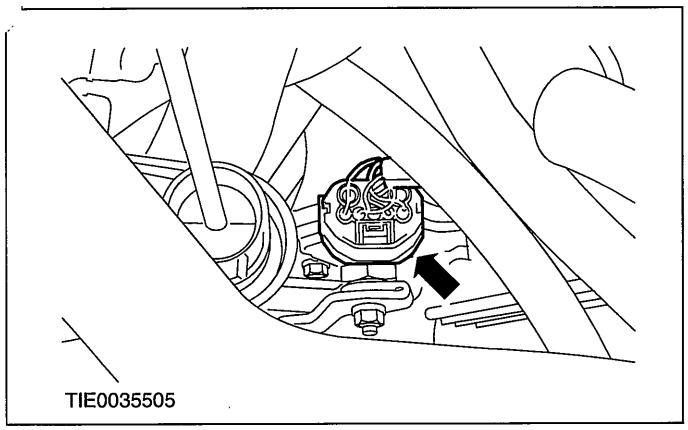


43. Connect the transaxle wiring harness electrical connector.

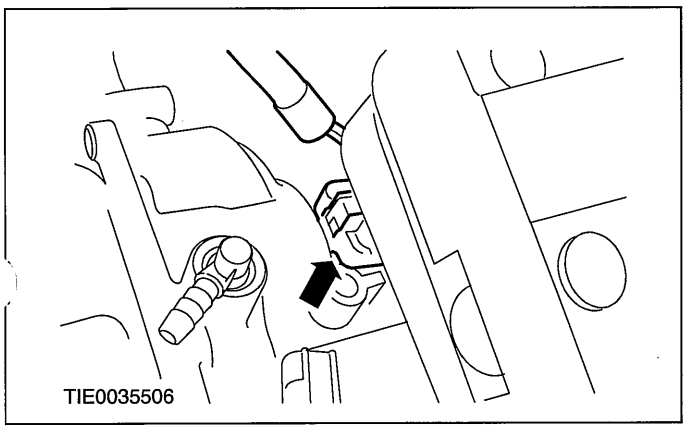


44. Connect the transaxle breather hose.

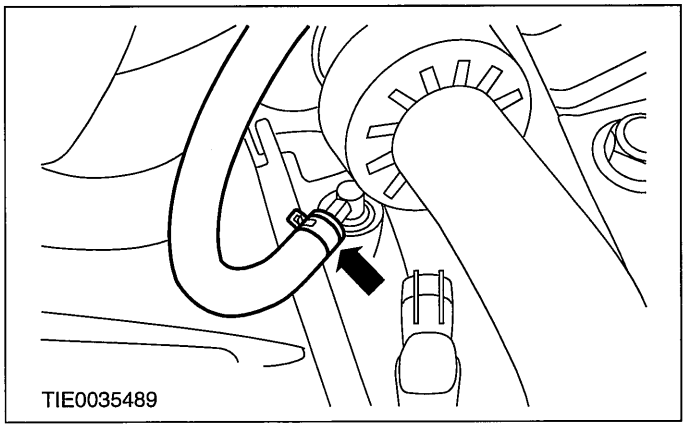


45. Connect the turbine shaft speed (TSS) sensor electrical connector.

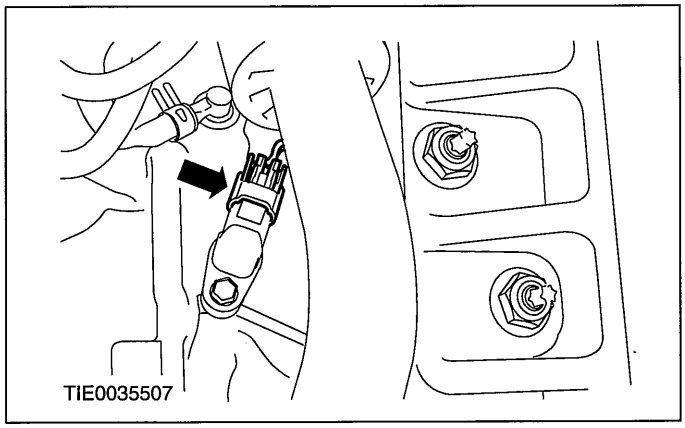


46. Attach the ground cable to the transaxle.

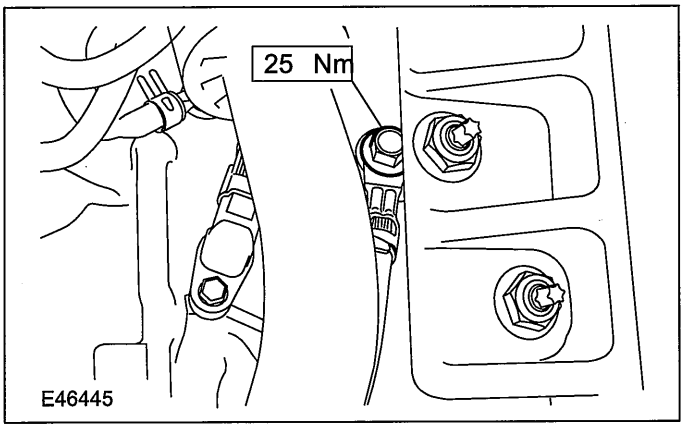


47. Install the engine wiring harness support brackets.

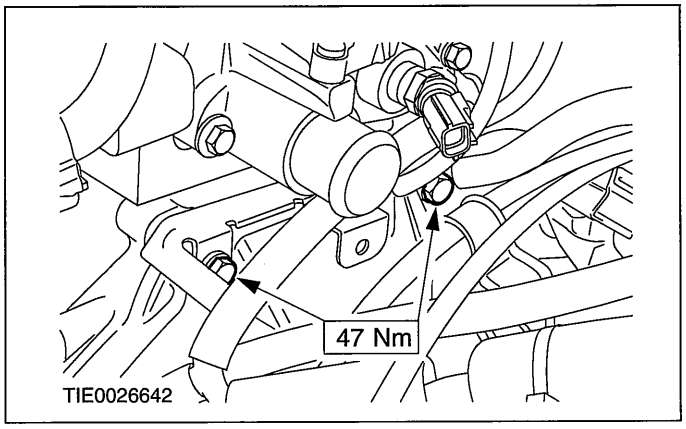

## INSTALLATION

48. Attach the engine ground cable to the transaxle.

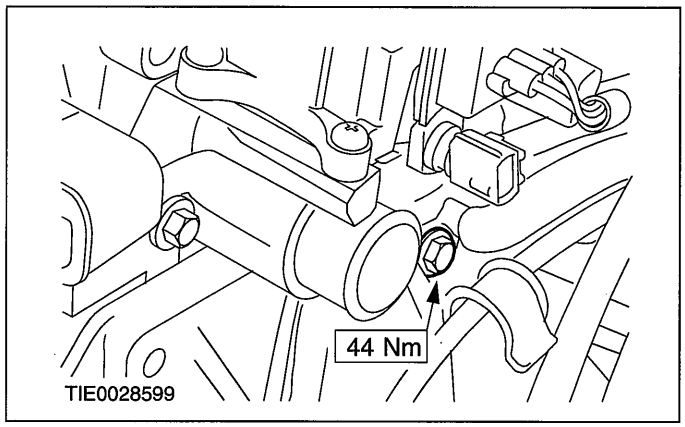


49. Connect the electronic ignition (EI) coil electrical connector.

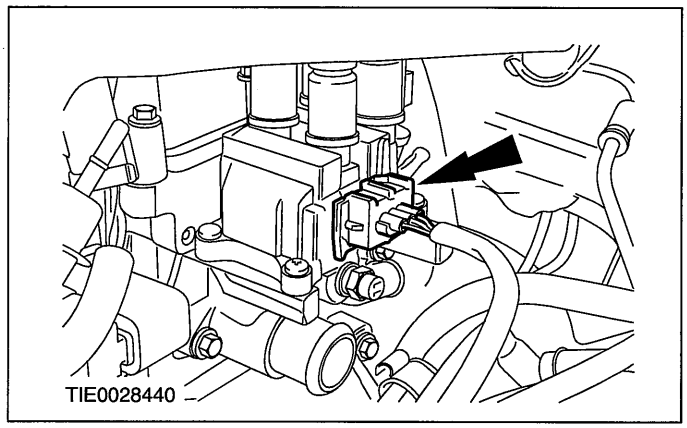


50. Connect the engine coolant temperature (ECT) electrical connector.

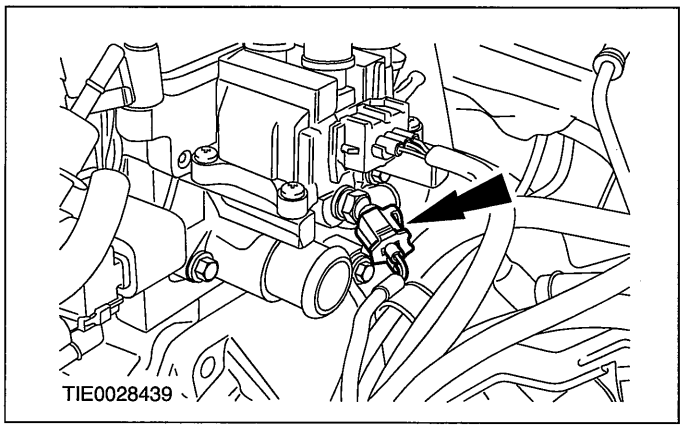


51. Install the right-hand headlamp assembly.

For additional information, refer to: Headlamp Assembly (417-01 Exterior Lighting, Removal and Installation).

52. Connect the generator electrical connectors.

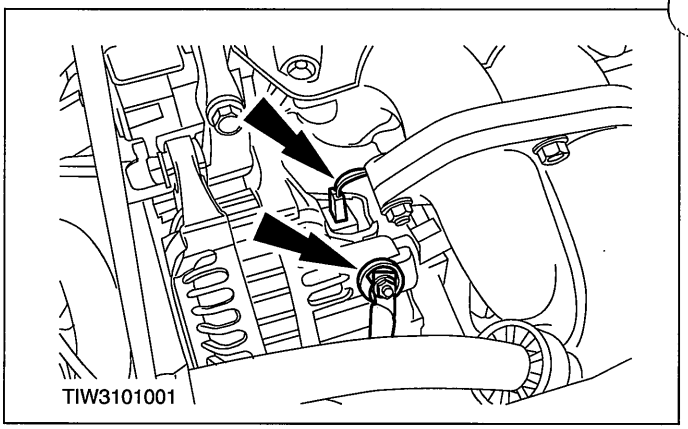


53. Connect the knock sensor (KS) electrical connector.

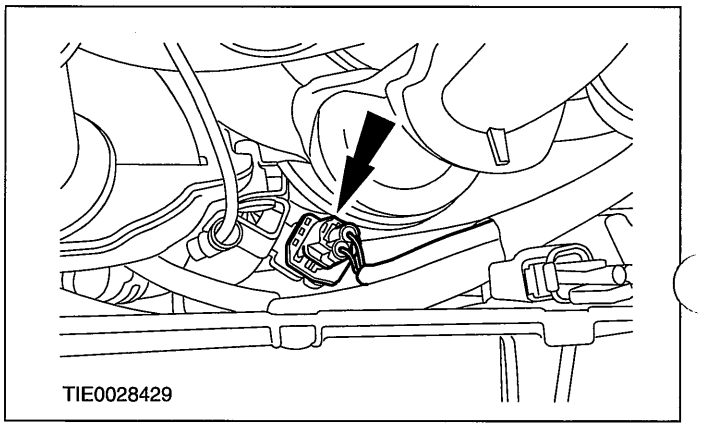


54. Connect the EVAP electrical connector.

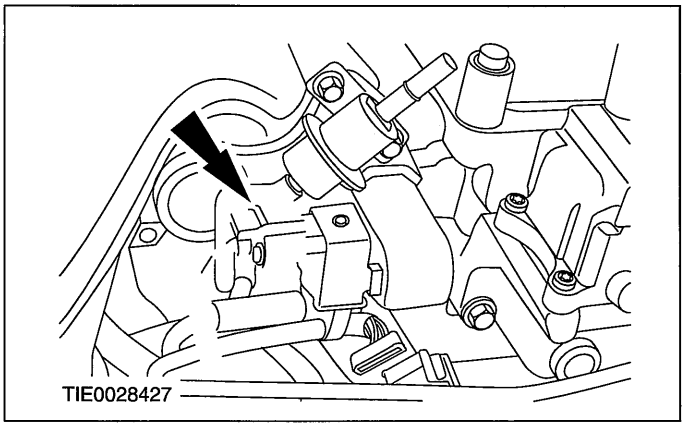

## INSTALLATION

55. Connect the engine wiring harness electrical connector.

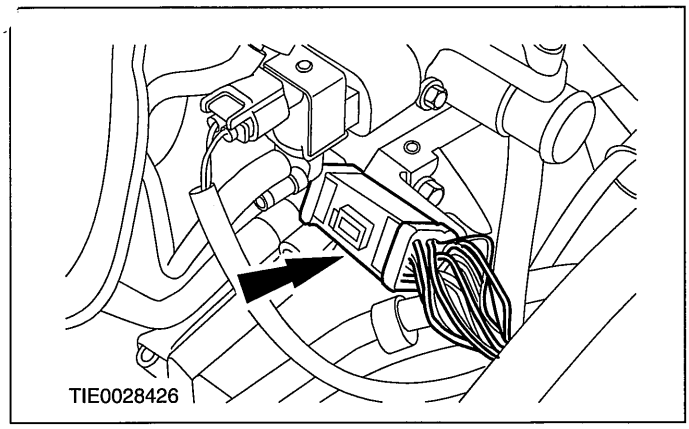


56. Attach the power steering line to the power steering pump mounting bracket.

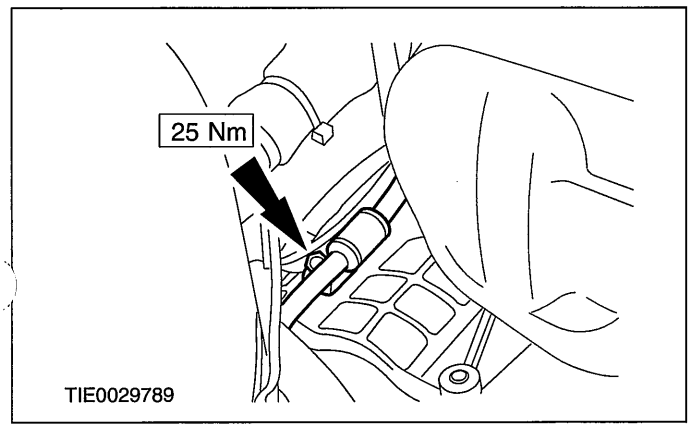


57. Attach the power steering line support bracket to the cylinder head.

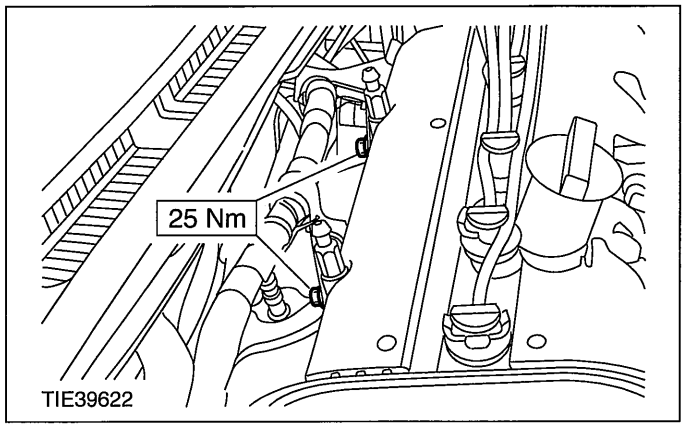


58. Connect the catalyst monitor sensor electrical connector.

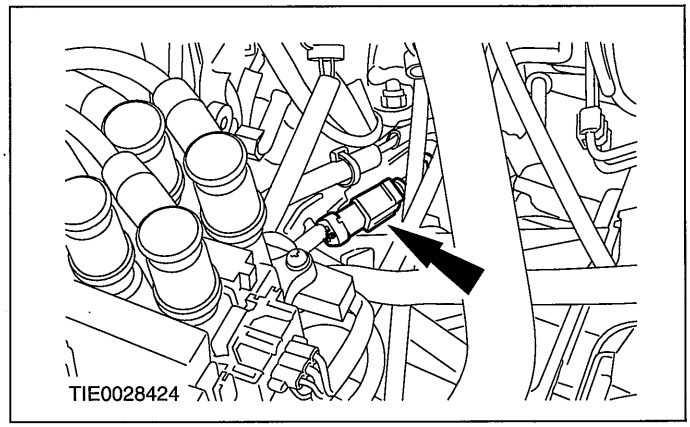


59. Connect the heated oxygen (HO2S) sensor electrical connector.

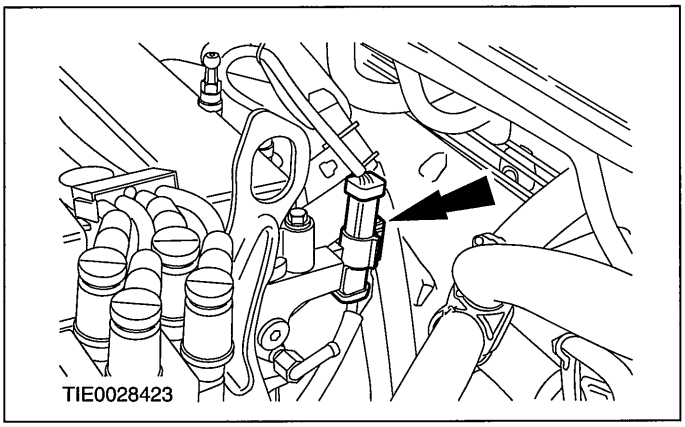


60. Using the special tool, connect the coolant hose to the coolant distribution housing.

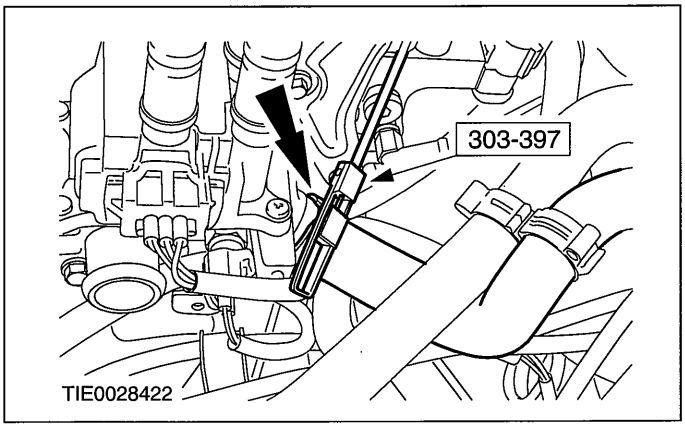

## INSTALLATION

61. Using the special tool, connect the coolant hose to the coolant distribution housing.

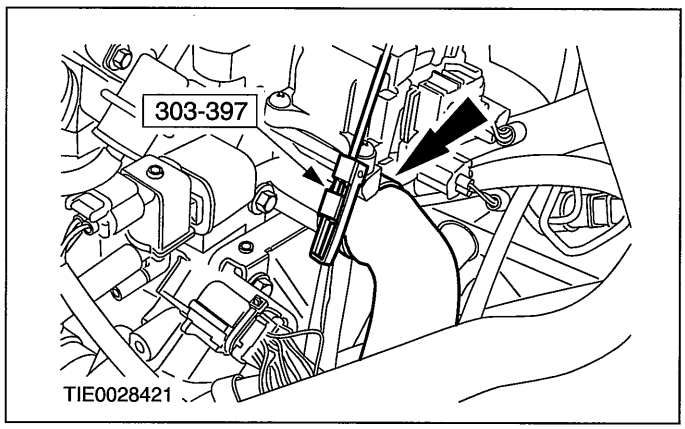


62. Attach the brake booster vacuum line to the intake manifold.

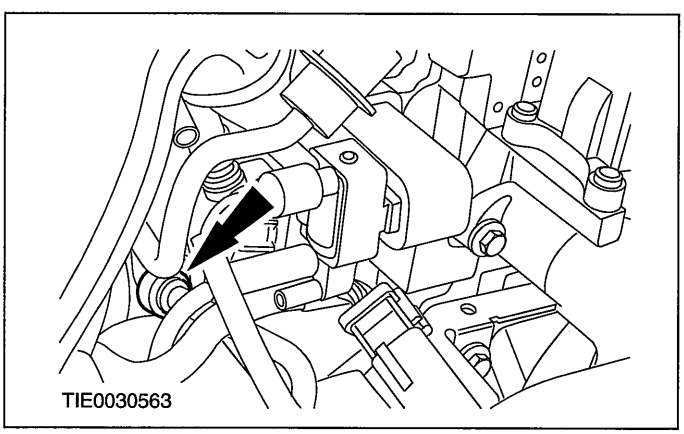


63. Connect the low pressure evaporate emission (EVAP) hose to the EVAP valve.

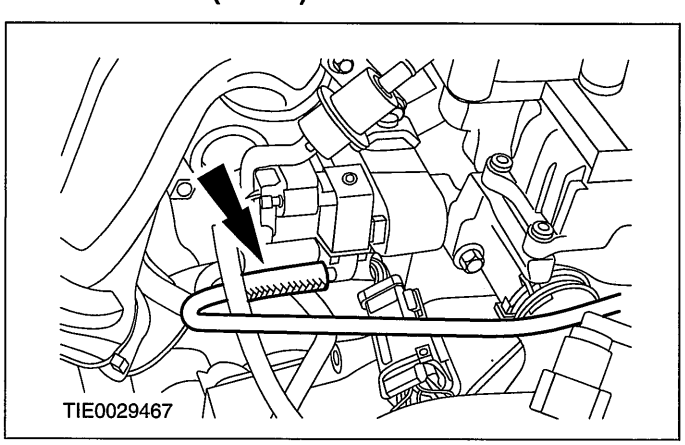


64. Attach the coolant expansion tank to the bracket.

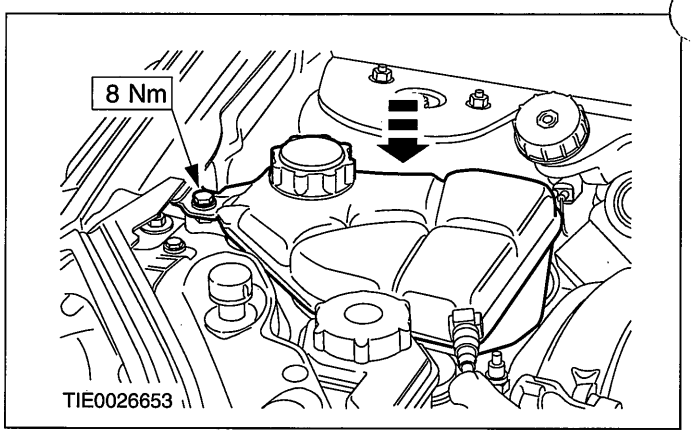


65. Using the special tool, connect the degas hose to the cylinder head.

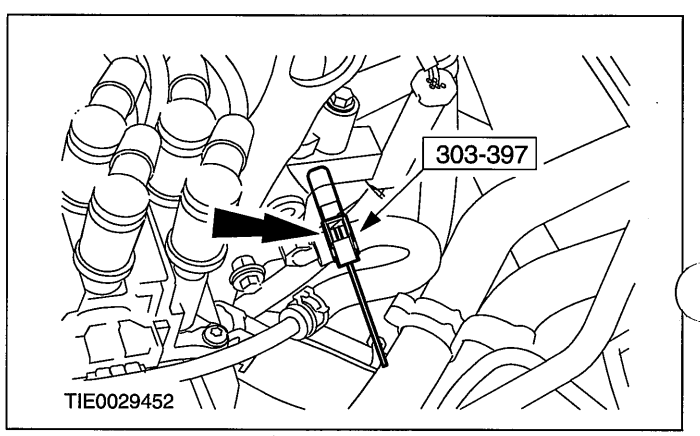


66. Attach the power steering fluid reservoir to the bracket.

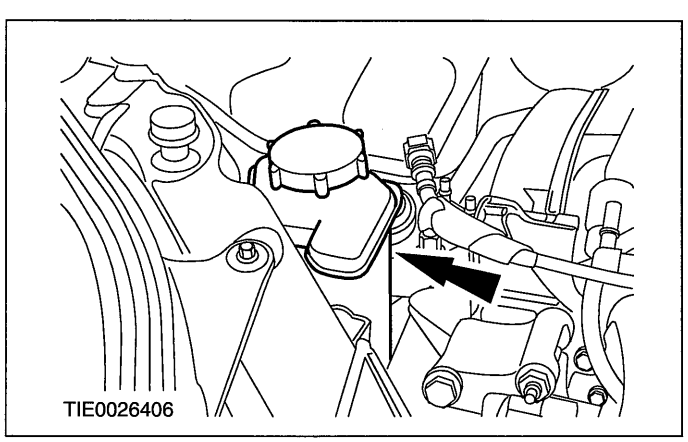

## INSTALLATION

67. **Connect the fuel supply line quick release coupling.**

    **For additional information, refer to: Quick Release Coupling (310-00 Fuel System - General Information, General Procedures).**

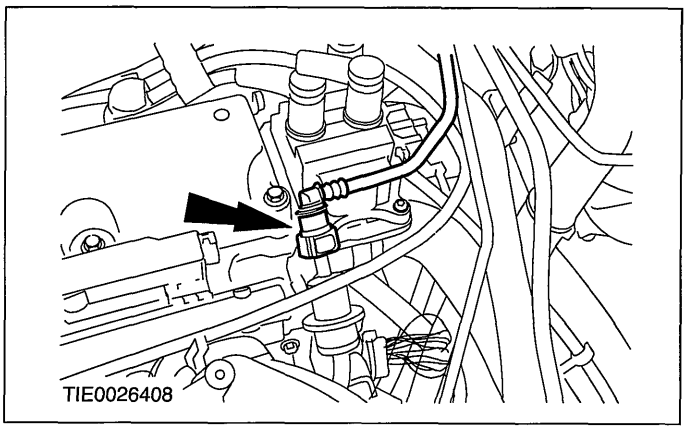


68. **Connect the fuel return line quick release coupling.**

    **For additional information, refer to: Quick Release Coupling (310-00 Fuel System - General Information, General Procedures).**

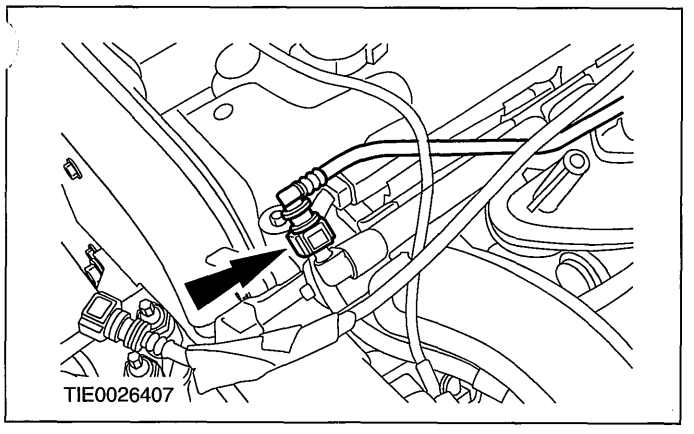


69. **Attach the fuel line and the degas line to the intake manifold.**
    - Install the cable tie.

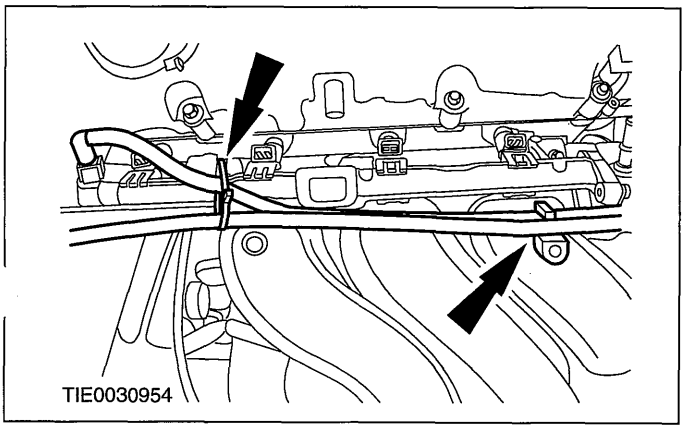


70. **Tighten the strut and spring assembly top mount nuts on both sides.**

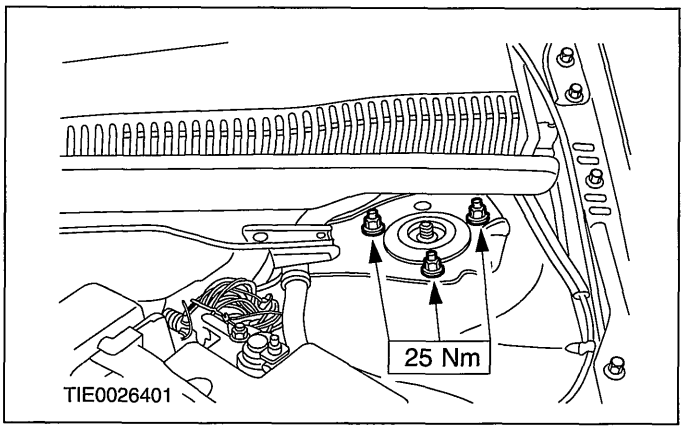


71. **Connect the powertrain control module (PCM) electrical connector.**

    **For additional information, refer to: Powertrain Control Module (PCM) - 1.25L Duratec-16V (Sigma)/1.4L Duratec-16V (Sigma)/1.6L Duratec-16V (Sigma) (303-14 Electronic Engine Controls, Removal and Installation).**

72. **Install the air cleaner.**

    **For additional information, refer to: Air Cleaner - 1.25L Duratec-16V (Sigma)/1.4L Duratec-16V (Sigma)/1.6L Duratec-16V (Sigma) (303-12 Intake Air Distribution and Filtering, Removal and Installation).**

73. **Install the front wheels and tires.**

    **For additional information, refer to: Wheel and Tire (204-04 Wheels and Tires, Removal and Installation).**

74. **Fill the engine cooling system.**

    **For additional information, refer to: Cooling System Draining, Filling and Bleeding - 1.25L Duratec-16V (Sigma)/1.4L Duratec-16V (Sigma)/1.6L Duratec-16V (Sigma)/1.3L Duratec-8V (Rocam) (303-03A, General Procedures).**

75. **Check the transmission fluid level and top up with clean automatic transmission fluid if necessary.**

    **For additional information, refer to: Transmission Fluid Level Check (307-01 Automatic Transmission/Transaxle - Vehicles With: 4-Speed Automatic Transmission (AW81-40), General Procedures).**

# SECTION 303-01B Engine — 2.0L Duratec-HE (MI4)

## VEHICLE APPLICATION:2006.0 Fiesta

CONTENTS PAGE


**SPECIFICATIONS**

Specifications ..... 303-01B-3
- Engine Data ..... 303-01B-3
- Engine Oil ..... 303-01B-3
- Oil system ..... 303-01B-3
- Engine Oil Capacity ..... 303-01B-4
- Valve Dimensions ..... 303-01B-4
- Camshaft Dimensions ..... 303-01B-4
- Crankshaft Dimensions ..... 303-01B-4
- Piston Dimensions ..... 303-01B-4
- Cylinder Head ..... 303-01B-4
- Cylinder Block ..... 303-01B-4

**DESCRIPTION AND OPERATION**

Engine ..... 303-01B-8

**DIAGNOSIS AND TESTING**

Engine ..... 303-01B-15

**GENERAL PROCEDURES**

Valve Clearance Adjustment ..... 303-01B-16

**IN-VEHICLE REPAIR**

| | | |
|---|---|---|
| Intake Manifold | (21 183 0) | 303-01B-21 |
| Crankshaft Front Seal | (21 467 0) | 303-01B-25 |
| Crankshaft Pulley | (21 572 0) | 303-01B-26 |
| Valve Seals | (21 238 0) | 303-01B-35 |
| Valves | (21 215 4) | 303-01B-37 |
| Camshafts | (21 284 0) | 303-01B-39 |
| Oil Pan | (21 154 0) | 303-01B-49 |
| Oil Pump | (21 714 0) | 303-01B-54 |
| Crankshaft Rear Seal | (21 468 4) | 303-01B-56 |
| Engine Front Cover | (21 148 0) | 303-01B-60 |
| Exhaust Manifold | | 303-01B-64 |
| Timing Chain | (21 314 0) | 303-01B-67 |
| Cylinder Head | (21 163 0) | 303-01B-69 |

**REMOVAL**

Engine ..... 303-01B-74

**DISASSEMBLY**

Engine ..... (21 134 8) 303-01B-83

**ASSEMBLY**

Engine..... (21 134 8) 303-01B-[illegible]

**INSTALLATION**

Engine..... 303-01B-111

# SPECIFICATIONS

## Engine Data

| Description | | |
|---|---|---|
| Engine code | N4JA | N4JB |
| Emission level | Stage III | Stage IV |
| Firing order | 1-3-4-2 | 1-3-4-2 |
| Bore | 87.5 mm | 87.5 mm |
| Stroke | 83.1 mm | 83.1 mm |
| Cubic capacity | 1998 cm³ | 1998 cm³ |
| Compression ratio | 10.8 : 1 | 10.8 : 1 |
| Power output 6000 rpm | 110 kW (150 PS) | 110 kW (150 PS) |
| Maximum torque at 4500 rpm | 190 Nm | 190 Nm |
| Maximum engine speed (intermittent) | 7000 rpm | 7000 rpm |
| Maximum engine speed (continous) | 6500 rpm | 6500 rpm |
| Idle speed | 700 rpm | 700 rpm |
| Number of main bearings | 5 | 5 |
| Camshaft drive | Chain | Chain |
| Maximum oil consumption | 0.5l/1000 km | 0.5l/1000 km |

## Engine Oil

| Viscosity /ambient temperature | Type | Specification |
|---|---|---|
| **Recommended engine oil** | | |
| SAE 5W-30 /below -20°C to over +40°C | Ford Formula E | WSS-M2C913-B |
| **Alternative engine oils (for top-up only)** | | |
| SAE 10W-40 /-20°C to over +40°C | Ford Formula XR+ | ACEA A3/B3 |
| SAE 5W-40 /below -20°C to over +40°C | Ford Formula S | ACEA A3/B3 |
| If other types of engine oil are used, these must conform at least to the respective API SH/EC viscosity class. | | |

## Lubricants, Fluids, Sealers and Adhesives

| Item | Specification |
|---|---|
| Silicone sealant, oil pan contact surface to crankshaft rear seal retainer, oil pan to cylinder block, oil pan to engine front cover, engine front cover to cylinder block/oil pan | WSE-M4G323-A4 |
| Oil pressure switch and engine front cover blanking plug adhesive | WSK-M2G349-A7 |
| Silicone grease | ESE-M1C171-AA |

## Oil system

| Description | bar |
|---|---|
| Pressure relief valve opening pressure | 5 |

## SPECIFICATIONS

### Engine Oil Capacity

| Description | Liters |
|---|---|
| Initial fill, including oil filter | 4.6 |
| Service fill including filter | 4.3 |
| Service fill excluding filter | 3.9 |

### Valve Dimensions

| Description | mm |
|---|---|
| Valve clearance (engine cold), intake | 0.22 - 0.28 |
| Valve clearance (engine cold), exhaust | 0.27 - 0.33 |
| Valve stem diameter, intake | 5.470 - 5.485 |
| Valve stem diameter, exhaust | 5.465 - 5.480 |

### Camshaft Dimensions

| Description | mm |
|---|---|
| Camshaft journal diameter | 24.97 ± 0.01 |
| Camshaft journal clearance | 0.035 - 0.080 |
| Camshaft endplay | 0.09 - 0.24 |
| Camshaft lobe lift, intake | 8.8 |
| Camshaft lobe lift, exhaust | 7.7 |

### Crankshaft Dimensions

| Description | mm |
|---|---|
| Crankshaft endplay | 0.335 ± 0.115 |

### Piston Dimensions

| Description | mm |
|---|---|
| Piston diameter - Class 1 | 87.465 - 87.475 |
| Piston diameter - Class 2 | 87.475 - 87.485 |
| Piston diameter - Class 3 | 87.485 - 87.495 |

### Cylinder Head

⚠ **CAUTION:The mating face of the cylinder head must not be reworked.**

| Description | mm |
|---|---|
| Maximum distortion (mating face) | 0.1 |

### Cylinder Block

| Description | mm |
|---|---|
| Cylinder bore diameter | 87.500 + 0.030 |
| Cylinder block distortion (maximum) | 0.1 |

## SPECIFICATIONS

### Torque Specifications

| Description | Nm | lb-ft | lb-in |
|---|---|---|---|
| Air cleaner retaining bracket | 8 | - | 71 |
| Air cleaner resonator support bracket retaining bolts | 15 | 11 | - |
| Battery cable to generator electrical connector | 15 | 11 | - |
| Battery tray support bracket retaining bolts | 25 | 18 | - |
| Cylinder head retaining bolts | a) | - | - |
| Camshaft bearing caps retaining bolts | a) | - | - |
| Camshaft sprocket retaining bolts | 72 | 53 | - |
| Camshaft position (CMP) sensor retaining bolt | 6 | - | 53 |
| Engine front cover retaining bolts | a) | - | - |
| Engine front cover upper blanking plug | 10 | - | 89 |
| Engine front cover lower blanking plug | 12 | 9 | - |
| Engine support insulator retaining bolts | 48 | 35 | - |
| Engine wiring harness bracket to valve cover retaining nut | 10 | - | 89 |
| Generator upper retaining bolt | 25 | 18 | - |
| Hood latch lever retaining bolts | 15 | 11 | - |
| Crankshaft pulley retaining bolts | a) | - | - |
| Coolant expansion tank retaining nut | 8 | - | 71 |
| Coolant plug to cylinder block | 43 | 32 | - |
| Coolant plugs (4) to cylinder head | 75 | 55 | - |
| Power steering pump retaining bolt | 23 | 17 | - |
| Power steering reservoir retaining bolts | 9 | - | 80 |
| Power steering pipe to the power steering | 65 | 48 | - |
| Power steering bracket retaining nut | 15 | 11 | - |
| Power steering supply line to intake manifold retaining bolt | 11 | 8 | - |
| Power steering high-pressure line retaining bracket retaining bolt | 30 | 22 | - |
| Power steering return line support bracket retaining nut | 15 | 11 | - |
| Exhaust manifold bracket retaining bolts | 25 | 18 | - |
| Exhaust manifold upper heat shield retaining bolts | 10 | - | 89 |
| Exhaust manifold lower heat shield retaining bolts | 10 | - | 89 |
| Exhaust manifold to the cylinder head retaining nuts | 55 | 41 | - |
| Exhaust manifold studs to cylinder head | 17 | 13 | - |

## SPECIFICATIONS

| Description | Nm | lb-ft | lb-in |
|---|---|---|---|
| Evaporative emission (EVAP) valve retaining bracket retaining nut and bolt | 10 | - | 89 |
| Cylinder block blanking plug | 20 | 15 | - |
| Coolant pump pulley retaining bolts | 25 | 18 | - |
| Coolant pump retaining bolts | 10 | - | 89 |
| Valve cover retaining bolts | 10 | - | 89 |
| Oil level indicator and oil level indicator tube upper retaining bolt | 10 | - | 89 |
| Oil level indicator and oil level indicator tube lower retaining bolt | 10 | - | 89 |
| Oil pressure switch | 15 | 11 | - |
| Oil pan retaining bolts | 25 | 18 | - |
| Oil drain plug | 28 | 21 | - |
| Oil cooler to oil filter adaptor retaining bolt | 34 | 25 | - |
| Crankshaft rear seal carrier retaining bolts | 10 | - | 89 |
| Flywheel retaining bolts | a) | - | - |
| Oil filter adaptor retaining bolts | 25 | 18 | - |
| Positive crankcase ventilation housing retaining bolts | 10 | - | 89 |
| Knock sensor retaining bolt | 20 | 15 | - |
| Thermostat housing retaining bolts | 10 | - | 89 |
| Oil pump retaining bolts | a) | - | - |
| Oil pump sprocket retaining bolt | 25 | 18 | - |
| Oil pump chain guide retaining bolts | 10 | - | 89 |
| Oil pump chain tensioner retaining bolt | 10 | - | 89 |
| Timing chain guide retaining bolts | 10 | - | 89 |
| Timing chain tensioner retaining bolts | 10 | - | 89 |
| Crankshaft position sensor retaining bolts | 7 | - | 62 |
| Accessory drive belt idler pulley retaining bolt | 25 | 18 | - |
| Intake manifold retaining bolts | 18 | 13 | - |
| Transaxle left-hand retaining bolts | 44 | 32 | - |
| Transaxle right-hand retaining bolts | 44 | 32 | - |
| Transaxle lower retaining bolts | 40 | 30 | - |
| Halfshaft center bearing carrier retaining bolts | 48 | 35 | - |
| Intermediate shaft bearing cap retaining nuts | 25 | 18 | - |
| Lower arm ball joint retaining bolt | 48 | 35 | - |

## SPECIFICATIONS

| Description | Nm | lb-ft | lb-in |
|---|---|---|---|
| Wiring harness retaining bracket nuts | 20 | 15 | - |
| Starter motor retaining bolts | 35 | 26 | - |
| Air conditioning (A/C) compressor retaining bolts | 20 | 15 | - |
| Engine rear mount retaining nut | 90 | 66 | - |
| Engine front mount studs to front cover | 12 | 9 | - |
| Engine front mount retaining bolts | 48 | 35 | - |
| Engine front mount retaining nuts | 115 | 85 | - |
| Strut and spring assembly top mount retaining nuts | 25 | 18 | - |
| Spark plugs | 12 | 9 | - |
| a) Refer to the procedure in this section. | | | |

## DESCRIPTION AND OPERATION

# Engine

**Engine**

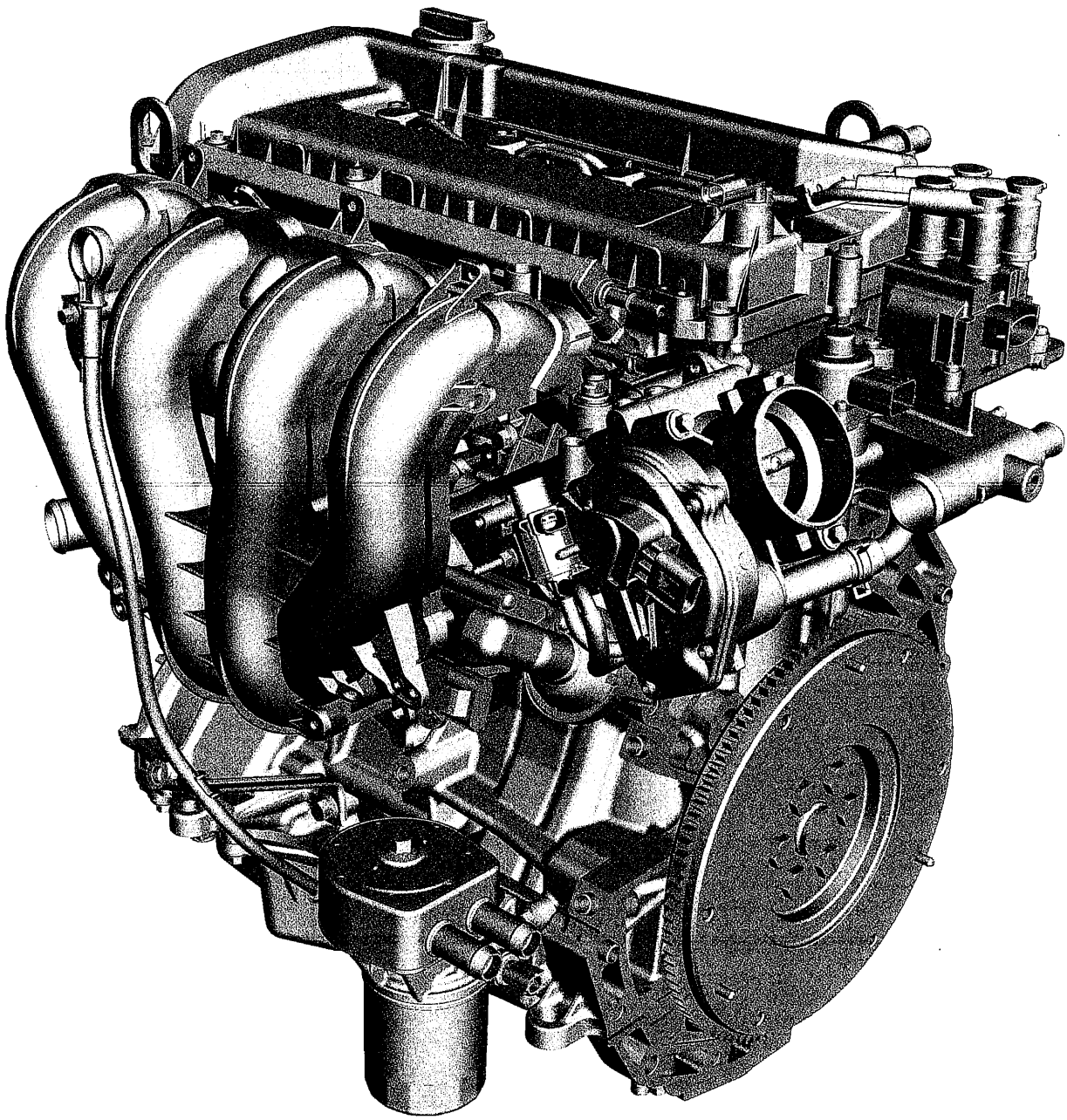

E58244

For the Fiesta ST the engine is available with the following specification:

| 2.0L Duratec-HE (MI4) engine | |
|---|---|
| Engine code | N4JA (Stage III), N4JB (Stage IV) |
| Displacement | 1998 cm³ |
| Maximum power output | 110 kW (150 PS) at 6000 rpm |
| Maximum torque | 190 Nm at 4000 rpm |

## DESCRIPTION AND OPERATION

| 2.0L Duratec-HE (MI4) engine | |
|---|---|
| Emission standard | European Emissions Standard Stage IV (Stage III, depending on country) |

The complete engine is made of cast aluminum which, when combined with the plastic intake manifold, gives a very light unit.

**NOTE:**Due to the fine tolerance in the bearing clearances and bearing shells, no service operations whatsoever are permitted on the crank assembly. In the event of damage, the complete cylinder block and crank assembly must be changed.

Further design features include a ladder frame incorporating the main bearing caps which support the crankshaft in the cylinder block, and the deep-drawn side walls of the cylinder block which reduce engine vibration.

The camshafts are driven by a pinned link chain which runs very quietly and is also maintenance-free.

The engine management for the 2.0L Duratec-HE (MI4) is provided by a Visteon system.

This engine management systems controls the sequential multipoint fuel injection (SFI) and the electronically controlled coolant-cooled exhaust gas recirculation (EGR) valve.

### Engine codes

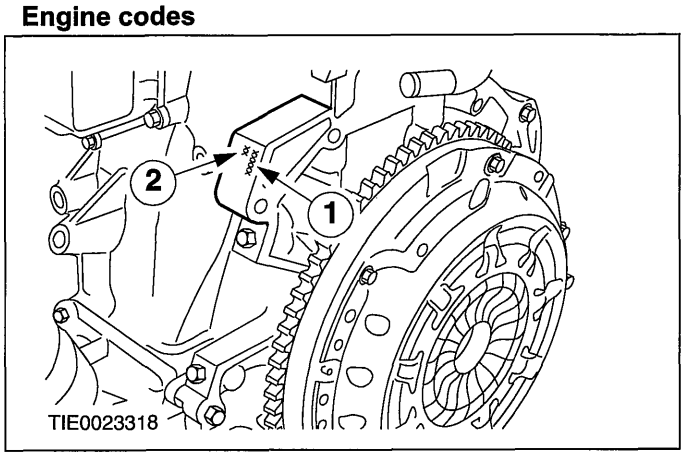


| Item | Description |
|---|---|
| 1 | Enngine code |
| 2 | Engine serial number |

The engine code and the engine serial number are stamped on the right-hand side of the cylinder block on the flywheel side of the engine.

### Cylinder head

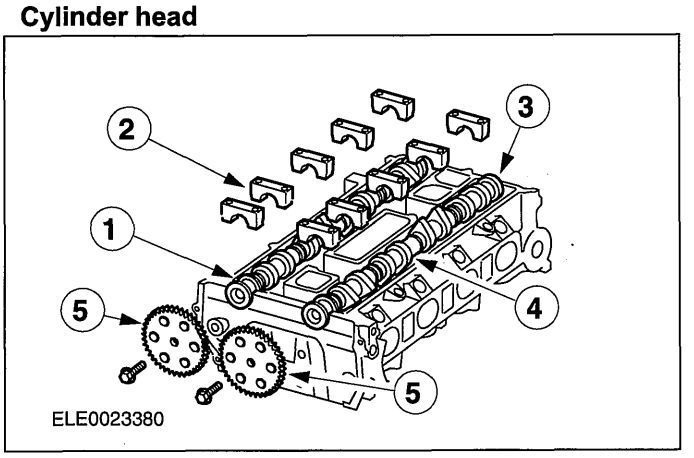


| Item | Description |
|---|---|
| 1 | Exhaust camshaft |
| 2 | Camshaft bearing cap |
| 3 | Cam to identify cylinder No. 1 |
| 4 | Intake camshaft |
| 5 | Camshaft sprockets |

The design and the valve arrangement in the cylinder head is similar to the head of the Zetec-SE engines.

### Cylinder head gasket

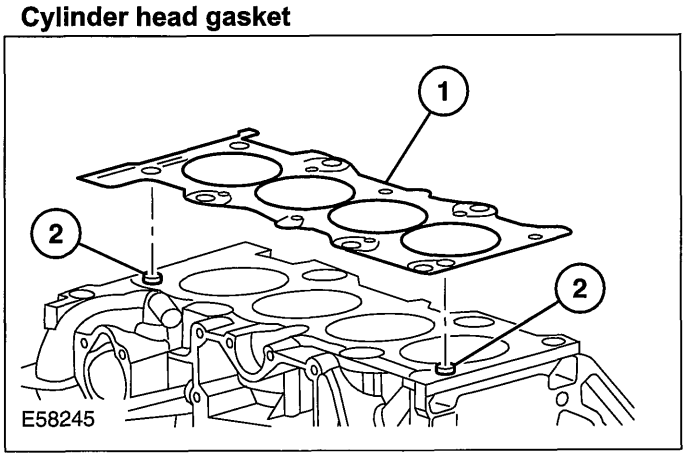


| Item | Description |
|---|---|
| 1 | Cylinder head gasket |
| 2 | Locating dowels |

A four-layer laminated steel cylinder head gasket is used.

The cylinder head gasket and cylinder head are located with two locating dowels.

## DESCRIPTION AND OPERATION

### Valve tappets

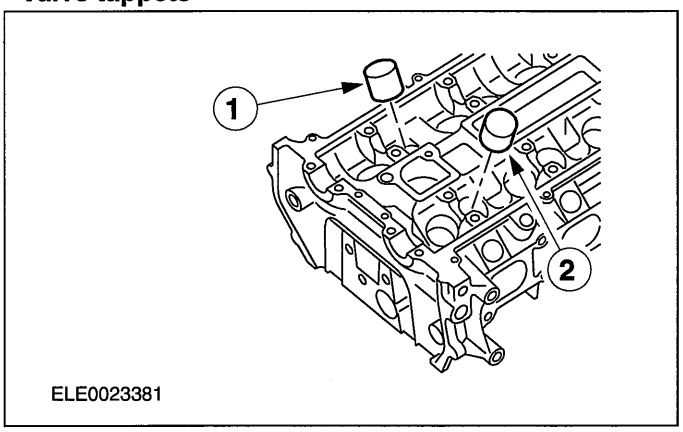


| Item | Description |
|---|---|
| 1 | Exhaust valve tappet |
| 2 | Intake valve tappet |

Mechanical tappets are fitted without adjusting shims.

Due to the special materials and the optimized camshaft profiles, the wear in the area of the valve gear is so minute that checking and adjustment of the valve clearances is only necessary after the engine has been in extensive service.

Different sizes of replacement valve tappets are available in the event of wear or repairs to the valve gear.

### Camshaft drive

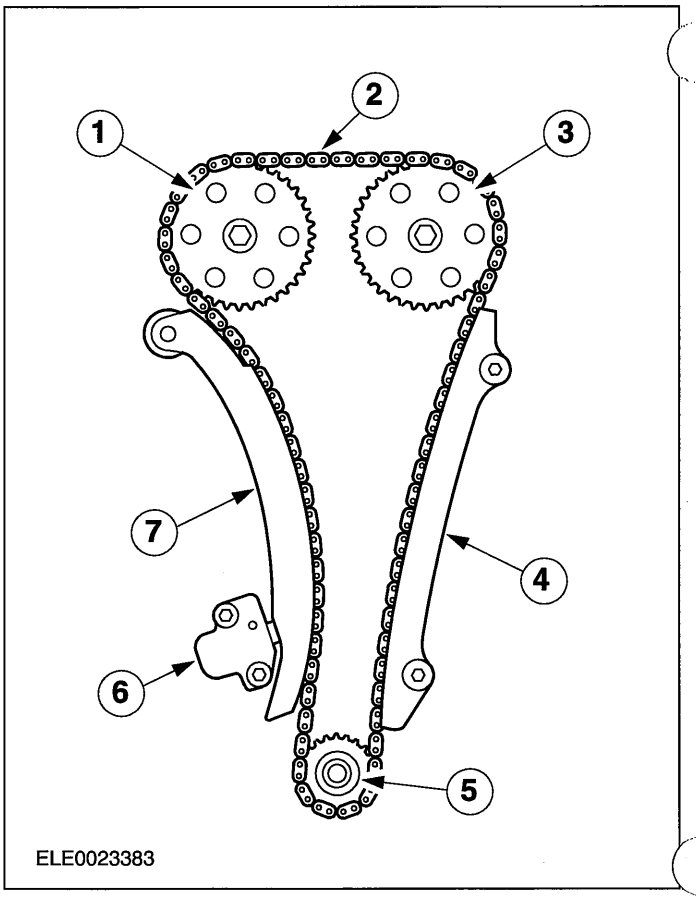


| Item | Description |
|---|---|
| 1 | Exhaust camshaft sprocket |
| 2 | Timing chain |
| 3 | Intake camshaft sprocket |
| 4 | Timing chain guide |
| 5 | Crankshaft sprocket |
| 6 | Hydraulic timing chain tensioner |
| 7 | Timing chain tensioner arm |

The camshafts are driven by a low-noise, maintenance-free pinned link timing chain.

The timing chain is lubricated by the engine oil circuit.

An elongated timing chain guide and a timing chain tensioner arm ensure optimum timing chain guidance and silent running.

The timing chain is tensioned by a hydraulic timing chain tensioner which is supplied from the engine oil circuit.

The timing chain tensioner can be used again after removal.

The camshaft drive requires no maintenance.

## DESCRIPTION AND OPERATION

### Engine front cover

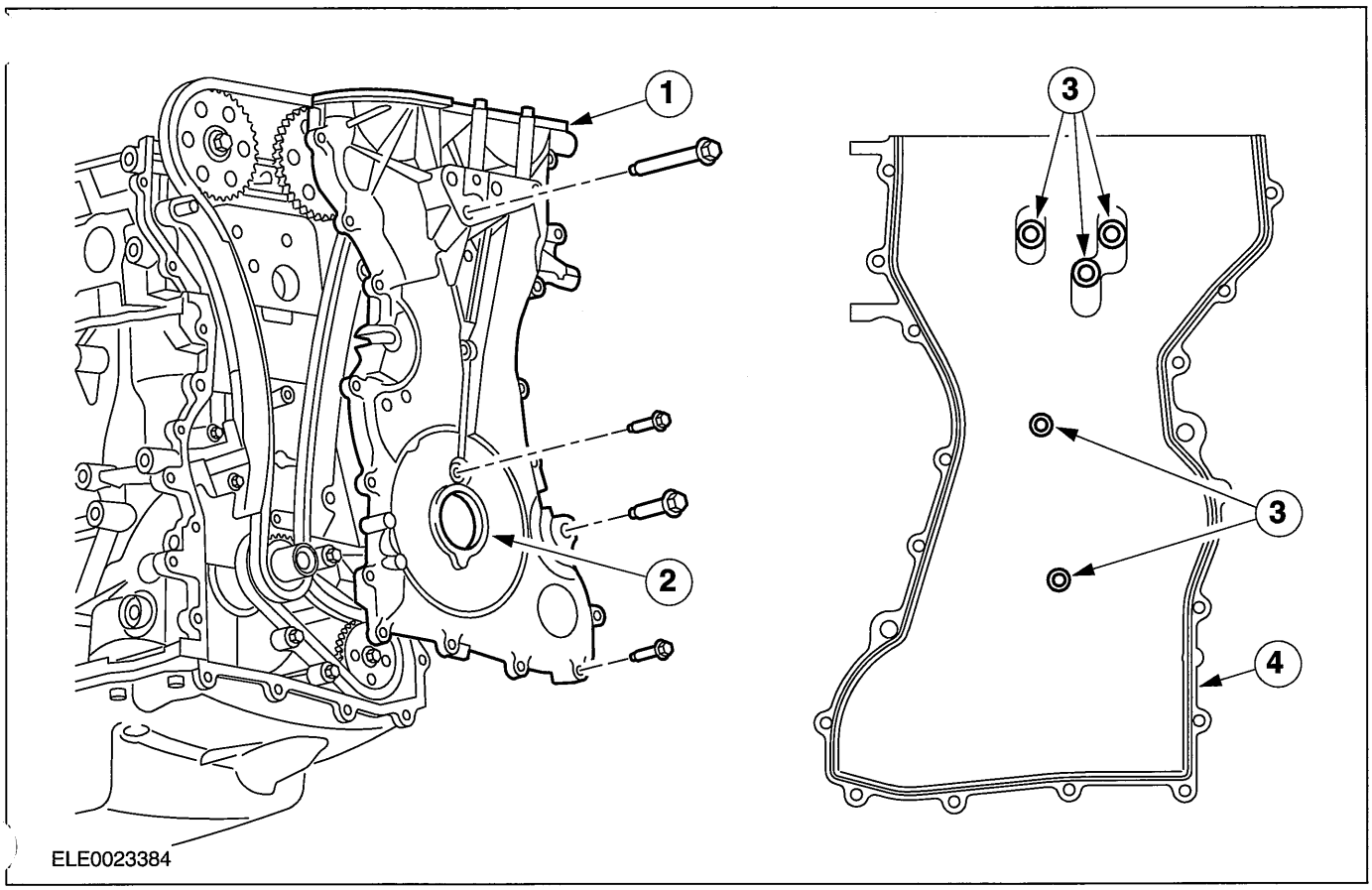


| Item | Description |
|---|---|
| 1 | Engine front cover |
| 2 | Crankshaft front seal |
| 3 | Silicone sealant for sealing at bores |
| 4 | Silicone sealant for sealing engine front cover |

The camshaft drive is sealed with an aluminum engine front cover.

The crankshaft front seal is installed in the engine front cover.

The engine front cover is installed using silicone sealant.

## DESCRIPTION AND OPERATION

### Crankshaft pulley

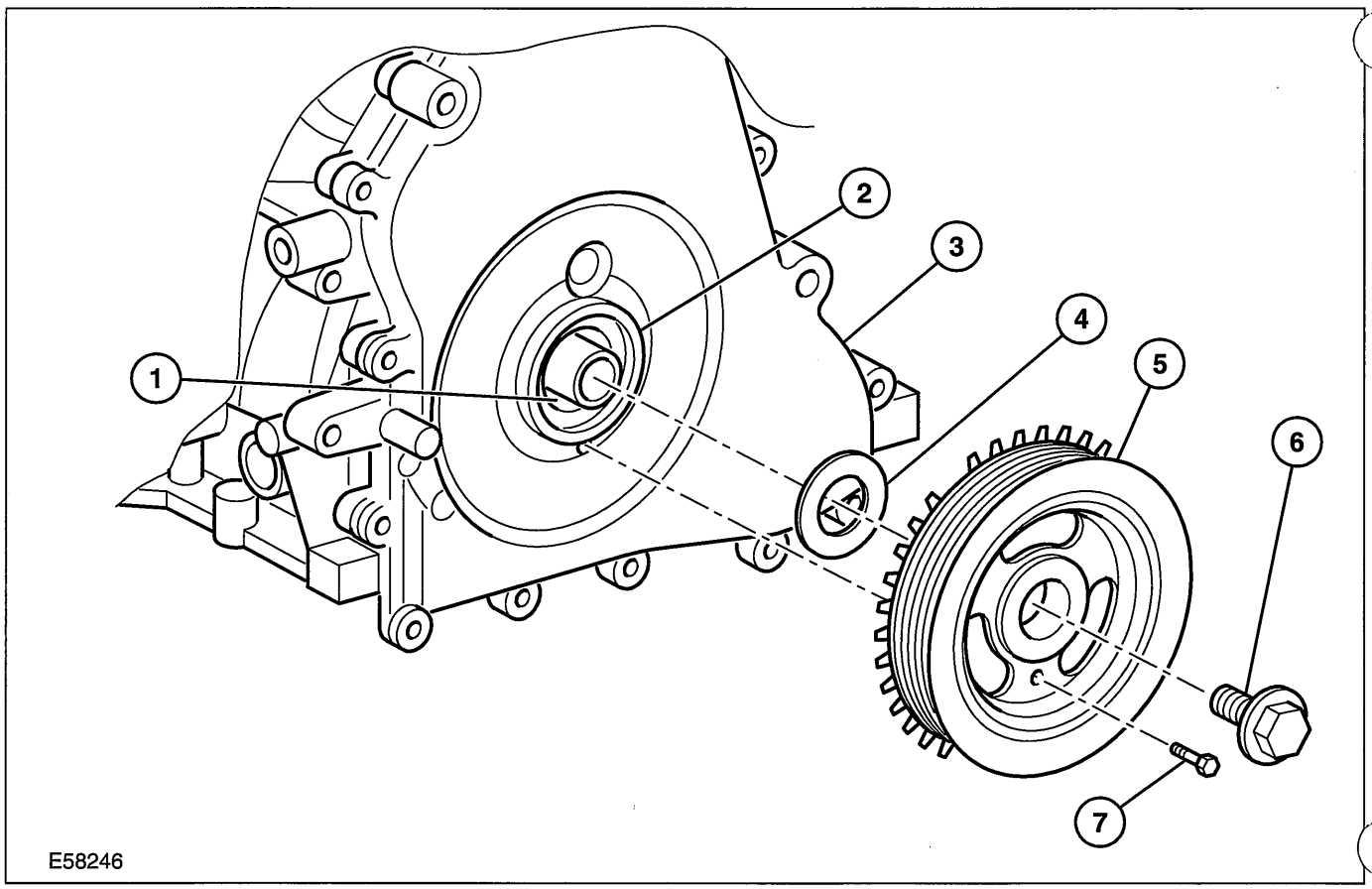


| Item | Description |
|---|---|
| 1 | Crankshaft |
| 2 | Crankshaft front seal |
| 3 | Engine front cover |
| 4 | Friction washer |
| 5 | Crankshaft pulley |
| 6 | Crankshaft pulley retaining bolt |
| 7 | M6 bolt |

The crankshaft pulley forms a unit with the rotor for indicating the crankshaft position.

It is secured to the crankshaft by the contact pressure of the retaining bolt (free to turn on the seat on the crankshaft).

The crankshaft pulley retaining bolt must be changed after removal.

The crankshaft pulley is positioned with the aid of an M6 bolt.

**NOTE:** The M6 bolt must never be used as support when tightening the crankshaft pulley retaining bolt as this could damage the engine front cover.

## DESCRIPTION AND OPERATION

### Oil pump

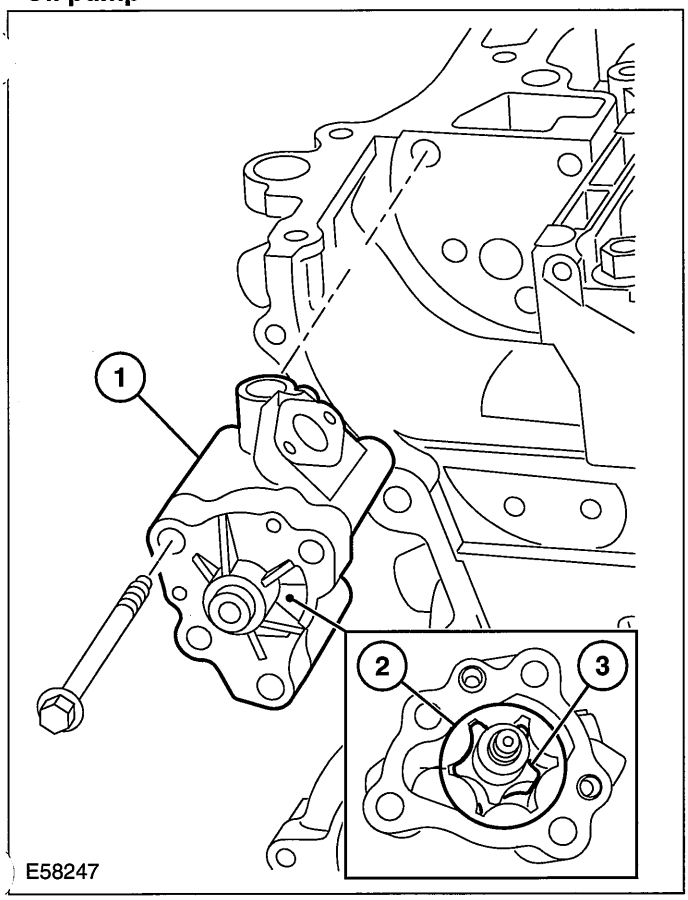


| Item | Description |
|---|---|
| 1 | Oil pump |
| 2 | Oil pump outer rotor |
| 3 | Oil pump inner rotor |

A rotor oil pump is used for engine lubrication.

The rotor oil pump is a positive displacement pump with an internally toothed outer rotor and an externally toothed inner rotor.

The rotor pump works very evenly, can produce high pressures and is therefore fundamental for optimum engine lubrication.

### Oil Pump Drive

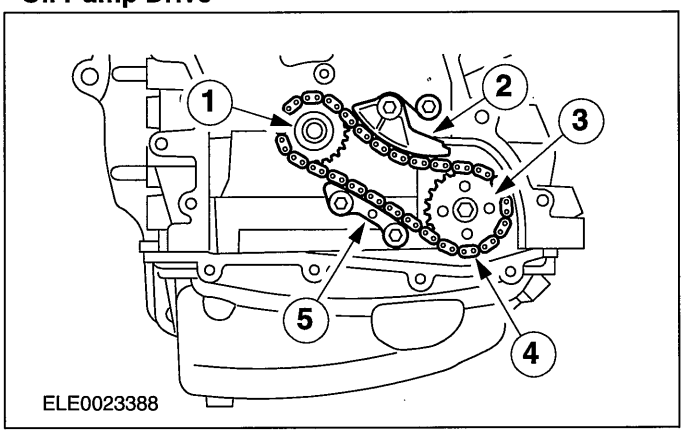


| Item | Description |
|---|---|
| 1 | Crankshaft sprocket |
| 2 | Oil pump chain tensioner |
| 3 | Oil pump sprocket |
| 4 | Oil pump chain |
| 5 | Oil pump chain guide |

The oil pump is mounted on the cylinder block, on the engine front cover side at the bottom and driven directly from the crankshaft by a separate driving chain.

A oil pump chain guide and an oil pump spring-loaded chain tensioner ensure quiet maintenance-free operation.

## DESCRIPTION AND OPERATION

**Oil filter adapter**

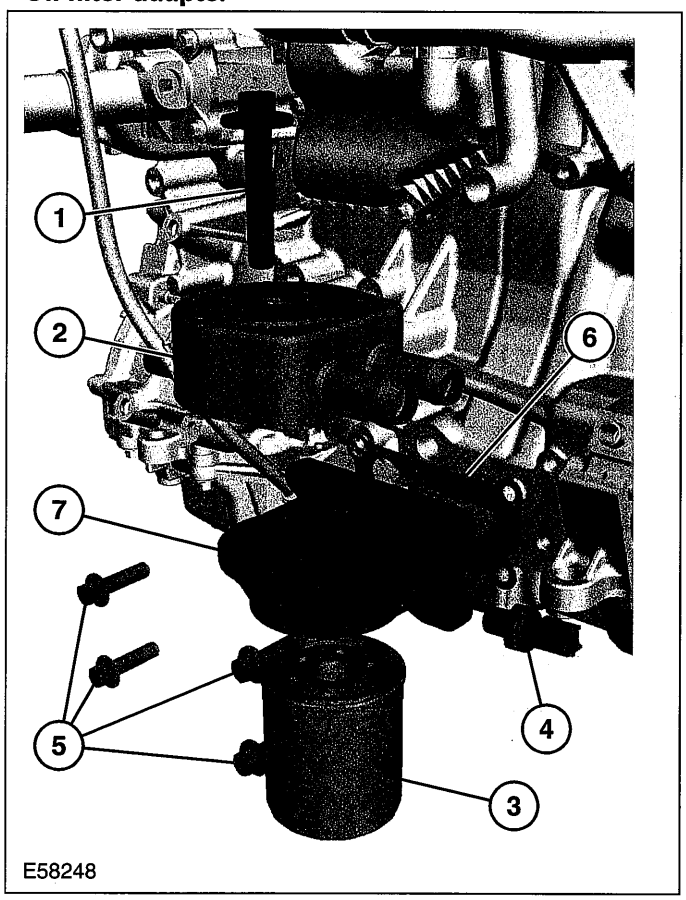


| Item | Description |
|---|---|
| 1 | Oil cooler retaining bolt |
| 2 | Oil cooler |
| 3 | Oil filter |
| 4 | Oil pressure switch |
| 5 | Oil filter adapter retaining bolts |
| 6 | Oil filter adapter gasket |
| 7 | Oil filter adapter |

The oil filter adapter is mounted on the cylinder block with a gasket.

**Engine oil cooler**

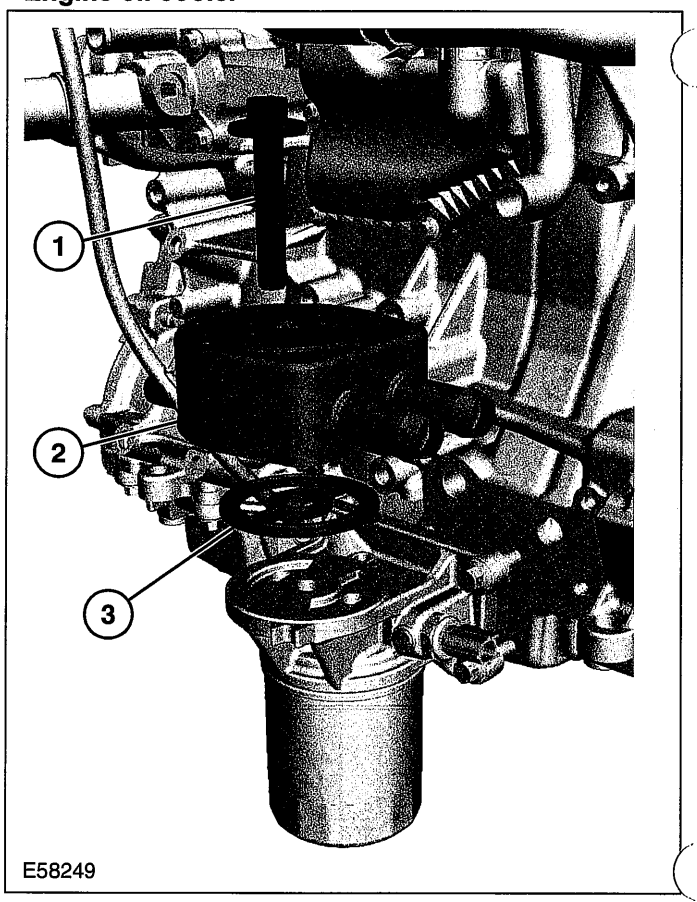


| Item | Description |
|---|---|
| 1 | Oil cooler retaining bolt |
| 2 | Oil cooler |
| 3 | Oil cooler O-ring seal |

## DIAGNOSIS AND TESTING

# Engine

REFER to Section 303-00 [Engine System - General Information].

## GENERAL PROCEDURES

# Valve Clearance Adjustment

### Special Tool(s)

| | |
|---|---|
| 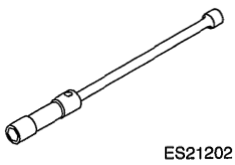 ES21202 | Socket, Spark Plug 303-499 (21-202) |
| 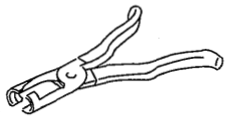 21211 | Pliers, Valve Stem Seal 303-508 (21-211) |

### General Equipment

| |
|---|
| Feeler gauges |

### Materials

| Name | Specification |
|---|---|
| Silicone Sealant | WSE-M4G323-A4 |

1. **Disconnect the battery ground cable.**

   **For additional information, refer to: Battery Disconnect (414-01 Battery, Mounting and Cables, General Procedures).**

2. **Remove the air cleaner.**

   **For additional information, refer to: Air Cleaner - 2.0L Duratec-HE (MI4) (303-12 Intake Air Distribution and Filtering, Removal and Installation).**

3. **Detach the engine wiring harness from the valve cover.**
   1. Unclip the power steering return line from the engine wiring harness bracket.
   2. Remove the air cleaner retaining bracket.
   3. Unclip the engine wiring harness bracket from the intake manifold.
   4. Unclip the engine wiring harness from the intake manifold.

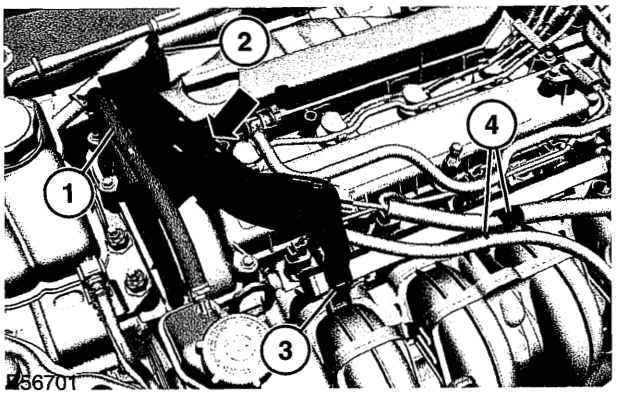

E56701

4. **Remove the positive crankshaft ventilation (PCV) hose.**

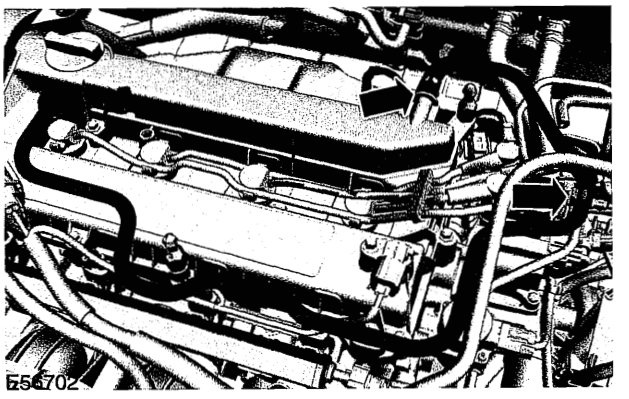
E56702

5. **Disconnect the camshaft position (CMP) sensor electrical connector.**

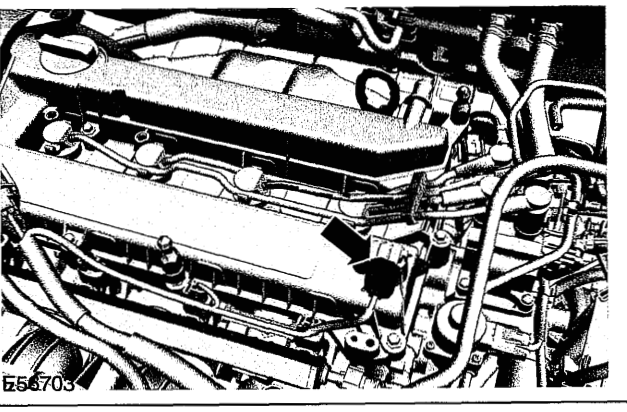
E56703

## GENERAL PROCEDURES

6. Remove the air cleaner retaining bracket.

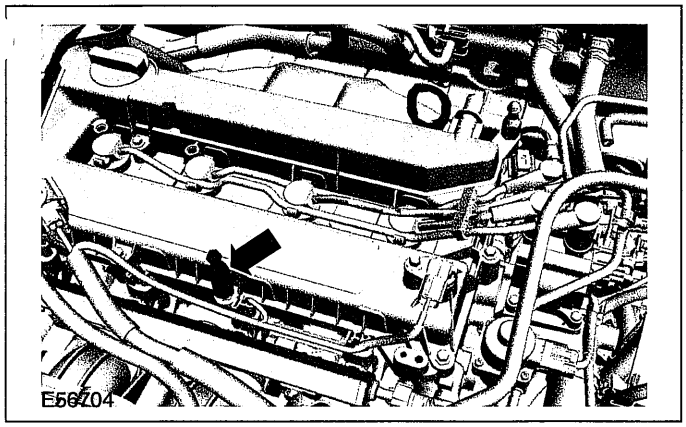


7. Remove the evaporative emission (EVAP) valve support bracket.

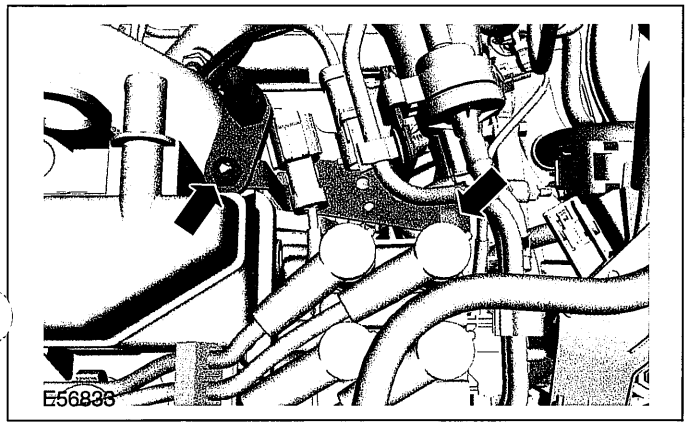


8. Using the special tool, disconnect the spark plug electrical connectors.

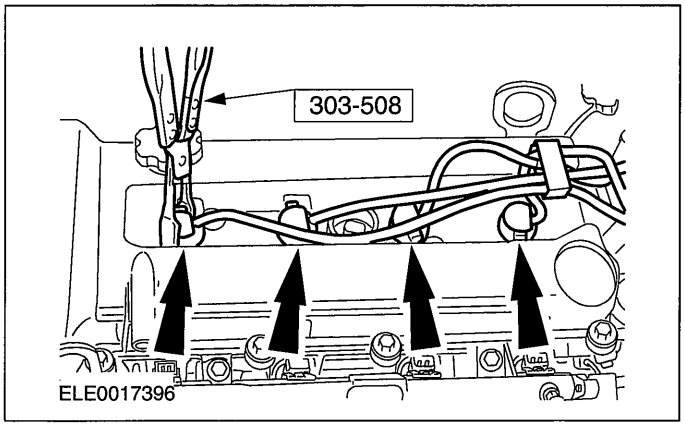


9. Using the special tool, remove the spark plugs.

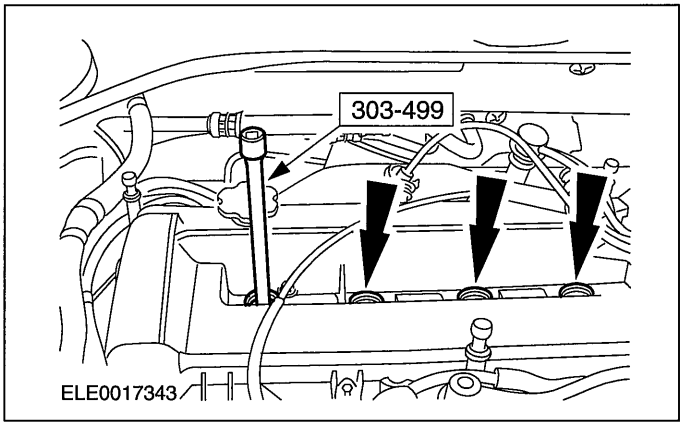


10. Remove the valve cover.

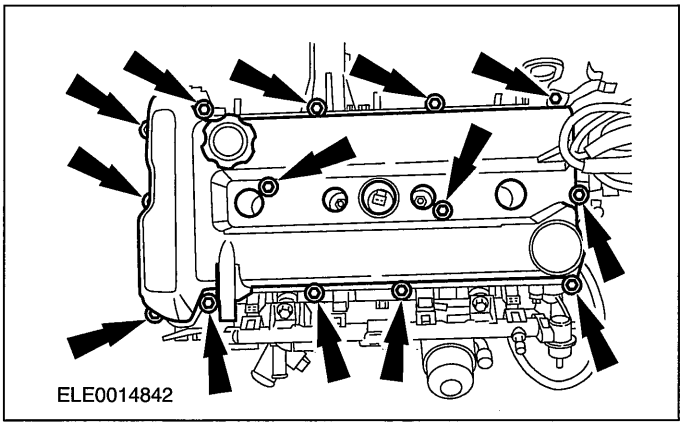


11. ⚠CAUTION:Only rotate the crankshaft in the normal direction of rotation.

Rotate the crankshaft until piston No. 1 is at top dead center (TDC).

12. NOTE:Make a note of each cylinder number and the valve clearances measured.

Using a suitable set of feeler gauges, measure the valve clearances.

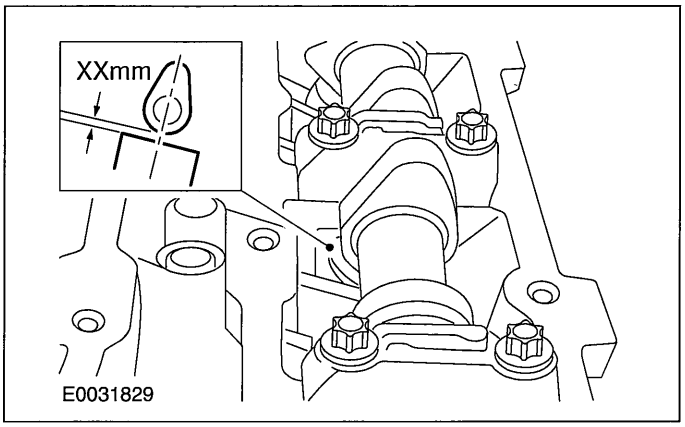

## GENERAL PROCEDURES

13. ⚠CAUTION:Only rotate the crankshaft in the normal direction of rotation.

    Rotate the crankshaft until each piston is at TDC and measure the valve clearances.

14. NOTE:Only carry out the following steps when the valve clearance(s) require adjustment.

    For additional information, refer to: Specifications (303-01 Engine - 2.0L Duratec-HE (MI4), Specifications).

    Remove the camshafts.

    For additional information, refer to: Camshafts (303-01 Engine - 2.0L Duratec-HE (MI4), In-vehicle Repair).

15. NOTE:The number on the valve tappet is the valve tappet thickness, however only the decimal places are marked (for example .650 = 3.650).

    Determine the valve tappet thickness required:

    1. Remove the valve tappet and read the thickness from the underside.
    2. Valve tappet thickness required = thickness of currently installed valve tappet + the measured valve clearance - the required valve clearance.

       For additional information, refer to: Specifications (303-01 Engine - 2.0L Duratec-HE (MI4), Specifications).
    3. Install the correct valve tappet.

16. NOTE:Do not install the valve cover at this stage.

    Install the camshafts.

    For additional information, refer to: Camshafts (303-01 Engine - 2.0L Duratec-HE (MI4), In-vehicle Repair).

17. ⚠CAUTION:Only rotate the crankshaft in the normal direction of rotation.

    Rotate the crankshaft until each piston is at TDC and measure the valve clearances.

18. Repeat this procedure as necessary until all valve clearances are within the specified tolerance.

19. Apply a small bead of sealant to the areas as shown.

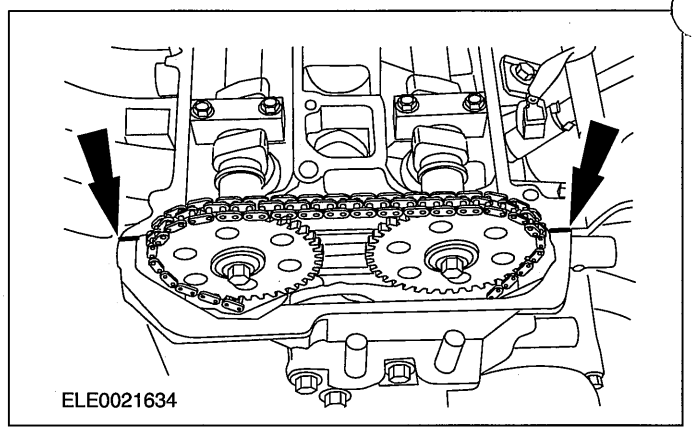


20. NOTE:Install a new valve cover gasket if necessary.

    Install the valve cover.

    - Tighten the bolts in the sequence shown.

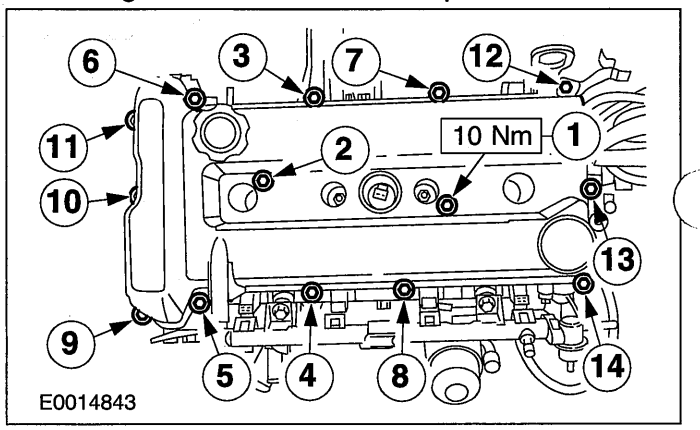


21. Using the special tool, install the spark plugs.

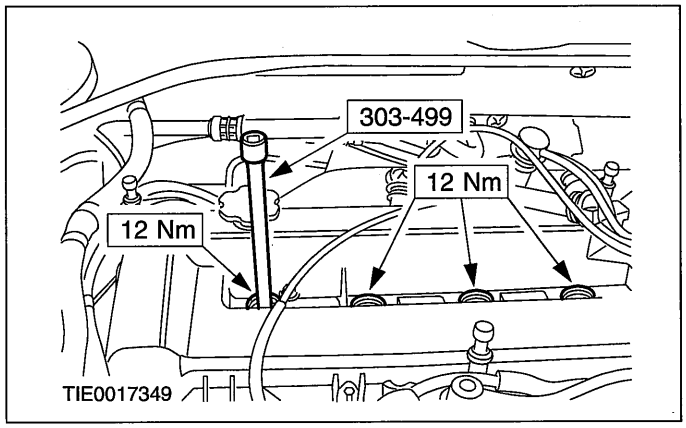

## GENERAL PROCEDURES

22. **Using the special tool, connect the spark plug electrical connectors.**

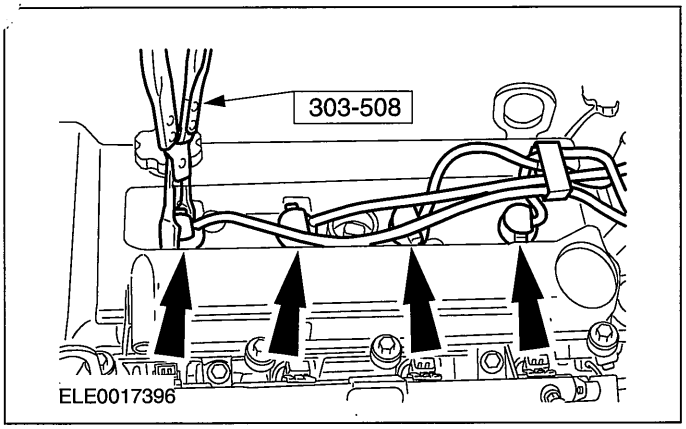


23. **Install the evaporative emission (EVAP) valve support bracket.**

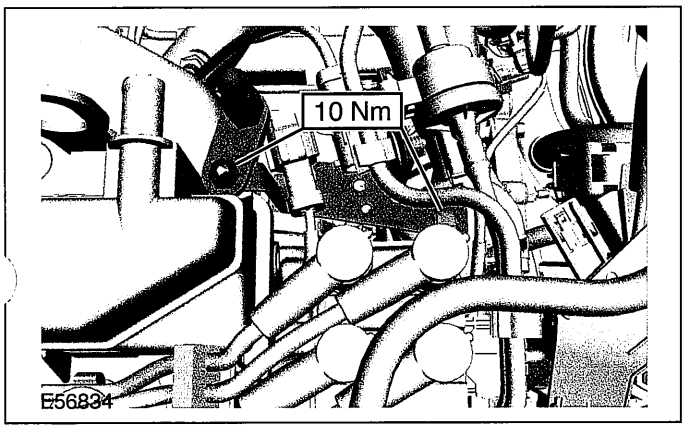


24. **Install the air cleaner retaining bracket.**

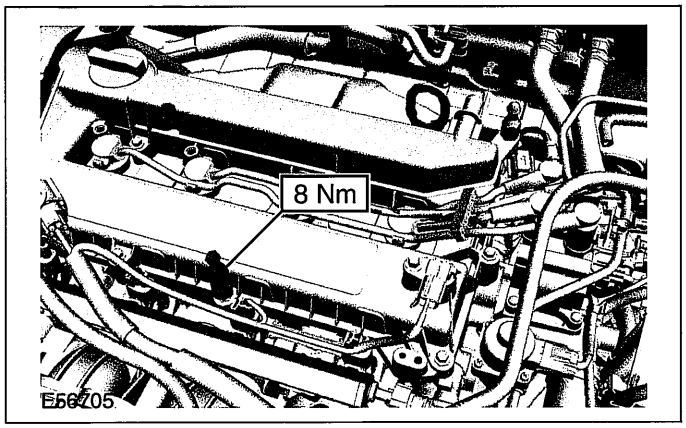


25. **Connect the CMP sensor electrical connector.**

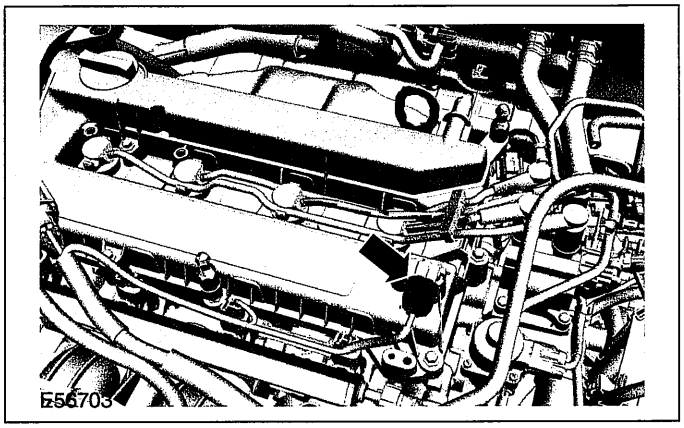


26. **Install the positive crankshaft ventilation (PCV) hose.**

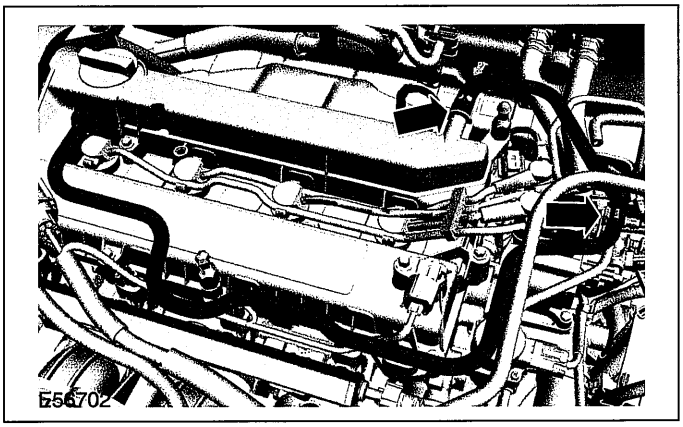


27. **Attach the engine wiring harness to the valve cover.**
    1. Clip the engine wiring harness to the intake manifold.
    2. Clip the engine wiring harness bracket to the intake manifold.
    3. Install the air cleaner retaining bracket.
    4. Clip the power steering return line to the engine wiring harness bracket.

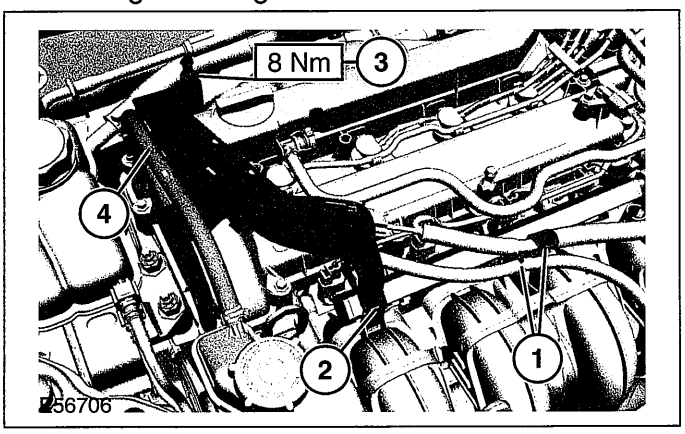

## GENERAL PROCEDURES

28. Install the air cleaner.

    For additional information, refer to: Air Cleaner - 2.0L Duratec-HE (MI4) (303-12 Intake Air Distribution and Filtering, Removal and Installation).

29. Connect the battery ground cable.

    For additional information, refer to: Battery Disconnect (414-01 Battery, Mounting and Cables, General Procedures).

## IN-VEHICLE REPAIR

# Intake Manifold(21 183 0)

## Removal

1. **Disconnect the battery.**

   **For additional information, refer to: Battery Disconnect (414-01 Battery, Mounting and Cables, General Procedures).**

2. **Remove the air cleaner.**

   **For additional information, refer to: Air Cleaner - 2.0L Duratec-HE (MI4) (303-12 Intake Air Distribution and Filtering, Removal and Installation).**

3. **Remove the right-hand headlamp.**

   **For additional information, refer to: Headlamp Assembly (417-01 Exterior Lighting, Removal and Installation).**

4. **Raise and support the vehicle. For additional information, refer to: (100-02 Jacking and Lifting)**

   **Jacking (Description and Operation), Lifting (Description and Operation).**

5. **Disconnect the crankshaft position (CKP) sensor electrical connector.**

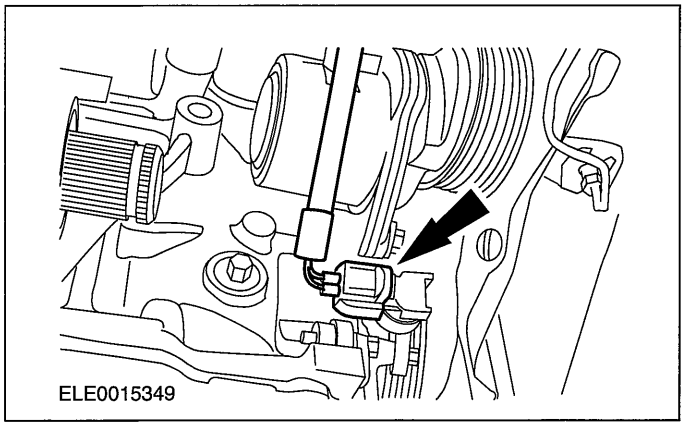


6. **Disconnect the generator electrical connectors.**

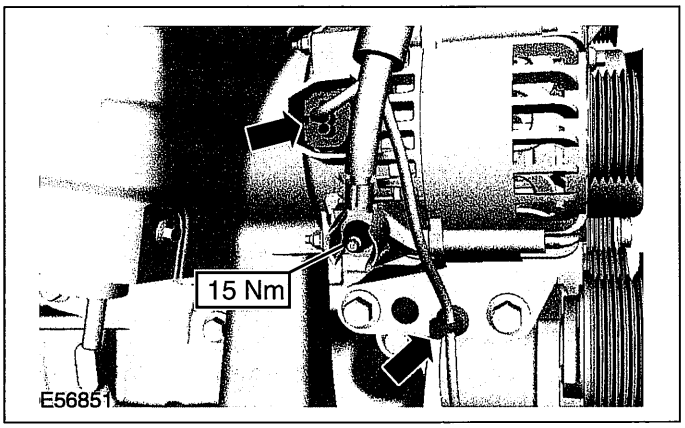


7. **Remove the intake manifold lower retaining bolt.**

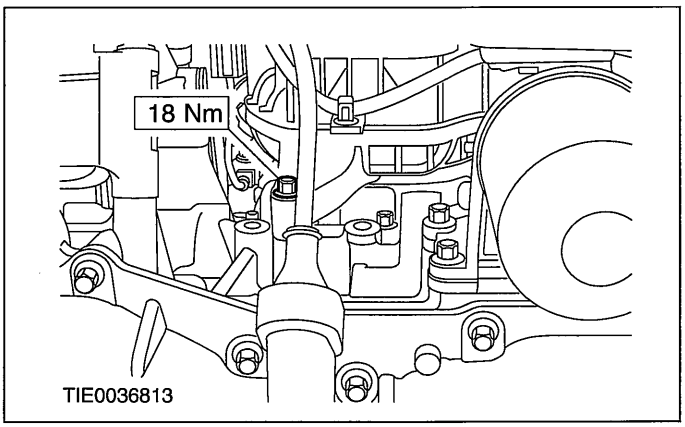


8. **Remove the oil level indicator tube lower retaining bolt.**

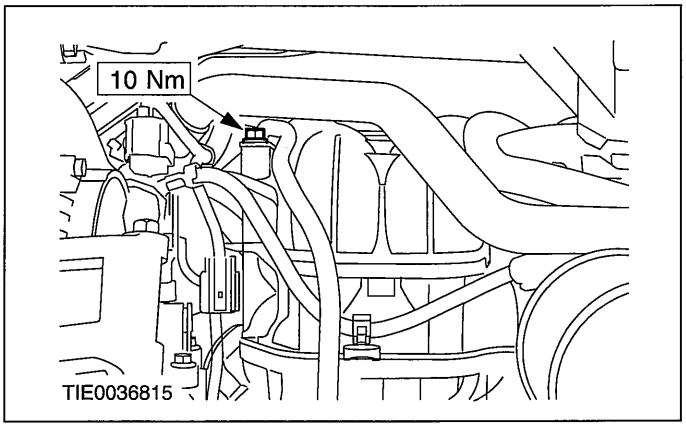

## IN-VEHICLE REPAIR

9. **Detach the wiring harness from the intake manifold.**

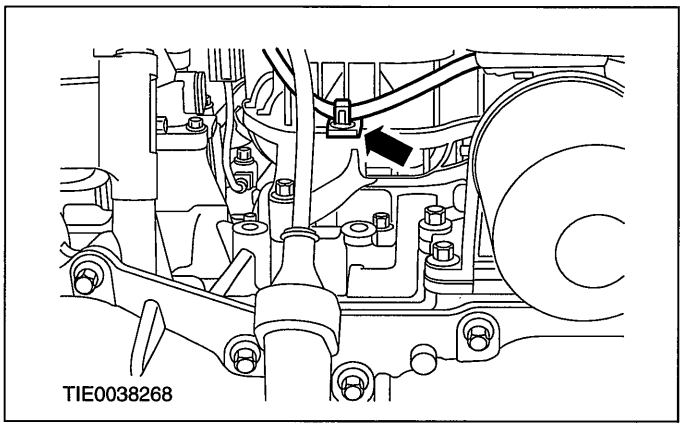


10. **Detach the power steering supply line from the intake manifold.**

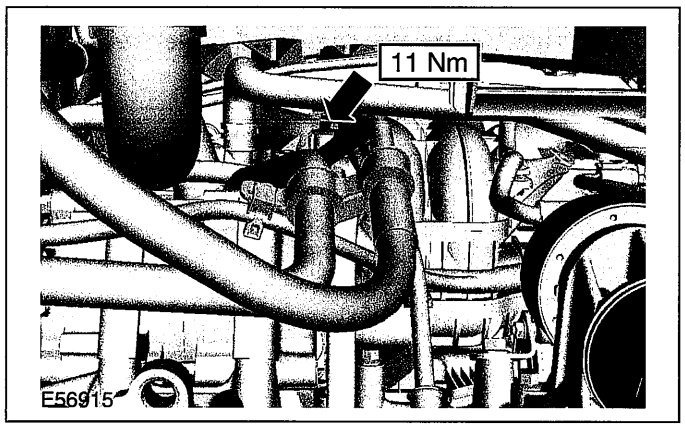


11. **Lower the vehicle.**
12. **Detach the engine wiring harness from the valve cover.**
    1. Unlcip the power steering return line from the wiring harness bracket.
    2. Remove the air cleaner retaining bracket.
    3. Unclip the engine wiring harness bracket from the intake manifold.
    4. Unclip the engine wiring harness from the intake manifold.

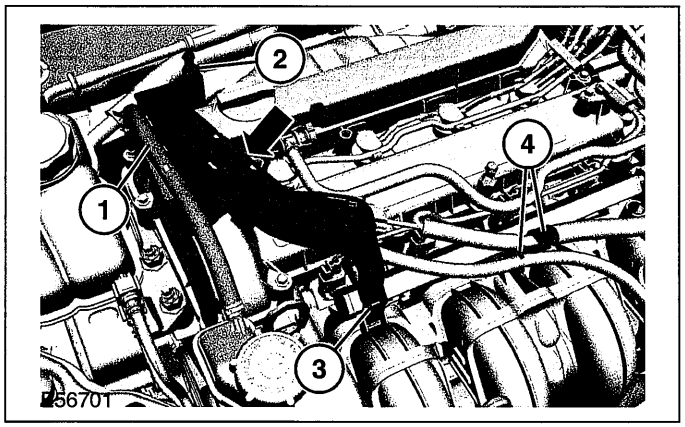


13. **Remove the fuel rail.**

    **For additional information, refer to: Fuel Rail (303-04 Fuel Charging and Controls - 2.0L Duratec-HE (MI4), Removal and Installation).**

14. **Detach the starter motor electrical connector from the intake manifold.**

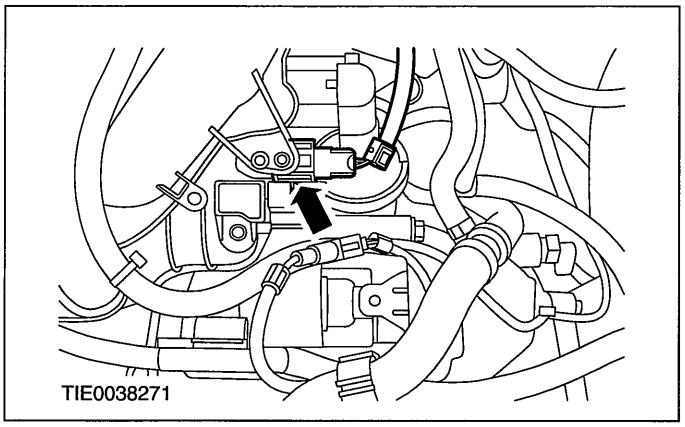


15. **Disconnect the manifold absolute pressure (MAP) sensor electrical connector.**

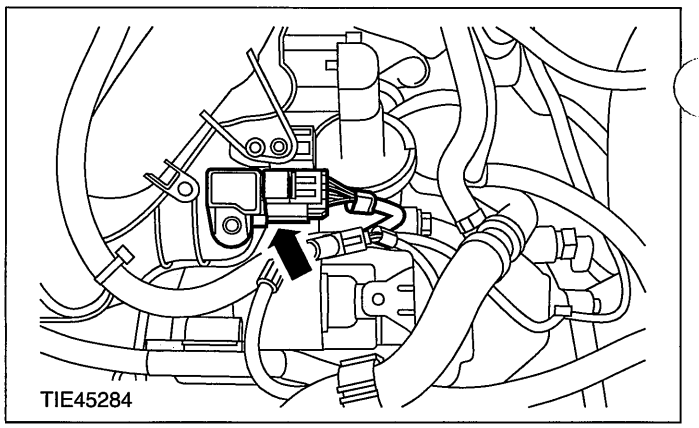


16. **Detach the evaporative emission valve (EVAP) hose from the intake manifold.**

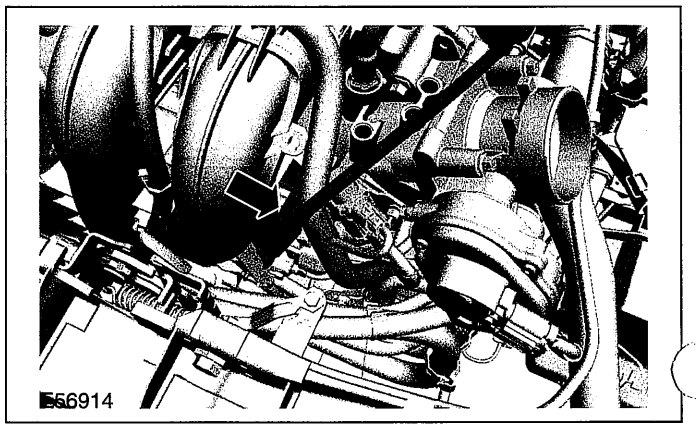

## IN-VEHICLE REPAIR

17. **Disconnect the intake manifold runner control (IMRC) electrical connector.**

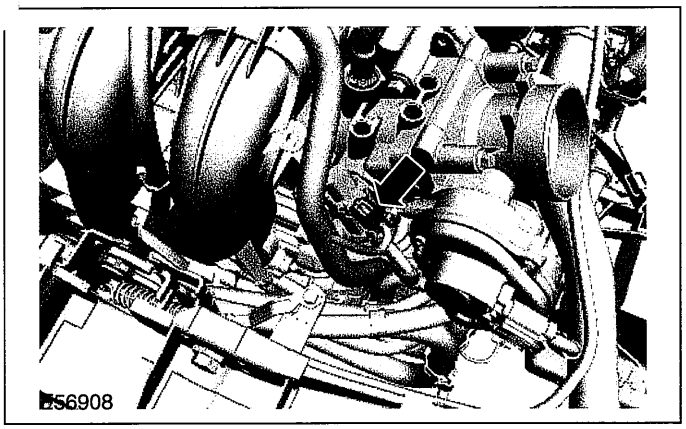


18. **Disconnect the throttle body electrical connector.**

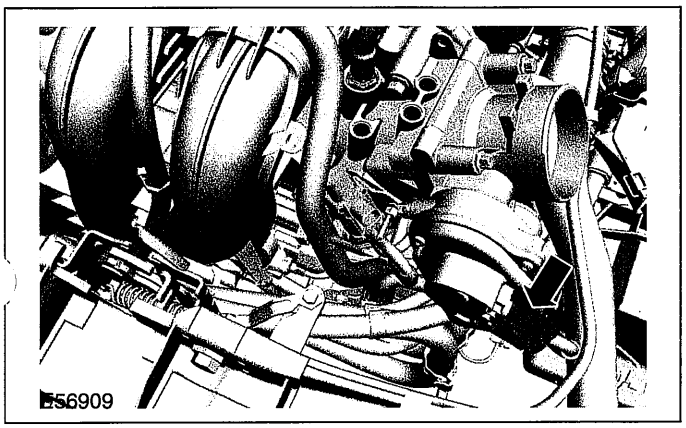


19. **Disconnect the knock sensor (KS) electrical connector (power steering fluid reservoir shown removed for clarity).**
    - Detach the KS electrical connector from the intake manifold.

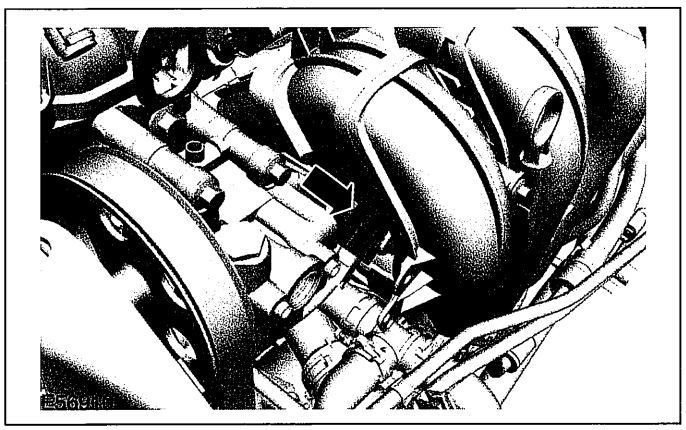

20. **Disconnect the hood latch electrical connector.**

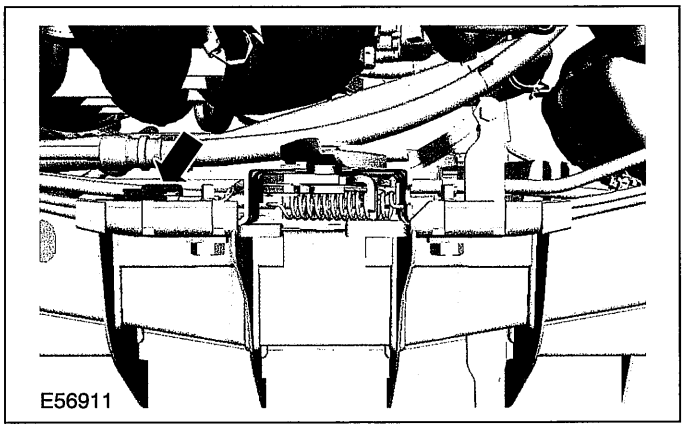


21. **Remove the hood latch lever retaining bolt.**

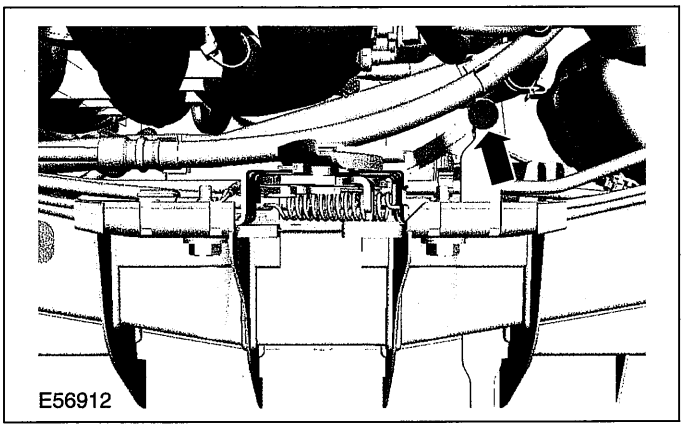


22. **Detach the hood latch from the radiator grille opening panel reinforcement.**

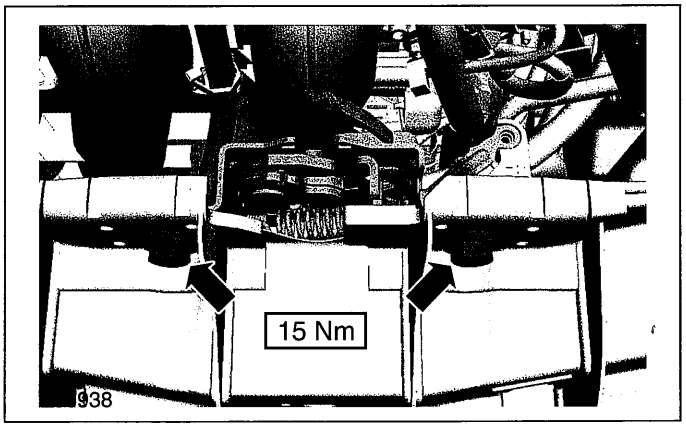

## IN-VEHICLE REPAIR

23. **Disconnect the brake booster vacuum line from the intake manifold.**

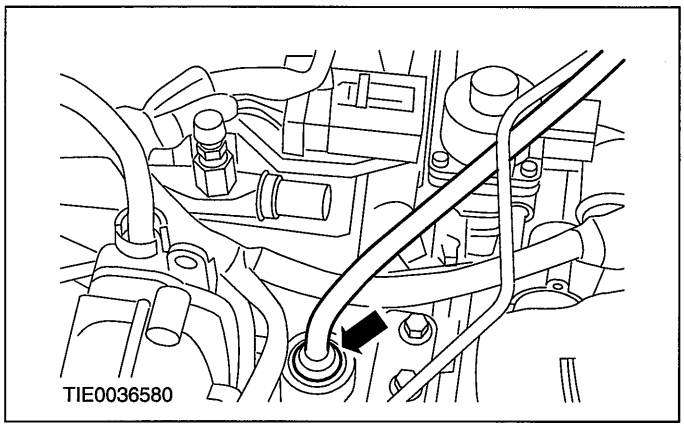


24. **Remove the oil level indicator and oil level indicator tube.**

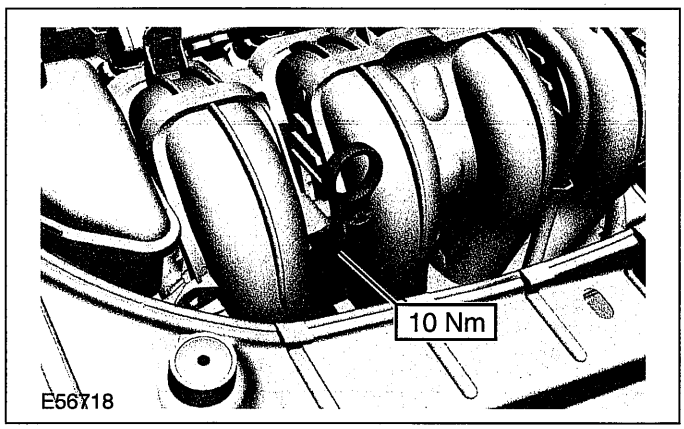


25. **Remove the intake manifold retaining bolts (engine shown removed for clarity).**
    - Detach the intake manifold from the cylinder head.

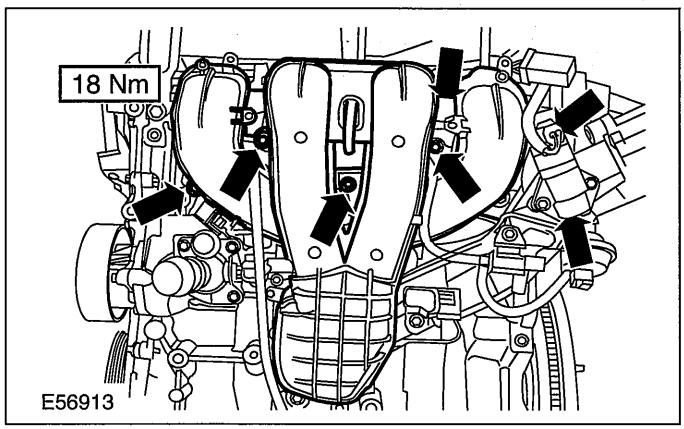


26. **Disconnect the positive crankshaft ventilation (PCV) hose from the intake manifold.**

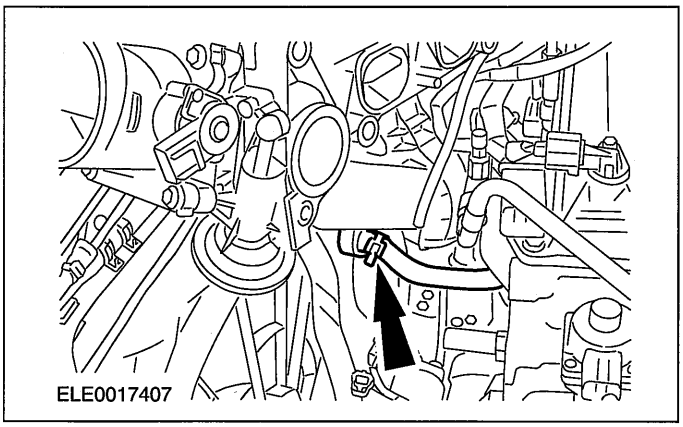


27. **Remove the intake manifold.**

### Installation

1. **NOTE:Install new gaskets if necessary.**

   **To install, reverse the removal procedure.**

## IN-VEHICLE REPAIR

# Crankshaft Front Seal(21 467 0)

**Special Tool(s)**

| | |
|---|---|
| 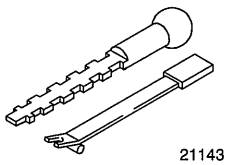 21143 | Remover, Crankshaft Seal 303-293 (21-143) |
| 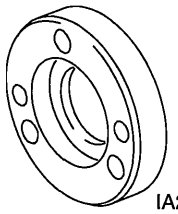 IA21213 | Remover, Vibration Damper Hub 303-509 (21-213) |

## Removal

1. **Remove the crankshaft pulley.**

   **For additional information, refer to: Crankshaft Pulley (303-01C, In-vehicle Repair).**

2. **Using the special tool, remove the crankshaft front seal.**
   - Discard the seal.

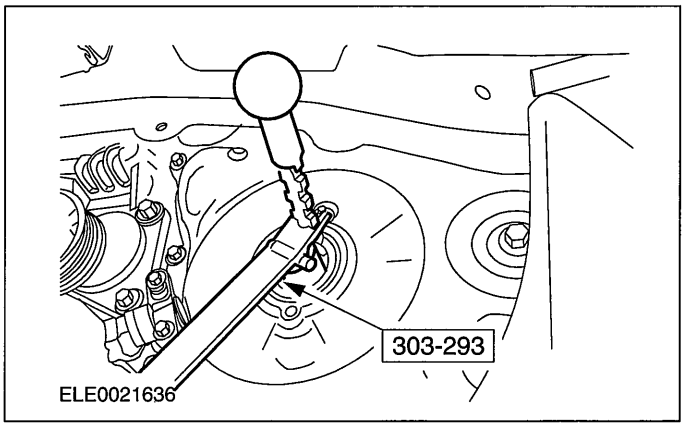


## Installation

1. **NOTE:Install a new crankshaft front seal.**

**Using the special tool and the crankshaft pulley retaining bolt, install the crankshaft front seal (engine shown removed for clarity).**

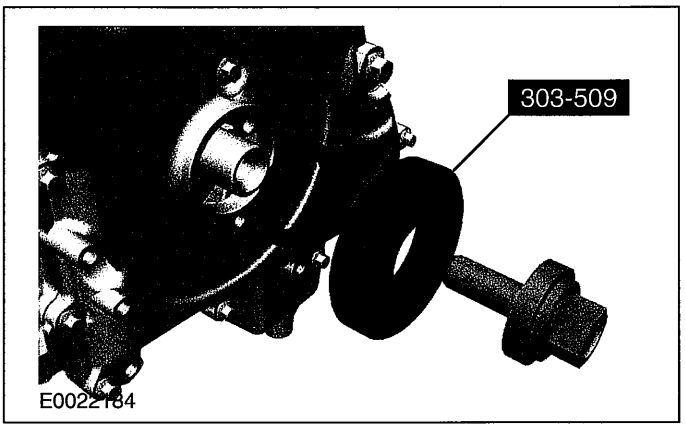


2. **Remove the crankshaft pulley retaining bolt and the special tool.**
   - Discard the crankshaft pulley retaining bolt.
3. **Install the crankshaft pulley.**

   **For additional information, refer to: Crankshaft Pulley (303-01C, In-vehicle Repair).**

## IN-VEHICLE REPAIR

# Crankshaft Pulley(21 572 0)

### Special Tool(s)

| | |
|---|---|
| 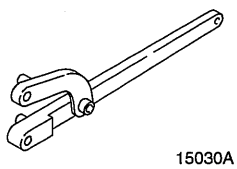 15030A | Flange Holding Wrench, Universal 205-072 |
| 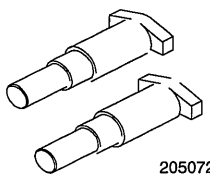 20507202 | Adapter for 205-072 205-072-02 |
| 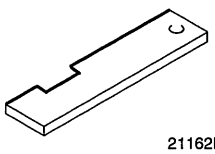 21162B | Alignment Tool, Camshaft Alignment 303-376 |
| 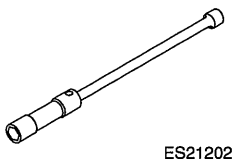 ES21202 | Socket, Spark Plug 303-499 |
| 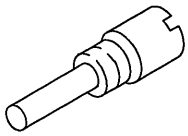 PZ21210 | Timing Peg, Crankshaft TDC position 303-507 |
| 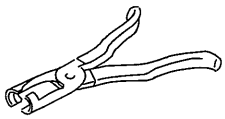 21211 | Pliers, Valve Stem Seal 303-508 (21-211) |

### General Equipment

| |
|---|
| Bolt M6 x 18 mm |

| Materials | |
|---|---|
| **Name** | **Specification** |
| Silicone sealant | WSE-M4G323-A4 |

## Removal

1. **Disconnect the battery.**

   **For additional information, refer to: Battery Disconnect (414-01 Battery, Mounting and Cables, General Procedures).**

2. **Remove the air cleaner.**

   **For additional information, refer to: Air Cleaner - 2.0L Duratec-HE (MI4) (303-12 Intake Air Distribution and Filtering, Removal and Installation).**

3. **Detach the engine wiring harness from the valve cover.**
   1. Unclip the power steering fluid return line from the retaining clips.
   2. Remove the air cleaner retainer.
   3. Unclip the engine wiring harness bracket at the intake pipe.
   4. Unclip the engine wiring harness at the intake pipe.

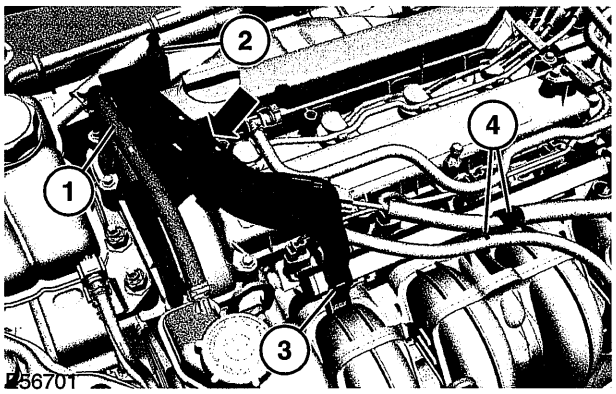

## IN-VEHICLE REPAIR

4. Detach the positive crankcase ventilation (PCV) hose from the valve cover.

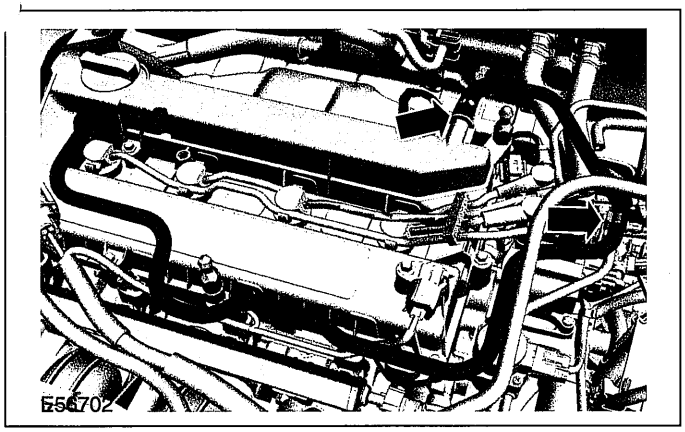


5. Disconnect the camshaft position sensor (CMP sensor) electrical connector.

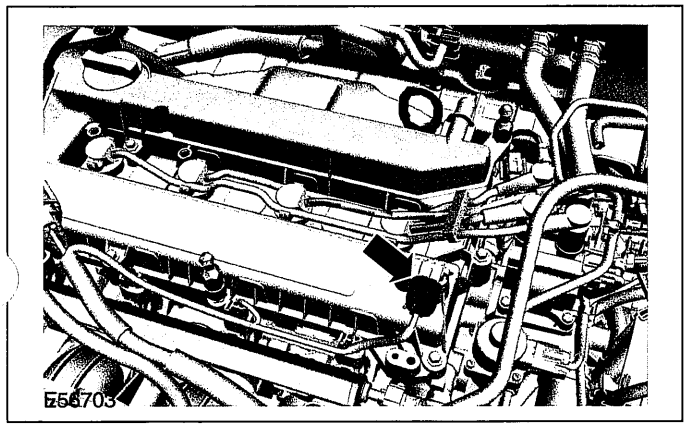


6. Remove the air cleaner retainer.

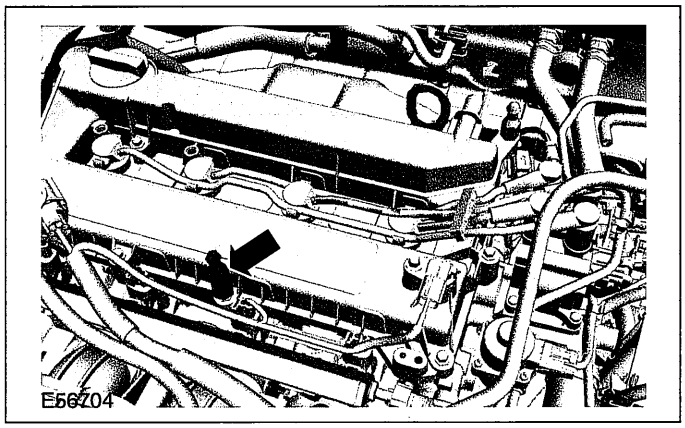


7. Remove the EVAP valve bracket.

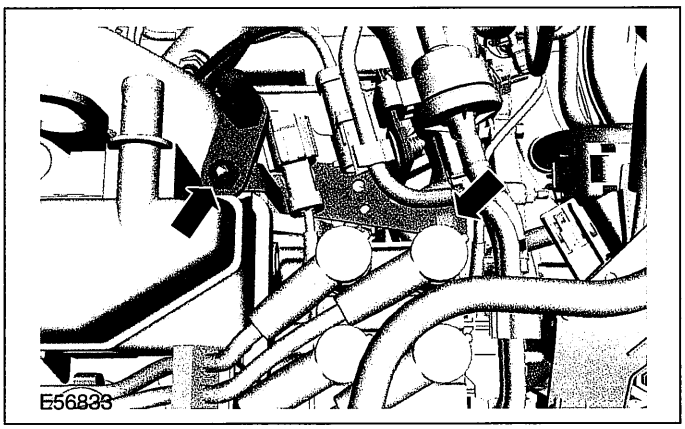


8. Using the special tool, disconnect the spark plug electrical connectors.

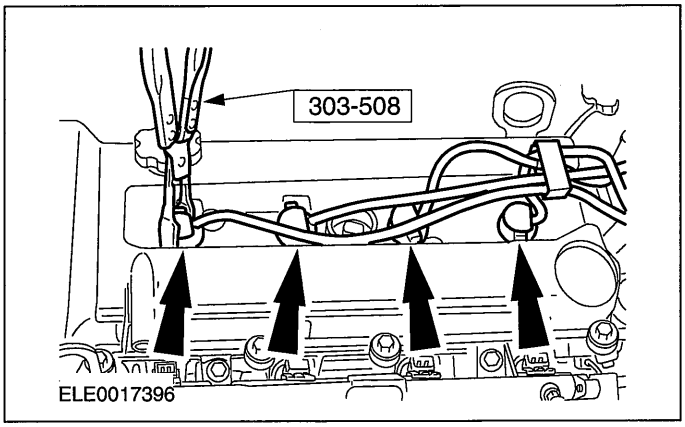


9. Using the special tool, remove the spark plugs.

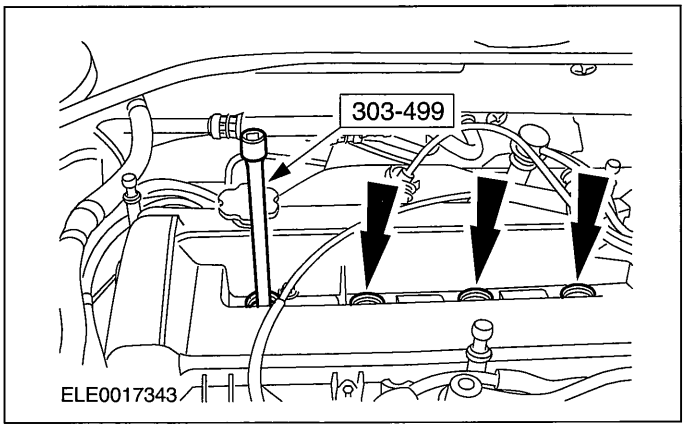

## IN-VEHICLE REPAIR

10. **Remove the valve cover.**

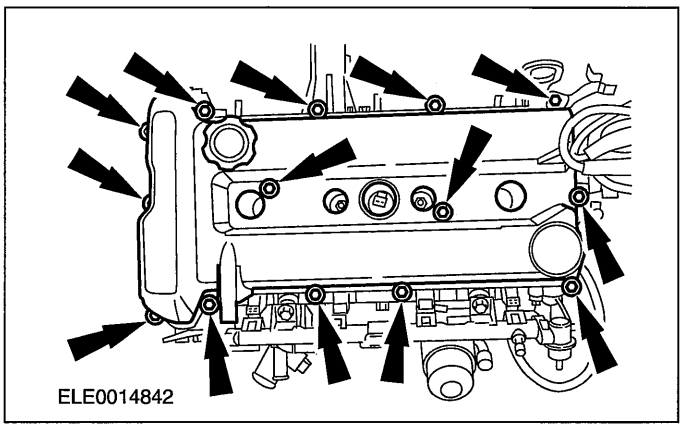


11. **Remove the drive belt.**

    **For additional information, refer to: Accessory Drive Belt - 2.0L Duratec-HE (MI4) (303-05 Accessory Drive, Removal and Installation).**

12. **NOTE:Only rotate the crankshaft in the normal direction of rotation.**

    **Rotate the crankshaft until piston no. 1 is approx. 45 degrees before TDC.**

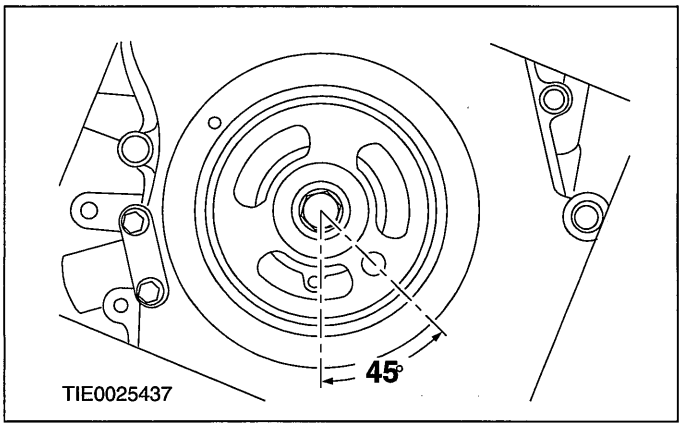


13. **NOTE:Do not discard the crankshaft pulley bolt.**

    **Using the special tool, remove the crankshaft pulley.**

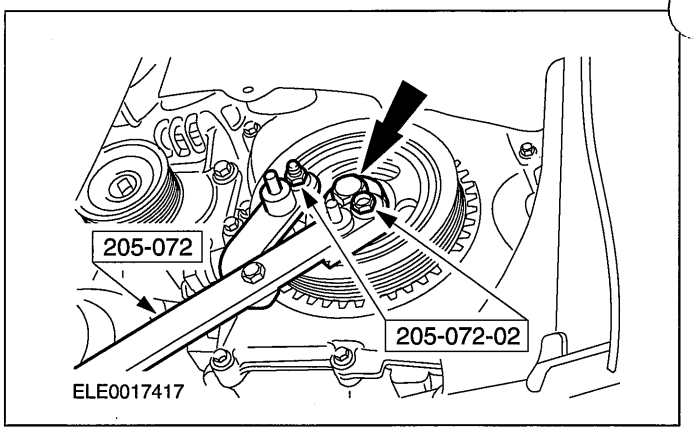


14. **Remove the crankshaft front seal.**

    **For additional information, refer to: Crankshaft Front Seal (303-01 Engine - 2.0L Duratec-HE (MI4), In-vehicle Repair).**

15. **Remove the front friction washer (engine shown removed for clarity).**

    - Discard the friction washer.

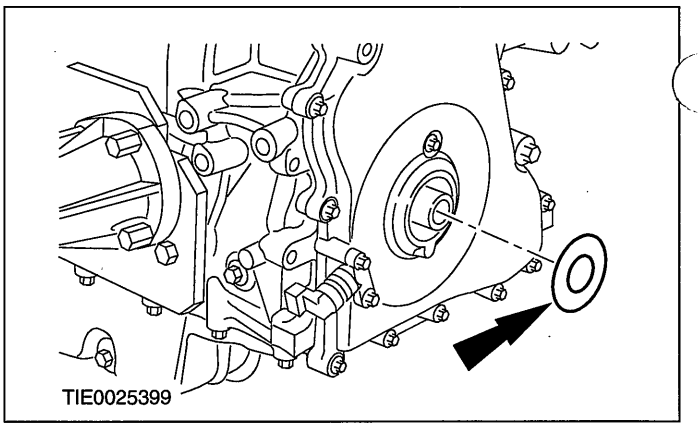


16. **NOTE:Do not damage the inner constant velocity (CV) joint boot.**

    **Pull the inner CV joint boot off the intermediate shaft.**

## IN-VEHICLE REPAIR

- Remove and discard the CV joint boot clamp.

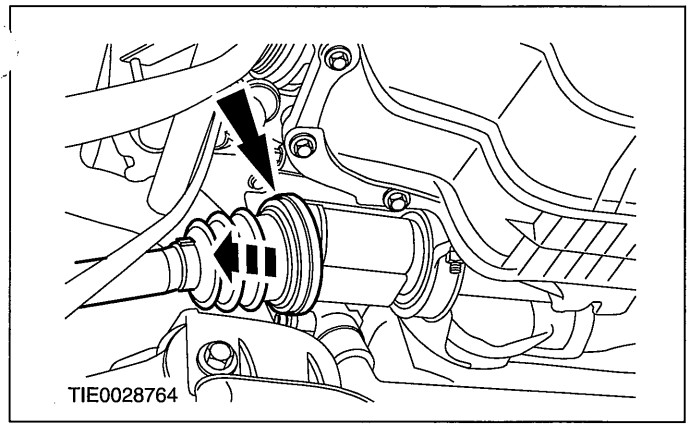


### Installation

1. **NOTE:Install a new front friction washer.**

   **Install the front friction washer (engine shown removed for clarity).**

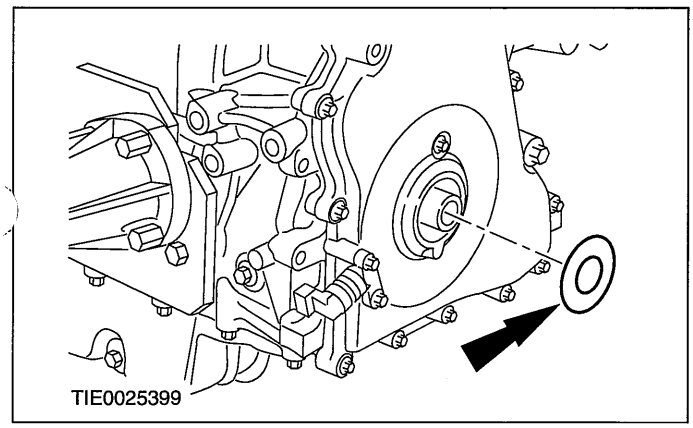


2. **Install the crankshaft front seal.**

   **For additional information, refer to: Crankshaft Front Seal (303-01 Engine - 2.0L Duratec-HE (MI4), In-vehicle Repair).**

3. **Lower the vehicle.**
4. **NOTE:Only rotate the camshafts in the normal direction of rotation.**

   **Carefully rotate the camshafts using a spanner until the cams of cylinder no. 4 are positioned at the valve overlap.**

5. **Install the special tool.**

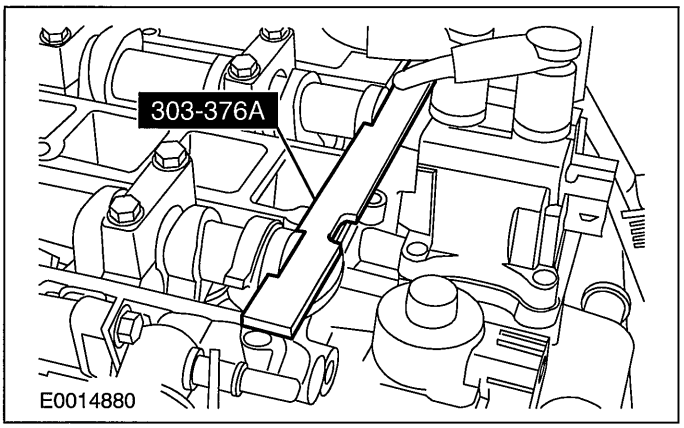


6. **Raise the vehicle. For additional information, refer to: (100-02 Jacking and Lifting)**

   **Jacking (Description and Operation), Lifting (Description and Operation).**

7. **Remove the cylinder block lower blanking plug and install the special tool.**

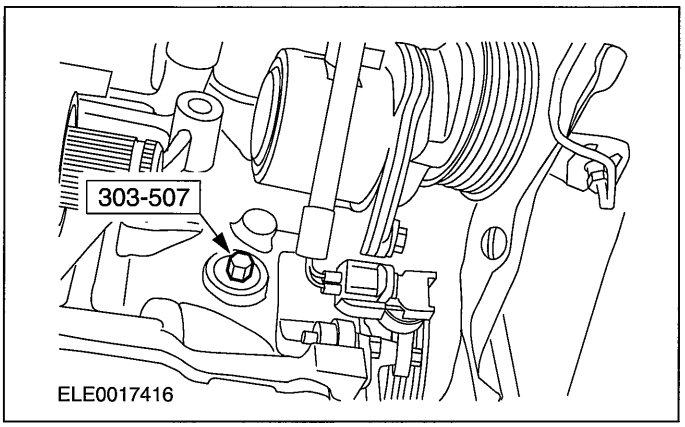


8. **NOTE:Only rotate the crankshaft in the normal direction of rotation.**

   **Rotate the crankshaft using the crankshaft pulley bolt until the crankshaft contacts the special tool.**

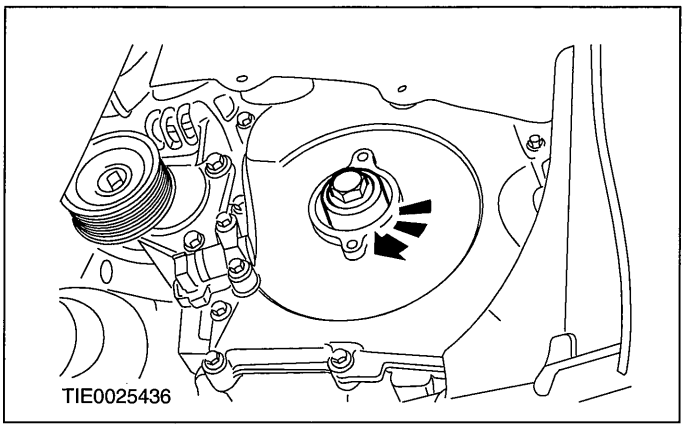

## IN-VEHICLE REPAIR

**9. Remove the crankshaft pulley bolt.**

- Discard the bolt.

**10. ⚠CAUTION:Tighten M6 x 18 mm bolt hand-tight only.**

**Install the crankshaft pulley and fasten to the engine front cover with an M6 x 18 mm bolt.**

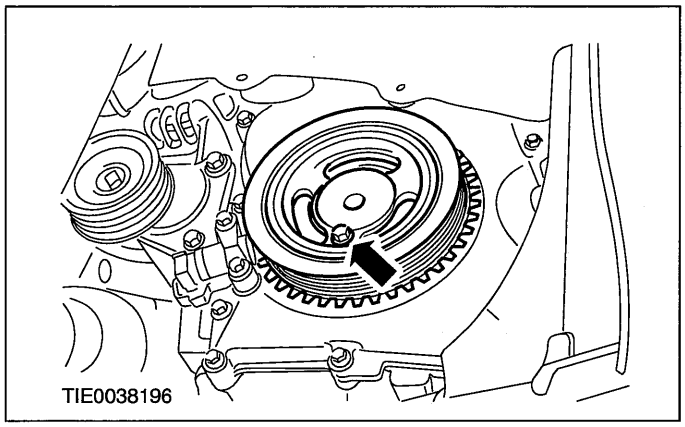


**11. NOTE:Install a new crankshaft pulley bolt.**

**Counterhold the crankshaft pulley using the special tools and tighten the crankshaft pulley bolt.**

- Tighten the bolt in two stages.
- Stage 1: 100 Nm.
- Stage 2: 90 degrees.

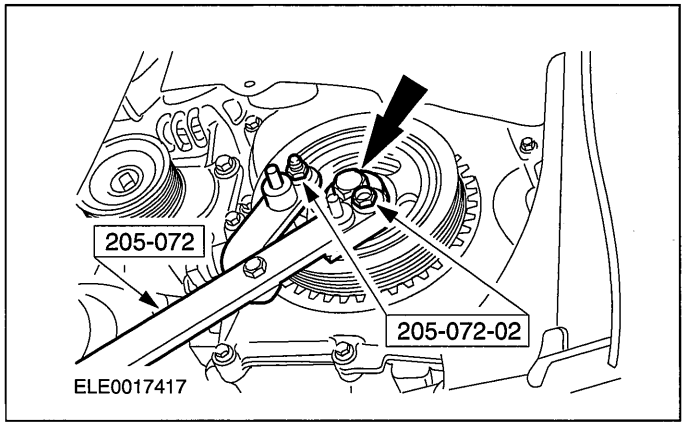


**12. Remove the M6 x 18 mm bolt.**

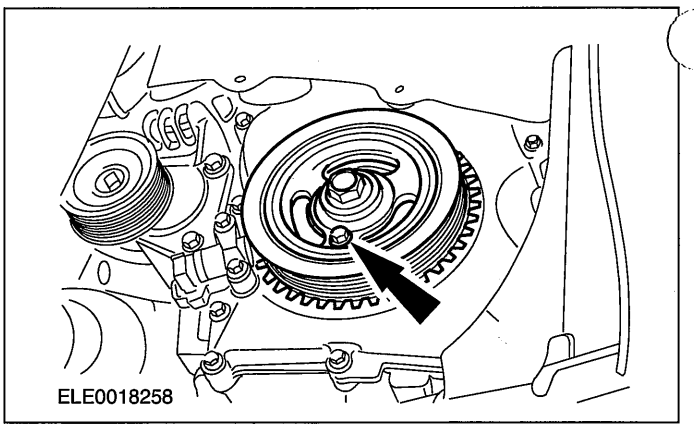


**13. Lower the vehicle.**

**14. Remove the special tool.**

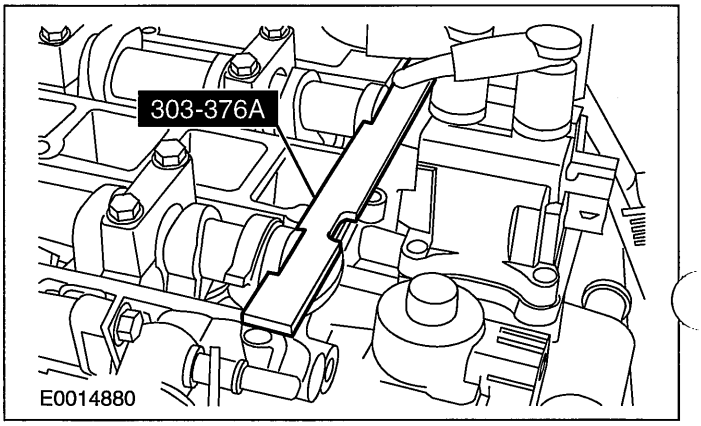


**15. Raise the vehicle. For additional information, refer to: (100-02 Jacking and Lifting)**

**Jacking (Description and Operation), Lifting (Description and Operation).**

**16. Remove the special tool.**

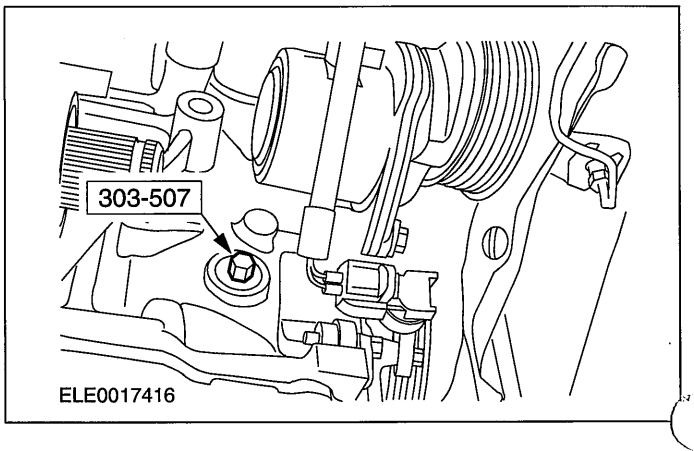


**17. NOTE:Only rotate the crankshaft in the normal direction of rotation.**

## IN-VEHICLE REPAIR

**Rotate the crankshaft one and three quarters of a rotation until piston no. 1 is approx. 45 degrees before TDC.**

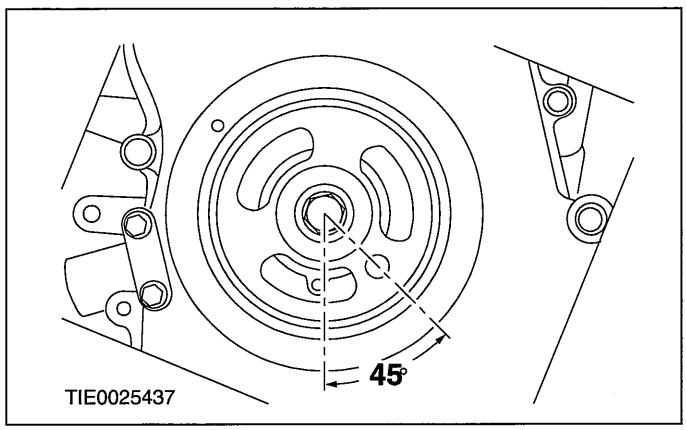


**18. Install the special tool.**

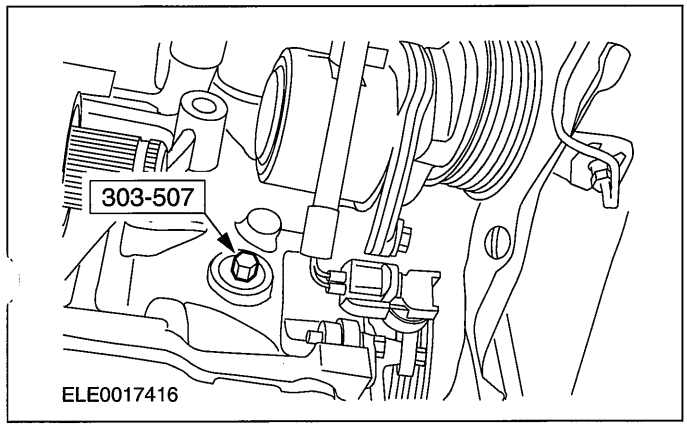


**19. NOTE:Only rotate the crankshaft in the normal direction of rotation.**

**Rotate the crankshaft until no. 1 piston is at TDC.**

**20. ⚠CAUTION:Tighten the M6 x 18 mm bolt finger-tight only.**

**NOTE:**If the M6 x 18 mm bolt cannot be installed, correct the valve timing.

**Check the position of the crankshaft pulley using the M6 x 18 mm bolt.**

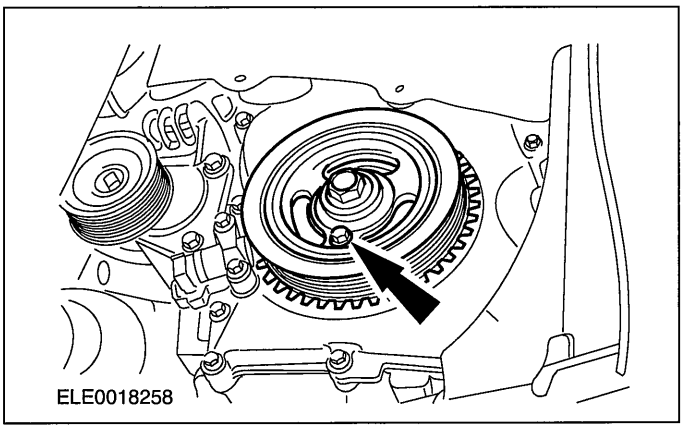


**21. Lower the vehicle.**

**22. NOTE:If the special tool cannot be attached, correct the valve timing.**

**Check the position of the camshafts using the special tool.**

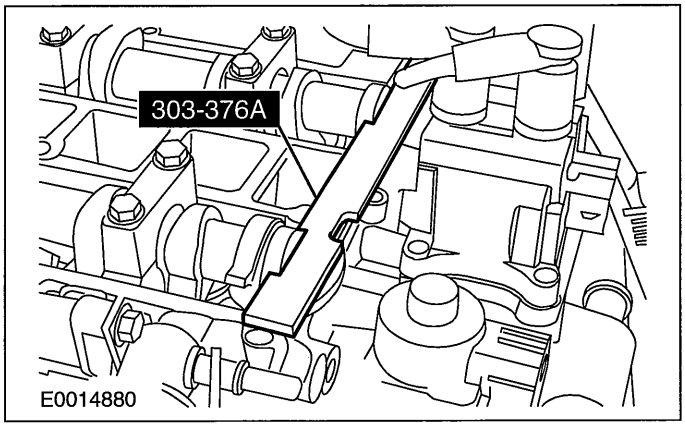


**23. Remove the special tool.**

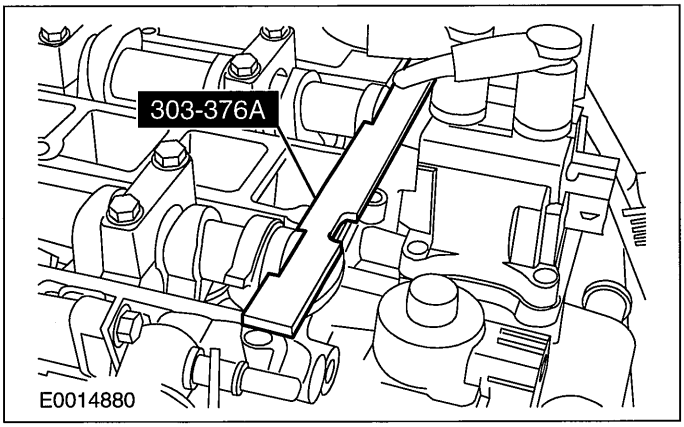

## IN-VEHICLE REPAIR

**24. Raise the vehicle. For additional information, refer to: (100-02 Jacking and Lifting)**

**Jacking (Description and Operation), Lifting (Description and Operation).**

**25. Remove the M6 x 18 mm bolt.**

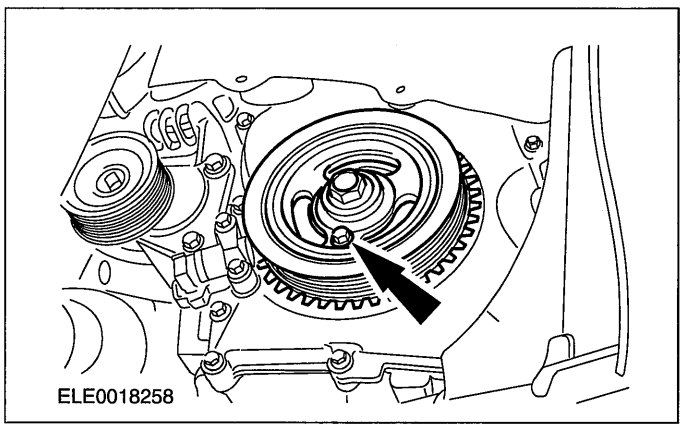


**26. Remove the special tool.**

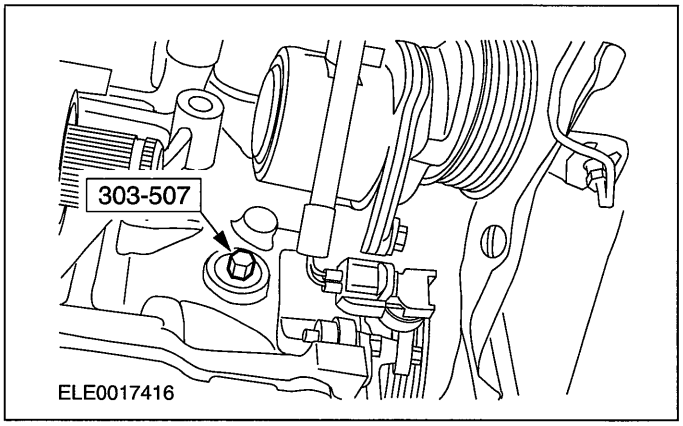


**27. Install the cylinder block lower blanking plug.**

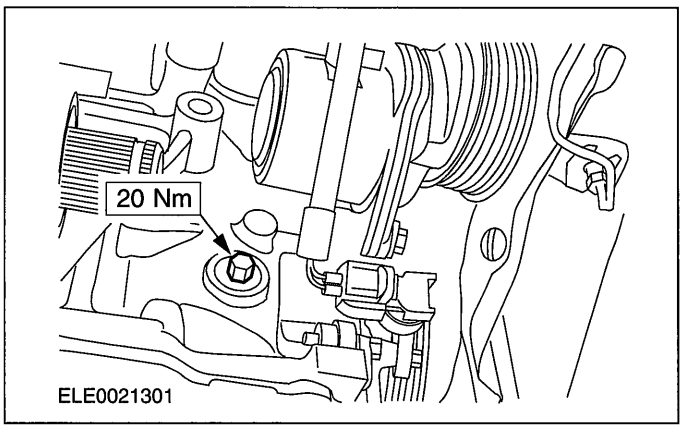


**28. NOTE:Do not damage the boot of the inner CV joint.**

**NOTE:**Make sure that the contact surface for the CV joint boot on the intermediate shaft is clean.

**Slide the inner CV joint boot onto the intermediate shaft.**

- Use a suitable screwdriver under the boot to allow air to escape.

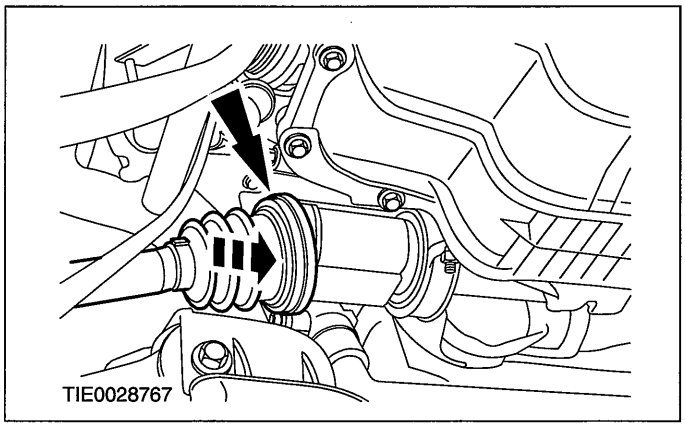


**29. NOTE:Install a new boot clamp.**

**Using a suitable grip wrench, install the inner CV joint boot clamp.**

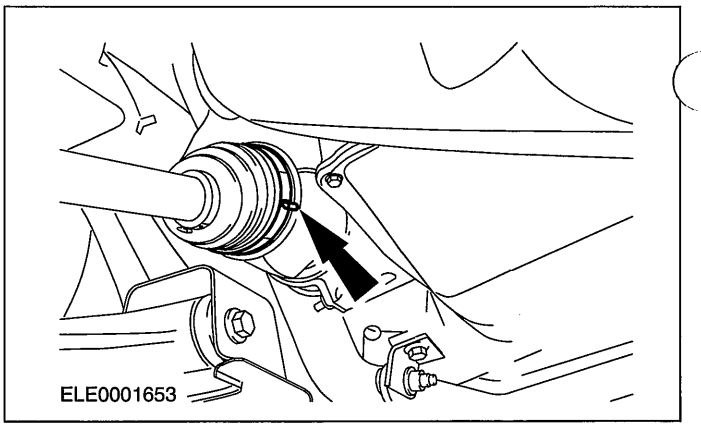


**30. NOTE:When installing a new engine front cover, the crankshaft position sensor (CKP sensor) must be aligned using the tool supplied.**

**Align the CKP sensor (engine shown removed for clarity).**

1. Loosen the CKP sensor bolts.

## IN-VEHICLE REPAIR

2. Insert the tool supplied so that it engages with the teeth of the crankshaft pulley.

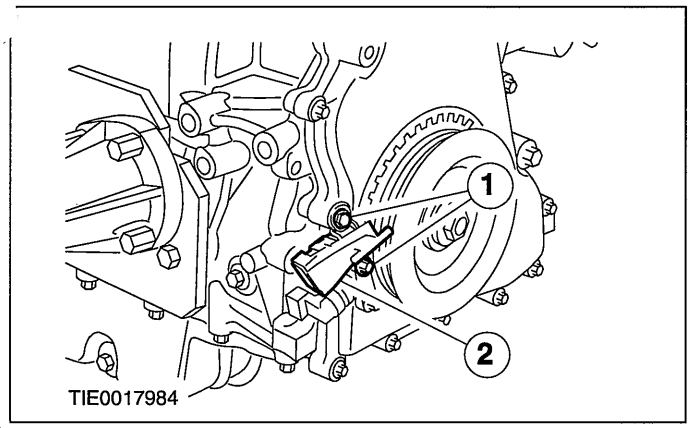


**31. Install the CKP sensor (engine shown removed for clarity).**

1. Install the CKP sensor bolts.
2. Remove the tool.

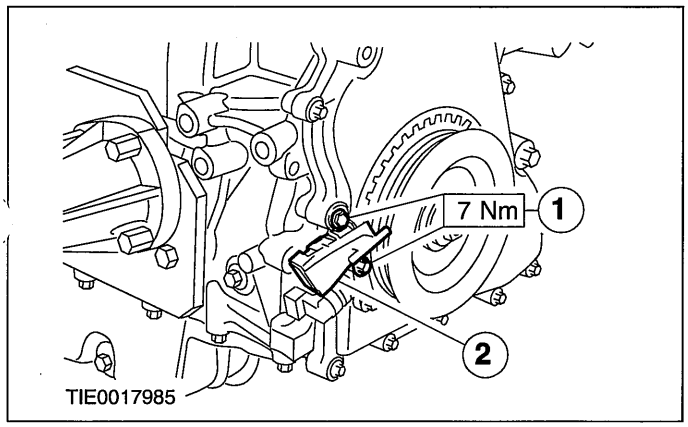


**32. Install the drive belt.**

**For additional information, refer to: Accessory Drive Belt - 2.0L Duratec-HE (MI4) (303-05 Accessory Drive, Removal and Installation).**

**33. Apply sealant thinly on the areas shown.**

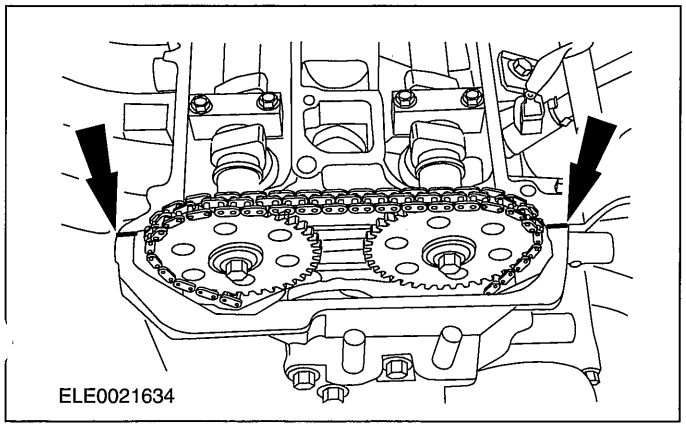


**34. NOTE:If necessary, install a new valve cover gasket.**

**Install the valve cover.**

- Tighten the bolts in the sequence shown.

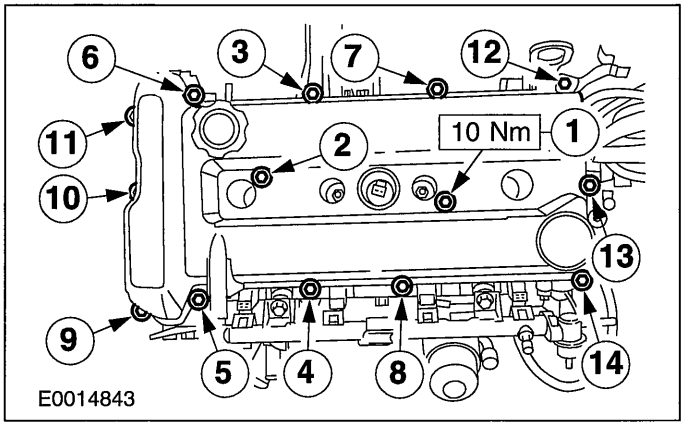


**35. Using the special tool, install the spark plugs.**

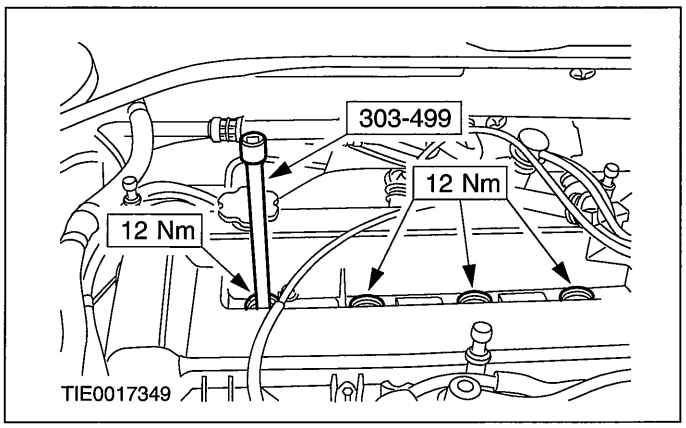


**36. Using the special tool, connect the spark plug connectors.**

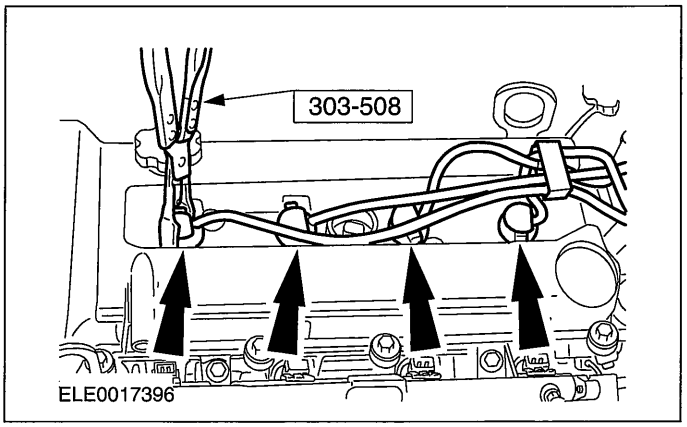

## IN-VEHICLE REPAIR

**37. Install the EVAP valve bracket.**

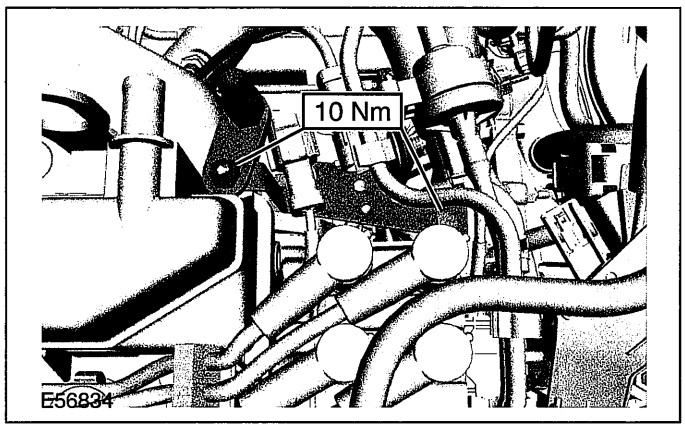


**38. Install the air cleaner retainer.**

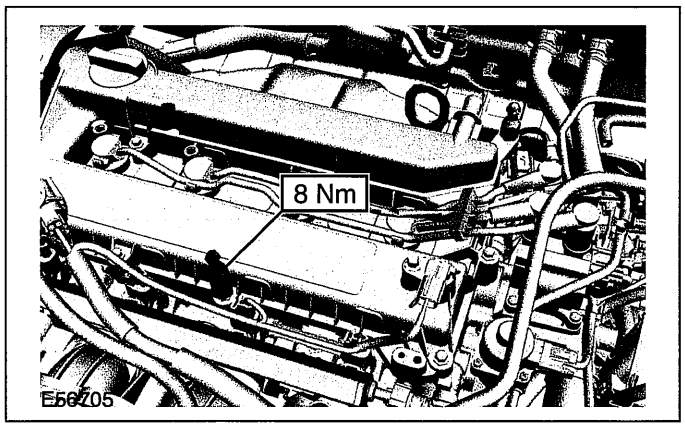


**39. Connect the camshaft position (CMP) sensor connector.**

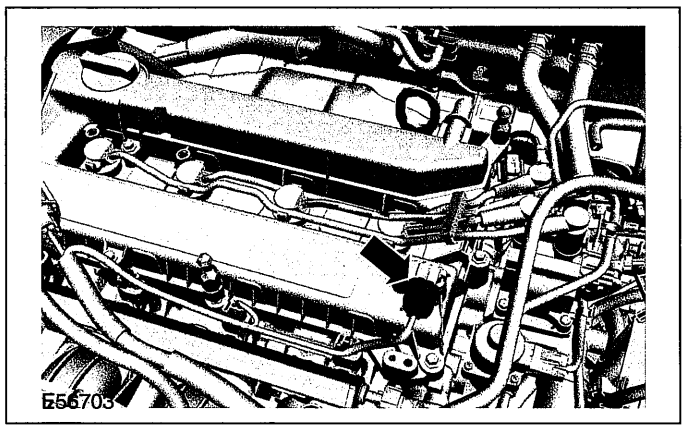


**40. Attach the positive crankcase ventilation (PCV) hose to the valve cover.**

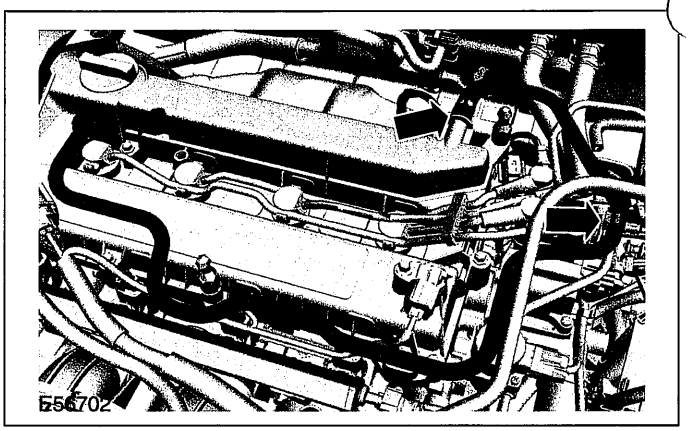


**41. Attach the engine wiring harness to the valve cover.**

1. Clip on the engine wiring harness at the intake pipe.
2. Clip on the engine wiring harness bracket at the intake pipe.
3. Install the air cleaner retainer.
4. Connect the power steering fluid return line to the retaining clip.

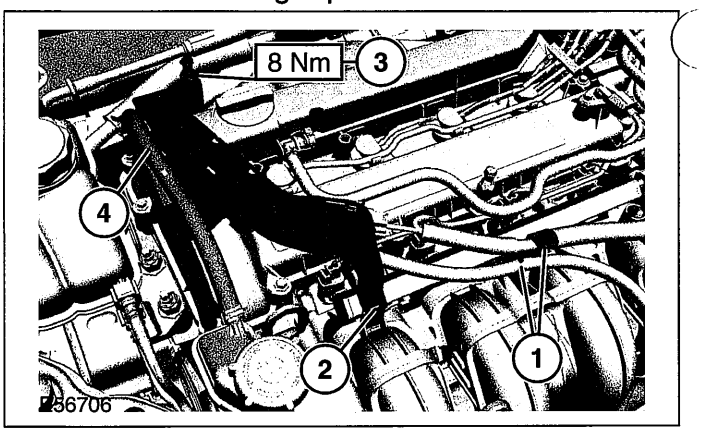


**42. Install the air cleaner.**

**For additional information, refer to: Air Cleaner - 2.0L Duratec-HE (MI4) (303-12 Intake Air Distribution and Filtering, Removal and Installation).**

**43. Connect the battery ground cable.**

**For additional information, refer to: Battery Disconnect (414-01 Battery, Mounting and Cables, General Procedures).**

## IN-VEHICLE REPAIR

# Valve Seals(21 238 0)

### Special Tool(s)

| | |
|---|---|
| 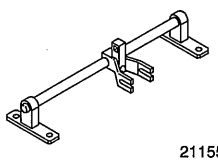 21155 | Compressor, Valve Spring 303-361A (21-155A) |
| 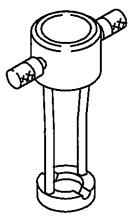 2115502A | Adapter for 303-361A 303-361-02 (21-155-02A) |
| 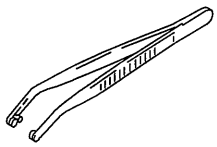 21156 | Installer, Valve Stem Collets 303-362 (21-156) |
| 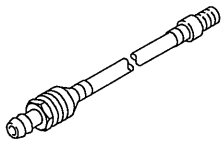 21157 | Adapter, Air Supply (Cylinder Head) 303-363 (21-157) |
| 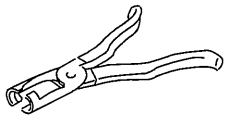 21165 | Pliers, Valve Stem Seal 303-508 (21-165) |

## Removal

1. **Remove the camshafts.**

   **For additional information, refer to: Camshafts (303-01 Engine - 2.0L Duratec-HE (MI4), In-vehicle Repair).**

2. **Using the special tool, apply 7 to 10 bar of compressed air into the cylinder.**

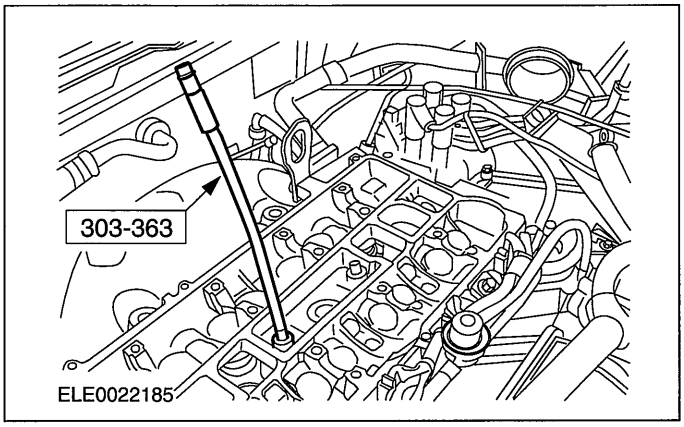


3. **Remove the valve tappets and keep them in order for reassembly.**
4. **Using the special tools, remove the valve springs.**
   - Compress the valve spring.
   - Remove the valve collets.
   - Release the valve spring.
   - Remove the valve spring retainer and the valve spring.

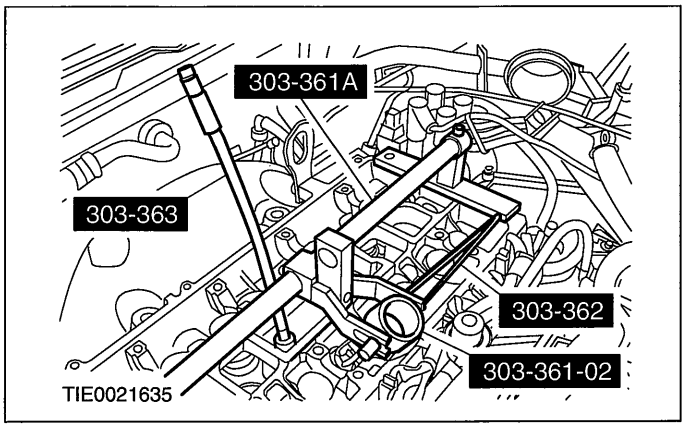


5. **Using the special tool, remove the valve seals.**

## IN-VEHICLE REPAIR

- Discard the valve seals.

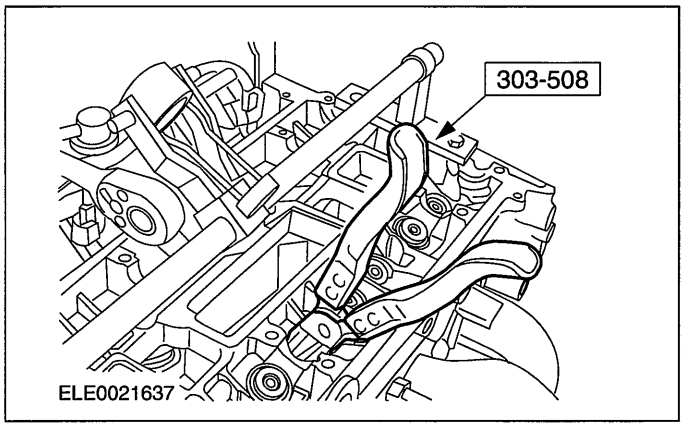


- Release the valve spring.

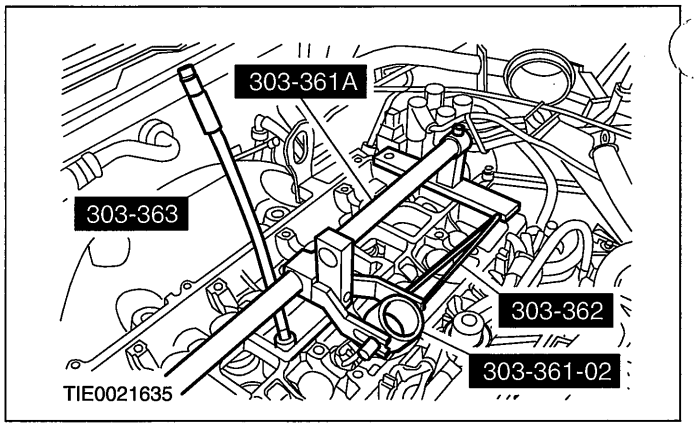


### Installation

1. **NOTE:Install new valve seals.**

**NOTE:**Cover the valve collet groove on the valve stem with a protective sleeve.

**Using the special tool, install the valve seals.**

- Remove the protective sleeve.

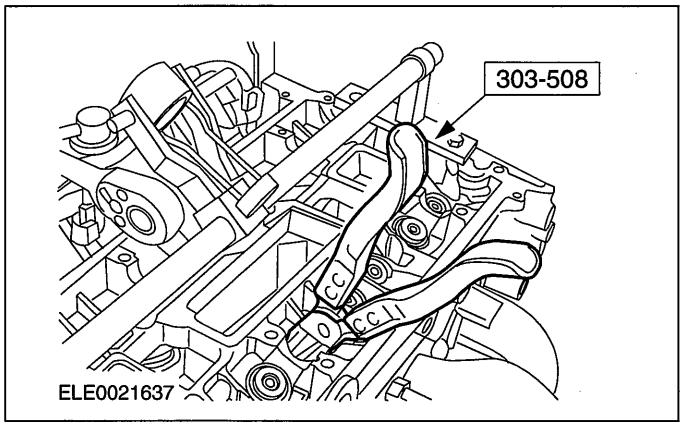


2. **Using the special tools, install the valve springs.**
   - Install the valve spring retainer and the valve spring.
   - Compress the valve spring.
   - Install the valve collets.
3. **Remove the special tools.**
4. **Install the valve tappets.**
5. **Install the camshafts.**

**For additional information, refer to: Camshafts (303-01 Engine - 2.0L Duratec-HE (MI4), In-vehicle Repair).**

## IN-VEHICLE REPAIR

# Valves(21 215 4)

**Special Tool(s)**

| | |
|---|---|
| 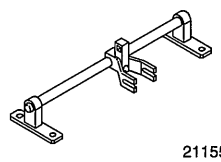 21155 | Compressor, Valve Spring 303-361A (21-155A) |
| 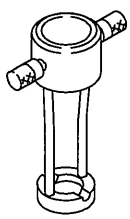 2115502A | Adapter for 303-361A 303-361-02 (21-155-02A) |
| 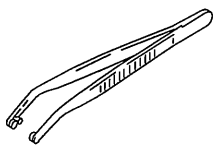 21156 | Installer, Valve Stem Collets 303-362 (21-156) |
| 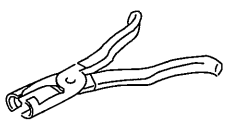 21165 | Pliers, Valve Stem Seal 303-508 (21-165) |

## Removal

1. **Remove the cylinder head.**

   **For additional information, refer to: Cylinder Head (303-01 Engine - 2.0L Duratec-HE (MI4), In-vehicle Repair).**

2. **Using the special tools, remove the valve springs.**
   - Compress the valve spring.
   - Remove the valve collets.
   - Release the valve spring.
   - Remove the valve spring retainer and the valve spring.

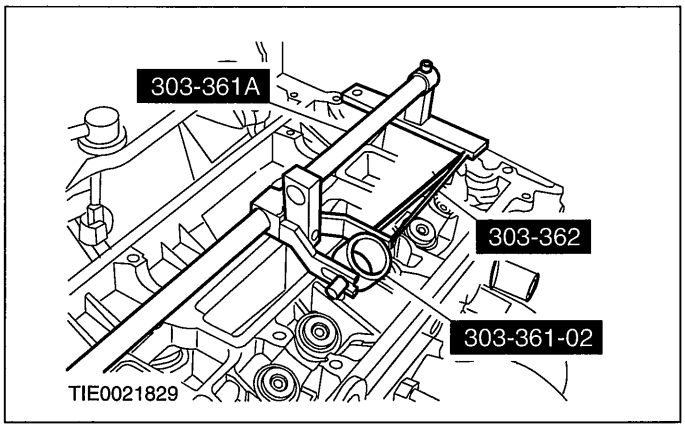


3. **Using the special tool, remove the valve seals.**
   - Discard the valve seals.

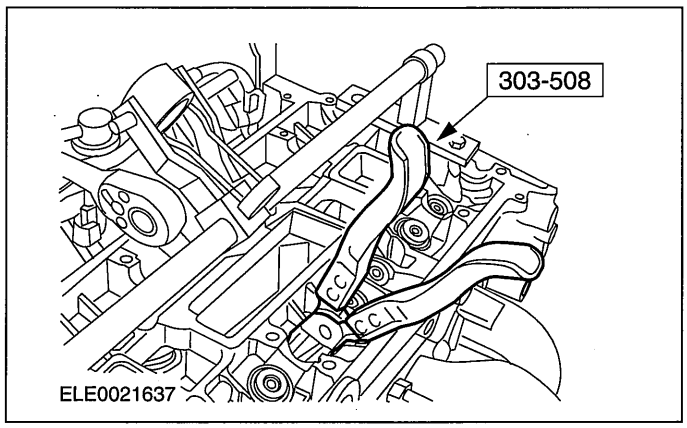


4. **Remove the valves.**

## Installation

1. **Install the valves.**
2. **NOTE:Install new valve seals.**

**NOTE:**Cover the valve collet groove on the valve stem with a protective sleeve.

**Using the special tool, install the valve seals.**

## IN-VEHICLE REPAIR

- Remove the protective sleeve.

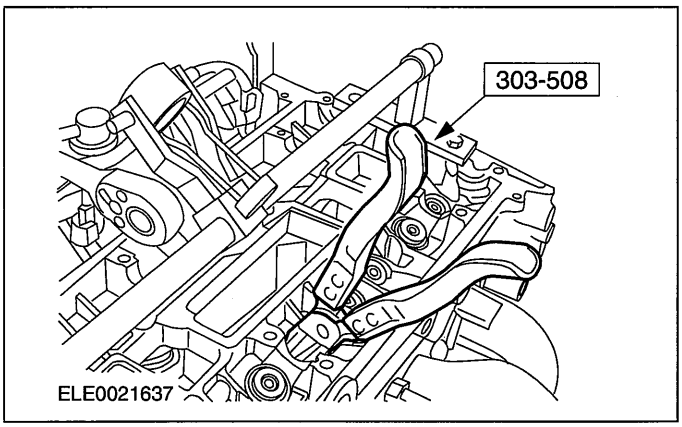


3. **Using the special tools, install the valve springs.**
   - Install the valve spring retainer and the valve spring.
   - Compress the valve spring
   - Install the valve collets.
   - Release the valve spring.

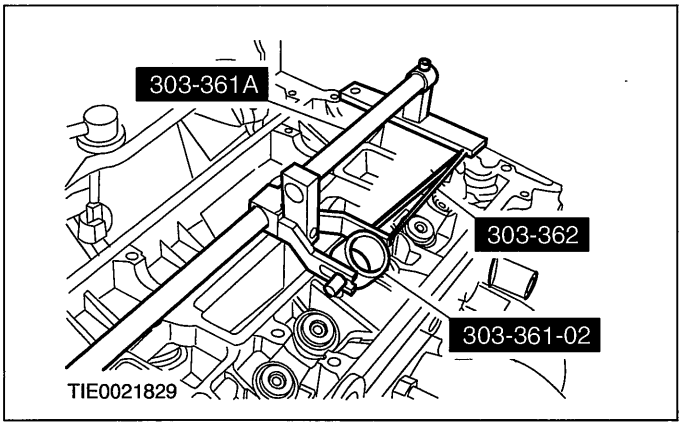


4. **Remove the special tools.**
5. **Install the cylinder head.**

   **For additional information, refer to: Cylinder Head (303-01 Engine - 2.0L Duratec-HE (MI4), In-vehicle Repair).**

## IN-VEHICLE REPAIR

# Camshafts(21 284 0)

### Special Tool(s)

| | |
|---|---|
| 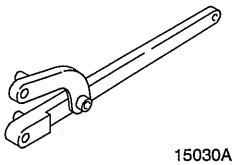 15030A | Universal Flange Holding Wrench 205-072 |
| 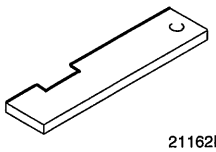 21162B | Alignment Plate, Camshaft 303-376A |
| 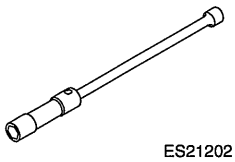 ES21202 | Socket, Spark Plug 303-499 |
| 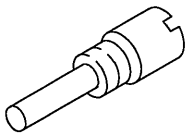 PZ21210 | Timing Peg, Crankshaft TDC 303-507 |
| 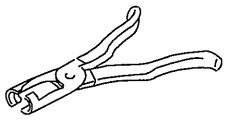 21211 | Pliers, Valve Stem Seal 303-508 |

### General Equipment

| |
|---|
| M6 x 18 mm bolt |
| M6 x 25 mm bolt |

### Materials

| Name | Specification |
|---|---|
| Hypoid Gear Oil | SQM-2C9002-AA |
| Silicone Sealant | WSE-M4G323-A4 |

## Removal

1. **Disconnect the battery ground cable.**

   **For additional information, refer to: Battery Disconnect (414-01 Battery, Mounting and Cables, General Procedures).**

2. **Remove the air cleaner.**

   **For additional information, refer to: Air Cleaner - 2.0L Duratec-HE (MI4) (303-12 Intake Air Distribution and Filtering, Removal and Installation).**

3. **Detach the engine wiring harness from the valve cover.**
   1. Unclip the power steering return line from the engine wiring harness bracket.
   2. Remove the air cleaner retaining bracket.
   3. Unclip the engine wiring harness bracket from the intake manifold.
   4. Unclip the engine wiring harness from the intake manifold.

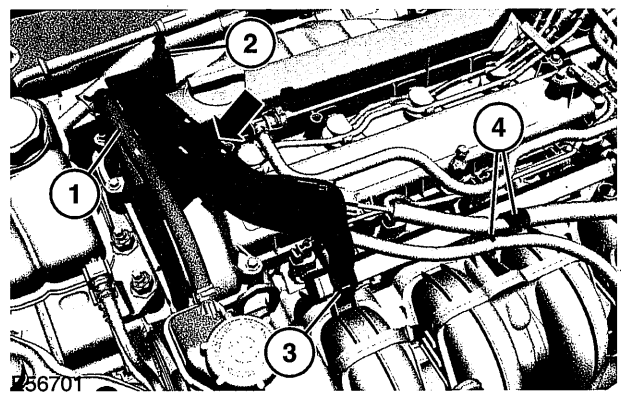


4. **Remove the positive crankshaft ventilation (PCV) hose.**

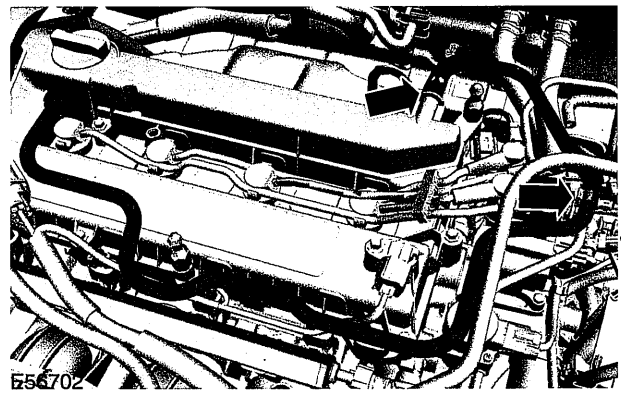

## IN-VEHICLE REPAIR

5. Disconnect the camshaft position (CMP) sensor electrical connector.

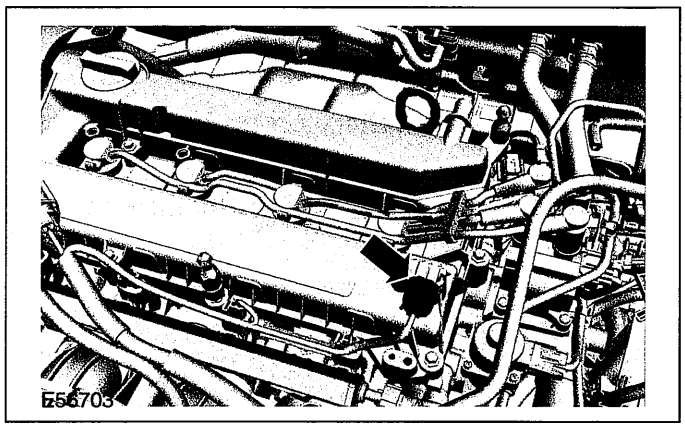


6. Remove the air cleaner retaining bracket.

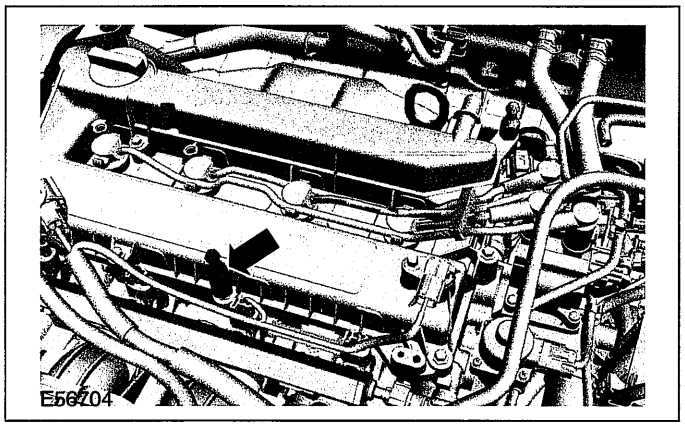


7. Remove the evaporative emission (EVAP) valve support bracket.

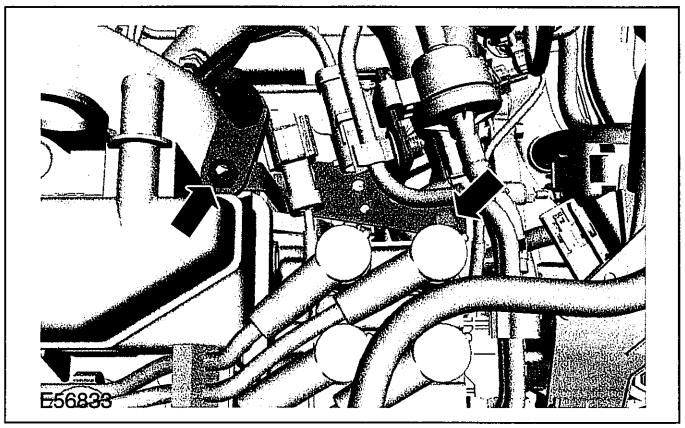


8. Using the special tool, disconnect the spark plug electrical connectors.

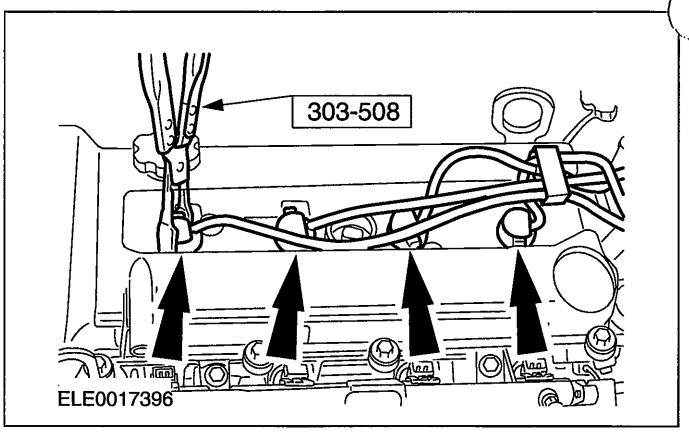


9. Using the special tool, remove the spark plugs.

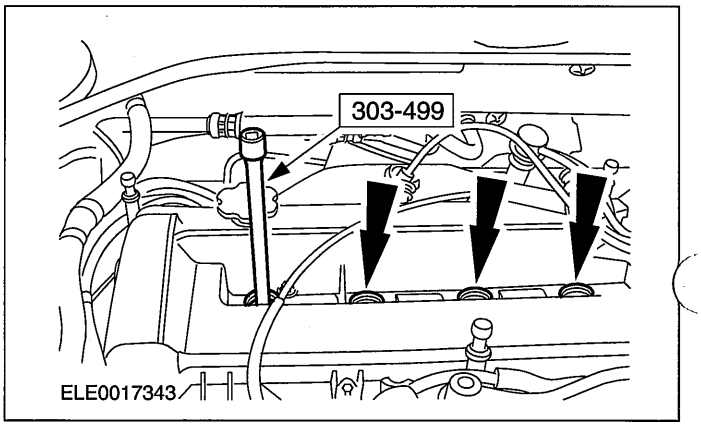


10. Remove the valve cover.

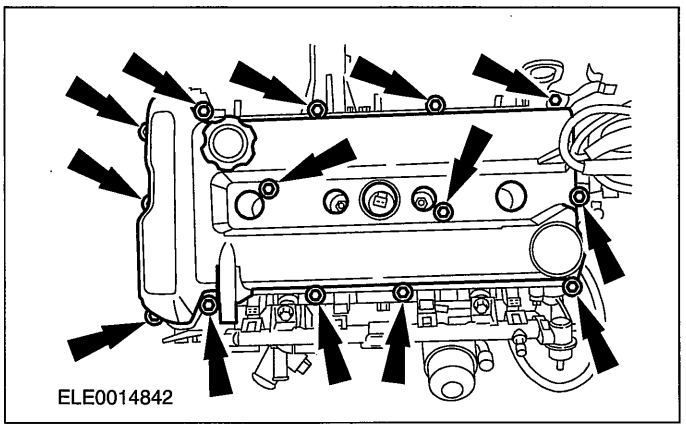


11. Remove the accessory drive belt.

For additional information, refer to: Accessory Drive Belt - 2.0L Duratec-HE (MI4) (303-05 Accessory Drive, Removal and Installation).

## IN-VEHICLE REPAIR

12. **Raise and support the vehicle. For additional information, refer to: (100-02 Jacking and Lifting)**

    **Jacking (Description and Operation), Lifting (Description and Operation).**

13. **Disconnect the crankshaft position (CKP) sensor electrical connector.**

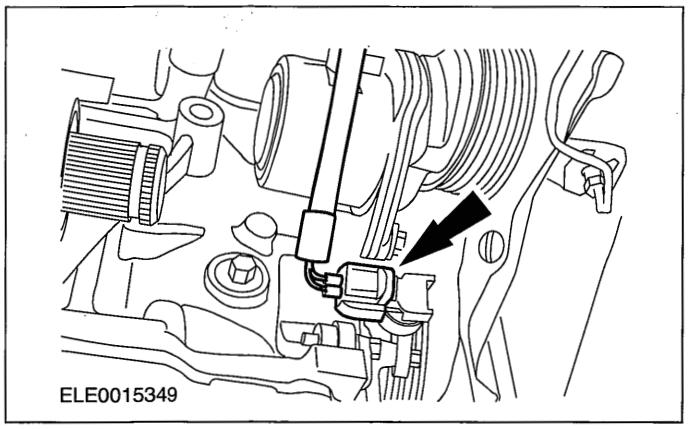


14. **Disconnect the generator electrical connectors.**
    - Unclip the wiring harness.

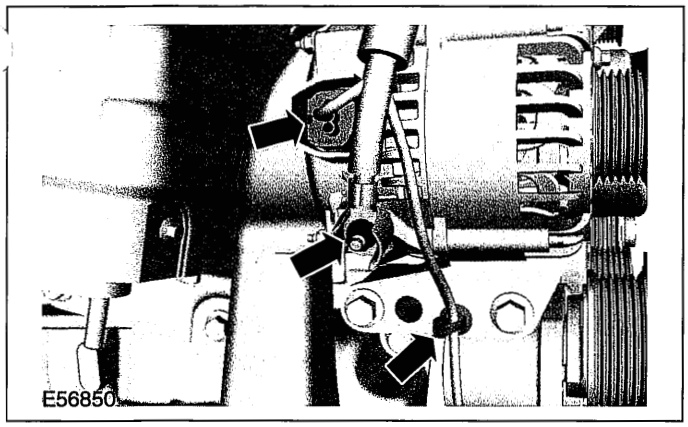


15. **NOTE:Do not damage the inner constant velocity (CV) joint boot.**

    **Detach the inner CV joint boot from the intermediate shaft.**

    - Remove and discard the constant velocity (CV) joint boot clamp.

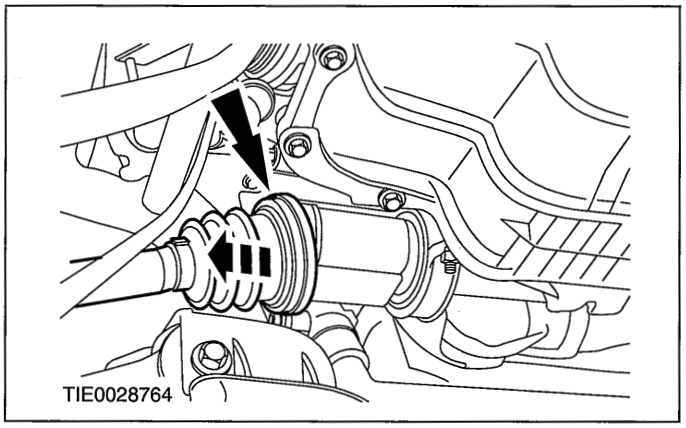


16. **NOTE:Only rotate the crankshaft in the normal direction of rotation.**

    **Rotate the crankshaft until piston No. 1 is approximately 45 degrees before top dead center (BTDC).**

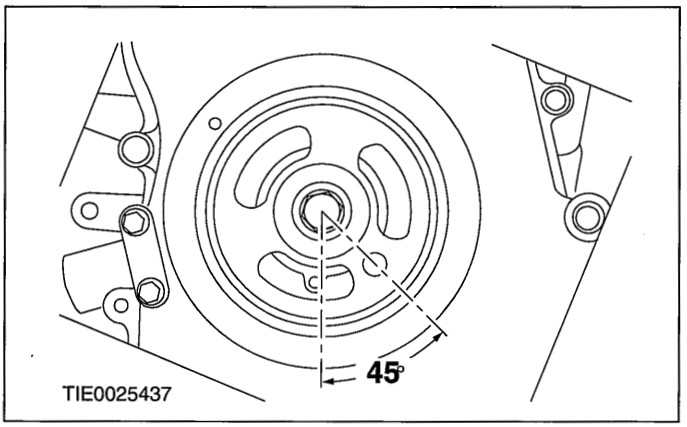


17. **Remove the engine front cover lower blanking plug.**

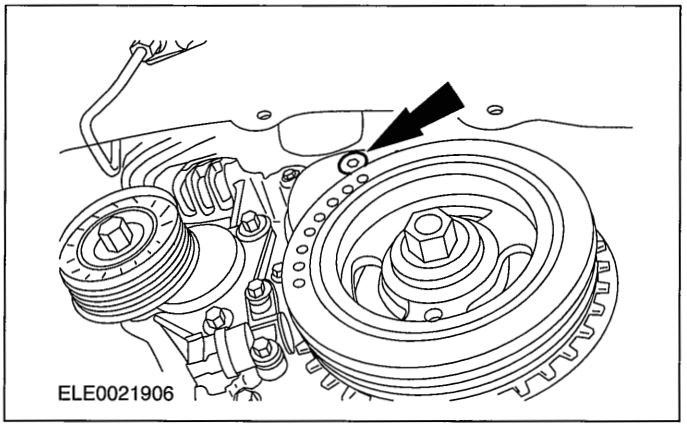

## IN-VEHICLE REPAIR

**18. Remove the cylinder block lower blanking plug and install the special tool.**

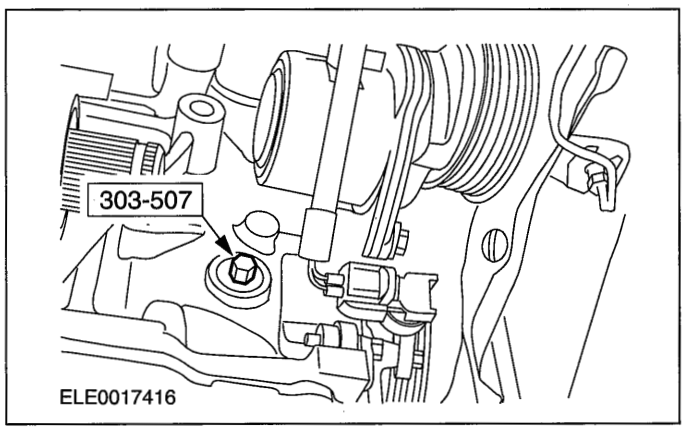


**19. Lower the vehicle.**

**20. Remove the engine front cover upper blanking plug.**

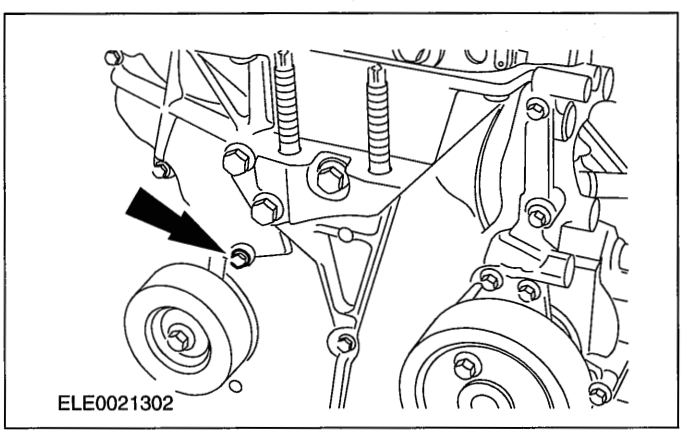


**21. ⚠CAUTION:To detension the timing chain, make sure the timing chain tensioner ratchet is in the released position.**

**Detension the timing chain.**

1. Using a suitable screwdriver, unlock the timing chain tensioner ratchet.
2. Carefully turn the exhaust camshaft by the hexagon in the normal direction of rotation, to detension the timing chain tensioner.
3. Install a suitable M6 x 18 mm bolt through the blanking plug to secure the timing chain guide in the detensioned position.

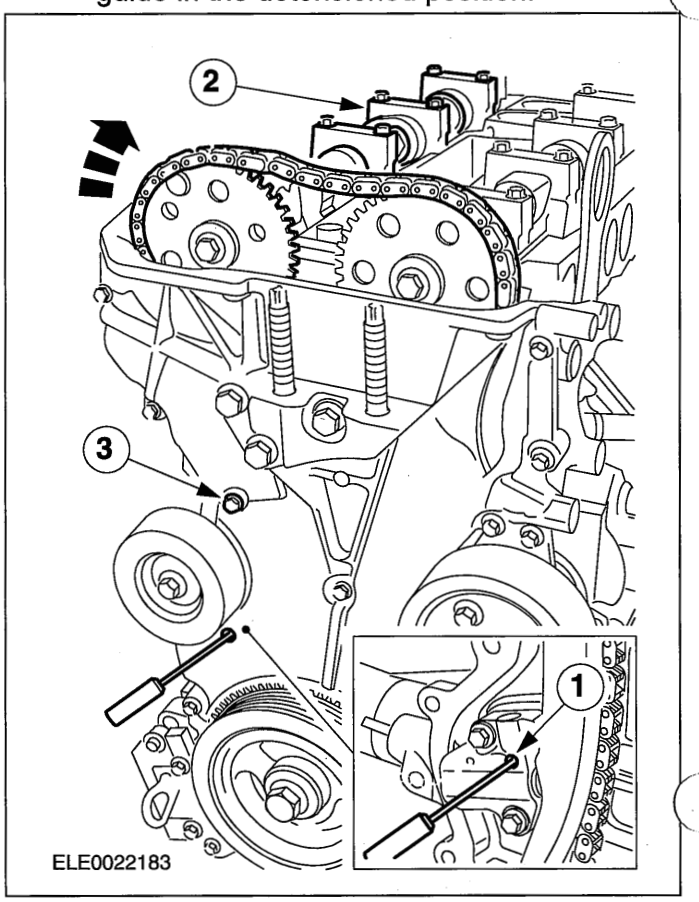


**22. ⚠CAUTION:Hold the camshaft by the hexagon with an open-ended wrench to stop it from turning.**

**NOTE:**Using a suitable piece of wire, prevent the timing chain and the sprocket from dropping into the timing case.

**Loosen the camshaft sprockets retaining bolts.**

- Detach the exhaust camshaft sprocket together with the timing chain from the exhaust camshaft.

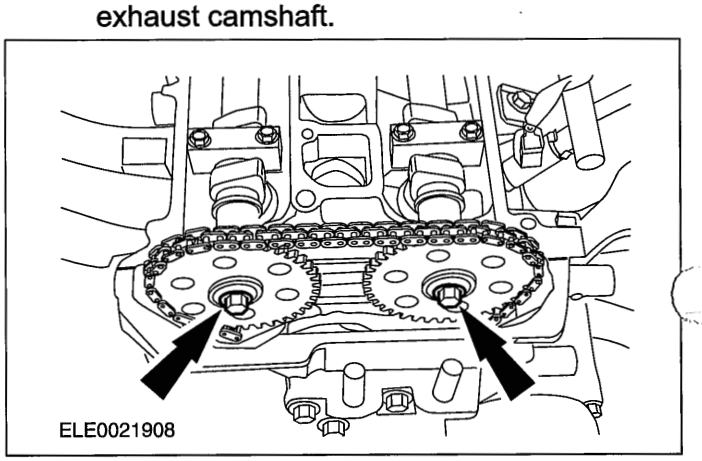

## IN-VEHICLE REPAIR

23. **⚠CAUTION:Keep the camshaft bearing caps, the camshafts and the camshaft sprockets in order for installation.**

**NOTE:**Working in several stages, release each camshaft bearing cap retaining bolt two turns at a time.

**Remove the camshaft bearing caps in the sequence shown.**

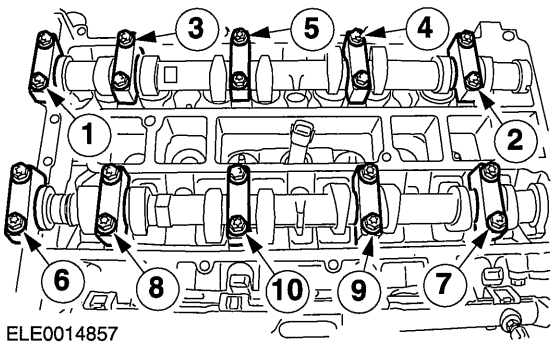

ELE0014857

24. **NOTE:Using a suitable piece of wire, prevent the timing chain and the sprocket from dropping into the timing case.**

**Detach the intake camshaft sprocket from the intake camshaft.**

25. **⚠CAUTION:Keep the valve tappets in order for installation.**

**Remove the valve tappets.**

### Installation

1. **Install the valve tappets.**
2. **NOTE:Do not tighten the camshaft sprocket retaining bolt at this stage.**

   **Attach the intake camshaft sprocket together with the timing chain to the intake camshaft and insert the intake camshaft.**
3. **CAUTIONS:**

   **⚠Install the camshafts approximately at valve overlap position cylinder No. 4.**

   **⚠Install the camshafts and bearing caps in their original location.**

   **Install the camshafts.**

   - Working in several stages, evenly tighten the camshaft bearing cap bolts in the sequence shown, one half turn at a time.
   - Coat the camshaft bearing caps with oil.
   - Tighten the bolts in two stages:
   - Stage 1: 7 Nm.
   - Stage 2: 16 Nm.

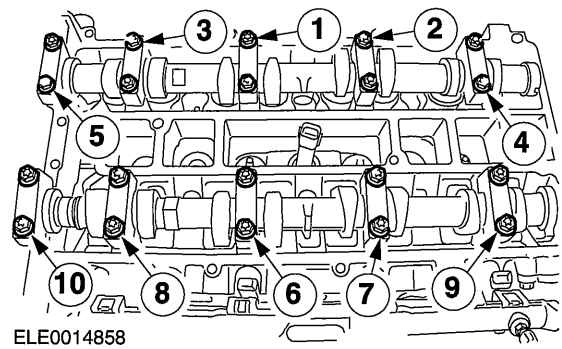

ELE0014858

4. **NOTE:Only carry out the following step when a new cylinder head or new valves are installed.**

   **Check the valve clearance and adjust if necessary.**

   **For additional information, refer to: Valve Clearance Adjustment (303-01 Engine - 2.0L Duratec-HE (MI4), General Procedures).**
5. **NOTE:Do not tighten the camshaft sprocket retaining bolt at this stage.**

   **Attach the exhaust camshaft sprocket together with the timing chain to the exhaust camshaft.**

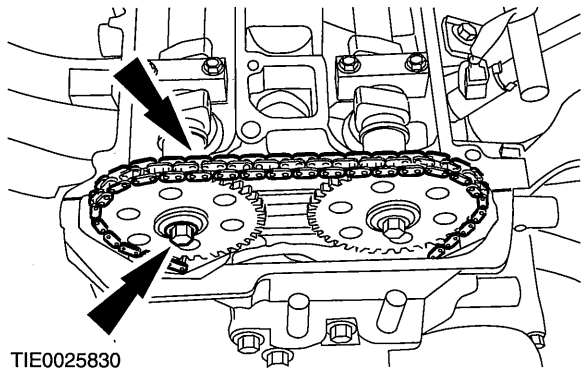
TIE0025830

## IN-VEHICLE REPAIR

6. **Install the special tool.**

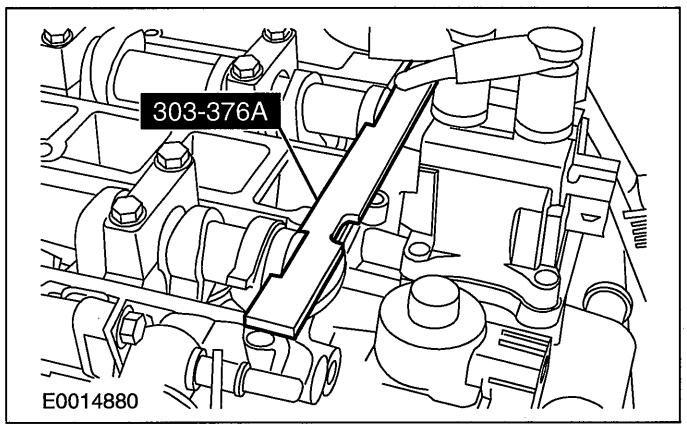


7. **Coat the engine front cover upper blanking plug with sealant.**
8. **Tension the timing chain.**
   - Remove the timing chain guide securing bolt and install the engine front cover upper blanking plug.

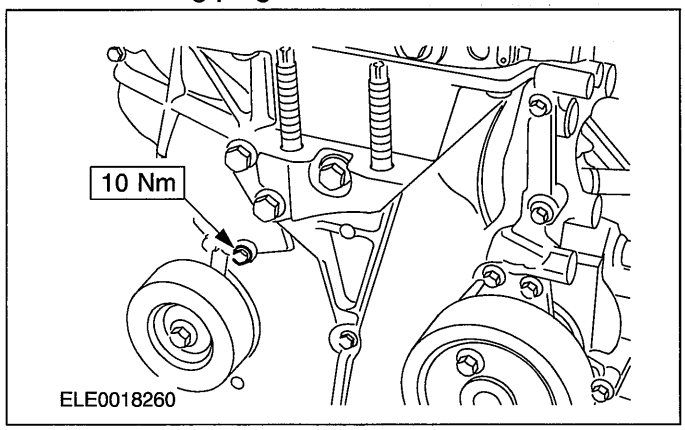


9. **NOTE:Only rotate the crankshaft in the normal direction of rotation.**

   **Rotate the crankshaft until piston No. 1 is at TDC.**
10. **NOTE:Hold the camshafts by the hexagon with an open-ended wrench to stop them from rotating.**

   **Tighten the camshaft sprocket retaining bolts.**

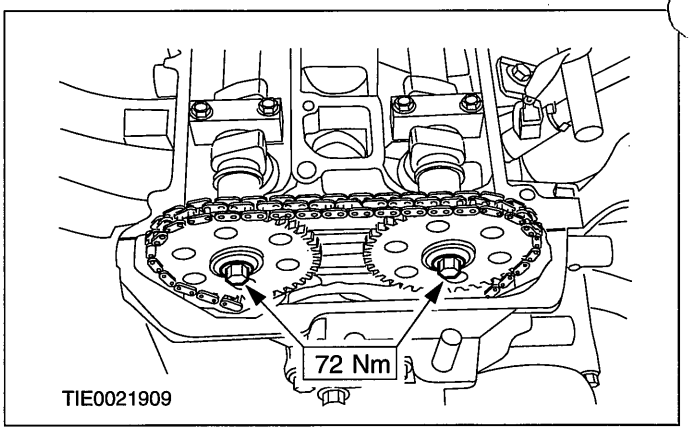


11. **Remove the special tool.**

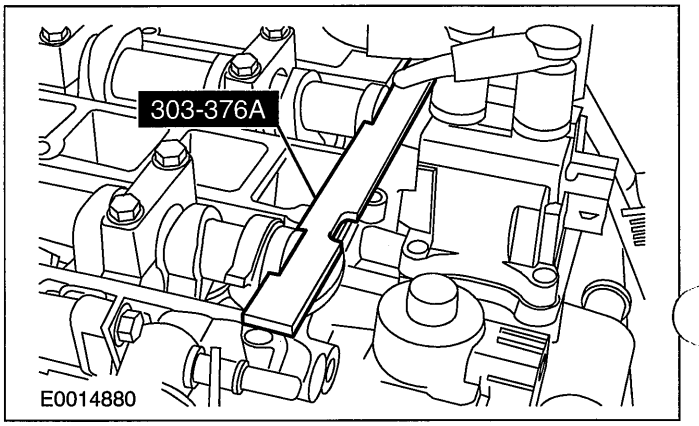


12. **Raise and support the vehicle. For additional information, refer to: (100-02 Jacking and Lifting)**

    **Jacking (Description and Operation), Lifting (Description and Operation).**
13. **Remove the special tool.**

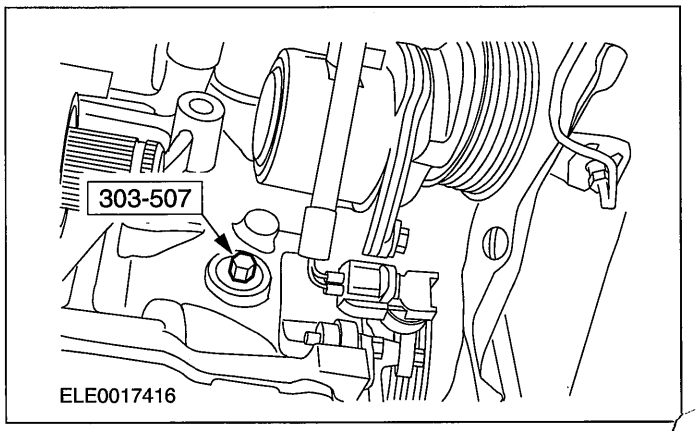


14. **NOTE:Only rotate the crankshaft in the normal direction of rotation.**

## IN-VEHICLE REPAIR

**Rotate the crankshaft approximately one and three quarter revolutions until piston No. 1 is 45 degrees before TDC.**

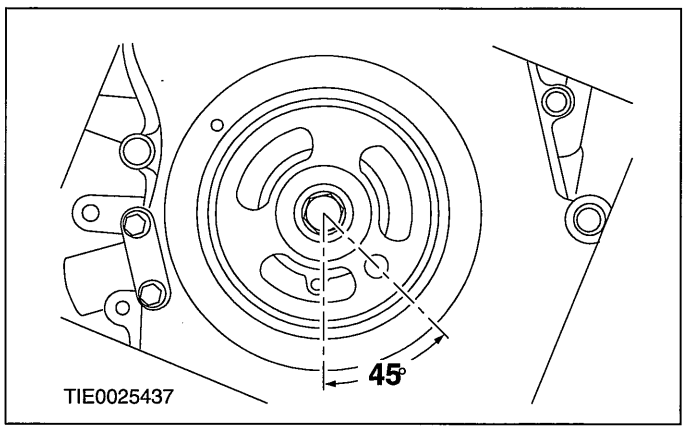


**15. Install the special tool.**

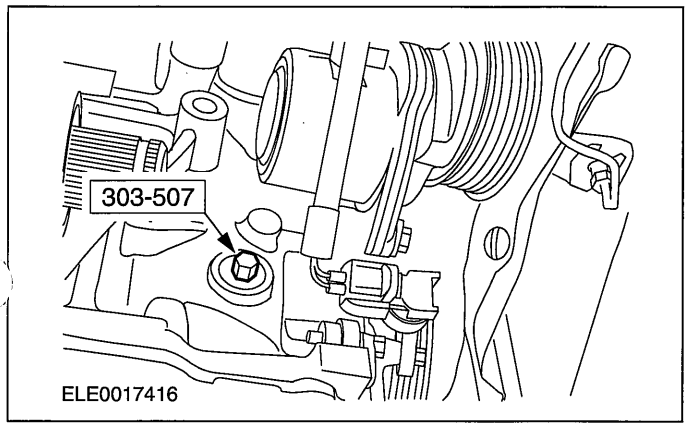


**16. NOTE:Only rotate the crankshaft in the normal direction of rotation.**

**Rotate the crankshaft until piston No. 1 is at TDC.**

**17. ⚠CAUTION:Only tighten the crankshaft pulley securing bolt finger tight.**

**NOTE:**If it is not possible to install the crankshaft pulley securing bolt, correct the valve timing.

**Using a M6 x 18 mm bolt, check the position of the crankshaft pulley.**

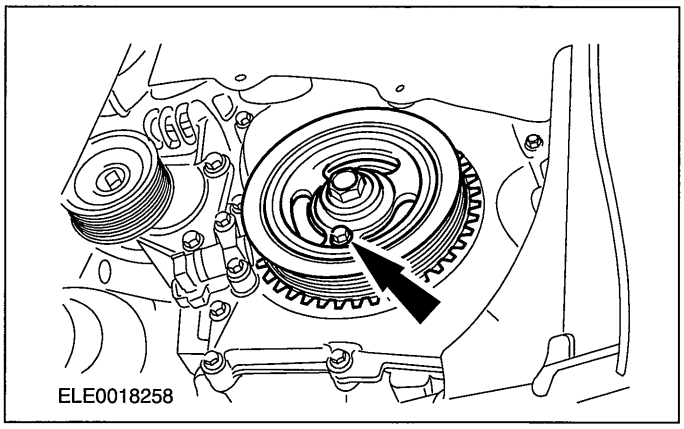


**18. Lower the vehicle.**

**19. NOTE:If it is not possible to install the special tool, correct the valve timing.**

**Using the special tool, check the position of the camshafts.**

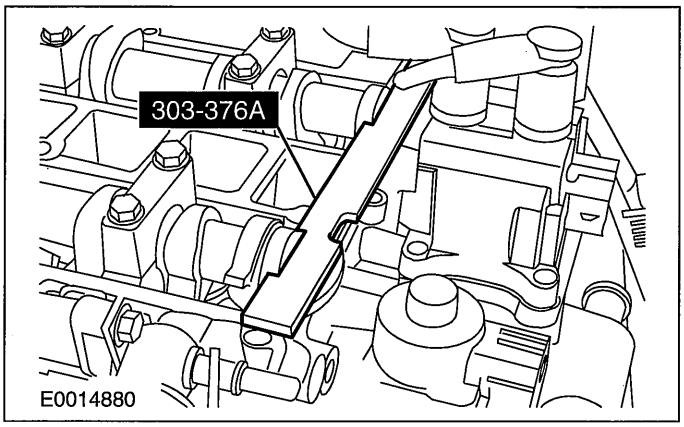


**20. Remove the special tool.**

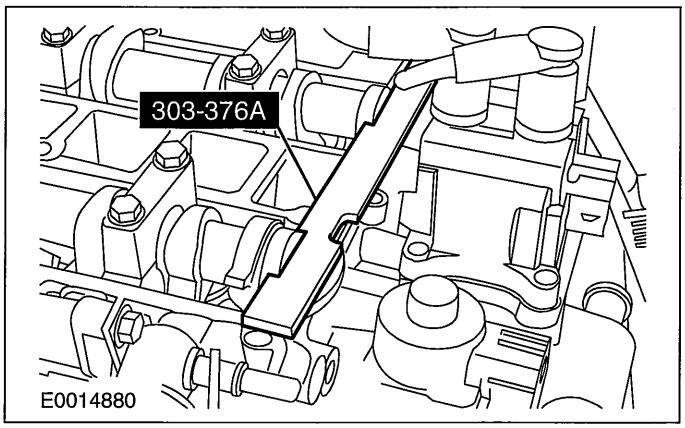

## IN-VEHICLE REPAIR

21. **Raise and support the vehicle. For additional information, refer to: (100-02 Jacking and Lifting)**

    **Jacking (Description and Operation), Lifting (Description and Operation).**

22. **Remove the crankshaft pulley securing bolt.**

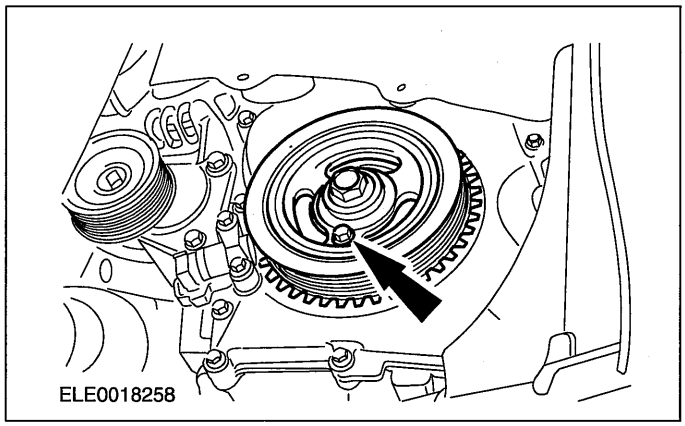


23. **Remove the special tool.**

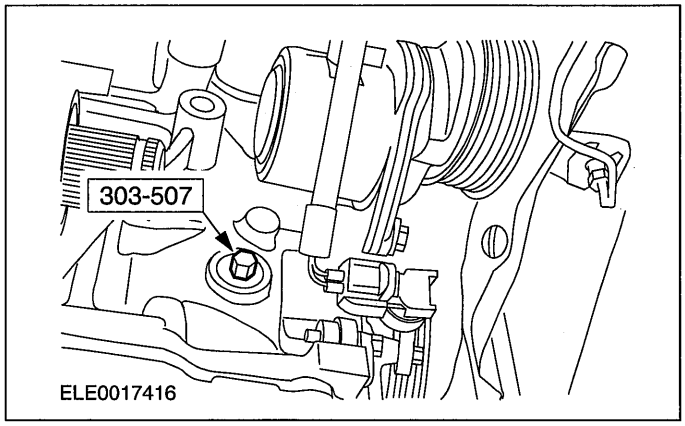


24. **Install the cylinder block lower blanking plug.**

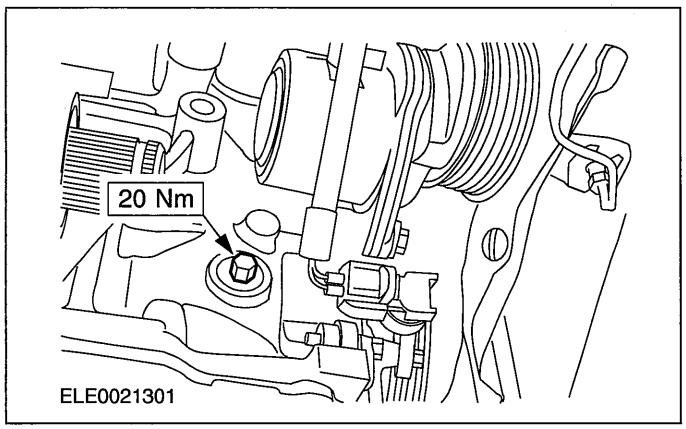


25. **Coat the engine front cover lower blanking plug with sealant.**

26. **Install the engine front cover lower blanking plug.**

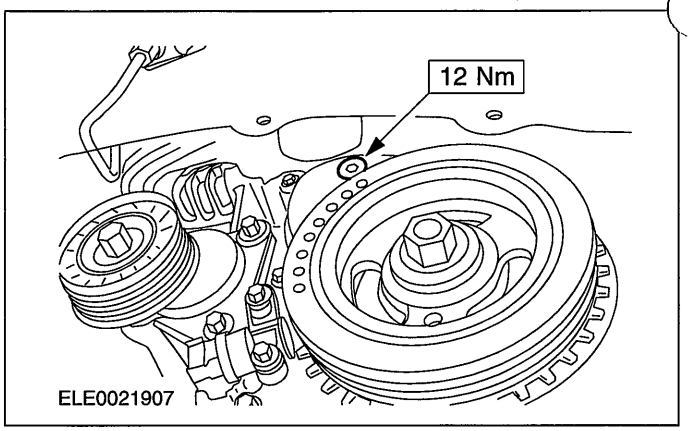


27. **NOTE:Do not damage the inner constant velocity (CV) joint boot.**

**NOTE:**Make sure that the intermediate shaft mating surface for the CV joint boot is clean.

**Attach the inner CV joint boot to the intermediate shaft.**

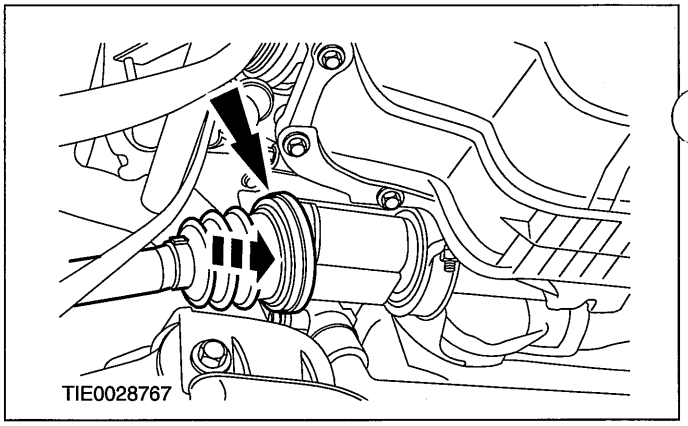


28. **NOTE:Install a new CV joint boot clamp.**

**Using a suitable grip wrench, install the inner CV joint boot clamp.**

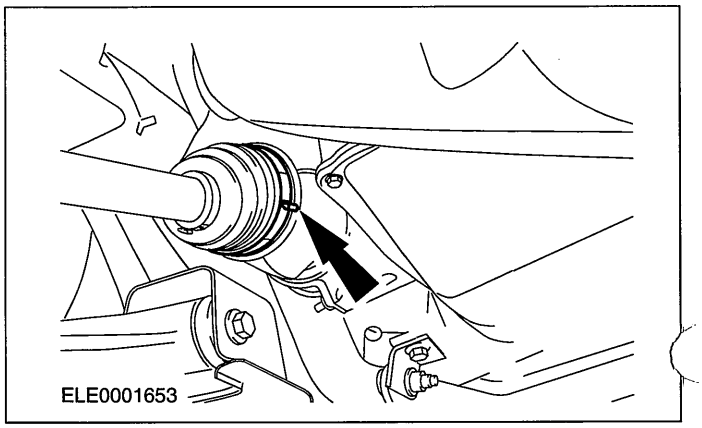

## IN-VEHICLE REPAIR

29. **Connect the generator electrical connectors.**
    - Clip the wiring harness.

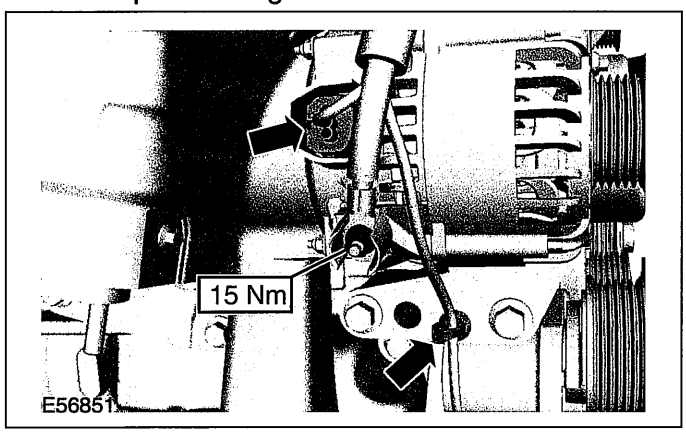


30. **Connect the crankshaft position (CKP) sensor electrical connector.**

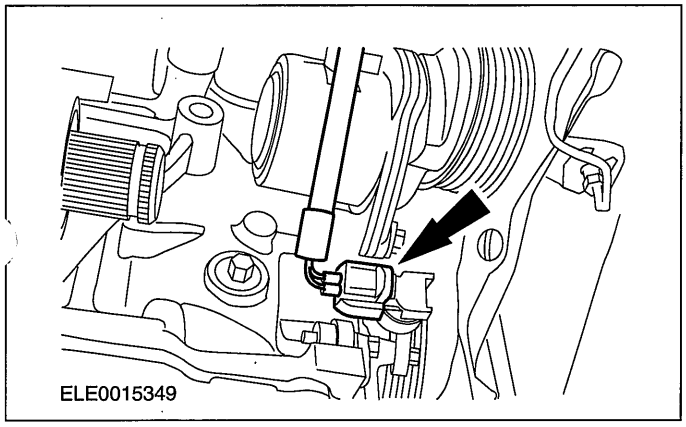


31. **Install the accessory drive belt.**

    **For additional information, refer to: Accessory Drive Belt - 2.0L Duratec-HE (MI4) (303-05 Accessory Drive, Removal and Installation).**

32. **Apply a small bead of sealant to the areas as shown.**

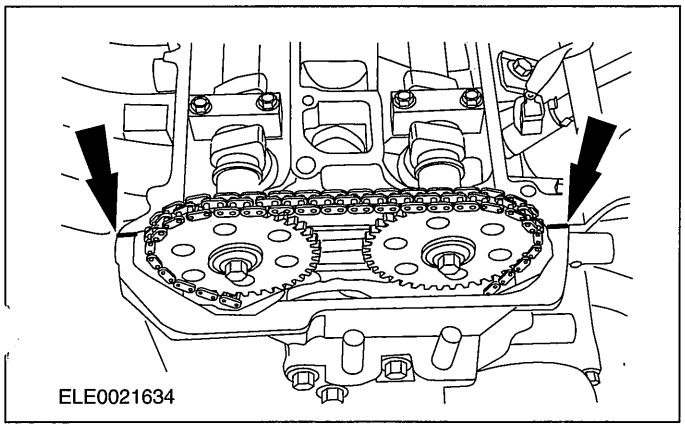


33. **NOTE:Install a new valve cover gasket if necessary.**

    **Install the valve cover.**
    - Tighten the bolts in the sequence shown.

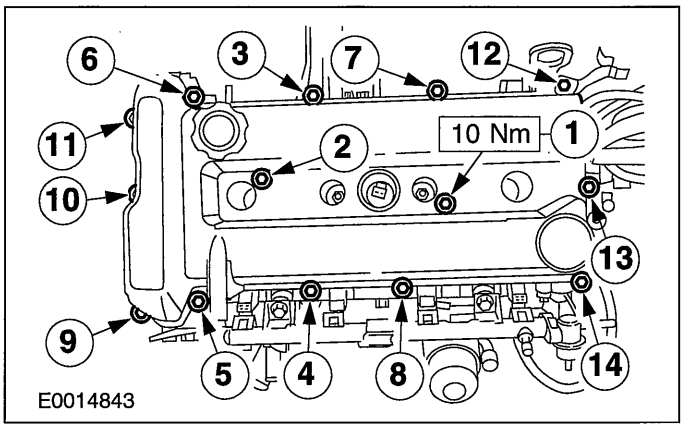


34. **Using the special tool, install the spark plugs.**

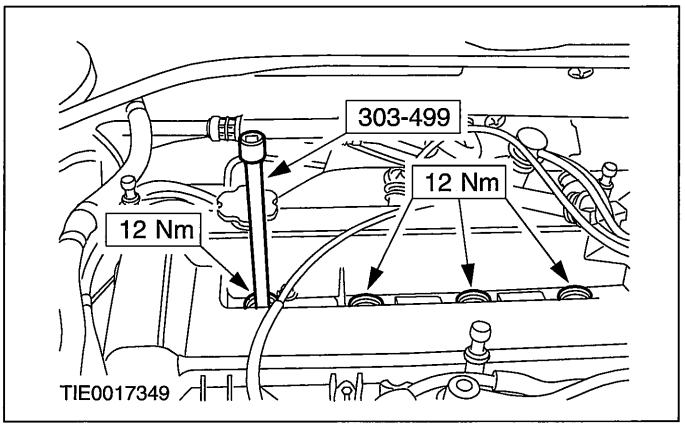


35. **Using the special tool, connect the spark plug electrical connectors.**

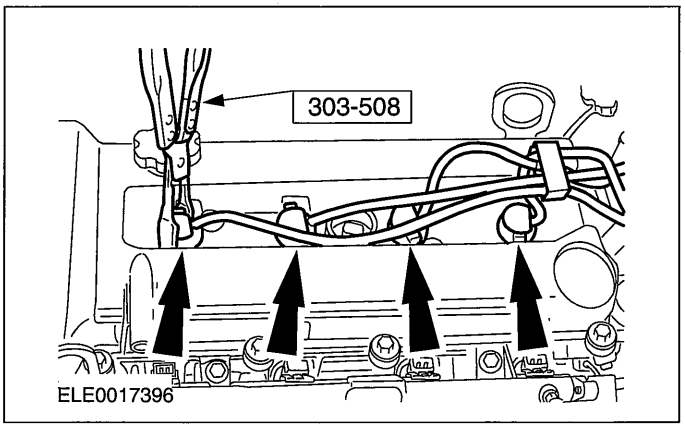

## IN-VEHICLE REPAIR

36. **Install the evaporative emission (EVAP) valve support bracket.**

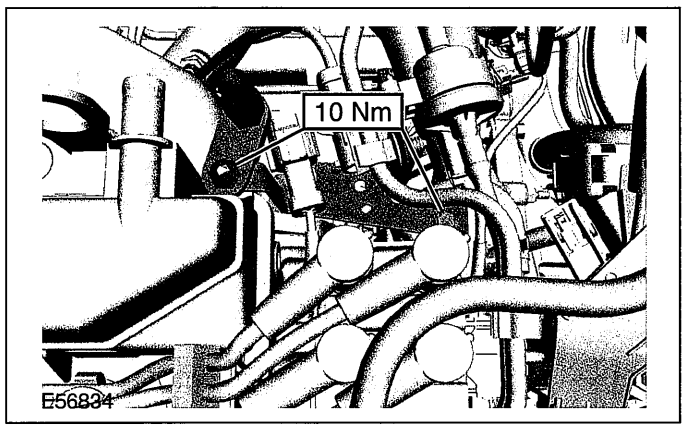


37. **Install the air cleaner retaining bracket.**

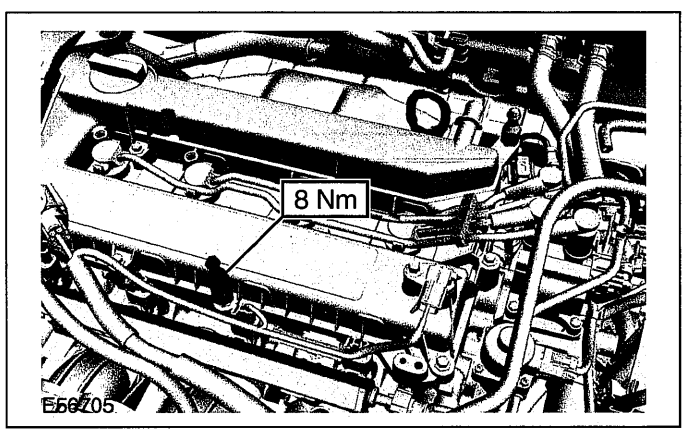


38. **Connect the camshaft position (CMP) sensor electrical connector.**

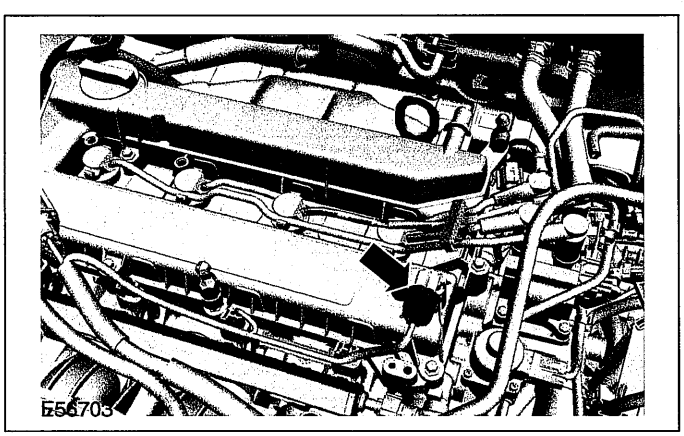


39. **Install the positive crankshaft ventilation (PCV) hose.**

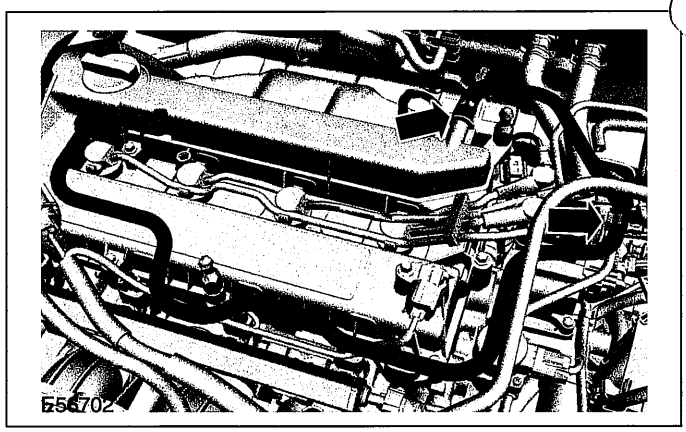


40. **Attach the engine wiring harness to the valve cover.**
    1. Clip the engine wiring harness to the intake manifold.
    2. Clip the engine wiring harness bracket to the intake manifold.
    3. Install the air cleaner retaining bracket.
    4. Clip the power steering return line to the engine wiring harness bracket.

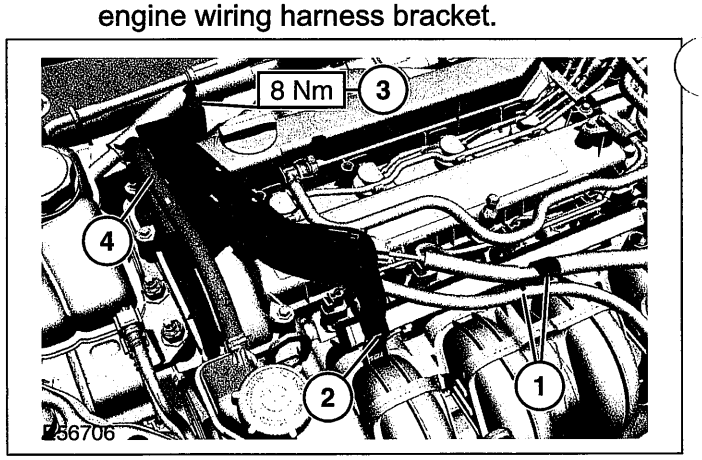


41. **Install the air cleaner.**

    **For additional information, refer to: Air Cleaner - 2.0L Duratec-HE (MI4) (303-12 Intake Air Distribution and Filtering, Removal and Installation).**

42. **Connect the battery ground cable.**

    **For additional information, refer to: Battery Disconnect (414-01 Battery, Mounting and Cables, General Procedures).**

## IN-VEHICLE REPAIR

# Oil Pan(21 154 0)

### Special Tool(s)

| | |
|---|---|
| 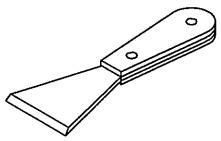 21179 | Separator, Oil Pan 303-428 (21-179) |

| Materials | |
|---|---|
| **Name** | **Specification** |
| Cleaner | WSK-M2G342-A |
| Silicone Sealant | WSE-M4G323-A4 |

## Removal

1. **Disconnect the battery.**

   **For additional information, refer to: Battery Disconnect (414-01 Battery, Mounting and Cables, General Procedures).**

2. **Remove the air cleaner.**

   **For additional information, refer to: Air Cleaner - 2.0L Duratec-HE (MI4) (303-12 Intake Air Distribution and Filtering, Removal and Installation).**

3. **Remove the oil level indicator and oil level indicator tube upper retaining bolt.**

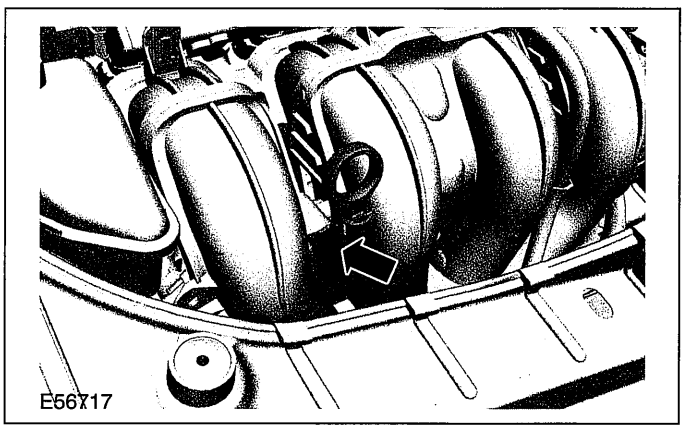


4. **Loosen the transaxle upper retaining bolts approximately 10 mm.**

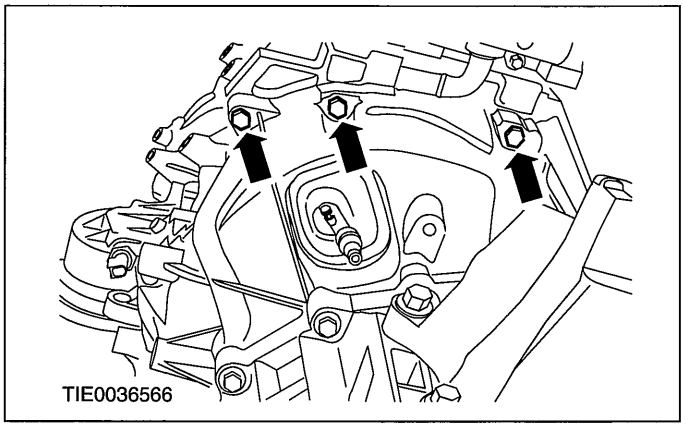


5. **Raise and support the vehicle. For additional information, refer to: (100-02 Jacking and Lifting)**

   **Jacking (Description and Operation), Lifting (Description and Operation).**

6. **Remove the oil level indicator tube lower retaining bolt.**

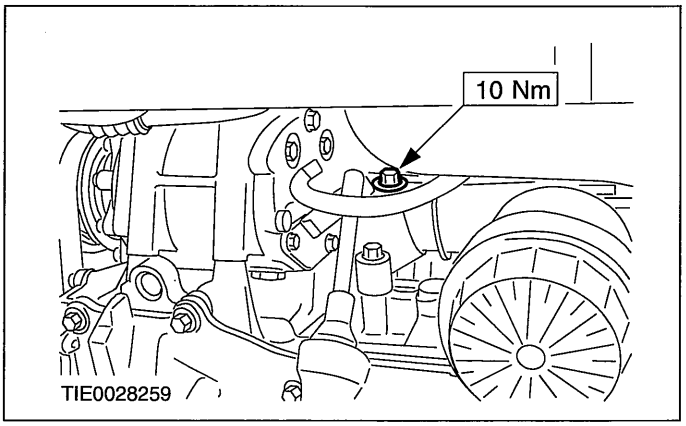


7. **Remove the engine support insulator.**

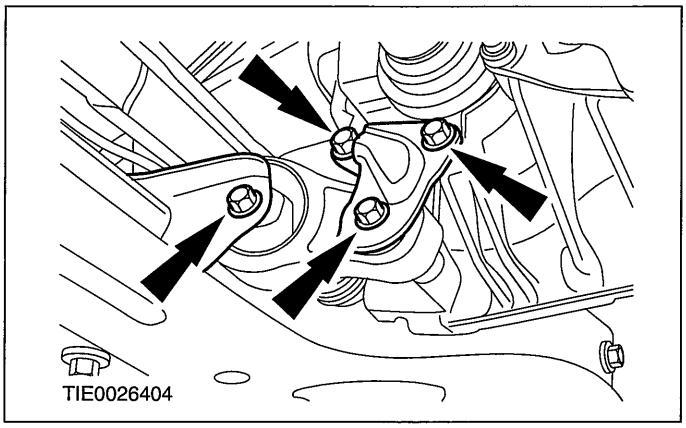

## IN-VEHICLE REPAIR

8. **Drain the engine.**
   - Allow the oil to drain into a suitable container.
9. **NOTE:Inspect the oil pan drain plug seal for damage. Install a new drain plug and seal if required.**

   **Install the drain plug.**

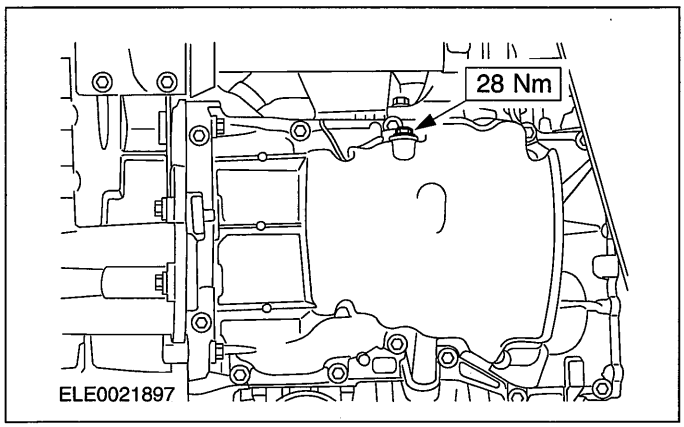


10. **Loosen the transaxle right-hand retaining bolts approximately 10 mm.**

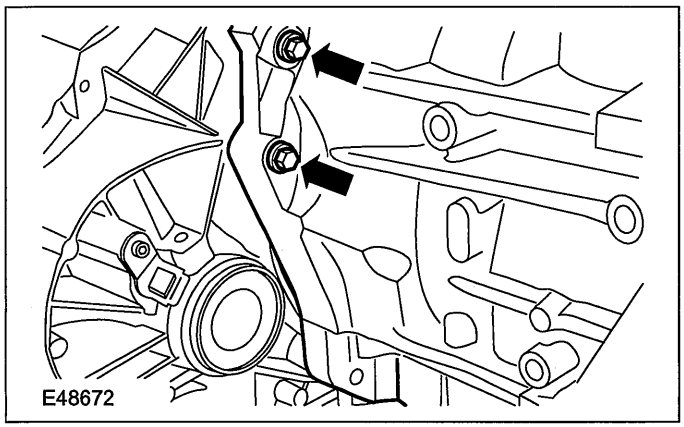


11. **Loosen the transaxle left-hand retaining bolts approximately 10 mm.**

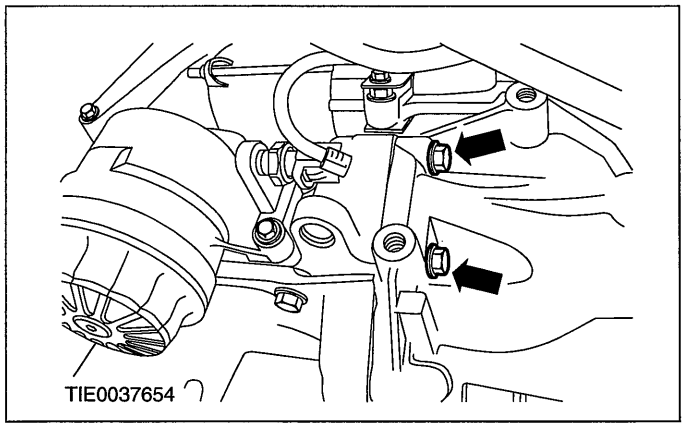


12. **Remove the engine front cover lower retaining bolts.**

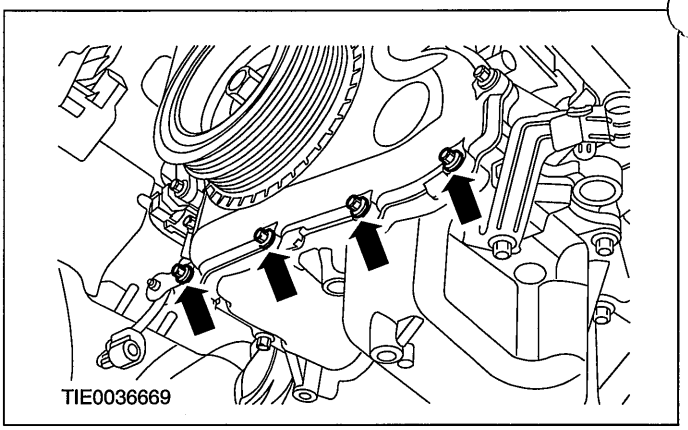


13. **Remove the transaxle lower retaining bolts.**

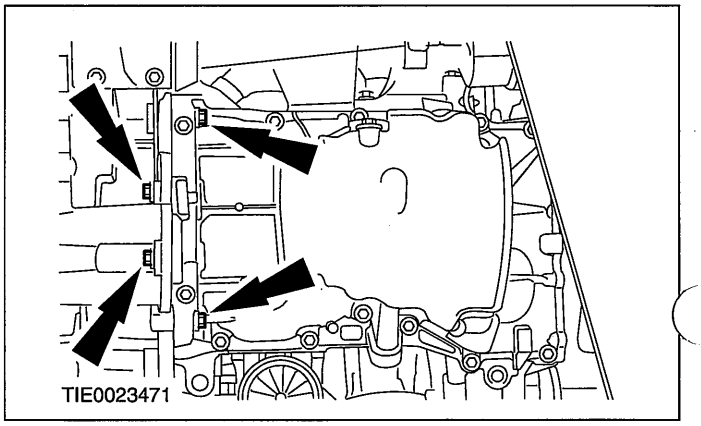


14. **Slide back the transaxle approximately 8 mm.**
15. **Remove the oil pan retaining bolts.**

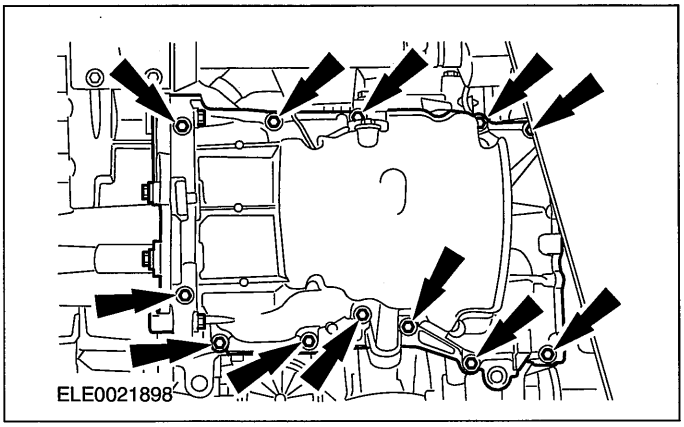

## IN-VEHICLE REPAIR

16. **Using the special tool, remove the oil pan.**

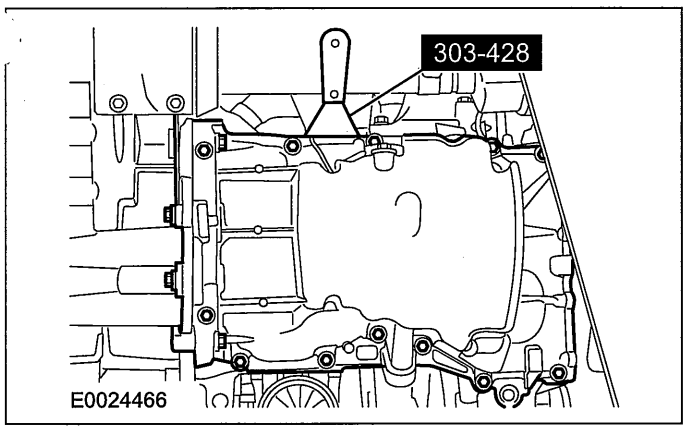


### Installation

1. **Clean the mating faces of the cylinder block, the oil pan and the engine front cover with cleaner.**
2. **Apply a 3 mm bead of sealant to the oil pan.**

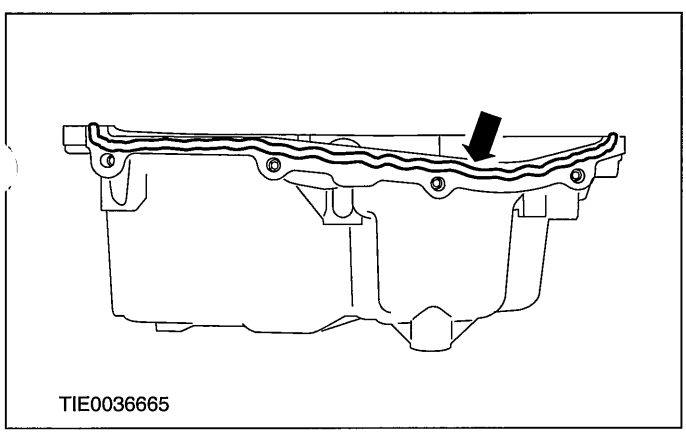


3. **NOTE:Install the oil pan within 10 minutes of applying the silicone sealant and tighten the retaining bolts within a further 5 minutes.**

   **Apply a 3 mm bead of sealant to the oil pan.**

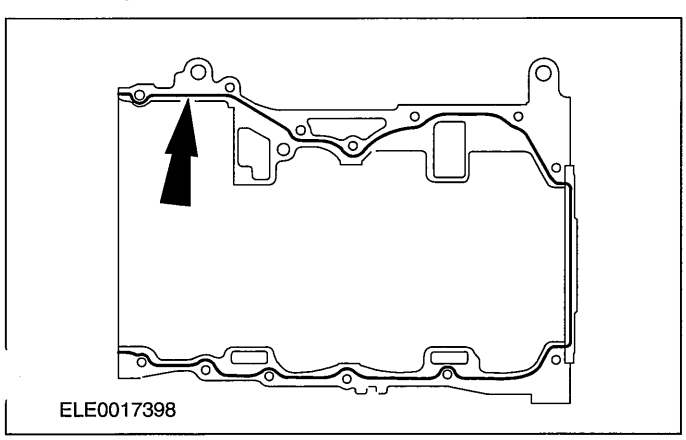


4. **NOTE:Do not tighten the oil pan retaining bolts at this stage.**

   **Install the oil pan.**

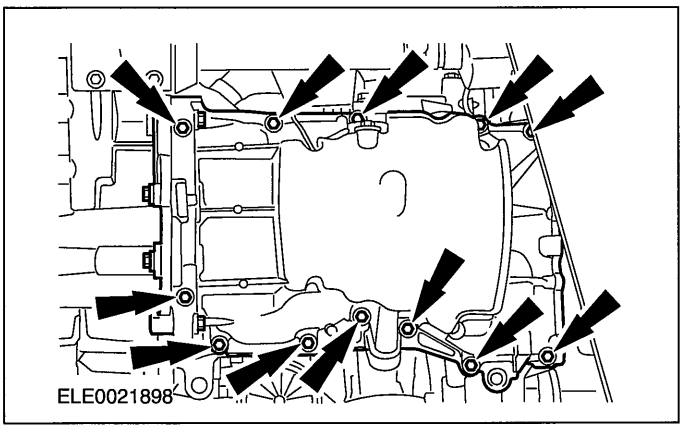


5. **NOTE:Do not tighten the transaxle lower retaining bolts at this stage.**

   **Install the transaxle lower retaining bolts.**

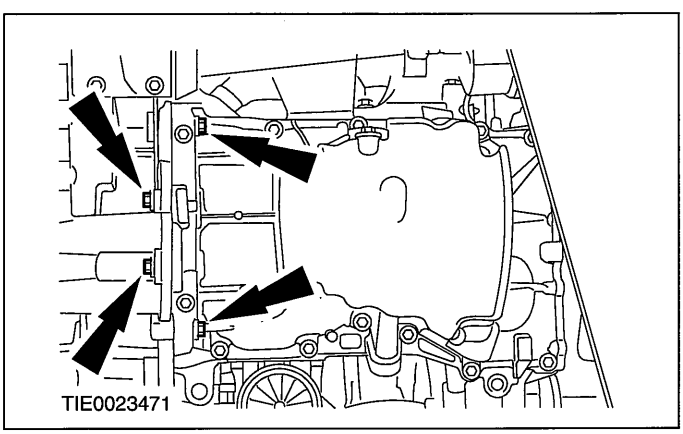


6. **Install the engine front cover lower retaining bolts.**

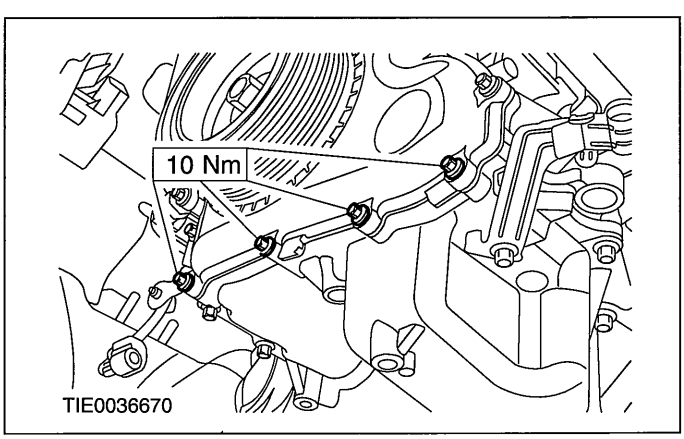

## IN-VEHICLE REPAIR

7. Tighten the oil pan retaining bolts in the sequence shown.

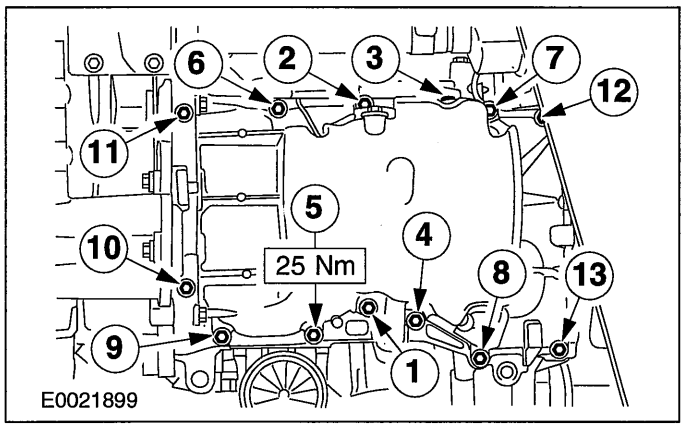


8. Tighten the transaxle lower retaining bolts.

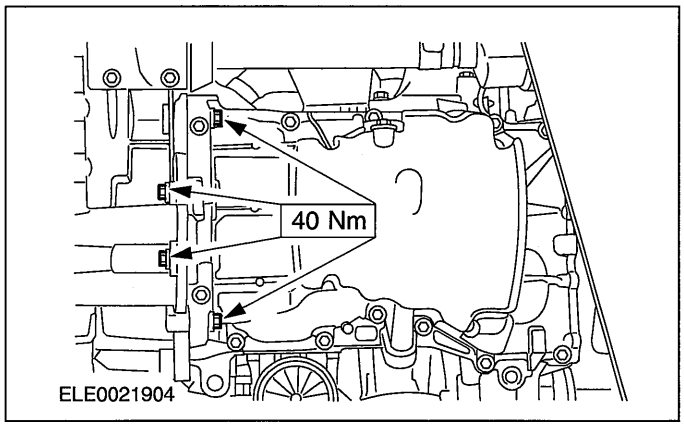


9. Install the engine support insulator.

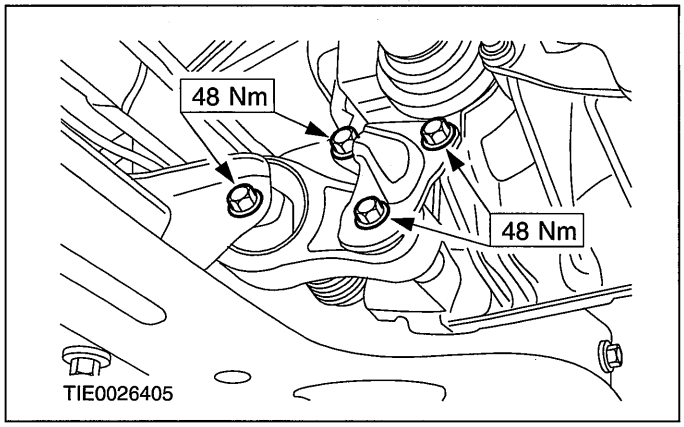


10. Install the oil level indicator tube lower retaining bolt.

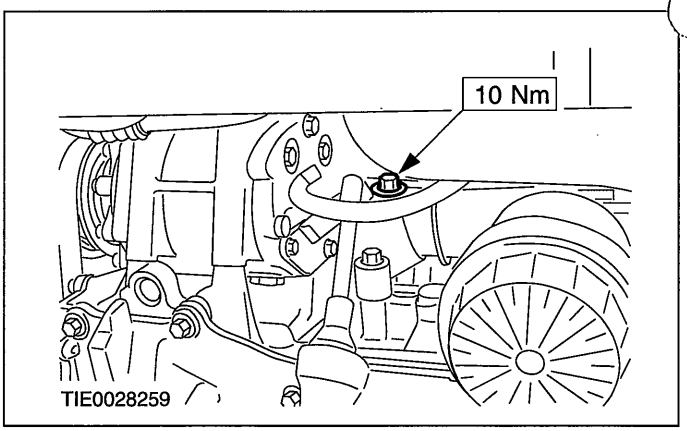


11. Tighten the transaxle left-hand retaining bolts.

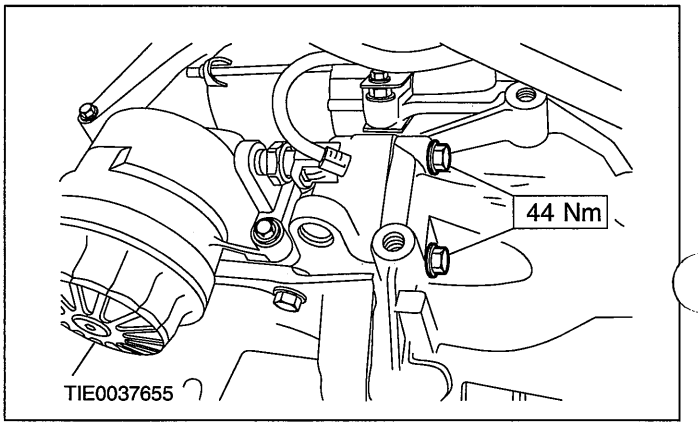


12. Tighten the transaxle right-hand retaining bolts.

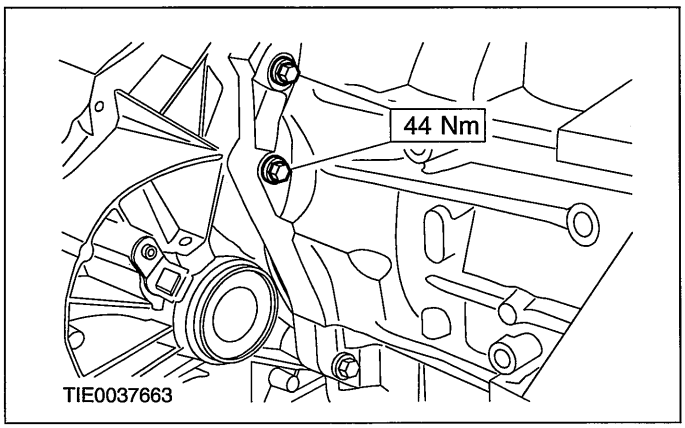


13. Lower the vehicle.

## IN-VEHICLE REPAIR

14. Tighten the transaxle upper retaining bolts.

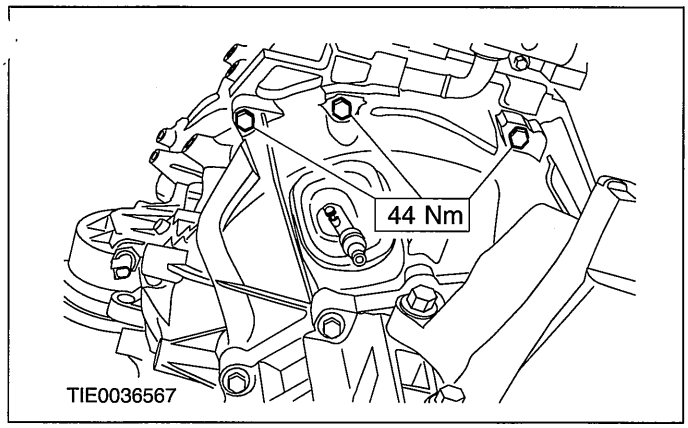


15. Install the oil level indicator and oil level indicator tube upper retaining bolt.

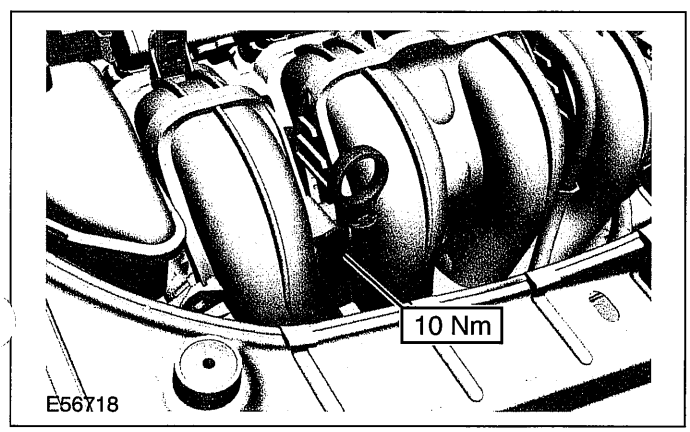


16. Install the air cleaner.

    For additional information, refer to: Air Cleaner - 2.0L Duratec-HE (MI4) (303-12 Intake Air Distribution and Filtering, Removal and Installation).

17. Connect the battery.

    For additional information, refer to: Battery Disconnect (414-01 Battery, Mounting and Cables, General Procedures).

18. Fill the engine with engine oil.

    For additional information, refer to: Specifications (303-01 Engine - 2.0L Duratec-HE (MI4), Specifications).

## IN-VEHICLE REPAIR

# Oil Pump(21 714 0)

### Special Tool(s)

| | |
|---|---|
| 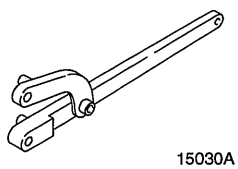 15030A | Universal Flange Holding Wrench 205-072 (15-030A) |
| 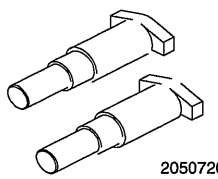 20507202 | Adapter for 205-072 205-072-02 (15-030 A01) |

## Removal

1. **Remove the timing chain.**

   **For additional information, refer to: Timing Chain (303-01 Engine - 2.0L Duratec-HE (MI4), In-vehicle Repair).**

2. **Remove the oil pan.**

   **For additional information, refer to: Oil Pan (303-01 Engine - 2.0L Duratec-HE (MI4), In-vehicle Repair).**

3. **Remove the oil pump chain guide.**

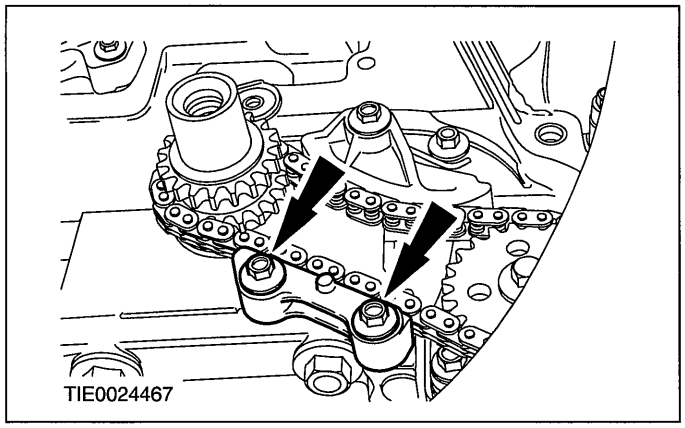


4. **Remove the oil pump chain tensioner.**

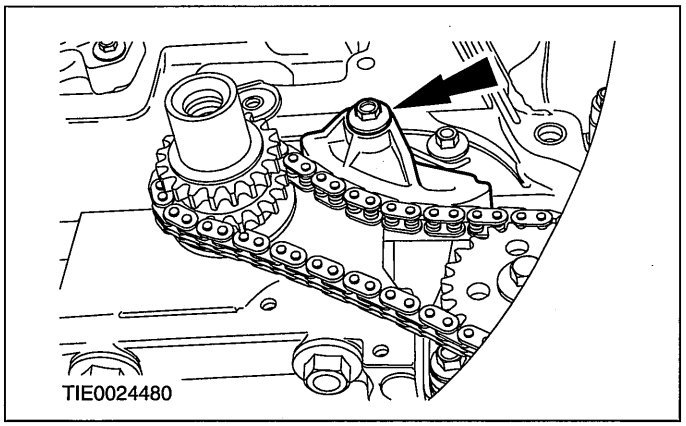


5. **Using the special tools, loosen the oil pump sprocket retaining bolt.**

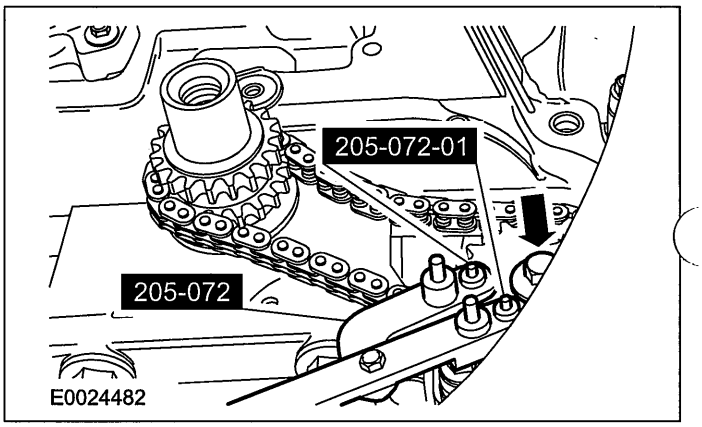


6. **Remove the oil pump chain.**
   1. Remove the oil pump sprocket retaining bolt.
   2. Remove the oil pump chain and the oil pump sprocket.

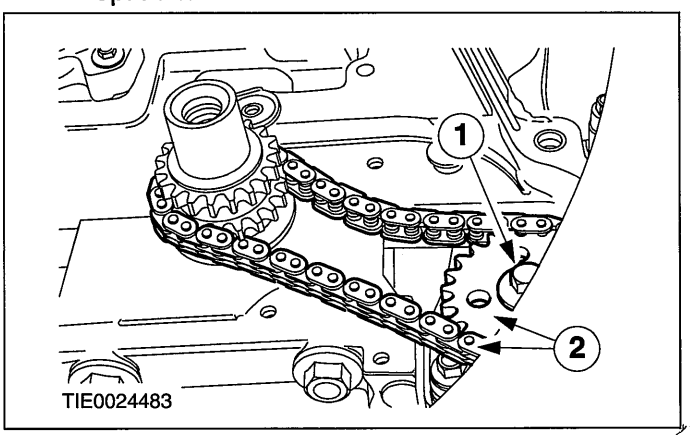

## IN-VEHICLE REPAIR

**7. Remove the oil pump.**

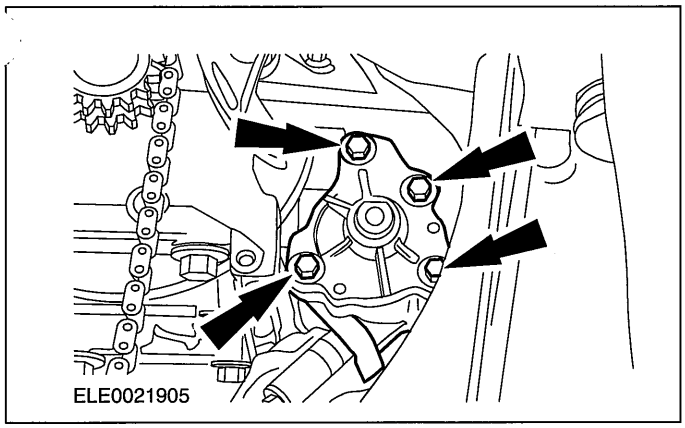


### Installation

**1. Install the oil pump.**

- Tighten the bolts in the sequence shown in two stages.
- Stage 1: 10 Nm
- Stage 2: 23 Nm

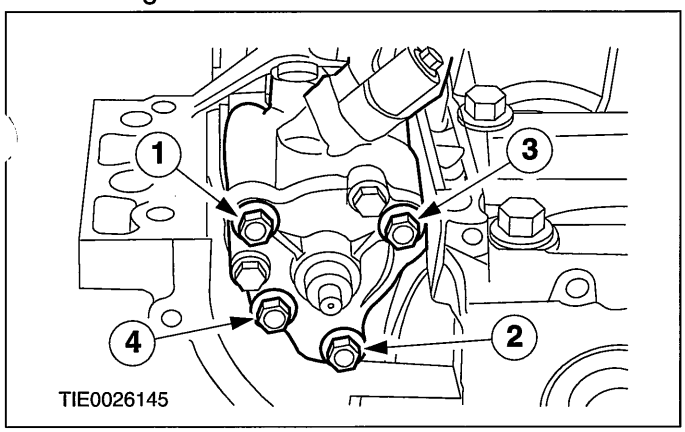


**2. NOTE:Do not tighten the oil pump sprocket retaining bolt at this stage.**

**Install the oil pump chain.**

1. Install the oil pump chain and the oil pump sprocket.
2. Install the oil pump sprocket retaining bolt.

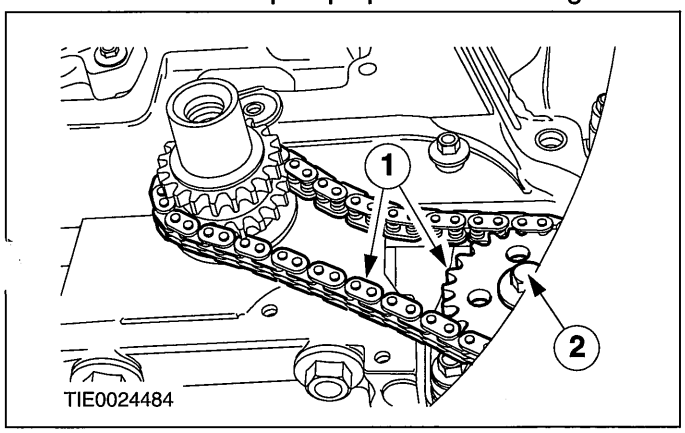


**3. Using the special tools, tighten the oil pump sprocket retaining bolt.**

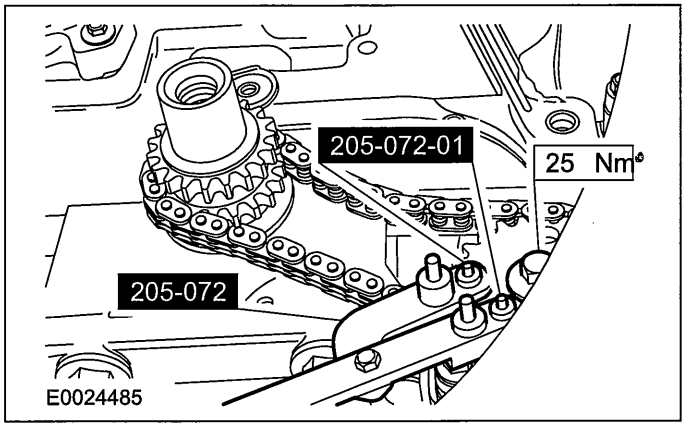


**4. Install the oil pump chain tensioner.**

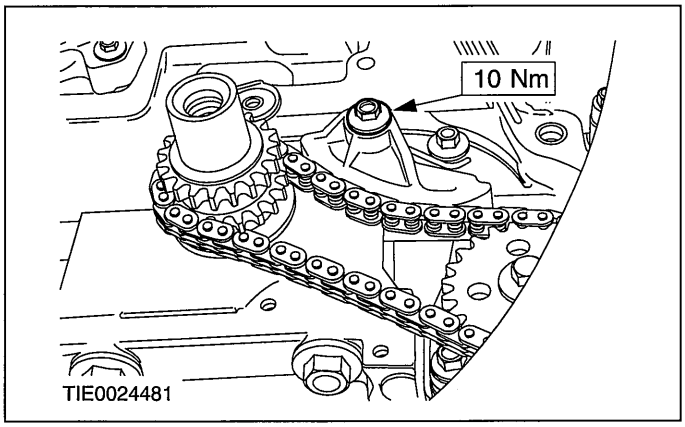


**5. Install the oil pump chain guide.**

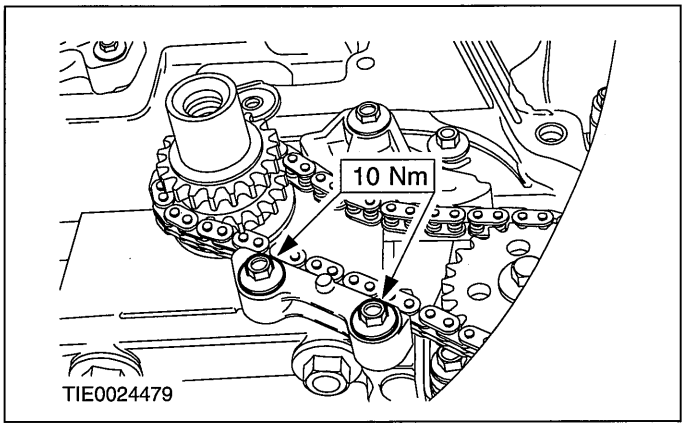


**6. Install the oil pan.**

**For additional information, refer to: Oil Pan (303-01 Engine - 2.0L Duratec-HE (MI4), In-vehicle Repair).**

**7. Install the timing chain.**

**For additional information, refer to: Timing Chain (303-01 Engine - 2.0L Duratec-HE (MI4), In-vehicle Repair).**

## IN-VEHICLE REPAIR

# Crankshaft Rear Seal(21 468 4)

### Special Tool(s)

| | |
|---|---|
| 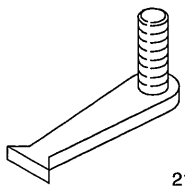 21135 | Locking Tool, Flywheel 303-254 (21-135) |
| 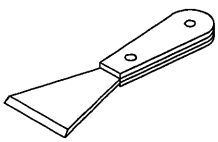 21179 | Separator, Oil Pan 303-428 (21-179) |

| Materials | |
|---|---|
| **Name** | **Specification** |
| Cleaner | WSK-M2G342-A |
| Silicone Sealant | WSE-M4G323-A4 |

## Removal

1. **Remove the oil level indicator and oil level indicator tube upper retaining bolt.**

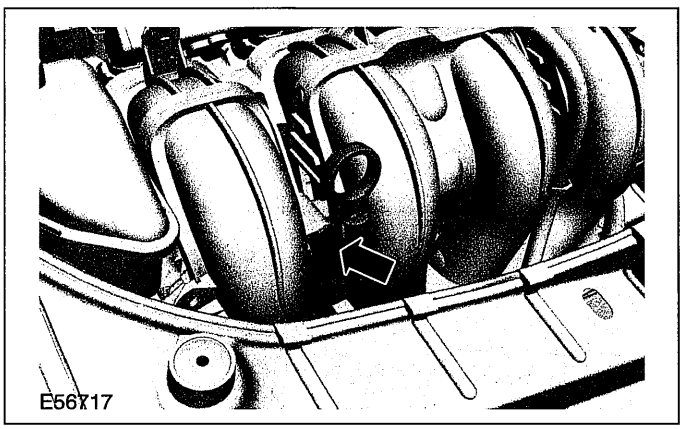


2. **Remove the clutch disc and pressure plate.**

   **For additional information, refer to: Clutch Disc and Pressure Plate (308-01 Clutch, Removal and Installation).**

3. **Drain the engine.**
   - Allow the oil to drain into a suitable container.
4. **NOTE:Inspect the oil pan drain plug seal for damage. Install a new drain plug and seal if required.**

**Install the drain plug.**

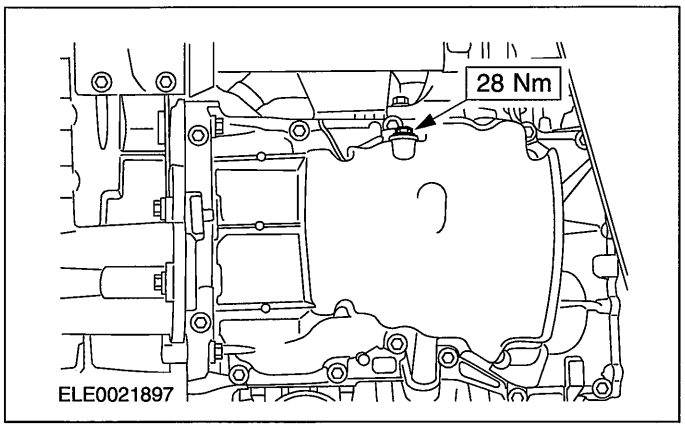


5. **Remove the oil level indicator tube lower retaining bolt.**

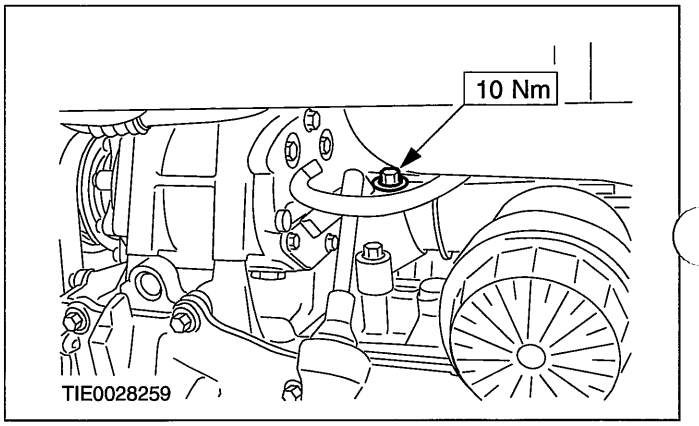


6. **Using the special tool, lock the flywheel in position.**

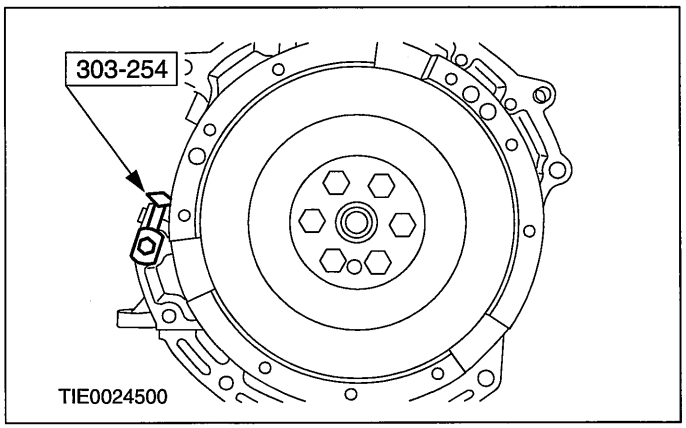


7. **Remove the flywheel.**

## IN-VEHICLE REPAIR

- Discard the bolts.

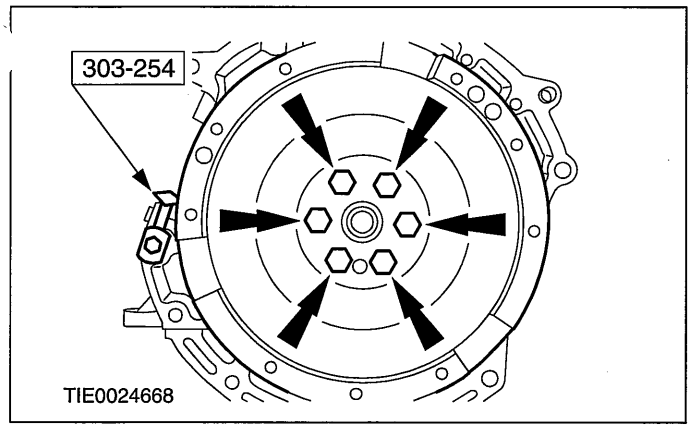


**8. Remove the engine front cover lower retaining bolts.**

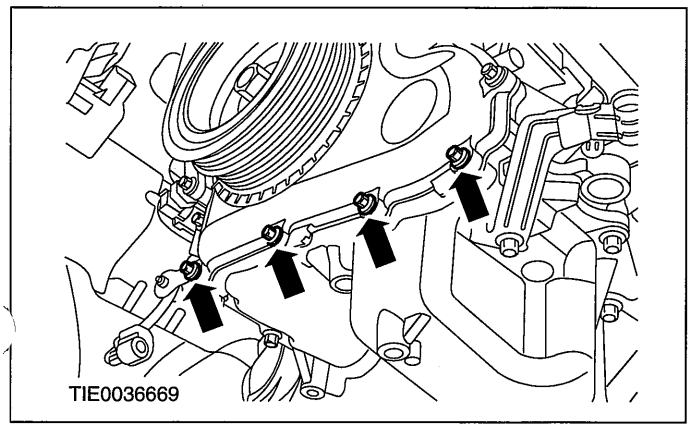


**9. Remove the oil pan retaining bolts.**

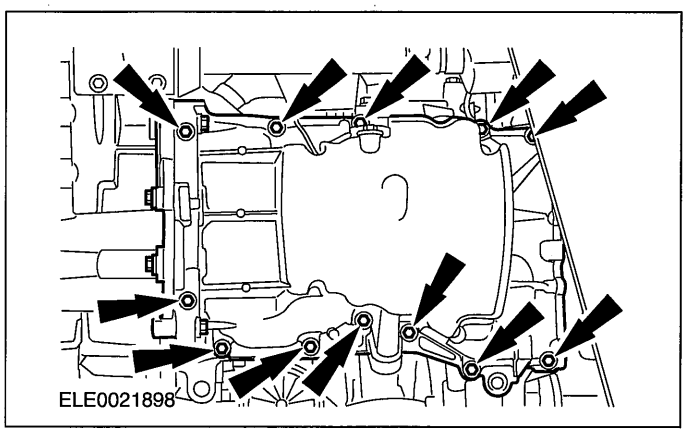


**10. Using the special tool, remove the oil pan.**

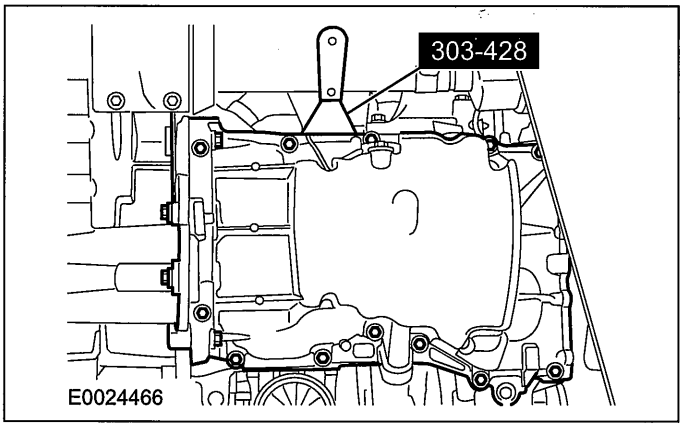


**11. Remove the crankshaft rear seal carrier.**

- Discard the crankshaft rear seal carrier.

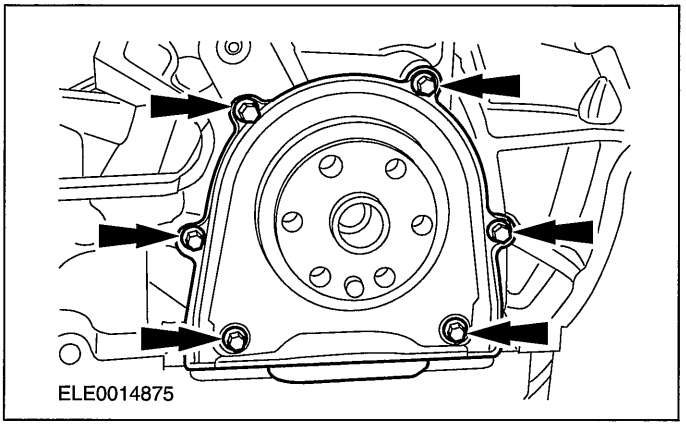


## Installation

1. **⚠CAUTION:Do not remove the the installation sleeve before installation.**

**NOTE:**A new crankshaft rear seal carrier is supplied preassembled with an installation sleeve that must be removed following installation.

**NOTE:**Install a new crankshaft rear seal carrier.

**Install the crankshaft rear seal carrier.**

- Tighten the retaining bolts in the sequence shown.

## IN-VEHICLE REPAIR

- Discard the installation sleeve.

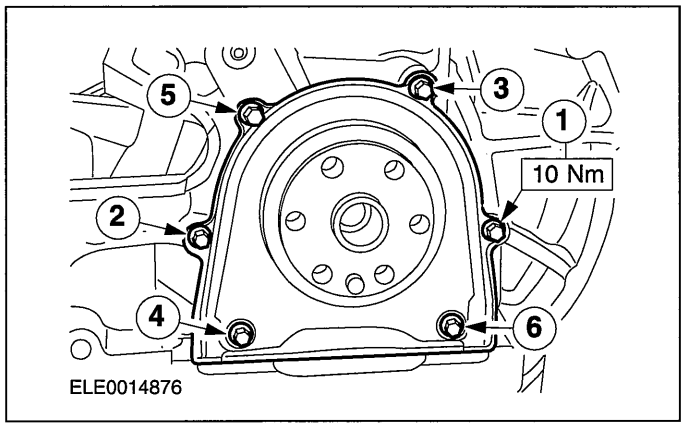


2. **Clean the mating faces of the cylinder block, the oil pan and the engine front cover with cleaner.**
3. **Apply a 3 mm bead of sealant to the oil pan.**

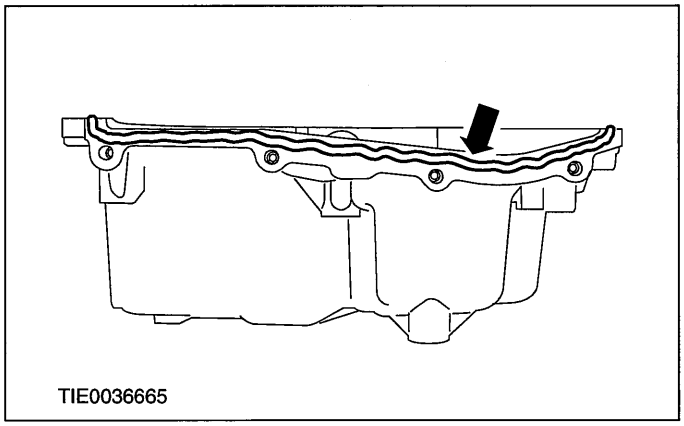


4. **NOTE:Install the oil pan within 10 minutes of applying the silicone sealant and tighten the retaining bolts within a further 5 minutes.**

   **Apply a 3 mm bead of sealant to the oil pan.**

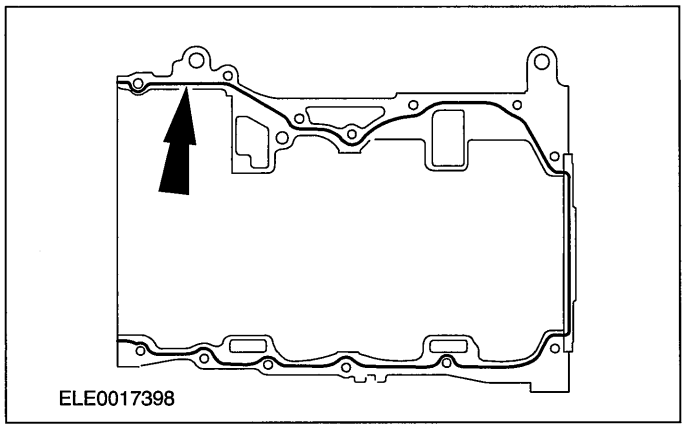


5. **NOTE:Do not tighten the retaining bolts at this stage.**

   **Install the oil pan.**

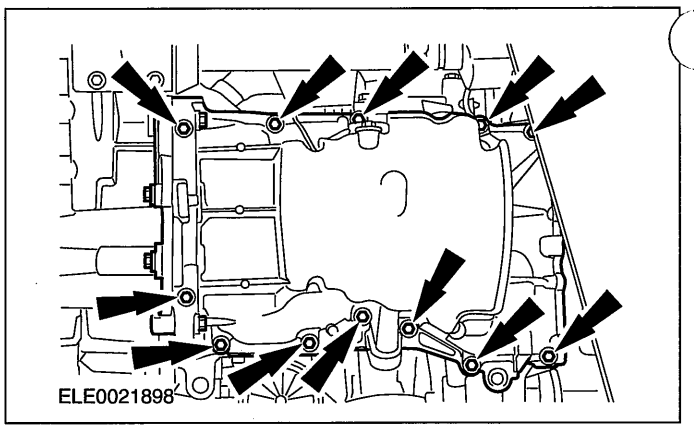


6. **Install the engine front cover lower retaining bolts.**

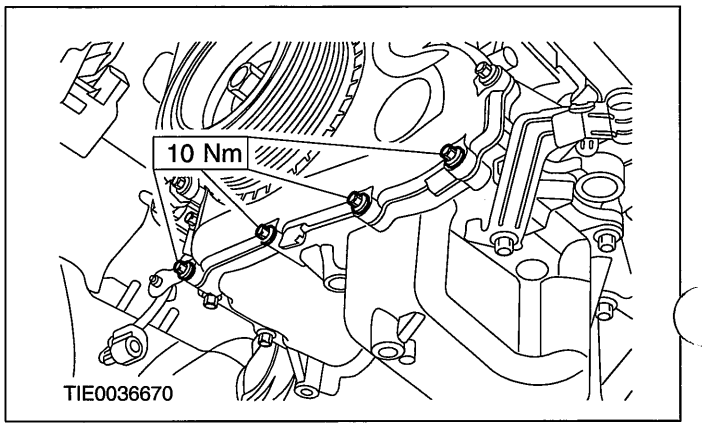


7. **Tighten the oil pan retaining bolts in the sequence shown.**

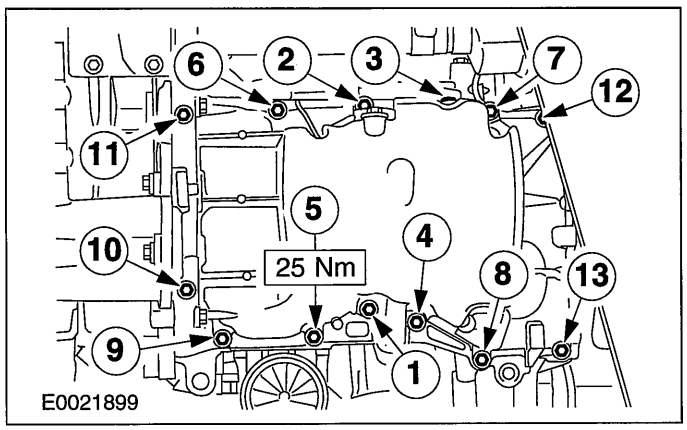


8. **NOTE:Install new flywheel retaining bolts.**

   **NOTE:**Do not tighten the flywheel retaining bolts at this stage.

## IN-VEHICLE REPAIR

**Install the flywheel.**

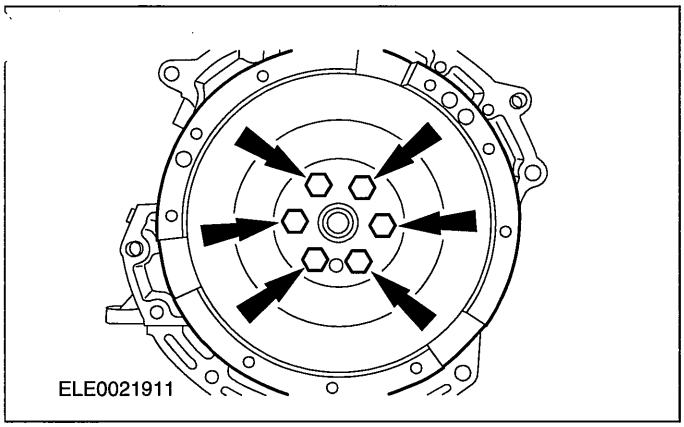


**9. Using the special tool, lock the flywheel in position.**

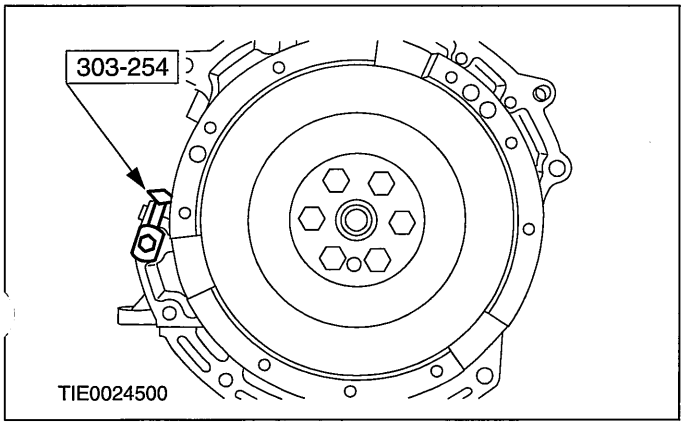


**10. Tighten the flywheel retaining bolts.**

- Tighten the bolts in the sequence shown in three stages.
- Stage 1: 50 Nm.
- Stage 2: 80 Nm.
- Stage 3: 112 Nm.

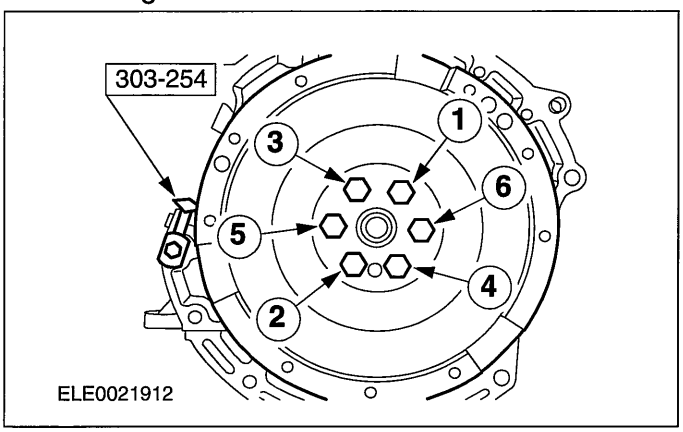


**11. Remove the special tool.**

**12. Install the oil level indicator tube lower retaining bolt.**

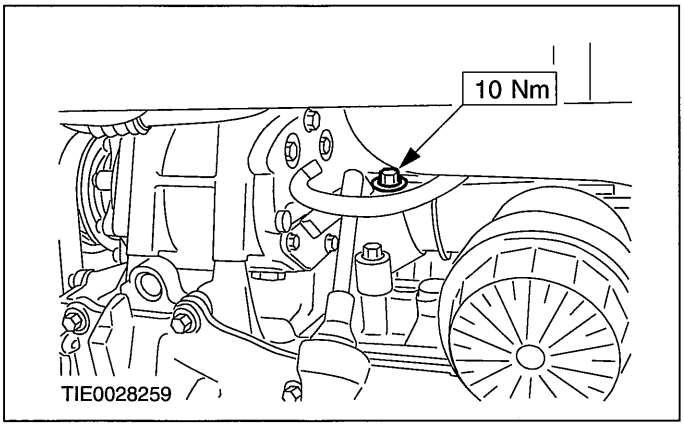


**13. Install the clutch disc and pressure plate.**

**For additional information, refer to: Clutch Disc and Pressure Plate (308-01 Clutch, Removal and Installation).**

**14. Install the oil level indicator and oil level indicator tube upper retaining bolt.**

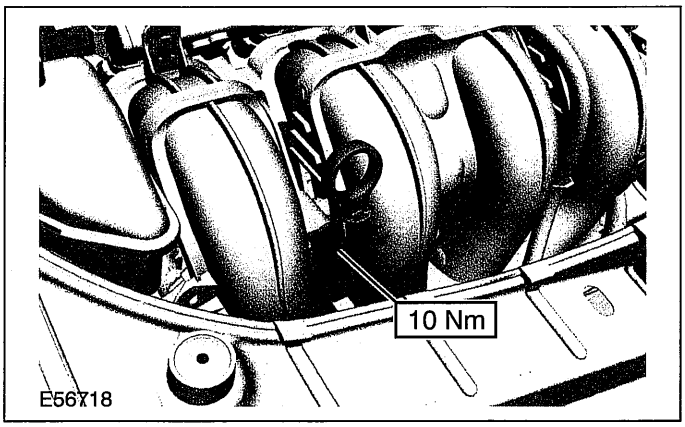


**15. Fill the engine with engine oil.**

**For additional information, refer to: Specifications (303-01 Engine - 2.0L Duratec-HE (MI4), Specifications).**

## IN-VEHICLE REPAIR

# Engine Front Cover(21 148 0)

### General Equipment

| |
|---|
| Vehicle jack |

| Materials | |
|---|---|
| **Name** | **Specification** |
| Silicone Sealant | WSE-M4G323-A4 |

## Removal

1. **Remove the crankshaft belt pulley.**

   **For additional information, refer to: Crankshaft Pulley (303-01 Engine - 2.0L Duratec-HE (MI4), In-vehicle Repair).**

2. **Remove the timing cover lower bolts.**

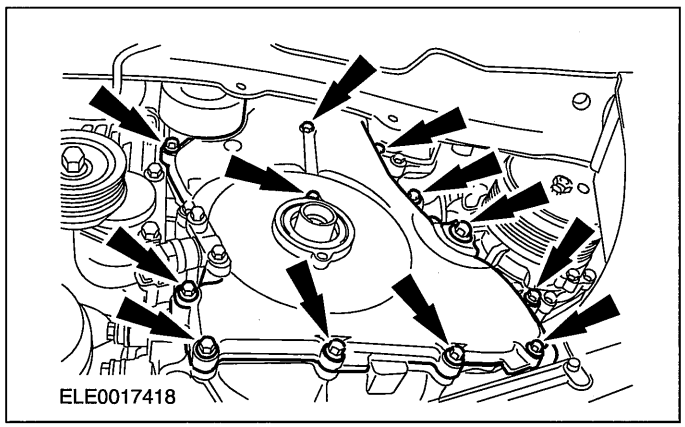


3. **Disconnect the crankshaft position (CKP) sensor electrical connector.**

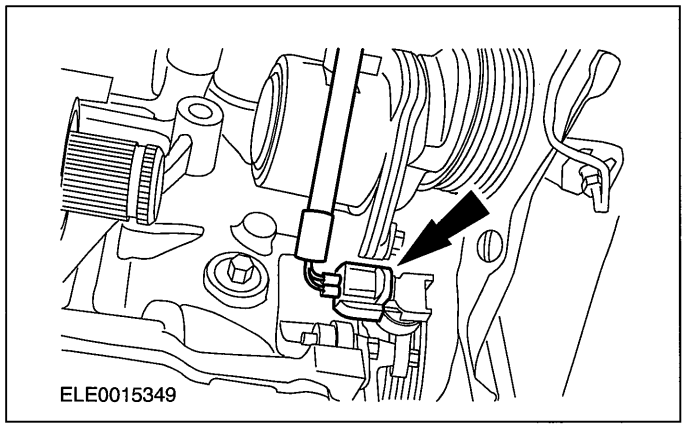


4. **Lower the vehicle.**
5. **Remove the power steering pump.**

   **For additional information, refer to: Power Steering Pump - 2.0L Duratec-HE (MI4) (211-02 Power Steering, Removal and Installation).**

6. **Detach the coolant expansion tank and lay it to one side.**

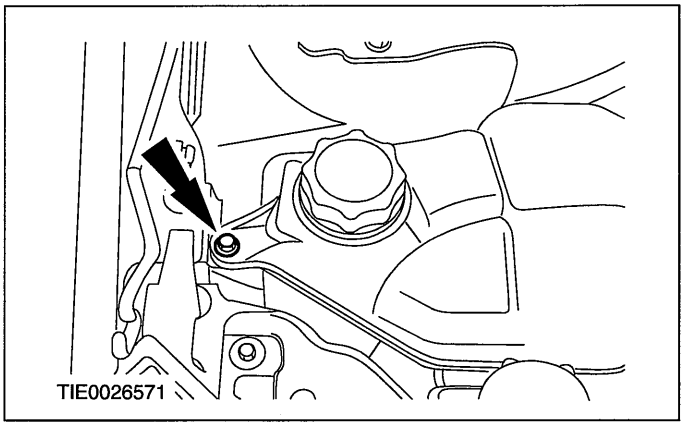


7. **Support the engine with a vehicle jack.**
8. **Remove the front engine mount.**
   - Discard the front engine mount nuts.

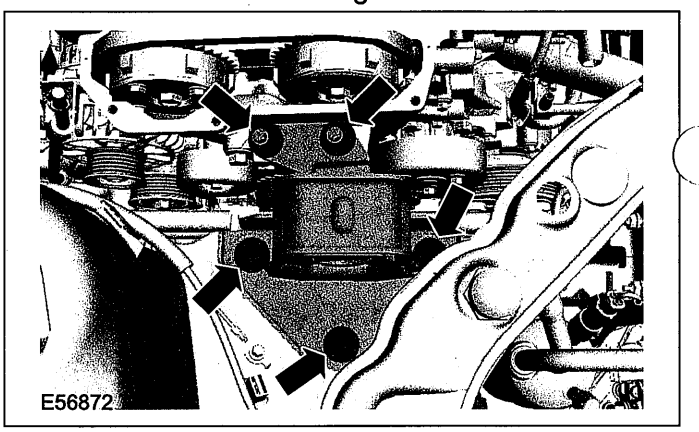


9. **Remove the coolant pump pulley.**

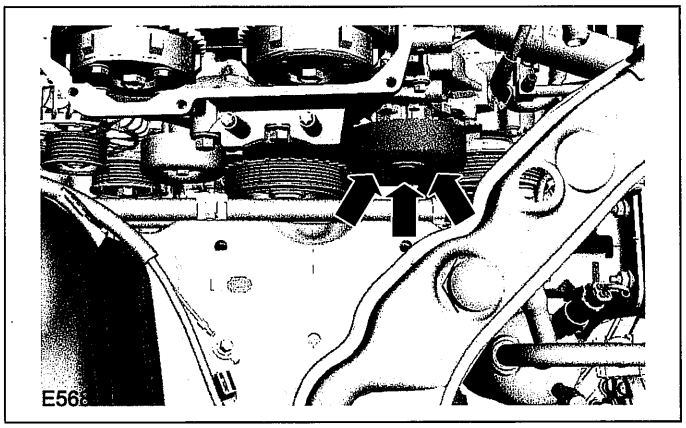

## IN-VEHICLE REPAIR

**10. Remove the drive belt idler pulley.**

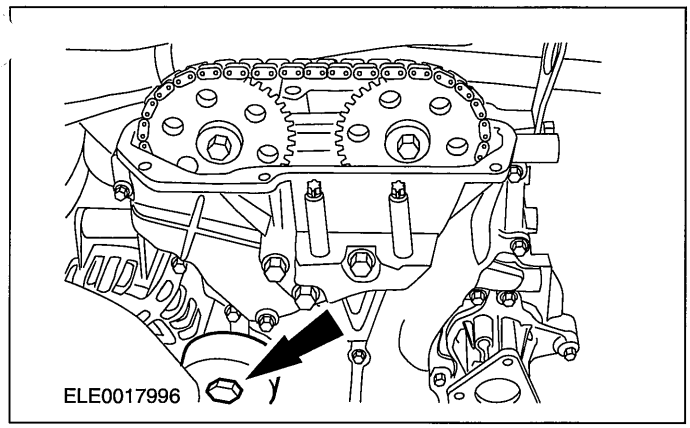


**11. Remove the timing cover upper bolts.**

- Remove the timing cover.

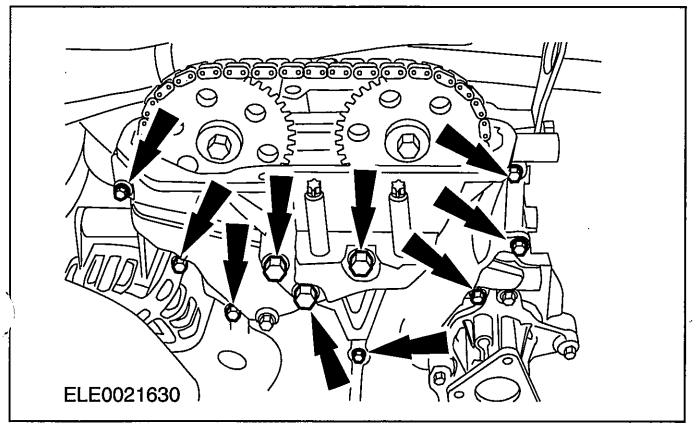


### Installation

**1. Clean the sealing surfaces of the timing cover and the cylinder block.**

**2. NOTE:Install the timing cover within 10 minutes of applying the silicon sealer.**

**Apply sealer to the timing cover (bead diameter: 3 mm).**

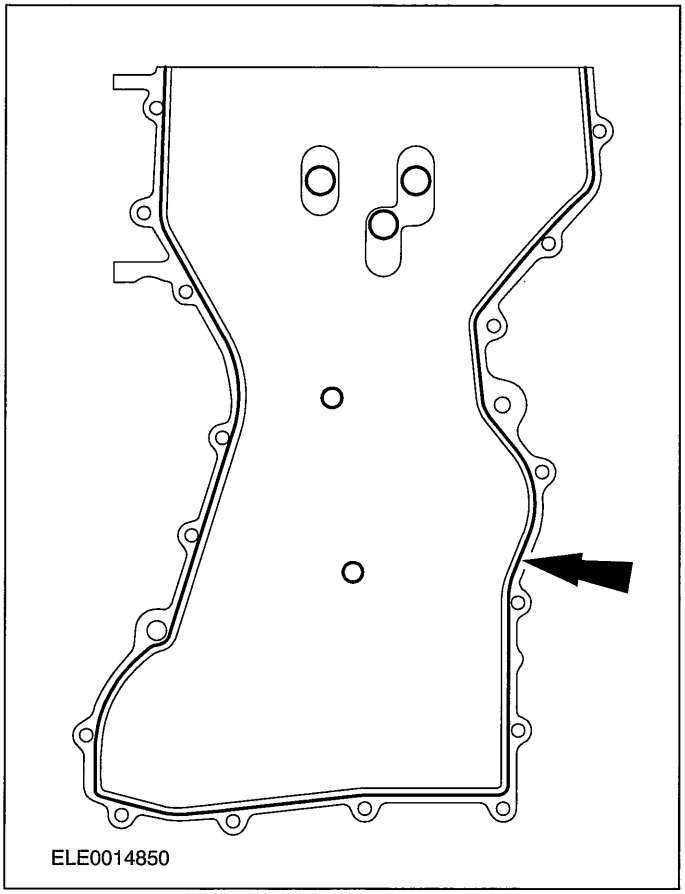


**3. Install the timing cover (engine shown removed for clarity).**

- Tighten the bolts in the sequence shown.
- Tighten bolts 1 to 8 to a torque of 10 Nm.
- Tighten bolt 9 to 48 Nm.
- Tighten bolts 10 to 19 to a torque of 10 Nm.

## IN-VEHICLE REPAIR

- Tighten bolts 20 to 22 to a torque of 48 Nm.

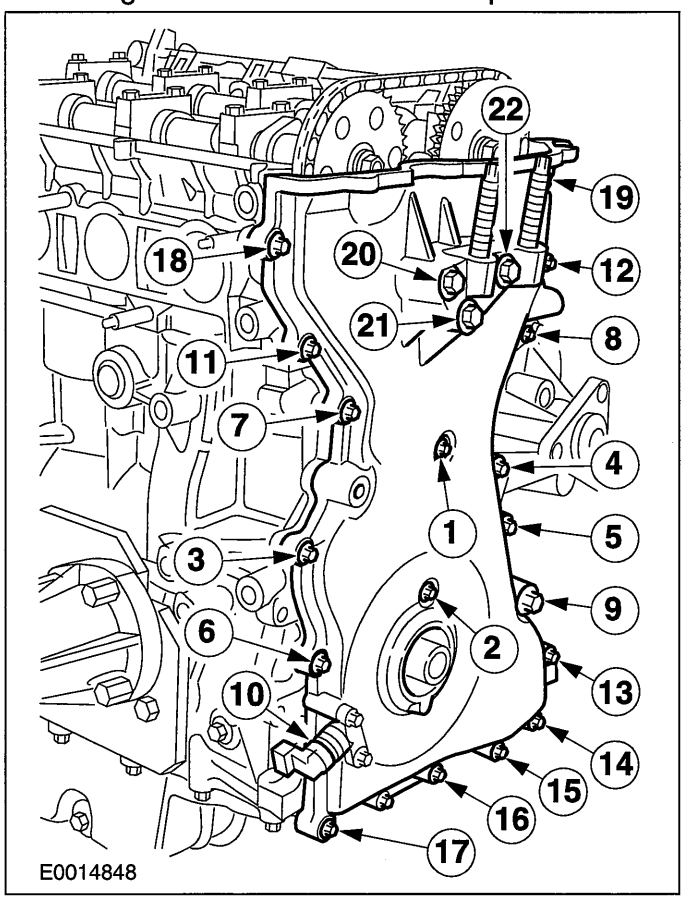


**4. Install the multi-groove belt idler pulley.**

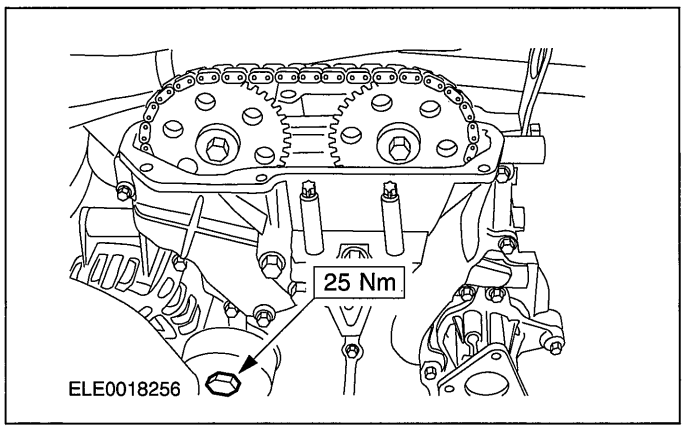


**5. Install the coolant pump pulley.**

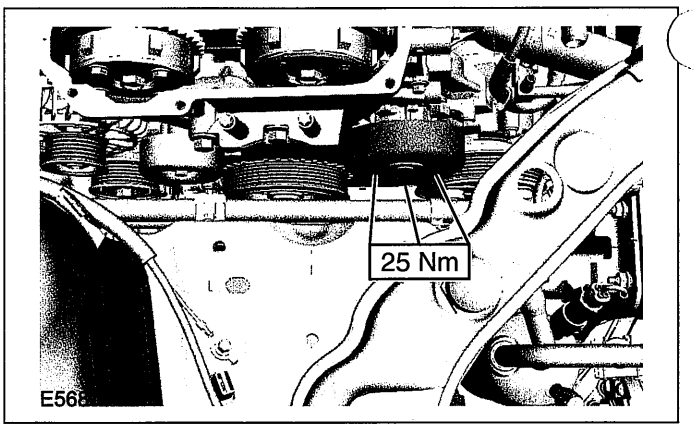


**6. NOTE:Install new front engine mount nuts.**
**Install the front engine mount.**

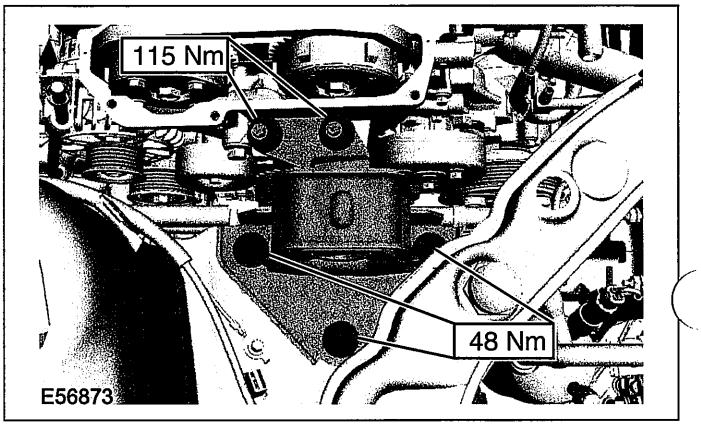


**7. Install the coolant expansion tank.**

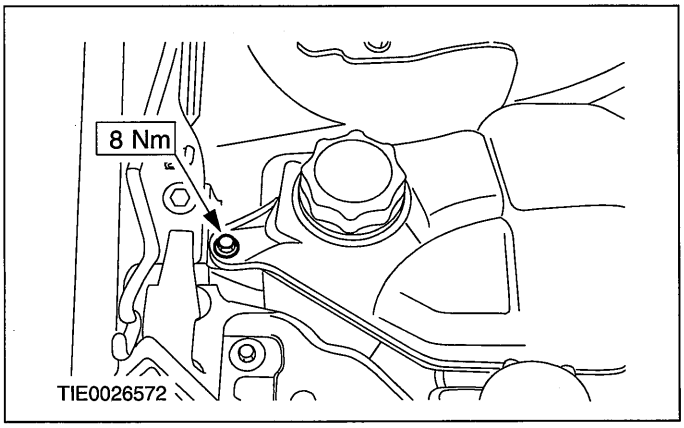


**8. Raise the vehicle.**

## IN-VEHICLE REPAIR

9. **Connect the CKP sensor electrical connector.**

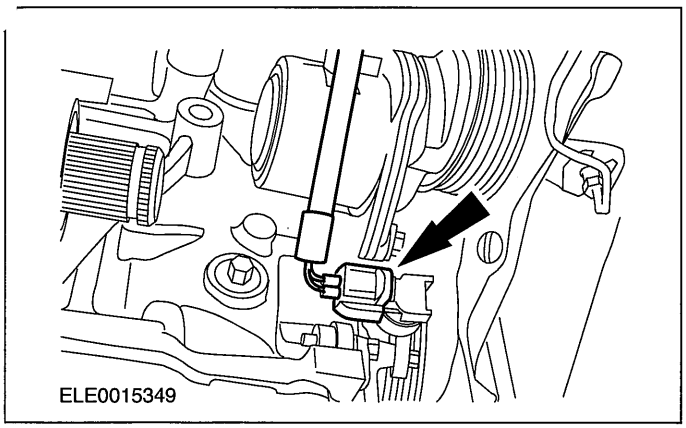


10. **Install the crankshaft belt pulley.**

    **For additional information, refer to: Crankshaft Pulley (303-01 Engine - 2.0L Duratec-HE (MI4), In-vehicle Repair).**

## IN-VEHICLE REPAIR

# Exhaust Manifold

1. **Remove the air cleaner.**

   **For additional information, refer to: Air Cleaner - 2.0L Duratec-HE (MI4) (303-12 Intake Air Distribution and Filtering, Removal and Installation).**

2. **Remove the components in the order indicated in the following illustration(s) and table(s).**

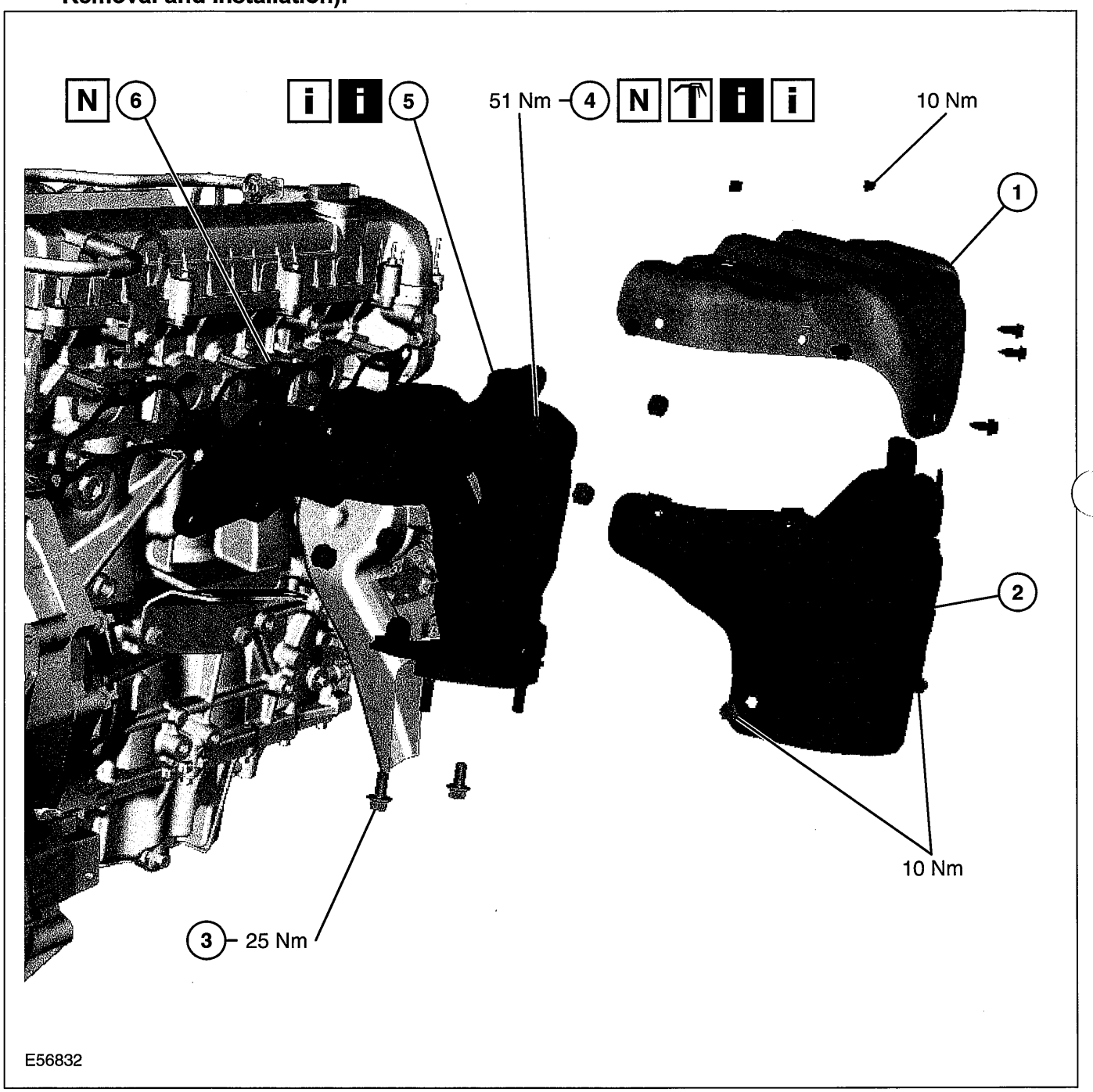


| Item | Description |
|---|---|
| 1 | Exhaust manifold upper heat shield |
| 2 | Exhaust manifold lower heat shield |

| Item | Description |
|---|---|
| 3 | Exhaust manifold support bracket retaining bolts |
| 4 | Exhaust manifold retaining nuts<br>See Removal Detail |

## IN-VEHICLE REPAIR

| Item | Description |
|---|---|
| | See Installation Detail |
| 5 | Exhaust manifold<br>See Removal Detail |

| Item | Description |
|---|---|
| | See Installation Detail |
| 6 | Exhaust manifold gasket |

3. **To install, reverse the removal procedure.**

# Removal Details

### Item 4 Exhaust manifold retaining nuts

1. **NOTE:Do not remove the exhaust manifold outer retaining nuts at this stage.**

   **Loosen the exhaust manifold outer retaining nuts by two turns (engine shown removed for clarity).**

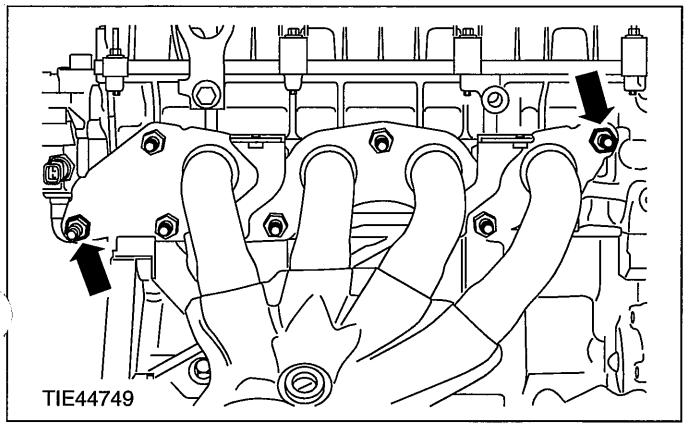


2. **Remove the exhaust manifold inner retaining nuts (engine shown removed for clarity).**
   - Discard the nuts.

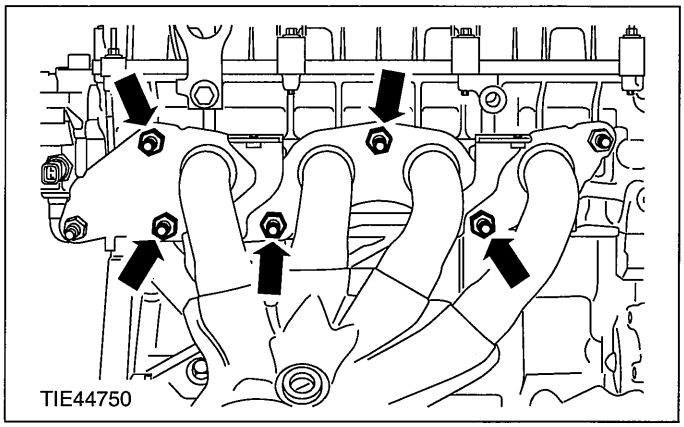


3. **Raise and support the vehicle. For additional information, refer to: (100-02 Jacking and Lifting)**

   **Jacking (Description and Operation), Lifting (Description and Operation).**

4. **Remove the engine support insulator center retaining bolt.**

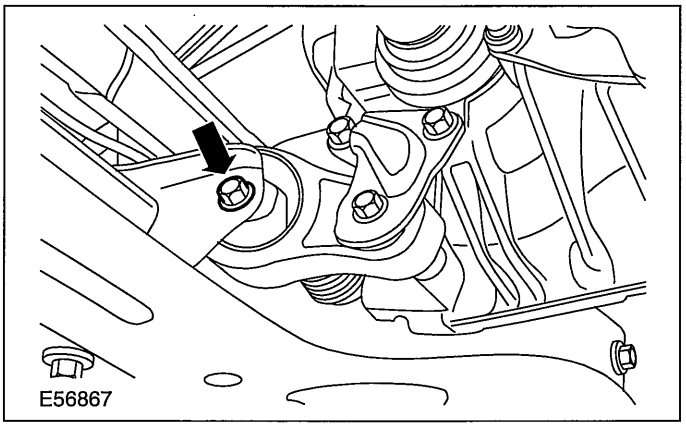


5. **Remove the exhaust flexible pipe.**

   **For additional information, refer to: Exhaust Flexible Pipe - 2.0L Duratec-HE (MI4) (309-00 Exhaust System, Removal and Installation).**

### Item 5 Exhaust manifold

1. **Remove the exhaust manifold outer retaining nuts.**
   - Discard the nuts.

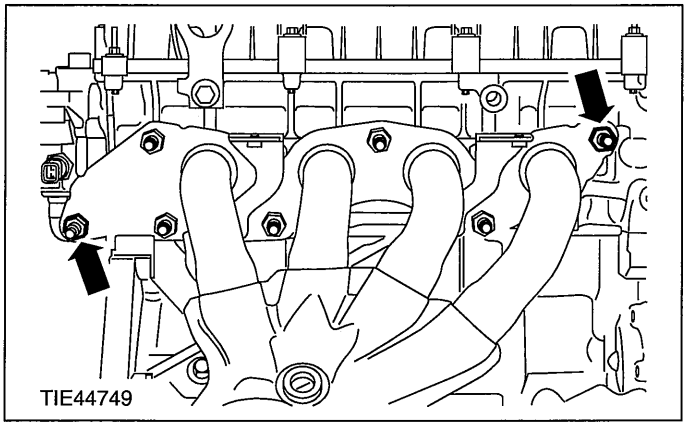

## IN-VEHICLE REPAIR

# Installation Details

### Item 5 Exhaust manifold

1. ⚠**CAUTION:Never use jointing compound forward of the exhaust manifold.**

**NOTE:**Coat the exhaust manifold studs with anti-seize grease.

**NOTE:**Install a new gasket and new nuts.

**NOTE:**Do not fully tighten the exhaust manifold outer retaining nuts at this stage.

**Loosely install the exhaust manifold outer retaining nuts.**

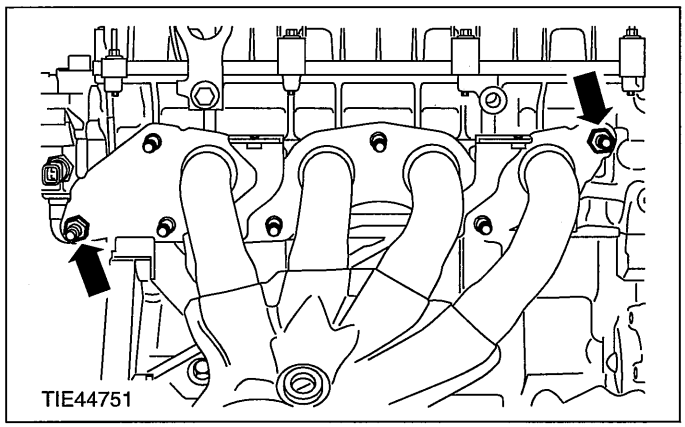


### Item 4 Exhaust manifold retaining nuts

1. **Install the exhaust flexible pipe.**

   **For additional information, refer to: Exhaust Flexible Pipe - 2.0L Duratec-HE (MI4) (309-00 Exhaust System, Removal and Installation).**

2. **Install the engine support insulator center retaining bolt.**

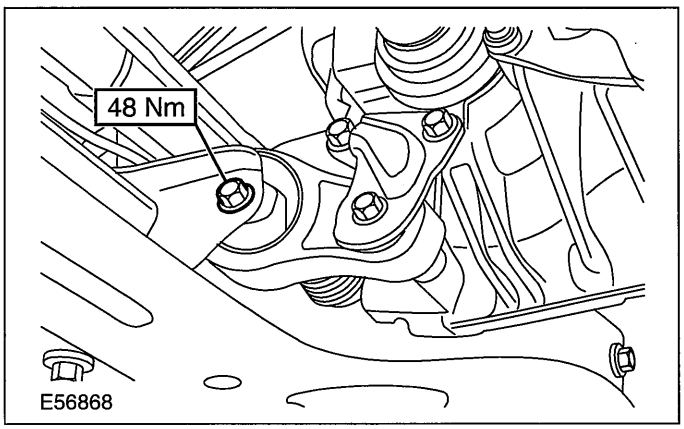


3. **Lower the vehicle and fully tighten the exhaust manifold retaining nuts.**

## IN-VEHICLE REPAIR

# Timing Chain(21 314 0)

## Removal

1. **Remove the engine front cover.**

   **For additional information, refer to Engine Front Cover - in this section.**

2. **Detension the timing chain.**
   1. Unlock the timing chain tensioner ratchet.
   2. Apply pressure to the timing chain guide.
   3. Fix the timing chain tensioner with a suitable pin punch.

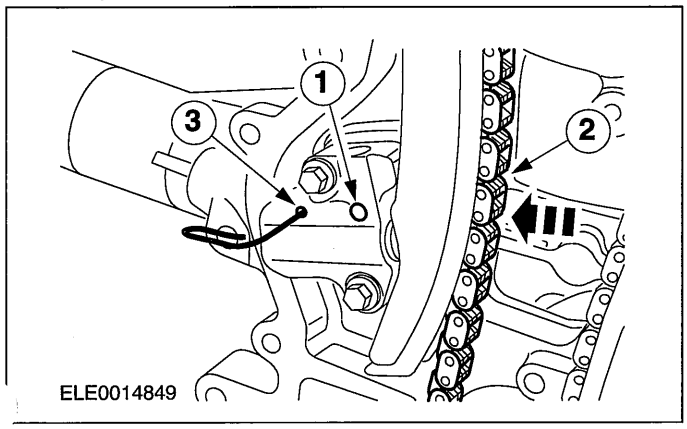


3. **NOTE:Hold the camshafts by the hexagon with an open-ended wrench to stop them from rotating.**

   **Loosen the camshaft sprocket retaining bolts.**

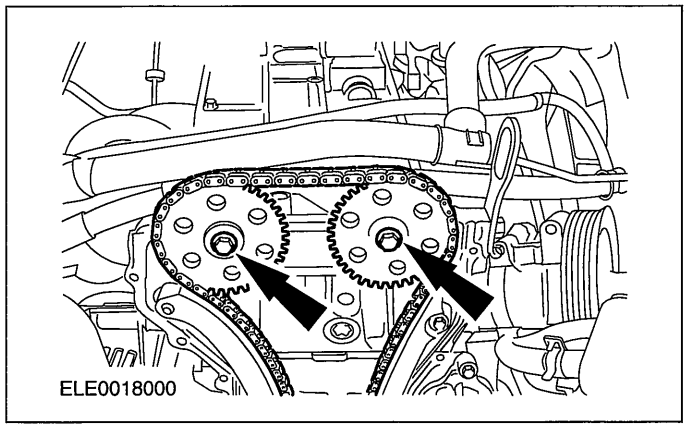


4. **Remove the timing chain guides.**

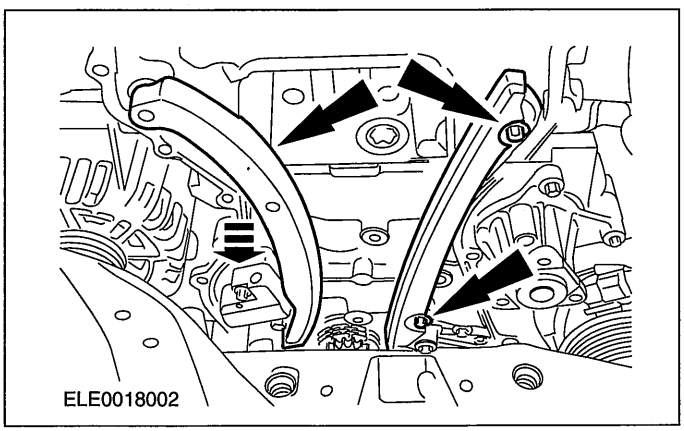


5. **Remove the timing chain tensioner.**

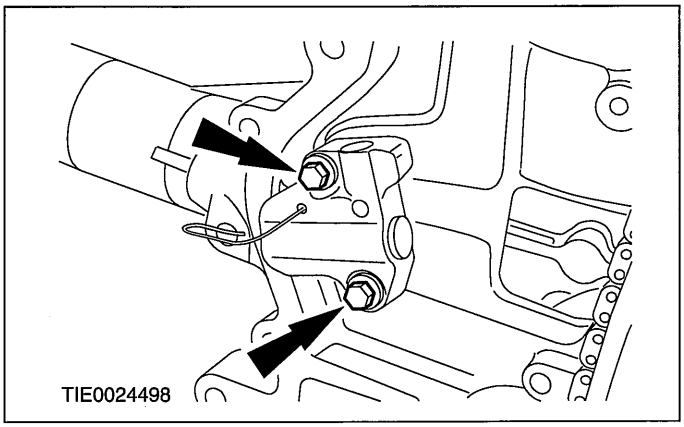


## Installation

1. **Install the timing chain tensioner.**

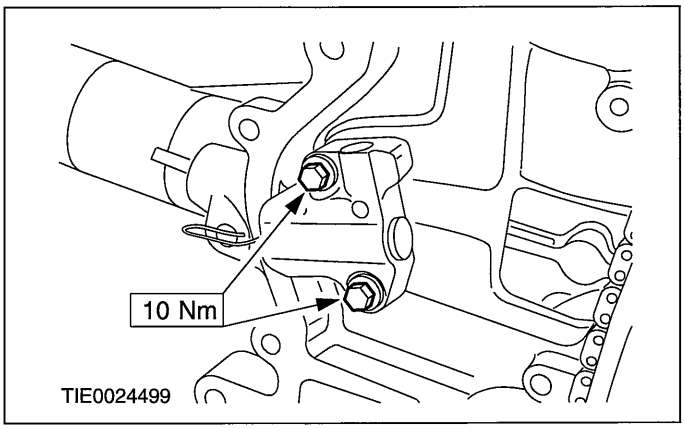

## IN-VEHICLE REPAIR

2. **Install the timing chain guides.**

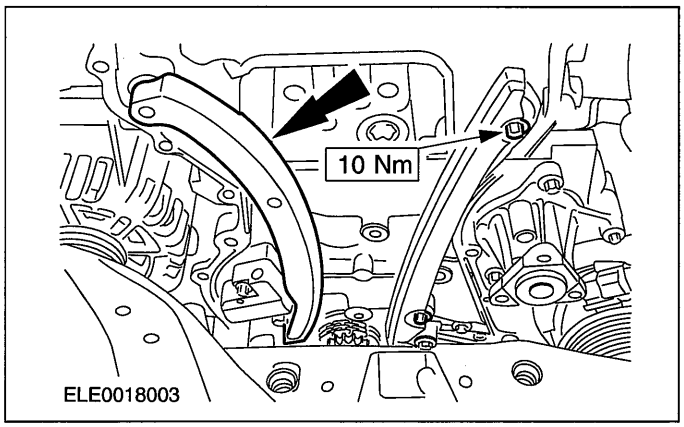


3. **⚠CAUTION:Do not tighten the camshaft sprocket retaining bolts at this stage. Make sure the camshaft sprockets rotate on the camshafts.**

   **Install the camshaft sprockets.**

   - Install the timing chain.

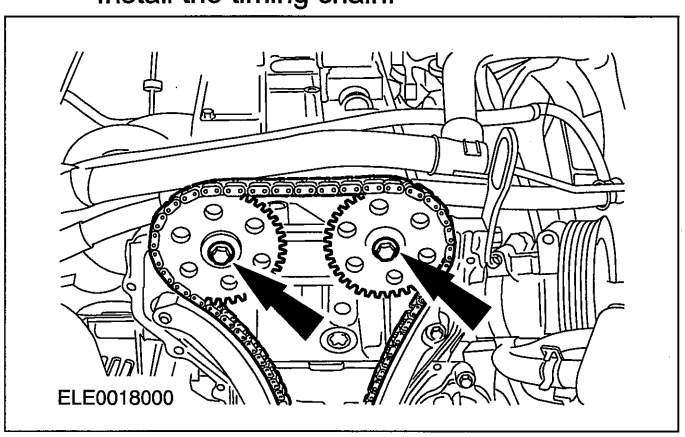


4. **Tension the timing chain.**

   - Apply pressure to the timing chain and remove the securing pin.

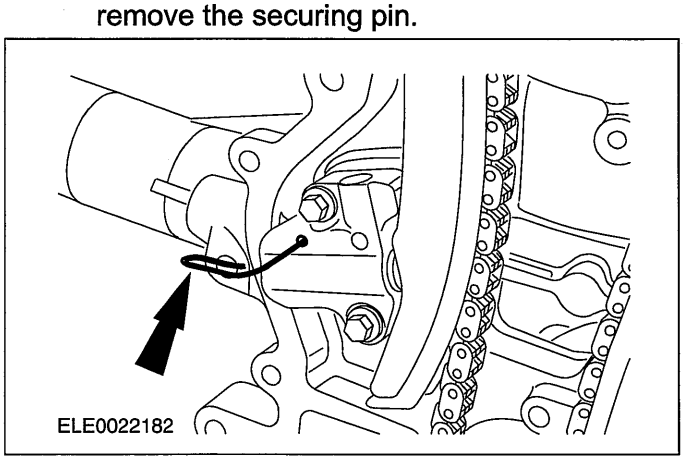


5. **NOTE:Hold the camshafts by the hexagon with an open ended wrench to stop them from rotating.**

   **Tighten the camshaft sprocket retaining bolts.**

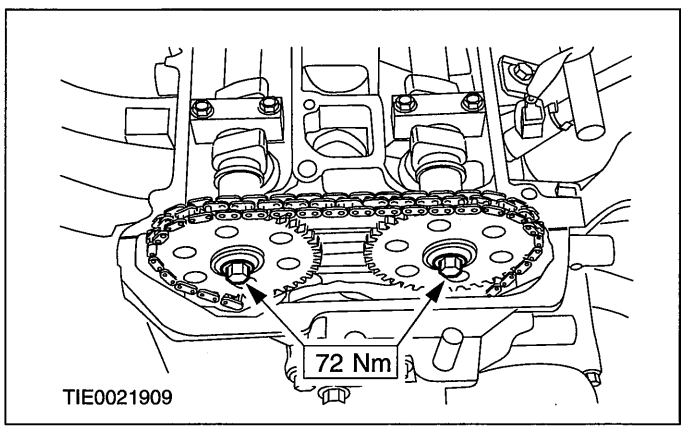


6. **Install the engine front cover.**

   **For additional information, refer to Engine Front Cover - in this section.**

## IN-VEHICLE REPAIR

# Cylinder Head(21 163 0)

### Special Tool(s)

| | |
|---|---|
| 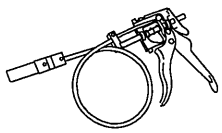 24003 | Remover/Installer, Hose Clamp 303-397 |

| Materials | |
|---|---|
| **Name** | **Specification** |
| Hypoid Gear Oil | SQM-2C9002-AA |

## Removal

**WARNING:Do not smoke or carry lighted tobacco or open flame of any type when working on or near any fuel related components. Highly flammable vapors are always present and may ignite. Failure to follow these instructions may result in personal injury.**

1. **Drain the cooling system.**

   **For additional information, refer to: Cooling System Draining, Filling and Bleeding (303-03 Engine Cooling - 2.0L Duratec-HE (MI4), General Procedures).**

2. **Remove the exhaust manifold support bracket retaining bolts.**

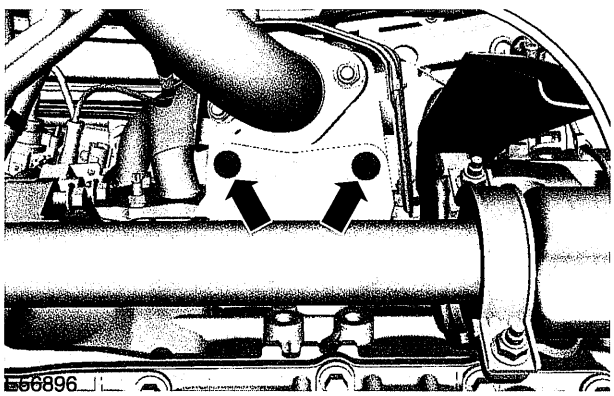


3. **Lower the vehicle.**
4. **Remove the intake manifold.**

   **For additional information, refer to: Intake Manifold (303-01 Engine - 2.0L Duratec-HE (MI4), In-vehicle Repair).**

5. **Remove the timing chain.**

   **For additional information, refer to: Timing Chain (303-01 Engine - 2.0L Duratec-HE (MI4), In-vehicle Repair).**

6. **Disconnect the exhaust gas recirculation (EGR) valve electrical connector.**

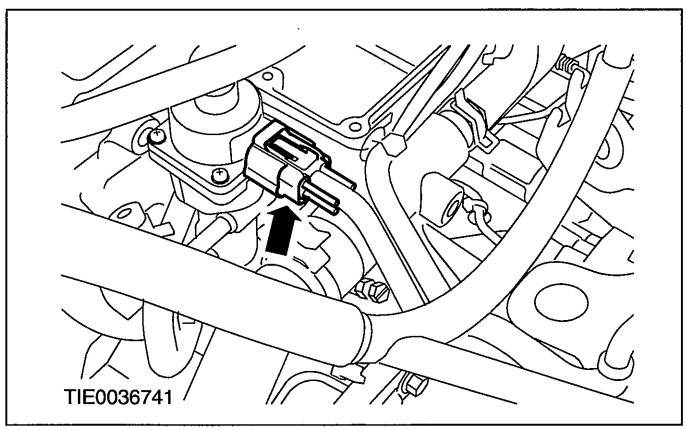


7. **Using the special tool, disconnect the coolant hose from the EGR valve.**

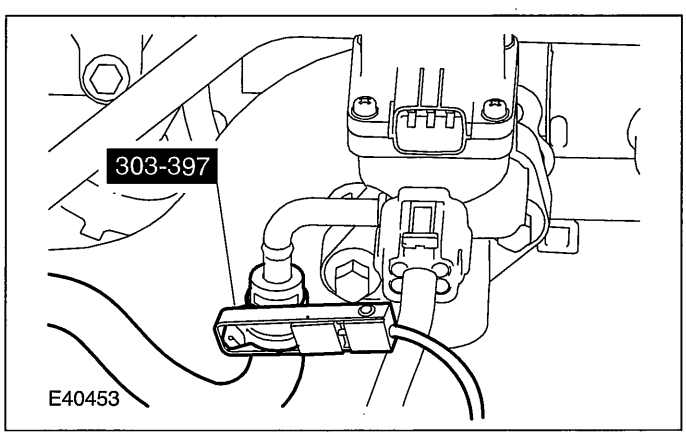


8. **Using the special tool, disconnect the coolant hoses from the coolant outlet connector.**

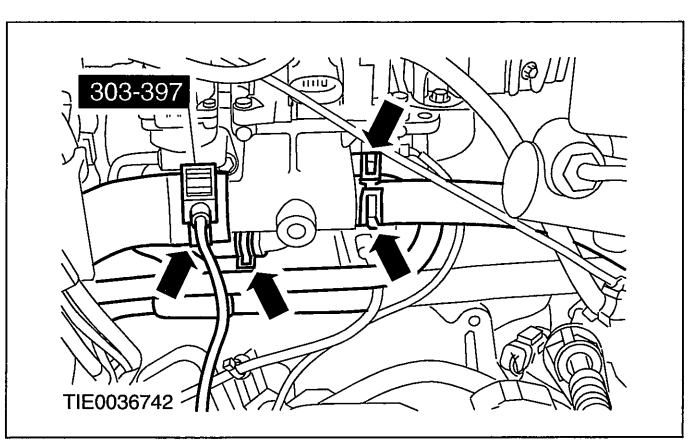

## IN-VEHICLE REPAIR

9. **Disconnect the engine coolant temperature (ECT) sensor electrical connector.**

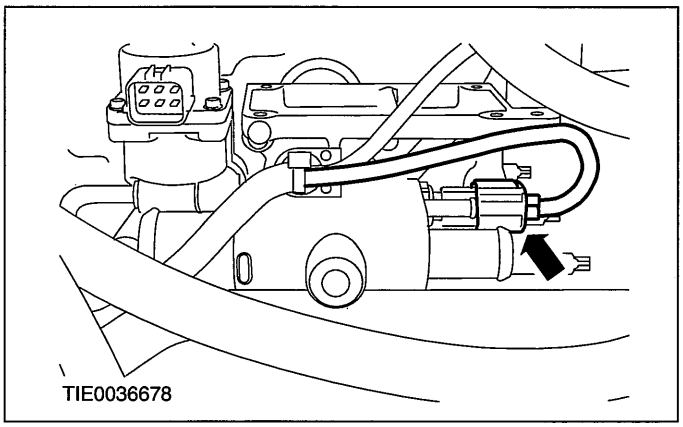


10. **Remove the power steering pump return line support bracket.**

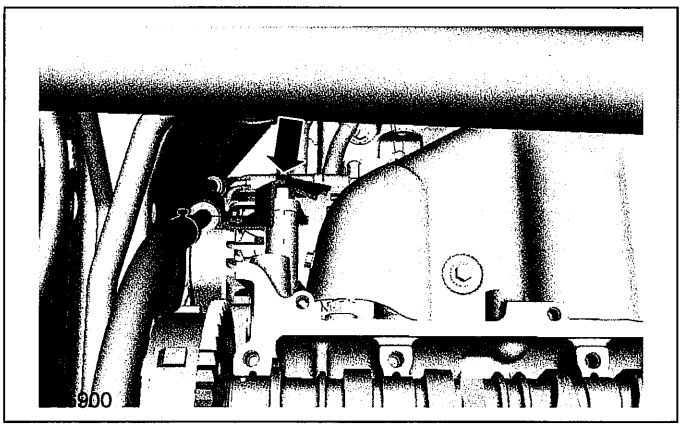

11. **Remove the generator upper retaining bolt.**

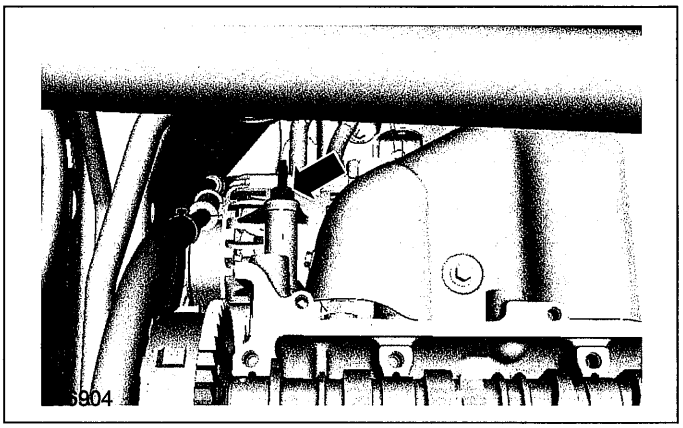

12. **Remove the exhaust manifold upper heat shield (engine shown removed for clarity).**

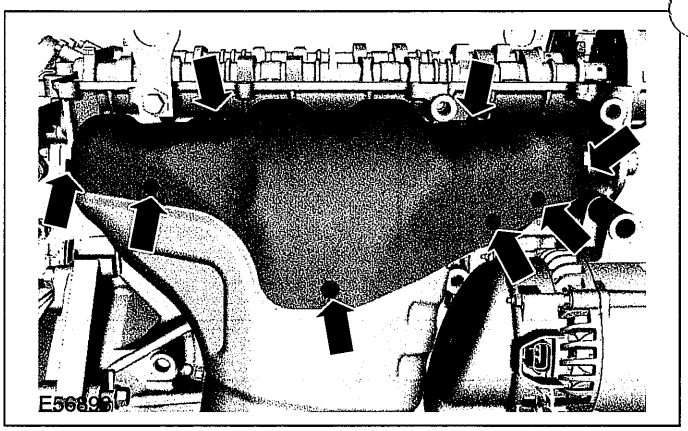

13. **Remove the exhaust manifold lower heat shield (engine shown removed for clarity).**

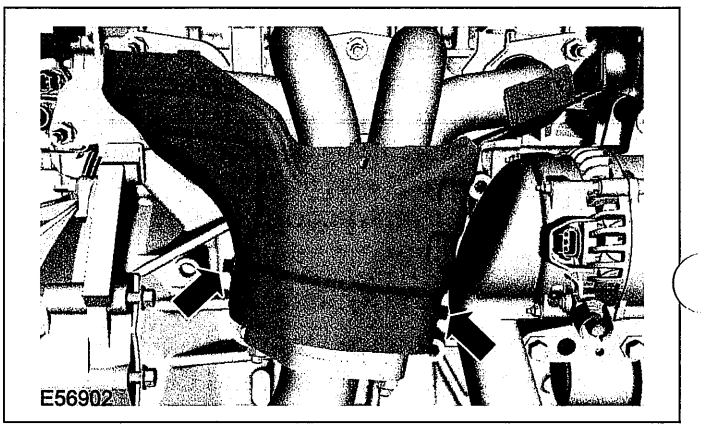


14. **Remove the exhaust manifold retaining nuts (engine shown removed for clarity).**
    - Detach the exhaust manifold from the cylinder head and position it to one side.
    - Discard the gasket and nuts.

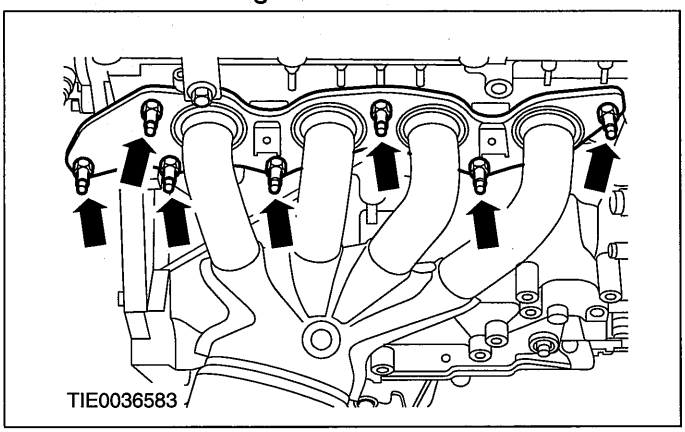


15. **CAUTIONS:**

    **⚠Keep the camshaft bearing caps and the camshafts in order for installation.**

## IN-VEHICLE REPAIR

**⚠Remove the camshaft bearing caps in the sequence shown.**

**NOTE:**Working in several stages, release each camshaft bearing cap retaining bolt two turns at a time.

**Remove the camshafts.**

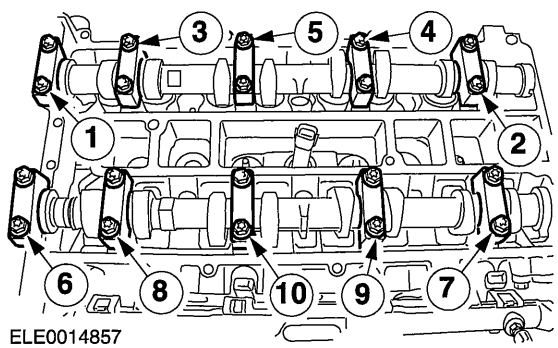

ELE0014857

16. **⚠CAUTION:Keep the valve tappets in order for installation.**

**Remove the valve tappets.**

17. **⚠CAUTION:Remove the cylinder head bolts in the sequence shown.**

**Remove the cylinder head.**

- Discard the gasket.
- Discard the bolts.

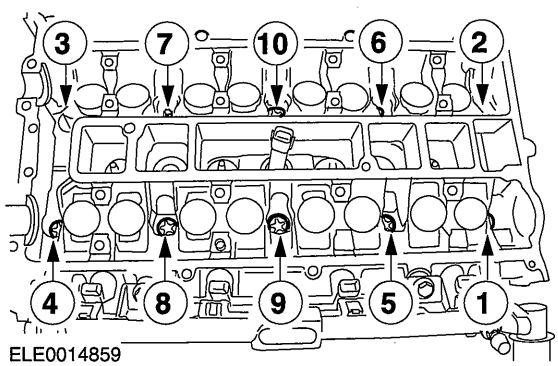

ELE0014859

## Installation

1. **Check the cylinder head for distortion.**

   **For additional information, refer to: Cylinder Head Distortion (303-00 Engine System - General Information, General Procedures).**

2. **NOTE:Install a new cylinder head gasket and bolts.**

   **Install the cylinder head.**

   - Tighten the cylinder head bolts in the sequence shown in five stages:
   - Stage 1: 5 Nm.
   - Stage 2: 15 Nm.
   - Stage 3: 45 Nm.
   - Stage 4: 90 degrees.
   - Stage 5: 90 degrees.

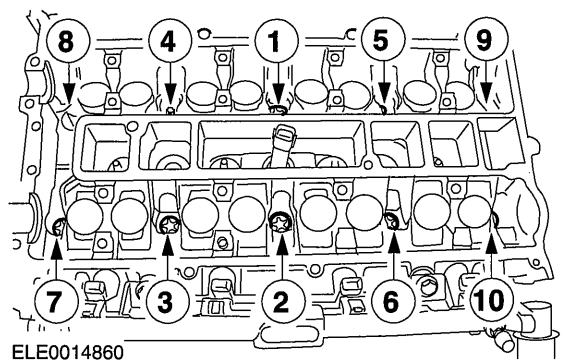

ELE0014860

3. **Install the valve tappets.**

4. **⚠CAUTION:Working in several stages, evenly tighten the camshaft bearing cap bolts in the sequence shown, one half turn at a time.**

   **Install the camshafts.**

   - Coat the camshaft bearing caps with oil.
   - Tighten the bolts in the sequence shown in two stages:
   - Stage 1: 7 Nm.
   - Stage 2: 16 Nm.

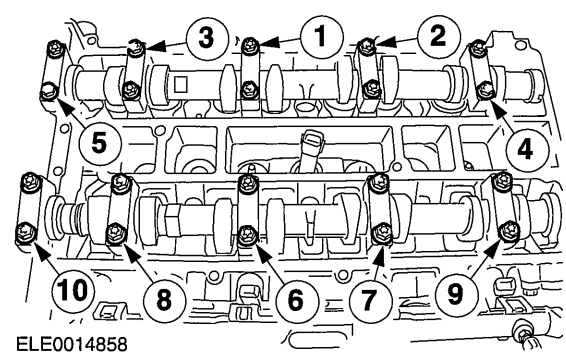

ELE0014858

5. **NOTE:Only carry out the following step when a new cylinder head or new valves are installed.**

## IN-VEHICLE REPAIR

Check the valve clearance and adjust if necessary.

For additional information, refer to: Valve Clearance Adjustment (303-01 Engine - 2.0L Duratec-HE (MI4), General Procedures).

6. Connect the engine coolant temperature (ECT) sensor electrical connector.

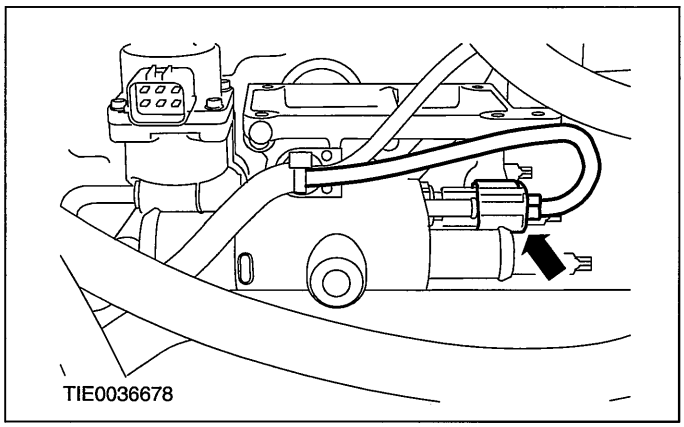


7. Using the special tool, connect the coolant hoses to the coolant outlet connector.

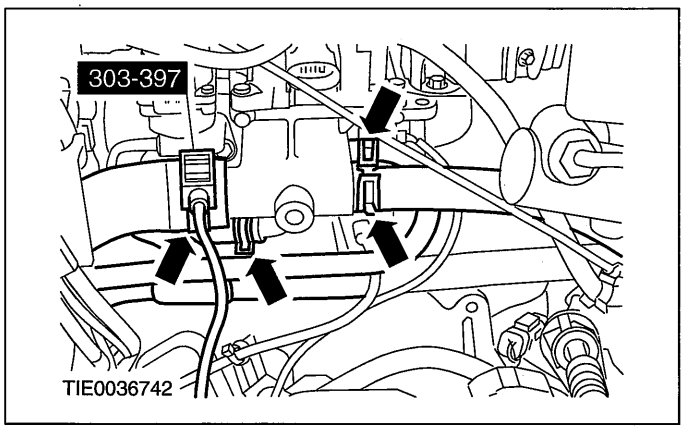


8. Connect the exhaust gas recirculation (EGR) valve electrical connector.

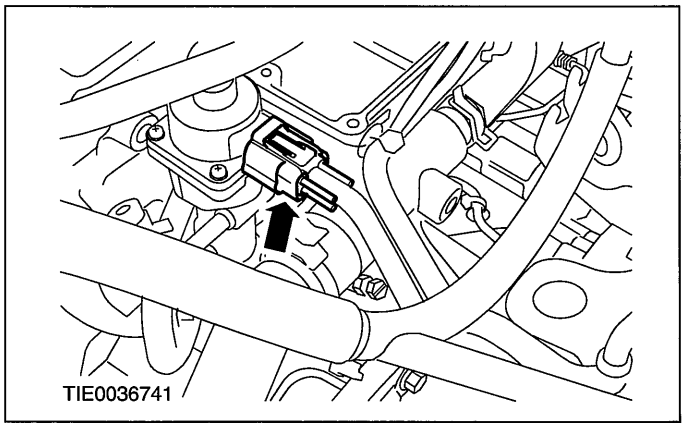


9. Using the special tool, connect the coolant hose to the EGR valve.

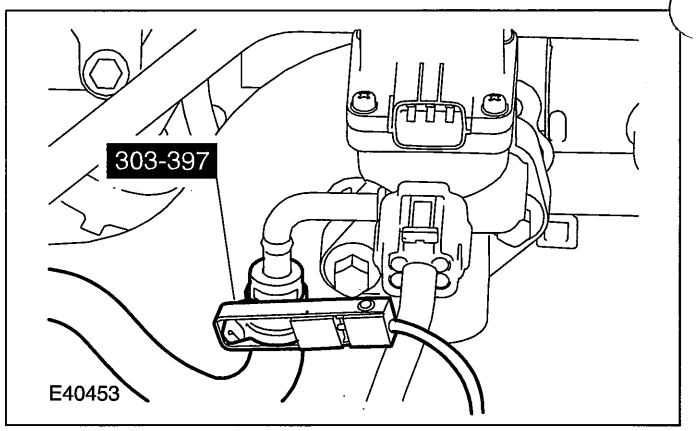


10. NOTE:Install a new exhaust manifold gasket and nuts.

Tighten the exhaust manifold retaining nuts (engine shown removed for clarity).

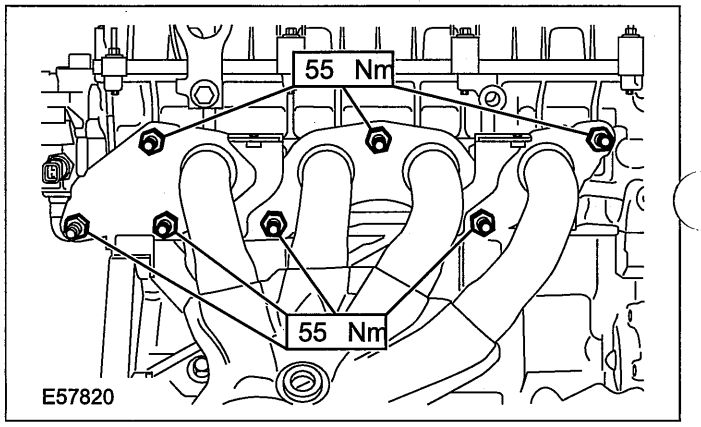


11. Install the exhaust manifold lower heat shield (engine shown removed for clarity).

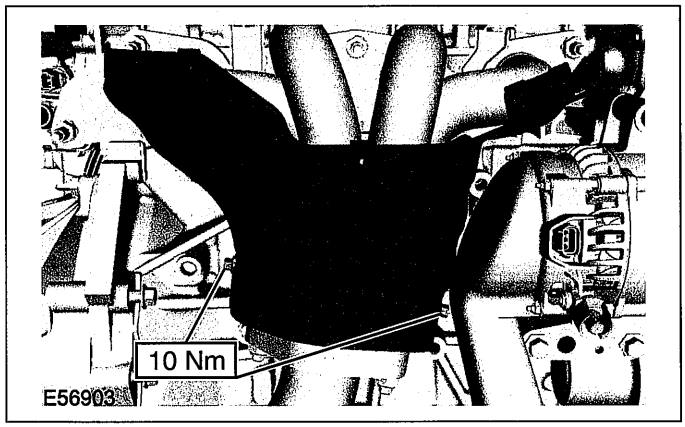

## IN-VEHICLE REPAIR

12. Install the exhaust manifold upper heat shield (engine shown removed for clarity).

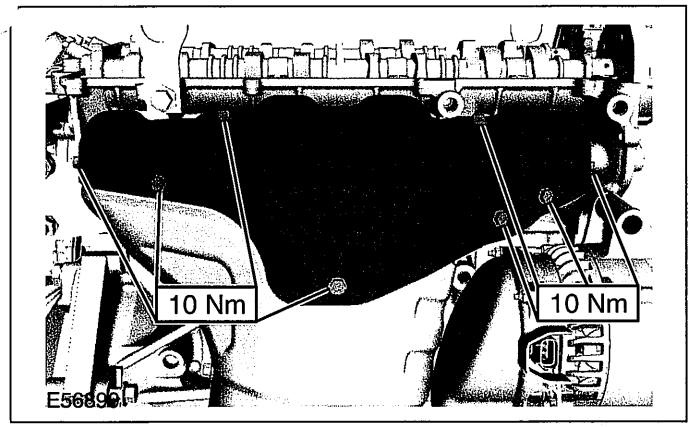


13. Install the generator upper retaining bolt.

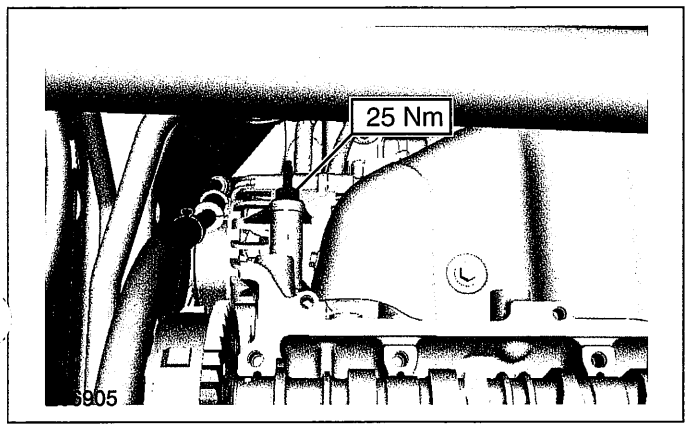


14. Install the power steering pump return line support bracket.

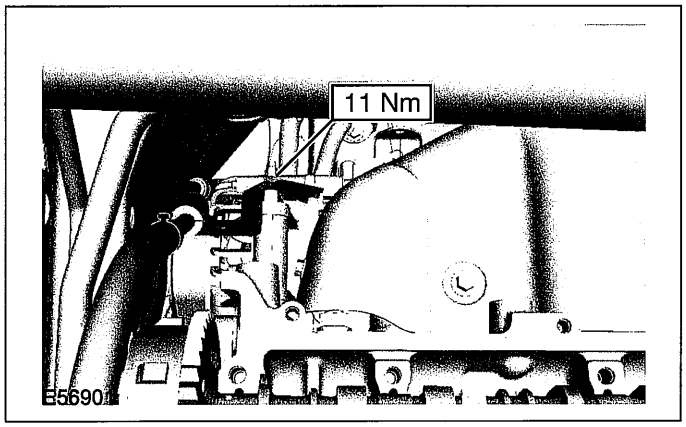


15. Install the timing chain.

    For additional information, refer to: Timing Chain (303-01 Engine - 2.0L Duratec-HE (MI4), In-vehicle Repair).

16. Install the intake manifold.

    For additional information, refer to: Intake Manifold (303-01 Engine - 2.0L Duratec-HE (MI4), In-vehicle Repair).

17. Raise and support the vehicle. For additional information, refer to: (100-02 Jacking and Lifting)

    Jacking (Description and Operation), Lifting (Description and Operation).

18. Install the exhaust manifold support bracket retaining bolts.

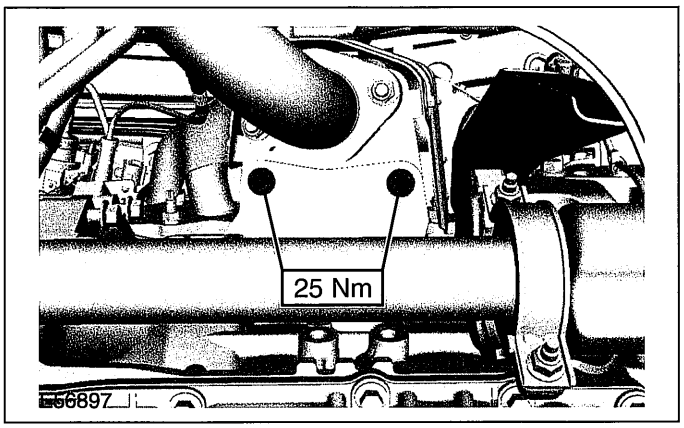


19. Fill and bleed the cooling system.

    For additional information, refer to: Cooling System Draining, Filling and Bleeding (303-03 Engine Cooling - 2.0L Duratec-HE (MI4), General Procedures).

## REMOVAL

# Engine

### Special Tool(s)

| | |
|---|---|
| 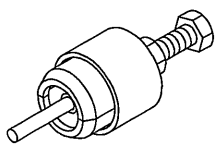 ES13021 | Remover, Power Steering Pump Pulley 211-198 |
| 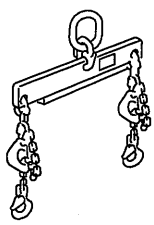 21068A | Lifting Bracket, Engine 303-122 |
| 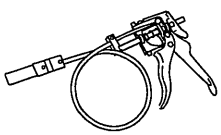 24003 | Remover/Installer, Hose Clamp 303-397 |
| 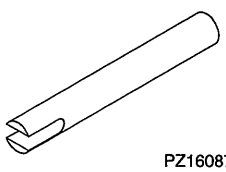 PZ16087 | Remover, Halfshaft 308-237 |

### General Equipment

| |
|---|
| Workshop table |
| Engine hoist |
| Securing straps |

## Removal

**WARNING:Do not smoke or carry lighted tobacco or open flame of any type when working on or near any fuel related components. Highly flammable vapors are always present and may ignite. Failure to follow these instructions may result in personal injury.**

1. **Remove the air cleaner.**

   **For additional information, refer to: Air Cleaner - 2.0L Duratec-HE (MI4) (303-12 Intake Air Distribution and Filtering, Removal and Installation).**

2. **Remove the battery tray.**

   **For additional information, refer to: Battery Tray - 2.0L Duratec-HE (MI4) (414-01 Battery, Mounting and Cables, Removal and Installation).**

3. **Loosen the strut and spring assembly top mount nuts by three turns on both sides.**

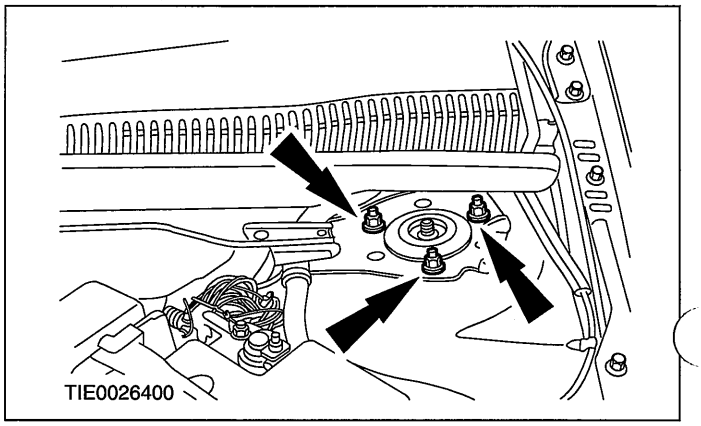


4. **Remove the right-hand headlamp assembly.**

   **For additional information, refer to: Headlamp Assembly (417-01 Exterior Lighting, Removal and Installation).**

5. **Remove the accessory drive belt.**

   **For additional information, refer to: Accessory Drive Belt - 2.0L Duratec-HE (MI4) (303-05 Accessory Drive, Removal and Installation).**

6. **Drain the cooling system.**

   **For additional information, refer to: Cooling System Draining, Filling and Bleeding (303-03 Engine Cooling - 2.0L Duratec-HE (MI4), General Procedures).**

7. **Detach the exhaust flexible pipe from the exhaust manifold.**

   **For additional information, refer to: Exhaust Flexible Pipe - 2.0L Duratec-HE (MI4) (309-00 Exhaust System, Removal and Installation).**

## REMOVAL

**8. Disconnect the cooling fan motor and cooling fan resistor electrical connectors.**

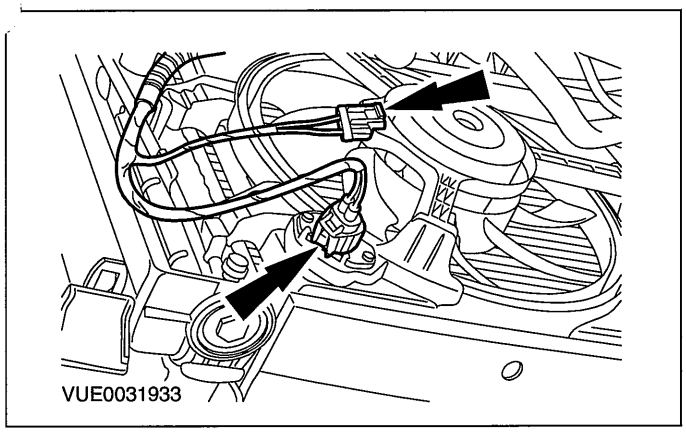


**9. Remove the cooling fan motor and shroud.**

1. Release the cooling fan motor and shroud from the retaining brackets.
2. Push the cooling fan motor and shroud upwards and then downwards to remove.

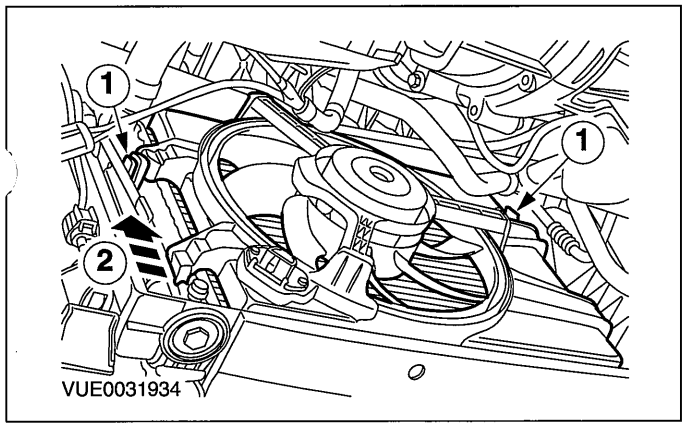


**10. Lower the vehicle.**

**11. Using the special tool, disconnect the coolant hose from the coolant outlet connector.**

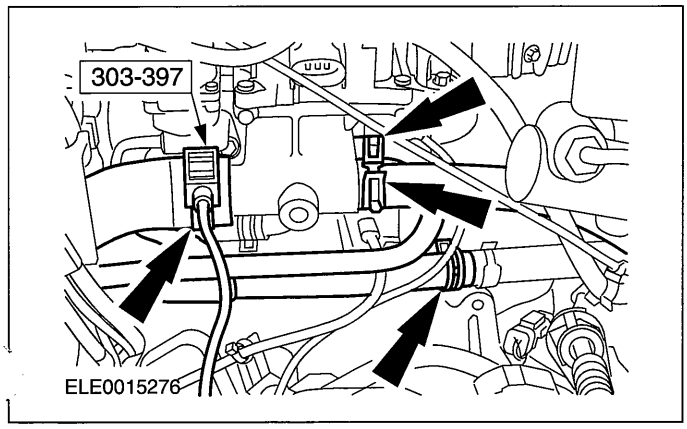


**12. Detach the evaporative emission (EVAP) valve from EVAP valve support bracket.**

1. Disconnect the EVAP valve electrical connector.
2. Disconnect the low pressure line from the EVAP valve.
3. Push the EVAP valve from the support bracket.

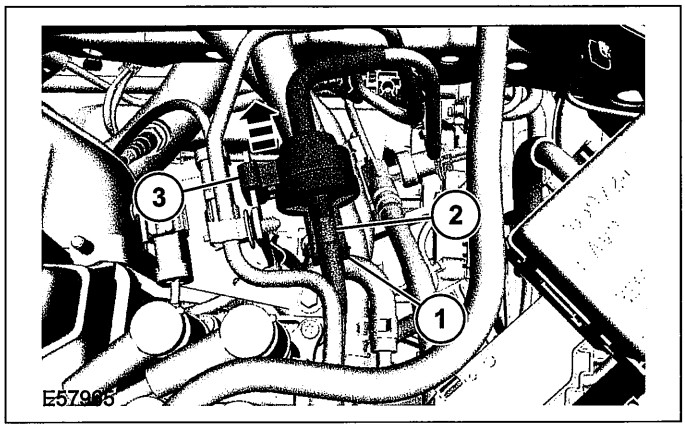


**13. Disconnect the brake booster vacuum line from the intake manifold.**

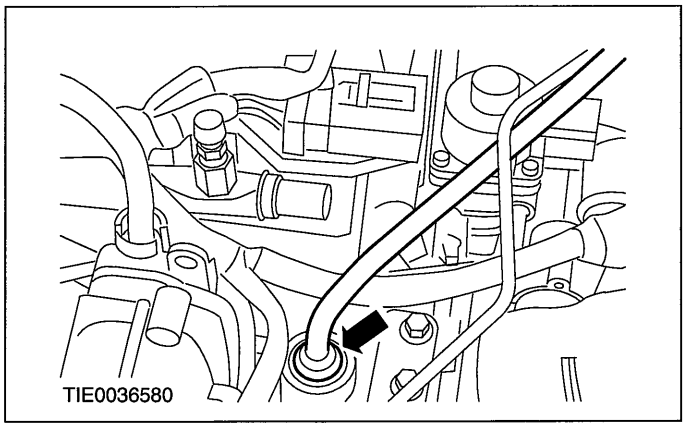


**14. Remove the battery tray support bracket.**

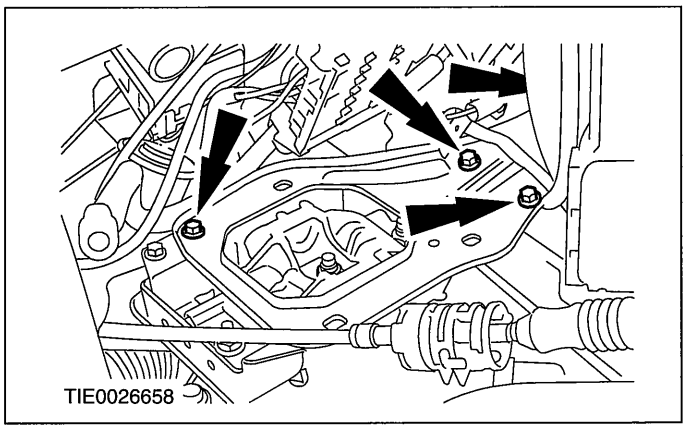

## REMOVAL

15. Disconnect the power steering pump switch electrical connector.

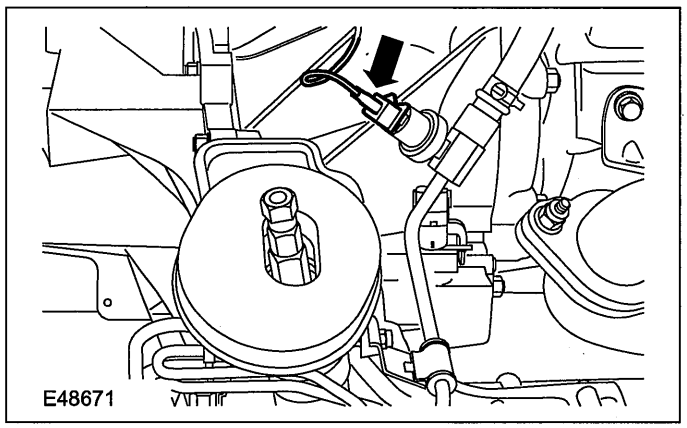


16. Disconnect the catalyst monitor sensor electrical connector.

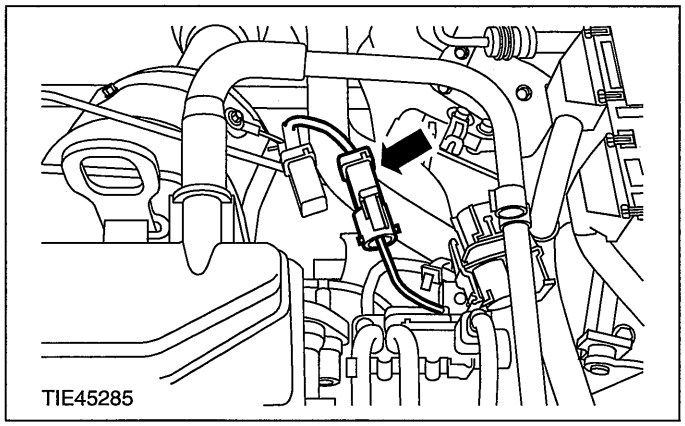


17. Disconnect the engine wiring harness electrical connector.

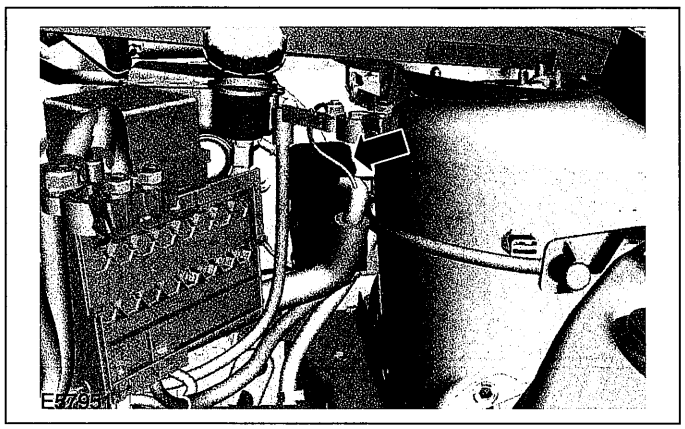

18. Remove the engine wiring harness bracket.

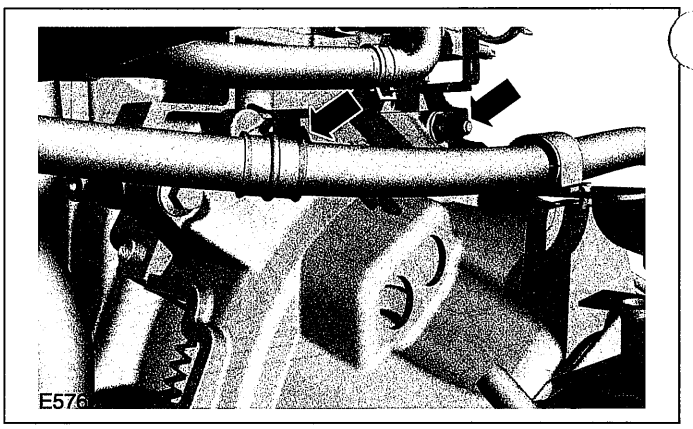

19. Detach the power steering high-pressure line retaining bracket from the transaxle.

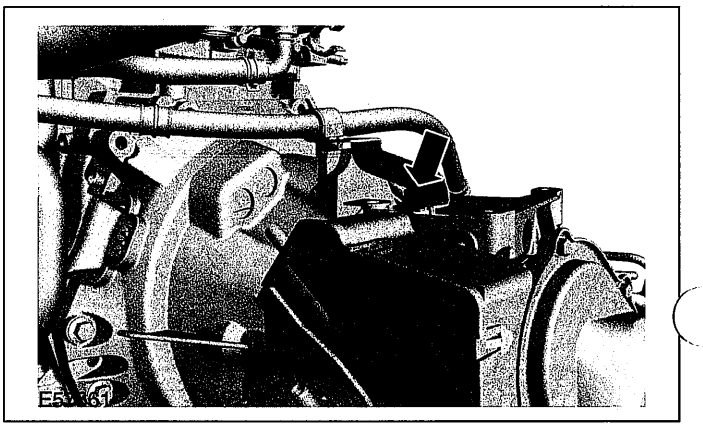

20. Remove the coolant expansion tank.

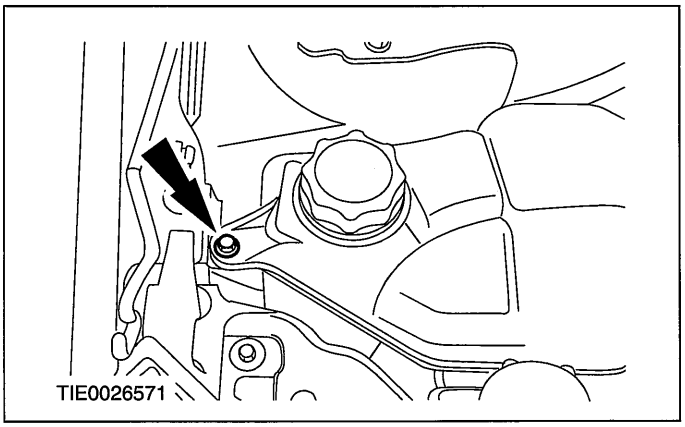

## REMOVAL

21. **Disconnect the reversing lamp switch electrical connector.**

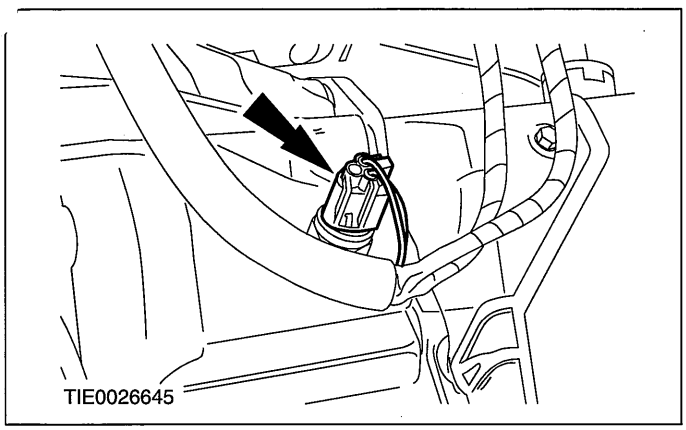


22. **⚠CAUTION:If brake fluid is spilt on the paintwork, the affected area must be immediately washed down with cold water.**

**Disconnect the clutch slave cylinder supply line.**

- Remove the spring clip.

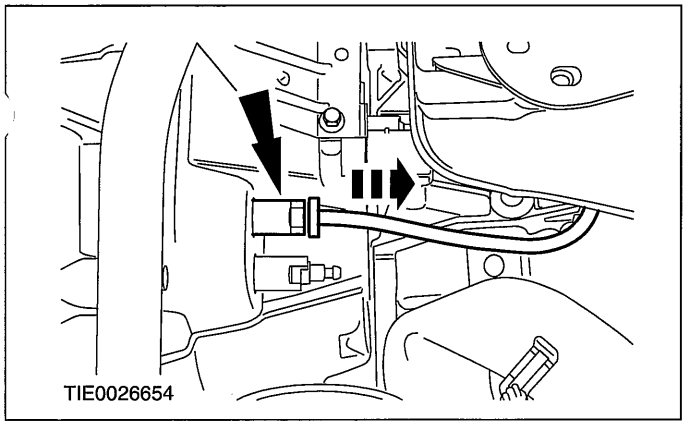


23. **Disconnect the air conditioning low pressure switch connector.**

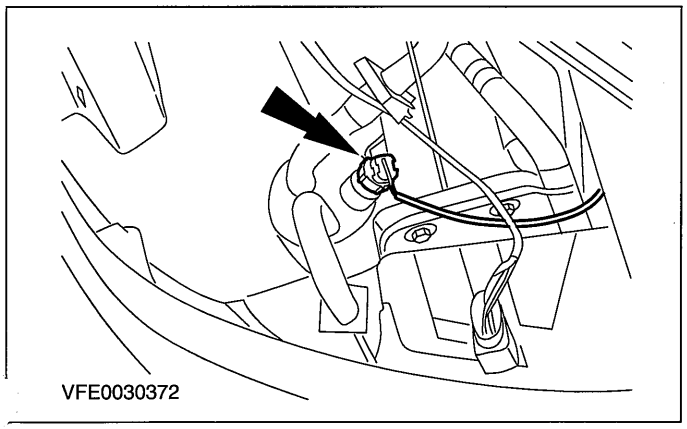


24. **NOTE:Note the position of the steering gear to power steering fluid reservoir return line support bracket to aid installation.**

**Detach the steering gear to power steering fluid reservoir return line support bracket from the generator.**

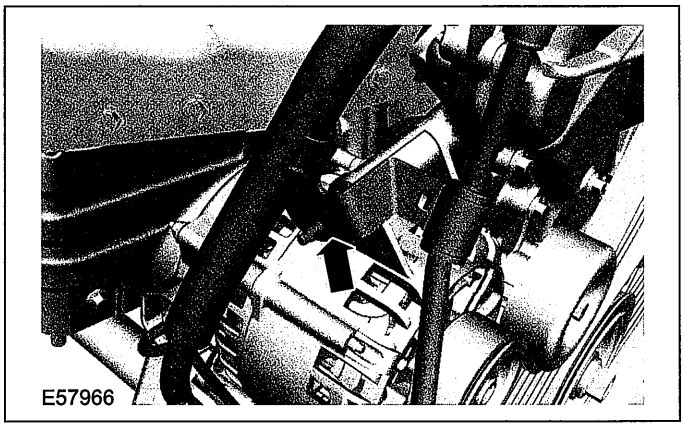


25. **Using the special tool, disconnect the steering gear to power steering fluid reservoir return line from the power steering fluid reservoir.**

- Allow the power steering fluid to drain into a suitable container.

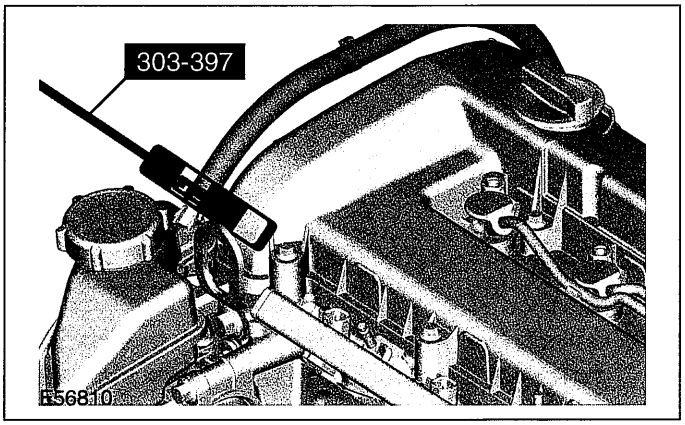


26. **Remove the power steering fluid reservoir.**

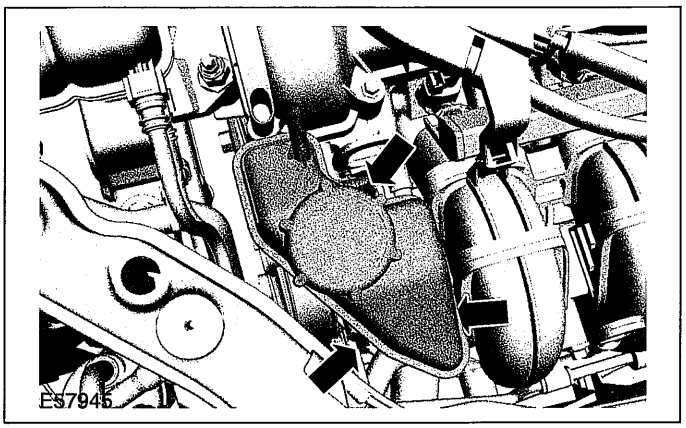


27. **⚠CAUTION:Cap the power steering fluid reservoir to prevent power steering fluid loss or dirt ingress.**

## REMOVAL

**Remove and discard the power steering fluid reservoir O-rings.**

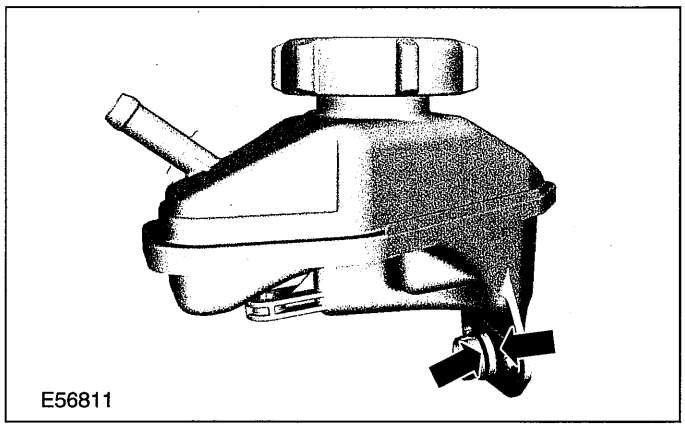


**28. Using the special tool, remove the power steering pump pulley.**

- Discard the power steering pump pulley.

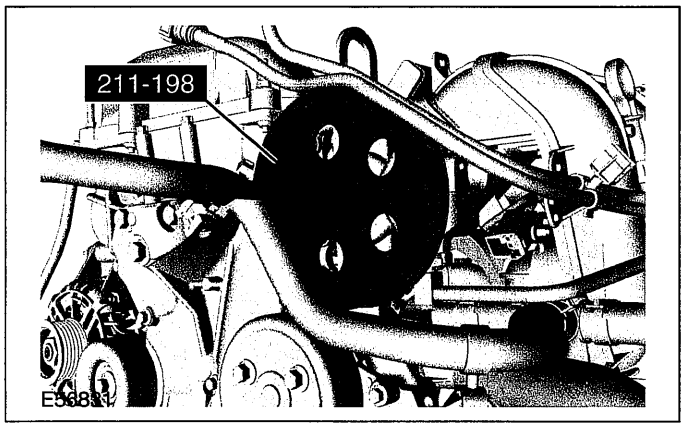


**29. Detach the power steering pump to steering gear pressure line from the power steering pump.**

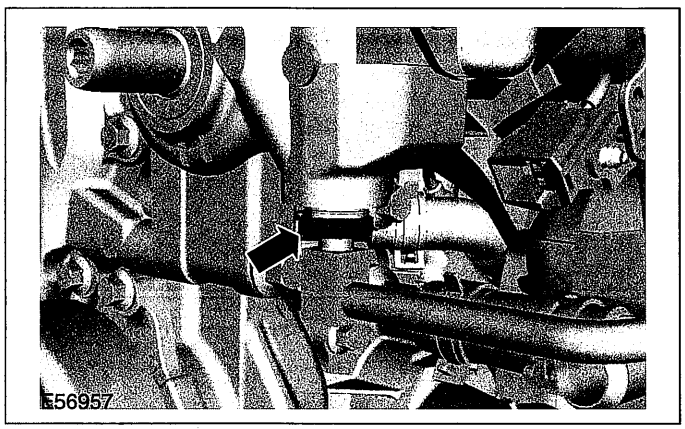


**30. Detach the power steering pump to steering gear pressure line from the intake manifold.**

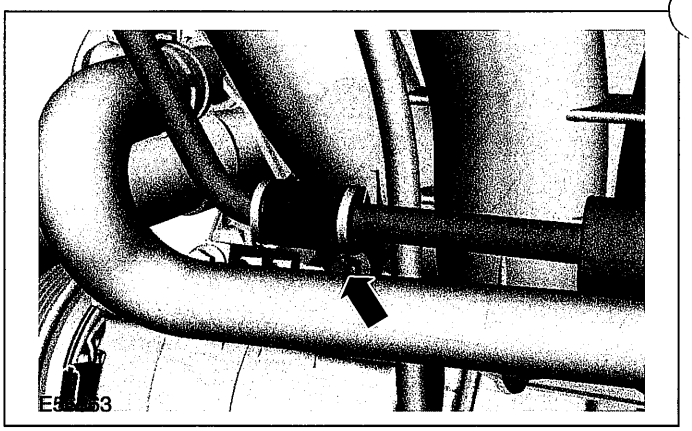

**31. Disconnect the fuel supply line.**

**For additional information, refer to: Quick Release Coupling (310-00 Fuel System - General Information, General Procedures).**

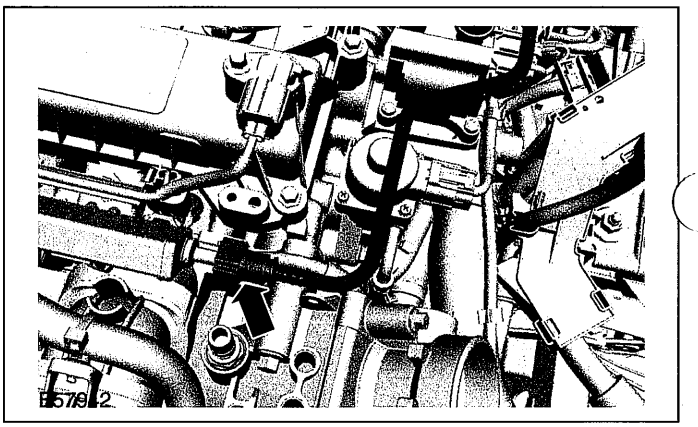

**32. Raise and support the vehicle. For additional information, refer to: (100-02 Jacking and Lifting)**

**Jacking (Description and Operation), Lifting (Description and Operation).**

**33. Remove the air cleaner resonator support bracket.**

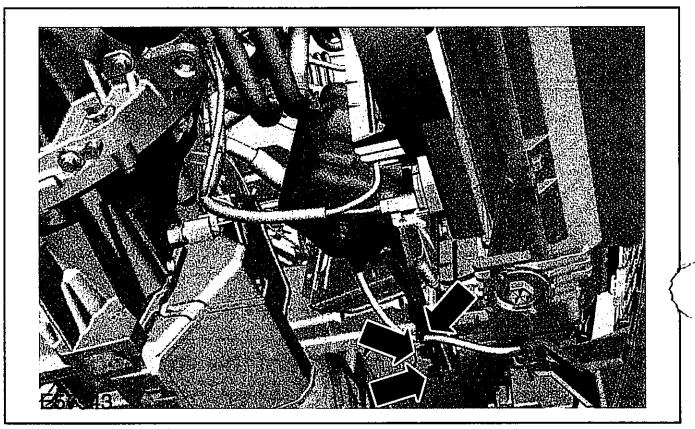

## REMOVAL

34. **Detach the powertrain control module (PCM) support bracket from the side member.**

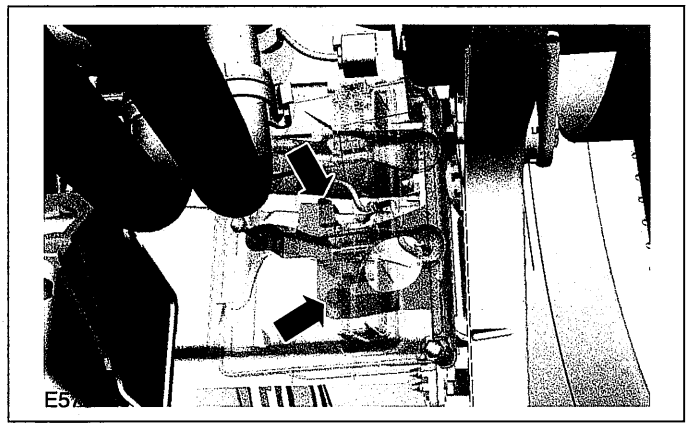

35. **⚠CAUTION:Protect the ball joint seal using a soft cloth to prevent damage.**

**Detach the lower arm ball joint from the wheel knuckle on both sides.**

- Remove the heat shield.

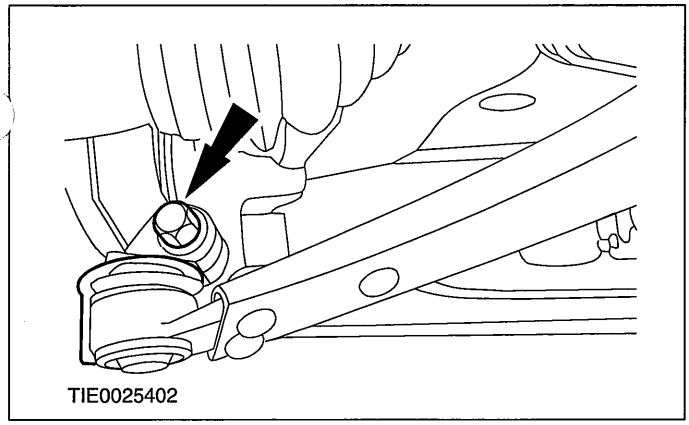


36. **Remove the intermediate shaft center bearing cap.**

- Discard the bearing cap and retaining nuts.
- Remove the intermediate shaft center bearing heat shield (if equipped).

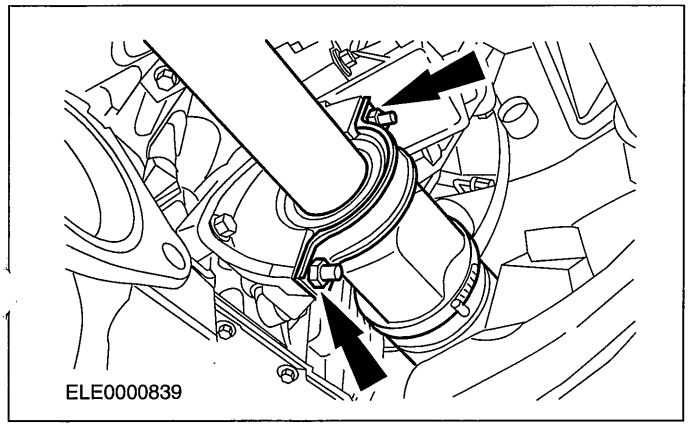


37. **CAUTIONS:**

**⚠The inner CV joint must not be bent more than 23 degrees. The outer CV joint must not be bent more than 45 degrees.**

**⚠Make sure the halfshaft seal is not damaged.**

**⚠Plug the transaxle to prevent oil loss or dirt ingress.**

**Remove the halfshaft and intermediate shaft assembly.**

- Allow the oil to drain into a suitable container.

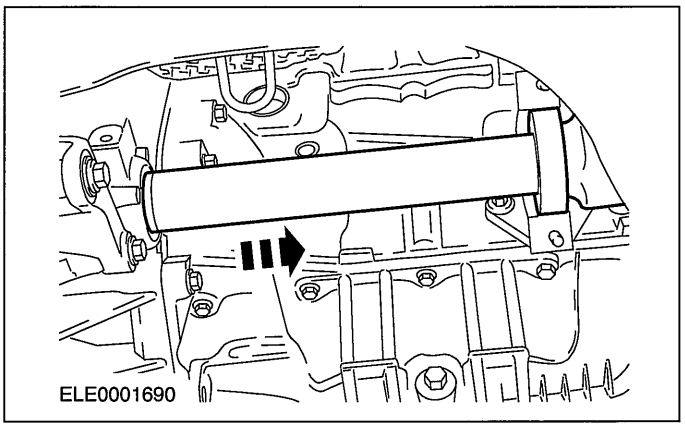


38. **CAUTIONS:**

**⚠Support the halfshaft. The inner joint must not be bent more than 18 degrees. The outer joint must not be bent more than 45 degrees.**

**⚠Do not damage the halfshaft seal.**

**NOTE:**Plug the transaxle to prevent oil loss or dirt ingress.

**Remove the left-hand halfshaft.**

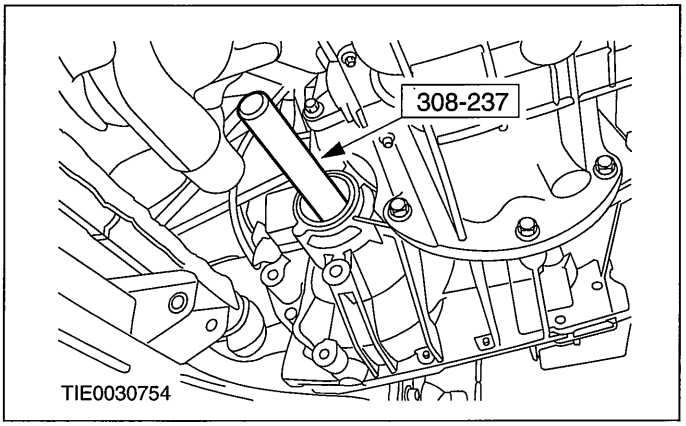

## REMOVAL

39. **Remove the gearshift cables cover.**

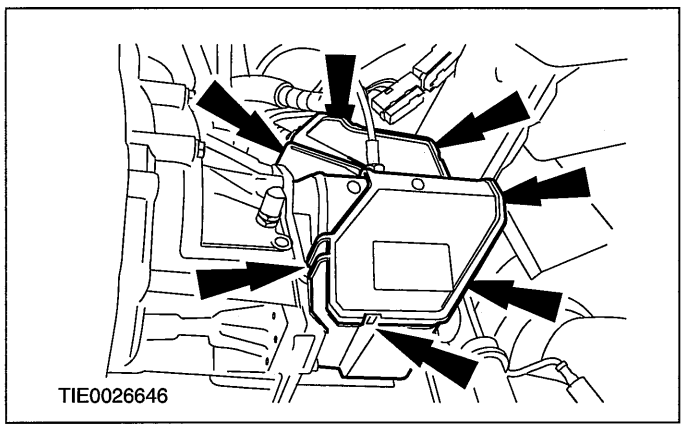


40. **Detach the gearshift cables from the transaxle.**
    1. Detach the gearshift cables and the selector cable from the selector levers.
    2. Turn the abutment sleeve clockwise and detach the cables from the bracket.

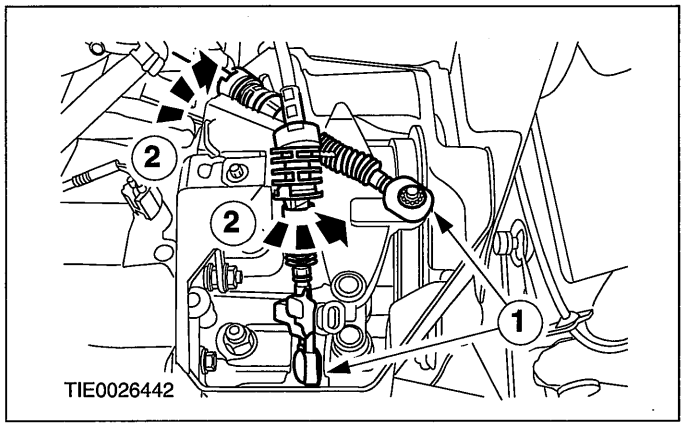


41. **Disconnect the A/C high pressure switch electrical connector.**

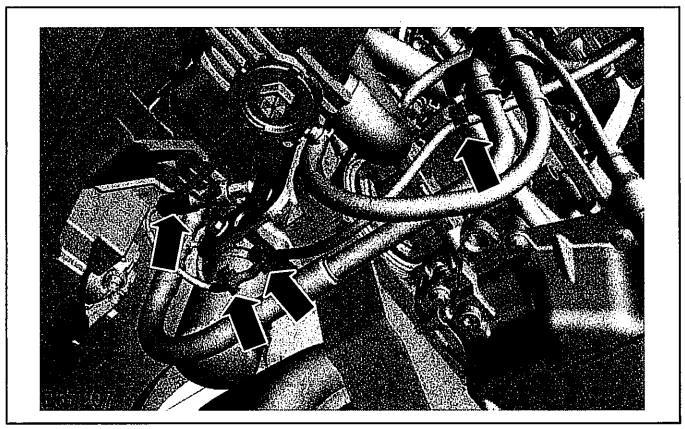

42. **Detach the A/C compressor from the cylinder block and position it to one side.**

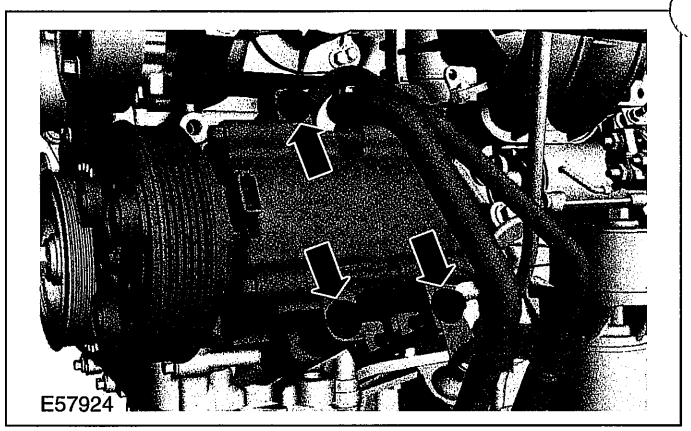


43. **Remove the engine support insulator.**

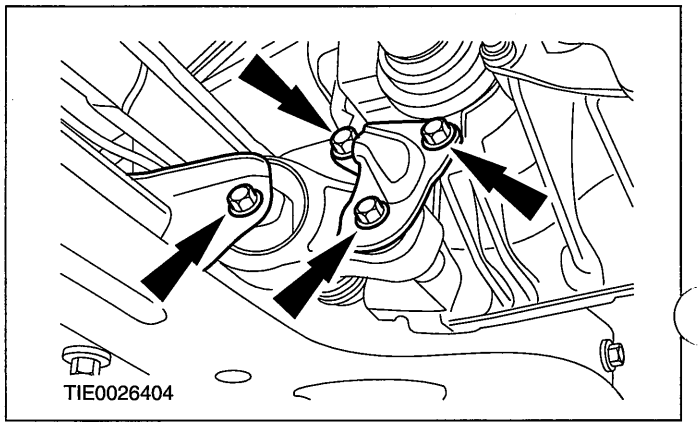


44. **NOTE:Use securing straps to secure the engine and the transaxle on the workshop table.**

    **Position the workshop table under the vehicle and carefully lower the vehicle, until the engine and transaxle assembly is in the correct position to remove the engine mounts.**

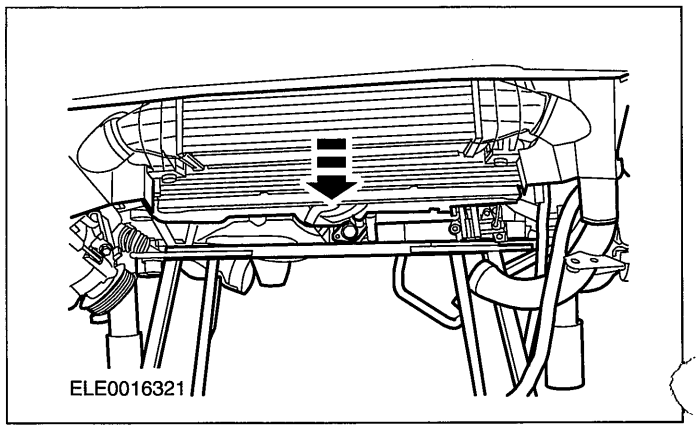


45. **Remove the engine front mount.**

## REMOVAL

- Discard the nuts.

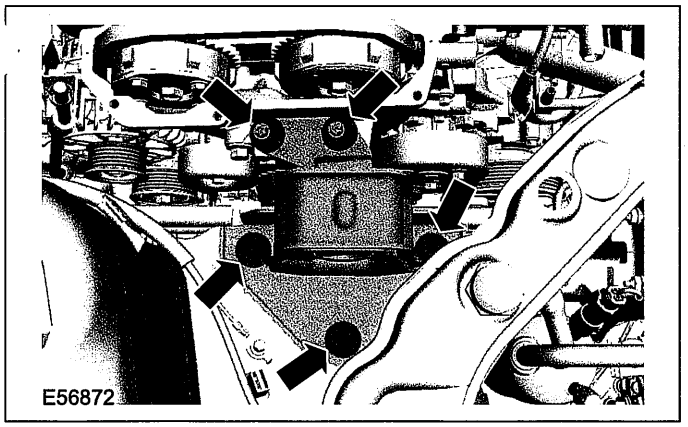


**46. Remove the engine rear mount retaining nuts.**

- Discard the nuts.

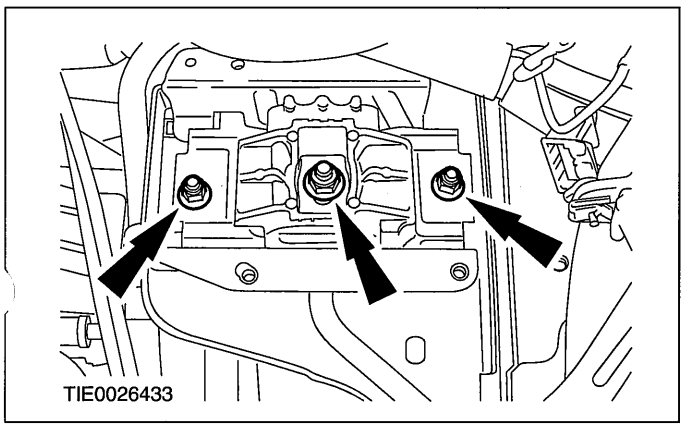


**47. Raise and support the vehicle and remove the engine and transaxle assembly. For additional information, refer to: (100-02 Jacking and Lifting)**

**Jacking (Description and Operation), Lifting (Description and Operation).**

**48. Using a suitable engine hoist support the engine and transaxle assembly and remove the retaining straps.**

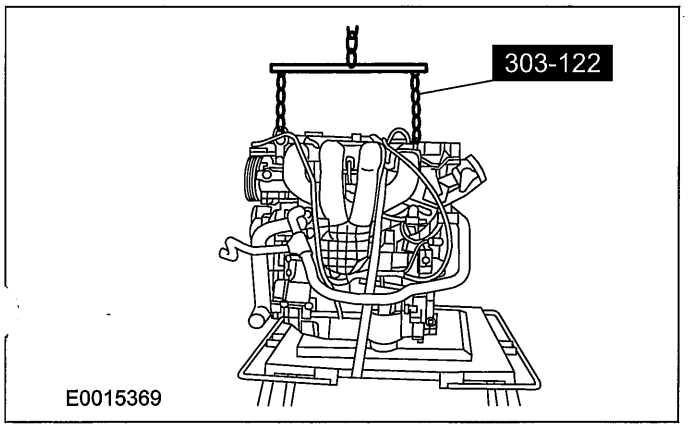


**49. Remove the wiring harness retaining bracket.**

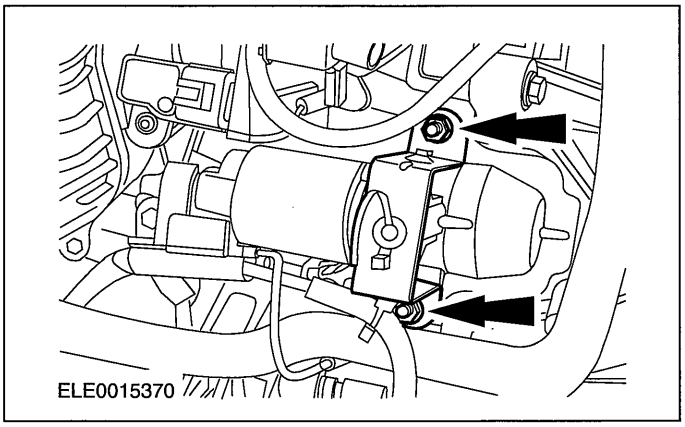


**50. Remove the starter motor.**

- Detach the wiring harness from the retaining bracket.

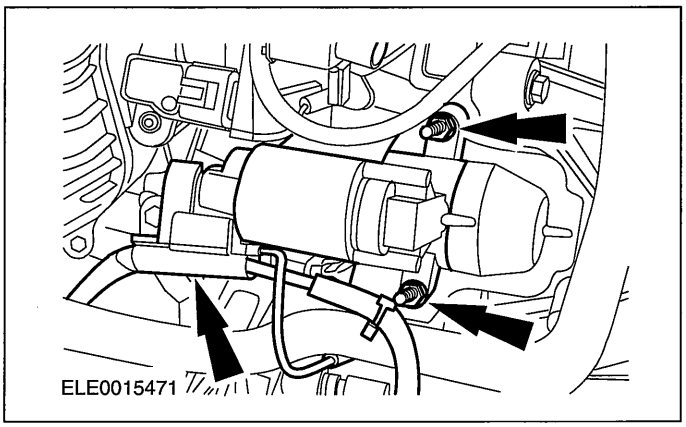


**51. Remove the transaxle lower retaining bolts.**

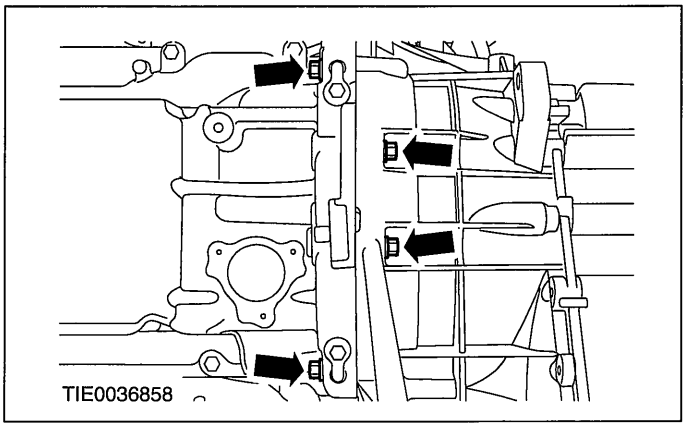

## REMOVAL

52. Remove the transaxle right-hand retaining bolts.

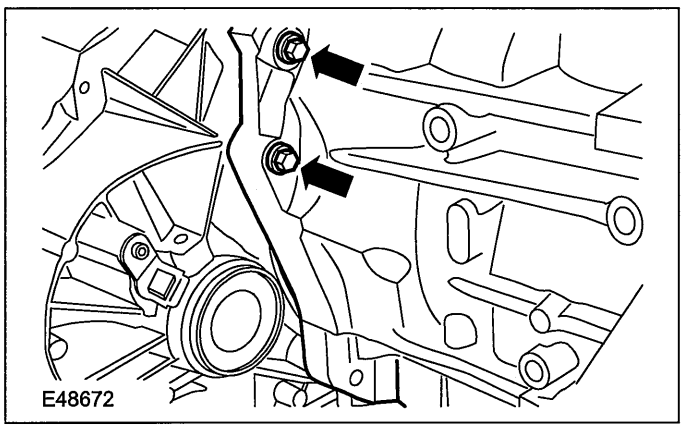


53. Remove the transaxle left-hand retaining bolts.

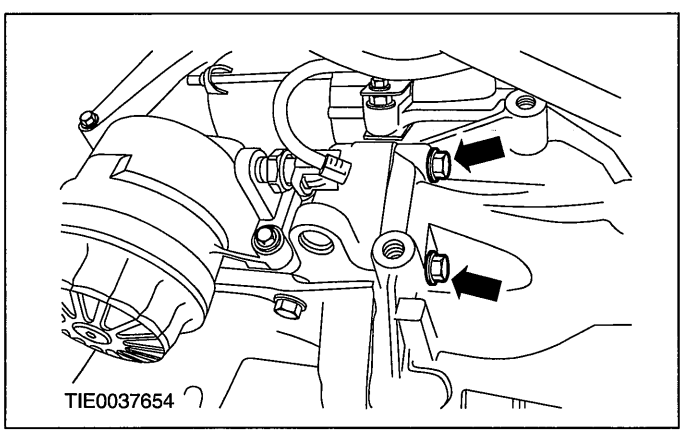


54. Remove the transaxle upper retaining bolts.

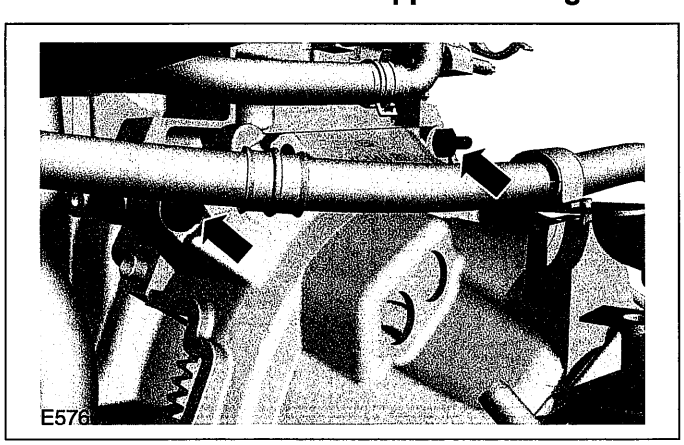


55. Remove the transaxle.

## DISASSEMBLY

# Engine(21 134 8)

### Special Tool(s)

| | |
|---|---|
| 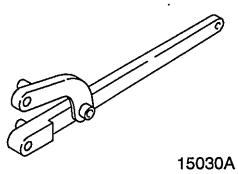 15030A | Universal Flange Holding Wrench<br>205-072 (15-030A) |
| 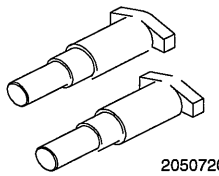 20507202 | Adapter for 205-072<br>205-072-02 (15-030A-02) |
| 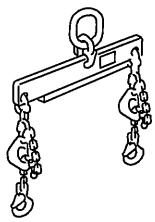 21068A | Lifting Bracket, Engine<br>303-122 (21-068A) |
| 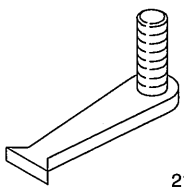 21135 | Locking Tool, Flywheel<br>303-254 (21-135) |
| 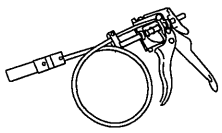 24003 | Remover/Installer, Hose Clamp<br>303-397 (24-003) |
| 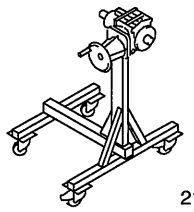 21187 | Mounting Stand<br>303-435 (21-187) |

### Special Tool(s)

| | |
|---|---|
| 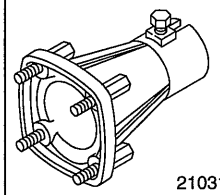 21031B | Mounting Bracket for 303-435<br>303-435-06 (21-031B) |
| 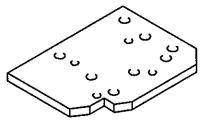 21146C | Mounting Plate for<br>303-435-06<br>303-435-11A (21-146D) |
| 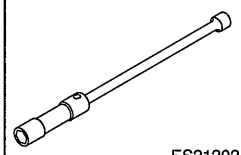 ES21202 | Socket, Spark Plug<br>303-499 (21-202) |
| 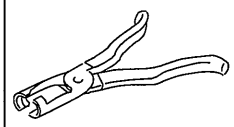 21211 | Pliers, Valve Stem Seal<br>303-508 (21-211) |

## Disassembly

1. **Disconnect the generator electrical connector.**

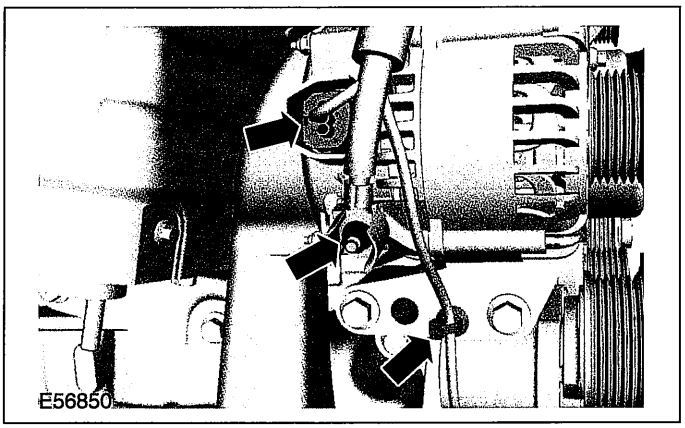

## DISASSEMBLY

2. **Remove the exhaust manifold upper heat shield.**

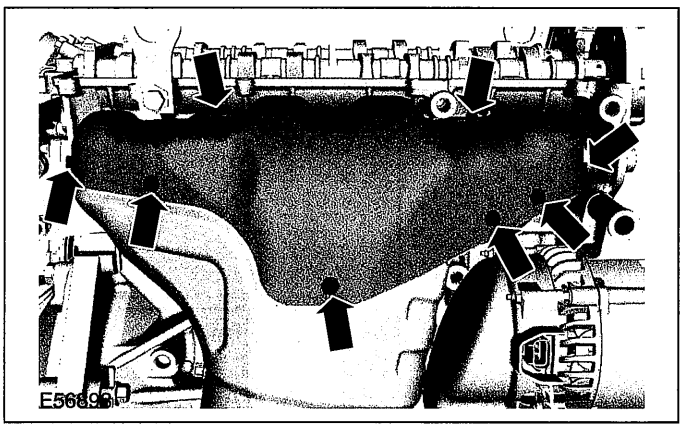


3. **Remove the exhaust manifold lower heat shield.**

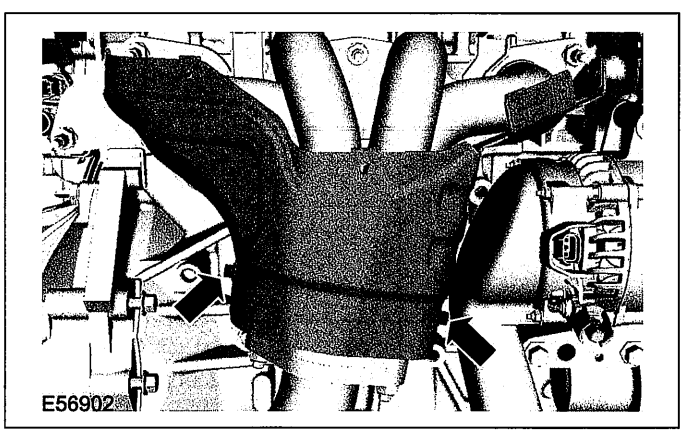


4. **Disconnect the crankshaft position (CKP) sensor electrical connector.**

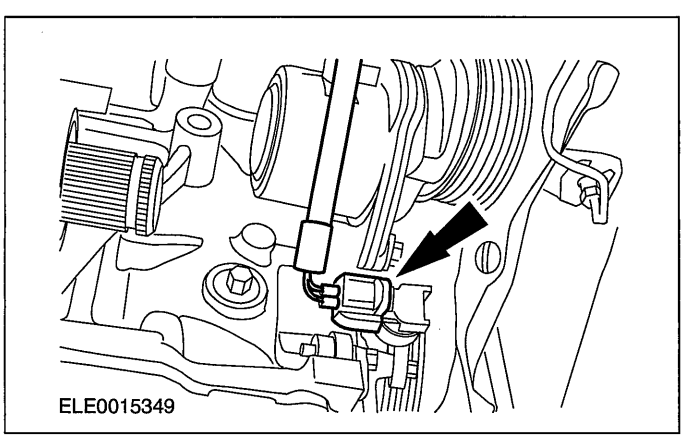


5. **Remove the generator.**

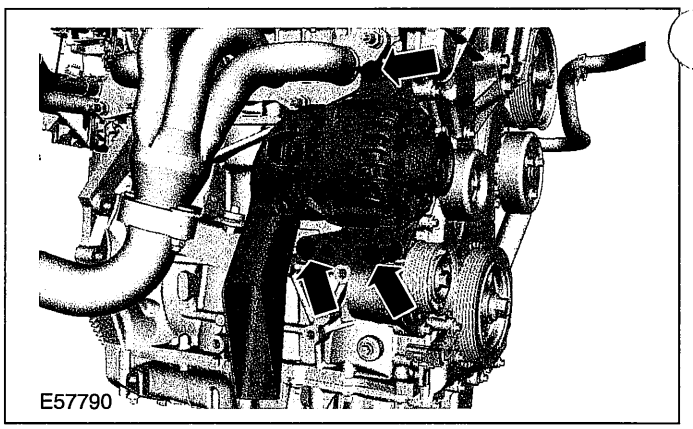


6. **Using the special tools, mount the engine to the mounting stand.**

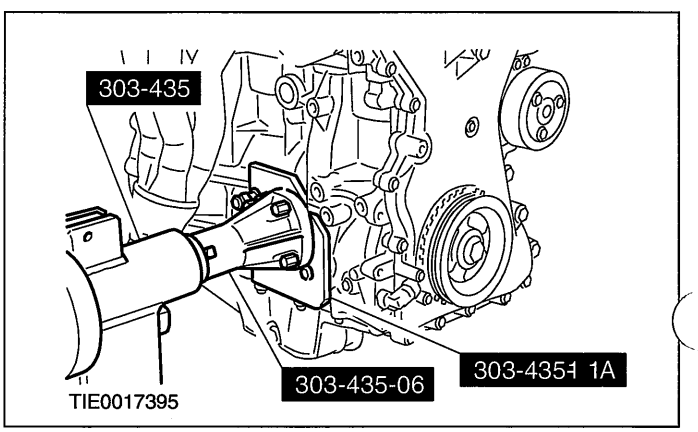


7. **Remove the special tool.**

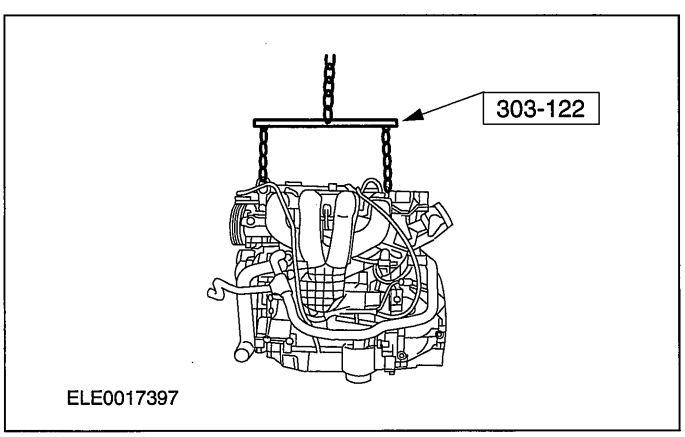


8. **Drain the engine.**
   - Allow the oil to drain into a suitable container.
9. **NOTE:Inspect the oil drain plug seal for damage. Install a new drain plug and seal if necessary.**

## DISASSEMBLY

Install the drain plug.

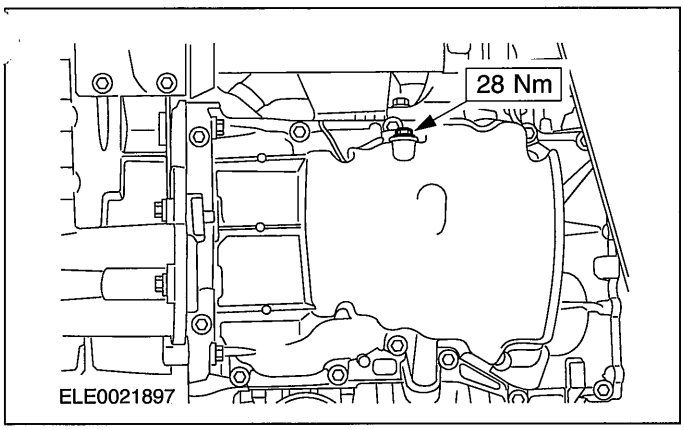


10. Detach the engine wiring harness bracket from the intake manifold.

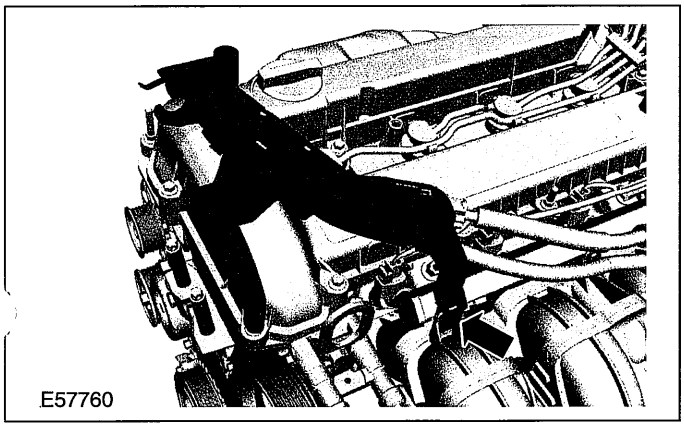


11. Disconnect the knock sensor (KS) electrical connector.

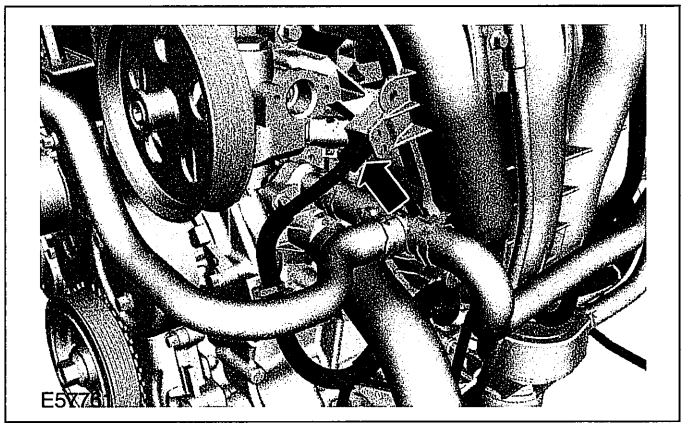


12. Disconnect the oil pressure switch electrical connector.

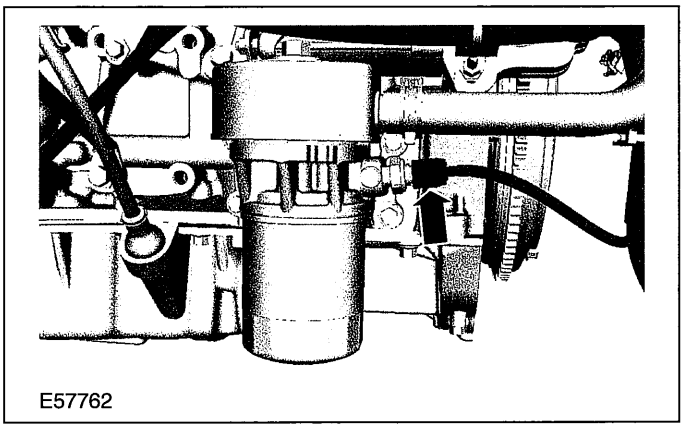


13. Disconnect the fuel injector electrical connectors.

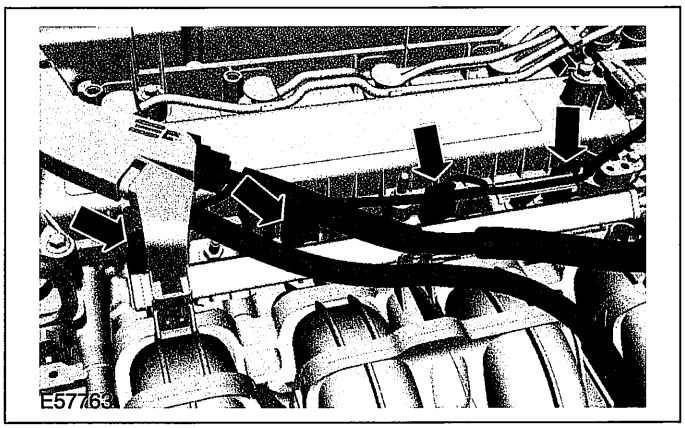


14. Disconnect the camshaft position (CMP) sensor electrical connector.

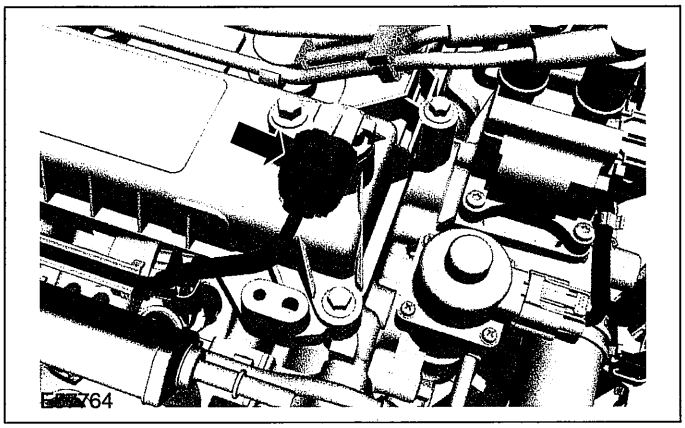

## DISASSEMBLY

15. Disconnect the exhaust gas recirculation (EGR) valve electrical connector.

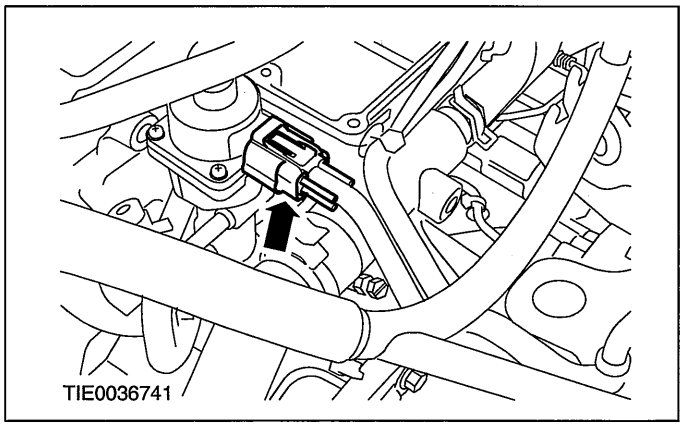


16. Disconnect the electronic ignition (EI) electrical connector.

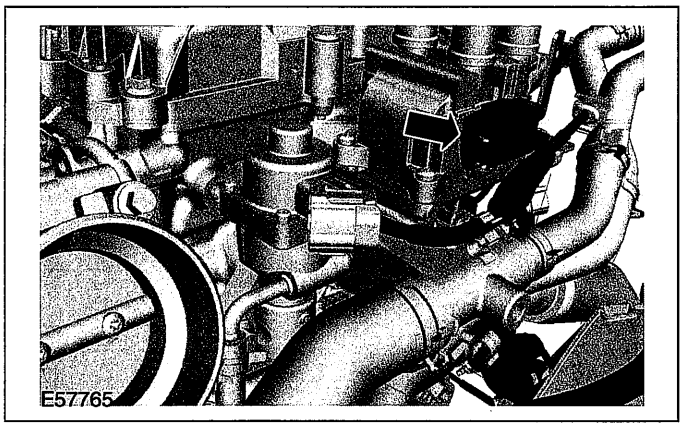


17. Disconnect the engine coolant temperature (ECT) sensor electrical connector.

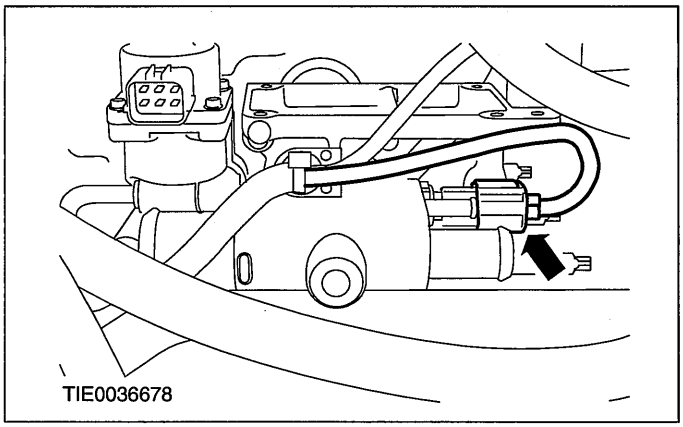


18. Disconnect the heated oxygen (H2OS) sensor electrical connector.

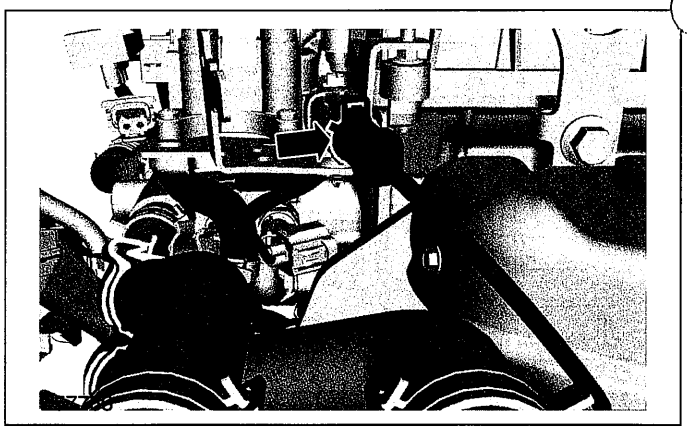

19. Disconnect the throttle body (TB) electrical connector.

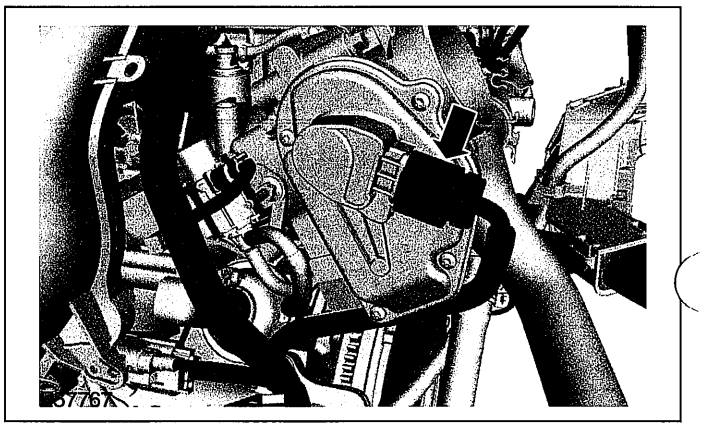

20. Disconnect the intake manifold runner control (IMRC) electrical connector.

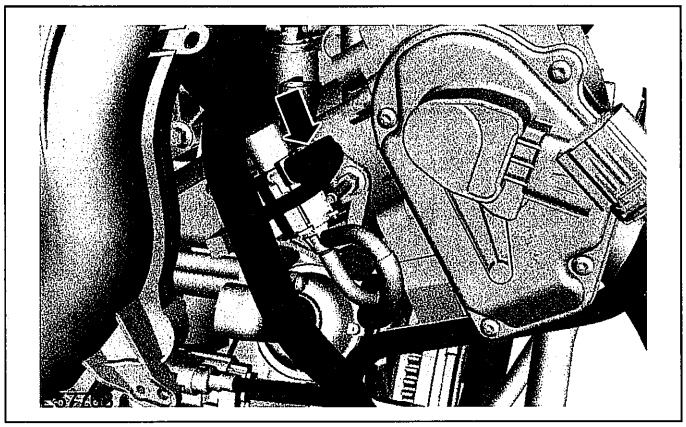

## DISASSEMBLY

**21. Detach the starter motor electrical connector from the intake manifold.**

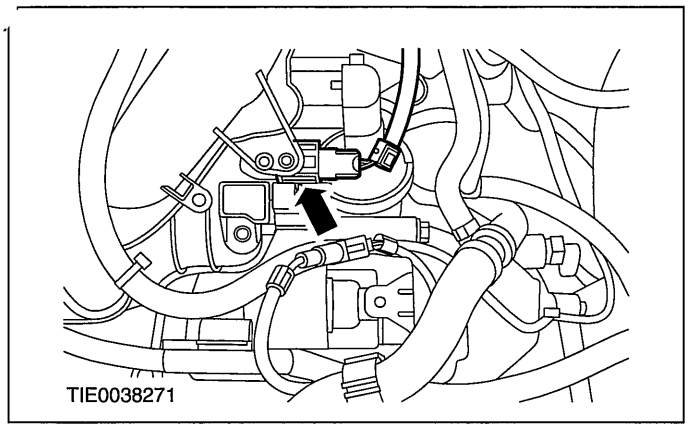


**22. Disconnect the manifold absolute pressure (MAP) sensor electrical connector.**

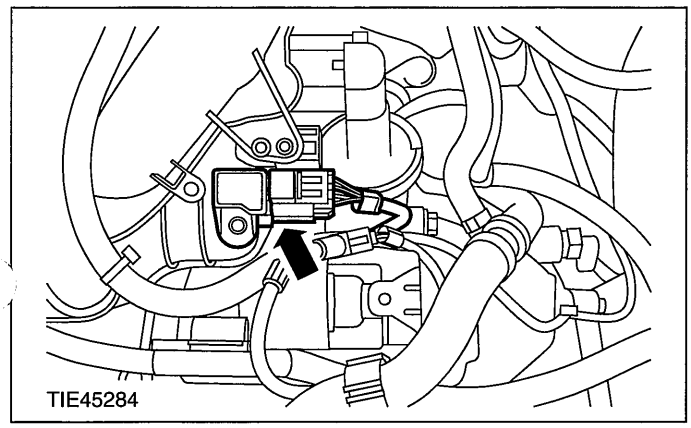


**23. Remove the exhaust manifold lower retaining bolts.**

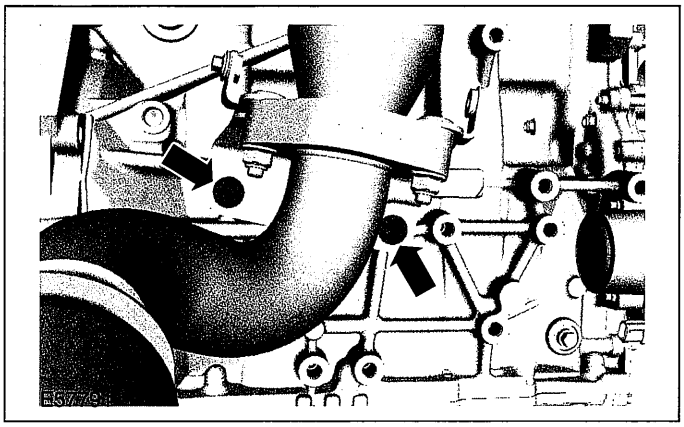

**24. Remove the exhaust manifold.**

- Discard the gasket.

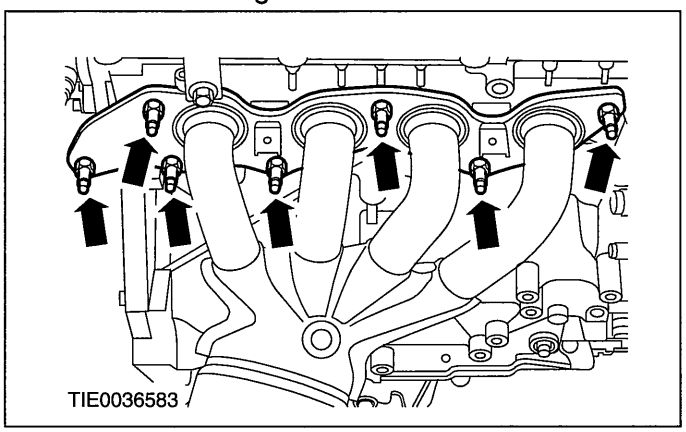


**25. Remove the oil level indicator and oil level indicator tube.**

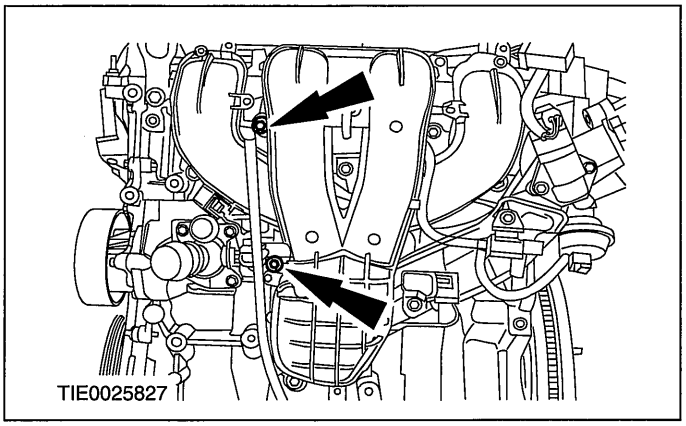


**26. Remove the intake manifold.**

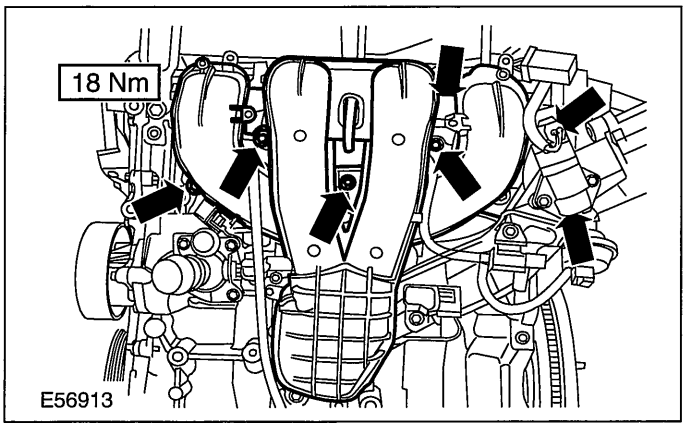

## DISASSEMBLY

27. Disconnect the positive crankcase ventilation (PCV) hose from the intake manifold.

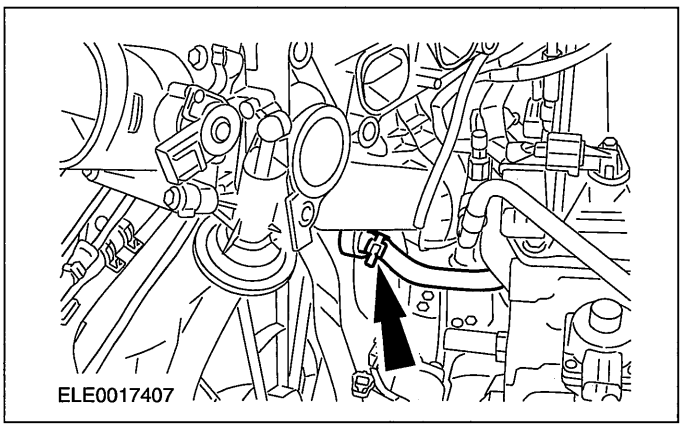


28. Remove the evaporative emission (EVAP) valve support bracket.

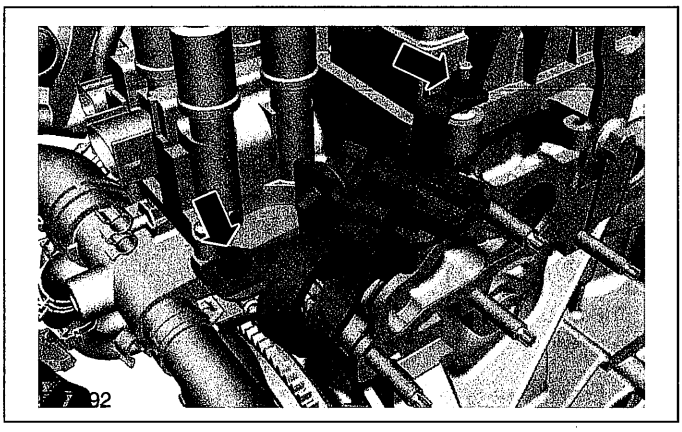

29. Using the special tool, disconnect the spark plug electrical connectors.

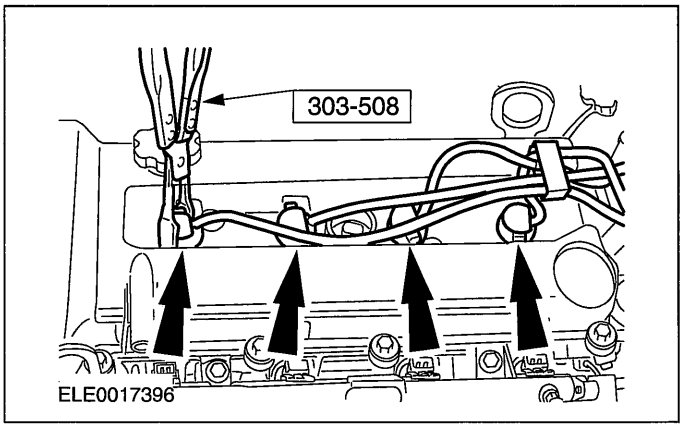


30. Using the special tool, remove the spark plugs.

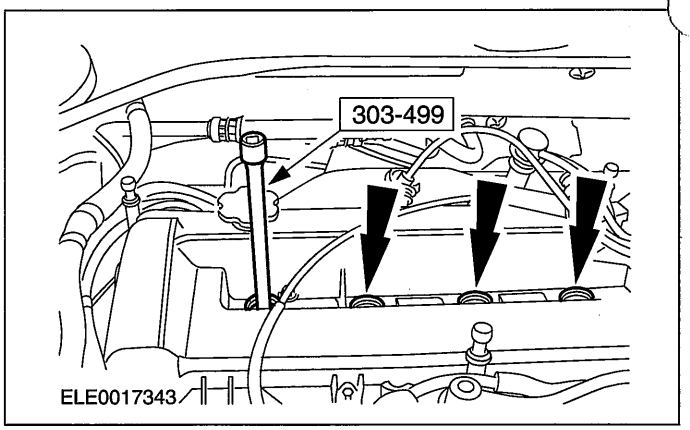


31. Remove the valve cover.

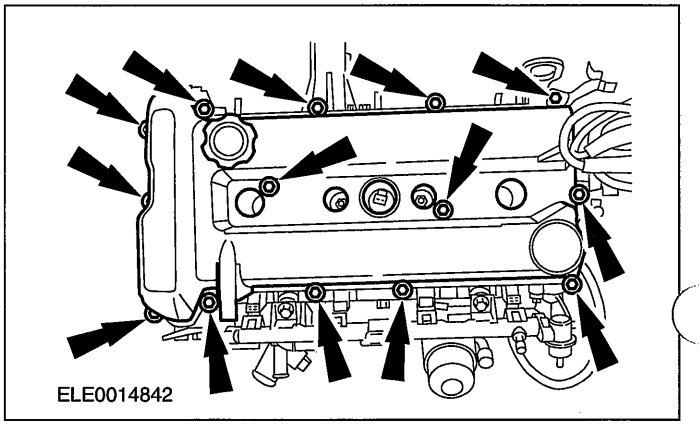


32. Using the special tool, disconnect the coolant hoses.

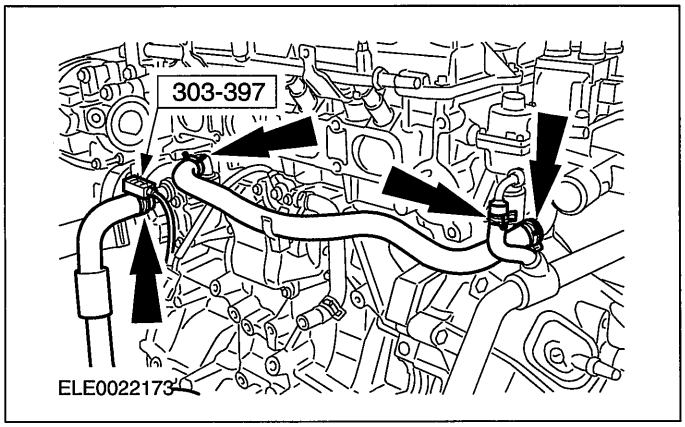

## DISASSEMBLY

33. Remove the power steering pump.

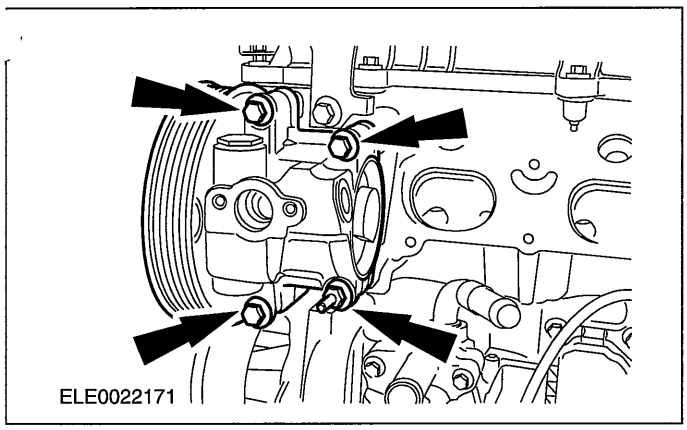


34. Remove the accessory drive belt tensioner.

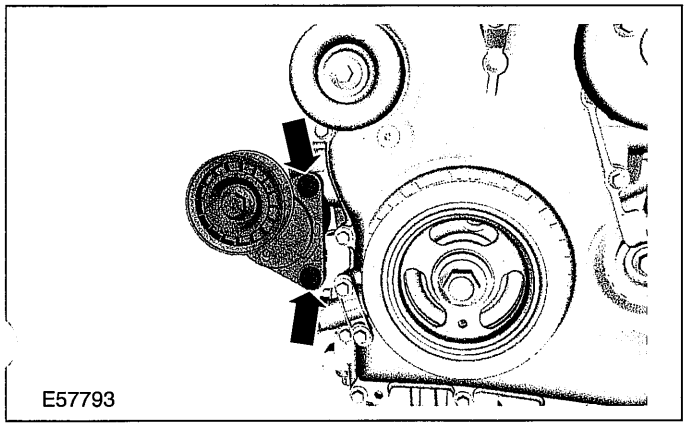


35. Remove the accessory drive belt idler pulley.

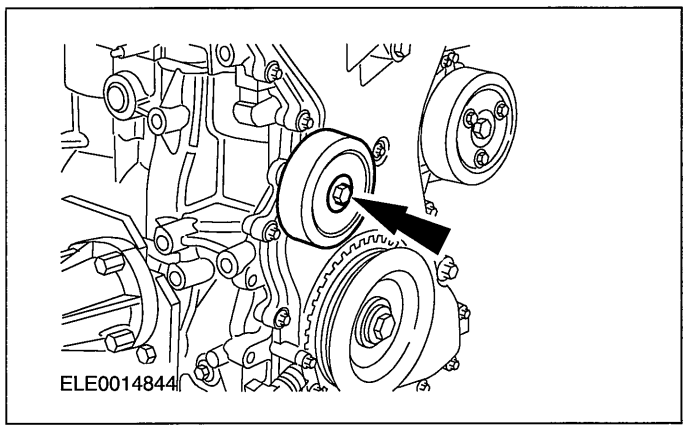


36. Remove the coolant pump pulley.

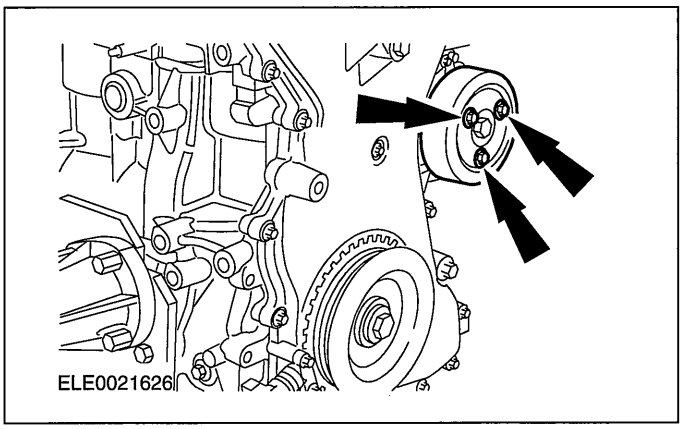


37. Using the special tools, prevent the crankshaft pulley from rotating and remove the crankshaft pulley.

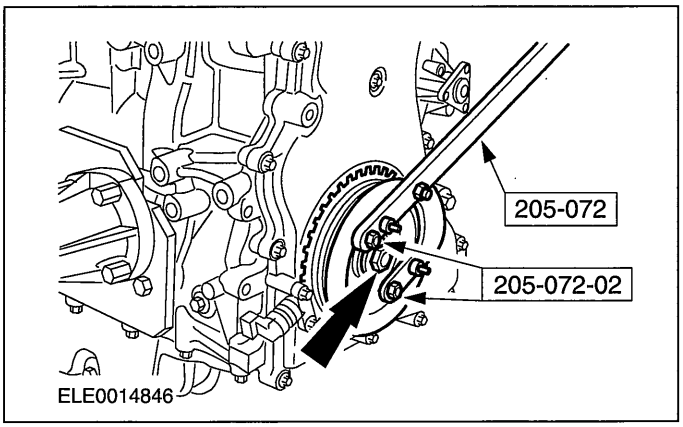

## DISASSEMBLY

**38. Remove the engine front cover.**

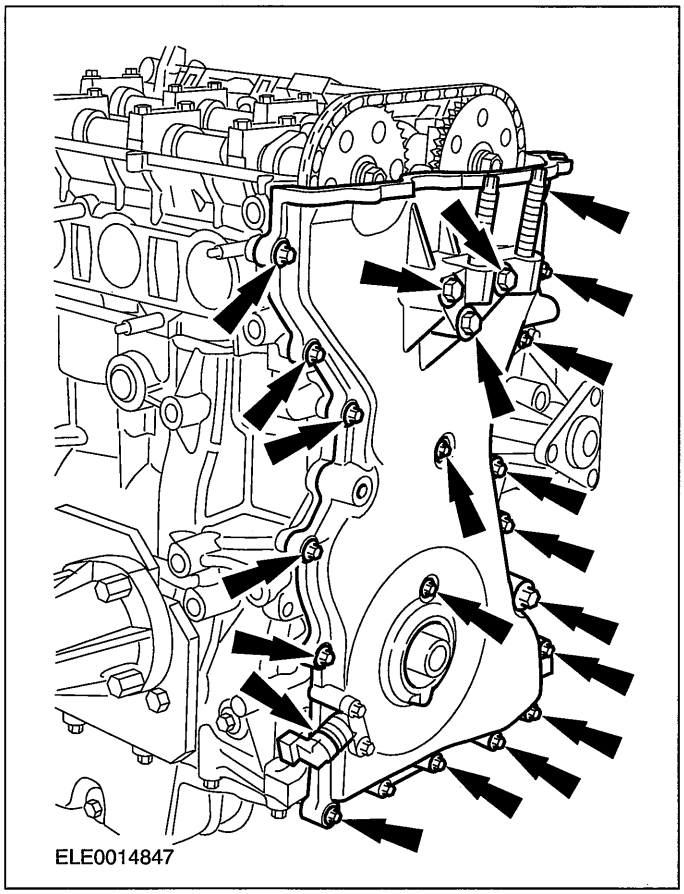


**39. Detension the timing chain.**

1. Unlock the timing chain tensioner ratchet.
2. Apply pressure to the timing chain guide.
3. Lock the timing chain tensioner with a suitable piece of wire.

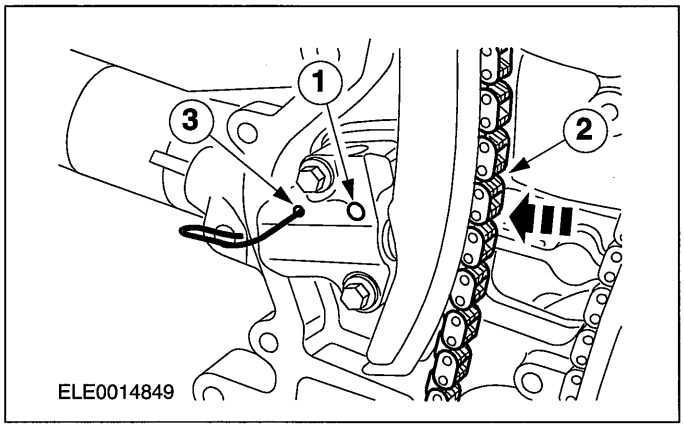


**40. NOTE:Hold each camshaft by the hexagon with an open-ended wrench to stop it from rotating.**

**Remove the camshaft sprockets and the timing chain.**

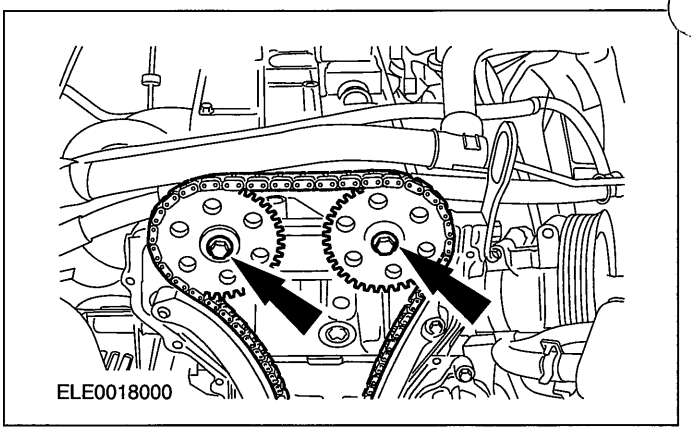


**41. Remove the timing chain guides.**

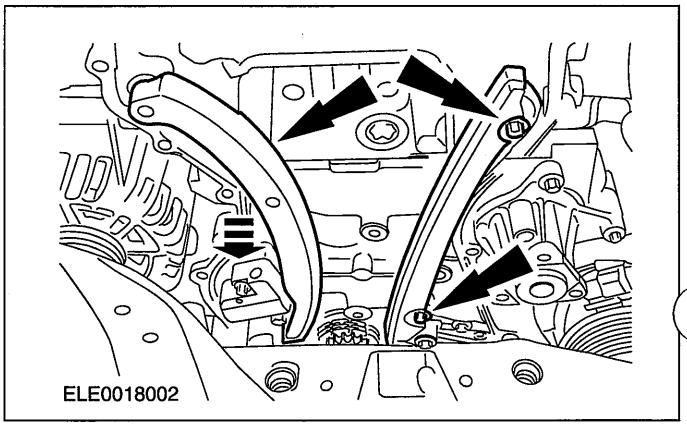


**42. Remove the timing chain tensioner.**

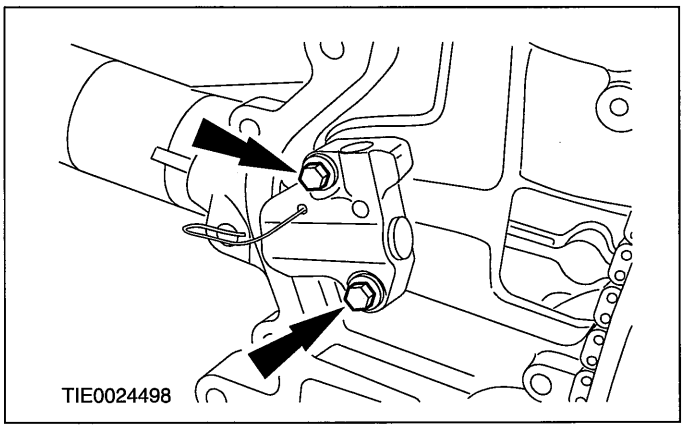

## DISASSEMBLY

**43. Remove the oil pump chain guide.**

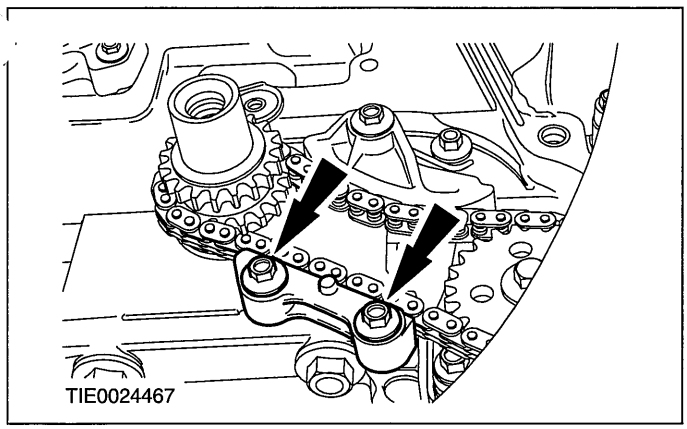


**44. Remove the oil pump chain tensioner.**

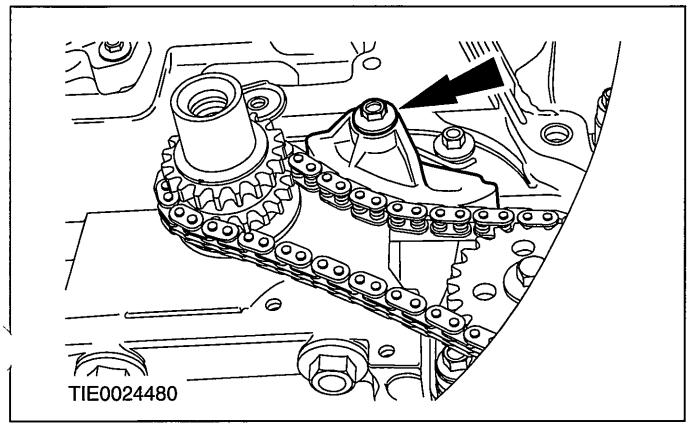


**45. Using the special tools, loosen the oil pump sprocket retaining bolt.**

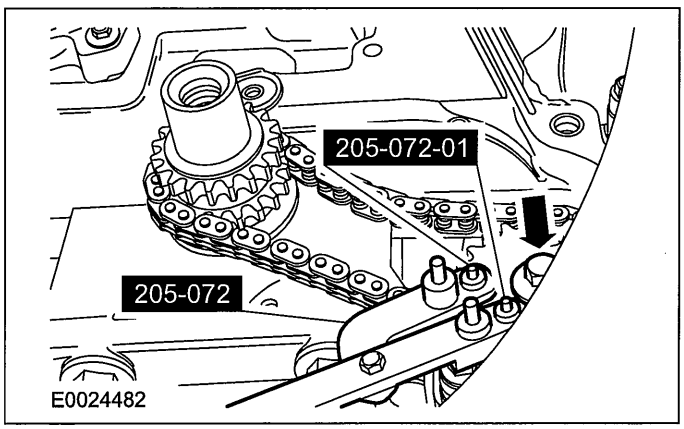


**46. Remove the oil pump chain.**

1. Remove the oil pump sprocket retaining bolt.
2. Remove the oil pump chain and the oil pump sprocket.

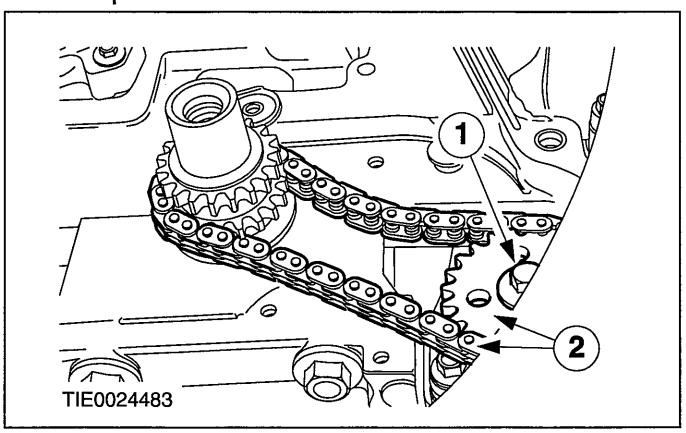


**47. Remove the front friction washer (if equipped).**

- Discard the friction washer.

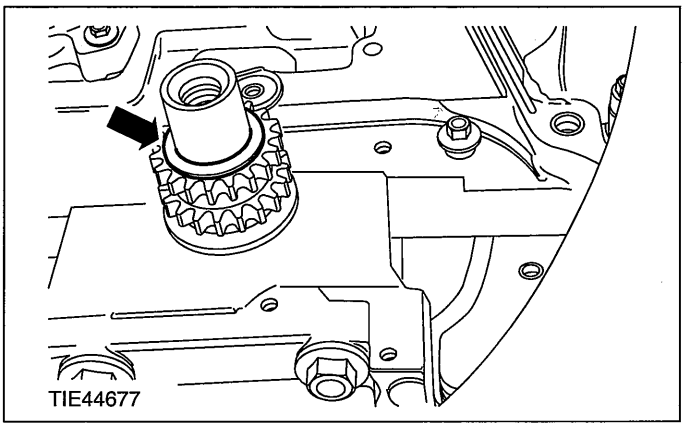


**48. Remove the crankshaft sprocket.**

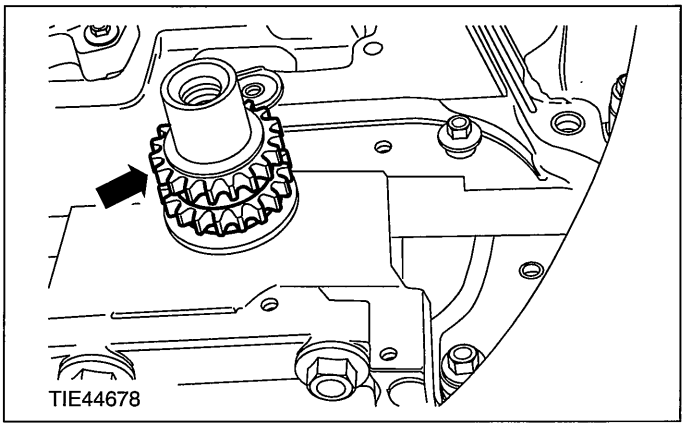


**49. Remove the rear friction washer (if equipped).**

## DISASSEMBLY

- Discard the friction washer.

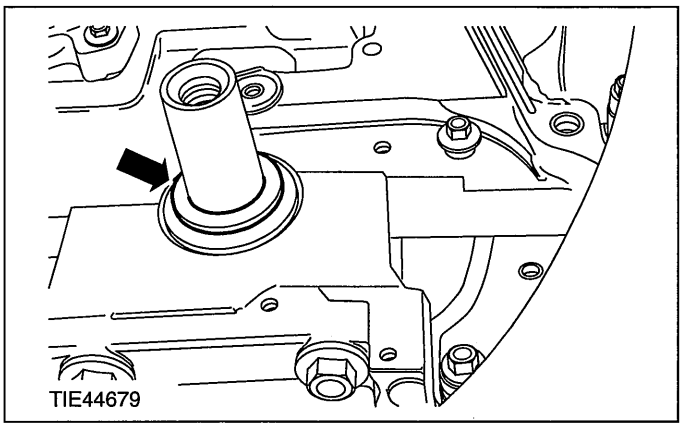


**50. CAUTIONS:**

**⚠Keep the camshaft bearing caps in order for installation.**

**⚠Remove the camshaft bearing caps in the sequence shown.**

**NOTE:**Working in several stages, release each camshaft bearing cap retaining bolt two turns at a time.

**Remove the camshaft bearing caps.**

- Remove the camshafts.

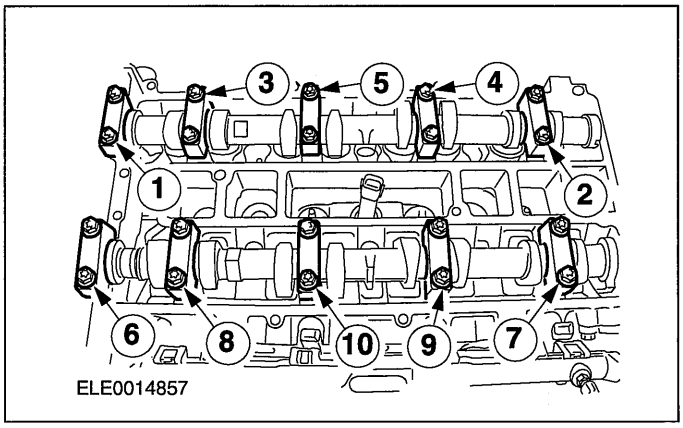


**51. ⚠CAUTION:Keep the valve tappets in order for installation.**

**Remove the valve tappets.**

**52. ⚠CAUTION:Remove the cylinder head bolts in the sequence shown.**

**Remove the cylinder head.**

- Discard the gasket.

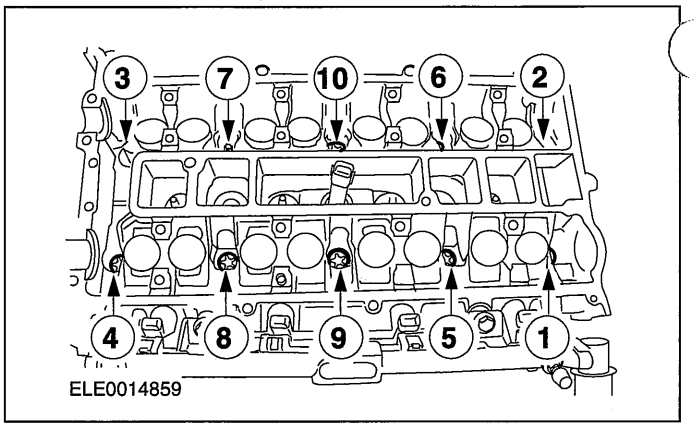


**53. Remove the knock sensor (KS).**

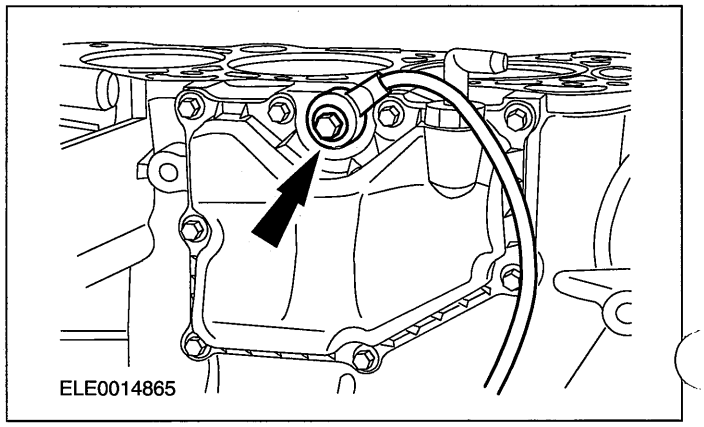


**54. Remove the coolant pump.**

- Discard the O-ring seal.

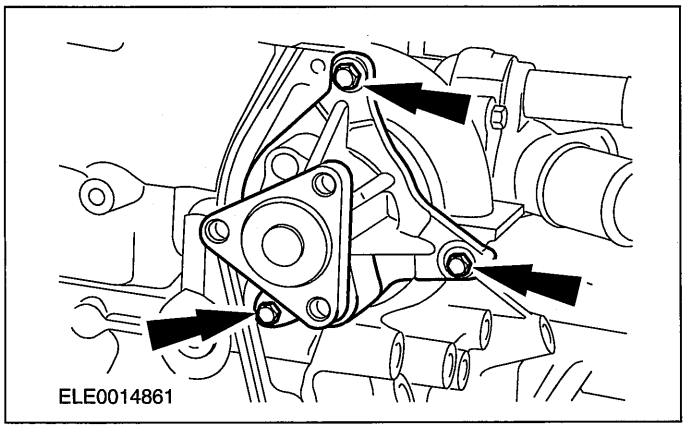


**55. Remove the thermostat housing.**

## DISASSEMBLY

- Discard the gasket.

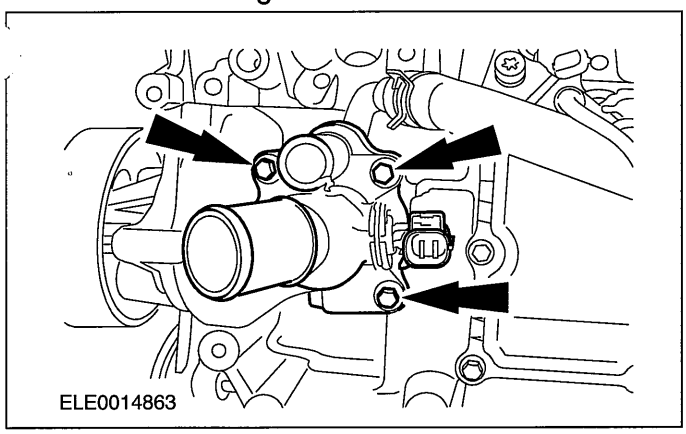


**56. Remove the crankcase vent oil separator.**

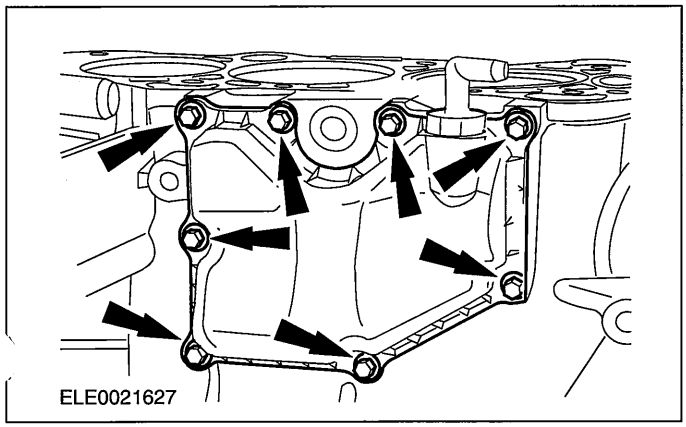


**57. Remove the oil filter adapter.**

- Discard the gasket.

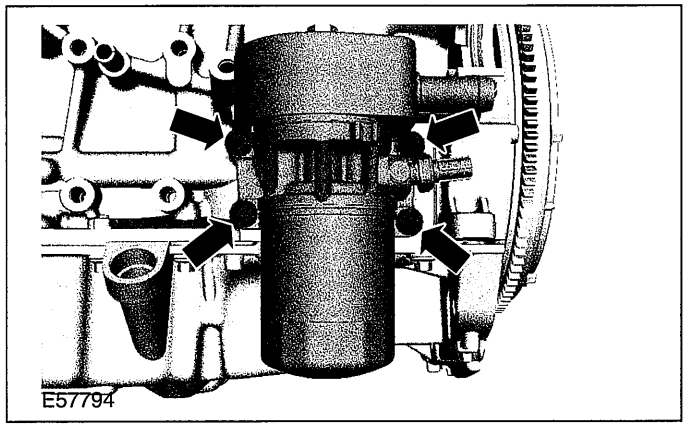


**58. Remove the clutch disc and pressure plate.**

**For additional information, refer to: Clutch Disc and Pressure Plate (308-01 Clutch, Removal and Installation).**

**59. Using the special tool, lock the flywheel in position.**

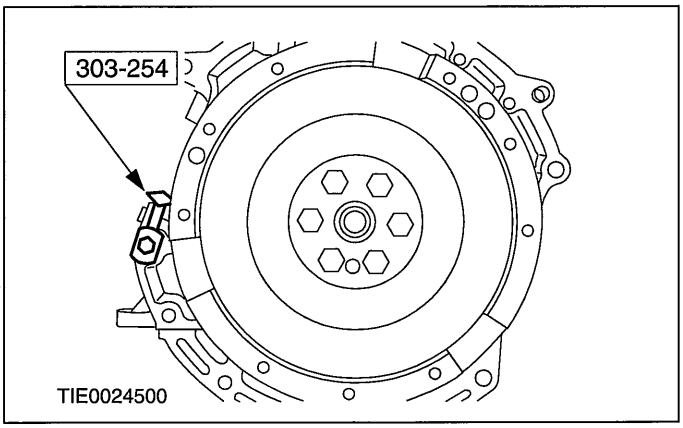


**60. Remove the flywheel.**

- Discard the bolts.

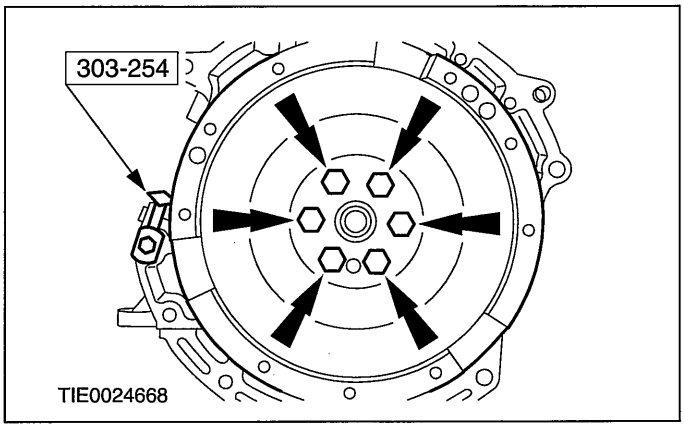


**61. Remove the special tool.**

**62. Remove the oil pan.**

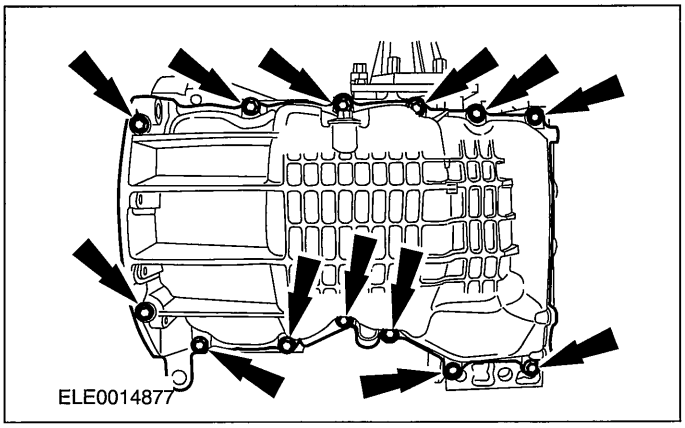


**63. Remove the crankshaft rear seal carrier.**

## DISASSEMBLY

- Discard the seal carrier.

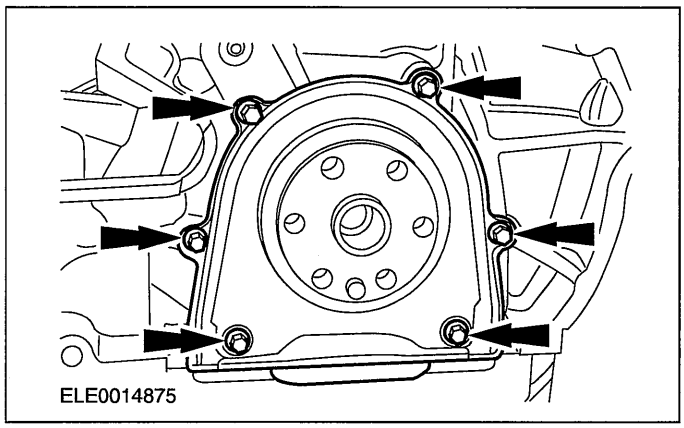


**64. Remove the oil pump.**

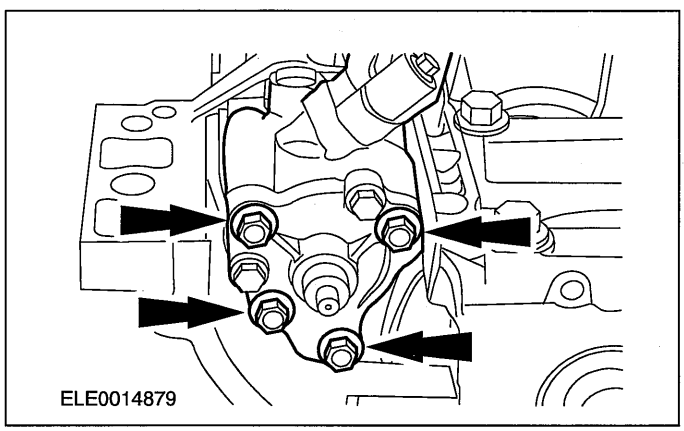

## ASSEMBLY

# Engine(21 134 8)

### Special Tool(s)

| | |
|---|---|
| 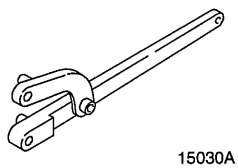 15030A | Universal Flange Holding Wrench 205-072 (15-030A) |
| 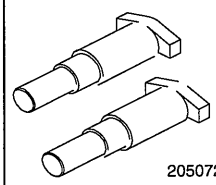 20507202 | Adapter for 205-072 205-072-02 (15-030A-02) |
| 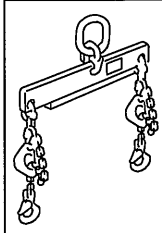 21068A | Lifting Bracket, Engine 303-122 (21-068A) |
| 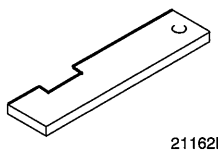 21162B | Alignment Plate, Camshaft 303-376A (21-162B) |
| 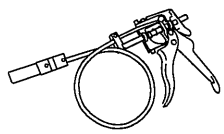 24003 | Remover/Installer, Hose Clamp 303-397 (24-003) |
| 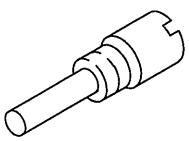 PZ21210 | Timing Peg, Crankshaft TDC 303-507 (21-210) |

### Special Tool(s)

| | |
|---|---|
| 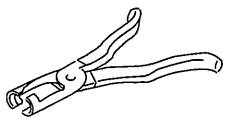 21211 | Pliers, Valve Stem Seal 303-508 (21-211) |

### General Equipment

| |
|---|
| Engine hoist |
| M6 x 18 mm bolt |
| Straight edge |

### Materials

| Name | Specification |
|---|---|
| Silicone Sealant | WSE-M4G323-A4 |
| Hypoid Gear Oil | SQM-2C9002-AA |

## Assembly

**1. Install the oil pump.**

- Tighten the bolts in the sequence shown in two stages.
- Stage 1: 10 Nm.
- Stage 2: 23 Nm.

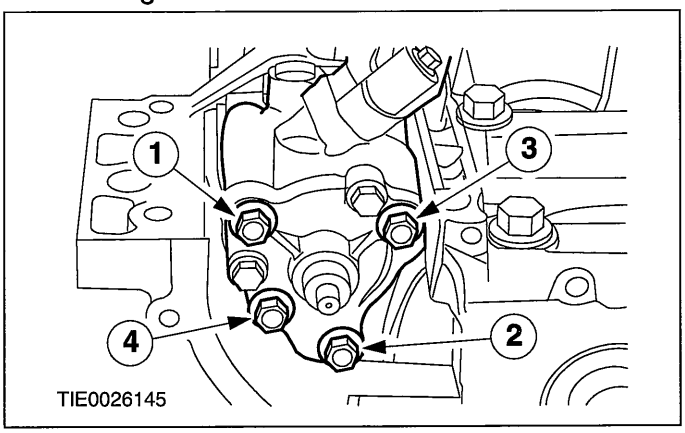


**2. ⚠CAUTION:Do not remove the the installation sleeve before installation.**

**NOTE:**A new crankshaft rear seal carrier is supplied preassembled with an installation sleeve that must be removed following installation.

**NOTE:**Install a new crankshaft rear seal carrier.

**Install the crankshaft rear seal carrier.**

## ASSEMBLY

- Tighten the bolts in the sequence shown.

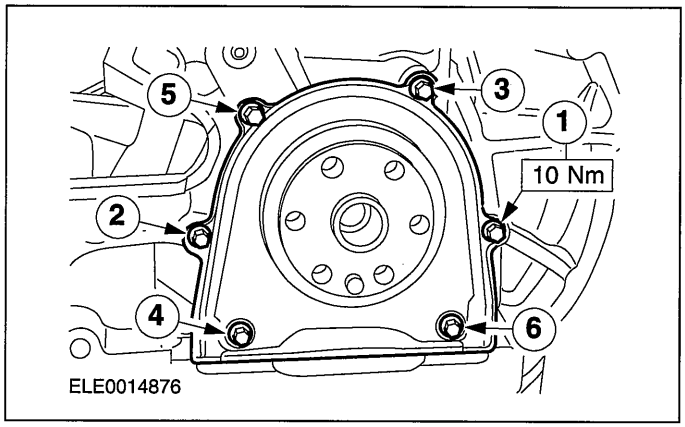


3. **Clean the mating faces of the cylinder block and the oil pan with a suitable metal surface cleaner.**
4. **NOTE:Install the oil pan within 10 minutes of applying the sealant and tighten the retaining bolts within a further 5 minutes.**

   **Apply a 3 mm bead of sealant to the oil pan.**

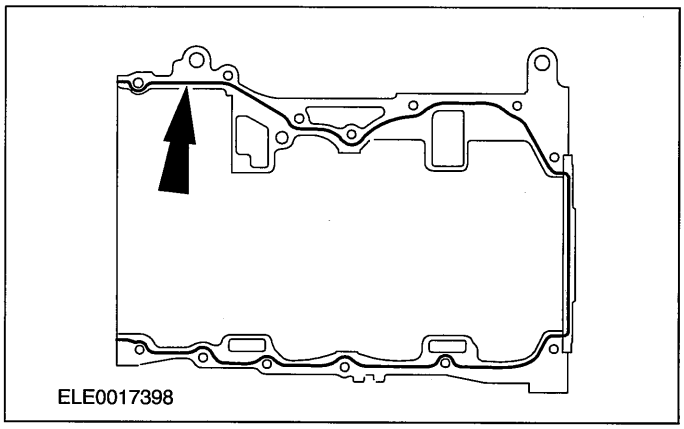


5. **Using a suitable straight edge, align the oil pan to the cylinder block mating face on the timing chain side.**
6. **Tighten the oil pan retaining bolts.**
   - Tighten the bolts in the sequence shown.

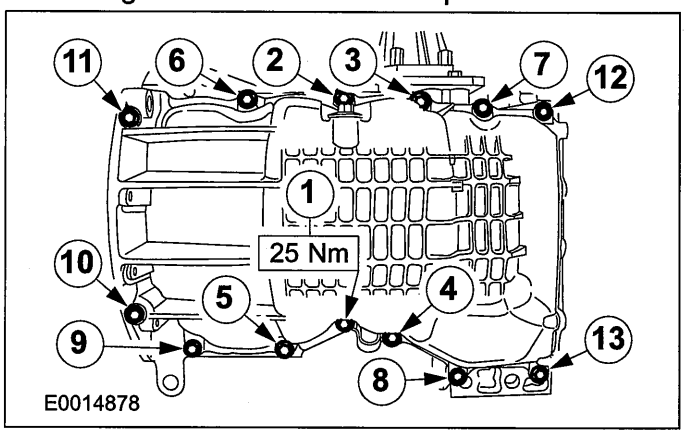


7. **NOTE:Install new flywheel bolts.**

   **Install the flywheel.**

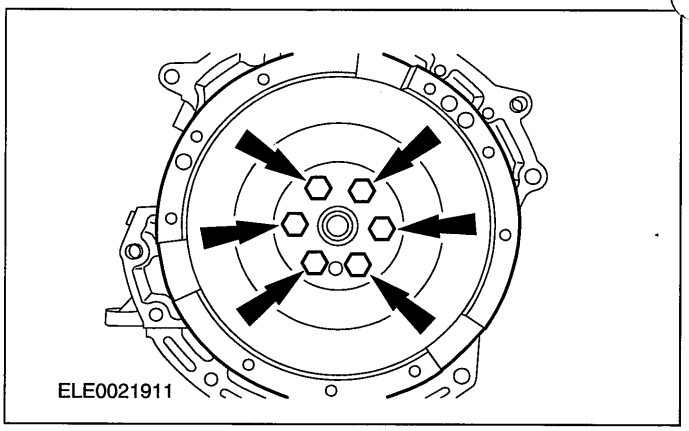


8. **Using the special tool, lock the flywheel in position.**

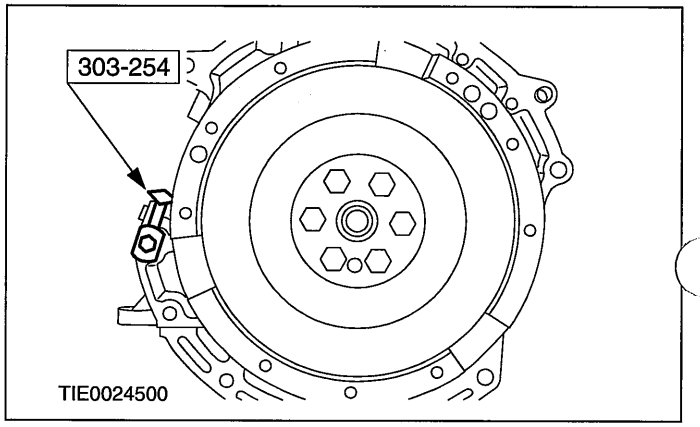


9. **Tighten the flywheel bolts.**
   - Tighten the bolts in the sequence shown in three stages.
   - Stage 1: 50 Nm.
   - Stage 2: 80 Nm.
   - Stage 3: 112 Nm.

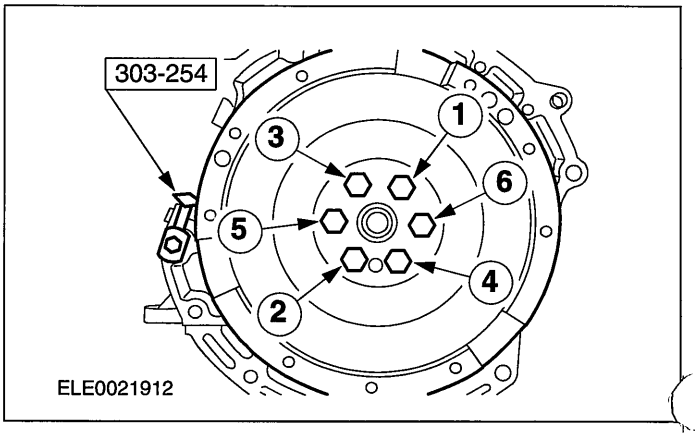


10. **Remove the special tool.**

## ASSEMBLY

11. **Install the clutch disc and pressure plate.**

    **For additional information, refer to: Clutch Disc and Pressure Plate (308-01 Clutch, Removal and Installation).**

12. **NOTE:Install a new oil filter adapter gasket.**

    **Install the oil filter adapter.**

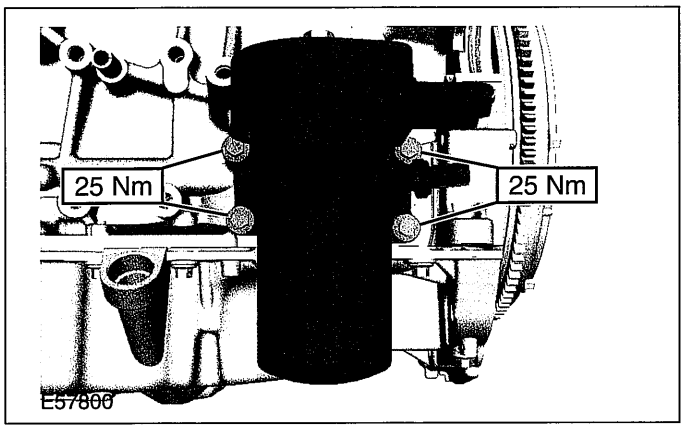


13. **Install the crankcase vent oil separator.**

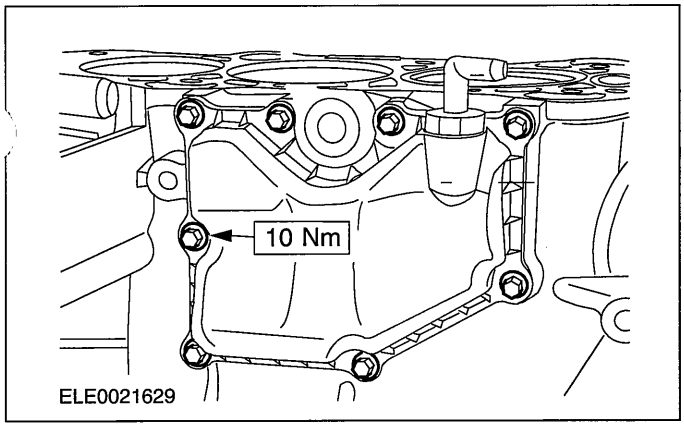


14. **NOTE:Rotate the knock sensor (KS) as far counter-clockwise as possible without it touching the crankcase vent oil separator.**

    **Install the KS.**

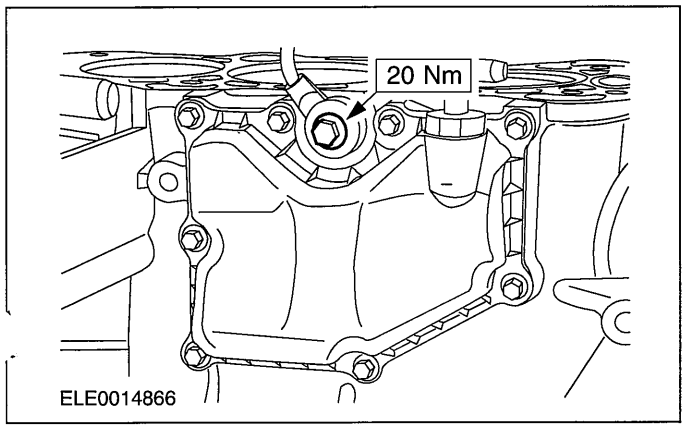


15. **NOTE:Install a new thermostat housing gasket.**

    **Install the thermostat housing.**

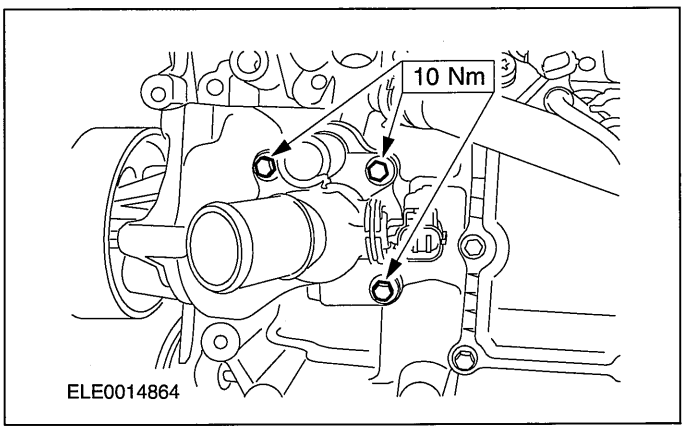


16. **NOTE:Install a new coolant pump O-ring.**

    **Install the coolant pump.**

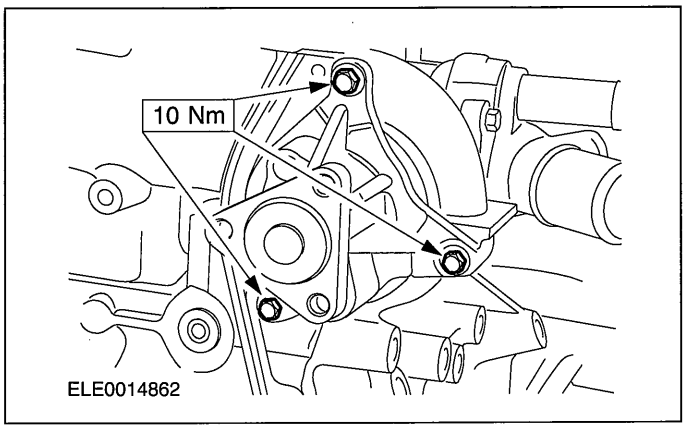


17. **NOTE:Install new cylinder head bolts and gasket.**

    **Install the cylinder head.**

- Tighten the cylinder head bolts in five stages.
- Stage 1: 5 Nm.
- Stage 2: 15 Nm.
- Stage 3: 45 Nm.
- Stage 4: 90 degrees.

## ASSEMBLY

- Stage 5: 90 degrees.

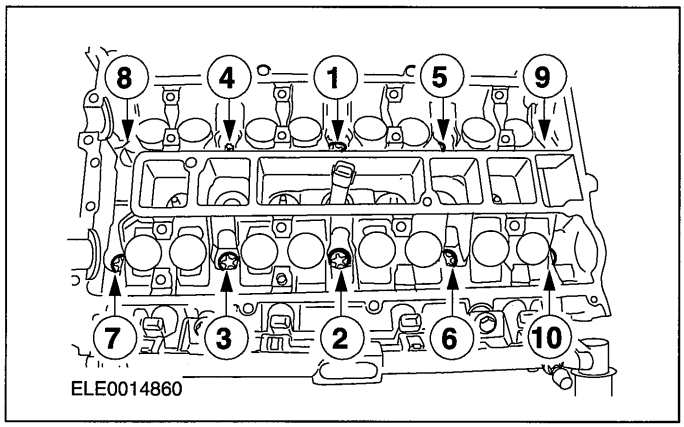


- Stage 2: 16 Nm.

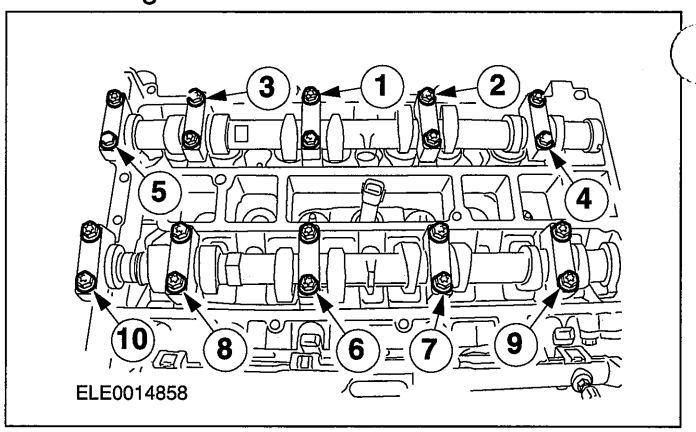


**18. NOTE:Only rotate the crankshaft in its normal direction of rotation.**

**Rotate the crankshaft until piston No. 1 is approximately 45 degrees before top dead center (TDC).**

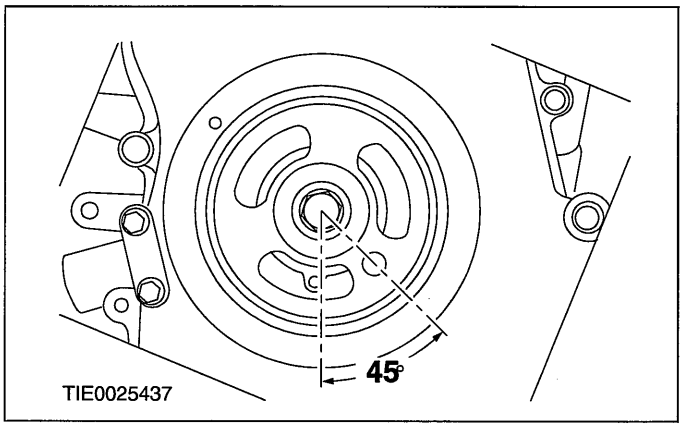


**19. Install the valve tappets.**

**20. ⚠CAUTION:Install the camshafts approximately at valve overlap position on cylinder No. 4.**

**Install the camshafts.**

- Working in several stages, evenly tighten the camshaft bearing cap bolts in the sequence shown, one half turn at a time.
- Coat the camshaft bearing caps with oil.
- Tighten the bolts in two stages.
- Stage 1: 7 Nm.

**21. Install the special tool.**

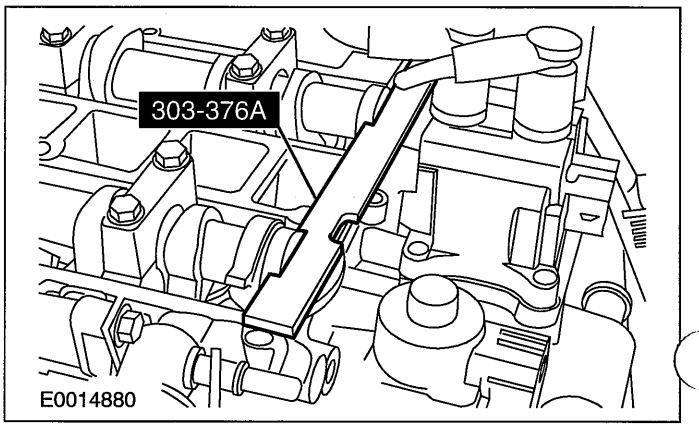


**22. NOTE:Install a new rear friction washer.**

**Install the rear friction washer.**

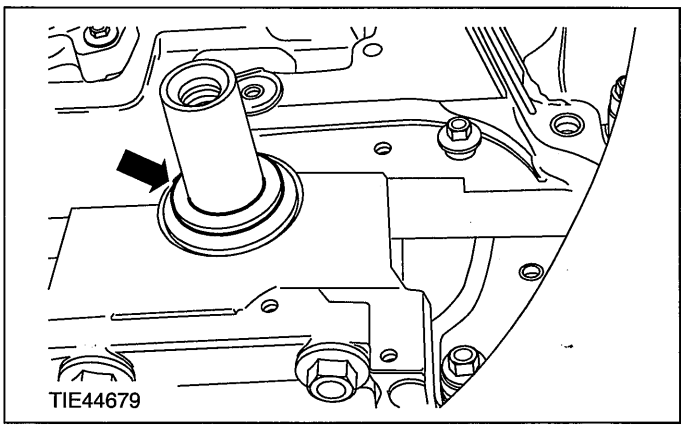

## ASSEMBLY

**23. Install the crankshaft sprocket.**

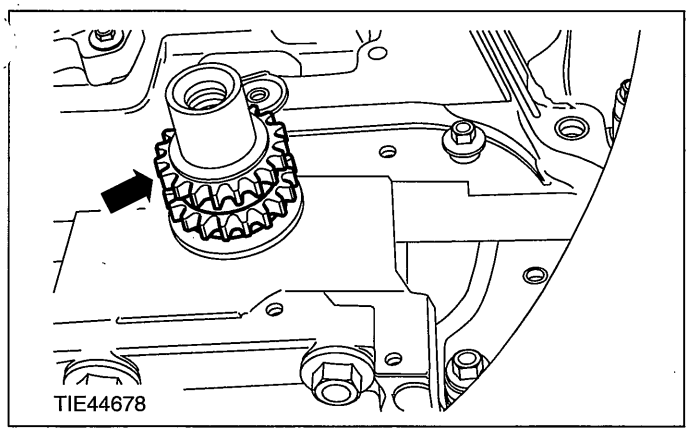


**24. NOTE:Install a new front friction washer.**

**Install the front friction washer.**

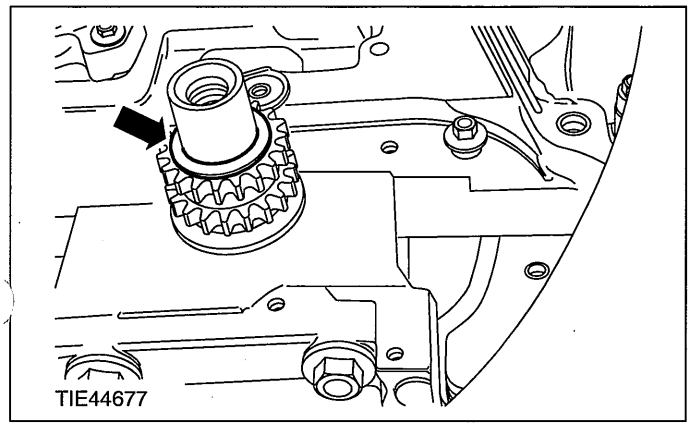


**25. Install the oil pump chain.**

1. Install the oil pump chain and the oil pump sprocket.
2. Install the oil pump sprocket retaining bolt.

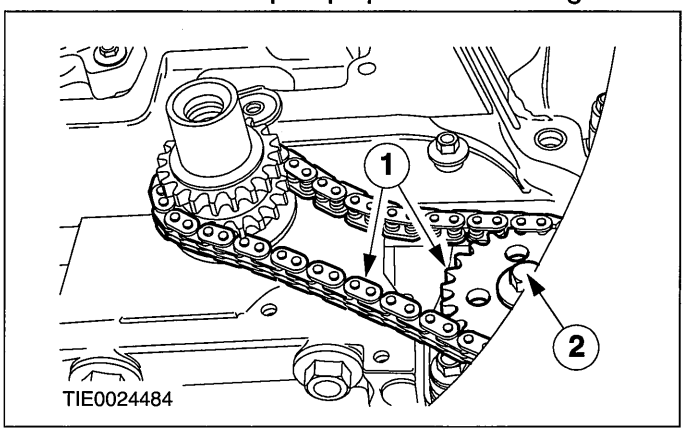


**26. Using the special tools, tighten the oil pump sprocket retaining bolt.**

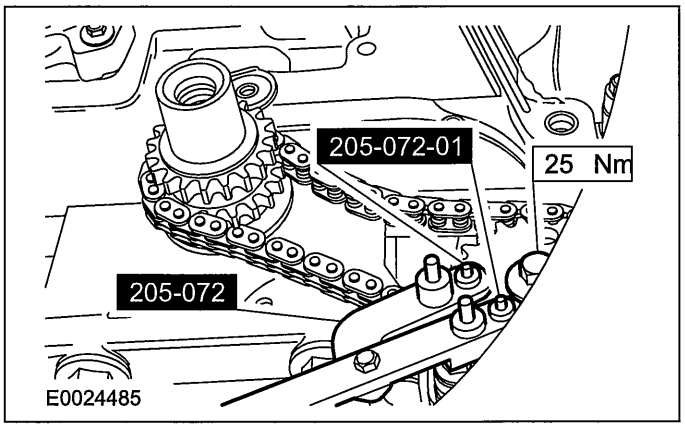


**27. Install the oil pump chain tensioner.**

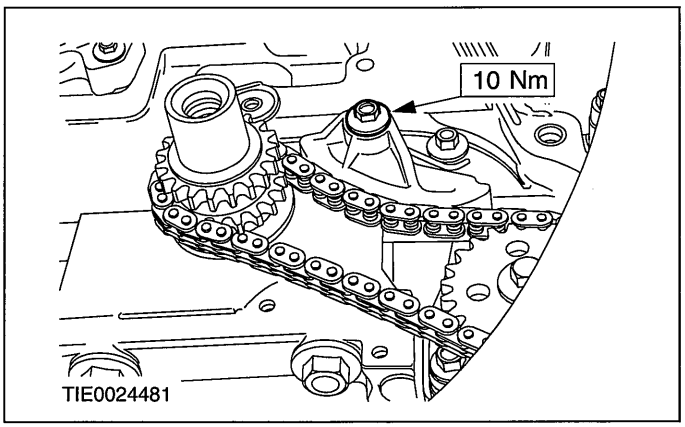


**28. Install the oil pump chain guide.**

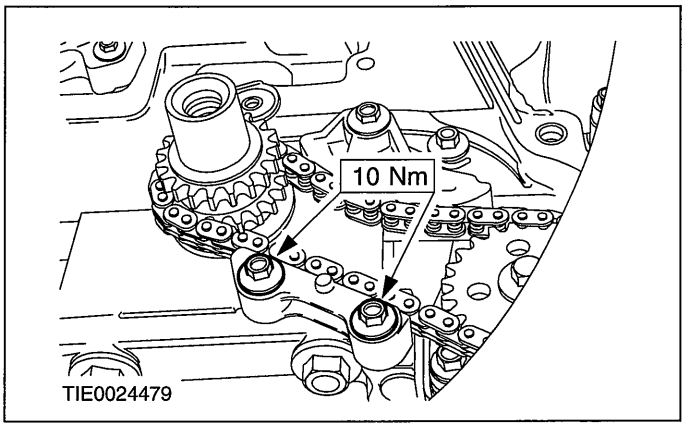

## ASSEMBLY

**29. Install the timing chain tensioner.**

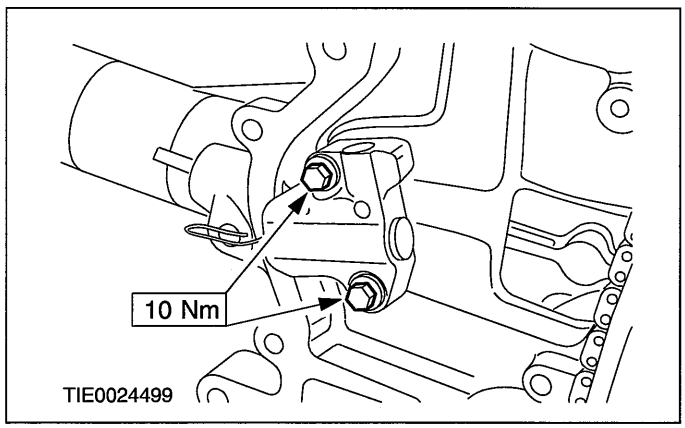


**30. Install the timing chain guides.**

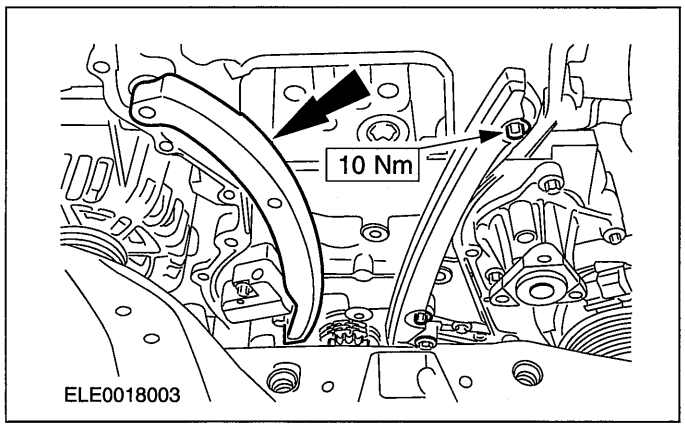


**31. ⚠CAUTION:Do not fully tighten the camshaft sprocket retaining bolts at this stage. Make sure the camshaft sprockets turn on the camshafts.**

**Install the camshaft sprockets.**

- Install the timing chain.

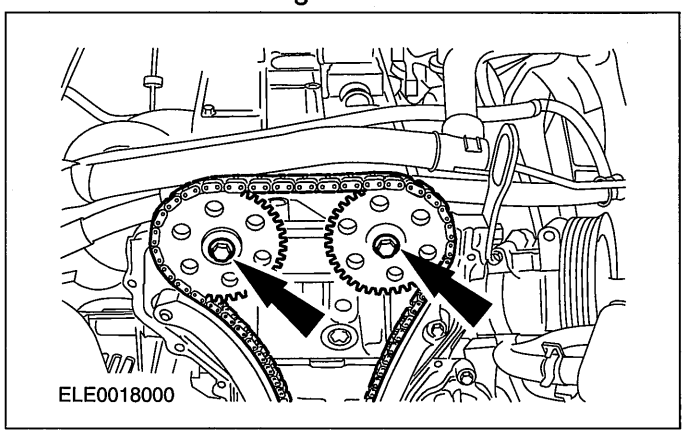


**32. Tension the timing chain.**

- Apply pressure to the timing chain and remove the securing pin.

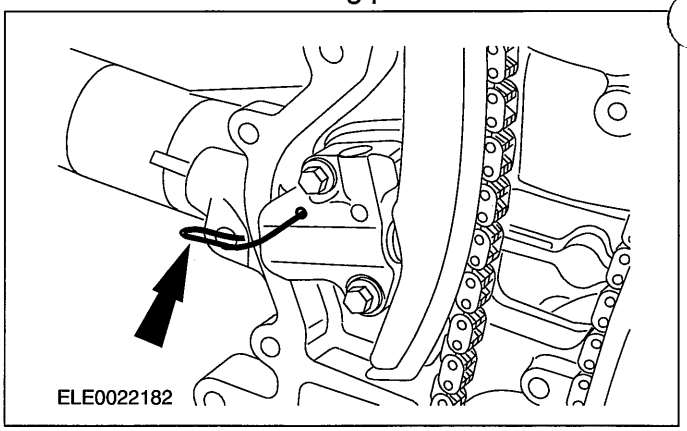


**33. ⚠CAUTION:Hold each camshaft by the hexagon with an open-ended wrench to stop it from turning.**

**Tighten the camshaft sprockets retaining bolts.**

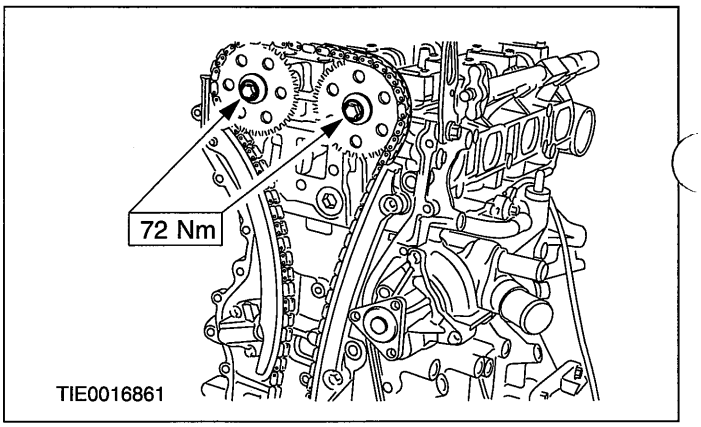


**34. Clean the mating face of the engine front cover with a suitable metal surface cleaner.**

**35. NOTE:Install the engine front cover within 10 minutes of applying the sealant.**

## ASSEMBLY

**Apply a 3 mm bead of sealant to the engine front cover.**

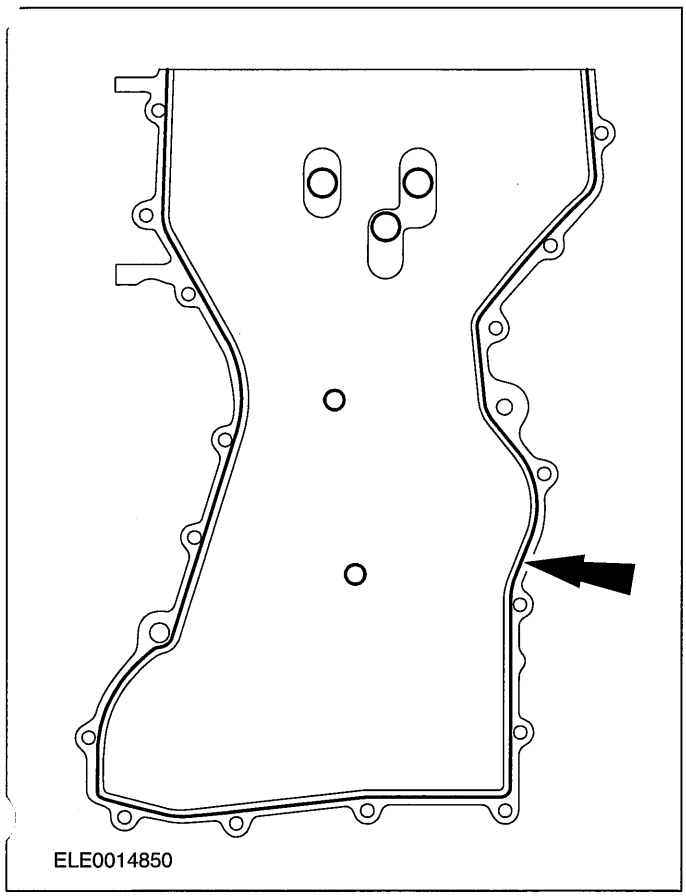


**36. Install the engine front cover.**

- Tighten the bolts in the sequence shown.
- Tighten bolts 1 through 8 to 10 Nm.
- Tighten bolt 9 to 48 Nm.
- Tighten bolts 10 through 19 to 10 Nm.
- Tighten bolts 20 through 22 to 48 Nm.

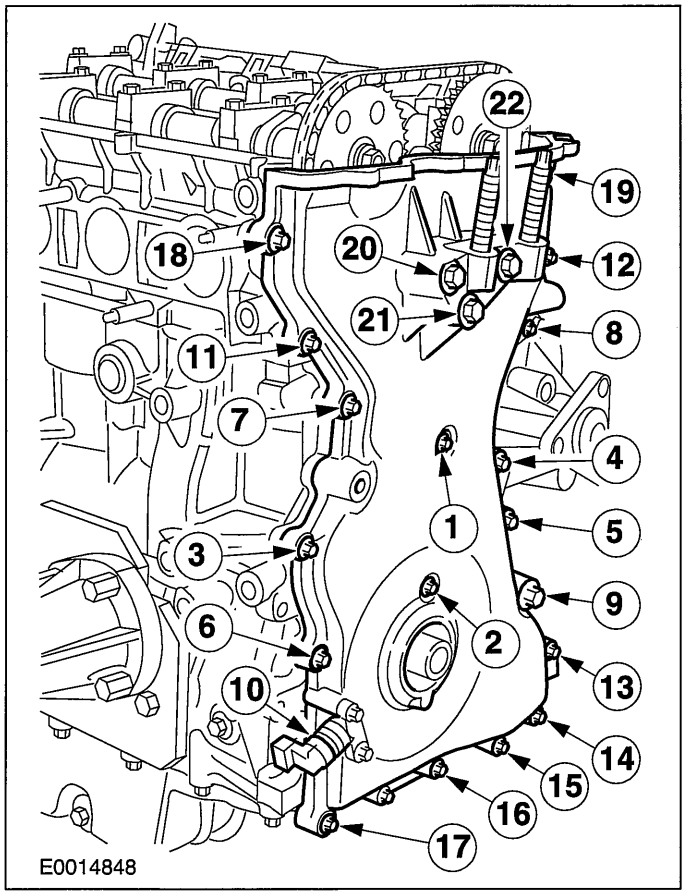


**37. Remove the cylinder block lower blanking plug from the cylinder block and install the special tool.**

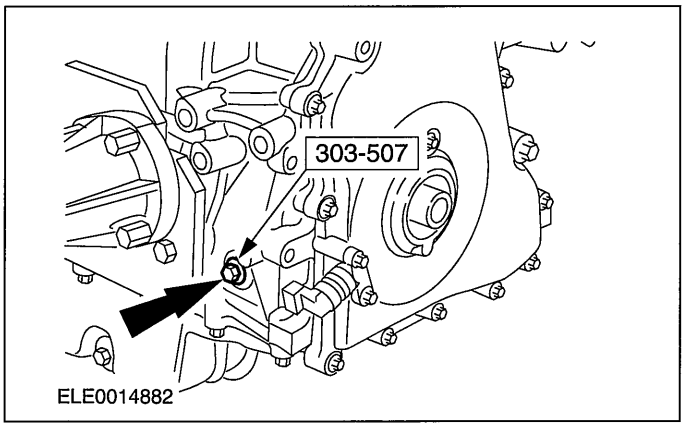


**38. NOTE:Only rotate the crankshaft in the normal direction of rotation.**

## ASSEMBLY

**Using the crankshaft pulley retaining bolt, rotate the crankshaft until piston No. 1 is at TDC.**

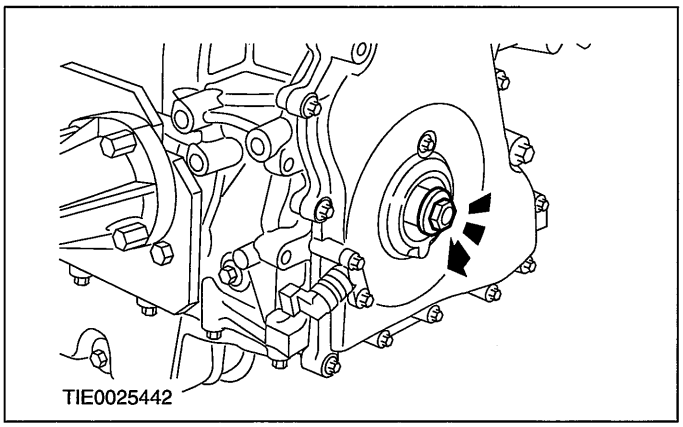


**39. Remove the crankshaft pulley retaining bolt.**

- Discard the bolt.

**40. ⚠CAUTION:Only tighten the crankshaft pulley securing bolt finger tight.**

**Install the crankshaft pulley onto the crankshaft and secure the crankshaft pulley to the front cover using a M6 x 18 mm bolt.**

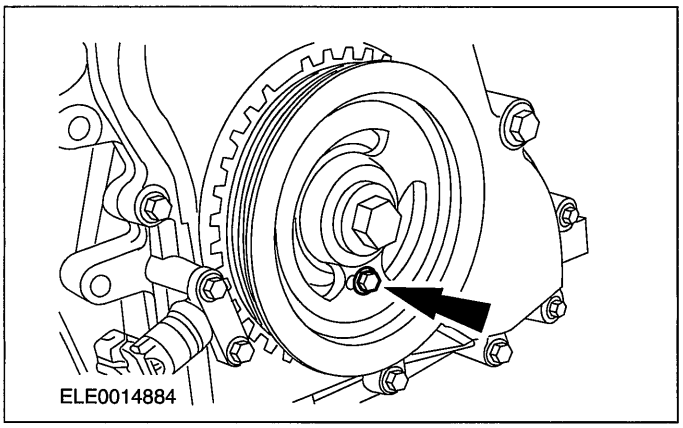


**41. NOTE:Install a new crankshaft pulley retaining bolt.**

**Using the special tools, prevent the crankshaft pulley from rotating and tighten the crankshaft pulley retaining bolt.**

- Tighten the bolt in two stages.
- Stage 1: 100 Nm.
- Stage 2: 90 degrees.

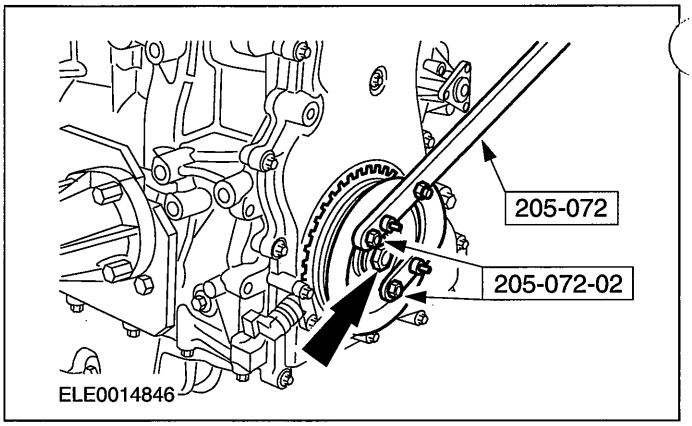


**42. Remove the crankshaft pulley securing bolt.**

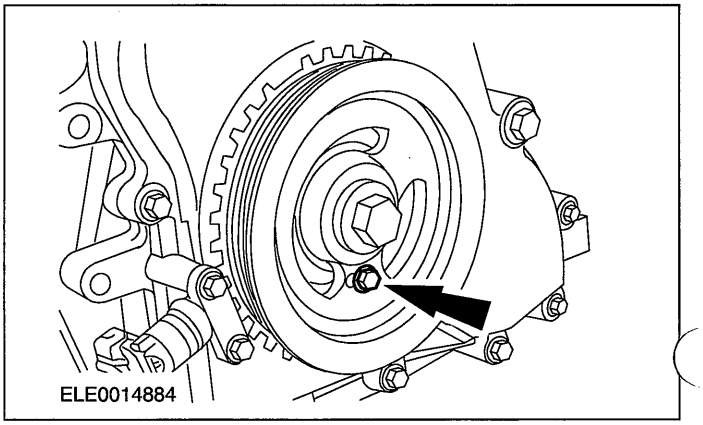


**43. Remove the special tool.**

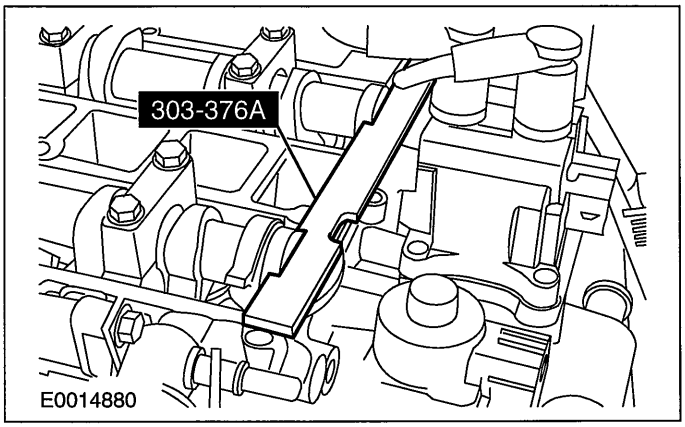

## ASSEMBLY

44. **Remove the special tool.**

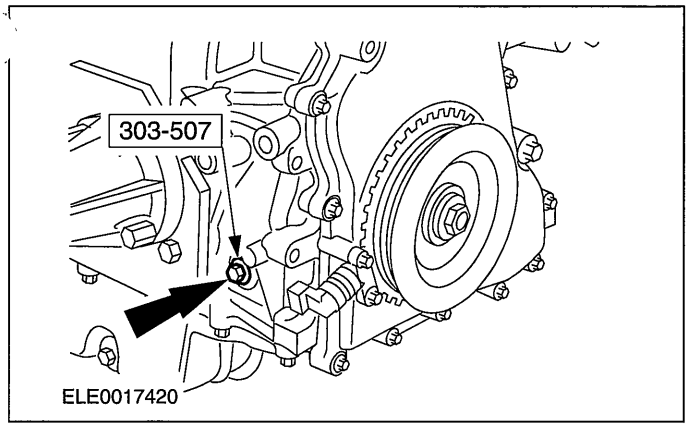


45. **NOTE:Only rotate the crankshaft in the normal direction of rotation.**

    **Rotate the crankshaft two revolutions.**

46. **Install the special tool.**

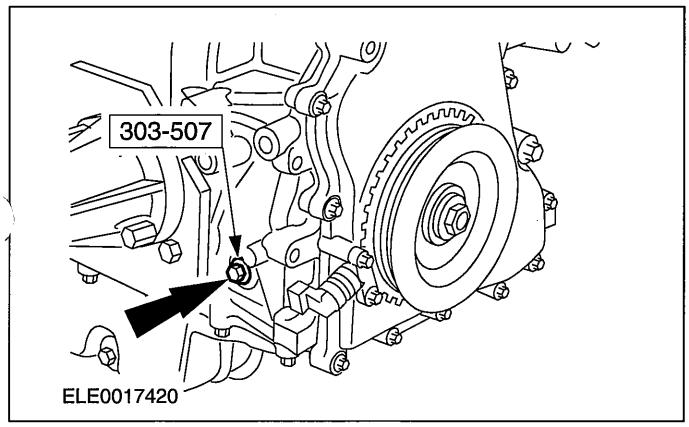


47. **NOTE:Only rotate the crankshaft in the normal direction of rotation.**

    **Rotate the crankshaft until piston No. 1 is at TDC.**

48. **⚠CAUTION:Only tighten the crankshaft pulley securing bolt finger tight.**

**NOTE:**If it is not possible to install the crankshaft pulley securing bolt, correct the engine timing.

**Using a M6 x 18 mm bolt, check the position of the crankshaft pulley.**

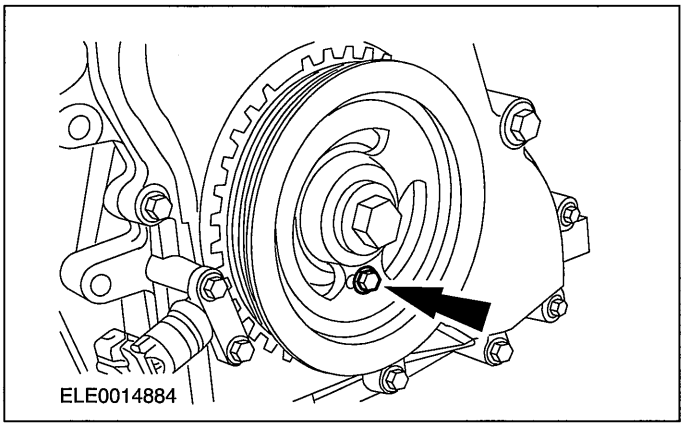


49. **NOTE:If it is not possible to install the special tool, correct the engine timing.**

    **Using the special tool, check the position of the camshafts.**

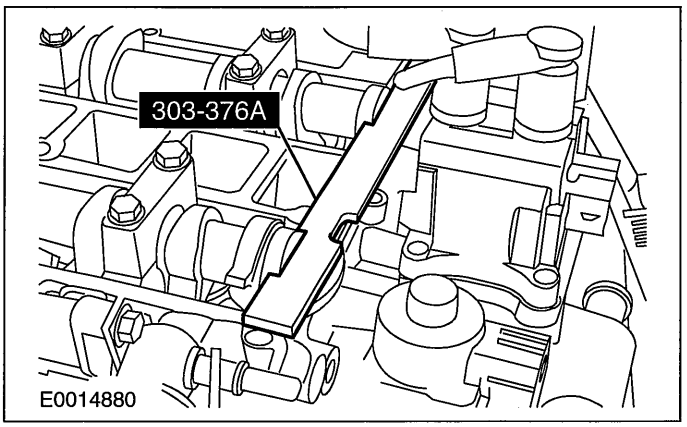


50. **Remove the special tool.**

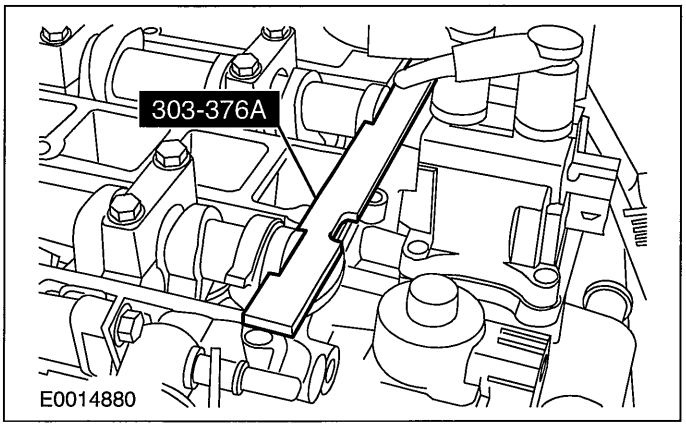

## ASSEMBLY

**51. Remove the crankshaft pulley securing bolt.**

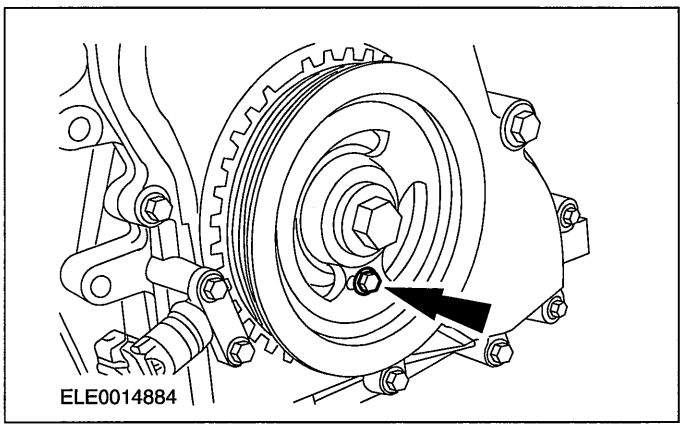


**52. Remove the special tool.**

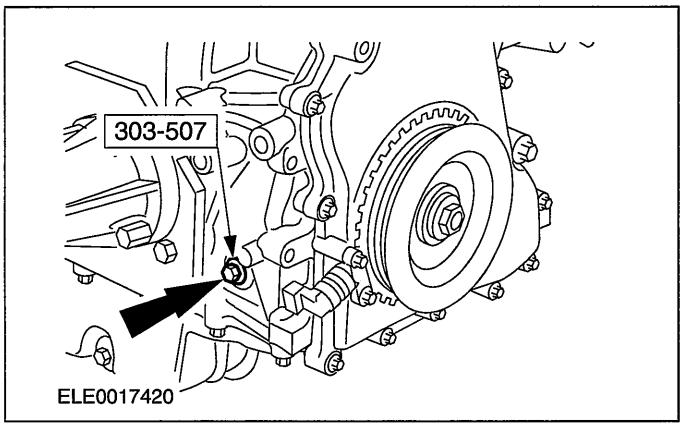


**53. Install the cylinder block lower blanking plug.**

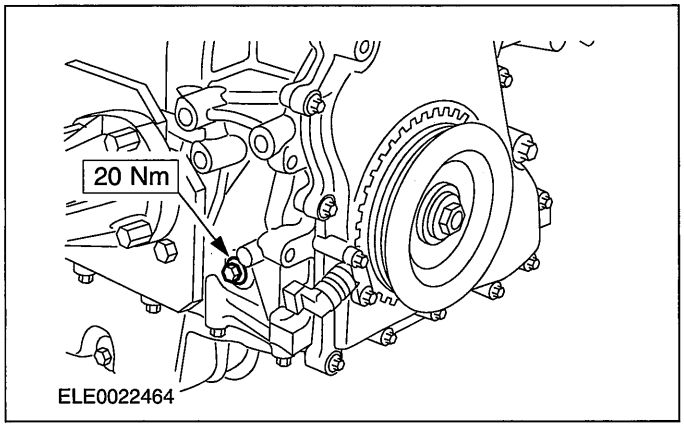


**54. NOTE:When installing a new crankshaft pulley or engine front cover, the crankshaft position (CKP) sensor must be aligned using the alignment tool supplied with the new component.**

**NOTE:**Do not tighten the bolts at this stage.

**Align the CKP sensor.**

1. Loosen the CKP sensor retaining bolts.
2. Insert the alignment tool supplied, so that it is hooked in the crankshaft pulley teeth.

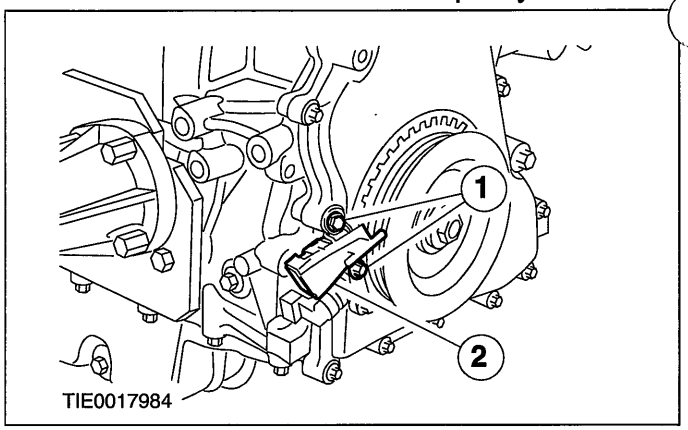


**55. Install the CKP sensor.**

1. Tighten the CKP sensor retaining bolts.
2. Remove the alignment tool.

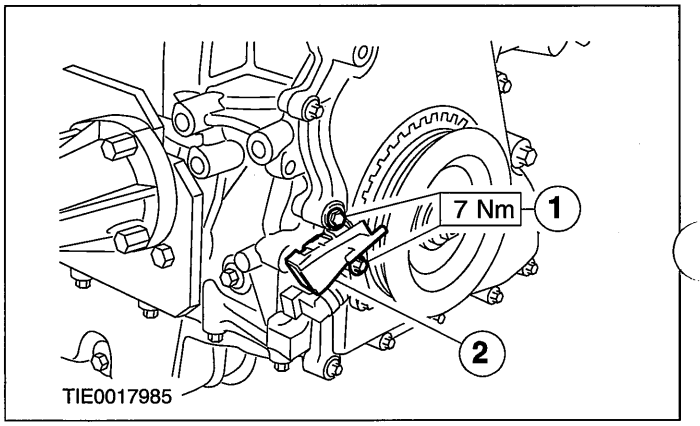


**56. Install the coolant pump pulley.**

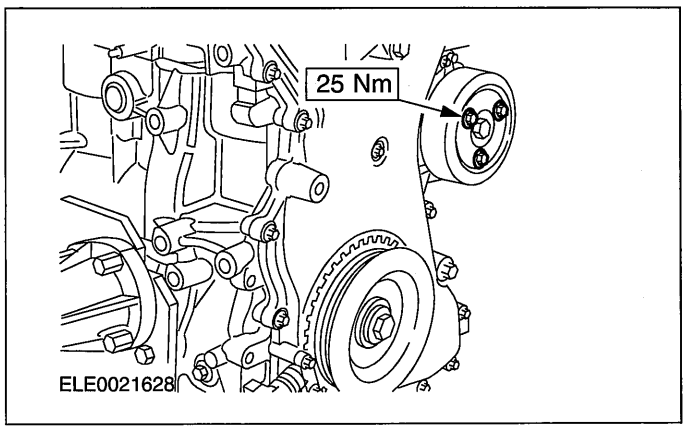

## ASSEMBLY

**57. Install the accessory drive belt idler pulley.**

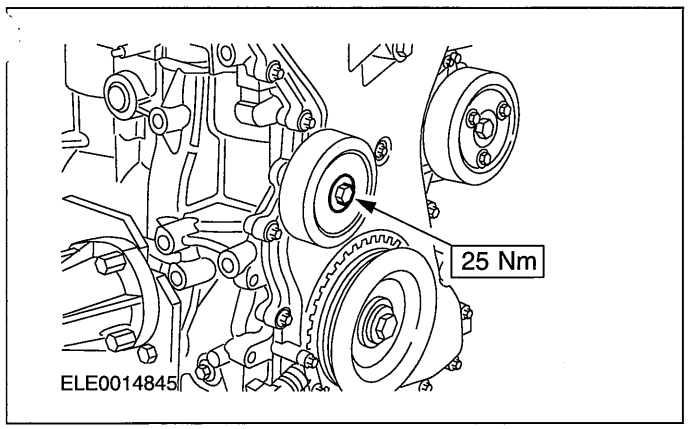


**58. Install the accessory drive belt tensioner.**

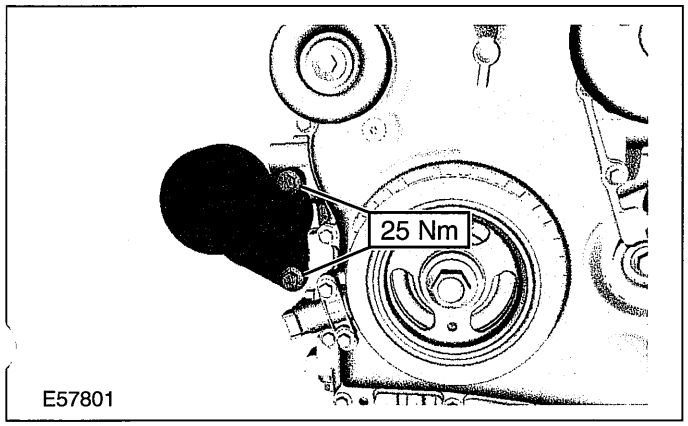


**59. Apply a small bead of sealant to the areas as shown.**

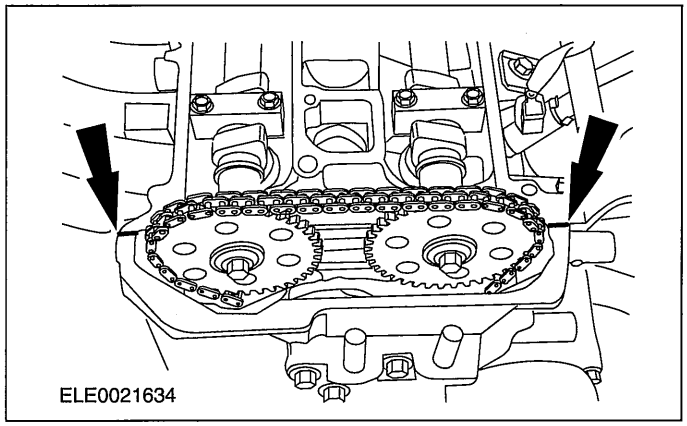


**60. NOTE:Install a new valve cover gasket if necessary.**

**Install the valve cover.**

- Tighten the bolts in the sequence shown.

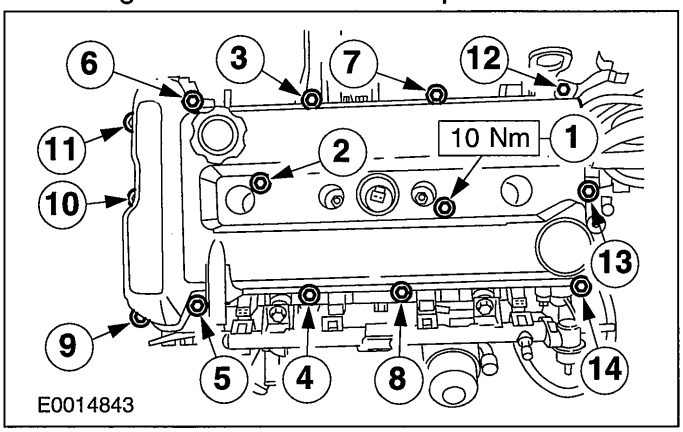


**61. Install the evaporative emission (EVAP) valve support bracket.**

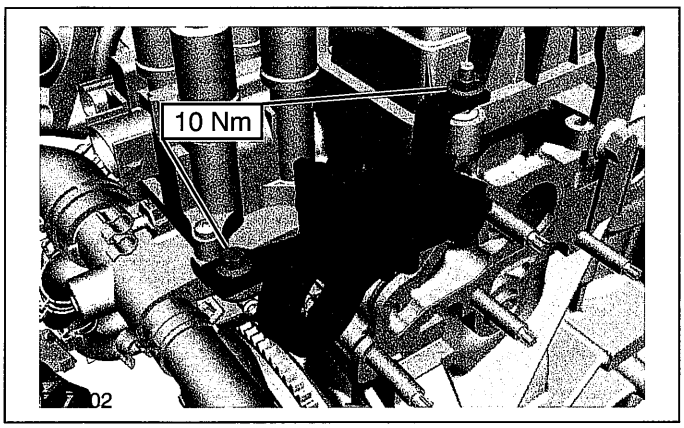


**62. Using the special tool, install the spark plugs.**

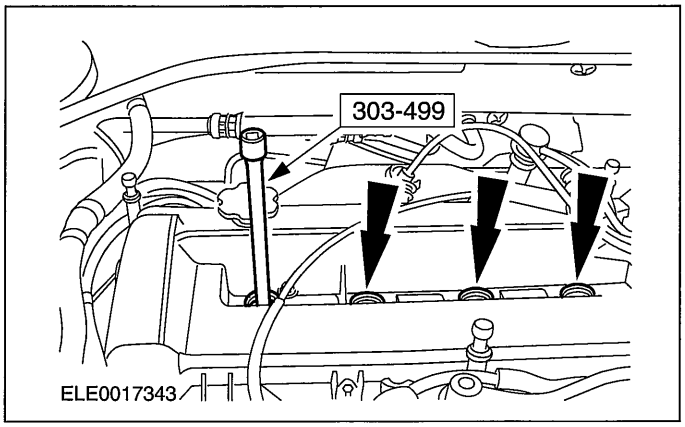

## ASSEMBLY

63. **Using the special tool, connect the spark plug electrical connectors.**

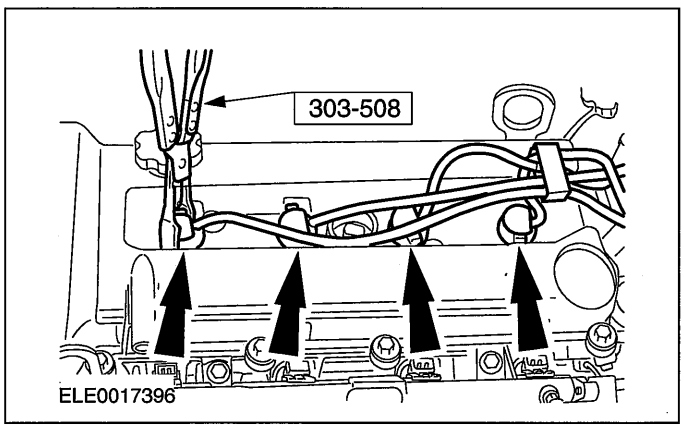


64. **Install the power steering pump.**

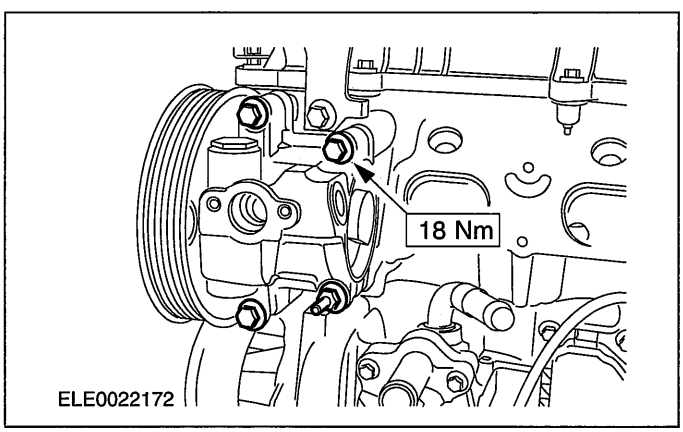


65. **Using the special tool, install the coolant hoses.**

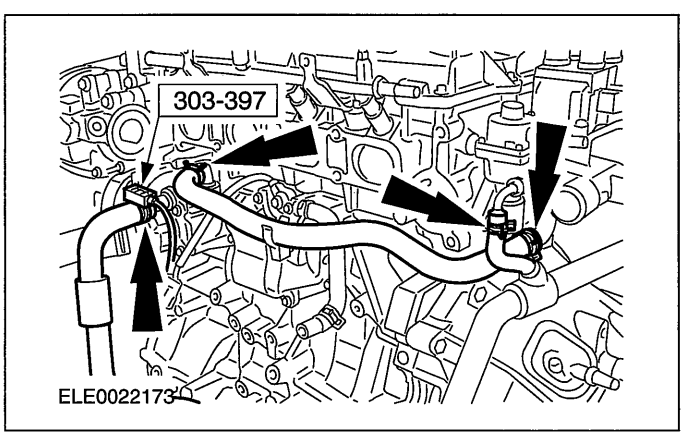


66. **Connect the positive crankcase ventilation (PCV) hose to the intake manifold.**

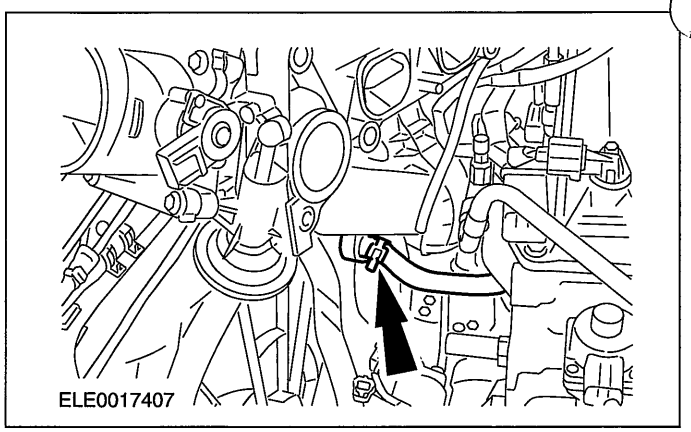


67. **Install the intake manifold.**

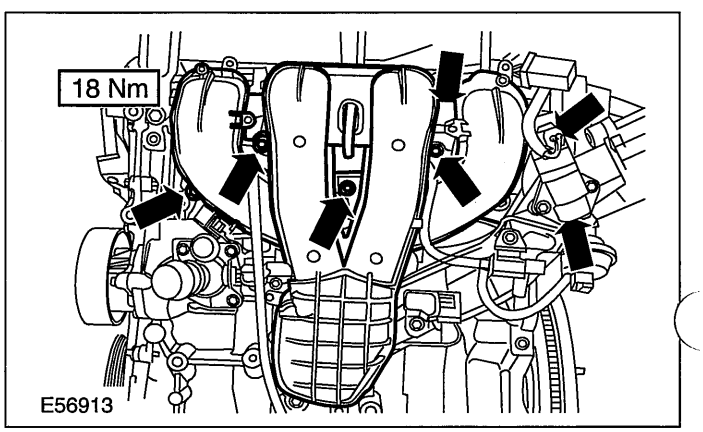


68. **Install the oil level indicator tube and oil level indicator.**

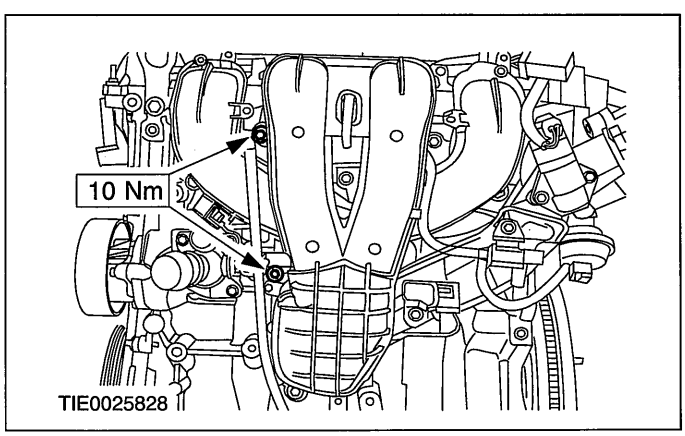


69. **NOTE:Install a new exhaust manifold gasket.**

**NOTE:**Do not tighten the exhaust manifold retaining nuts at this stage.

## ASSEMBLY

Install the exhaust manifold.

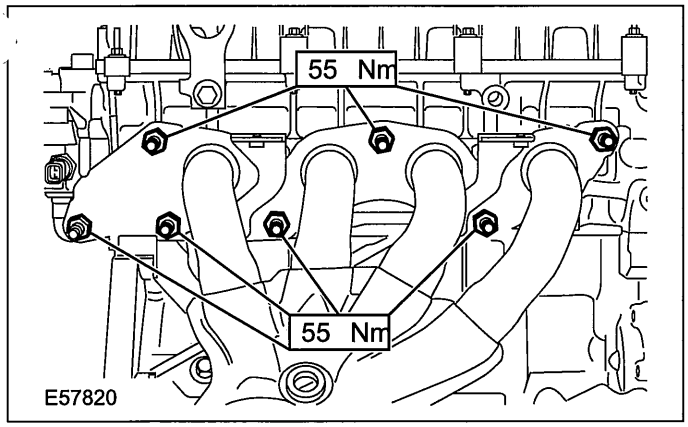


70. Install the exhaust manifold lower retaining bolts.

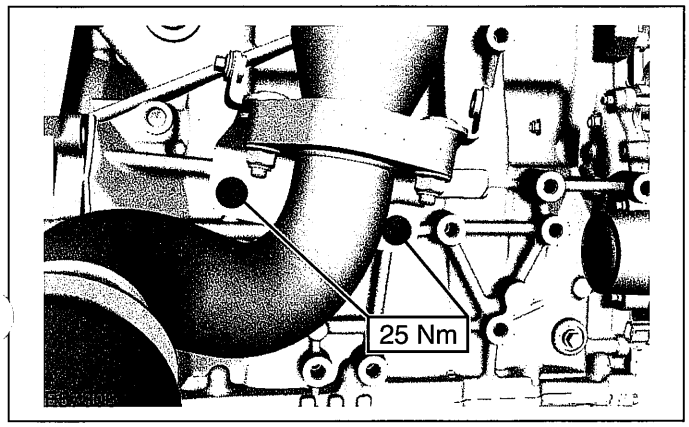


71. Connect the manifold absolute pressure (MAP) sensor electrical connector.

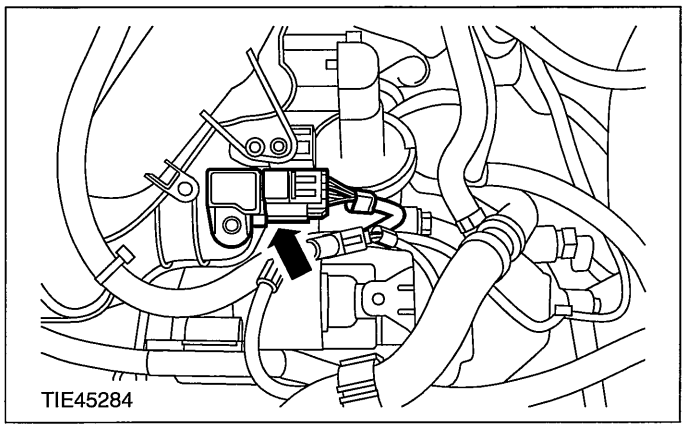


72. Attach the starter motor electrical connector to the intake manifold.

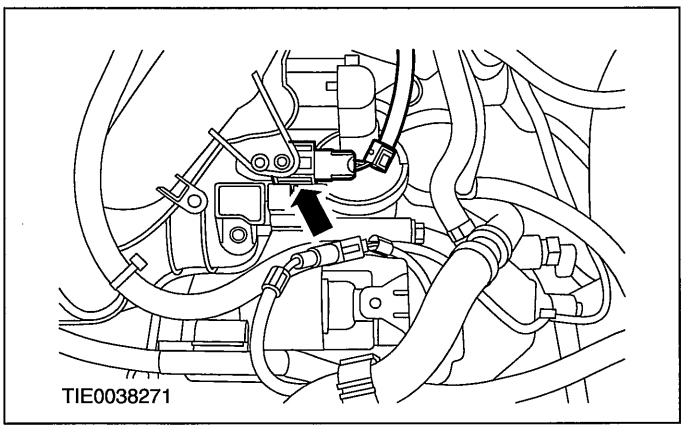


73. Connect the intake manifold runner control (IMRC) electrical connector.

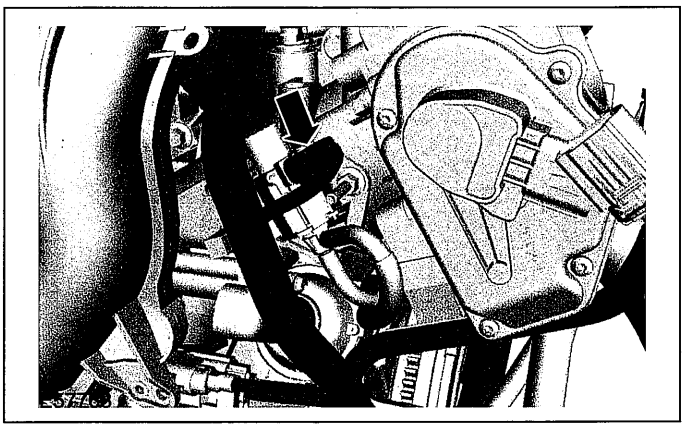

74. Connect the throttle body (TB) electrical connector.

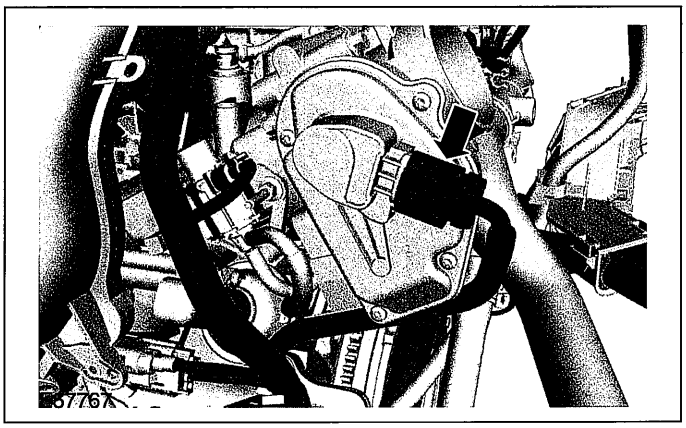

## ASSEMBLY

75. Connect the heated oxygen (H2OS) sensor electrical connector.

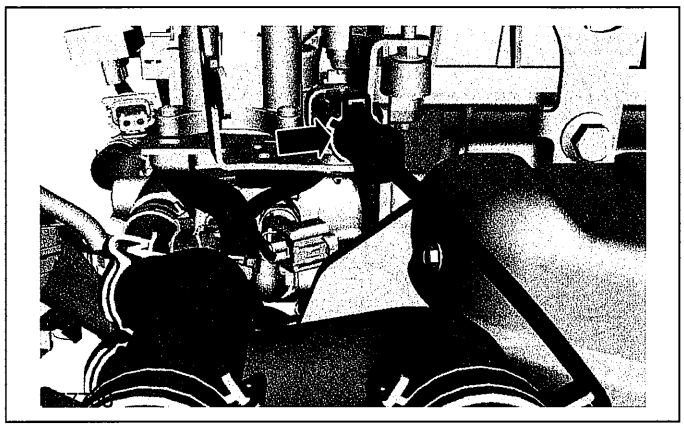

76. Connect the engine coolant temperature (ECT) sensor electrical connector.

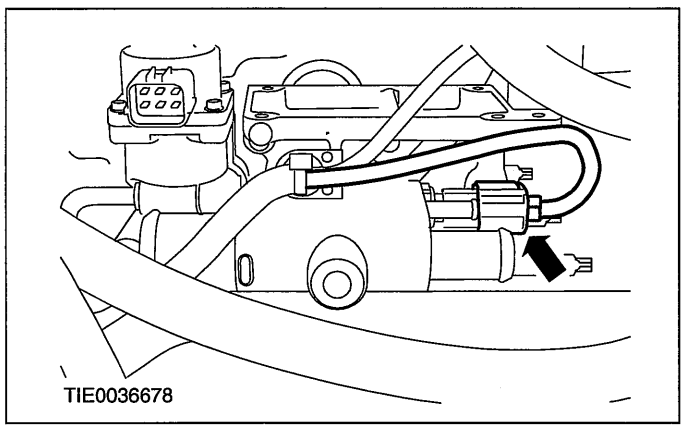


77. Connect the electronic ignition (EI) electrical connector.

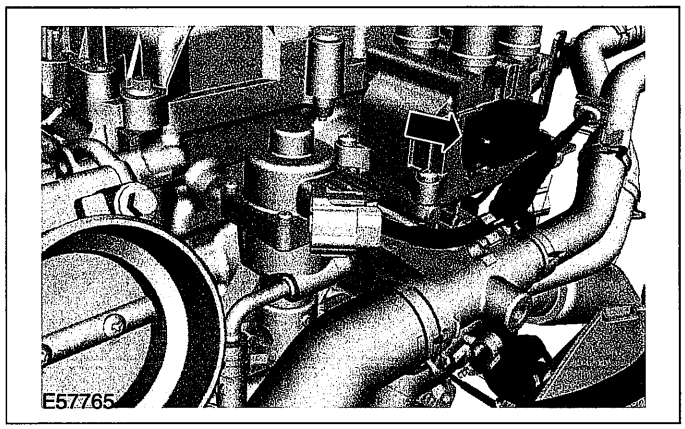


78. Connect the exhaust gas recirculation (EGR) valve electrical connector.

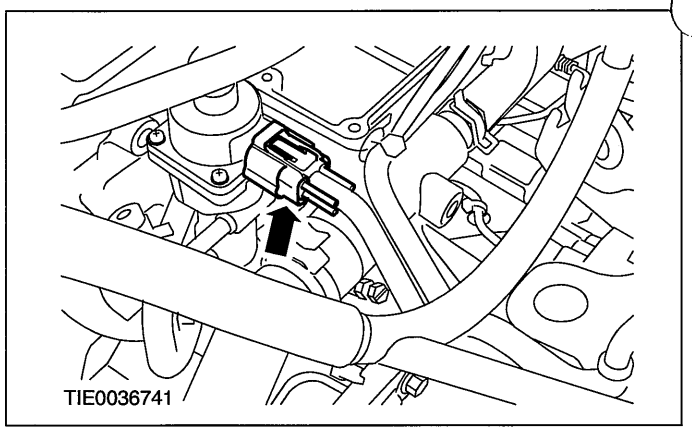


79. Connect the camshaft position (CMP) sensor electrical connector.

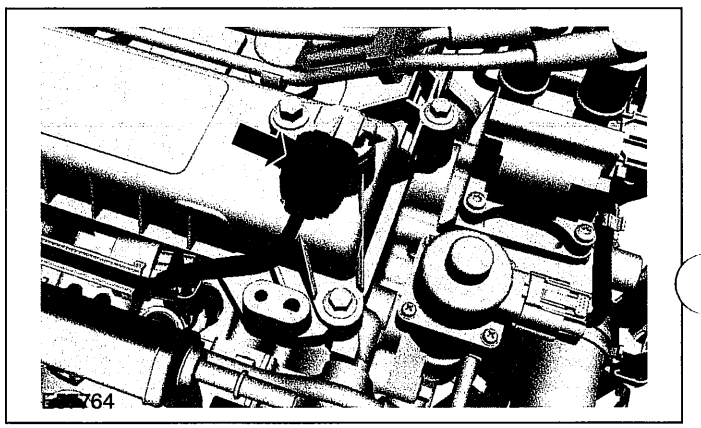


80. Connect the fuel injector electrical connectors.

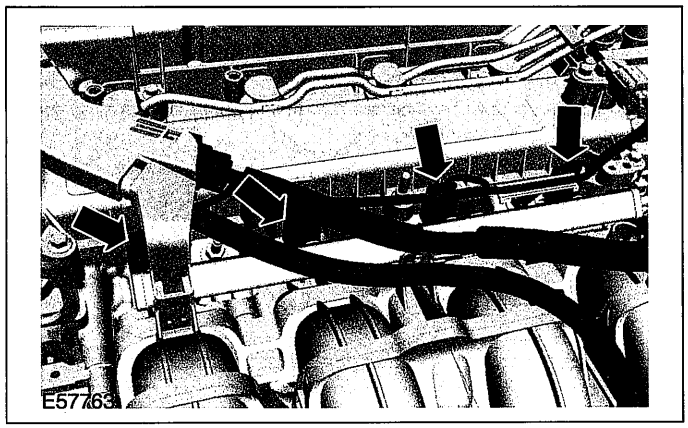

## ASSEMBLY

81. Connect the oil pressure switch electrical connector.

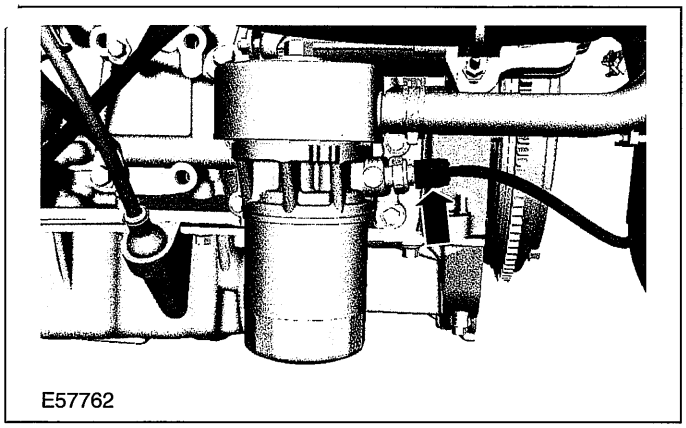


82. Connect the knock sensor (KS) electrical connector.

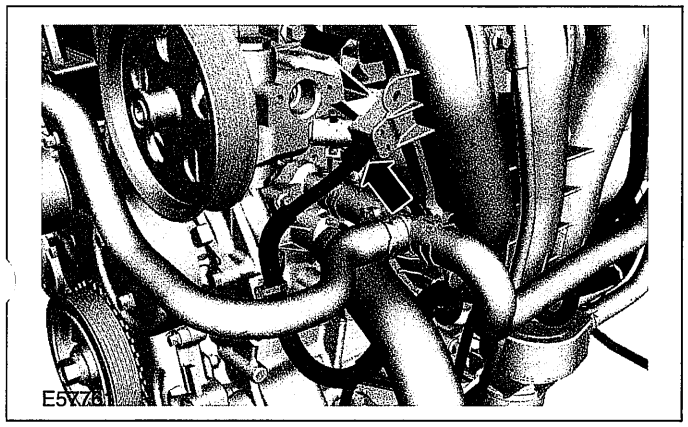


83. Attach the engine wiring harness bracket to the intake manifold.

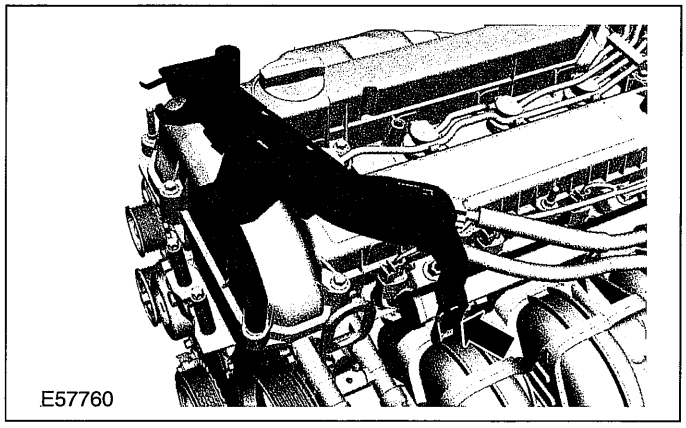


84. Fill the engine with engine oil.

For additional information, refer to:
Specifications (303-01 Engine - 2.0L Duratec-HE (MI4), Specifications).

85. Using the special tool and an engine hoist, support the engine.

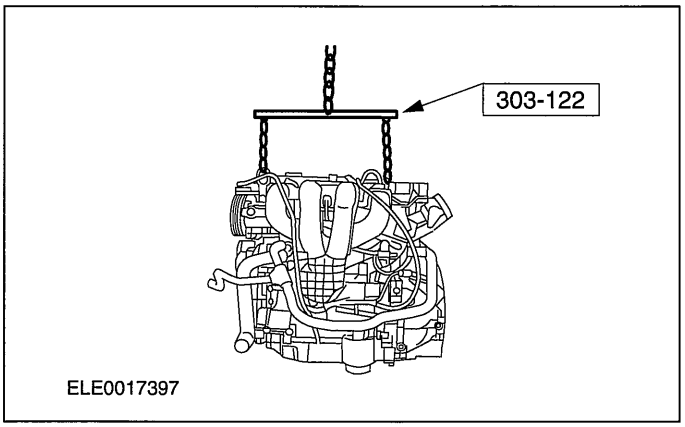


86. Remove the special tools.

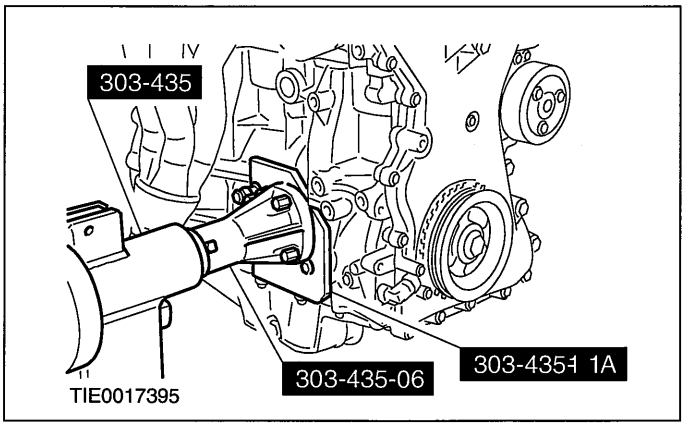


87. Install the generator.

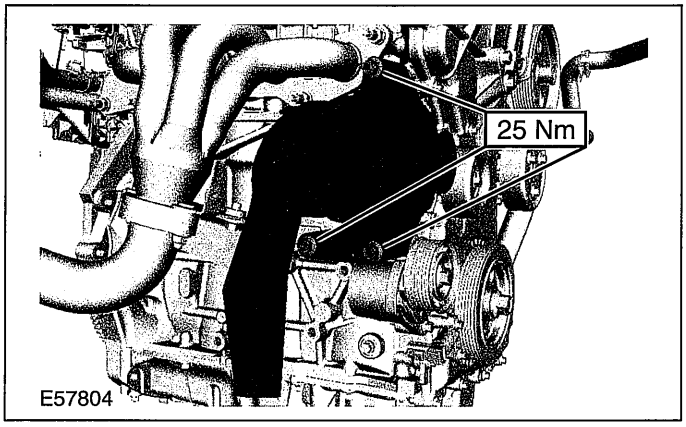

## ASSEMBLY

88. Connect the crankshaft position (CKP) sensor electrical connector.

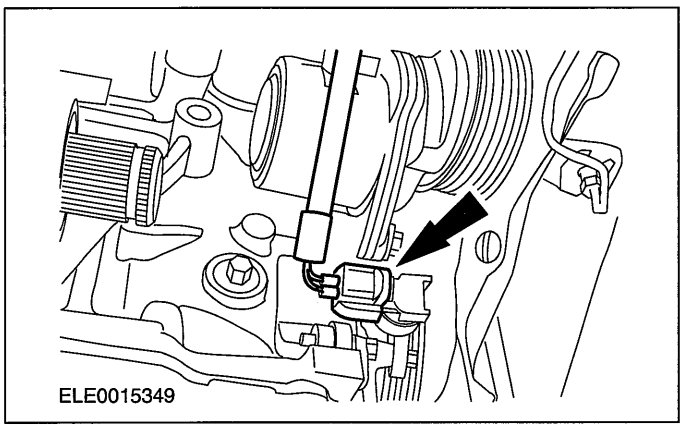


89. Install the exhaust manifold lower heat shield.

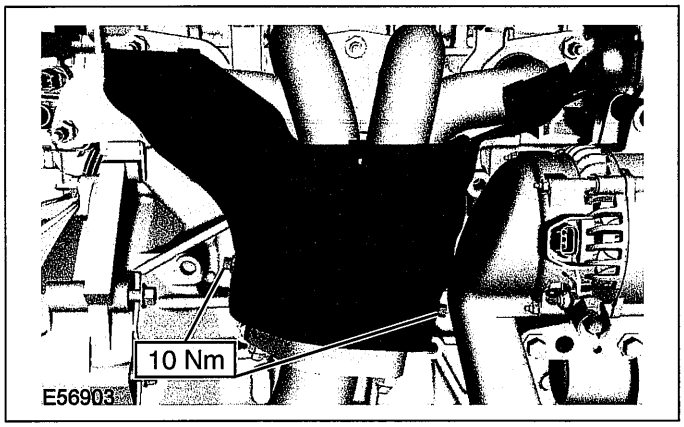


90. Install the exhaust manifold upper heat shield.

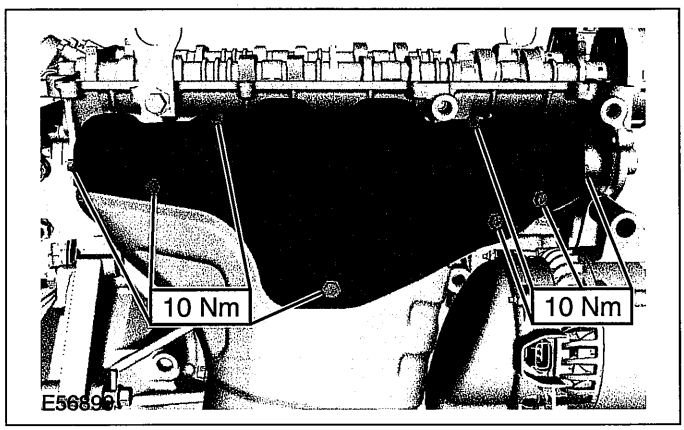


91. Connect the generator electrical connector.

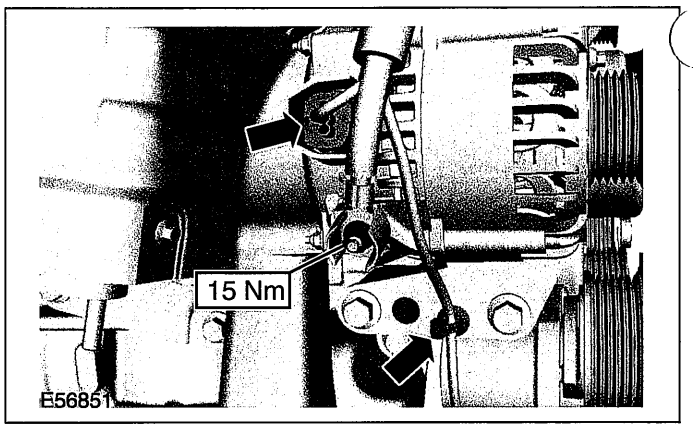

## INSTALLATION

# Engine

### Special Tool(s)

| | |
|---|---|
| 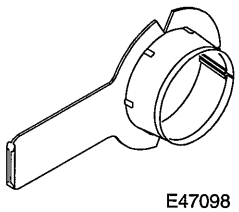 E47098 | Protector, Halfshaft Seal 205-775 |
| 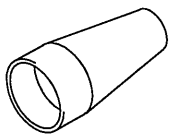 13015 | Expander, Teflon Seal 211-188 |
| 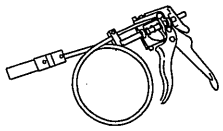 24003 | Remover/Installer, Hose Clamp 303-397 |
| 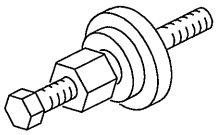 21192 | Installer, Camshaft Pulley 303-458 |

### General Equipment

| |
|---|
| Workshop table |
| Securing straps |
| Engine hoist |

▲ **WARNING:Do not smoke or carry lighted tobacco or open flame of any type when working on or near any fuel related components. Highly flammable vapors are always present and may ignite. Failure to follow these instructions may result in personal injury.**

1. **NOTE:Using suitable retaining straps, secure the engine on the workshop table.**

   **Support the engine with wooden blocks.**

2. **Install the transaxle.**

3. **Install the transaxle upper retaining bolts.**

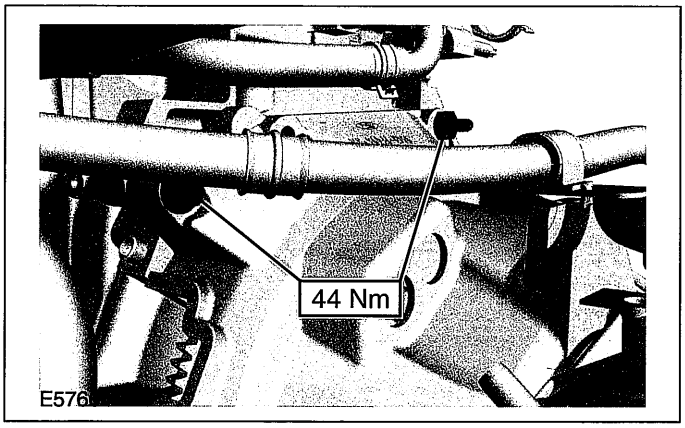


4. **Install the transaxle left-hand retaining bolts.**

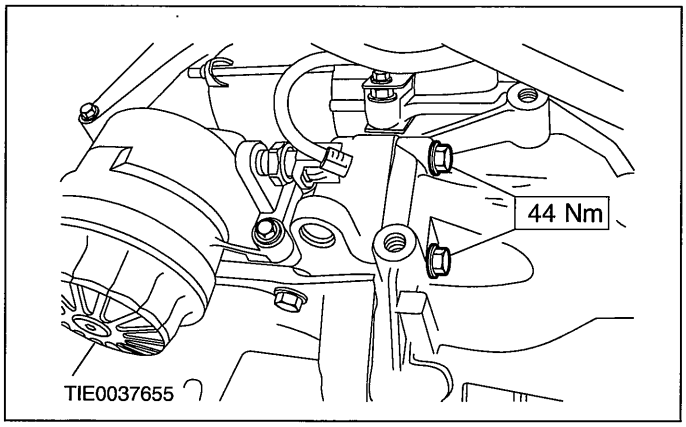


5. **Install the transaxle right-hand retaining bolts.**

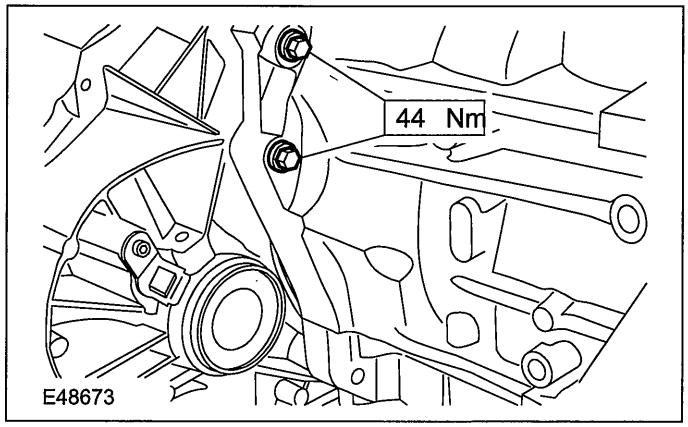

## INSTALLATION

6. **Install the transaxle lower retaining bolts.**

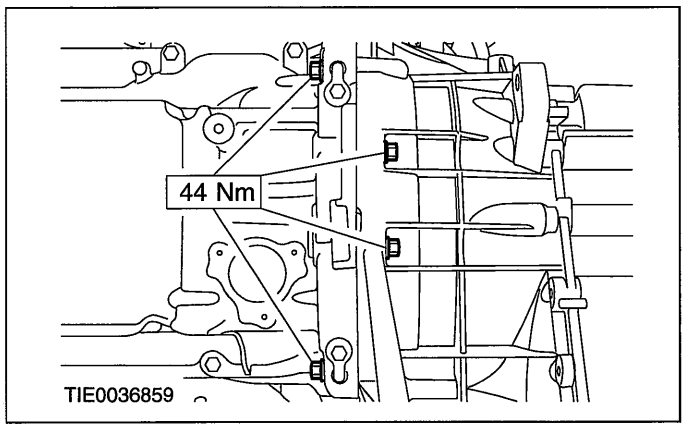


7. **Install the starter motor.**

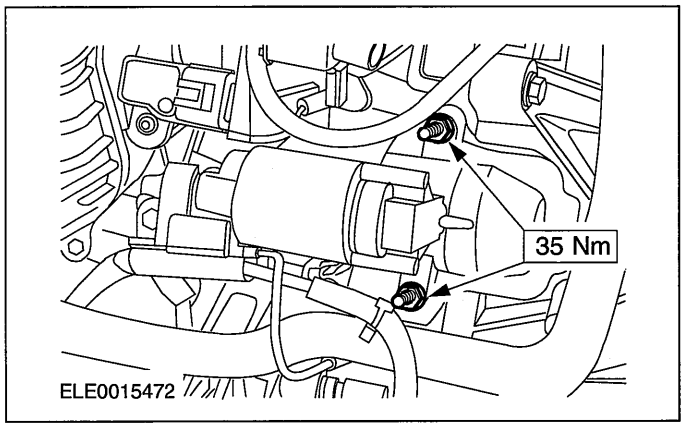


8. **Install the wiring harness retaining bracket.**
   - Attach the wiring harness to the retaining bracket.

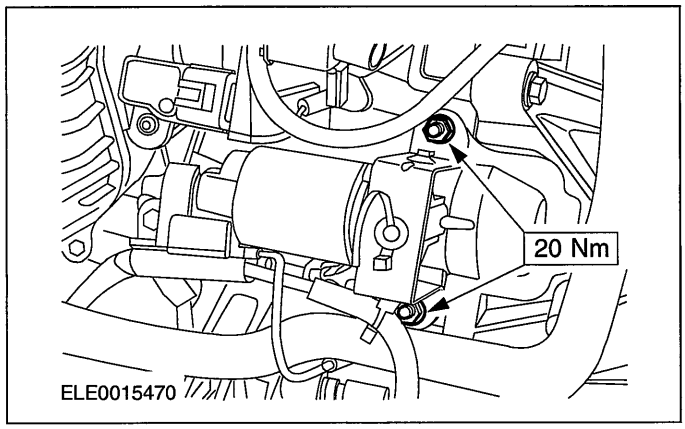


9. **Position the workshop table under the vehicle and carefully lower the vehicle until the engine and transaxle assembly is in the correct position to install the engine mounts.**

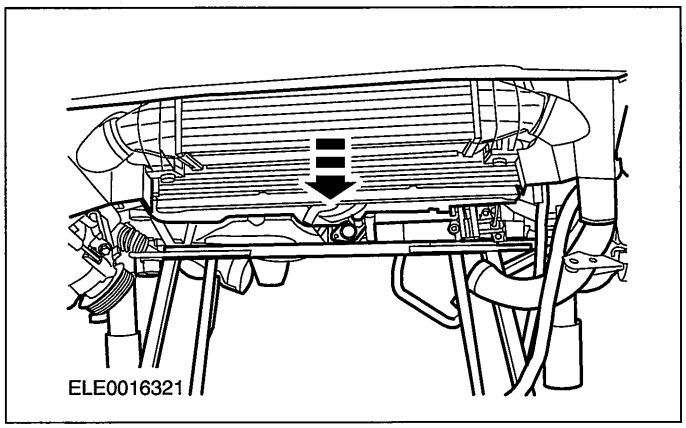


10. **NOTE:Do not tighten the engine rear mount retaining nuts at this stage.**

    **Install the engine rear mount retaining nuts.**

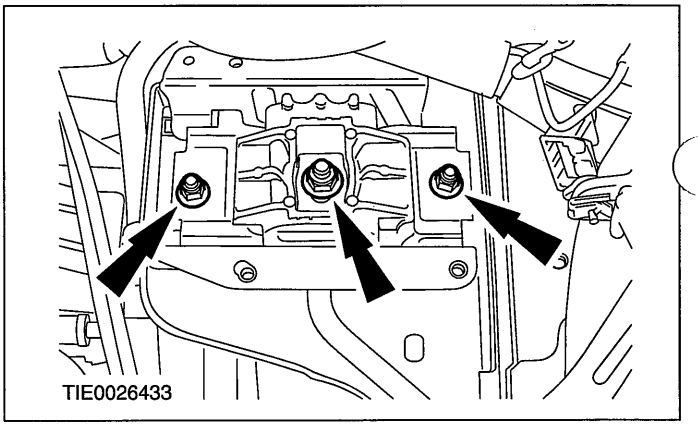


11. **NOTE:Install new engine front mount retaining nuts.**

**NOTE:**Do not tighten the engine front mount retaining nuts and bolts at this stage.

**Install the engine front mount retaining nuts and bolts.**

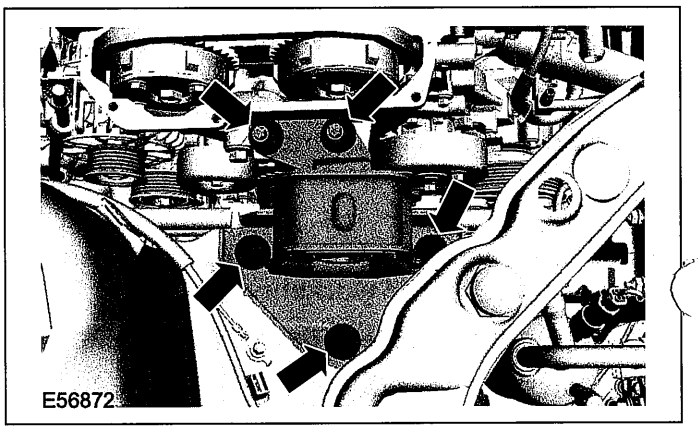

## INSTALLATION

12. Remove the securing straps.
13. Raise and support the vehicle. For additional information, refer to: (100-02 Jacking and Lifting)

    Jacking (Description and Operation), Lifting (Description and Operation).
14. Install the engine support insulator.

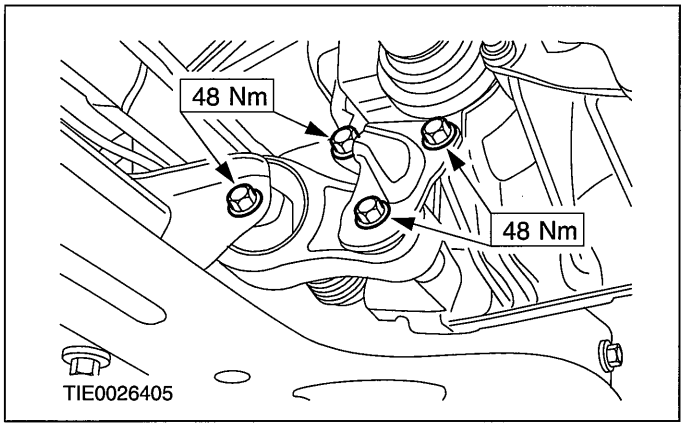


15. Attach the air conditioning (A/C) compressor to the cylinder block.

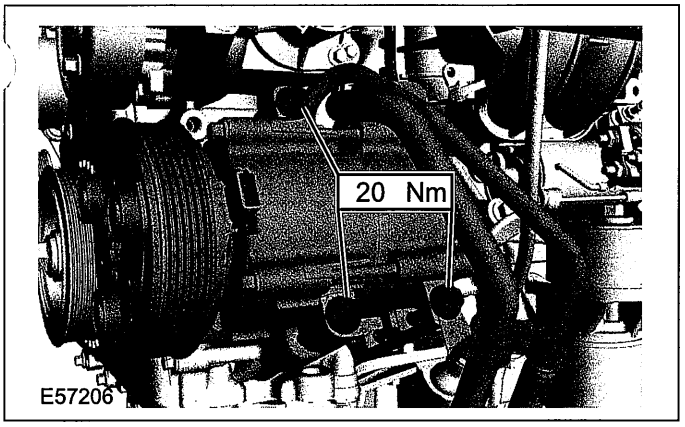


16. Connect the A/C high pressure switch electrical connector.

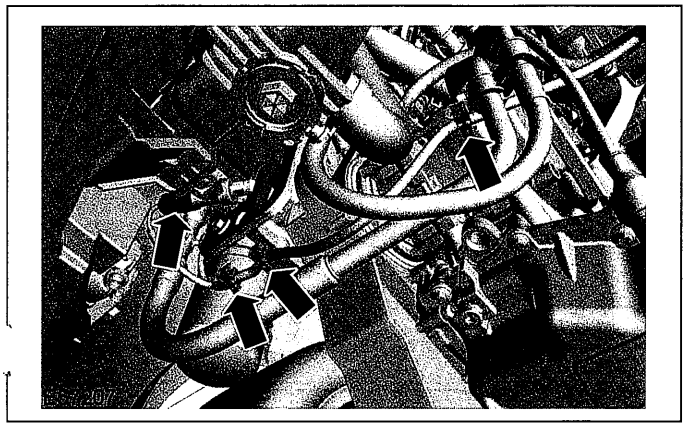

17. Attach the gearshift cables to the bracket and turn the abutment sleeves counterclockwise.

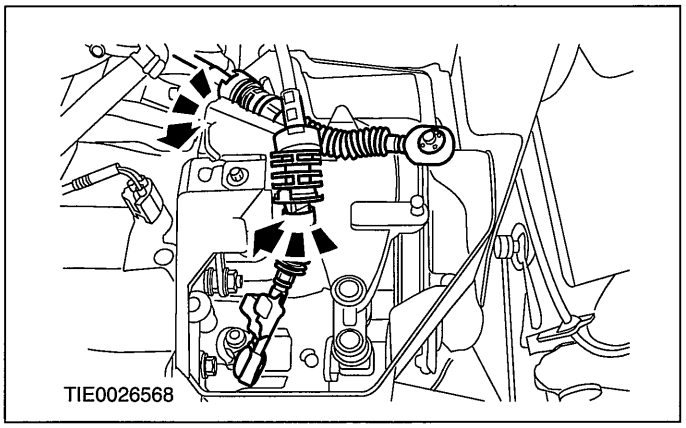


18. Attach the gearshift cables to the selector levers.

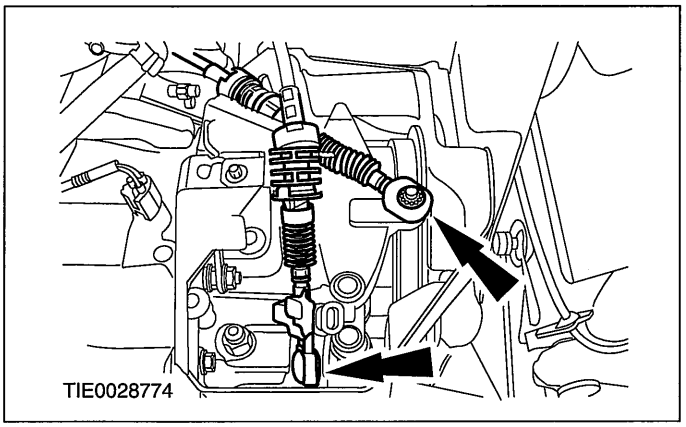


19. CAUTIONS:

    ⚠The inner CV joint must not be bent more than 23 degrees. The outer CV joint must not be bent more than 45 degrees.

    ⚠Make sure that the halfshaft seal is not damaged.

    ⚠Make sure the snap ring is correctly seated.

**NOTE:** Install a new snap ring.

Using the special tool, attach the left-hand halfshaft to the transaxle.

## INSTALLATION

- Remove the special tool before fully installing the halfshaft.

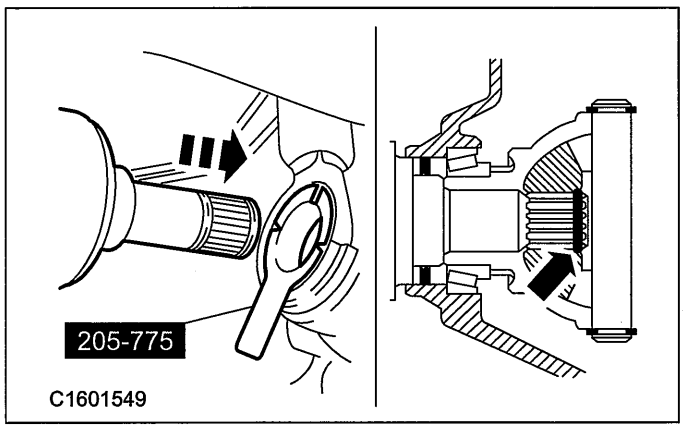


**20. CAUTIONS:**

**⚠The inner CV joint must not be bent more than 23 degrees. The outer CV joint must not be bent more than 45 degrees.**

**⚠Make sure the halfshaft seal is not damaged.**

**Using the special tool, attach the right-hand halfshaft and intermediate shaft assembly to the transaxle.**

- Remove the special tool before fully installing the halfshaft.

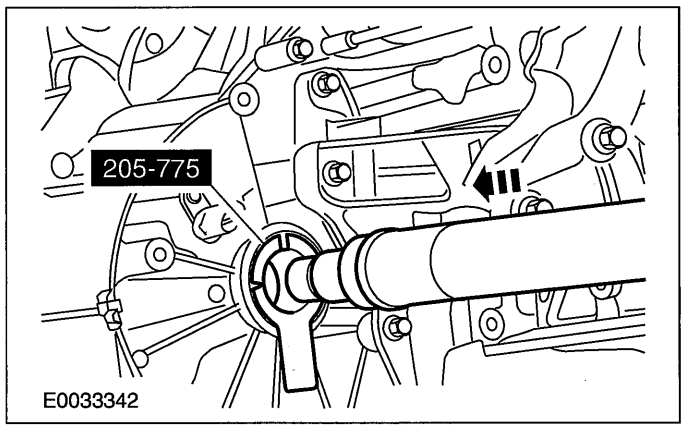


**21. NOTE:Install a new intermediate shaft center bearing cap and retaining nuts.**

**NOTE:**Make sure that the intermediate shaft center bearing is correctly positioned in the intermediate shaft center bearing retaining bracket.

**Install the intermediate shaft center bearing cap.**

- Position the center bearing cap.
- Position the intermediate shaft center bearing heat shield (if equipped).
- Tighten the center bearing cap retaining nuts.

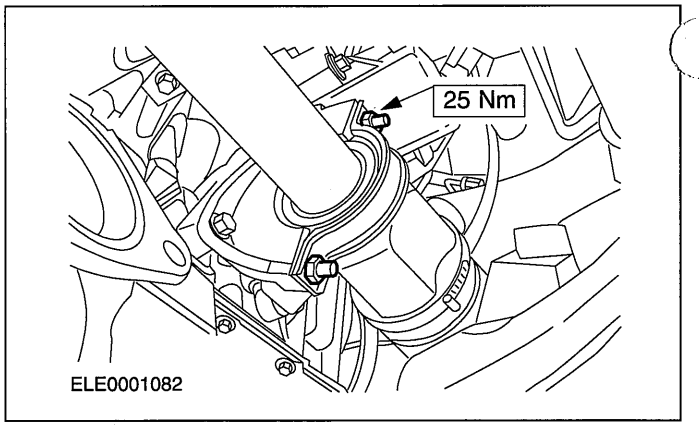


**22. ⚠CAUTION:Make sure that the lower arm ball joint heat shield is installed to prevent damage to the ball joint.**

**Install the lower arm ball joint heat shield.**

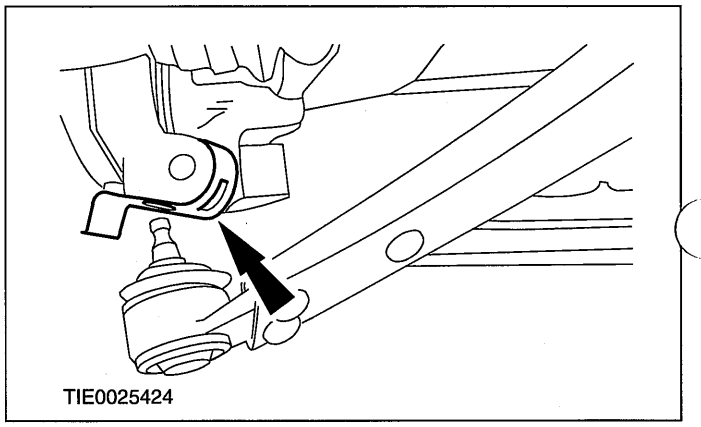


**23. ⚠CAUTION:The lower arm pinch bolt must be installed from the rear of the wheel knuckle.**

**Attach the lower arm ball joint to the wheel knuckle.**

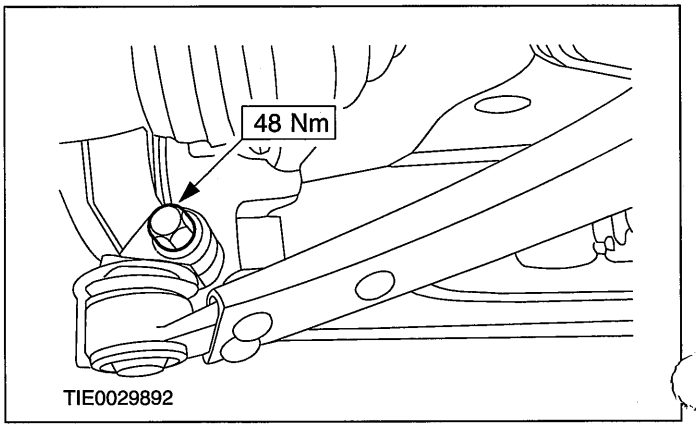

## INSTALLATION

24. Attach the powertrain control module (PCM) support bracket to the side member.

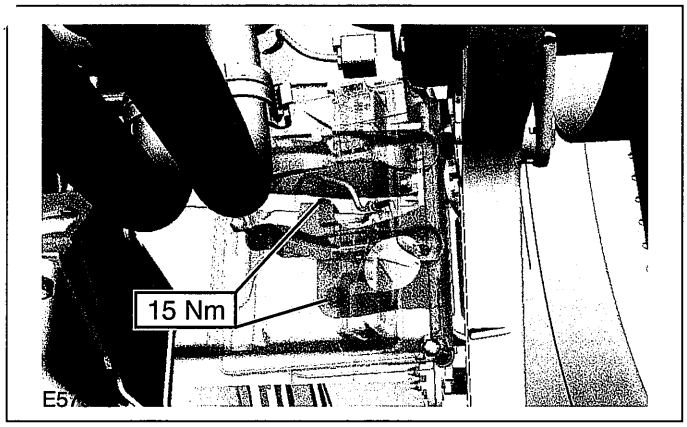


25. Install the air cleaner resonator support bracket.

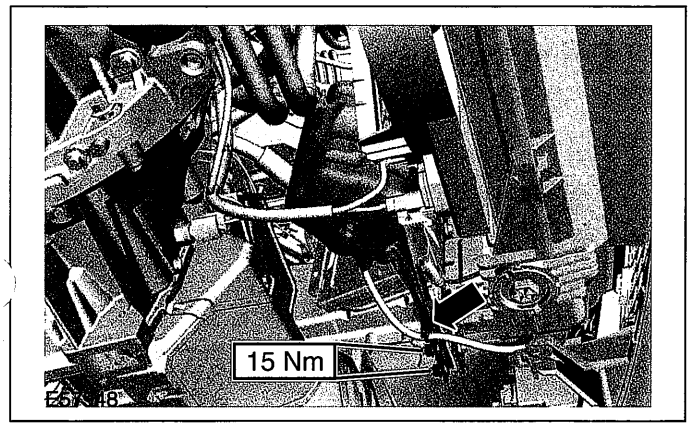


26. Lower the vehicle.

27. Tighten the engine rear mount outer retaining nuts.

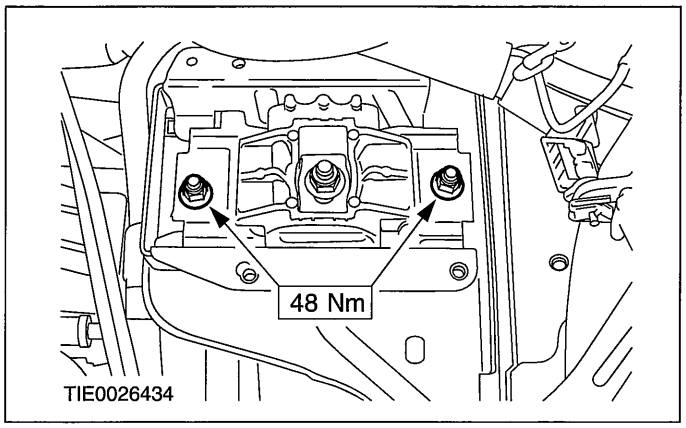


28. Tighten the engine rear mount center retaining nut.

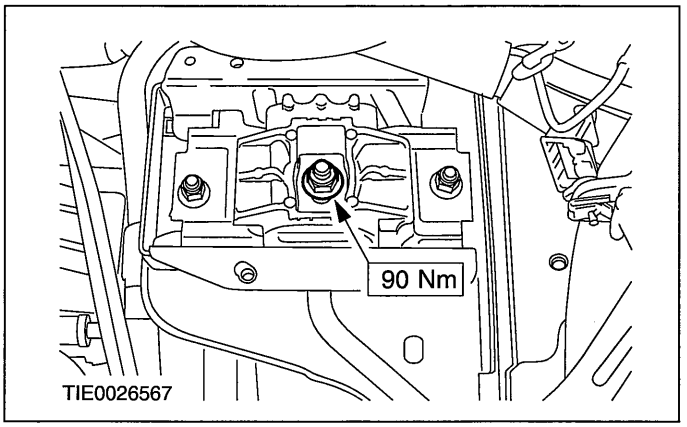


29. Tighten the engine front mount retaining nuts and retaining bolts.

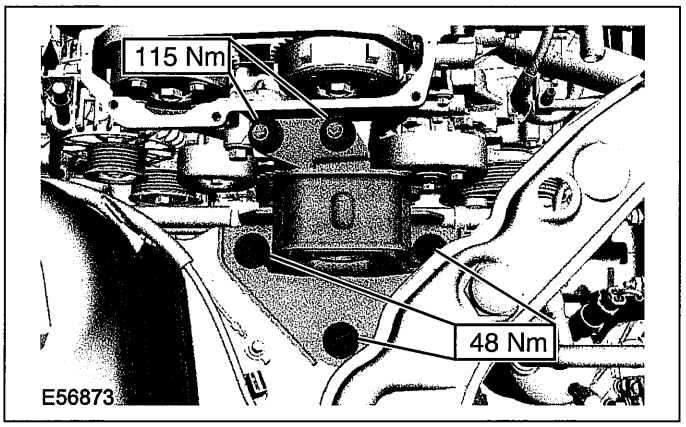


30. Connect the fuel supply line.

For additional information, refer to: Quick Release Coupling (310-00 Fuel System - General Information, General Procedures).

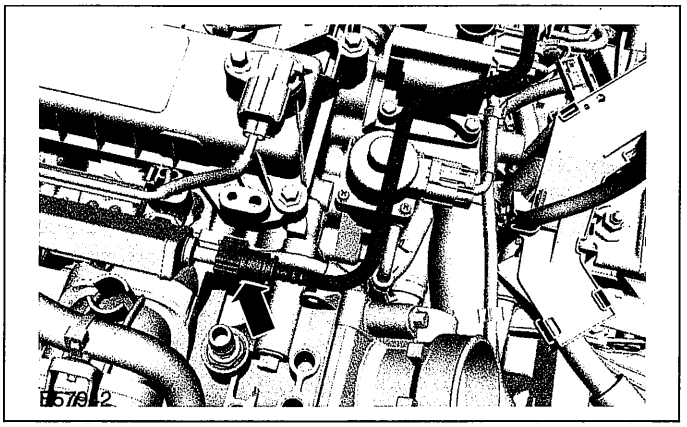

## INSTALLATION

31. **Attach the power steering pump to steering gear pressure line to the intake manifold.**

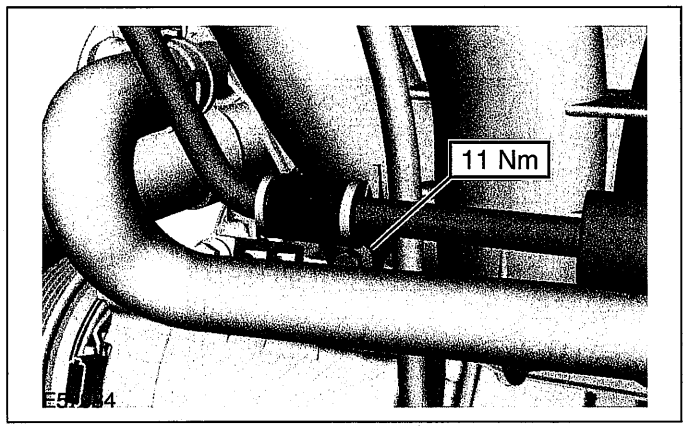


32. **⚠CAUTION:Care must be taken to prevent dirt ingress.**

**Using the special tool, install a new O-ring seal onto the power steering pump to steering gear pressure line union.**

1. Push the O-ring seal onto the special tool.
2. Locate the special tool onto the power steering pump to steering gear pressure line union and install the O-ring seal.

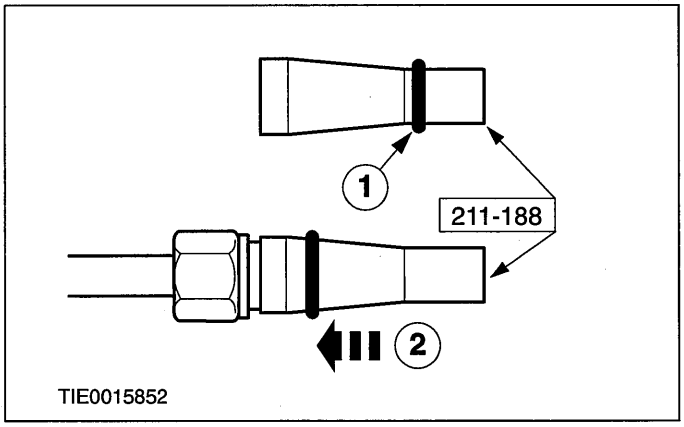


33. **Attach the power steering pump to steering gear pressure line from the power steering pump.**

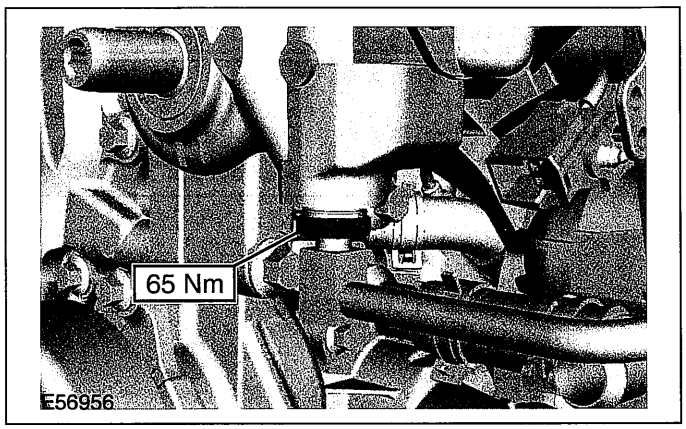


34. **NOTE:Install a new power steering pump pulley.**

**Using the special tool, install the power steering pump pulley.**

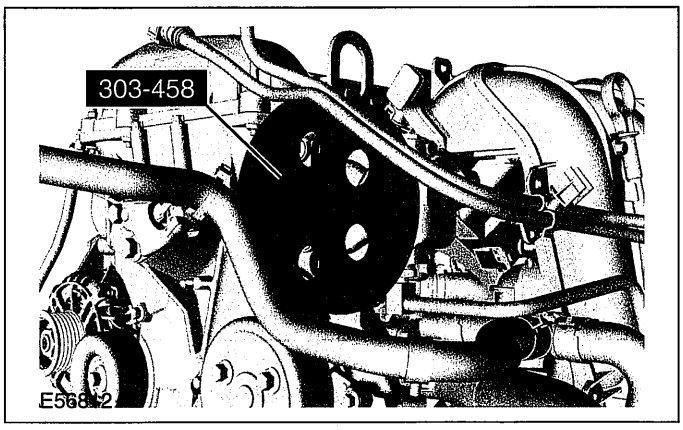


35. **Install new power steering fluid reservoir O-ring seals.**

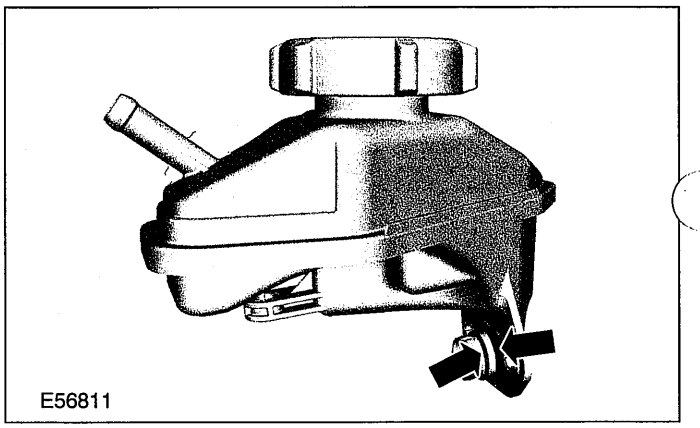


36. **Install the power steering fluid reservoir.**

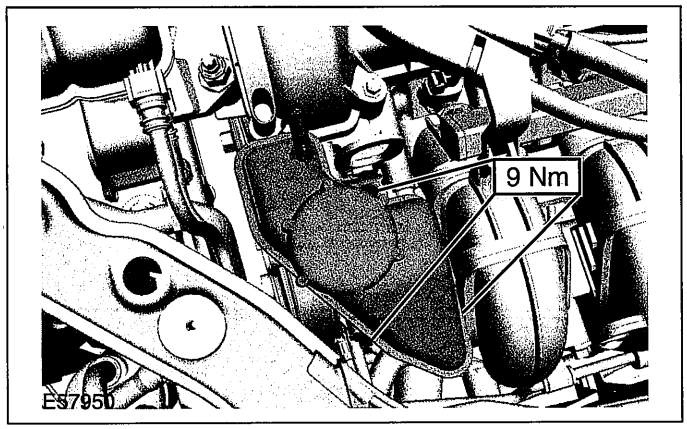

## INSTALLATION

37. **Using the special tool, connect the steering gear to power steering fluid reservoir return line to the power steering fluid reservoir.**

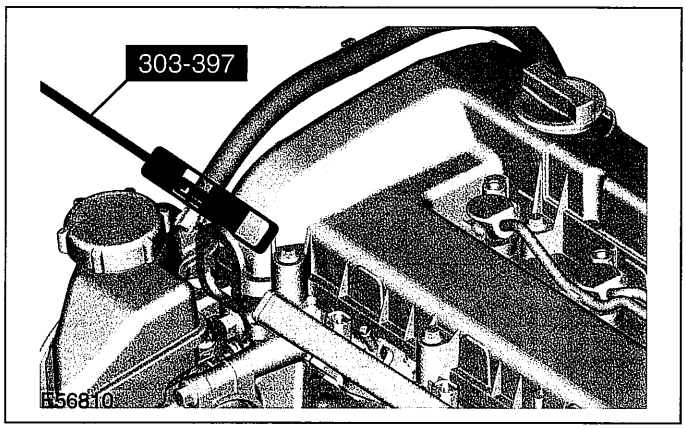


38. **Attach the steering gear to power steering fluid reservoir return line support bracket to the generator.**

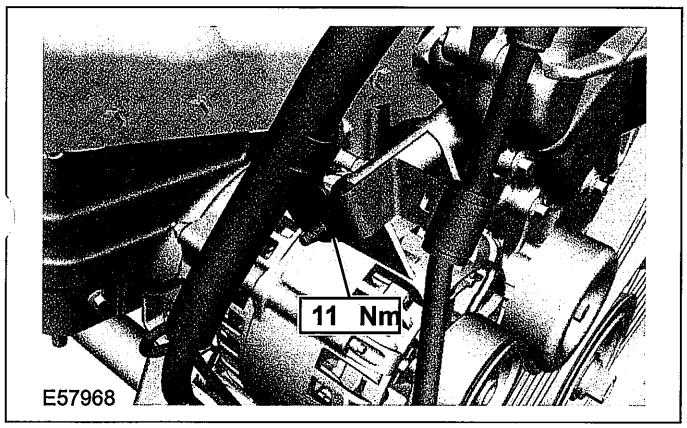


39. **Connect the A/C low pressure switch connector.**

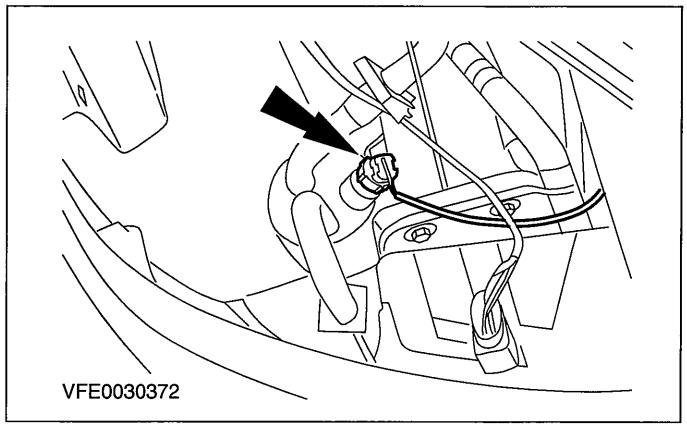


40. ⚠**CAUTION:If brake fluid is spilt on the paintwork, the affected area must be immediately washed down with cold water.**

**NOTE:**Make sure the spring clip is correctly seated.

**Connect the clutch slave cylinder supply line.**

- Install the spring clip.

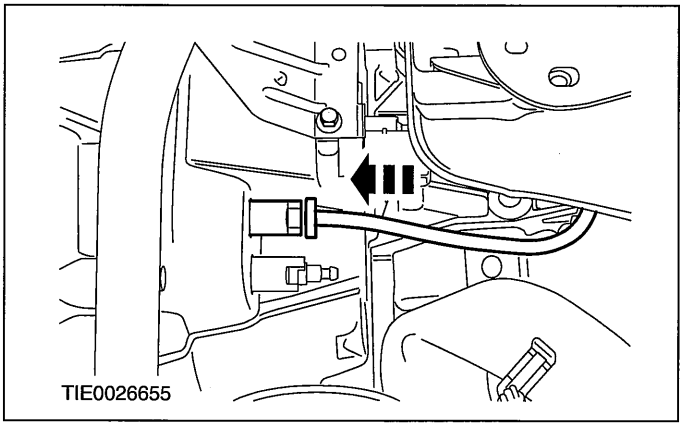


41. **Connect the reversing lamp switch electrical connector.**

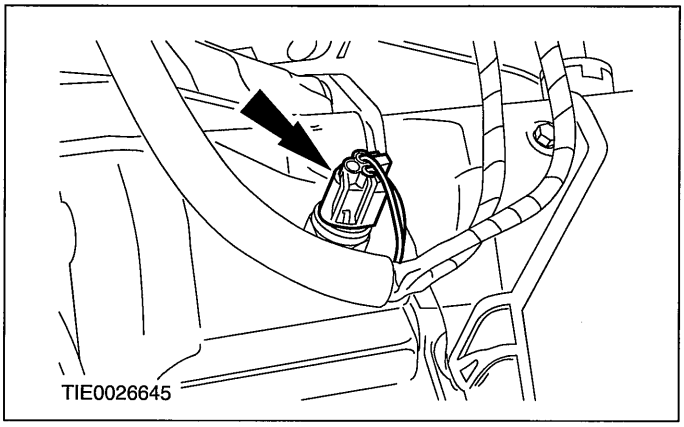


42. **Lower the vehicle.**

43. **Install the coolant expansion tank.**

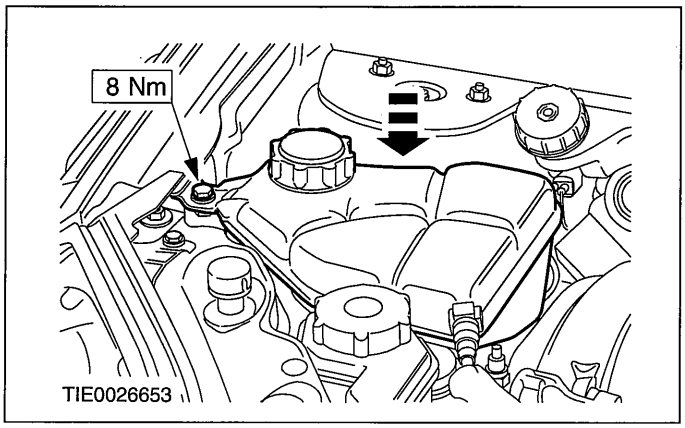

## INSTALLATION

44. Attach the power steering high-pressure line retaining bracket to the transaxle.

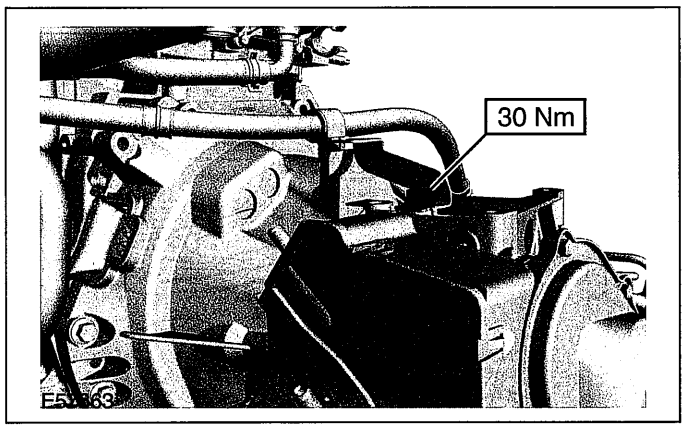


45. Install the engine wiring harness bracket.

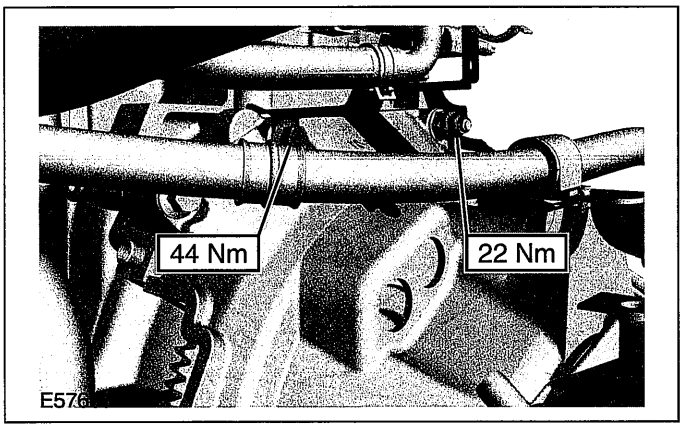


46. Connect the engine wiring harness electrical connector.

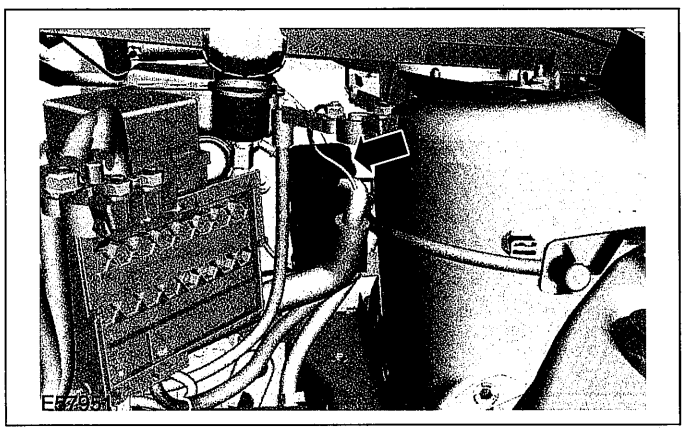

47. Connect the catalyst monitor sensor electrical connector.

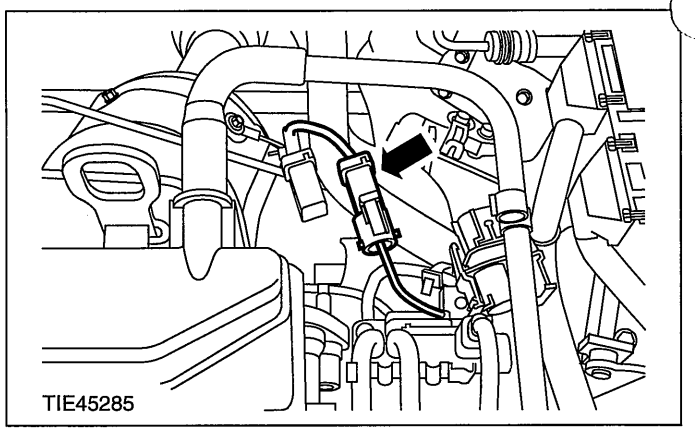


48. Connect the power steering pump switch electrical connector.

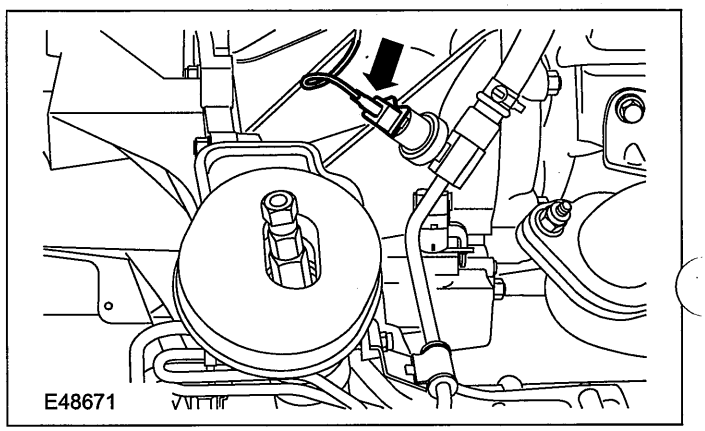


49. Install the battery tray support bracket.

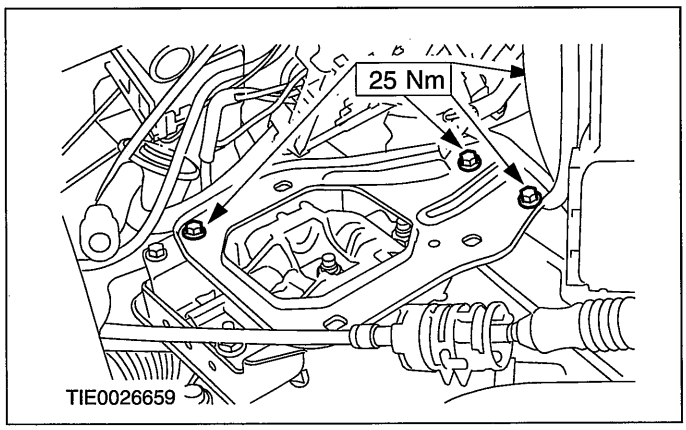

## INSTALLATION

**50. Connect the brake booster vacuum line to the intake manifold.**

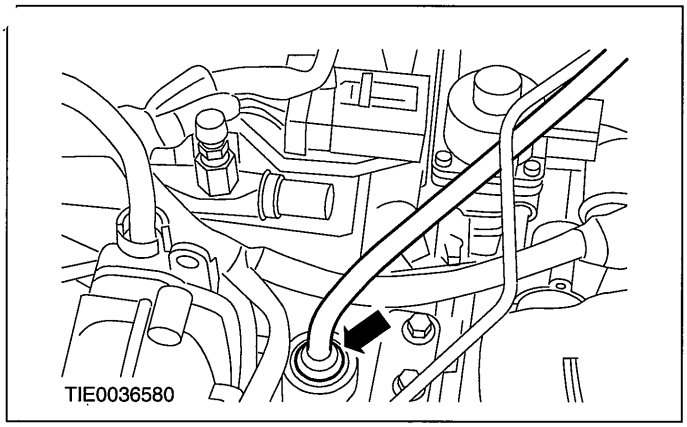


**51. Attach the evaporative emission (EVAP) valve from EVAP valve support bracket.**

1. Connect the EVAP valve electrical connector.
2. Connect the low pressure line to the EVAP valve.
3. Push the EVAP valve onto the support bracket.

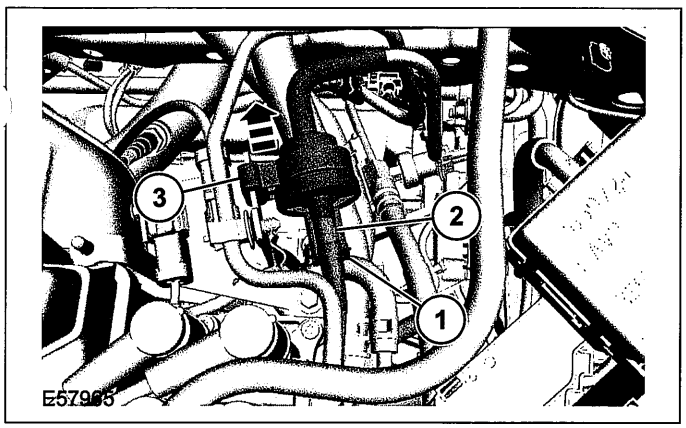


**52. Using the special tool, connect the coolant hose to the coolant outlet connector.**

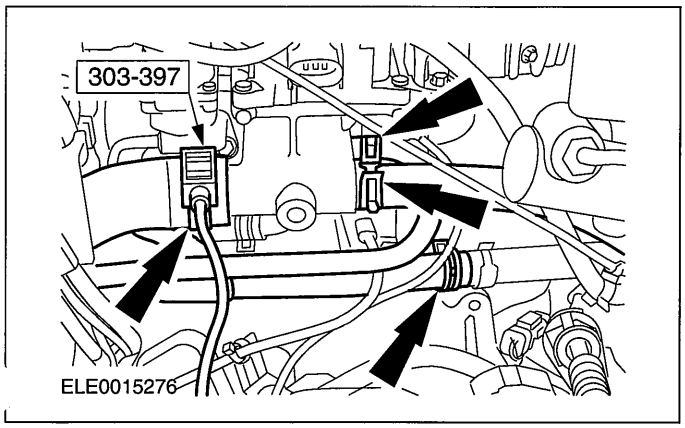


**53. Tighten the strut and spring assembly top mount nuts.**

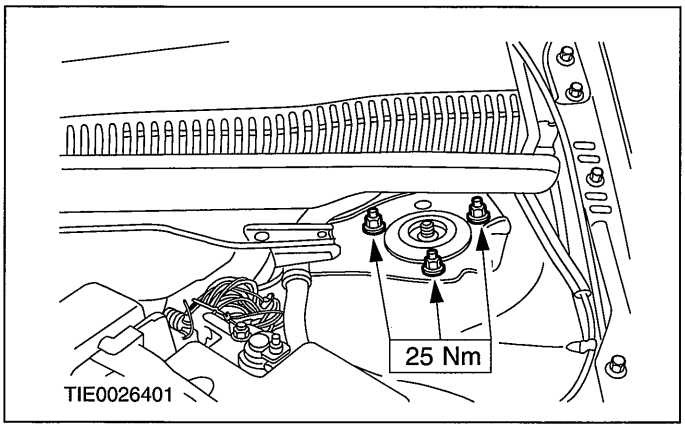


**54. Install the right-hand headlamp assembly.**

**For additional information, refer to: Headlamp Assembly (417-01 Exterior Lighting, Removal and Installation).**

**55. Attach the exhaust flexible pipe to the exhaust manifold.**

**For additional information, refer to: Exhaust Flexible Pipe - 2.0L Duratec-HE (MI4) (309-00 Exhaust System, Removal and Installation).**

**56. Install the cooling fan motor and shroud.**

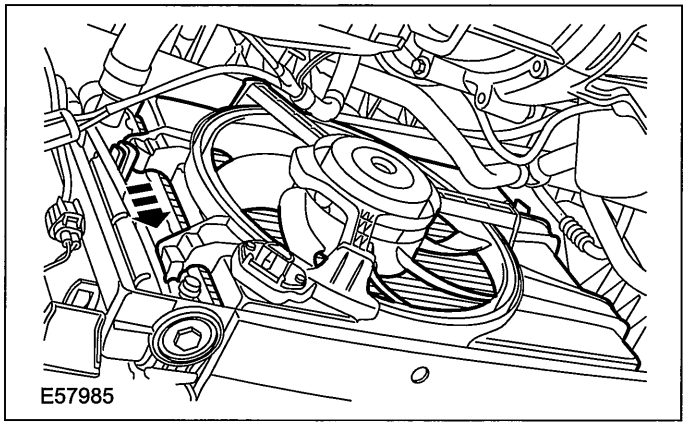

## INSTALLATION

57. Connect the cooling fan motor and cooling fan resistor electrical connectors.

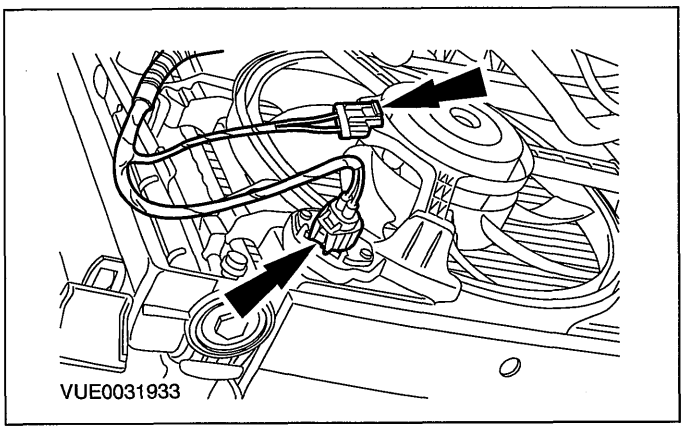


58. Install the accessory drive belt.

    For additional information, refer to: Accessory Drive Belt - 2.0L Duratec-HE (MI4) (303-05 Accessory Drive, Removal and Installation).

59. Adjust the gearshift cables.

    For additional information, refer to: Gearshift Cable Adjustment (308-00 Manual Transmission/Transaxle and Clutch - General Information, General Procedures).

60. Bleed the hydraulic clutch system.

    For additional information, refer to: Clutch System Bleeding (308-00 Manual Transmission/Transaxle and Clutch - General Information, General Procedures).

61. Install the battery tray.

    For additional information, refer to: Battery Tray - 2.0L Duratec-HE (MI4) (414-01 Battery, Mounting and Cables, Removal and Installation).

62. Install the air cleaner.

    For additional information, refer to: Air Cleaner - 2.0L Duratec-HE (MI4) (303-12 Intake Air Distribution and Filtering, Removal and Installation).

63. Fill and bleed the cooling system.

    For additional information, refer to: Cooling System Draining, Filling and Bleeding (303-03 Engine Cooling - 2.0L Duratec-HE (MI4), General Procedures).

# SECTION 303-03A Engine Cooling — 1.3L Duratec-8V (Rocam)/1.25L Duratec-16V (Sigma)/1.4L Duratec-16V (Sigma)/1.6L Duratec-16V (Sigma)

## VEHICLE APPLICATION:2006.0 Fiesta

CONTENTS PAGE


**SPECIFICATIONS**

Specifications ..... 303-03A-2

**DESCRIPTION AND OPERATION**

Engine Cooling — 1.4L Duratec-16V (Sigma)/1.6L Duratec-16V (Sigma) ..... 303-03A-4
Overview ..... 303-03A-4
Components ..... 303-03A-5

**DIAGNOSIS AND TESTING**

Engine Cooling ..... 303-03A-8
Inspection and Verification ..... 303-03A-8
Symptom Chart ..... 303-03A-8
Component Tests ..... 303-03A-16

**GENERAL PROCEDURES**

Cooling System Draining, Filling and Bleeding — 1.3L Duratec-8V (Rocam)/1.25L Duratec-16V (Sigma)/1.4L Duratec-16V (Sigma)/1.6L Duratec-16V (Sigma) ..... (24 122 0) 303-03A-19
Draining ..... 303-03A-19
Filling and Bleeding ..... 303-03A-19

**REMOVAL AND INSTALLATION**

Water Pump — 1.25L Duratec-16V (Sigma)/1.4L Duratec-16V (Sigma)/1.6L Duratec-16V (Sigma) ..... (24 404 0) 303-03A-21
Thermostat — 1.25L Duratec-16V (Sigma)/1.4L Duratec-16V (Sigma)/1.6L Duratec-16V (Sigma) ..... (24 454 0) 303-03A-24
Radiator ..... (24 254 0) 303-03A-26

## SPECIFICATIONS

### Lubricants, Fluids, Sealers and Adhesives

| Description | Specification |
|---|---|
| Motorcraft Super Plus 2000 antifreeze | WSS-M97B44-D |

### Antifreeze - All vehicles used in climates where daytime ambient air temperature does not regularly exceed +46°C (+115°F)

| Specific gravity (providing no other additive is in the coolant) | Approximate percentage of anti-freeze (by volume) | Remains fluid to | Solidifies at |
|---|---|---|---|
| 1.061 at +15°C (+59°F) | 50% | -25°C (-13°F) | -30°C (-22°F) |

### Antifreeze - Vehicles with 1.25L/1.4L/1.6L engine used in climates where daytime ambient air temperature regularly exceeds +46°C (+115°F)

| Specific gravity (providing no other additive is in the coolant) | Approximate percentage of antifreeze (by volume) |
|---|---|
| 1.0278 at +35°C (+95°F) | 25% |

### Cooling System Refill Capacities

| Description | Liters |
|---|---|
| Cooling system, including heater system and coolant expansion tank (all except vehicles with diesel engine) | 5.0 |

### Cooling System Pressure Specification

| Description | Pressure kpa (psi) |
|---|---|
| Radiator pressure test | 138 (20) |
| Coolant expansion tank cap release pressure | 120 to 150 (17-21) |

### Torque Specifications - vehicles with 1.25L/1.4L/1.6L engine

| Description | Nm | lb-ft | lb-in |
|---|---|---|---|
| Radiator retaining nut | 10 | - | 89 |
| Thermostat housing retaining bolts | 10 | - | 89 |
| Water pump retaining bolts | 10 | - | 89 |
| Water pump pulley retaining bolts | 24 | 18 | - |
| Generator retaining bolts | 45 | 33 | - |
| Generator electrical connector retaining nut | 8 | - | 71 |
| Timing belt lower cover retaining bolts | 9 | - | 80 |

### Torque Specifications - vehicles with 1.3L engine

| Description | Nm | lb-ft | lb-in |
|---|---|---|---|
| Radiator retaining nut | 10 | - | 89 |
| Water pump retaining bolts | 10 | - | 89 |
| Water pump pulley retaining bolts | 12 | 9 | - |

## SPECIFICATIONS

| Description | Nm | lb-ft | lb-in |
|---|---|---|---|
| Thermostat housing retaining bolts | 10 | - | 89 |

## DESCRIPTION AND OPERATION

# Engine Cooling — 1.4L Duratec-16V (Sigma)/1.6L Duratec-16V (Sigma)

### Overview

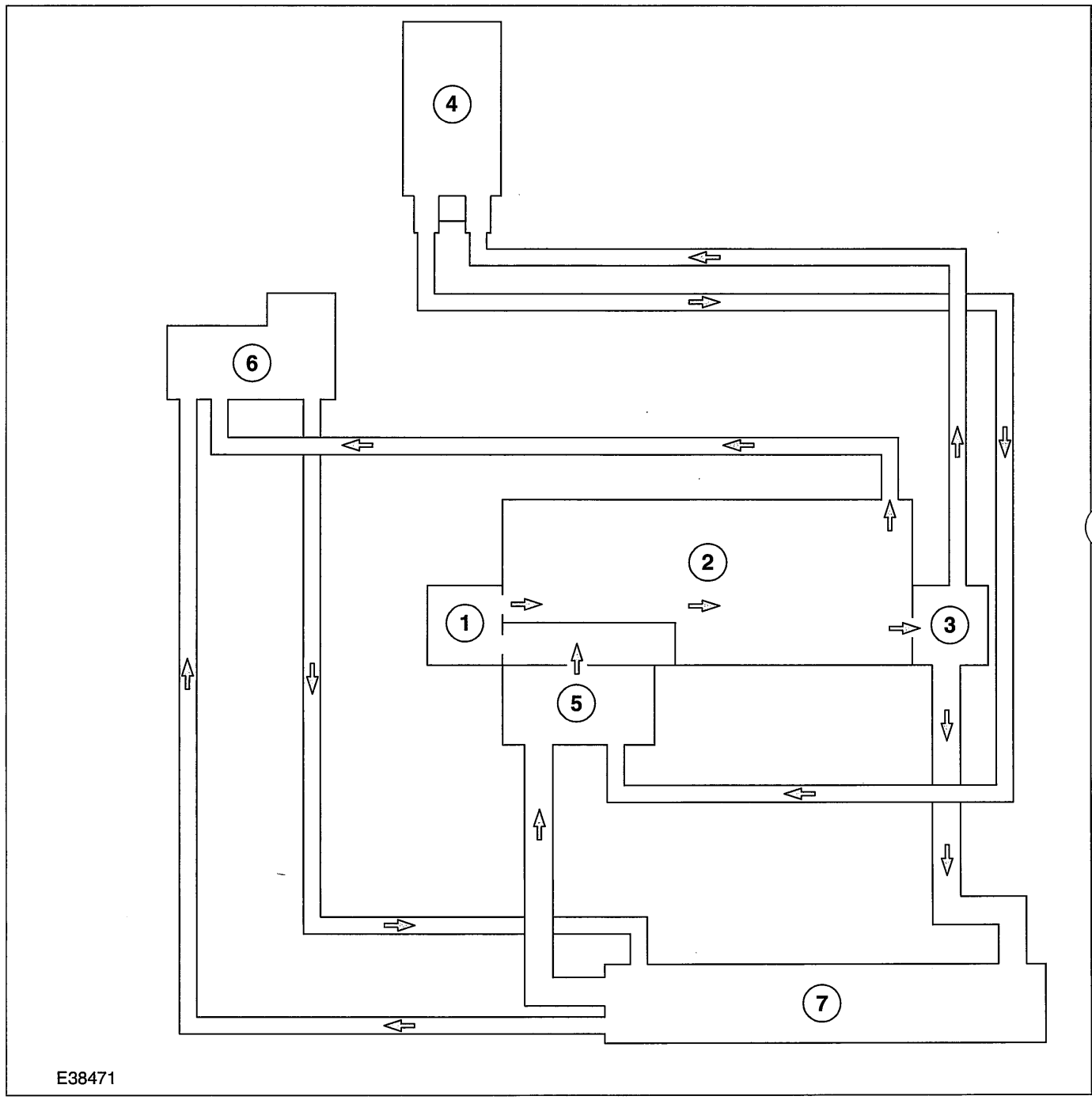


| Item | Description |
|---|---|
| 1 | Coolant pump |
| 2 | Engine |
| 3 | Water outlet housing |

| Item | Description |
|---|---|
| 4 | Heater heat exchanger |
| 5 | Thermostat housing |
| 6 | Coolant expansion tank |
| 7 | Radiator |

# DESCRIPTION AND OPERATION

## Components

### Coolant pump

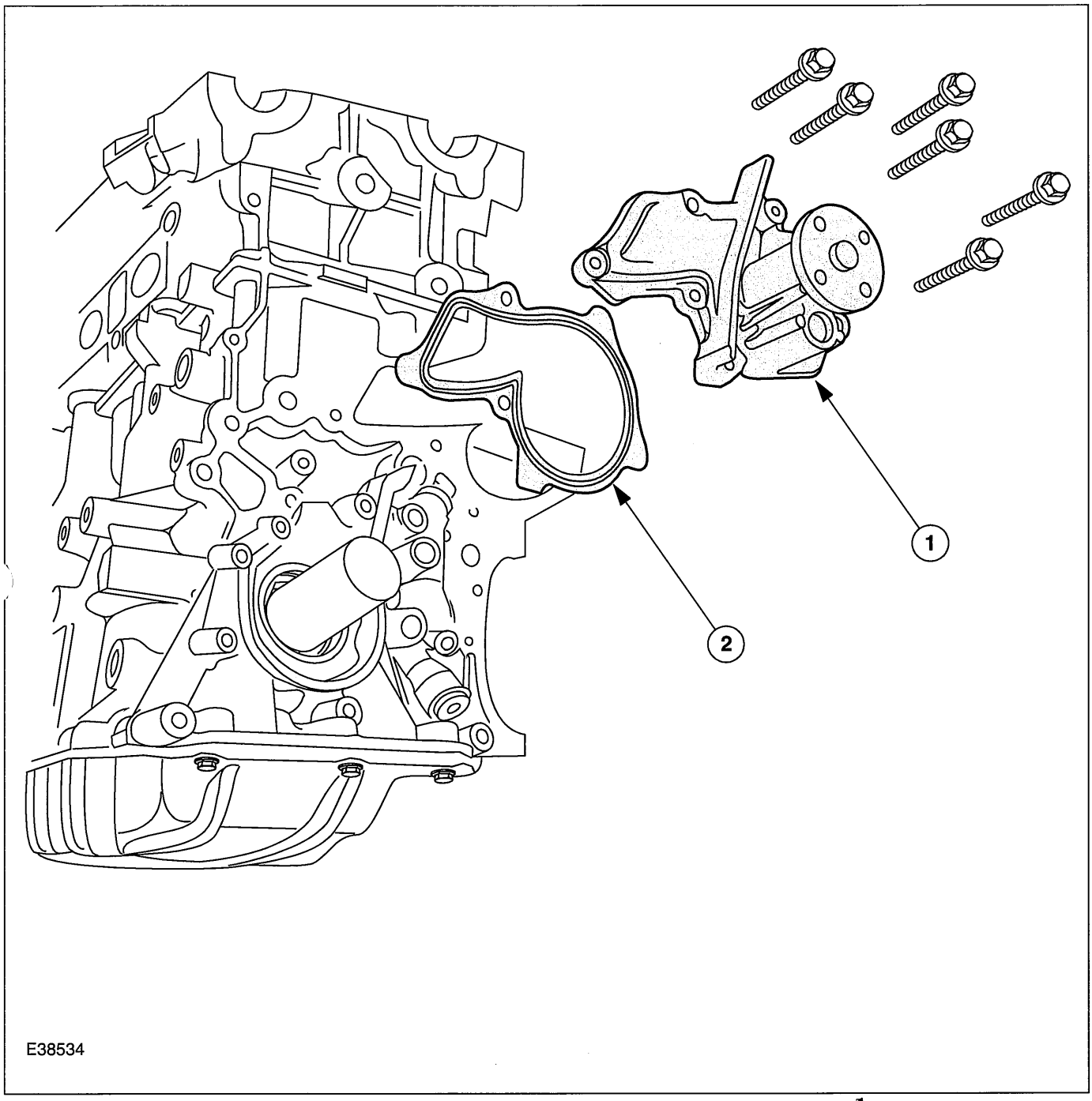


| Item | Description |
|---|---|
| 1 | Coolant pump |
| 2 | Coolant pump gasket |

The coolant pump is secured to the engine block at the timing gear end.

It is driven through a pulley by the accessory drive belt.

The gasket for the coolant pump must not be reused.

## DESCRIPTION AND OPERATION

### Thermostat and thermostat housing

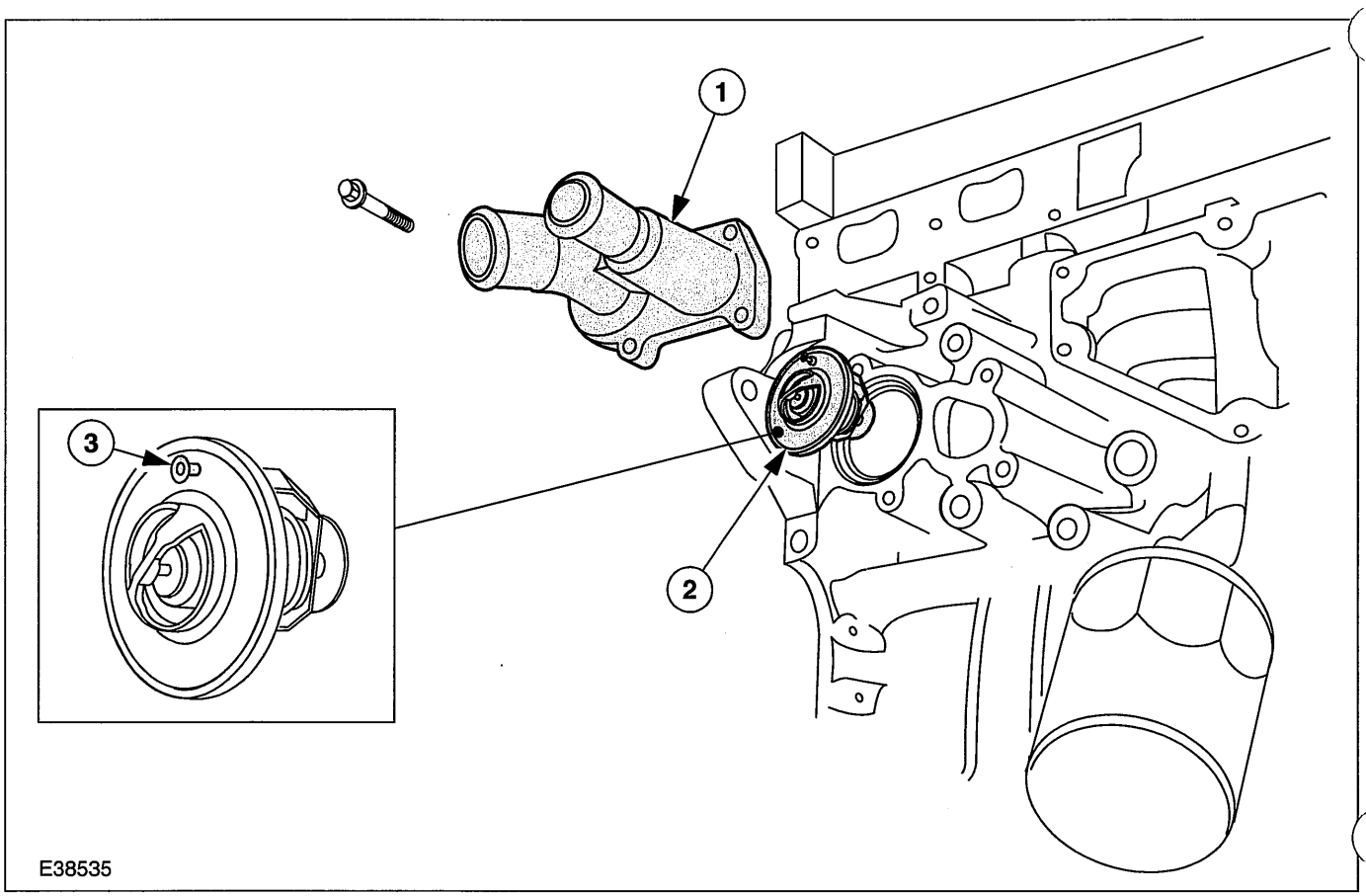


| Item | Description |
|---|---|
| 1 | Thermostat housing |
| 2 | Thermostat |
| 3 | Venting pin |

The thermostat and thermostat housing are located on the side of the engine block.

When installing the thermostat, make sure that the venting pin is at the top.

## DESCRIPTION AND OPERATION

### Water outlet housing

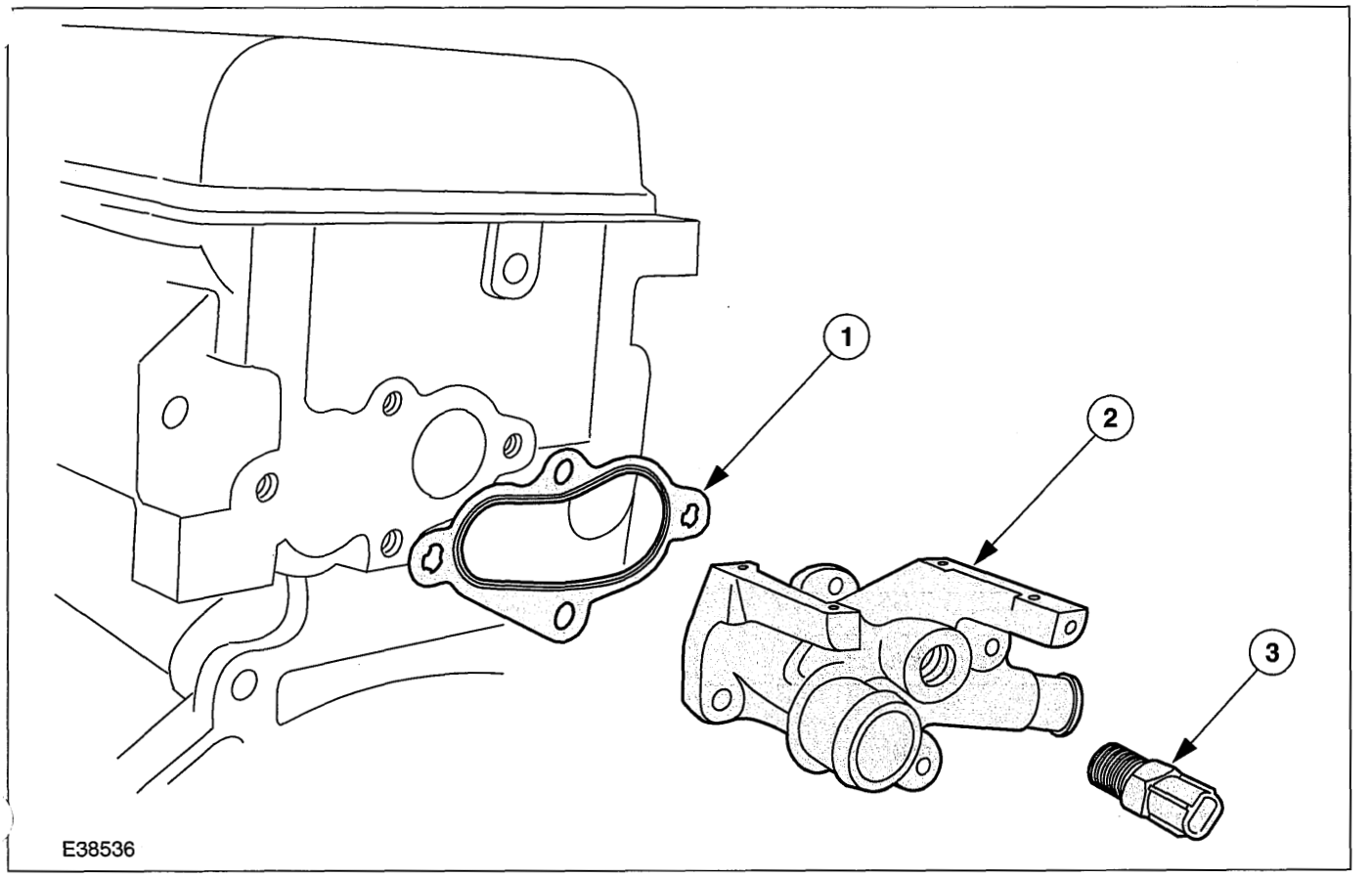


| Item | Description |
|---|---|
| 1 | Gasket |
| 2 | Water outlet housing |
| 3 | Engine Coolant Temperature (ECT) sensor |

The water outlet housing is located on the cylinder head nearest the transmission.

Among other things, it is used to mount the Electronic Ignition (EI) coil.

In addition, the ECT sensor is located in the housing.

## DIAGNOSIS AND TESTING

# Engine Cooling

### Special Tool(s)

| | |
|---|---|
| 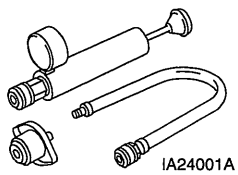 IA24001A | Pressure Tester, Cooling System 303-396 (24-001 A) |
| 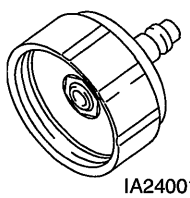 IA2400101A | Adapter for 303-396 303-396-01 |

### General Equipment

| |
|---|
| Worldwide Diagnostic System (WDS) |

### Visual Inspection Chart

| Mechanical | Electrical |
|---|---|
| – Coolant leak(s)<br>– Coolant level<br>– Air in system<br>– Gaskets/seals<br>– Hose(s)/hose joints<br>– Coolant expansion tank cap and seal<br>– Coolant expansion tank<br>– Radiator<br>– Water pump<br>– Thermostat<br>– Thermostat housing<br>– Accessory drive belt | – Fuse(s)<br>– Relay(s)<br>– Wiring harness<br>– Electrical connector(s)<br>– Cooling fan motor<br>– Engine coolant temperature (ECT) sensor<br>– Cylinder head temperature (CHT) sensor<br>– Powertrain control module (PCM) |

## Inspection and Verification

1. Verify the customer concern.
2. Visually inspect for obvious signs of mechanical or electrical damage.
3. If an obvious cause for an observed or reported concern is found, correct the cause (if possible) before proceeding to the next step.
4. If the cause is not visually evident, verify the symptom and refer to the Symptom Chart.

## Symptom Chart

### Symptom Chart

| Symptom | Possible Sources | Action |
|---|---|---|
| • Loss of coolant | • Hose(s)/hose joint(s). | • INSPECT the hoses and hose joints. INSTALL a new hose(s) as necessary. |
| | • Radiator. | • INSPECT the radiator for leaks. CARRY OUT the Pressure Test Component Test in this section. INSTALL a new radiator as necessary.<br>REFER to: Radiator (303-03 Engine Cooling - 1.3L Duratec-8V (Rocam)/1.25L Duratec-16V (Sigma)/1.4L Duratec-16V (Sigma)/1.6L Duratec-16V (Sigma), Removal and Installation). |

## DIAGNOSIS AND TESTING

| Symptom | Possible Sources | Action |
|---|---|---|
| | • Water pump. | • INSPECT the water pump for leaks. CARRY OUT the Pressure Test Component Test in this section. INSTALL a new water pump or water pump gasket as necessary.<br>REFER to: Water Pump - 1.3L Duratec-8V (Rocam) (303-03 Engine Cooling - 1.3L Duratec-8V (Rocam)/1.25L Duratec-16V (Sigma)/1.4L Duratec-16V (Sigma)/1.6L Duratec-16V (Sigma), Removal and Installation) / Water Pump - 1.25L Duratec-16V (Sigma)/1.4L Duratec-16V (Sigma)/1.6L Duratec-16V (Sigma) (303-03 Engine Cooling - 1.3L Duratec-8V (Rocam)/1.25L Duratec-16V (Sigma)/1.4L Duratec-16V (Sigma)/1.6L Duratec-16V (Sigma), Removal and Installation). |
| | • Thermostat housing. | • INSPECT the thermostat housing for leaks. CARRY OUT the Pressure Test Component Test in this section. INSTALL a new thermostat housing or thermostat housing gasket as necessary.<br>REFER to: Thermostat - 1.3L Duratec-8V (Rocam) (303-03 Engine Cooling - 1.3L Duratec-8V (Rocam)/1.25L Duratec-16V (Sigma)/1.4L Duratec-16V (Sigma)/1.6L Duratec-16V (Sigma), Removal and Installation) / Thermostat - 1.25L Duratec-16V (Sigma)/1.4L Duratec-16V (Sigma)/1.6L Duratec-16V (Sigma) (303-03 Engine Cooling - 1.3L Duratec-8V (Rocam)/1.25L Duratec-16V (Sigma)/1.4L Duratec-16V (Sigma)/1.6L Duratec-16V (Sigma), Removal and Installation). |

## DIAGNOSIS AND TESTING

| Symptom | Possible Sources | Action |
|---|---|---|
| | • Coolant expansion tank cap or seal. | • CHECK the coolant expansion tank cap for tightness. If OK, CARRY OUT the Coolant Expansion Tank Cap Pressure Test Component Test in this section. |
| | • Coolant expansion tank. | • INSPECT the seal face on the coolant expansion tank for damage. INSTALL a new coolant expansion tank as necessary. |
| | • Heater core. | • CHECK the heater core for leaks. |
| | • Engine. | • INSPECT the engine, cylinder head, cylinder block and cylinder head gasket.<br>REFER to: Cylinder Head (303-01 Engine - 1.25L Duratec-16V (Sigma)/1.4L Duratec-16V (Sigma)/1.6L Duratec-16V (Sigma), In-vehicle Repair). |

## DIAGNOSIS AND TESTING

| Symptom | Possible Sources | Action |
|---|---|---|
| • The engine overheats (signs of coolant boiling) | • Cooling system does not hold pressure. | • CARRY OUT the Coolant Expansion Tank Cap Test Component Test in this section.<br>• INSPECT the coolant expansion tank for damage. INSTALL a new coolant expansion tank as necessary.<br>• INSPECT the water pump or water pump gasket for damage. INSTALL a new water pump or water pump gasket as necessary.<br>REFER to: Water Pump - 1.3L Duratec-8V (Rocam) (303-03 Engine Cooling - 1.3L Duratec-8V (Rocam)/1.25L Duratec-16V (Sigma)/1.4L Duratec-16V (Sigma)/1.6L Duratec-16V (Sigma), Removal and Installation) / Water Pump - 1.25L Duratec-16V (Sigma)/1.4L Duratec-16V (Sigma)/1.6L Duratec-16V (Sigma) (303-03 Engine Cooling - 1.3L Duratec-8V (Rocam)/1.25L Duratec-16V (Sigma)/1.4L Duratec-16V (Sigma)/1.6L Duratec-16V (Sigma), Removal and Installation).<br>• INSPECT the engine, cylinder head, cylinder block and cylinder head gasket.<br>REFER to: Cylinder Head (303-01 Engine - 1.25L Duratec-16V (Sigma)/1.4L Duratec-16V (Sigma)/1.6L Duratec-16V (Sigma), In-vehicle Repair). |
| | • Radiator. | • INSPECT the radiator for blockage or damage. CARRY OUT the Pressure Test Component Test in this section. INSTALL a new radiator as necessary.<br>REFER to: Radiator (303-03 Engine Cooling - 1.3L Duratec-8V (Rocam)/1.25L Duratec-16V (Sigma)/1.4L Duratec-16V (Sigma)/1.6L Duratec-16V (Sigma), Removal and Installation). |

## DIAGNOSIS AND TESTING

| Symptom | Possible Sources | Action |
|---|---|---|
| | • Air in system. | • BLEED the cooling system.<br>REFER to: Cooling System Draining, Filling and Bleeding - 1.3L Duratec-8V (Rocam)/1.25L Duratec-16V (Sigma)/1.4L Duratec-16V (Sigma)/1.6L Duratec-16V (Sigma) (303-03 Engine Cooling - 1.3L Duratec-8V (Rocam)/1.25L Duratec-16V (Sigma)/1.4L Duratec-16V (Sigma)/1.6L Duratec-16V (Sigma), General Procedures). |
| | • Coolant expansion tank cap or seal. | • CHECK the coolant expansion tank cap for tightness. If OK, CARRY OUT the Coolant Expansion Tank Cap Pressure Test Component Test in this section. |
| | • Coolant expansion tank. | • INSPECT the seal face on the coolant expansion tank for damage. INSTALL a new coolant expansion tank as necessary. |

## DIAGNOSIS AND TESTING

| Symptom | Possible Sources | Action |
|---|---|---|
| | • Coolant level/condition. | • CHECK the coolant level. REFILL the cooling system as necessary.<br>REFER to: Cooling System Draining, Filling and Bleeding - 1.3L Duratec-8V (Rocam)/1.25L Duratec-16V (Sigma)/1.4L Duratec-16V (Sigma)/1.6L Duratec-16V (Sigma) (303-03 Engine Cooling - 1.3L Duratec-8V (Rocam)/1.25L Duratec-16V (Sigma)/1.4L Duratec-16V (Sigma)/1.6L Duratec-16V (Sigma), General Procedures).<br>• CHECK the coolant condition. If the coolant is in poor condition drain and refill with new coolant.<br>REFER to: Cooling System Draining, Filling and Bleeding - 1.3L Duratec-8V (Rocam)/1.25L Duratec-16V (Sigma)/1.4L Duratec-16V (Sigma)/1.6L Duratec-16V (Sigma) (303-03 Engine Cooling - 1.3L Duratec-8V (Rocam)/1.25L Duratec-16V (Sigma)/1.4L Duratec-16V (Sigma)/1.6L Duratec-16V (Sigma), General Procedures). |
| | • Coolant concentration. | • REFER to: Specifications (303-03 Engine Cooling - 1.3L Duratec-8V (Rocam)/1.25L Duratec-16V (Sigma)/1.4L Duratec-16V (Sigma)/1.6L Duratec-16V (Sigma), Specifications). |
| | • Radiator grille. | • INSPECT the radiator grille for air restrictions or damage. REPAIR or INSTALL new parts as necessary. |

## DIAGNOSIS AND TESTING

| Symptom | Possible Sources | Action |
|---|---|---|
| | • Water pump. | • CARRY OUT the Pressure Test Component Test in this section. INSPECT the water pump for leaks. INSTALL a new water pump or water pump gasket as necessary.<br>REFER to: Water Pump - 1.3L Duratec-8V (Rocam) (303-03 Engine Cooling - 1.3L Duratec-8V (Rocam)/1.25L Duratec-16V (Sigma)/1.4L Duratec-16V (Sigma)/1.6L Duratec-16V (Sigma), Removal and Installation) / Water Pump - 1.25L Duratec-16V (Sigma)/1.4L Duratec-16V (Sigma)/1.6L Duratec-16V (Sigma) (303-03 Engine Cooling - 1.3L Duratec-8V (Rocam)/1.25L Duratec-16V (Sigma)/1.4L Duratec-16V (Sigma)/1.6L Duratec-16V (Sigma), Removal and Installation). |
| | • Thermostat. | • CARRY OUT the Thermostat Test Component Test in this section. INSTALL a new thermostat as necessary.<br>REFER to: Thermostat - 1.3L Duratec-8V (Rocam) (303-03 Engine Cooling - 1.3L Duratec-8V (Rocam)/1.25L Duratec-16V (Sigma)/1.4L Duratec-16V (Sigma)/1.6L Duratec-16V (Sigma), Removal and Installation) / Thermostat - 1.25L Duratec-16V (Sigma)/1.4L Duratec-16V (Sigma)/1.6L Duratec-16V (Sigma) (303-03 Engine Cooling - 1.3L Duratec-8V (Rocam)/1.25L Duratec-16V (Sigma)/1.4L Duratec-16V (Sigma)/1.6L Duratec-16V (Sigma), Removal and Installation). |
| | • Accessory drive belt | • CHECK the accessory drive belt for correct operation.<br>REFER to: Accessory Drive (303-05 Accessory Drive, Diagnosis and Testing). |

## DIAGNOSIS AND TESTING

| Symptom | Possible Sources | Action |
|---|---|---|
| | • Cooling fan motor. | • CHECK the operation of the cooling fan motor. REFER to WDS. |
| | • Engine. | • INSPECT the engine, cylinder head, cylinder block and cylinder head gasket.<br>REFER to: Cylinder Head (303-01 Engine - 1.25L Duratec-16V (Sigma)/1.4L Duratec-16V (Sigma)/1.6L Duratec-16V (Sigma), In-vehicle Repair). |
| • The engine does not reach normal operating temperature. | • ECT sensor. | • CHECK the ECT sensor. REFER to WDS. |
| | • Temperature gauge. | • CHECK the instrument cluster engine temperature gauge.<br>REFER to: Instrument Cluster - Vehicles Built Up To: 10/2005 (413-01 Instrument Cluster, Diagnosis and Testing)<br>/ Instrument Cluster - Vehicles Built From: 10/2005 (413-01 Instrument Cluster, Diagnosis and Testing). |
| | • Thermostat. | • CARRY OUT the Thermostat Test Component Test in this section. INSTALL a new thermostat as necessary.<br>REFER to: Thermostat - 1.3L Duratec-8V (Rocam) (303-03 Engine Cooling - 1.3L Duratec-8V (Rocam)/1.25L Duratec-16V (Sigma)/1.4L Duratec-16V (Sigma)/1.6L Duratec-16V (Sigma), Removal and Installation)<br>/ Thermostat - 1.25L Duratec-16V (Sigma)/1.4L Duratec-16V (Sigma)/1.6L Duratec-16V (Sigma) (303-03 Engine Cooling - 1.3L Duratec-8V (Rocam)/1.25L Duratec-16V (Sigma)/1.4L Duratec-16V (Sigma)/1.6L Duratec-16V (Sigma), Removal and Installation). |

# DIAGNOSIS AND TESTING

## Component Tests

### Pressure Test

**WARNING:When releasing the system pressure, cover the expansion tank cap with a thick cloth to prevent the possibility of coolant scalding, Failure to follow this instruction may result in personal injury.**

1. Remove the coolant expansion tank cap.
2. Install the special tools to the coolant expansion tank.
3. Pressurize the system to the coolant expansion tank cap release pressure.

   REFER to: Specifications (303-03 Engine Cooling - 1.3L Duratec-8V (Rocam)/1.25L Duratec-16V (Sigma)/1.4L Duratec-16V (Sigma)/1.6L Duratec-16V (Sigma), Specifications).
4. Observe the cooling system pressure tester gauge reading for approximately two minutes. The pressure should not drop during this time. If the system holds pressure, proceed to step 6. If the system does not hold pressure, check it thoroughly for coolant leaks.
5. Check the engine for coolant leaks. Drain the cooling system, repair any coolant leaks found and fill and bleed the cooling system as necessary.

   REFER to: Cooling System Draining, Filling and Bleeding - 1.3L Duratec-8V (Rocam)/1.25L Duratec-16V (Sigma)/1.4L Duratec-16V (Sigma)/1.6L Duratec-16V (Sigma) (303-03 Engine Cooling - 1.3L Duratec-8V (Rocam)/1.25L Duratec-16V (Sigma)/1.4L Duratec-16V (Sigma)/1.6L Duratec-16V (Sigma), General Procedures).
6. Recheck the system by repeating steps 3 and 4 at least twice.

### Radiator Leak Test, Removed From Vehicle

**CAUTION:Radiator internal pressure must not exceed 130 kpa (20 psi) or damage may result.**

Clean the radiator thoroughly before leak testing it, to prevent contamination of the water in the test tank. Leak test the radiator in clean water with 138 kpa (20 psi) air pressure. Check it thoroughly for air leaks. INSTALL a new radiator if necessary.

REFER to: Radiator (303-03 Engine Cooling - 1.3L Duratec-8V (Rocam)/1.25L Duratec-16V (Sigma)/1.4L Duratec-16V (Sigma)/1.6L Duratec-16V (Sigma), Removal and Installation).

### Coolant Expansion Tank Cap Pressure Test

**WARNING:When releasing the system pressure, cover the expansion tank cap with a thick cloth to prevent the possibility of coolant scalding, Failure to follow this instruction may result in personal injury.**

1. Remove the coolant expansion tank cap.
2. Use water to clean the area of the rubber seal and pressure relief valve. Install the pressure tester and adapter and immerse the coolant expansion tank cap in water .

**NOTE:**If the plunger of the pump is depressed too quickly, an erroneous pressure reading will result.

3. Slowly depress the plunger of the pressure test pump until the pressure gauge reading stops increasing, and note the highest pressure reading obtained.
4. Release pressure by turning the pressure relief screw counterclockwise. Tighten the pressure relief screw and repeat step 3 at least twice to make sure the pressure test reading is repeatable and within acceptable gauge reading limits of the coolant expansion tank cap.
5. If the pressure test gauge readings are not within the acceptable gauge reading limits, INSTALL a new coolant expansion tank cap.

### Thermostat Test

1. Connect the WDS to the data link connector (DLC).
2. Using the WDS datalogger function, SELECT the following sensors (as applicable to the application):

- IAT - intake air temperature (IAT) sensor
- ECT - engine coolant temperature (ECT) sensor
- CHT - cylinder head temperature (CHT) sensor
- LOAD - engine load
- VSS - vehicle speed sensor (VSS)

## DIAGNOSIS AND TESTING

- RPM - engine speed
- DSRPM - desired engine speed

The IAT sensor output is useful if the engine being tested is cold or after an over-night cold soak. The ECT sensor or CHT sensor and the IAT sensor should either indicate the same value or be within 1 to 2 degrees Celsius of each other.

The ECT sensor output is important to display as it indicates the engine warm-up and opening temperature for the thermostat. It will initially indicate a slightly higher reading just before the thermostat opens and then drops back before settling to a near flat line output (see graphic below).

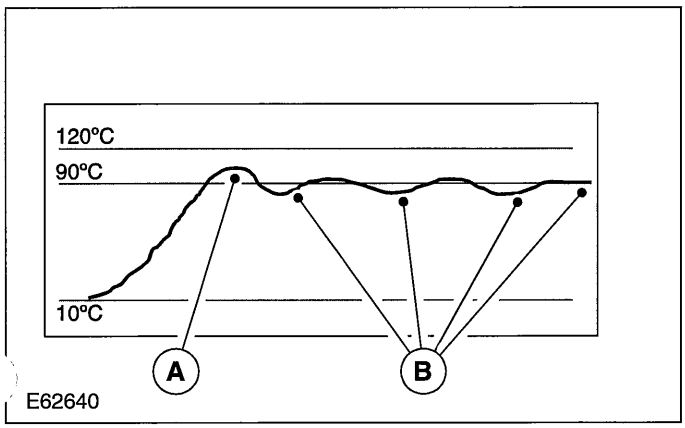


| Item | Description |
|---|---|
| A | Thermostat opens |
| B | Thermostat settles into a cyclic open and closure pattern |

**CAUTION:If the ECT sensor output reaches the 120°C default line under normal cooling system pressure, internal damage may be caused to the engine and a diagnostic trouble code (DTC) will be set in the PCM. The test should be stopped and the cause located and corrected. If the cooling system does not pressurize, the coolant will boil at 100°C which may also damage the engine. CARRY OUT the Coolant Expansion Tank Cap Pressure Test Component Test in this section.**

If the WDS only allows the ECT sensor to be displayed in volts, refer to the following table for corresponding Celsius values:

| Volts | °Celsius |
|---|---|
| 1.33 | 60 |
| 1.02 | 70 |
| 0.78 | 80 |
| 0.60 | 90 |
| 0.46 | 100 |
| 0.35 | 110 |
| 0.27 | 120 |

The CHT sensor output is useful to examine the cylinder head temperature rise during the warm-up cycle and later during the normal light throttle cruise test. This sensor output may vary between vehicles with manual transmission and vehicles with automatic transmission and should be used for reference only.

The LOAD display is used for reference as it is necessary to maintain a stable load line during the test. It is necessary to carry out the test under normal light throttle cruise driving conditions and average loads, typically 40% to 70% of the load value.

The VSS output is used for reference but can help to identify misfires and sensors which fail during the warm-up cycle.

The RPM display indicates the engine speed and can be compared with the DSRPM.

The DSRPM is the desired or calculated idle speed which the PCM commands the engine to reach. If the thermostat opens too early (before the correct opening temperature has been reached), the engine will not reach this value.

When using the WDS in data logger mode, the signals recorded should remain within the DEFAULT values set by the WDS.

3. **WARNING:Make sure that the WDS is placed in the vehicle so that it does not interfere with the safe operation of the vehicle. Do not place the WDS in the deployment path of any air bag. Failure to follow these instructions may result in personal injury.**

**NOTE:**The road test is best carried out with the aid of another technician in the vehicle to enable the vehicle to be driven safely while the sensor outputs are monitored within datalogger. If there is only one technician available, the WDS can be set up (using the record/capture mode camera icon) before leaving the workshop to record a 16 km (10 mile) test.

## DIAGNOSIS AND TESTING

**NOTE:**The results from the test are more conclusive if the engine is cold when the test is started.

Carry out a road test.

REFER to: Road/Roller Testing (100-00 General Information, Description and Operation).

4. Drive the vehicle at a constant throttle opening and set speed until the ECT value settles into a shallow rise and fall signal, close to a straight line. This indicates that the thermostat is functioning correctly.

**NOTE:**Some thermostats indicate the temperature(s) in Celsius and Fahrenheit.

The graphic below shows the location and an example of the opening temperature (88°C) and fully open temperature (102°C) of a thermostat.

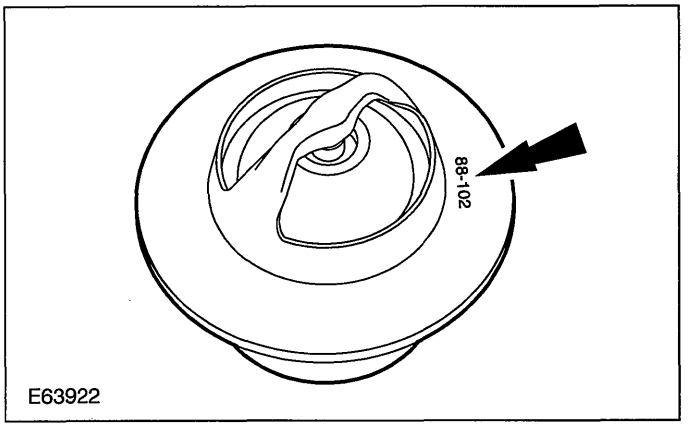


The graphic below shows an alternative method used to show the opening temperature (88°C) and fully open temperature (112°C) of a thermostat.

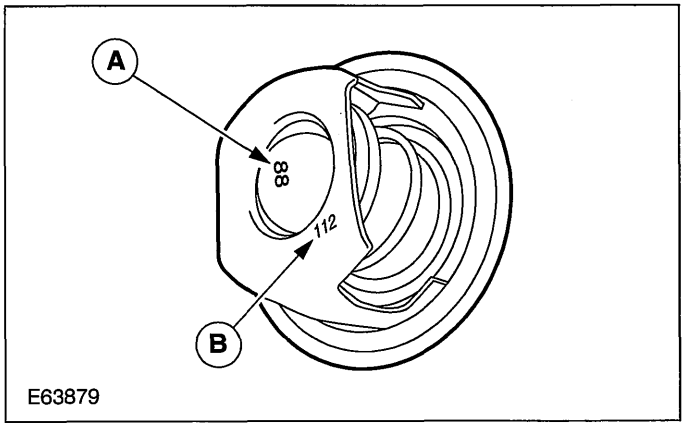


| Item | Description |
|---|---|
| A | Opening temperature |
| B | Fully open temperature |

**NOTE:**Generally, most thermostats maintain a coolant temperature between 88°C (190°F) and 92°C (198°F) although dual stage electric thermostats may increase the coolant temperature up to 100°C (212°F) under light engine load conditions.

The engine should start cleanly and the ECT value will rise quite quickly with smooth progression. If the ECT signal appears unstable or erratic, the ECT sensor, electrical connector and wiring harness to the PCM need to be visually inspected for damage, chafing or water ingress.

The temperature should rise to approximately 90°C for a thermostat that has an 88°C value. The signal value will then fall as cooler coolant enters the engine.

If the ECT value fails to maintain a constant value and falls back to lower figures, typically between 60°C (140°F) and 70°C (150°F), the thermostat and its sealing function within the thermostat housing must be checked.

5. INSTALL a new thermostat.

   REFER to: Thermostat - 1.3L Duratec-8V (Rocam) (303-03 Engine Cooling - 1.3L Duratec-8V (Rocam)/1.25L Duratec-16V (Sigma)/1.4L Duratec-16V (Sigma)/1.6L Duratec-16V (Sigma), Removal and Installation)
   / Thermostat - 1.25L Duratec-16V (Sigma)/1.4L Duratec-16V (Sigma)/1.6L Duratec-16V (Sigma) (303-03 Engine Cooling - 1.3L Duratec-8V (Rocam)/1.25L Duratec-16V (Sigma)/1.4L Duratec-16V (Sigma)/1.6L Duratec-16V (Sigma), Removal and Installation).

6. Carry out another road test from step 1 using the same criteria to confirm that the concern has been rectified.
7. Using the WDS, clear the PCM keep alive memory (KAM) or electrically erasable programmable read only memory (EEPROM) so that new drive values can be learnt.

## GENERAL PROCEDURES

# Cooling System Draining, Filling and Bleeding — 1.3L Duratec-8V (Rocam)/1.25L Duratec-16V (Sigma)/1.4L Duratec-16V (Sigma)/1.6L Duratec-16V (Sigma)(24 122 0)

### Draining

1. **▲WARNING:When releasing the cooling system pressure, cover the coolant expansion tank cap with a thick cloth to prevent the possibility of scalding. Failure to follow this instruction may result in personal injury.**

   **Release the cooling system pressure by slowly turning the coolant expansion tank cap a quarter of a turn.**

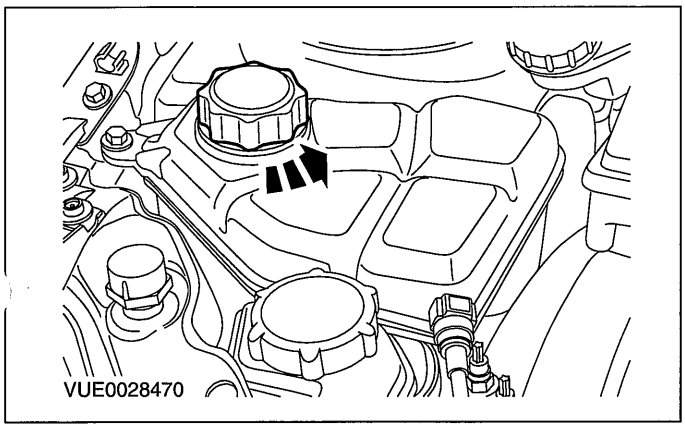


2. **Remove the coolant expansion tank cap.**
3. **Raise and support the vehicle.**

   **For additional information, refer to: Lifting (100-02 Jacking and Lifting, Description and Operation).**
4. **Drain the cooling system.**
   - Allow the coolant to drain into a suitable container.

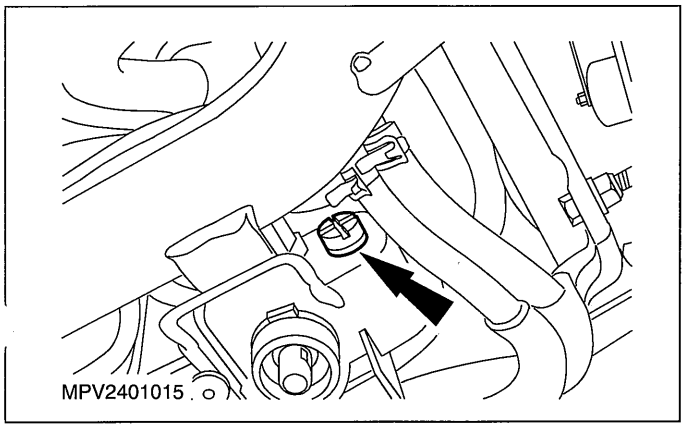


5. **Install the radiator drain plug.**
6. **Lower the vehicle.**

### Filling and Bleeding

1. **Remove the radiator bleed plug (if equipped).**

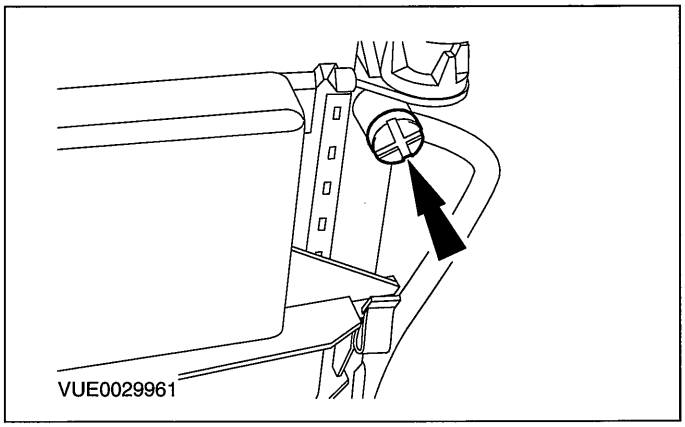


2. **Fill the coolant expansion tank until coolant is expelled from the radiator bleed point or stabilizes at the MAX mark (whichever occurs first).**
3. **Install the radiator bleed plug (if equipped).**
4. **Fill the coolant expansion tank to the MAX mark (if necessary).**

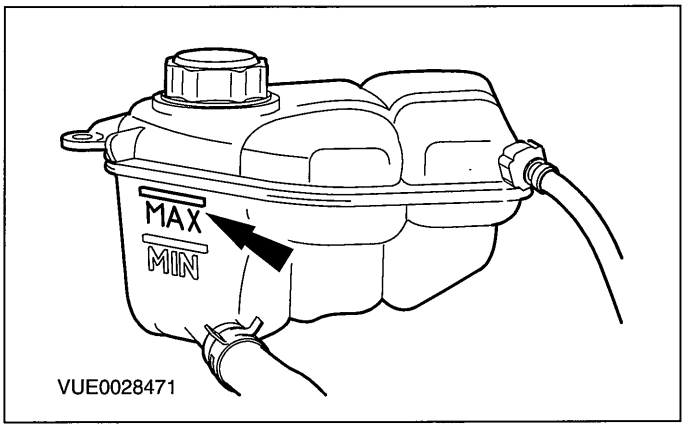


5. **Start and run the engine at 3000 revolutions per minute (RPM) for two minutes.**
6. **Fill the coolant expansion tank completely.**
7. **Install the coolant expansion tank cap.**
8. **Start and run the engine at 3000 RPM for another two minutes.**

## GENERAL PROCEDURES

9. Switch the engine off.

## REMOVAL AND INSTALLATION

# Water Pump — 1.25L Duratec-16V (Sigma)/1.4L Duratec-16V (Sigma)/1.6L Duratec-16V (Sigma)(24 404 0)

### Removal

Vehicles built up to 04/2005

1. **Disconnect the battery ground cable.**

   **For additional information, refer to: Battery Disconnect (414-01 Battery, Mounting and Cables, General Procedures).**

2. **Remove the air cleaner.**

   **For additional information, refer to: Air Cleaner - 1.25L Duratec-16V (Sigma)/1.4L Duratec-16V (Sigma)/1.6L Duratec-16V (Sigma) (303-12 Intake Air Distribution and Filtering, Removal and Installation).**

3. **Drain the cooling system.**

   **For additional information, refer to: Cooling System Draining, Filling and Bleeding - 1.3L Duratec-8V (Rocam)/1.25L Duratec-16V (Sigma)/1.4L Duratec-16V (Sigma)/1.6L Duratec-16V (Sigma) (303-03 Engine Cooling - 1.3L Duratec-8V (Rocam)/1.25L Duratec-16V (Sigma)/1.4L Duratec-16V (Sigma)/1.6L Duratec-16V (Sigma), General Procedures).**

4. **Remove the crankshaft pulley splash shield.**

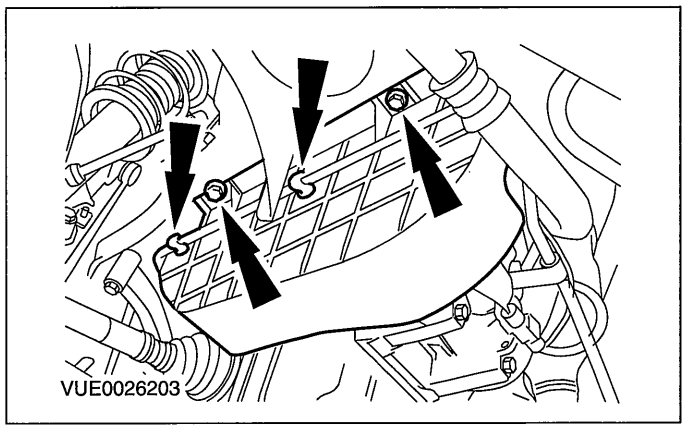


5. **▲WARNING:Do not remove the water pump pulley retaining bolts at this stage as the pulley is under tension from the accessory drive belt. Failure to follow this instruction may result in personal injury.**

   **Loosen the water pump pulley retaining bolts.**

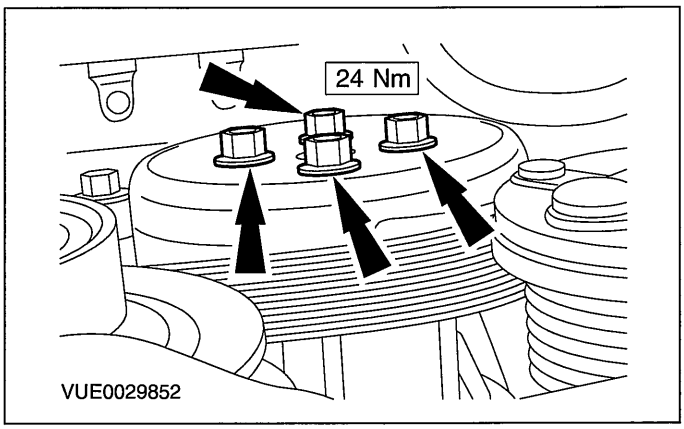


6. **Lower the vehicle.**

7. **Disconnect the degas hose from the coolant expansion tank.**

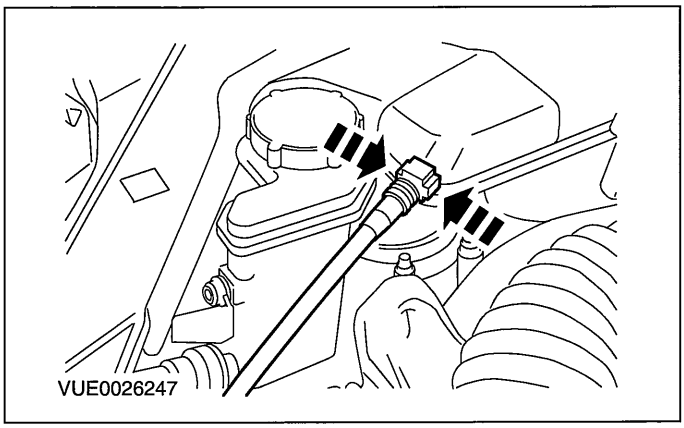


8. **Detach the coolant expansion tank and secure it to one side.**

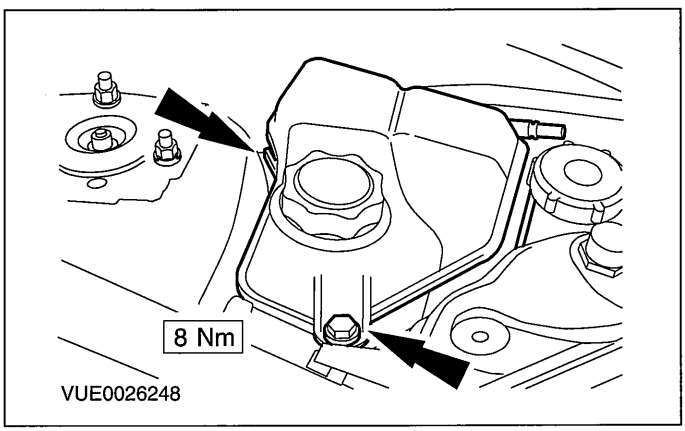

## REMOVAL AND INSTALLATION

9. **Remove the generator.**

   **For additional information, refer to: Generator - 1.25L Duratec-16V (Sigma)/1.4L Duratec-16V (Sigma)/1.6L Duratec-16V (Sigma) (414-02 Generator and Regulator, Removal and Installation).**

10. **Remove the water pump pulley.**

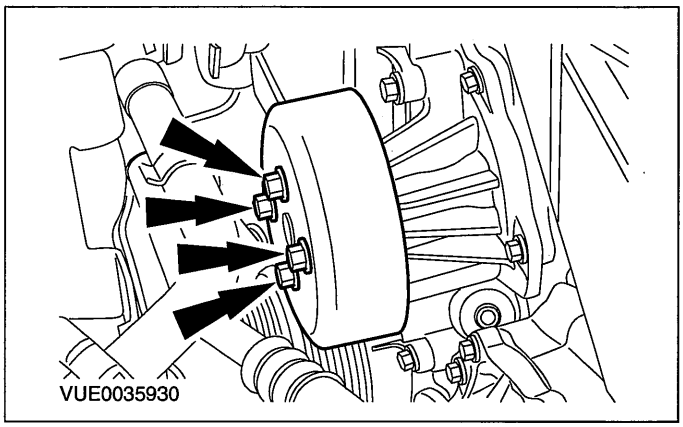


11. **Remove the timing belt cover (cover shown removed for clarity).**

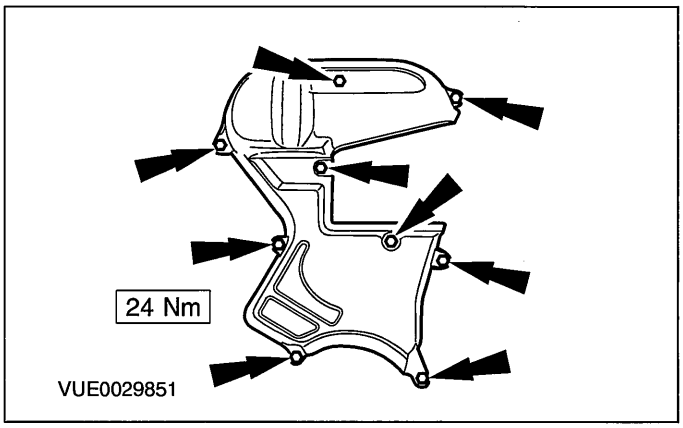


12. **⚠CAUTION:Protect the timing belt and lower cover from contamination by the coolant.**

    **Remove the water pump.**

- Discard the gasket.

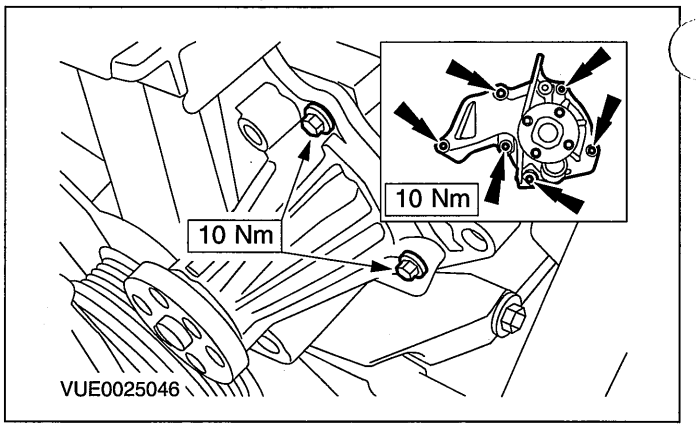


Vehicles built 04/2005 onwards

13. **Remove the timing belt.**

    **For additional information, refer to: Timing Belt (303-01 Engine - 1.25L Duratec-16V (Sigma)/1.4L Duratec-16V (Sigma)/1.6L Duratec-16V (Sigma), In-vehicle Repair).**

14. **Drain the cooling system.**

    **For additional information, refer to: Cooling System Draining, Filling and Bleeding - 1.3L Duratec-8V (Rocam)/1.25L Duratec-16V (Sigma)/1.4L Duratec-16V (Sigma)/1.6L Duratec-16V (Sigma) (303-03 Engine Cooling - 1.3L Duratec-8V (Rocam)/1.25L Duratec-16V (Sigma)/1.4L Duratec-16V (Sigma)/1.6L Duratec-16V (Sigma), General Procedures).**

15. **Remove the water pump and the timing belt tensioner.**

- Discard the gasket.

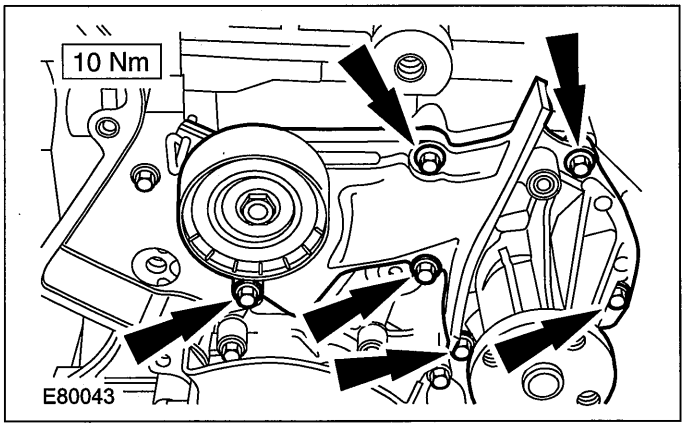

## REMOVAL AND INSTALLATION

16. **Remove the timing belt tensioner from the water pump.**

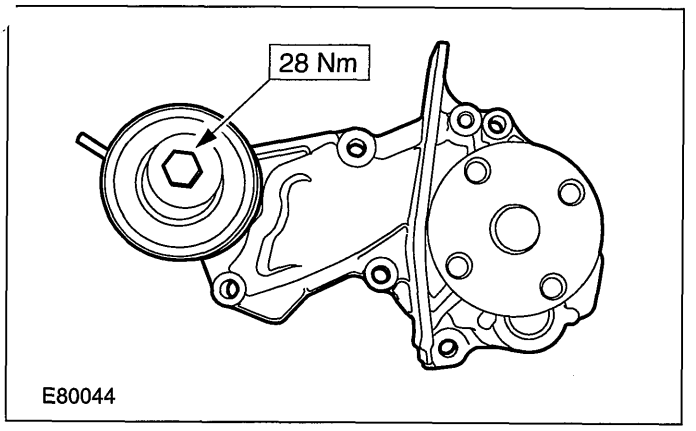


### Installation

1. **NOTE:Install a new water pump gasket.**

   **To install, reverse the removal procedure.**

## REMOVAL AND INSTALLATION

# Thermostat — 1.25L Duratec-16V (Sigma)/1.4L Duratec-16V (Sigma)/1.6L Duratec-16V (Sigma)(24 454 0)

**Special Tool(s)**

| | |
|---|---|
| 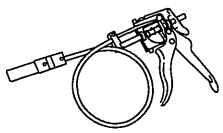 24003 | Remover/Installer, Cooling Hose Clamp 303–397 (24–003) |

## Removal

1. **Drain the cooling system.**

   **For additional information, refer to Cooling System Draining, Filling and Bleeding in this section.**

2. **Remove the generator. For additional information, refer to Section 414-02 [Generator and Regulator].**
3. **Using the special tool, disconnect the radiator lower hose from the thermostat housing.**

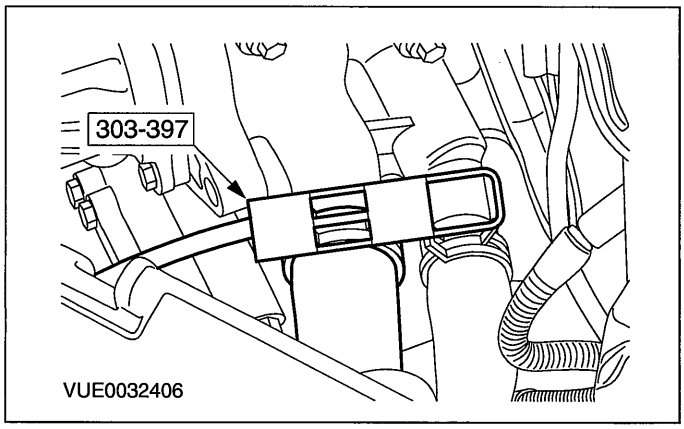


4. **Disconnect the heater hose from the thermostat housing.**

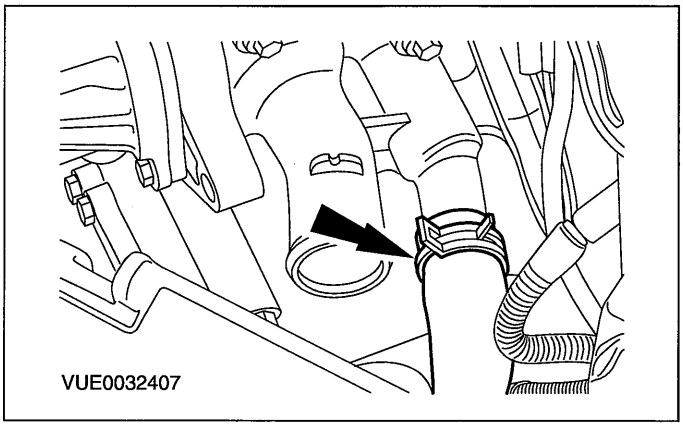


5. **Remove the thermostat housing.**

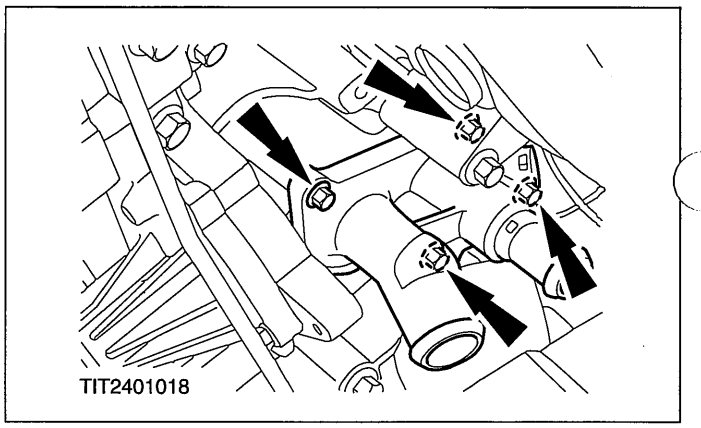


6. **NOTE:The thermostat is installed with the jiggle pin at the top.**

   **Remove the thermostat.**

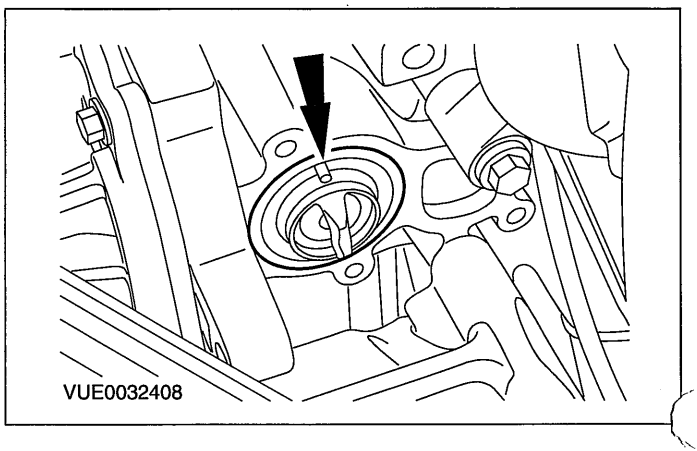


## Installation

1. **To install, reverse the removal procedure.**

## REMOVAL AND INSTALLATION

- Make sure the rubber seal is located correctly.

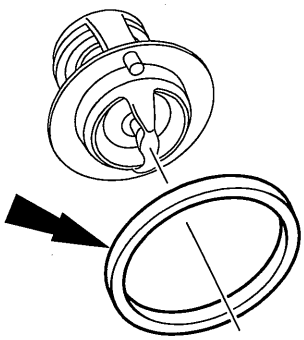

VUE0032409

## REMOVAL AND INSTALLATION

# Radiator(24 254 0)

### Special Tool(s)

| | |
|---|---|
| 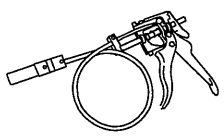 24003 | Remover/Installer, Cooling Hose Clamp 303–397 (24–003) |

## Removal

1. **Disconnect the battery ground cable. For additional information, refer to Section 414-01 [Battery, Mounting and Cables].**
2. **Drain the cooling system.**

   **For additional information, refer to Cooling System Draining, Filling and Bleeding in this section.**
3. **Disconnect the cooling fan motor and cooling fan resistor electrical connectors.**

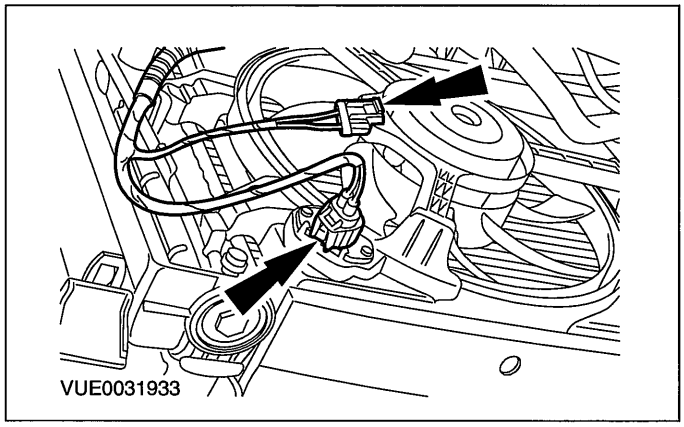


4. **Remove the cooling fan motor and shroud.**
   1. Release the cooling fan motor and shroud from the retaining brackets.
   2. Push the cooling fan motor and shroud upwards and then downwards to remove.

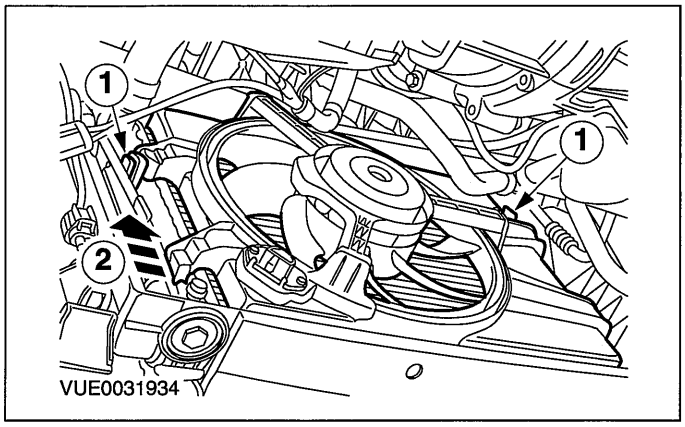


5. **Using the special tool, disconnect the radiator upper hose.**

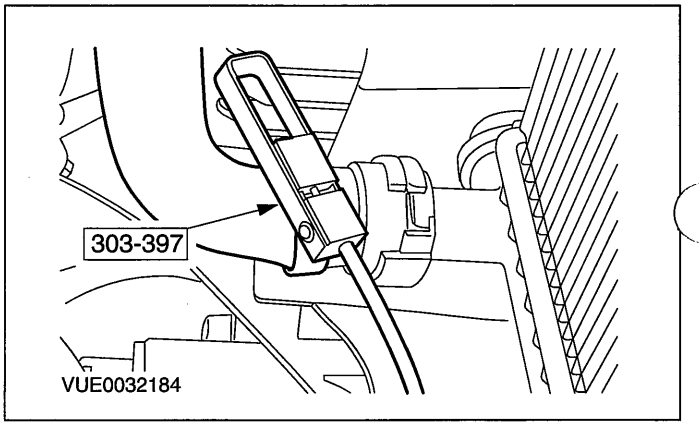


6. **Using the special tool, disconnect the radiator lower hose.**

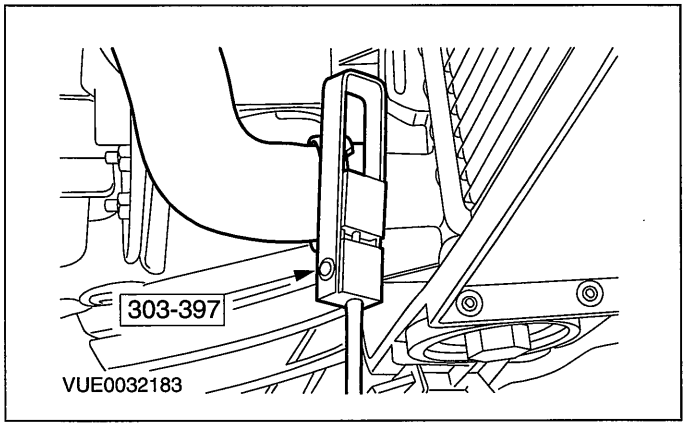


7. **Remove the radiator retainers.**
   1. Remove the radiator retainer locking screws.

## REMOVAL AND INSTALLATION

2. Remove the radiator retainers and grommets.

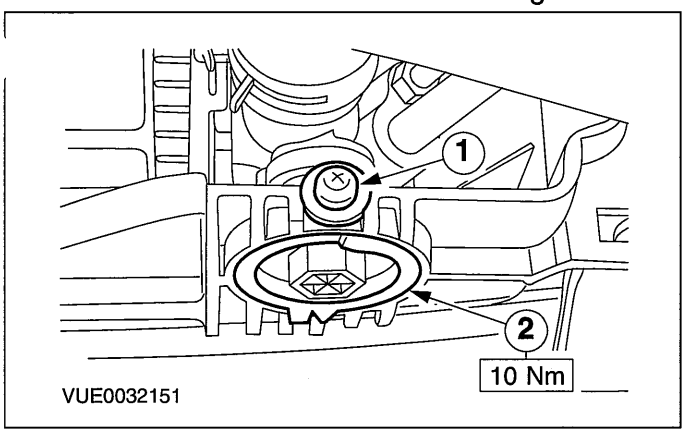


**8. Detach the radiator and the air conditioning (A/C) condenser from the support panel.**

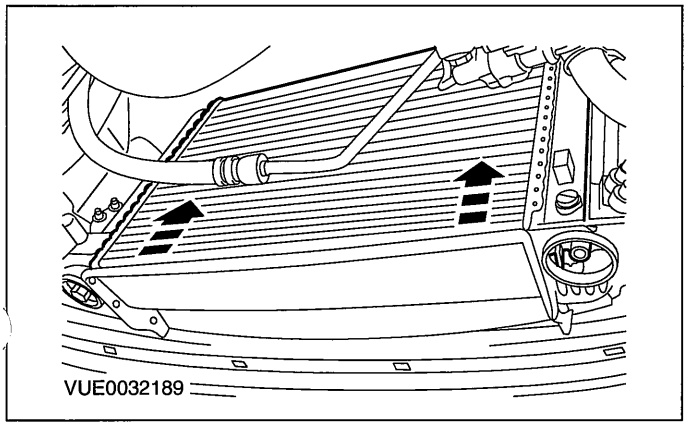


**9. ⚠CAUTION:Support the condenser by positioning it on the support panel.**

**Slide the A/C condenser to detach it from the radiator**

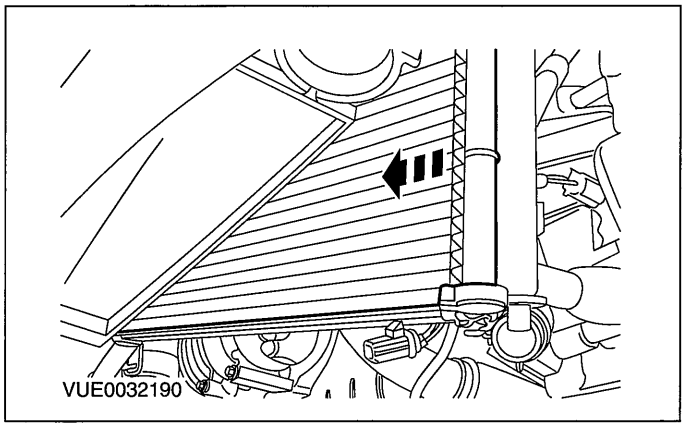


**10. Remove the radiator.**

### Installation

**1. To install, reverse the removal procedure.**

# SECTION 303-03B Engine Cooling — 2.0L Duratec-HE (MI4)

## VEHICLE APPLICATION:2006.0 Fiesta

CONTENTS PAGE


**SPECIFICATIONS**

Specifications ..... 303-03B-2

**DESCRIPTION AND OPERATION**

Engine Cooling ..... 303-03B-3
System Overview ..... 303-03B-3
Components ..... 303-03B-4
Coolant ..... 303-03B-7
Changing Coolant ..... 303-03B-7
Fail-Safe Cooling ..... 303-03B-8

**DIAGNOSIS AND TESTING**

Engine Cooling ..... 303-03B-9
Inspection and Verification ..... 303-03B-9
Symptom Chart ..... 303-03B-9
Component Tests ..... 303-03B-13

**GENERAL PROCEDURES**

Cooling System Draining, Filling and Bleeding ..... (24 122 0) 303-03B-17
Draining ..... 303-03B-17
Filling and Bleeding ..... 303-03B-17

**REMOVAL AND INSTALLATION**

Coolant Pump ..... (24 404 0) 303-03B-19
Thermostat Housing ..... 303-03B-21
Coolant Outlet Connector ..... 303-03B-24
Radiator ..... (24 254 0) 303-03B-26

# SPECIFICATIONS

## Lubricants, Fluids, Sealers and Adhesives

| Description | Specification |
|---|---|
| Motorcraft Super Plus 2000 antifreeze | WSS-M97B44-D |

## Antifreeze

| Specific gravity (providing no other additive is in the coolant) | Approximate percentage of anti-freeze (by volume) | Remains fluid to | Solidifies at |
|---|---|---|---|
| 1.061 at +15°C | 50% | -25°C (-13°F) | -30°C (-22°F) |

## Cooling System Refill Capacities

| Description | Liters |
|---|---|
| Cooling system, including heater system and coolant expansion tank | 4.0 |

## Cooling System Pressure Specification

| Description | Pressure kpa (psi) |
|---|---|
| Radiator pressure test | 138 (20) |
| Coolant expansion tank cap release pressure | 120 to 150 (17-21) |

## Torques

| Description | Nm | lb-ft | lb-in |
|---|---|---|---|
| Radiator retaining nut | 10 | - | 89 |
| Thermostat housing retaining bolts | 10 | - | 89 |
| Coolant pump retaining bolts | 10 | - | 89 |
| Coolant pump pulley retaining bolts | 20 | 15 | - |
| Coolant outlet connector retaining bolts | 10 | - | 89 |
| Ignition coil pack retaining bolts | 6 | - | 53 |

## DESCRIPTION AND OPERATION

# Engine Cooling

### System Overview

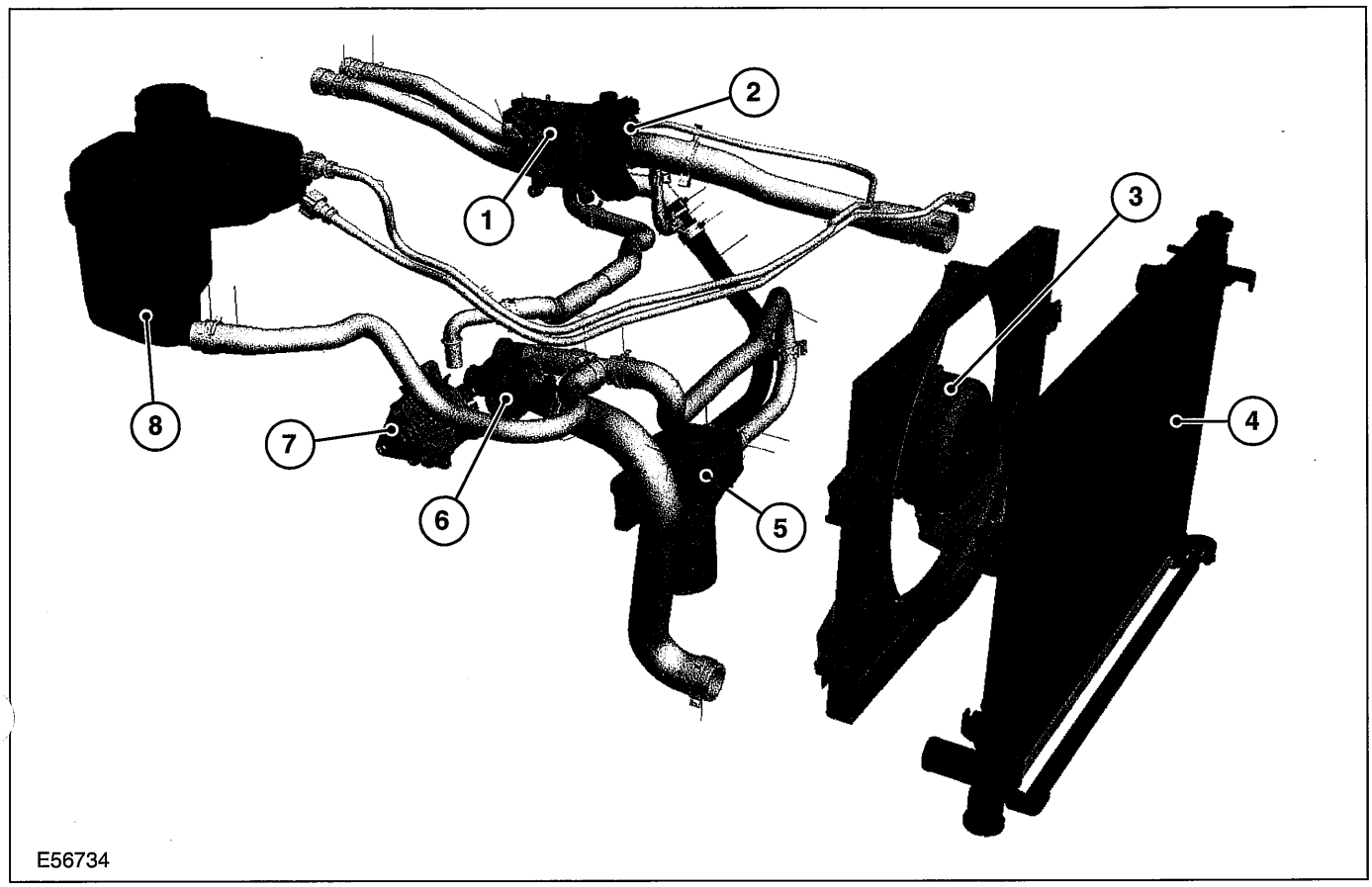


| Item | Description |
|---|---|
| 1 | Coolant outlet connector |
| 2 | Exhaust gas recirculation (EGR) valve |
| 3 | Cooling fan motor |
| 4 | Radiator |

| Item | Description |
|---|---|
| 5 | Oil cooler |
| 6 | Thermostat housing |
| 7 | Coolant pump |
| 8 | Coolant expansion tank |

# DESCRIPTION AND OPERATION

## Components

### Coolant Pump

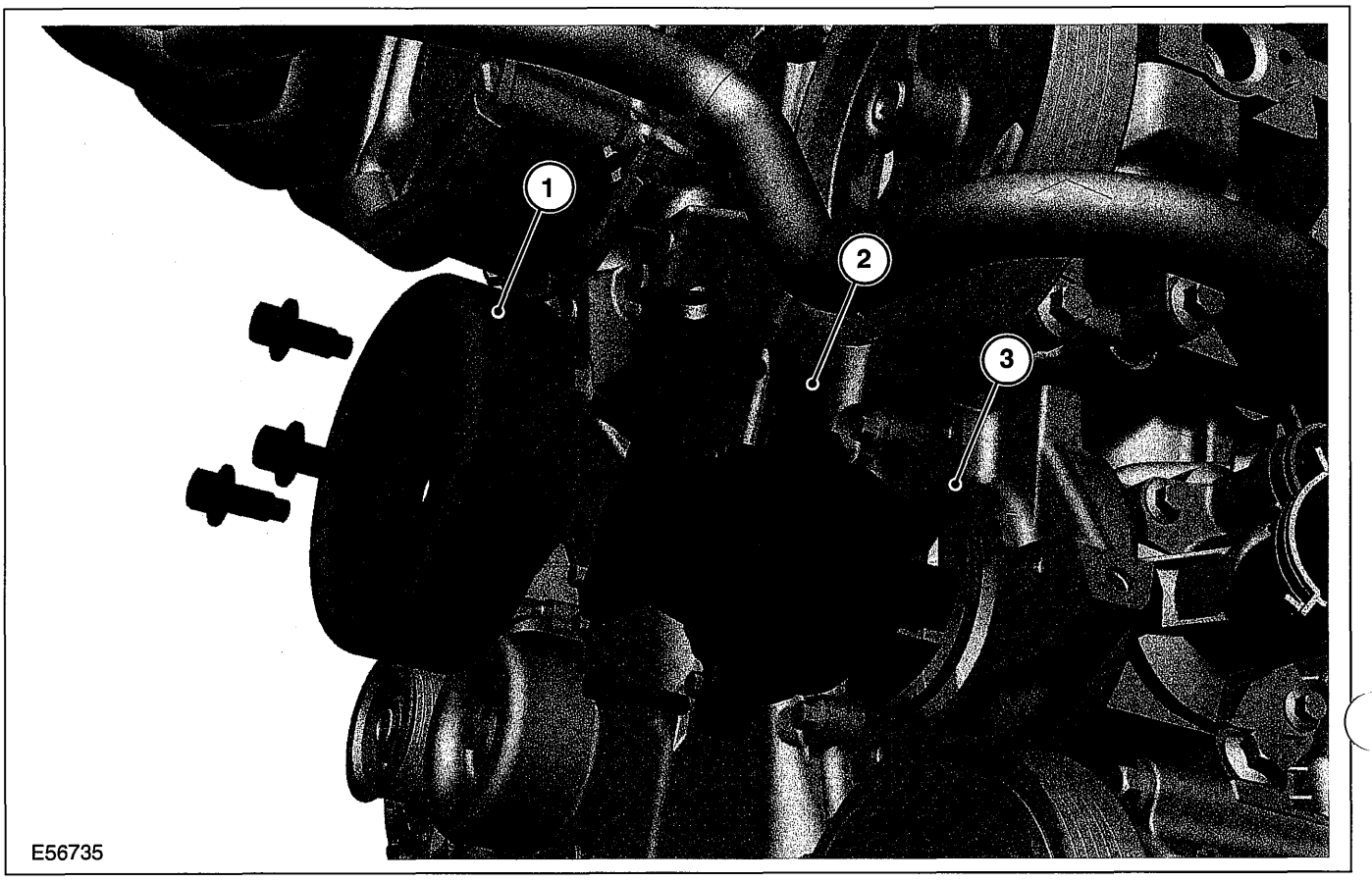


| Item | Description |
|---|---|
| 1 | Coolant pump pulley |
| 2 | Coolant pump |
| 3 | Coolant pump gasket |

The coolant pump is of a conventional design and is driven by the water pump pulley and accessory drive belt.

It is driven through a pulley by the accessory drive belt.

The coolant pump gasket must not be reused.

## DESCRIPTION AND OPERATION

### Thermostat Housing

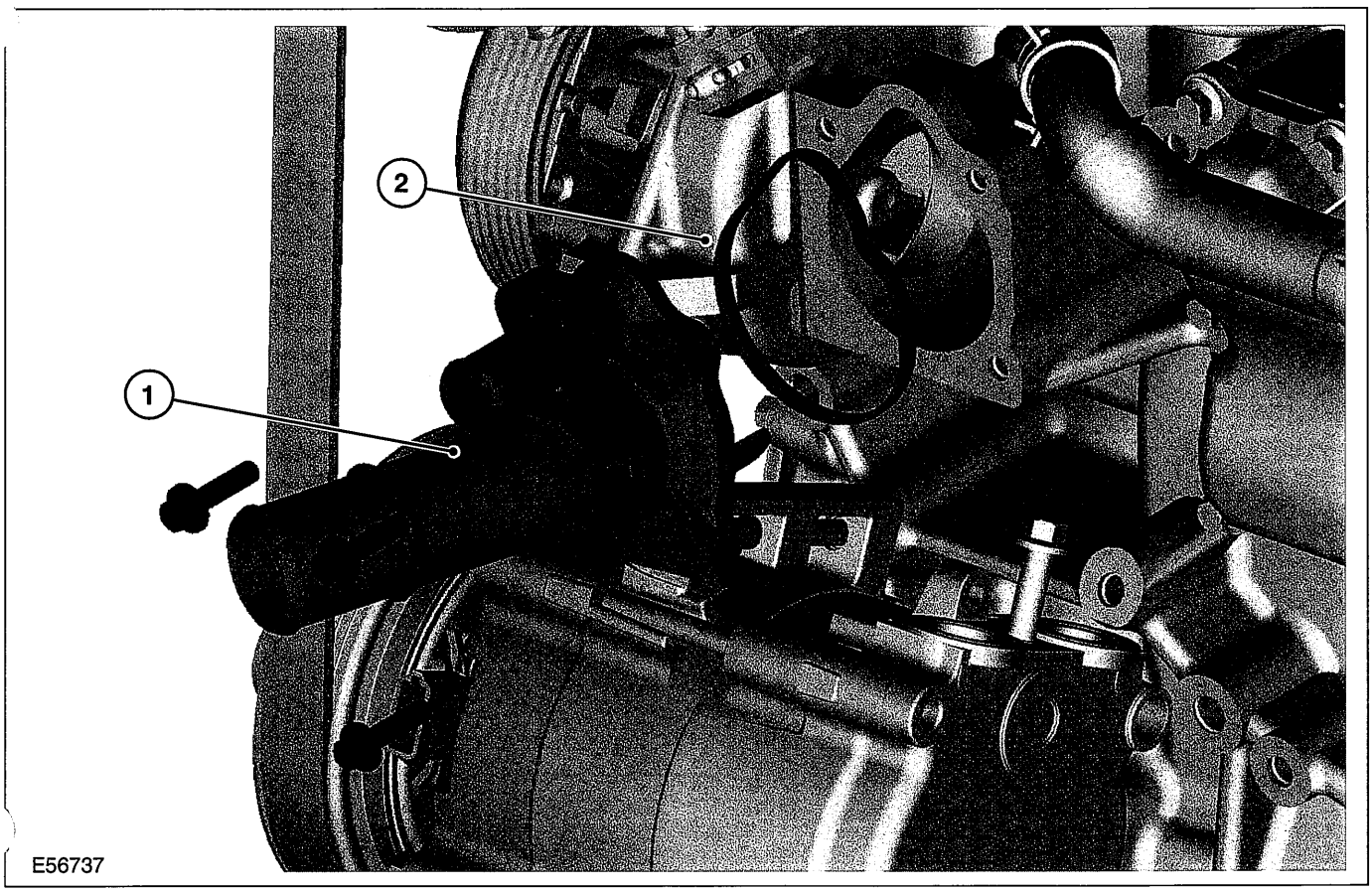


| Item | Description |
|---|---|
| 1 | Thermostat housing |
| 2 | Thermostat housing gasket |

The thermostat and thermostat housing are located on the side of the engine block.

The thermostat is built into the thermostat housing and cannot be serviced as a separate component.

## DESCRIPTION AND OPERATION

### Coolant Outlet Connector

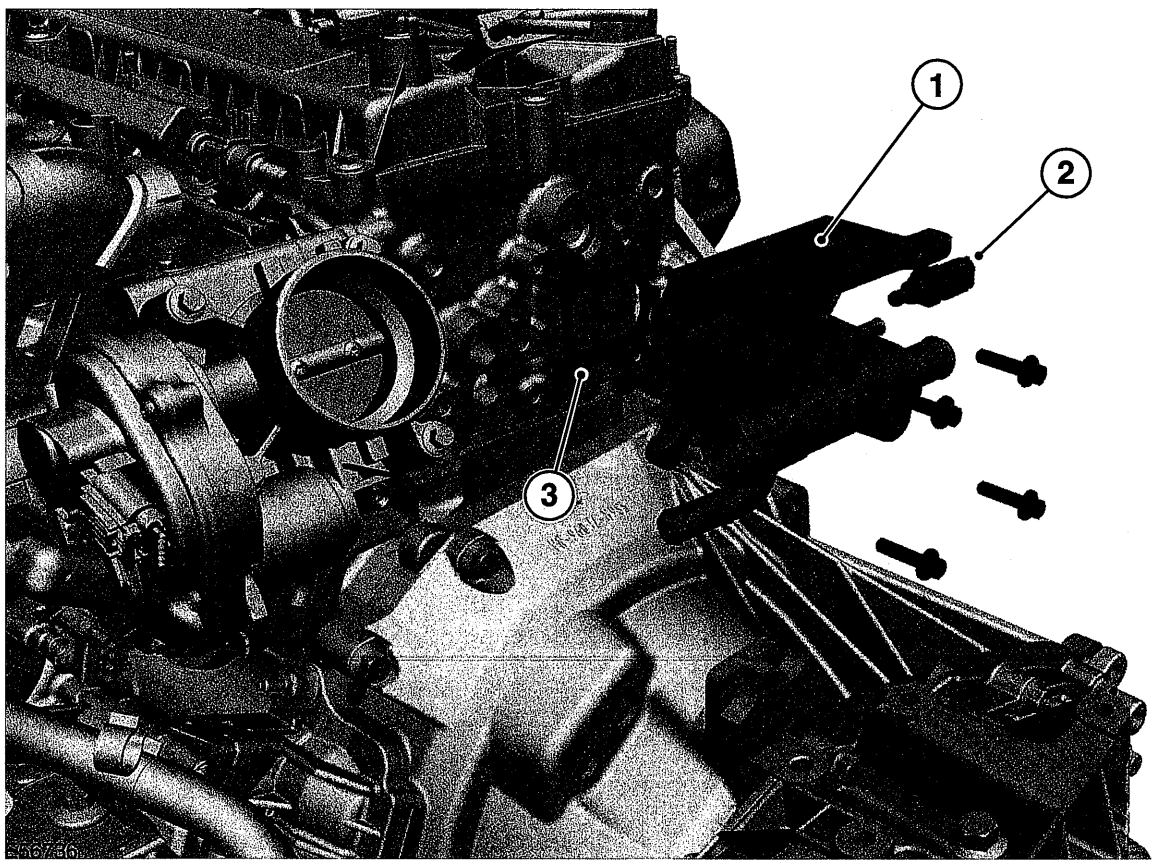


| Item | Description |
|---|---|
| 1 | Coolant outlet connector |
| 2 | Engine coolant temperature (ECT) sensor |
| 3 | Coolant outlet connector gasket |

The coolant outlet connector is located on the cylinder head above the transmission.

The ECT sensor is located in the coolant outlet connector.

## DESCRIPTION AND OPERATION

### Oil Cooler

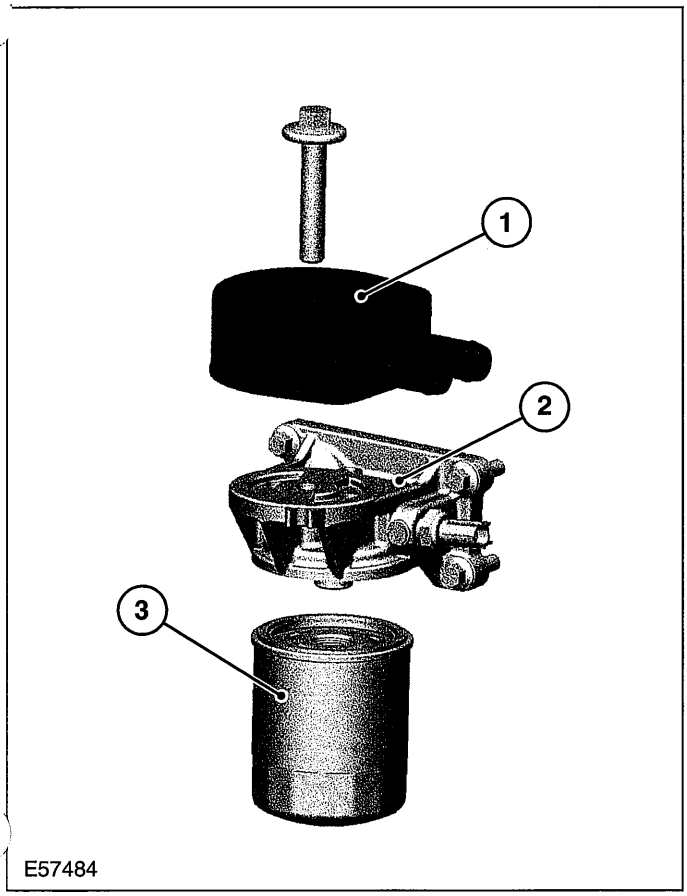


| Item | Description |
|---|---|
| 1 | Oil cooler |
| 2 | Oil filter adaptor |
| 3 | Oil filter |

The oil cooler is an oil to water type and is a full flow system.

The oil cooler and oil filter are fitted to an adaptor which is mounted on the cylinder block.

The coolant supply for the oil cooler is through the thermostat by-pass hose.

### Coolant Recovery System

A pressurized coolant expansion tank system is used which continuously separates the air from the cooling system and replenishes the system through the coolant expansion tank outlet hose.

A continuous vent from the engine and radiator to the coolant expansion tank prevents air locks from forming in the cooling system.

No manual bleed points are provided on the system.

The coolant expansion tank serves as the location for:

- Service fill.
- Coolant expansion during warm-up.
- Air separation during operation.
- System pressurization by the coolant pressure cap.

### Coolant

**WARNING:Coolant contains monoethylene glycol and other constituents which are toxic if taken internally and can be absorbed into the skin after prolonged contact. Failure to follow this instruction may result in personal injury.**

Coolant concentration should be checked through the neck of the expansion tank with a hydrometer. The acceptable range of specific gravity (sg) of correctly balanced fluids is between 1.06 and 1.07kg/l, which represents a coolant concentration between 40% and 55%. If the concentration falls below 40% there is insufficient low temperature protection and the corrosion resistance will be inadequate. In such cases the concentration must be brought back to specification.

The coolant used is the orange-colored Motorcraft Super Plus 2000. Motorcraft Super Plus 2000 is a non silicated organic acid technology (OAT) coolant, and must not be mixed with other coolant types. For cooling system top up, only use coolant which meets the correct specification and is compatible with the existing coolant.

### Changing Coolant

**WARNING:When releasing the cooling system pressure, cover the coolant expansion tank cap with a thick cloth to prevent the possibility of coolant scalding. Failure to follow this instruction may result in personal injury.**

**CAUTION:When draining the coolant or changing any cooling system components, it is imperative that no coolant comes into contact with the camshaft drive belt or accessory drive belt. If necessary the belt should be removed. Contamination of the belt may result in premature belt failure.**

**NOTE:**Providing the coolant has not been contaminated with other fluids or foreign matter, the robust corrosion resistance properties of this

## DESCRIPTION AND OPERATION

coolant means that it can be re-used after changing an aluminium cooling system component, although the concentration should always be checked and maintained within specification.

This coolant should be changed after a period of 10 years or 150 000 miles, whichever occurs first. Refill the cooling system with coolant which meets the correct specification and is compatible with the existing coolant.

### Fail-Safe Cooling

The vehicle has a strategy built into the powertrain control module (PCM) that will control the engine if the engine starts to overheat.

If the engine starts to overheat, stage 1 of the strategy will commence. The ECT sensor transmits a signal to the PCM which then moves the temperature gauge pointer into the red zone.

If the engine is not switched off and the temperature continues to rise, the malfunction indicator lamp (MIL) is illuminated. This indicates to the driver that the engine is approaching critical limits and should stop. At this point DTC P1285 is set in the PCM which can be retrieved using WDS.

If the MIL and temperature gauge are ignored by the driver, stage 2 of the strategy will commence. The PCM will start to control the engine by cutting out two cylinders and restricting the RPM to below 3000 RPM. The MIL will remain illuminated. This indicates that long term engine damage may occur and vehicle emissions will be affected. At this point DTC P1299 is set in the PCM which can be retrieved using WDS.

Air is drawn into the deactivated cylinders which helps to control the temperature of the engine internal components. The deactivated cylinders are alternated to allow even cooling of all the cylinders.

**NOTE:**If the driver is using a high percentage of throttle travel (for example, an overtaking maneuver) when the PCM starts engine deactivation (stage 2), the deactivation will be delayed for 10 seconds.

**NOTE:**After 2-cylinder operation has begun, the engine will not revert to 4-cylinder operation, even if the temperature should fall, until the ignition is switched off and then on again.

**NOTE:**The MIL can only be extinguished by using WDS after the fault has been rectified and the DTC cleared.

If the engine temperature still continues to rise, stage 3 of the strategy will commence. This will result in the engine being totally disabled before major engine damage or seizure occurs. The MIL will begin to flash, indicating to the driver that the engine will be switched off after 30 seconds. This allows the driver time to choose a suitable parking place.

## DIAGNOSIS AND TESTING

# Engine Cooling

### Special Tool(s)

| | |
|---|---|
| 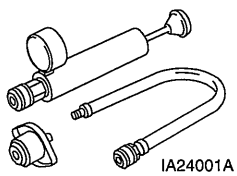 IA24001A | Pressure Tester, Cooling System 303-396 (24-001 A) |
| 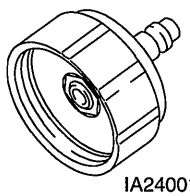 IA2400101A | Adaptor for 303-396 303-396-01 |

### Visual Inspection Chart

| Mechanical | Electrical |
|---|---|
| • Coolant leak(s)<br>• Coolant level<br>• Gasket(s) or seal(s)<br>• Core plug(s)<br>• Hose(s) or hose joints<br>• Coolant expansion tank cap and seal<br>• Coolant expansion tank<br>• Radiator<br>• Coolant pump<br>• Thermostat housing<br>• Heater core<br>• Accessory drive belt<br>• Coolant outlet connector | • Fuse(s)<br>• Relay(s)<br>• Wiring harness<br>• Electrical connector(s)<br>• Engine coolant temperature (ECT) sensor<br>• Cooling fan motor<br>• Powertrain control module (PCM) |

## Inspection and Verification

1. Verify the customer concern.
2. Visually inspect for obvious signs of mechanical or electrical damage.
3. If an obvious cause for an observed or reported concern is found, correct the cause (if possible) before proceeding to the next step
4. If the cause is not visually evident, verify the symptom and refer to the Symptom Chart.

## Symptom Chart

### Symptom Chart

| Symptom | Possible Sources | Action |
|---|---|---|
| • Loss of coolant | • Hose(s) or hose joint(s). | • INSPECT the hoses and hose joints. INSTALL a new hose(s) as necessary. |
| | • Radiator. | • INSPECT the radiator for leaks. CARRY OUT the Pressure Test Component Test in this section. INSTALL a new radiator as necessary.<br>REFER to: Radiator (303-03 Engine Cooling - 2.0L Duratec-HE (MI4), Removal and Installation). |

## DIAGNOSIS AND TESTING

| Symptom | Possible Sources | Action |
|---|---|---|
| | • Coolant pump. | • INSPECT the coolant pump for leaks. CARRY OUT the Pressure Test Component Test in this section. INSTALL a new coolant pump or coolant pump gasket as necessary.<br>REFER to: Coolant Pump (303-03 Engine Cooling - 2.0L Duratec-HE (MI4), Removal and Installation). |
| | • Thermostat housing. | • INSPECT the thermostat housing for leaks. CARRY OUT the Pressure Test Component Test in this section. INSTALL a new thermostat housing and thermostat housing gasket as necessary.<br>REFER to: Thermostat Housing (303-03 Engine Cooling - 2.0L Duratec-HE (MI4), Removal and Installation). |
| | • Coolant expansion tank cap or seal(s). | • CHECK the coolant expansion tank cap for tightness and damage. INSTALL a new coolant expansion cap as necessary. |
| | • Coolant expansion tank. | • INSPECT the coolant expansion tank for damage. INSTALL a new coolant expansion tank as necessary. |
| | • Heater core. | • CHECK the heater core for leaks. |
| | • Engine. | • INSPECT the engine, cylinder head, cylinder block and cylinder head gasket.<br>REFER to: Cylinder Head (303-01 Engine - 1.3L Duratec-8V (Rocam), In-vehicle Repair). |

## DIAGNOSIS AND TESTING

| Symptom | Possible Sources | Action |
|---|---|---|
| • The engine overheats (signs of coolant boiling) | • Cooling system does not hold pressure. | • INSPECT the coolant expansion tank for damage. INSTALL a new coolant expansion tank as necessary.<br>• INSPECT the coolant pump or coolant pump gasket for damage. INSTALL a new coolant pump or coolant pump gasket as necessary.<br>REFER to: Coolant Pump (303-03 Engine Cooling - 2.0L Duratec-HE (MI4), Removal and Installation).<br>• INSPECT the engine, cylinder head, cylinder block and cylinder head gasket.<br>REFER to: Cylinder Head (303-01 Engine - 1.3L Duratec-8V (Rocam), In-vehicle Repair). |
| | • Air in cooling system. | • BLEED the cooling system.<br>REFER to: Cooling System Draining, Filling and Bleeding (303-03 Engine Cooling - 2.0L Duratec-HE (MI4), General Procedures). |
| | • Coolant expansion tank cap or seal(s). | • CHECK the coolant expansion tank cap for tightness and damage. INSTALL a new coolant expansion cap as necessary. |
| | • Coolant expansion tank. | • INSPECT the coolant expansion tank for damage. INSTALL a new coolant expansion tank as necessary. |

## DIAGNOSIS AND TESTING

| Symptom | Possible Sources | Action |
|---|---|---|
| | • Coolant level or condition. | • CHECK the coolant level. REFILL the cooling system as necessary.<br>REFER to: Cooling System Draining, Filling and Bleeding (303-03 Engine Cooling - 2.0L Duratec-HE (MI4), General Procedures).<br>• CHECK the coolant condition and concentration<br>REFER to: Specifications (303-03 Engine Cooling - 2.0L Duratec-HE (MI4), Specifications).<br>If the coolant is contaminated or the concentration is below specifications, drain and refill with new coolant.<br>REFER to: Cooling System Draining, Filling and Bleeding (303-03 Engine Cooling - 2.0L Duratec-HE (MI4), General Procedures). |
| | • Radiator grille. | • INSPECT the radiator grille for air restrictions or damage. REPAIR or INSTALL new parts as necessary. |
| | • Coolant pump. | • CARRY OUT the Pressure Test Component Test in this section. INSPECT the coolant pump for leaks. INSTALL a new coolant pump or coolant pump gasket as necessary.<br>REFER to: Coolant Pump (303-03 Engine Cooling - 2.0L Duratec-HE (MI4), Removal and Installation). |
| | • Thermostat. | • CARRY OUT the Thermostat Test Component Test in this section. INSTALL a new thermostat housing and thermostat housing gasket as necessary.<br>REFER to: Thermostat Housing (303-03 Engine Cooling - 2.0L Duratec-HE (MI4), Removal and Installation). |

## DIAGNOSIS AND TESTING

| Symptom | Possible Sources | Action |
|---|---|---|
| | • Accessory drive belt. | • CHECK the condition of the accessory drive belt.<br>REFER to: Accessory Drive (303-05 Accessory Drive, Diagnosis and Testing). |
| | • Cooling fan. | • CHECK the operation of the cooling fan. REFER to WDS. |
| | • Engine. | • INSPECT the engine, cylinder head, cylinder block and cylinder head gasket.<br>REFER to: Cylinder Head (303-01 Engine - 1.3L Duratec-8V (Rocam), In-vehicle Repair). |
| • The engine does not reach normal operating temperature. | • ECT sensor. | • CHECK the ECT sensor. REFER to WDS. |
| | • Temperature gauge. | • CHECK the instrument cluster engine temperature gauge.<br>REFER to: Instrument Cluster - Vehicles Built Up To: 10/2005 (413-01 Instrument Cluster, Diagnosis and Testing)<br>/ Instrument Cluster - Vehicles Built From: 10/2005 (413-01 Instrument Cluster, Removal and Installation). |
| | • Thermostat. | • CARRY OUT the Thermostat Test Component Test in this section. INSTALL a new thermostat housing and thermostat housing gasket as necessary.<br>REFER to: Thermostat Housing (303-03 Engine Cooling - 2.0L Duratec-HE (MI4), Removal and Installation). |

## Component Tests

### Pressure Test

**WARNING:When releasing the cooling system pressure, cover the coolant expansion tank cap with a thick cloth to prevent the possibility of coolant scalding. Failure to follow this instruction may result in personal injury.**

**NOTE:**If the coolant expansion tank cap is rotated counterclockwise by 1/2 a full turn, the pressurized coolant will be vented to the underside of the coolant expansion tank cap.

1. Remove the coolant expansion tank cap.
2. Install the special tools 303-396 and 303-396-01 to the coolant expansion tank.
3. Pressurize the system to the coolant expansion tank cap release pressure.

   REFER to: Specifications (303-03 Engine Cooling - 2.0L Duratec-HE (MI4), Specifications).

## DIAGNOSIS AND TESTING

4. Observe the cooling system pressure tester gauge reading for approximately two minutes. The pressure should not drop during this time. If the system holds pressure, proceed to Step 7. If the system does not hold pressure, check it thoroughly for coolant leaks.
5. Check the engine for coolant leaks. Drain the cooling system, repair any coolant leaks found and fill and bleed the cooling system as necessary.

   REFER to: Cooling System Draining, Filling and Bleeding (303-03 Engine Cooling - 2.0L Duratec-HE (MI4), General Procedures).
6. Recheck the system by repeating Steps 3 and 4 at least twice.

### Radiator Leak Test, Removed From Vehicle

⚠ **CAUTION:Radiator internal pressure must not exceed 130 kpa (20 psi) or damage may result.**

Clean the radiator thoroughly before leak testing it, to prevent contamination of the water in the test tank. Leak test the radiator in clean water with 138 kpa (20 psi) air pressure. Check it thoroughly for air leaks. INSTALL a new radiator if necessary.

REFER to: Radiator (303-03 Engine Cooling - 2.0L Duratec-HE (MI4), Removal and Installation).

### Coolant Expansion Tank Cap Pressure Test

▲ **WARNING:When releasing the system pressure, cover the expansion tank cap with a thick cloth to prevent the possibility of coolant scalding, Failure to follow this instruction may result in personal injury.**

1. Remove the coolant expansion tank cap.
2. Use water to clean the area of the rubber seal and pressure relief valve. Install the pressure tester and adapter and immerse the coolant expansion tank cap in water .

**NOTE:**If the plunger of the pump is depressed too quickly, an erroneous pressure reading will result.

3. Slowly depress the plunger of the pressure test pump until the pressure gauge reading stops increasing, and note the highest pressure reading obtained.
4. Release pressure by turning the pressure relief screw counterclockwise. Tighten the pressure relief screw and repeat step 3 at least twice to make sure the pressure test reading is repeatable and within acceptable gauge reading limits of the coolant expansion tank cap.
5. If the pressure test gauge readings are not within the acceptable gauge reading limits, INSTALL a new coolant expansion tank cap.

### Thermostat Test

1. Connect the WDS to the data link connector (DLC).
2. Using the WDS datalogger function, SELECT the following sensors (as applicable to the application):

- IAT - intake air temperature (IAT) sensor
- ECT - engine coolant temperature (ECT) sensor
- CHT - cylinder head temperature (CHT) sensor
- LOAD - engine load
- VSS - vehicle speed sensor (VSS)
- RPM - engine speed
- DSRPM - desired engine speed

The IAT sensor output is useful if the engine being tested is cold or after an over-night cold soak. The ECT sensor or CHT sensor and the IAT sensor should either indicate the same value or be within 1 to 2 degrees Celsius of each other.

The ECT sensor output is important to display as it indicates the engine warm-up and opening temperature for the thermostat. It will initially indicate a slightly higher reading just before the thermostat opens and then drops back before settling to a near flat line output (see graphic below).

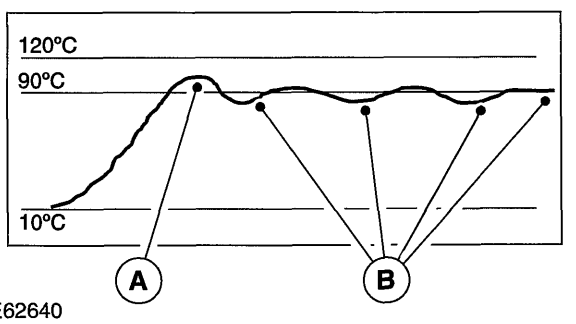

E62640

| Item | Description |
|---|---|
| A | Thermostat opens |
| B | Thermostat settles into a cyclic open and closure pattern |

## DIAGNOSIS AND TESTING

**CAUTION:If the ECT sensor output reaches the 120°C default line under normal cooling system pressure, internal damage may be caused to the engine and a diagnostic trouble code (DTC) will be set in the PCM. The test should be stopped and the cause located and corrected. If the cooling system does not pressurize, the coolant will boil at 100°C which may also damage the engine. CARRY OUT the Coolant Expansion Tank Cap Pressure Test Component Test in this section.**

If the WDS only allows the ECT sensor to be displayed in volts, refer to the following table for corresponding Celsius values:

| Volts | °Celsius |
|---|---|
| 1.33 | 60 |
| 1.02 | 70 |
| 0.78 | 80 |
| 0.60 | 90 |
| 0.46 | 100 |
| 0.35 | 110 |
| 0.27 | 120 |

The CHT sensor output is useful to examine the cylinder head temperature rise during the warm-up cycle and later during the normal light throttle cruise test. This sensor output may vary between vehicles with manual transmission and vehicles with automatic transmission and should be used for reference only.

The LOAD display is used for reference as it is necessary to maintain a stable load line during the test. It is necessary to carry out the test under normal light throttle cruise driving conditions and average loads, typically 40% to 70% of the load value.

The VSS output is used for reference but can help to identify misfires and sensors which fail during the warm-up cycle.

The RPM display indicates the engine speed and can be compared with the DSRPM.

The DSRPM is the desired or calculated idle speed which the PCM commands the engine to reach. If the thermostat opens too early (before the correct opening temperature has been reached), the engine will not reach this value.

When using the WDS in data logger mode, the signals recorded should remain within the DEFAULT values set by the WDS.

3. **WARNING:Make sure that the WDS is placed in the vehicle so that it does not interfere with the safe operation of the vehicle. Do not place the WDS in the deployment path of any air bag. Failure to follow these instructions may result in personal injury.**

**NOTE:**The road test is best carried out with the aid of another technician in the vehicle to enable the vehicle to be driven safely while the sensor outputs are monitored within datalogger. If there is only one technician available, the WDS can be set up (using the record/capture mode camera icon) before leaving the workshop to record a 16 km (10 mile) test.

**NOTE:**The results from the test are more conclusive if the engine is cold when the test is started.

Carry out a road test.

REFER to: Road/Roller Testing (100-00 General Information, Description and Operation).

4. Drive the vehicle at a constant throttle opening and set speed until the ECT value settles into a shallow rise and fall signal, close to a straight line. This indicates that the thermostat is functioning correctly.

**NOTE:**Some thermostats indicate the temperature(s) in Celsius and Fahrenheit.

The graphic below shows the location and an example of the opening temperature (88°C) and fully open temperature (102°C) of a thermostat.

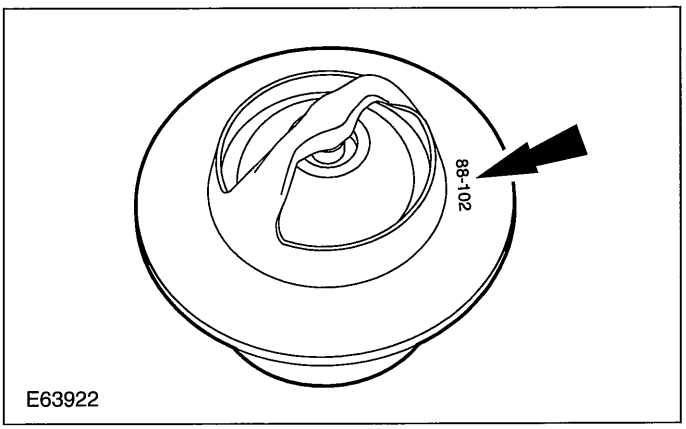


The graphic below shows an alternative method used to show the opening temperature (88°C) and fully open temperature (112°C) of a thermostat.

## DIAGNOSIS AND TESTING

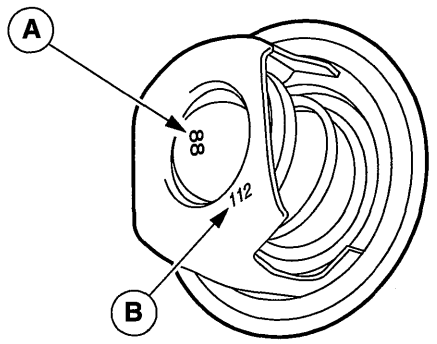


E63879

| Item | Description |
|---|---|
| A | Opening temperature |
| B | Fully open temperature |

**NOTE:** Generally, most thermostats maintain a coolant temperature between 88°C (190°F) and 92°C (198°F) although dual stage electric thermostats may increase the coolant temperature up to 100°C (212°F) under light engine load conditions.

The engine should start cleanly and the ECT value will rise quite quickly with smooth progression. If the ECT signal appears unstable or erratic, the ECT sensor, electrical connector and wiring harness to the PCM need to be visually inspected for damage, chafing or water ingress.

The temperature should rise to approximately 90°C for a thermostat that has an 88°C value. The signal value will then fall as cooler coolant enters the engine.

If the ECT value fails to maintain a constant value and falls back to lower figures, typically between 60°C (140°F) and 70°C (150°F), the thermostat and its sealing function within the thermostat housing must be checked.

5. INSTALL a new thermostat housing and thermostat housing gasket as necessary.

   REFER to: Thermostat Housing (303-03 Engine Cooling - 2.0L Duratec-HE (MI4), Removal and Installation).
6. Carry out another road test from step 1 using the same criteria to confirm that the concern has been rectified.
7. Using the WDS, clear the PCM keep alive memory (KAM) or electrically erasable programmable read only memory (EEPROM) so that new drive values can be learnt.

## GENERAL PROCEDURES

# Cooling System Draining, Filling and Bleeding(24 122 0)

### Special Tool(s)

| | |
|---|---|
| 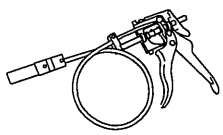 24003 | Remover/Installer, Cooling Hose Clamp 303–397 (24–003) |

### Draining

1. **▲WARNING:When releasing the cooling system pressure, cover the coolant expansion tank cap with a thick cloth to prevent the possibility of scalding. Failure to follow this instruction may result in personal injury.**

   **Release the cooling system pressure by slowly turning the coolant expansion tank cap a quarter of a turn.**

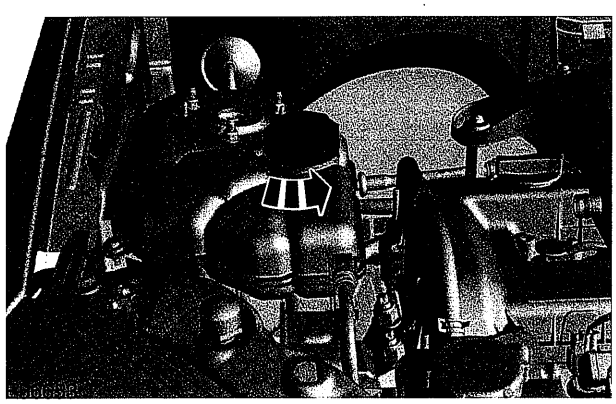

2. **Remove the coolant expansion tank cap.**
3. **Raise and support the vehicle.**

   **For additional information, refer to: Lifting (100-02 Jacking and Lifting, Description and Operation).**
4. **Using the special tool, disconnect the radiator lower hose to drain the cooling system.**

   - Allow the coolant to drain into a suitable container.

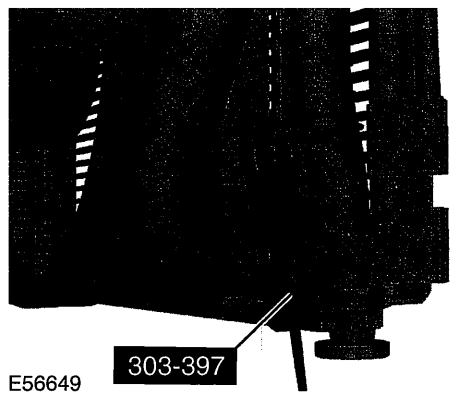


E56649

5. **Install the radiator lower hose.**
6. **Lower the vehicle.**

### Filling and Bleeding

1. **Fill the coolant expansion tank to the MAX mark.**

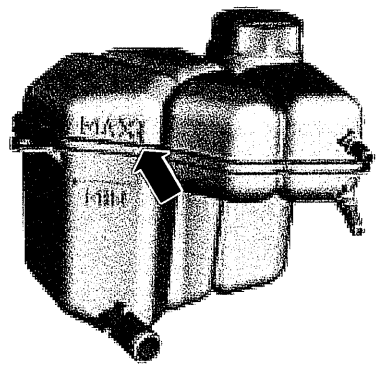


E53268

2. **NOTE:Do not allow the engine to reach normal operating temperature.**

   **Start the engine, run the engine briefly at 2500 revolutions per minute (RPM) for 10 seconds to prime the heater circuit.**
3. **Switch the engine off.**
4. **Fill the coolant expansion tank 15 mm over the MAX mark.**
5. **Install the coolant expansion tank cap.**
6. **Start the engine, maintain the engine speed at 2500 RPM for eight minutes or until the engine reaches normal operating temperature.**

## GENERAL PROCEDURES

7. Maintain the engine speed at 2500 RPM for three minutes after the engine has reached normal operating temperature.
8. Increase the engine speed to 4000 RPM for five seconds.
9. Decrease the engine speed to 2500 RPM for three minutes.
10. Increase the engine speed to 4000 RPM for five seconds.
11. Decrease the engine speed to 2500 RPM for three minutes.
12. Switch the engine off.
13. Check the cooling system for leaks.
14. Allow the engine to cool.
15. Fill the coolant expansion tank to the MAX mark.

## REMOVAL AND INSTALLATION

# Coolant Pump(24 404 0)

1. Drain the cooling system.

   For additional information, refer to: Cooling System Draining, Filling and Bleeding (303-03 Engine Cooling - 2.0L Duratec-HE (MI4), General Procedures).

2. Remove the crankshaft pulley splash shield.

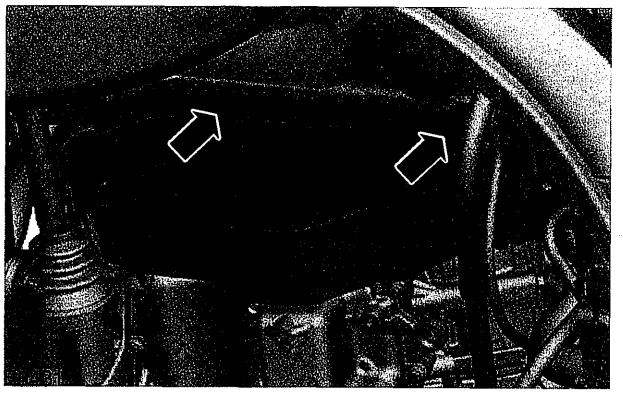

3. Loosen the coolant pump pulley retaining bolts.

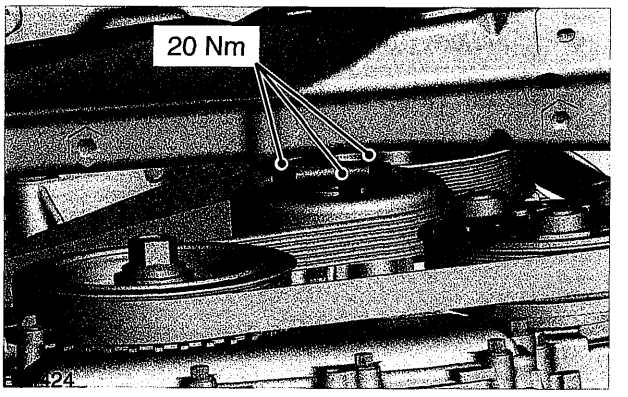


4. Remove the accessory drive belt.

   For additional information, refer to: Accessory Drive Belt - 2.0L Duratec-HE (MI4) (303-05 Accessory Drive, Removal and Installation).

5. Remove the components in the order indicated in the following illustration(s) and table(s).

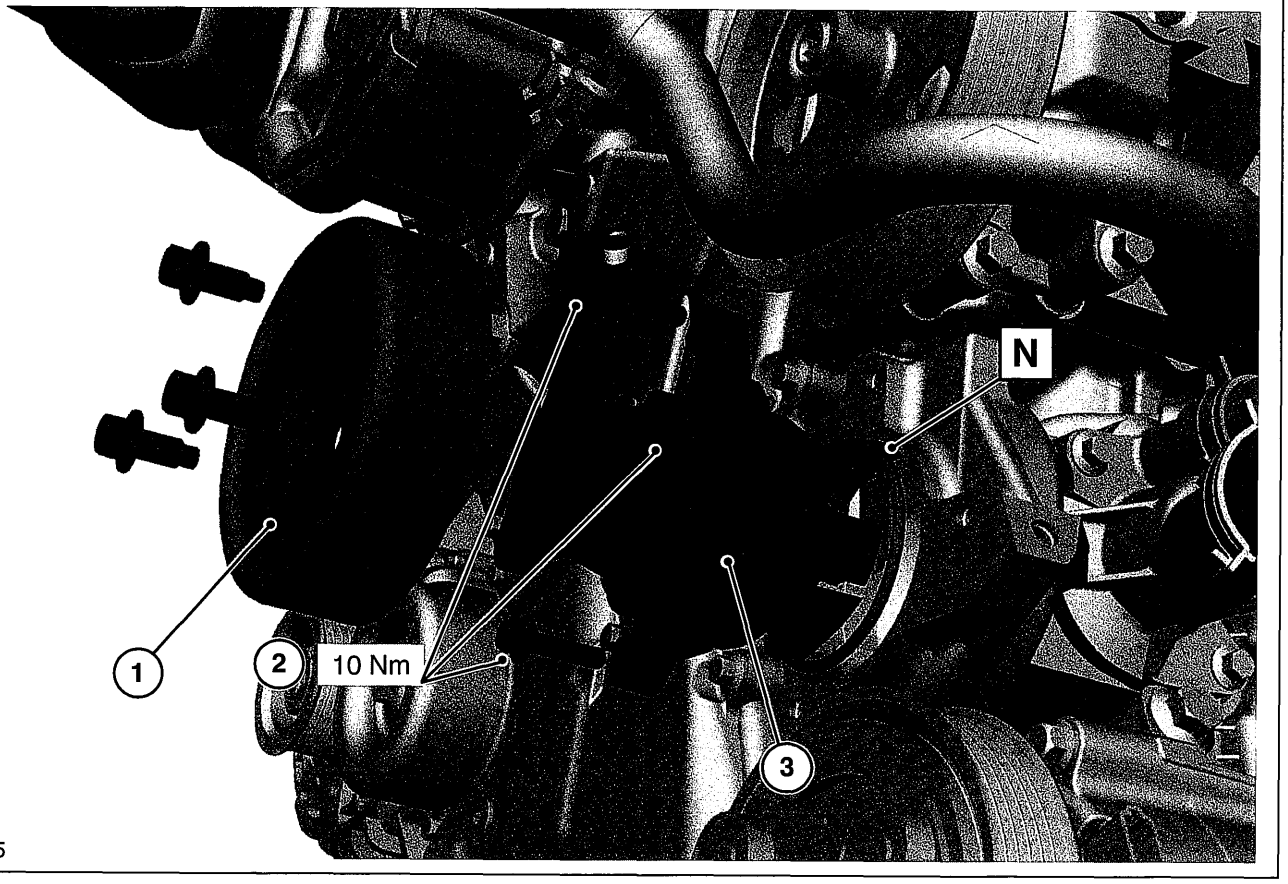

## REMOVAL AND INSTALLATION

| Item | Description |
|---|---|
| 1 | Coolant pump pulley |
| 2 | Coolant pump retaining bolts |
| 3 | Coolant pump |
| 4 | Coolant pump gasket |

**6. To install, reverse the removal procedure.**

## REMOVAL AND INSTALLATION

# Thermostat Housing

**Special Tool(s)**

| | |
|---|---|
| 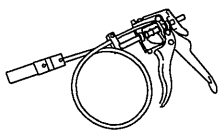 24003 | Remover/Installer, Coolant Hose Clamp 303-397 |

1. **Drain the cooling system.**

   **For additional information, refer to: Cooling System Draining, Filling and Bleeding (303-03 Engine Cooling - 2.0L Duratec-HE (MI4), General Procedures).**

2. **Lower the vehicle.**
3. **Remove the right-hand headlamp assembly.**

   **For additional information, refer to: Headlamp Assembly (417-01 Exterior Lighting, Removal and Installation).**

4. **Remove the components in the order indicated in the following illustration(s) and table(s).**

## REMOVAL AND INSTALLATION

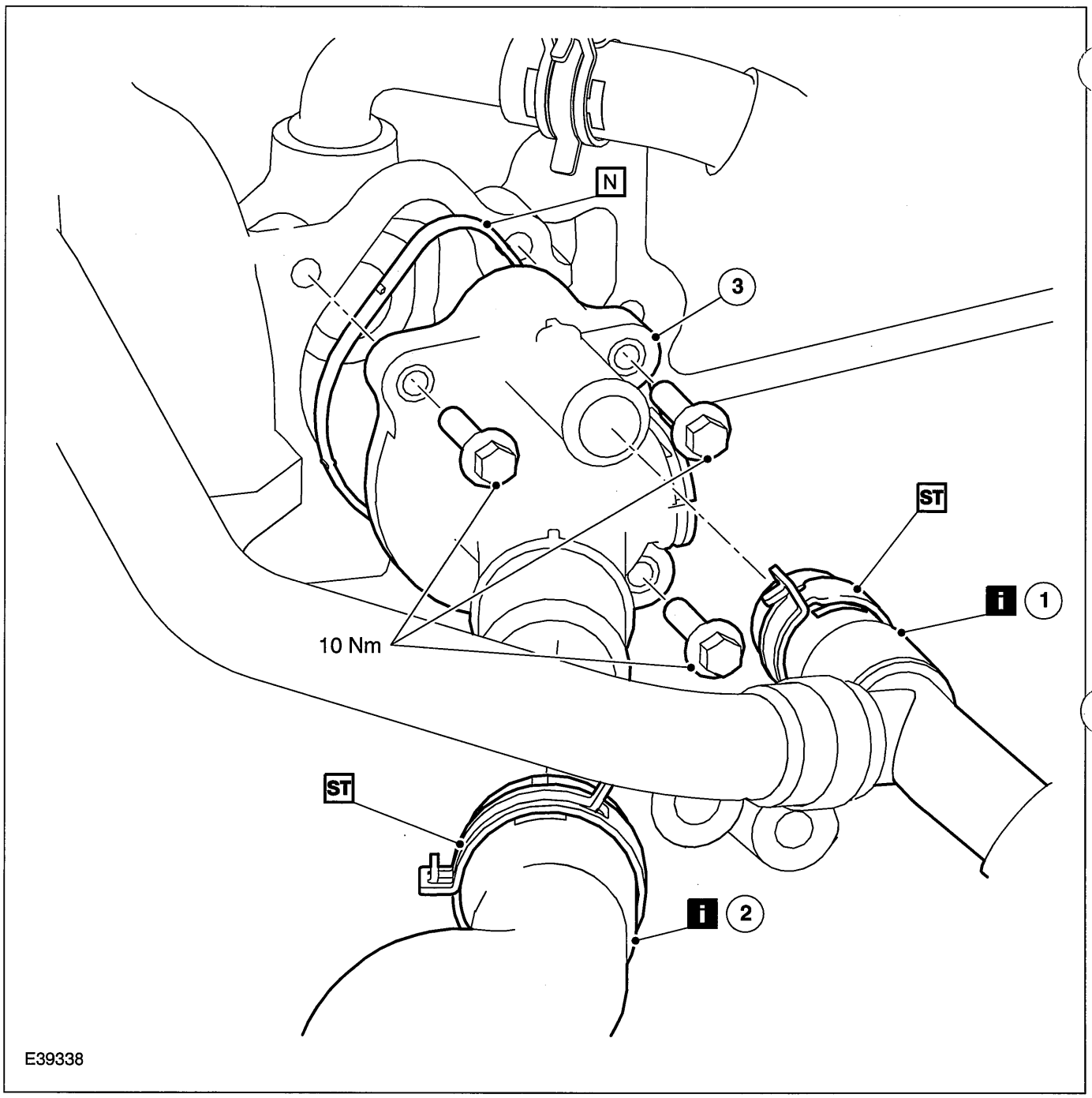


| Item | Description |
|---|---|
| 1 | Thermostat housing to coolant expansion tank and heater core return coolant hose See Removal Detail |
| 2 | Radiator lower to thermostat housing coolant hose |
| | See Removal Detail |
| 3 | Thermostat housing |

**5. To install, reverse the removal procedure.**

## Removal Details

## REMOVAL AND INSTALLATION

**Item 1** **Thermostat housing to coolant expansion tank and heater core return coolant hose**

1. **Using the special tool, disconnect the thermostat housing to coolant expansion tank and heater core return coolant hose.**

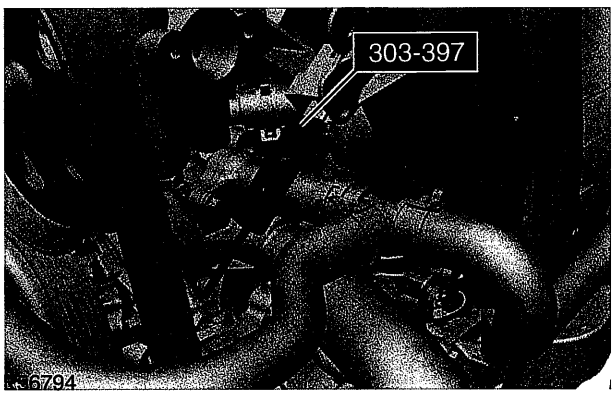


**Item 2** **Radiator lower to thermostat housing coolant hose**

1. **Using the special tool, disconnect the radiator lower to thermostat housing coolant hose.**

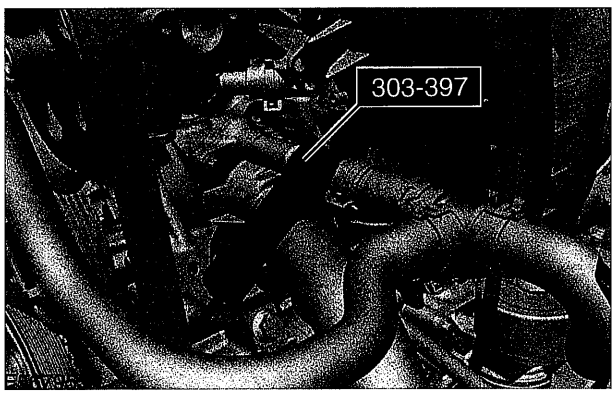

## REMOVAL AND INSTALLATION

# Coolant Outlet Connector

### Removal

1. **Remove the air cleaner.**

   **For additional information, refer to: Air Cleaner - 2.0L Duratec-HE (MI4) (303-12 Intake Air Distribution and Filtering, Removal and Installation).**

2. **Disconnect the spark plug wires from the ignition coil pack.**

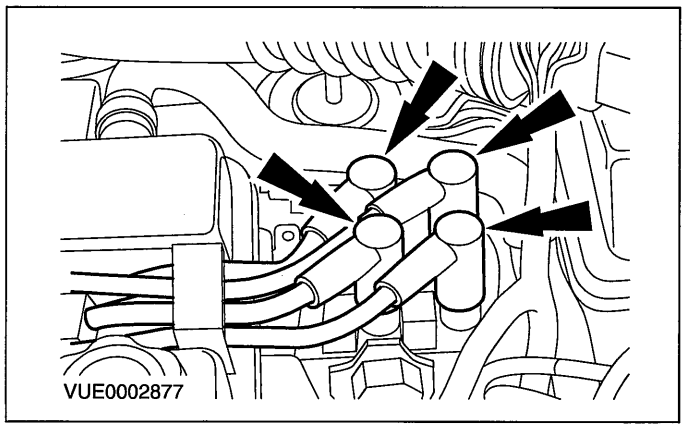


3. **Disconnect the ignition coil pack electrical connector.**

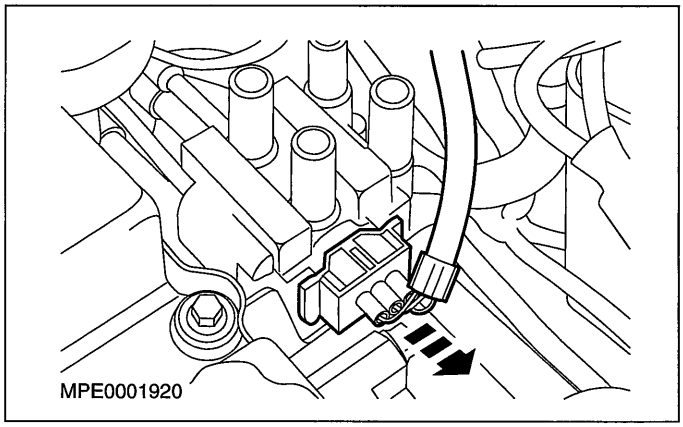


4. **Remove the ignition coil pack.**

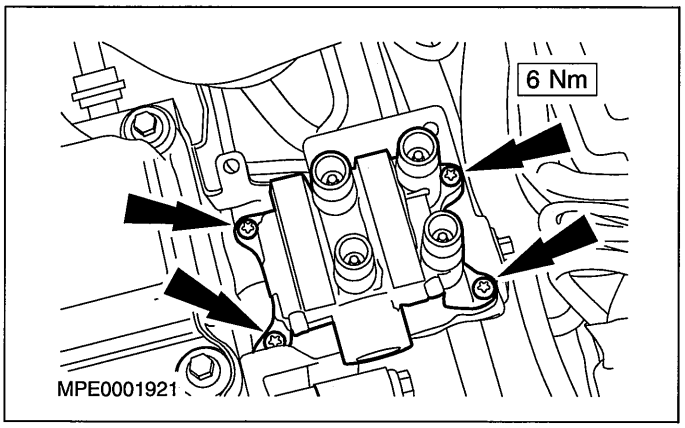


5. **Drain the cooling system.**

   **For additional information, refer to: Cooling System Draining, Filling and Bleeding (303-03 Engine Cooling - 2.0L Duratec-HE (MI4), General Procedures).**

6. **Disconnect the engine coolant temperature (ECT) sensor electrical connector.**

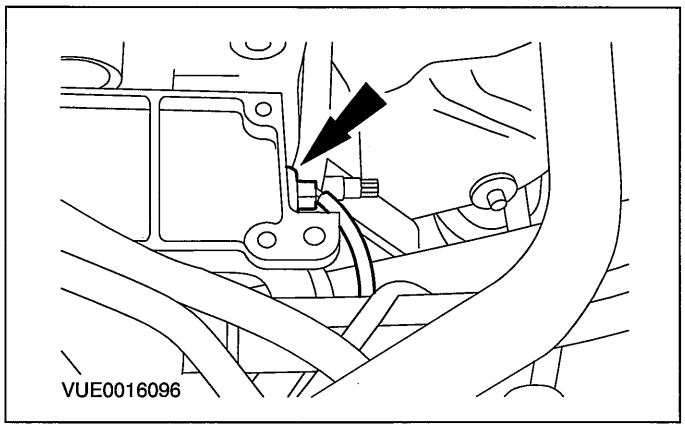

## REMOVAL AND INSTALLATION

7. **Disconnect the radiator hose and the heater hose from the coolant outlet connector.**

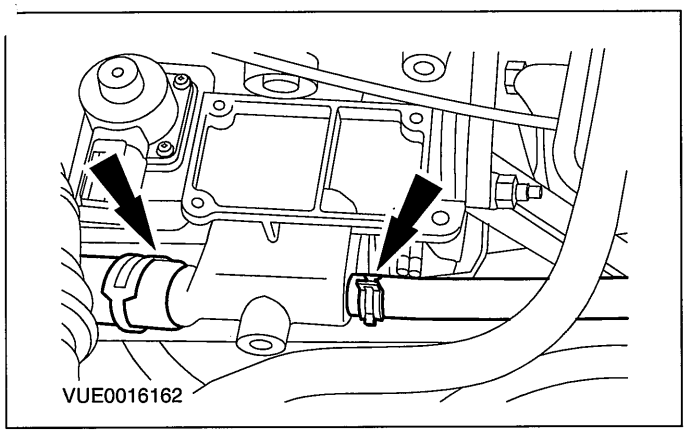


8. **Disconnect the coolant expansion tank hose from the coolant outlet connector.**

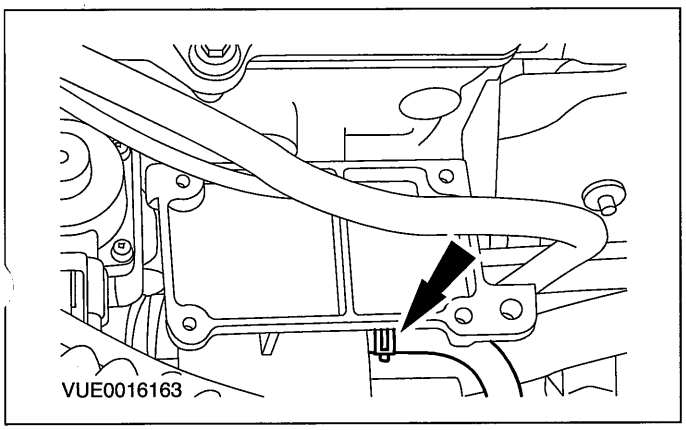


9. **Disconnect the thermostat housing coolant hose from the coolant outlet connector.**

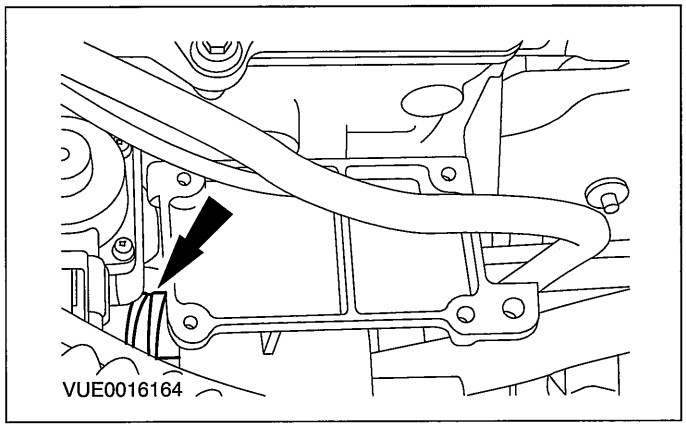


10. **Remove the coolant outlet connector.**

- Discard the gasket.

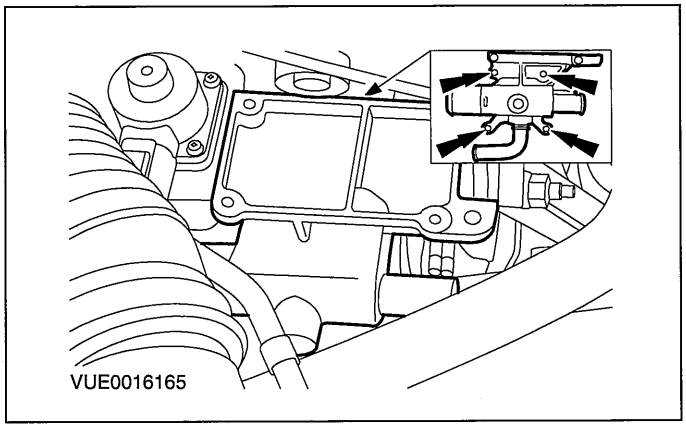


### Installation

1. **NOTE:Install a new coolant outlet connector gasket.**

   **To install, reverse the removal procedure.**

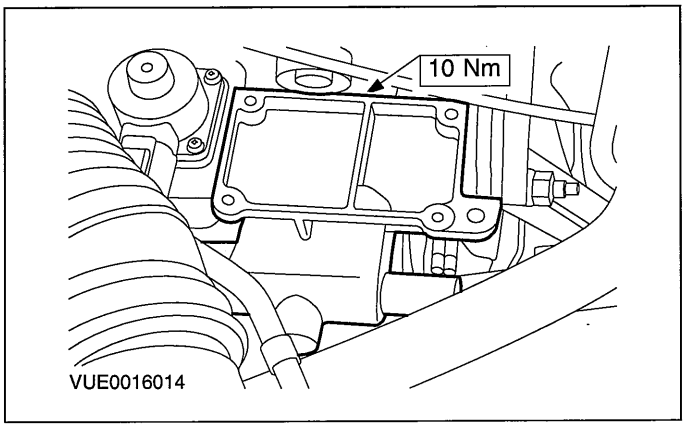

## REMOVAL AND INSTALLATION

# Radiator(24 254 0)

### Removal

1. **Disconnect the battery ground cable.**

   **For additional information, refer to: Battery Disconnect (414-01 Battery, Mounting and Cables, General Procedures).**

2. **Drain the cooling system.**

   **For additional information, refer to: Cooling System Draining, Filling and Bleeding (303-03 Engine Cooling - 2.0L Duratec-HE (MI4), General Procedures).**

3. **Disconnect the cooling fan motor and cooling fan resistor electrical connectors.**

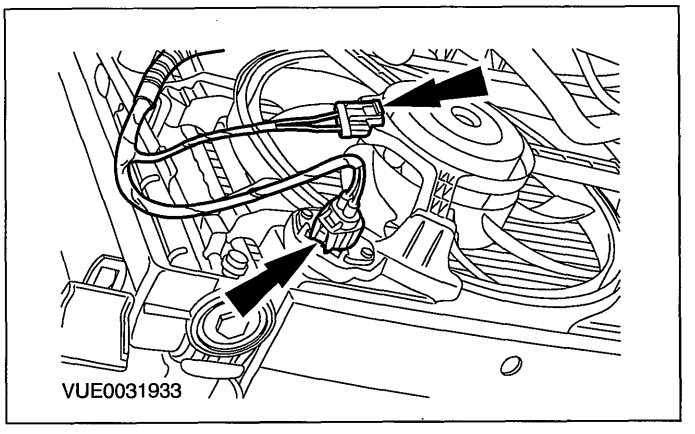


4. **Remove the air cleaner intake pipe resonator.**

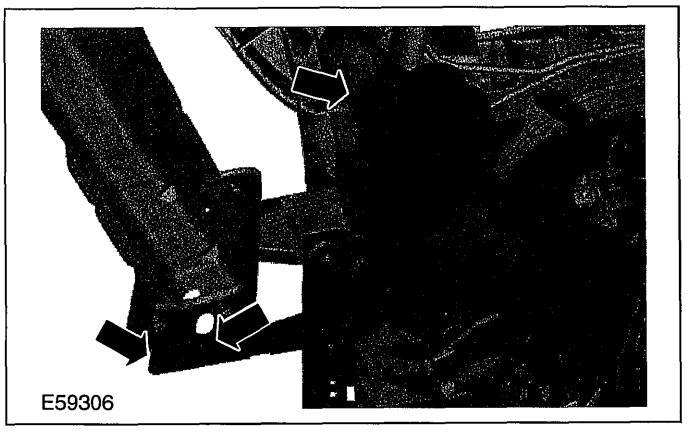


5. **Remove the cooling fan motor and shroud.**
   1. Release the cooling fan motor and shroud from the retaining brackets.
   2. Push the cooling fan motor and shroud upwards and then downwards to remove.

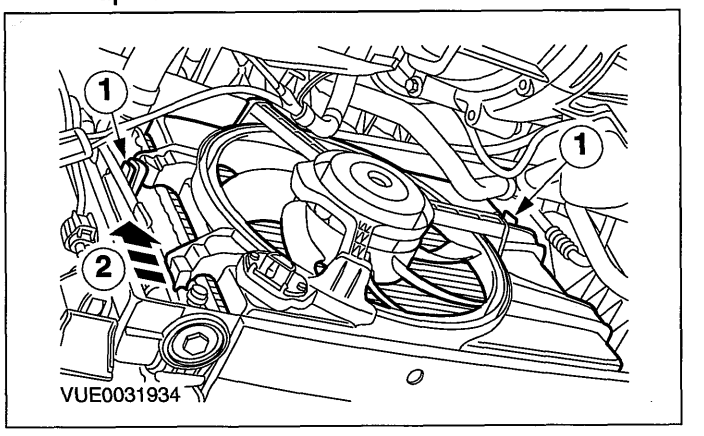


6. **Disconnect the radiator upper hose.**
   1. Pull out the quick release spring clip.
   2. Pull the radiator upper hose from the quick release connector.

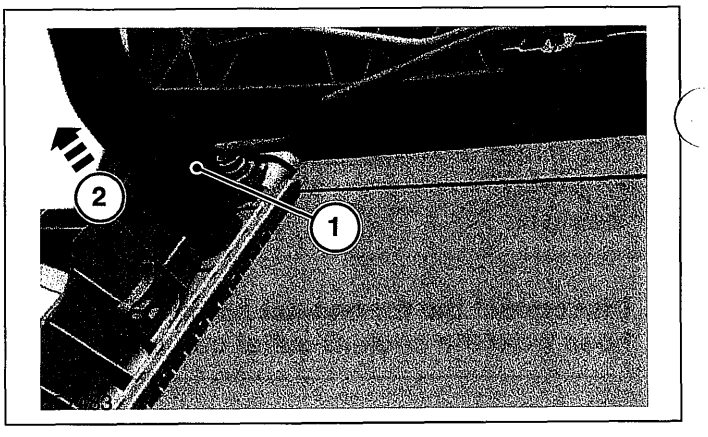


7. **Disconnect the radiator degas hose from the radiator.**
   - Release the locking tangs.

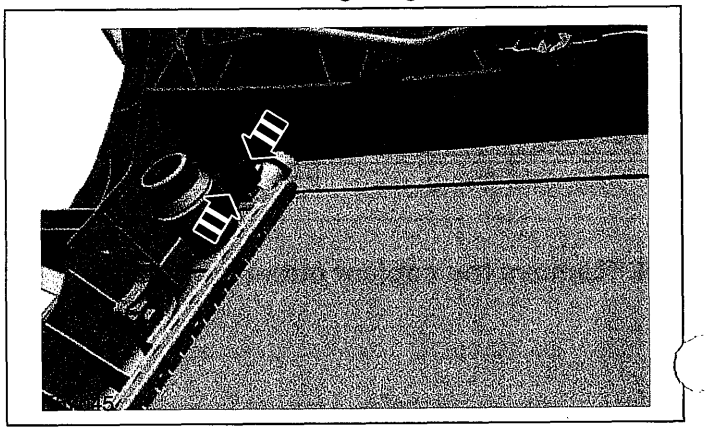

8. **Remove the radiator retainers.**

## REMOVAL AND INSTALLATION

1. Remove the radiator retainer locking screws.
2. Remove the radiator retainers and grommets.

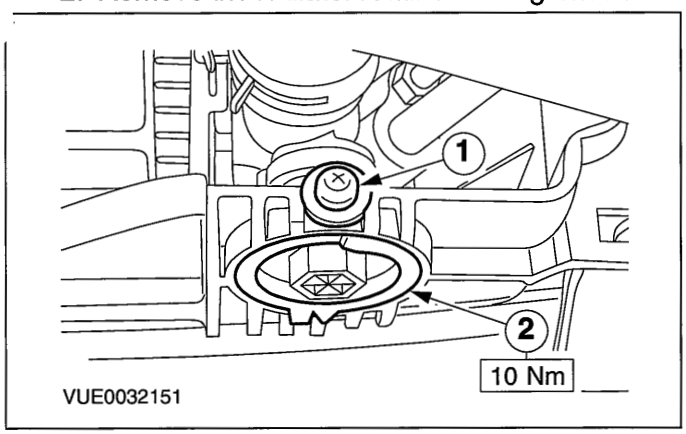


**9. Detach the radiator and the air conditioning (A/C) condenser from the support panel.**

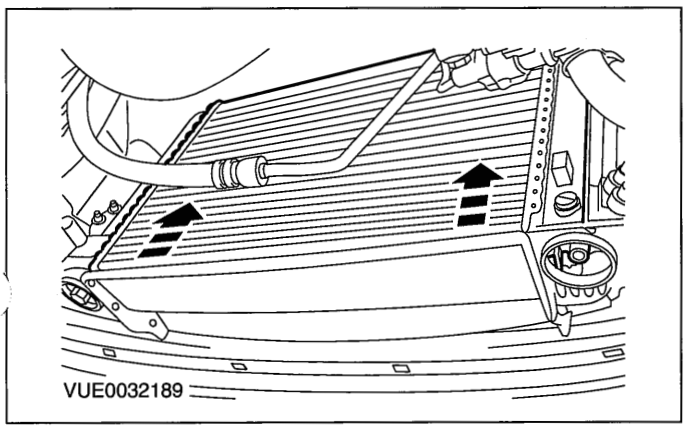


**10. ⚠CAUTION:Support the A/C condenser by positioning it on the support panel.**

**Slide the A/C condenser to detach it from the radiator**

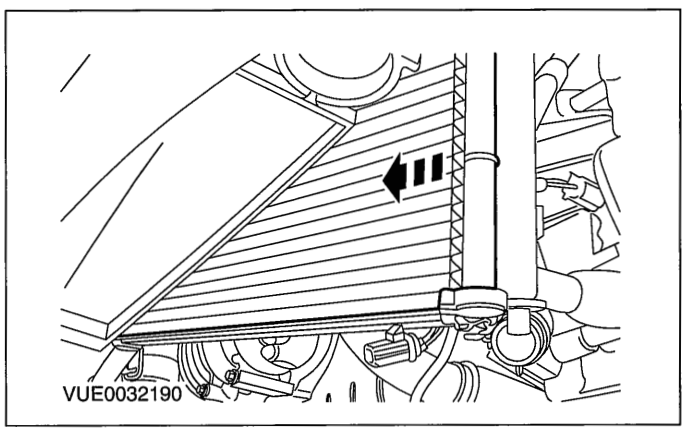


**11. Remove the radiator.**

### Installation

**1. To install, reverse the removal procedure.**

# SECTION 303-04A Fuel Charging and Controls — 1.25L Duratec-16V (Sigma)/1.4L Duratec-16V (Sigma)/1.6L Duratec-16V (Sigma)

## VEHICLE APPLICATION:2006.0 Fiesta

CONTENTS PAGE


**SPECIFICATIONS**

Specifications ..... 303-04A-2

**DIAGNOSIS AND TESTING**

Fuel Charging and Controls ..... 303-04A-3
Principles Of Operation ..... 303-04A-3
Inspection and Verification ..... 303-04A-3

**REMOVAL AND INSTALLATION**

Throttle Body ..... (23 198 0) 303-04A-4
Fuel Charging Wiring Harness ..... (36 437 0) 303-04A-5
Fuel Injection Supply Manifold ..... (23 450 0) 303-04A-7

## SPECIFICATIONS

### General Specifications

| Condition | Specification |
|---|---|
| Regulated fuel pressure | 380 kpa (55 psi) |
| Maximum idle increase for high generator load | 100 rpm |
| Air conditioning idle upspeed at low ambient temperatures | 100 rpm |
| Air conditioning idle upspeed at high ambient temperatures | 150 rpm |
| Power steering idle speed upspeed | 50 rpm |

### Torque Specifications

| Description | Nm | lb-ft | lb-in |
|---|---|---|---|
| Throttle body retaining bolts | 10 | - | 89 |
| Fuel pressure regulator retaining bolts | 10 | - | 89 |
| Fuel injection supply manifold retaining bolts | 15 | 11 | - |

## DIAGNOSIS AND TESTING

# Fuel Charging and Controls

## Principles Of Operation

REFER to: Acceleration Control (310-02A, Diagnosis and Testing).

## Inspection and Verification

1. Verify the customer concern.
2. Visually inspect for obvious signs of mechanical or electrical damage.

**Visual Inspection Chart**

| Mechanical | Electrical |
|---|---|
| – Fuel leak(s)<br>– Blocked or contaminated fuel filter<br>– Fuel rail<br>– Vacuum line(s)<br>– Throttle body | – Wiring harness<br>– Electrical connector(s)<br>– Fuel injector(s)<br>– Throttle body |

3. If an obvious cause for an observed or reported concern is found, correct the cause (if possible) before proceeding to the next step.
4. If the cause is not visually evident, verify the symptom and refer to WDS.

## REMOVAL AND INSTALLATION

# Throttle Body(23 198 0)

### Removal

1. **Disconnect the air cleaner outlet pipe from the throttle body.**

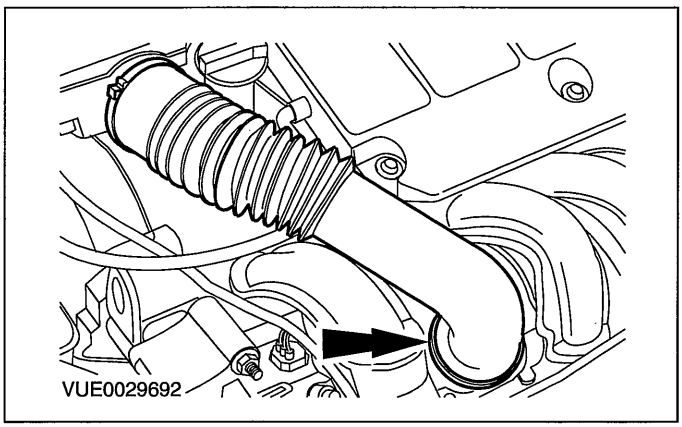


2. **Remove the throttle body retaining bolts.**

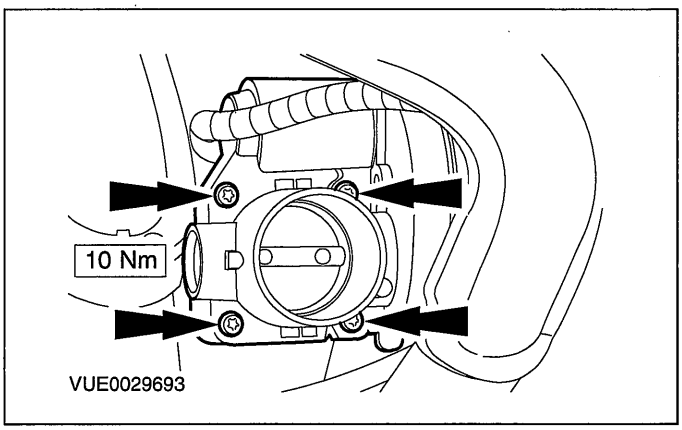


3. **Disconnect the throttle body electrical connector and remove the throttle body.**

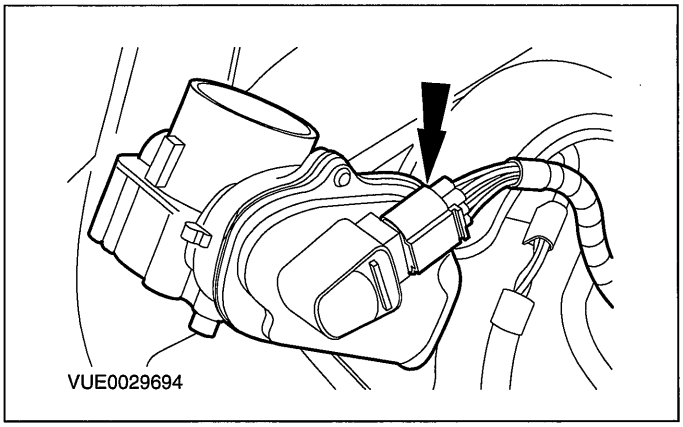


### Installation

1. **To install, reverse the removal procedure.**
2. **NOTE:Do not press the accelerator pedal during the initialization period as this will prevent the complete initialization of the throttle body.**

   **Turn the ignition key to position II and wait for one minute to initialize the throttle body.**
3. **Turn the ignition key to the OFF position.**

## REMOVAL AND INSTALLATION

# Fuel Charging Wiring Harness(36 437 0)

### Removal

1. **Remove the air cleaner. For additional information, refer to Section 303-12 [Intake Air Distribution and Filtering].**
2. **Disconnect the spark plug wires from the ignition coil.**

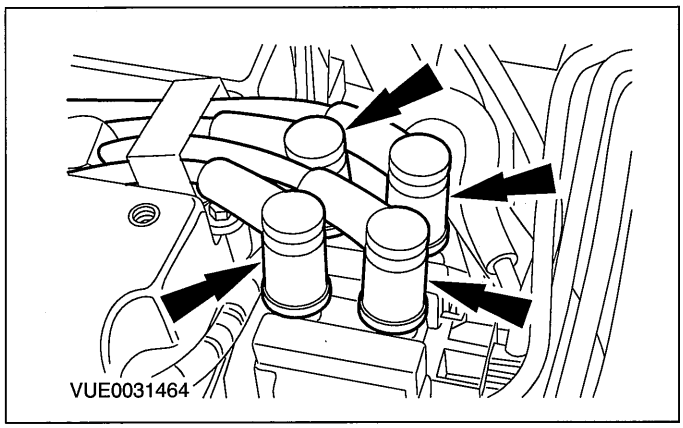


3. **Disconnect the engine coolant temperature (ECT) sensor electrical connector.**

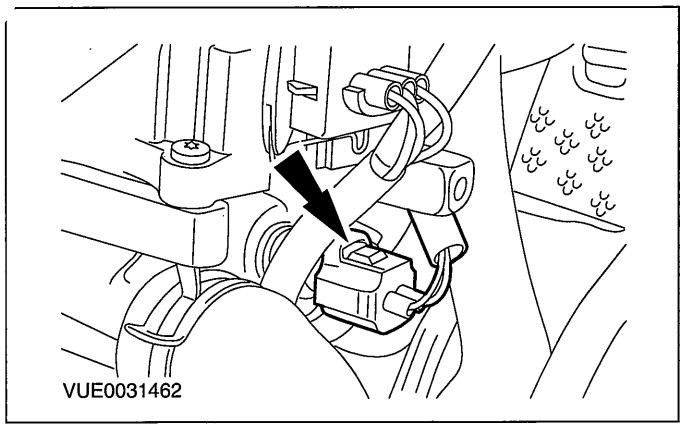


4. **Disconnect the camshaft position (CMP) sensor electrical connector.**

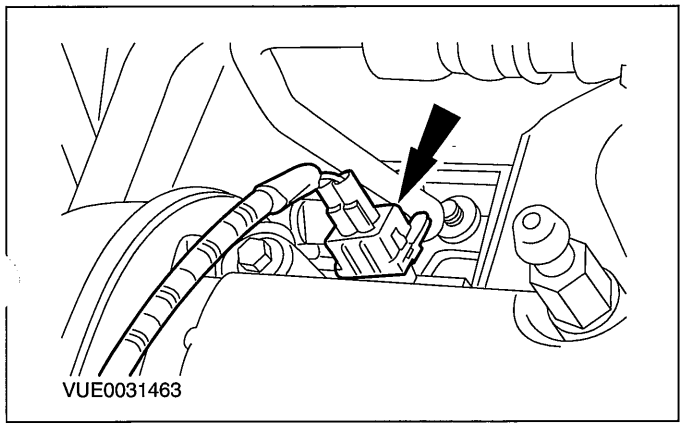


5. **NOTE:It is necessary to lift the red locking tab before the electrical connector can be disconnected.**

   **Disconnect the throttle body electrical connector.**

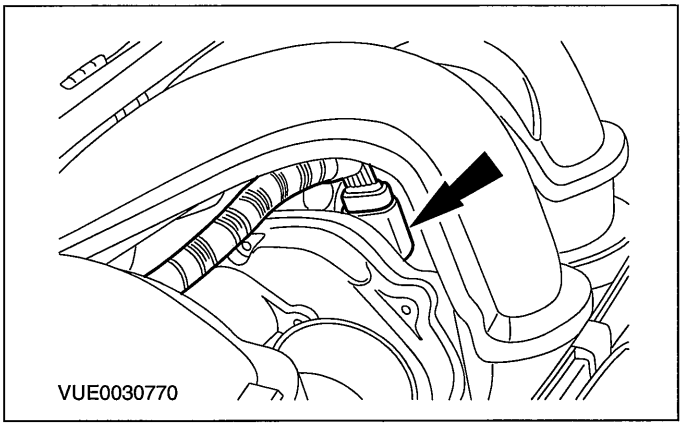


6. **Disconnect the fuel charging wiring harness electrical connector.**

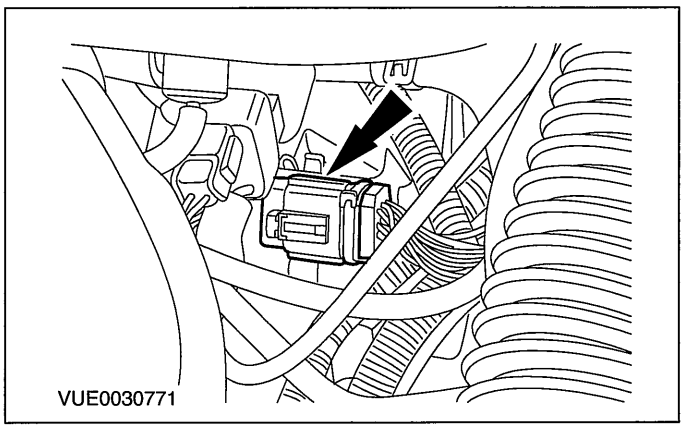


7. **Remove the positive crankcase ventilation (PCV) hose.**

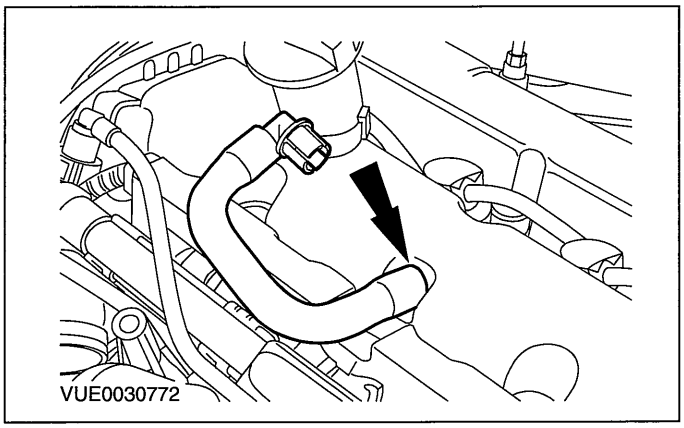

## REMOVAL AND INSTALLATION

8. **Disconnect the fuel injector electrical connectors and remove the fuel charging wiring harness.**

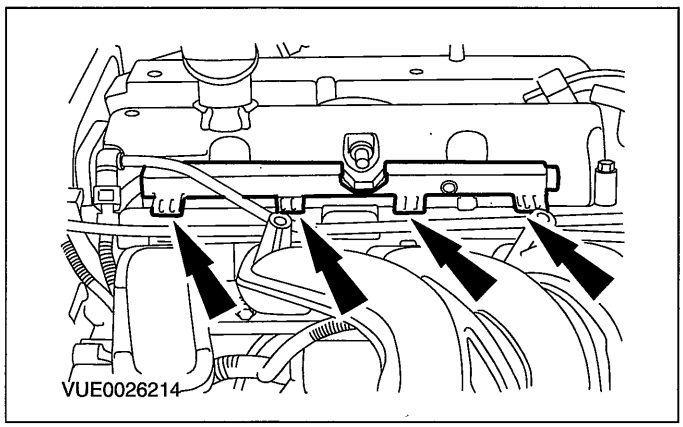


### Installation

1. **To install, reverse the removal procedure.**

## REMOVAL AND INSTALLATION

# Fuel Injection Supply Manifold(23 450 0)

### Removal

**WARNINGS:**

- **Do not smoke or carry lighted tobacco or open flame of any type when working on or near any fuel related components. Highly flammable vapors are always present and can ignite. Failure to follow these instructions may result in personal injury.**
- **This procedure involves fuel handling. Be prepared for fuel spillage at all times and always observe fuel handling precautions. Failure to follow these instructions may result in personal injury.**

1. **Release the fuel system pressure. For additional information, refer to Section 310-00 [Fuel System - General Information].**
2. **Disconnect the battery ground cable. For additional information, refer to Section 414-01 [Battery, Mounting and Cables].**
3. **Remove the air cleaner. For additional information, refer to Section 303-12 [Intake Air Distribution and Filtering].**
4. **Remove the positive crankcase ventilation (PCV) hose.**

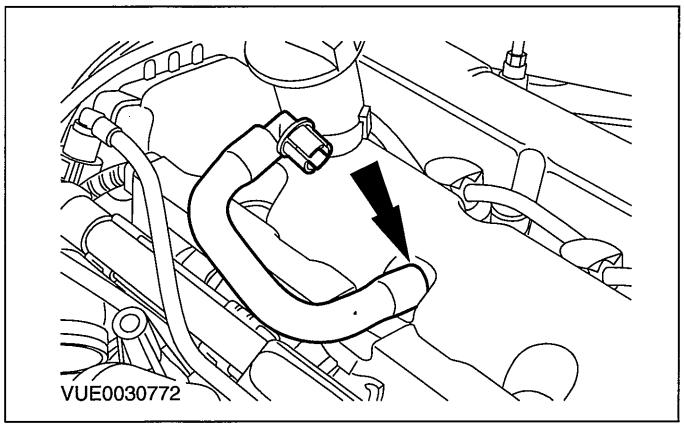


5. **Disconnect the fuel injector electrical connectors and position the wiring harness to one side.**

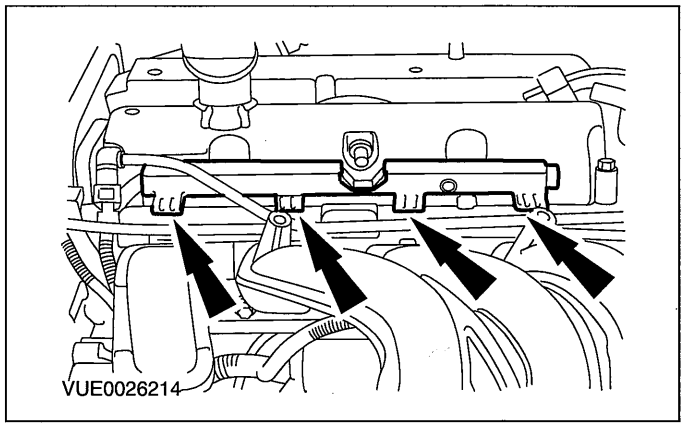


6. **Disconnect the vacuum line from the fuel pressure regulator.**

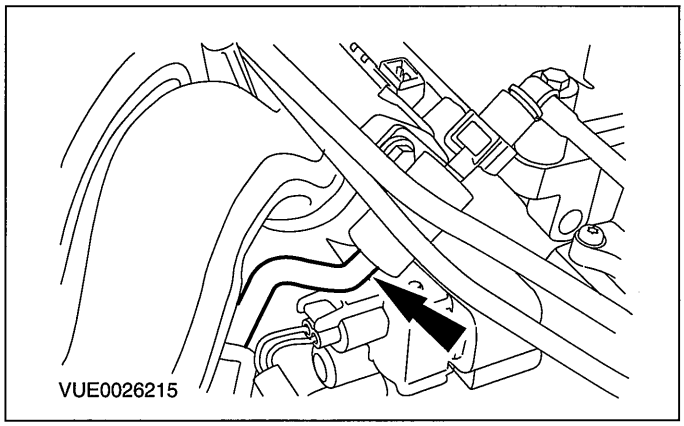


7. **NOTE:Fuel supply line connectors are white or are identified by a white band. Fuel return line connectors are red or are identified by a red band.**

## REMOVAL AND INSTALLATION

**Disconnect the fuel supply line from the fuel injection supply manifold. For additional information, refer to Section 310-00 [Fuel System - General Information].**

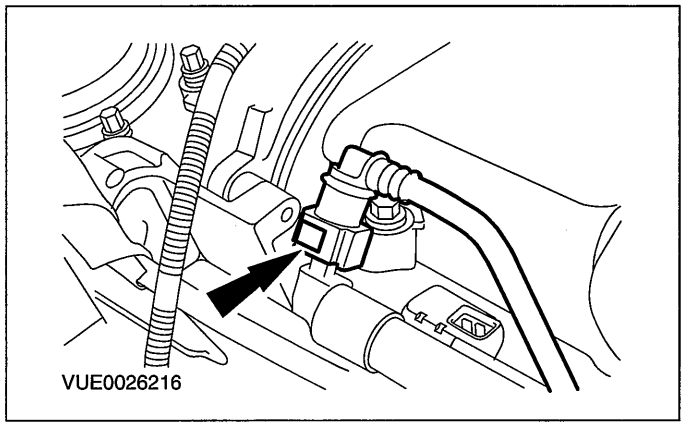


8. **NOTE:Fuel supply line connectors are white or are identified by a white band. Fuel return line connectors are red or are identified by a red band.**

   **Disconnect the fuel return line from the fuel injection supply manifold. For additional information, refer to Section 310-00 [Fuel System - General Information].**

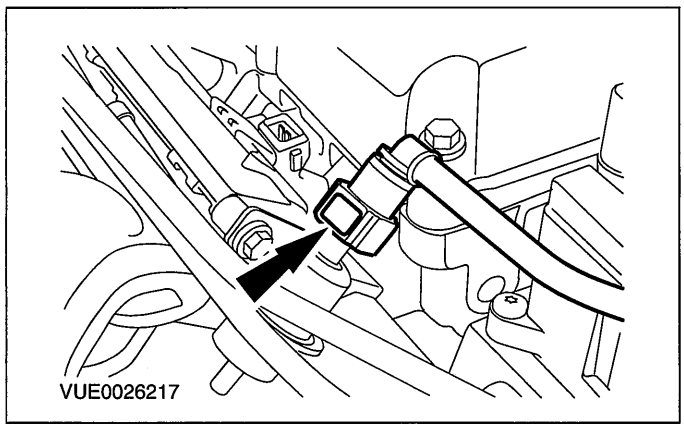


9. **Remove the fuel injection supply manifold.**

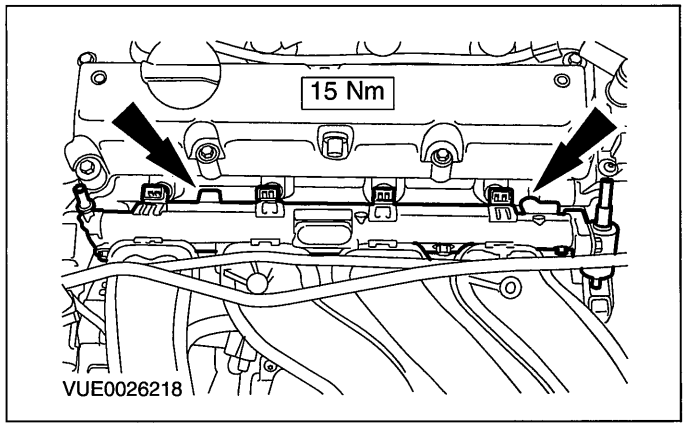


10. **Remove the fuel pressure regulator.**

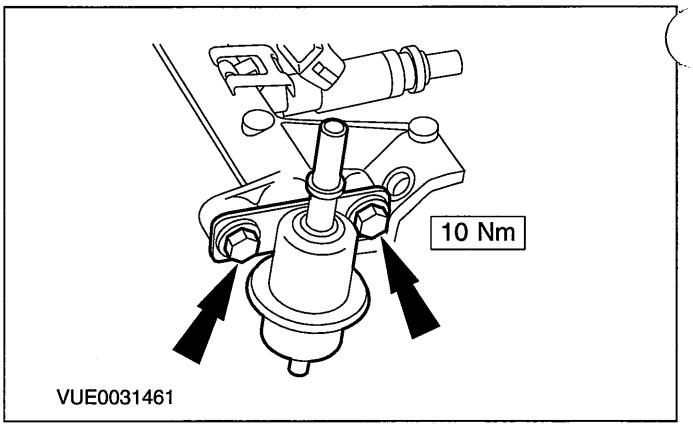


11. **Remove and discard the O-ring seal.**

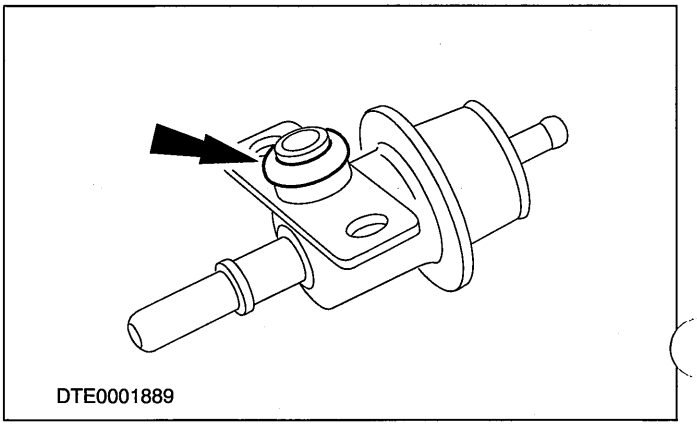


12. **NOTE:Discard the fuel injector O-ring seals.**

    **Remove the fuel injectors from the fuel injection supply manifold.**

    1. Lift the retaining clip.
    2. Slide the retaining clip.
    3. Pull the fuel injector.

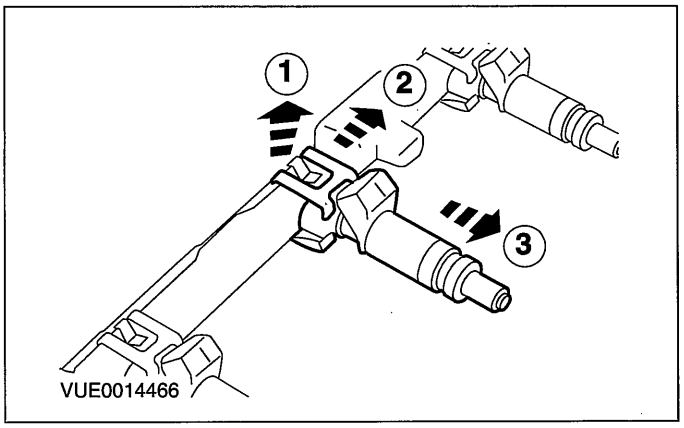

## REMOVAL AND INSTALLATION

**13. Remove and discard the O-ring seals.**

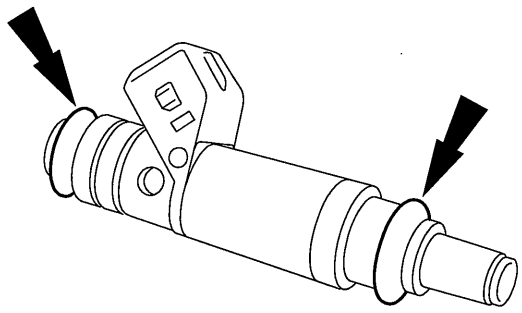

DTE0001882

### Installation

**WARNINGS:**

▲ **Do not smoke or carry lighted tobacco or open flame of any type when working on or near any fuel related components. Highly flammable vapors are always present and can ignite. Failure to follow these instructions may result in personal injury.**

▲ **This procedure involves fuel handling. Be prepared for fuel spillage at all times and always observe fuel handling precautions. Failure to follow these instructions may result in personal injury.**

**1. NOTE:Install new fuel injector O-ring seals.**

**NOTE:**Install a new fuel pressure regulator O-ring seal.

**NOTE:**Lubricate the O-ring seals with clean engine oil to aid installation.

**To install, reverse the removal procedure.**

# SECTION 303-04B Fuel Charging and Controls — 2.0L Duratec-HE (MI4)

## VEHICLE APPLICATION:2006.0 Fiesta

CONTENTS PAGE

**SPECIFICATIONS**

Specifications ..... 303-04B-2

**DESCRIPTION AND OPERATION**

Fuel Charging and Controls ..... 303-04B-3

**DIAGNOSIS AND TESTING**

Fuel Charging and Controls ..... 303-04B-5
Principles of Operation ..... 303-04B-5
Inspection and Verification ..... 303-04B-8
Symptom Chart ..... 303-04B-9

**REMOVAL AND INSTALLATION**

Throttle Body ..... 303-04B-24
Fuel Injectors ..... (23 455 0) 303-04B-26
Fuel Rail ..... 303-04B-27

## SPECIFICATIONS

### Torque Specifications

| Description | Nm | lb-ft | lb-in |
|---|---|---|---|
| Throttle body retaining bolts | 10 | — | 89 |
| Fuel injection supply manifold retaining bolts | 25 | 18 | — |

## DESCRIPTION AND OPERATION

# Fuel Charging and Controls

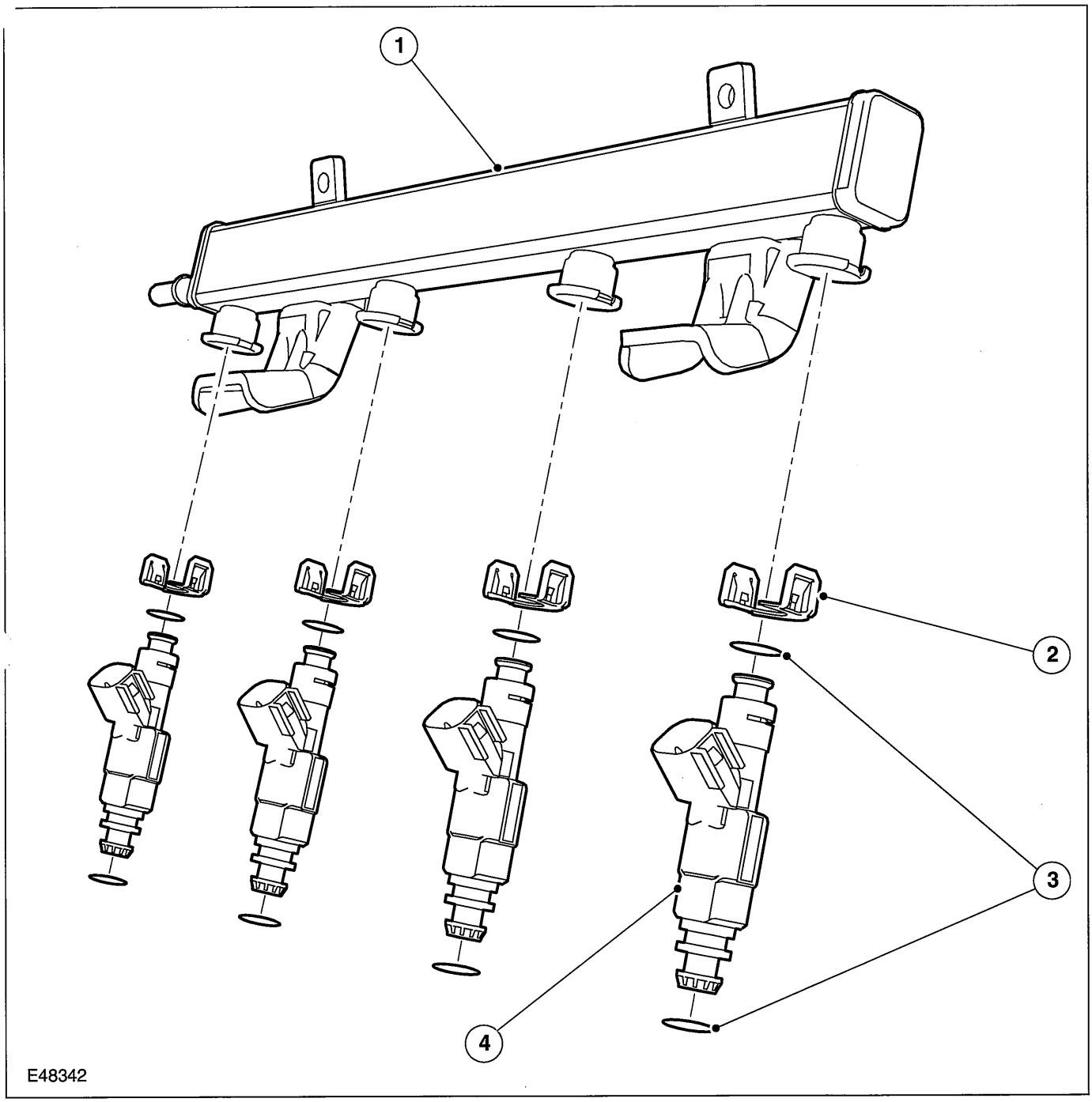


| Item | Description |
|---|---|
| 1 | Fuel injection supply manifold |
| 2 | Fuel injector retaining clip |
| 3 | Fuel injector O-ring seals |
| 4 | Fuel injector |

### Fuel Injection Supply Manifold

The fuel injection supply manifold is retained to the engine by two bolts. The fuel injection supply manifold has pressed steel cups to house the fuel injectors.

The fuel injectors are fitted directly into the fuel injection supply manifold and are retained by the fuel injector retaining clips. Sealing between the

## DESCRIPTION AND OPERATION

fuel injector to fuel injection supply manifold and the intake manifold is achieved by means of upper and lower O-ring seals.

The fuel injectors are activated sequentially by the powertrain control module (PCM) which modifies the fuel quantity by adjusting fuel injector opening times according to the engine operating conditions.

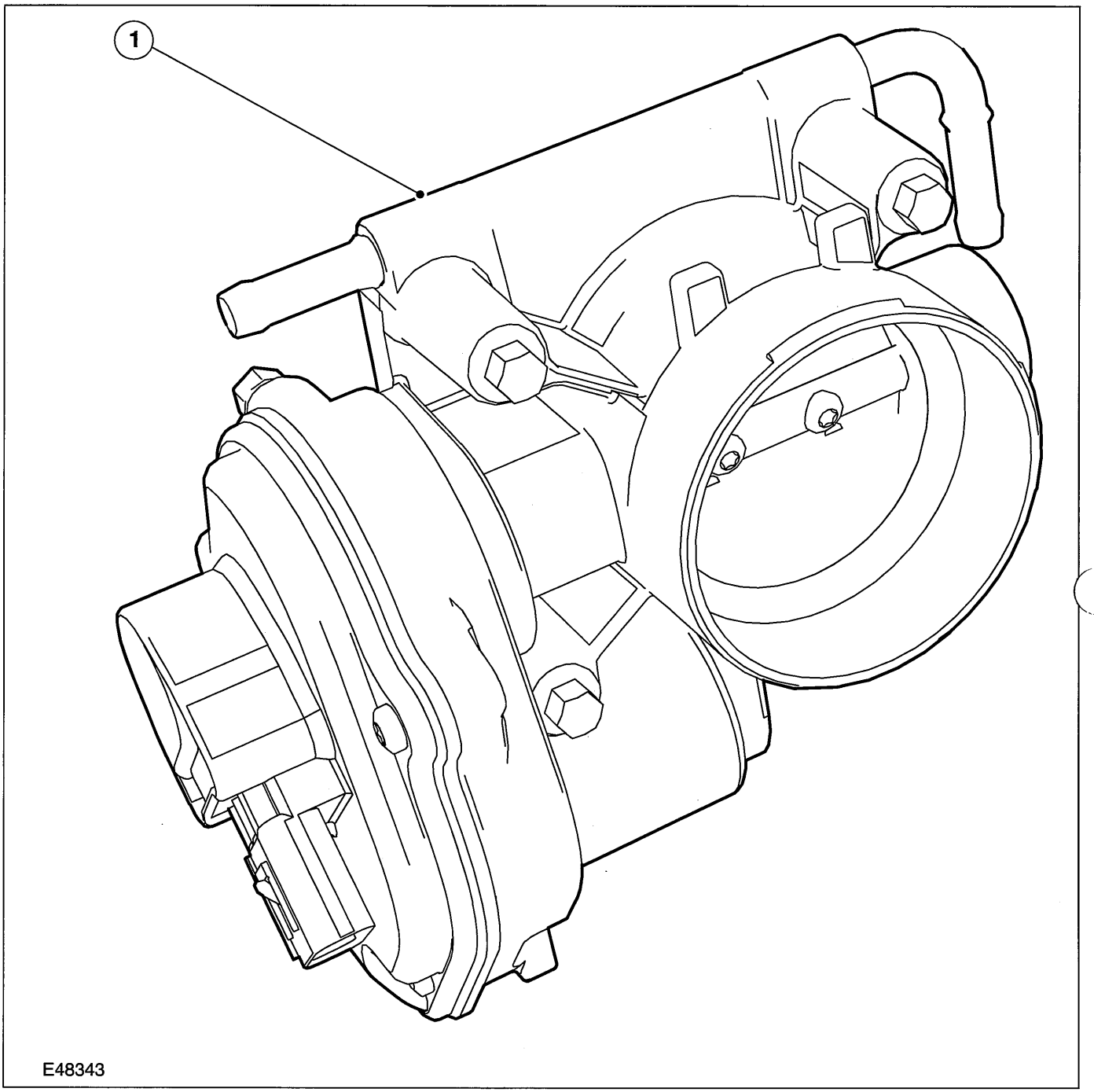


| Item | Description |
|---|---|
| 1 | Throttle body |

**Throttle Body**

The throttle butterfly position is controlled by a signal from the PCM which receives an input from the accelerator pedal position sensor. The system is fully electronic and does not use any cables.

The signal from the PCM is used to control a DC motor within the throttle body which is connected to the throttle butterfly through gears.

The throttle body also gives inputs back to the PCM. This information allows the PCM to compensate for factors such as carbon build up within the throttle body and throttle body wear. The throttle body also provides information to the PCM to enable the flagging of a DTC.

## DIAGNOSIS AND TESTING

# Fuel Charging and Controls

### General Equipment

| |
|---|
| Worldwide Diagnostic System (WDS) |

## Principles of Operation

### Ethanol equipped vehicles

Ethanol, is derived from cellulose waste. A large proportion of Ethanol is distilled from corn, wheat and sugar cane crops. The product that is to be used in this vehicle is called Ethanol E85. E85 is a mixture of 15% gasoline and 85% Ethanol. Ethanol is a clear liquid and when fully burnt the combustion gasses remaining are Carbon Dioxide and water. This makes the use of Ethanol a good environmental proposition. One drawback with pure Ethanol is that it is corrosive to certain rubber and plastic materials.

The introduction of Ethanol E85 has required some major internal changes to the fuel supply and delivery system. Some earlier vehicles used an Ethanol mixture called Ethanol E15. This fuel was made up of 15% Ethanol and 85% gasoline. At this mixture ratio, no changes to the fuel charging or delivery system where required, as no degradation would occur with the cylinder head valves or material content of the components, although some performance loss would be noticeable.

The components used by vehicles running Ethanol appear to be the same in construction as those that use unleaded fuel only. The changes are mainly to do with the materials used and increases in fuel flow rates.

Ethanol has a much higher octane rating than standard fuel which means that the ignition and fuel injection calibrations for a vehicle that is capable of using Ethanol E85 must be adapted suitably.

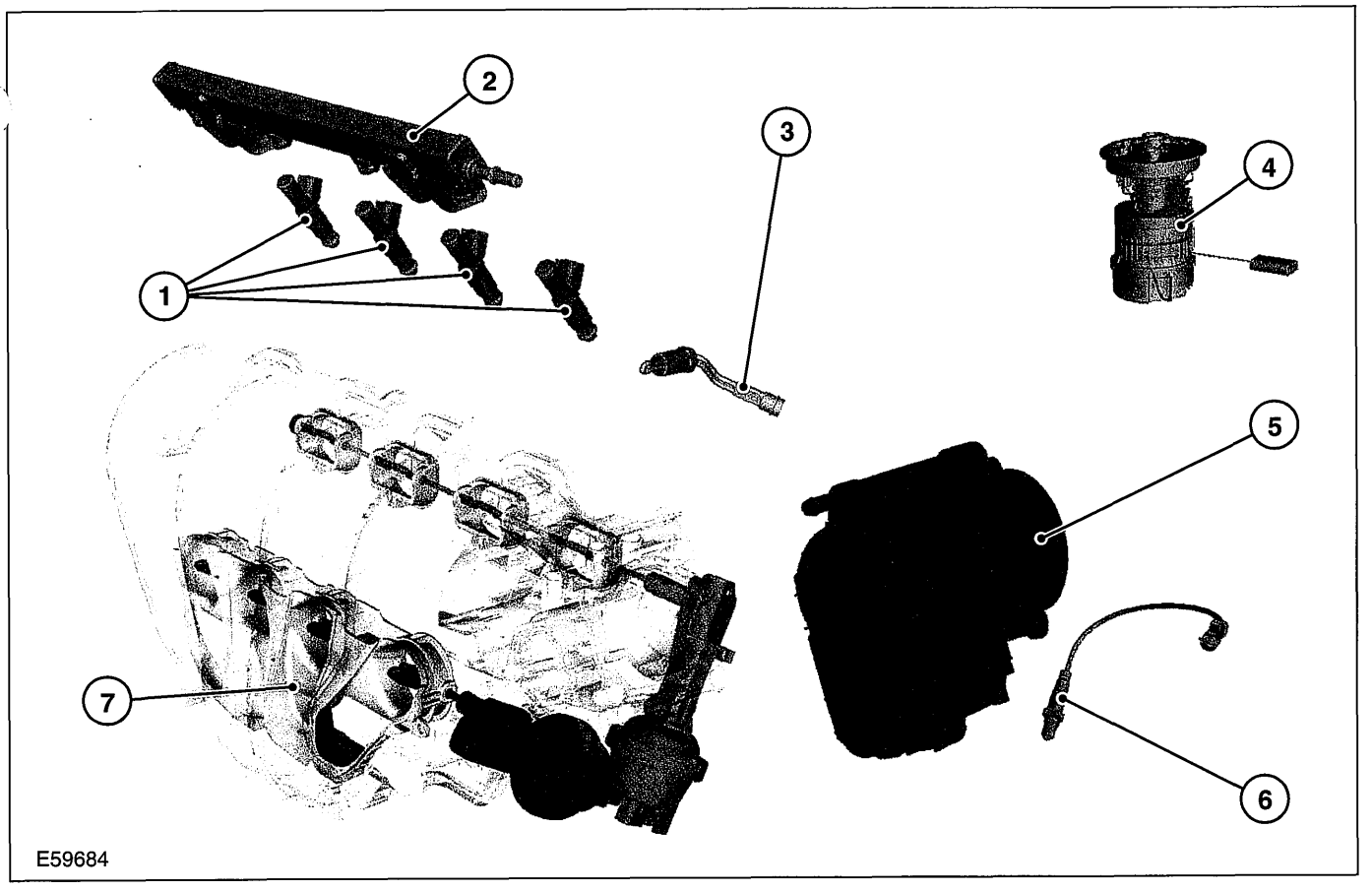


| Item | Description |
|---|---|
| 1 | Fuel injectors |
| 2 | Fuel rail |

| Item | Description |
|---|---|
| 3 | Block heater |
| 4 | Fuel pump module |

## DIAGNOSIS AND TESTING

| Item | Description |
|---|---|
| 5 | Throttle body |
| 6 | Heated Oxygen sensor (HO2s) |
| 7 | Intake manifold |

### Fuel injectors

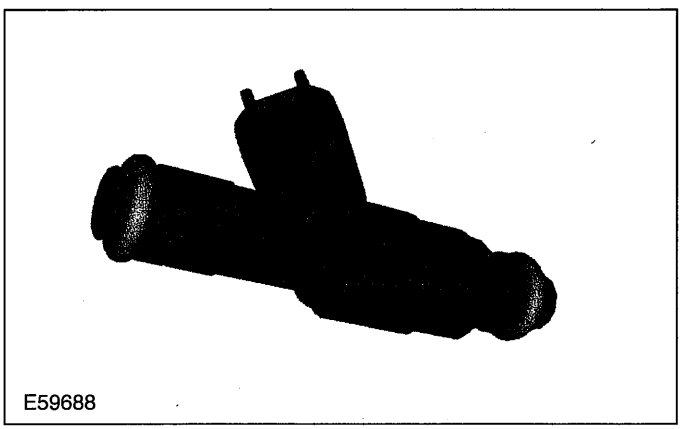
E59688

To maintain the same or similar power output to that of the unleaded fuel vehicle, the fuel injectors have been replaced with high flow fuel injectors.

### Fuel composition monitoring

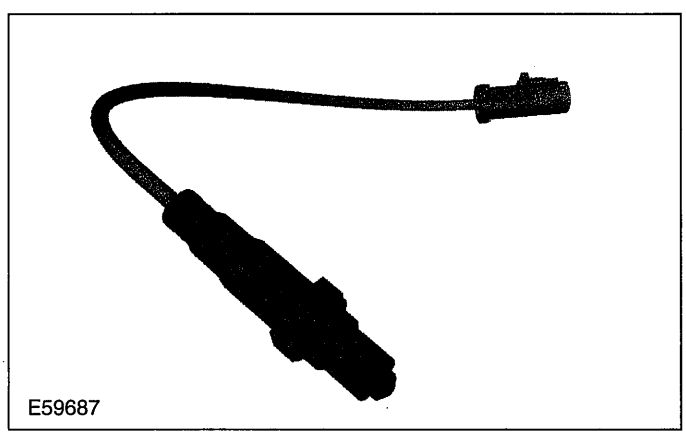
E59687

The quantity of Ethanol E85 in relation to the quantity of unleaded fuel contained in the fuel tank at any one time is not monitored at the fuel tank. The Ethanol percentage volume can only decrease from its maximum 85% (pure Ethanol E85), to zero (100% unleaded fuel).

The fuel charging system compensates for the changes in fuel composition using the signal received by the power train control module (PCM) from the HO2s. The PCM adapts the fueling and ignition calibrations to suit the current fuel tank content composition.

### Fuel supply

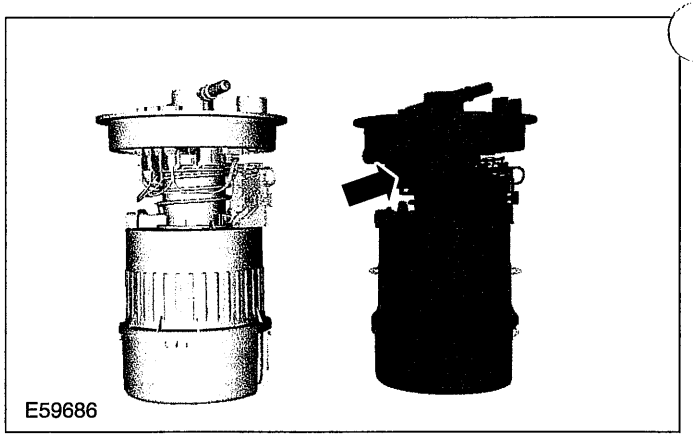
E59686

The fuel supply for all petrol fueled variants is equipped with a return-less fuel system. This means that the fuel delivery pressure at the fuel injectors, is monitored and controlled by the fuel tank module. This control is achived by switching the fuel pump on and off.

The fuel pump module for both the Ethanol E85 variant vehicle and the unleaded fueled vehicle are very similar. Visualy the only difference is the fuel pump electrical connections which on the Ethanol E85 variant is sealed. This is not the only differance, both fuel pump modules have different fuel level sensor resistor card values.

### Cold start

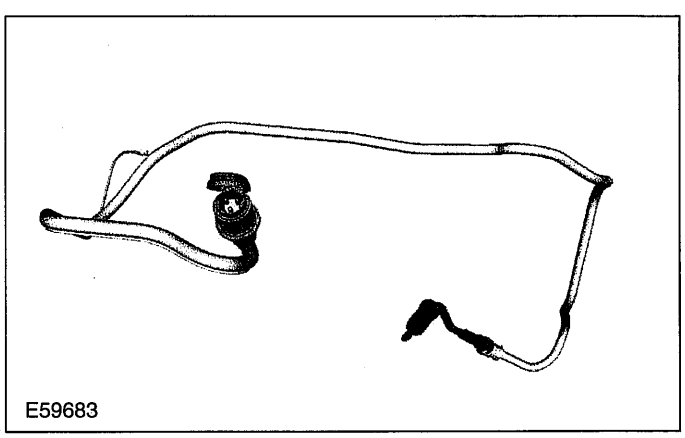
E59683

To overcome the problems relating to cold start inherent with Ethanol E85 vehicles (temperatures down to -29 degrees centigrade), a block heater has been installed into the engine coolant system.

The block heater is located to the rear of the engine under the exhaust manifold. The block heater is fitted with a dedicated harness which terminates at an external plug connector fitted into the radiator grill.

## DIAGNOSIS AND TESTING

The block heater can be connected to an external power supply, which will pre-heat the engine coolant contained within the cylinder block. The heated coolant will radiate heat to the fuel rail, which will warm the contained fuel. Sufficient warmed fuel is stored in the fuel rail to allow the engine to start and continue running correctly, until the engine combustion generates sufficient heat to maintain correct operating conditions.

### Fuel rail

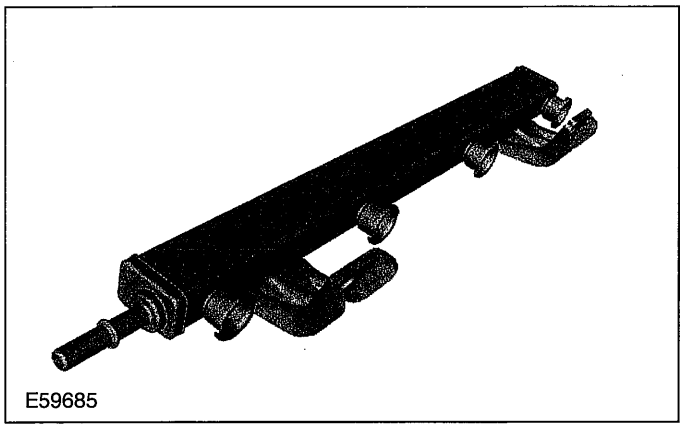

E59685

The fuel rail on Ethanol E85 vehicles is the same as non Ethanol E85 variants. The fuel rail function is to supply a reservoir of fuel at equal pressure for all four fuel injectors.

### Throttle body

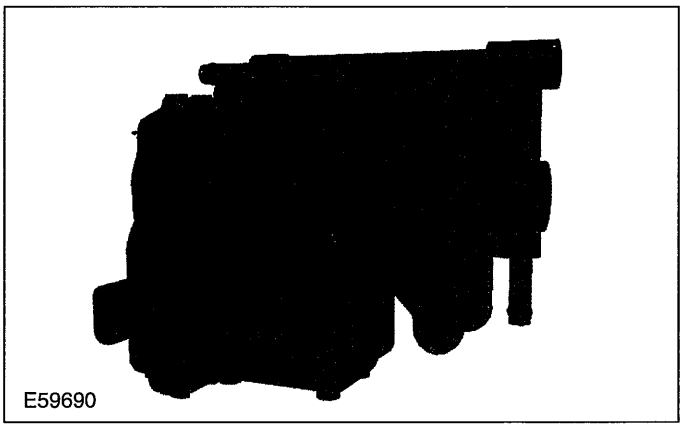

E59690

The throttle body on Ethanol E85 vehicles is the same as non Ethanol E85 variants. This is a fully electronic controlled and monitored component. The PCM adapts to the wear characteristics of the throttle plate. If a new throttle body is installed, it is necessary to teach the values of the new throttle body to the PCM. If installing a new throttle body, follow the initialization procedure.

REFER to: Throttle Body (303-04C, Removal and Installation).

## DIAGNOSIS AND TESTING

### Intake manifold

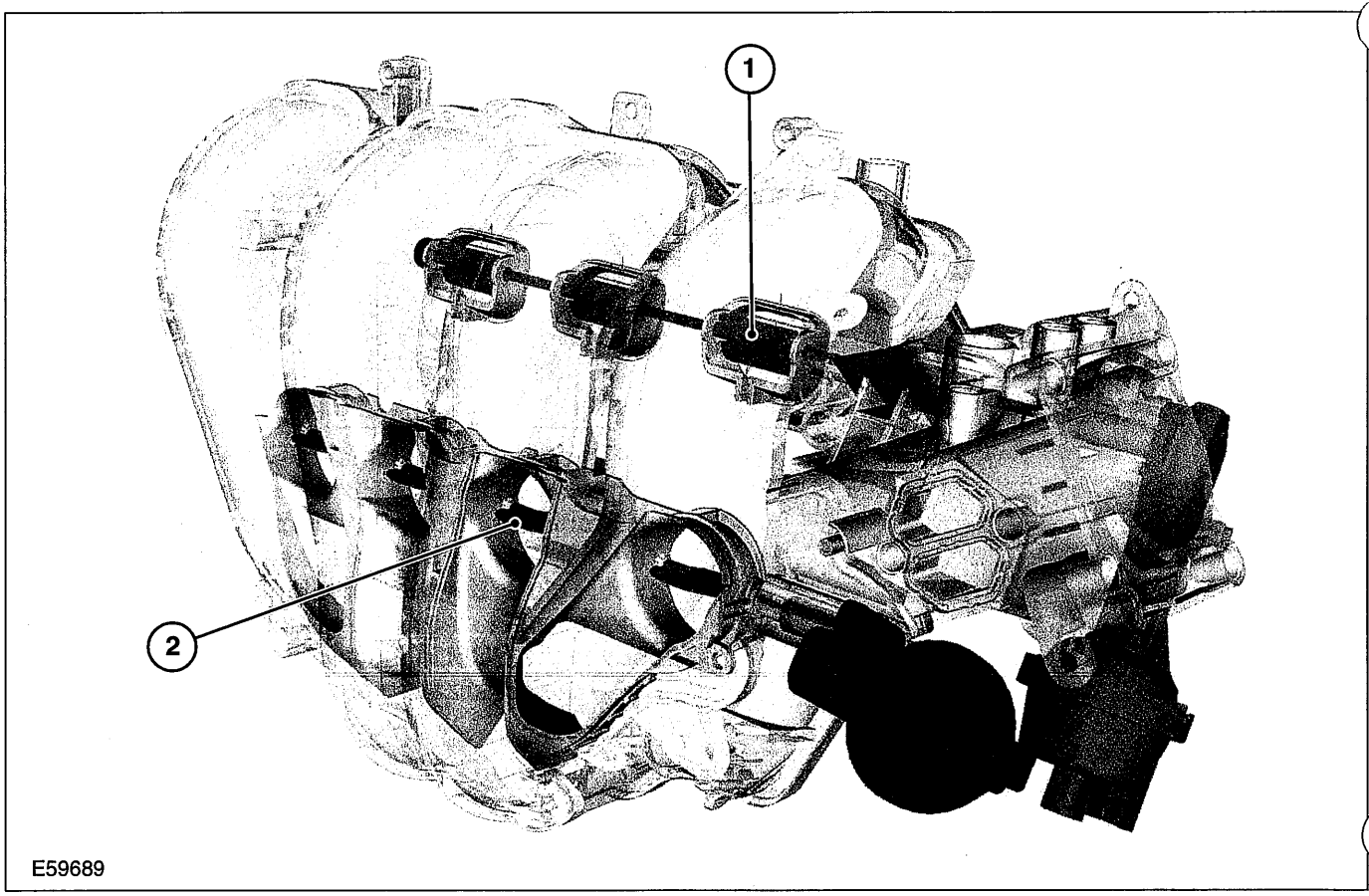


| Item | Description |
|---|---|
| 1 | Intake manifold tuning (IMT) swirl plates |
| 2 | Intake manifold runner control (IMRC) throttle plates |

The intake manifold for both Ethanol E85 and standard unleaded fueled vehicles is the same construction.

Built into the intake manifold, are the IMRC throttle plates and IMT swirl plates.

Under low demand throttle conditions, the air charge is delivered to the cylinder head intake ports through the primary air intake chambers. The clean flow of the air charge is disturbed by the IMT swirl plates to assist in the mixing of the air fuel mixture at the fuel injectors.

During high demand throttle conditions, the IMRC throttle plates are opened and the air charge is allowed to use both primary and secondary intake chambers. This means a higher volume of air charge can be accommodated by the intake manifold. During this high demand throttle condition, the IMT swirl plates are fully open so as not to restrict the air charge flow.

## Inspection and Verification

1. Verify the customer concern.
2. Visually inspect for obvious signs of mechanical or electrical damage.

**Visual Inspection Chart**

| Mechanical | Electrical |
|---|---|
| – Fuel leak(s)<br>– Vacuum line(s)<br>– Gasket(s)<br>– Seal(s)<br>– Fuel injector(s)<br>– Throttle body<br>– Fuel rail<br>– Fuel supply line | – Powertrain control module (PCM)<br>– Wiring harness<br>– Electrical connector(s)<br>– Throttle body<br>– Fuel injector(s) |

3. If an obvious cause for an observed or reported concern is found, correct the cause (if possible) before proceeding to the next step.
4. If the cause is not visually evident, verify the symptom and refer to the Symptom Chart.

## DIAGNOSIS AND TESTING

### Symptom Chart

**Symptom Chart**

| Symptom | Possible Sources | Action |
|---|---|---|
| • Engine does not crank | • PATS. | • CHECK the PATS LED extinguishes within 3 seconds when the ignition is turned on.<br>REFER to: Anti-Theft - Passive (419-01B, Diagnosis and Testing). |
| | • Starting system. | • REFER to: Starting System (303-06, Diagnosis and Testing). |
| | • Ignition switch. | • REFER to the Wiring Diagrams. |
| | • Powertrain control module (PCM). | • Carry out a full engine diagnosis using the guided diagnostic menu in WDS. |
| • Engine cranks but does not start | • Inertia fuel shutoff (IFS) switch. | • RESET the IFS switch. |
| | • Low fuel system pressure. | • Check the fuel system pressure.<br>REFER to: Fuel System Pressure Check (310-00A, General Procedures). |
| | • Fuel lines damaged or blocked. | • INSPECT the fuel lines. INSTALL new components as necessary. TEST the system for normal operation. |
| | • Fuel filter blocked. | • INSTALL a new fuel filter. |
| | • Fuel pump module. | • REFER to: Fuel System - 1.3L Duratec-8V (Rocam)/1.25L Duratec-16V (Sigma)/2.0L Duratec-HE (MI4)/1.4L Duratec-16V (Sigma)/1.6L Duratec-16V (Sigma) (310-00 Fuel System - General Information, Diagnosis and Testing). |
| | • Crankshaft position (CKP) sensor. | • Carry out a full engine diagnosis using the guided diagnostic menu in WDS. |
| | • Camshaft position (CMP) sensor. | • Carry out a full engine diagnosis using the guided diagnostic menu in WDS. |
| | • PCM. | • Carry out a full engine diagnosis using the guided diagnostic menu in WDS. |

## DIAGNOSIS AND TESTING

| Symptom | Possible Sources | Action |
|---|---|---|
| | • Fuel rail fuel pressure sensor. | • Carry out a full engine diagnosis using the guided diagnostic menu in WDS. |
| | • Fuel injectors. | • INSPECT the fuel injectors. CLEAN the fuel injectors or INSTALL a new set of injectors as required only after the checks have been carried out. |
| | • Incorrect valve timing. | • CHECK the valve timing. |
| | • Low cylinder compression. | • TEST the cylinder compression. |
| • Poor starting | • Low fuel system pressure. | • Check the fuel system pressure.<br>REFER to: Fuel System Pressure Check (310-00A, General Procedures). |
| | • Fuel system leak. | • CHECK the system for fuel leak(s). REPAIR the system as necessary. |
| | • Fuel system restriction. | • INSPECT the fuel system. INSTALL new components as necessary. TEST the system for normal operation. |
| | • Fuel filter blocked. | • INSTALL a new fuel filter. |
| | • Air cleaner element blocked. | • INSTALL a new air cleaner element. |
| | • Incorrect engine oil. | • INSTALL a new engine oil filter and engine oil. |
| | • Incorrect power steering fluid. | • DRAIN and REFILL the power steering system with the correct fluid.<br>REFER to: Power Steering System Flushing - Vehicles With: Electro-Hydraulic Power Steering (EHPS) (211-00, General Procedures). |
| | • CKP sensor. | • Carry out a full engine diagnosis using the guided diagnostic menu in WDS. |
| | • Engine coolant temperature (ECT) sensor. | • Carry out a full engine diagnosis using the guided diagnostic menu in WDS. |

## DIAGNOSIS AND TESTING

| Symptom | Possible Sources | Action |
|---|---|---|
| | • Fuel injector(s). | • INSPECT the fuel injectors. CLEAN the fuel injectors or INSTALL a new set of injectors as required only after the checks have been carried out. |
| | • Fuel rail fuel pressure sensor. | • Carry out a full engine diagnosis using the guided diagnostic menu in WDS. |
| | • Catalytic converter blocked. | • REMOVE and visually INSPECT the catalytic converter as necessary.<br>REFER to: Catalytic Converter - 1.8L Duratec-HE (MI4)/2.0L Duratec-HE (MI4) (309-00, Removal and Installation). |
| | • Low cylinder compression. | • TEST the engine cylinder compression. |
| • Engine starts but immediately stops | • Air cleaner element blocked. | • INSTALL a new air cleaner element. |
| | • CKP sensor. | • Carry out a full engine diagnosis using the guided diagnostic menu in WDS. |
| | • CMP sensor. | • Carry out a full engine diagnosis using the guided diagnostic menu in WDS. |
| | • PCM. | • Carry out a full engine diagnosis using the guided diagnostic menu in WDS. |
| | • Low fuel system pressure. | • Check the fuel system pressure.<br>REFER to: Fuel System Pressure Check (310-00A, General Procedures). |
| | • Fuel system restriction. | • INSPECT the fuel system. INSTALL new components as necessary. TEST the system for normal operation. |
| | • Fuel filter blocked. | • INSTALL a new fuel filter. |
| • Poor idling | • Air cleaner element blocked. | • INSTALL a new air cleaner element. |

## DIAGNOSIS AND TESTING

| Symptom | Possible Sources | Action |
|---|---|---|
| | • Incorrect or contaminated fuel. | • CHECK for signs of contamination such as strange odors from the fuel tank.<br>• If contaminated fuel is found, DRAIN the complete fuel system. FLUSH the fuel system through with clean gasoline.<br>REFER to: Fuel Tank Draining (310-00A, General Procedures). |
| | | INSTALL a new fuel filter.<br>• INSPECT the fuel injectors. CLEAN the fuel injectors or INSTALL a new set of injectors as required only after the checks have been carried out.<br>• INSTALL a new fuel rail.<br>REFER to: Fuel Injection Supply Manifold (303-04C, Removal and Installation). |
| | • Low fuel system pressure. | • Check the fuel system pressure.<br>REFER to: Fuel System Pressure Check (310-00A, General Procedures). |
| | • Fuel filter blocked. | • INSTALL a new fuel filter. |
| | • EGR valve sticking open. | • REFER to: Engine Emission Control (303-08 Engine Emission Control - 2.0L Duratec-HE (MI4), Diagnosis and Testing). |
| | • Fuel injectors. | • INSPECT the fuel injectors. CLEAN the fuel injectors or INSTALL a new set of injectors as required only after the checks have been carried out. |
| | • CKP sensor. | • Carry out a full engine diagnosis using the guided diagnostic menu in WDS. |
| | • Knock sensor (KS). | • Carry out a full engine diagnosis using the guided diagnostic menu in WDS. |
| | • Fuel injection supply manifold fuel pressure sensor. | • Carry out a full engine diagnosis using the guided diagnostic menu in WDS. |

## DIAGNOSIS AND TESTING

| Symptom | Possible Sources | Action |
|---|---|---|
| • Engine stumbling | • Engine ignition. | • REFER to: Engine Ignition (303-07B, Diagnosis and Testing). |
| | • Fuel injectors. | • INSPECT the fuel injectors. CLEAN the fuel injectors or INSTALL a new set of injectors as required only after the checks have been carried out. |
| | • Low fuel system pressure. | • Check the fuel system pressure.<br>REFER to: Fuel System Pressure Check (310-00A, General Procedures). |
| | • Fuel rail fuel pressure sensor. | • Carry out a full engine diagnosis using the guided diagnostic menu in WDS. |
| | • EGR valve sticking open. | • REFER to: Engine Emission Control (303-08 Engine Emission Control - 2.0L Duratec-HE (MI4), Diagnosis and Testing). |
| • Engine lacks power | • Engine ignition. | • REFER to: Engine Ignition (303-07B, Diagnosis and Testing). |
| | • Brakes binding. | • CHECK the braking system.<br>REFER to: Brake System (206-00, Diagnosis and Testing). |
| | • Vehicle overloaded, or excessive wind resistance (roof racks, towing etc). | • ADVISE the customer about the effects of overloading the vehicle and wind resistance on the fuel consumption. |
| | • Air cleaner element blocked. | • INSTALL a new air cleaner element as necessary. |
| | • Low fuel system pressure. | • Check the fuel system pressure.<br>REFER to: Fuel System Pressure Check (310-00A, General Procedures). |
| | • Kinked or restricted fuel lines. | • INSPECT the fuel lines. INSTALL new components as necessary. TEST the system for normal operation. |

## DIAGNOSIS AND TESTING

| Symptom | Possible Sources | Action |
|---|---|---|
| | • Incorrect or contaminated fuel. | • CHECK for signs of contamination such as strange odors from the fuel tank.<br>• If contaminated fuel is found, DRAIN the complete fuel system. FLUSH the fuel system through with clean gasoline.<br>REFER to: Fuel Tank Draining (310-00A, General Procedures).<br>INSTALL a new fuel filter.<br>• INSPECT the fuel injectors. CLEAN the fuel injectors or INSTALL a new set of injectors as required only after the checks have been carried out.<br>• INSTALL a new rail.<br>REFER to: Fuel Injection Supply Manifold (303-04C, Removal and Installation). |
| | • Fuel filter blocked. | • INSTALL a new fuel filter. |
| | • EGR valve sticking open. | • REFER to: Engine Emission Control (303-08 Engine Emission Control - 2.0L Duratec-HE (MI4), Diagnosis and Testing). |
| | • Vehicle speed sensor (VSS). | • Carry out a full engine diagnosis using the guided diagnostic menu in WDS. |
| | • ECT sensor. | • Carry out a full engine diagnosis using the guided diagnostic menu in WDS. |
| | • Fuel injectors. | • INSPECT the fuel injectors. CLEAN the fuel injectors or INSTALL a new set of injectors as required only after the checks have been carried out. |
| | • Fuel rail fuel pressure sensor. | • Carry out a full engine diagnosis using the guided diagnostic menu in WDS. |
| | • Incorrect valve timing. | • CHECK the valve timing. |
| | • Low cylinder compression. | • CHECK the cylinder compression. |

## DIAGNOSIS AND TESTING

| Symptom | Possible Sources | Action |
|---|---|---|
| | • Catalytic converter blocked. | • REMOVE and visually INSPECT the catalytic converter for damage. INSTALL a new catalytic converter as necessary.<br>REFER to: Catalytic Converter - 1.8L Duratec-HE (MI4)/2.0L Duratec-HE (MI4) (309-00, Removal and Installation). |
| • Black smoke at idle | • Air cleaner element blocked. | • INSTALL a new air cleaner element as necessary. |
| | • Fuel injectors. | • INSPECT the fuel injectors. CLEAN the fuel injectors or INSTALL a new set of injectors as required only after the checks have been carried out. |
| | • ECT sensor. | • Carry out a full engine diagnosis using the guided diagnostic menu in WDS. |
| | • Fuel rail fuel pressure sensor. | • Carry out a full engine diagnosis using the guided diagnostic menu in WDS. |
| | • Catalytic converter blocked. | • REMOVE and visually INSPECT the catalytic converter for damage. INSTALL a new catalytic converter as necessary.<br>REFER to: Catalytic Converter - 1.8L Duratec-HE (MI4)/2.0L Duratec-HE (MI4) (309-00, Removal and Installation). |
| | • Incorrect valve timing. | • CHECK the valve timing. |
| • Excessive black smoke during acceleration | • Air cleaner element blocked. | • INSTALL a new air cleaner element as necessary. |

## DIAGNOSIS AND TESTING

| Symptom | Possible Sources | Action |
|---|---|---|
| | • Incorrect or contaminated fuel. | • CHECK for signs of contamination such as strange odors from the fuel tank.<br>• If contaminated fuel is found, DRAIN the complete fuel system. FLUSH the fuel system through with clean gasoline.<br>REFER to: Fuel Tank Draining (310-00A, General Procedures).<br>INSTALL a new fuel filter.<br>• INSPECT the fuel injectors. CLEAN the fuel injectors or INSTALL a new set of injectors as required only after the checks have been carried out.<br>• INSTALL a new fuel rail.<br>REFER to: Fuel Injection Supply Manifold (303-04C, Removal and Installation). |
| | • EGR valve sticking open. | • REFER to: Engine Emission Control (303-08 Engine Emission Control - 2.0L Duratec-HE (MI4), Diagnosis and Testing). |
| | • CKP sensor. | • Carry out a full engine diagnosis using the guided diagnostic menu in WDS. |
| | • KS. | • Carry out a full engine diagnosis using the guided diagnostic menu in WDS. |
| | • Fuel injectors. | • INSPECT the fuel injectors. CLEAN the fuel injectors or INSTALL a new set of injectors as required only after the checks have been carried out. |
| | • Fuel rail fuel pressure sensor. | • Carry out a full engine diagnosis using the guided diagnostic menu in WDS. |
| | • Catalytic converter blocked. | • REMOVE and visually INSPECT the catalytic converter for damage. INSTALL a new catalytic converter as necessary.<br>REFER to: Catalytic Converter - 1.8L Duratec-HE (MI4)/2.0L Duratec-HE (MI4) (309-00, Removal and Installation). |

## DIAGNOSIS AND TESTING

| Symptom | Possible Sources | Action |
|---|---|---|
| • Black smoke at cruising speeds | • Air cleaner element blocked. | • INSTALL a new air cleaner element. |
| | • EGR valve sticking open. | • REFER to: Engine Emission Control (303-08 Engine Emission Control - 2.0L Duratec-HE (MI4), Diagnosis and Testing). |
| | • ECT sensor. | • Carry out a full engine diagnosis using the guided diagnostic menu in WDS. |
| | • Fuel injectors. | • INSPECT the fuel injectors. CLEAN the fuel injectors or INSTALL a new set of injectors as required only after the checks have been carried out. |
| | • Fuel rail fuel pressure sensor. | • Carry out a full engine diagnosis using the guided diagnostic menu in WDS. |
| | • Catalytic converter blocked. | • REMOVE and visually INSPECT the catalytic converter for damage. INSTALL a new catalytic converter as necessary.<br>REFER to: Catalytic Converter - 1.8L Duratec-HE (MI4)/2.0L Duratec-HE (MI4) (309-00, Removal and Installation). |
| • Blue smoke | • Engine burning oil. | • CARRY OUT a controlled oil consumption test over 1000 km (600 miles). CONFIRM that the oil consumption is less than 0.1 litre per 1000 km (600 miles). |

## DIAGNOSIS AND TESTING

| Symptom | Possible Sources | Action |
|---|---|---|
| | • Incorrect or contaminated fuel. | • CHECK for signs of contamination such as strange odors from the fuel tank.<br>• If contaminated fuel is found, DRAIN the complete fuel system. FLUSH the fuel system through with clean gasoline.<br>REFER to: Fuel Tank Draining (310-00A, General Procedures).<br>INSTALL a new fuel filter.<br>• INSPECT the fuel injectors. CLEAN the fuel injectors or INSTALL a new set of injectors as required only after the checks have been carried out.<br>• INSTALL a new fuel rail.<br>REFER to: Fuel Injection Supply Manifold (303-04C, Removal and Installation). |
| | • Positive crankcase ventilation (PCV) system. | • INSPECT for visible signs of damage or blockage. CLEAN, REPAIR or INSTALL new parts as necessary. |
| | • Worn or damaged valve guide(s), piston ring(s), cylinder bore(s), cylinder head or gasket. | • REMOVE the cylinder head. INSPECT the cylinder head, pistons and cylinder bores for signs of wear or damage.<br>REFER to: Cylinder Head (303-01C, In-vehicle Repair). |

## DIAGNOSIS AND TESTING

| Symptom | Possible Sources | Action |
|---|---|---|
| • White smoke | • Incorrect or contaminated fuel. | • CHECK for signs of contamination such as strange odors from the fuel tank.<br>• If contaminated fuel is found, DRAIN the complete fuel system. FLUSH the fuel system through with clean gasoline.<br>REFER to: Fuel Tank Draining (310-00A, General Procedures).<br>INSTALL a new fuel filter.<br>• INSPECT the fuel injectors. CLEAN the fuel injectors or INSTALL a new set of injectors as required only after the checks have been carried out.<br>• INSTALL a new fuel injection supply manifold.<br>REFER to: Fuel Injection Supply Manifold (303-04C, Removal and Installation). |
| | • Coolant in the combustion chamber. | • CARRY OUT a cooling system pressure test.<br>REFER to: Engine Cooling (303-03C, Diagnosis and Testing).<br>REMOVE the cylinder head.<br>INSPECT the cylinder head, cylinder head gasket and cylinder bores for wear or damage.<br>REFER to: Cylinder Head (303-01C, In-vehicle Repair). |

## DIAGNOSIS AND TESTING

| Symptom | Possible Sources | Action |
|---|---|---|
| • Engine misfire | • Engine ignition. | • REFER to: Engine Ignition (303-07B, Diagnosis and Testing). |
| | • Incorrect or contaminated fuel. | • CHECK for signs of contamination such as strange odors from the fuel tank.<br>• If contaminated fuel is found, DRAIN the complete fuel system. FLUSH the fuel system through with clean gasoline.<br>REFER to: Fuel Tank Draining (310-00A, General Procedures).<br>INSTALL a new fuel filter.<br>• INSPECT the fuel injectors. CLEAN the fuel injectors or INSTALL a new set of injectors as required only after the checks have been carried out.<br>• INSTALL a new fuel rail.<br>REFER to: Fuel Injection Supply Manifold (303-04C, Removal and Installation). |
| | • Low fuel system pressure. | • Check the fuel system pressure.<br>REFER to: Fuel System Pressure Check (310-00A, General Procedures). |
| | • EGR valve sticking open. | • REFER to: Engine Emission Control (303-08 Engine Emission Control - 2.0L Duratec-HE (MI4), Diagnosis and Testing). |
| | • Engine operating temperature too high. | • REFER to: Engine Cooling (303-03C, Diagnosis and Testing). |
| | • ECT sensor. | • Carry out a full engine diagnosis using the guided diagnostic menu in WDS. |
| | • CKP sensor. | • Carry out a full engine diagnosis using the guided diagnostic menu in WDS. |
| | • CMP sensor. | • Carry out a full engine diagnosis using the guided diagnostic menu in WDS. |
| | • KS. | • Carry out a full engine diagnosis using the guided diagnostic menu in WDS. |

## DIAGNOSIS AND TESTING

| Symptom | Possible Sources | Action |
|---|---|---|
| | • Fuel injectors. | • INSPECT the fuel injectors. CLEAN the fuel injectors or INSTALL a new set of injectors as required only after the checks have been carried out. |
| | • Fuel rail fuel pressure sensor. | • Carry out a full engine diagnosis using the guided diagnostic menu in WDS. |
| | • Low cylinder compression. | • CHECK the engine compression. |
| | • Worn or damaged valve(s), tappet(s) or camshaft(s). | • REMOVE the cylinder head. INSPECT the cylinder head, valves, tappets and camshafts for signs of wear or damage.<br>REFER to: Cylinder Head (303-01C, In-vehicle Repair). |
| | • Damaged cylinder head gasket. | • REMOVE the cylinder head. INSPECT the cylinder head gasket and cylinder bores for wear or damage.<br>REFER to: Cylinder Head (303-01C, In-vehicle Repair). |
| • Engine knock at idle | • Low engine oil level. | • CHECK the engine oil level. REFILL as necessary. |
| | • Incorrect or contaminated fuel. | • CHECK for signs of contamination such as strange odors from the fuel tank.<br>• If contaminated fuel is found, DRAIN the complete fuel system. FLUSH the fuel system through with clean gasoline.<br>REFER to: Fuel Tank Draining (310-00A, General Procedures).<br>INSTALL a new fuel filter.<br>• INSPECT the fuel injectors. CLEAN the fuel injectors or INSTALL a new set of injectors as required only after the checks have been carried out.<br>• INSTALL a new fuel rail.<br>REFER to: Fuel Injection Supply Manifold (303-04C, Removal and Installation). |
| | • KS. | • Carry out a full engine diagnosis using the guided diagnostic menu in WDS. |

## DIAGNOSIS AND TESTING

| Symptom | Possible Sources | Action |
|---|---|---|
| | • CKP sensor. | • Carry out a full engine diagnosis using the guided diagnostic menu in WDS. |
| | • Fuel injector(s). | • INSPECT the fuel injectors. CLEAN the fuel injectors or INSTALL a new set of injectors as required only after the checks have been carried out. |
| | • Incorrect valve timing. | • CHECK the valve timing. |
| | • Excessive carbon build up. | • REMOVE the cylinder head. INSPECT the cylinder head and pistons for signs carbon build up.<br>REFER to: Cylinder Head (303-01C, In-vehicle Repair). |
| | • Worn or damaged oil pump.<br>• Worn or damaged timing chain or sprocket.<br>• Major mechanical engine failure. | • INSPECT the engine components. |
| • Engine knock during acceleration | • KS. | • Carry out a full engine diagnosis using the guided diagnostic menu in WDS. |
| | • Fuel injectors. | • INSPECT the fuel injectors. CLEAN the fuel injectors or INSTALL a new set of injectors as required only after the checks have been carried out. |
| | • Major mechanical engine failure. | • REFER to: Engine (303-01 Engine - 2.0L Duratec-HE (MI4), Diagnosis and Testing). |
| **NOTE:** Before proceeding with any of the actions in relation to the possible sources for excessive fuel consumption, a fuel consumption test located in the toolbox menu of WDS must be performed.<br>• Excessive fuel consumption | • Brakes binding. | • CHECK the braking system.<br>REFER to: Brake System (206-00, Diagnosis and Testing). |
| | • Vehicle overloaded, or excessive wind resistance (roof racks, towing etc). | • ADVISE the customer about the effects of overloading the vehicle and wind resistance on the fuel consumption. |
| | • Air cleaner element blocked. | • INSTALL a new air cleaner element. |

## DIAGNOSIS AND TESTING

| Symptom | Possible Sources | Action |
|---|---|---|
| | • Fuel system leak(s). | • CHECK the system for fuel leak(s). REPAIR or INSTALL new parts as necessary. |
| | • Fuel filter blocked. | • INSTALL a new fuel filter. |
| | • Incorrect engine oil. | • INSTALL a new oil filter and engine oil. |
| | • Generator. | • REFER to WDS. |
| | • EGR valve sticking open. | • REFER to: Engine Emission Control (303-08 Engine Emission Control - 2.0L Duratec-HE (MI4), Diagnosis and Testing). |
| | • Slipping clutch. | • REFER to: Manual Transaxle and Clutch (308-00, Diagnosis and Testing). |
| | • ECT sensor. | • Carry out a full engine diagnosis using the guided diagnostic menu in WDS. |
| | • Fuel injectors. | • INSPECT the fuel injectors. CLEAN the fuel injectors or INSTALL a new set of injectors as required only after the checks have been carried out. |
| | • PCM calibration. | • Using WDS, CHECK for the availability of a calibration update. |
| | • Incorrect valve timing. | • CHECK the valve timing. |
| | • Low cylinder compression. | • CHECK the engine compression. |
| • Engine cuts out during hard acceleration | • CMP sensor. | • Carry out a full engine diagnosis using the guided diagnostic menu in WDS. |
| | • CKP sensor. | • Carry out a full engine diagnosis using the guided diagnostic menu in WDS. |
| | • Fuel rail fuel pressure sensor. | • Carry out a full engine diagnosis using the guided diagnostic menu in WDS. |
| | • Low fuel system pressure. | • Check the fuel system pressure.<br>REFER to: Fuel System Pressure Check (310-00A, General Procedures). |

## REMOVAL AND INSTALLATION

# Throttle Body

1. **Remove the components in the order indicated in the following illustration(s) and table(s).**

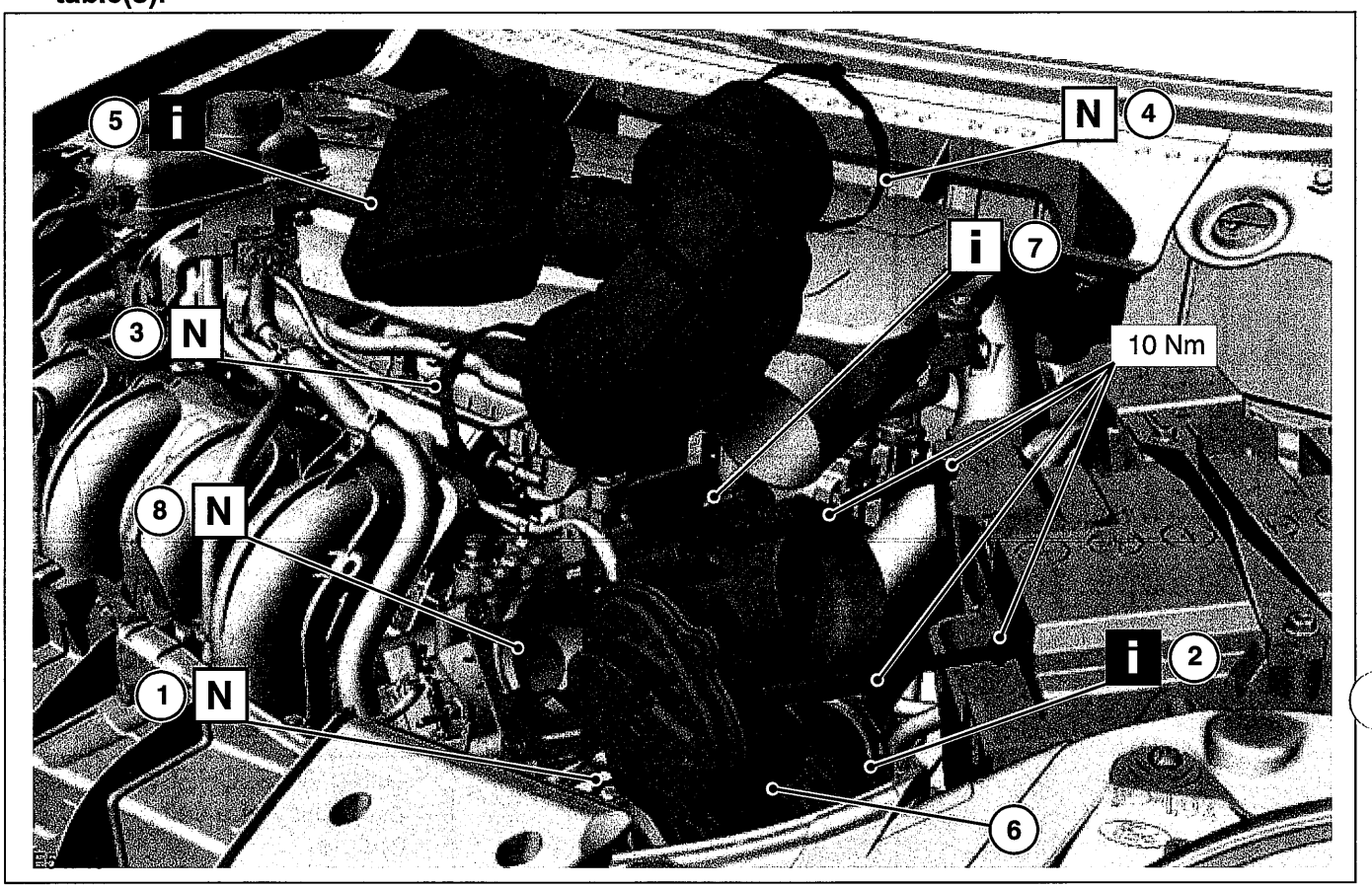


| Item | Description |
|---|---|
| 1 | Air cleaner intake pipe retaining clip |
| 2 | Air cleaner intake pipe<br>See Removal Detail |
| 3 | Air cleaner outlet pipe retaining clip |
| 4 | Air cleaner outlet pipe retaining clip |
| 5 | Air cleaner outlet pipe and resonator<br>See Removal Detail |
| 6 | Throttle body electrical connector |
| 7 | Throttle body |
| | See Installation Detail |
| 8 | Throttle body gasket |

2. **To install, reverse the removal procedure.**
3. **NOTE:Do not press the accelerator pedal during the initialization period as this will prevent the complete initialization of the throttle body.**

   **Turn the ignition key to position II and wait for one minute to initialize the throttle body.**
4. **Turn the ignition key to the OFF position.**

# Removal Details

### Item 2 Air cleaner intake pipe

1. **Detach the air cleaner intake pipe from the air cleaner intake pipe duct.**

## REMOVAL AND INSTALLATION

**Item 5 Air cleaner outlet pipe and resonator**

1. **Detach the air cleaner outlet pipe resonator from the air cleaner and remove the air cleaner outlet pipe.**

# Installation Details

**Item 7 Throttle body**

**NOTE:** Do not fully tighten the throttle body retaining bolts at this stage.

1. **Install each throttle body retaining bolt three full turns by hand.**

**Item 7 Throttle body**

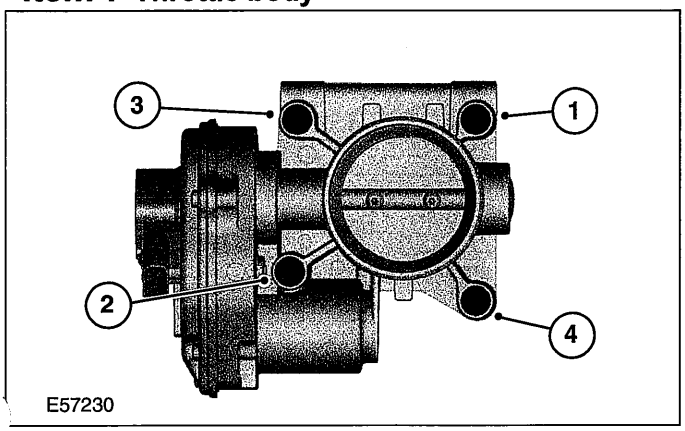


1. **Tighten the throttle body retaining bolts in the sequence shown.**

## REMOVAL AND INSTALLATION

# Fuel Injectors(23 455 0)

1. **Remove the fuel injection supply manifold.**

   **For additional information, refer to Fuel Injection Supply Manifold - in this section.**

## REMOVAL AND INSTALLATION

# Fuel Rail

| Materials | |
|---|---|
| Name | Specification |
| Engine Oil - 5W-30 | WSS-M2C913-B |

**WARNINGS:**

▲ **Do not smoke or carry lighted tobacco or open flame of any type when working on or near any fuel related components. Highly flammable vapors are always present and may ignite. Failure to follow these instructions may result in personal injury.**

▲ **This procedure involves fuel handling. Be prepared for fuel spillage at all times and always observe fuel handling precautions. Failure to follow these instructions may result in personal injury.**

1. **Release the fuel system pressure.**

   **For additional information, refer to: Fuel System Pressure Release (310-00 Fuel System - General Information, General Procedures).**

2. **Disconnect the battery ground cable.**

   **For additional information, refer to: Battery Disconnect (414-01 Battery, Mounting and Cables, General Procedures).**

3. **Remove the air cleaner assembly.**

   **For additional information, refer to: Air Cleaner - 2.0L Duratec-HE (MI4) (303-12 Intake Air Distribution and Filtering, Removal and Installation).**

4. **Remove the components in the order indicated in the following illustration(s) and table(s).**

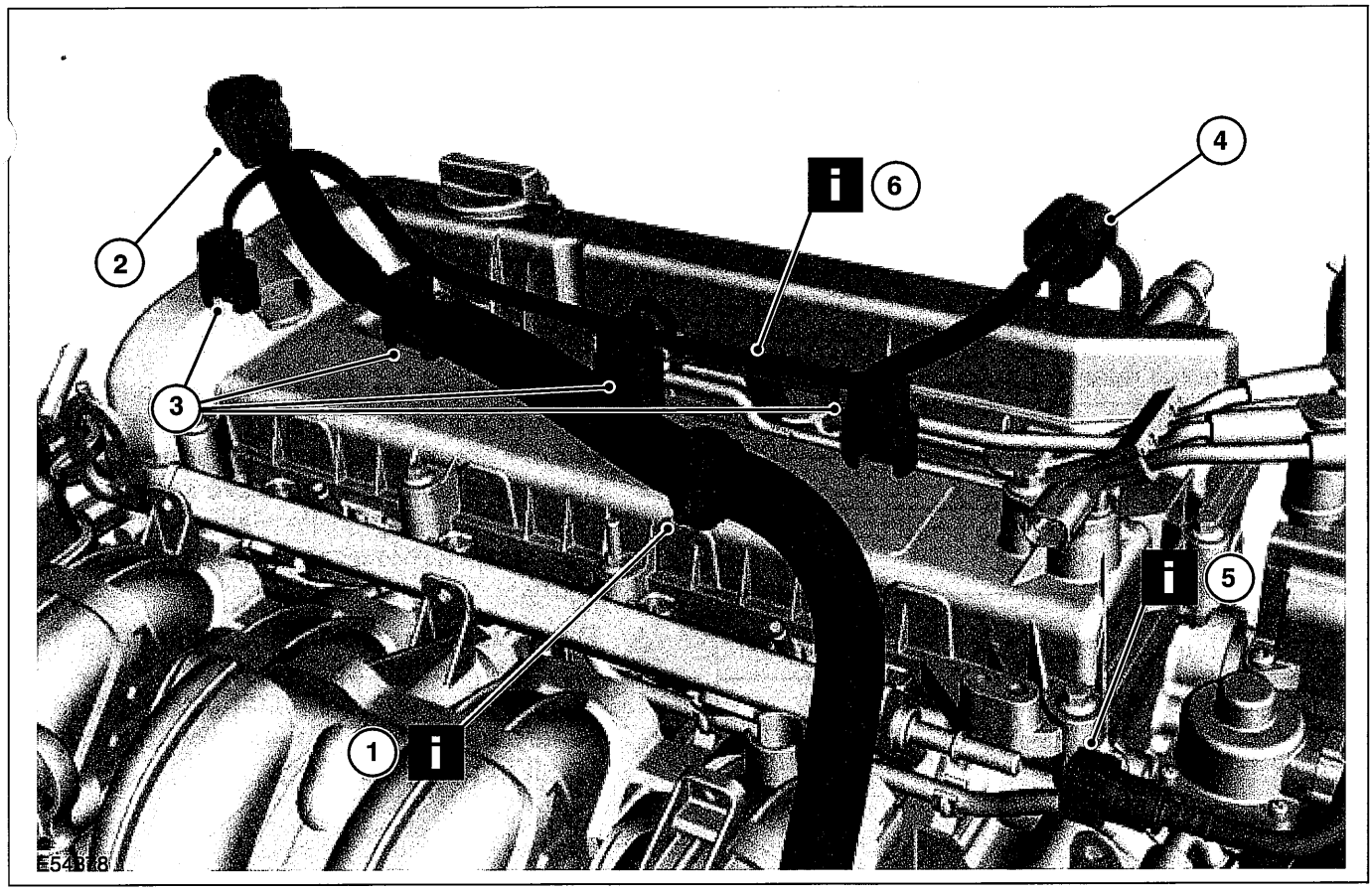


| Item | Description |
|---|---|
| 1 | Fuel charging wiring harness retaining clip See Removal Detail |
| 2 | Fuel charging wiring harness electrical connector |
| 3 | Fuel injector electrical connector(s) |
| 4 | Camshaft position sensor (CMP) electrical connector |

## REMOVAL AND INSTALLATION

| Item | Description |
|---|---|
| 5 | Fuel rail fuel supply line<br>See Removal Detail |
| 6 | Fuel charging wiring harness retaining clip |

| Item | Description |
|---|---|
| | See Removal Detail |

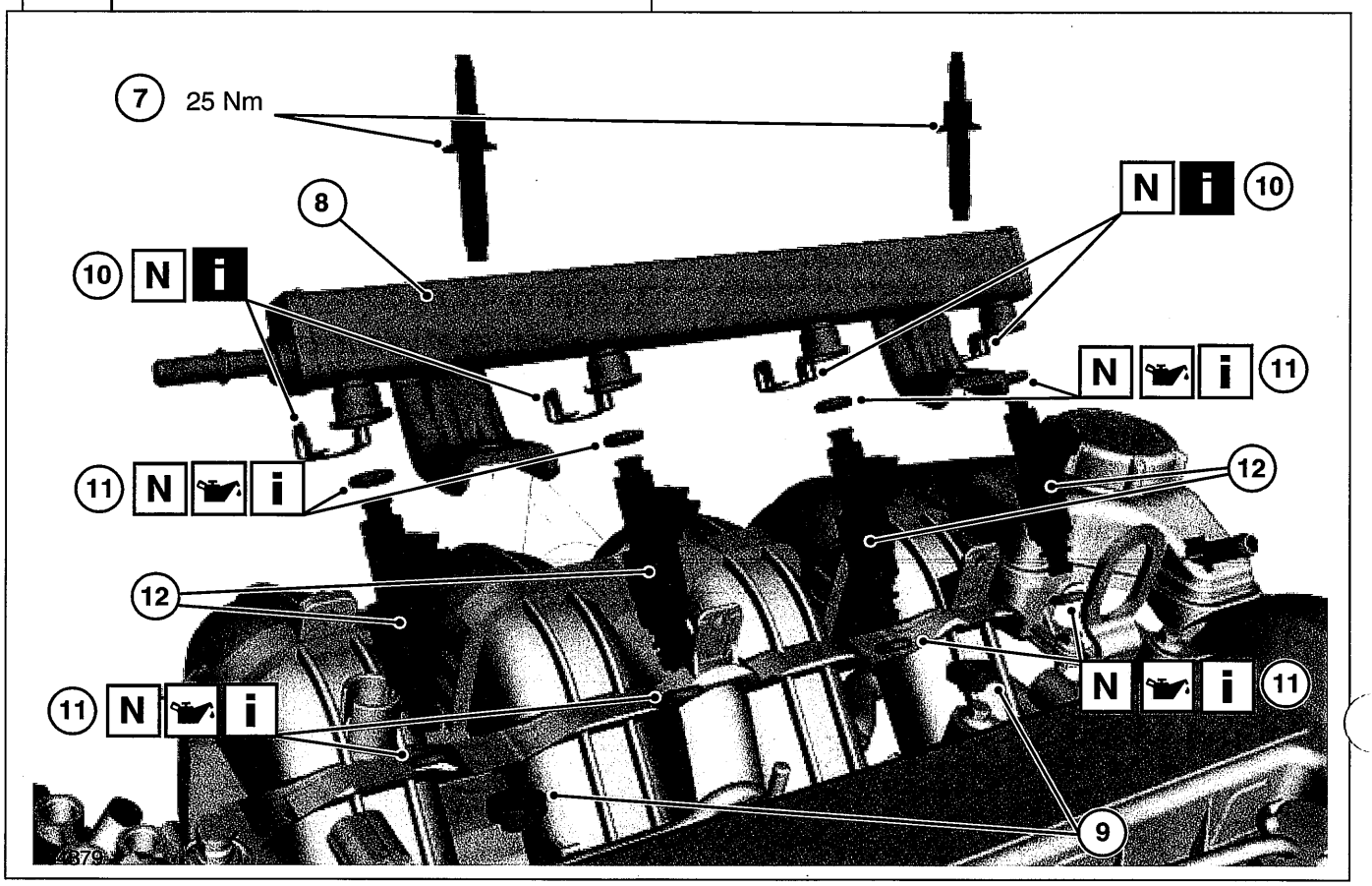


| Item | Description |
|---|---|
| 7 | Fuel rail retaining bolts |
| 8 | Fuel rail |
| 9 | Fuel rail spacers |
| 10 | Fuel injector retaining clips<br>See Removal Detail |
| 11 | Fuel injector O-ring seals<br>See Installation Detail |
| 12 | Fuel injectors |

**5. To install, reverse the removal procedure.**

**WARNINGS:**

**Do not smoke or carry lighted tobacco or open flame of any type when working on or near any fuel related components. Highly flammable vapors are always present and may ignite. Failure to follow these instructions may result in personal injury.**

**This procedure involves fuel handling. Be prepared for fuel spillage at all times and always observe fuel handling precautions. Failure to follow these instructions may result in personal injury.**

# Removal Details

### Item 1 Fuel charging wiring harness retaining clip

**1. Detach the fuel charging wiring harness retaining clip from the intake manifold.**

## REMOVAL AND INSTALLATION

**Item 5 Fuel rail fuel supply line**

1. **Disconnect the fuel supply line from the fuel rail.**

   **For additional information, refer to: Quick Release Coupling (310-00 Fuel System - General Information, General Procedures).**

**Item 6 Fuel charging wiring harness retaining clip**

1. **Detach the fuel charging wiring harness retaining clip from the fuel rail retaining bolt.**

**Item 10 Fuel injector retaining clips**

1. **Remove the fuel injector retaining clips.**

- Discard the fuel injector retaining clips.

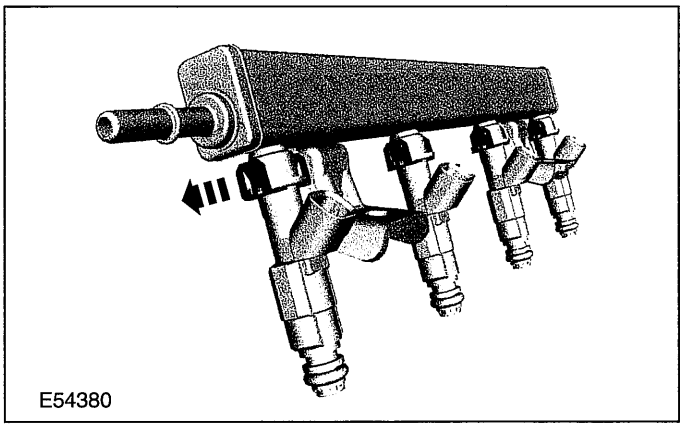


## Installation Details

**Item 11 Fuel injector O-ring seals**

1. **Lubricate the fuel injector O-ring seals with clean engine oil.**

# SECTION 303-05 Accessory Drive

## VEHICLE APPLICATION:2006.0 Fiesta

CONTENTS PAGE


**SPECIFICATIONS**

Specifications ..... 303-05-2

**DESCRIPTION AND OPERATION**

Accessory Drive — 1.4L Duratec-16V (Sigma)/1.6L Duratec-16V (Sigma) ..... 303-05-3
Accessory Drive — 2.0L Duratec-HE (MI4) ..... 303-05-4
2.0L Duratec HE (MI4) engine ..... 303-05-4

**DIAGNOSIS AND TESTING**

Accessory Drive ..... 303-05-5
Inspection and Verification ..... 303-05-5
Accessory Drive Belt Concerns ..... 303-05-5
Symptom Chart ..... 303-05-10
Component Tests ..... 303-05-16

**REMOVAL AND INSTALLATION**

Accessory Drive Belt — 1.4L Duratec-16V (Sigma)/1.6L Duratec-16V (Sigma), Vehicles With: Air Conditioning ..... (21 567 0) 303-05-18
Accessory Drive Belt — 1.4L Duratec-16V (Sigma)/1.6L Duratec-16V (Sigma), Vehicles Without: Air Conditioning ..... (21 567 0) 303-05-21
Power Steering Pump Belt — 1.4L Duratec-16V (Sigma)/1.6L Duratec-16V (Sigma), Vehicles With: Air Conditioning ..... (21 567 0) 303-05-24
Accessory Drive Belt — 2.0L Duratec-HE (MI4) ..... (21 567 0) 303-05-26

## SPECIFICATIONS

**Torque Specifications - vehicles with 1.3L Duratec-8V (Rocam) engine**

| Description | Nm | lb-ft | lb-in |
|---|---|---|---|
| Accessory drive belt tensioner retaining bolt | 25 | 18 | - |
| Accessory drive belt idler pulley retaining bolt | 25 | 18 | - |
| Accessory drive bracket assembly retaining bolts | 30 | 22 | - |

**Torque Specifications - vehicles with 1.4L Duratorq-TDCi (DV)/1.6L Duratorq-TDCi (DV) Diesel engine**

| Description | Nm | lb-ft | lb-in |
|---|---|---|---|
| Accessory drive belt tensioner retaining bolts | 25 | 18 | - |

**Torque Specifications - vehicles with 2.0L Duratec-HE (MI4) engine**

| Description | Nm | lb-ft | lb-in |
|---|---|---|---|
| Accessory drive belt tensioner retaining bolts | 25 | 18 | - |

## DESCRIPTION AND OPERATION

# Accessory Drive — 1.4L Duratec-16V (Sigma)/1.6L Duratec-16V (Sigma)

### Overview

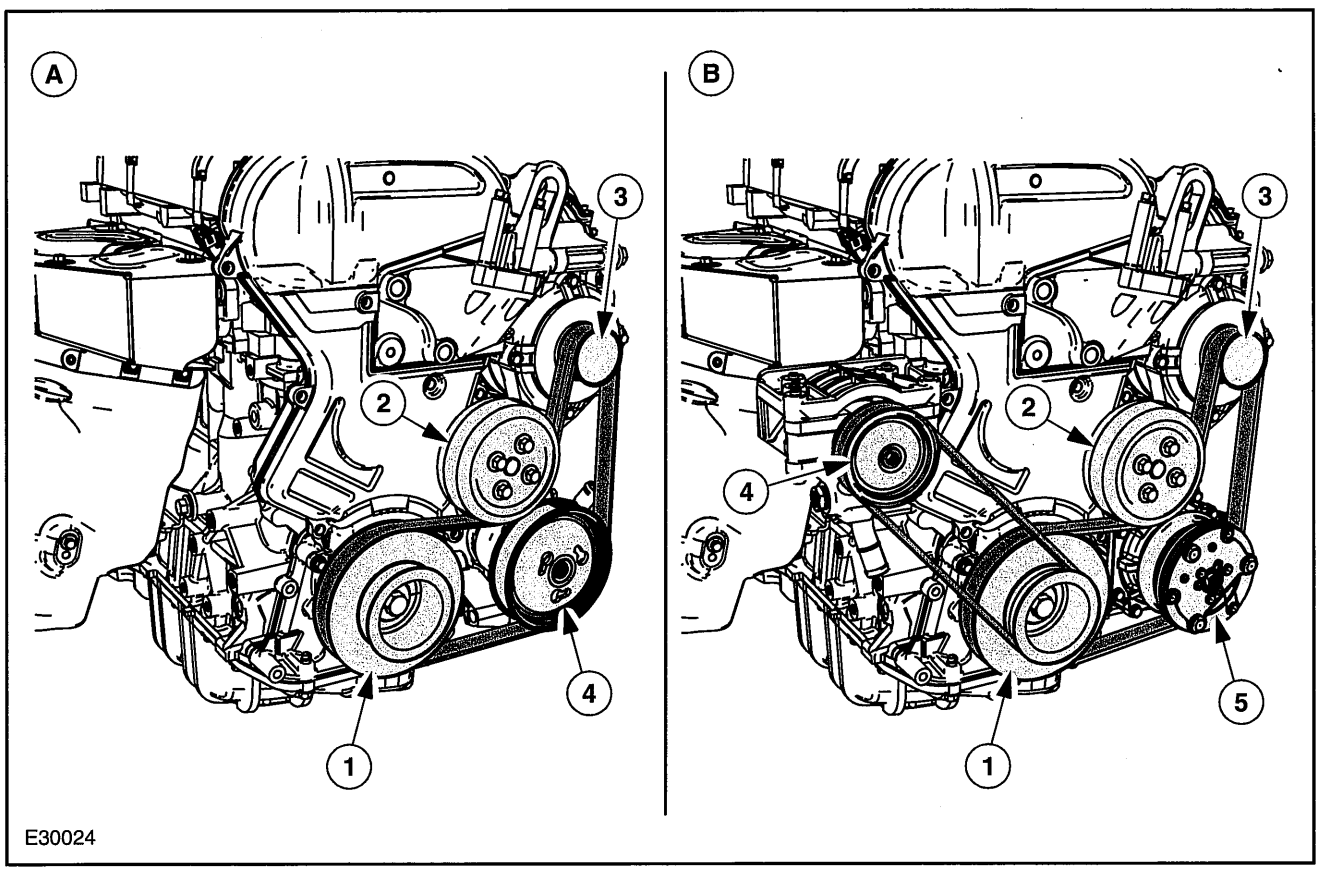


| Item | Description |
|---|---|
| A | Vehicles without air conditioning |
| B | Vehicles with air conditioning |
| 1 | Crankshaft pulley |
| 2 | Coolant pump |
| 3 | Generator |
| 4 | Power steering pump |
| 5 | Air conditioning compressor |

Vehicles without air conditioning have one drive belt, which drives the generator, the coolant pump and the power steering pump.

Vehicles with air conditioning have two drive belts, the longer of which drives the generator, the coolant pump and the air conditioning compressor. The shorter drive belt drives only the power steering pump.

Both versions are elastic multi-ribbed belts and do not need a tensioning pulley. Re-tensioning is not required.

## DESCRIPTION AND OPERATION

# Accessory Drive — 2.0L Duratec-HE (MI4)

### 2.0L Duratec HE (MI4) engine

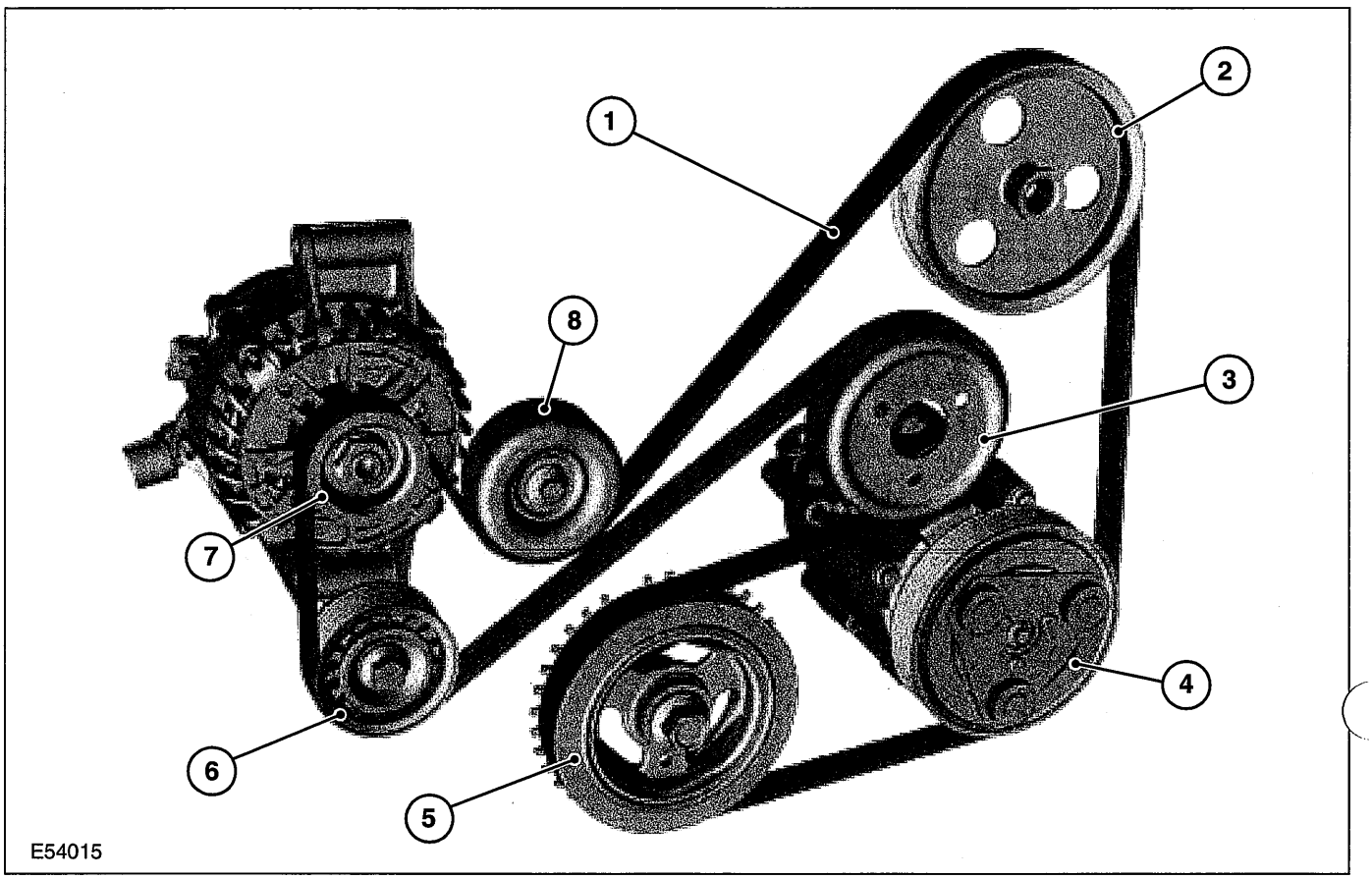


| Item | Description |
|---|---|
| 1 | Accessory drive belt |
| 2 | Power steering pump pulley |
| 3 | Coolant pump pulley |
| 4 | Air conditioning (A/C) compressor pulley |
| 5 | Crankshaft pulley |
| 6 | Accessory drive belt tensioner pulley |
| 7 | Generator pulley |
| 8 | Accessory drive belt idler pulley |

## DIAGNOSIS AND TESTING

# Accessory Drive

## Inspection and Verification

1. Verify the customer concern.
2. Visually inspect for obvious signs of mechanical damage.

### Visual Inspection Chart

| Mechanical |
|---|
| – Damaged or contaminated accessory drive belt |
| – Damaged or contaminated pulley(s) |
| – Incorrect accessory drive belt |
| – Incorrect fitment of the accessory drive belt |
| – Accessory drive belt tensioner |
| – Accessory drive belt idler pulley |
| – Generator |
| – Power steering pump |
| – Power steering pump leakage |
| – Air conditioning (A/C) compressor |
| – Pulley(s) |
| – Loose hardware |

3. If an obvious cause for an observed or reported concern is found, correct the cause (if possible) before proceeding to the next step.

## Accessory Drive Belt Concerns

**CAUTION:Do not lubricate the accessory drive belt, accessory drive belt tensioner or idler pulley(s) as potential damage to the accessory drive belt material construction, accessory drive belt tensioner damping mechanism, accessory drive belt tensioner pulley bearing and idler pulley(s) bearing may occur.**

### Cracking

Accessory drive belts are made from rubber which hardens with time and can develop cracks. As the belt runs on the back of some of the pulleys, the cracks are opened up. Small cracks are not considered to be a failure of the belt. Only if the crack is deep enough to reach the bottom of the groove to expose the cord or any chunks are found to be missing from the belt, is the belt condition considered to be unacceptable.

1. Check the accessory drive belt for cracks. If the damage exceeds the acceptable limit, install a new accessory drive belt.

- REFER to: Accessory Drive Belt - 1.3L Duratec-8V (Rocam) (303-05 Accessory Drive, Removal and Installation).
- REFER to: Accessory Drive Belt - 1.4L Duratec-16V (Sigma)/1.6L Duratec-16V (Sigma), Vehicles With: Air Conditioning (303-05 Accessory Drive, Removal and Installation).
- REFER to: Power Steering Pump Belt - 1.4L Duratec-16V (Sigma)/1.6L Duratec-16V (Sigma), Vehicles With: Air Conditioning (303-05 Accessory Drive, Removal and Installation).
- REFER to: Accessory Drive Belt - 1.4L Duratec-16V (Sigma)/1.6L Duratec-16V (Sigma), Vehicles Without: Air Conditioning (303-05 Accessory Drive, Removal and Installation).
- REFER to: Accessory Drive Belt - 1.4L Duratorq-TDCi (DV) Diesel (303-05 Accessory Drive, Removal and Installation).
- REFER to: Accessory Drive Belt - 1.6L Duratorq-TDCi (DV) Diesel (303-05 Accessory Drive, Removal and Installation).
- REFER to: Accessory Drive Belt - 2.0L Duratec-HE (MI4) (303-05 Accessory Drive, Removal and Installation).

### Chunking

Chunking describes the condition where long lengths of rubber become detached from the ribs of the belt. This is considered to be a failure of the belt.

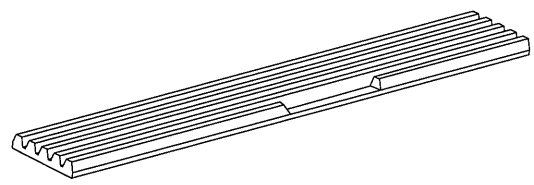

MPZ9632071

## DIAGNOSIS AND TESTING

2. Check the accessory drive belt for damage. If any chunks are found to be missing, install a new accessory drive belt.
- REFER to: Accessory Drive Belt - 1.3L Duratec-8V (Rocam) (303-05 Accessory Drive, Removal and Installation).
- REFER to: Accessory Drive Belt - 1.4L Duratec-16V (Sigma)/1.6L Duratec-16V (Sigma), Vehicles With: Air Conditioning (303-05 Accessory Drive, Removal and Installation).
- REFER to: Power Steering Pump Belt - 1.4L Duratec-16V (Sigma)/1.6L Duratec-16V (Sigma), Vehicles With: Air Conditioning (303-05 Accessory Drive, Removal and Installation).
- REFER to: Accessory Drive Belt - 1.4L Duratec-16V (Sigma)/1.6L Duratec-16V (Sigma), Vehicles Without: Air Conditioning (303-05 Accessory Drive, Removal and Installation).
- REFER to: Accessory Drive Belt - 1.4L Duratorq-TDCi (DV) Diesel (303-05 Accessory Drive, Removal and Installation).
- REFER to: Accessory Drive Belt - 1.6L Duratorq-TDCi (DV) Diesel (303-05 Accessory Drive, Removal and Installation).
- REFER to: Accessory Drive Belt - 2.0L Duratec-HE (MI4) (303-05 Accessory Drive, Removal and Installation).

### Pilling

Pilling is dust that forms in between the ribs of the belt from rubber that is worn off the belt when it is new. There may also be loose particles left on the belt during the manufacturing process. These are worn off and form into small balls of rubber that then get trapped in the grooves of the belt. This condition will usually clear itself within 4800 km - 8000 km (3000 miles - 5000 miles) of normal driving.

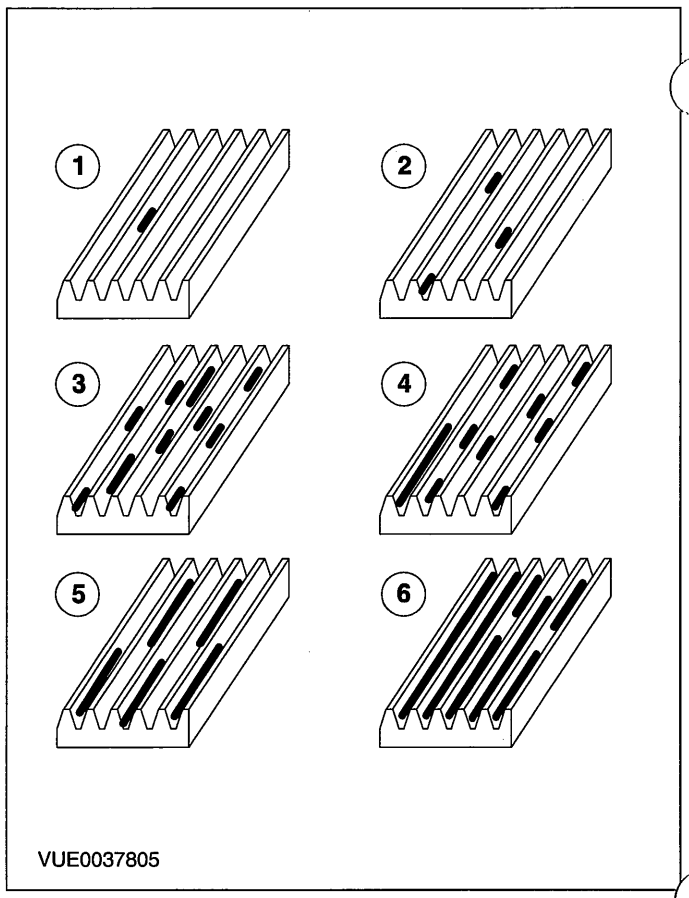


3. Check the accessory drive belt for pilling. The condition of the belt should be compared against the illustration.
   1. Small scattered pills. Not considered a concern. No action required.
   2. Small scattered pills. Not considered a concern. No action required.

## DIAGNOSIS AND TESTING

3. Longer pills up to 50% of the rib height. Possible noise concern. INSTALL a new belt if noise is apparent.

   REFER to: Accessory Drive Belt - 1.3L Duratec-8V (Rocam) (303-05 Accessory Drive, Removal and Installation)
   / Accessory Drive Belt - 1.4L Duratec-16V (Sigma)/1.6L Duratec-16V (Sigma), Vehicles With: Air Conditioning (303-05 Accessory Drive, Removal and Installation)
   / Power Steering Pump Belt - 1.4L Duratec-16V (Sigma)/1.6L Duratec-16V (Sigma), Vehicles With: Air Conditioning (303-05 Accessory Drive, Removal and Installation)
   / Accessory Drive Belt - 1.4L Duratec-16V (Sigma)/1.6L Duratec-16V (Sigma), Vehicles Without: Air Conditioning (303-05 Accessory Drive, Removal and Installation)
   / Accessory Drive Belt - 1.4L Duratorq-TDCi (DV) Diesel (303-05 Accessory Drive, Removal and Installation)
   / Accessory Drive Belt - 1.6L Duratorq-TDCi (DV) Diesel (303-05 Accessory Drive, Removal and Installation)
   / Accessory Drive Belt - 2.0L Duratec-HE (MI4) (303-05 Accessory Drive, Removal and Installation).

4. Longer pills up to 50% of the rib height. Possible noise concern. INSTALL a new belt if noise is apparent.

   REFER to: Accessory Drive Belt - 1.3L Duratec-8V (Rocam) (303-05 Accessory Drive, Removal and Installation)
   / Accessory Drive Belt - 1.4L Duratec-16V (Sigma)/1.6L Duratec-16V (Sigma), Vehicles With: Air Conditioning (303-05 Accessory Drive, Removal and Installation)
   / Power Steering Pump Belt - 1.4L Duratec-16V (Sigma)/1.6L Duratec-16V (Sigma), Vehicles With: Air Conditioning (303-05 Accessory Drive, Removal and Installation)
   / Accessory Drive Belt - 1.4L Duratec-16V (Sigma)/1.6L Duratec-16V (Sigma), Vehicles Without: Air Conditioning (303-05 Accessory Drive, Removal and Installation)
   / Accessory Drive Belt - 1.4L Duratorq-TDCi (DV) Diesel (303-05 Accessory Drive, Removal and Installation)
   / Accessory Drive Belt - 1.6L Duratorq-TDCi (DV) Diesel (303-05 Accessory Drive, Removal and Installation)
   / Accessory Drive Belt - 2.0L Duratec-HE (MI4) (303-05 Accessory Drive, Removal and Installation).

## DIAGNOSIS AND TESTING

5. Heavy deposits in the grooves. Possible noise and stability concern. INSTALL a new belt.

   REFER to: Accessory Drive Belt - 1.3L Duratec-8V (Rocam) (303-05 Accessory Drive, Removal and Installation)
   / Accessory Drive Belt - 1.4L Duratec-16V (Sigma)/1.6L Duratec-16V (Sigma), Vehicles With: Air Conditioning (303-05 Accessory Drive, Removal and Installation)
   / Power Steering Pump Belt - 1.4L Duratec-16V (Sigma)/1.6L Duratec-16V (Sigma), Vehicles With: Air Conditioning (303-05 Accessory Drive, Removal and Installation)
   / Accessory Drive Belt - 1.4L Duratec-16V (Sigma)/1.6L Duratec-16V (Sigma), Vehicles Without: Air Conditioning (303-05 Accessory Drive, Removal and Installation)
   / Accessory Drive Belt - 1.4L Duratorq-TDCi (DV) Diesel (303-05 Accessory Drive, Removal and Installation)
   / Accessory Drive Belt - 1.6L Duratorq-TDCi (DV) Diesel (303-05 Accessory Drive, Removal and Installation)
   / Accessory Drive Belt - 2.0L Duratec-HE (MI4) (303-05 Accessory Drive, Removal and Installation).

6. Heavy deposits in the grooves. Possible noise and stability concern. INSTALL a new belt.

   REFER to: Accessory Drive Belt - 1.3L Duratec-8V (Rocam) (303-05 Accessory Drive, Removal and Installation)
   / Accessory Drive Belt - 1.4L Duratec-16V (Sigma)/1.6L Duratec-16V (Sigma), Vehicles With: Air Conditioning (303-05 Accessory Drive, Removal and Installation)
   / Power Steering Pump Belt - 1.4L Duratec-16V (Sigma)/1.6L Duratec-16V (Sigma), Vehicles With: Air Conditioning (303-05 Accessory Drive, Removal and Installation)
   / Accessory Drive Belt - 1.4L Duratec-16V (Sigma)/1.6L Duratec-16V (Sigma), Vehicles Without: Air Conditioning (303-05 Accessory Drive, Removal and Installation)
   / Accessory Drive Belt - 1.4L Duratorq-TDCi (DV) Diesel (303-05 Accessory Drive, Removal and Installation)
   / Accessory Drive Belt - 1.6L Duratorq-TDCi (DV) Diesel (303-05 Accessory Drive, Removal and Installation)
   / Accessory Drive Belt - 2.0L Duratec-HE (MI4) (303-05 Accessory Drive, Removal and Installation).

**Fraying - Vehicles without accessory drive belt tensioner built up to 02/2003**

Due to the manufacturing process, the belt edge may appear frayed, but this frayed appearance does not necessarily affect the durability or performance of the belt. If a concern is raised during a service or repair over the level of fraying, the condition of the belt should be compared against the illustrations.

## DIAGNOSIS AND TESTING

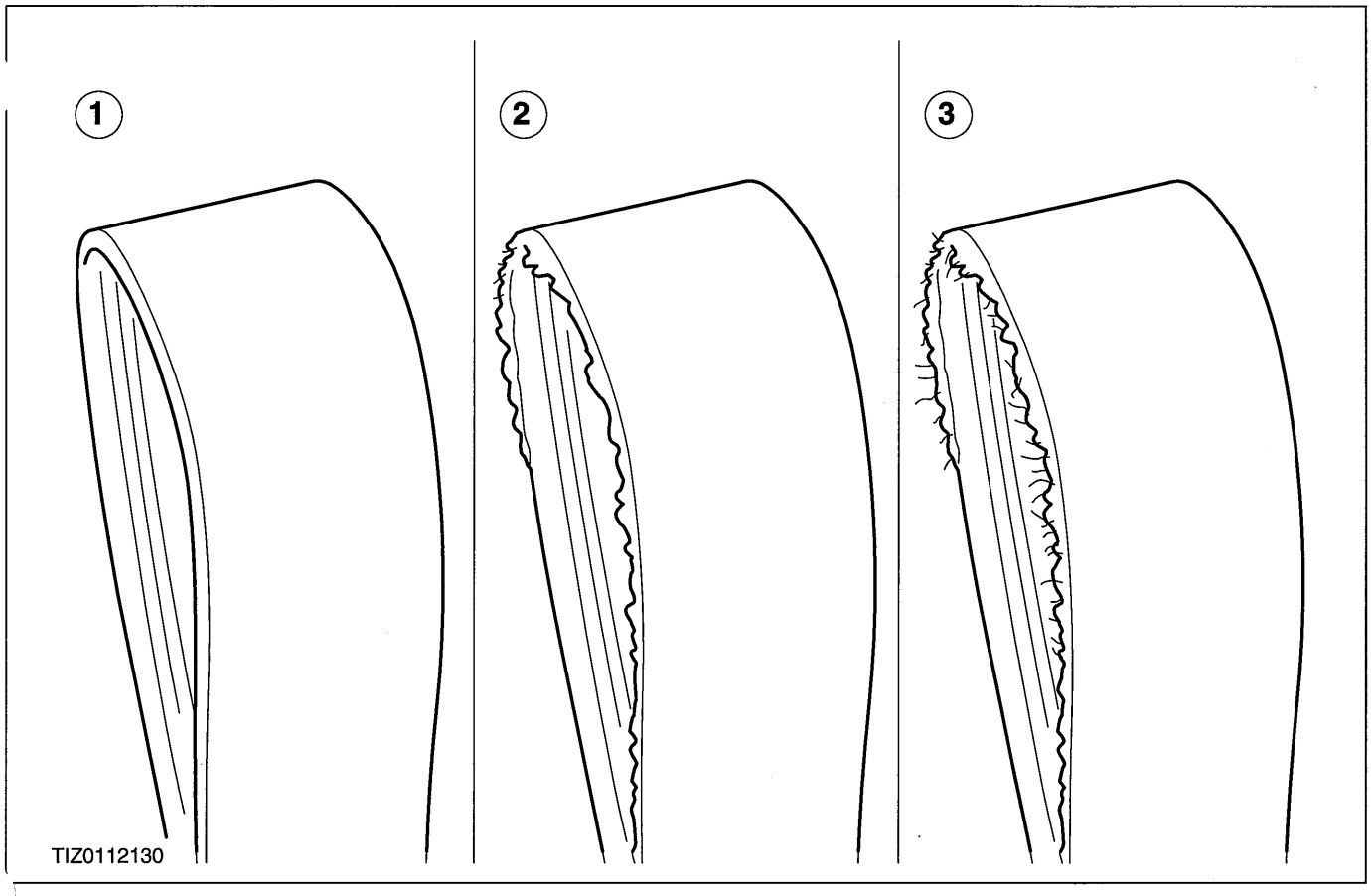


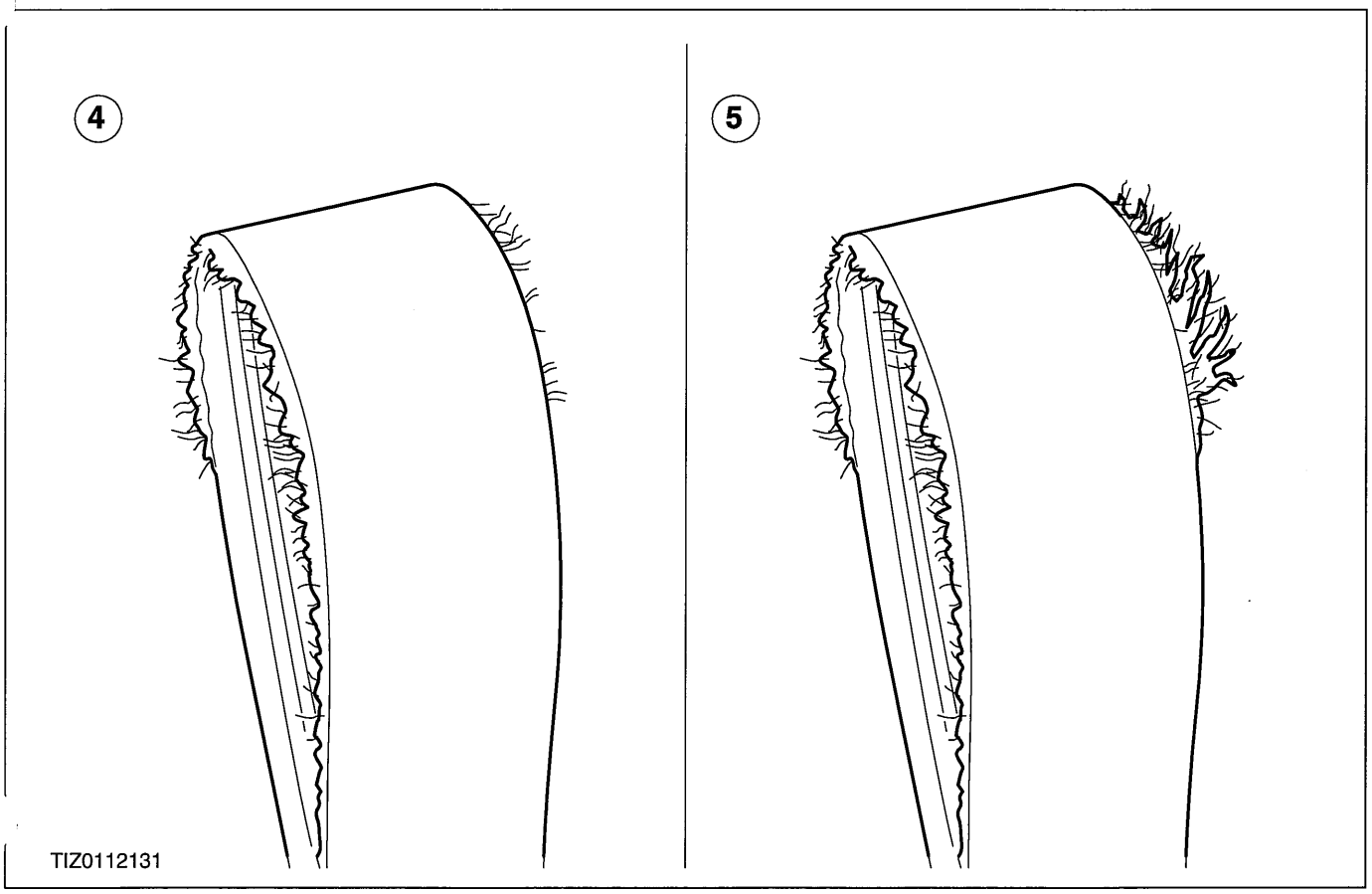


4. Check the accessory drive belt for fraying.

1. No fraying (new belt). Not considered a concern. No action required.

## DIAGNOSIS AND TESTING

2. Fraying just starting. Not considered a concern. No action required.
3. Slight fraying. Not considered a concern. No action required.
4. High amount of fraying without cord cuts. INSTALL a new accessory drive belt.

   REFER to: Accessory Drive Belt - 1.3L Duratec-8V (Rocam) (303-05 Accessory Drive, Removal and Installation)
   / Accessory Drive Belt - 1.4L Duratec-16V (Sigma)/1.6L Duratec-16V (Sigma), Vehicles With: Air Conditioning (303-05 Accessory Drive, Removal and Installation)
   / Power Steering Pump Belt - 1.4L Duratec-16V (Sigma)/1.6L Duratec-16V (Sigma), Vehicles With: Air Conditioning (303-05 Accessory Drive, Removal and Installation)
   / Accessory Drive Belt - 1.4L Duratec-16V (Sigma)/1.6L Duratec-16V (Sigma), Vehicles Without: Air Conditioning (303-05 Accessory Drive, Removal and Installation)
   / Accessory Drive Belt - 1.4L Duratorq-TDCi (DV) Diesel (303-05 Accessory Drive, Removal and Installation)
   / Accessory Drive Belt - 1.6L Duratorq-TDCi (DV) Diesel (303-05 Accessory Drive, Removal and Installation)
   / Accessory Drive Belt - 2.0L Duratec-HE (MI4) (303-05 Accessory Drive, Removal and Installation).
5. High amount of fraying with cord cuts. INSTALL a new accessory drive belt.

   REFER to: Accessory Drive Belt - 1.3L Duratec-8V (Rocam) (303-05 Accessory Drive, Removal and Installation)
   / Accessory Drive Belt - 1.4L Duratec-16V (Sigma)/1.6L Duratec-16V (Sigma), Vehicles With: Air Conditioning (303-05 Accessory Drive, Removal and Installation)
   / Power Steering Pump Belt - 1.4L Duratec-16V (Sigma)/1.6L Duratec-16V (Sigma), Vehicles With: Air Conditioning (303-05 Accessory Drive, Removal and Installation)
   / Accessory Drive Belt - 1.4L Duratec-16V (Sigma)/1.6L Duratec-16V (Sigma), Vehicles Without: Air Conditioning (303-05 Accessory Drive, Removal and Installation)
   / Accessory Drive Belt - 1.4L Duratorq-TDCi (DV) Diesel (303-05 Accessory Drive, Removal and Installation)
   / Accessory Drive Belt - 1.6L Duratorq-TDCi (DV) Diesel (303-05 Accessory Drive, Removal and Installation)
   / Accessory Drive Belt - 2.0L Duratec-HE (MI4) (303-05 Accessory Drive, Removal and Installation).

**Incorrect fitment**

Belt noise can be generated by the belt being incorrectly fitted on the pulley as shown in the following illustration. Make sure that all the V grooves on the belt contact correctly with the pulley.

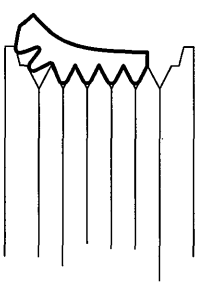

VUE0037806

5. If the cause is not visually evident, verify the symptom and refer to the Symptom Chart.

## Symptom Chart

### Symptom Chart

## DIAGNOSIS AND TESTING

| Symptom | Possible Sources | Action |
|---|---|---|
| • Accessory drive belt noise | • Accessory drive system - Vehicles with accessory drive belt tensioner | • CHECK the system with the engine running and the accessory drive belt removed (only run the engine for a very short period). If a noise is apparent, the cause is not the accessory drive system. If a noise is not apparent, the cause is the accessory drive system. CHECK where the noise is coming from. Use a stethoscope or other listening device to determine the source of the noise. INSTALL new components as necessary. TEST the system for normal operation. |
| | • Accessory drive system - Vehicles without accessory drive belt tensioner | • Use a stethoscope or other listening device to determine the source of the noise. INSTALL new components as necessary. TEST the system for normal operation. |

## DIAGNOSIS AND TESTING

| Symptom | Possible Sources | Action |
|---|---|---|
| | • Accessory drive belt incorrectly installed. | • CHECK the accessory drive belt is correctly installed in the pulley grooves. INSTALL a new accessory drive belt as necessary.<br>REFER to: Accessory Drive Belt - 1.3L Duratec-8V (Rocam) (303-05 Accessory Drive, Removal and Installation)<br>/ Accessory Drive Belt - 1.4L Duratec-16V (Sigma)/1.6L Duratec-16V (Sigma), Vehicles With: Air Conditioning (303-05 Accessory Drive, Removal and Installation)<br>/ Power Steering Pump Belt - 1.4L Duratec-16V (Sigma)/1.6L Duratec-16V (Sigma), Vehicles With: Air Conditioning (303-05 Accessory Drive, Removal and Installation)<br>/ Accessory Drive Belt - 1.4L Duratec-16V (Sigma)/1.6L Duratec-16V (Sigma), Vehicles Without: Air Conditioning (303-05 Accessory Drive, Removal and Installation)<br>/ Accessory Drive Belt - 1.4L Duratorq-TDCi (DV) Diesel (303-05 Accessory Drive, Removal and Installation)<br>/ Accessory Drive Belt - 1.6L Duratorq-TDCi (DV) Diesel (303-05 Accessory Drive, Removal and Installation)<br>/ Accessory Drive Belt - 2.0L Duratec-HE (MI4) (303-05 Accessory Drive, Removal and Installation).<br>TEST the system for normal operation. |
| | • Pulley(s). | • CHECK the pulley(s) for damage, freedom of rotation, stone entrapment and alignment. INSTALL new components as necessary. TEST the system for normal operation. |

## DIAGNOSIS AND TESTING

| Symptom | Possible Sources | Action |
|---|---|---|
| | • Lubricant or other contamination. | • CHECK the accessory drive belt for contamination or damage. RECTIFY the source of the leak and INSTALL a new accessory drive belt.<br>REFER to: Accessory Drive Belt - 1.3L Duratec-8V (Rocam) (303-05 Accessory Drive, Removal and Installation)<br>/ Accessory Drive Belt - 1.4L Duratec-16V (Sigma)/1.6L Duratec-16V (Sigma), Vehicles With: Air Conditioning (303-05 Accessory Drive, Removal and Installation)<br>/ Power Steering Pump Belt - 1.4L Duratec-16V (Sigma)/1.6L Duratec-16V (Sigma), Vehicles With: Air Conditioning (303-05 Accessory Drive, Removal and Installation)<br>/ Accessory Drive Belt - 1.4L Duratec-16V (Sigma)/1.6L Duratec-16V (Sigma), Vehicles Without: Air Conditioning (303-05 Accessory Drive, Removal and Installation)<br>/ Accessory Drive Belt - 1.4L Duratorq-TDCi (DV) Diesel (303-05 Accessory Drive, Removal and Installation)<br>/ Accessory Drive Belt - 1.6L Duratorq-TDCi (DV) Diesel (303-05 Accessory Drive, Removal and Installation)<br>/ Accessory Drive Belt - 2.0L Duratec-HE (MI4) (303-05 Accessory Drive, Removal and Installation).<br>TEST the system for normal operation. |

## DIAGNOSIS AND TESTING

| Symptom | Possible Sources | Action |
|---|---|---|
| **NOTE:**Squeal is defined as a continuous shriek, most noticeable when the engine is being accelerated or with electrical load.<br>• Accessory drive belt squeal | • Accessory drive belt tensioner worn, damaged or contaminated with oil. | • CHECK the accessory drive belt tensioner for correct operation, damage or contamination. REFER to the Accessory Drive Belt Tensioner Component Test in this procedure. INSTALL a new accessory drive belt tensioner as necessary.<br>REFER to: Accessory Drive Belt Tensioner - 1.6L Duratorq-TDCi (DV) Diesel, Vehicles With: Air Conditioning (303-05, Removal and Installation)<br>/ Accessory Drive Belt Tensioner - 1.6L Duratorq-TDCi (DV) Diesel (303-05 Accessory Drive, Removal and Installation).<br>TEST the system for normal operation. |
| **NOTE:**Whine is defined as a continuous noise at the same frequency, generally associated with plastic pulleys.<br>• Accessory drive belt whine | • Poor surface finish on accessory drive belt idler pulley flat surface(s). | • REMOVE the accessory drive belt.<br>REFER to: Accessory Drive Belt - 1.3L Duratec-8V (Rocam) (303-05 Accessory Drive, Removal and Installation)<br>/ Accessory Drive Belt - 1.4L Duratorq-TDCi (DV) Diesel (303-05 Accessory Drive, Removal and Installation)<br>/ Accessory Drive Belt Tensioner - 1.6L Duratorq-TDCi (DV) Diesel (303-05 Accessory Drive, Removal and Installation)<br>/ Accessory Drive Belt - 2.0L Duratec-HE (MI4) (303-05 Accessory Drive, Removal and Installation).<br>INSPECT the idler pulley(s) for surface finish. INSTALL a new idler pulley(s) as necessary. TEST the system for normal operation. |

## DIAGNOSIS AND TESTING

| Symptom | Possible Sources | Action |
|---|---|---|
| | • Accessory drive belt idler pulley bearing failure. | • REMOVE the accessory drive belt.<br>REFER to: Accessory Drive Belt - 1.3L Duratec-8V (Rocam) (303-05 Accessory Drive, Removal and Installation)<br>/ Accessory Drive Belt - 1.4L Duratorq-TDCi (DV) Diesel (303-05 Accessory Drive, Removal and Installation)<br>/ Accessory Drive Belt - 1.6L Duratorq-TDCi (DV) Diesel (303-05 Accessory Drive, Removal and Installation)<br>/ Accessory Drive Belt - 2.0L Duratec-HE (MI4) (303-05 Accessory Drive, Removal and Installation).<br>INSPECT the idler pulley(s) for smooth rotation. INSTALL a new idler pulley(s) as necessary. TEST the system for normal operation. |
| **NOTE:**Chirp is defined as a twittering noise, often intermittent<br>• Accessory drive belt chirp | • Pulley misalignment (usually evident at idle). | • CHECK that the accessory drive belt is running centrally on the flat pulleys. TEST the system for normal operation.<br>• CHECK the pulleys for excessive end float and bent flanges.<br>• With the engine running at idle, use a stethoscope to identify the source of the noise. INSTALL new components as necessary. TEST the system for normal operation. |

## DIAGNOSIS AND TESTING

| Symptom | Possible Sources | Action |
|---|---|---|
| **NOTE:**Rattle is defined as a metallic knocking noise<br>• Accessory drive belt rattle | • Accessory drive belt tensioner hitting the end stops. | • CHECK the accessory drive belt tensioner for correct operation or damage. REFER to the Accessory Drive Belt Tensioner Component Test in this procedure. INSTALL a new accessory drive belt tensioner as necessary.<br>REFER to: Accessory Drive Belt Tensioner - 1.6L Duratorq-TDCi (DV) Diesel, Vehicles With: Air Conditioning (303-05, Removal and Installation)<br>/ Accessory Drive Belt Tensioner - 1.6L Duratorq-TDCi (DV) Diesel (303-05 Accessory Drive, Removal and Installation).<br>TEST the system for normal operation. |
| | • Loose components or hardware. | • CHECK the components or hardware for correct installation and tighten as necessary. TEST the system for normal operation. |
| • Accessory drive belt fraying | • Accessory drive belt. | • CHECK the extent of the fraying by referring to the illustrations shown in the Visual Inspection section. Only INSTALL a new accessory drive belt if the fraying is within the criteria quoted in the Visual Inspection section. TEST the system for normal operation. |
| | • Pulley(s). | • CHECK the pulley(s) for damage, freedom of rotation and alignment. INSTALL new components as necessary. TEST the system for normal operation. |

## Component Tests

### Accessory Drive Belt Tensioner - Static Check

The accessory drive belt tensioner may be checked statically as follows:

1. Inspect the area surrounding the accessory drive belt tensioner for lubricant or other contamination. Rectify any leaks before installing a new accessory drive belt tensioner. If the accessory drive belt tensioner is contaminated, do not attempt to clean it as the damping mechanism inside may be damaged. INSTALL a new accessory drive belt tensioner as necessary.

## DIAGNOSIS AND TESTING

- REFER to: Accessory Drive Belt Tensioner - 1.6L Duratorq-TDCi (DV) Diesel, Vehicles With: Air Conditioning (303-05, Removal and Installation).
- REFER to: Accessory Drive Belt Tensioner - 1.6L Duratorq-TDCi (DV) Diesel (303-05 Accessory Drive, Removal and Installation).

TEST the system for normal operation.

2. Detach the accessory drive belt in the area of the accessory drive belt tensioner.
3. **NOTE:The accessory drive belt tensioner has a damping feature, which is usually a friction device, therefore some friction within the system is normal.**

   Using the correct tool, move the accessory drive belt tensioner from its relaxed position through its full stroke and back to the relaxed position to make sure there is no excessive stick, grab or bind, and to make sure there is tension on the accessory drive belt tensioner spring.
4. Rotate the accessory drive belt tensioner pulley and check for damage, freedom of rotation and alignment. INSTALL a new accessory drive belt tensioner as necessary.
   - REFER to: Accessory Drive Belt Tensioner - 1.6L Duratorq-TDCi (DV) Diesel, Vehicles With: Air Conditioning (303-05, Removal and Installation).
   - REFER to: Accessory Drive Belt Tensioner - 1.6L Duratorq-TDCi (DV) Diesel (303-05 Accessory Drive, Removal and Installation).

TEST the system for normal operation.

5. If the accessory drive belt tensioner meets the above criteria, proceed to test the accessory drive belt tensioner dynamically. If the accessory drive belt tensioner does not meet the above criteria, INSTALL a new accessory drive belt tensioner.
   - REFER to: Accessory Drive Belt Tensioner - 1.6L Duratorq-TDCi (DV) Diesel, Vehicles With: Air Conditioning (303-05, Removal and Installation).
   - REFER to: Accessory Drive Belt Tensioner - 1.6L Duratorq-TDCi (DV) Diesel (303-05 Accessory Drive, Removal and Installation).

TEST the system for normal operation.

### Accessory Drive Belt Tensioner - Dynamic Check

The accessory drive belt tensioner may be checked dynamically as follows:

1. With the engine running, observe the accessory drive belt tensioner movement. The accessory drive belt tensioner should move (respond) when the engine is accelerated rapidly or when the A/C clutch cycles ON and OFF (the degree of movement can be up to 4 mm). If the accessory drive belt tensioner movement is not constant without engine acceleration or A/C clutch cycling, a pulley or shaft is possibly bent, out of round, or the damping mechanism inside the accessory drive belt tensioner may be damaged. INSTALL a new accessory drive belt tensioner as necessary.
   - REFER to: Accessory Drive Belt Tensioner - 1.6L Duratorq-TDCi (DV) Diesel, Vehicles With: Air Conditioning (303-05, Removal and Installation).
   - REFER to: Accessory Drive Belt Tensioner - 1.6L Duratorq-TDCi (DV) Diesel (303-05 Accessory Drive, Removal and Installation).

TEST the system for normal operation.

2. Excessive accessory drive belt rideout (uneven depth of grooves in the accessory drive belt) may cause excessive accessory drive belt tensioner movement. Check the condition by installing a new accessory drive belt.
   - REFER to: Accessory Drive Belt - 1.3L Duratec-8V (Rocam) (303-05 Accessory Drive, Removal and Installation).
   - REFER to: Accessory Drive Belt - 1.4L Duratorq-TDCi (DV) Diesel (303-05 Accessory Drive, Removal and Installation).
   - REFER to: Accessory Drive Belt - 1.6L Duratorq-TDCi (DV) Diesel (303-05 Accessory Drive, Removal and Installation).
   - REFER to: Accessory Drive Belt - 2.0L Duratec-HE (MI4) (303-05 Accessory Drive, Removal and Installation).

TEST the system for normal operation.

## REMOVAL AND INSTALLATION

# Accessory Drive Belt — 1.4L Duratec-16V (Sigma)/1.6L Duratec-16V (Sigma), Vehicles With: Air Conditioning(21 567 0)

**General Equipment**

| |
|---|
| Knife |

## Removal

⚠ **CAUTION:The accessory drive belt must not be reused as it is designed to be stretched onto the pulleys only once. Failure to follow this instruction may lead to premature failure of the belt.**

1. **Raise and support the vehicle. For additional information, refer to Section 100-02 [Jacking and Lifting].**
2. **Detach the power steering line and remove the crankshaft pulley splash shield.**

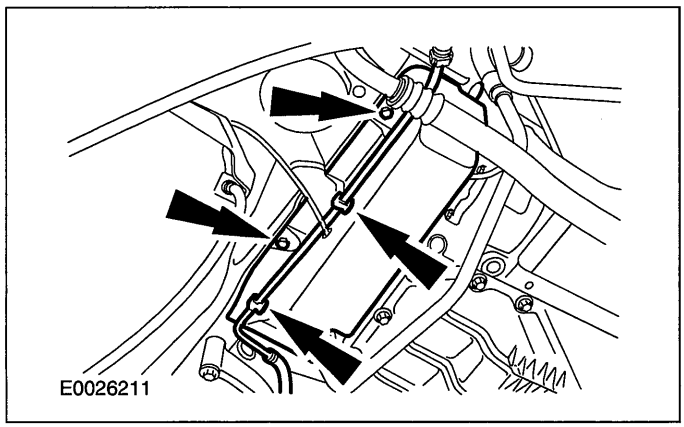


3. **Using a suitable knife, cut both accessory drive belts and remove.**

## Installation

**NOTE:**Install a new accessory drive belt and power steering pump belt.

1. **Wipe clean all of the pulleys to make sure that the accessory drive belt does not slip during installation.**
2. **Using paint or typing correction fluid, mark the crankshaft pulley at the 6 o'clock position.**

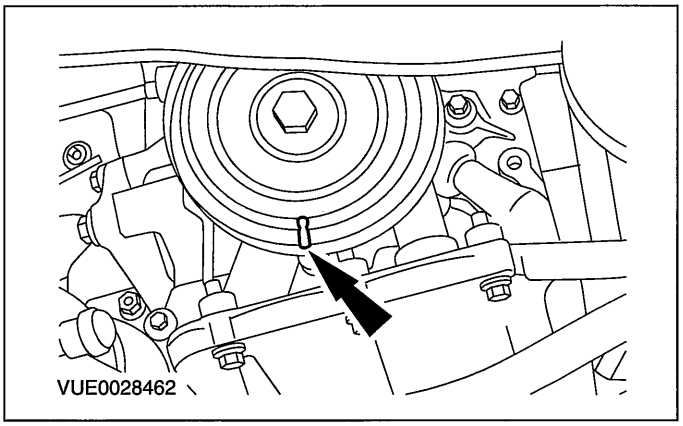


3. **Install the installation tool (supplied in the parts kit) to the crankshaft pulley at the 6 o'clock position.**

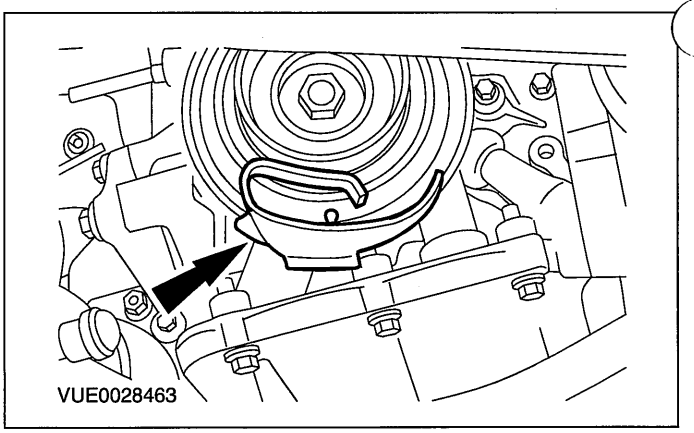


4. **Install the accessory drive belt.**
   1. Install the belt around the generator pulley.
   2. Install the belt around the air conditioning compressor pulley.
   3. Install the belt around the water pump pulley.

## REMOVAL AND INSTALLATION

4. Install the belt around the installation tool.

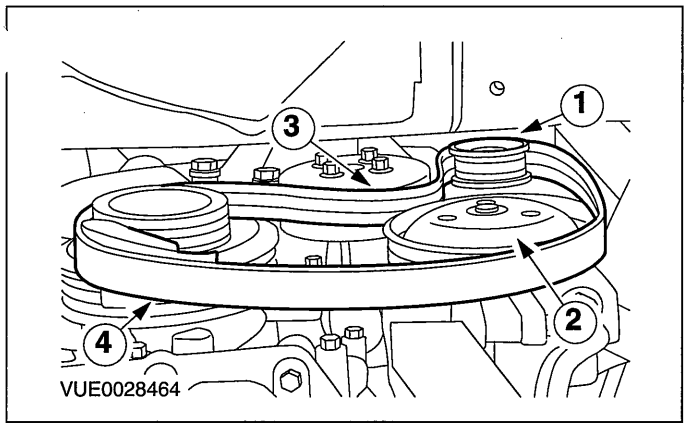


5. **Make sure that the accessory drive belt is correctly positioned in the grooves of the pulleys.**
6. **NOTE:Only turn the engine in the normal direction of rotation.**

**NOTE:**Guide the accessory drive belt onto the pulleys as the engine is rotated.

**Turn the engine until the paint mark is at the 8 o'clock position.**

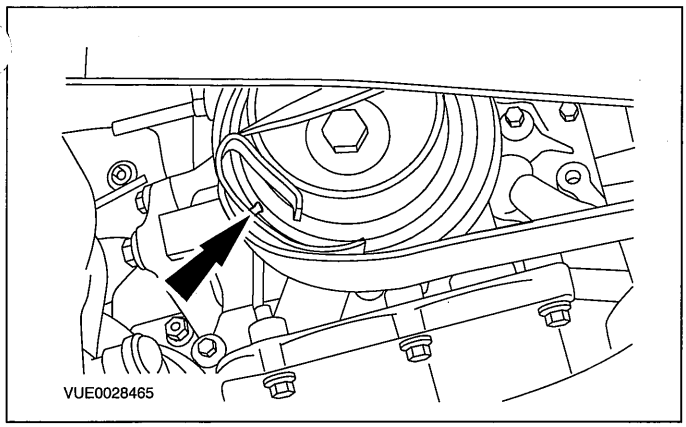


7. **NOTE:The curved end of the tool fits around the belt and the cranked end of the tool fits around the generator mounting bracket.**

**Install the belt guide tool (supplied in the parts kit) to the accessory drive belt (shown from above for clarity).**

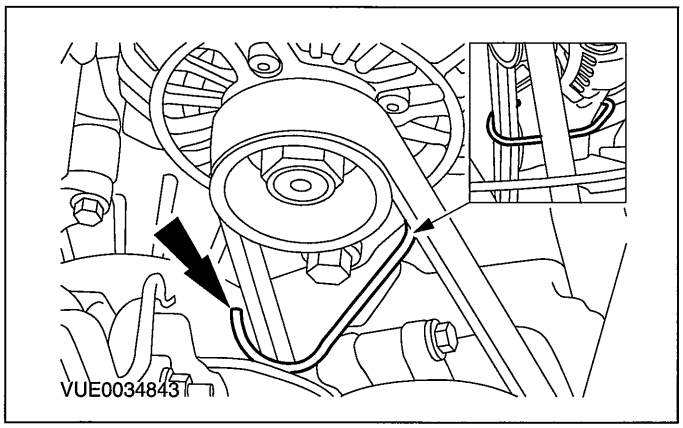


8. **Install the belt guide tool to the generator mounting bracket.**

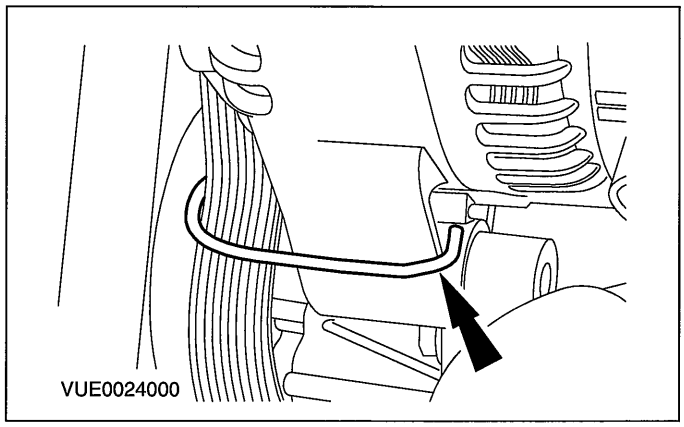


9. **NOTE:Only turn the engine in the normal direction of rotation.**

**NOTE:**Guide the accessory drive belt onto the pulleys as the engine is rotated.

**Turn the engine until the paint mark is at the 3 o'clock position**

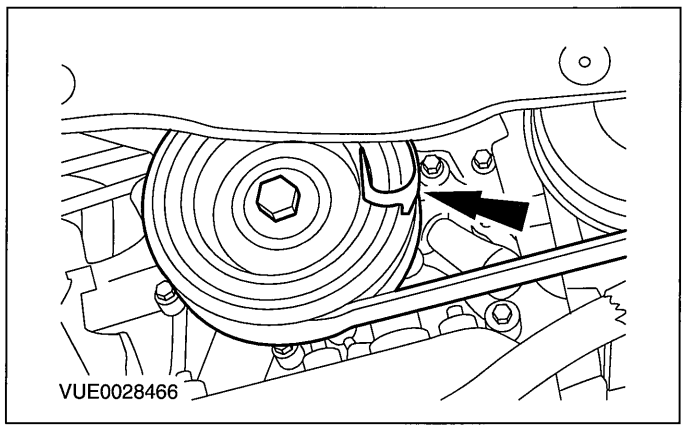


10. **Remove the installation tool from the crankshaft pulley.**

## REMOVAL AND INSTALLATION

11. **NOTE:Only turn the engine in the normal direction of rotation.**

    **Turn the engine through 360 degrees.**

12. **Check that the accessory drive belt is correctly positioned in the grooves of the pulleys.**
    - Repeat the installation procedure if the accessory drive belt is misaligned.

13. **Remove the belt guide tool from the accessory drive belt.**
    - Discard the belt guide tool.

14. **Install the installation tool to the crankshaft pulley at the 12 o'clock position.**

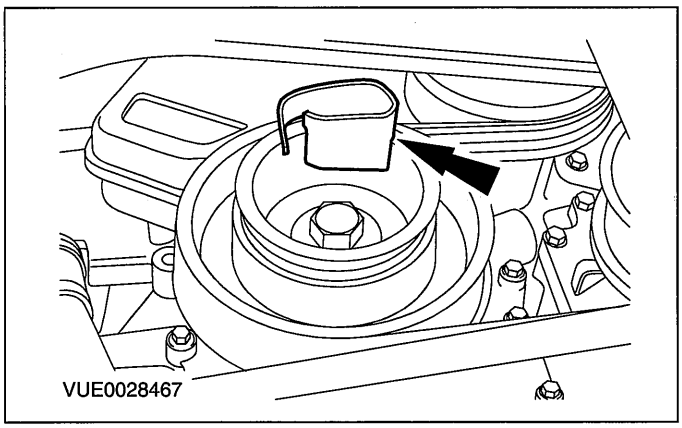


15. **Install the power steering pump belt.**
    1. Install the power steering pump belt around the power steering pump pulley.
    2. Install the power steering pump belt around the installation tool.

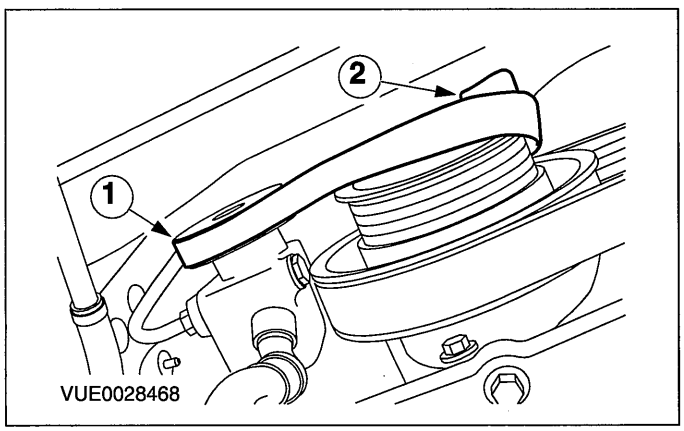


16. **Make sure that the power steering pump belt is correctly positioned in the grooves of the pulleys.**

17. **NOTE:Only turn the engine in the normal direction of rotation.**

    **NOTE:**Guide the power steering pump belt onto the pulleys as the engine is rotated.

    **Turn the engine until the tool is at the 9 o'clock position.**

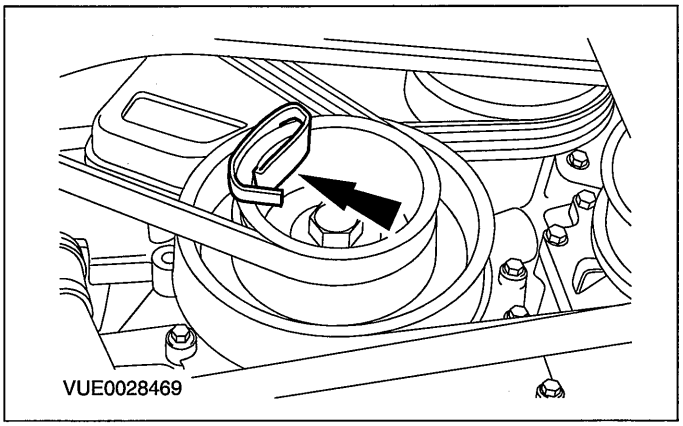


18. **Remove the installation tool from the crankshaft pulley.**

19. **NOTE:Only turn the engine in the normal direction of rotation.**

    **Turn the engine through 360 degrees.**

20. **Check that the power steering pump belt is correctly positioned in the grooves of the pulleys.**
    - Repeat the installation procedure if the power steering pump belt is misaligned.
    - Discard the installation tool.

21. **Install the crankshaft pulley splash shield.**

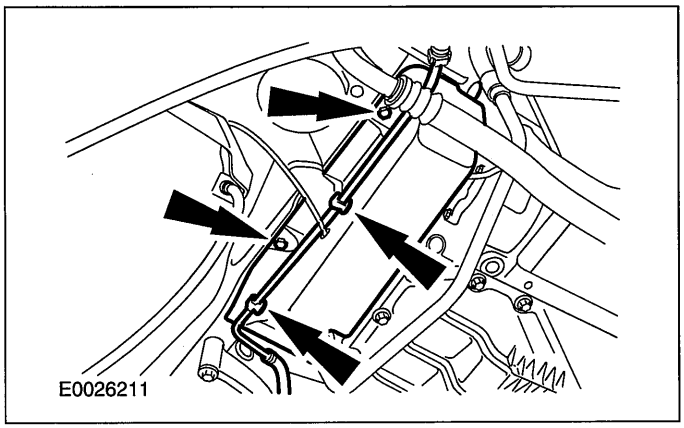


22. **Lower the vehicle.**

## REMOVAL AND INSTALLATION

# Accessory Drive Belt — 1.4L Duratec-16V (Sigma)/1.6L Duratec-16V (Sigma), Vehicles Without: Air Conditioning(21 567 0)

**General Equipment**

| |
|---|
| Knife |

## Removal

⚠ **CAUTION:The accessory drive belt must not be reused as it is designed to be stretched onto the pulleys only once. Failure to follow this instruction may lead to premature failure of the belt.**

1. **Raise and support the vehicle. For additional information, refer to Section 100-02 [Jacking and Lifting].**
2. **Detach the power steering line and remove the crankshaft pulley splash shield.**

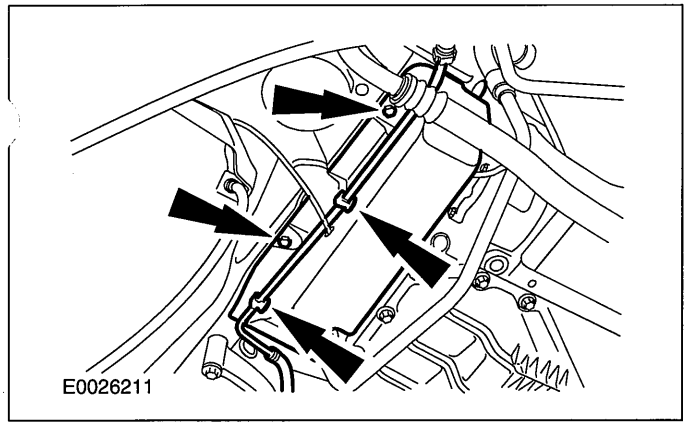


3. **Using a suitable knife, cut the accessory drive belt and remove.**

## Installation

**NOTE:**Install a new accessory drive belt.

1. **Wipe clean all of the pulleys to make sure that the accessory drive belt does not slip during installation.**
2. **Using paint or typing correction fluid, mark the crankshaft pulley at the 6 o'clock position.**

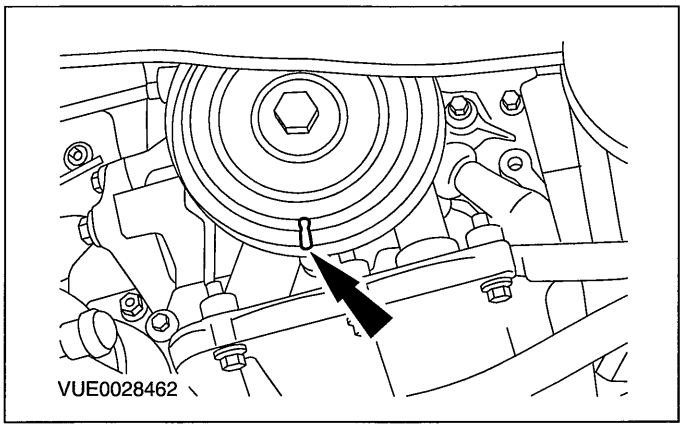


3. **Install the installation tool (supplied in the parts kit) to the crankshaft pulley at the 6 o'clock position.**

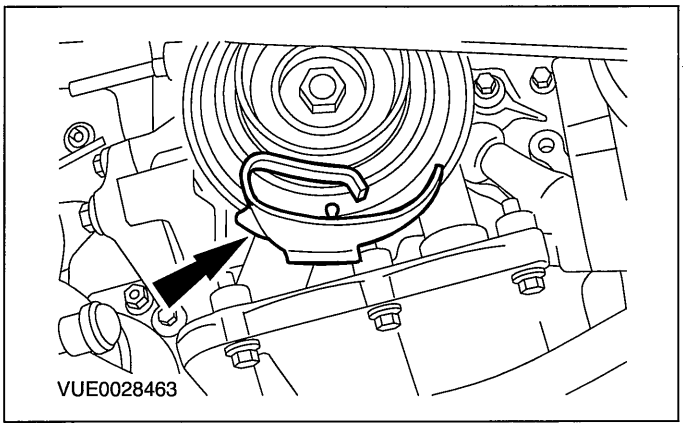


4. **Install the accessory drive belt.**
   1. Install the belt around the generator pulley.
   2. Install the belt around the power steering pump pulley.
   3. Install the belt around the water pump pulley.

## REMOVAL AND INSTALLATION

4. Install the belt around the installation tool.

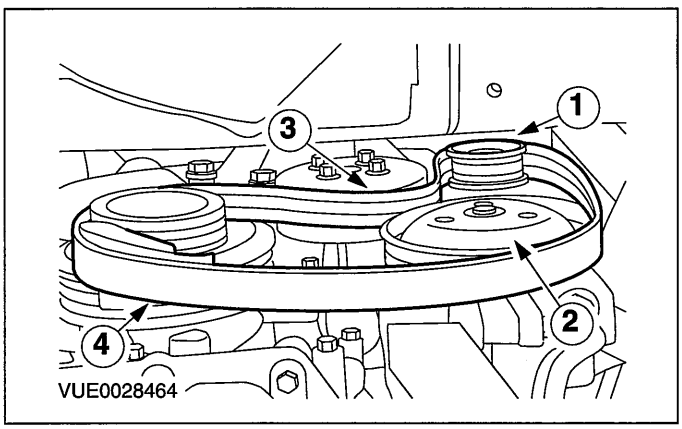


5. **Make sure that the accessory drive belt is correctly positioned in the grooves of the pulleys.**
6. **NOTE:Only turn the engine in the normal direction of rotation.**

**NOTE:**Guide the accessory drive belt onto the pulleys as the engine is rotated.

**Turn the engine until the paint mark is at the 8 o'clock position.**

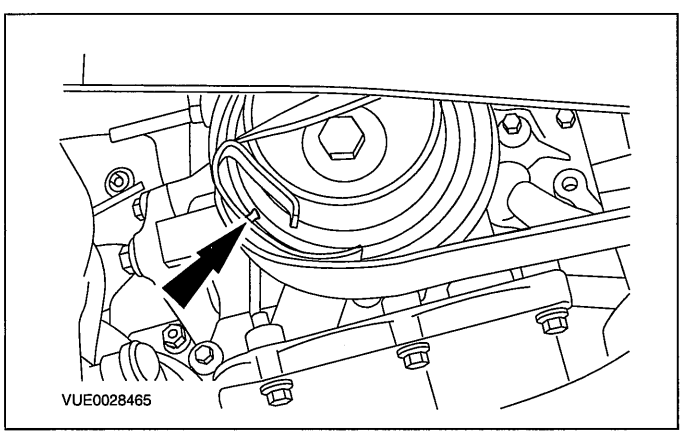


7. **NOTE:The curved end of the tool fits around the belt and the cranked end of the tool fits around the generator mounting bracket.**

**Install the belt guide tool (supplied in the parts kit) to the accessory drive belt (shown from above for clarity).**

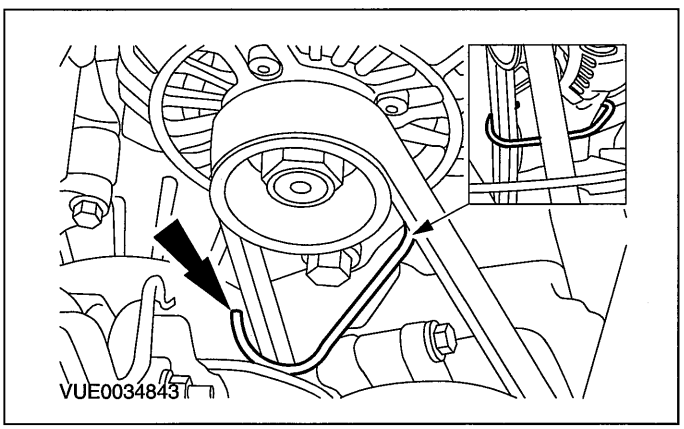


8. **Install the belt guide tool to the generator mounting bracket.**

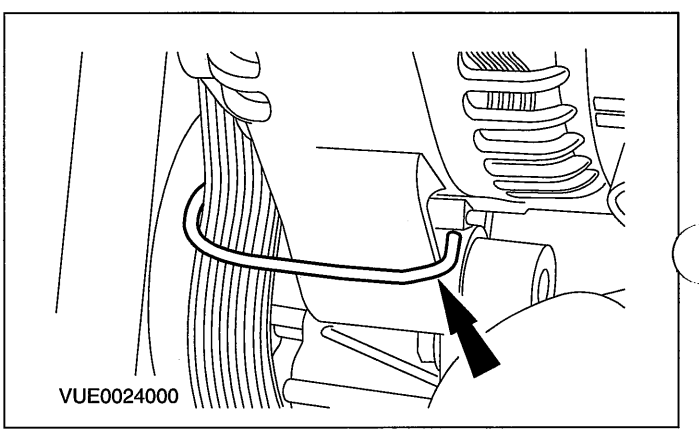


9. **NOTE:Only turn the engine in the normal direction of rotation.**

**NOTE:**Guide the accessory drive belt onto the pulleys as the engine is rotated.

**Turn the engine until the paint mark is at the 3 o'clock position**

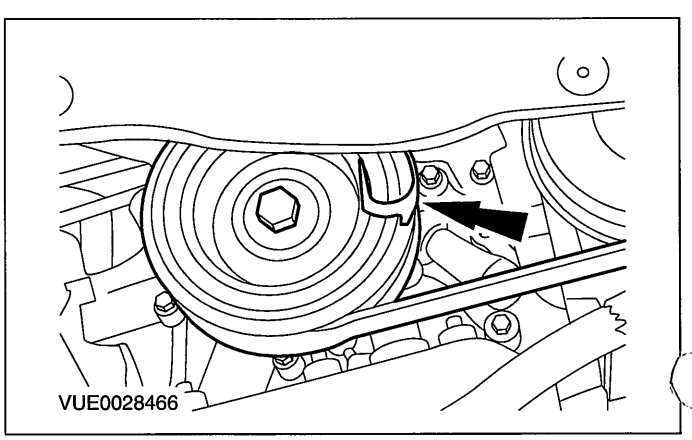


10. **Remove the installation tool from the crankshaft pulley.**

## REMOVAL AND INSTALLATION

11. **NOTE:Only turn the engine in the normal direction of rotation.**

    **Turn the engine through 360 degrees.**

12. **Check that the accessory drive belt is correctly positioned in the grooves of the pulleys.**
    - Repeat the installation procedure if the accessory drive belt is misaligned.
    - Discard the installation tool.

13. **Remove the belt guide tool from the accessory drive belt.**
    - Discard the belt guide tool.

14. **Install the crankshaft pulley splash shield and attach the power steering line.**

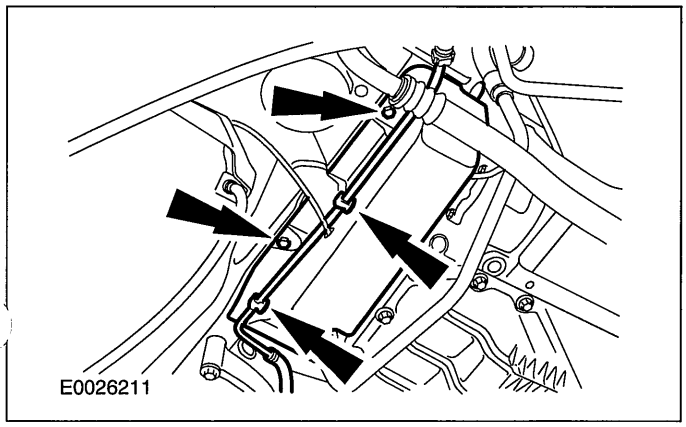


15. **Lower the vehicle.**

## REMOVAL AND INSTALLATION

# Power Steering Pump Belt — 1.4L Duratec-16V (Sigma)/1.6L Duratec-16V (Sigma), Vehicles With: Air Conditioning(21 567 0)

**General Equipment**

| |
|---|
| Knife |

## Removal

⚠ **CAUTION:The power steering pump belt must not be reused as it is designed to be stretched onto the pulleys only once. Failure to follow this instruction may lead to premature failure of the belt.**

1. **Raise and support the vehicle. For additional information, refer to Section 100-02 [Jacking and Lifting].**
2. **Detach the power steering line and remove the crankshaft pulley splash shield.**

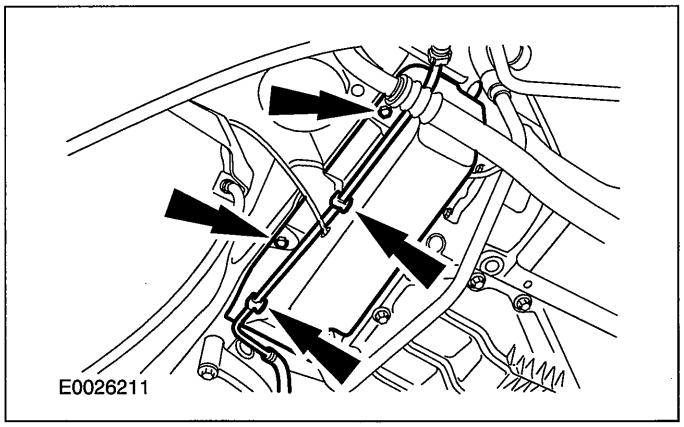


3. **Using a suitable knife, cut the power steering pump belt and remove.**

## Installation

**NOTE:**Install a new power steering pump belt.

1. **Wipe clean both of the pulleys to make sure that the power steering pump belt does not slip during installation.**
2. **Install the installation tool (supplied in the parts kit) to the crankshaft pulley at the 12 o'clock position.**

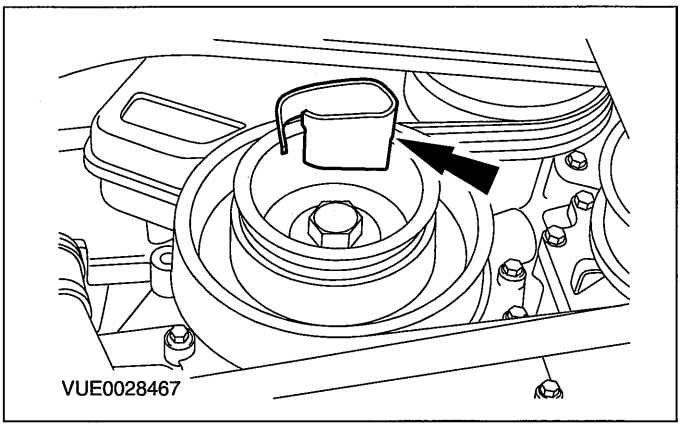


3. **Install the power steering pump belt.**
   1. Install the belt around the power steering pump pulley.
   2. Install the belt around the installation tool.

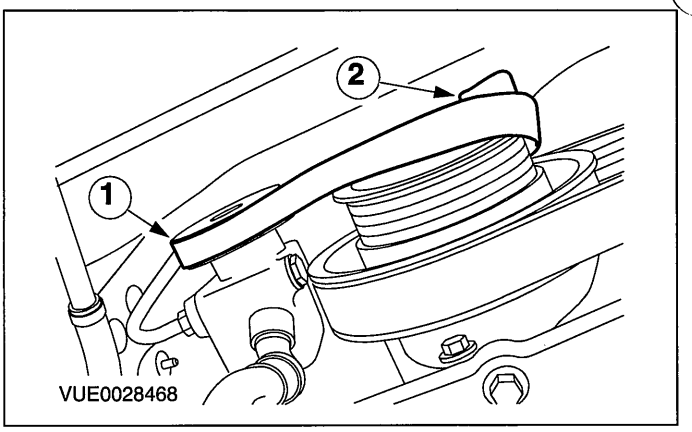


4. **Make sure that the power steering pump belt is correctly positioned in the grooves of the pulleys.**
5. **NOTE:Only turn the engine in the normal direction of rotation.**

**NOTE:**Guide the power steering pump belt onto the pulleys as the engine is rotated.

## REMOVAL AND INSTALLATION

**Turn the engine until the installation tool is at the 9 o'clock position.**

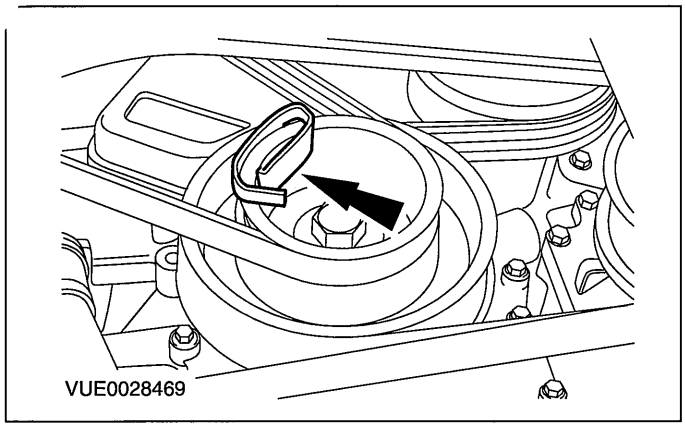


6. **Remove the installation tool from the crankshaft pulley.**
7. **NOTE:Only turn the engine in the normal direction of rotation.**

   **Turn the engine through 360 degrees.**
8. **Check that the power steering pump belt is correctly positioned in the grooves of the pulleys.**
   - Repeat the installation procedure if the power steering pump belt is misaligned.
   - Discard the installation tool.
9. **Install the crankshaft pulley splash shield.**

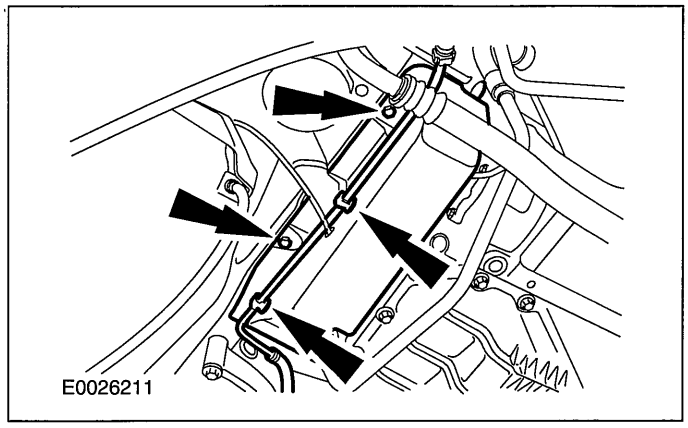


10. **Lower the vehicle.**

## REMOVAL AND INSTALLATION

# Accessory Drive Belt — 2.0L Duratec-HE (MI4)(21 567 0)

### Removal

1. **Disconnect the battery ground cable.**

   **For additional information, refer to: Battery Disconnect (414-01 Battery, Mounting and Cables, General Procedures).**

2. **Raise and support the vehicle.**

   **For additional information, refer to: Lifting (100-02 Jacking and Lifting, Description and Operation).**

3. **Remove the crankshaft pulley splash shield.**

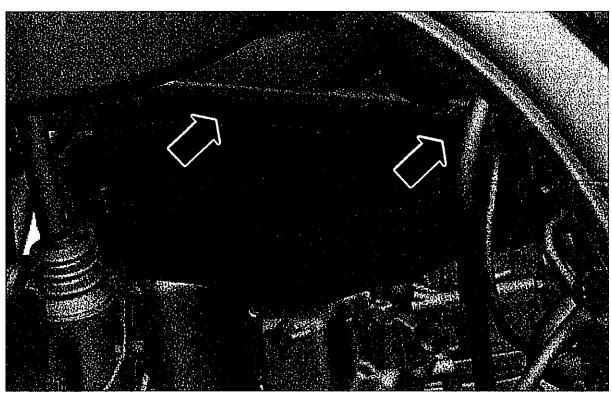

4. **Remove the accessory drive belt.**
   1. Rotate the accessory drive belt tensioner counterclockwise.
   2. Remove the accessory drive belt.

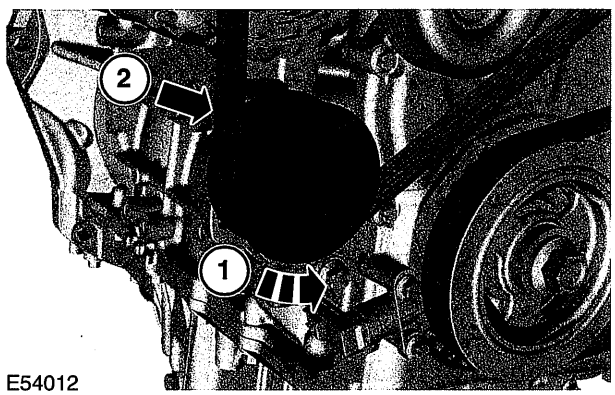

E54012

### Installation

1. **To install, reverse the removal procedure.**

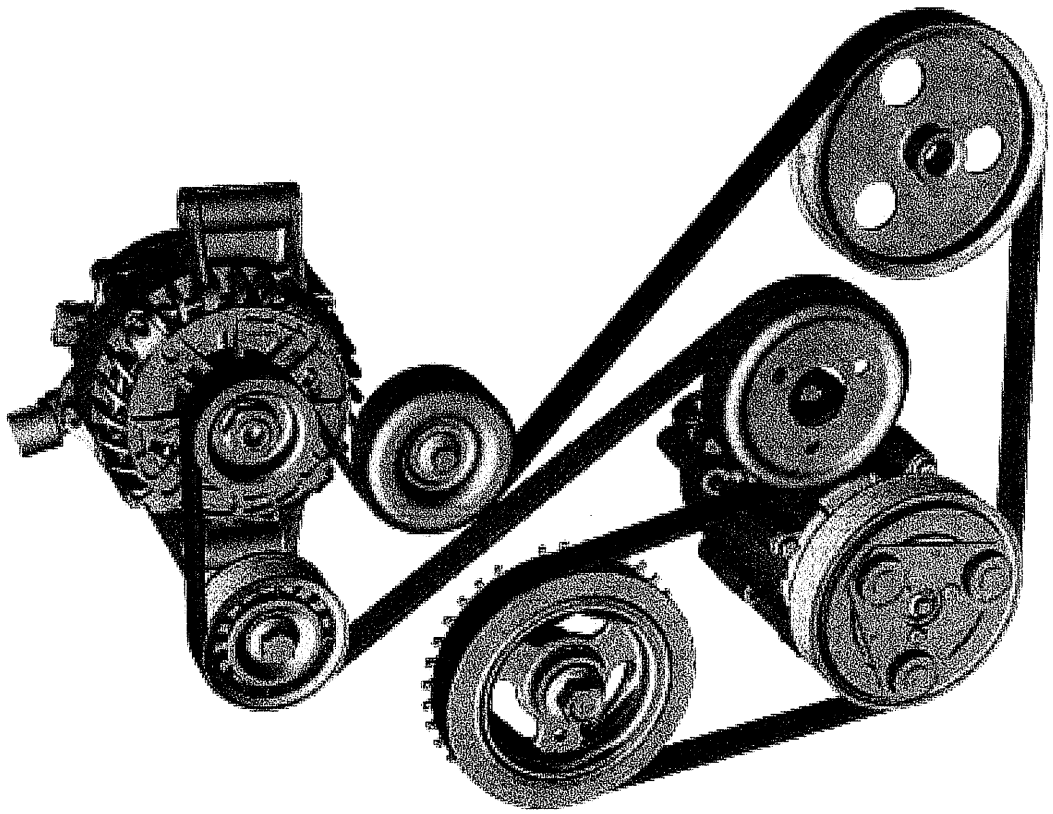
E54017

# SECTION 303-06 Starting System

## VEHICLE APPLICATION:2006.0 Fiesta

CONTENTS PAGE

### SPECIFICATIONS

Specifications ..... 303-06-2
Torque Specifications - vehicles with 1.25L Duratec-16V (Sigma)/1.3L Duratec-8V (Rocam)/1.4L Duratec-16V (Sigma)/1.6L Duratec-16V (Sigma) engines ..... 303-06-2
Torque Specifications - vehicles with 1.4L Duratorq-TDCi (DV)/1.6L Duratorq-TDCi (DV) Diesel engines ..... 303-06-2
Torque Specifications - vehicles with 2.0L Duratec-HE (MI4) engine ..... 303-06-2

### DESCRIPTION AND OPERATION

Starting System ..... 303-06-3
Starting system ..... 303-06-3

### DIAGNOSIS AND TESTING

Starting System ..... 303-06-4
Inspection and Verification ..... 303-06-4
Symptom Chart ..... 303-06-4
Pinpoint Tests ..... 303-06-6

### REMOVAL AND INSTALLATION

Starter Motor — 1.3L Duratec-8V (Rocam)/1.25L Duratec-16V (Sigma)/1.4L Duratec-16V (Sigma)/1.6L Duratec-16V (Sigma) ..... (26 204 0) 303-06-11
Starter Motor — 2.0L Duratec-HE (MI4) ..... 303-06-12

## SPECIFICATIONS

**Torque Specifications - vehicles with 1.25L Duratec-16V (Sigma)/1.3L Duratec-8V (Rocam)/1.4L Duratec-16V (Sigma)/1.6L Duratec-16V (Sigma) engines**

| Description | Nm | lb-ft | lb-in |
|---|---|---|---|
| Ignition switch to starter motor cable retaining nut | 7 | - | 62 |
| Starter motor positive cable retaining nut | 12 | 9 | - |
| Starter motor retaining bolts | 35 | 26 | - |

**Torque Specifications - vehicles with 1.4L Duratorq-TDCi (DV)/1.6L Duratorq-TDCi (DV) Diesel engines**

| Description | Nm | lb-ft | lb-in |
|---|---|---|---|
| Ignition switch to starter motor cable retaining nut | 6 | - | 53 |
| Starter motor positive cable retaining nut | 12 | 9 | - |
| Starter motor retaining bolts | 25 | 18 | - |

**Torque Specifications - vehicles with 2.0L Duratec-HE (MI4) engine**

| Description | Nm | lb-ft | lb-in |
|---|---|---|---|
| Ignition switch to starter motor cable retaining nut | 6 | - | 53 |
| Starter motor positive cable retaining nut | 12 | 9 | - |
| Starter motor wiring harness support bracket retaining nuts | 20 | 15 | - |
| Starter motor retaining studs | 25 | 18 | - |

## DESCRIPTION AND OPERATION

# Starting System

### Starting system

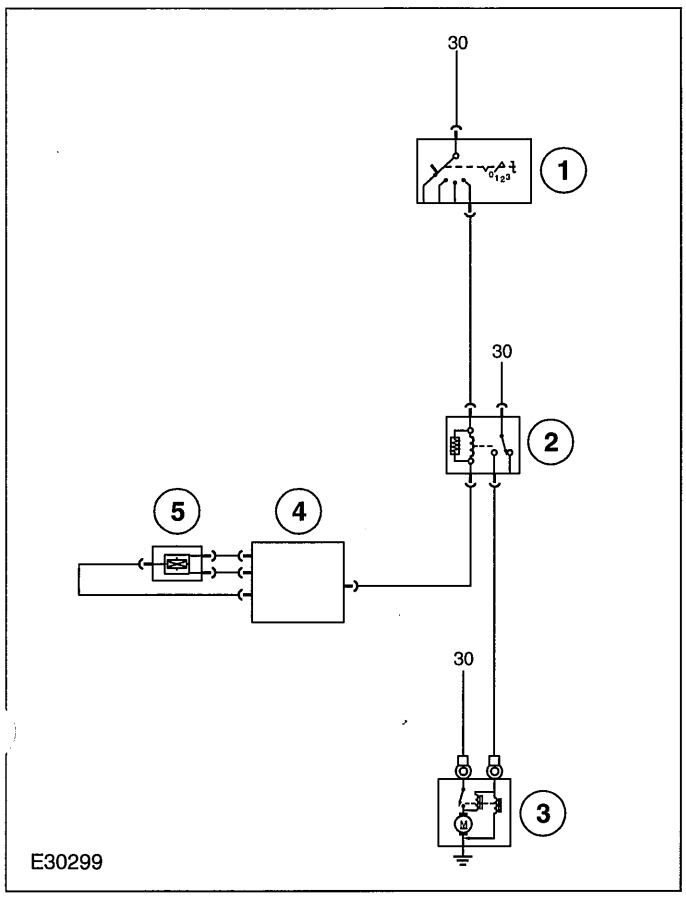


| Item | Description |
|---|---|
| 1 | Ignition/starter switch |
| 2 | Starter relay |
| 3 | Electric starter motor |
| 4 | Powertrain control module (PCM) |
| 5 | Sensor,- crankshaft position ( CKP) |

The purpose of the starting system is to turn the engine crankshaft at a speed which enables the engine to start.

The engine is started as follows:

- Ignition/starter switch in position III.
- The starter relay is activated by the PCM .
- The solenoid is supplied with voltage.
- The solenoid engages the starter motor pinion with the flywheel ring gear.
- The solenoid applies battery current to the starter.
- The starter turns the crankshaft until the engine starts. The key can then be released and it automatically returns to position II.

The system incorporates the "Smart Starting"strategy. This makes starting faster and protects the starter.

If the driver fails to release the key immediately after the engine starts, the PCM interrupts activation of the starter relay and thus switches off the electric starter motor.

The speed signal provided by the CKP sensor is used for monitoring the starting procedure.

## DIAGNOSIS AND TESTING

# Starting System

Refer to Wiring Diagrams Section 303-06, for schematic and connector information.

**General Equipment**

| |
|---|
| Worldwide Diagnostic System (WDS) |

## Inspection and Verification

1. Verify the customer concern.
2. Visually inspect for obvious signs of electrical damage.

**Visual Inspection Chart**

| Electrical |
|---|
| Fuse(s) |
| Wiring harness |
| Electrical connector(s) |
| Relay |
| Central junction box (CJB) |
| Switch(es) |
| Battery |
| Starter motor |
| Powertrain Control Module (PCM) |

3. If an obvious cause for an observed or reported concern is found, correct the cause (if possible) before proceeding to the next step.
4. If the cause is not visually evident, verify the symptom and refer to the Symptom Chart.

## Symptom Chart

| Symptom | Possible Sources | Action |
|---|---|---|
| • The engine does not crank/the relay does click | • Battery. | • REFER to: Charging System (414-00 Charging System - General Information, Diagnosis and Testing). |
| | • Starter motor. | • CARRY OUT the starter motor Component Test using WDS. |
| | • Relay. | • CARRY OUT the relay Component Test. REFER to the wiring diagrams. |
| | • Circuit(s). | • GO to Pinpoint Test A. |
| | • PCM. | • REFER to WDS. |
| • The engine does not crank/the relay does not click | • Battery. | • REFER to: Charging System (414-00 Charging System - General Information, Diagnosis and Testing). |
| | • Fuse. | • INSTALL a new fuse as necessary. If the fuse fails again check for short to ground. |
| | • Passive anti-theft system (PATS). | • REFER to: Anti-Theft - Passive (419-01 Anti-Theft - Passive, Diagnosis and Testing). |
| | • Starter motor. | • CARRY OUT the starter motor Component Test using WDS. |
| | • Ignition switch. | • GO to Pinpoint Test B. |

## DIAGNOSIS AND TESTING

| Symptom | Possible Sources | Action |
|---|---|---|
| | • Relay. | • CARRY OUT the relay Component Test. REFER to the wiring diagrams. |
| | • Circuit(s). | • GO to Pinpoint Test B. |
| • The engine cranks slowly | • Battery. | • REFER to: Charging System (414-00 Charging System - General Information, Diagnosis and Testing). |
| | • Starter motor. | • CARRY OUT the starter motor Component Test using WDS. |
| | • Circuit(s). | • GO to Pinpoint Test C. |
| • Unusual starter noise | • Starter motor. | • REMOVE the starter motor. REFER to: (303-06 Starting System)<br>Starter Motor - 1.3L Duratec-8V (Rocam)/1.25L Duratec-16V (Sigma)/1.4L Duratec-16V (Sigma)/1.6L Duratec-16V (Sigma) (Removal and Installation),<br>Starter Motor - 1.4L Duratorq-TDCi (DV) Diesel (Removal and Installation).<br>INSPECT the starter motor gear for damage. INSTALL a new starter motor as necessary. |
| | • Flywheel ring gear. | • INSPECT the flywheel for damage. |
| • The starter spins but the engine does not crank | • Starter motor. | • REMOVE the starter motor.REFER to: (303-06 Starting System)<br>Starter Motor - 1.3L Duratec-8V (Rocam)/1.25L Duratec-16V (Sigma)/1.4L Duratec-16V (Sigma)/1.6L Duratec-16V (Sigma) (Removal and Installation),<br>Starter Motor - 1.4L Duratorq-TDCi (DV) Diesel (Removal and Installation).<br>INSPECT the starter motor gear for damage. INSTALL a new starter motor as necessary. |
| | • Flywheel ring gear. | • INSPECT the flywheel for damage. |

## DIAGNOSIS AND TESTING

| Symptom | Possible Sources | Action |
|---|---|---|
| • The starter stops cranking the engine before the engine starts | • PCM. | • REFER to WDS. |

## Pinpoint Tests

**NOTE:** Use a digital multimeter for all electrical measurements.

**PINPOINT TEST A : THE ENGINE DOES NOT CRANK/THE RELAY DOES CLICK**

| TEST CONDITIONS | DETAILS/RESULTS/ACTIONS |
|---|---|
| **A1: CHECK VOLTAGE TO STARTER SOLENOID** | |
| | 1 Ignition switch in position III. |
| 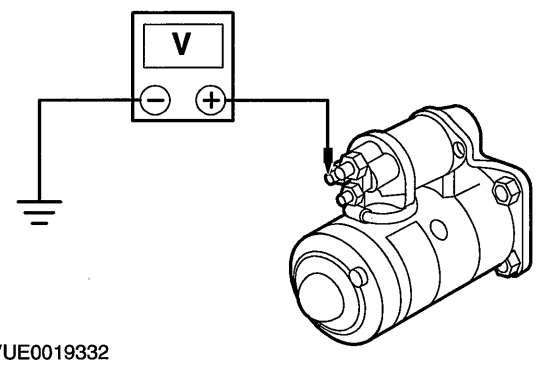  VUE0019332 | 2 Measure the voltage between starter motor terminal 50, harness side and ground.<br>• Is the voltage greater than 10 volts?<br>→ **Yes**<br>GO to A2.<br>→ **No**<br>GO to A3. |
| **A2: CHECK THE VOLTAGE DROP** | |
| 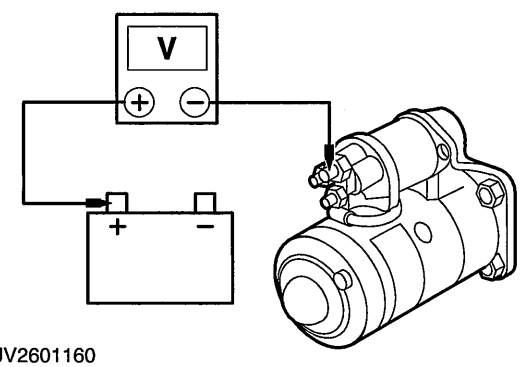  VUV2601160 | 1 Measure the voltage between starter motor terminal 30, component side and the battery positive terminal.<br>• Is the voltage less than 0.5 volts?<br>→ **Yes**<br>GO to A4.<br>→ **No**<br>CLEAN and TIGHTEN all battery positive cable connections. TEST the system for normal operation. If the concern persists, INSTALL a new battery starter motor solenoid cable.<br>REFER to: Battery to Starter Motor Solenoid Cable - 1.3L Duratec-8V (Rocam) (414-01 Battery, Mounting and Cables, Removal and Installation)<br>/ Battery to Starter Motor Solenoid Cable - 1.25L Duratec-16V (Sigma)/1.4L Duratec-16V (Sigma)/1.6L Duratec-16V (Sigma) (414-01 Battery, Mounting and Cables, Removal and Installation).<br>TEST the system for normal operation. |

## DIAGNOSIS AND TESTING

| TEST CONDITIONS | DETAILS/RESULTS/ACTIONS |
|---|---|
| **A3: CHECK CIRCUIT 29-BB17 (OG/BK) FOR OPEN** | |
| | 1 Ignition switch in position 0. |
| | 2 Disconnect Starter Relay C423. |
| 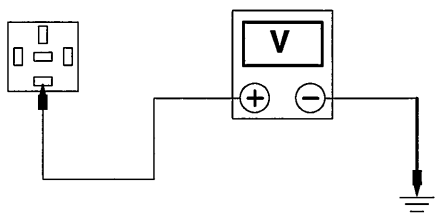  VUE0018285 | 3 Measure the voltage between starter relay C423 pin 3, circuit 29-BB17 (OG/BK), harness side and ground.<br>• Is the voltage greater than 10 volts?<br>→ **Yes**<br>REPAIR circuit 50-BB10 (GY/BK). TEST the system for normal operation.<br>→ **No**<br>REPAIR circuit 29-BB17 (OG/BK). TEST the system for normal operation. |
| **A4: CHECK THE STARTER MOTOR GROUND CIRCUIT FOR OPEN** | |
| 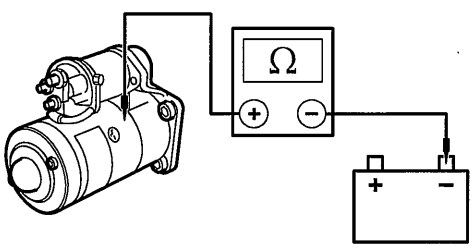  TIV2601016 | 1 Measure the resistance between the starter motor casing and battery ground terminal.<br>• Is the resistance less than 0.5 ohms?<br>→ **Yes**<br>INSTALL a new starter motor.<br>REFER to: Starter Motor - 1.3L Duratec-8V (Rocam)/1.25L Duratec-16V (Sigma)/1.4L Duratec-16V (Sigma)/1.6L Duratec-16V (Sigma) (303-06 Starting System, Removal and Installation)<br>/ Starter Motor - 1.4L Duratorq-TDCi (DV) Diesel (303-06 Starting System, Removal and Installation).<br>INSPECT the starter motor gear for damage.<br>INSTALL a new starter motor as necessary.<br>→ **No**<br>CLEAN and TIGHTEN all battery and engine ground cable connections. TEST the system for normal operation. |

### PINPOINT TEST B : THE ENGINE DOES NOT CRANK/RELAY DOES NOT CLICK

| TEST CONDITIONS | DETAILS/RESULTS/ACTIONS |
|---|---|
| **B1: CHECK THE SWITCHED POWER TO THE STARTER RELAY** | |
| | 1 Disconnect Starter Relay C423. |
| | 2 Ignition switch in position III. |

## DIAGNOSIS AND TESTING

| TEST CONDITIONS | DETAILS/RESULTS/ACTIONS |
|---|---|
| 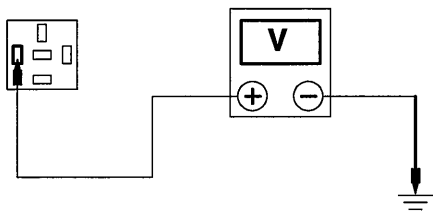 VUE0018265 | 3 Measure the voltage between the starter motor relay C423 pin 1, harness side and ground.<br>• Is the voltage greater than 10 volts?<br>→ **Yes**<br>GO to B3.<br>→ **No**<br>GO to B2. |
| **B2: CHECK CIRCUIT 50-BB16 (GY/BK) FOR OPEN** | |
| | 1 Ignition switch in position 0. |
| | 2 Disconnect Ignition Switch C329. |
| 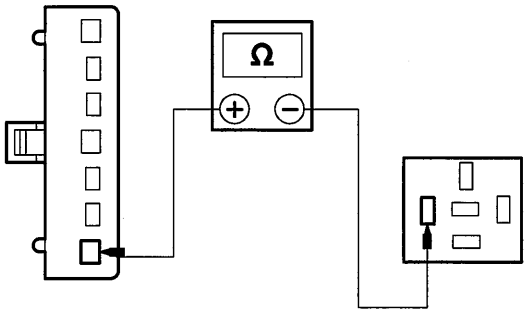 VUE0012329 | 3 Measure the resistance between the ignition switch C329 pin 7, circuit 50-BB16 (GY/BK), harness side and the starter relay C423 pin 1, circuit 50-BB16 (GY/BK), harness side.<br>• Is the resistance less than 5 ohms?<br>→ **Yes**<br>INSTALL a new ignition switch.<br>REFER to: Ignition Switch (211-05 Steering Column Switches, Removal and Installation).<br>TEST the system for normal operation.<br>→ **No**<br>REPAIR the circuit. TEST the system for normal operation. |
| **B3: CHECK CIRCUIT 91S-BB16 (BK/RD) FOR OPEN** | |
| | 1 Ignition switch in position II. |
| 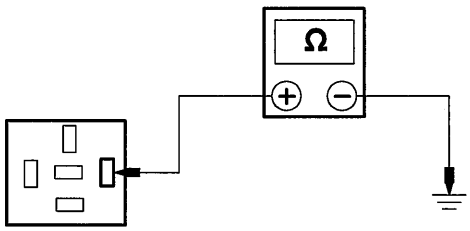 VUE0013833 | 2 Measure the resistance between the starter relay C423 pin 2, circuit 91S-BB16 (BK/RD), harness side and ground.<br>• Is the resistance less than 5 ohms?<br>→ **Yes**<br>INSTALL a new starter relay. TEST the system for normal operation.<br>→ **No**<br>All except vehicles with diesel engine, GO to B4.<br>Vehicles with diesel engine, GO to B5. |

## DIAGNOSIS AND TESTING

| TEST CONDITIONS | DETAILS/RESULTS/ACTIONS |
|---|---|
| **B4: CHECK CIRCUIT 91S-BB16 (BK/RD) FOR OPEN** | |
| | 1 Ignition switch in position 0. |
| | 2 Disconnect PCM C343. |
| 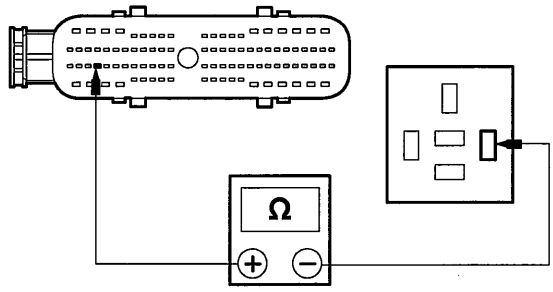  VUE0029942 | 3 Measure the resistance between the starter relay C423 pin 2, circuit 91S-BB16 (BK/RD), harness side and PCM C343 pin F30, 91S-BB16 (BK/RD), harness side.<br>• Is the resistance less than 5 ohms?<br>→ **Yes**<br>CHECK the PATS system. REFER to WDS.<br>→ **No**<br>REPAIR the circuit. TEST the system for normal operation. |
| **B5: CHECK CIRCUIT 91S-BB16 (BK/RD) FOR OPEN** | |
| | 1 Ignition switch in position 0. |
| | 2 Disconnect PCM C372. |
| 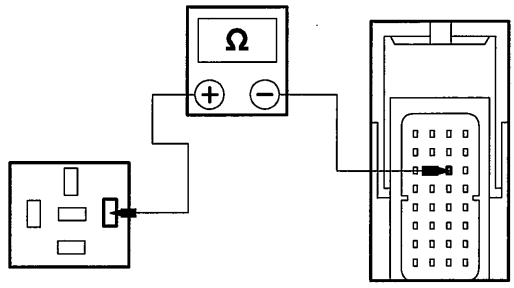  VUE0029849 | 3 Measure the resistance between the starter relay C423 pin 2, circuit 91S-BB16 (BK/RD), harness side and the PCM C372 pin C3, 91S-BB16 (BK/RD), harness side.<br>• Is the resistance less than 5 ohms?<br>→ **Yes**<br>CHECK the PATS system. REFER to WDS.<br>→ **No**<br>Repair the circuit. Test the system for normal operation. |

### PINPOINT TEST C : THE ENGINE CRANKS SLOWLY

| TEST CONDITIONS | DETAILS/RESULTS/ACTIONS |
|---|---|
| **C1: CHECK FOR VOLTAGE DROP** | |
| | 1 Ignition switch in position III. |

## DIAGNOSIS AND TESTING

| TEST CONDITIONS | DETAILS/RESULTS/ACTIONS |
|---|---|
| 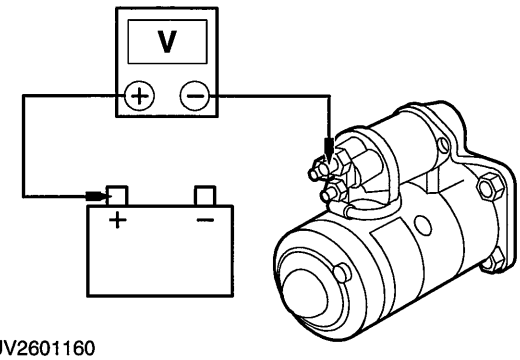 <br>VUV2601160 | 2 Measure the voltage between the starter motor terminal 30, component side and the battery positive terminal.<br>• Is the voltage less than 0.5 volts?<br>→ **Yes**<br>GO to C2.<br>→ **No**<br>CLEAN and TIGHTEN all battery positive cable connections. TEST the system for normal operation. If the concern persists, INSTALL a new battery to starter motor solenoid cable.<br>REFER to: Battery to Starter Motor Solenoid Cable - 1.3L Duratec-8V (Rocam) (414-01 Battery, Mounting and Cables, Removal and Installation)<br>/ Battery to Starter Motor Solenoid Cable - 1.25L Duratec-16V (Sigma)/1.4L Duratec-16V (Sigma)/1.6L Duratec-16V (Sigma) (414-01 Battery, Mounting and Cables, Removal and Installation).<br>Test the system for normal operation. |
| **C2: CHECK FOR GROUND CONNECTION** | |
| | 1 Ignition switch in position III. |
| 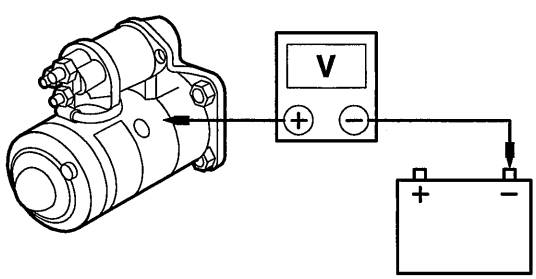 <br>VUV9510063 | 2 Measure the voltage between the starter motor case and the battery ground terminal.<br>• Is the voltage less than 0.5 volts?<br>→ **Yes**<br>CHECK the battery.<br>REFER to: Charging System (414-00 Charging System - General Information, Diagnosis and Testing).<br>TEST the system for normal operation.<br>→ **No**<br>CLEAN and TIGHTEN all battery ground cable connections, starter motor mounting and body to ground straps. TEST the system for normal operation. If the concern persists, INSTALL a new battery ground cable. Test the system for normal operation. |

## REMOVAL AND INSTALLATION

# Starter Motor — 1.3L Duratec-8V (Rocam)/1.25L Duratec-16V (Sigma)/1.4L Duratec-16V (Sigma)/1.6L Duratec-16V (Sigma)(26 204 0)

### Removal

1. **Disconnect the battery ground cable. For additional information, refer to Section 414-01 [Battery, Mounting and Cables].**
2. **Raise and support the vehicle. For additional information, refer to Section 100-02 [Jacking and Lifting].**
3. **Disconnect the ignition switch to starter motor solenoid and battery to starter motor solenoid cables (oil filter shown removed for clarity).**

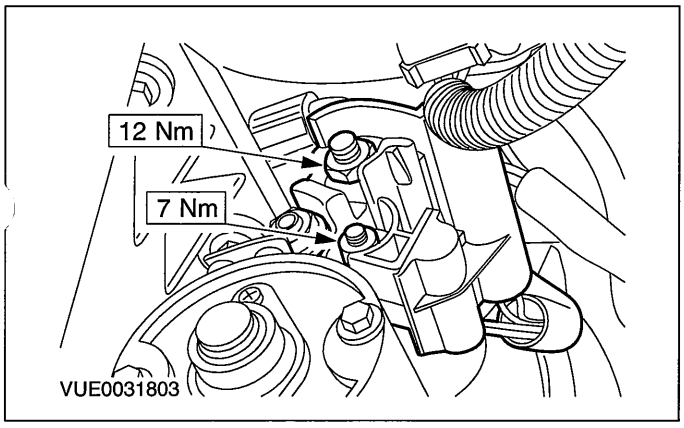


4. **Remove the starter motor retaining bolts and remove the starter motor.**

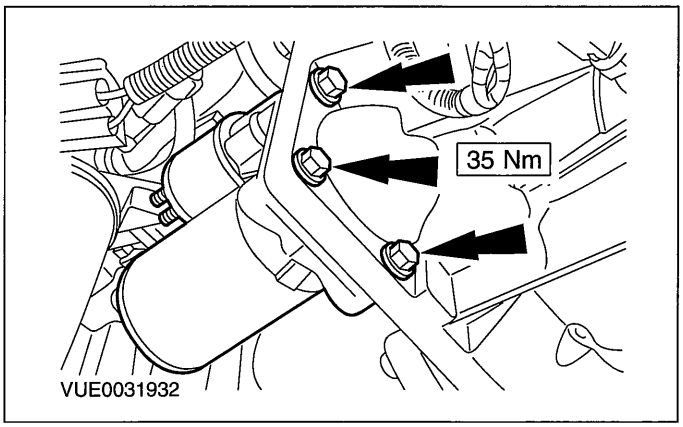


### Installation

1. **To install, reverse the removal procedure.**

## REMOVAL AND INSTALLATION

# Starter Motor — 2.0L Duratec-HE (MI4)

1. **Disconnect the battery ground cable.**

   **For additional information, refer to: Battery Disconnect (414-01 Battery, Mounting and Cables, General Procedures).**

2. **Raise and support the vehicle.**

   **For additional information, refer to: Lifting (100-02 Jacking and Lifting, Description and Operation).**

3. **Remove the components in the order indicated in the following illustration(s) and table(s).**

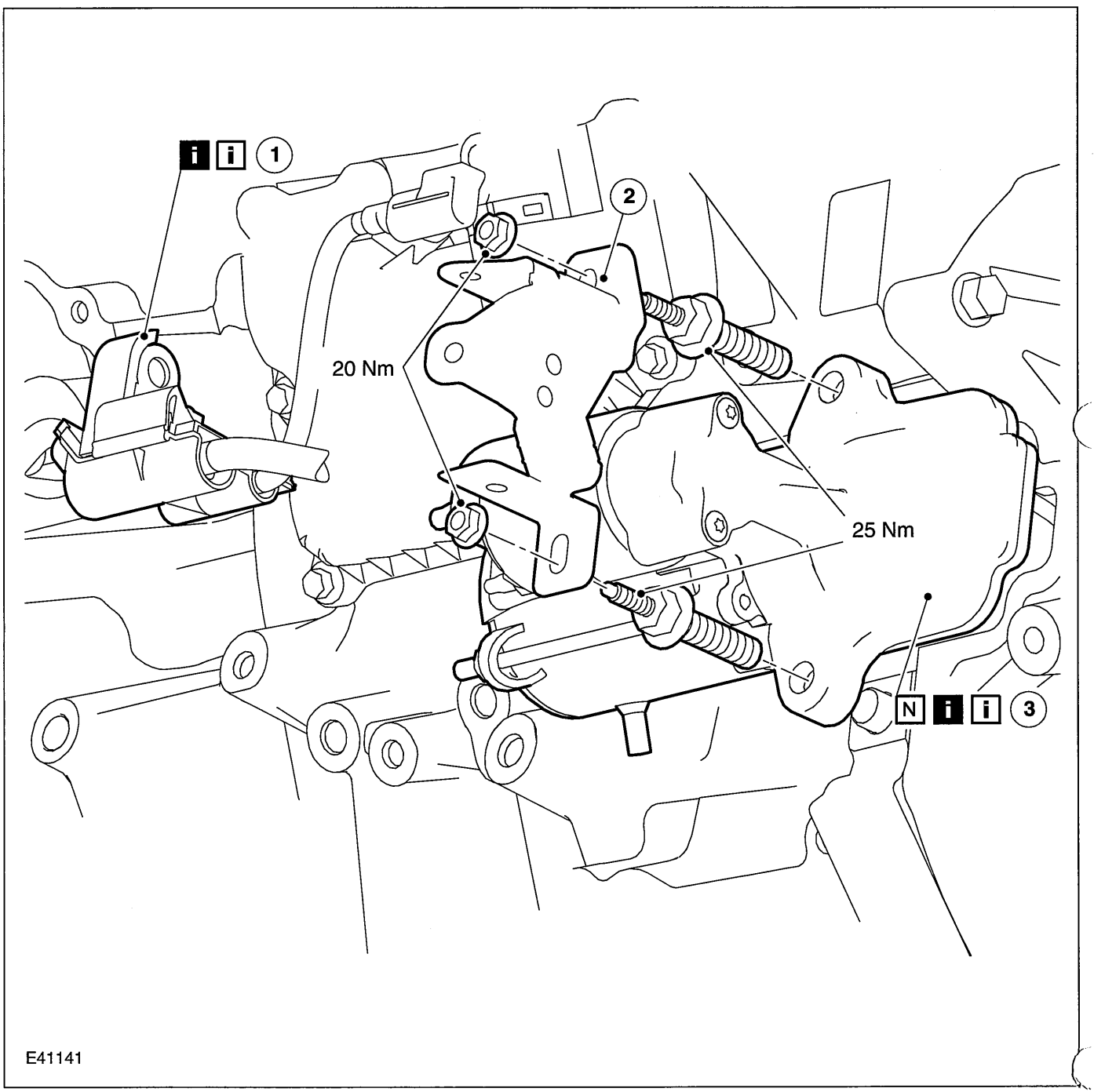


| Item | Description |
|---|---|
| 1 | Starter motor electrical connectors<br>See Removal Detail |

| Item | Description |
|---|---|
| | |

## REMOVAL AND INSTALLATION

| Item | Description |
|---|---|
| | See Installation Detail |
| 2 | Starter motor wiring harness support bracket |
| | |

| Item | Description |
|---|---|
| 3 | Starter motor<br>See Removal Detail<br>See Installation Detail |

**4. To install, reverse the removal procedure.**

# Removal Details

### Item 1 Starter motor electrical connectors

**1. Disconnect the ignition switch and battery to starter motor solenoid cables.**

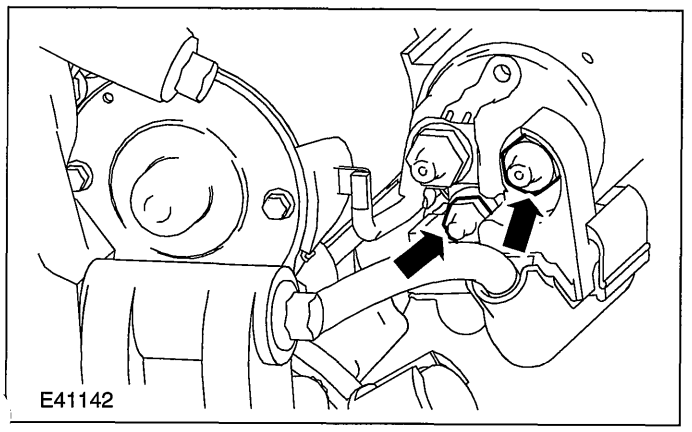


### Item 3 Starter motor

**1. Discard the starter motor gasket.**

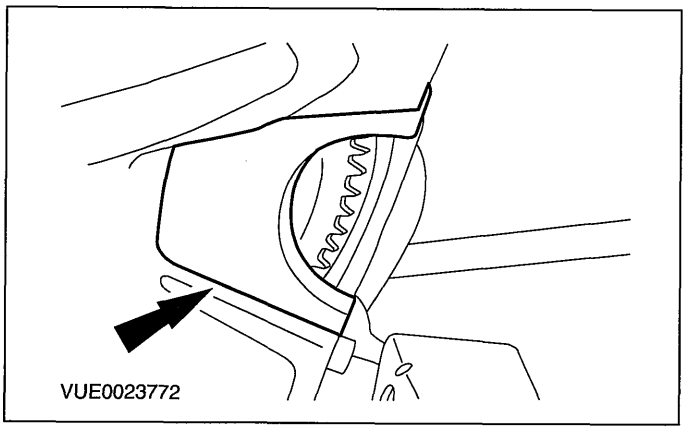


# Installation Details

### Item 1 Starter motor electrical connectors

**1. NOTE:Clean the electrical connectors before connecting the cables. Failure to follow this instruction may cause a high resistance between the electrical connectors and the starter motor solenoid.**

**Connect the ignition switch and battery to starter motor solenoid cables.**

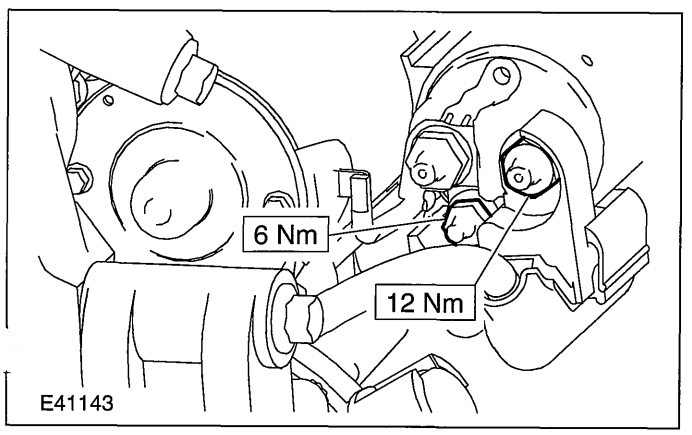


### Item 3 Starter motor

**1. NOTE:Clean the mating surfaces before installing the new starter motor gasket.**

**Install a new starter motor gasket into the transaxle housing prior to installing the starter motor.**

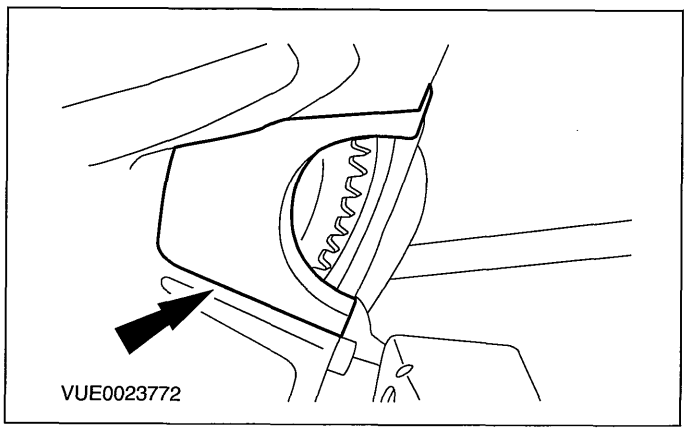

# SECTION 303-07A Engine Ignition

## VEHICLE APPLICATION:2006.0 Fiesta

CONTENTS PAGE

**SPECIFICATIONS**

Specifications..... 303-07A-2

**DIAGNOSIS AND TESTING**

Engine Ignition..... 303-07A-3
Inspection and Verification..... 303-07A-3

## SPECIFICATIONS

### Torque Specifications

| Description | Nm | lb-ft | lb-in |
|---|---|---|---|
| Ignition coil retaining bolts | 6 | - | 53 |
| Spark plugs | 15 | 11 | - |

## DIAGNOSIS AND TESTING

# Engine Ignition

### Inspection and Verification

1. Verify the customer concern.
2. Visually inspect for obvious signs of mechanical or electrical damage.

**Visual Inspection Chart**

| Mechanical | Electrical |
|---|---|
| – Spark plug wire(s)<br>– Spark plug(s)<br>– Ignition coil pack | – Wiring harness<br>– Electrical connector(s) |

3. If an obvious cause for an observed or reported concern is found, correct the cause (if possible) before proceeding to the next step.
4. If the concern remains after visual inspection, use WDS to diagnose the system.

# SECTION 303-07B Engine Ignition — 2.0L Duratec-HE (MI4)

## VEHICLE APPLICATION:2006.0 Fiesta

CONTENTS PAGE

**SPECIFICATIONS**

Specifications..... 303-07B-2

**DIAGNOSIS AND TESTING**

Engine Ignition..... 303-07B-3
Inspection and Verification..... 303-07B-3
Symptom Chart..... 303-07B-3

## SPECIFICATIONS

### Torque Specifications

| Description | Nm | lb-ft | lb-in |
|---|---|---|---|
| Ignition coil pack retaining bolts | 6 | – | 53 |
| Spark plug(s) | 12 | 9 | – |

## DIAGNOSIS AND TESTING

# Engine Ignition

### General Equipment

| |
|---|
| Worldwide Diagnostic System (WDS) |

## Inspection and Verification

1. Verify the customer concern.
2. Visually inspect for obvious signs of electrical damage.

### Visual Inspection Chart

| Electrical |
|---|
| • Wiring harness<br>• Electrical connector(s)<br>• Spark plug(s)<br>• Spark plug wire(s)<br>• Ignition coil pack<br>• Powertrain control module (PCM) |

3. If an obvious cause for an observed or reported concern is found, correct the cause (if possible) before proceeding to the next step.
4. If the cause is not visually evident, verify the symptom and refer to the Symptom Chart.

## Symptom Chart

### Symptom Chart

| Symptom | Possible Sources | Action |
|---|---|---|
| • Engine misfire | • Spark plug(s).<br>• Spark plug wire(s). | • CARRY OUT a KV test using WDS. |
| | • Ignition coil pack.<br>• PCM.<br>• PCM calibration. | • REFER to WDS. |
| • Engine stumbling | • Spark plug(s).<br>• Spark plug wire(s). | • CARRY OUT a KV test using WDS. |
| | • Ignition coil pack.<br>• PCM.<br>• PCM calibration. | • REFER to WDS. |
| • Engine lacks power | • Spark plug(s).<br>• Spark plug wire(s). | • CARRY OUT a KV test using WDS. |
| | • Ignition coil pack. | • REFER to WDS. |

# SECTION 303-08A Engine Emission Control — 1.3L Duratec-8V (Rocam)/1.25L Duratec-16V (Sigma)/1.4L Duratec-16V (Sigma)/1.6L Duratec-16V (Sigma)

## VEHICLE APPLICATION:2006.0 Fiesta

CONTENTS PAGE

**SPECIFICATIONS**

Specifications ..... 303-08A-2

**DESCRIPTION AND OPERATION**

Engine Emission Control ..... 303-08A-3
Positive Crankcase Ventilation (PCV) - 1.3L Duratec 8V ..... 303-08A-3
PCV - 1.4L/1.6L Duratec 16V ..... 303-08A-5

**DIAGNOSIS AND TESTING**

Engine Emission Control ..... 303-08A-6
Inspection and Verification ..... 303-08A-6
Symptom Chart ..... 303-08A-6

**REMOVAL AND INSTALLATION**

Crankcase Vent Oil Separator ..... 303-08A-7

## SPECIFICATIONS

### Torque Specifications

| Description | Nm | lb-ft | lb-in |
|---|---|---|---|
| Crankcase vent oil separator retaining bolts | 10 | - | 89 |

## DESCRIPTION AND OPERATION

# Engine Emission Control

## Positive Crankcase Ventilation (PCV) - 1.3L Duratec 8V

### Overview

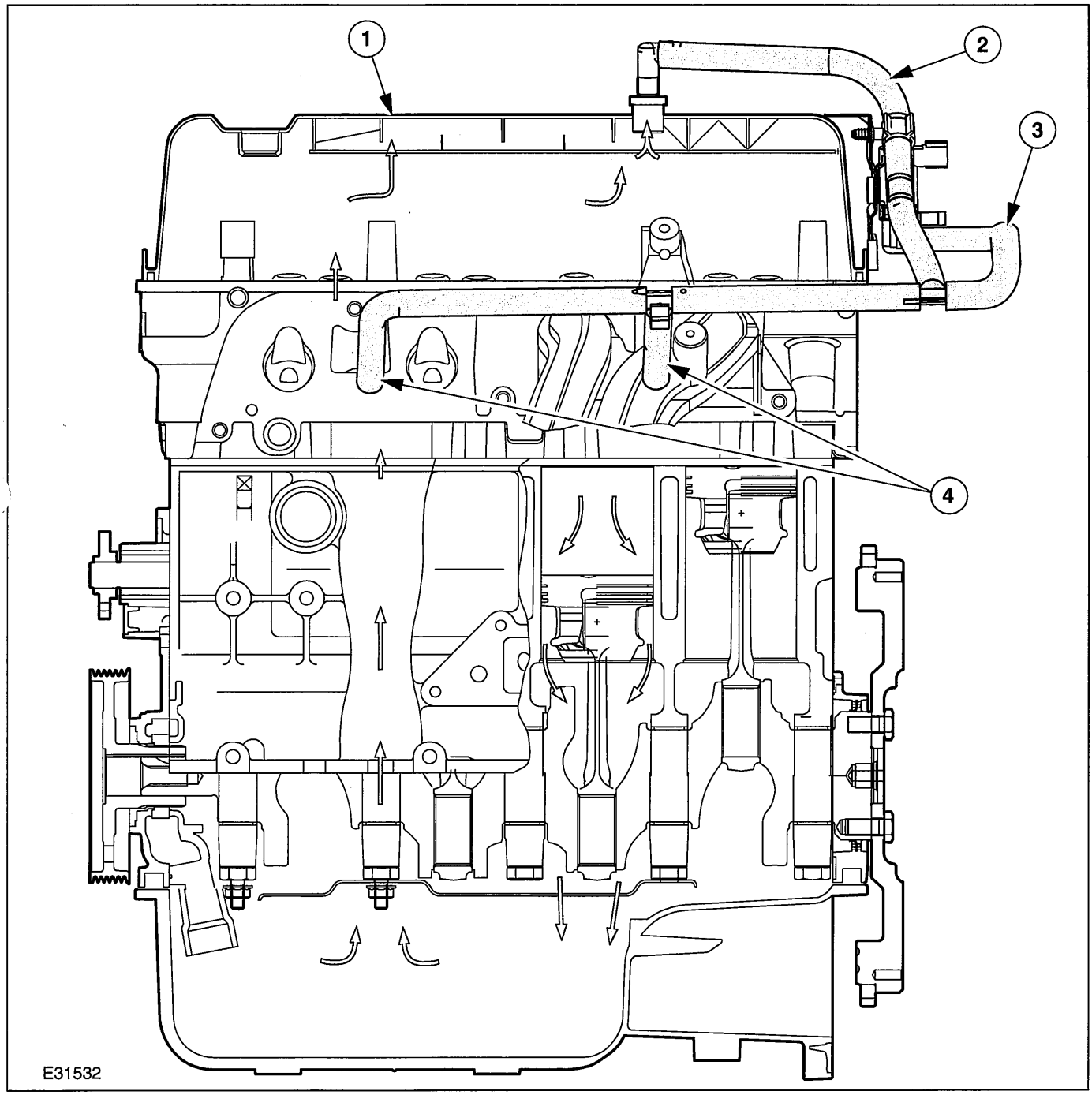


Side view

| Item | Description |
|---|---|
| 1 | Cylinder head cover with integrated oil separator |
| 2 | From PCV valve |
| 3 | From Evaporative Emission (EVAP) solenoid valve |
| 4 | To the intake manifold |

## DESCRIPTION AND OPERATION

### PCV valve

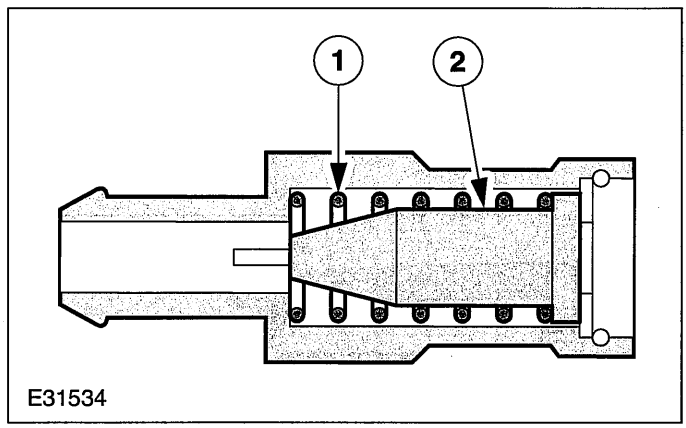


Sectional view

| Item | Description |
|---|---|
| 1 | Spring |
| 2 | Pistons |

The PCV valve is located on the upper side of the cylinder head cover.

The crankcase gases are sucked by the PCV valve into the intake manifold.

The PCV valve is opened by the vacuum in the intake manifold.

The amount of crankcase gases depends on the engine speed. The quantity sucked in is determined by the spring and the shape of the piston.

### Deflection panel

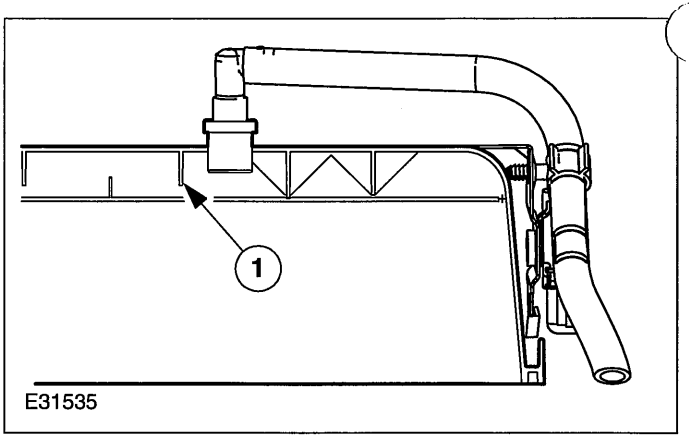


Side view

| Item | Description |
|---|---|
| 1 | Deflection plate |

The deflection plate is integrated into the cylinder head cover.

It prevents oil from being sucked in and burned in the combustion process.

The oil drops condense on the deflection plate and are then returned to the oil circuit.

## DESCRIPTION AND OPERATION

### PCV - 1.4L/1.6L Duratec 16V

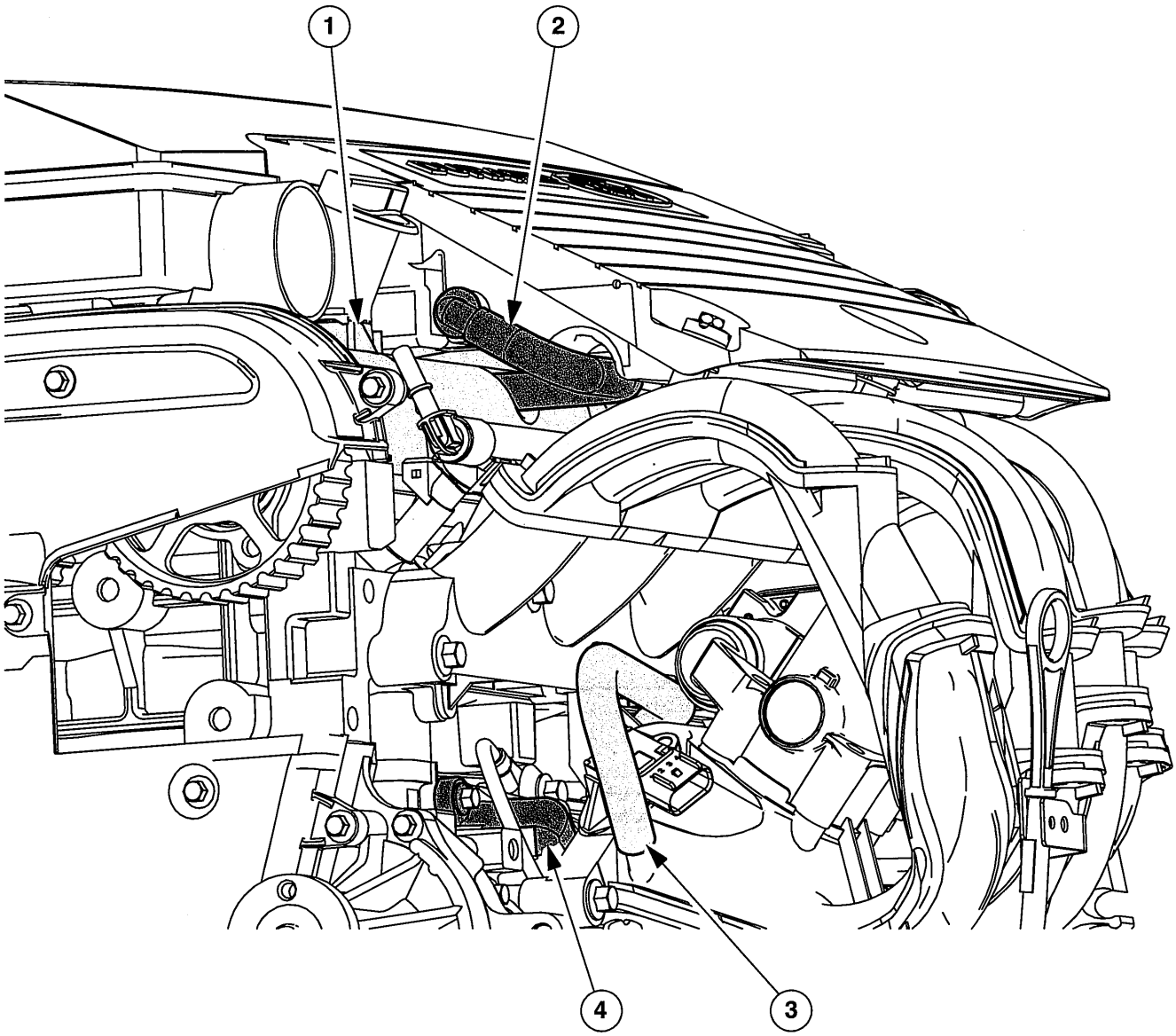


E38735

| Item | Description |
|---|---|
| 1 | Valve cover |
| 2 | Hose from valve cover to air cleaner housing |
| 3 | Hose from PCV oil separator to intake manifold |
| 4 | PCV oil separator with integral PCV valve |

The crankcase gases are freed of oil in the valve cover and in the PCV oil separator in order to prevent the oil from being sucked in and burned.

The PCV valve is located in the PCV oil separator.

The crankcase gases are sucked by the PCV valve into the intake manifold.

The PCV valve is opened by the vacuum in the intake manifold.

The amount of crankcase gases depends on the engine speed.

## DIAGNOSIS AND TESTING

# Engine Emission Control

## Inspection and Verification

1. Verify the customer concern.
2. Visually inspect for obvious signs of mechanical damage.

### Visual Inspection Chart

| Mechanical |
|---|
| Positive crankcase ventilation (PCV) valve |
| PCV separator |

| Mechanical |
|---|
| Hose(s)/hose joints |
| Gasket(s) |

3. If an obvious cause for an observed or reported concern is found, correct the cause (if possible) before proceeding to the next step.
4. If the cause is not visually evident, verify the symptom and refer to the Symptom Chart.

## Symptom Chart

### Symptom Chart

| Symptom | Possible Sources | Action |
|---|---|---|
| • Excessive crankcase pressure | • Blocked PCV valve.<br>• Blocked PCV separator.<br>• Blocked PCV hose. | • CLEAN or INSTALL new PCV components as necessary. TEST the system for normal operation. If the concern persists, REFER to Section 303-00 [Engine System - General Information]. |
| • Oil in the air intake system | • Restriction in PCV separator. | • CLEAN or INSTALL a new PCV separator. TEST the system for normal operation. |
| | • PCV valve permanently open. | • INSTALL a new PCV valve. TEST the system for normal operation. |

## REMOVAL AND INSTALLATION

# Crankcase Vent Oil Separator

## Removal

1. **Remove the air cleaner. For additional information, refer to Section 303-12 [Intake Air Distribution and Filtering].**
2. **Remove the intake manifold. For additional information, refer to Section 303-01A [Engine -- 1.25L Duratec-16V (Sigma)/1.4L Duratec-16V (Sigma)/1.6L Duratec-16V (Sigma)] / 303-01B [Engine -- 1.4L Duratorq-TDCi (DV) Diesel] / 303-01C [Engine -- 1.3L Duratec-8V (Rocam)] / 303-01D [Engine -- 2.0L Duratec-HE (MI4)] / 303-01E [Engine -- 1.6L Duratorq-TDCi (DV) Diesel].**
3. **Remove the crankcase vent oil separater.**
   - Discard the gasket.

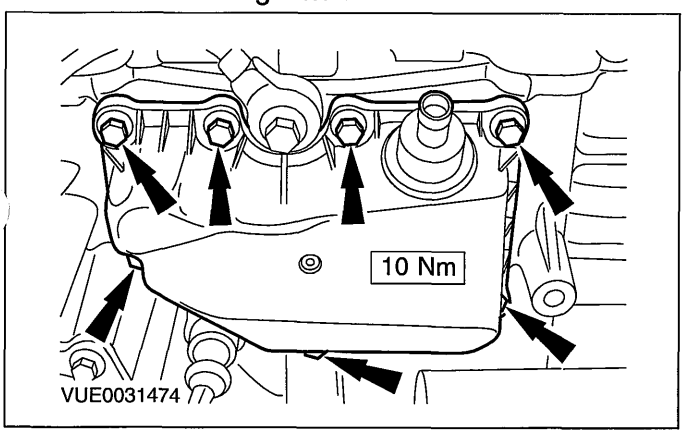


## Installation

1. **NOTE:Install a new crankcase vent oil separator gasket.**

   **To install, reverse the removal procedure.**

# SECTION 303-08B Engine Emission Control — 2.0L Duratec-HE (MI4)

## VEHICLE APPLICATION:2006.0 Fiesta

CONTENTS PAGE

**SPECIFICATIONS**

Specifications ..... 303-08B-2

**DESCRIPTION AND OPERATION**

Engine Emission Control ..... 303-08B-3

**DIAGNOSIS AND TESTING**

Engine Emission Control ..... 303-08B-6
Inspection and Verification ..... 303-08B-6
Symptom Chart ..... 303-08B-6

**REMOVAL AND INSTALLATION**

Exhaust Gas Recirculation (EGR) Valve ..... 303-08B-8
Crankcase Vent Oil Separator ..... 303-08B-10

## SPECIFICATIONS

### Torque Specifications

| Description | Nm | lb-ft | lb-in |
|---|---|---|---|
| Exhaust gas recirculation (EGR) valve bolts | 25 | 18 | – |
| EGR valve outlet tube union | 55 | 41 | – |
| Crankcase vent oil separator retaining bolts | 10 | – | 89 |

## DESCRIPTION AND OPERATION

# Engine Emission Control

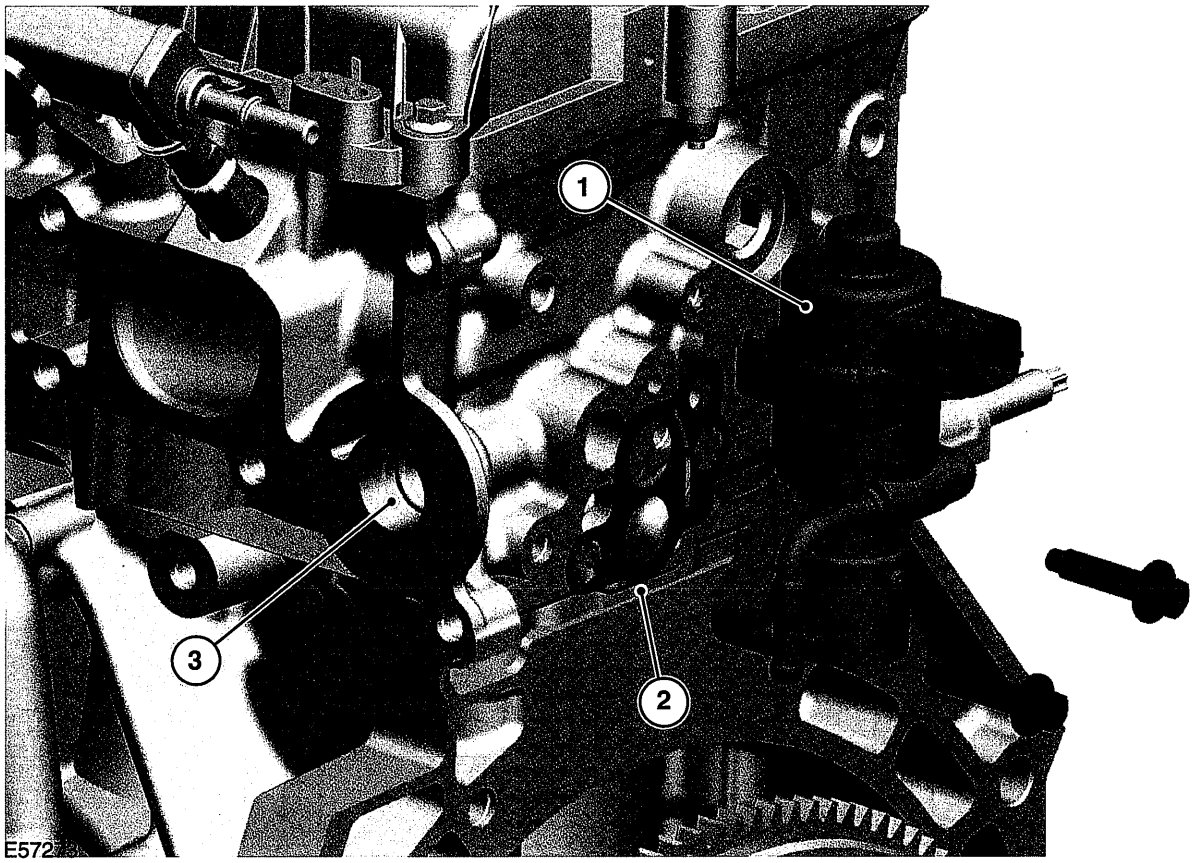


| Item | Description |
|---|---|
| 1 | Exhaust gas recirculation (EGR) valve |
| 2 | EGR valve gasket |
| 3 | EGR outlet |

The exhaust gas recirculation (EGR) system allows a measured quantity of exhaust gas to be directed back to the intake manifold. The exhaust gas is introduced to the incoming charge in the intake manifold, where it dilutes the air fuel mixture and lowers the peak gas temperature, reducing nitrogen oxide exhaust emissions.

The exhaust gas is drawn through a passage within the cylinder head from the exhaust manifold to the intake manifold by the EGR valve.

The EGR valve is controlled by an input from the powertrain control module (PCM).

## DESCRIPTION AND OPERATION

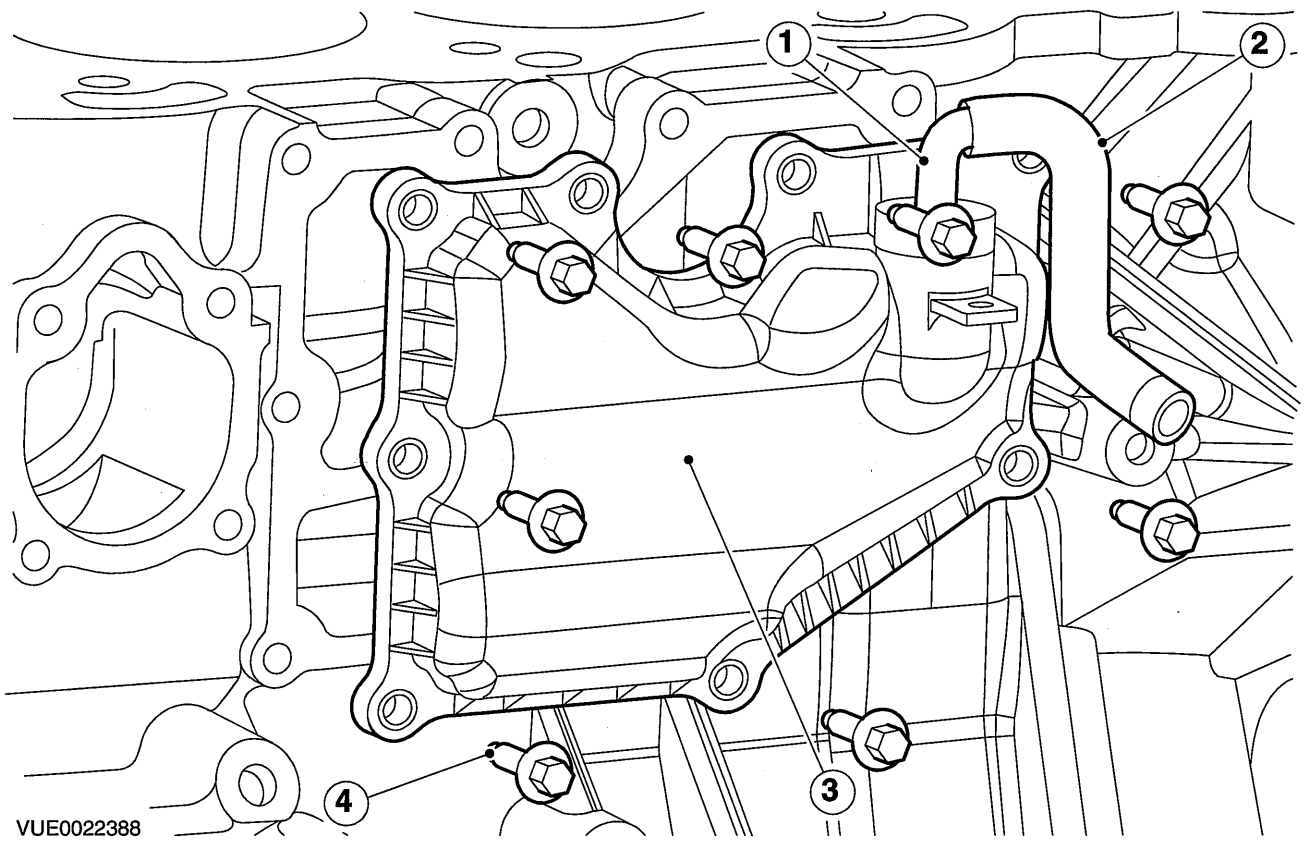


| Item | Description |
|---|---|
| 1 | Positive crankcase ventilation (PCV) valve |
| 2 | PCV hose |
| 3 | Crankcase vent oil separator |
| 4 | Crankcase vent oil separator retaining bolt |

The positive crankcase ventilation (PCV) system consists of a valve mounted in the crankcase vent oil separator (attached to the cylinder block) and two hoses. One PCV hose connects the PCV valve to the intake manifold, the other PCV hose connects the valve cover to the air cleaner.

Under idle and part throttle conditions, the crankcase vapor flows through the intake manifold into the combustion chambers where the vapor is burnt during combustion.

## DESCRIPTION AND OPERATION

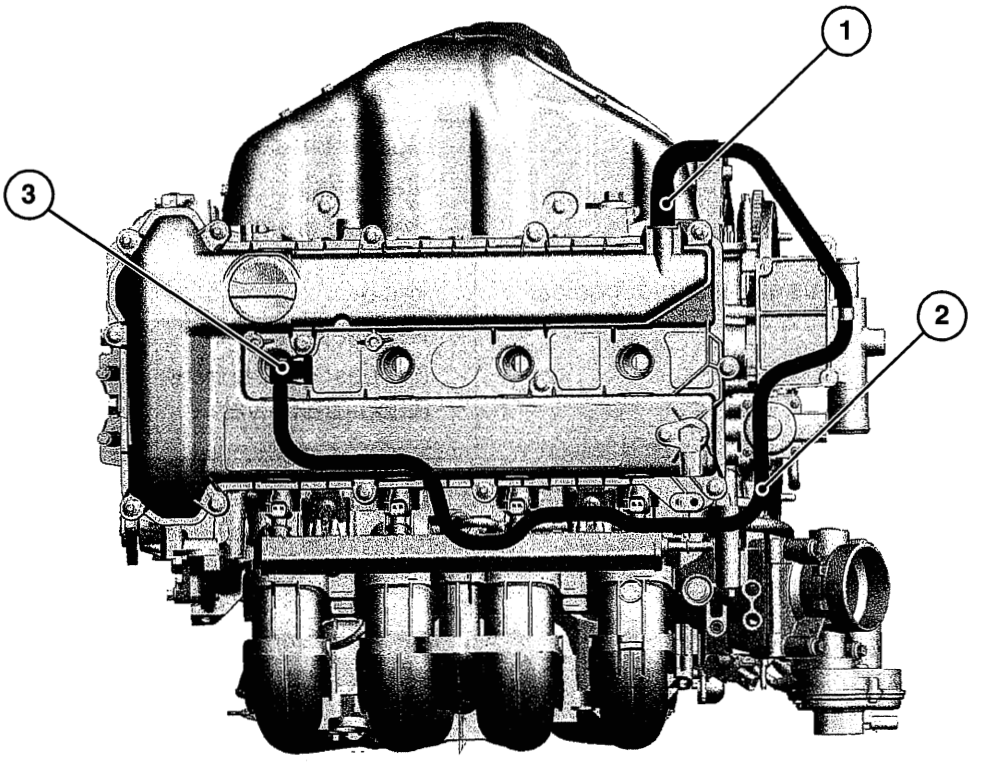


E57308

| Item | Description |
|---|---|
| 1 | PCV hose to valve cover connector |
| 2 | PCV hose |
| 3 | PCV hose to air cleaner connector |

Under full throttle conditions, the crankcase vapor flows from the valve cover into the air cleaner through the PCV hose.

## DIAGNOSIS AND TESTING

# Engine Emission Control

### General Equipment

| |
|---|
| Worldwide Diagnostic System (WDS) |

## Inspection and Verification

1. Verify the customer concern.
2. Visually inspect for obvious signs of mechanical or electrical damage.

### Visual Inspection Chart

| Mechanical | Electrical |
|---|---|
| – Hose(s)/hose joints<br>– Gasket(s)<br>– Positive crankcase ventilation (PCV) valve<br>– PCV separator<br>– Exhaust gas recirculation (EGR) valve | – Electrical connector(s)<br>– Wiring harness<br>– Fuse(s)<br>– Relay<br>– EGR valve<br>– Powertain control module (PCM) |

3. If an obvious cause for an observed or reported concern is found, correct the cause (if possible) before proceeding to the next step.
4. If the concern is not visually evident, verify the symptom and refer to the Symptom Chart.

## Symptom Chart

### Symptom Chart

| Symptom | Possible Sources | Action |
|---|---|---|
| • Poor engine performance | • EGR valve. | • Using WDS, CHECK the EGR Valve Duty Cycle input signal to the EGR vacuum regulator valve. If the result is 0%, REMOVE the EGR valve.<br>REFER to Exhaust Gas Recirculation (EGR) Valve - in this section.<br>INSPECT the EGR valve and valve seat for damage. Make sure that the EGR valve is in the closed position. If the EGR valve is not closed. INSTALL a new EGR valve. TEST the system for normal operation. If the result is not 0% continue the engine diagnostic using WDS. |
| • Excessive crankcase pressure | • Blocked or damaged PCV hose(s).<br>• Blocked crankcase vent oil separator. | • CHECK the PCV system components for blockages, CLEAN or INSTALL new components as necessary. |

## DIAGNOSIS AND TESTING

| Symptom | Possible Sources | Action |
|---|---|---|
| | • Worn or damaged engine components. | • REFER to Section 303-01A [Engine -- 1.25L Duratec-16V (Sigma)/1.4L Duratec-16V (Sigma)/1.6L Duratec-16V (Sigma)] / 303-01B [Engine -- 1.4L Duratorq-TDCi (DV) Diesel] / 303-01C [Engine -- 1.3L Duratec-8V (Rocam)] / 303-01D [Engine -- 2.0L Duratec-HE (MI4)] / 303-01E [Engine -- 1.6L Duratorq-TDCi (DV) Diesel]. |

## REMOVAL AND INSTALLATION

# Exhaust Gas Recirculation (EGR) Valve

### Special Tool(s)

| | |
|---|---|
| 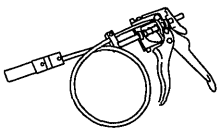 24003 | Remover/Installer, Coolant Hose Clamp 303-397 |

1. **Drain the cooling system.**

   **For additional information, refer to: Cooling System Draining, Filling and Bleeding (303-03 Engine Cooling - 2.0L Duratec-HE (MI4), General Procedures).**

2. **Remove the air cleaner outlet pipe.**

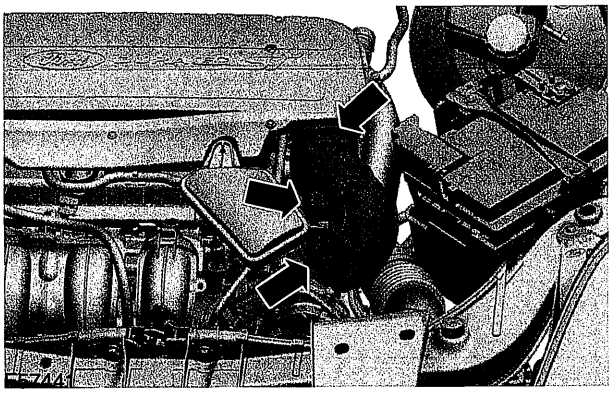

3. **Remove the air cleaner intake tube.**

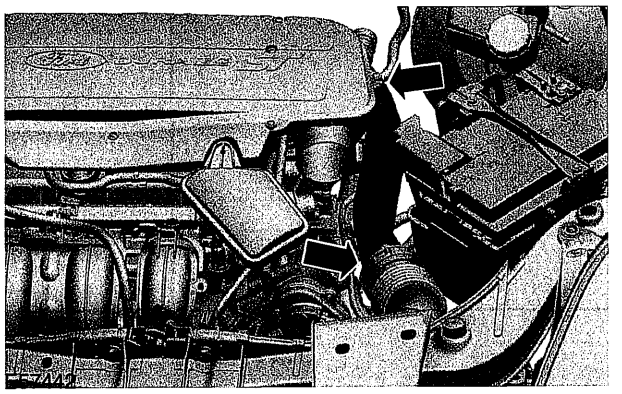

4. **Using the special tool, disconnect the radiator upper coolant hose from the coolant outlet connector.**

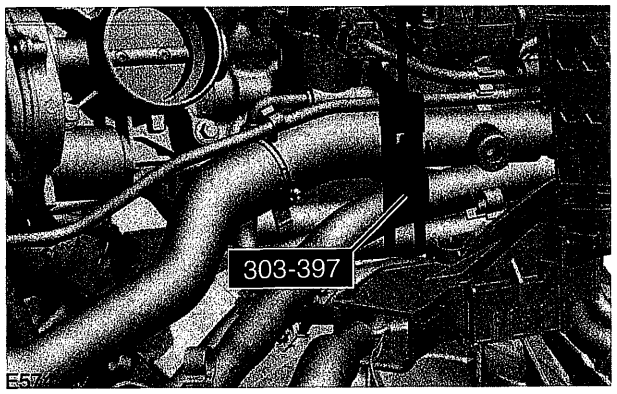


5. **Remove the components in the order indicated in the following illustration(s) and table(s).**

## REMOVAL AND INSTALLATION

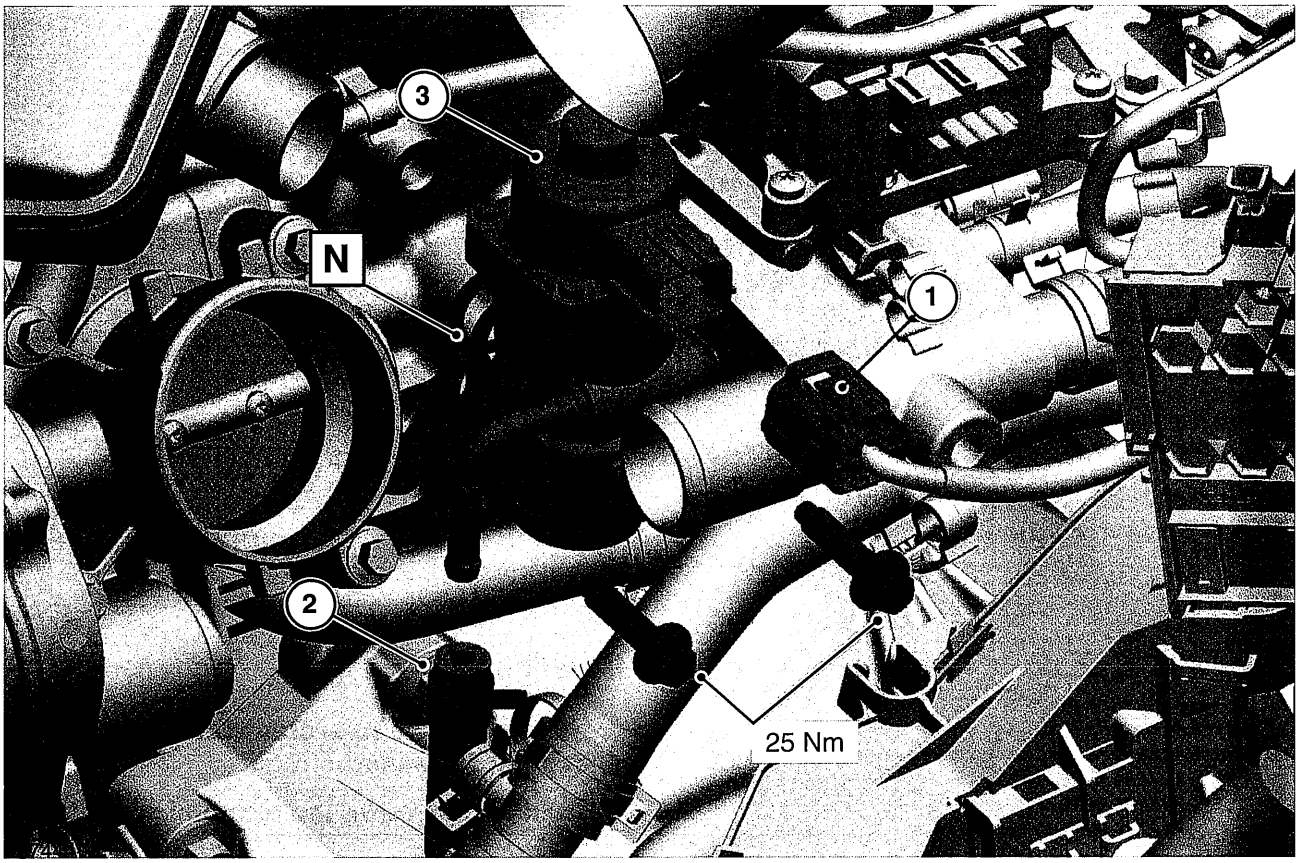


| Item | Description |
|---|---|
| 1 | EGR valve electrical connector |
| 2 | EGR valve coolant hose<br>See Removal Detail |
| 3 | EGR valve |

**6. To install, reverse the removal procedure.**

## REMOVAL AND INSTALLATION

# Crankcase Vent Oil Separator

### Removal

1. **Remove the intake manifold. For additional information, refer to Section 303-01A [Engine -- 1.25L Duratec-16V (Sigma)/1.4L Duratec-16V (Sigma)/1.6L Duratec-16V (Sigma)] / 303-01B [Engine -- 1.4L Duratorq-TDCi (DV) Diesel] / 303-01C [Engine -- 1.3L Duratec-8V (Rocam)] / 303-01D [Engine -- 2.0L Duratec-HE (MI4)] / 303-01E [Engine -- 1.6L Duratorq-TDCi (DV) Diesel].**
2. **Disconnect the positive crankcase ventilation (PCV) hose from the PCV valve.**

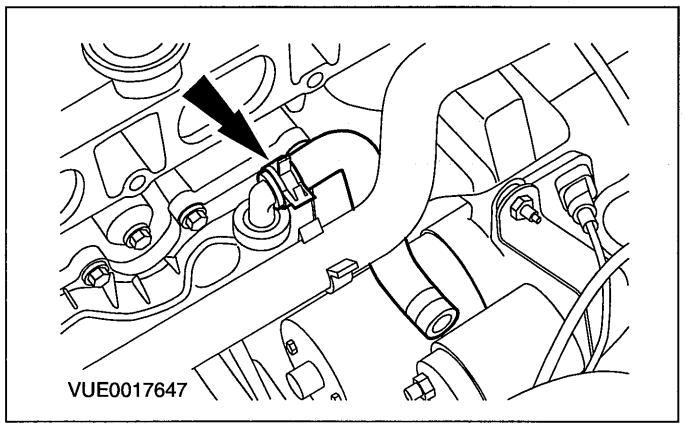


3. **Remove the PCV valve from the crankcase vent oil separator.**
   1. Push in the locking tangs.
   2. Twist the PCV valve to remove.

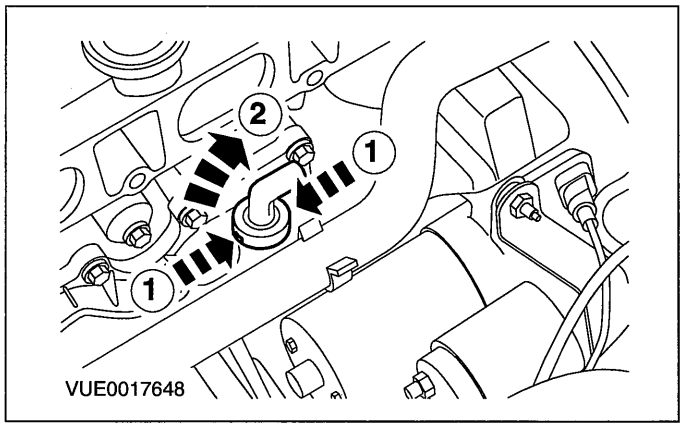


4. **Remove the crankcase vent oil separator.**
   - Discard the gasket.

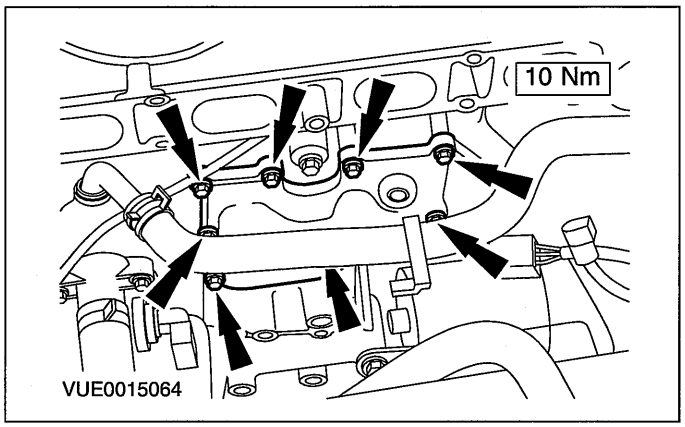


### Installation

1. **NOTE:Install a new crankcase vent oil separator gasket.**

   **To install, reverse the removal procedure.**

# SECTION 303-12 Intake Air Distribution and Filtering

## VEHICLE APPLICATION:2006.0 Fiesta

CONTENTS PAGE


**SPECIFICATIONS**

Specifications ..... 303-12-2

**DESCRIPTION AND OPERATION**

Intake Air Distribution and Filtering — 1.4L Duratec-16V (Sigma)/1.6L Duratec-16V (Sigma) ..... 303-12-3
Intake manifold ..... 303-12-3
Intake Air Distribution and Filtering — 2.0L Duratec-HE (MI4) ..... 303-12-4
2.0L Duratec HE (MI4) engine ..... 303-12-4

**DIAGNOSIS AND TESTING**

Intake Air Distribution and Filtering ..... 303-12-7
Inspection and Verification ..... 303-12-7
Symptom Chart ..... 303-12-7

**REMOVAL AND INSTALLATION**

Air Cleaner — 1.25L Duratec-16V (Sigma)/1.4L Duratec-16V (Sigma)/1.6L Duratec-16V (Sigma) ..... (23 174 0) 303-12-12
Air Cleaner — 2.0L Duratec-HE (MI4) ..... 303-12-13

## SPECIFICATIONS

### Torque Specifications

| Description | Nm | lb-ft | lb-in |
|---|---|---|---|
| Air cleaner intake pipe retaining bolt - vehicles with 1.4L Duratorq-TDCi (DV) diesel engine | 4 | - | 35 |
| Air cleaner retaining screws - vehicles with 1.4L Duratorq-TDCi (DV) diesel engine | 5 | - | 44 |
| Air cleaner outlet hose retaining clip - vehicles with 1.6L Duratorq-TDCi (DV) diesel engine | 4 | - | 35 |
| Air cleaner intake pipe duct retaining bolts - vehicles with 1.6L Duratorq-TDCi (DV) diesel engine | 5 | - | 44 |
| Charge air cooler hose retaining clamps - 1.6L Duratorq-TDCi (DV) diesel engine | 5 | - | 44 |
| Charge air cooler retaining bolts - 1.6L Duratorq-TDCi (DV) diesel engine | 10 | - | 89 |
| Radiator support bracket retaining bolts - 1.6L Duratorq-TDCi (DV) diesel engine | 25 | 18 | - |

## DESCRIPTION AND OPERATION

# Intake Air Distribution and Filtering — 1.4L Duratec-16V (Sigma)/1.6L Duratec-16V (Sigma)

### Intake manifold

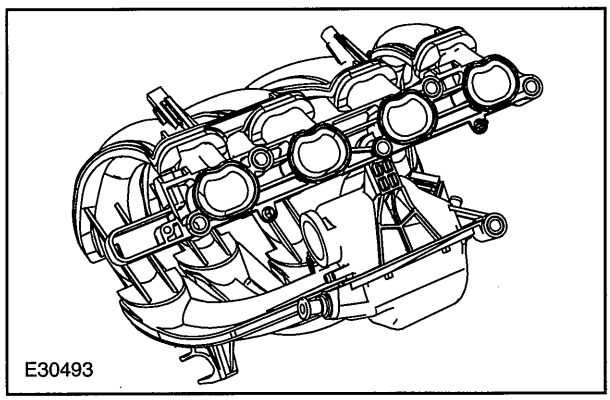


The 1.4l and 1.6l versions feature a revised intake manifold. The overall length of the intake pipes has been increased, but the pipes are of equal length on all cylinders. This has resulted in increased torque in the lower engine speed range and a reduction in noise levels.

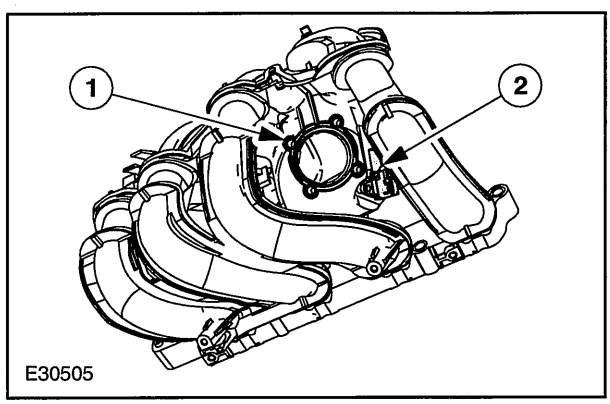


| Item | Description |
|---|---|
| 1 | Mounting for the throttle valve unit |
| 2 | T-MAP sensor |

The mounting for the electronic throttle valve is located inside the intake manifold between the intake pipes of cylinders 1 and 2. The T-MAP sensor, which is used on both the 1.4l and 1.6l versions, is situated next to the throttle valve unit.

## DESCRIPTION AND OPERATION

# Intake Air Distribution and Filtering — 2.0L Duratec-HE (MI4)

## 2.0L Duratec HE (MI4) engine

### Intake manifold and ancillary components

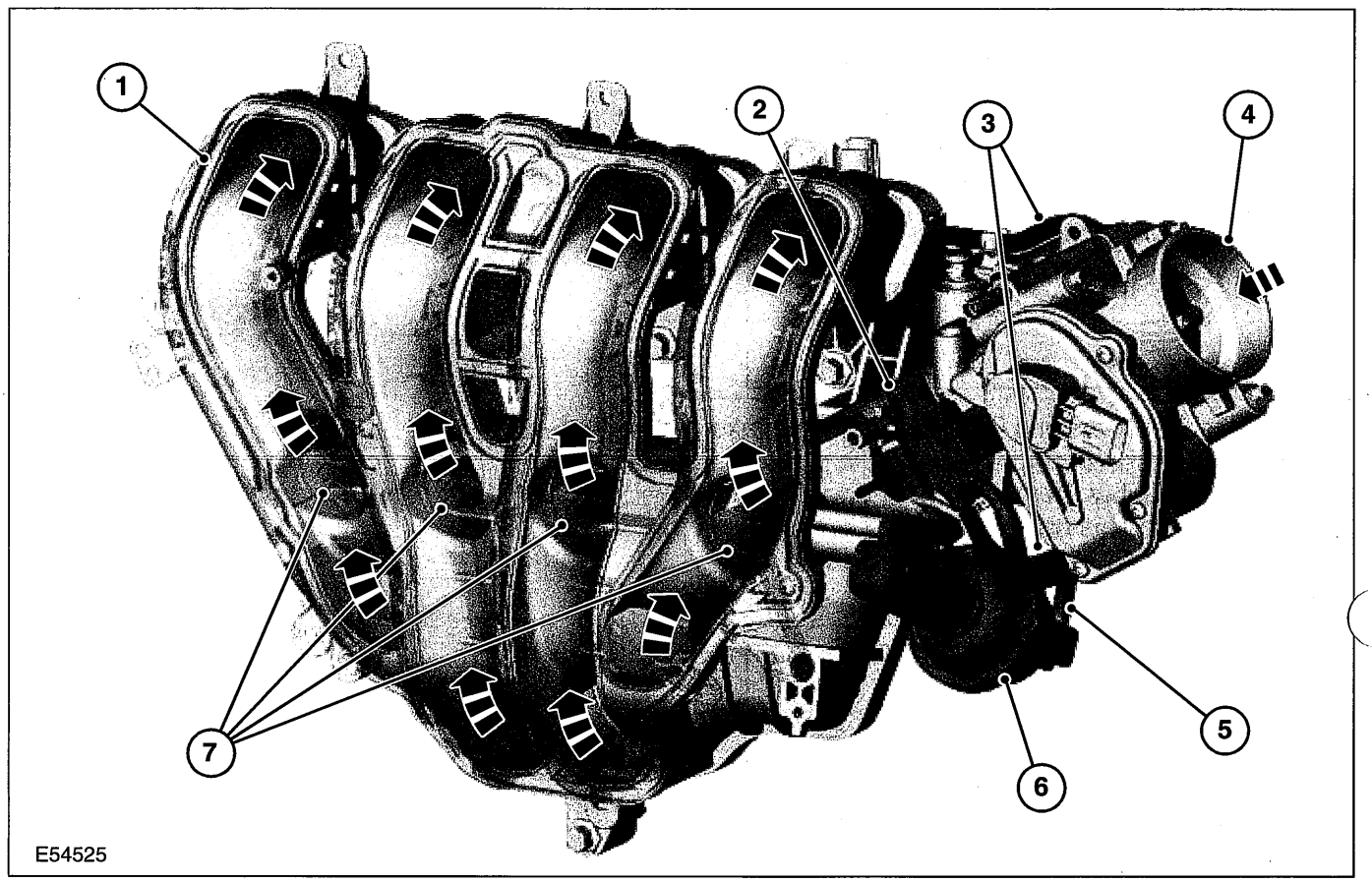


| Item | Description |
|---|---|
| 1 | Intake manifold |
| 2 | Intake manifold tuning valve solenoid |
| 3 | Intake manifold tuning valve |
| 4 | Intake manifold tuning valve solenoid to intake manifold vacuum pipe |

| Item | Description |
|---|---|
| 5 | Intake manifold tuning valve solenoid to intake manifold tuning valve vacuum pipe |
| 6 | Intake manifold tuning valve actuator |
| 7 | Intake manifold tuning valve flaps |

## DESCRIPTION AND OPERATION

### Air intake system

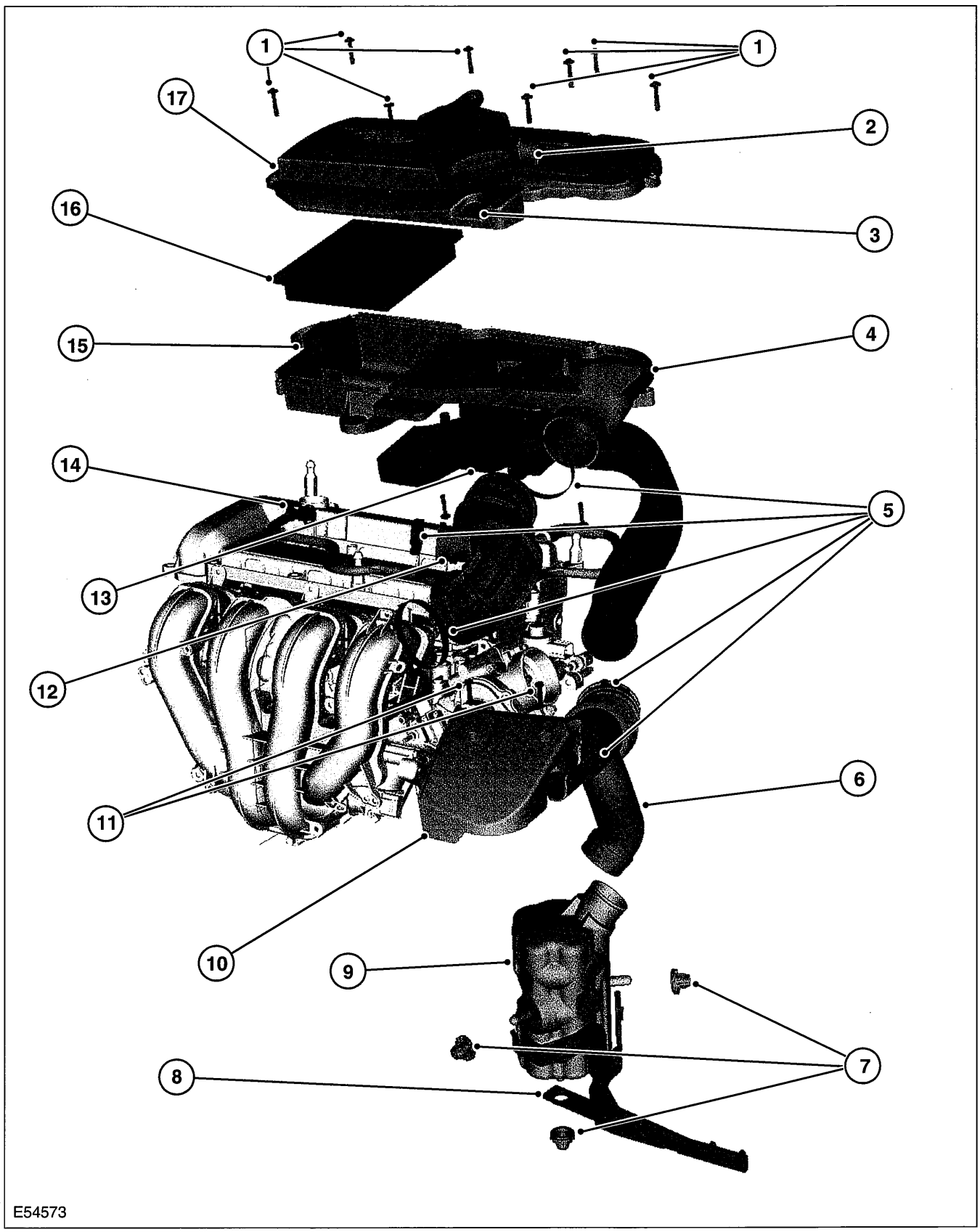

## DESCRIPTION AND OPERATION

| Item | Description |
|---|---|
| 1 | Air cleaner housing cover retaining bolts |
| 2 | Air cleaner housing outlet pipe resonator |
| 3 | Air cleaner housing outlet pipe resonator grommet |
| 4 | Air cleaner housing |
| 5 | Air cleaner pipe retaining clamps |
| 6 | Air cleaner intake pipe |
| 7 | Air cleaner intake pipe resonator isolators |
| 8 | Air cleaner intake pipe resonator retaining bracket |
| 9 | Air cleaner intake pipe resonator |
| 10 | Air cleaner intake pipe duct |
| 11 | Air cleaner intake pipe duct retaining bolts |
| 12 | Air cleaner outlet pipe |
| 13 | Air cleaner housing resonator |
| 14 | Positive crankcase ventilation (PCV) hose |
| 15 | PCV hose foam filter |
| 16 | Air cleaner element |
| 17 | Air cleaner housing cover |

## DIAGNOSIS AND TESTING

# Intake Air Distribution and Filtering

## Inspection and Verification

1. Verify the customer concern.
2. Visually inspect for obvious signs of mechanical or electrical damage.
3. If an obvious cause for an observed or reported concern is found, correct the cause (if possible) before proceeding to the next step.
4. If the cause is not visually evident, verify the symptom and refer to the Symptom Chart.

**Visual Inspection Chart**

| Mechanical | Electrical |
|---|---|
| – Air cleaner element<br>– Air cleaner intake pipe<br>– Air cleaner outlet pipe<br>– Charge air cooler (Vehicles with 1.6L Duratorq-TDCi (DV) Diesel engine)<br>– Charge air cooler intake hose (Vehicles with 1.6L Duratorq-TDCi (DV) Diesel engine)<br>– Charge air cooler outlet hose (Vehicles with 1.6L Duratorq-TDCi (DV) Diesel engine) | – Mass air flow (MAF) sensor<br>– Manifold absolute pressure (MAP) sensor (Vehicles with 1.6L Duratorq-TDCi (DV) Diesel engine)<br>– Electrical connector(s) |

## Symptom Chart

| Symptom | Possible Sources | Action |
|---|---|---|
| • Excessive intake air noise | • Detached air cleaner pipe(s).<br>• Detached turbocharger pipe(s) (Vehicles with Duratorq-TDCi (DV) Diesel engine or 1.6L Duratorq-TDCi (DV) Diesel engine).<br>• Detached charge air cooler hose(s) (Vehicles with 1.6L Duratorq-TDCi (DV) Diesel engine). | • CHECK the pipe(s) for security and leaks to atmosphere. INSTALL new intake air components as necessary. TEST the system for normal operation. |

## DIAGNOSIS AND TESTING

| Symptom | Possible Sources | Action |
|---|---|---|
| • Oil in the air intake system | • Blocked or damaged positive crankcase ventilation (PCV) valve.<br>• Blocked or damaged PCV pipe(s)/hose(s).<br>• Blocked or damaged crankcase vent oil separator. | • Vehicles with 1.25L Duratec-16V (Sigma)/1.3L Duratec-8V (Rocam)/1.4L Duratec-16V (Sigma)/1.6L Duratec-16V (Sigma) engine.<br>REFER to: Crankcase Vent Oil Separator (303-08 Engine Emission Control - 1.3L Duratec-8V (Rocam)/1.25L Duratec-16V (Sigma)/1.4L Duratec-16V (Sigma)/1.6L Duratec-16V (Sigma), Removal and Installation).<br>• Vehicles with 2.0L Duratec-HE (MI4) engine.<br>REFER to: Crankcase Vent Oil Separator (303-08C Engine Emission Control - 2.0L Duratec-HE (MI4), Removal and Installation). |
| | • Turbocharger (Vehicles with Duratorq-TDCi (DV) Diesel engine or 1.6L Duratorq-TDCi (DV) Diesel engine). | • Vehicles with 1.4L Duratorq-TDCi (DV) Diesel engine.<br>REFER to: Turbocharger (303-04 Fuel Charging and Controls - Turbocharger - 1.4L Duratorq-TDCi (DV) Diesel, Removal and Installation).<br>• Vehicles with 1.6L Duratorq-TDCi (DV) Diesel engine.<br>REFER to: Turbocharger - 1.6L Duratorq-TDCi (DV) Diesel (303-04 Fuel Charging and Controls - Turbocharger - 1.6L Duratorq-TDCi (DV) Diesel, Removal and Installation). |
| • Water in the air cleaner | • Detached air cleaner intake pipe. | • CHECK the air cleaner intake pipe for security. INSTALL new intake air system components as necessary. TEST the system for normal operation. |
| | • Blocked air cleaner drain. | • CLEAN the air cleaner drain. TEST the system for normal operation. |
| • Engine lacks power | • Air cleaner element blocked. | • INSPECT the air cleaner for signs of blockage. INSTALL a new air cleaner element as necessary. |

## DIAGNOSIS AND TESTING

| Symptom | Possible Sources | Action |
|---|---|---|
| | • Charge air cooler pipe(s) (Vehicles with 1.6L Duratorq-TDCi (DV) Diesel engine). | • INSPECT the charge air cooler pipes for damage. INSTALL a new charge air cooler pipe(s) as necessary. |
| | • Charge air cooler blocked (Vehicles with 1.6L Duratorq-TDCi (DV) Diesel engine). | • INSPECT the charge air cooler for blockage. INSTALL a new charge air cooler as necessary.<br>REFER to: Charge Air Cooler - 1.6L Duratorq-TDCi (DV) Diesel (303-12 Intake Air Distribution and Filtering, Removal and Installation). |

## DIAGNOSIS AND TESTING

| Symptom | Possible Sources | Action |
|---|---|---|
| | • Fuel charging and controls | • Vehicles with 1.3L Duratec-8V (Rocam) engine.<br>REFER to: Fuel Charging and Controls (303-04 Fuel Charging and Controls - 1.3L Duratec-8V (Rocam), Diagnosis and Testing).<br>• Vehicles with 1.25L Duratec-16V (Sigma)/1.4L Duratec-16V (Sigma)/1.6L Duratec-16V (Sigma) engine.<br>REFER to: Fuel Charging and Controls (303-04 Fuel Charging and Controls - 1.25L Duratec-16V (Sigma)/1.4L Duratec-16V (Sigma)/1.6L Duratec-16V (Sigma), Diagnosis and Testing).<br>• Vehicles with 1.4L Duratorq-TDCi (DV) Diesel engine.<br>REFER to: Fuel Charging and Controls (303-04 Fuel Charging and Controls - 1.4L Duratorq-TDCi (DV) Diesel, Diagnosis and Testing).<br>• Vehicles with 2.0L Duratec-HE (MI4) engine.<br>REFER to: Fuel Charging and Controls (303-04 Fuel Charging and Controls - 2.0L Duratec-HE (MI4), Diagnosis and Testing).<br>• Vehicles with 1.6L Duratorq-TDCi (DV) Diesel engine.<br>REFER to: Fuel Charging and Controls (303-04 Fuel Charging and Controls - 1.6L Duratorq-TDCi (DV) Diesel, Diagnosis and Testing). |

## DIAGNOSIS AND TESTING

| Symptom | Possible Sources | Action |
|---|---|---|
| | • Turbocharger (Vehicles with Duratorq-TDCi (DV) Diesel engine or 1.6L Duratorq-TDCi (DV) Diesel engine). | • Vehicles with 1.4L Duratorq-TDCi (DV) Diesel engine.<br>REFER to: Turbocharger (303-04 Fuel Charging and Controls - Turbocharger - 1.4L Duratorq-TDCi (DV) Diesel, Removal and Installation).<br>• Vehicles with 1.6L Duratorq-TDCi (DV) Diesel engine.<br>REFER to: Turbocharger - 1.6L Duratorq-TDCi (DV) Diesel (303-04 Fuel Charging and Controls - Turbocharger - 1.6L Duratorq-TDCi (DV) Diesel, Removal and Installation). |

## REMOVAL AND INSTALLATION

# Air Cleaner — 1.25L Duratec-16V (Sigma)/1.4L Duratec-16V (Sigma)/1.6L Duratec-16V (Sigma)(23 174 0)

### Removal

1. **Disconnect the air cleaner outlet pipe and the positive crankcase ventilation (PCV) hose from the air cleaner.**

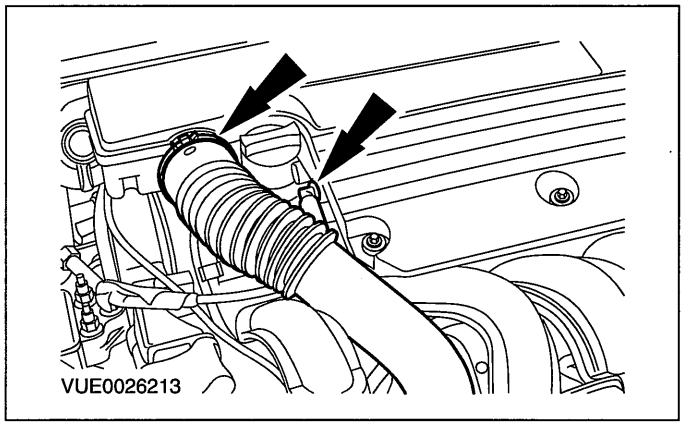


2. **Disconnect the air intake hose from the air cleaner.**

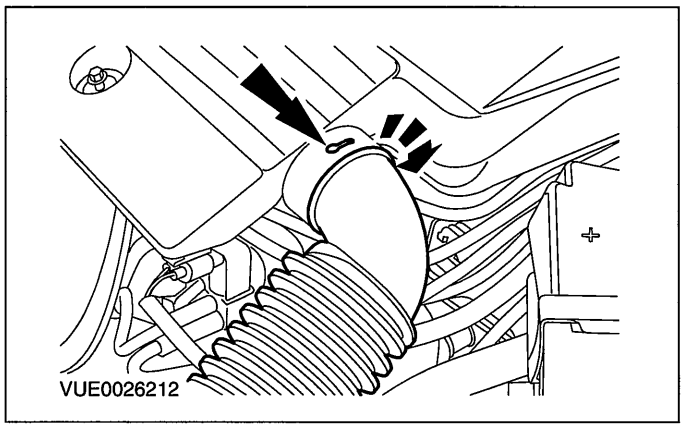


3. **Remove the air cleaner.**
   - Remove the retaining bolts and lift the air cleaner up at the rear to remove.

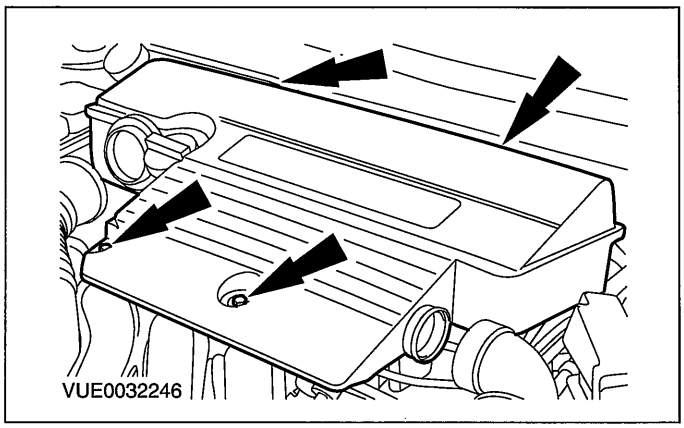


### Installation

1. **NOTE:Locate the rear isolators onto the rear mounting pegs and push down.**

   **To install, reverse the removal procedure.**

## REMOVAL AND INSTALLATION

# Air Cleaner — 2.0L Duratec-HE (MI4)

1. **Remove the components in the order indicated in the following illustration(s) and table(s).**

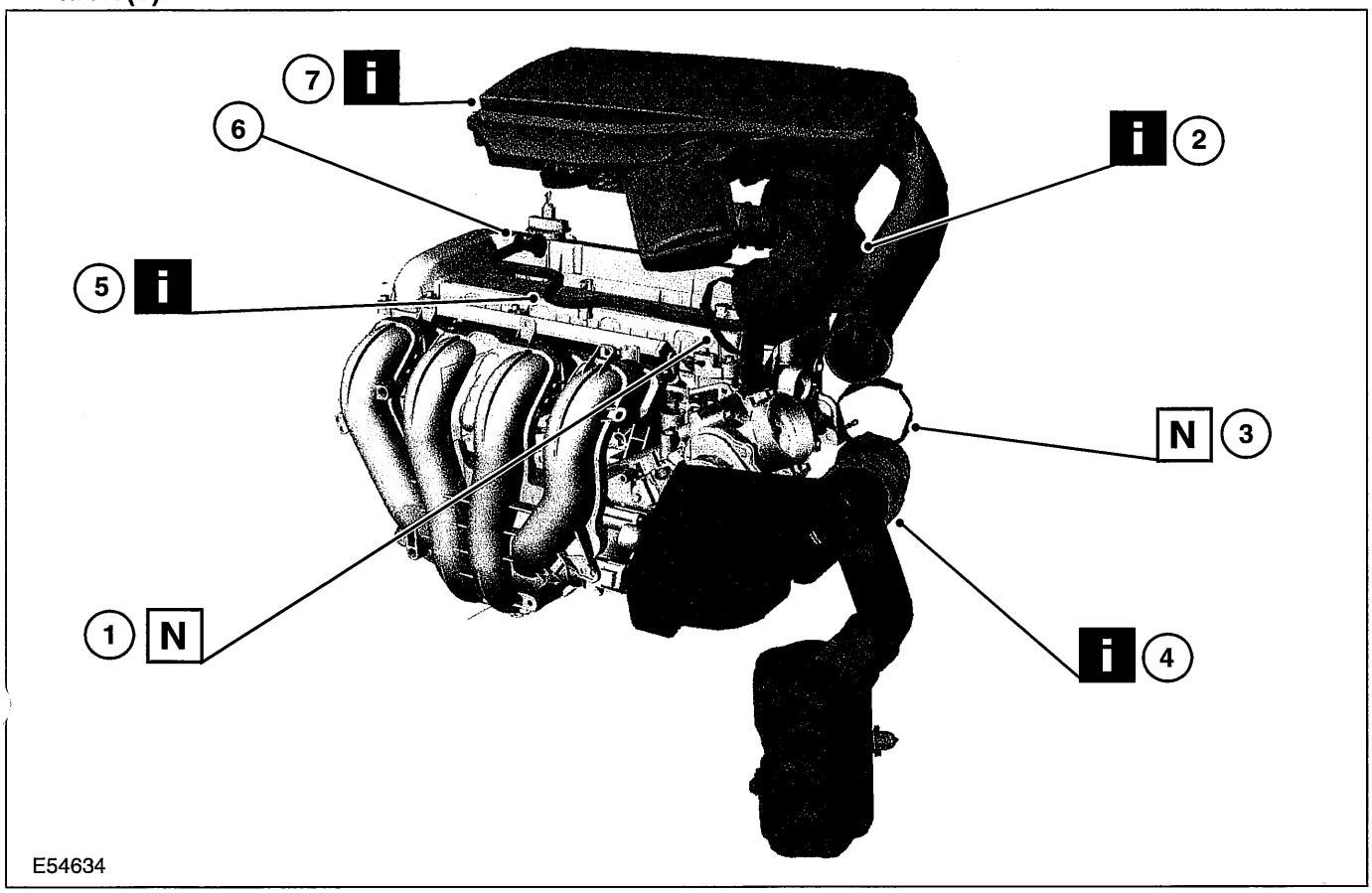


| Item | Description |
|---|---|
| 1 | Air cleaner outlet pipe retaining clip |
| 2 | Air cleaner outlet pipe<br>See Removal Detail |
| 3 | Air cleaner intake pipe retaining clip |
| 4 | Air cleaner intake pipe<br>See Removal Detail |
| 5 | Positive crankcase ventilation (PCV) hose<br>See Removal Detail |
| 6 | PCV hose connector |
| 7 | Air cleaner<br>See Removal Detail |

2. **To install, reverse the removal procedure.**

# Removal Details

### Item 2 Air cleaner outlet pipe

1. **Detach the air cleaner outlet pipe from the throttle body.**

### Item 4 Air cleaner intake pipe

1. **Detach the air cleaner intake pipe from the air cleaner.**

### Item 5 Positive crankcase ventilation (PCV) hose

1. **Detach the PCV hose from the air cleaner.**

## REMOVAL AND INSTALLATION

### Item 7 Air cleaner

1. ⚠CAUTION:Make sure the air cleaner is removed from the air cleaner mountings in a vertical direction. Failure to follow this instruction may cause damage to the air cleaner and air cleaner mountings.

   Detach the air cleaner from the air cleaner mountings and remove the air cleaner.

# SECTION 303-13 Evaporative Emissions

## VEHICLE APPLICATION:2006.0 Fiesta

CONTENTS PAGE

**DESCRIPTION AND OPERATION**

Evaporative Emissions..... 303-13-2
Overview..... 303-13-2

**DIAGNOSIS AND TESTING**

Evaporative Emissions..... 303-13-3
Inspection and Verification..... 303-13-3

**REMOVAL AND INSTALLATION**

Evaporative Emission Canister — 1.3L Duratec-8V (Rocam)/1.25L Duratec-16V (Sigma)/1.4L Duratec-16V (Sigma)/1.6L Duratec-16V (Sigma). (29 250 0) 303-13-4

## DESCRIPTION AND OPERATION

# Evaporative Emissions

### Overview

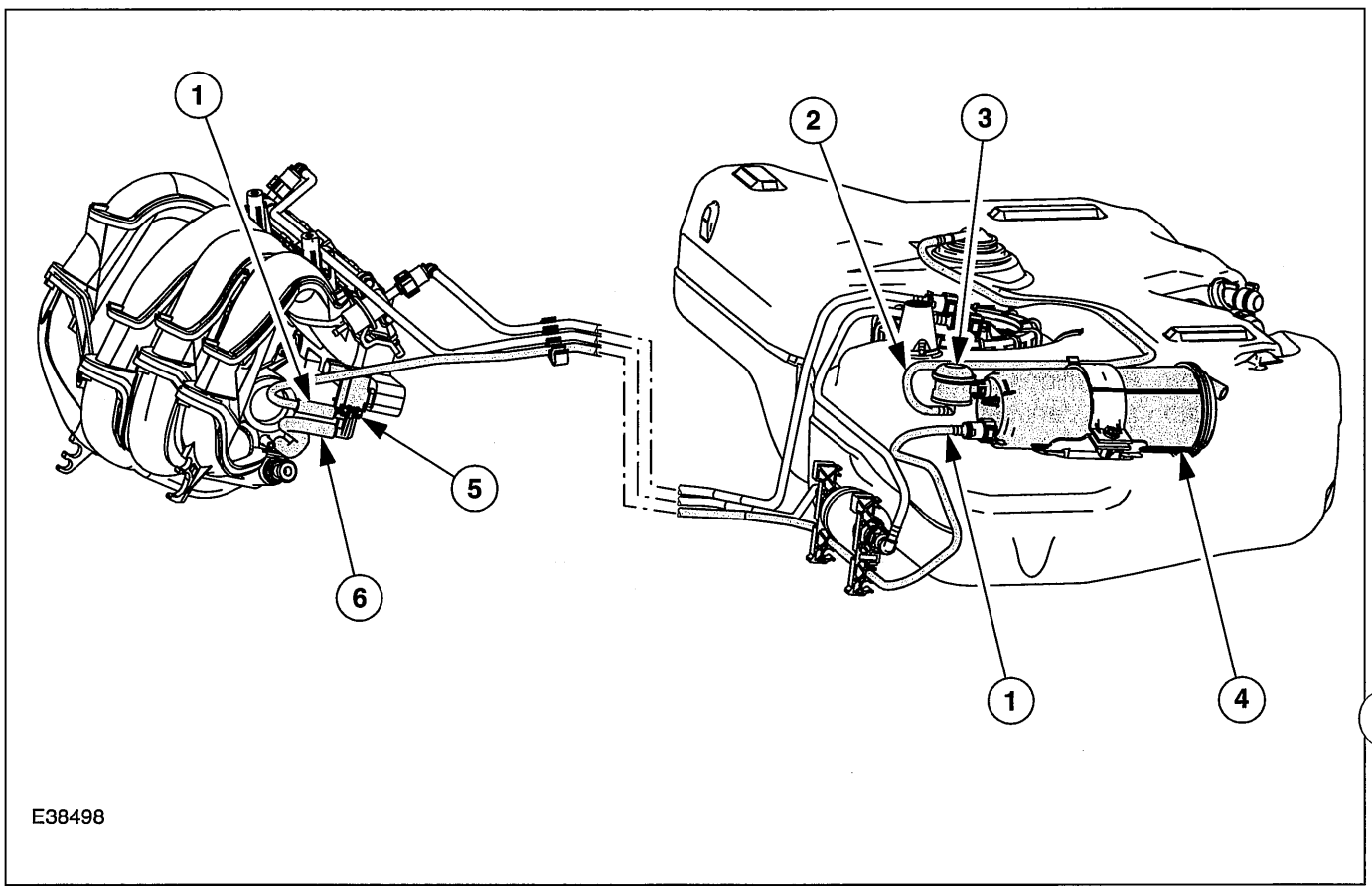


| Item | Description |
|---|---|
| 1 | From activated charcoal canister |
| 2 | From fuel tank |
| 3 | Non-return valve |
| 4 | Carbon canister |
| 5 | Evaporative Emission (EVAP) solenoid valve |
| 6 | To the intake manifold |

The EVAP collection system prevents fuel vapours from reaching the atmosphere.

To achieve this, the fuel vapours are led from the fuel tank into the activated charcoal canister, and temporarily stored there.

Under part load the Powertrain Control Module (PCM) activates the EVAP solenoid valve. This causes the fuel vapours to be passed on to the intake system of the engine.

## DIAGNOSIS AND TESTING

# Evaporative Emissions

## Inspection and Verification

1. Verify the customer concern.
2. Visually inspect for obvious signs of mechanical or electrical damage.

**Visual Inspection Chart**

| Mechanical | Electrical |
|---|---|
| – Vacuum line(s)<br>– Evaporative emission (EVAP) system canister<br>– EVAP system hose(s)<br>– EVAP system canister purge valve | – Fuse(s)<br>– Wiring harness<br>– Electrical connector(s) |

3. If an obvious cause for an observed or reported concern is found, correct the cause (if possible) before proceeding to the next step.
4. If the cause is not visually evident, verify the symptom and refer to WDS to diagnose the system.

## REMOVAL AND INSTALLATION

# Evaporative Emission Canister — 1.3L Duratec-8V (Rocam)/1.25L Duratec-16V (Sigma)/1.4L Duratec-16V (Sigma)/1.6L Duratec-16V (Sigma)(29 250 0)

**General Equipment**

| |
|---|
| Transmission jack |

## Removal

**WARNINGS:**

▲ **Do not smoke or carry lighted tobacco or open flame of any type when working on or near fuel related components. Highly flammable vapors are always present and may ignite. Failure to follow these instructions may result in personal injury.**

▲ **This procedure involves fuel handling. Be prepared for fuel spillage at all times and always observe fuel handling precautions. Failure to follow these instructions may result in personal injury.**

1. **Raise and support the vehicle. For additional information, refer to Section 100-02 [Jacking and Lifting].**
2. **Remove the floor panel crossmember.**

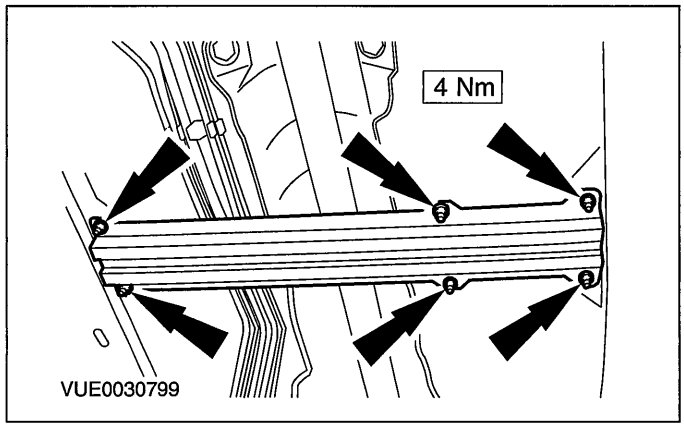


3. **Detach the exhaust system from the center exhaust hanger insulator.**

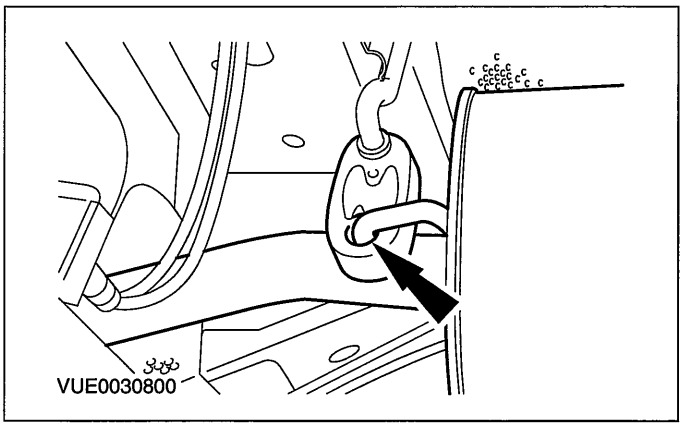


4. **NOTE:When detaching the exhaust system allow the system to be supported by the rear suspension assembly.**

   **Detach the exhaust system from the rear exhaust hanger insulator.**

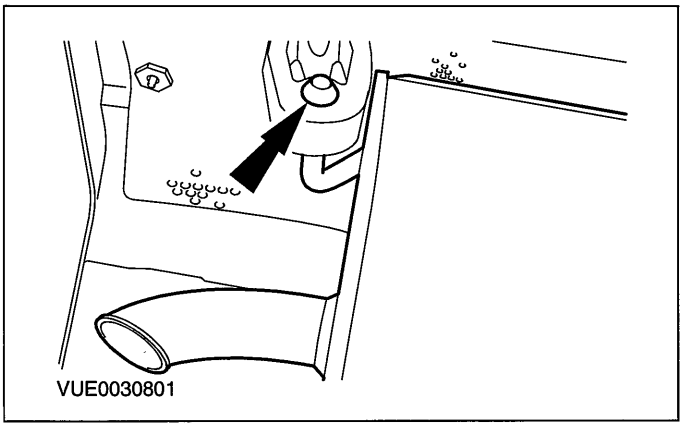


5. **Remove the exhaust system heat shield.**

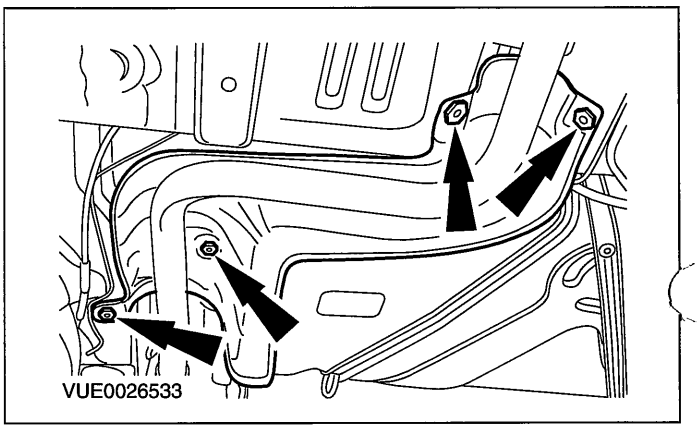

## REMOVAL AND INSTALLATION

6. ⚠CAUTION:Use a suitable packing material to prevent damage to the underside of the fuel tank.

   Using a suitable transmission jack , support the fuel tank.

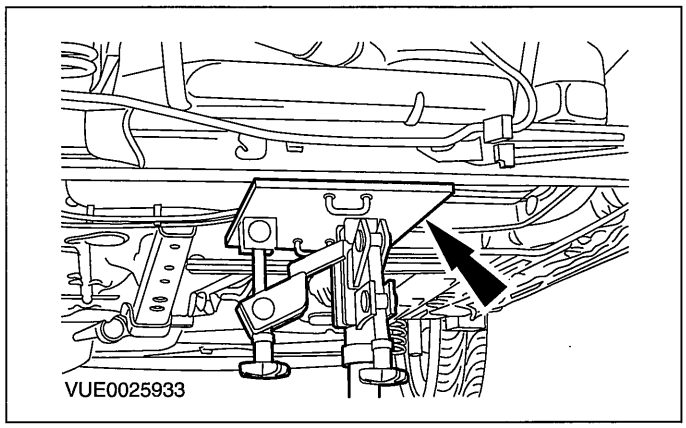


7. Remove the fuel tank support strap rear retaining bolts.

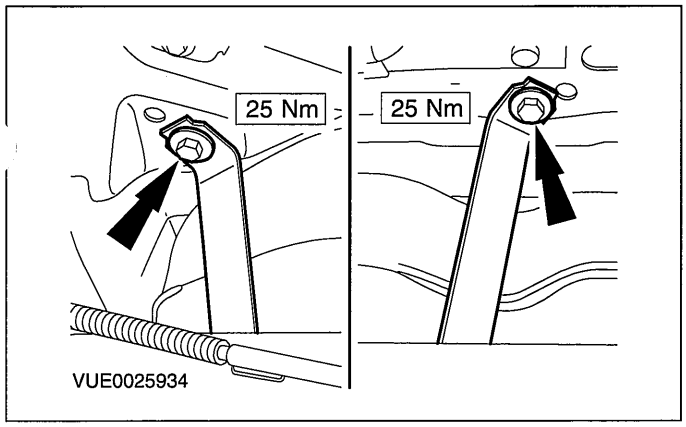


8. NOTE:Make note of the positions of the support straps to make sure they are positioned in exactly the same positions when installing (left-hand over right-hand).

   Remove the fuel tank support straps.

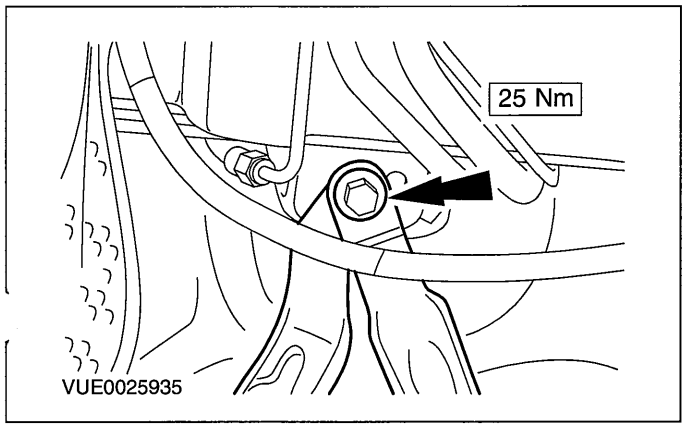


9. ⚠CAUTION:When lowering the fuel tank, make sure that excessive strain is not placed on the fuel lines and electrical connectors.

   Partially lower the fuel tank.

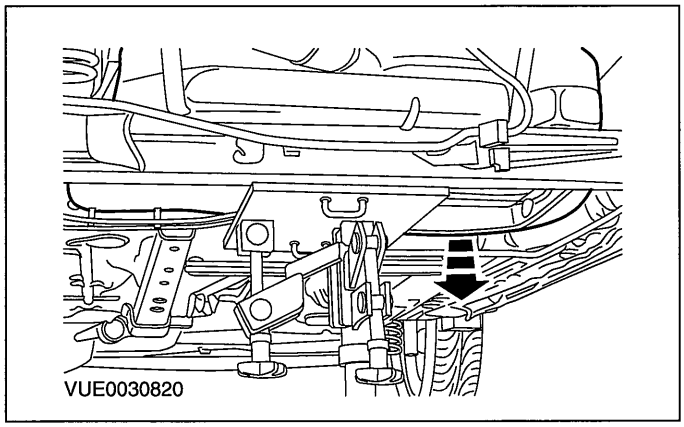


10. Disconnect the fuel tank vent pipe from the evaporative emission canister. For additional information, refer to Section 310-00 [Fuel System - General Information].

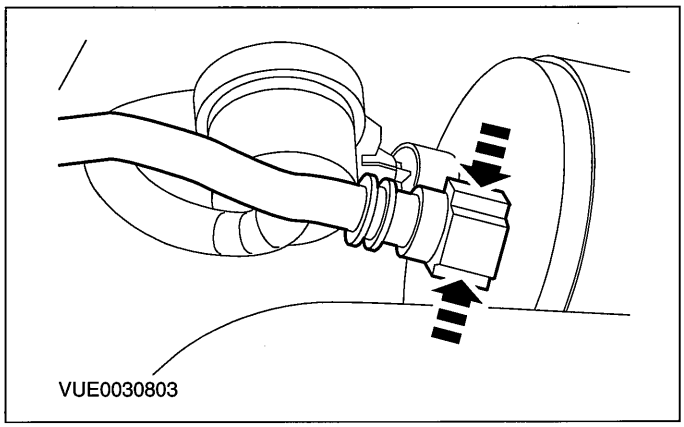


11. Disconnect the back pressure valve from the evaporative emission canister.
    - Hold the cap against the canister and pull the back pressure valve.

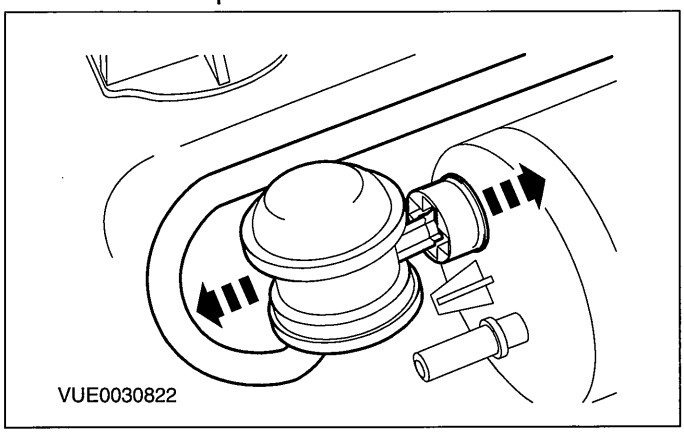

## REMOVAL AND INSTALLATION

12. **Remove the evaporative emissions canister from the fuel tank.**

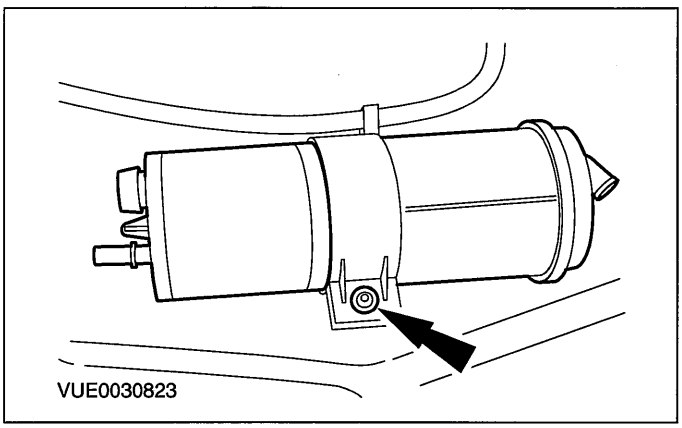


### Installation

1. **WARNINGS:**

   **▲Do not smoke or carry lighted tobacco or open flame of any type when working on or near fuel related components. Highly flammable vapors are always present and may ignite. Failure to follow these instructions may result in personal injury.**

   **▲This procedure involves fuel handling. Be prepared for fuel spillage at all times and always observe fuel handling precautions. Failure to follow these instructions may result in personal injury.**

**NOTE:** When installing the fuel tank make sure the fuel lines do not get kinked or trapped.

**To install, reverse the removal procedure.**

# SECTION 303-14 Electronic Engine Controls

## VEHICLE APPLICATION:2006.0 Fiesta

CONTENTS PAGE


**SPECIFICATIONS**

Specifications ..... 303-14-2

**DESCRIPTION AND OPERATION**

Electronic Engine Controls — 1.25L Duratec-16V (Sigma)/1.4L Duratec-16V (Sigma)/1.6L Duratec-16V (Sigma) ..... 303-14-4
Overview ..... 303-14-4
Throttle Control Unit (TCU) ..... 303-14-6
CPP switch ..... 303-14-7
(Brake Pedal Position) BPP switch ..... 303-14-8
APP sensor ..... 303-14-8
Electronic Engine Controls — 2.0L Duratec-HE (MI4) ..... 303-14-10
System Overview, 2.0L Duratec HE (MI4) Engine ..... 303-14-10
Components ..... 303-14-11

**DIAGNOSIS AND TESTING**

Electronic Engine Controls ..... 303-14-14
Principles of Operation ..... 303-14-14
MIL Code List ..... 303-14-17
Inspection and Verification ..... 303-14-21

**REMOVAL AND INSTALLATION**

Powertrain Control Module (PCM) — 1.25L Duratec-16V (Sigma)/1.4L Duratec-16V (Sigma)/1.6L Duratec-16V (Sigma) ..... (29 200 0) 303-14-22
Powertrain Control Module (PCM) — 2.0L Duratec-HE (MI4), Vehicles With: PCM Security Shield ..... 303-14-24
Powertrain Control Module (PCM) — 2.0L Duratec-HE (MI4), Vehicles Without: PCM Security Shield ..... 303-14-27
Heated Oxygen Sensor (HO2S) ..... (29 220 0) 303-14-30
Crankshaft Position (CKP) Sensor ..... 303-14-32
Knock Sensor (KS) ..... 303-14-35

## SPECIFICATIONS

**Torque Specifications - vehicles with 1.3L Duratec-8V (Rocam) engine**

| Description | Nm | lb-ft | lb-in |
|---|---|---|---|
| Powertrain control module (PCM) retaining bolts | 3 | - | 27 |
| Knock sensor (KS) retaining bolt | 20 | 15 | - |
| Crankshaft position (CKP) sensor retaining bolt | 10 | - | 89 |
| Camshaft position (CMP) sensor retaining bolt | 6 | - | 53 |
| Throttle position (TP) sensor screws | 5 | - | 44 |
| Idle air control (IAC) valve retaining bolts | 10 | - | 89 |
| Ignition coil pack retaining bolts | 6 | - | 53 |
| Exhaust manifold heatshield retaining bolts | 10 | - | 89 |
| Heated oxygen sensor (HO2S) | 47 | 35 | - |
| Catalyst monitor sensor (CMS) | 47 | 35 | - |

**Torque Specifications - vehicles with 1.25L Duratec-16V (Sigma)/1.4L Duratec-16V (Sigma)/1.6L Duratec-16V (Sigma) engine**

| Description | Nm | lb-ft | lb-in |
|---|---|---|---|
| Powertrain control module (PCM) retaining bolts | 3 | - | 27 |
| Knock sensor (KS) retaining bolt | 20 | 15 | - |
| Cylinder head temperature (CHT) sensor | 25 | 18 | - |
| Crankshaft position (CKP) sensor retaining bolt | 10 | - | 89 |
| Camshaft position (CMP) sensor retaining bolt | 10 | - | 89 |
| Engine coolant temperature (ECT) sensor | 20 | 15 | - |
| Idle air control (IAC) valve | 10 | - | 89 |
| Heated oxygen sensor (HO2S) | 47 | 35 | - |
| Catalyst monitor sensor (CMS) | 47 | 35 | - |

**Torque Specifications - vehicles with 1.4L Duratorq-TDCi (DV) Diesel engine**

| Description | Nm | lb-ft | lb-in |
|---|---|---|---|
| Powertrain control module (PCM) retaining nuts and retaining bolts | 10 | - | 89 |
| Timing belt upper cover retaining bolts | 4 | - | 35 |
| Timing belt lower cover retaining bolts | 6 | - | 53 |
| Camshaft position (CMP) sensor retaining bolt | 5 | - | 44 |
| Crankshaft position (CKP) sensor retaining bolt | 8 | - | 71 |
| Crankshaft pulley retaining bolt | a | - | - |

a)

For additional information, refer to: Crankshaft Position (CKP) Sensor - 1.4L Duratorq-TDCi (DV) Diesel (303-14 Electronic Engine Controls, Removal and Installation).

## SPECIFICATIONS

### Torque Specifications - vehicles with 1.6L Duratorq-TDCi (DV) Diesel engine

| Description | Nm | lb-ft | lb-in |
|---|---|---|---|
| Powertrain control module (PCM) retaining nuts and retaining bolts | 10 | - | 89 |
| Timing belt upper cover retaining bolts | 4 | - | 35 |
| Timing belt lower cover retaining bolts | 6 | - | 53 |
| Camshaft position (CMP) sensor retaining bolt | 5 | - | 44 |
| Crankshaft position (CKP) sensor retaining bolt | 8 | - | 71 |
| Crankshaft pulley retaining bolt | a | - | - |

a)

For additional information, refer to: Crankshaft Position (CKP) Sensor - 1.6L Duratorq-TDCi (DV) Diesel (303-14 Electronic Engine Controls, Removal and Installation).

### Torque Specifications - vehicles with 2.0L Duratec-HE (MI4) engine

| Description | Nm | lb-ft | lb-in |
|---|---|---|---|
| Powertrain control module (PCM) retaining bolts | 10 | - | 89 |
| PCM mounting bracket retaining bolts | 25 | 18 | - |
| Knock sensor (KS) retaining bolt | 20 | 15 | - |
| Crankshaft position (CKP) sensor retaining bolt | 7 | - | 62 |
| Camshaft position (CMP) sensor retaining bolt | 6 | - | 53 |
| Ignition coil pack retaining bolts | 6 | - | 53 |
| Exhaust manifold heatshield retaining bolts | 10 | - | 89 |
| Heated oxygen sensor (HO2S) | 47 | 35 | - |
| Catalyst monitor sensor (CMS) | 47 | 35 | - |

## DESCRIPTION AND OPERATION

# Electronic Engine Controls — 1.25L Duratec-16V (Sigma)/1.4L Duratec-16V (Sigma)/1.6L Duratec-16V (Sigma)

### Overview

## DESCRIPTION AND OPERATION

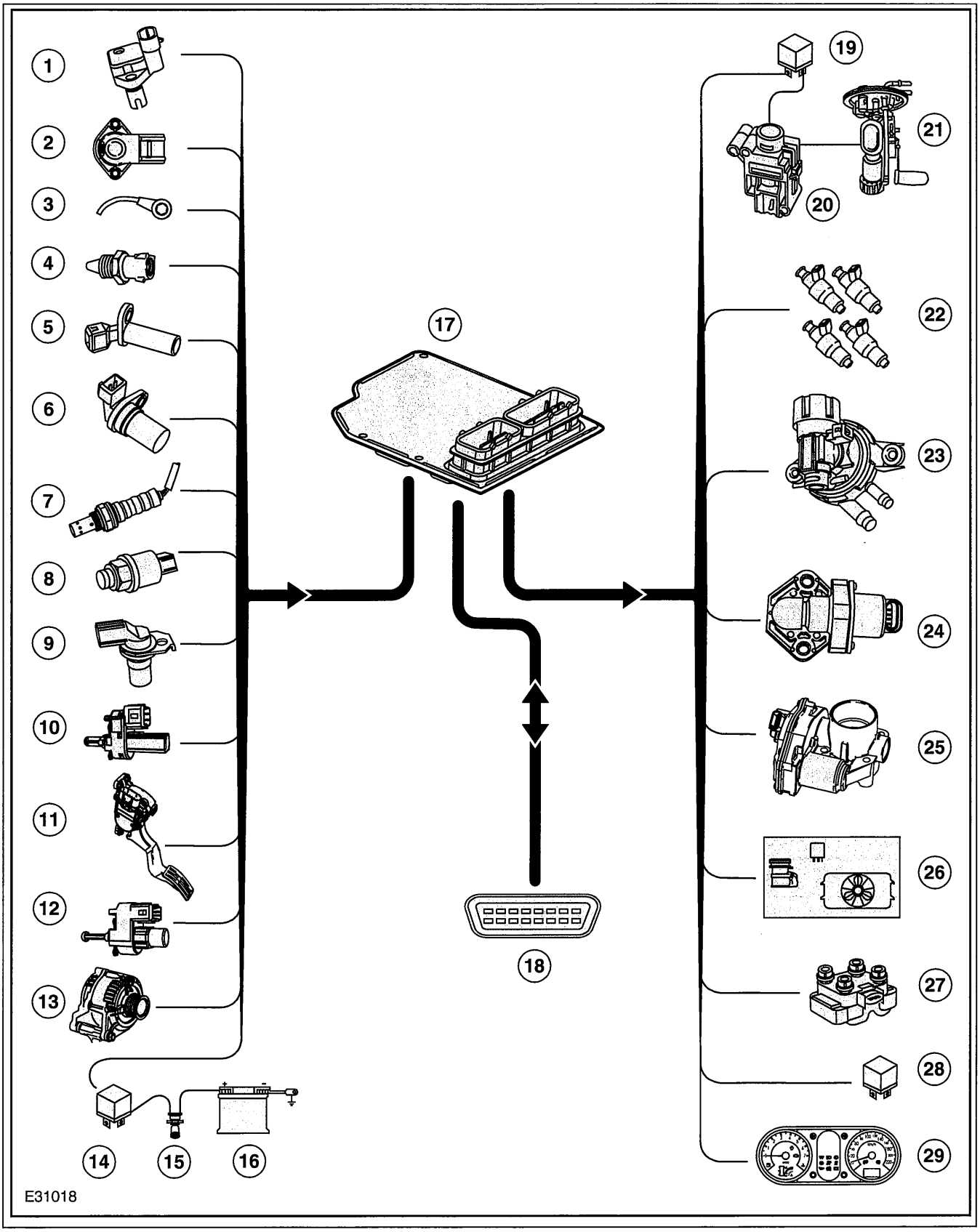


| Item | Description |
|---|---|
| 1 | Temperature and Manifold Absolute Pressure (T-MAP) sensor |
| 2 | Throttle Position (TP) sensor |

| Item | Description |
|---|---|
| 3 | Knock Sensor (KS) |
| 4 | Sensor - Engine Coolant Temperature (ECT) |

## DESCRIPTION AND OPERATION

| Item | Description |
|---|---|
| 5 | Crankshaft Position (CKP) sensor |
| 6 | Camshaft Position (CMP) sensor |
| 7 | Heated Oxygen Sensor (HO2S) |
| 8 | Power Steering Pressure (PSP) sensor |
| 9 | Vehicle Speed Sensor (VSS) (only on vehicles without Anti-lock Braking System (ABS)) |
| 10 | Brake Pedal Position (BPP) switch |
| 11 | Accelerator Pedal Position (APP) sensor |
| 12 | Clutch Pedal Position (CPP) switch |
| 13 | Generator |
| 14 | Current supply relay |
| 15 | Ignition key |
| 16 | Battery |
| 17 | Powertrain Control Module (PCM) |
| 18 | Data Link Connector (DLC) |
| 19 | Fuel Pump (FP) relay |
| 20 | Inertia fuel shut-off switch |
| 21 | Fuel Pump Driver Module (FPDM) |
| 22 | Fuel injectors |
| 23 | Evaporative emissions (EVAP) solenoid valve |
| 24 | Idle Air Control (IAC) valve |
| 25 | Throttle Control Unit (TCU) |
| 26 | Air Conditioning (A/C) compressor clutch / blower switch |
| 27 | Injector Driver Module (IDM) |
| 28 | Start inhibit relay |
| 29 | Instrument cluster |

## Throttle Control Unit (TCU)

### Components

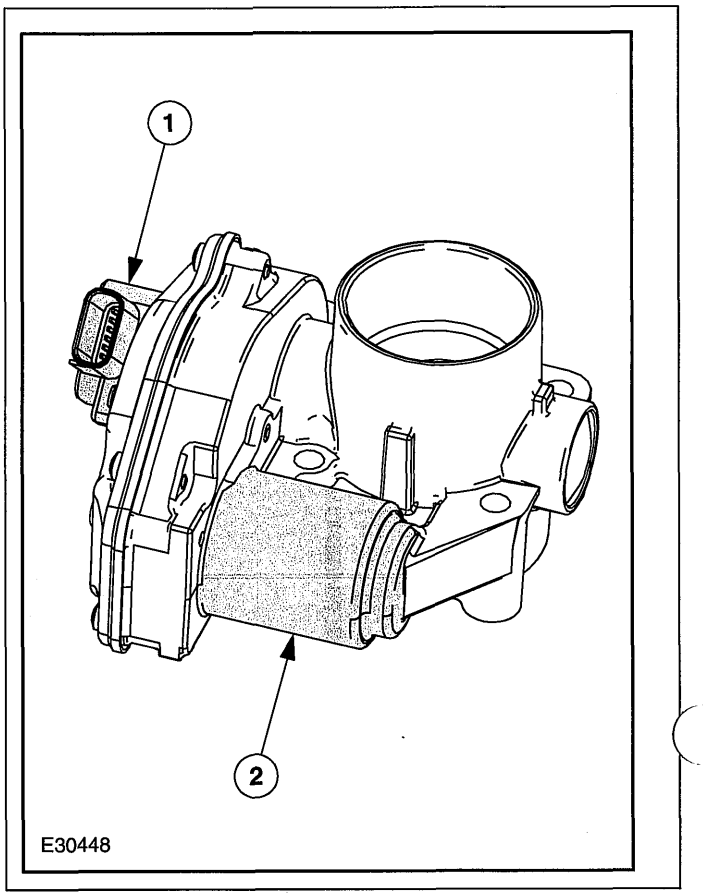


| Item | Description |
|---|---|
| 1 | TP sensor |
| 2 | Electric motor |

The electronically controlled throttle control unit (TCU) consists of the following components:

- Housing
- Throttle flap
- Throttle flap spindle
- Gear set
- Electric motor with pinion
- TP sensor
- Stop screw
- Throttle flap return spring

## DESCRIPTION AND OPERATION

### Function

⚠ **CAUTION:The throttle control unit (TCU) must not be dismantled. No adjustments or repairs can be made to the TCU.**

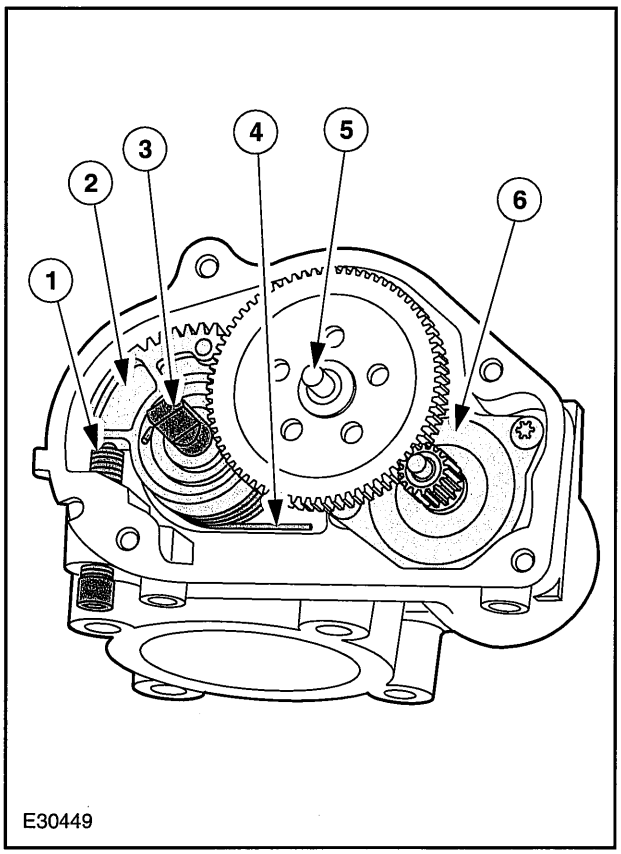


| Item | Description |
|---|---|
| 1 | Stop screw |
| 2 | Toothed segment |
| 3 | Throttle flap spindle |
| 4 | Throttle flap return spring |
| 5 | Intermediate shaft with gear |
| 6 | Electric motor with pinion |

The APP sensor sends the data containing the driver's acceleration requirement to the PCM. This information depends directly on the movement of the accelerator pedal.

The PCM processes this information and converts it into an output signal for the throttle control unit (TCU). This output signal is the control for the electric motor.

The electric motor moves the throttle flap spindle by means of the gear set.

The throttle flap position is adjusted and monitored in a closed control loop. The TP sensor provides the PCM with the information on the actual position of the throttle flap.

### Standby function

If a fault develops in the throttle control unit (TCU), a standby function is carried out. This standby function allows a slight opening of the throttle flap, so that enough air passes through to allow limited engine operation.

For this purpose, there is an throttle flap adjustment screw on the throttle housing. The return spring closes the throttle flap until the stop of the toothed segment touches the stop screw. In this way a defined throttle flap gap is formed for limp home mode.

The stop screw has a spring loaded pin, which holds the throttle flap open for limp home mode. In normal operating mode, this spring loaded pin is pushed in by the force of the electric motor when the throttle flap must be closed past the limp home position (e.g. for idle speed control or overrun shutoff).

### CPP switch

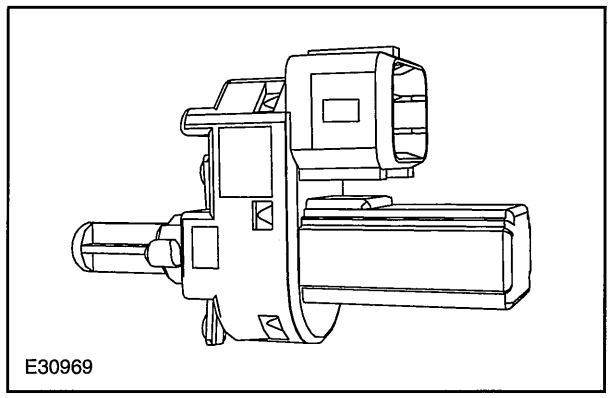


The CPP switch is located directly on the pedal box.

The engine management recognises gearshifts through the CPP switch and thus improves engine running characteristics.

The CPP switch passes a ground signal to the PCM when the clutch pedal is depressed (disengaged).

## DESCRIPTION AND OPERATION

### (Brake Pedal Position) BPP switch

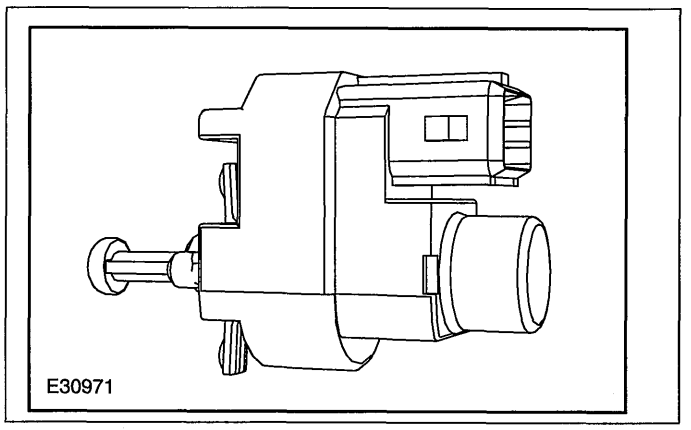


There are two brake pedal switches at the pedal box: the brake lamp switch and the BPP switch. The brake lamp switch only serves to switch on the brake lamps. The BPP switch is used for engine management purposes.

The BPP switch provides the PCM with the information that the vehicle will be decelerated.

The BPP switch is closed in the rest state (brake pedal not depressed) and sends a ground signal to the PCM.

If when the APP sensor has failed, the BPP is operated, the engine will be controlled to run at idle speed by the PCM.

### APP sensor

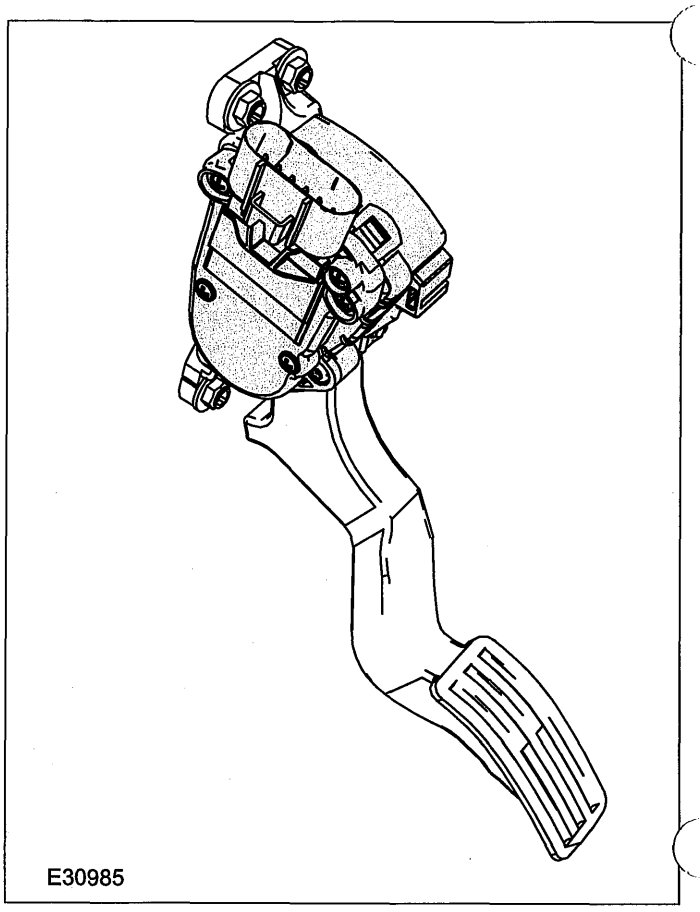


In order that the engine power output can be matched to that required by the driver, the PCM needs to know the position of the APP sensor.

The APP sensor is a variable resistor whose resistance varies with the accelerator position. It is a sliding contact potentiometer (2 potentiometers in total).

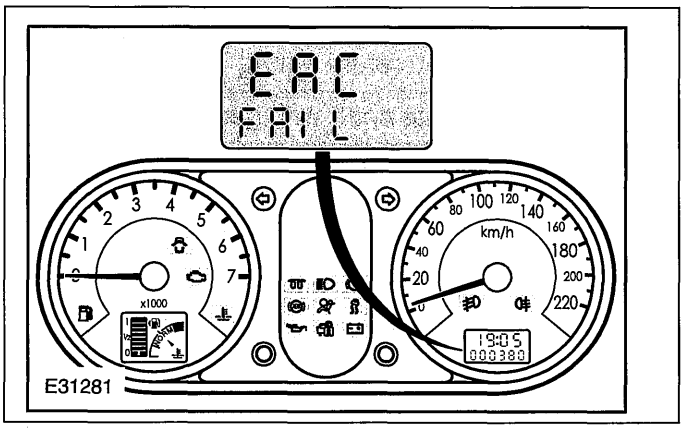


If a fault occurs in the APP sensor or the throttle control unit (TCU) during vehicle operation, then this will be **briefly** indicated by a digital display in the instrument cluster after the ignition is switched on, and a trouble code will be stored in the PCM.

## DESCRIPTION AND OPERATION

If one potentiometer fails, the engine will run with reduced power (maximum torque 80 Nm), if both potentiometers fail, the engine will run with reduced power (maximum torque 55 Nm).

This warning may also be indicated if the engine does not start. The cause may be a poor state of charge of the battery.

The warning indication normally disappears once the battery is re-charged.

## DESCRIPTION AND OPERATION

# Electronic Engine Controls — 2.0L Duratec-HE (MI4)

### System Overview, 2.0L Duratec HE (MI4) Engine

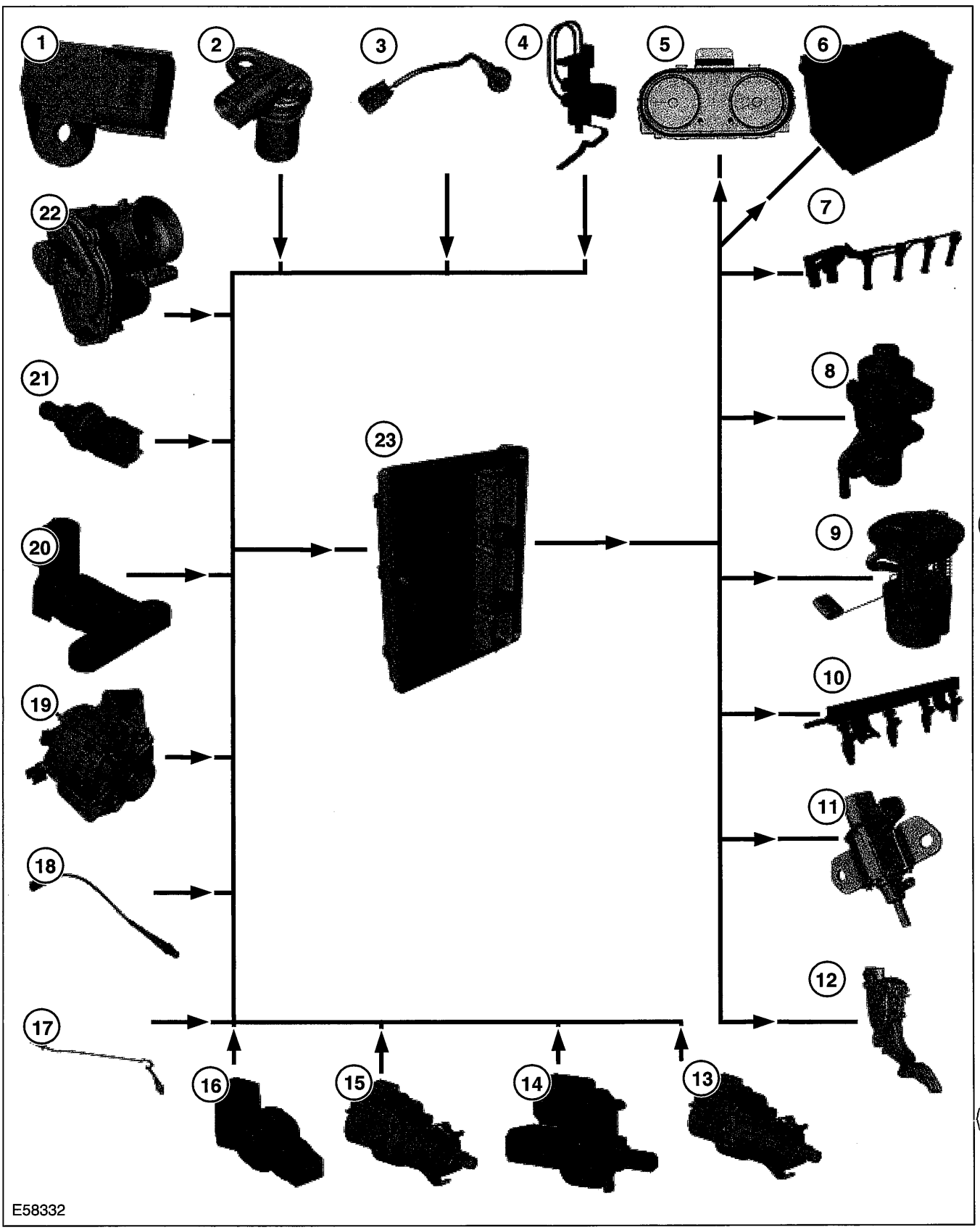

## DESCRIPTION AND OPERATION

| Item | Description |
|---|---|
| 1 | Manifold absolute pressure and temperature (MAPT) sensor |
| 2 | Camshaft position (CMP) sensor |
| 3 | Knock sensor (KS) |
| 4 | Ambient air temperature sensor |
| 5 | Instrument cluster |
| 6 | Battery |
| 7 | Spark plug wires |
| 8 | Exhaust gas recirculation (EGR) valve |
| 9 | Fuel pump module |
| 10 | Fuel rail and fuel injectors |
| 11 | Intake manifold tuning valve solenoid |
| 12 | Accelerator pedal position (APP) sensor |
| 13 | Clutch pedal position (CPP) switch |
| 14 | Brake pedal position (BPP) switch |
| 15 | Stoplamp switch |
| 16 | Power steering pressure (PSP) switch |
| 17 | Catalyst monitor sensor |
| 18 | Heated oxygen sensor (HO2S) |
| 19 | Generator (input signal) |
| 20 | Crankshaft position (CKP) sensor |
| 21 | Engine coolant temperature (ECT) sensor |
| 22 | Throttle position (TP) sensor (part of throttle body) |
| 23 | Powertrain control module (PCM) |

## Components

### MAPT sensor

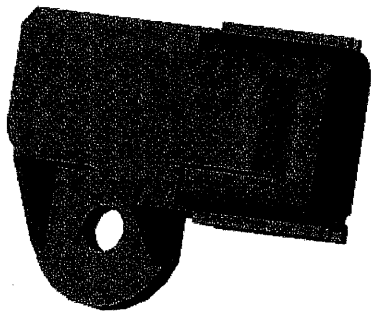

E58425

The MAPT sensor is attached to the housing of the intake manifold valve behind the throttle body. The signal from the MAPT sensor is used to modify the ignition and fuel delivery.

### CMP sensor

E58426

The CMP sensor is located on the right-hand side of the valve cover above the intake camshaft. The CMP sensors send signals to the PCM which are then used by the PCM to calculate the position of the camshaft.

## DESCRIPTION AND OPERATION

### Powertrain control module (PCM)

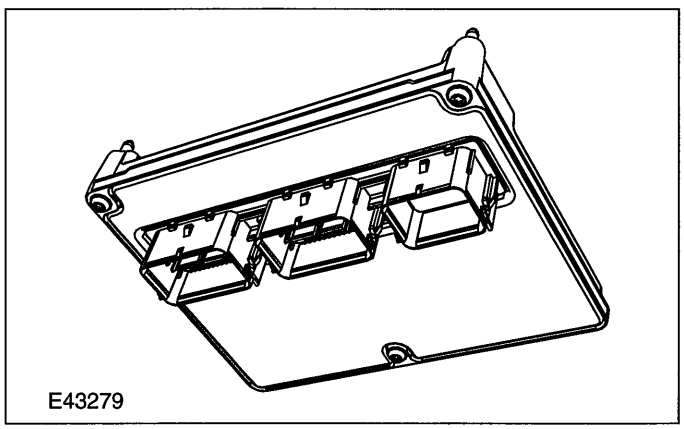
E43279

The powertrain control module is located within the engine compartment below the battery and is secured to the left-hand chassis rail by means of a mounting bracket. On right-hand drive vehicles the PCM is protected by a security shield which is secured to the retaining bracket by a shear-head bolt. In order to disconnect the PCM electrical connectors it is necessary to remove the security shield.

The PCM monitors and processes the signals from the sensors and compares these with stored parameters. The PCM uses this information to calculate the output signals to the actuators.

Communications between the PCM and other control units (for example, the stability assist and the instrument cluster) including the DLC for diagnosis of the system, take place on the controller area network (CAN).

Diagnosis can be carried out through the DLC using the Worldwide Diagnostic System (WDS) diagnostic equipment.

### Knock sensor (KS)

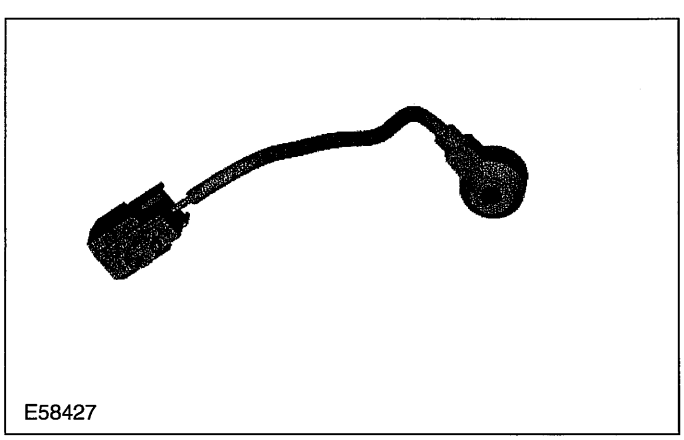
E58427

The knock sensor is located on the cylinder block between cylinders 2 and 3.

The KS detects engine vibrations caused by knock and produces an output voltage signal in proportion to the knock. The PCM uses the voltage signal to control knock by retarding the ignition timing.

### Intake manifold tuning valve solenoid

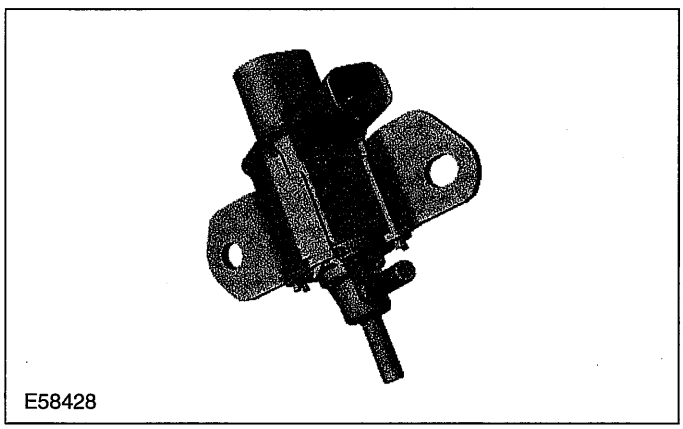
E58428

The solenoid for the intake manifold tuning system is located on the transmission side of the cylinder head.

Vacuum is supplied by a central vacuum connection from the intake manifold.

The solenoid for the intake manifold tuning system is supplied with either the maximum voltage or zero voltage, i.e. the valves are either fully open or fully closed.

Actuation depends on the engine speed and the engine load.

### BPP switch

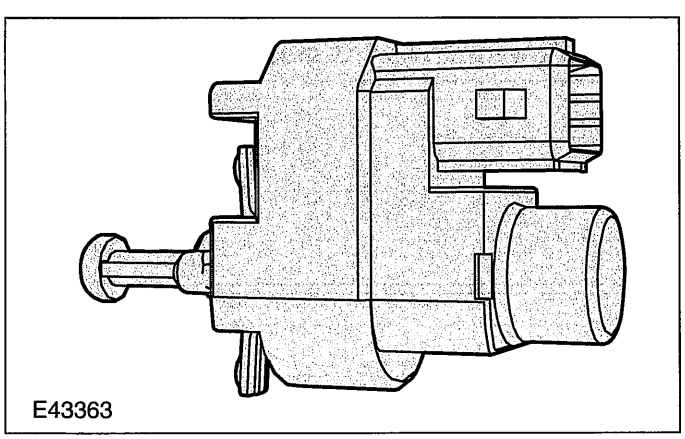
E43363

The BPP switch and the stoplamp switch are located on the pedal box and provide the PCM with the information that the brake pedal has been pressed and that the vehicle is therefore being decelerated.

## DESCRIPTION AND OPERATION

The BPP switch is connected to the instrument cluster via a CAN bus. In its rest state the switch is closed and sends a ground signal to the PCM.

The signal from the BPP switch is used in the event of failure of the APP sensor for the emergency operating mode.

When the brake pedal is pressed again the engine speed drops to idle speed. When the brake pedal returns to its rest position the engine speed is increased again.

### Accelerator pedal position (APP) sensor

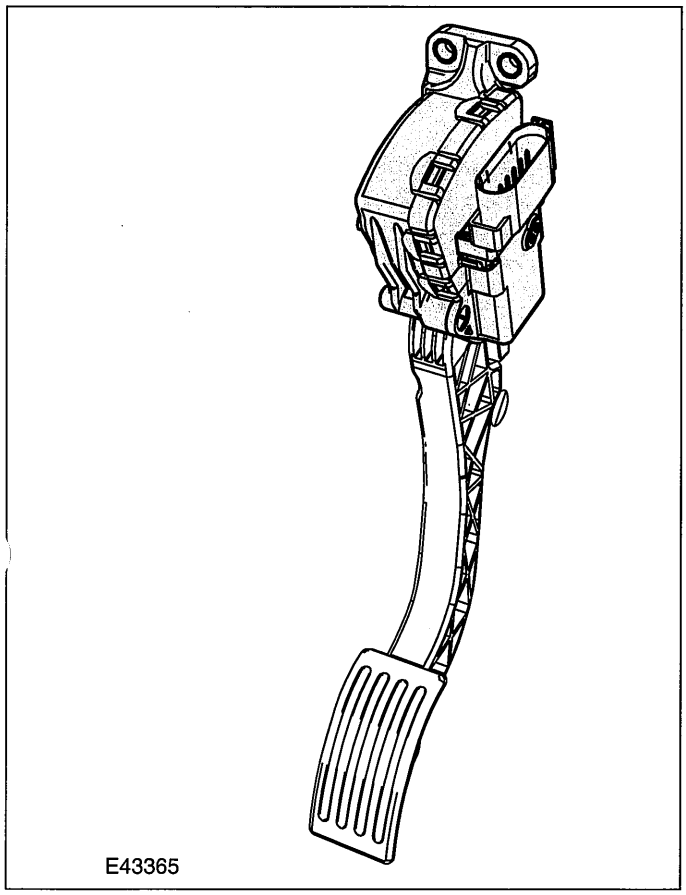


The PCM requires the pedal position from the APP sensor in order to regulate the power output of the engine according to the driver request for power.

The APP sensor is a double contact-less inductive sensor.

If a concern occurs with the APP sensor while driving, a diagnostic trouble code (DTC) is stored in the PCM.

If both sensors of the APP sensor fail, the engine is regulated to a maximum engine speed of up to 4000 rev/min after a single operation of the BPP switch and the stop lamp switch and a subsequent comparative plausibility test. The vehicle can only be accelerated to a maximum speed of 56 km/h.

## DIAGNOSIS AND TESTING

# Electronic Engine Controls

### General Equipment

| |
|---|
| Worldwide Diagnostic System (WDS) |

## Principles of Operation

For Principles of Operation on the electronic accelerator control system

REFER to: Acceleration Control (310-02A, Diagnosis and Testing).

#### European On-Board Diagnostics (EOBD)

EOBD is a diagnostic system integrated into the powertrain control module (PCM). This system continuously monitors vehicle emission components. The system includes a malfunction indicator lamp (MIL) which indicates when there is a concern that can affect emissions or the system malfunctions. Data stored within the module DTC memory can be accessed using a generic scan tool or WDS.

EOBD is mandated within European Union regulations from the year 2000 for passenger vehicles with petrol engines and from 2003 onwards for passenger vehicles with diesel engines.

EOBD Functions:

- Establishes when and how emissions control faults must be indicated.
- Actuates emission control malfunction indicator lamp (MIL) and fault memory.
- Indicates operating conditions in which the concern occurred (freeze frame data).
- Standardized output of operating data such as engine speed, engine coolant temperature etc.
- Standardized names and abbreviations for components and systems.
- Standardized DTCs for all manufacturers.
- Standardized communication with the diagnostic equipment.
- Standardized 16-pin data link connector (DLC) in area of the instrument panel.
- Concern display must be possible using a generic scan tool.

EOBD consists of the following elements:

#### Warm-up Cycle

The warm-up cycle is an operation that consists of key on, engine start and a coolant temperature increase of 22°C, exceeding 71°C on completion.

#### Drive Cycle

A drive cycle commences when the engine is started (cold or warm) and ends when the engine is switched off.

#### Trip

A trip begins when the engine is started and is complete when all the EOBD monitors have completed a self-test. This may take place over a number of drive cycles. On diesel variants, the information gathered from one drive cycle is not carried over to a subsequent cycle or cycles.

When a concern has been rectified, particularly after electronic engine control components have been changed, the DTC memory, which is part of the EEPROM must be cleared of all trouble codes. When the DTC memory has been cleared, the code P1000 (known as the readiness code) is set in the PCM memory, which indicates that since the EEPROM has been cleared, not all of the monitoring systems have completed their tests. P1000 can only be cleared by carrying out a trip, which includes driving the vehicle under variable conditions of speed, load and time so that all of the monitors are completed. As P1000 will not illuminate the MIL it is not necessary to carry out the trip before returning the vehicle to the customer.

#### Freeze Frame Data

When a concern is detected, various data is stored depending on application including:

- Diagnostic trouble code.
- Vehicle speed.
- Engine coolant temperature.
- Engine speed.
- Engine load.
- Mixture formation trim value (trim value for engine wear) (All except vehicles with diesel engine).
- State of oxygen sensor control (open and closed loop) (All except vehicles with diesel engine).
- Distance covered since the concern was first registered.

## DIAGNOSIS AND TESTING

### Monitors

The purpose of the monitors is to continuously check the operation of the emission related sensors and actuators. It then establishes if they are operating within specified tolerances. All monitors carry out their functions in such a way as to be unnoticeable by the driver of the vehicle. Each one is carried out under specific conditions of load, speed and engine temperature. The Comprehensive Component Monitor, Combustion Misfire Monitor and Air/Fuel Ratio Monitor operate continuously. The remaining monitors are only invoked under certain operating conditions. On diesel variants, all of the monitors operate under normal driving conditions: There are no monitors which intervene and cause special operating modes to enable the monitors to work. Some diesel monitors are non-continuous. This means that in a drive cycle, monitoring is done as and when suitable driving conditions exist and potential faults are accumulated and compared with acceptance criteria. Examples of this type are the turbocharger boost pressure and exhaust gas recirculation (EGR) monitors on vehicles with common rail fuel injection.

### Comprehensive Component Monitor (CCM)

When the CCM detects a component operating out of tolerance, it sets a Diagnostic Trouble Code (DTC), which is stored in the EEPROM. If the same concern is confirmed during the next trip the MIL will be switched on. The CCM monitors many components, sub-systems and signals. The following is a list of those that can effect emissions depending on application:

- Electronic Ignition (EI) System.
- Crankshaft Position (CKP) Sensor.
- Ignition Coil.
- Electronic Throttle Control Unit.
- Camshaft Position (CMP) Sensor.
- Air Conditioning (A/C) Clutch.
- Idle Air Control (IAC) Valve.
- Mass Air Flow (MAF) Sensor.
- Manifold Absolute Pressure (MAP) Sensor.
- Intake Air Temperature (IAT) Sensor.
- Engine Coolant Temperature (ECT) Sensor.
- Cylinder Head Temperature (CHT) Sensor.
- Heated Oxygen Sensor (HO2S).
- Catalyst Monitor Sensor.
- Charge Air Temperature Sensor.
- Knock Sensor (KS).
- Throttle Position (TP) Sensor.
- Vehicle Speed Sensor (VSS).
- Boost Pressure Sensor.
- Cam-Crank Phasing Sensor.
- EEPROM.
- High Pressure Fuel Injection Pump.
- Exhaust Gas Recirculation (EGR) Valve Monitor.
- Fuel Injectors.
- Turbocharger.
- Combustion Noise Monitor.
- Barometric Pressure (BARO) Sensor.

### Combustion Misfire Monitor (All except vehicles with diesel engine)

The combustion misfire monitor operates independently of the others, and can detect misfires caused by the ignition system, fuel system or mechanical engine components. As each cylinder fires, a characteristic crankshaft acceleration is produced. The monitor detects irregularities in the acceleration pattern using the crankshaft position (CKP) sensor, thus detecting the misfire. It can also detect which cylinder has misfired. Combustion misfires can be categorized as follows:

Type A: These can cause catalytic converter damage due to excessive internal temperatures. If a certain number of misfires occur over a pre-determined number of engine revolutions, the MIL will be switched on to alert the driver of the concern.

Type B: These can lead to an increase in emissions to a point above the EOBD threshold. If the misfire is detected during a second trip, over a pre-determined number of engine revolutions, the MIL will be switched on. If the misfire does not occur over the next three trips, the MIL will be extinguished

### Air/Fuel Ratio (AFR) Monitor (All except vehicles with diesel engine)

The HO2S fitted before the catalytic converter (upstream) measures the oxygen content of the exhaust gas and the variations in it. This then enables the PCM to adjust the opening times of the fuel injectors to maintain the correct AFR. This is known as Short Term Fuel Trim (STFT). If the same variation is registered a pre-determined number of times, a permanent correction factor is applied. This is known as Long Term Fuel Trim (LTFT), which is stored in the EEPROM. When the correction factors exceed pre-determined limits a DTC will be set in the EEPROM. If a concern is

## DIAGNOSIS AND TESTING

detected in either the STFT or LTFT, and it is still present on a second trip, the MIL will be switched on.

**Heated Oxygen Sensor (HO2S) Monitor (All except vehicles with diesel engine)**

This monitors the operation of the pre (upstream) and post (downstream) catalytic converter HO2S sensors. It will detect deviations in air/fuel ratios (AFR) and sensor faults.

The HO2S will cause emission increase when its response time increases too much. To diagnose a sensor a period is measured and the number of lean/rich transitions are counted. The sum of valid periods is then calculated. To avoid non-representative measurements, the period is valid only if the HO2S has been below a low threshold and above a high threshold between 2 consecutive lean/rich transitions. A failure is declared when the sum of the measured periods exceeds the sum of the corresponding limit (held within the PCM) and the MIL is illuminated.

**Catalytic Converter Efficiency Monitor (All except vehicles with diesel engine)**

The efficiency of a catalytic converter is measured by its ability to store and later release oxygen to convert harmful gases. The efficiency is reduced if the converter becomes contaminated as it ages, and at high gas flow rates, because the exhaust gas does not remain in the converter long enough to complete the conversion process.

This monitor checks for the oxygen storage capacity (OSC) of the catalytic converter. During a controlled period, the catalyst monitor sensor signal is analyzed to evaluate the OSC of the catalyst. It represents the quantity of oxygen that is really used for the oxidation-reduction reaction by the catalytic converter If a fault has occurred with the catalyst monitor sensor during the catalyst diagnosis, a sensor diagnosis is carried out. During the controlled diagnosis phase, the catalyst monitor sensor activity is measured and is compared to the OSC of the catalyst. If this activity is high (low OSC) the MIL will be illuminated. If throughout the controlled phase, repeated several times, the downstream sensor output has not moved, the closed loop mode is delayed in order to test the sensor. If the catalyst monitor sensor is set to rich, the injection time is forced to lean and conversely if the downstream sensor is set to lean, the injection time is forced to rich until the sensor switches over or until the end of a delay. If this delay expires or the sensor does not switch, the sensor is treated as failed.

**Combustion Noise Monitor (Vehicles with common rail fuel injection)**

In diesel variants, the Combustion Noise Monitor is used to trim the fuel injection pulse lengths. Each fuel injector has an associated set of correction data that is determined during a production end of line test. The Combustion Noise Monitor is used to determine how the fuel injector characteristic changes from this initial calibration over the life of the fuel injector.

**EGR Monitor (Vehicles with diesel engine)**

The functionality of the EGR system is checked by comparing either the MAP sensor output or EGR valve lift potentiometer output (depending upon application) with expected values.

**Diagnostic Requirements**

Vehicles equipped with EOBD, can be diagnosed using the WDS. In order for the EOBD system to be invoked, a number of criteria must be met. After any repair, which could affect emissions, a trip must be carried out on the vehicle, to make sure that engine management system operates correctly.

**Malfunction Indicator Lamp (MIL)**

The MIL is located in the instrument cluster and is fitted to alert the driver to the fact that an abnormal condition has developed in the engine management system, that is having an adverse effect on emissions. In cases of misfires which are likely to cause catalytic converter damage, it is switched on immediately. With all other faults it will illuminate continuously from the second trip after the condition occurred. Under normal operation it should illuminate at key-on and go out almost as soon as the engine is started.

**Diagnostic Trouble Codes (DTCs)**

The DTCs given by the PCM are standardized, which means that generic scan tools can read results from all vehicles.

## DIAGNOSIS AND TESTING

- The DTC is always a 5 digit alphanumerical code, for example "P0100".
- The first digit of a code (letter) identifies the system which has set the code. Provision has been made for a total of four systems to be identified although only the 'P' code is required for EOBD.
  - 'B' for the body
  - 'C' for the chassis
  - 'P' for the powertrain
  - 'U' for the network communications systems
- All of the "x0xxx" codes are standardized codes. However, any manufacturer can use additional codes over and above the standardized codes. These will be labelled "x1xxx"
- The third digit of a code (numeric) identifies the sub-system which has set the code.
  - 'Px1xx' for metering of fuel and air supply
  - 'Px2xx' for metering of fuel and air supply
  - 'Px3xx' for ignition system – combustion misfires
  - 'Px4xx' for auxiliary emission control equipment
  - 'Px5xx' for vehicle speed, idle setting and other related inputs
  - 'Px6xx' for trip computer and other related outputs
  - 'Px7xx' for transmission.
  - 'Px8xx' for transmission.
  - 'Px9xx' category to be determined
  - 'Px0xx' category to be determined
- When a concern occurs, the actions taken include storage of the relevant information and actuation of the MIL occurs in line with the relevant legislation.

### MIL Code List

| MIL Code | Description |
|---|---|
| P0030 | Heated oxygen sensor (HO2S) heater open circuit |
| P0031 | HO2S heater low voltage |
| P0032 | HO2S heater high voltage |
| P0036 | Catalyst monitor sensor heater open circuit |
| P0037 | Catalyst monitor sensor heater low voltage |
| P0038 | Catalyst monitor sensor heater high voltage |
| P0053 | HO2S heater resistance out of limits |
| P0054 | Catalyst monitor sensor heater resistance out of limits |
| P0106 | Manifold absolute pressure (MAP) sensor plausibility malfunction |
| P0107 | MAP sensor circuit low input |
| P0108 | MAP sensor circuit high input |
| P0109 | MAP sensor temporary malfunction |
| P0112 | Intake air temperature (IAT) circuit low input |
| P0113 | IAT circuit high input |
| P0114 | IAT intermittent failure |
| P0116 | Engine coolant temperature (ECT) signal stuck at low level |
| P0117 | ECT circuit low input |
| P0118 | ECT circuit high input |

## DIAGNOSIS AND TESTING

| MIL Code | Description |
|---|---|
| P0119 | ECT intermittent failure |
| P0122 | Throttle position (TP) sensor circuit 1 low input |
| P0123 | TP sensor circuit 1 high input |
| P0130 | HO2S circuit open circuit |
| P0131 | HO2S circuit low voltage |
| P0132 | HO2S circuit high voltage |
| P0133 | HO2S circuit slow response |
| P0134 | HO2S low amplitude |
| P0136 | Catalyst monitor sensor circuit open circuit |
| P0137 | Catalyst monitor sensor circuit low voltage |
| P0138 | Catalyst monitor sensor circuit high voltage |
| P0139 | Catalyst monitor sensor circuit slow response |
| P0171 | Fuel system error, lean limit |
| P0171 | Fuel system error , NOx emissions |
| P0172 | Fuel system error , rich limit |
| P0172 | Fuel system error, HC/CO emissions |
| P0201 | Cylinder No. 1 - injector circuit open circuit |
| P0202 | Cylinder No. 2 - injector circuit open circuit |
| P0203 | Cylinder No. 3 - injector circuit open circuit |
| P0204 | Cylinder No. 4 - injector circuit open circuit |
| P0222 | TP sensor circuit 2 low input |
| P0223 | TP sensor circuit 2 high input |
| P0231 | Fuel pump input low voltage |
| P0232 | Fuel pump input high voltage |
| P0261 | Cylinder No. 1 - injector circuit low voltage |
| P0262 | Cylinder No. 1 - injector circuit high voltage |
| P0264 | Cylinder No. 2 - injector circuit low voltage |
| P0265 | Cylinder No. 2 - injector circuit high voltage |
| P0267 | Cylinder No. 3 - injector circuit low voltage |
| P0268 | Cylinder No. 3 - injector circuit high voltage |
| P0270 | Cylinder No. 4 - injector circuit low voltage |
| P0271 | Cylinder No. 4 - injector circuit high voltage |
| P0300 | Random misfire detected |
| P0301 | Cylinder No. 1 misfire detected |
| P0302 | Cylinder No. 2 misfire detected |

## DIAGNOSIS AND TESTING

| MIL Code | Description |
|---|---|
| P0303 | Cylinder No. 3 misfire detected |
| P0304 | Cylinder No. 4 misfire detected |
| P0315 | Flywheel segment adaptation at the Limit |
| P0324 | Knock sensor (KS) communication error or implausible signal |
| P0325 | KS implausible signal |
| P0335 | Crankshaft position (CKP) sensor implausible signal |
| P0336 | CKP sensor missing teeth |
| P0336 | CKP sensor loss of synchronization |
| P0336 | CKP sensor no signal |
| P0340 | Camshaft position (CMP) sensor no signal |
| P0341 | CMP sensor implausible signal |
| P0351 | Ignition coil A primary malfunction |
| P0352 | Ignition coil B primary malfunction |
| P0420 | Catalyst system efficiency below threshold |
| P0444 | Evaporative mission canister purge valve open circuit |
| P0458 | Evaporative mission canister purge valve low voltage |
| P0459 | Evaporative mission canister purge valve high voltage |
| P0460 | Fuel tank level malfunction from instrument cluster |
| P0500 | Vehicle speed sensor (VSS) signal malfunction |
| P0500 | Vehicle speed via CAN (VS CAN) implausible signal |
| P0503 | VSS signal too high |
| P0511 | Idle air control (IAC) valve circuit malfunction |
| P0560 | Battery system voltage malfunction high voltage |
| P0562 | Battery system voltage malfunction open circuit |
| P0571 | Brake switch plausibility error |
| P0603 | Powertrain control module (PCM) error NVMY or EEPROM error |
| P0604 | PCM error RAM error |
| P0605 | PCM error checksum error |
| P0610 | VID block checksum not correct or not programmed |
| P0617 | Starter relay malfunction |
| P0620 | Generator circuit malfunction |
| P0625 | Generator low voltage |
| P0626 | Generator high voltage |
| P0628 | Fuel pump primary circuit low voltage |
| P0629 | Fuel pump primary circuit high voltage |

## DIAGNOSIS AND TESTING

| MIL Code | Description |
|---|---|
| P0641 | Transmission sensor power supply 1 noisy signal |
| P0642 | Transmission sensor power supply 1 low voltage |
| P0643 | Transmission sensor power supply 1 high voltage |
| P0646 | Air conditioning (A/C) clutch relay circuit low voltage |
| P0647 | A/C clutch relay circuit high voltage |
| P0651 | Transmission sensor power supply 2 noisy signal |
| P0652 | Transmission sensor power supply 2 low voltage |
| P0653 | Transmission sensor power supply 2 high voltage |
| P0654 | Engine run output circuit malfunction |
| P0686 | Main relay malfunction low voltage |
| P0687 | Main relay malfunction high voltage |
| P0691 | Cooling fan 1 control circuit low voltage |
| P0692 | Cooling fan 1 control circuit high voltage |
| P0693 | Cooling fan 2 control circuit low voltage |
| P0694 | Cooling fan 2 control circuit high voltage |
| P0704 | Clutch switch implausible signal |
| P1000 | EOBD system readiness test not complete |
| P1500 | Vehicle speed sensor (VSS) output circuit malfunction |
| P1632 | Generator command malfunction |
| P1794 | Battery voltage malfunction too high or too low |
| P2100 | Engine throttle body H-bridge malfunction |
| P2107 | Safety failure level 3 |
| P2108 | Safety failure level 2 error |
| P2119 | Engine throttle body throttle flap malfunction |
| P2122 | Accelerator pedal position (APP) sensor circuit 1 low input |
| P2123 | APP sensor circuit 1 high input |
| P2127 | APP sensor circuit 2 low input |
| P2128 | APP sensor circuit 2 high input |
| P2128 | APP sensor circuits 1 and 2 plausibility error |
| P2135 | TP sensor circuits 1 and 2 plausibility error |
| P2176 | Engine throttle body adaptive algorithm failed |
| P2280 | Air cleaner obstruction or leakage |
| P2282 | Air leakage between throttle and inlet valves |
| U0001 | Control Area Network (CAN) bus-off or mute |
| U0101 | CAN missing frame from TCU |

## DIAGNOSIS AND TESTING

| MIL Code | Description |
|---|---|
| U0121 | CAN missing frame from ABS |
| U0122 | CAN missing frame from ESP |
| U0155 | CAN missing frame from HEC |
| B1213 | Number of Passive Anti-Theft System (PATS) programmed keys is below minimum |
| B1600 | PATS ignition key transponder signal is not received |
| B1601 | PATS received incorrect key-code from ignition key transponder |
| B1602 | PATS received invalid format of key-code from ignition key transponder |
| B1681 | PATS transceiver module signal is not received |
| B2103 | PATS immobilizer antenna not connected |
| B2139 | PATS immobilizer challenge response doesn't match |
| B2141 | PATS immobilizer no PCM-ID transferred |
| B2431 | PATS immobilizer transponder programming failure |
| U2510 | PATS immobilizer problem with messages on data link |

### Inspection and Verification

1. Verify the customer concern by operating the system.
2. Visually inspect for obvious signs of mechanical or electrical damage.

**Visual Inspection Chart**

| Mechanical | Electrical |
|---|---|
| – Sensors<br>– Actuators | – Fuse(s)<br>– Wiring harness<br>– Electrical connector(s)<br>– Powertrain control module (PCM) |

3. If an obvious cause for an observed or reported concern is found, correct the cause (if possible) before proceeding to the next step.
4. If the cause is not visually evident, verify the symptom and refer to WDS or equivalent scan tool for further diagnostics.

## REMOVAL AND INSTALLATION

# Powertrain Control Module (PCM) — 1.25L Duratec-16V (Sigma)/1.4L Duratec-16V (Sigma)/1.6L Duratec-16V (Sigma)(29 200 0)

### Special Tool(s)

| | |
|---|---|
| 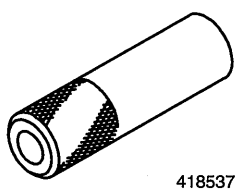 418537 | Drill Bush, Powertrain Control Module<br>418-537 (29-016) |

## Removal

**NOTE:**If a new PCM is being installed connect WDS. Upload the PCM configuration information using the programmable modules installation routine prior to commencing the removal of the PCM.

1. **Remove the battery tray.**

   **For additional information, refer to: Battery Tray (414-01, Removal and Installation).**

2. **Position the PCM on the battery tray support panel.**

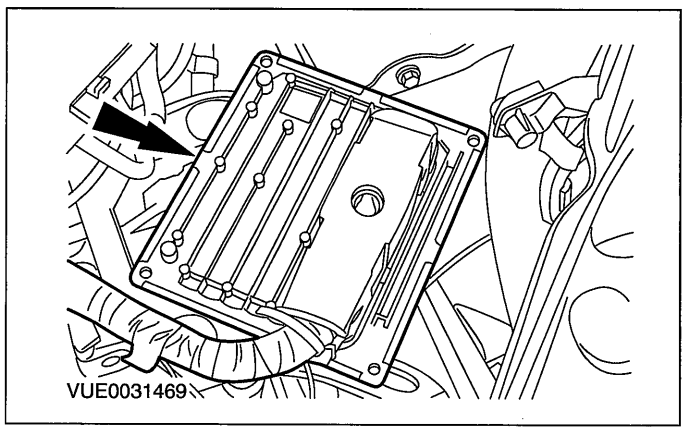


3. **Insert the special tool into the PCM electrical connector.**

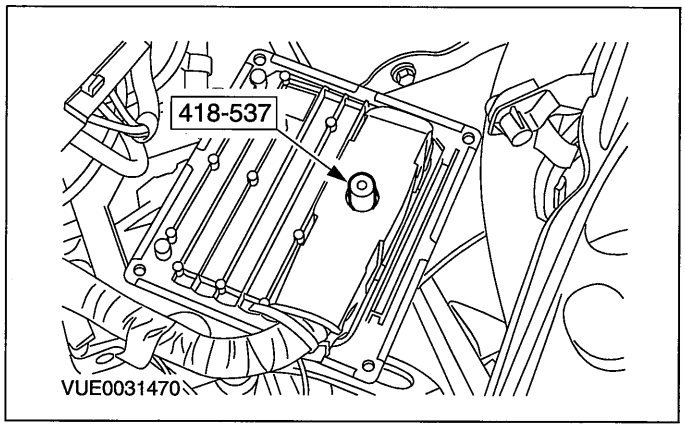


4. **⚠CAUTION:Make sure the special tool is used to guide the drill bit. Failure to follow this instruction may result in damage to the electrical connector.**

   **Using the special tool as a guide, drill into the shear bolt using a 6mm drill bit, until the head is removed.**

5. **Remove the special tool from the PCM electrical connector and clean all foreign material from the electrical connector.**

6. **Disconnect the PCM electrical connector and remove the PCM.**

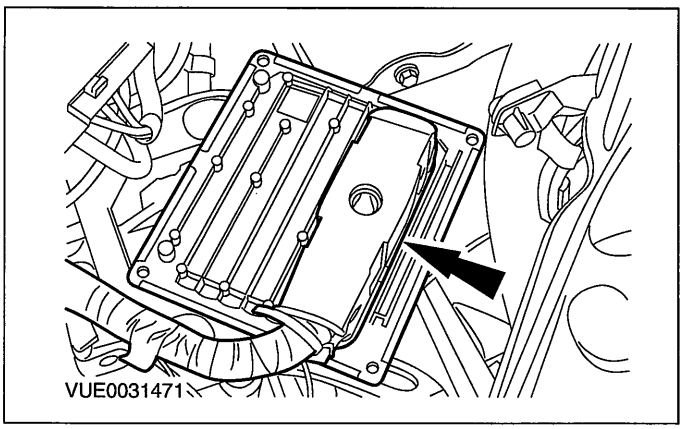

## REMOVAL AND INSTALLATION

7. **Remove the remains of the shear bolt from the PCM using grips.**

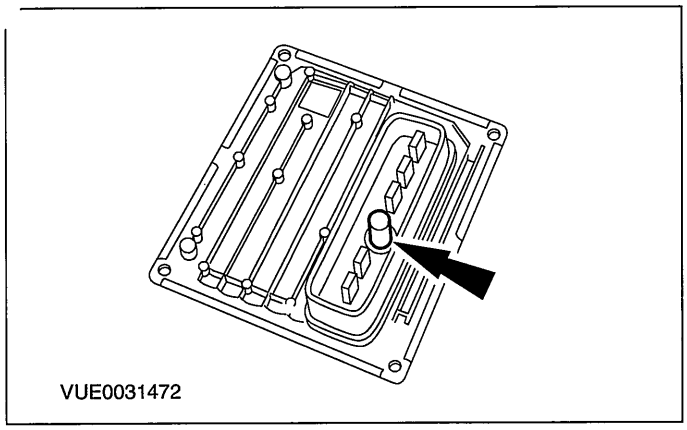


### Installation

1. **Install a new shear bolt and securing clip, using the special tool to push the clip onto the shank of the bolt.**

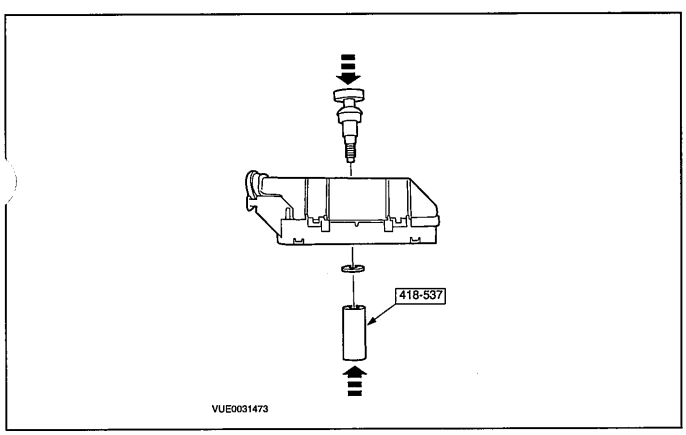


2. **Install the PCM electrical connector to the PCM.**
   - Tighten the bolt until the head shears off.

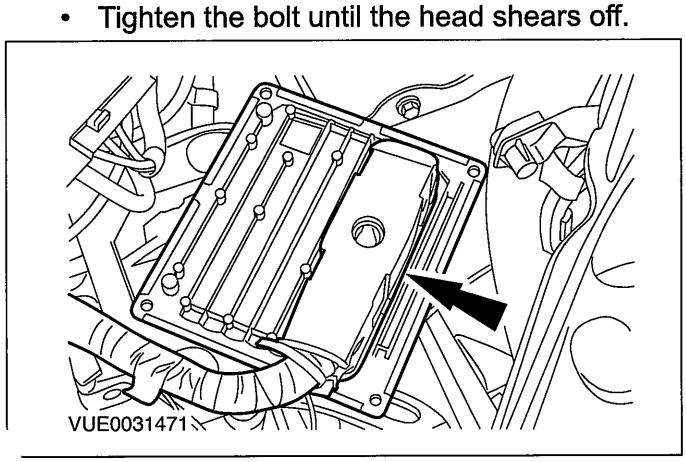


3. **Install the battery tray.**

   **For additional information, refer to: Battery Tray (414-01, Removal and Installation).**

4. **If a new PCM is being installed connect WDS. Download the PCM configuration information using the programmable modules installation routine.**
5. **NOTE:Do not press the accelerator pedal during the initialization period as this will prevent the complete initialization of the throttle body.**

   **Turn the ignition key to position II and wait for one minute to initialize the throttle body.**
6. **Turn the ignition key to the OFF position.**

## REMOVAL AND INSTALLATION

# Powertrain Control Module (PCM) — 2.0L Duratec-HE (MI4), Vehicles With: PCM Security Shield

**NOTE:** If a new PCM is being installed connect the Worldwide Diagnostic System (WDS). Upload the PCM configuration information using the programmable modules installation routine prior to commencing the removal of the PCM.

1. **Remove the battery tray.**

   **For additional information, refer to: Battery Tray (414-01, Removal and Installation).**

2. **Raise and support the vehicle.**

   **For additional information, refer to: Lifting (100-02 Jacking and Lifting, Description and Operation).**

3. **Disconnect the ambient air temperature sensor electrical connector and detach the wiring harness from the retaining clip.**

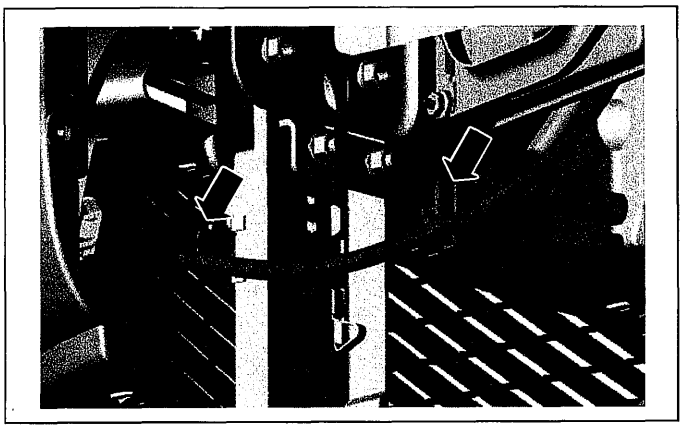

4. **Remove the PCM mounting bracket lower retaining bolt.**

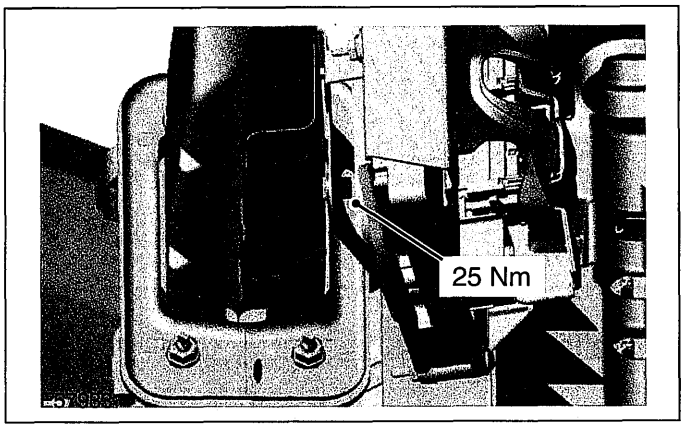


5. **Lower the vehicle.**
6. **Remove the PCM mounting bracket upper retaining bolt.**

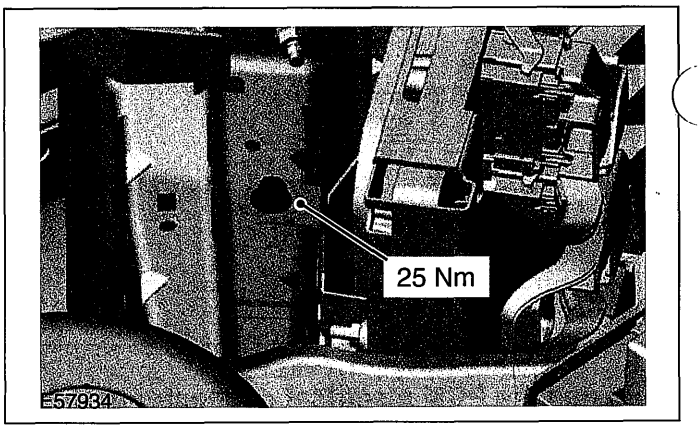


7. **Position the PCM, PCM retaining bracket and PCM mounting bracket on the battery tray support panel.**
8. **Remove the components in the order indicated in the following illustration(s) and table(s).**

## REMOVAL AND INSTALLATION

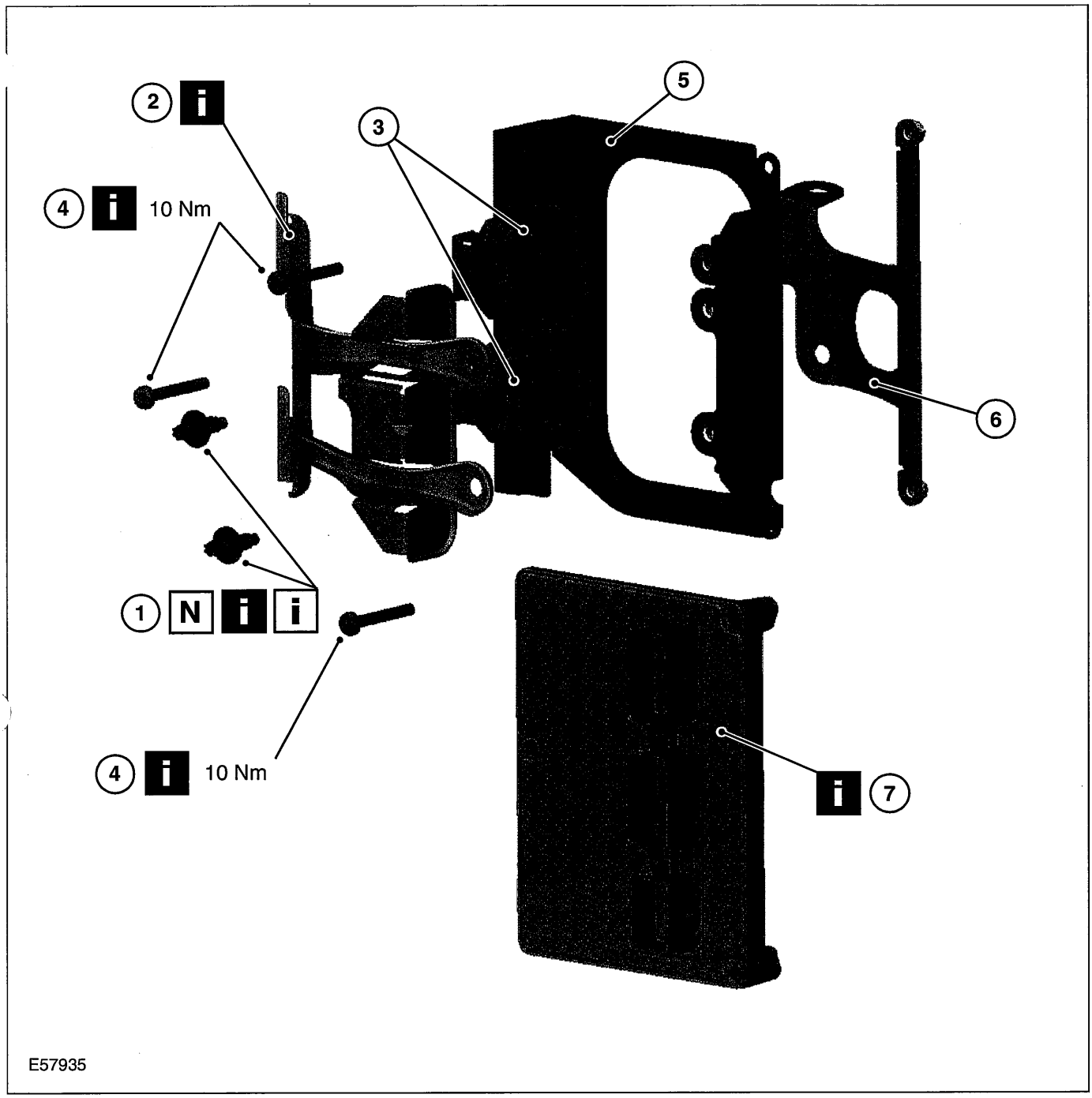


| Item | Description |
|---|---|
| 1 | PCM security shield shear bolts<br>See Removal Detail<br>See Installation Detail |
| 2 | PCM security shield<br>See Removal Detail |
| 3 | PCM electrical connectors |
| 4 | PCM retaining bolts<br>See Removal Detail |
| 5 | PCM retaining bracket |

| Item | Description |
|---|---|
| 6 | PCM mounting bracket |
| 7 | PCM<br>See Removal Detail |

**9. To install, reverse the removal procedure.**

**NOTE:** If a new PCM is being installed connect WDS. Download the PCM configuration information using the programmable modules installation routine after the installation of the PCM.

## REMOVAL AND INSTALLATION

# Removal Details

### Item 1 PCM security shield shear bolts

**1. Remove the PCM security shield shear bolts.**

- Drill a 3 mm pilot hole in the center of the PCM security shield shear bolts.
- Drill a 8 mm hole in the PCM security shield shear bolts and remove the PCM security shield.

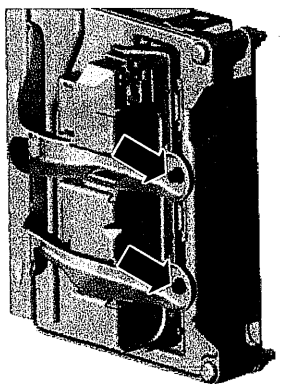

E57986

### Item 2 PCM security shield

**1. Remove the PCM security shield.**

1. Swing the PCM security shied away from the PCM retaining bracket.
2. Slide the PCM security shield from the PCM retaining bracket.

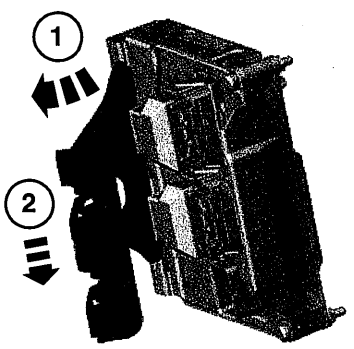


E58305

### Item 4 PCM retaining bolts

**1. Support the PCM, PCM retaining bracket and PCM mounting bracket while removing the PCM retaining bolts.**

### Item 7 PCM

**1. Remove the PCM from the PCM retaining bracket.**

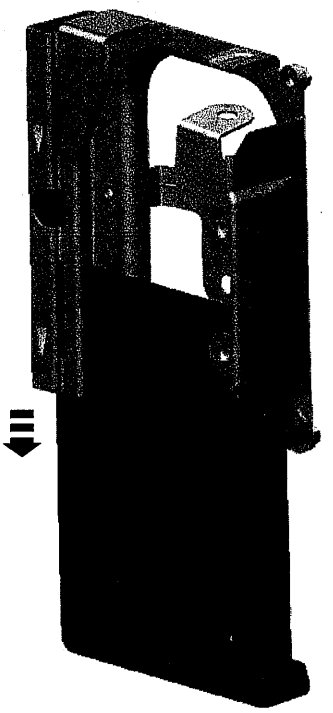

E58036

# Installation Details

### Item 1 PCM security shield shear bolts

**1. Tighten the PCM security shield shear bolts until the head of the bolt shears off.**

## REMOVAL AND INSTALLATION

# Powertrain Control Module (PCM) — 2.0L Duratec-HE (MI4), Vehicles Without: PCM Security Shield

**NOTE:** If a new PCM is being installed connect WDS. Upload the PCM configuration information using the programmable modules installation routine prior to commencing the removal of the PCM.

1. **Disconnect the battery ground cable.**

   **For additional information, refer to: Battery Disconnect (414-01 Battery, Mounting and Cables, General Procedures).**

2. **Disconnect the ambient air temperature sensor electrical connector and detach the wiring harness from the retaining clip.**

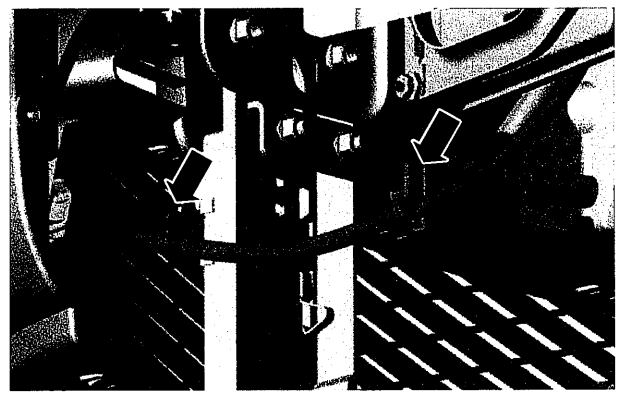

3. **Remove the components in the order indicated in the following illustration(s) and table(s).**

## REMOVAL AND INSTALLATION

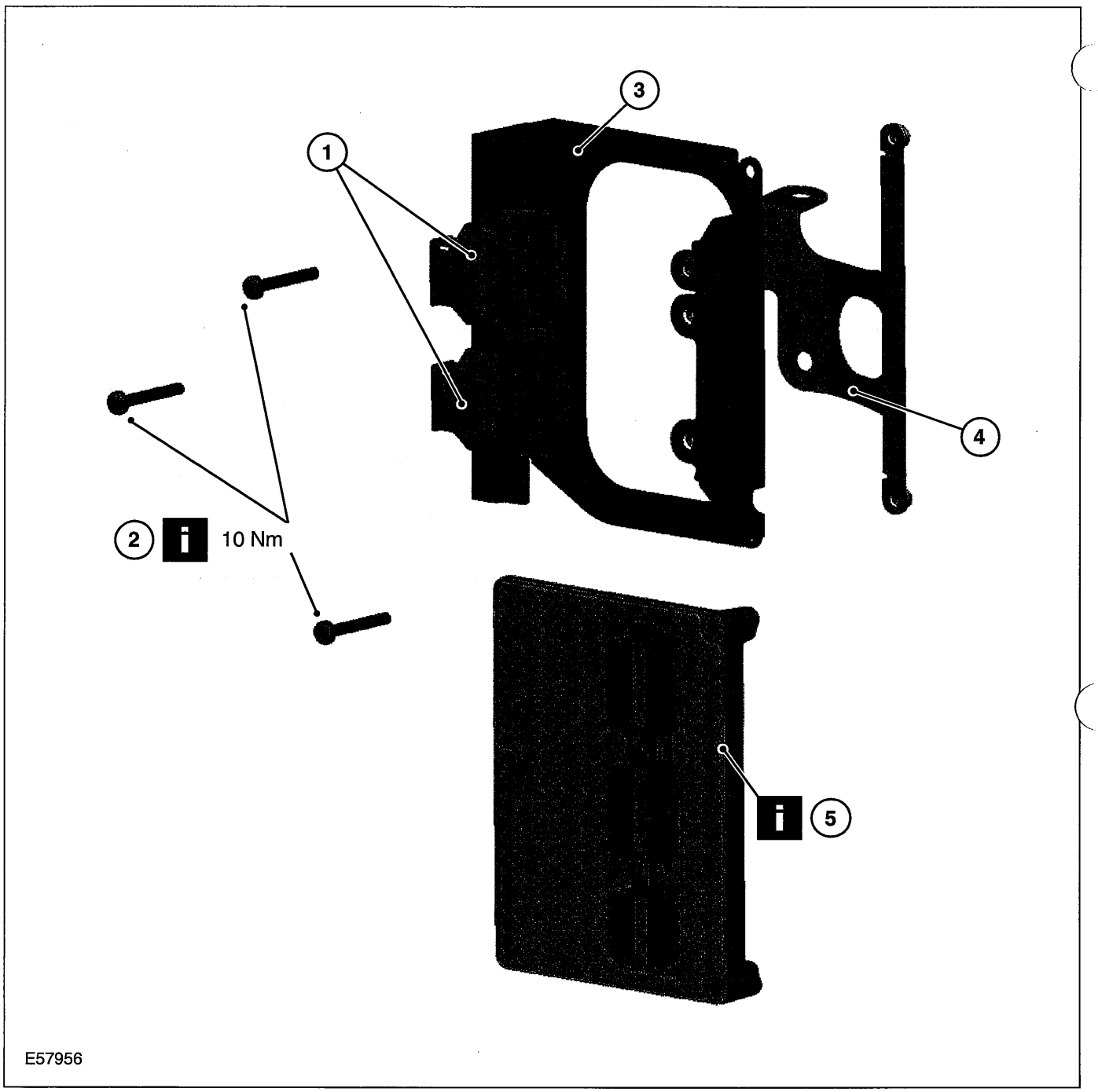


| Item | Description |
|---|---|
| 1 | PCM electrical connectors |
| 2 | PCM retaining bolts<br>See Removal Detail |
| 3 | PCM retaining bracket |
| 4 | PCM mounting bracket |
| 5 | PCM |

| Item | Description |
|---|---|
| | See Removal Detail |

**4. To install, reverse the removal procedure.**

**NOTE:** If a new PCM is being installed connect WDS. Download the PCM configuration information using the programmable modules installation routine after the installation of the PCM.

# Removal Details

## REMOVAL AND INSTALLATION

### Item 2 PCM retaining bolts

1. Support the PCM and PCM retaining bracket while removing the PCM retaining bolts.

### Item 5 PCM

1. Remove the PCM from the PCM retaining bracket.

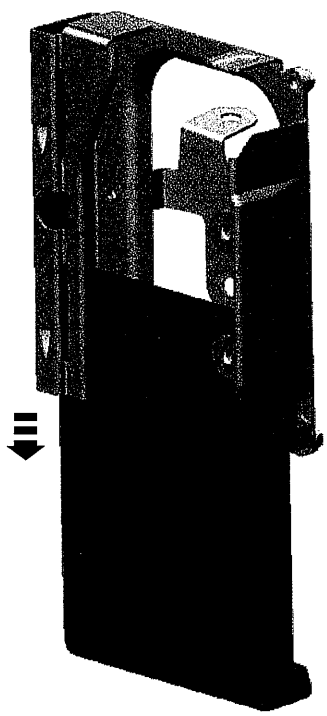

E58036

## REMOVAL AND INSTALLATION

# Heated Oxygen Sensor (HO2S)(29 220 0)

**Special Tool(s)**

| | |
|---|---|
| 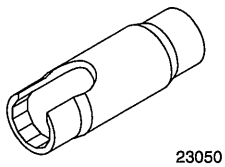 23050 | Socket, Fuel Injector (22mm) 310-063 (23-050) |

## Removal

1. **Remove the air cleaner. For additional information, refer to Section 303-12 [Intake Air Distribution and Filtering].**
2. **Disconnect the ignition coil pack electrical connector.**

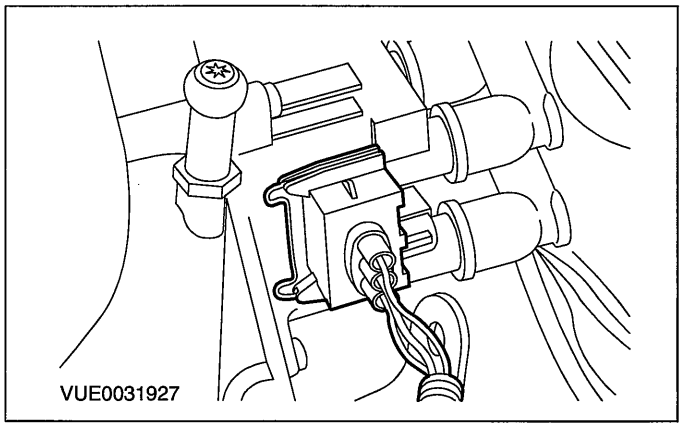


3. **Detach the ignition coil pack and position it to one side**

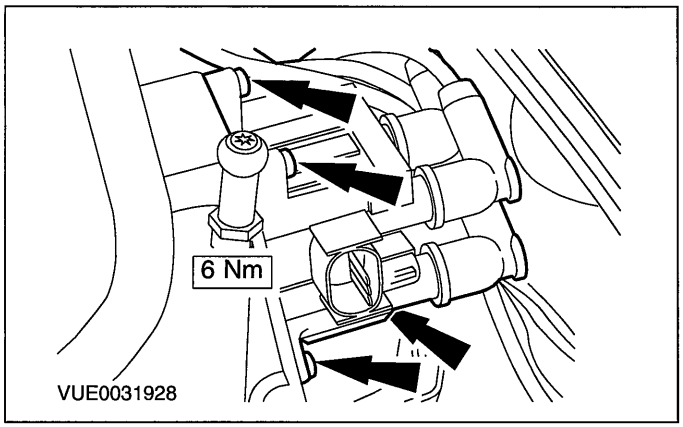


4. **Disconnect the HO2S electrical connector.**

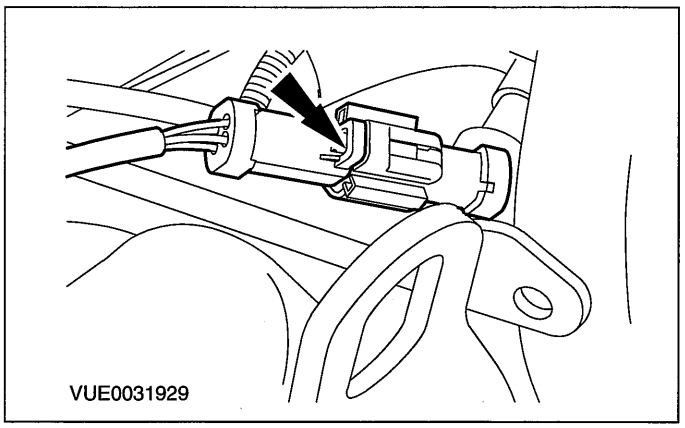


5. **Remove the exhaust manifold heat shield.**

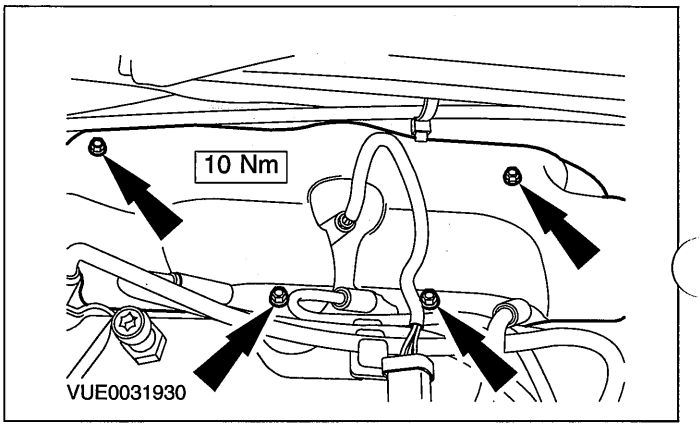


6. **Using the special tool, remove the HO2S.**

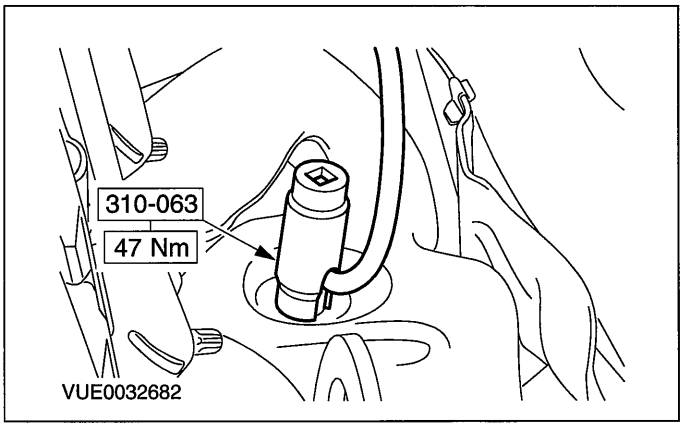


## Installation

⚠ **CAUTION:When installing a new HO2S, it is possible that the new component will be supplied with a longer cable than the one removed. It is important that the cable is routed and secured in such a way that it**

## REMOVAL AND INSTALLATION

cannot be damaged by heat or moving components and will not cause a noise, vibration or harshness (NVH) issue.

1. To install, reverse the removal procedure.

## REMOVAL AND INSTALLATION

# Crankshaft Position (CKP) Sensor

**General Equipment**

| |
|---|
| Bolt, M6 x 18 mm |
| CKP alignment tool |

1. **Raise and support the vehicle.**

   **For additional information, refer to: Lifting (100-02, Description and Operation).**

2. **Remove the splash shield**

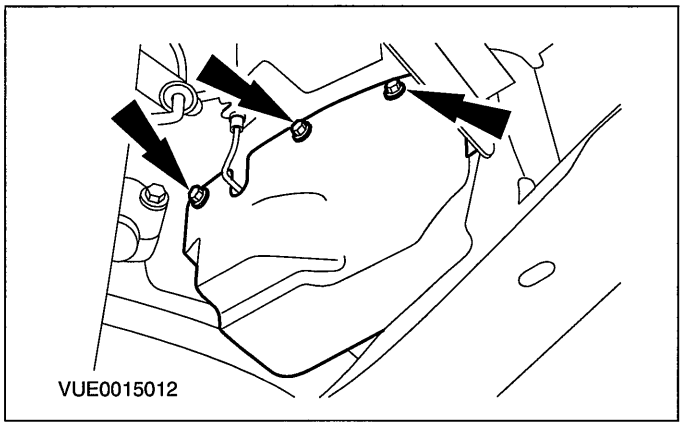


3. **CAUTIONS:**

   **⚠Only turn the crankshaft pulley in the normal direction of rotation.**

   **⚠Tighten the M6 x 18 mm bolt finger-tight only.**

   **Rotate the crankshaft pulley clockwise until the crankshaft pulley timing bolt, M6 x 18 mm can be installed through the crankshaft pulley timing hole into the engine front cover.**

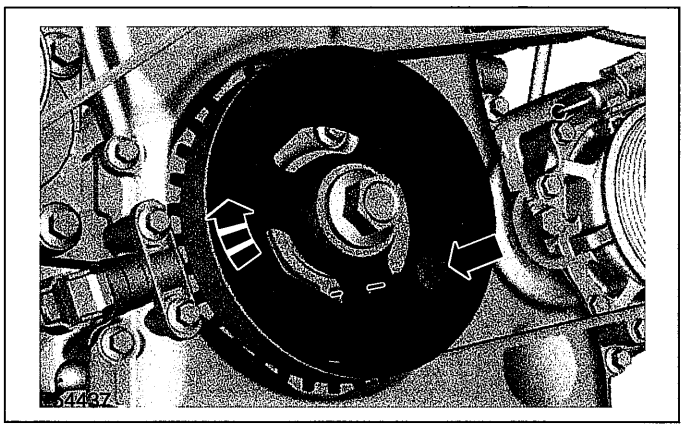


4. **Remove the components in the order indicated in the following illustration(s) and table(s).**

## REMOVAL AND INSTALLATION

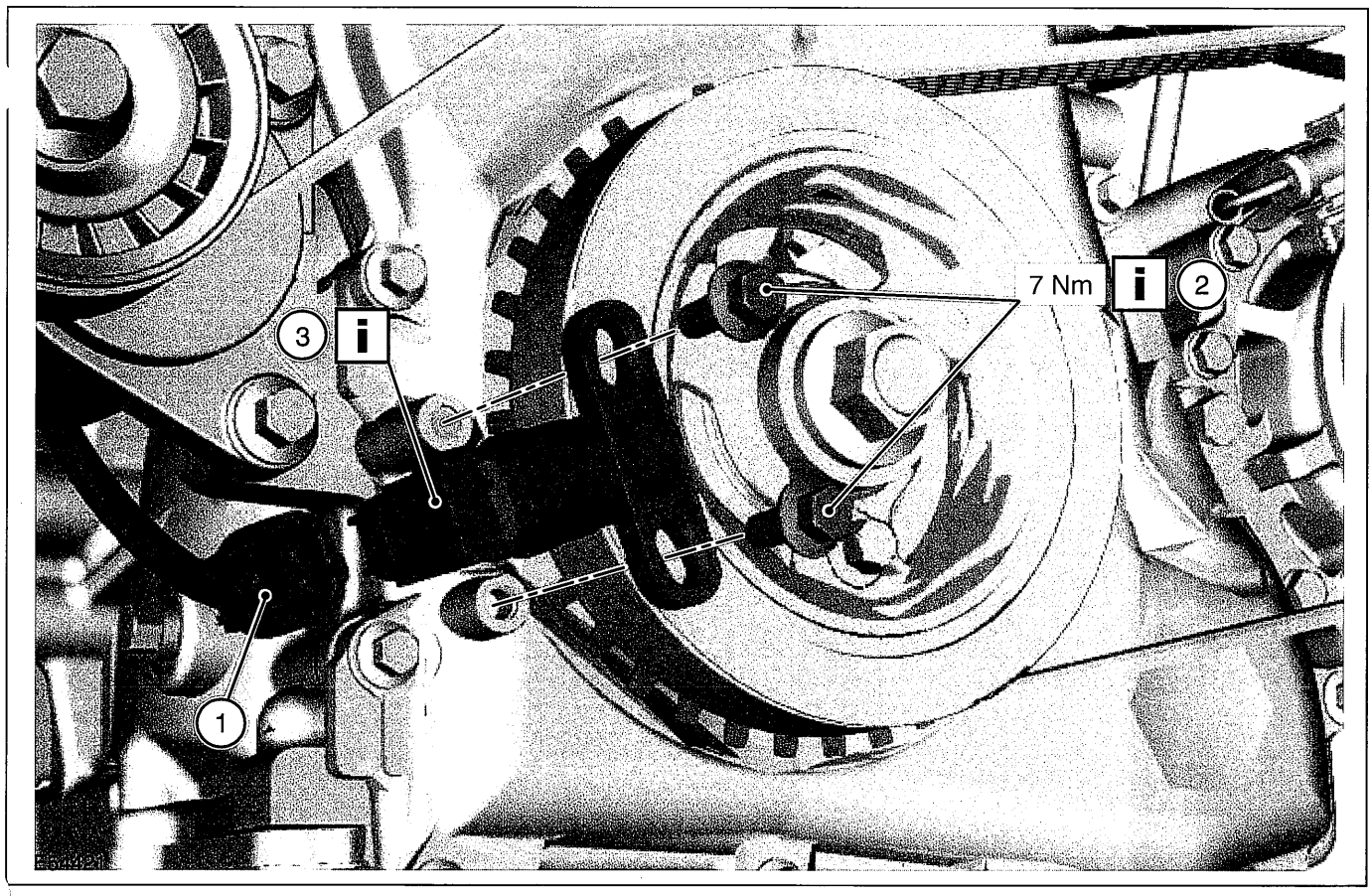


| Item | Description |
|---|---|
| 1 | CKP sensor electrical connector |
| 2 | CKP sensor retaining bolts<br>See Installation Detail |
| 3 | CKP sensor |

| Item | Description |
|---|---|
| | See Installation Detail |

**5. To install, reverse the removal procedure.**

# Installation Details

### Item 3 CKP sensor

**1. Install the CKP sensor alignment tool to the CKP sensor.**

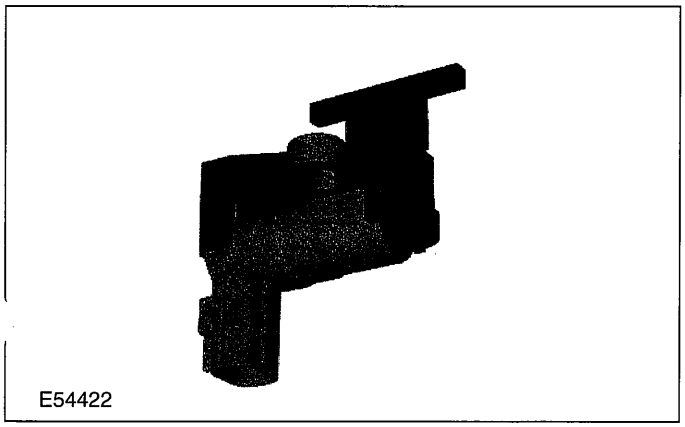


**2. Align the CKP sensor with the crankshaft pulley sensor ring.**

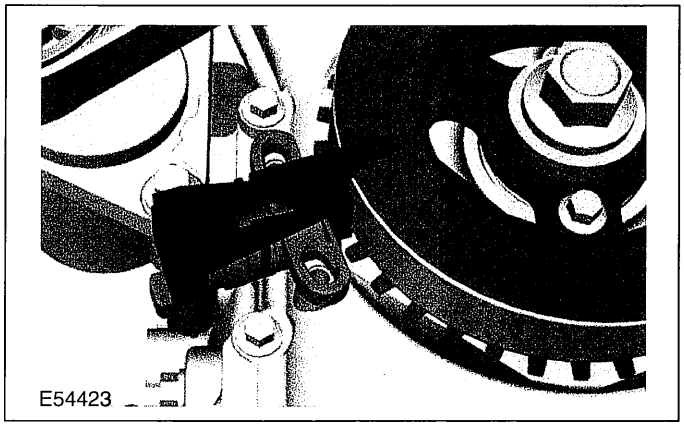

## REMOVAL AND INSTALLATION

**Item 2 CKP sensor retaining bolts**

1. Install the CKP sensor retaining bolts.
2. Remove the CKP sensor alignment tool.

## REMOVAL AND INSTALLATION

# Knock Sensor (KS)

1. **Detach the KS electrical connector from the intake manifold.**

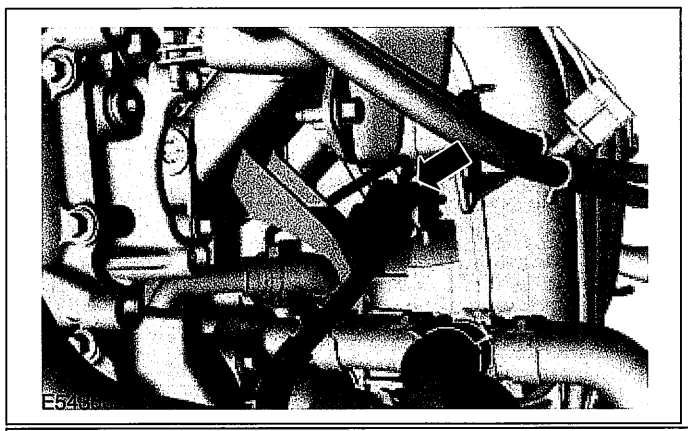

2. **Remove the intake manifold.**

   **For additional information, refer to: Intake Manifold (303-01 Engine - 2.0L Duratec-HE (MI4), In-vehicle Repair).**

3. **Remove the components in the order indicated in the following illustration(s) and table(s).**

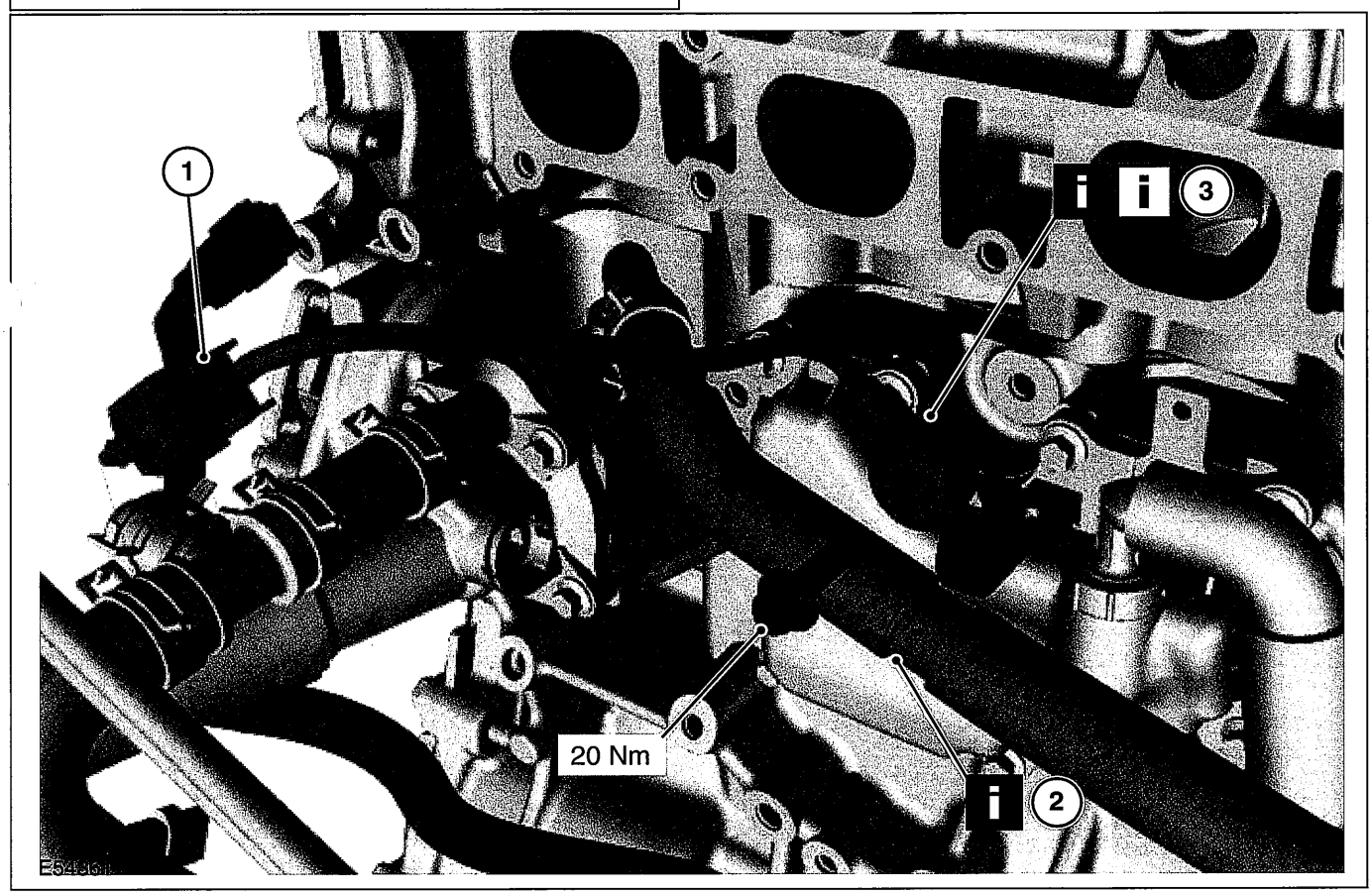


| Item | Description |
|---|---|
| 1 | KS electrical connector |
| 2 | Coolant hose<br>See Removal Detail |
| 3 | KS |

| Item | Description |
|---|---|
| | See Removal Detail<br>See Installation Detail |

4. **To install, reverse the removal procedure.**

# Removal Details

## REMOVAL AND INSTALLATION

### Item 2 Coolant hose

1. **Detach the coolant hose from the coolant hose retaining clip and position it to one side.**

### Item 3 KS

**NOTE:**Make a note of the position of the KS and make sure it is positioned in the same position when installed.

# Installation Details

### Item 3 KS

**NOTE:** Prior to installing the KS, clean the engine block and KS mating surfaces.

**NOTE:**Make sure the KS is installed in the same position as removed.

# SECTION 307-01 Automatic Transmission/Transaxle — Vehicles With: 4-Speed Automatic Transmission (AW81-40)

## VEHICLE APPLICATION:2006.0 Fiesta

CONTENTS PAGE


**SPECIFICATIONS**

Specifications ..... 307-01-3

**DESCRIPTION AND OPERATION**

Automatic Transaxle ..... 307-01-5
- Transmission cross-section ..... 307-01-5
- Torque converter with Torque Converter Clutch (TCC) ..... 307-01-6
- Fluid pump and stator shaft ..... 307-01-7
- Planetary gearset ..... 307-01-8
- Clutches and brakes ..... 307-01-9
- Intermediate gear stage and differential assembly ..... 307-01-11
- Main control body ..... 307-01-12
- Internal gearshift mechanism ..... 307-01-13
- Fluid circuit ..... 307-01-14

Identification Tags ..... 307-01-16
- Type plate ..... 307-01-16

Transmission Ranges and Power Flow ..... 307-01-18
- Transmission ratio and power flow route - 1st gear ..... 307-01-18
- Transmission ratio and power flow route - 2nd gear ..... 307-01-20
- Transmission ratio and power flow route - 3rd gear ..... 307-01-22
- Transmission ratio and power flow route - 4th gear ..... 307-01-24
- Transmission ratio and power flow route - reverse gear ..... 307-01-26

Transaxle Electronic Control System ..... 307-01-28
- Overview ..... 307-01-28
- Transmission control unit ..... 307-01-29
- Gearshift strategies ..... 307-01-30
- Selector lever positions ..... 307-01-33
- Signal transmission on the CAN databus ..... 307-01-34
- Sensors ..... 307-01-37
- Actuators ..... 307-01-40

**DIAGNOSIS AND TESTING**

Automatic Transaxle ..... 307-01-45
- Inspection and Verification ..... 307-01-45
- Diagnostic Trouble Code Chart ..... 307-01-45
- Line Pressure Test ..... 307-01-47
- Stall Speed Test ..... 307-01-48
- Time Lag Test ..... 307-01-49

## GENERAL PROCEDURES

Transmission Fluid Level Check ..... 307-01-5[illegible]
Transmission Fluid Drain and Refill ..... 307-01-53

## IN-VEHICLE REPAIR

Transmission Range (TR) Sensor ..... 307-01-55
Halfshaft Seal LH ..... 307-01-58
Halfshaft Seal RH ..... 307-01-59
Turbine Shaft Speed (TSS) Sensor ..... 307-01-60
Vehicle Speed Sensor (VSS) ..... 307-01-61

## REMOVAL AND INSTALLATION

Transaxle ..... 307-01-62

## SPECIFICATIONS

### Lubricants, Fluids, Sealers and Adhesives

**WARNING:Refer to the Material Safety Data Sheets for the Automatic Transmission Fluid E-AW. Failure to follow this instruction may result in personal injury. Certain Transmission and Power Steering fluids supplied to Ford contain additives which may cause skin irritation or other skin reactions after contact.**

**For additional information, refer to: Health and Safety Precautions (100-00 General Information, Description and Operation). See - Transmission Fluids.**

| | Specifications |
|---|---|
| Automatic transmission fluid | WSS-M2C 924-A |
| Grease | WSD-M1C 230-A |

### Capacities

| | Litres |
|---|---|
| Automatic transmission fluid (including cooler and tubes) | 5.75 |

### Torque Specifications

| Item | Nm | lb-ft | lb-in |
|---|---|---|---|
| Transaxle to engine flange retaining bolts | 47 | 35 | - |
| Engine ground cable to transaxle retaining nut | 25 | 18 | - |
| Torque converter retaining nuts | 27 | 20 | - |
| Starter motor retaining bolts | 47 | 35 | - |
| Engine and transaxle rear mount retaining bolt | 80 | 59 | - |
| Lower arm to the wheel knuckle | 48 | 35 | - |
| tie-rod end to the wheel knuckle | 48 | 35 | - |
| Exhaust flexible pipe to catalytic converter | 44 | 32 | - |
| Engine support insulator bolts | 48 | 35 | - |
| Ignition switch to starter motor solenoid cable | 7 | - | 62 |
| Battery to starter motor solenoid cable | 12 | 9 | - |
| Fluid level indicator tube to transaxle retaining bolt | 25 | 18 | - |
| Selector lever cable bracket retaining bolts | 20 | 15 | - |
| Ground cable to transaxle retaining bolt | 25 | 18 | - |
| Engine rear mount outer retaining nuts | 48 | 35 | - |
| Engine rear mount center retaining nut | 90 | 66 | - |
| Battery tray retaining bolts | 25 | 18 | - |
| Strut and spring assembly top mount nuts | 25 | 18 | - |
| Transaxle drain plug | 17 | 13 | - |
| Turbine shaft speed (TSS) sensor retaining bolt | 5 | - | 44 |
| Vehicle speed sensor (VSS) retaining stud bolt | 13 | 10 | - |
| Vehicle speed sensor (VSS) heat shield retaining nut | 13 | 10 | - |

## SPECIFICATIONS

| Item | Nm | lb-ft | lb-in |
|---|---|---|---|
| Transmission range (TR) sensor to selector shaft locking nut | 7 | - | 62 |
| Transmission range (TR) sensor retaining bolts | 5 | - | 44 |
| Manual shift lever retaining nut | 13 | 10 | - |

## DESCRIPTION AND OPERATION

# Automatic Transaxle

### Transmission cross-section

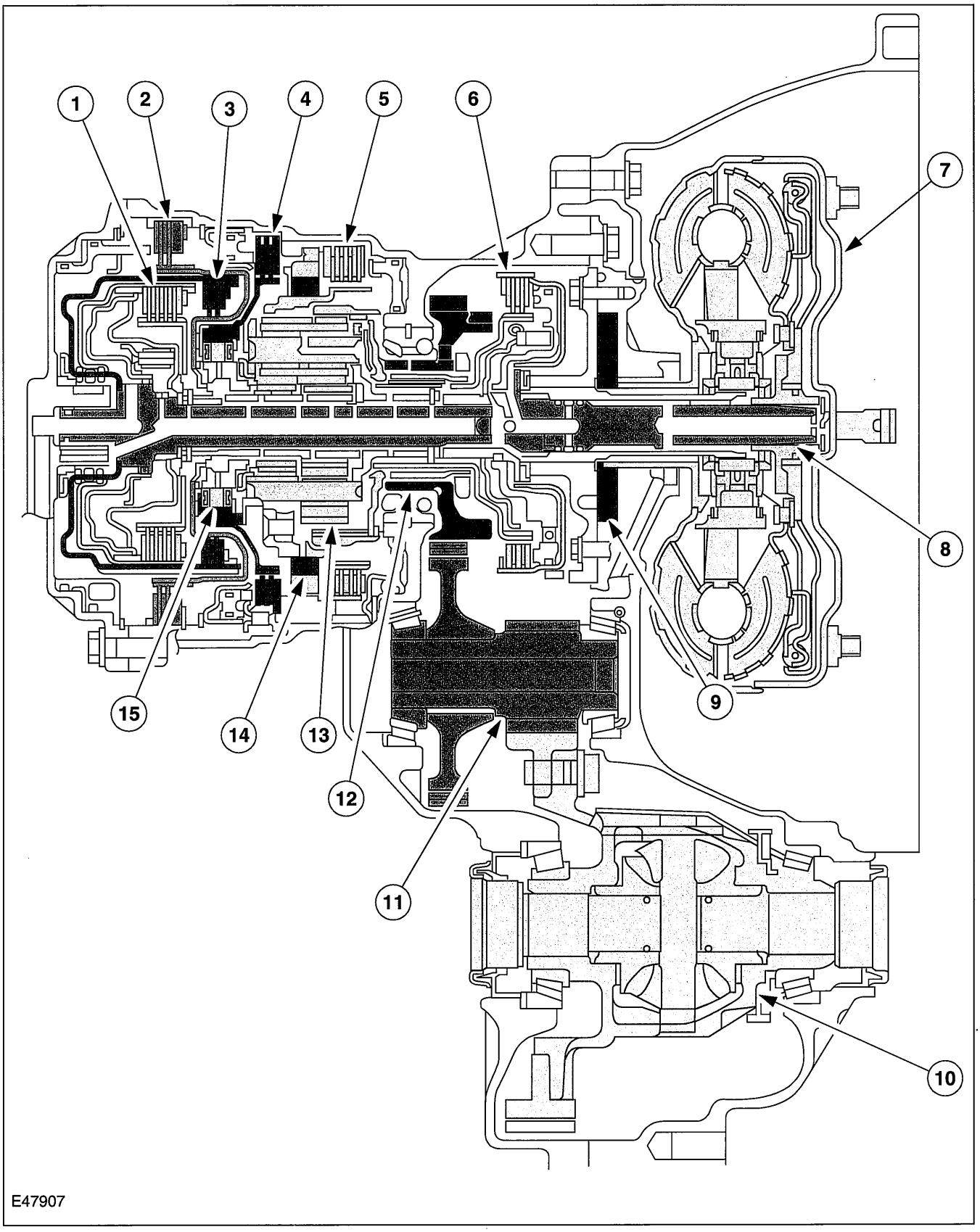

## DESCRIPTION AND OPERATION

| Item | Description |
|---|---|
| 1 | 1st - 3rd gear clutch |
| 2 | 4th gear brake |
| 3 | Reverse gear clutch |
| 4 | 2nd - 4th gear brake |
| 5 | Reverse gear brake |
| 6 | 3rd/4th gear clutch |
| 7 | Torque converter |
| 8 | Transmission input shaft |
| 9 | Fluid pump |
| 10 | Differential assembly |
| 11 | Intermediate gear stage |
| 12 | Output wheel, planetary gearset |
| 13 | Planetary gearset |
| 14 | 1st gear one-way clutch |
| 15 | 2nd gear one-way clutch |

### Torque converter with Torque Converter Clutch (TCC)

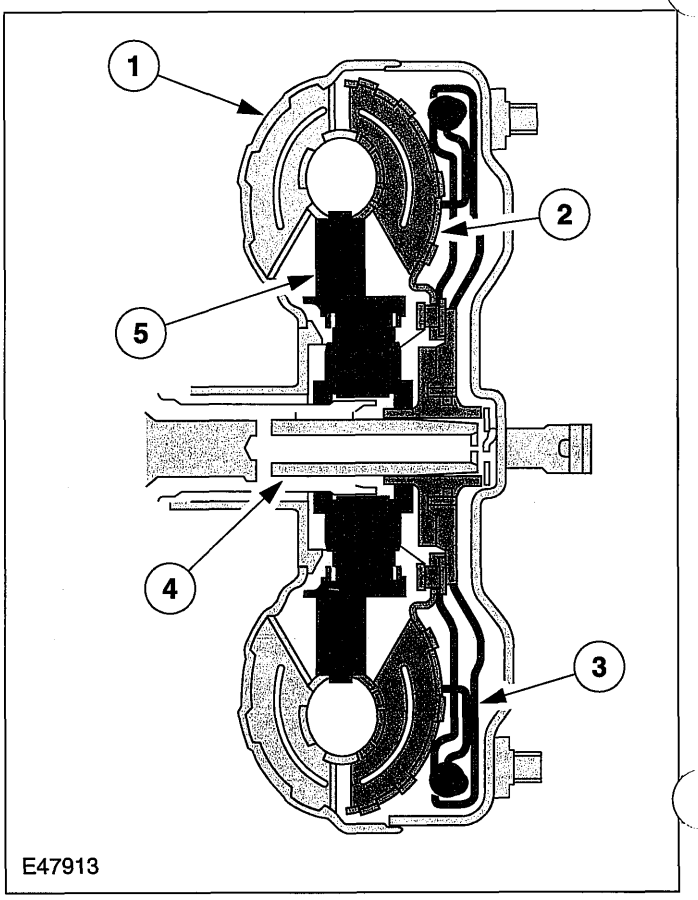


| Item | Description |
|---|---|
| 1 | Torque converter housing and impeller |
| 2 | Turbine wheel |
| 3 | TCC |
| 4 | Transmission input shaft |
| 5 | Stator with roller-type one-way clutch |

The torque converter hydraulically transmits the output torque from the engine to the input shaft of the transmission.

The stator increases the torque up to the clutch point (approx. 90 % speed difference between the impeller and the turbine wheel).

In order to increase the efficiency of the automatic transmission, the torque converter is also equipped with a hydraulically activated TCC

The TCC is applied with slip to ensure soft engagement.

When the TCC is engaged, the torque is transmitted directly from the crankshaft via the torque converter housing to the transmission input shaft.

## DESCRIPTION AND OPERATION

The TCC is engaged depending on the current driving situation when the selector lever is in position "D" and 3rd or 4th gear is engaged.

When 4th gear is disabled (O/D Off) the TCC is engaged in 3rd gear depending on the current driving situation.

### Fluid pump and stator shaft

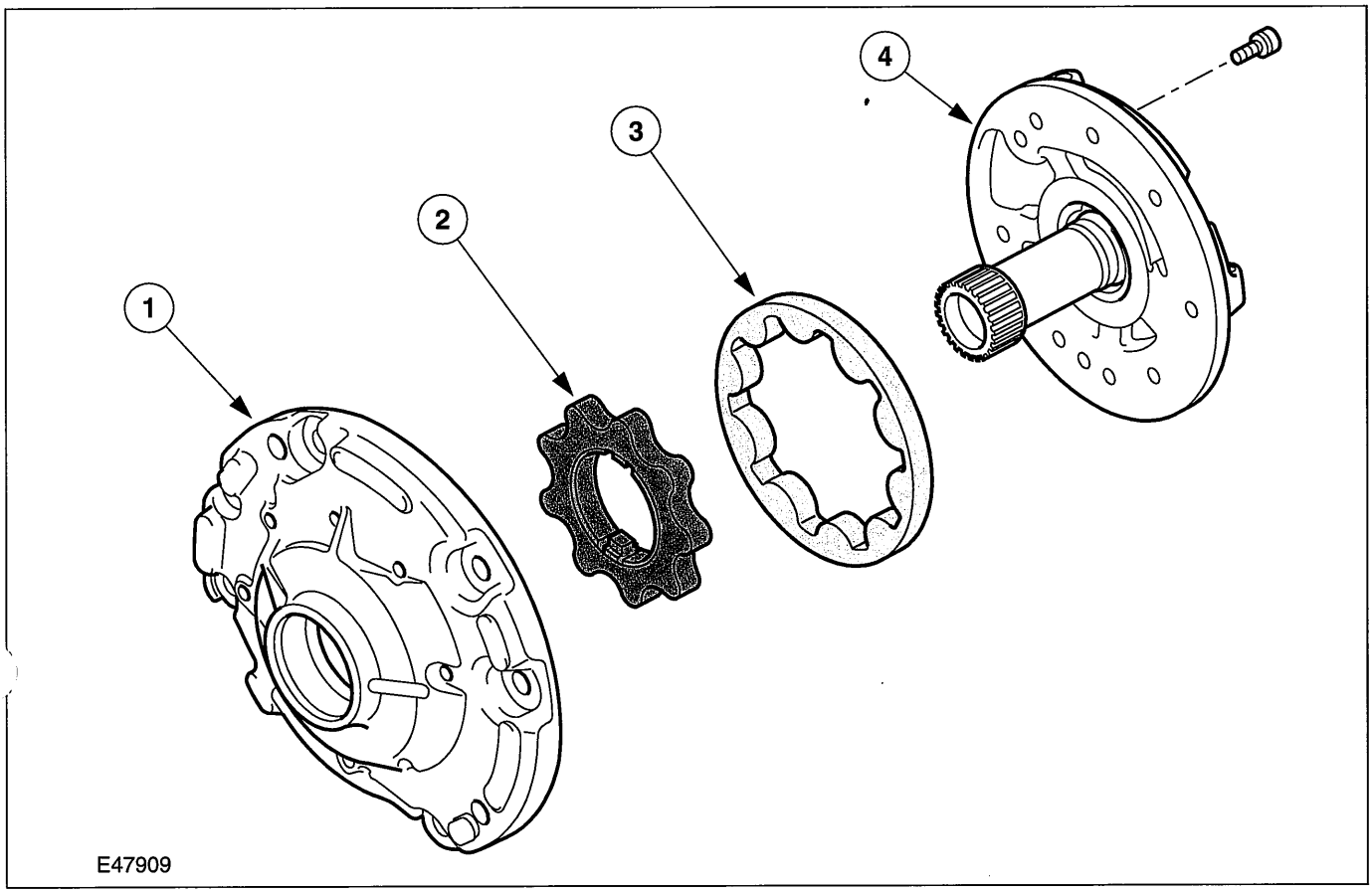


| Item | Description |
|---|---|
| 1 | Fluid pump housing |
| 2 | Inner rotor, fluid pump |
| 3 | Outer rotor, fluid pump |
| 4 | Stator shaft |

The fluid pump is a G-rotor oil pump.

It sucks up transmission fluid from the oil pan, builds up the oil pressure and then supplies it under high pressure to the main control body.

The fluid pump is driven by the crankshaft via the torque converter housing.

The fluid pump housing is bolted to the transmission housing.

The stator shaft is bolted to the fluid pump. It engages via teeth in the stator of the torque converter and acts as a support for the latter.

## DESCRIPTION AND OPERATION

### Planetary gearset

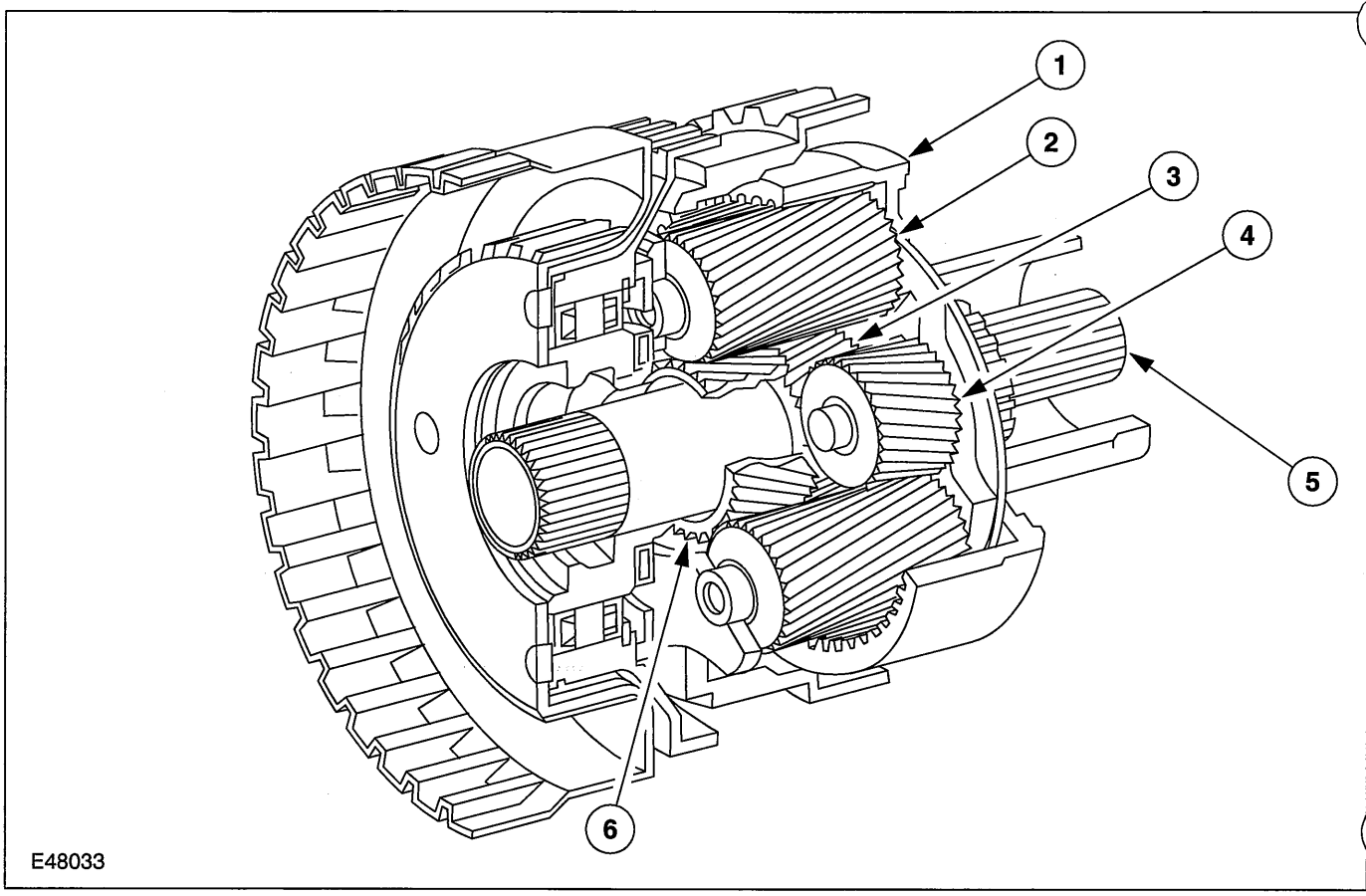


| Item | Description |
|---|---|
| 1 | Annulus |
| 2 | Long planet gear |
| 3 | Small sun gear |
| 4 | Short planet gear |
| 5 | Transmission input shaft |
| 6 | Large sun gear |

A Ravigneaux planetary gearset is a two-stage gearset with a shared planet gear carrier and one annulus.

The following connections exist between the individual components:

- small sun gear - short planet gears - long planet gears- annulus,
- large sun gear - long planet gears - annulus.

The different transmission ratios are selected by actuating and releasing the individual clutches and brakes.

The drive is transmitted from the transmission input shaft via the corresponding clutch either onto the small sun gear (1st - 3rd gear) or the planet gear carrier (3rd and 4th gear) or the large sun gear (reverse gear).

The output always flows through the annulus.

## DESCRIPTION AND OPERATION

### Clutches and brakes

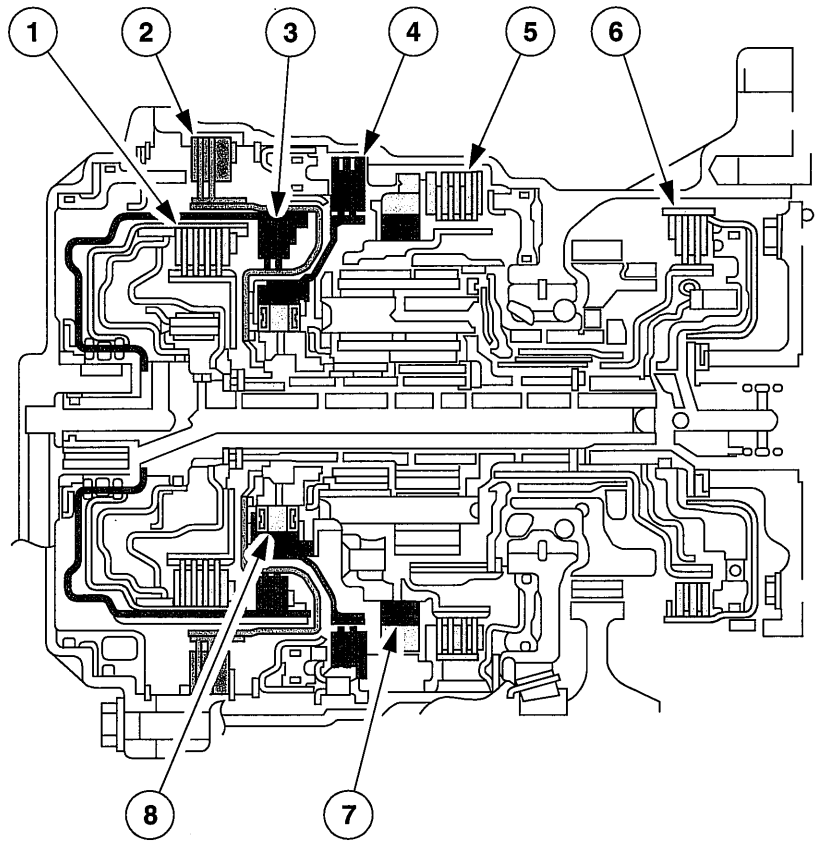


E48041

| Item | Description |
|---|---|
| 1 | 1st - 3rd gear clutch |
| 2 | 4th gear brake |
| 3 | Reverse gear clutch |
| 4 | 2nd - 4th gear brake |
| 5 | Reverse gear brake |
| 6 | 3rd/4th gear clutch |
| 7 | 1st gear one-way clutch |
| 8 | 2nd gear one-way clutch |

The transmission is equipped with three clutches and five brakes.

The clutches are multi-plate clutches.

The brakes are three multi-plate brakes and two one-way sprag clutches.

The clutches serve to transmit the torque from the transmission input shaft to certain components of the planetary gearset.

The brakes serve to hold certain components of the planetary gearset.

In order to achieve a given transmission ratio, it is necessary for at least one component of the planetary gearset to be held while the torque is transmitted to another component.

These combinations produce the different transmission ratios for the individual gears.

## DESCRIPTION AND OPERATION

### Overview of operation

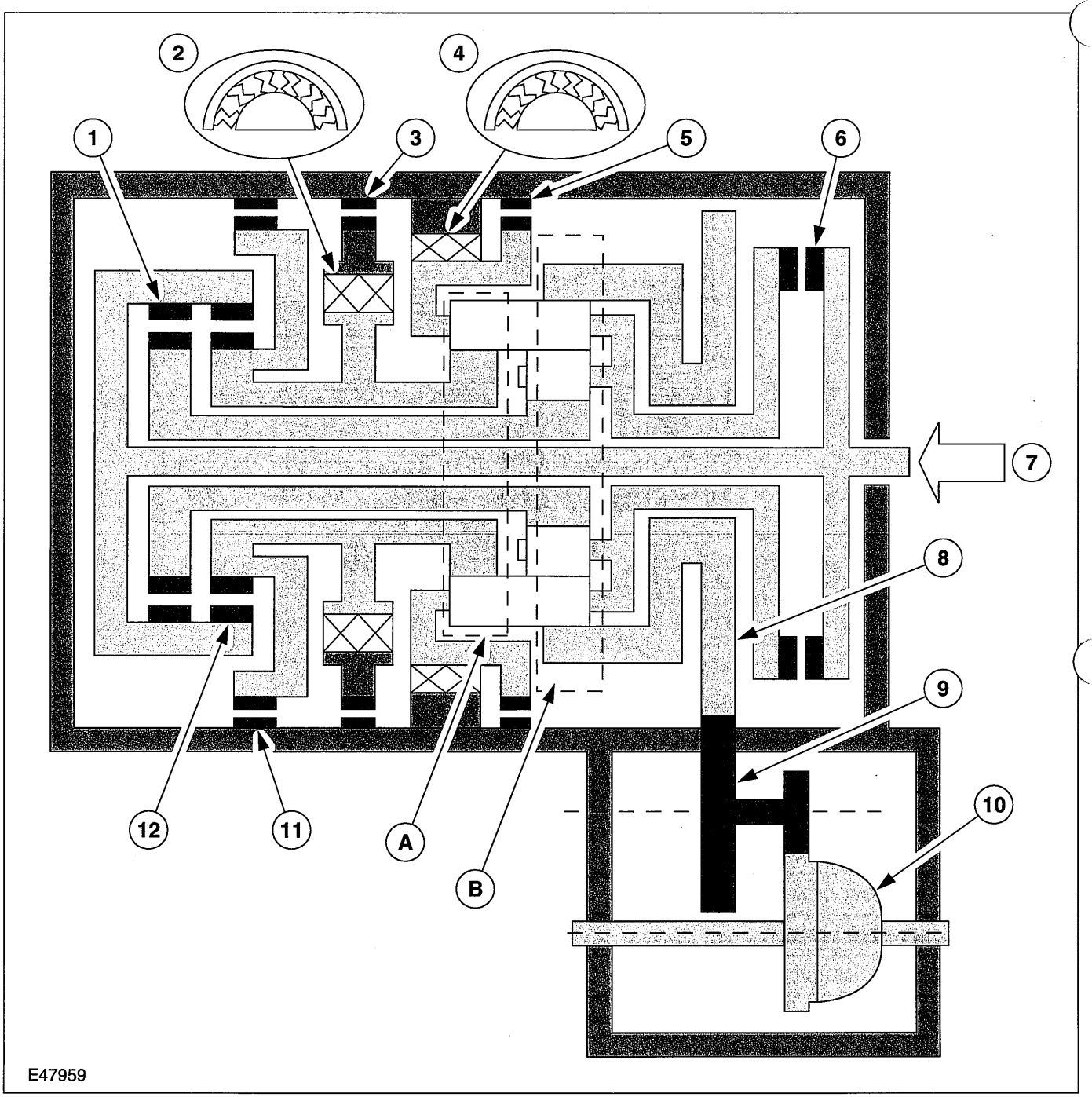


| Item | Description |
|---|---|
| 1 | 1st - 3rd gear clutch |
| 2 | 2nd gear one-way clutch |
| 3 | 2nd - 4th gear brake |
| 4 | 1st gear one-way clutch |
| 5 | Reverse gear brake |
| 6 | 3rd/4th gear clutch |
| 7 | From the torque converter |

| Item | Description |
|---|---|
| 8 | Output wheel, planetary gearset |
| 9 | Intermediate gear stage |
| 10 | Differential assembly |
| 11 | 4th gear brake |
| 12 | Reverse gear clutch |
| A | Planetary gearset, rear |
| B | Planetary gearset, front |

## DESCRIPTION AND OPERATION

| Component | Connects | P/N | R | 1 | 2 | 3 | 4 |
|---|---|---|---|---|---|---|---|
| 1st - 3rd gear clutch | Transmission input shaft to small sun gear | | | X | X | X | |
| 3rd/4th gear clutch | Transmission input shaft to planet gear carrier | | | | | X | X |
| Reverse gear clutch | Transmission input shaft to large sun gear | | X | | | | |
| 2nd - 4th gear brake | Transmission housing to large sun gear | | | | X | X | X |
| 4th gear brake | Transmission housing to 2nd gear one-way clutch | | | | X* | | X |
| Reverse gear brake | Transmission housing to planet gear carrier | | X | X** | | | |
| 1st gear one-way clutch | Transmission housing to planet gear carrier | | | X | | | |
| 2nd gear one-way clutch | 4th gear brake to large sun gear | | | | X | | |

* Only in selector lever position 2

** Only in selector lever position 1

## Intermediate gear stage and differential assembly

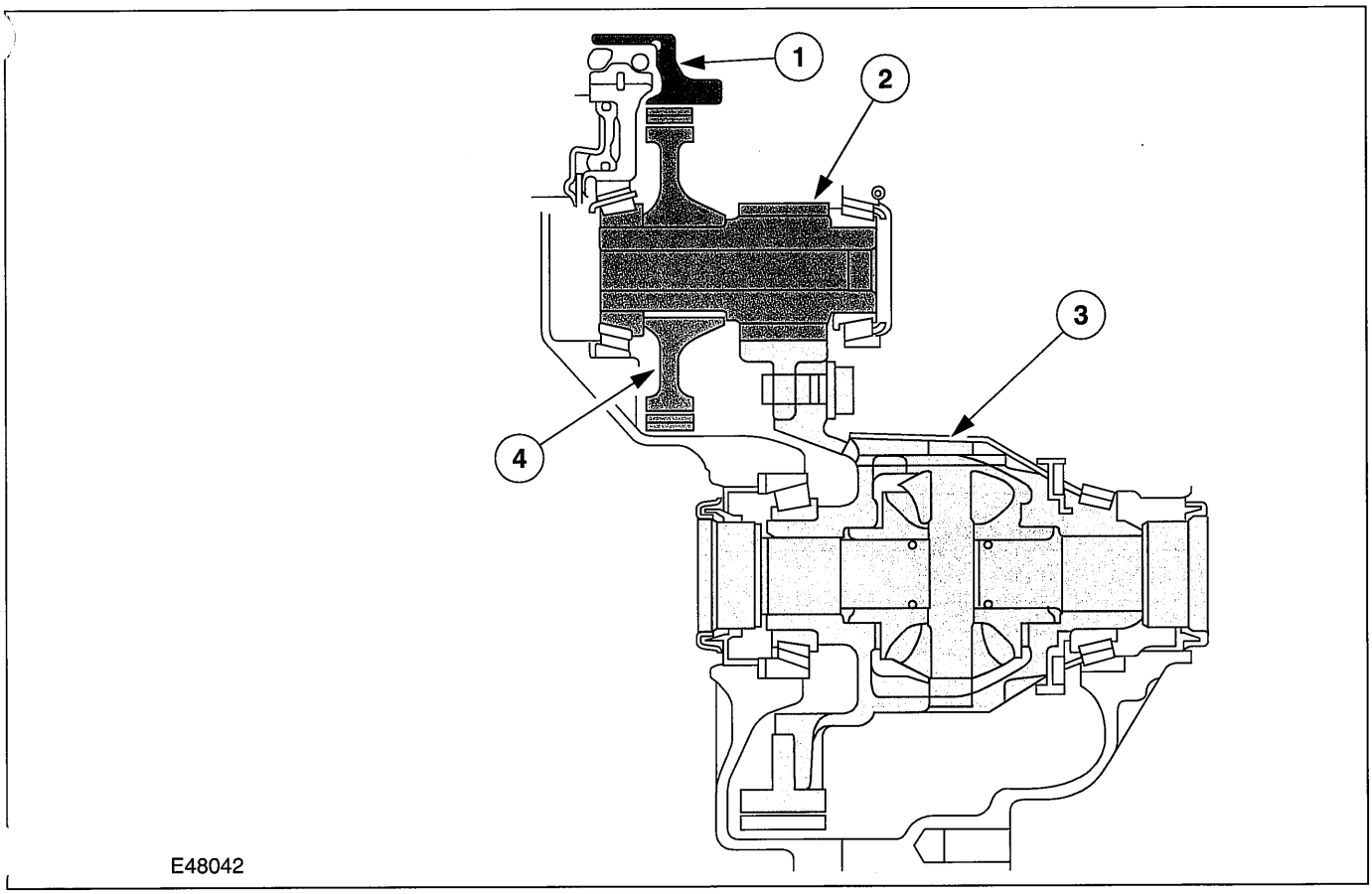

## DESCRIPTION AND OPERATION

| Item | Description |
|---|---|
| 1 | Output wheel, planetary gearset |
| 2 | Output wheel, intermediate gear stage |
| 3 | Differential assembly |
| 4 | Input wheel, intermediate gear stage |

The annulus of the planetary gearset is fixedly connected to the output wheel of the planetary gearset.

The output wheel of the planetary gearset drives the input wheel of the intermediate gear stage.

The output wheel of the intermediate gear stage drives the spur gear of the differential assembly.

The differential assembly transmits the torque via the halfshafts to the front wheels.

Any differences in rotational speed between the two halfshafts are compensated by the differential.

### Main control body

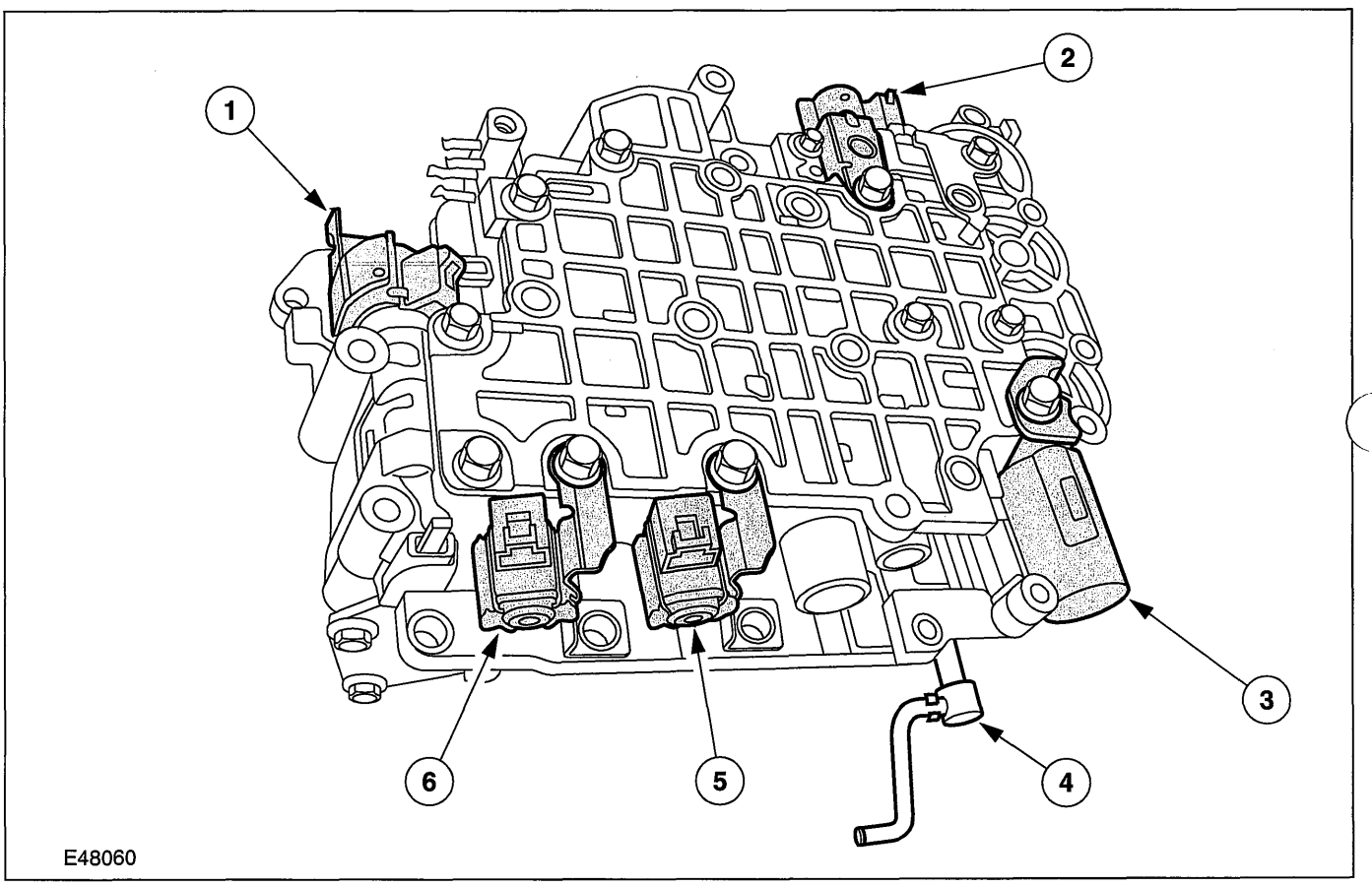


| Item | Description |
|---|---|
| 1 | Shift timing solenoid valve |
| 2 | Shift solenoid valve, TCC |
| 3 | Main regulating valve |
| 4 | Manual selector lever |
| 5 | SSB shift solenoid valve |
| 6 | SSA shift solenoid valve |

The hydraulic pressure is distributed to the individual clutches and brakes in the main control body.

The hydraulic lines and pressures are electronically regulated by a proportional solenoid valve (main regulating valve) and four shift solenoid valves.

In addition, the manual selector slide in the main control body provides a hydraulic emergency running programme which allows the vehicle to be driven in 3rd gear with the selector lever in position "D", "2" or "1" and in reverse gear with the selector lever in position "R" if key components or the transmission control unit fail.

The manual selector slide is actuated by the driver via the selector lever, the selector lever cable, the selector shaft lever and the internal gearshift mechanism.

## DESCRIPTION AND OPERATION

### Internal gearshift mechanism

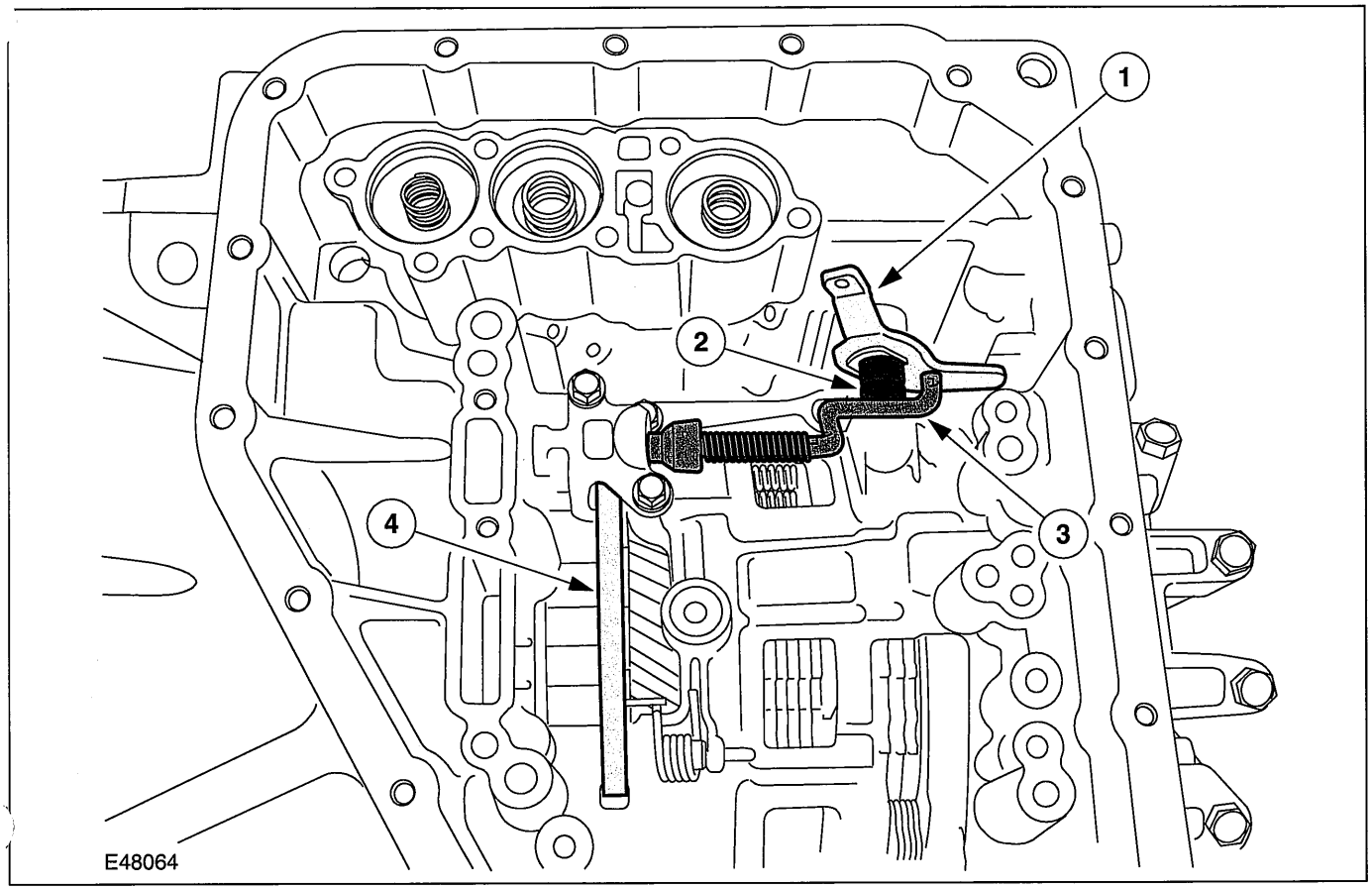


| Item | Description |
|---|---|
| 1 | Stepped cam with actuating lever for the manual selector slide |
| 2 | Selector shaft |
| 3 | Actuating rod for the parking pawl with cone |
| 4 | Parking pawl |

The mechanical parking lock secures the vehicle against rolling away.

When the vehicle is stationary it is engaged purely mechanically via the selector lever when the selector lever position "P" is engaged.

The movement of the selector lever is transmitted via the selector lever cable to the selector shaft lever.

The movement is then transferred via the selector shaft to the stepped cam.

The actuating lever for the manual selector slide forms part of the stepped cam, and it is used to actuate the manual selector slide in the main control body.

The actuating rod for the parking pawl with cone is hooked into the stepped cam.

The cone displaces the parking pawl when the selector lever position "P" is engaged.

The parking pawl engages in the teeth on the output wheel of the planetary gearset.

Accordingly, the differential is blocked via the intermediate shaft, and the vehicle is secured and cannot roll away.

## DESCRIPTION AND OPERATION

### Fluid circuit

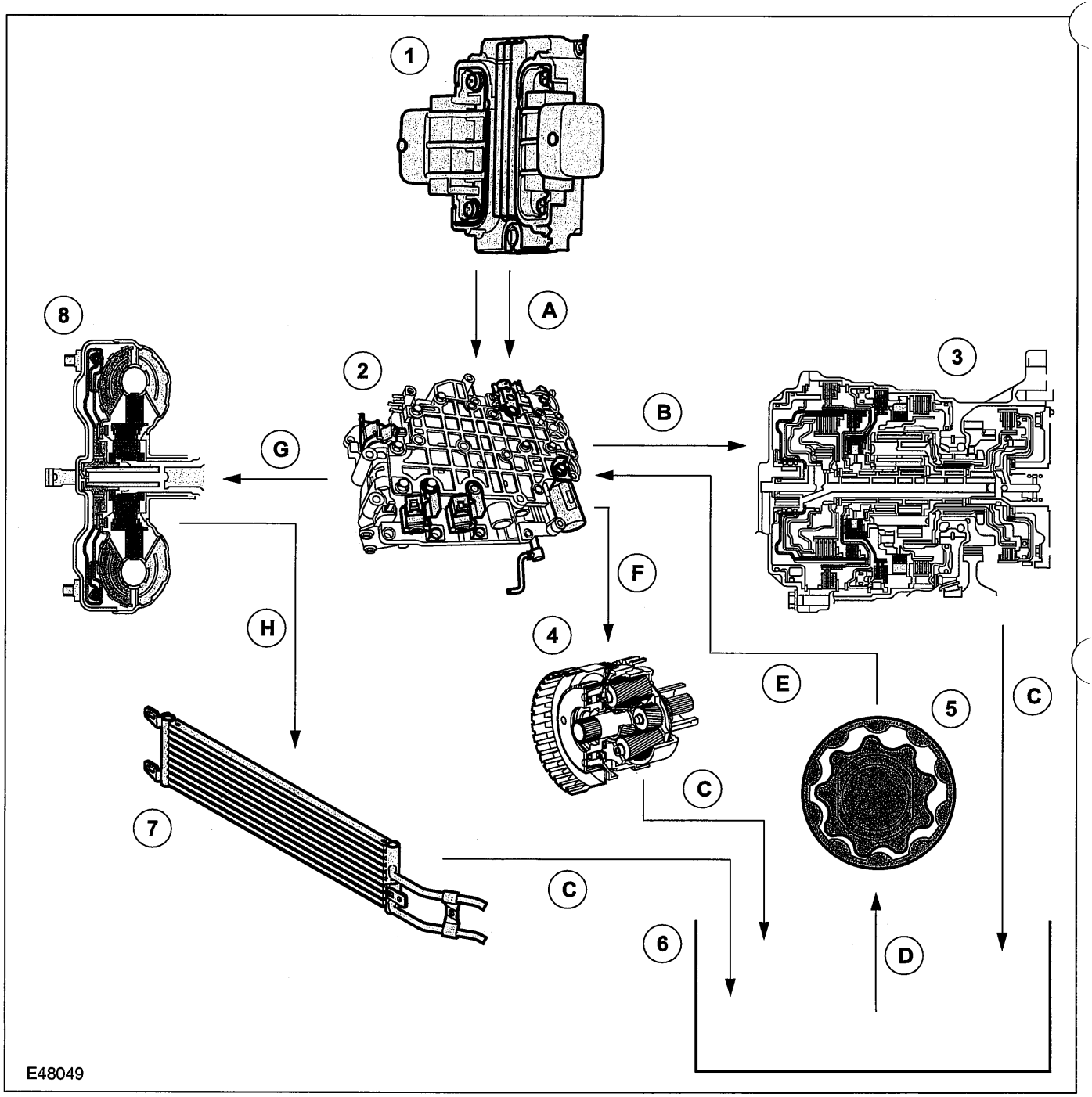


| Item | Description |
|---|---|
| 1 | Transmission control unit |
| 2 | Solenoid valves and main control body |
| 3 | Clutches and brakes |
| 4 | Planetary gearset |
| 5 | Fluid pump |
| 6 | Oil pan |
| 7 | Fluid cooler |

| Item | Description |
|---|---|
| 8 | Torque converter |
| A | Electric actuation of the solenoid valves |
| B | Actuating pressure of the clutches and brakes |
| C | To the oil pan |
| D | From the oil pan |
| E | Fluid pump pressure |

## DESCRIPTION AND OPERATION

| Item | Description |
|---|---|
| F | Lubrication |
| G | To the torque converter |
| H | To the fluid cooler |

## DESCRIPTION AND OPERATION

# Identification Tags

### Type plate

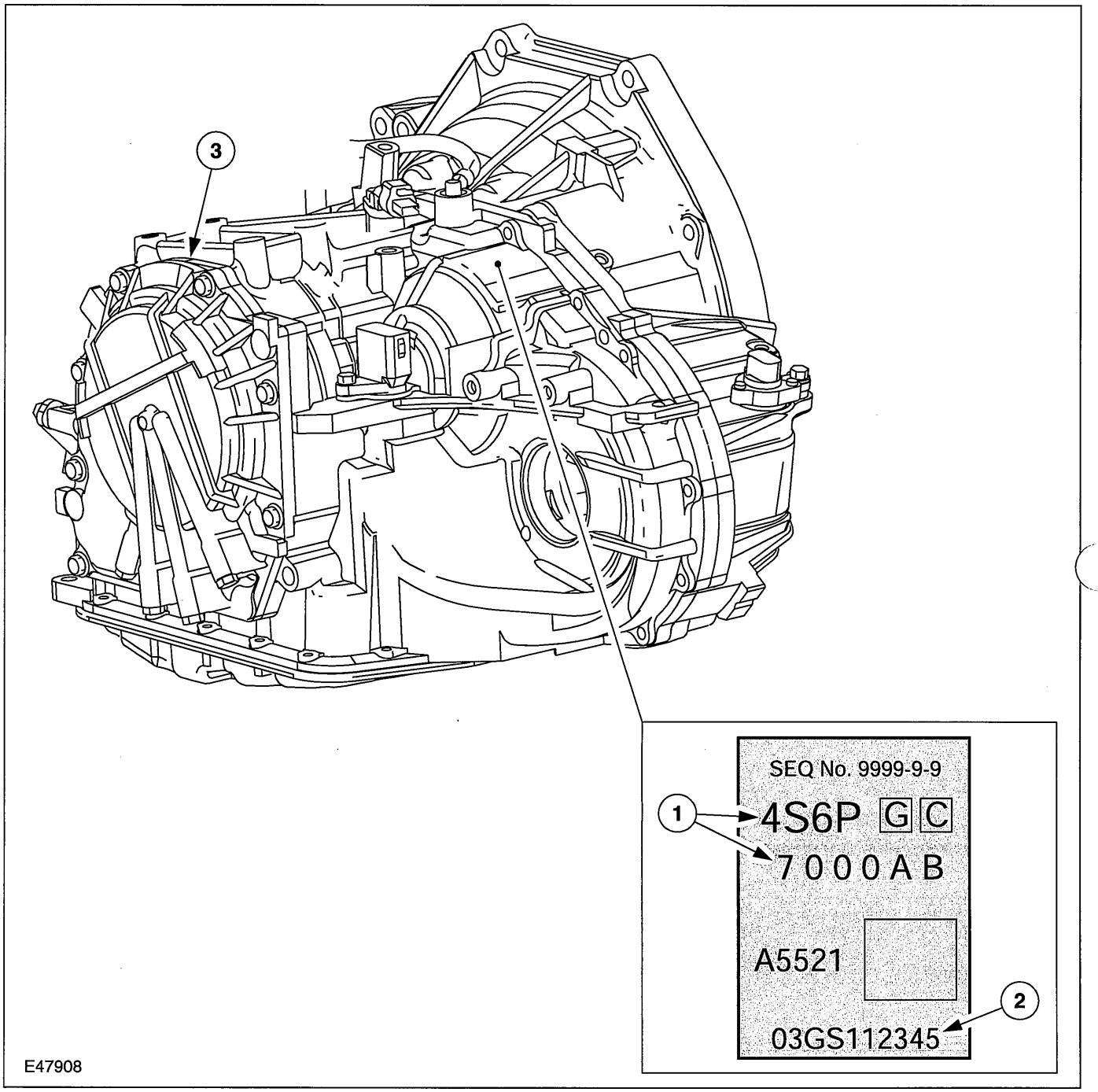


| Item | Description |
|---|---|
| 1 | Ford part number |
| 2 | Serial number |
| 3 | Stamped serial number |

The serial number and the Ford part number are shown on a sticker on the transmission housing.

In addition, the serial number is also stamped on the transmission housing.

Serial number (example: 03GS112345)

- **03**: Year of manufacture 2003
- **G**: Month of manufacture: July
- **S**: Model code for 80-series

## DESCRIPTION AND OPERATION

- **1**: production line 1
- **12345**: Serial number

| Code letter (part of the serial number) | Month of manufacture |
|---|---|
| A | January |
| B | February |
| C | March |
| D | April |
| E | May |
| F | June |
| G | July |
| H | August |
| J | September |
| K | October |
| L | November |
| M | December |

## DESCRIPTION AND OPERATION

# Transmission Ranges and Power Flow

### Transmission ratio and power flow route - 1st gear

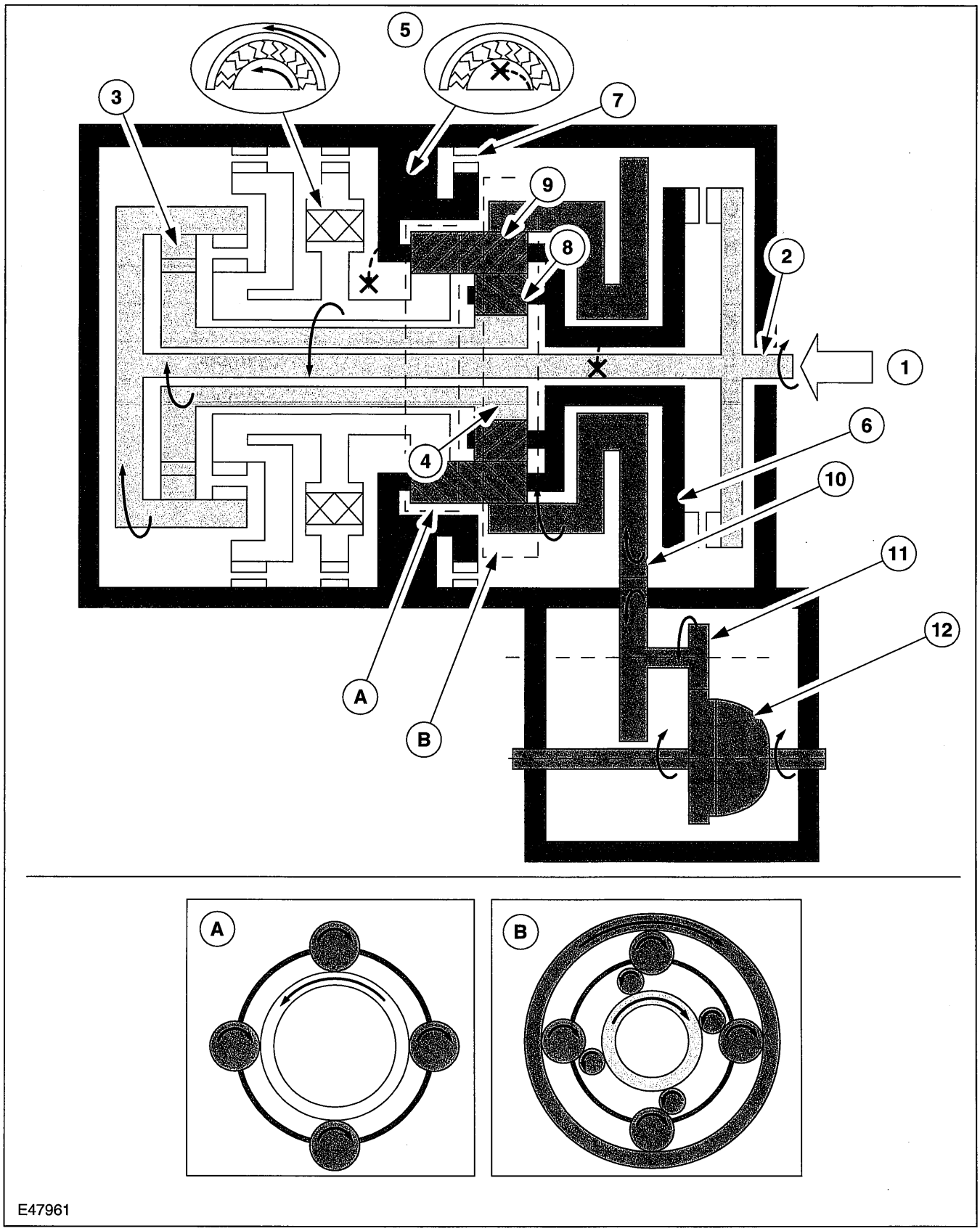

## DESCRIPTION AND OPERATION

| Item | Description |
|---|---|
| 1 | From the torque converter |
| 2 | Transmission input shaft |
| 3 | 1st - 3rd gear clutch |
| 4 | Small sun gear |
| 5 | 1st gear one-way clutch |
| 6 | Planet gear carrier |
| 7 | Reverse gear brake |
| 8 | Short planet gear |
| 9 | Long planet gear |
| 10 | Annulus and output wheel of the planetary gearset |
| 11 | Intermediate gear stage |
| 12 | Differential assembly |
| A | Planetary gearset, rear |
| B | Planetary gearset, front |

Drive is transmitted from the torque converter (1) to the transmission input shaft (2) and via the 1st-3rd gear clutch (3) to the small sun gear (4).

The planet gear carrier (6) is held by the 1st gear one-way clutch (5).

**NOTE:** In selector lever position "1" the planet gear carrier is also held by the reverse gear brake (7) (engine braking).

The short planet gears (8) are driven by the small sun gear in the opposite direction of rotation to the output from the engine.

The short planet gears drive the long planet gears (9) in the same direction of rotation as the output from the engine.

The long planet gears drive the ring gear (10) in the same direction of rotation as the output from the engine.

The annulus is fixedly connected to the output wheel of the planetary gearset and drives the intermediate gear stage (11) in the opposite direction of rotation to the output from the engine.

The intermediate gear stage drives the differential assembly (12) in the same direction of rotation as the output from the engine.

## DESCRIPTION AND OPERATION

### Transmission ratio and power flow route - 2nd gear

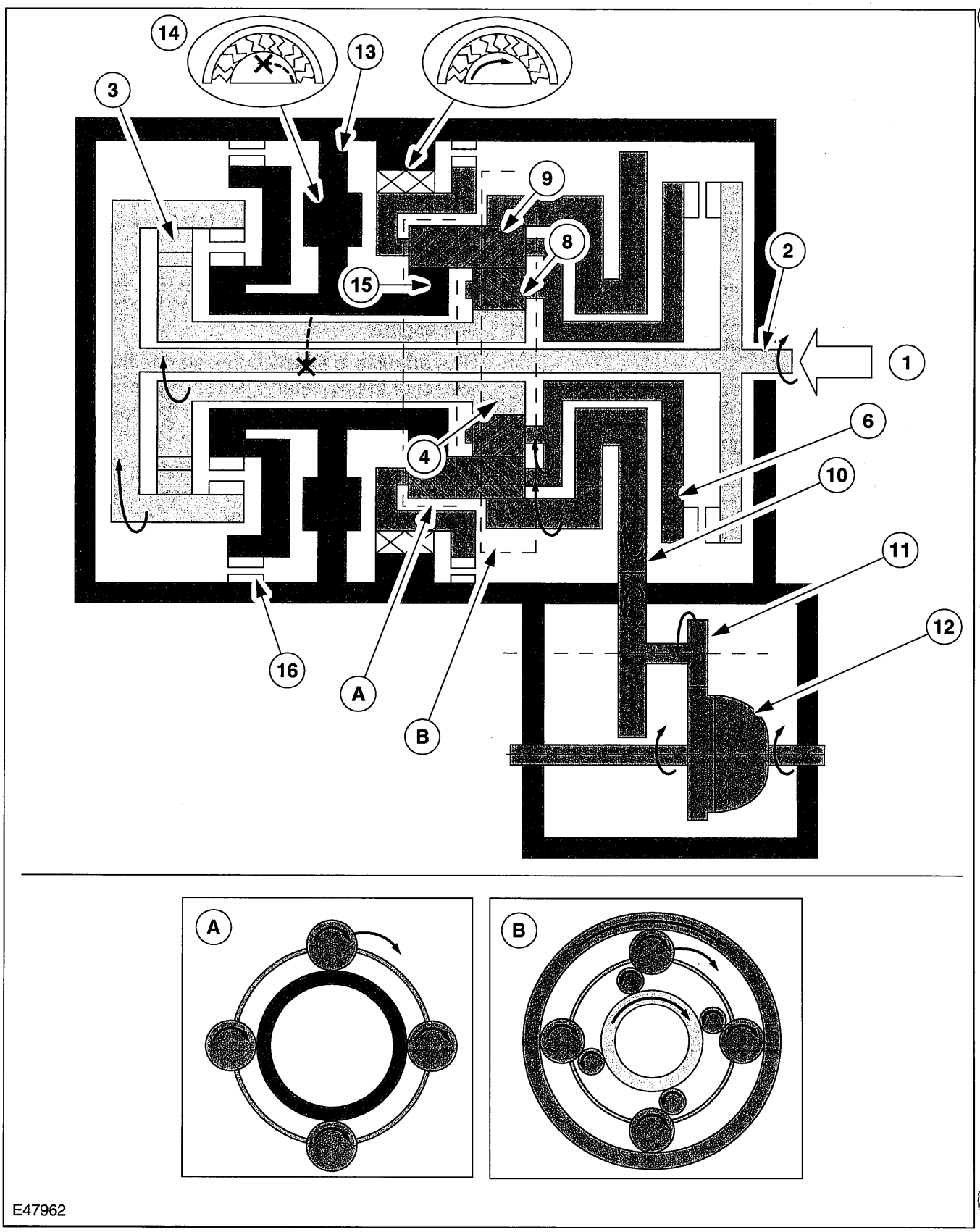

## DESCRIPTION AND OPERATION

| Item | Description |
|---|---|
| 1 | From the torque converter |
| 2 | Transmission input shaft |
| 3 | 1st - 3rd gear clutch |
| 4 | Small sun gear |
| 6 | Planet gear carrier |
| 8 | Short planet gear |
| 9 | Long planet gear |
| 10 | Annulus and output wheel of the planetary gearset |
| 11 | Intermediate gear stage |
| 12 | Differential assembly |
| 13 | 2nd - 4th gear brake |
| 14 | 2nd gear one-way clutch |
| 15 | Large sun gear |
| 16 | 4th gear brake |
| A | Planetary gearset, rear |
| B | Planetary gearset, front |

Drive is transmitted from the torque converter (1) to the transmission input shaft (2) and via the 1st-3rd gear clutch (3) to the small sun gear (4).

The large sun gear (15) is held by the 2nd gear one-way clutch (14) and the 2nd-4th gear brake (13).

**NOTE:**In selector lever position "2" the large sun gear is also held by the 4th gear brake (16) (engine braking).

The short planet gears (8) are driven by the small sun gear in the opposite direction of rotation to the output from the engine.

The short planet gears drive the long planet gears (9) in the same direction of rotation as the output from the engine.

The long planet gears are supported by the large sun gear which is being held, and they drive the planet gear carrier (6) in the same direction of rotation as the output from the engine.

The long planet gears drive the ring gear (10) in the same direction of rotation as the output from the engine.

The annulus is fixedly connected to the output wheel of the planetary gearset and drives the intermediate gear stage (11) in the opposite direction of rotation to the output from the engine.

The intermediate gear stage drives the differential assembly (12) in the same direction of rotation as the output from the engine.

## DESCRIPTION AND OPERATION

### Transmission ratio and power flow route - 3rd gear

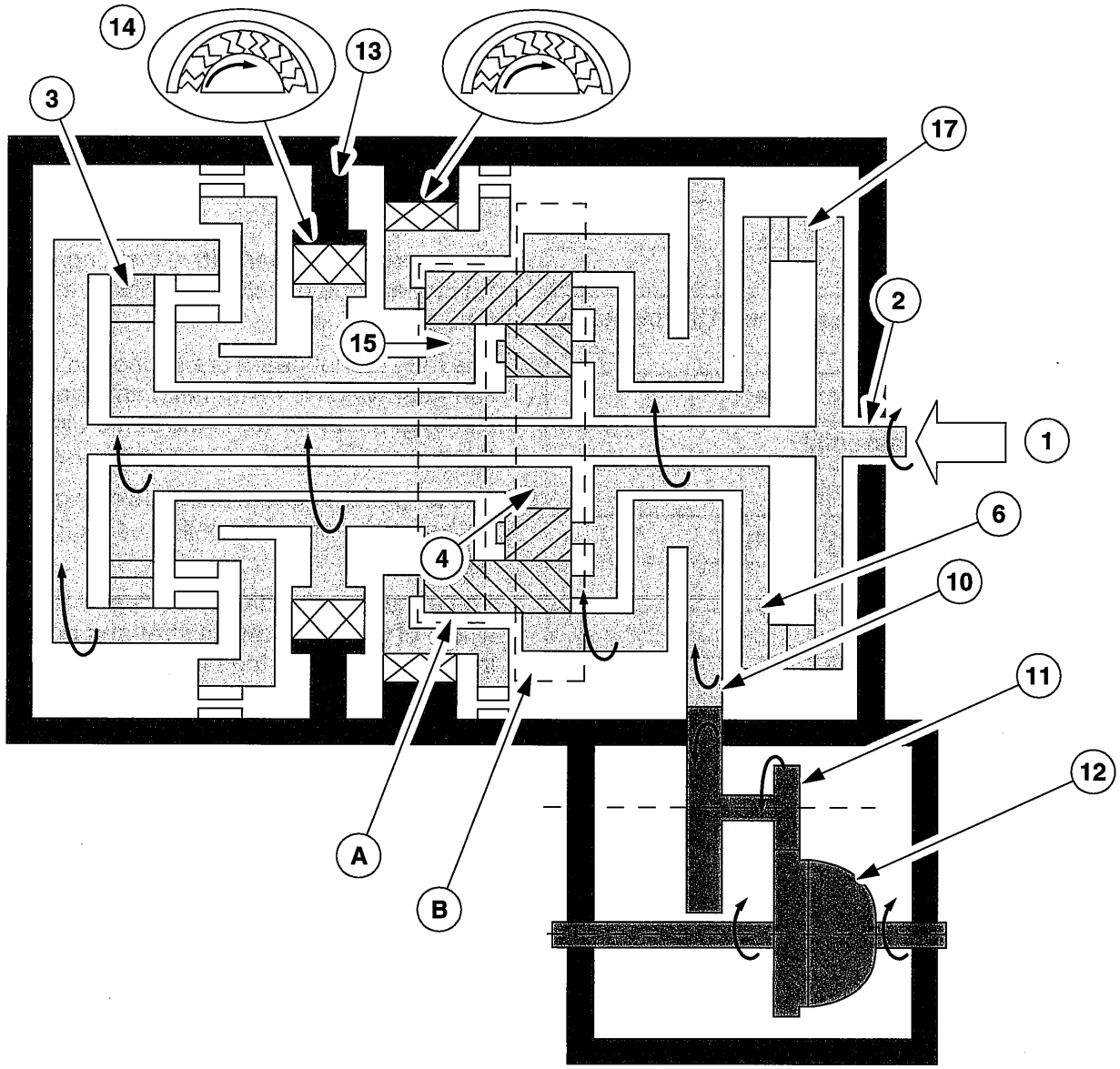


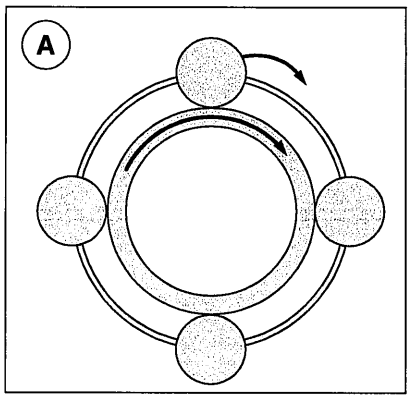


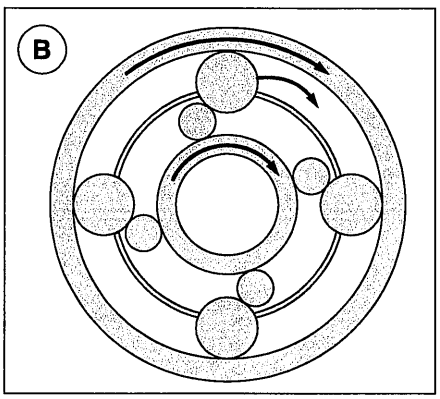


E47963

## DESCRIPTION AND OPERATION

| Item | Description |
|---|---|
| 1 | From the torque converter |
| 2 | Transmission input shaft |
| 3 | 1st - 3rd gear clutch |
| 4 | Small sun gear |
| 6 | Planet gear carrier |
| 10 | Annulus and output wheel of the planetary gearset |
| 11 | Intermediate gear stage |
| 12 | Differential assembly |
| 13 | 2nd - 4th gear brake |
| 14 | 2nd gear one-way clutch |
| 15 | Large sun gear |
| 17 | 3rd/4th gear clutch |
| A | Planetary gearset, rear |
| B | Planetary gearset, front |

The drive is transmitted from the torque converter (1) on the one hand to the transmission input shaft (2) and via the 1st-3rd gear clutch (3) to the small sun gear (4), and on the other hand from the transmission input shaft via the 3rd/4th gear clutch (17) to the planet gear carrier (6).

As the drive is transmitted to two components simultaneously, there are no relative movements within the planetary gearset. The planetary gearset rotates as a complete unit.

**NOTE:** The 2nd-4th gear brake (13) remains engaged, but the large sun gear (15) can rotate in the same direction of rotation as the output from the engine by means of the 2nd gear one-way clutch (14), as a result of which the 2nd-4th gear brake has no influence on the transmission ratio.

The Annulus (10) is fixedly connected to the output wheel of the planetary gearset and drives the intermediate gear stage (11) in the opposite direction of rotation to the output from the engine.

The intermediate gear stage drives the differential assembly (12) in the same direction of rotation as the output from the engine.

## DESCRIPTION AND OPERATION

### Transmission ratio and power flow route - 4th gear

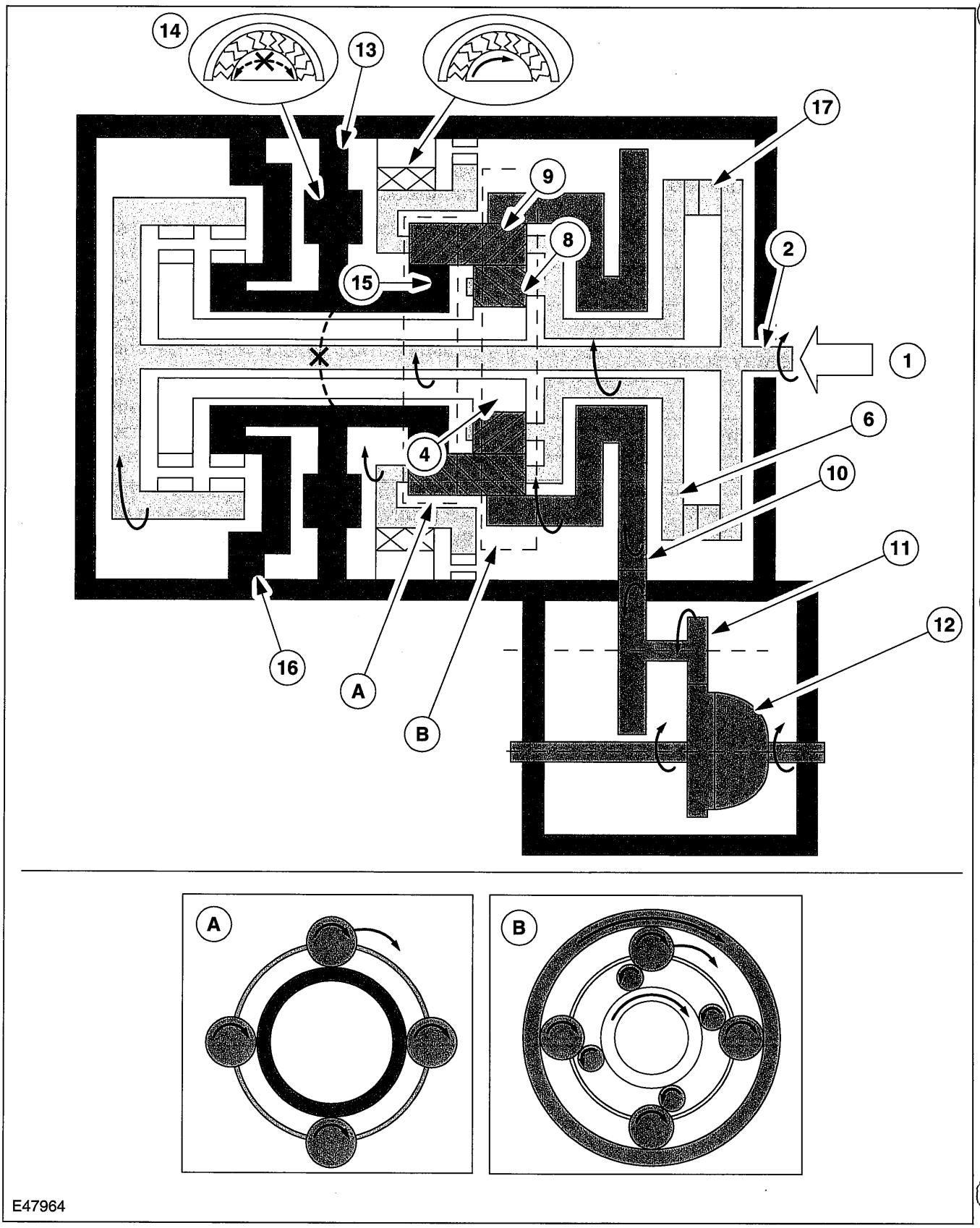

## DESCRIPTION AND OPERATION

| Item | Description |
|---|---|
| 1 | From the torque converter |
| 2 | Transmission input shaft |
| 4 | Small sun gear |
| 6 | Planet gear carrier |
| 8 | Short planet gear |
| 9 | Long planet gear |
| 10 | Annulus and output wheel of the planetary gearset |
| 11 | Intermediate gear stage |
| 12 | Differential assembly |
| 13 | 2nd - 4th gear brake |
| 14 | 2nd gear one-way clutch |
| 15 | Large sun gear |
| 16 | 4th gear brake |
| 17 | 3rd/4th gear clutch |
| A | Planetary gearset, rear |
| B | Planetary gearset, front |

Drive is transmitted from the torque converter (1) to the transmission input shaft (2) and via the 3rd/4th gear clutch (17) to the planet gear carrier (6).

The large sun gear (15) is held by the 4th gear brake (16), the 2nd gear one-way clutch (14) and the 2nd-4th gear brake (13).

**NOTE:** The short planet gears (8) and the small sun gear (4) co-rotate, but they have no influence on the transmission ratio.

The long planet gears (9) drive the annulus (10) in the same direction of rotation as the output from the engine.

The annulus is fixedly connected to the output wheel of the planetary gearset and drives the intermediate gear stage (11) in the opposite direction of rotation to the output from the engine.

The intermediate gear stage drives the differential assembly (12) in the same direction of rotation as the output from the engine.

## DESCRIPTION AND OPERATION

### Transmission ratio and power flow route - reverse gear

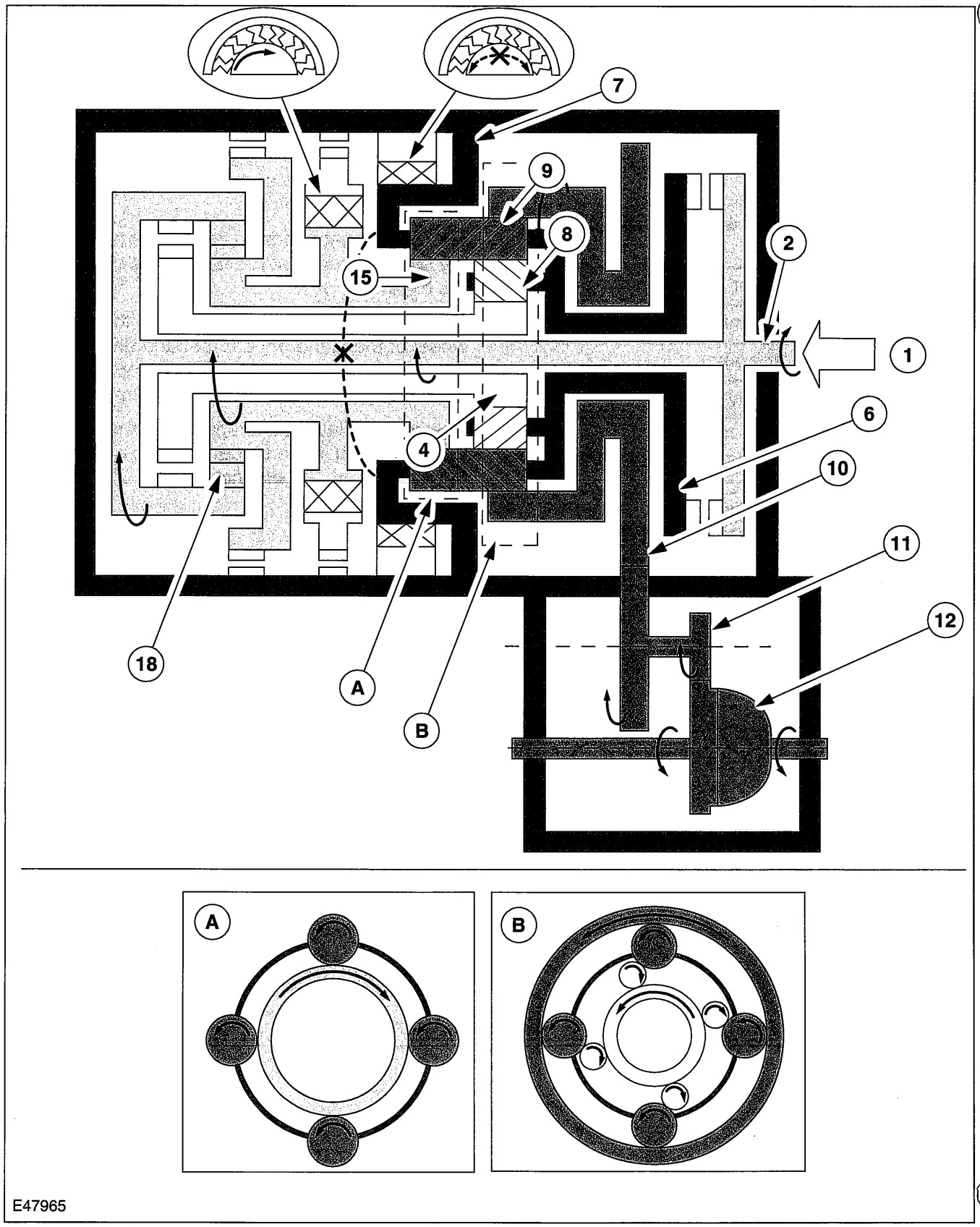

## DESCRIPTION AND OPERATION

| Item | Description |
|---|---|
| 1 | From the torque converter |
| 2 | Transmission input shaft |
| 4 | Small sun gear |
| 6 | Planet gear carrier |
| 7 | Reverse gear brake |
| 8 | Short planet gear |
| 9 | Long planet gear |
| 10 | Annulus and output wheel of the planetary gearset |
| 11 | Intermediate gear stage |
| 12 | Differential assembly |
| 15 | Large sun gear |
| 18 | Reverse gear clutch |
| A | Planetary gearset, rear |
| B | Planetary gearset, front |

Drive is transmitted from the torque converter (1) to the transmission input shaft (2) and via the reverse gear clutch (18) to the large sun gear (15).

The planet gear carrier (6) is held by the reverse gear brake (7).

The large sun gear drives the long planet gears (9) in the opposite direction of rotation to the output from the engine.

**NOTE:**The short planet gears (8) and the small sun gear (4) co-rotate, but they have no influence on the transmission ratio.

The long planet gears drive the annulus (10) in the opposite direction of rotation to the output from the engine.

The annulus is fixedly connected to the output wheel of the planetary gearset and drives the intermediate gear stage (11) in the same direction of rotation as the output from the engine.

The intermediate gear stage drives the differential assembly (12) in the opposite direction of rotation to the output from the engine.

## DESCRIPTION AND OPERATION

# Transaxle Electronic Control System

### Overview

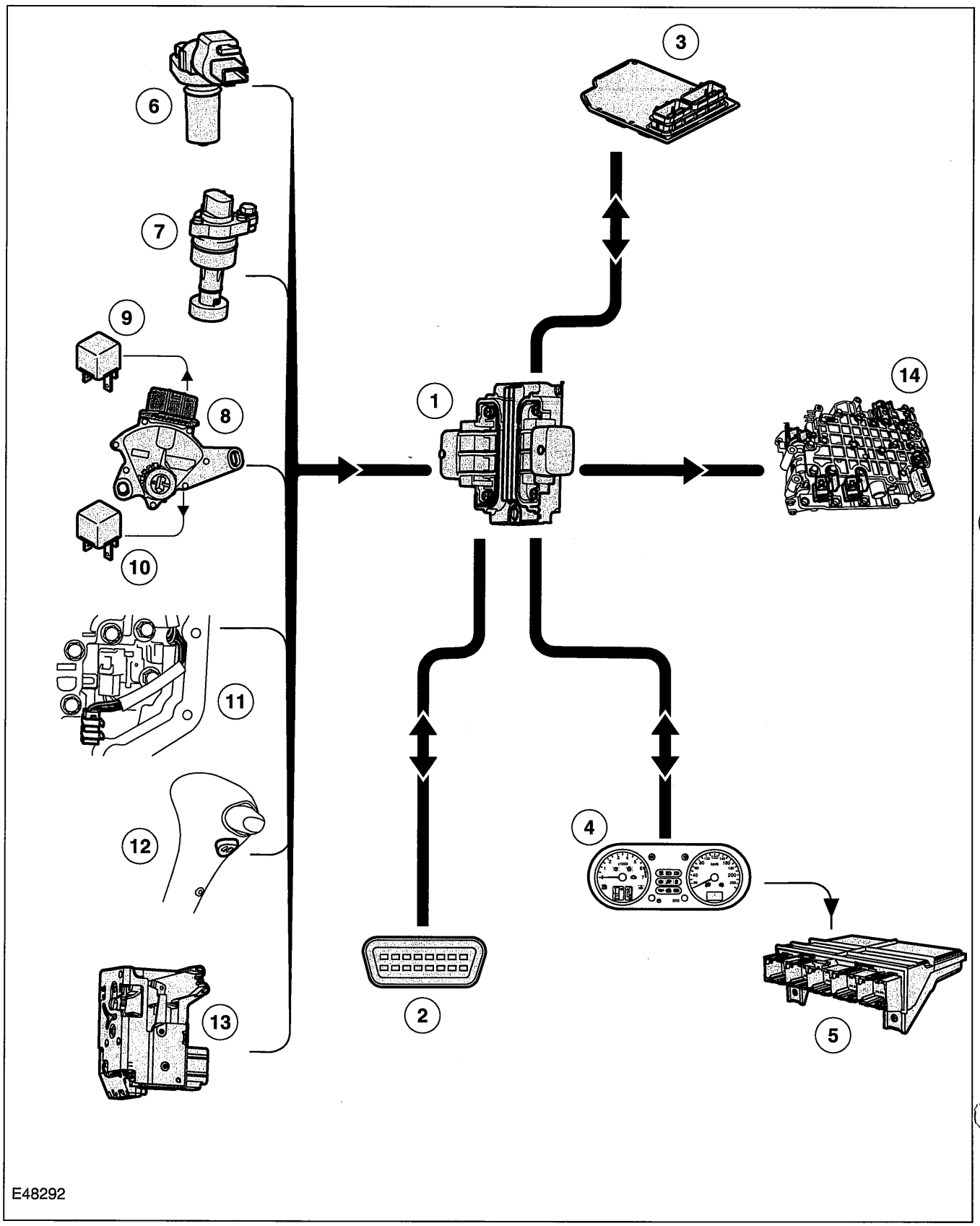

## DESCRIPTION AND OPERATION

| Item | Description |
|---|---|
| 1 | Transmission control unit |
| 2 | Data Link Connector (DLC) |
| 3 | Powertrain Control Module (PCM) |
| 4 | Instrument cluster |
| 5 | Generic Electronic Module (GEM) |
| 6 | Turbine Shaft Speed (TSS) sensor |
| 7 | Output Shaft Speed (OSS) sensor |

| Item | Description |
|---|---|
| 8 | Transmission Range (TR) sensor |
| 9 | Starter inhibit relay |
| 10 | Backup lamp relay |
| 11 | Transmission Fluid Temperature (TFT) sensor |
| 12 | Overdrive switch |
| 13 | Driver's side door ajar switch |
| 14 | Solenoid valves in the main control body |

### Transmission control unit

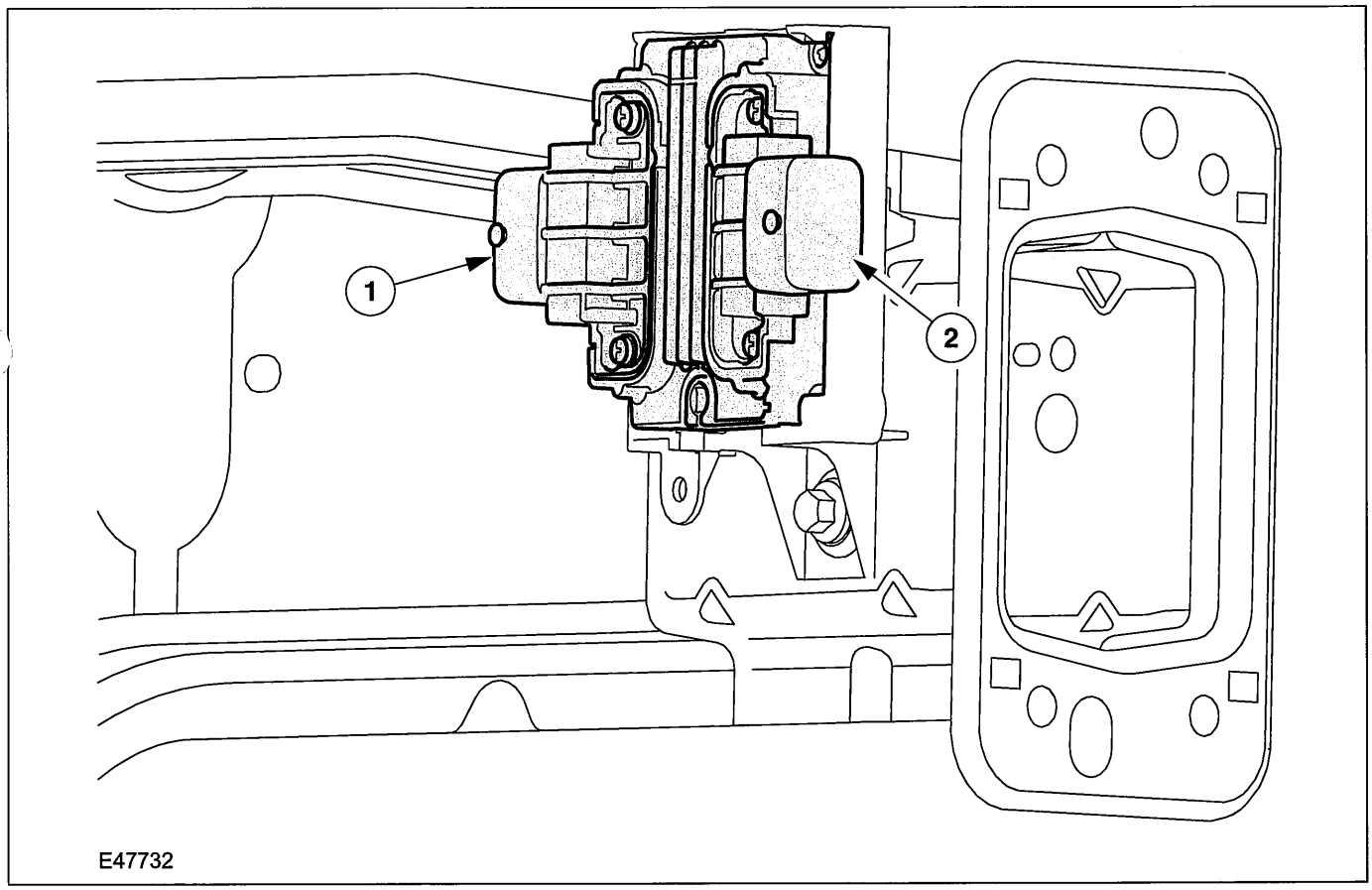


| Item | Description |
|---|---|
| 1 | Electrical connector, vehicle wiring harness |
| 2 | Electrical connector, transmission wiring harness |

The transmission control unit is located in the engine compartment on the left-hand side member.

The transmission control unit evaluates incoming signals and controls the actuators accordingly.

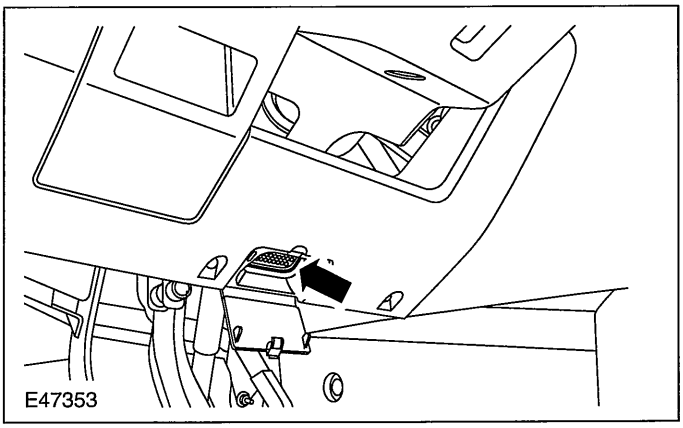

## DESCRIPTION AND OPERATION

The transmission control unit can be diagnosed with WDS via the DLC.

### Gearshift strategies

#### Gearshift control

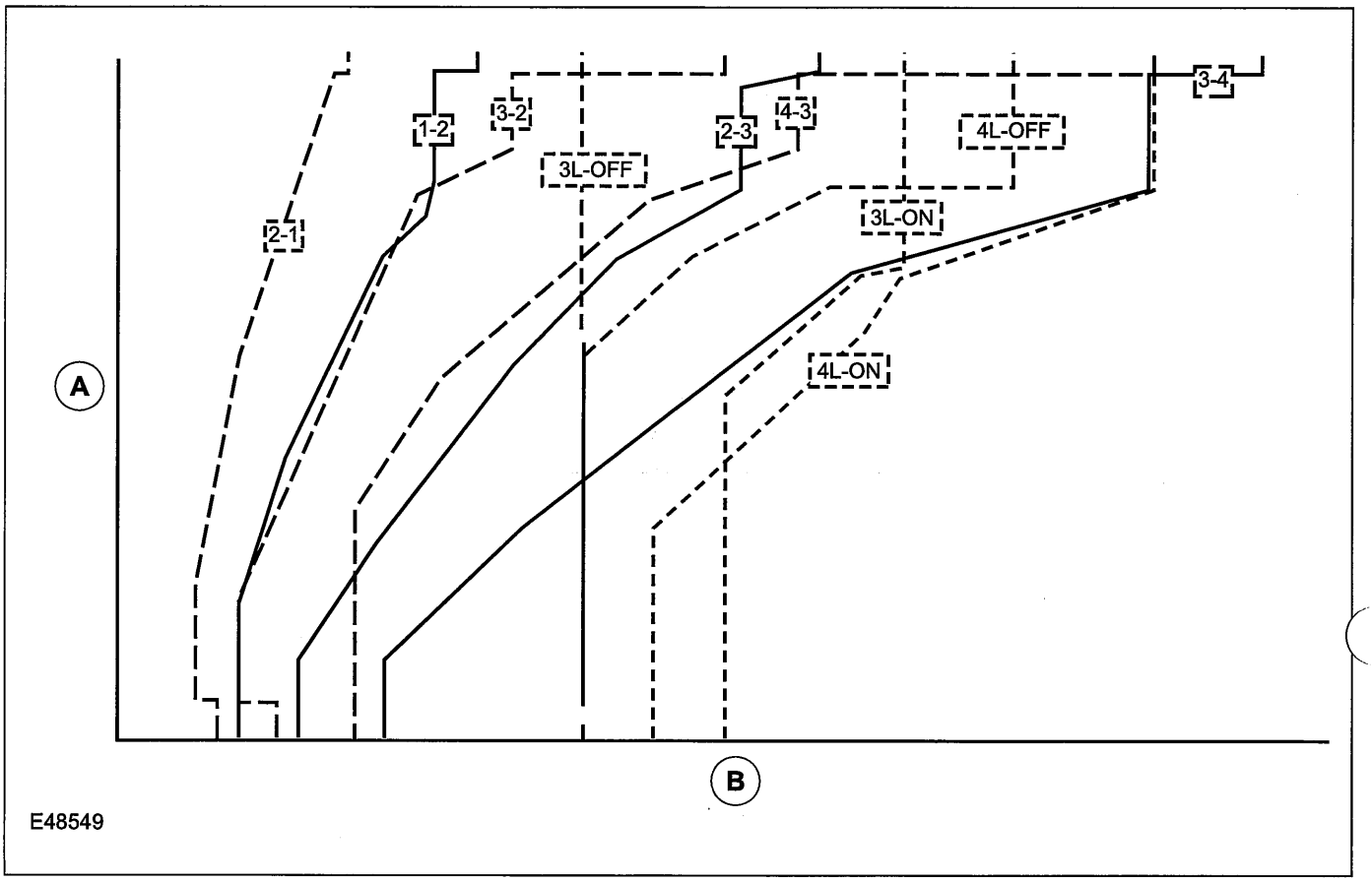


| Item | Description |
|---|---|
| A | Accelerator pedal position |
| B | Vehicle speed |

The current ratio is selected by the transmission control unit either in accordance with the requirements for low fuel consumption or in order to meet the required driving performance.

The gearshift timing is selected in accordance with a gearshift map which is programmed into the control unit as a function of the accelerator pedal position and the vehicle speed.

For kick-down (accelerator pedal pressed down at least 95 %) the next lowest gear is selected, as long as the engine speed allows it. All gearshift timings are set by the transmission control unit to the upper shift characteristic.

The driver can feel the kickdown point in the accelerator pedal as a slight increase in resistance to the operation of the pedal.

This is influenced by the following variables:

- accelerator pedal position and actuation,
- vehicle speed,
- brake pedal position,
- selector lever position.

The following are actuated:

- SSA shift solenoid valve,
- SSB shift solenoid valve.

#### Hill climb mode

When the vehicle is in hill climb mode or towing a trailer, the transmission control delays gearshifts to prevent frequent shifting back and forth between the gears.

## DESCRIPTION AND OPERATION

The transmission control unit determines hill climb mode or trailer operation from the change in throttle valve position supplied by the PCM in relation to the acceleration of the vehicle.

Depending on the driving resistance, the transmission control unit chooses between two gearshift maps which have been specially programmed for this purpose and in which the shift timings are again chosen as a function of the accelerator pedal position and the vehicle speed..

### Hill descent mode

The hill descent mode is used to take better advantage of engine braking during hill descents.

A 'hill descent' situation is recognised by the transmission control unit if the vehicle is accelerating without operation of the accelerator pedal.

If in addition the brake is also depressed then the transmission control unit automatically shifts back from 4th into 3rd gear.

### Cold start mode

In order to reach operating temperature as quickly as possible under low ambient temperatures, gearshifts into 4th gear and engagement of the torque converter clutch (TCC) are suppressed if one of the following conditions is met:

- Transmission fluid temperature below +20 °C
- Coolant temperature below - 40°C

The following are actuated:

- SSA shift solenoid valve,
- SSB shift solenoid valve,
- Shift solenoid valve, TCC.

### Overheating protection mode

The overheating protection mode serves to protect the transmission against overheating and the serious damage that this can cause.

If the transmission fluid temperature reaches a temperature of around 135 °C, the transmission control employs a shift pattern designed to prevent a further increase in the transmission fluid temperature.

When the transmission fluid temperature drops back below approx. 125 °C, the transmission control exits the overheating protection mode.

The MIL warning lamp is actuated by the transmission control unit if the transmission fluid temperature reaches approximately 140 °C.

The MIL warning lamp goes out again when the transmission fluid temperature drops back to below around 130 °C.

### Main line pressure control

In order to ensure the highest possible efficiency of the automatic transmission and to limit the power losses from the fluid pump, the main line pressure is adapted accordingly by the main regulating valve as a function of the accelerator pedal position (driver torque demand) and the selector lever position.

This is influenced by the following variables:

- Accelerator pedal position and actuation
- Selector lever position

The following are actuated:

- Main regulating valve

### Engagement of the TCC

The TCC is engaged in 3rd and 4th gear depending on the current driving situation.

Engagement is controlled in accordance with the shift map stored in the control unit.

This is influenced by the following variables:

- Accelerator pedal position and actuation,
- Vehicle speed,
- Selector lever position,
- Transmission fluid temperature,
- Coolant temperature.

The following are actuated:

- Shift solenoid valve, TCC.

### Torque reduction during gearshifts

In order to improve the quality of gearshifts and to avoid gearshift judder, the engine torque is reduced by the PCM in response to a request from the transmission control unit during gearshifts.

The engine torque is also reduced during engagement and disengagement of the TCC.

## DESCRIPTION AND OPERATION

This is influenced by the following variables:
- Engine speed,
- Engine load,
- Transmission input speed,
- Vehicle speed.

The following are actuated:
- PCM (torque reduction request signal via the CAN databus).

### Pressure control during gearshifts

In order to ensure that the engagement of the clutches and brakes is as judder-free as possible, the main line pressure is reduced during gearshifts.

This is influenced by the following variables:
- Engine speed,
- Engine load,
- Transmission input speed,
- Vehicle speed.

The following are actuated:
- Main regulating valve.

### Shift timing adaptation during upshifts

In order to ensure that the engagement of the clutches and brakes is as judder-free as possible, the timing of the gearshift processes is monitored during upshifts.

In the event of any discrepancy from the target values, the main line pressure is adapted accordingly during the next gearshift.

The shift timing adaptation during upshifts is only active at transmission fluid temperatures between 50 °C and 120 °C.

This is influenced by the following variables:
- Engine load,
- Accelerator pedal position,
- Transmission input speed,
- Vehicle speed,
- Transmission fluid temperature,
- Selector lever position.

The following are actuated:
- Main regulating valve.

### Shift timing adaptation during shifts from 3rd to 4th gear

The shift from 3rd gear into 4th gear is the only gearshift during which a clutch is disengaged and a brake is engaged simultaneously.

In order to control the synchronized switching of the two components as exactly as possible, the shift timing solenoid valve is actuated accordingly.

In order to ensure that this particular gearshift is performed as judder-free as possible throughout the service life of the transmission, the gearshift is monitored by the two rotational speed sensors and the actuation of the shift timing solenoid valve is adapted accordingly.

The shift timing adaptation for gearshifts from 3rd gear into 4th gear is only active at transmission fluid temperatures between 30 °C and 120 °C.

This is influenced by the following variables:
- Engine load,
- Accelerator pedal position,
- Transmission input speed,
- Vehicle speed,
- Transmission fluid temperature,
- Selector lever position.

The following are actuated:
- Shift timing solenoid valve.

### Shift timing adaptation during shifts from 4th to 3rd gear

The shift from 4th gear into 3rd gear is the only gearshift during which a brake is disengaged and a clutch is engaged simultaneously.

In order to control the engagement of the clutch as precisely as possible, the main regulating valve is actuated accordingly in order to build up the actuating pressure at exactly the right time.

In order to ensure that this particular gearshift is performed as judder-free as possible throughout the service life of the transmission, the gearshift is monitored by the two rotational speed sensors and the actuation of the main regulating valve is adapted accordingly.

The shift timing adaptation for gearshifts from 4th gear into 3rd gear is only active at transmission fluid temperatures between 20 °C and 120 °C.

## DESCRIPTION AND OPERATION

This is influenced by the following variables:
- Engine load,
- Accelerator pedal position,
- Transmission input speed,
- Vehicle speed,
- Transmission fluid temperature,
- Selector lever position.

The following are actuated:
- Main regulating valve.

### Reverse gear safety strategy

The transmission control unit prevents shifts into reverse gear while the vehicle is driving forwards, as otherwise serious transmission damage can be caused.

The reverse gear safety strategy is active when reverse gear is engaged with the selector lever at vehicle speeds in excess of 11 km/h.

In this case the transmission control unit actuates the shift timing solenoid valve, as a result of which the actuating pressure does not reach the reverse gear clutch or the reverse gear brake.

The reverse gear safety strategy is deactivated when the vehicle speed is below 9 km/h. The actuating pressure can then reach the reverse gear clutch and the reverse gear brake and the gearshift into reverse gear is performed.

This is influenced by the following variables:
- Vehicle speed,
- Selector lever position.

The following are actuated:
- Shift timing solenoid valve.

### Avoidance of gearshift judder during engagement of a transmission range

In order to prevent gearshift judder when moving the selector lever from N to D, the transmission control unit initially shifts into 2nd gear instead of 1st gear, and then immediately shifts back into 1st gear before the gearshift process is finished.

This reduces the amount of gearshift judder during engagement of a forward drive range.

This is influenced by the following variables:
- Selector lever position,
- Accelerator pedal position,
- Transmission input speed,
- Vehicle speed,
- Transmission fluid temperature.

The following are actuated:
- SSA shift solenoid valve,
- SSB shift solenoid valve.

### Torque reduction when pulling away

In order to protect the clutches against excessively high torque when pulling away, the PCM reduces the engine torque in response to a request from the transmission control.

If the accelerator pedal is depressed while the vehicle is pulling away, then the transmission control unit sends a corresponding signal requesting a torque reduction via the CAN databus.

This is influenced by the following variables:
- Selector lever position,
- Accelerator pedal position,
- Engine speed,
- Transmission input speed,
- Vehicle speed.

The following are actuated:
- PCM (torque reduction request signal via the CAN databus).

## Selector lever positions

### Selector lever position "P"

No gear is engaged in selector lever position "P".

The parking pawl is engaged manually via the selector lever cable and the selector shaft.

### Selector lever position "R"

The reverse gear is engaged in selector lever position "R".

### Selector lever position "N"

No gear is engaged in selector lever position "N".

The powertrain is not blocked.

## DESCRIPTION AND OPERATION

### Selector lever position "D"

In selector lever position "D" the transmission control will allow all gears to be engaged provided the overdrive switch is not operated.

If the overdrive switch is pressed then the transmission control prevents gearshifts into 4th gear or shifts back into 3rd gear.

### Selector lever position "2"

Only the second gear is engaged when the selector lever is in position "2". Gearshifts into 1st gear are not permitted.

If the selector lever is moved to position "2" at higher speeds than are permitted for second gear, then the transmission control delays the downshift until the vehicle speed has slowed down enough.

In selector lever position "2" engine braking is effective when the vehicle is coasting.

### Selector lever position "1"

Only the first gear is engaged when the selector lever is in position "1".

If the selector lever is moved to position "1" at higher speeds than are permitted for first gear, then the transmission control delays the downshift until the vehicle speed has slowed down enough.

In selector lever position "1" engine braking is effective when the vehicle is coasting.

### Signal transmission on the CAN databus

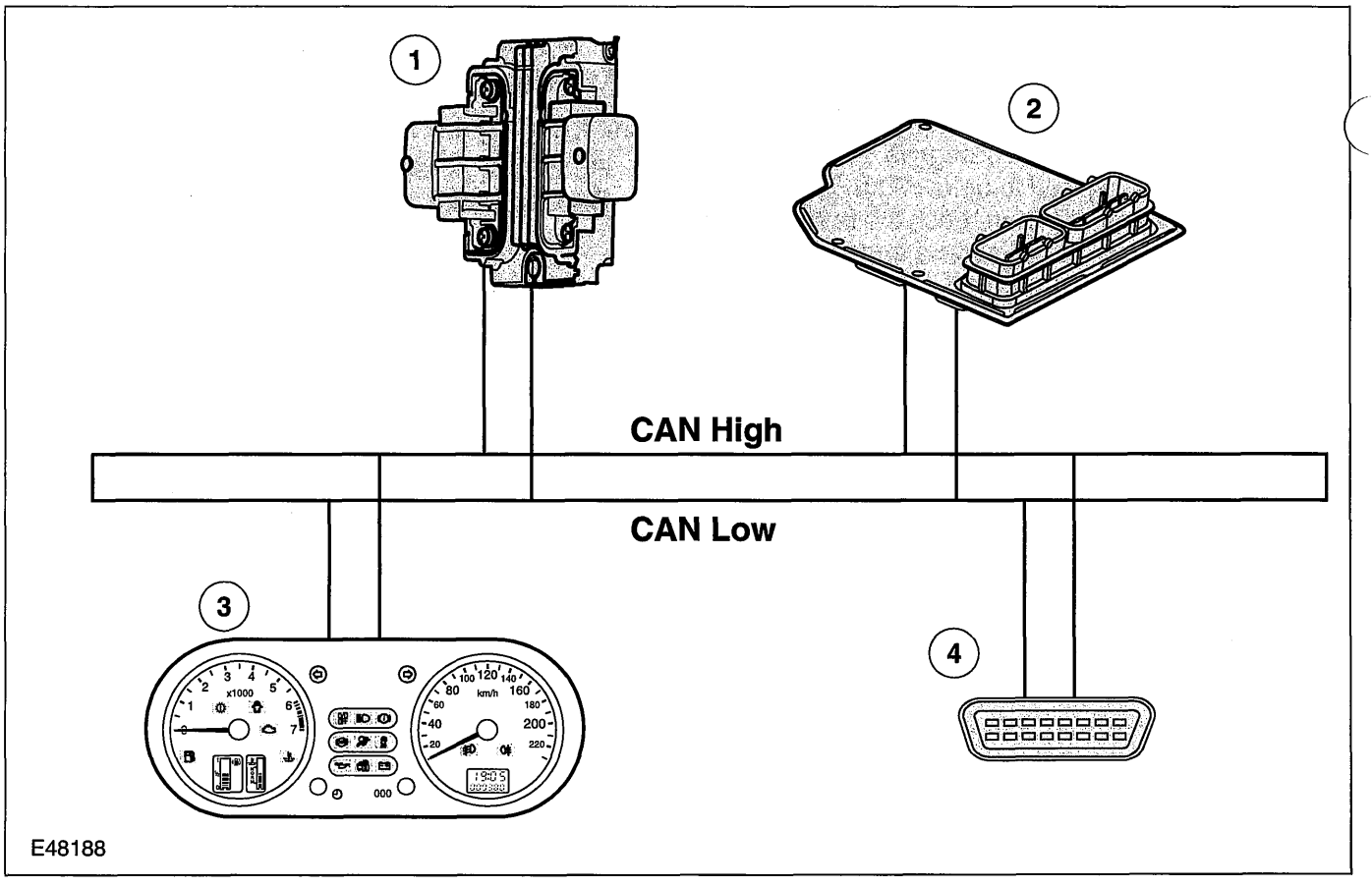


| Item | Description |
|---|---|
| 1 | Transmission control unit |
| 2 | PCM |

| Item | Description |
|---|---|
| 3 | Instrument cluster |
| 4 | DLC |

## DESCRIPTION AND OPERATION

### Engine speed

The engine speed is detected by the crankshaft position (CKP) sensor and passed on to the PCM.

The engine speed is transmitted from the PCM via the CAN databus to the transmission control unit.

The transmission control unit uses this signal for:

- Torque reduction during gearshifts,
- Pressure control during gearshifts.

### Engine load

The PCM determines a load signal which is transmitted via the CAN databus to the transmission control unit.

The transmission control unit uses this signal for:

- Torque reduction during gearshifts,
- Pressure control during gearshifts,
- Shift timing adaptation during upshifts,
- Shift timing adaptation during shifts from 3rd to 4th gear,
- Hill climb mode,
- Hill descent mode.

### Torque reduction request signal

Before performing a gearshift, the transmission control unit sends a signal via the CAN databus to the PCM requesting a torque reduction.

The PCM then reduces the engine torque, ensuring that the gearshift is as smooth and judder-free as possible.

### Brake signal

The PCM receives a signal from the stoplamp switch when the brake pedal is depressed.

This signal is transmitted via the CAN databus to the transmission control unit.

The transmission control unit uses this signal for:

- Gearshift control,
- Engagement of the TCC

### Accelerator pedal position

The PCM receives the current accelerator pedal position signal from the Accelerator Pedal Position (APP) sensor.

This signal is transmitted via the CAN databus to the transmission control unit.

The transmission control unit uses this signal for:

- Controlling the main line pressure,
- Gearshift control,
- Engagement of the TCC,
- Shift timing adaptation during upshifts,
- Shift timing adaptation during shifts from 3rd to 4th gear,
- Shift timing adaptation during shifts from 4th to 3rd gear,
- Avoidance of gearshift judder during engagement of a transmission range,
- Torque reduction when pulling away.

### Coolant temperature

The coolant temperature is detected by the Engine Coolant Temperature (ECT) sensor and passed on to the PCM.

This signal is transmitted via the CAN databus to the transmission control unit.

The transmission control unit uses this signal for:

- Cold start mode,
- Engagement of the TCC

### Selector lever position

The transmission control unit transmits the selector lever position to the instrument cluster.

The instrument cluster uses the signal to send a request for a warning tone to the GEM when the selector lever is not in position "P" and the driver's door is opened.

## DESCRIPTION AND OPERATION

### Actuation of the MIL warning lamp

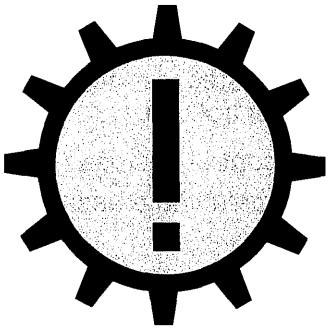

E38687

The MIL warning lamp is actuated by the instrument cluster if there are serious faults in the transmission control or if the transmission fluid temperature is excessively high.

The information required to actuate the MIL warning lamp is sent by the transmission control unit to the instrument cluster.

### Actuation of the overdrive indicator lamp

E48217

The overdrive indicator lamp is located on the instrument panel.

The information required to actuate the overdrive indicator lamp is sent from the transmission control unit when the overdrive switch on the selector lever is pressed.

### Warning tone request

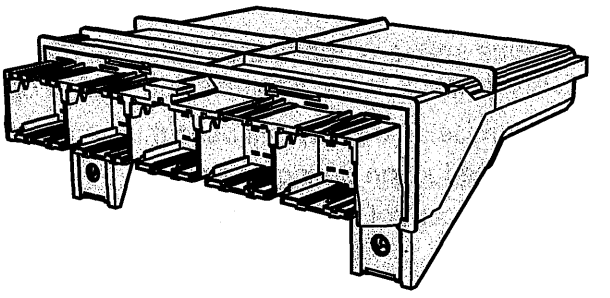

E38701

The transmission control unit sends a warning tone request to the instrument cluster if the following conditions are met:

- The selector lever is not in position "P",
- The driver's door is open.

The instrument cluster passes on the warning tone request to the GEM. The GEM generates the warning tone.

## DESCRIPTION AND OPERATION

### Sensors

#### TSS sensor

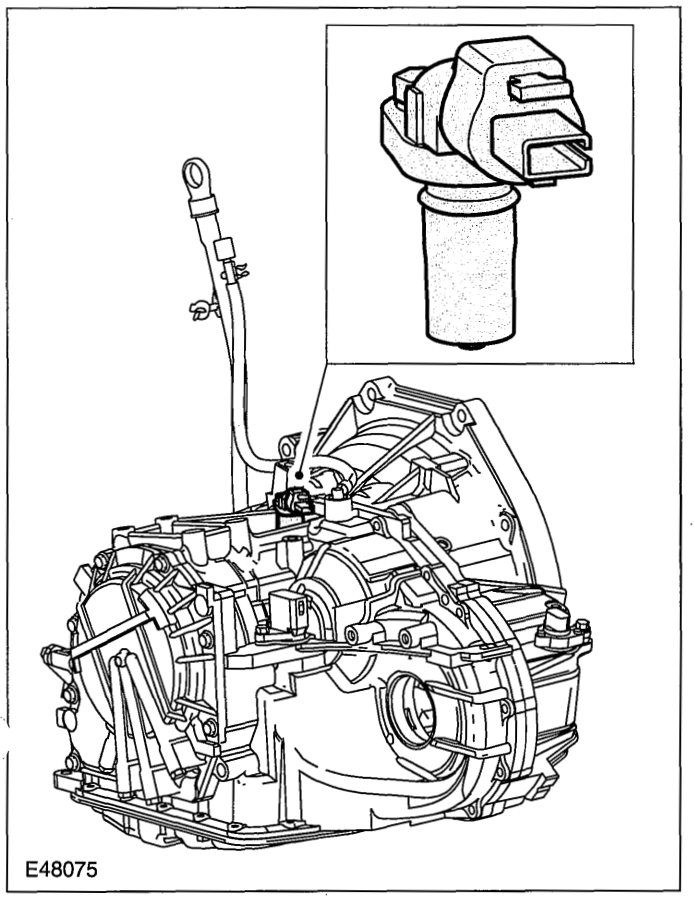


The TSS sensor is an inductive pickup.

It measures the transmission input speed via the outer plate carrier of the 3rd/4th gear clutch and sends the signal to the transmission control unit.

The transmission control unit uses this signal for:

- Torque reduction during gearshifts,
- Pressure control during gearshifts,
- Shift timing adaptation during upshifts,
- Shift timing adaptation during shifts from 3rd to 4th gear,
- Shift timing adaptation during shifts from 4th to 3rd gear,
- Avoidance of gearshift judder during engagement of a transmission range,
- Torque reduction when pulling away.

Consequences of signal failure:

- No TCC,
- no torque reduction,
- no shift timing adaptation,
- no 4th gear.

#### OSS sensor

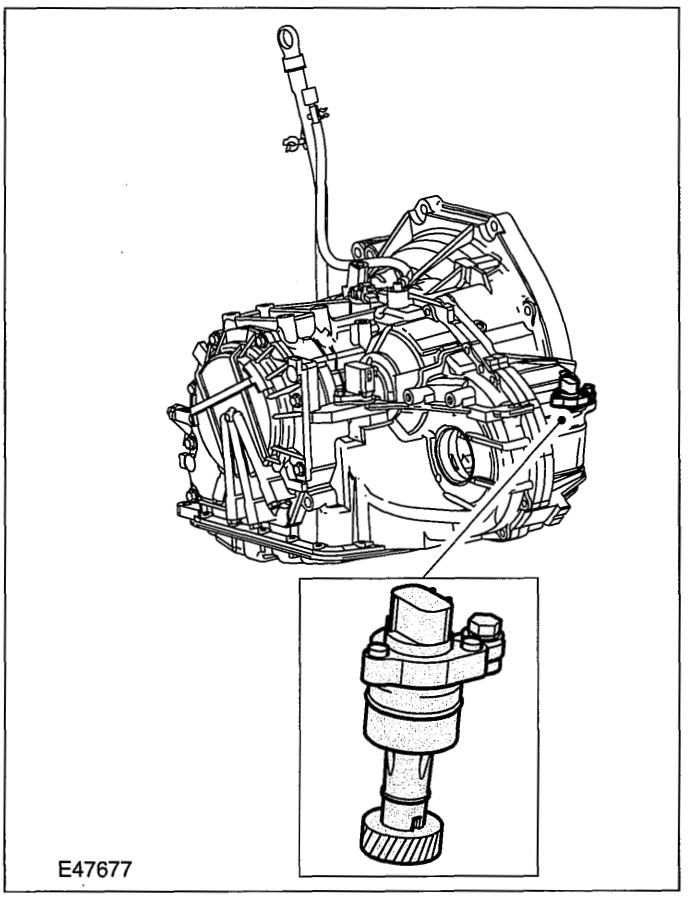


The OSS sensor is a Hall sensor.

It is mechanically connected via a gear to the input wheel of the differential assembly.

It measures the vehicle speed via the input wheel of the differential assembly and sends the signal to the transmission control unit.

The transmission control unit uses this signal for:

- Gearshift control,
- Engagement of the TCC,
- Torque reduction during gearshifts,
- Pressure control during gearshifts,
- Shift timing adaptation during upshifts,
- Shift timing adaptation during shifts from 3rd to 4th gear,
- Shift timing adaptation during shifts from 4th to 3rd gear,
- Reverse gear safety strategy,
- Avoidance of gearshift judder during engagement of a transmission range,
- Torque reduction when pulling away,
- Hill climb mode,
- Hill descent mode.

## DESCRIPTION AND OPERATION

Consequences of signal failure:

- No TCC,
- no torque reduction,
- no shift timing adaptation,
- no 4th gear.

### TR sensor

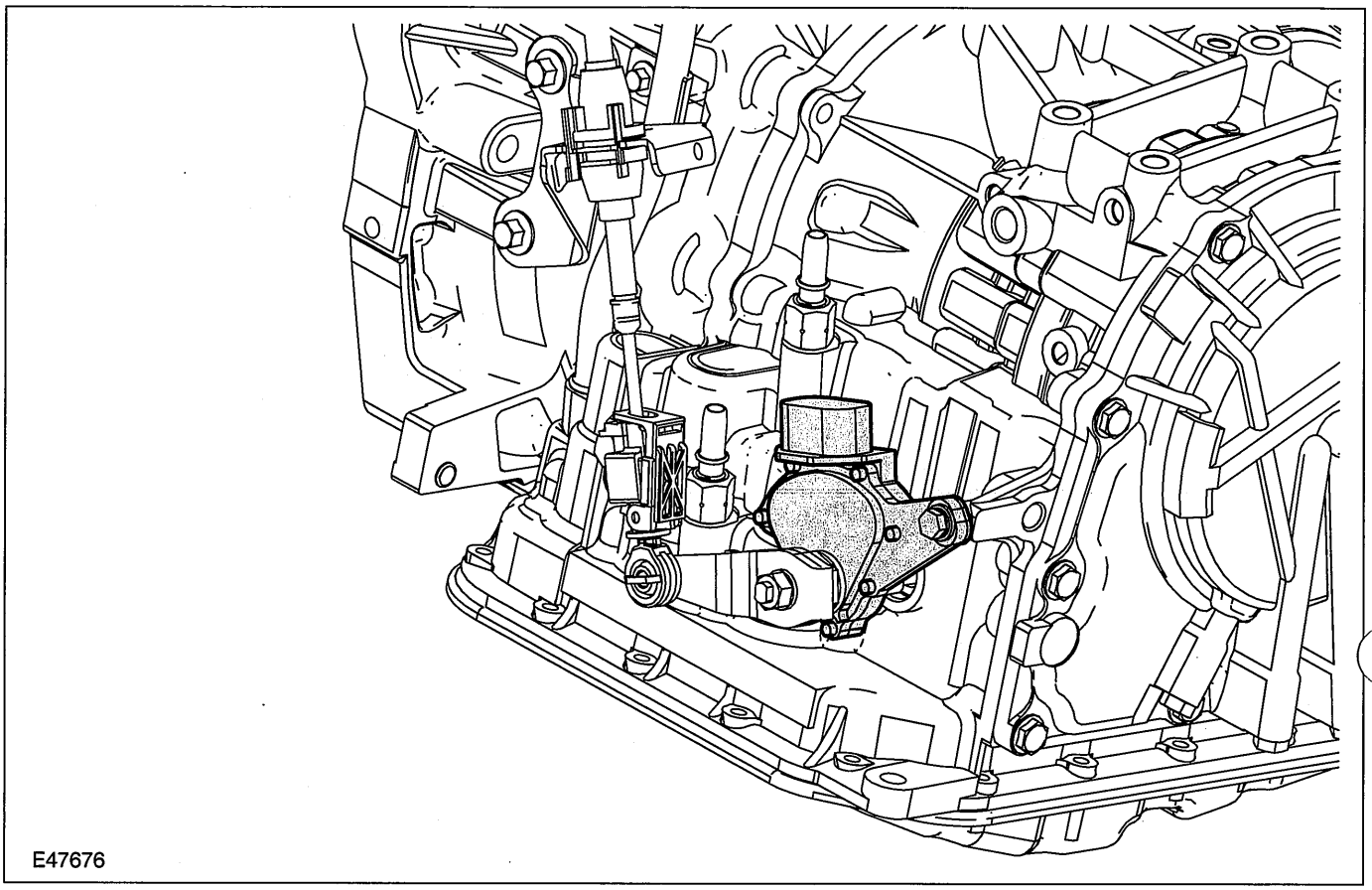


The TR sensor serves to signal the currently selected transmission range to the transmission control unit.

It is a switch which transmits the selected transmission range directly to the transmission control unit.

In addition, the starter inhibit relay is actuated by the PCM via the TR sensor when the selector lever is in the positions "P" or "N".

In selector lever position "R" the backup lamp relay is also actuated via the TR sensor.

The transmission control unit uses this signal for:

- Controlling the main line pressure,
- Gearshift control,
- Engagement of the TCC,
- Shift timing adaptation during upshifts,
- Shift timing adaptation during shifts from 3rd to 4th gear,
- Shift timing adaptation during shifts from 4th to 3rd gear,
- Reverse gear safety strategy,
- Avoidance of gearshift judder during engagement of a transmission range,
- Torque reduction when pulling away.

Consequences of signal failure:

- No TCC,
- no shift timing adaptation.

## DESCRIPTION AND OPERATION

### TFT sensor

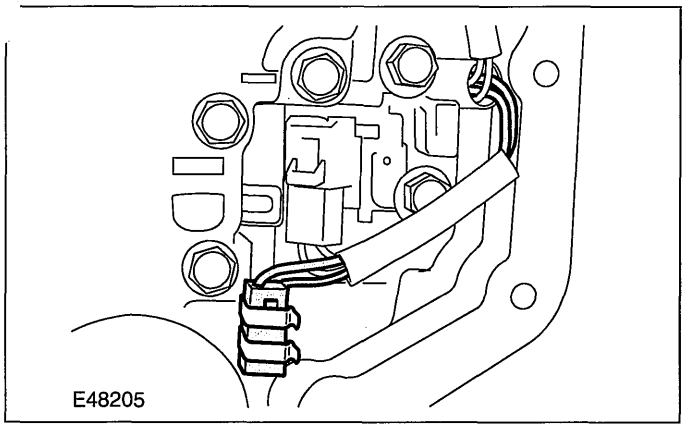


The TFT sensor is located in the oil pan on the main control body and is part of the transmission wiring harness.

It measures the current transmission fluid temperature and sends the signal to the transmission control unit.

The transmission control unit uses this signal for:

- Cold start mode,
- Engagement of the TCC,
- Shift timing adaptation during upshifts,
- Shift timing adaptation during shifts from 3rd to 4th gear,
- Shift timing adaptation during shifts from 4th to 3rd gear,
- Overheating protection mode.

Consequences of signal failure:

- No TCC,
- no shift timing adaptation,
- no 4th gear.

### Overdrive switch

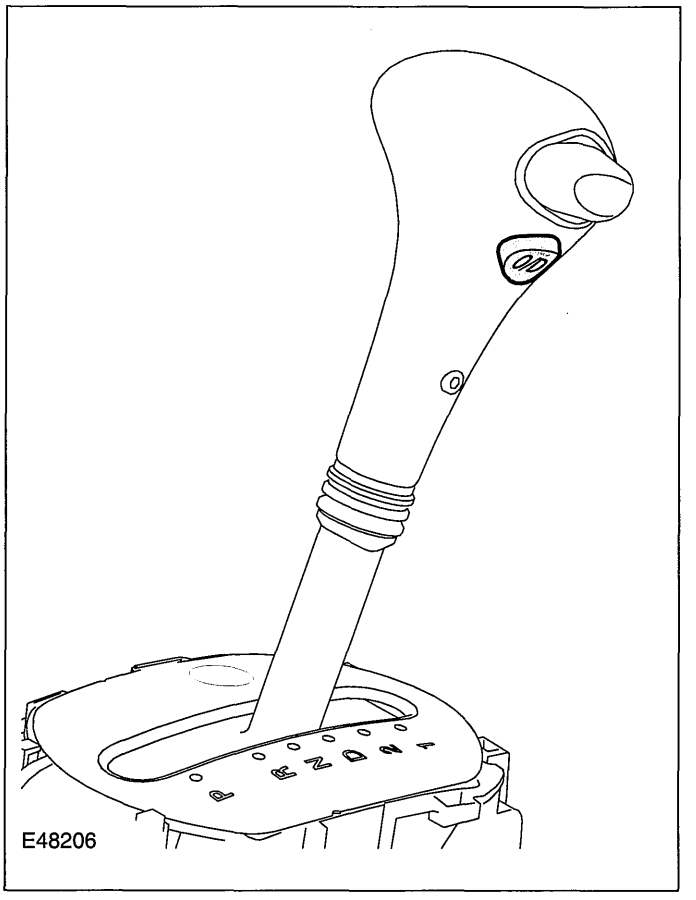


The overdrive switch is located on the selector lever.

It allows the driver to suppress or enable gearshifts into 4th gear when "D" is selected.

The signal from the overdrive switch is transmitted to the transmission control unit.

When gearshifts into 4th gear are suppressed, the transmission control unit sends a corresponding signal via the CAN databus to the instrument cluster. The instrument cluster then actuates the overdrive indicator lamp.

Consequences of signal failure:

- no suppression of gearshifts into 4th gear.

## DESCRIPTION AND OPERATION

### Driver's side door ajar switch

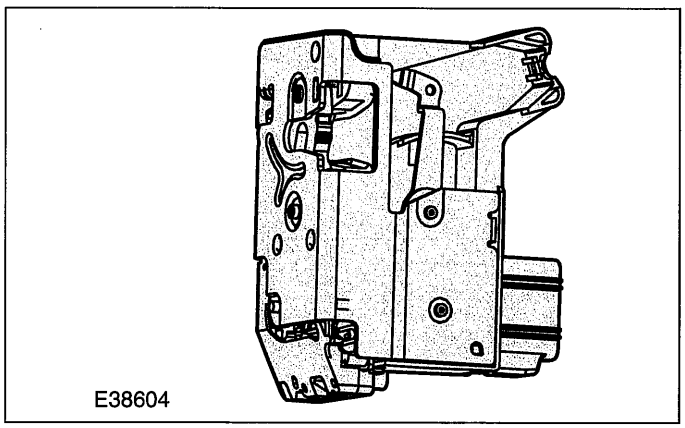


The door ajar switch is located in the door lock on the driver's side.

When the door is closed a ground connection is signalled to the transmission control unit.

When the door is opened this ground connection is interrupted.

The transmission control unit uses the signal from the driver's side door ajar switch to warn the driver if the selector lever is not in position "P" and the driver's door is open.

In this case the transmission control unit transmits the warning tone request via the CAN databus to the instrument cluster.

The instrument cluster passes this request on to the GEM, which then generates a warning tone.

Consequences of signal failure:

- no warning tone request.

### Actuators

#### Main regulating valve

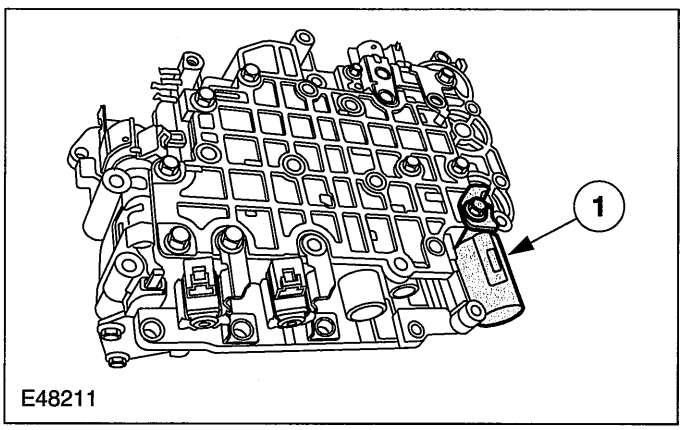


| Item | Description |
|---|---|
| 1 | Main regulating valve |

The main regulating valve is a proportional valve which converts the applied electric current into a proportional hydraulic pressure.

The currentless state corresponds to maximum pressure.

The main regulating valve is used to determine the main line pressure and therefore the actuating pressure for the clutches and brakes.

Consequences of signal failure:

- hydraulic emergency running mode.

#### SSA and SSB shift solenoid valves

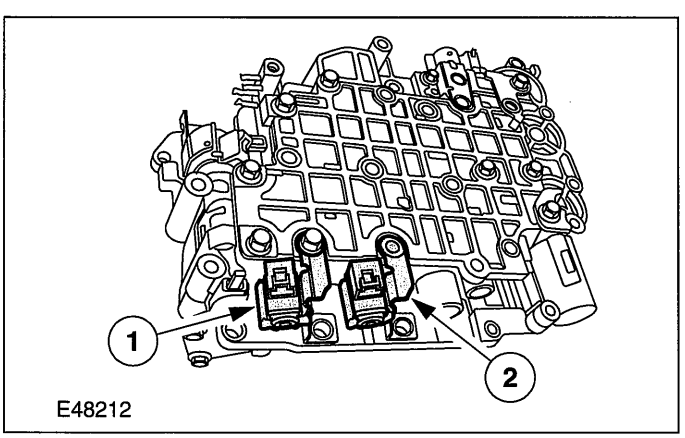


| Item | Description |
|---|---|
| 1 | SSA |
| 2 | SSB |

## DESCRIPTION AND OPERATION

The SSA and SSB shift solenoid valves are used to switch the different hydraulic paths in the main control body.

They are actuated by the transmission control unit according to the required gear.

In their currentless state they are open.

Consequences of signal failure:

- hydraulic emergency running mode.

**Actuation of the SSA and SSB shift solenoid valves**

| gear | SSA | SSB |
|---|---|---|
| 1st gear | On | On |
| 2nd gear | On | Off |
| 3rd gear | Off | Off |
| 4th gear | Off | On |

### Shift timing solenoid valve

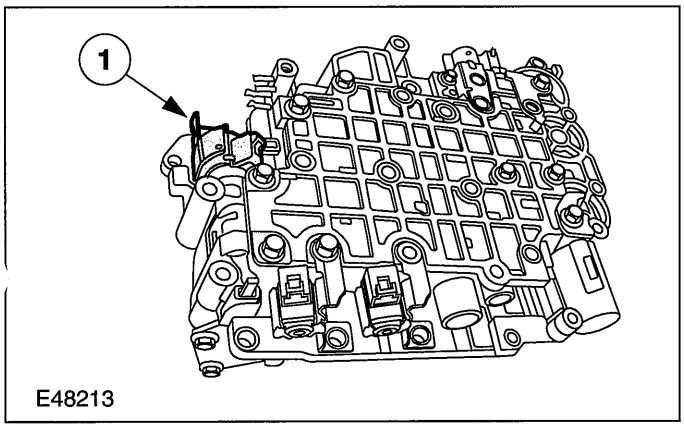


| Item | Description |
|---|---|
| 1 | Shift timing solenoid valve |

The shift timing solenoid valve is used to precisely control the timing of the engagement and disengagement of the 1st-3rd gear clutch.

In addition, it is also used to prevent engagement of reverse gear if the driver moves the selector lever to "R" while the vehicle is driving forwards at a speed in excess of 11 km/h.

It is actuated by the transmission control unit according to requirements.

In its currentless state the solenoid valve is closed.

Consequences of signal failure:

- hydraulic emergency running mode.

### Shift solenoid valve, TCC

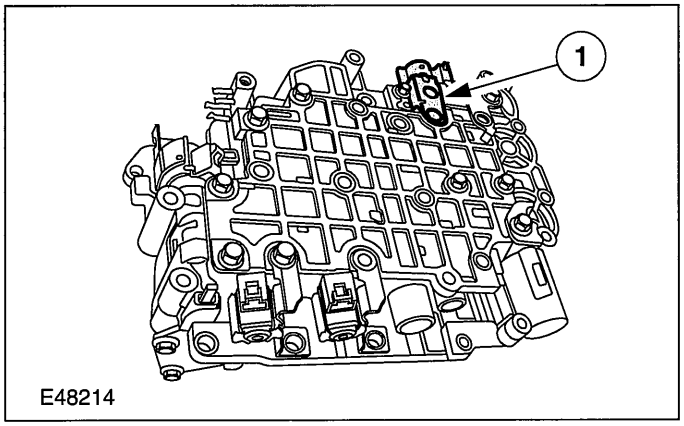


| Item | Description |
|---|---|
| 1 | Shift solenoid valve, TCC |

The TCC shift solenoid valve is used to engage or disengage the TCC.

It is actuated by the transmission control unit according to requirements.

In its currentless state the solenoid valve is open and the TCC is not engaged.

Consequences of signal failure:

- Engagement of the TCC.

## DESCRIPTION AND OPERATION

### Starter inhibit relay

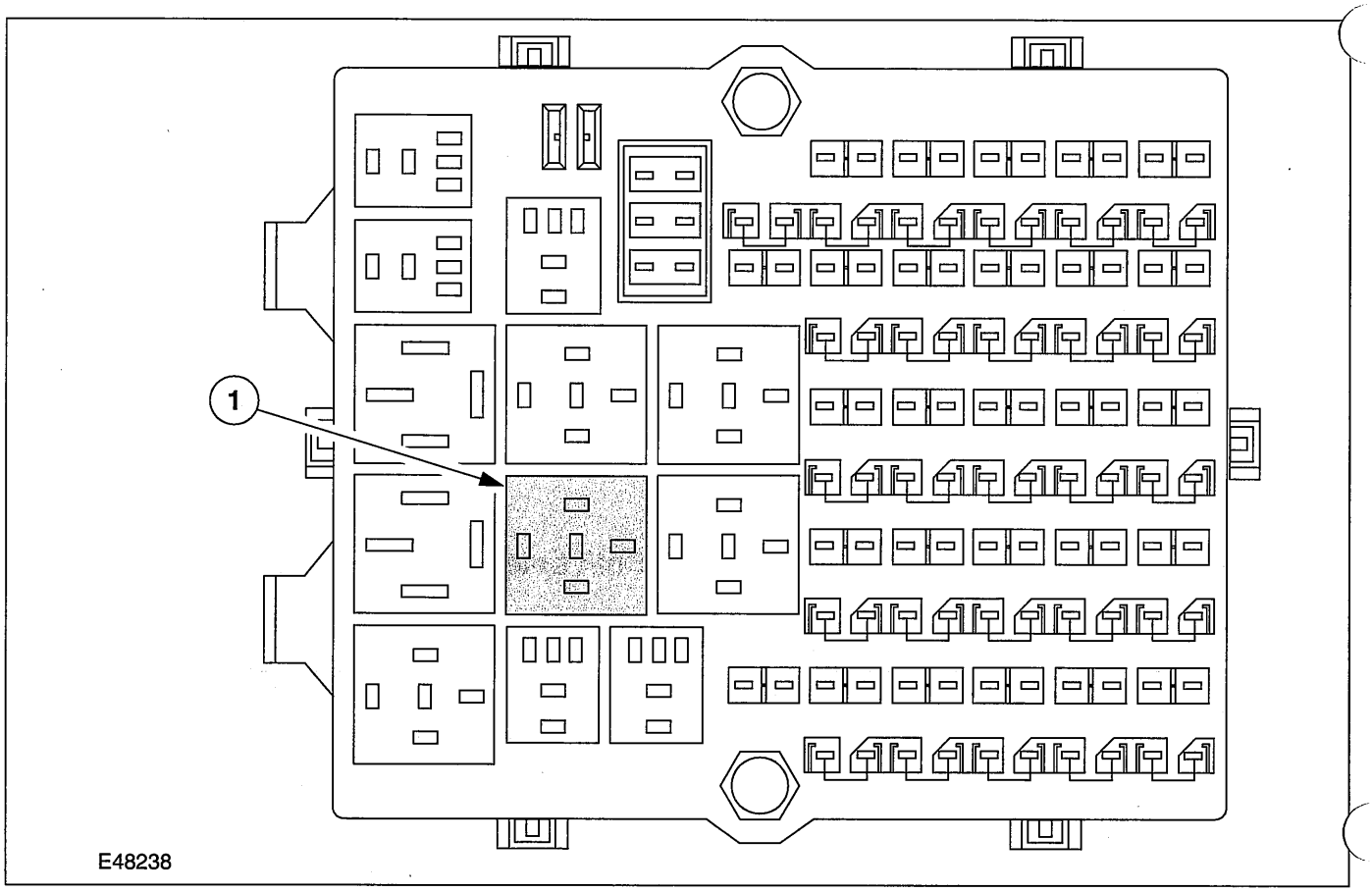


| Item | Description |
|---|---|
| 1 | Starter inhibit relay |

**NOTE:** The engine cannot be started if the electrical connector is disconnected from the TR sensor.

The starter inhibit relay is located in the central junction box (CJB).

In the selector lever positions "P" and "N" a ground signal is directed from the PCM via the TR sensor to the starter inhibit relay, as a result of which the starter inhibit relay is actuated.

## DESCRIPTION AND OPERATION

### Backup lamp relay

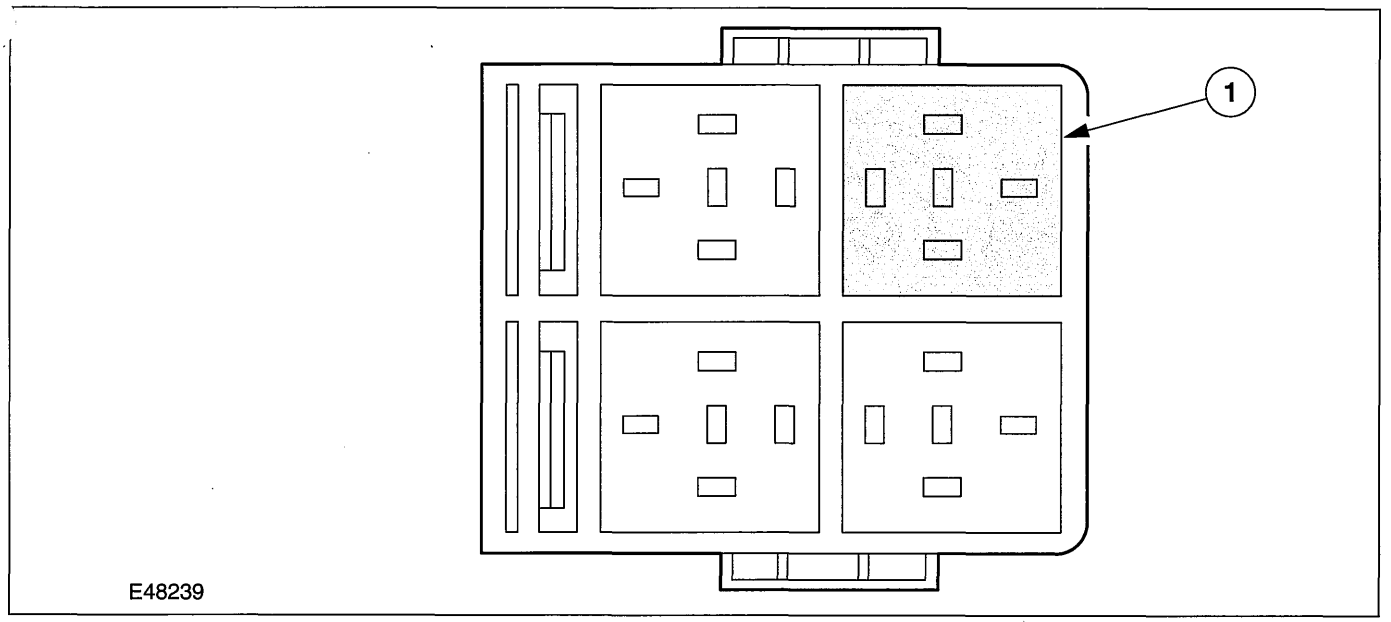


| Item | Description |
|---|---|
| 1 | Backup lamp relay |

The backup lamp relay is located in the relay box in the engine compartment.

When the selector lever is in position "R" the backup lamp relay receives a ground signal from the TR sensor and actuates the backup lamps as a result.

Consequences of signal failure:

- backup lamps inoperative.

### Selector lever lock solenoid

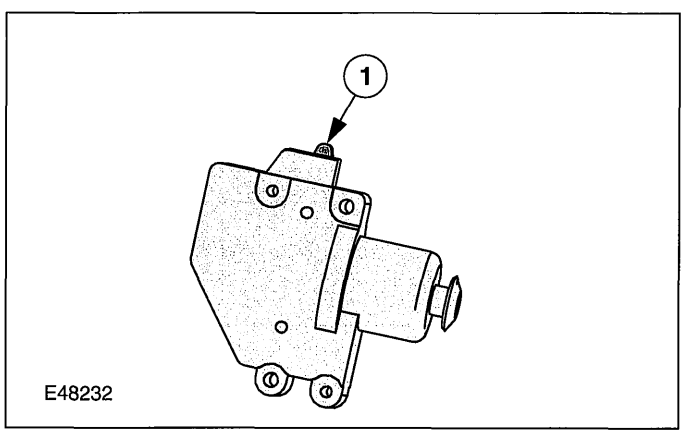


| Item | Description |
|---|---|
| 1 | Locking pin |

The selector lever lock solenoid is part of the selector lever.

When the ignition is switched on, the selector lever lock solenoid is actuated by depressing the brake pedal (signal from the stoplamp switch). This results in the locking pin being pulled back, and the selector lever can be moved out of "P".

The ground connection to the solenoid for the ignition key removal inhibitor is also made via the selector lever lock solenoid in all selector lever positions except "P".

Consequences of signal failure:

- If the signal from the stoplamp switch is missing or the ground connection is interrupted, then the selector lever can no longer be moved out of the position "P".

The selector lever lock can be manually released by removing the cover and pressing a suitable object into the opening on the selector lever until the selector lever can be moved out of the position "P".

The selector lever then re-locks if it is moved back to "P".

## DESCRIPTION AND OPERATION

### Solenoid for the ignition key removal inhibitor

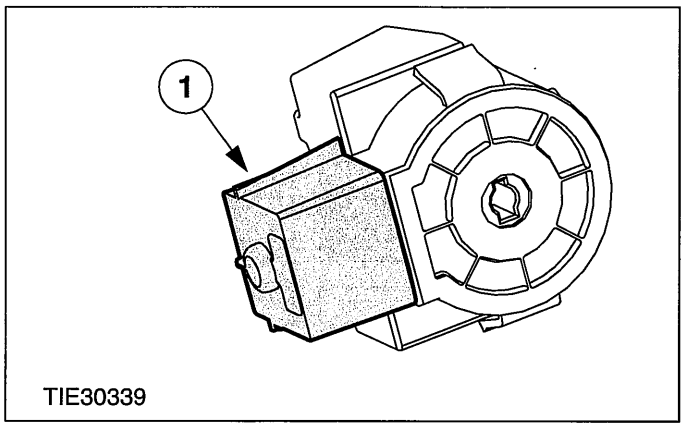


| Item | Description |
|---|---|
| 1 | Solenoid for the ignition key removal inhibitor |

The solenoid for the ignition key removal inhibitor is integrated in the ignition lock.

With the selector lever in position "P", the ground connection via the selector lever lock solenoid is interrupted.

The ignition key can be turned to "0" and removed from the ignition lock.

In all other selector lever positions the ground connection is made via the selector lever lock solenoid.

The locking pin of the solenoid for the ignition key removal inhibitor engages in the ignition lock.

The ignition key cannot be turned to "0" and removed from the ignition lock.

Consequences of signal failure:

- A short to ground will make it impossible to remove the ignition key from the ignition lock.
- A break in the electrical circuit will make it possible to remove the ignition key from the ignition lock in all selector lever positions.

## DIAGNOSIS AND TESTING

# Automatic Transaxle

### Special Tool(s)

| | |
|---|---|
| 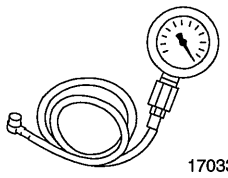 17033 | Hydraulic Pressure Gauge (0 - 60 bar) 307-201 |
| 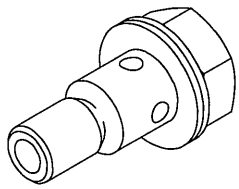 E48050 | Adapter for 307-201 307-201-01 |

### General Equipment

| |
|---|
| Worldwide Diagnostic System (WDS) |

## Inspection and Verification

1. Verify the customer concern.
2. Visually inspect for obvious signs of mechanical or electrical damage.

### Visual Inspection Chart

| Mechanical | Electrical |
|---|---|
| • Damaged shift mechanism<br>• Transaxle fluid leaks<br>• Damaged transaxle casing | • Fuse(s)<br>• Electrical connector(s) |

3. If an obvious cause for an observed or reported concern is found, correct the cause (if possible) before proceeding to the next step.
4. If the cause is not visually evident, verify the symptom and refer to the Diagnostic Trouble Code Chart.

## Diagnostic Trouble Code Chart

### Diagnostic Trouble Code Charts

| Symptom | Possible Sources | Action |
|---|---|---|
| • A207 Checksum error | • Transmission control module (TCM) .<br>• Circuit(s). | • REFER to WDS. |
| • E516 CAN bus OFF sensor error | • CAN bus. | • REFER to WDS. |
| • D900 CAN bus no communication error | • CAN bus. | • REFER to WDS. |
| • P0706 Transmission range (TR) sensor error | • Inhibitor switch.<br>• Inhibitor switch circuit(s). | • REFER to WDS. |
| • P0707 Transmission range (TR) sensor circuit low input | • Inhibitor switch.<br>• Inhibitor switch circuit(s). | • REFER to WDS. |
| • P0712 Transmission fluid temperature circuit - low input | • Transmission fluid temperature sensor.<br>• Circuit(s). | • REFER to WDS. |
| • P0713 Transmission fluid temperature circuit - high input | • Transmission fluid temperature sensor.<br>• Circuit(s). | • REFER to WDS. |
| • P0717 Input speed sensor circuit no signal | • Input speed sensor.<br>• Circuit(s). | • REFER to WDS. |

## DIAGNOSIS AND TESTING

| Symptom | Possible Sources | Action |
|---|---|---|
| • P0722 Vehicle speed sensor (VSS) circuit no signal | • Vehicle speed sensor (VSS).<br>• Circuit(s). | • REFER to WDS. |
| • P0740 Torque converter clutch solenoid failure | • Lock-up duty solenoid.<br>• Circuit(s). | • REFER to WDS. |
| • P0741 Torque converter clutch (TCC) system. | • TCC system stuck off. | • REFER to WDS. |
| • P0742 Torque converter clutch (TCC) system. | • TCC system stuck on.<br>• Circuit(s). | • REFER to WDS. |
| • P0743 Torque converter clutch solenoid failure | • Lock-up duty solenoid.<br>• Circuit(s). | • REFER to WDS. |
| • P0727 Engine revolution speed error | • Powertrain control module (PCM).<br>• Circuit(s). | • REFER to WDS. |
| • P1746 Pressure control solenoid A open circuit | • Line pressure control solenoid.<br>• Circuit(s). | • REFER to WDS. |
| • P1747 Pressure control solenoid A short circuit | • Line pressure control solenoid.<br>• Circuit(s). | • REFER to WDS. |
| • P0972 Shift solenoid A performance | • Shift solenoid A open circuit.<br>• Circuit(s).<br>• Internal mechanical/hydraulic failure. | • REFER to WDS. |
| • P0973 Shift solenoid A electrical | • Shift solenoid A short circuit.<br>• Circuit(s). | • REFER to WDS. |
| • P0974 Shift solenoid A electrical | • Shift solenoid A.<br>• Circuit(s). | • REFER to WDS. |
| • P0975 Shift solenoid B performance | • Shift solenoid B.<br>• Circuit(s).<br>• Internal mechanical/hydraulic failure. | • REFER to WDS. |
| • P0976 Shift solenoid B | • Shift solenoid B short circuit.<br>• Circuit(s). | • REFER to WDS. |
| • P0977 Shift solenoid B | • Shift solenoid B open circuit.<br>• Circuit(s). | • REFER to WDS. |
| • P0787 Timing solenoid electrical | • Timing solenoid short circuit.<br>• Circuit(s). | • REFER to WDS. |
| • P0788 Timing solenoid electrical | • Timing solenoid open circuit.<br>• Circuit(s). | • REFER to WDS. |
| • P0115 Engine coolant signal error | • Reported engine failure. | • REFER to WDS. |
| • P1719 Engine torque signal error | • Reported engine failure. | • REFER to WDS. |
| • P1783 Transmission over temperature condition | • Temperature sensor failure. | • REFER to WDS. |

## DIAGNOSIS AND TESTING

| Symptom | Possible Sources | Action |
|---|---|---|
| • C1750 Accelerator pedal position signal malfunction | • Accelerator pedal position sensor. | • REFER to WDS. |
| • U2516 CAN bus off transmit error | • CAN bus. | • REFER to WDS. |
| • U1900 CAN Communication bus fault error | • CAN bus. | • REFER to WDS. |
| • 5750 Throttle open malfunction | • CAN bus. | • REFER to WDS. |

### Line Pressure Test

**CAUTIONS:**

⚠ **Carry out the line pressure test before carrying out the stall speed test. If line pressure is low at idle, do not carry out the stall speed test or further transaxle damage will occur.**

⚠ **Do not maintain wide open throttle (WOT) in any range for more than five seconds.**

⚠ **After testing each of the following ranges 'D' (DRIVE) and 'R' (REVERSE), move the selector lever to 'N' (NEUTRAL) and run the engine at 1000 rpm for approximately 1 minute to allow the torque converter to cool.**

**NOTE:** Make sure that the self test and electrical repairs have been carried out, or test results may be incorrect.

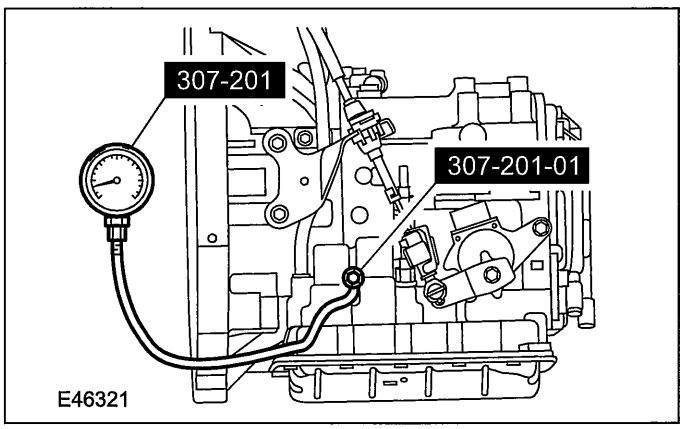


1. Connect the special tools to the line pressure test point.
2. Start the engine and check the line pressures. Refer to the line pressure chart to determine if line pressure is within specification.
3. If the line pressure is not within specification, refer to the line pressure diagnosis chart.

**Line Pressure Chart**

| Range | Idle | | Stall | |
|---|---|---|---|---|
| | Mpa | bar | Mpa | bar |
| D | 0.37 - 0.41 | 3.82 - 4.11 | 1.15 - 1.27 | 11.5 - 12.7 |
| R | 0.59 - 0.68 | 5.88 - 6.76 | 1.58 - 1.83 | 15.88 - 18.24 |

**Line Pressure Diagnosis Chart**

| Test Results | Possible Source |
|---|---|
| Higher than specification in 'D' (DRIVE) and 'R' (REVERSE) | Pressure control solenoid inoperative or open wire harness.<br>Pressure regulator valve sticking. |

## DIAGNOSIS AND TESTING

| Test Results | Possible Source |
|---|---|
| Lower than specification in 'D' (DRIVE) and 'R' (REVERSE) | Pressure control solenoid inoperative or open wire harness.<br>Pressure regulator valve sticking.<br>Worn oil pump.<br>Oil strainer blocked.<br>Fluid leak from each clutch hydraulic circuit. |
| Lower than specification in 'D' (DRIVE) | Drive hydraulic circuit failure.<br>Forward clutch failure. |
| Lower than specification in 'R' (REVERSE) | Reverse hydraulic circuit failure.<br>Reverse clutch failure.<br>First and reverse brake failure. |

### Stall Speed Test

This test checks the operation of the following components:

- torque converter
- forward clutch
- low one way clutch assembly
- engine performance

**WARNINGS:**

▲ **Apply the parking brake firmly while carrying out each stall test.**

▲ **Apply the foot brake firmly while carrying out each stall test.**

**CAUTIONS:**

⚠ **Always carry out the line pressure test before carrying out the stall speed test. If the line pressure is low at idle, do not carry out the stall speed test or further transaxle damage will occur.**

⚠ **After testing each of the following ranges 'D' (DRIVE) and 'R' (REVERSE), move the selector lever to 'N' (NEUTRAL) and run the engine at 1000 rpm for approximately one minute to allow the torque converter to cool.**

⚠ **Do not maintain wide open throttle (WOT) in any range for more than five seconds.**

⚠ **If the engine speed (rpm) recorded by the tachometer exceeds maximum specified rpm, release the accelerator pedal immediately. Clutch or band slippage is indicated.**

**NOTE:** The stall speed test should be carried out with the engine and transaxle at normal operating temperatures (50°C to 80°C).

**NOTE:** Prolonged use of this procedure may set DTC P0712. After carrying out the stall speed test, run the OBD test and clear the DTCs.

1. Connect a tachometer to the engine.
2. Press the accelerator pedal to the floor WOT in each selected range. Record the rpm reached in each selected range and refer to the stall speed chart.
3. If the stall speed is not within specification, refer to the stall speed diagnosis chart.

**Stall Speed Chart**

| Engine 1.6L | Speed (rpm) |
|---|---|
| 'D' (DRIVE) | 2500 ± 150 |
| 'R' (REVERSE) | 2420 ± 150 |

**Stall Speed Diagnosis Chart**

| Test Results | Possible Source |
|---|---|
| Lower than specification in 'D' (DRIVE) and 'R' (REVERSE) | Low engine power.<br>Torque converter one-way clutch failure. |

## DIAGNOSIS AND TESTING

| Test Results | Possible Source |
|---|---|
| Higher than specification in 'D' (DRIVE) | Pressure control solenoid inoperative.<br>Pressure regulator valve sticking.<br>Forward clutch failure (slipping).<br>One-way clutch No.2 failure. |
| Higher than specification in 'R' (REVERSE) | Pressure control solenoid inoperative.<br>Pressure regulator valve sticking.<br>Reverse clutch failure (slipping).<br>First and reverse brake failure (slipping). |
| Lower than specification in 'D' (DRIVE) | Drive hydraulic circuit failure.<br>Forward clutch failure. |
| Lower than specification in 'R' (REVERSE) | Pressure control solenoid inoperative.<br>Pressure regulator valve sticking.<br>Worn oil pump.<br>Oil strainer blocked.<br>Fluid leak from each clutch hydraulic circuit. |

### Time Lag Test

Time lag is the time between moving the selector lever from 'N' (NEUTRAL) to 'D' (DRIVE) or 'N' (NEUTRAL) to 'R' (REVERSE). With the parking brake applied the vehicle must not move if the selector lever is moved from 'N' (NEUTRAL) to 'D' (DRIVE) or 'N' (NEUTRAL) to 'R' (REVERSE). Drive is engaged when the vehicle starts to rise.

**WARNING:Apply the parking brake firmly while carrying out each test.**

**CAUTION:After testing each of the following ranges 'D' (DRIVE) and 'R' (REVERSE), move the selector lever to 'N' (NEUTRAL) and run the engine at 1000 rpm for approximately 1 minute to allow the torque converter to cool.**

1. Using a suitable stop watch, measure the time lag three times and calculate the average time. Record the time lag and refer to the time lag chart.
2. If the time lag is not within specification, refer to the time lag diagnosis chart.

**Time Lag Chart**

| Range | Time |
|---|---|
| 'N' (NEUTRAL) to 'D' (DRIVE) | less than 1.0 seconds |
| 'N' (NEUTRAL) to 'R' (REVERSE) | less than 1.2 seconds |

**Time Lag Diagnosis Chart**

| Test Results | Possible Source |
|---|---|
| Lower than specification in 'N' (NEUTRAL) to 'D' (DRIVE) | Pressure control solenoid inoperative.<br>Pressure regulator valve sticking.<br>Forward clutch failure (slipping).<br>Timing solenoid failure.<br>Drive hydraulic circuit failure. |

## DIAGNOSIS AND TESTING

| Test Results | Possible Source |
|---|---|
| Lower than specification in 'N' (NEUTRAL) to 'R' (REVERSE) | Pressure control solenoid inoperative.<br>Pressure regulator valve sticking.<br>Reverse clutch failure (slipping).<br>First and reverse brake failure (slipping).<br>Reverse hydraulic circuit failure. |

## GENERAL PROCEDURES

# Transmission Fluid Level Check

### General Equipment

| |
|---|
| Worldwide diagnostic system (WDS) |

### Materials

| Name | Specification |
|---|---|
| Automatic transmission fluid | WSS-M2C924-A |

**WARNING:Refer to the Material Safety Data Sheets for the Automatic Transmission Fluid E-AW. Failure to follow this instruction may result in personal injury. Certain Transmission and Power Steering fluids supplied to Ford contain additives which may cause skin irritation or other skin reactions after contact.**

**For additional information, refer to: Health and Safety Precautions (100-00 General Information, Description and Operation). See - Transmission Fluids.**

1. **NOTE:Make sure that the transmission is not in emergency operation mode.**

   **Connect the worldwide diagnostic system (WDS) to the data link connector (DLC).**

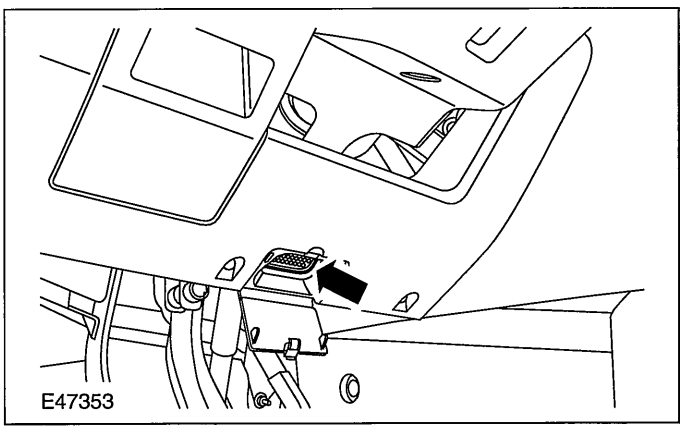


2. **WARNING:Make sure that the parking brake control lever is in the fully applied position. Failure to follow this instruction may result in personal injury.**

   **Start the engine.**

3. **Move the transmission selector lever through all the gear ranges, allow sufficient time for each position to engage.**
4. **Move the transmission selector lever to the "P" (PARK) position.**
5. **Using WDS, check that the transmission fluid temperature is between 50°C and 60°C.**
6. **Remove the transmission fluid level indicator.**

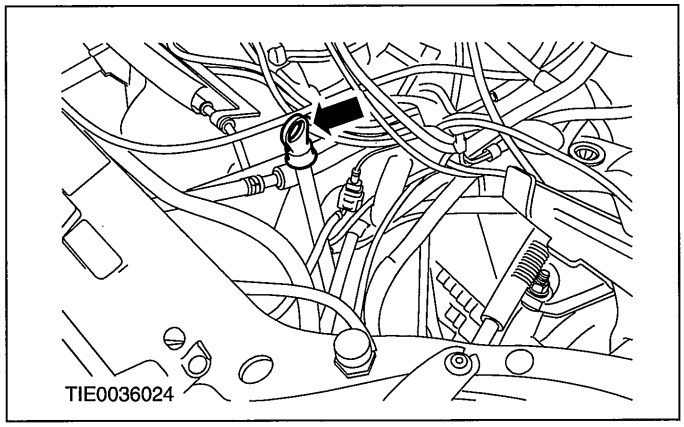


7. **Check the transmission fluid level and top up with clean automatic transmission fluid if necessary.**

   **For additional information, refer to: Health and Safety Precautions (100-00 General Information, Description and Operation). See - Transmission Fluids.**

   - Make sure that, with the transmission in the "P" (PARK) position, the oil level is between the "MIN" and "MAX" mark.

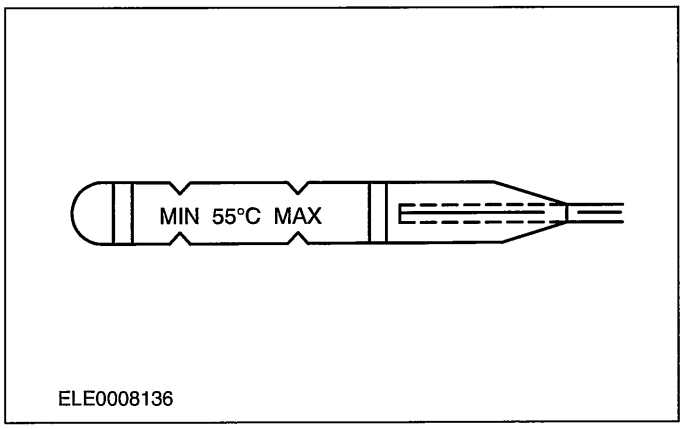

## GENERAL PROCEDURES

8. Install the transmission fluid level indicator.

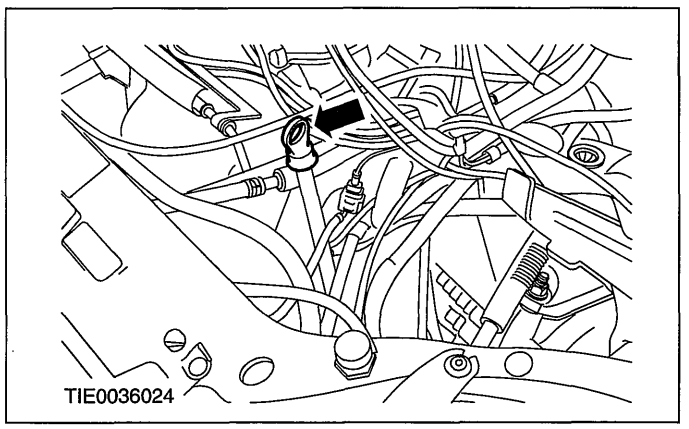


9. Switch the engine off.
10. Disconnect the WDS from the DLC.

## GENERAL PROCEDURES

# Transmission Fluid Drain and Refill

| Materials | |
|---|---|
| **Name** | **Specification** |
| Automatic transmission fluid | WSS-M2C924-A |

**WARNING:Refer to the Material Safety Data Sheets for the Automatic Transmission Fluid E-AW. Failure to follow this instruction may result in personal injury. Certain Transmission and Power Steering fluids supplied to Ford contain additives which may cause skin irritation or other skin reactions after contact.**

**For additional information, refer to: Health and Safety Precautions (100-00 General Information, Description and Operation). See - Transmission Fluids.**

1. **Raise and support the vehicle.**

   **For additional information, refer to: Jacking (100-02 Jacking and Lifting, Description and Operation) / Lifting (100-02 Jacking and Lifting, Description and Operation).**

2. **NOTE:If an internal transaxle concern is suspected, drain the fluid through a paper filter. A small amount of metal or friction particles may be found from normal wear. However, if excessive metal or friction particles are present, a detailed inspection of the transaxle will be required.**

   **Drain the transaxle.**

   **For additional information, refer to: Health and Safety Precautions (100-00 General Information, Description and Operation). See - Transmission Fluids.**

   - Allow the fluid to drain into a suitable container.

     For additional information, refer to: Health and Safety Precautions (100-00 General Information, Description and Operation). See - Transmission Fluids.

   - Discard the drain plug seal.

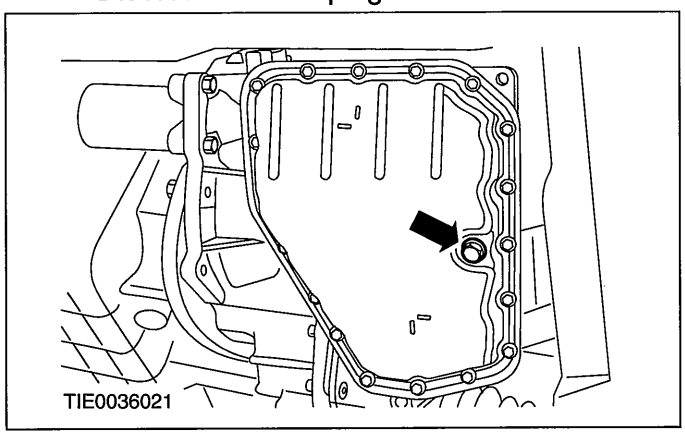


3. **NOTE:Install a new drain plug seal.**

   **NOTE:**Clean the drain plug thread.

   **Install the drain plug.**

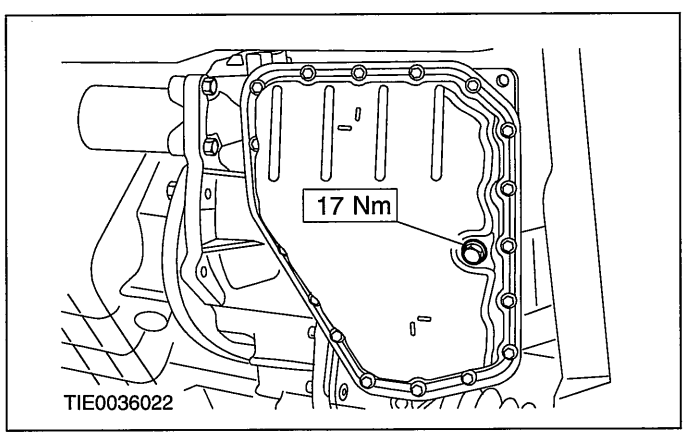


4. **Lower the vehicle.**
5. **Remove the transmission fluid level indicator.**

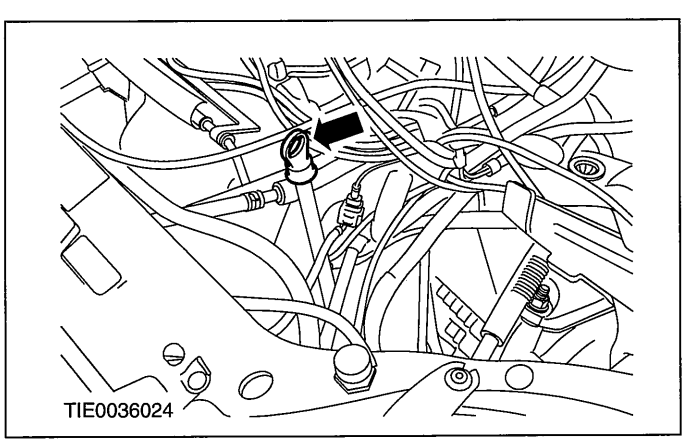

## GENERAL PROCEDURES

6. **Fill the transaxle with automatic transmission fluid.**

   **For additional information, refer to: Specifications (307-01 Automatic Transmission/Transaxle - Vehicles With: 4-Speed Automatic Transmission (AW81-40), Specifications).**

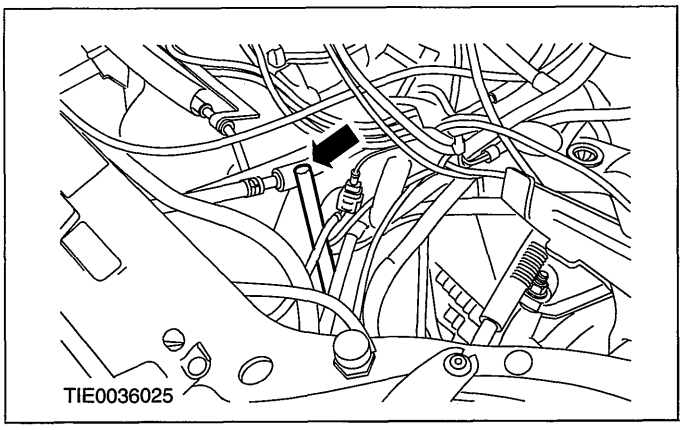


7. **Check the transmission fluid level.**

   **For additional information, refer to: Transmission Fluid Level Check (307-01 Automatic Transmission/Transaxle - Vehicles With: 4-Speed Automatic Transmission (AW81-40), General Procedures).**

## IN-VEHICLE REPAIR

# Transmission Range (TR) Sensor

## Removal

1. **Shift the transmission selector lever to the "N" (NEUTRAL) position.**
2. **Raise and support the vehicle.**

   **For additional information, refer to: Jacking (100-02 Jacking and Lifting, Description and Operation) / Lifting (100-02 Jacking and Lifting, Description and Operation).**
3. **Disconnect the transmission range (TR) sensor electrical connector.**

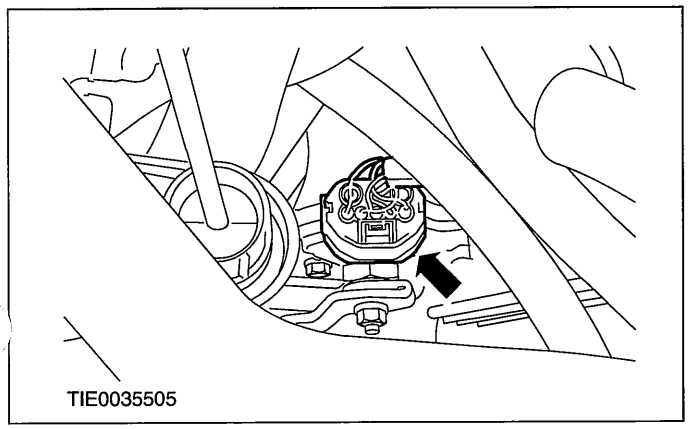


4. **Detach the selector lever cable from the manual shift lever.**
   1. Detach the selector lever cable from the manual shift lever.
   2. Detach the selector lever cable from the selector lever cable bracket.

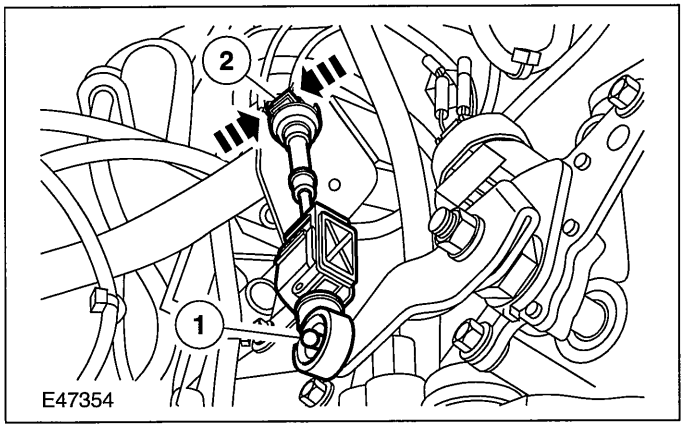


5. **⚠CAUTION:Hold the manual shift lever while loosening or tightening the manual shift lever locking nut to prevent rotational torque being transmitted to the TR sensor and shift mechanism.**

   **Remove the manual shift lever (automatic transaxle shown removed for clarity).**

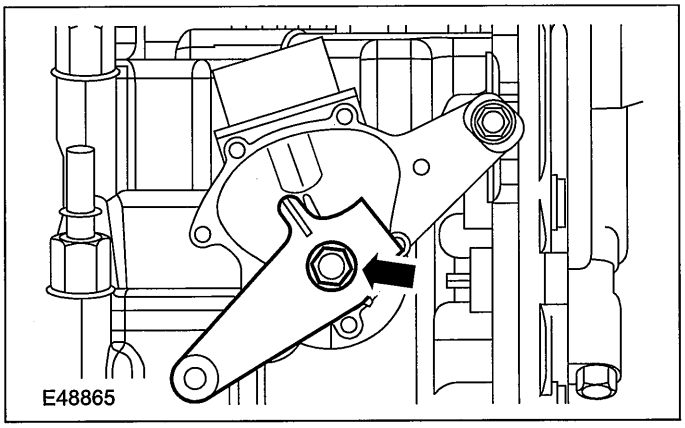


6. **Remove the nut and locking washer (automatic transaxle shown removed for clarity).**
   - Unbend the locking washer tangs.

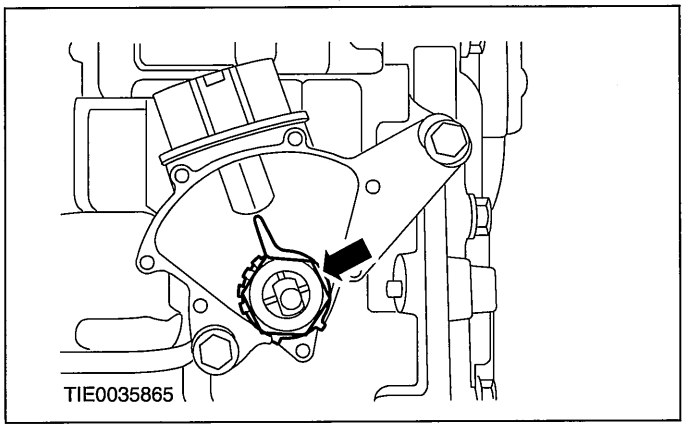


7. **NOTE:The TR sensor retaining bolts can be reused three times. Mark the retaining bolts to indicate usage.**

## IN-VEHICLE REPAIR

**Remove the TR sensor (automatic transaxle shown removed for clarity).**

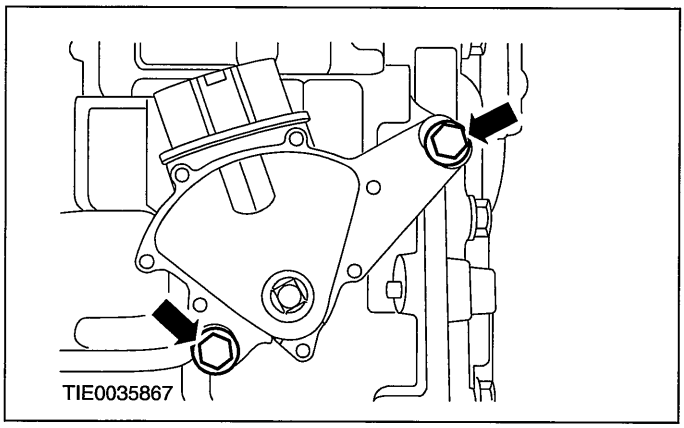


### Installation

1. **NOTE:The transmission range (TR) sensor retaining bolts can be reused three times. Check the retaining bolts and install new bolts if necessary.**

**NOTE:**Do not tighten the TR sensor retaining bolts at this stage.

**Install the TR sensor (automatic transaxle shown removed for clarity).**

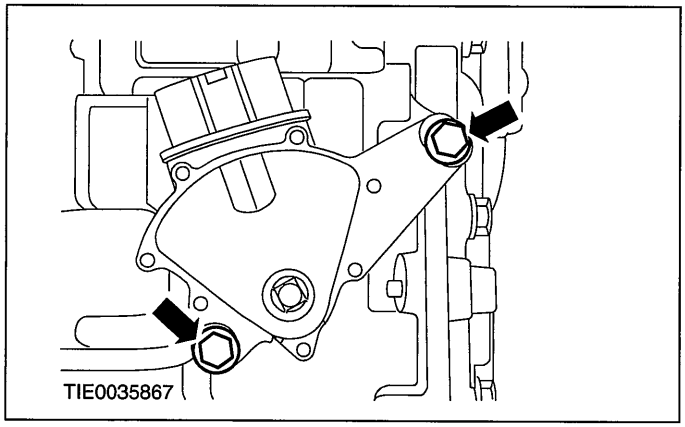


2. **Install the locking washer and nut (automatic transaxle shown removed for clarity).**

- Bend the locking washer tangs.

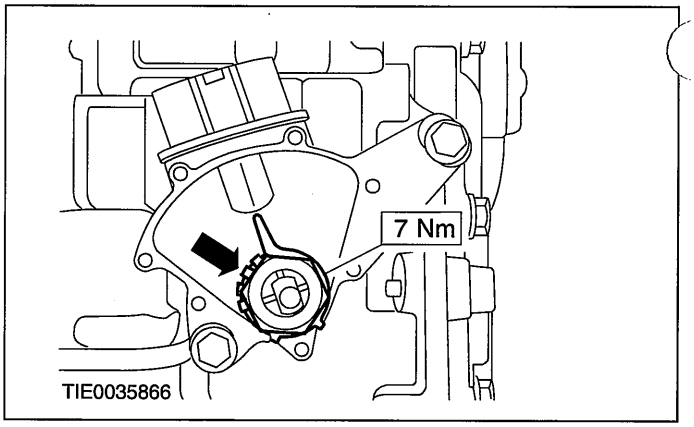


3. **⚠CAUTION:Check that the manual shift lever is in the "N" (NEUTRAL) position.**

**Adjust the TR sensor to align the locking washer pointer to the "N" (NEUTRAL) position scribed on the TR sensor body.**

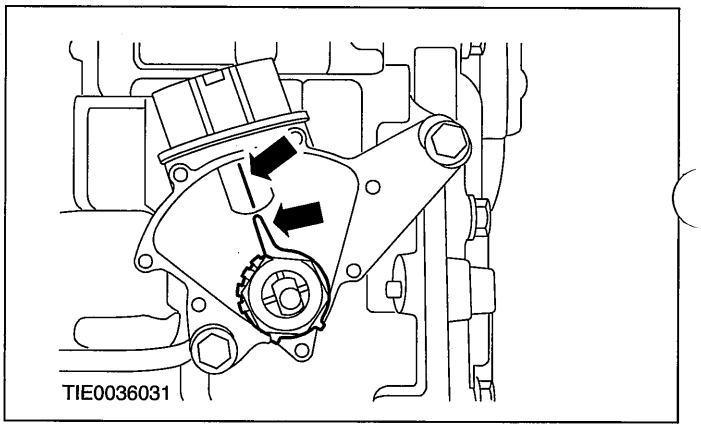


4. **Tighten the TR sensor retaining bolts (automatic transaxle shown removed for clarity).**

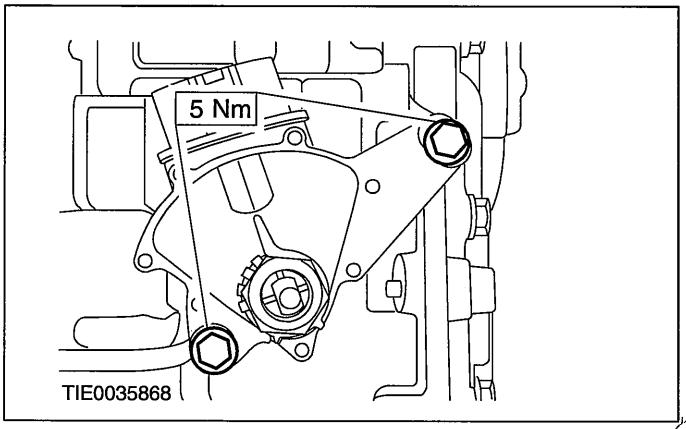


5. **CAUTIONS:**

**⚠Do not use air tools to tighten the manual shift lever locking nut.**

## IN-VEHICLE REPAIR

**⚠Hold the manual shift lever while tightening the manual shift lever locking nut to prevent rotational torque being transmitted to the TR sensor and shift mechanism.**

**Install the manual shift lever (automatic transaxle shown removed for clarity).**

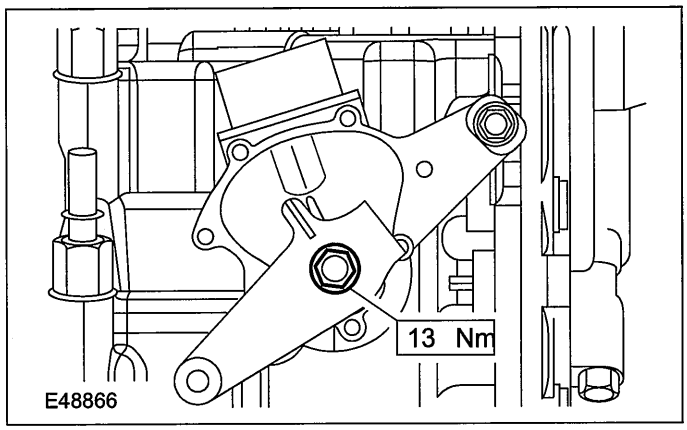


**6. Connect the TR sensor electrical connector.**

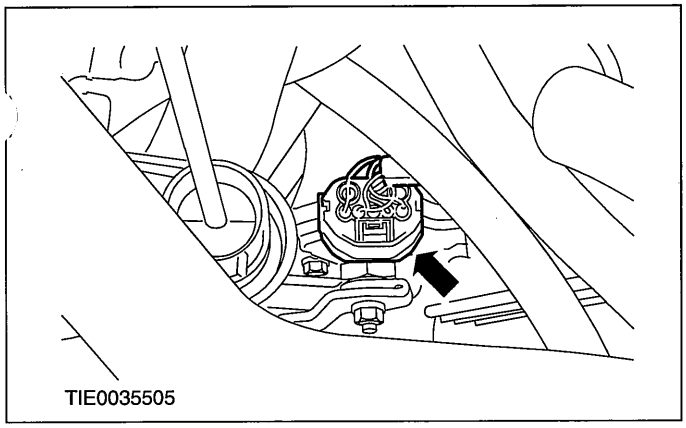


**7. Attach the selector lever cable to the manual shift lever.**

1. Attach the selector lever cable to the selector lever cable bracket.
2. Attach the selector lever cable to the manual shift lever.

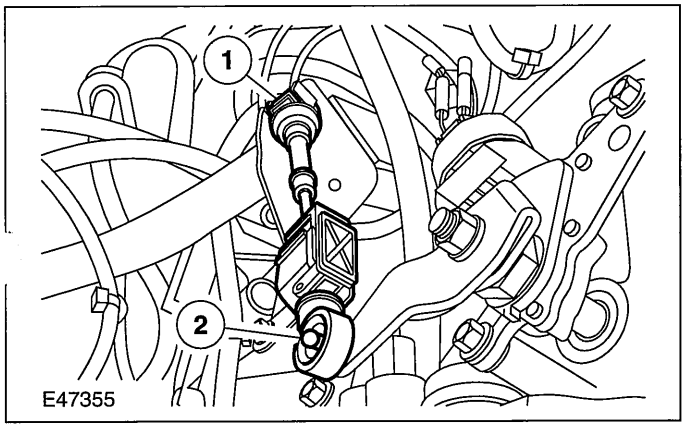


**8. Lower the vehicle.**

**9. Check the selector lever cable adjustment by moving the transmission selector lever through all gear ranges.**

## IN-VEHICLE REPAIR

# Halfshaft Seal LH

### Special Tool(s)

| | |
|---|---|
| 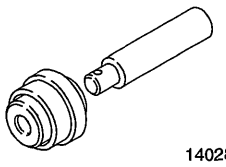 14028 | Installer, Front Wheel Hub Seal 204-066 (14-028) |
| 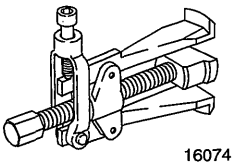 16074 | Remover, Halfshaft Seal 308-208 (16-074) |

## Removal

▲ **WARNING:Refer to the Material Safety Data Sheets for the Automatic Transmission Fluid E-AW. Failure to follow this instruction may result in personal injury. Certain Transmission and Power Steering fluids supplied to Ford contain additives which may cause skin irritation or other skin reactions after contact.**

**For additional information, refer to: Health and Safety Precautions (100-00 General Information, Description and Operation). See - Transmission Fluids.**

1. **Remove the left-hand halfshaft.**

   **For additional information, refer to: Front Halfshaft LH (205-04 Front Drive Halfshafts, Removal and Installation).**

2. **Using the special tool, remove the halfshaft seal.**
   - Allow the fluid to drain into a suitable container.

     For additional information, refer to: Health and Safety Precautions (100-00 General Information, Description and Operation). See - Transmission Fluids.
   - Discard the seal.

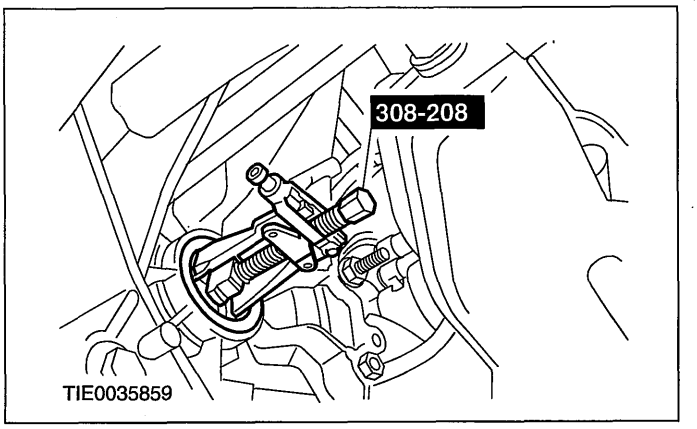


## Installation

1. **NOTE:Install a new halfshaft seal.**

   **Using the special tool, install the halfshaft seal.**

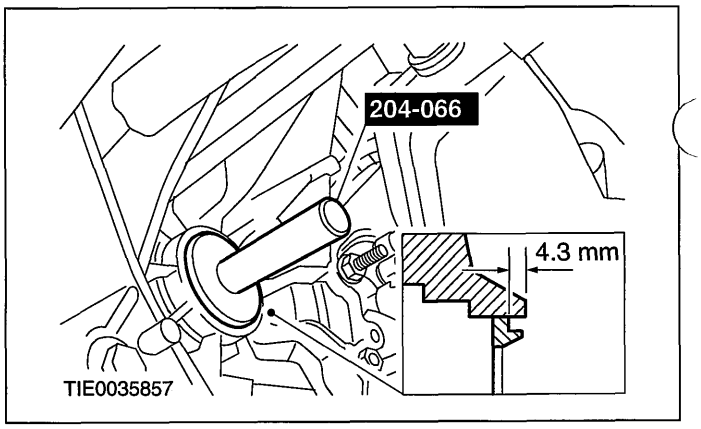


2. **Install the left-hand halfshaft.**

   **For additional information, refer to: Front Halfshaft LH (205-04 Front Drive Halfshafts, Removal and Installation).**

## IN-VEHICLE REPAIR

# Halfshaft Seal RH

### Special Tool(s)

| | |
|---|---|
| 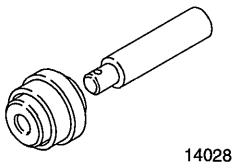 14028 | Installer, Front Wheel Hub Seal 204-066 (14-028) |
| 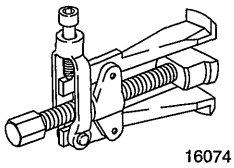 16074 | Remover, Halfshaft Seal 308-208 (16-074) |

## Removal

▲ **WARNING:Refer to the Material Safety Data Sheets for the Automatic Transmission Fluid E-AW. Failure to follow this instruction may result in personal injury. Certain Transmission and Power Steering fluids supplied to Ford contain additives which may cause skin irritation or other skin reactions after contact.**

**For additional information, refer to: Health and Safety Precautions (100-00 General Information, Description and Operation). See - Transmission Fluids.**

1. **Remove the right-hand halfshaft.**

   **For additional information, refer to: Front Halfshaft RH (205-04 Front Drive Halfshafts, Removal and Installation).**

2. **Using the special tool, remove the halfshaft seal.**
   - Allow the fluid to drain into a suitable container.

     For additional information, refer to: Health and Safety Precautions (100-00 General Information, Description and Operation). See - Transmission Fluids.
   - Discard the seal.

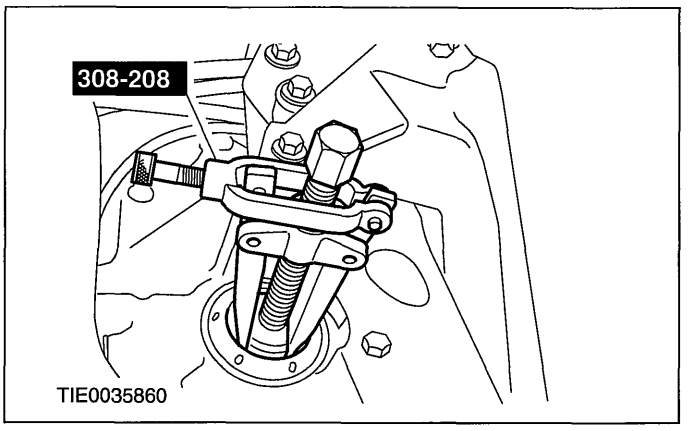


## Installation

1. **NOTE:Install a new halfshaft seal.**

   **Using the special tool, install the halfshaft seal.**

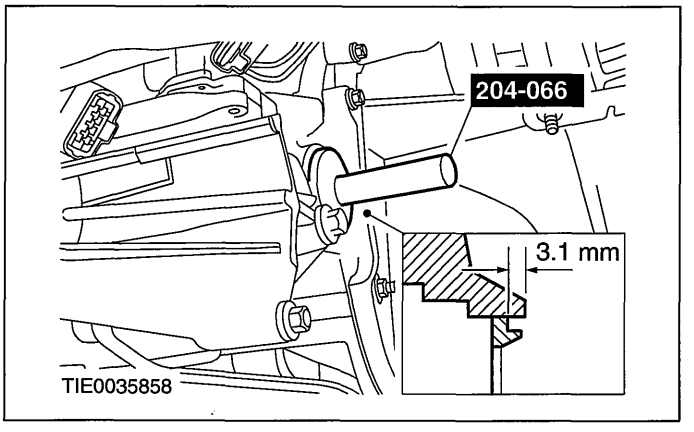


2. **Install the right-hand halfshaft.**

   **For additional information, refer to: Front Halfshaft RH (205-04 Front Drive Halfshafts, Removal and Installation).**

## IN-VEHICLE REPAIR

# Turbine Shaft Speed (TSS) Sensor

## Removal

1. **Disconnect the turbine shaft speed (TSS) sensor electrical connector.**

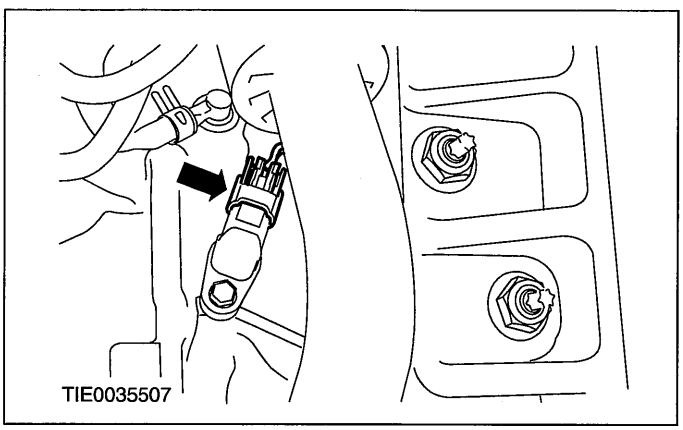


2. **Remove the TSS sensor.**

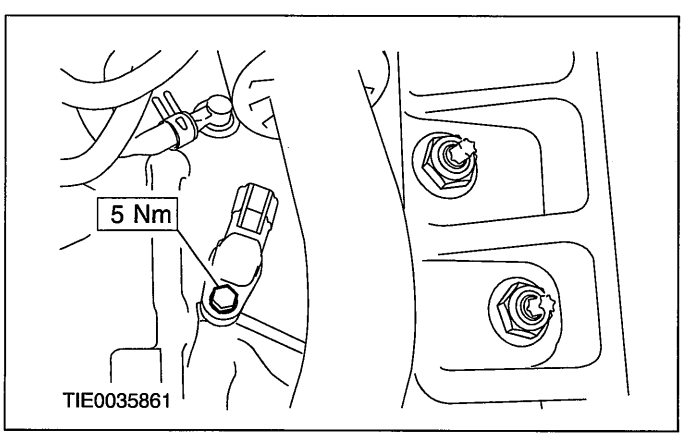


## Installation

1. **NOTE:Inspect the O-ring seal for damage. Install a new O-ring seal if necessary.**

**NOTE:**Apply a light coat of petroleum jelly to the O-ring seal before installation.

**To install, reverse the removal procedure.**

## IN-VEHICLE REPAIR

# Vehicle Speed Sensor (VSS)

## Removal

1. **Disconnect the vehicle speed sensor (VSS) electrical connector.**

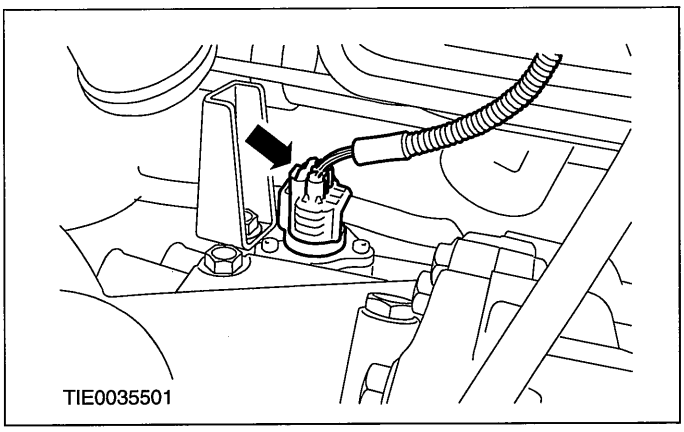


2. **Remove the VSS heat shield.**

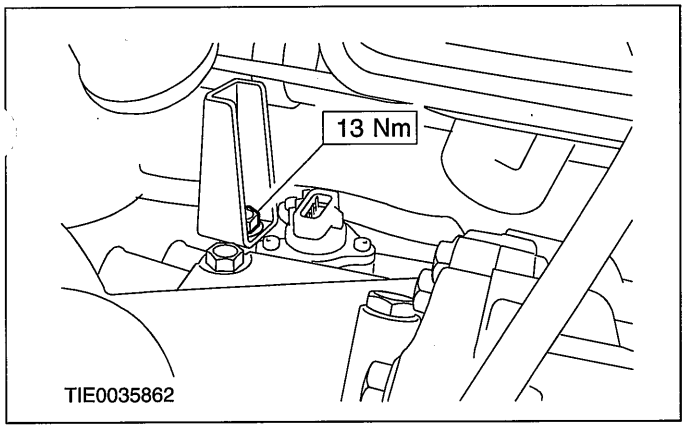


3. **Remove the VSS.**

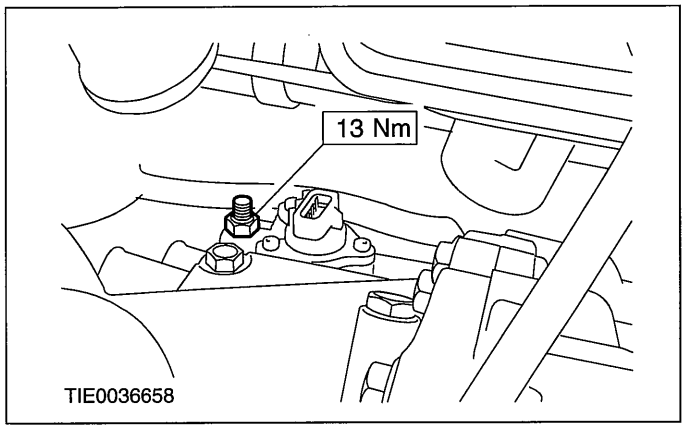


## Installation

1. **NOTE:Inspect the O-ring seal for damage. Install a new O-ring seal if necessary.**

**NOTE:**Apply a light coat of petroleum jelly to the O-ring seal before installation.

**To install, reverse the removal procedure.**

## REMOVAL AND INSTALLATION

# Transaxle

### Special Tool(s)

| | |
|---|---|
| 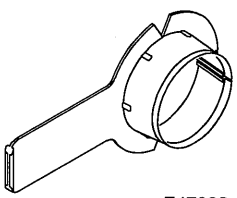 E47098 | Protector, Halfshaft Seal 205-775 |
| 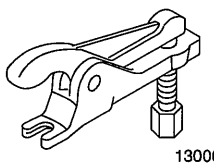 13006 | Separator, Ball Joint 211-020 (13-006) |
| 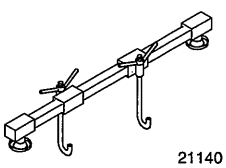 21140 | Support Bar, Engine 303-290A |
| 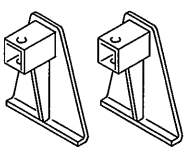 2114001 | Adapter for 303-290A 303-290-01 (21-140-01) |
| 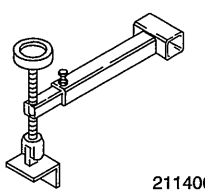 2114003 | Adapter for 303-290A 303-290-03A (21-140-03A) |
| 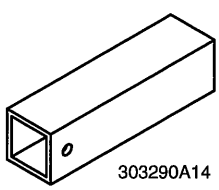 303290A14 | Adapter for 303-290A 303-290A-14 |

### General Equipment

| |
|---|
| Securing strap |

### General Equipment

| |
|---|
| Transmission jack |
| Worldwide diagnostic system (WDS) |

| Materials | |
|---|---|
| **Name** | **Specification** |
| Grease | WSD-M1C230-A |

## Removal

**WARNING:Refer to the Material Safety Data Sheets for the Automatic Transmission Fluid E-AW. Failure to follow this instruction may result in personal injury. Certain Transmission and Power Steering fluids supplied to Ford contain additives which may cause skin irritation or other skin reactions after contact.**

**For additional information, refer to: Health and Safety Precautions (100-00 General Information, Description and Operation). See - Transmission Fluids.**

1. **Remove the air cleaner.**

   **For additional information, refer to: Air Cleaner - 1.25L Duratec-16V (Sigma)/1.4L Duratec-16V (Sigma)/1.6L Duratec-16V (Sigma) (303-12 Intake Air Distribution and Filtering, Removal and Installation).**

2. **Disconnect the powertrain control module (PCM) electrical connector.**

   **For additional information, refer to: Powertrain Control Module (PCM) - 1.25L Duratec-16V (Sigma)/1.4L Duratec-16V (Sigma)/1.6L Duratec-16V (Sigma) (303-14 Electronic Engine Controls, Removal and Installation).**

3. **Remove the battery tray.**

   **For additional information, refer to: Battery Tray (414-01 Battery, Mounting and Cables, Removal and Installation).**

## REMOVAL AND INSTALLATION

4. **Loosen the strut and spring assembly top mount nuts by three turns on both sides.**

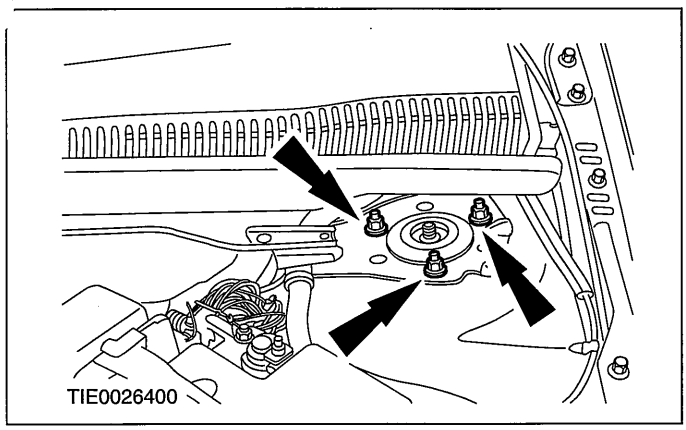


5. **Detach the engine ground cable from the transaxle.**

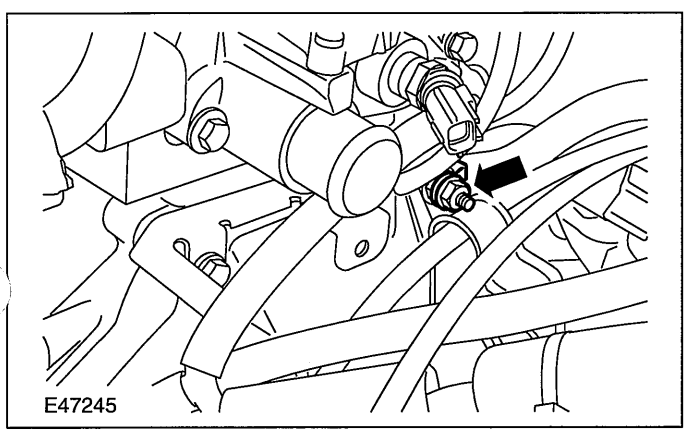


6. **Remove the transaxle upper retaining bolts.**
   - Detach the engine wiring harness bracket from the transaxle.

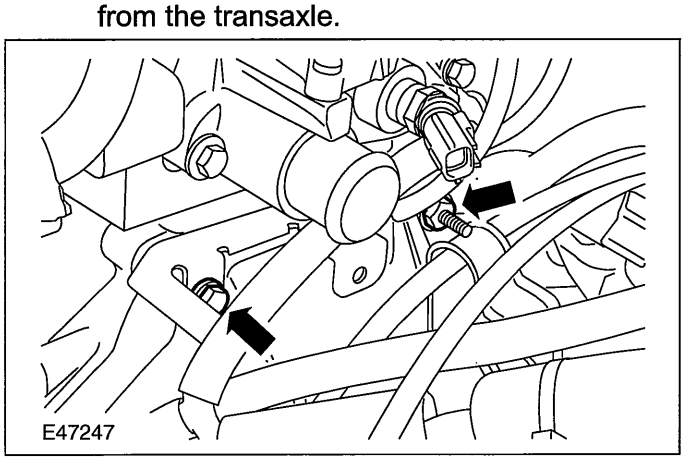


7. **Detach the ground cable from the transaxle.**

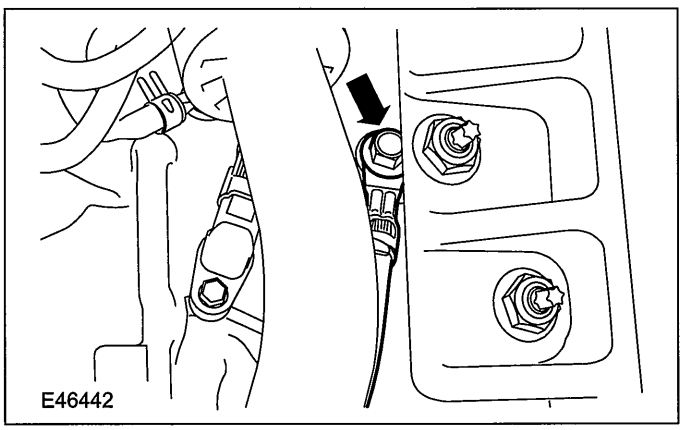


8. **Disconnect the turbine shaft speed (TSS) sensor electrical connector.**

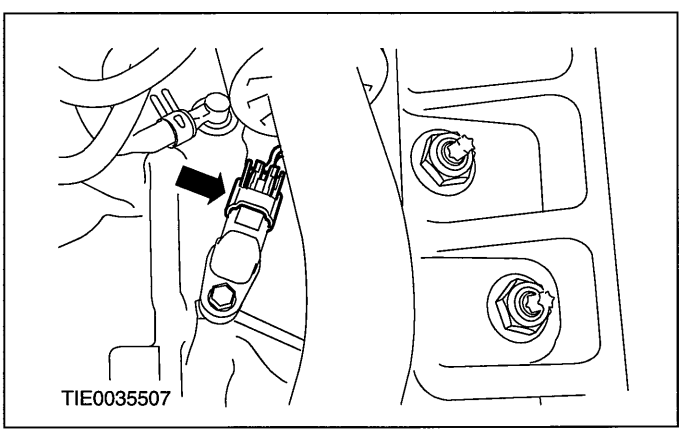


9. **Disconnect the transaxle breather hose.**

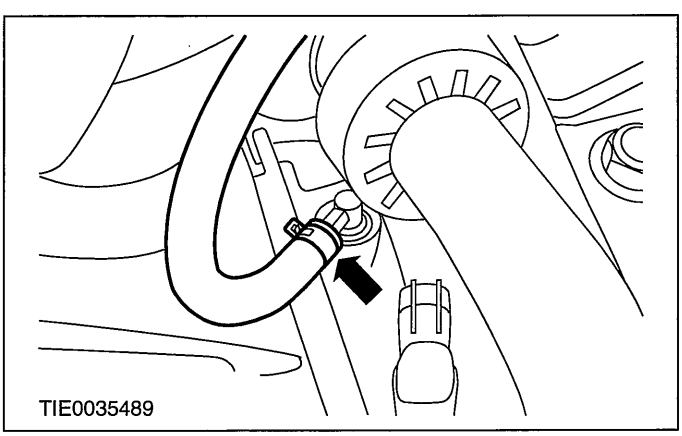

## REMOVAL AND INSTALLATION

10. Disconnect the transaxle wiring harness electrical connector.

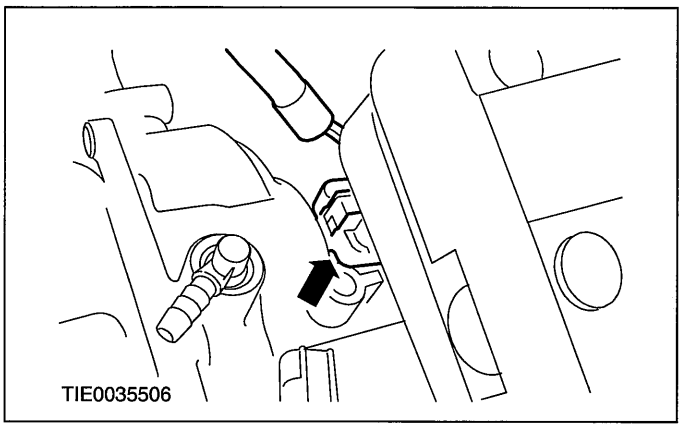


11. Disconnect the transmission range (TR) sensor electrical connector.

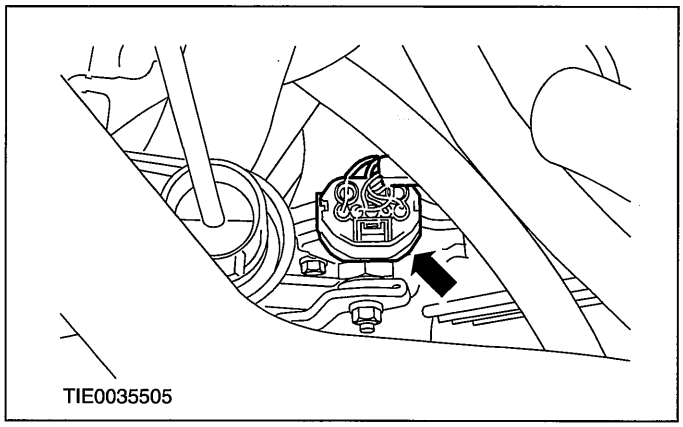


12. Disconnect the vehicle speed sensor (VSS) electrical connector.

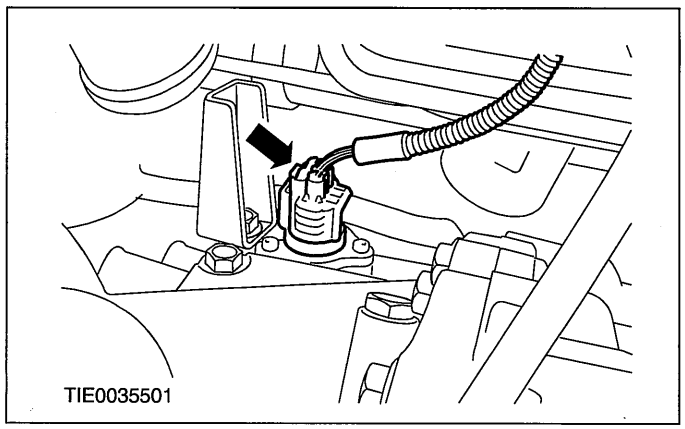


13. Remove the front wheels and tires.

    For additional information, refer to: Wheel and Tire (204-04 Wheels and Tires, Removal and Installation).

14. Detach the selector lever cable from the manual shift lever.

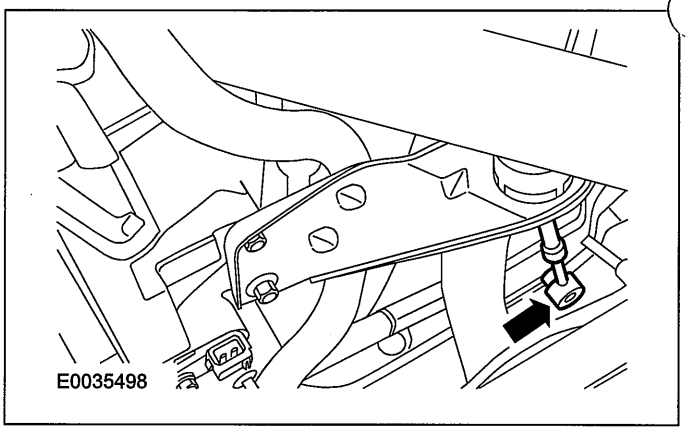


15. Detach the selector lever cable retaining bracket from the transaxle and position it to one side.

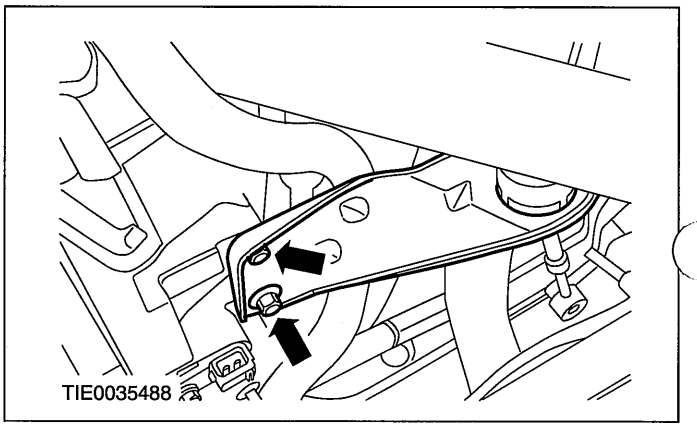


16. Remove the transmission fluid level indicator tube.

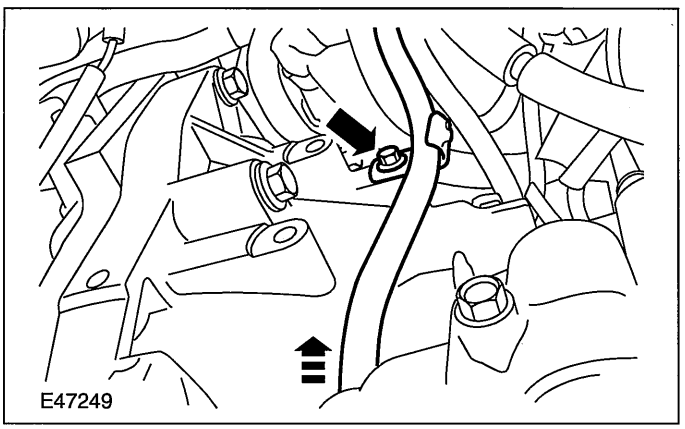

## REMOVAL AND INSTALLATION

**17. Disconnect the ignition switch to starter motor solenoid and battery to starter motor solenoid cables.**

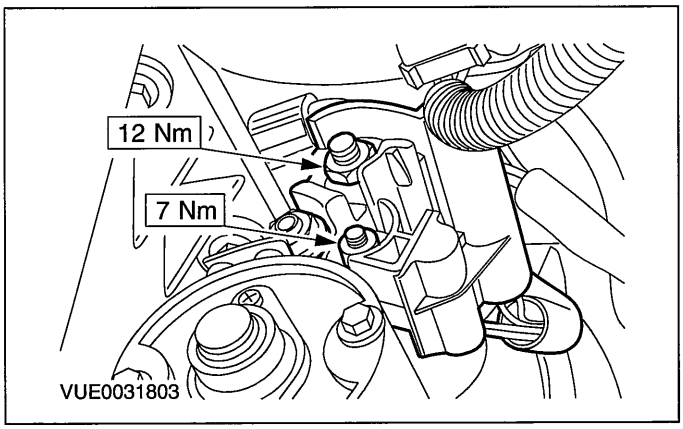


**18. Remove the accessory drive belt cover.**

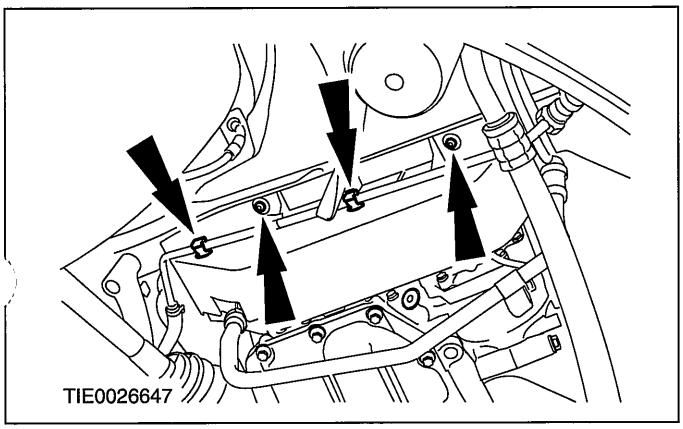


**19. Remove the engine support insulator.**

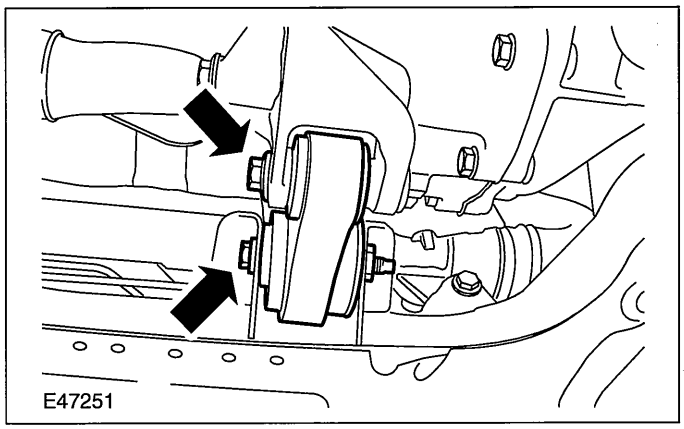


**20. ⚠CAUTION:Over bending of the exhaust flexible pipe may cause damage resulting in failure.**

**Support the exhaust flexible pipe with a suitable support wrap or suitable splint.**

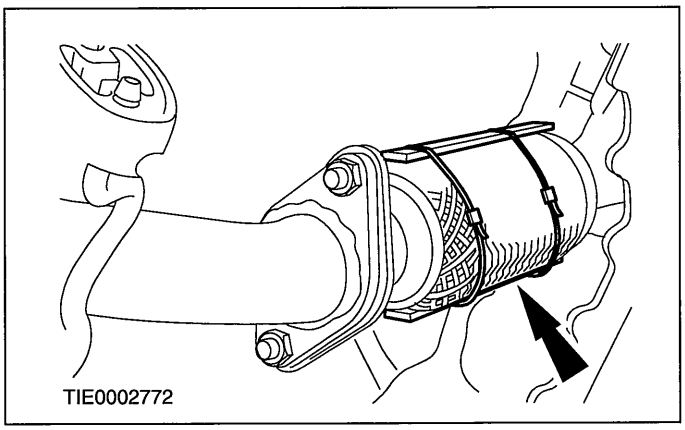


**21. Detach the exhaust flexible pipe from the catalytic converter.**

- Discard the nuts and the gasket.

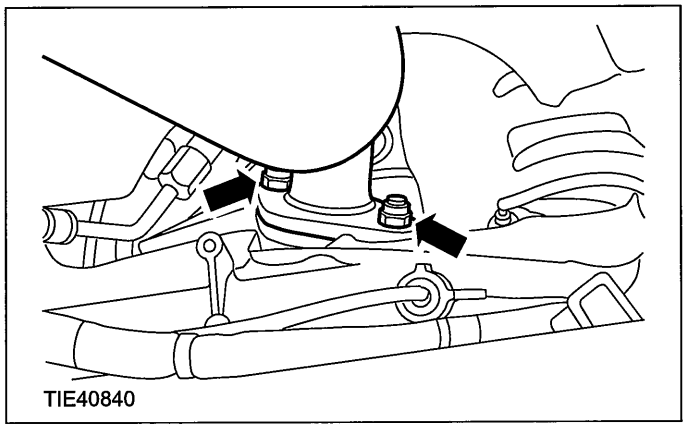


**22. ⚠CAUTION:Leave the tie-rod end retaining nut in place to protect the ball joint stud.**

**NOTE:**Use a 5mm Allen key to prevent the ball joint stud from rotating.

**Loosen the right-hand tie-rod end retaining nut.**

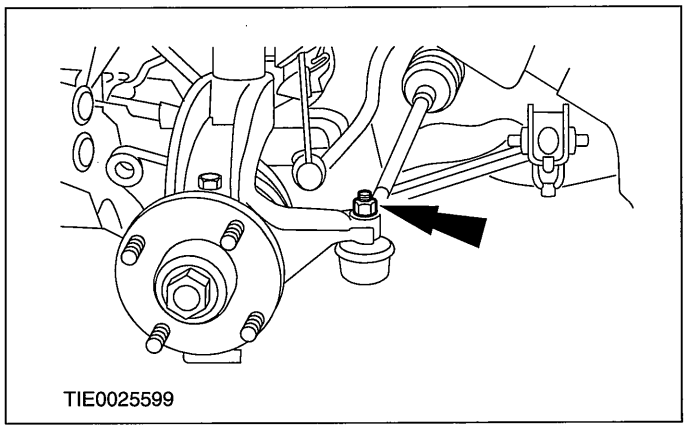

## REMOVAL AND INSTALLATION

23. ⚠**CAUTION:Protect the ball joint seal using a soft cloth to prevent damage.**

**Using the special tool, detach the right-hand tie-rod end from the wheel knuckle.**

1. Release the tie-rod end.
2. Remove and discard the tie-rod end retaining nut.

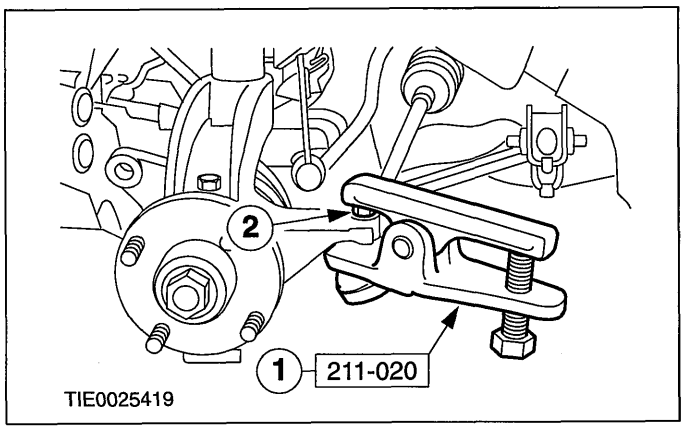


24. ⚠**CAUTION:Protect the ball joint seal.**

**Detach the lower arm from the wheel knuckle on both sides.**

- Remove the heat shield.

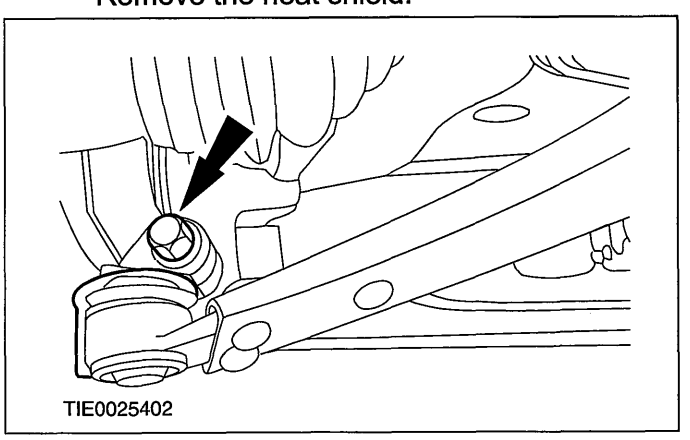


25. **CAUTIONS:**

⚠**Support the halfshaft. The inner joint must not be bent more than 18 degrees. The outer joint must not be bent more than 45 degrees.**

⚠**Do not damage the halfshaft seal.**

**NOTE:**Plug the transaxle to prevent oil loss or dirt ingress.

For additional information, refer to: Health and Safety Precautions (100-00 General Information, Description and Operation).
See - Transmission Fluids.

**Using a suitable tire lever, detach the left-hand halfshaft from the transaxle and secure it to one side.**

- Allow the oil to drain into a suitable container.

  For additional information, refer to: Health and Safety Precautions (100-00 General Information, Description and Operation).
  See - Transmission Fluids.
- Discard the snap ring.

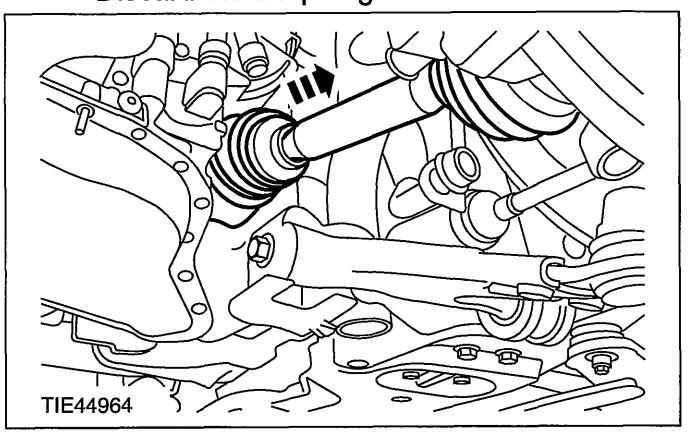


26. **CAUTIONS:**

⚠**Support the halfshaft. The inner joint must not be bent more than 18 degrees. The outer joint must not be bent more than 45 degrees.**

⚠**Do not damage the halfshaft seal.**

**NOTE:**Plug the transaxle to prevent oil loss or dirt ingress.

For additional information, refer to: Health and Safety Precautions (100-00 General Information, Description and Operation).
See - Transmission Fluids.

**Detach the right-hand halfshaft and the intermediate shaft from the transaxle and secure it to one side.**

- Discard the center bearing cap and locknuts.
- Allow the oil to drain into a suitable container.

  For additional information, refer to: Health and Safety Precautions (100-00 General Information, Description and Operation).

## REMOVAL AND INSTALLATION

See - Transmission Fluids.

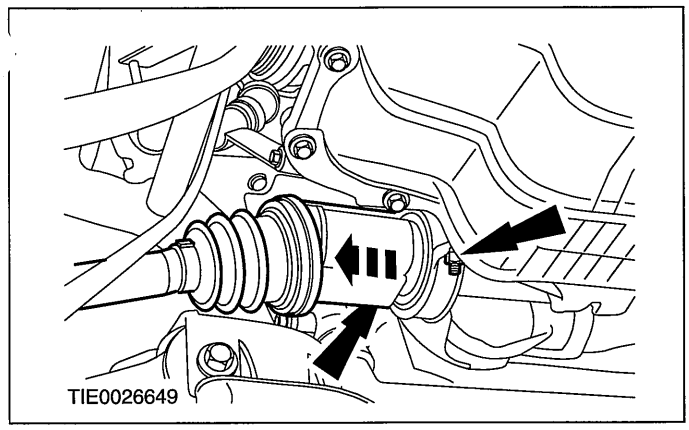


**27. Lower the vehicle.**

**28. Remove the battery tray support bracket.**

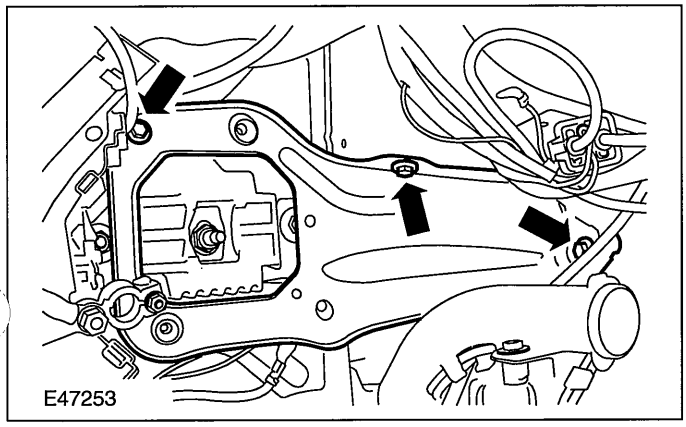


**29. ▲WARNING:When releasing the transmission fluid, take care to prevent scolding. Failure to follow this instruction may result in personal injury.**

**⚠ CAUTION:Plug the transmission fluid cooler feed and return lines to prevent fluid loss or dirt ingress.**

**For additional information, refer to: Health and Safety Precautions (100-00 General Information, Description and Operation). See - Transmission Fluids.**

**NOTE:**Mark the position of the feed and return lines to aid installation.

**Detach the transmission fluid cooler lines from the transmission.**

1. Push the transmission fluid cooler line quick release connector onto the transmission.
2. Press together the retaining tabs and detach the transmission fluid cooler line from the transmission.

- Allow the fluid to drain into a suitable container.

For additional information, refer to: Health and Safety Precautions (100-00 General Information, Description and Operation). See - Transmission Fluids.

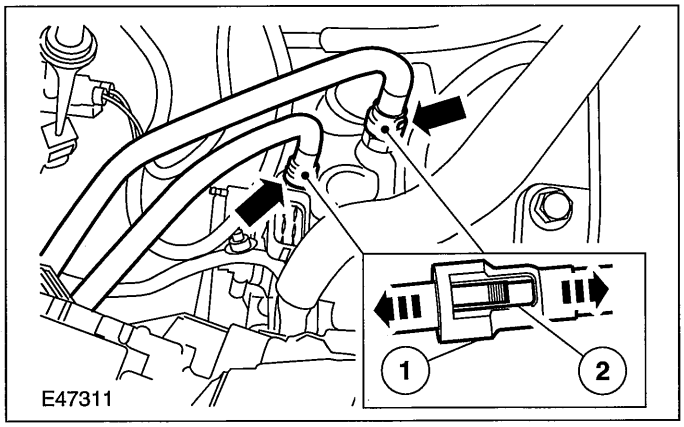


**30. Install the special tools.**

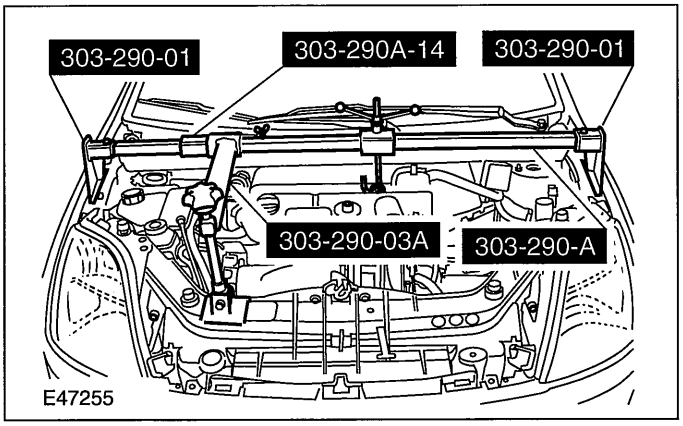


**31. Remove the engine and transaxle rear mount.**

- Discard the nuts.

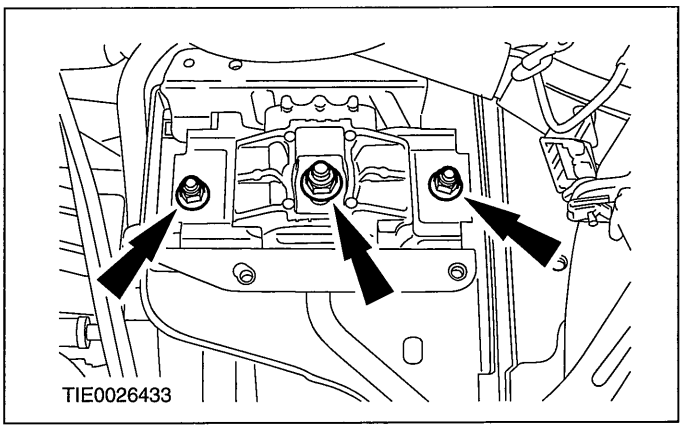

## REMOVAL AND INSTALLATION

32. **Using the special tools, lower the engine and transaxle assembly.**

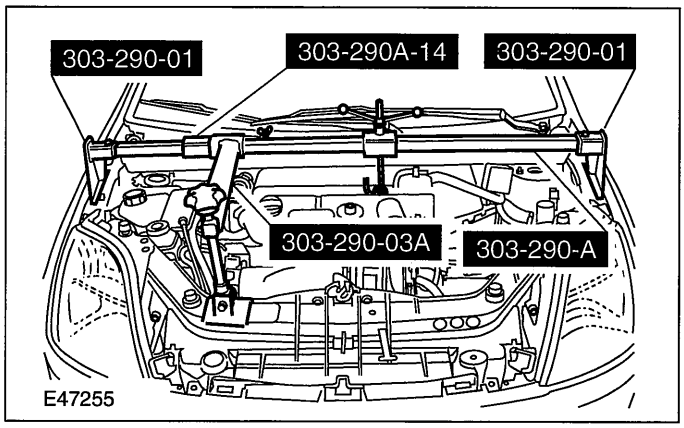


33. **Remove the engine and transaxle rear mount retaining bracket.**

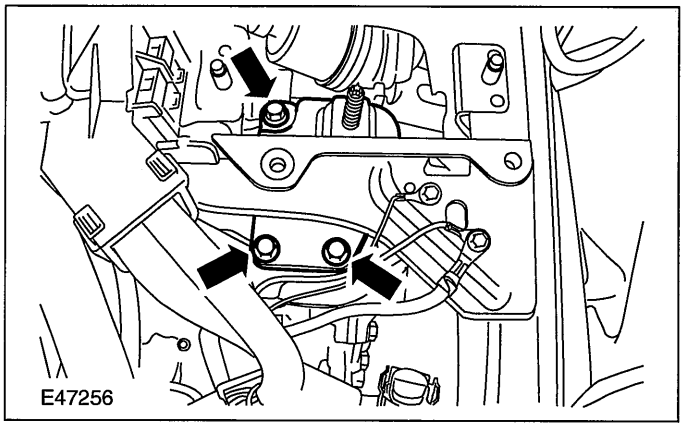


34. **Raise and support the vehicle.**

    **For additional information, refer to: Lifting (100-02 Jacking and Lifting, Description and Operation).**

35. **Remove the starter motor.**

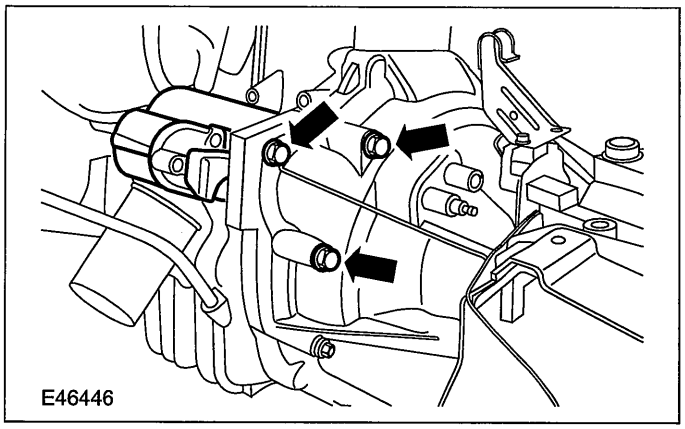


36. **Remove the torque converter retaining nuts.**

- Rotate the torque converter to gain access to the nuts.
- Discard the nuts.

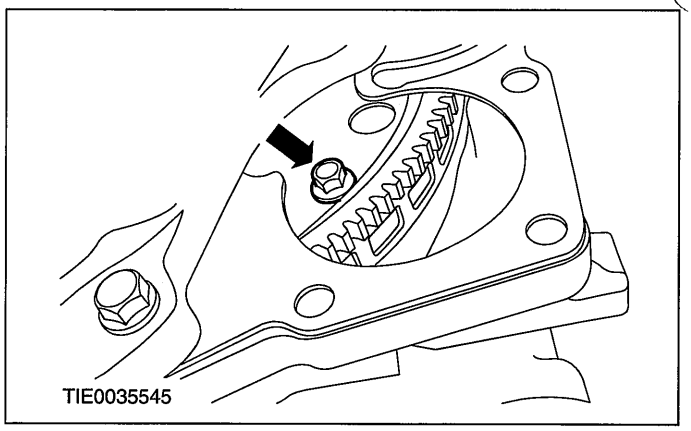


37. **Remove the transaxle lower retaining bolts.**

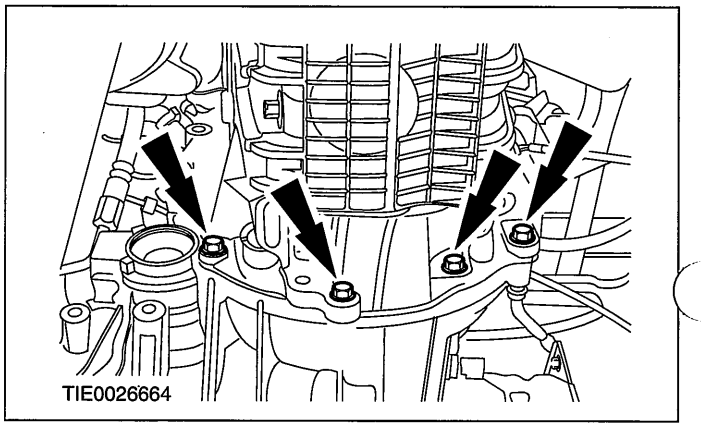


38. **NOTE:Secure the transaxle with a securing strap to the transmission jack.**

    **Using a suitable transmission jack, support the transaxle.**

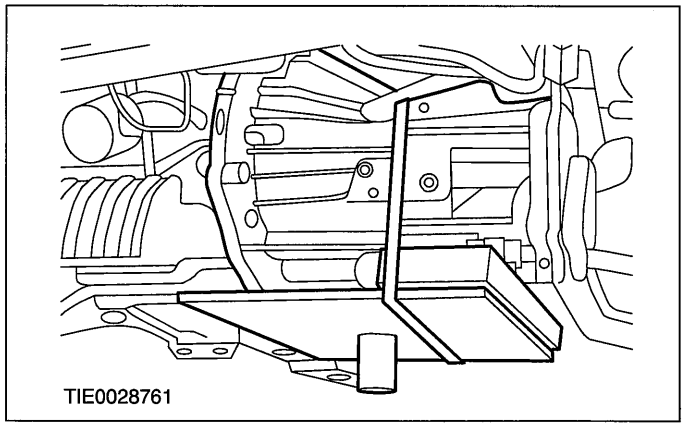

## REMOVAL AND INSTALLATION

**39. Tilt the engine and transaxle assembly forwards and insert a suitable wooden block.**

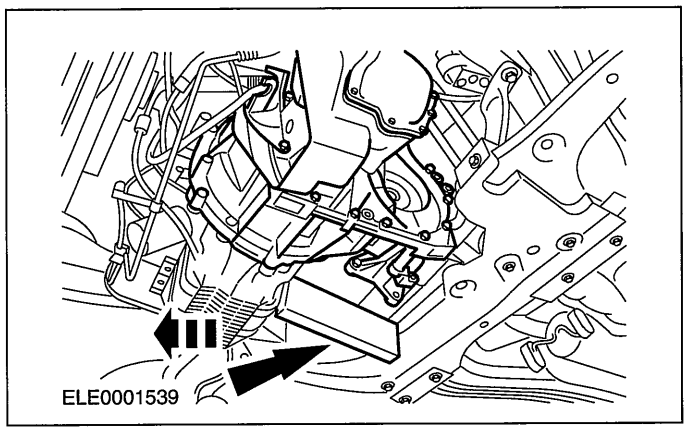


**40. Remove the transaxle right-hand retaining bolts.**

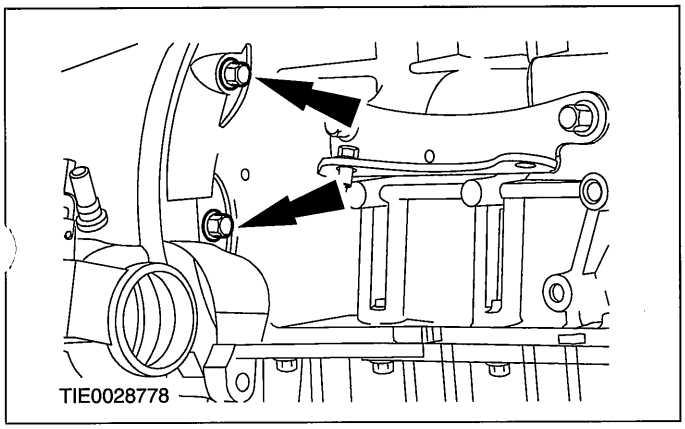


**41. ⚠CAUTION:Make sure the torque converter remains in the transaxle.**

**Using the transmission jack and remove the transaxle.**

### Installation

**1. ⚠CAUTION:The torque converter must remain at the correct installation depth during the entire installation.**

**NOTE:**Before installing the bolts in the transmission, the torque converter studs must be aligned with the holes in the drive plate.

**Install the torque converter.**

- Lubricate the torque converter centering spigot with grease.

**2. ⚠CAUTION:The torque converter hub must engage fully with the oil pump drive gear.**

**Check the installation depth of the torque converter.**

1. Lay a straight edge on the transaxle flange.
2. Check the installation depth between the transaxle flange and the torque converter centering spigot.

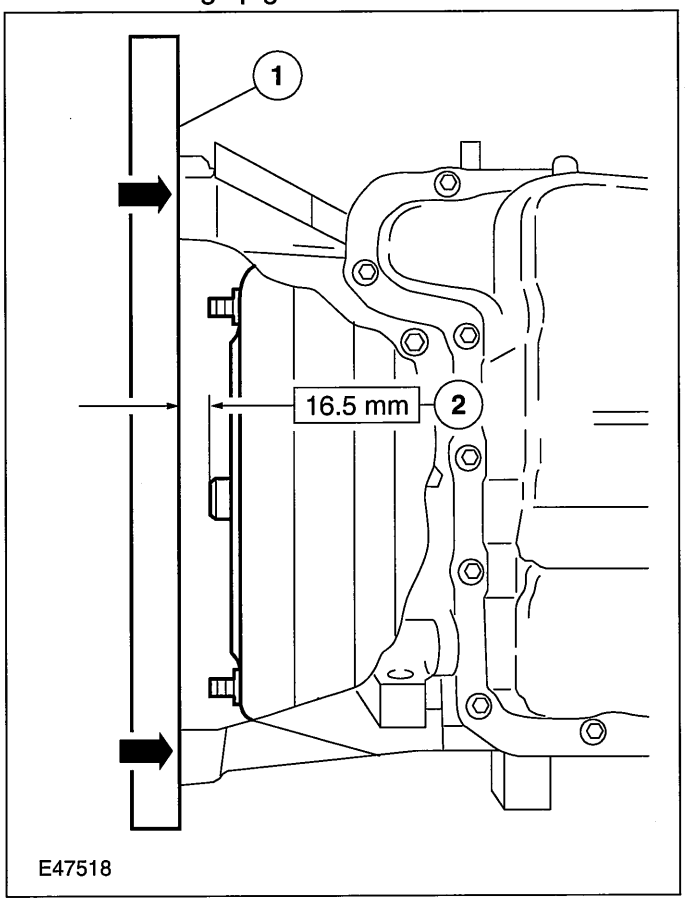


**3. ⚠CAUTION:The torque converter must remain at the correct installation depth during the entire installation.**

**NOTE:**Secure the transmission with the securing strap.

**NOTE:**Make sure that the two locating dowels are installed.

## REMOVAL AND INSTALLATION

**Using a suitable transmission jack, install the transaxle.**

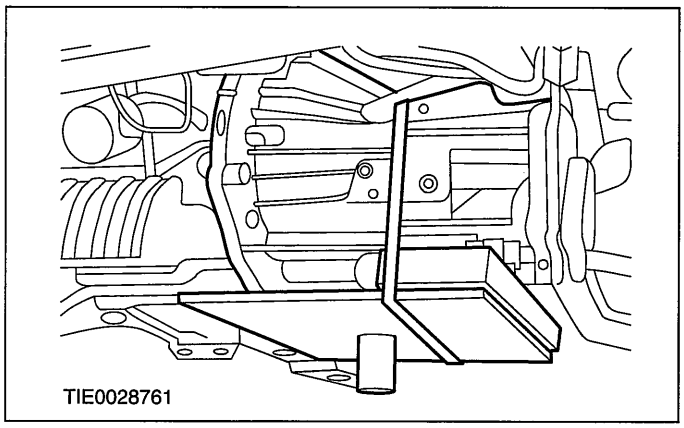


**4. Install the transaxle right-hand retaining bolts.**

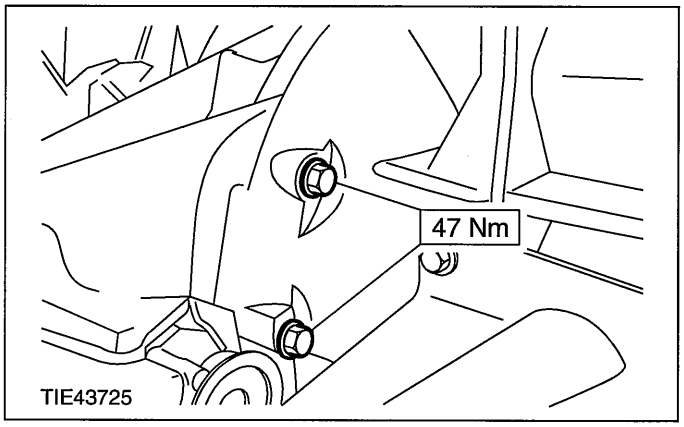


**5. Remove the wooden block.**

**6. Remove the securing strap.**

**7. Remove the transmission jack.**

**8. Install the transaxle lower retaining bolts.**

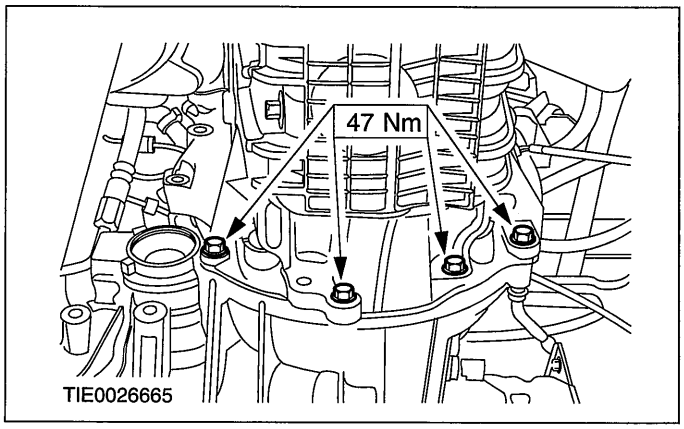


**9. NOTE:Install new torque converter retaining nuts.**

**Install the torque converter retaining nuts.**

1. Rotate the torque converter to gain access to the nut bolts.

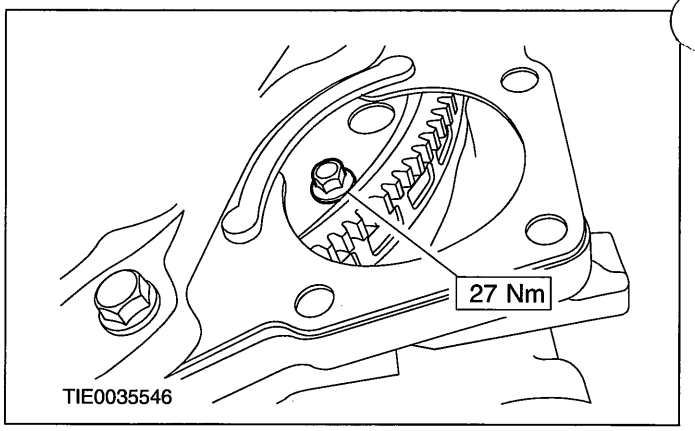


**10. Install the starter motor.**

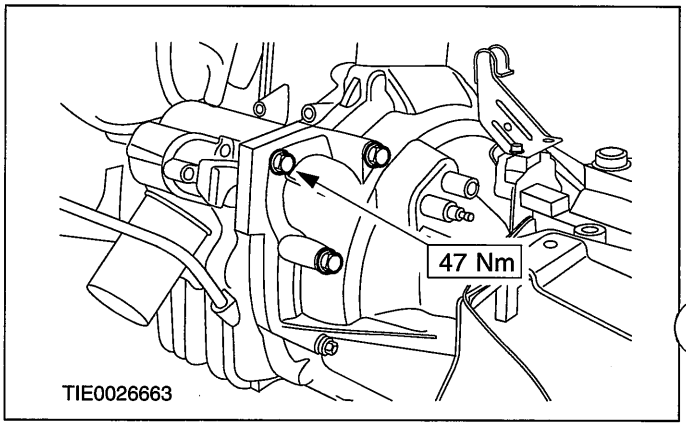


**11. Lower the vehicle.**

**12. Install the engine and transaxle rear mount retaining bracket.**

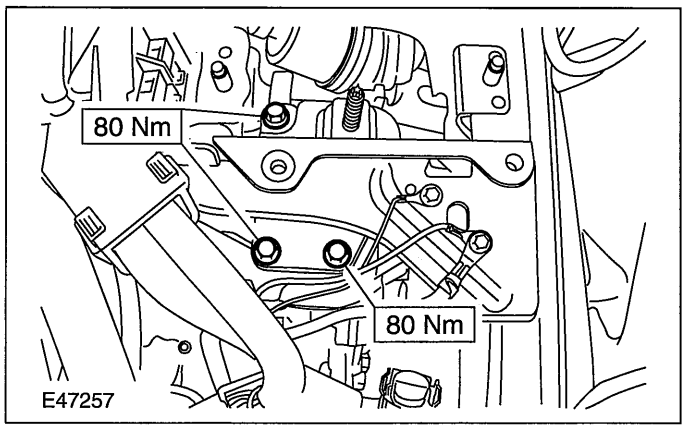

## REMOVAL AND INSTALLATION

13. **Using the special tools, raise the engine and transaxle assembly.**

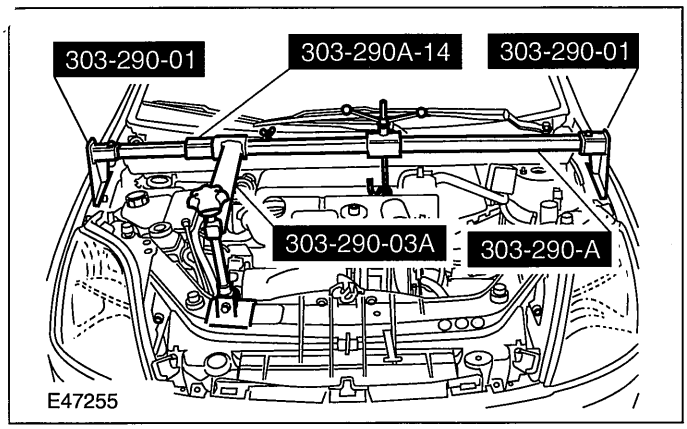


14. **NOTE:Do not tighten the engine rear mount retaining nuts at this stage.**

**NOTE:**Install new engine rear mount retaining nuts.

**Install the engine rear mount retaining nuts.**

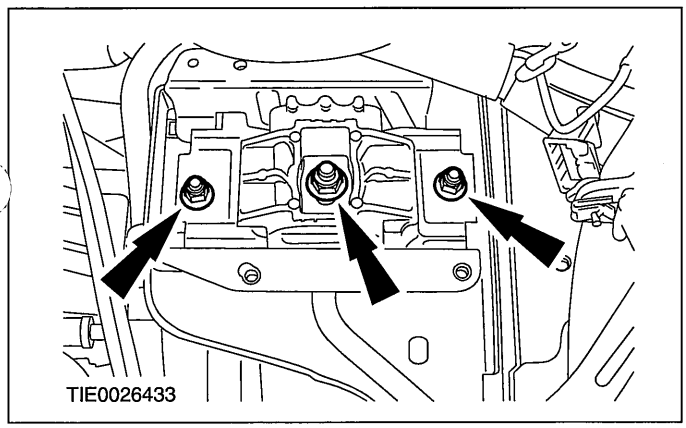


15. **Remove the special tools.**

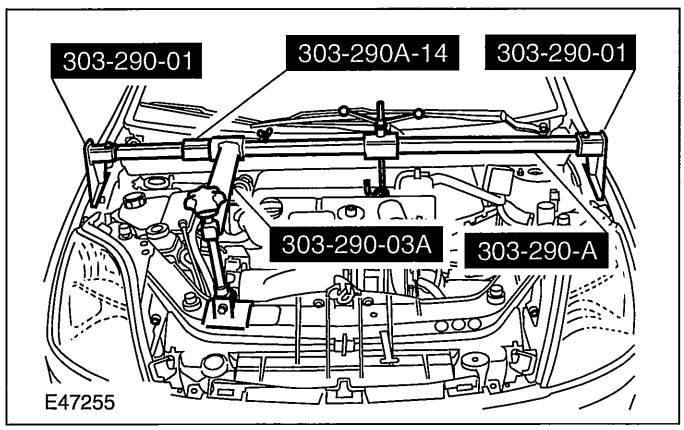


16. **Attach the transmission fluid cooler feed and return lines to the automatic transmission.**

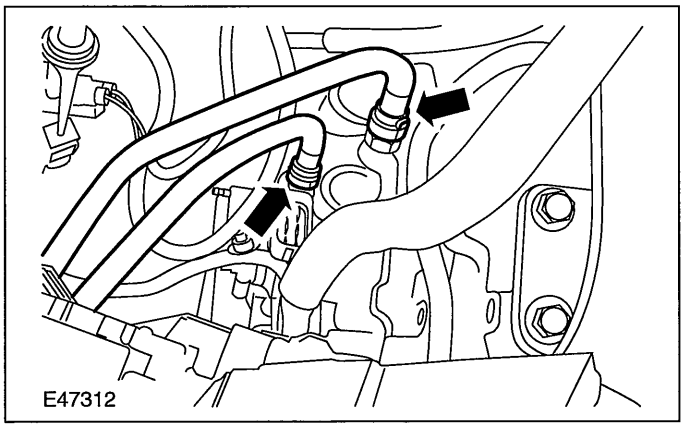


17. **Raise and support the vehicle.**

**For additional information, refer to: Lifting (100-02 Jacking and Lifting, Description and Operation).**

18. **CAUTIONS:**

**⚠The inner joint must not be bent more than 18 degrees. The outer joint must not be bent more than 45 degrees.**

**⚠Do not damage the halfshaft seal.**

**Attach the right-hand halfshaft and the intermediate shaft to the transaxle.**

- Remove the protective sleeve before fully installing the halfshaft.

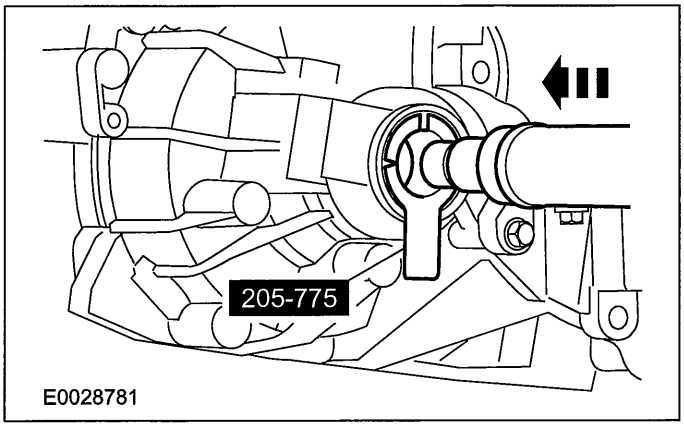


19. **NOTE:Install a new center bearing cap and locknuts.**

## REMOVAL AND INSTALLATION

**Install the intermediate shaft center bearing cap.**

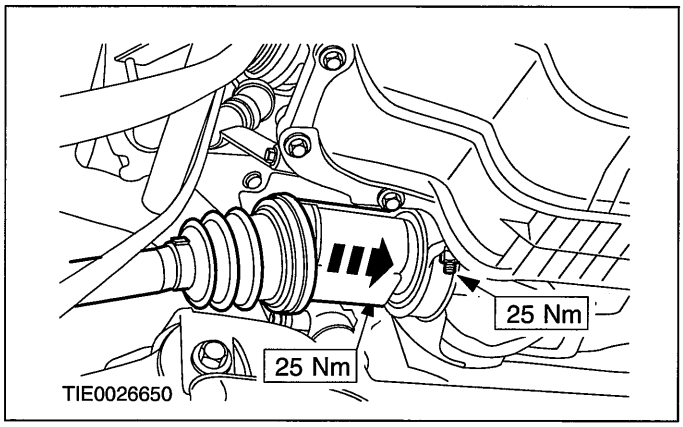


20. **CAUTIONS:**

**⚠The inner joint must not be bent more than 18 degrees. The outer joint must not be bent more than 45 degrees.**

**⚠Do not damage the halfshaft seal.**

**⚠Make sure the snap ring is correctly seated.**

**NOTE:**Install a new snap ring.

**Attach the left-hand halfshaft to the transaxle.**

- Remove the protective sleeve before fully installing the halfshaft.

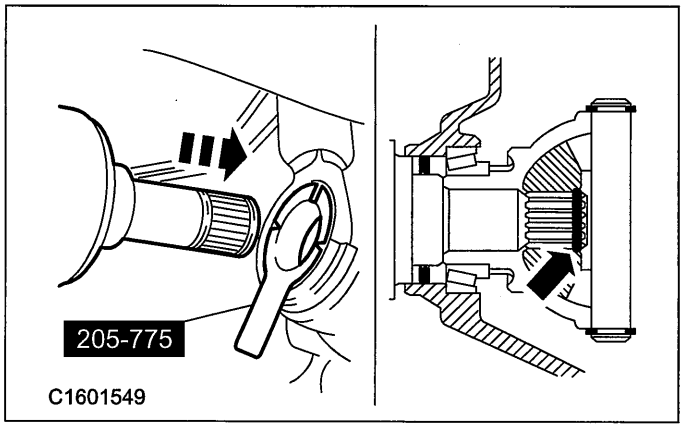


21. **⚠CAUTION:Make sure that the heat shield is installed to prevent damage to the ball joint.**

**NOTE:**The lower arm pinch bolt must be installed from the rear of the wheel knuckle.

**Attach the lower arm to the wheel knuckle on both sides.**

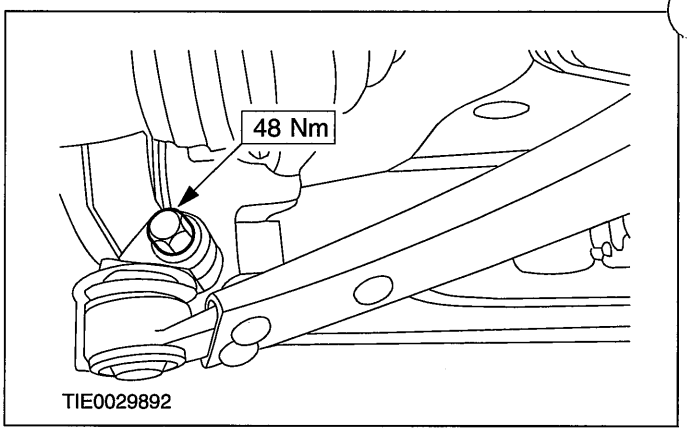


22. **▲WARNING:Install a new tie-rod end retaining nut. Failure to follow this instruction may result in personal injury.**

**NOTE:**Use a 5 mm Allen key to prevent the ball joint stud from rotating.

**Attach the right-hand tie-rod end to the wheel knuckle.**

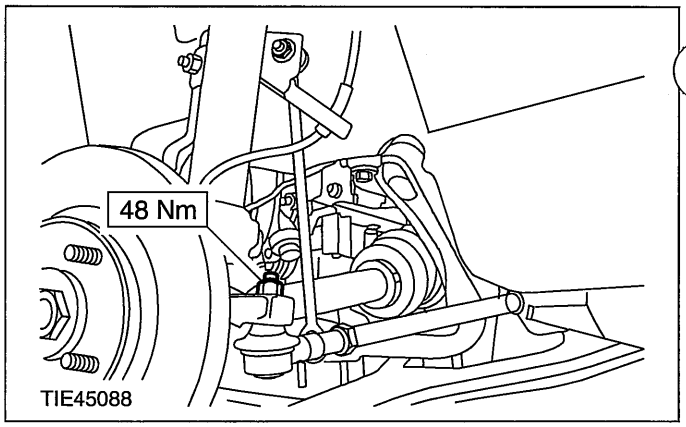


23. **NOTE:Install new exhaust flange nuts and a new exhaust flange gasket.**

**Attach the exhaust flexible pipe to the catalytic converter.**

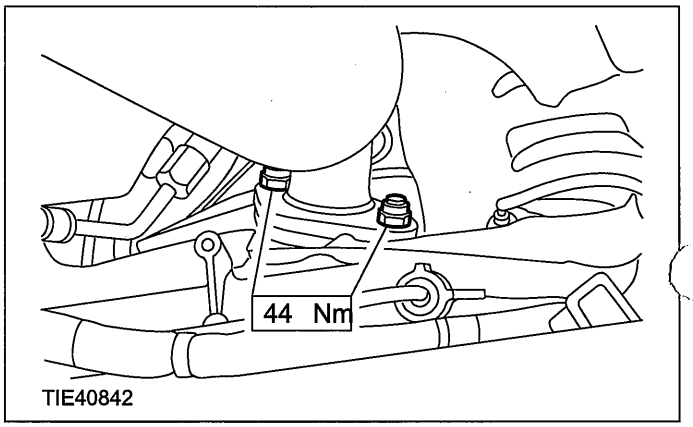

## REMOVAL AND INSTALLATION

24. Remove the exhaust flexible pipe support.
25. Install the engine support insulator.

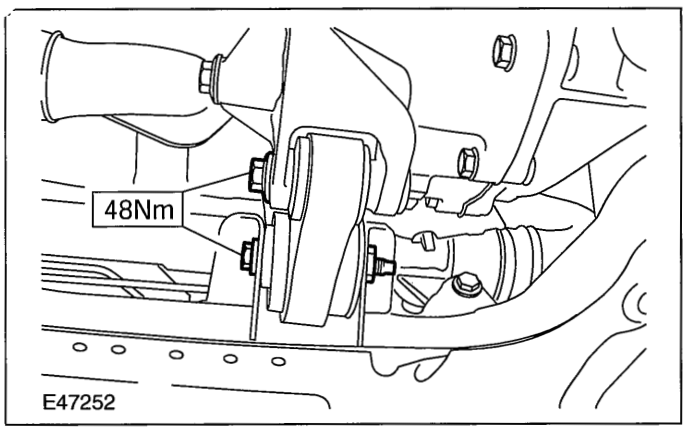


26. Install the accessory drive belt cover.

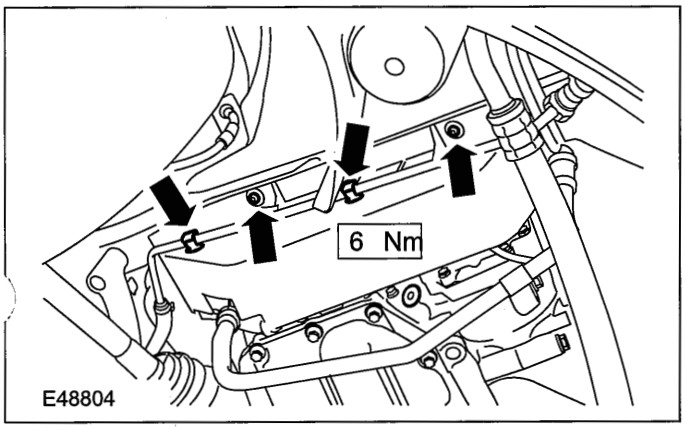


27. Connect the ignition switch to starter motor solenoid and battery to starter motor solenoid cables.

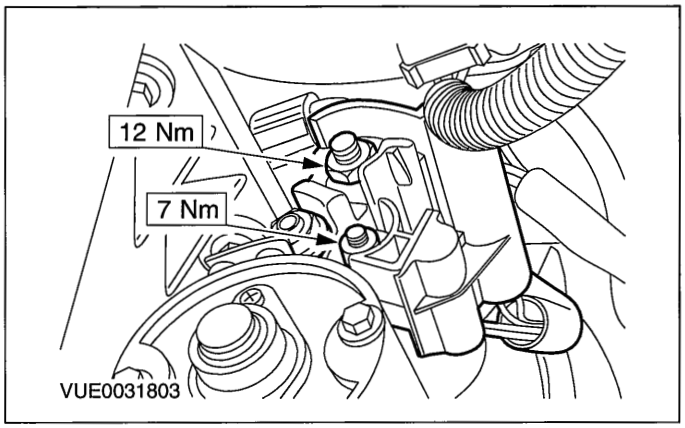


28. ⚠CAUTION:Make sure the transmission fluid level indicator tube is fully located in the transmission housing.

Install the transmission fluid level indicator tube to the transaxle.

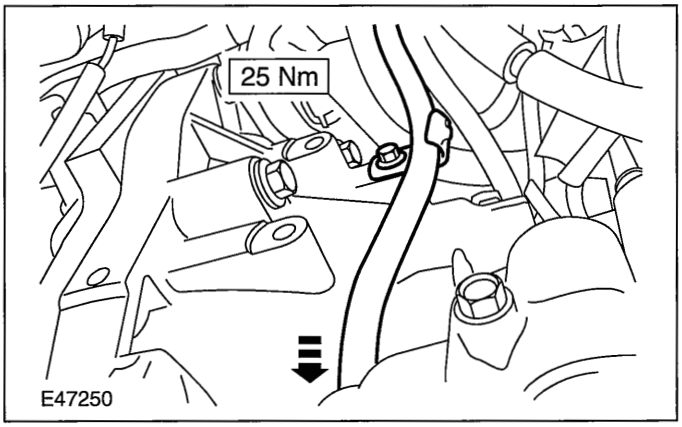


29. Attach the selector lever cable retaining bracket to the transaxle.

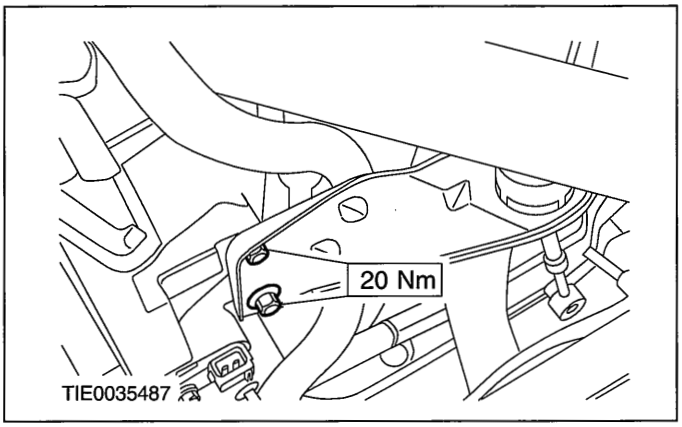


30. Attach the selector lever cable to the manual shift lever.

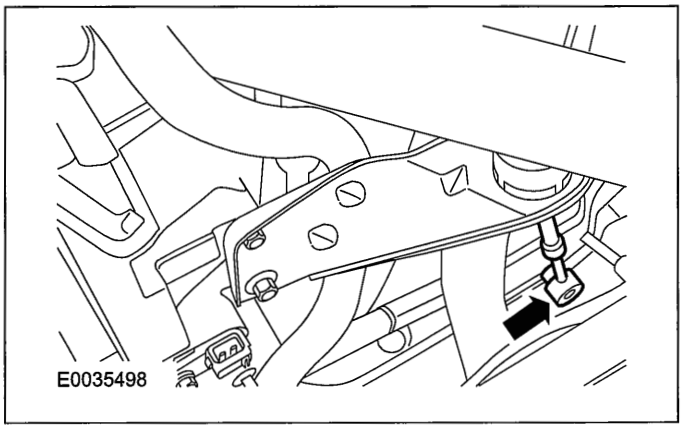


31. Adjust the selector lever cable.

For additional information, refer to: Selector Lever Cable Adjustment (307-05 Automatic Transmission/Transaxle External Controls - Vehicles With: 4-Speed Automatic Transmission (AW81-40), General Procedures).

## REMOVAL AND INSTALLATION

32. Lower the vehicle.

33. Connect the vehicle speed sensor (VSS) electrical connector.

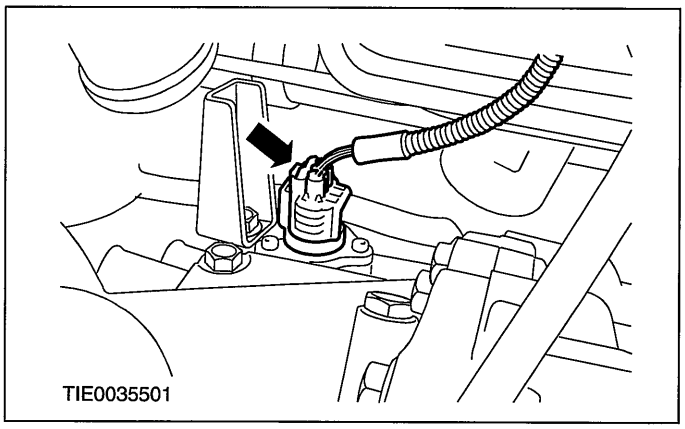


34. Connect the transmission range (TR) sensor electrical connector.

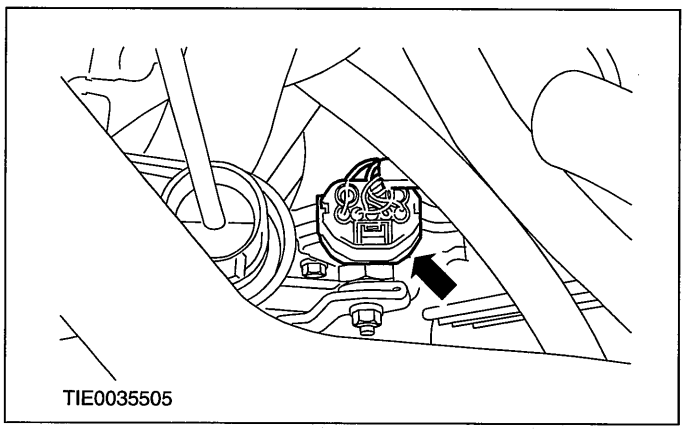


35. Connect the transaxle wiring harness electrical connector.

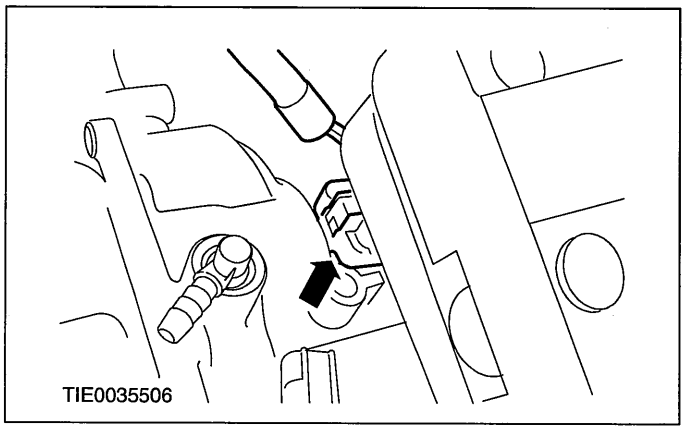


36. Connect the transaxle breather hose.

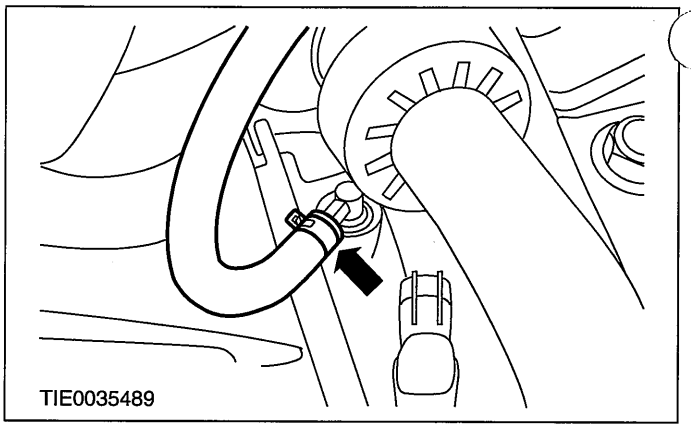


37. Connect the turbine shaft speed (TSS) sensor electrical connector.

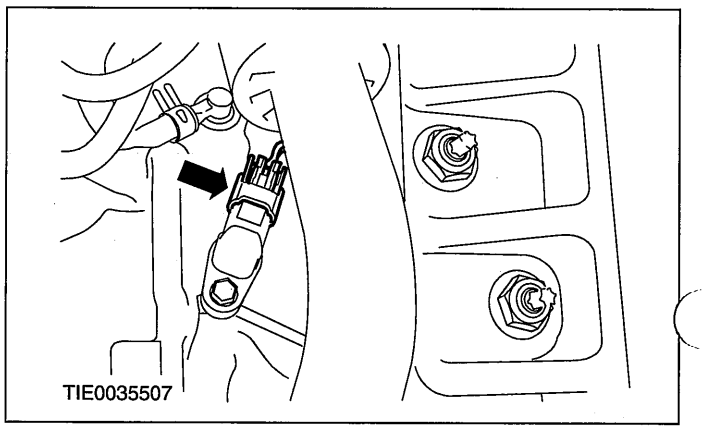


38. Attach the ground cable to the transaxle.

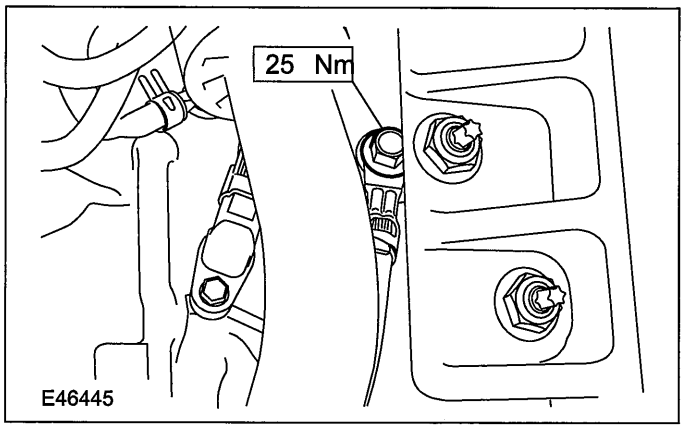

## REMOVAL AND INSTALLATION

39. Install the engine wiring harness support brackets.

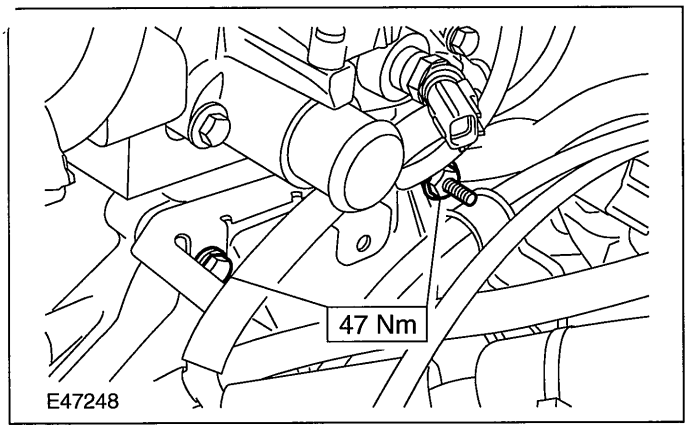


40. Attach the engine ground cable to the transaxle.

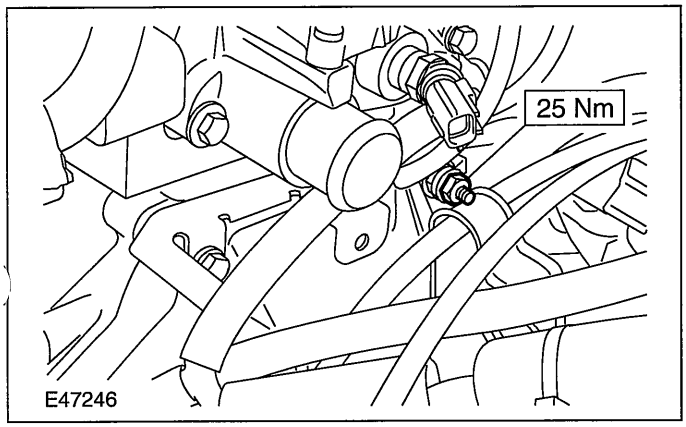


41. Tighten the engine rear mount outer retaining nuts.

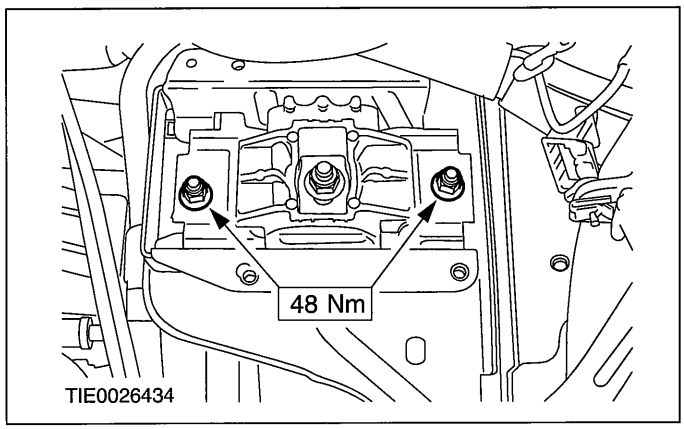


42. Tighten the engine rear mount center retaining nut.

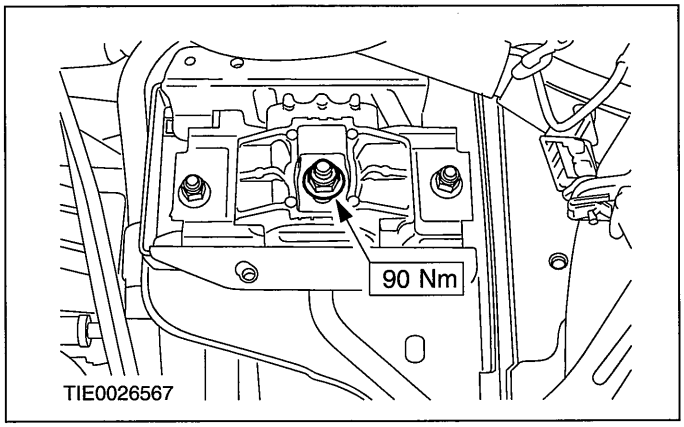


43. Install the battery tray support bracket.

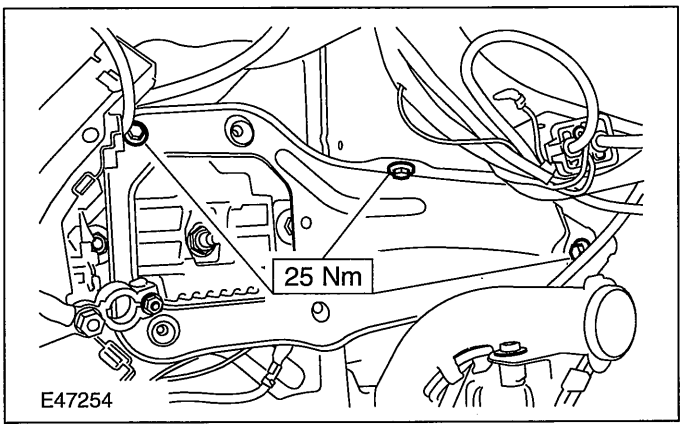


44. Tighten the strut and spring assembly top mount retaining nuts on both sides.

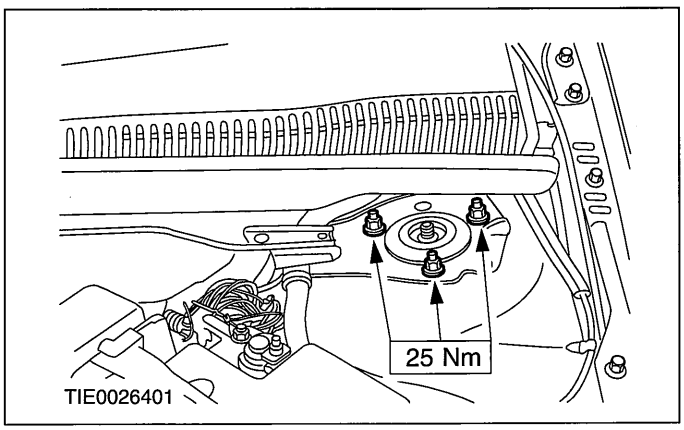


45. Install the front wheels and tires.

For additional information, refer to: Wheel and Tire (204-04 Wheels and Tires, Removal and Installation).

## REMOVAL AND INSTALLATION

46. Install the battery tray.

    For additional information, refer to: Battery Tray (414-01 Battery, Mounting and Cables, Removal and Installation).

47. Connect the powertrain control module (PCM) electrical connector to the PCM.

    For additional information, refer to: Powertrain Control Module (PCM) - 1.25L Duratec-16V (Sigma)/1.4L Duratec-16V (Sigma)/1.6L Duratec-16V (Sigma) (303-14 Electronic Engine Controls, Removal and Installation).

48. Install the air cleaner.

    For additional information, refer to: Air Cleaner - 1.25L Duratec-16V (Sigma)/1.4L Duratec-16V (Sigma)/1.6L Duratec-16V (Sigma) (303-12 Intake Air Distribution and Filtering, Removal and Installation).

49. Check the transmission fluid level and top up with clean automatic transmission fluid if necessary.

    For additional information, refer to: Transmission Fluid Level Check (307-01 Automatic Transmission/Transaxle - Vehicles With: 4-Speed Automatic Transmission (AW81-40), General Procedures).

50. NOTE:Only carry out the following step when a new transaxle has been installed.

    Using worldwide diagnostic system (WDS), reset the transmission control module (TCM).

# SECTION 307-02 Transmission/Transaxle Cooling — Vehicles With: 4-Speed Automatic Transmission (AW81-40)

## VEHICLE APPLICATION:2006.0 Fiesta

CONTENTS PAGE

**SPECIFICATIONS**

Specifications ..... 307-02-2

**DESCRIPTION AND OPERATION**

Transaxle Cooling ..... 307-02-3
Cooling circuit ..... 307-02-3

**REMOVAL AND INSTALLATION**

Transmission Fluid Cooler ..... (17 834 0) 307-02-4
Transmission Fluid Cooler Tubes ..... (17 857 0) 307-02-6

## SPECIFICATIONS

### Lubricants, Fluids, Sealers and Adhesives

**WARNING:Refer to the Material Safety Data Sheets for the Automatic Transmission Fluid E-AW. Failure to follow this instruction may result in personal injury. Certain Transmission and Power Steering fluids supplied to Ford contain additives which may cause skin irritation or other skin reactions after contact.**

**For additional information, refer to: Health and Safety Precautions (100-00 General Information, Description and Operation).**
**See - Transmission Fluids.**

| Item | Specification |
|---|---|
| Automatic transmission fluid | WSS-M2C924-A |

## DESCRIPTION AND OPERATION

# Transaxle Cooling

### Cooling circuit

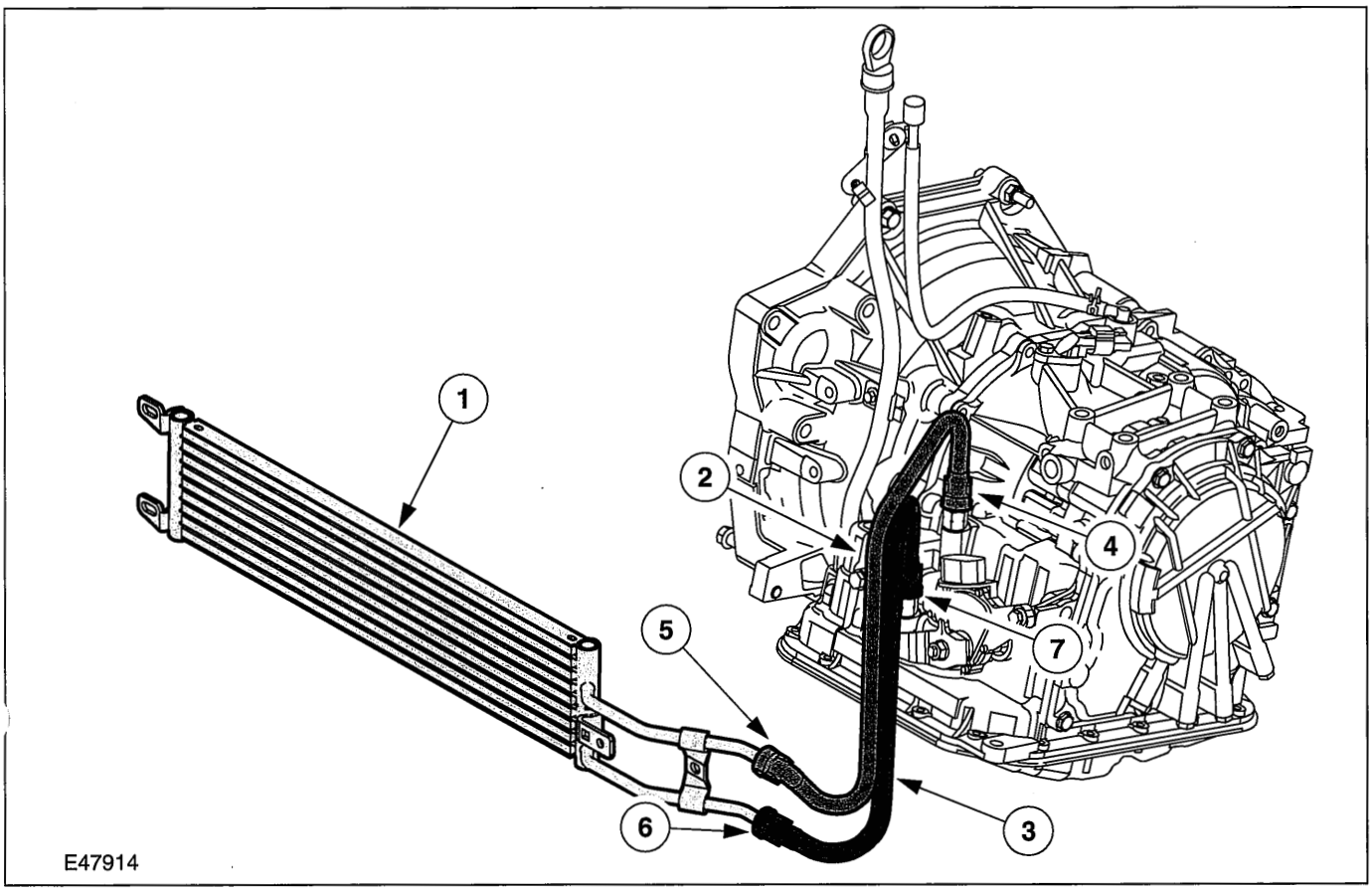


| Item | Description |
|---|---|
| 1 | Transmission fluid cooler |
| 2 | To the transmission fluid cooler |
| 3 | From the transmission fluid cooler |
| 4 | Red markings |
| 5 | Yellow markings |
| 6 | Blue markings |
| 7 | Black markings |

The transmission fluid cooler is positioned in front of the radiator.

It is connected to the transmission by means of two hose lines with quick-release couplings.

The quick-release couplings are colour-coded to prevent them from being mixed up.

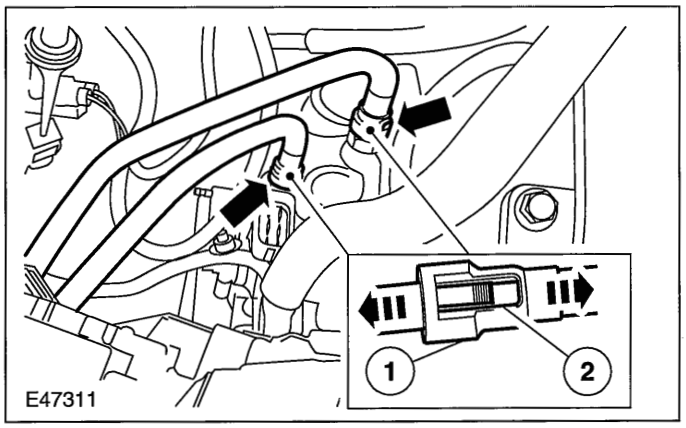


| Item | Description |
|---|---|
| 1 | Quick-release coupling |
| 2 | Colour coding |

The bumper needs to be disassembled in order to remove the transmission fluid cooler.

To release the quick-release couplings, first press the quick-release coupling together and press it towards the radiator or transmission connector and then pull it back to release it.

## REMOVAL AND INSTALLATION

# Transmission Fluid Cooler(17 834 0)

### Removal

▲ **WARNING:Refer to the Material Safety Data Sheets for the Automatic Transmission Fluid E-AW. Failure to follow this instruction may result in personal injury. Certain Transmission and Power Steering fluids supplied to Ford contain additives which may cause skin irritation or other skin reactions after contact.**

**For additional information, refer to: Health and Safety Precautions (100-00 General Information, Description and Operation). See - Transmission Fluids.**

1. **Remove the front bumper cover.**

   **For additional information, refer to: Front Bumper Cover (501-19 Bumpers, Removal and Installation).**

2. **Remove the radiator air deflector.**

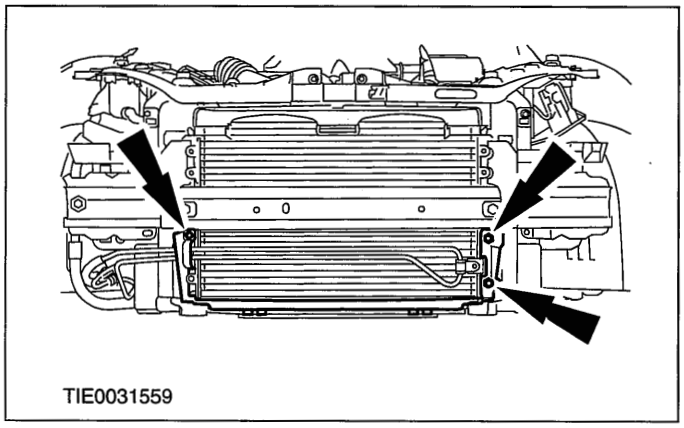


3. **Detach the power steering fluid line from the radiator grille.**

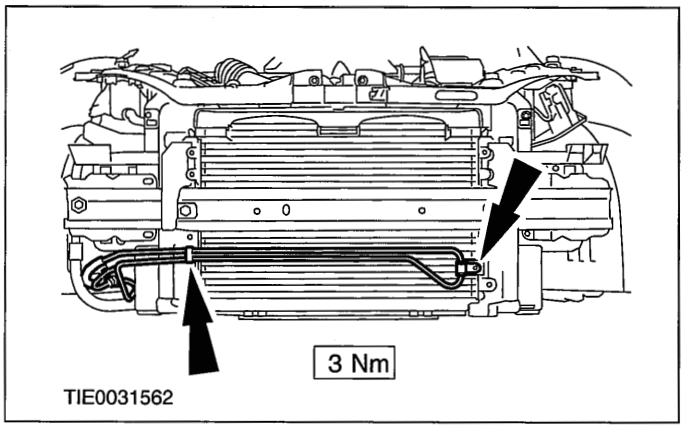


4. ▲**WARNING:When releasing the transmission fluid, take care to prevent scolding. Failure to follow this instruction may result in personal injury.**

⚠ **CAUTION:Plug the transmission fluid cooler lines to prevent fluid loss or dirt ingress.**

**For additional information, refer to: Health and Safety Precautions (100-00 General Information, Description and Operation). See - Transmission Fluids.**

**NOTE:**Mark the position of the feed and return lines to aid installation.

**Detach the transmission fluid lines from the transmission fluid cooler.**

1. Push the transmission fluid cooler line quick release connector toward the transmission fluid cooler.
2. Press together the retaining tabs and detach the transmission fluid line from the transmission fluid cooler.

- Allow the fluid to drain into a suitable container.

For additional information, refer to: Health and Safety Precautions (100-00 General Information, Description and Operation). See - Transmission Fluids.

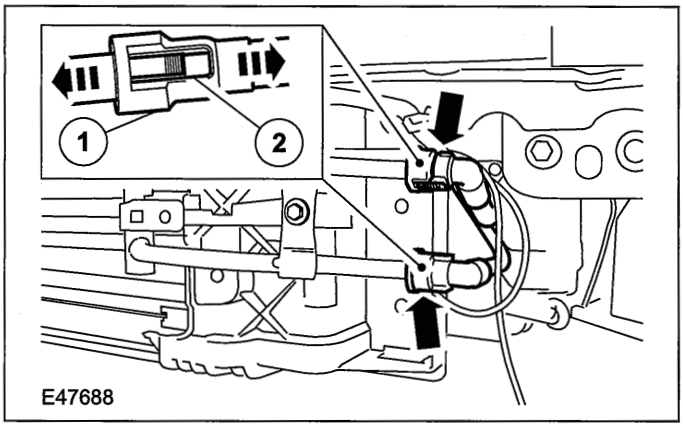

## REMOVAL AND INSTALLATION

5. **Remove the transmission fluid cooler.**

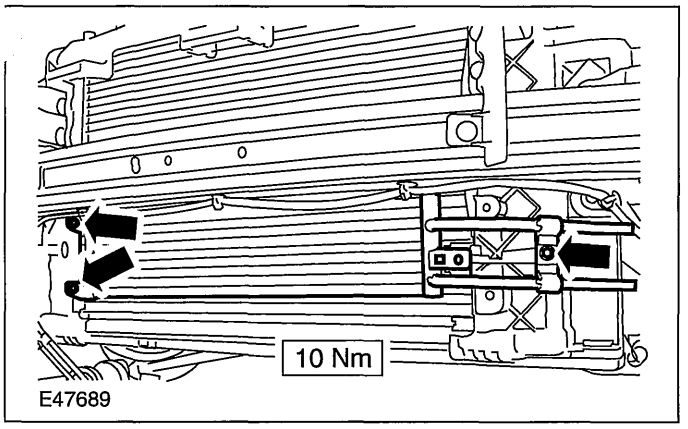


### Installation

1. **NOTE:Make sure the transmission fluid cooler lines are installed in the correct positions.**

   **To install, reverse the removal procedure.**

2. **Check the transmission fluid level and top up with clean automatic transmission fluid if necessary.**

   **For additional information, refer to: Transmission Fluid Level Check (307-01 Automatic Transmission/Transaxle - Vehicles With: 4-Speed Automatic Transmission (AW81-40), General Procedures).**

## REMOVAL AND INSTALLATION

# Transmission Fluid Cooler Tubes(17 857 0)

### Removal

**WARNING:Refer to the Material Safety Data Sheets for the Automatic Transmission Fluid E-AW. Failure to follow this instruction may result in personal injury. Certain Transmission and Power Steering fluids supplied to Ford contain additives which may cause skin irritation or other skin reactions after contact.**

**For additional information, refer to: Health and Safety Precautions (100-00 General Information, Description and Operation). See - Transmission Fluids.**

1. **Raise and support the vehicle.**

   **For additional information, refer to: Lifting (100-02 Jacking and Lifting, Description and Operation).**

2. **WARNING:When releasing the transmission fluid, take care to prevent scolding. Failure to follow this instruction may result in personal injury.**

   **CAUTION:Plug the transmission fluid cooler lines to prevent fluid loss or dirt ingress.**

   **For additional information, refer to: Health and Safety Precautions (100-00 General Information, Description and Operation). See - Transmission Fluids.**

**NOTE:**Mark the position of the feed and return lines to aid installation.

**Detach the transmission fluid cooler lines from the transmission.**

1. Push the transmission fluid cooler line quick release connector toward the transmission.
2. Press together the retaining tabs and detach the transmission fluid cooler line from the automatic transmission.

- Allow the fluid to drain into a suitable container.

  For additional information, refer to: Health and Safety Precautions (100-00 General Information, Description and Operation).

See - Transmission Fluids.

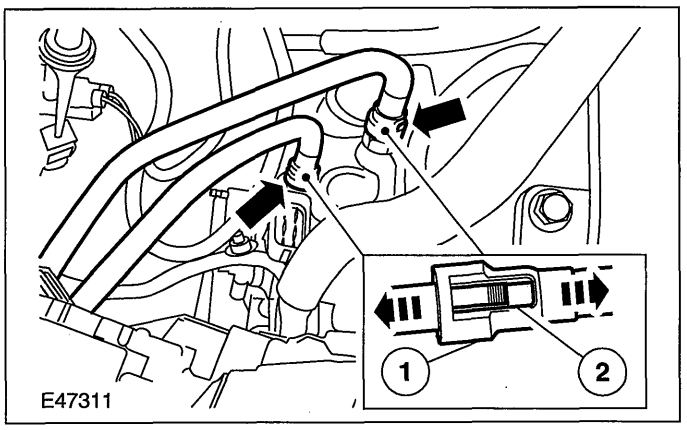


3. **WARNING:When releasing the transmission fluid, take care to prevent scolding. Failure to follow this instruction may result in personal injury.**

   **CAUTION:Plug the transmission fluid cooler lines to prevent fluid loss or dirt ingress.**

   **For additional information, refer to: Health and Safety Precautions (100-00 General Information, Description and Operation). See - Transmission Fluids.**

**NOTE:**Mark the position of the feed and return lines to aid installation.

**Remove the transmission fluid cooler lines.**

1. Push the transmission fluid cooler line quick release connector toward the transmission fluid cooler.
2. Press together the retaining tabs and detach the transmission fluid cooler line from the transmission fluid cooler.

- Allow the fluid to drain into a suitable container.

  For additional information, refer to: Health and Safety Precautions (100-00 General Information, Description and Operation).

## REMOVAL AND INSTALLATION

See - Transmission Fluids.

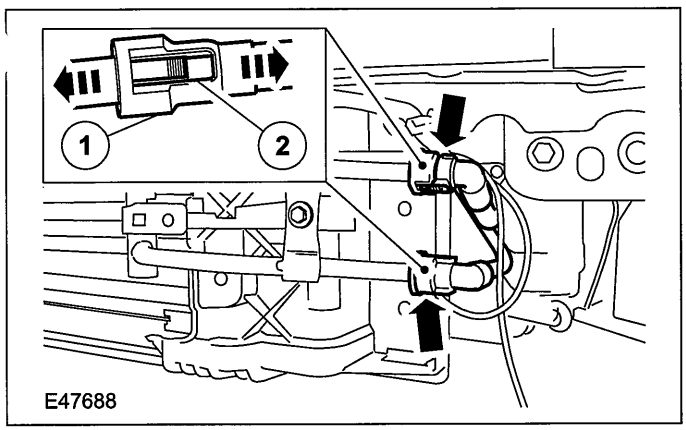


### Installation

1. **NOTE:Make sure the transmission fluid cooler lines are installed in the correct positions.**

   **To install, reverse the removal procedure.**

2. **Check the transmission fluid level and top up with clean automatic transmission fluid if necessary.**

   **For additional information, refer to:**
   **Transmission Fluid Level Check (307-01 Automatic Transmission/Transaxle - Vehicles With: 4-Speed Automatic Transmission (AW81-40), General Procedures).**

# SECTION 307-05 Automatic Transmission/Transaxle External Controls — Vehicles With: 4-Speed Automatic Transmission (AW81-40)

## VEHICLE APPLICATION:2006.0 Fiesta

CONTENTS PAGE

**SPECIFICATIONS**

Specifications ..... 307-05-2

**DESCRIPTION AND OPERATION**

External Controls ..... 307-05-3
Selector lever cable ..... 307-05-3

**GENERAL PROCEDURES**

Selector Lever Cable Adjustment ..... 307-05-5

**REMOVAL AND INSTALLATION**

Brake Shift Interlock Actuator ..... 307-05-6
Selector Lever Cable ..... 307-05-7
Selector Lever ..... 307-05-10
Selector Lever Bezel ..... 307-05-12
Selector Lever Knob ..... 307-05-13

**DISASSEMBLY AND ASSEMBLY**

Selector Lever ..... 307-05-14

## SPECIFICATIONS

### Lubricants, Fluids, Sealers and Adhesives

| Item | Specification |
|---|---|
| Grease | S-M1C1021-A |

### Torque Specifications

| Description | Nm | lb-ft | lb-in |
|---|---|---|---|
| Selector lever cable grommet | 9 | – | 80 |
| Selector lever assembly | 9 | – | 80 |

## DESCRIPTION AND OPERATION

# External Controls

### Selector lever cable

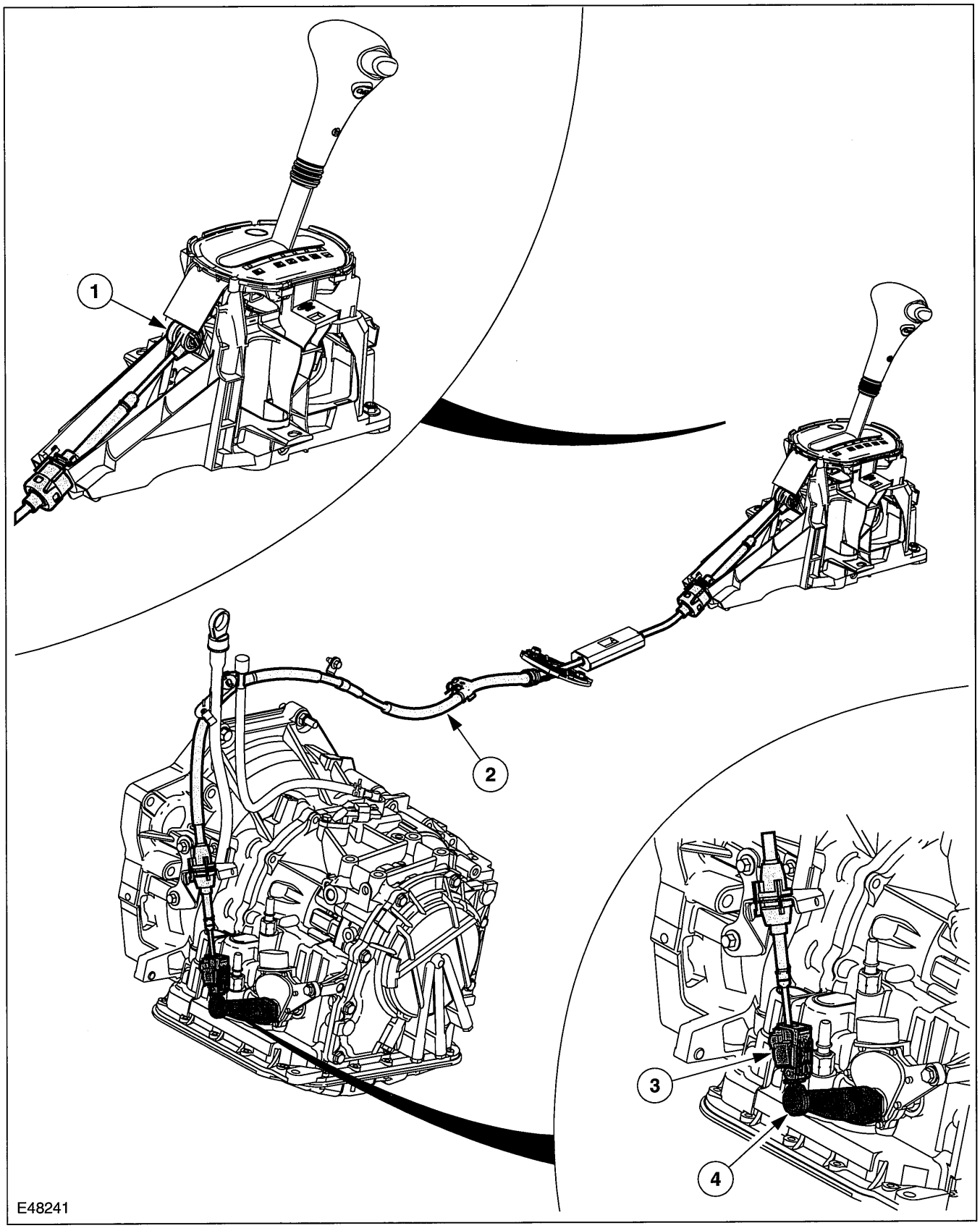

## DESCRIPTION AND OPERATION

| Item | Description |
|---|---|
| 1 | Ball head |
| 2 | Selector lever cable |
| 3 | Adjustment device |
| 4 | Selector shaft lever |

The selector lever cable is clipped onto a ball head on the selector lever.

At the transmission end it is clipped onto the ball head on the selector shaft lever.

The cable is moved in an axial direction by operation of the selector lever.

The selector shaft lever converts the axial motion into a rotation of the selector shaft.

The adjustment device for the selector lever cable is located at the transmission end of the cable.

## GENERAL PROCEDURES

# Selector Lever Cable Adjustment

### Adjustment

1. Shift the selector lever to the "D" (DRIVE) position.

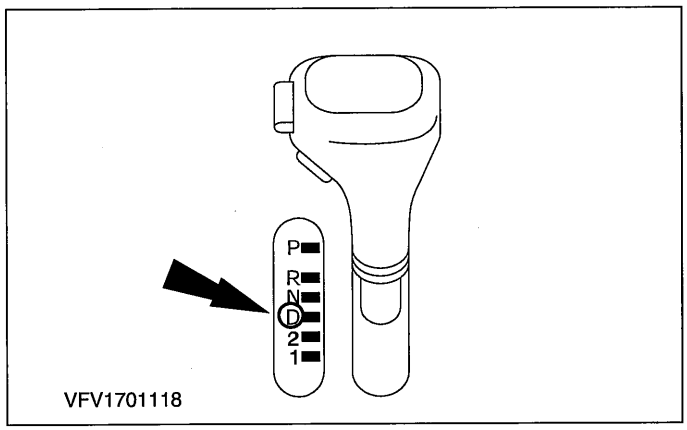


2. Raise and support the vehicle.

   For additional information, refer to: Lifting (100-02 Jacking and Lifting, Description and Operation).

3. Release the selector lever cable adjustment mechanism locking clip.

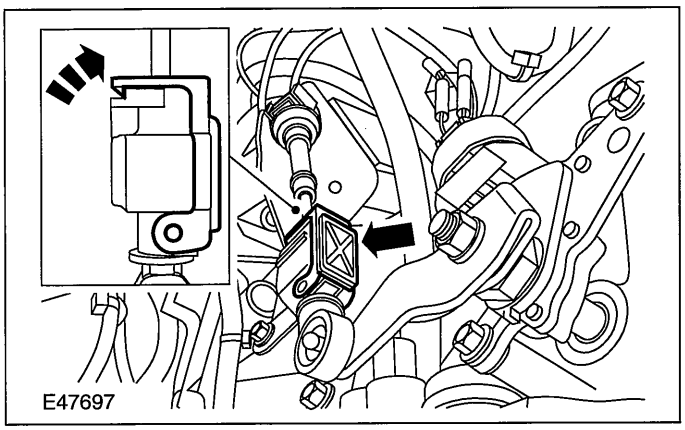


4. NOTE:In the "D" (DRIVE) position the transmission range (TR) sensor locking washer pointer will be aligned with the line scribed on the TR sensor body.

   Move the transaxle selector lever to the "D" (DRIVE) position.

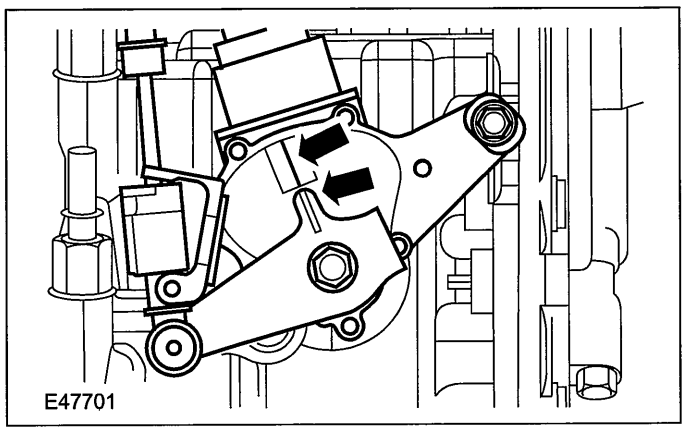


5. NOTE:Ensure that the selector lever cable adjustment mechanism is locked.

   Press in the selector lever cable adjustment mechanism locking clip fully.

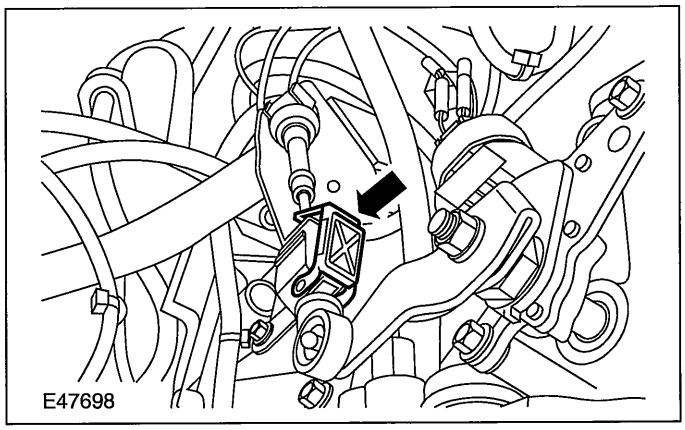


6. Lower the vehicle.
7. Start the engine and move the selector lever through all the gear positions. Wait until each gear engages when moving through the gear positions.
8. Check that the selector lever position indicator corresponds to the position of the selector lever, repeat the adjustment procedure if necessary.
9. Move the selector lever into the "P" (PARK) position and switch off the engine.

## REMOVAL AND INSTALLATION

# Brake Shift Interlock Actuator

## Removal

1. **Remove the floor console.**
2. **Disconnect the overdrive (O/D) switch electrical connector (selector lever assembly shown removed for clarity).**

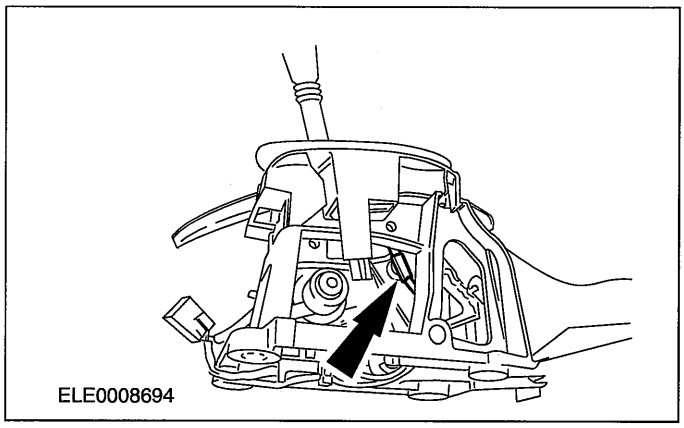


3. **Remove the brake shift interlock actuator.**
   1. Remove the bolt.
   2. Remove the knob.
   3. Remove the brake shift interlock actuator.

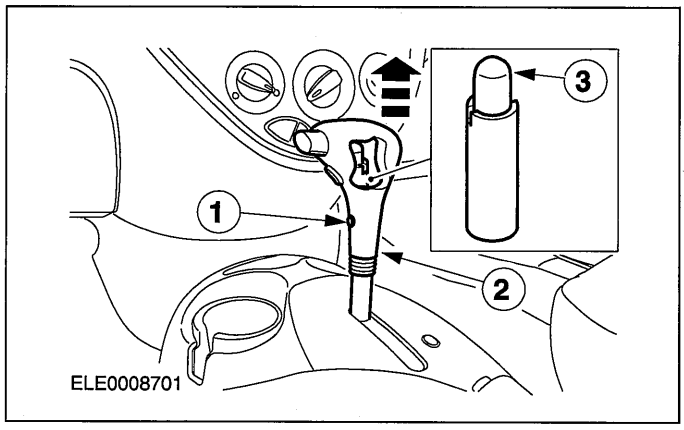


## Installation

1. **Install the brake shift interlock actuator.**
   1. Install the brake shift interlock actuator.
   2. Position the knob.
   3. Install the bolt.

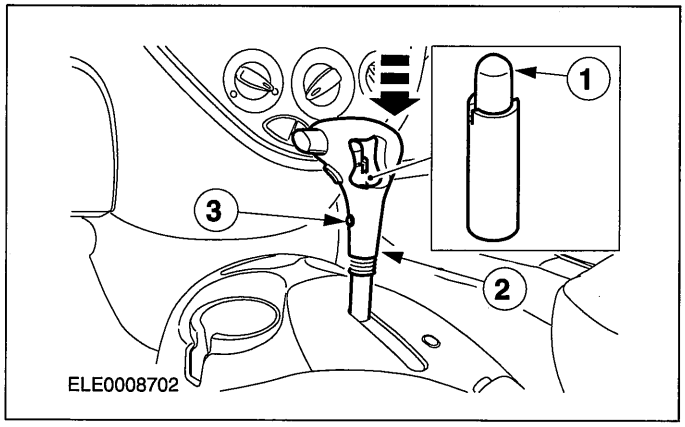


2. **Connect the O/D switch electrical connector (selector lever assembly shown removed for clarity).**

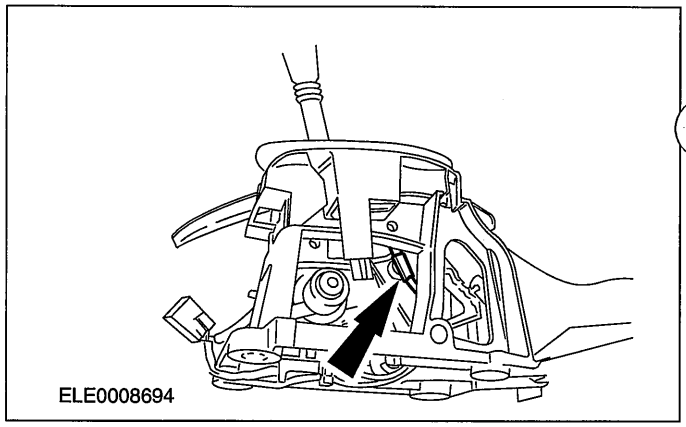


3. **Install the floor console.**

## REMOVAL AND INSTALLATION

# Selector Lever Cable

### General Equipment

| |
|---|
| Draw cord |

## Removal

1. **Detach the selector cable from the retaining clip.**

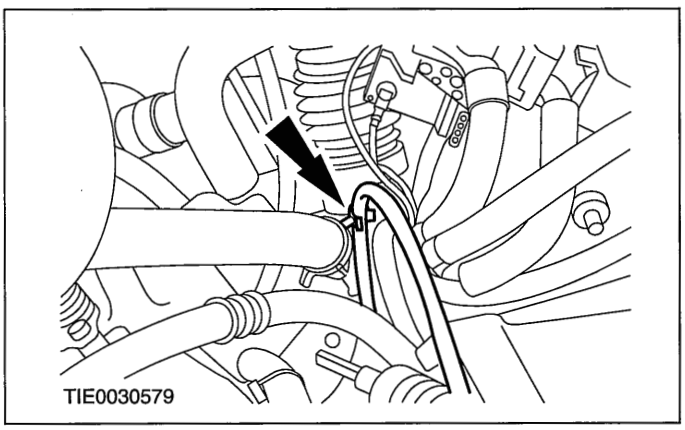


2. **Raise and support the vehicle.**

   **For additional information, refer to: Lifting (100-02 Jacking and Lifting, Description and Operation).**

3. **Remove the exhaust front hanger insulator.**

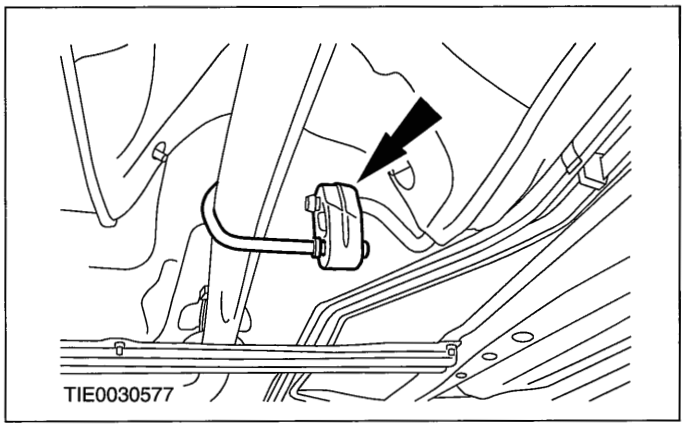


4. **Detach the exhaust heat shield from the floor panel.**

   - Slide the heat shield backwards.

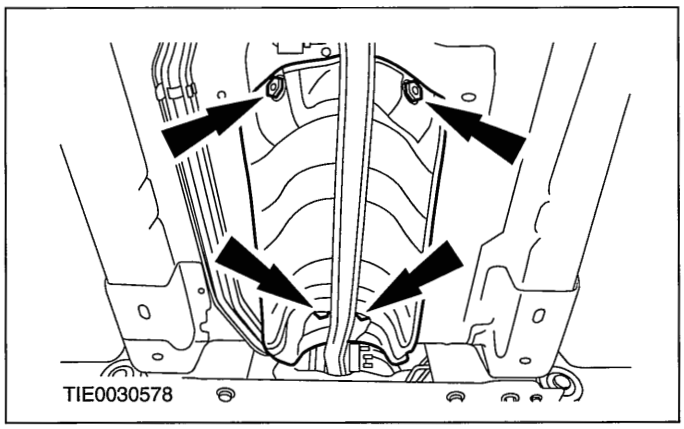


5. **Unclip the selector lever cable from the right-hand side of the bracket.**

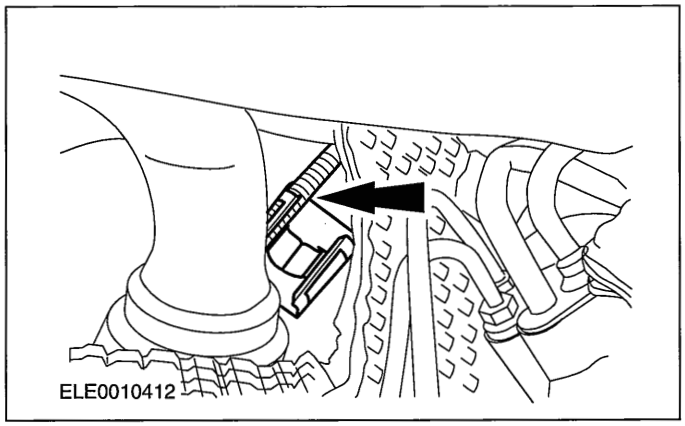


6. **Detach the selector lever cable from the manual shift lever.**
   1. Detach the selector lever cable from the manual shift lever.
   2. Detach the selector lever cable from the selector lever cable bracket.

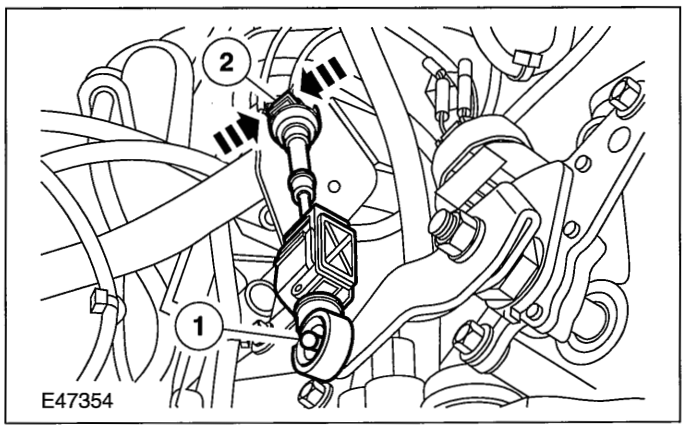

## REMOVAL AND INSTALLATION

7. **Attach a suitable length of draw cord to the transaxle end of the selector lever cable and secure it to the transaxle.**
8. **Lower the vehicle.**
9. **Remove the floor console.**

   **For additional information, refer to: Floor Console (501-12 Instrument Panel and Console, Removal and Installation).**
10. **Detach the selector lever cable from the transmission selector lever.**
    1. Shift the selector lever to the "P" (PARK) position.
    2. Detach the selector lever cable.
    3. Pull the selector lever cable locking pin and detach the selector lever cable outer sleeve.

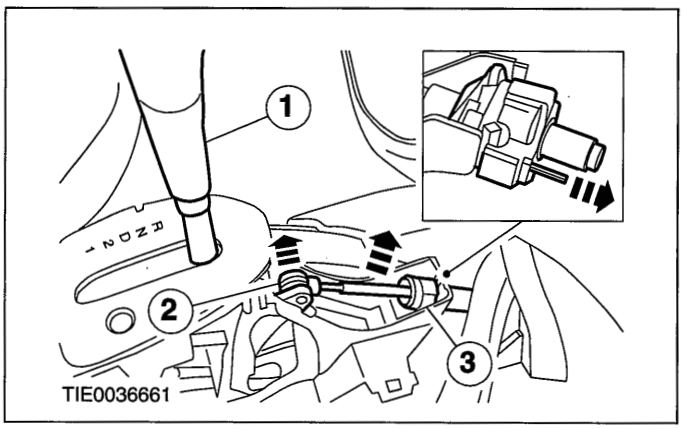


11. **Remove the selector lever cable grommet.**

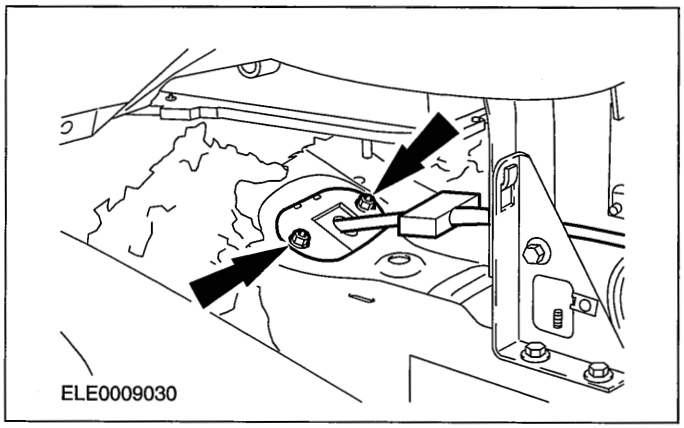


12. **Remove the selector lever cable.**
    - Pull the cable and draw cord through the floor panel.

### Installation

1. **Attach the draw cord to the transaxle end of the selector lever cable.**
2. **Using the draw cord, pull the selector lever cable through the floor panel.**
3. **Install the selector lever cable grommet.**

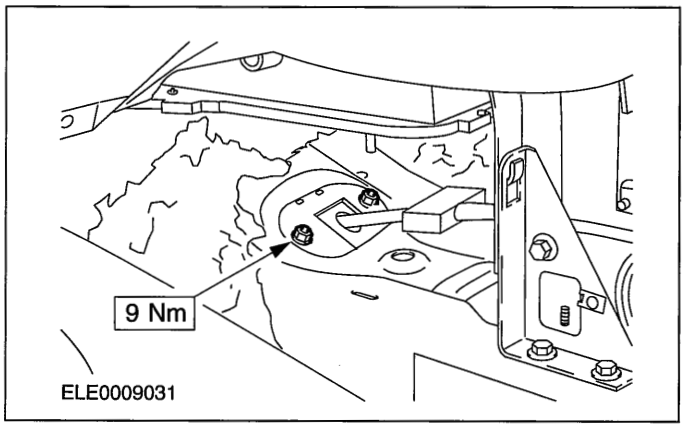


4. **Attach the selector lever cable to the selector lever.**
   1. Shift the selector lever to the "P" (PARK) position.
   2. Attach the selector lever cable outer sleeve.
   3. Attach the selector lever cable.

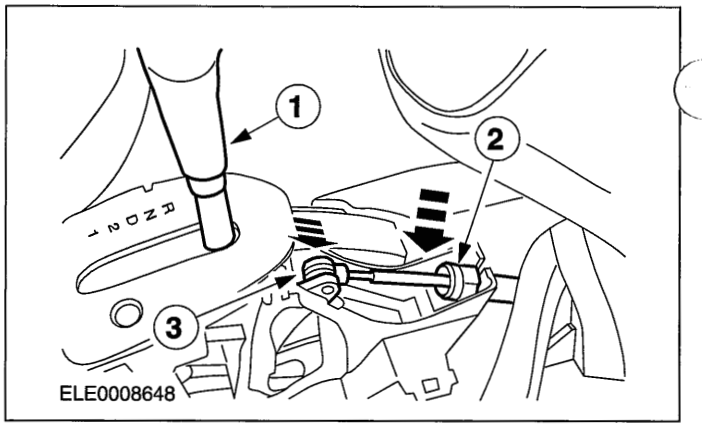


5. **Install the floor console.**

   **For additional information, refer to: Floor Console (501-12 Instrument Panel and Console, Removal and Installation).**
6. **Raise and support the vehicle.**

   **For additional information, refer to: Lifting (100-02 Jacking and Lifting, Description and Operation).**
7. **Remove the draw cord.**
8. **Attach the selector lever cable to the manual shift lever.**
   1. Attach the selector lever cable to the selector lever cable bracket.

## REMOVAL AND INSTALLATION

2. Attach the selector lever cable to the manual shift lever.

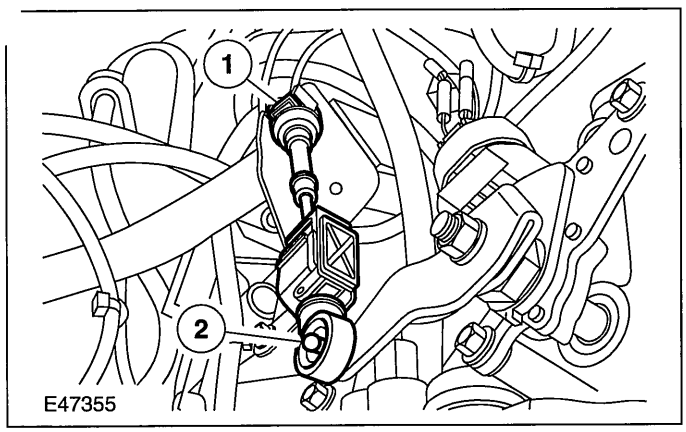


**9. Clip the selector lever cable into the right-hand side of the bracket.**

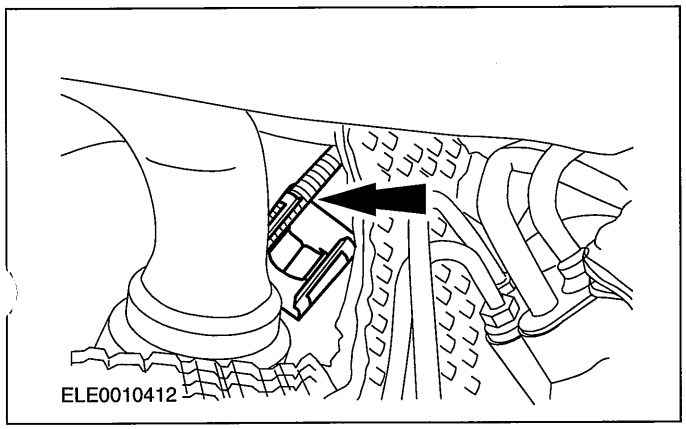


**10. Attach the exhaust heat shield to the floor panel.**

- Slide the heat shield forwards.

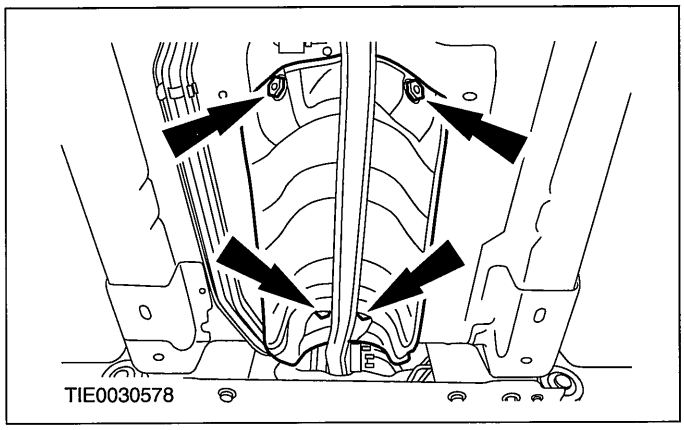


**11. Install the exhaust front hanger insulator.**

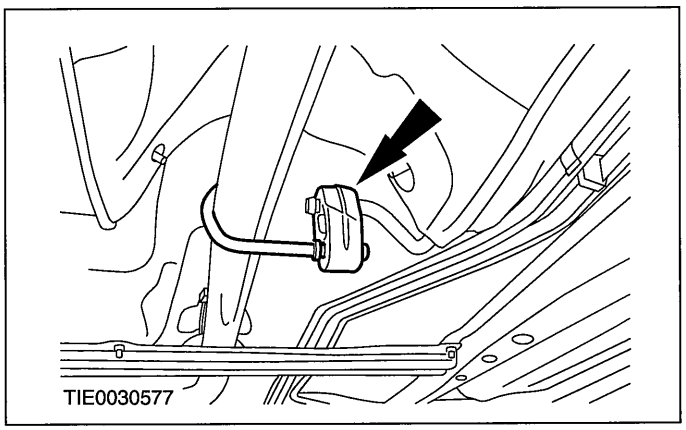


**12. Lower the vehicle.**

**13. Attach the selector cable to the retaining clip.**

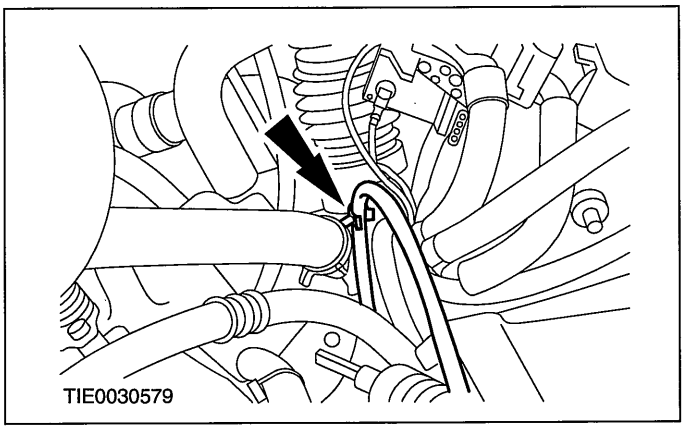


**14. Adjust the selector lever cable.**

**For additional information, refer to: Selector Lever Cable Adjustment (307-05 Automatic Transmission/Transaxle External Controls - Vehicles With: 4-Speed Automatic Transmission (AW81-40), General Procedures).**

## REMOVAL AND INSTALLATION

# Selector Lever

## Removal

1. **Remove the floor console.**
2. **Detach the selector lever cable from the transmission selector lever.**
   1. Shift the selector lever to the "P" (PARK) position.
   2. Detach the selector lever cable.
   3. Pull the selector lever cable locking pin and detach the selector lever cable outer sleeve.

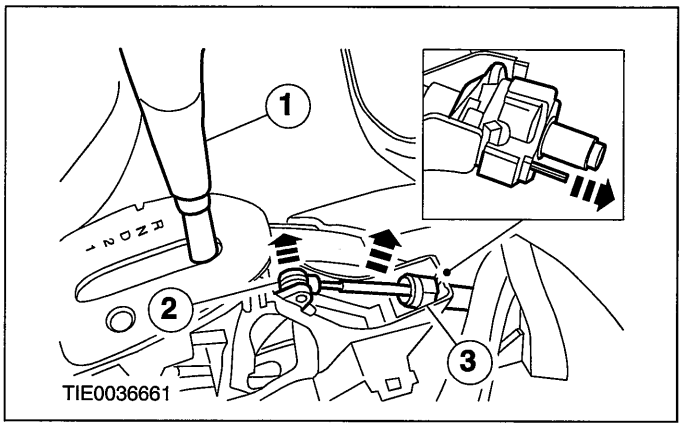


3. **Disconnect the transmission selector lever electrical connector.**

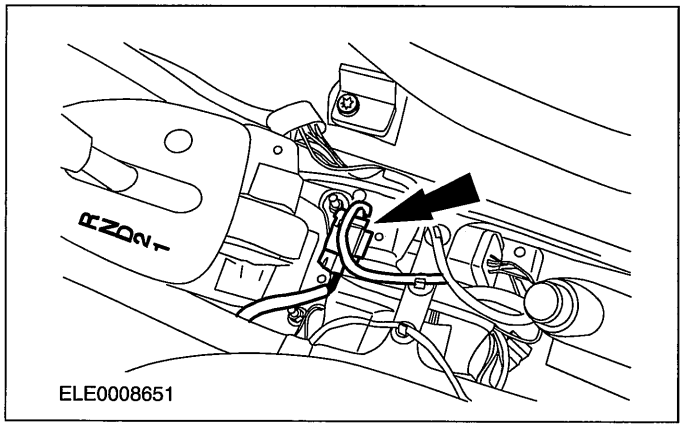


4. **Remove the transmission selector lever.**

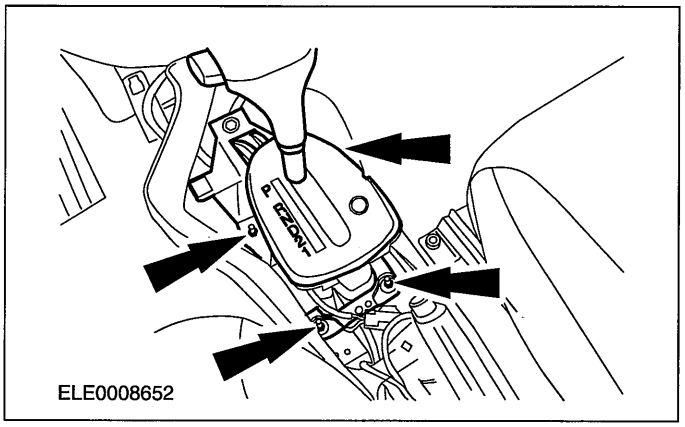


## Installation

1. **Install the transmission selector lever.**

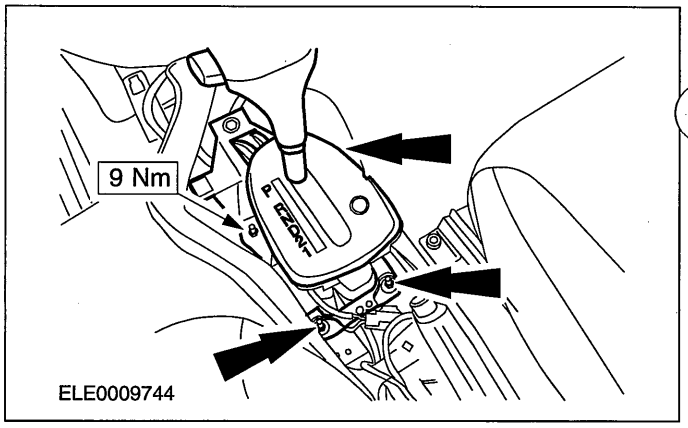


2. **Connect the transmission selector lever electrical connector.**

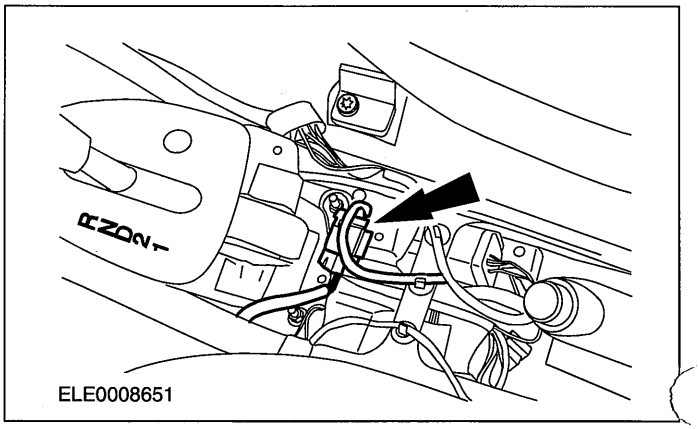


3. **Attach the selector lever cable to the transmission selector lever.**

## REMOVAL AND INSTALLATION

1. Shift the selector lever to the "P" (PARK) position.
2. Attach the selector lever cable outer sleeve.
3. Attach the selector lever cable.

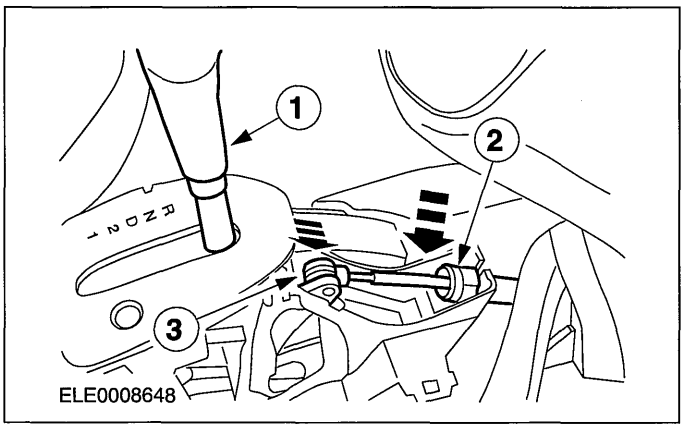


4. **Install the floor console.**
5. **Adjust the selector lever cable.**

   **For additional information, refer to Selector Lever Cable Adjustment - in this section.**

## REMOVAL AND INSTALLATION

# Selector Lever Bezel

## Removal

1. **Remove the transmission selector lever knob.**

   **For additional information, refer to Transmission Selector Lever Knob - in this section.**

2. **Remove the selector lever bezel (selector lever assembly shown removed for clarity).**
   - Unclip the bezel.
   - Unclip the lamp.

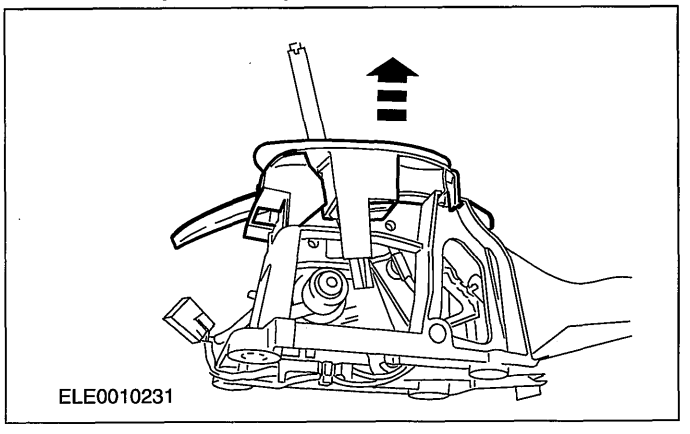


## Installation

1. **Install the selector lever bezel (selector lever assembly shown removed for clarity).**
   - Clip the bezel.
   - Clip the lamp.

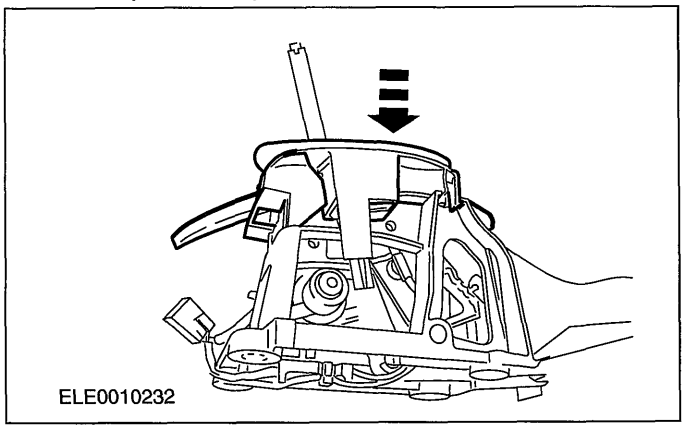


2. **Install the transmission selector lever knob.**

   **For additional information, refer to Transmission Selector Lever Knob - in this section.**

## REMOVAL AND INSTALLATION

# Selector Lever Knob

## Removal

1. **Remove the floor console.**
2. **Disconnect the overdrive (O/D) switch electrical connector (selector lever assembly shown removed for clarity).**

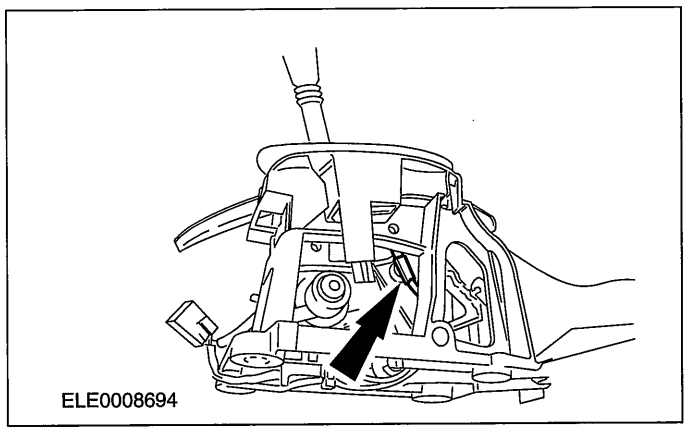


3. **Remove the selector lever knob.**
   - Remove the bolt.

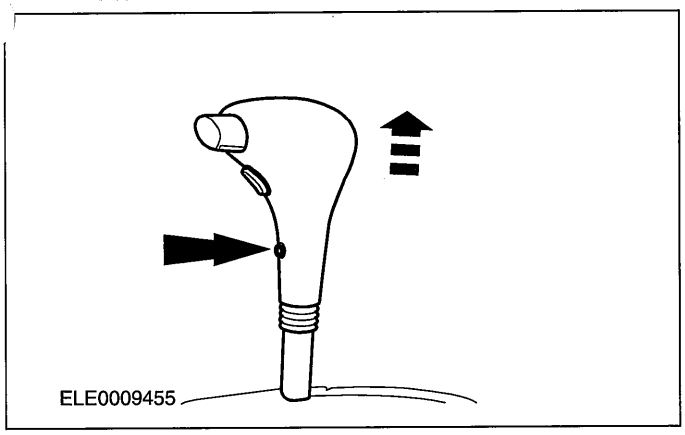


## Installation

1. **Install the selector lever knob.**
   - Position the knob.
   - Install the bolt.

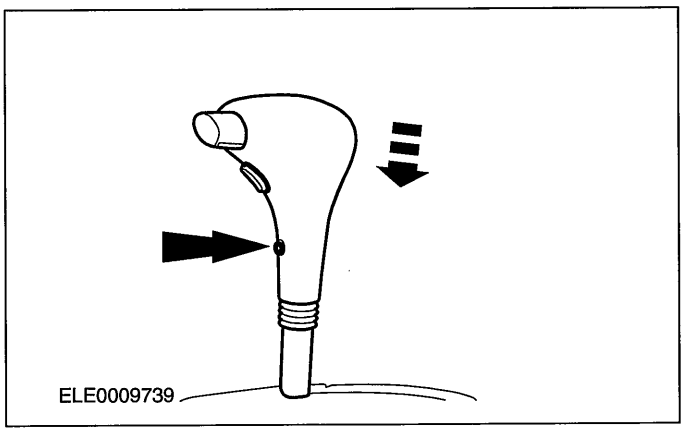


2. **Connect the O/D switch electrical connector (selector lever assembly shown removed for clarity).**

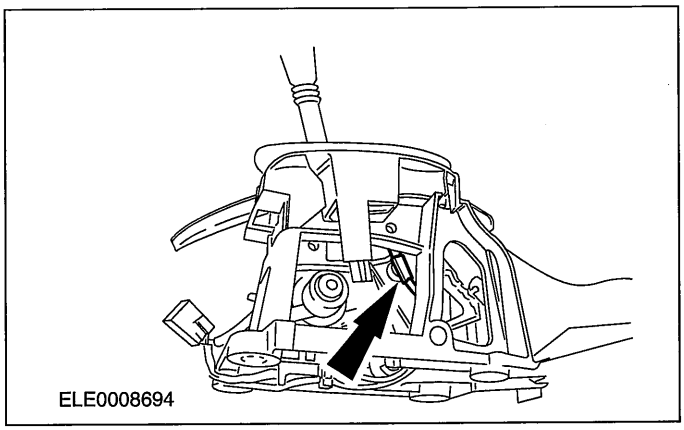


3. **Install the floor console.**

## DISASSEMBLY AND ASSEMBLY

# Selector Lever

| Materials | |
|---|---|
| **Name** | **Specification** |
| Grease | S-M1C1021-A |

## Disassembly

**NOTE:**Use vice jaw protectors for all work to be done in the vice.

1. **Disconnect the overdrive (O/D) switch electrical connector.**

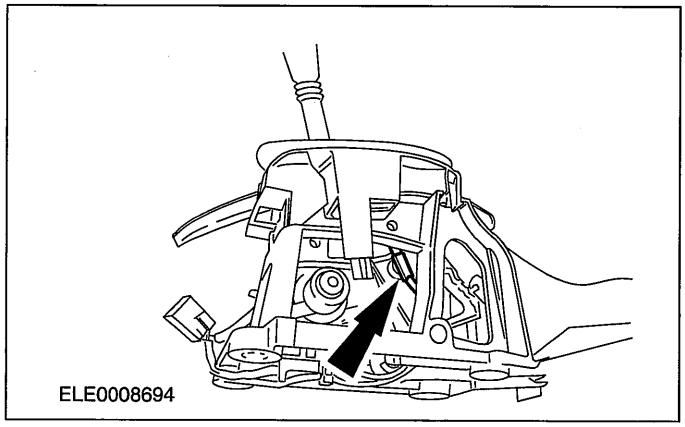


2. **Remove the selector lever knob.**
   - Remove the bolt.

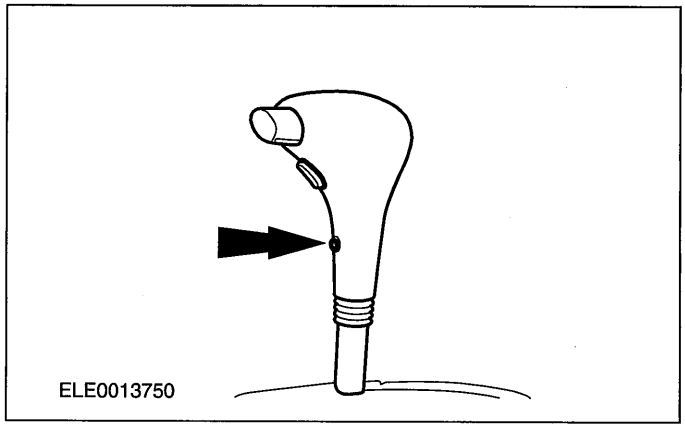


3. **Disassemble the selector lever.**
   - Remove the brake shift interlock actuator.
   - Remove the selector lever bezel.
     - Unclip the bezel.
     - Unclip the lamp.

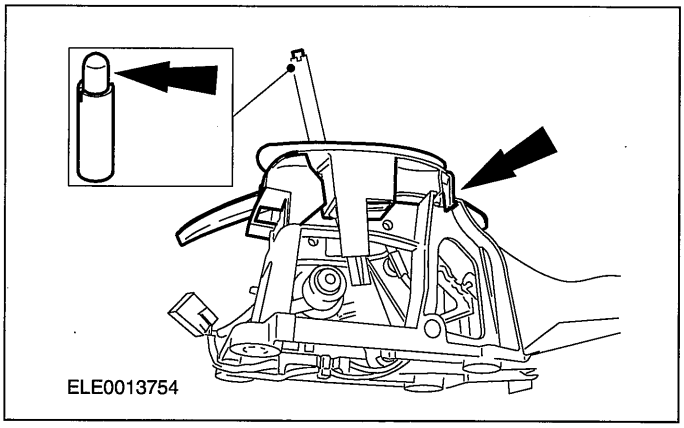


## Assembly

1. **To assemble, reverse the disassembly procedure.**
   - Coat all sliding and turning parts with grease.

# SECTION 308-00 Manual Transmission/Transaxle and Clutch - General Information

## VEHICLE APPLICATION:2006.0 Fiesta

CONTENTS PAGE


**SPECIFICATIONS**

Specifications ..... 308-00-2
Clutch Dimensions ..... 308-00-2

**DIAGNOSIS AND TESTING**

Manual Transaxle and Clutch ..... 308-00-3
Inspection and Verification ..... 308-00-3
Gear shifting concerns ..... 308-00-3
Transaxle noise concerns ..... 308-00-3
Oil leakage concerns ..... 308-00-3

**GENERAL PROCEDURES**

Gearshift Cable Adjustment ..... (16 513 0) 308-00-11
Clutch System Bleeding ..... (16 843 0) 308-00-12

## SPECIFICATIONS

### Lubricants, Fluids, Sealers and Adhesives

| Description | Specifications |
|---|---|
| Manual transmission fluid | WSD-M2C200-C |
| High melting point grease | ESD-M1C220-A |
| Super DOT 4 brake fluid | ESD-M6C57-A |

### Capacities

| Description | Litres |
|---|---|
| Manual transmission fluid: 10 - 15 mm below the lower edge of the fluid filler plug | 2.3 |

### Clutch Dimensions

| Description | mm |
|---|---|
| Pedal travel | 135 ± 5 |
| Worn clutch disc discard thickness* | 7 |
| Clutch disc diameter: 1.25L/1.4L Duratec-16V (Sigma) | 190 |
| Clutch disc diameter: 1.6L Duratec-16V (Sigma) | 210 |
| Clutch disc diameter: 2.0L Duratec-HE (MI4) | 220 |
| Clutch disc diameter: 1.4L/1.6L Duratorq-TDCi (DV) Diesel | 210 |
| Clutch disc diameter: 1.3L Duratec-8V (Rocam) | 190 |

* When the discard thickness has been reached, install a new clutch disc.

## DIAGNOSIS AND TESTING

# Manual Transaxle and Clutch

### General Equipment

| |
|---|
| Ultraviolet fluid leak detection equipment |

## Inspection and Verification

1. Verify the customer concern.
2. Visually inspect for obvious signs of mechanical damage.

### Visual Inspection Chart

| Mechanical |
|---|
| • Oil leaks.<br>• Visibly damaged or worn components.<br>• Loose or missing nuts or bolts. |

3. If an obvious cause for an observed or reported concern is found, correct the cause (if possible) before proceeding to the next step.
4. If the cause is not evident, verify the symptom and REFER to Symptom Chart.

The following checks should be carried out before repairing or installing a new transaxle.

The inspection and verification of manual transaxle concerns can be considered in three main areas.

## Gear shifting concerns

1. Check the operation of the clutch: Lay a block of wood approximately 25 mm thick under the clutch pedal and depress the clutch pedal as far as the stop. If first or second gear can be selected with the engine running and the parking brake applied, without any concerns, the clutch is OK.
2. If the gear(s) cannot be selected, REFER to Symptom Chart.

## Transaxle noise concerns

1. Check the engine and transaxle support for insufficient gap between the transaxle and the body.
2. Road test the vehicle.

   REFER to: Road/Roller Testing (100-00 General Information, Description and Operation).
3. If a noise occurs in various gears at the same engine speed, check if the noise also occurs in the neutral position. If it does, the noise is not caused by the transaxle.
4. REFER to Symptom Chart.

## Oil leakage concerns

1. Check the transaxle fluid level. If necessary, drain off any excess fluid.
2. Clean the transaxle and the adjacent areas carefully and road test the vehicle.

   REFER to: Road/Roller Testing (100-00 General Information, Description and Operation).
3. Using suitable ultraviolet fluid leak detection equipment, locate the leak and check whether the leaking fluid is transaxle fluid, brake fluid (from the hydraulically operated clutch) or engine oil.
4. REFER to Symptom Chart.

### Symptom Chart

| Symptom | Possible Sources | Action |
|---|---|---|
| • Clutch slippage | • Clutch master cylinder.<br>• Clutch slave cylinder.<br>• Clutch pressure plate.<br>• Clutch disc.<br>• Engine or transaxle housing oil or fluid leak(s). | • GO to Pinpoint Test A. |
| • Clutch chatter or shudder | • Engine and transaxle mounts. | • REFER to: Noise, Vibration and Harshness (NVH) (100-04, Diagnosis and Testing). |
| | • Clutch pressure plate.<br>• Clutch disc.<br>• Flywheel. | • GO to Pinpoint Test B. |

## DIAGNOSIS AND TESTING

| Symptom | Possible Sources | Action |
|---|---|---|
| • Clutch drag | • Insufficient brake fluid. | • FILL the brake master cylinder reservoir to the MAX mark. INSPECT the brake and clutch hydraulic systems for leaks. REPAIR as necessary. |
| | • Air in the clutch hydraulic system. | • BLEED the system.<br>REFER to: Clutch System Bleeding (308-00 Manual Transmission/Transaxle and Clutch - General Information, General Procedures). |
| | • Clutch pedal free travel.<br>• Clutch pressure plate.<br>• Clutch disc.<br>• Crankshaft end play. | • GO to Pinpoint Test C. |
| • Clutch pedal pulsation | • Clutch pressure plate.<br>• Clutch disc. | • INSTALL a new clutch disc and pressure plate.<br>REFER to: Clutch Disc and Pressure Plate (308-01 Clutch, Removal and Installation). |
| | • Crankshaft end play. | • CHECK the crankshaft end play.<br>REFER to: Crankshaft End Play (303-00 Engine System - General Information, General Procedures). |
| • Hard shifting | • Clutch drag. | • GO to Pinpoint Test C. |
| | • Gearshift cable adjustment | • CHECK the gearshift cable adjustment.<br>REFER to: Gearshift Cable Adjustment (308-00 Manual Transmission/Transaxle and Clutch - General Information, General Procedures). |
| | • External controls. | • CHECK the external controls for wear or damage. INSTALL new components as necessary. |
| | • Gear wheels. | • DISASSEMBLE the transaxle.<br>REFER to: Transaxle (308-03 Manual Transmission/Transaxle, Disassembly).<br>INSTALL new components as necessary. |

## DIAGNOSIS AND TESTING

| Symptom | Possible Sources | Action |
|---|---|---|
| | • Selector mechanism. | • DISASSEMBLE the transaxle.<br>REFER to: Transaxle (308-03 Manual Transmission/Transaxle, Disassembly).<br>INSTALL new components as necessary. |
| | • Synchronizer(s). | • DISASSEMBLE the transaxle.<br>REFER to: Transaxle (308-03 Manual Transmission/Transaxle, Disassembly).<br>INSTALL new components as necessary. |
| • Excessive noise | • Engine vibrations inadequately damped. | • REFER to: Noise, Vibration and Harshness (NVH) (100-04, Diagnosis and Testing). |
| | • Transaxle fluid level low. | • CHECK the transaxle for leaks. TOP UP the transmission fluid. |
| | • Engine or transaxle is in contact with the chassis or body. | • REFER to: Powertrain/Drivetrain Mount Neutralizing (100-04 Noise, Vibration and Harshness, General Procedures). |
| | • Engine and transaxle out of alignment. | • REFER to: Powertrain/Drivetrain Mount Neutralizing (100-04 Noise, Vibration and Harshness, General Procedures). |
| | • External controls. | • CHECK the external controls for wear or damage. INSTALL new components as necessary. |
| | • Gear wheels and bearings. | • DISASSEMBLE the transaxle.<br>REFER to: Transaxle (308-03 Manual Transmission/Transaxle, Disassembly).<br>INSTALL new components as necessary. |
| | • Clutch pedal.<br>• Clutch release bearing. | • GO to Pinpoint Test D. |
| • Fluid leakage | • Clutch master cylinder.<br>• Clutch slave cylinder.<br>• Clutch hydraulic lines. | • INSPECT the brake and clutch hydraulic systems for leaks. REPAIR as necessary. |

## DIAGNOSIS AND TESTING

| Symptom | Possible Sources | Action |
|---|---|---|
| | • Halfshaft seal. | • INSTALL a new halfshaft seal. REFER to: (308-03 Manual Transmission/Transaxle)<br>Halfshaft Seal LH (In-vehicle Repair),<br>Halfshaft Seal RH (In-vehicle Repair). |
| | • Fluid leak between the transaxle housing sections. | • DISASSEMBLE the transaxle and clean the mating faces. CHECK the mating faces for damage. SEAL the transaxle with sealant.<br>REFER to: Transaxle (308-03 Manual Transmis-sion/Transaxle, Assembly). |

### PINPOINT TEST A : CLUTCH SLIPPAGE

| TEST CONDITIONS | DETAILS/RESULTS/ACTIONS |
|---|---|
| **A1: TEST CLUTCH SLIPPAGE** | |
| | 1 Lock the wheels and apply the parking brake. |
| | 2 Start the engine and engage fourth gear. |
| | 3 Run the engine at approximately 2000 rpm. |
| | 4 Release the clutch pedal slowly.<br>• Does the engine stall when the clutch pedal is fully released?<br>→ **Yes**<br>Clutch OK.<br>→ **No**<br>GO to A2. |
| **A2: CHECK THE CLUTCH PEDAL OPERATION** | |
| | 1 Depress clutch pedal and allow it to return.<br>• Does the pedal return to the initial position?<br>→ **Yes**<br>GO to A3.<br>→ **No**<br>GO to A4. |

## DIAGNOSIS AND TESTING

| TEST CONDITIONS | DETAILS/RESULTS/ACTIONS |
|---|---|
| **A3: CHECK THE CLUTCH DISC AND PRESSURE PLATE** | |
| | 1 Remove the clutch disc and pressure plate.<br>REFER to: Clutch Disc and Pressure Plate (308-01 Clutch, Removal and Installation).<br>• Is the clutch disc or pressure plate contaminated with oil or hydraulic fluid?<br>→ **Yes**<br>CHECK the engine and transaxle for leaks.<br>INSTALL new components as necessary.<br>TEST the system for normal operation.<br>→ **No**<br>INSTALL a new clutch disc and pressure plate.<br>REFER to: Clutch Disc and Pressure Plate (308-01 Clutch, Removal and Installation).<br>TEST the system for normal operation. |
| **A4: CHECK THE CLUTCH HYDRAULIC SYSTEM** | |
| | 1 Release the clutch slave cylinder bleed nipple.<br>• Does the pedal return to the initial position?<br>→ **Yes**<br>INSTALL a new clutch slave cylinder.<br>REFER to: Clutch Slave Cylinder (308-02 Clutch Controls, Removal and Installation).<br>TEST the system for normal operation.<br>→ **No**<br>INSTALL a new clutch master cylinder.<br>REFER to: Clutch Master Cylinder (308-02 Clutch Controls, Removal and Installation).<br>TEST the system for normal operation. |

### PINPOINT TEST B : CLUTCH CHATTER OR SHUDDER

| TEST CONDITIONS | DETAILS/RESULTS/ACTIONS |
|---|---|
| **B1: TEST FOR CLUTCH SHUDDER** | |
| | 1 Start the engine. |
| | 2 Engage the clutch and select fourth gear. |
| | 3 Run the engine at approximately 2000 rpm. |

## DIAGNOSIS AND TESTING

| TEST CONDITIONS | DETAILS/RESULTS/ACTIONS |
|---|---|
| | [4] Release the clutch pedal slowly.<br>• Does the clutch take up the drive smoothly?<br>→ **Yes**<br>Clutch is OK.<br>→ **No**<br>GO to B2. |
| **B2: CHECK THE CLUTCH DISC AND PRESSURE PLATE FOR OIL OR HYDRAULIC FLUID CONTAMINATION** | |
| | [1] Remove the clutch disc and pressure plate.<br>REFER to: Clutch Disc and Pressure Plate (308-01 Clutch, Removal and Installation).<br>• Is the clutch disc and pressure plate contaminated with oil or hydraulic fluid?<br>→ **Yes**<br>CHECK the engine and transaxle for leaks.<br>INSTALL new components as necessary.<br>TEST the system for normal operation.<br>→ **No**<br>GO to B3. |
| **B3: CHECK THE CLUTCH DISC AND PRESSURE PLATE** | |
| | [1] Visually check the clutch disc and pressure plate.<br>• Is the clutch disc and pressure plate worn or damaged?<br>→ **Yes**<br>INSTALL a new clutch disc and pressure plate.<br>REFER to: Clutch Disc and Pressure Plate (308-01 Clutch, Removal and Installation).<br>TEST the system for normal operation.<br>→ **No**<br>CARRY OUT the flywheel clutch surface inspection.<br>REFER to: Flywheel Inspection (303-00 Engine System - General Information, General Procedures).<br>TEST the system for normal operation. |

## DIAGNOSIS AND TESTING

### PINPOINT TEST C : CLUTCH DRAG

| TEST CONDITIONS | DETAILS/RESULTS/ACTIONS |
|---|---|
| **C1: CHECK THE OPERATION OF THE CLUTCH PEDAL** | |
| | 1 Bleed the clutch system.<br>REFER to: Clutch System Bleeding (308-00, General Procedures).<br>• Does the clutch properly disengage after bleeding?<br>→ **Yes**<br>Clutch system is OK.<br>→ **No**<br>GO to C2. |
| **C2: CHECK THE CLUTCH DISC AND PRESSURE PLATE FOR OIL OR HYDRAULIC FLUID CONTAMINATION** | |
| | 1 Remove the clutch disc and pressure plate.<br>REFER to: Clutch Disc and Pressure Plate (308-01 Clutch, Removal and Installation).<br>• Is the clutch disc and pressure plate contaminated with oil or hydraulic fluid?<br>→ **Yes**<br>CHECK the engine and transaxle for leaks. INSTALL new components as necessary. TEST the system for normal operation.<br>→ **No**<br>GO to C3. |
| **C3: CHECK THE CLUTCH DISC AND PRESSURE PLATE** | |
| | 1 Visually check the clutch disc and pressure plate.<br>• Is the clutch disc and pressure plate worn or damaged?<br>→ **Yes**<br>INSTALL a new clutch disc and pressure plate.<br>REFER to: Clutch Disc and Pressure Plate (308-01 Clutch, Removal and Installation).<br>TEST the system for normal operation.<br>→ **No**<br>GO to C4. |

## DIAGNOSIS AND TESTING

| TEST CONDITIONS | DETAILS/RESULTS/ACTIONS |
|---|---|
| **C4: CHECK THE INPUT SHAFT SPLINES** | |
| | 1 Check that the clutch disc slides freely on the input shaft splines.<br>• Does the clutch disc stick on the input shaft?<br>→ **Yes**<br>CHECK the clutch disc and input shaft splines for damage. INSTALL new components as necessary. TEST the system for normal operation.<br>→ **No**<br>MEASURE the crankshaft end play.<br>REFER to: Crankshaft End Play (303-00 Engine System - General Information, General Procedures). |

### PINPOINT TEST D : EXCESSIVE NOISE

| TEST CONDITIONS | DETAILS/RESULTS/ACTIONS |
|---|---|
| **D1: STATIC CHECK** | |
| | 1 Depress and release the clutch pedal.<br>• Is the noise apparent when the clutch is operated?<br>→ **Yes**<br>LUBRICATE the clutch and brake pedal shaft. TEST the system for normal operation.<br>→ **No**<br>GO to D2. |
| **D2: DYNAMIC CHECK** | |
| | 1 Start the engine. |
| | 2 Depress the clutch pedal.<br>• Is the noise apparent when the clutch pedal is depressed?<br>→ **Yes**<br>REFER to: Engine (303-00 Engine System - General Information, Diagnosis and Testing).<br>→ **No**<br>INSTALL a new clutch slave cylinder and release bearing assembly. REFER to:<br>Clutch Disc and Pressure Plate (308-01 Clutch, Removal and Installation),<br>Clutch Slave Cylinder (308-02 Clutch Controls, Removal and Installation).<br>TEST the system for normal operation. |

## GENERAL PROCEDURES

# Gearshift Cable Adjustment(16 513 0)

All vehicles

1. **Select the 3rd gear.**
2. **Raise and support the vehicle.**

   **For additional information, refer to: Jacking (100-02 Jacking and Lifting, Description and Operation).**

   **For additional information, refer to: Lifting (100-02 Jacking and Lifting, Description and Operation).**
3. **Remove the gearshift cables cover.**

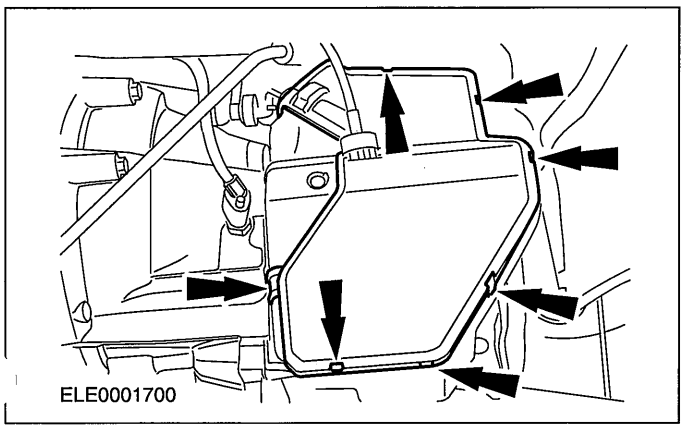


Vehicles built up to 08/2003

4. **Release the selector cable adjuster locking insert (gearshift cable box shown removed for clarity).**
   - Press down the orange colored clip.

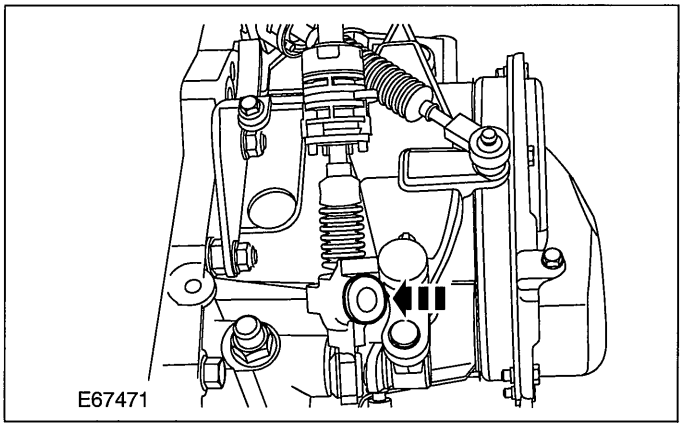


Vehicles built 08/2003 onwards

5. **Release the selector cable adjuster locking insert (gearshift cable box shown removed for clarity).**
   - Pull out the orange colored clip.

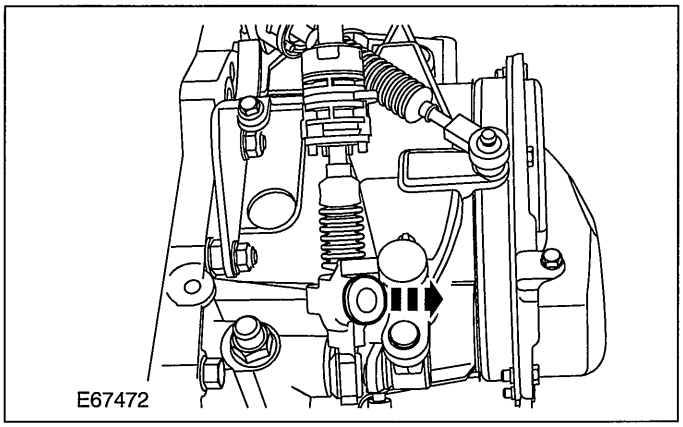


All vehicles

6. **NOTE:Make sure that the selector cable adjuster locking insert returns to the locked position.**

   **Lock the selector cable adjuster.**
   - Press down the clip on the adjuster.

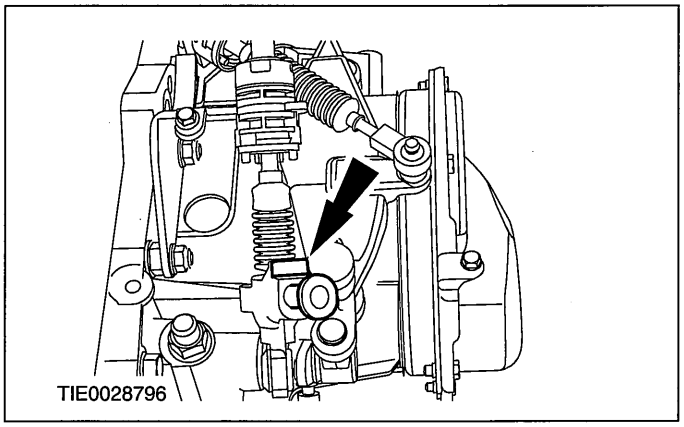


7. **Install the gearshift cables cover.**

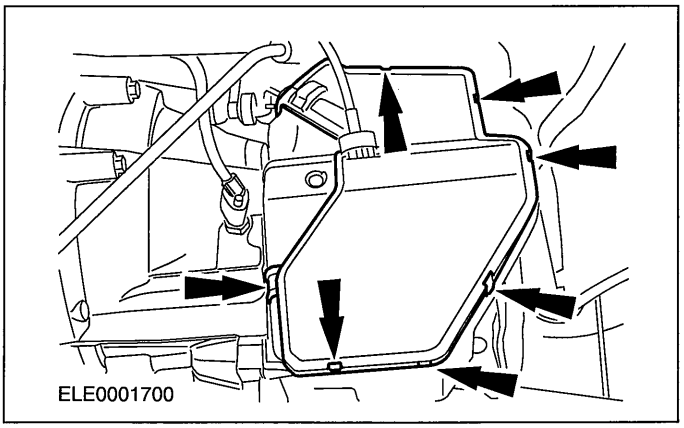


8. **Lower the vehicle.**

## GENERAL PROCEDURES

# Clutch System Bleeding(16 843 0)

**Special Tool(s)**

| | |
|---|---|
| 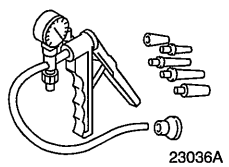 23036A | Hand Vacuum Pump/Pressure Pump 416-D001 (23-036A) |

| Materials | |
|---|---|
| **Name** | **Specification** |
| Super DOT 4 Brake Fluid | ESD-M6C57-A |

**WARNING:Brake fluid contains polyglycol ethers and polyglycols. Avoid contact with the eyes. Wash hands thoroughly after handling. If brake fluid contacts the eyes, flush the eyes for 15 minutes with cold running water. Get medical attention if irritation persists. If taken internally, drink water and induce vomiting. Get medical attention immediately. Failure to follow these instructions may result in personal injury.**

**CAUTION:If brake fluid is spilt on the paintwork, the affected area must be immediately washed down with cold water.**

**NOTE:**If proprietary brake bleeding equipment is available, this can be used to bleed the clutch system, following the method below. The maximum pressure must not exceed 1.5 bar.

**NOTE:**The clutch control system is self-venting. The components are arranged in such a way that small amounts of air trapped in the system are removed automatically during clutch operation.

1. **Remove the air cleaner, if necessary.For additional information, refer to Section 303-12 [Intake Air Distribution and Filtering].**
2. **Remove the battery, if necessary. For additional information, refer to Section 414-01 [Battery, Mounting and Cables].**
3. **Remove the battery tray, if necessary.**
4. **Drain the brake fluid reservoir.**
5. **Raise and support the vehicle, if necessary. For additional information, refer to Section 100-02 [Jacking and Lifting].**
6. **Fill the reservoir of the special tool with approximately 100 ml of new brake fluid.**
7. **NOTE:Make sure that the special tool reservoir is positioned lower than the bleed nipple.**

   **Install the special tool.**

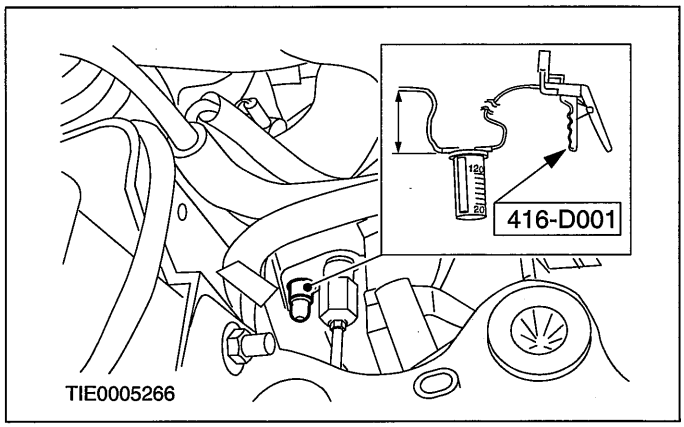


8. **Using the special tool, bleed the clutch system.**
   - Pump approximately 80 ml of brake fluid into the clutch system.
9. **Close the bleed nipple.**
10. **Remove the special tool.**
11. **Lower the vehicle, if necessary.**
12. **In order to remove any small amounts of trapped air remaining in the system, operate the clutch pedal several times (maximum five times), using the full clutch pedal travel.**
13. **Check the fluid level in the brake fluid reservoir and top up to the MAX mark with brake fluid if necessary.**
14. **Install the battery tray, if necessary.**
15. **Install the battery, if necessary. For additional information, refer to Section 414-01 [Battery, Mounting and Cables].**
16. **Install the air cleaner, if necessary. For additional information, refer to Section 303-12 [Intake Air Distribution and Filtering].**
17. **Test the clutch control system for normal operation.**

## GENERAL PROCEDURES

- Start the engine, depress the clutch pedal, wait two seconds, then carefully engage reverse gear. If there are any abnormal noises, or reverse gear is difficult to engage, repeat the clutch system bleeding procedure.

18. **Initialize the door window motors, if necessary. For additional information, refer to Section 501-11 [Glass, Frames and Mechanisms].**

# SECTION 308-01 Clutch

## VEHICLE APPLICATION:2006.0 Fiesta

CONTENTS PAGE

**SPECIFICATIONS**

Specifications ..... 308-01-2

**DESCRIPTION AND OPERATION**

Clutch ..... 308-01-3
Self-adjusting clutch ..... 308-01-3

**DIAGNOSIS AND TESTING**

Clutch ..... 308-01-6

**REMOVAL AND INSTALLATION**

Clutch Disc and Pressure Plate ..... (16 724 4) 308-01-7

## SPECIFICATIONS

### Torque Specifications

| Item | Nm | lb-ft | lb-in |
|---|---|---|---|
| Clutch pressure plate retaining bolts | 29 | 21 | - |

## DESCRIPTION AND OPERATION

# Clutch

## Self-adjusting clutch

### Advantages of the self-adjusting clutch

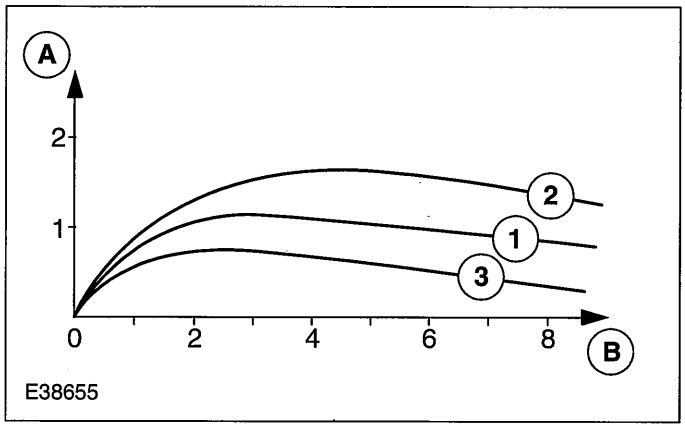


| Item | Description |
|---|---|
| A | Release force in kN |
| B | Release travel in mm |

| Item | Description |
|---|---|
| 1 | Conventional clutch - condition when new |
| 2 | Conventional clutch - after wear |
| 3 | Self-adjusting clutch |

The self-adjusting clutch has the following advantages over conventionally designed clutches:

- lower release forces, which remain constant over the service life and thus ensure high driving comfort throughout the entire service life
- increased wear reserve and therefore greater service life due to the automatic wear adjustment

### Function

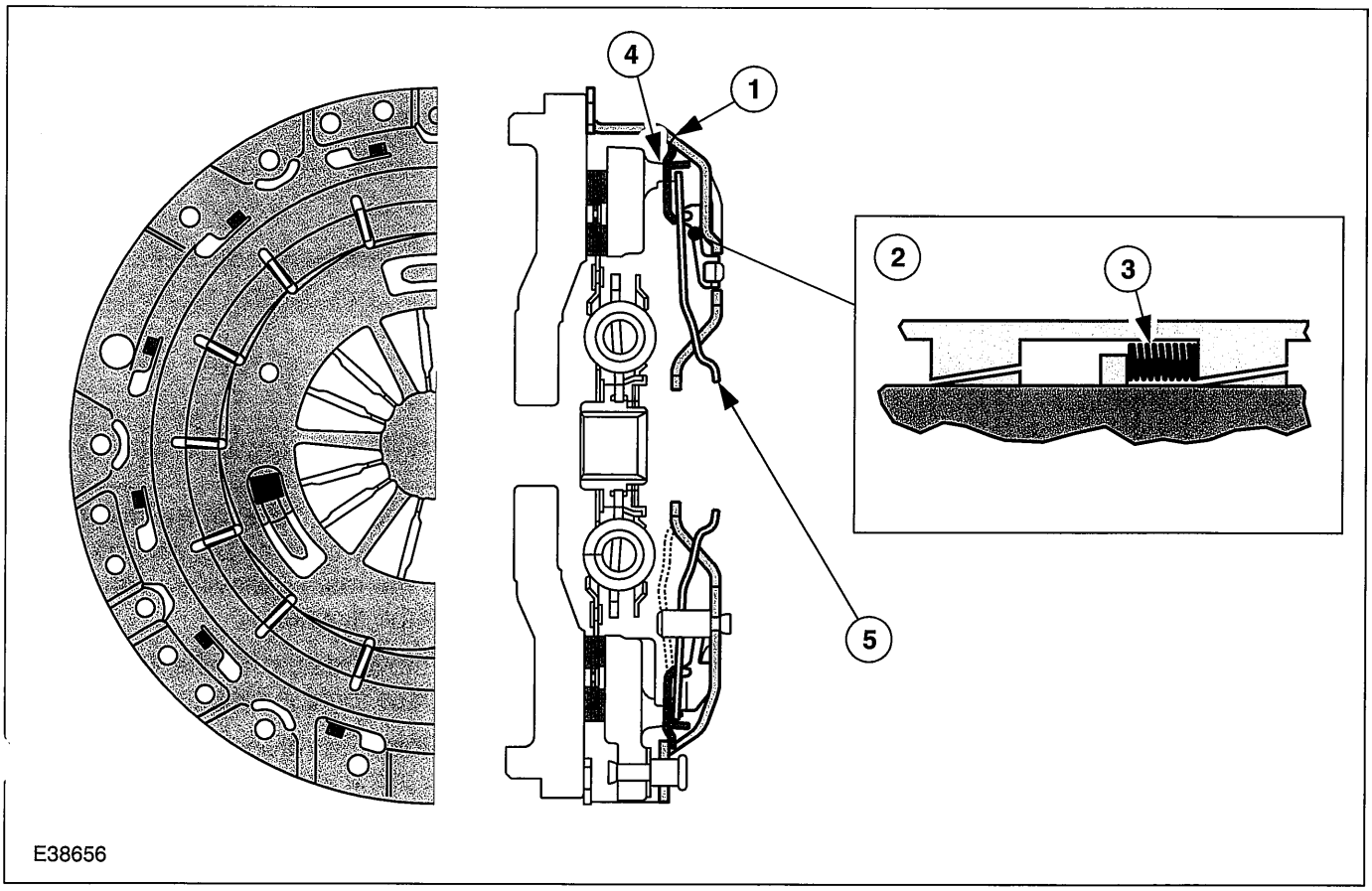

## DESCRIPTION AND OPERATION

| Item | Description |
|---|---|
| 1 | Cover |
| 2 | Adjusting ring (ramp ring) |
| 3 | Spring |
| 4 | Sensing Belleville washer |
| 5 | Main Belleville washer |

A conventional clutch responds to clutch wear with an increase in the release force, which ultimately has to be delivered by the driver to press down the clutch pedal.

This increase in the release force after clutch wear is used on the self-adjusting clutch as the key indicator for adjusting the clutch.

The main distinction to a conventional clutch is that the main Belleville washer is not riveted in a fixed manner to the cover, but instead is supported by a so-called sensing Belleville washer. In addition an adjusting ring (ramp ring) is used to compensate the wear of the clutch lining.

The sensing Belleville washer is hooked into the clutch cover at the outside and, with the inner tongues, forms the bearing for the main Belleville washer.

The sensing Belleville washer is designed to deliver a slightly greater opposing force under normal conditions than the maximum required release force.

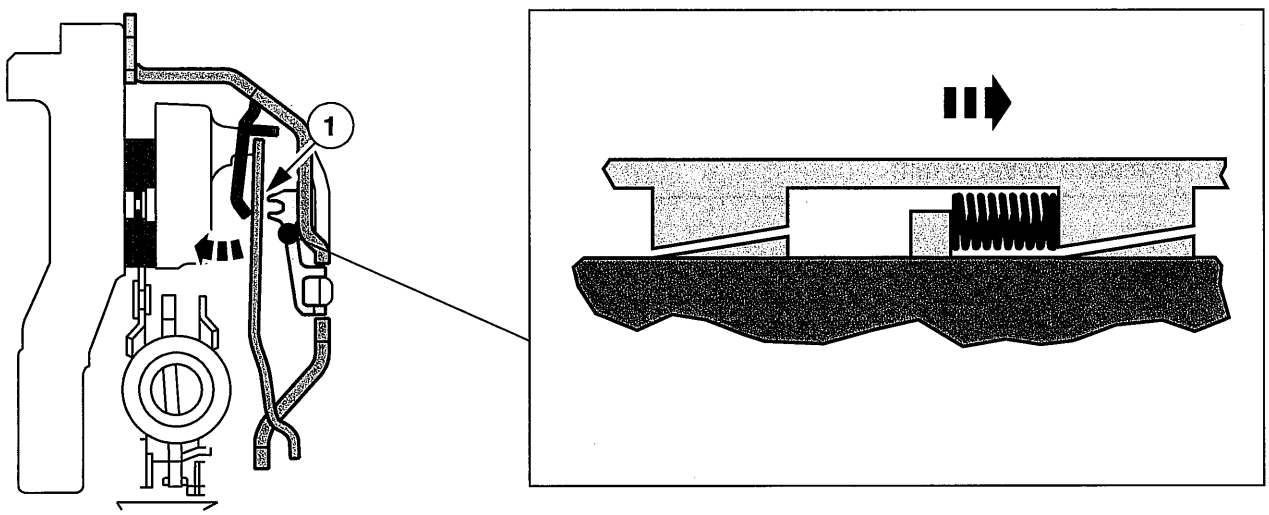


E38734

| Item | Description |
|---|---|
| 1 | Air gap |

If when the clutch is operated the release force is less than the opposing force of the sensing Belleville washer, then the pivot bearing point of the main Belleville washer remains in the same position.

If however the release force increases due to lining wear, then the opposing force of the sensing Belleville washer is exceeded.

If the opposing force of the sensing Belleville washer is exceeded, the sensing Belleville washer and therefore also the main Belleville washer are displaced towards the flywheel.

This displacement towards the flywheel has the effect that the release force is reduced again.

Once the release force has dropped to the level of the opposing force of the sensing Belleville washer again (equilibrium of forces), the displacement of the components towards the flywheel stops.

## DESCRIPTION AND OPERATION

When the sensing Belleville washer is displaced this results in an air gap between the main Belleville washer and the clutch cover.

The adjusting ring (ramp ring) arranged around the circumference immediately compensates for the air gap. To do this, springs press the adjusting ring and therefore the ramp against the main Belleville washer.

This results in a balancing of the clutch actuation mechanism, which keeps the forces required to operate the clutch constant throughout the entire service life of the clutch.

## DIAGNOSIS AND TESTING

# Clutch

REFER to: Manual Transaxle and Clutch (308-00, Diagnosis and Testing).

## REMOVAL AND INSTALLATION

# Clutch Disc and Pressure Plate(16 724 4)

**Special Tool(s)**

| | |
|---|---|
| 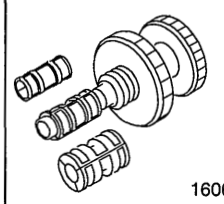 16067 | Aligner, Clutch Disk 308-204 (16-067) |

## Removal

1. **Remove the transaxle.For additional information, refer to: (308-03A Manual Transmission/Transaxle - Vehicles With: 5-Speed Manual Transaxle (iB5))**

   **Transaxle - 1.6L Duratec-16V (Sigma)/1.6L Duratec-16V Ti-VCT (Sigma) (Removal), Transaxle - 1.8L Duratec-HE (MI4) (Removal).**

2. **⚠CAUTION:Loosen the clutch pressure plate retaining bolts by two turns at a time in the sequence shown.**

   **Remove the clutch disc and pressure plate.**

   - Discard the bolts.

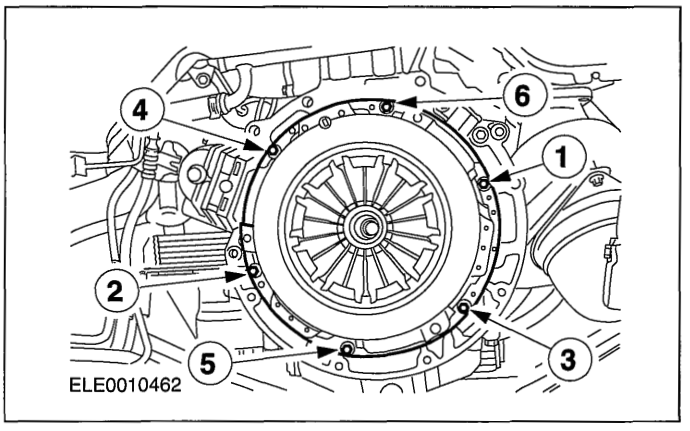


## Installation

1. **Using the special tool, centralize the clutch disc on the pressure plate.**

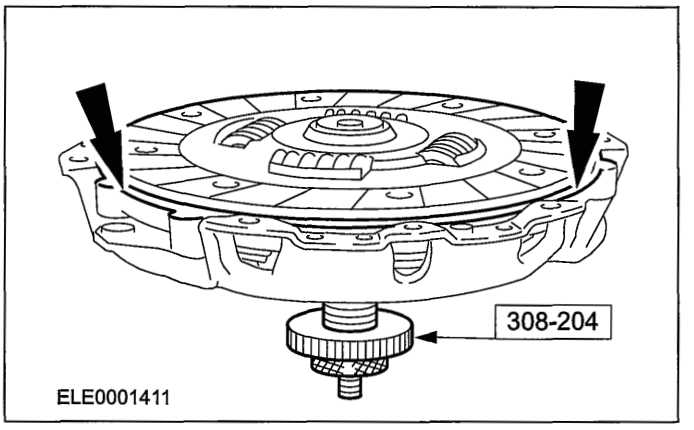


2. **⚠CAUTION:Tighten the clutch pressure plate retaining bolts finger tight and then evenly by two turns at a time in the sequence shown to the specified torque.**

**NOTE:**Install new clutch pressure plate retaining bolts.

## REMOVAL AND INSTALLATION

**Using the special tool, install the clutch disc and pressure plate.**

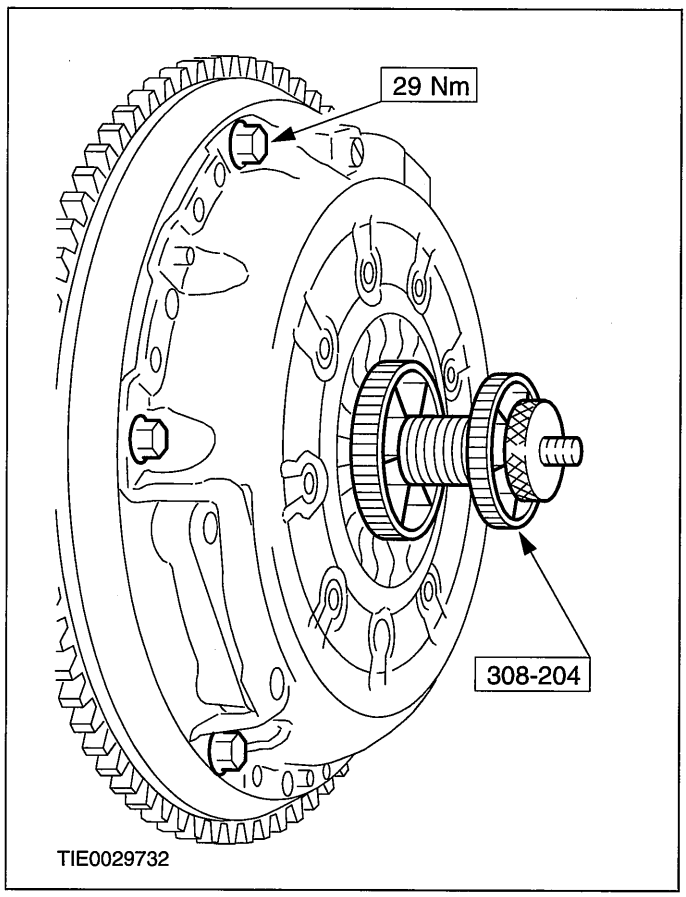


3. **Remove the special tool.**
4. **Install the transaxle. For additional information, refer to: (308-03A Manual Transmission/Transaxle - Vehicles With: 5-Speed Manual Transaxle (iB5))**

   **Transaxle - 1.6L Duratec-16V (Sigma)/1.6L Duratec-16V Ti-VCT (Sigma) (Installation), Transaxle - 1.8L Duratec-HE (MI4) (Installation).**

# SECTION 308-02 Clutch Controls

## VEHICLE APPLICATION:2006.0 Fiesta

CONTENTS PAGE

**SPECIFICATIONS**

Specifications..... 308-02-2

**DESCRIPTION AND OPERATION**

Clutch Controls..... 308-02-3
Overview..... 308-02-3
Function..... 308-02-4

**DIAGNOSIS AND TESTING**

Clutch Controls..... 308-02-5

**REMOVAL AND INSTALLATION**

Clutch Slave Cylinder..... (16 862 4) 308-02-6
Clutch Master Cylinder..... (16 856 0) 308-02-7

## SPECIFICATIONS

### Lubricants, Fluids, Sealers and Adhesives

| | Specifications |
|---|---|
| High-temperature grease | ESDM-1C220-A |

### Torque Specifications

| Item | Nm | lb-ft | lb-in |
|---|---|---|---|
| Clutch slave cylinder retaining bolts | 10 | - | 89 |
| Clutch master cylinder retaining bolts | 8 | - | 71 |
| Pedal pivot shaft retaining nut | 25 | 18 | - |

## DESCRIPTION AND OPERATION

# Clutch Controls

### Overview

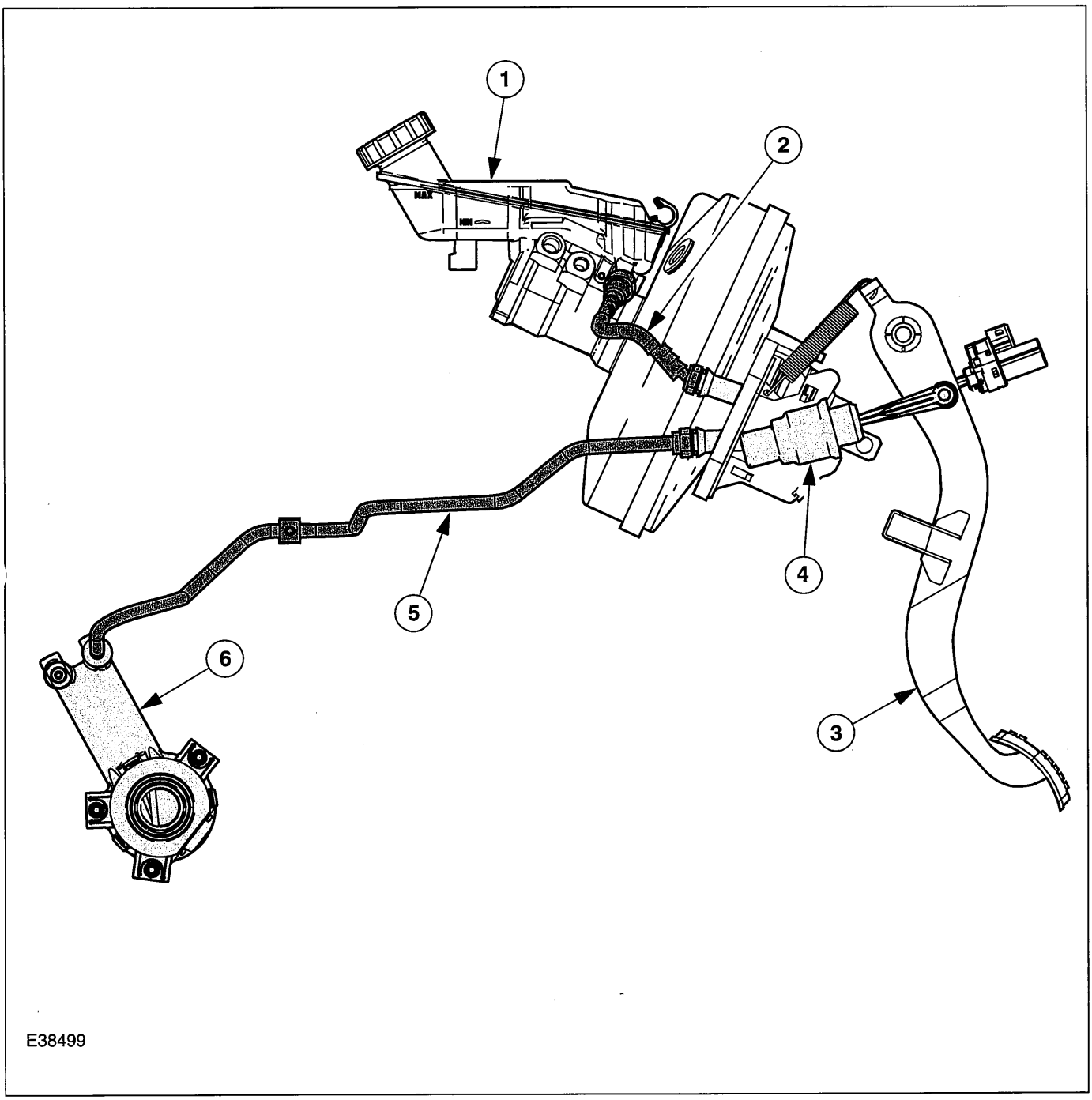


| Item | Description |
|---|---|
| 1 | Brake fluid reservoir |
| 2 | Supply line |
| 3 | Clutch Pedal |
| 4 | Master cylinder |

| Item | Description |
|---|---|
| 5 | Pressure line |
| 6 | Slave cylinder with choke assembly |

The hydraulic clutch is supplied from a separate chamber in the brake fluid reservoir.

## DESCRIPTION AND OPERATION

Because of this separate chamber, the braking system remains operational if a leak occurs in the hydraulic clutch system.

### Function

Pressure is created in the master cylinder when the clutch pedal is operated.

The hydraulic fluid in the master cylinder is put under pressure and fed through the pressure pipe to the slave cylinder.

The displaced hydraulic fluid moves the piston in the slave cylinder and this in turn slides the release bearing axially.

The release bearing pushes the bearing inner ring against the tongues of the diaphragm spring.

The spring induced grip between the clutch disc and the flywheel is broken.

When the clutch pedal is released the diaphragm spring presses the piston in the slave cylinder back to its starting position. The spring induced grip between the clutch disc and the flywheel is created again.

A spring in the slave cylinder ensures preload on the release bearing.

The release bearing is always touching the pressure plate because of this preload. The extra travel caused by clutch lining wear is compensated for by the preload.

There is a choke assembly in the slave cylinder which helps to increase smoothness when pulling away.

Because of the choke assembly, the pressure drop of the fluid leaving the slave cylinder and returning to the reservoir is delayed.

Because of this, the clutch closing time is delayed when the clutch pedal is released suddenly, and a soft and comfortable clutch engagement is achieved.

Choking does not occur during clutch disengagement.

⚠ **CAUTION:Vehicles with an automated shift manual (ASM) transmission have a slave cylinder without a choke assembly. The slave cylinders must not be exchanged for one another.**

**NOTE:**The clutch pedal travel cannot be adjusted.

The release bearing is an interference fit in the slave cylinder and cannot be renewed separately.

## DIAGNOSIS AND TESTING

# Clutch Controls

REFER to: Manual Transaxle and Clutch (308-00, Diagnosis and Testing).

## REMOVAL AND INSTALLATION

# Clutch Slave Cylinder(16 862 4)

| Materials | |
|---|---|
| Name | Specification |
| High-temperature grease | ESDM-1C220-A |

## Removal

1. **Remove the transaxle. For additional information, refer to: (308-03 Manual Transmission/Transaxle)**

   **Transaxle - 1.25L Duratec-16V (Sigma)/1.4L Duratec-16V (Sigma)/1.6L Duratec-16V (Sigma) (Removal),**
   **Transaxle - 1.3L Duratec-8V (Rocam) (Removal),**
   **Transaxle - 2.0L Duratec-HE (MI4) (Removal),**
   **Transaxle - 1.4L Duratorq-TDCi (DV) Diesel/1.6L Duratorq-TDCi (DV) Diesel (Removal).**

2. **Clean any grease and foreign material from the input shaft.**
3. **CAUTIONS:**

   **⚠If brake fluid is spilt on the paintwork, the affected area must be immediately washed down with cold water.**

   **⚠Using suitable adhesive tape, cover the input shaft splines to prevent damage to the input shaft oil seal.**

   **Remove the clutch slave cylinder.**

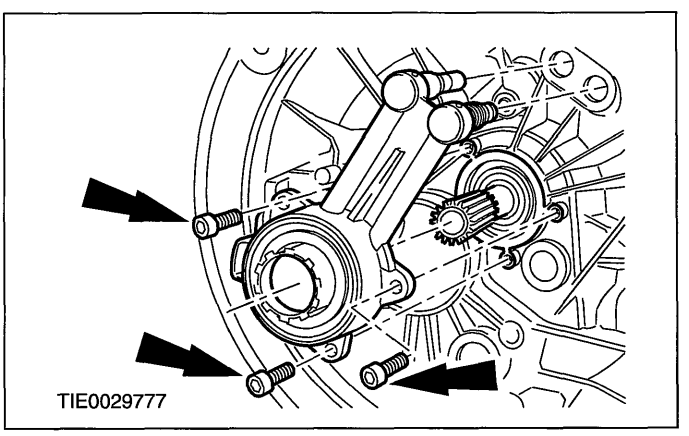


## Installation

1. **CAUTIONS:**

   **⚠If brake fluid is spilt on the paintwork, the affected area must be immediately washed down with cold water.**

   **⚠Do not apply grease on any area of the clutch slave cylinder.**

   **Install the clutch slave cylinder.**

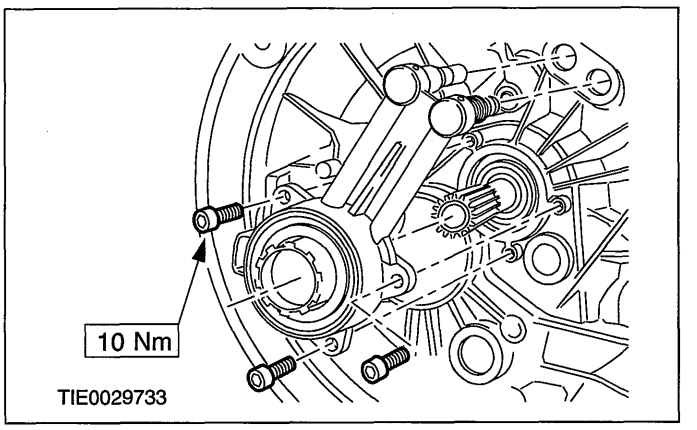


2. **Remove the adhesive tape from the input shaft splines.**
3. **Coat the input shaft splines with a thin layer of high-temperature grease.**
4. **Install the transaxle. For additional information, refer to: (308-03 Manual Transmission/Transaxle)**

   **Transaxle - 1.25L Duratec-16V (Sigma)/1.4L Duratec-16V (Sigma)/1.6L Duratec-16V (Sigma) (Installation),**
   **Transaxle - 1.3L Duratec-8V (Rocam) (Installation),**
   **Transaxle - 2.0L Duratec-HE (MI4) (Installation),**
   **Transaxle - 1.4L Duratorq-TDCi (DV) Diesel/1.6L Duratorq-TDCi (DV) Diesel (Installation).**

## REMOVAL AND INSTALLATION

# Clutch Master Cylinder(16 856 0)

### Removal

⚠ **CAUTION:If brake fluid is spilt on the paintwork, the affected area must be immediately washed down with cold water.**

All vehicles

1. **Using a suitable syringe, remove brake fluid from the brake fluid reservoir until the brake fluid level is at the MIN mark.**

Right-hand drive vehicles

2. **Remove the air cleaner. For additional information, refer to: (303-12 Intake Air Distribution and Filtering)**

   **Air Cleaner - 1.25L Duratec-16V (Sigma)/1.4L Duratec-16V (Sigma)/1.6L Duratec-16V (Sigma) (Removal and Installation),**
   **Air Cleaner - 1.3L Duratec-8V (Rocam) (Removal and Installation),**
   **Air Cleaner - 1.4L Duratorq-TDCi (DV) Diesel (Removal and Installation),**
   **Air Cleaner - 2.0L Duratec-HE (MI4) (Removal and Installation),**
   **Air Cleaner - 1.6L Duratorq-TDCi (DV) Diesel (Removal and Installation).**

Left-hand drive vehicles

3. **Disconnect the two vacuum hoses.**
   - Detach the vacuum hoses from the battery clamp clip.

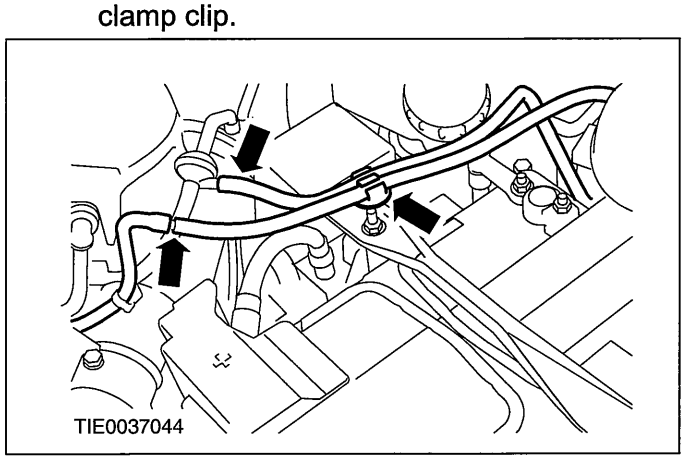
TIE0037044

4. **Remove the battery tray. For additional information, refer to:**

   **Battery Tray (414-01, Removal and Installation),**
   **Battery Tray - 2.0L Duratec-HE (MI4) (414-01 Battery, Mounting and Cables, Removal and Installation).**

All vehicles

5. **NOTE:Plug the brake fluid reservoir to prevent fluid loss or dirt ingress.**

   **Disconnect the clutch master cylinder supply hose from the brake fluid reservoir.**
   - Push the clip to release the clutch master cylinder supply hose.

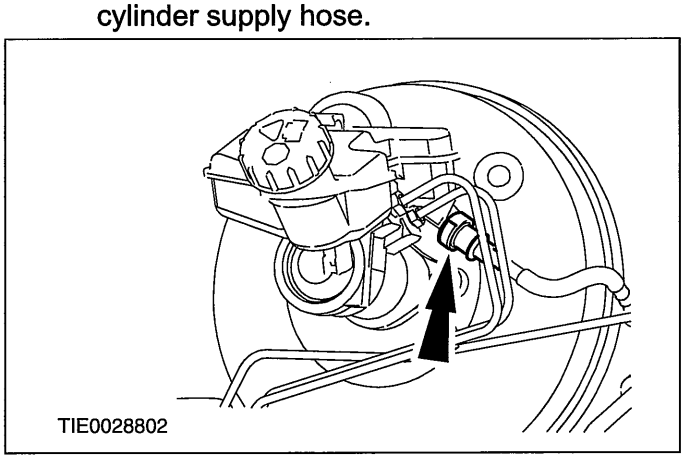
TIE0028802

6. **Remove the clutch master cylinder supply hose.**
   - Release the clutch master cylinder supply hose retaining clip.
   - Allow the fluid to drain into a suitable container.

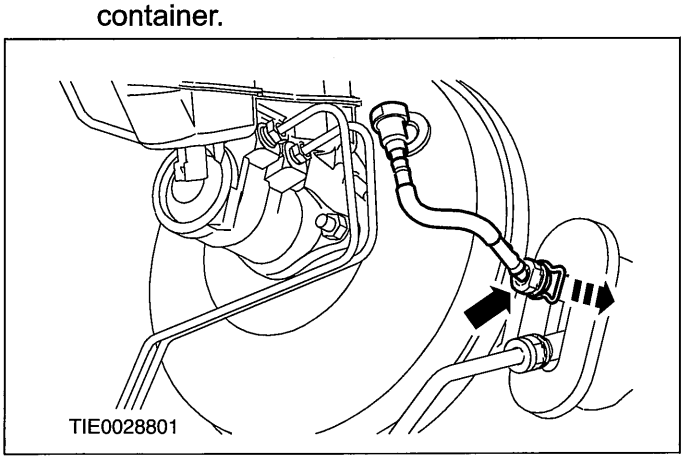
TIE0028801

7. **NOTE:Plug the clutch slave cylinder supply line to prevent fluid loss or dirt ingress.**

## REMOVAL AND INSTALLATION

**Disconnect the clutch slave cylinder supply line from the clutch master cylinder and position it to one side.**

- Release the clutch slave cylinder supply line retaining clip.

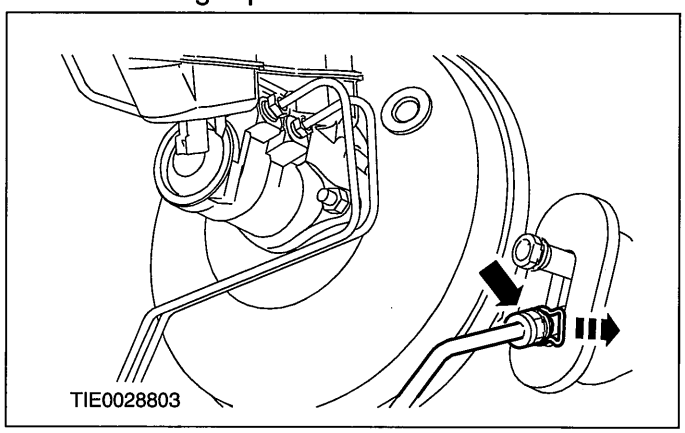


**8. Remove the clutch master cylinder retaining bolts.**

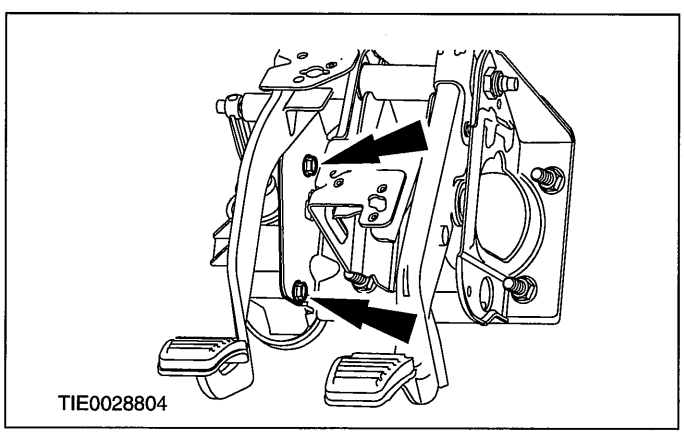


**9. NOTE:Remove the clutch master cylinder and the clutch pedal as an assembly.**

**Remove the clutch master cylinder and the clutch pedal assembly.**

- Remove the pedal pivot shaft retaining nut and remove the pivot shaft.
- Rotate the clutch master cylinder and clutch pedal assembly counterclockwise.

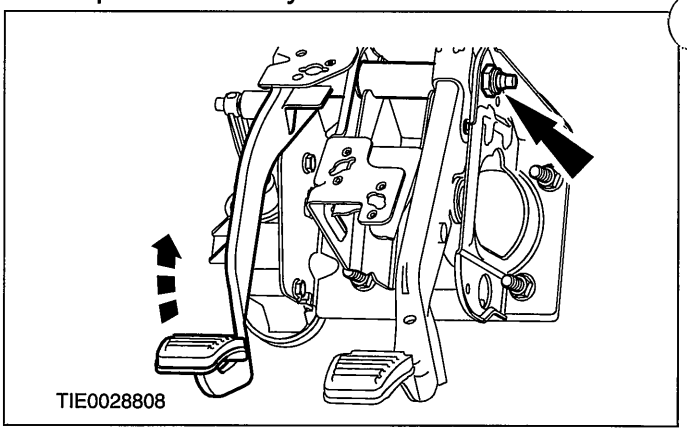


**10. Remove the clutch master cylinder.**

1. Remove the clutch pedal return spring.
2. Detach the clutch master cylinder actuating rod from the clutch pedal.

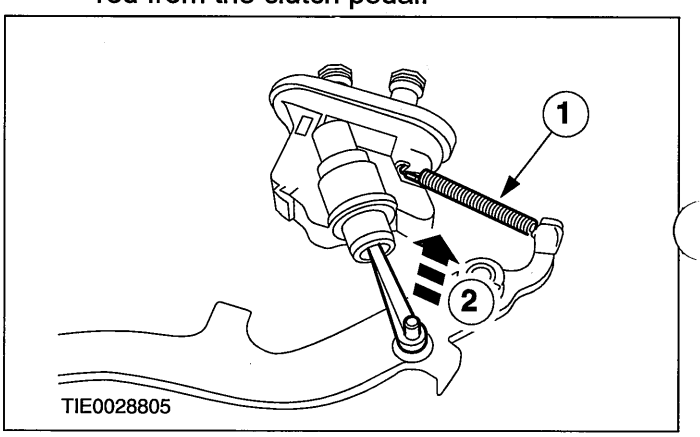


### Installation

#### All vehicles

**1. NOTE:Using suitable tape, secure the clutch pedal return spring in position.**

**Install the clutch master cylinder.**

1. Attach the clutch master cylinder actuating rod to the clutch pedal.

## REMOVAL AND INSTALLATION

2. Install the clutch pedal return spring.

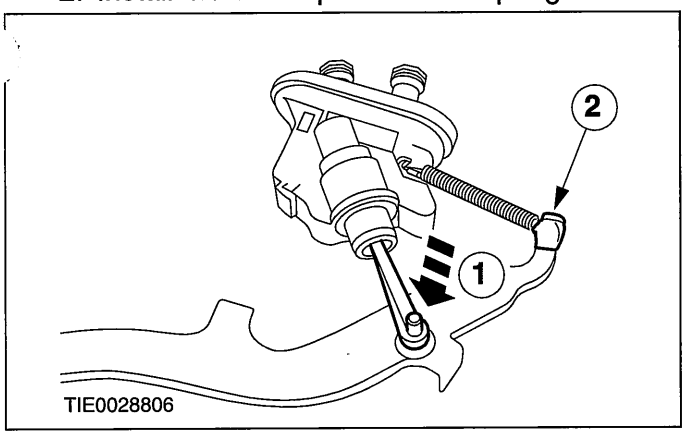


2. **NOTE:Install the clutch master cylinder and the clutch pedal as an assembly.**

   **Install the clutch master cylinder and the clutch pedal assembly.**

   - Rotate the clutch master cylinder and the clutch pedal assembly clockwise.
   - Install the pedal pivot shaft.

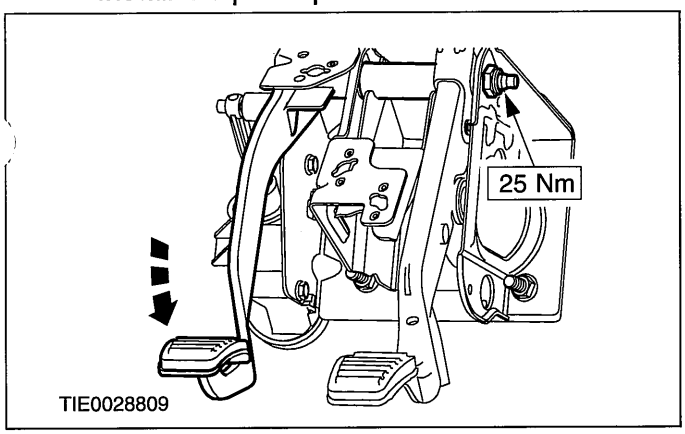


3. **Install the clutch master cylinder retaining bolts.**

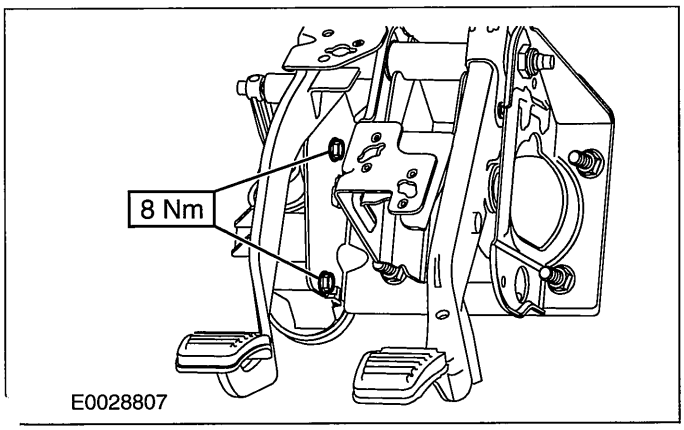


4. **Connect the clutch slave cylinder supply line to the clutch master cylinder.**

   - Install the clutch slave cylinder supply line retaining clip.

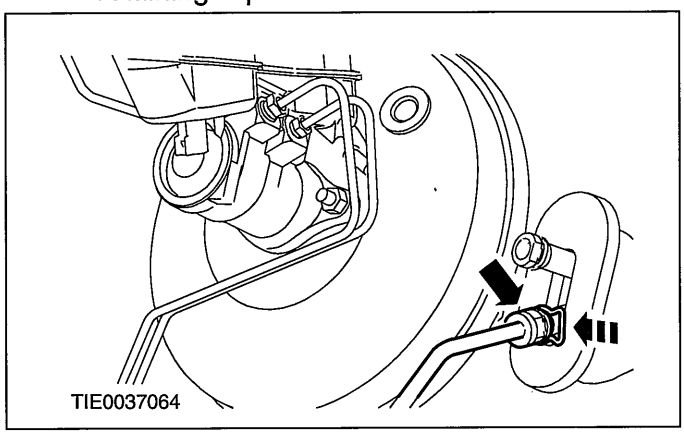


5. **Connect the clutch master cylinder supply hose to the clutch master cylinder.**

   - Install the clutch master cylinder supply hose retaining clip.

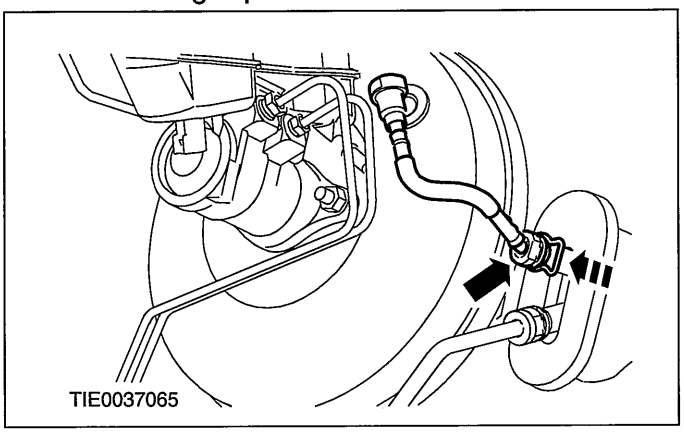


6. **Connect the clutch master cylinder supply hose to the brake fluid reservoir.**

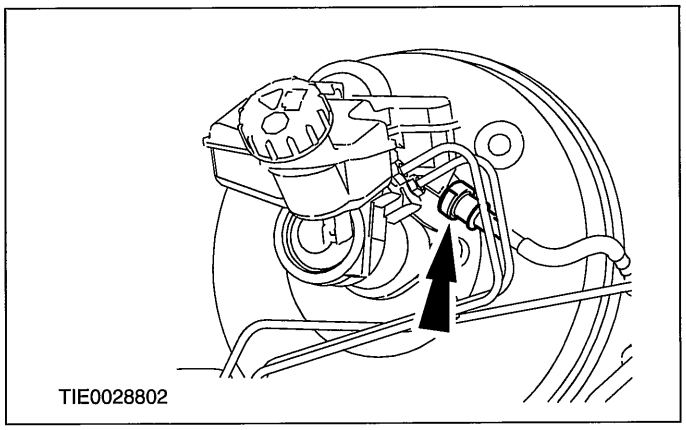

## REMOVAL AND INSTALLATION

7. **Bleed the clutch system. For additional information, refer to: (308-00 Manual Transmission/Transaxle and Clutch - General Information)**

   **Clutch System Bleeding (General Procedures),**
   **Clutch System Bleeding - Vehicles With: Automated Gearshift (General Procedures).**

Left-hand drive vehicles

8. **Install the battery tray. For additional information, refer to:**

   **Battery Tray (414-01, Removal and Installation),**
   **Battery Tray - 2.0L Duratec-HE (MI4) (414-01 Battery, Mounting and Cables, Removal and Installation).**

9. **Connect the two vacuum hoses.**
   - Attach the vacuum hoses to the battery clamp clip.

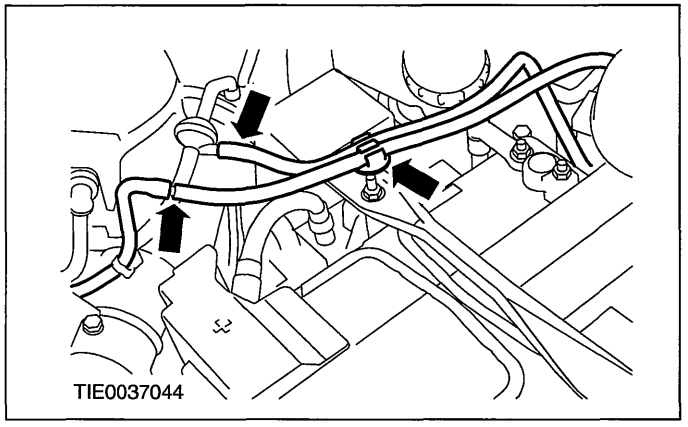


Right-hand drive vehicles

10. **Install the air cleaner. For additional information, refer to: (303-12 Intake Air Distribution and Filtering)**

    **Air Cleaner - 1.25L Duratec-16V (Sigma)/1.4L Duratec-16V (Sigma)/1.6L Duratec-16V (Sigma) (Removal and Installation),**
    **Air Cleaner - 1.3L Duratec-8V (Rocam) (Removal and Installation),**
    **Air Cleaner - 1.4L Duratorq-TDCi (DV) Diesel (Removal and Installation),**
    **Air Cleaner - 2.0L Duratec-HE (MI4) (Removal and Installation).**

# SECTION 308-03 Manual Transmission/Transaxle

## VEHICLE APPLICATION:2006.0 Fiesta

CONTENTS PAGE


**SPECIFICATIONS**

Specifications ..... 308-03-3
Required shim thickness ..... 308-03-3

**DESCRIPTION AND OPERATION**

Manual Transaxle ..... 308-03-5
General ..... 308-03-5
Transmission construction ..... 308-03-6
Internal shift mechanism ..... 308-03-11
Power transmission in the individual gears ..... 308-03-15

**DIAGNOSIS AND TESTING**

Manual Transaxle ..... 308-03-17

**GENERAL PROCEDURES**

Bearing Check ..... 308-03-18

**IN-VEHICLE REPAIR**

Halfshaft Seal LH ..... (14 303 0) 308-03-20
Halfshaft Seal RH ..... (14 304 0) 308-03-21
Vehicle Speed Sensor (VSS) ..... (33 654 0) 308-03-22

**REMOVAL**

Transaxle — 1.25L Duratec-16V (Sigma)/1.4L Duratec-16V (Sigma)/1.6L Duratec-16V (Sigma) ..... (16 114 0) 308-03-23
Transaxle — 2.0L Duratec-HE (MI4) ..... (16 114 0) 308-03-30

**DISASSEMBLY**

Transaxle ..... (16 118 8) 308-03-35

**DISASSEMBLY AND ASSEMBLY OF SUBASSEMBLIES**

Output Shaft ..... 308-03-41
Input Shaft ..... 308-03-46
Differential ..... (16 118 6) 308-03-48
Selector Plate ..... (16 284 8) 308-03-50

**ASSEMBLY**

Transaxle ..... (16 118 8) 308-03-52

## INSTALLATION

Transaxle — 1.25L Duratec-16V (Sigma)/1.4L Duratec-16V (Sigma)/1.6L Duratec-16V (Sigma)..... (16 114 0) 308-03-62
Transaxle — 2.0L Duratec-HE (MI4)..... (16 114 0) 308-03-69

# SPECIFICATIONS

## Lubricants, Fluids, Sealers and Adhesives

| Description | Specifications |
|---|---|
| High-temperature grease | ESDM-1C220-A |
| Manual transmission fluid | WSD-M2C200-C |
| Super DOT 4 brake fluid | ESD-M6C57-A |
| Sealer, transaxle housing to clutch housing | WSK-M2G348-A5 |

| Description | Specifications |
|---|---|
| Sealer, fifth gear end cap | WSE-M4G323-A4 |

## Capacities

| Description | Litres |
|---|---|
| Manual transmission fluid (just below the bottom of the filler hole) | 2.3 |

## Transaxle ratios

| | 1.25L | 1.3L | 1.4L | 1.6L | 1.4L Diesel | 1.6L Diesel | 2.0L |
|---|---|---|---|---|---|---|---|
| First gear | 3.58 | 3.58 | 3.58 | 3.15 | 3.58 | 3.58 | 3.58 |
| Second gear | 1.93 | 1.93 | 1.93 | 1.93 | 1.93 | 1.93 | 2.04 |
| Third gear | 1.28 | 1.28 | 1.28 | 1.28 | 1.28 | 1.28 | 1.41 |
| Fourth gear | 0.95 | 0.95 | 0.95 | 0.95 | 0.95 | 0.95 | 1.11 |
| Fifth gear | 0.76 | 0.76 | 0.76 | 0.76 | 0.76 | 0.76 | 0.88 |
| Reverse gear | 3.62 | 3.62 | 3.62 | 3.62 | 3.62 | 3.62 | 3.62 |
| Final drive | 4.25 | 3.82/4.06 | 4.06 | 4.25 | 3.37 | 3.37 | 3.82 |

## Required shim thickness

| Description | mm |
|---|---|
| Measuring shim | 3.8 |
| Shim availability (in increments of 0.1 mm) | 0.1 - 0.7 |

## Required snap ring thickness

| Description | mm |
|---|---|
| Snap ring fifth gear | 1.48 |

## Torque Specifications

| Item | Nm | lb-ft | lb-in |
|---|---|---|---|
| Clutch slave cylinder retaining bolts | 10 | - | 89 |
| Selector gate retaining bolts | 22 | 16 | - |
| Transaxle housing retaining bolts | 25 | 21 | - |
| Fifth gear housing to transaxle housing retaining bolts | 17 | 13 | - |
| Selector mechanism to transaxle retaining bolts | 22 | 16 | - |
| Reversing lamp switch | 12 | 9 | - |

## SPECIFICATIONS

| Item | Nm | lb-ft | lb-in |
|---|---|---|---|
| Transaxle housing final drive cover retaining bolts | 12 | 9 | - |
| Transaxle to engine retaining bolts | 47 | 35 | - |
| Engine support insulator to engine retaining bolt | 48 | 35 | - |
| Engine support insulator to subframe retaining bolts | 48 | 35 | - |
| Engine rear mount outer retaining nuts | 48 | 35 | - |
| Exhaust flexible pipe retaining nuts | 44 | 32 | - |
| Wiring harness retaining bracket retaining nut | 22 | 16 | - |
| Power steering high-pressure line retaining bracket retaining bolt | 25 | 21 | - |
| Lower arm ball joint to the wheel knuckle retaining nut | 52 | 38 | - |
| Engine rear mount center retaining nut | 90 | 66 | - |
| Intermediate shaft center bearing retaining nuts | 25 | 18 | - |
| Strut and spring assembly top mount retaining nuts | 48 | 35 | - |
| Transmission fluid filler plug | 35 | 26 | - |
| Starter motor retaining bolts | 35 | 26 | - |
| Starter motor wiring harness retaining bracket retaining nuts | 20 | 15 | - |

## DESCRIPTION AND OPERATION

# Manual Transaxle

### General

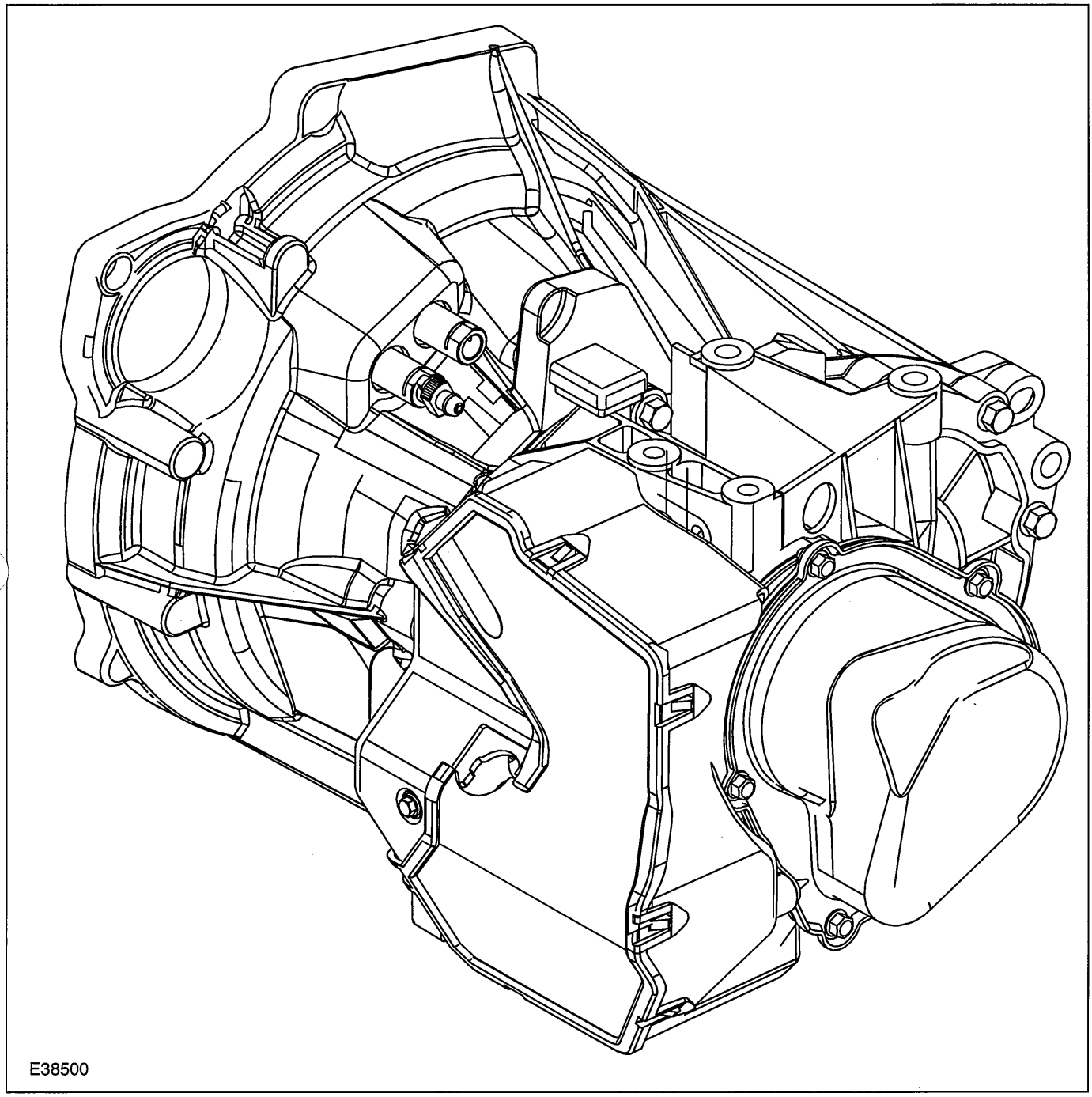

E38500

The iB5 manual transmission is a two shaft transmission.

All gear wheels are helical toothed, synchronised (except reverse gear) and run in plain bearings.

1st and 2nd gears are double synchronised.

There is no need to change the oil.

# DESCRIPTION AND OPERATION

## Transmission construction

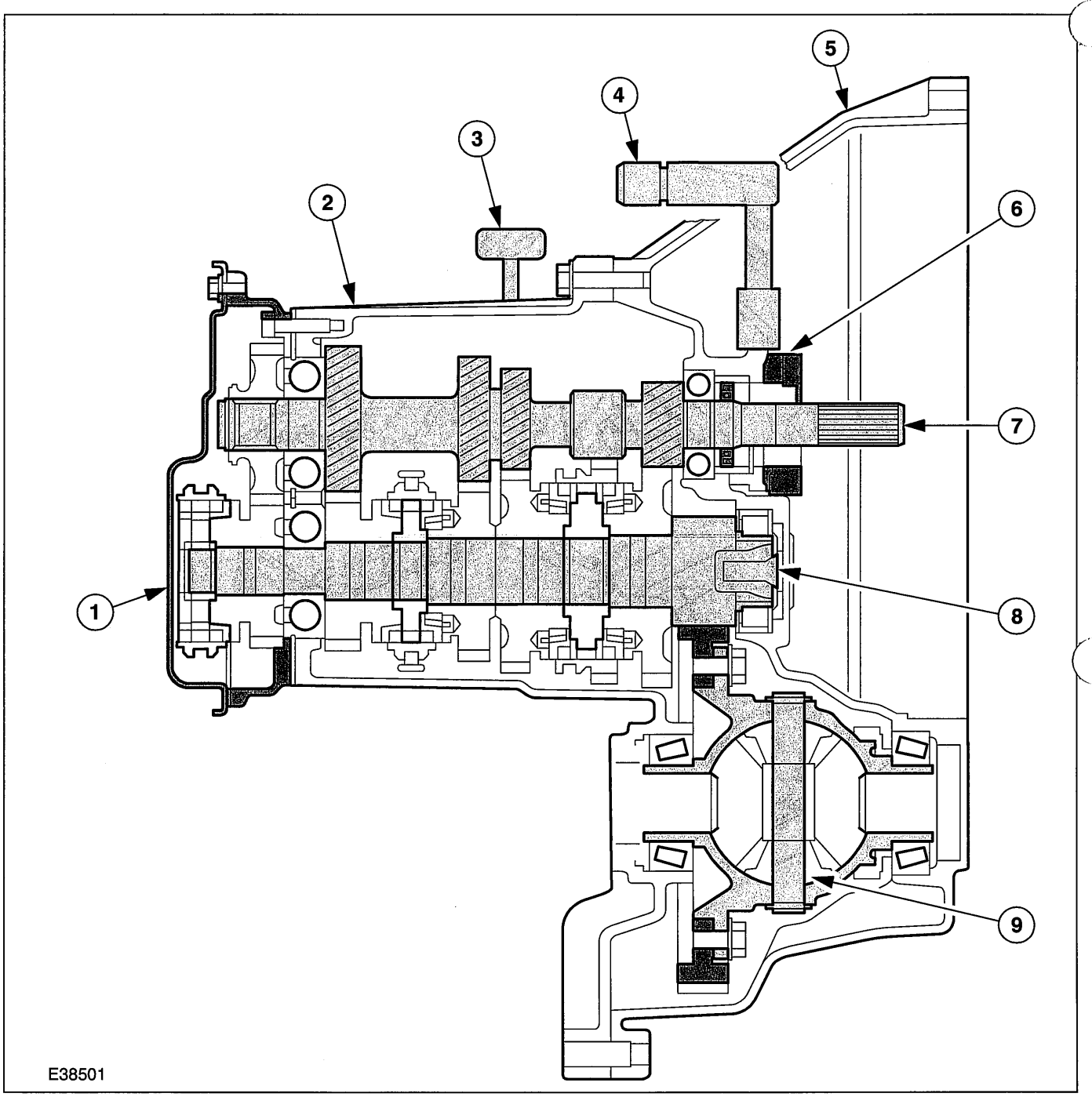


| Item | Description |
|---|---|
| 1 | 5th gear housing |
| 2 | Transmission side housing halves |
| 3 | Breather |
| 4 | Hydraulic clutch connection |
| 5 | Clutch side housing halves |

| Item | Description |
|---|---|
| 6 | Slave cylinder with integral release bearing |
| 7 | Input shaft |
| 8 | Output shaft |
| 9 | Differential assembly |

## DESCRIPTION AND OPERATION

### Input shaft

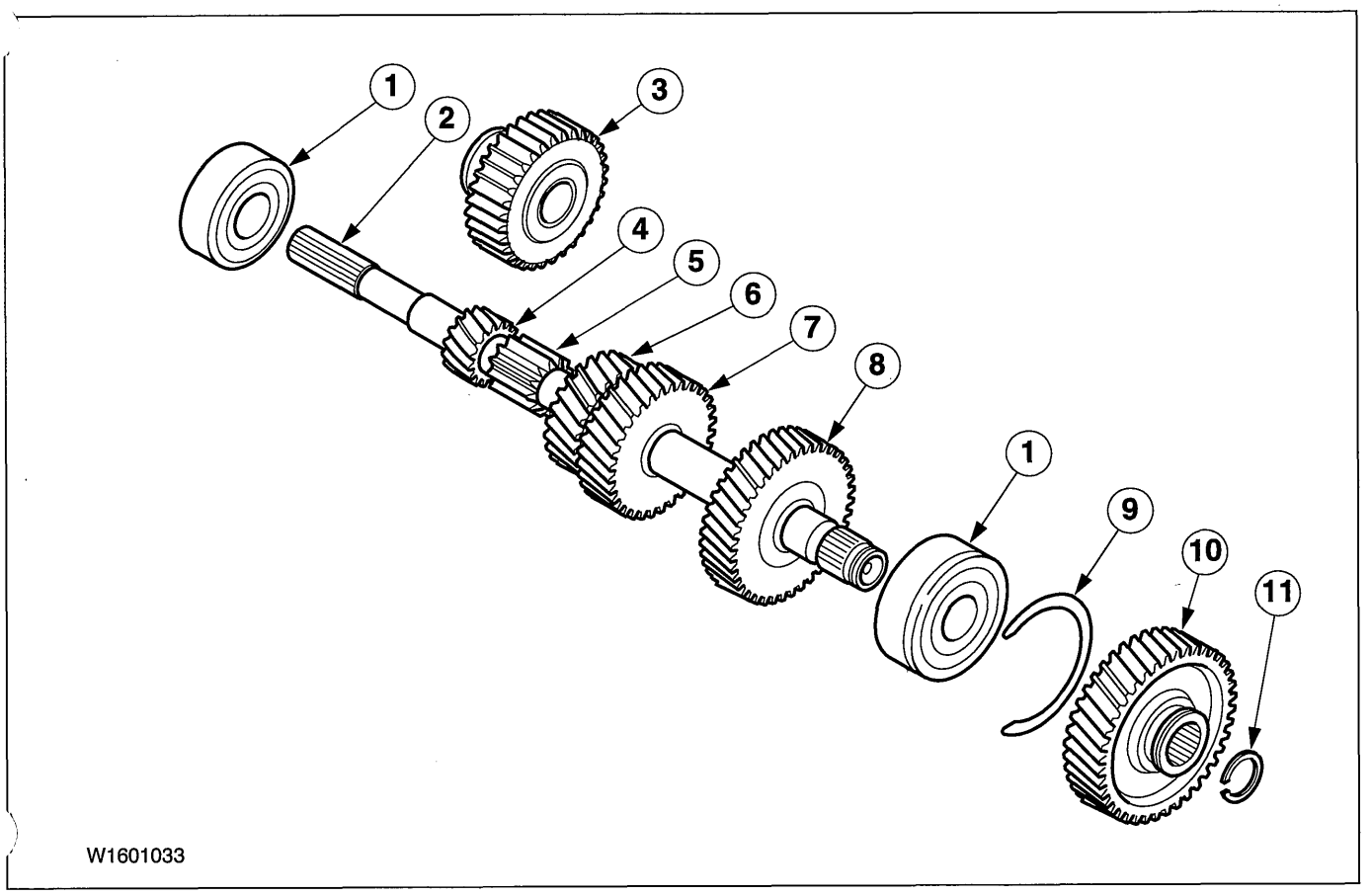


| Item | Description |
|---|---|
| 1 | Ball bearing |
| 2 | Input shaft |
| 3 | Reverse gear idler |
| 4 | 1st gear wheel |
| 5 | Reverse gear wheel |

| Item | Description |
|---|---|
| 6 | 2nd gear wheel |
| 7 | 3rd gear wheel |
| 8 | 4th gear wheel |
| 9 | Snap ring |
| 10 | 5th gear wheel |
| 11 | Snap ring |

## DESCRIPTION AND OPERATION

### Output shaft

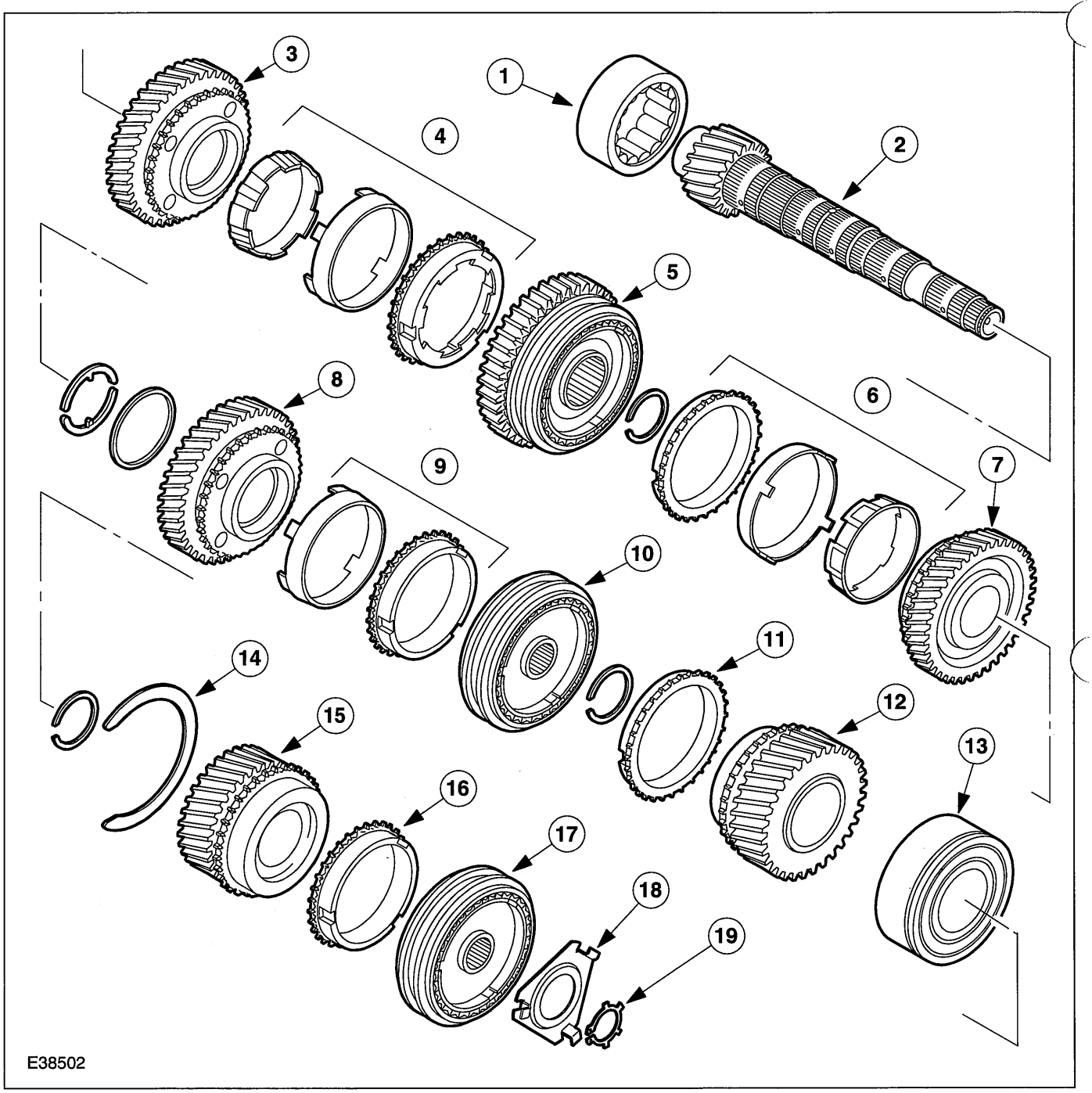


| Item | Description |
|---|---|
| 1 | Open cylinder roller bearing |
| 2 | Output shaft with differential drive wheel |
| 3 | 1st gear wheel |
| 4 | 1st gear double synchronisation |
| 5 | Synchroniser - 1st/2nd gear with reverse gear wheel |
| 6 | 2nd gear double synchronisation |

| Item | Description |
|---|---|
| 7 | 2nd gear wheel |
| 8 | 3rd gear wheel |
| 9 | 3rd gear simple synchronisation |
| 10 | Synchroniser assembly - 3rd/4th gear |
| 11 | 4th gear simple synchronisation |
| 12 | 4th gear wheel |
| 13 | Ball bearing (closed both sides) |

## DESCRIPTION AND OPERATION

| Item | Description |
|---|---|
| 14 | Snap ring |
| 15 | 5th gear wheel |
| 16 | 5th gear simple synchronisation |

| Item | Description |
|---|---|
| 17 | 5th gear synchroniser assembly |
| 18 | Retaining plate |
| 19 | Snap ring |

### Double synchronisation

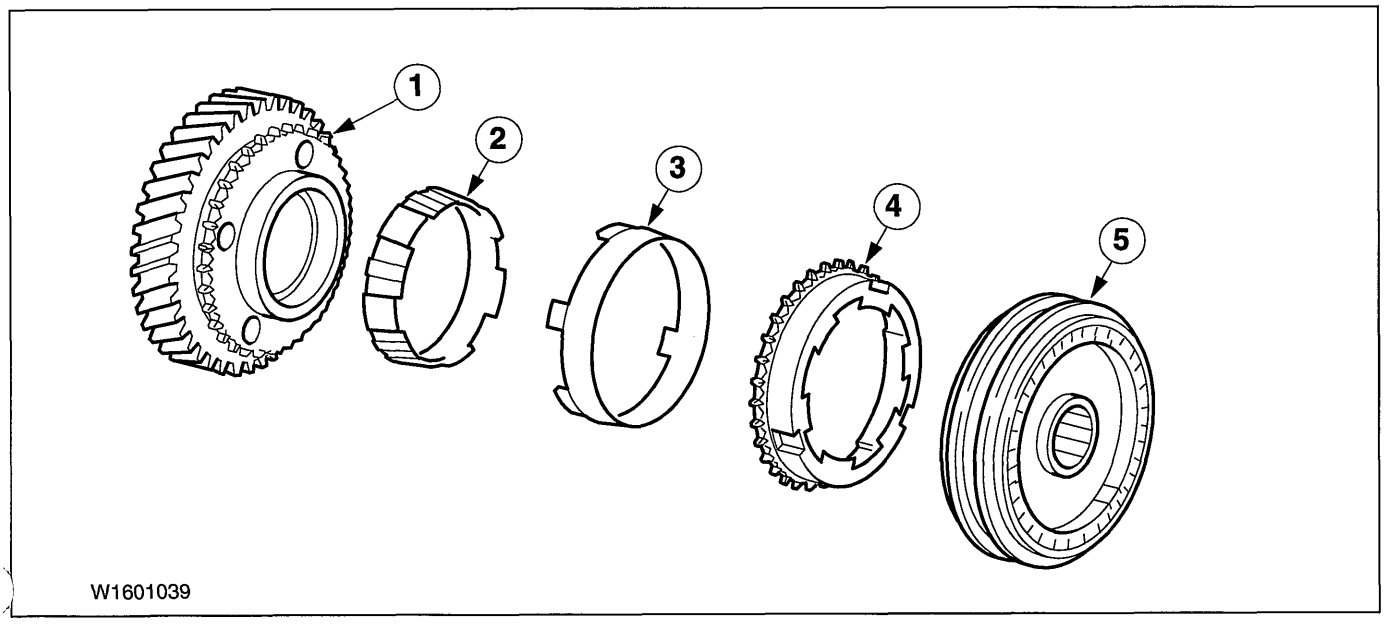


| Item | Description |
|---|---|
| 1 | Gearwheel |
| 2 | Inner synchroniser ring |
| 3 | Conical ring |
| 4 | Outer synchroniser ring |
| 5 | Synchroniser hub |

1st and 2nd gears are double synchronised.

The effective synchronisation surface for double synchronisation is almost twice that of simple synchronisation. Because of this, the speeds of the gearwheels are equalised much faster, which considerably improves gearshifting comfort.

## DESCRIPTION AND OPERATION

### Differential assembly

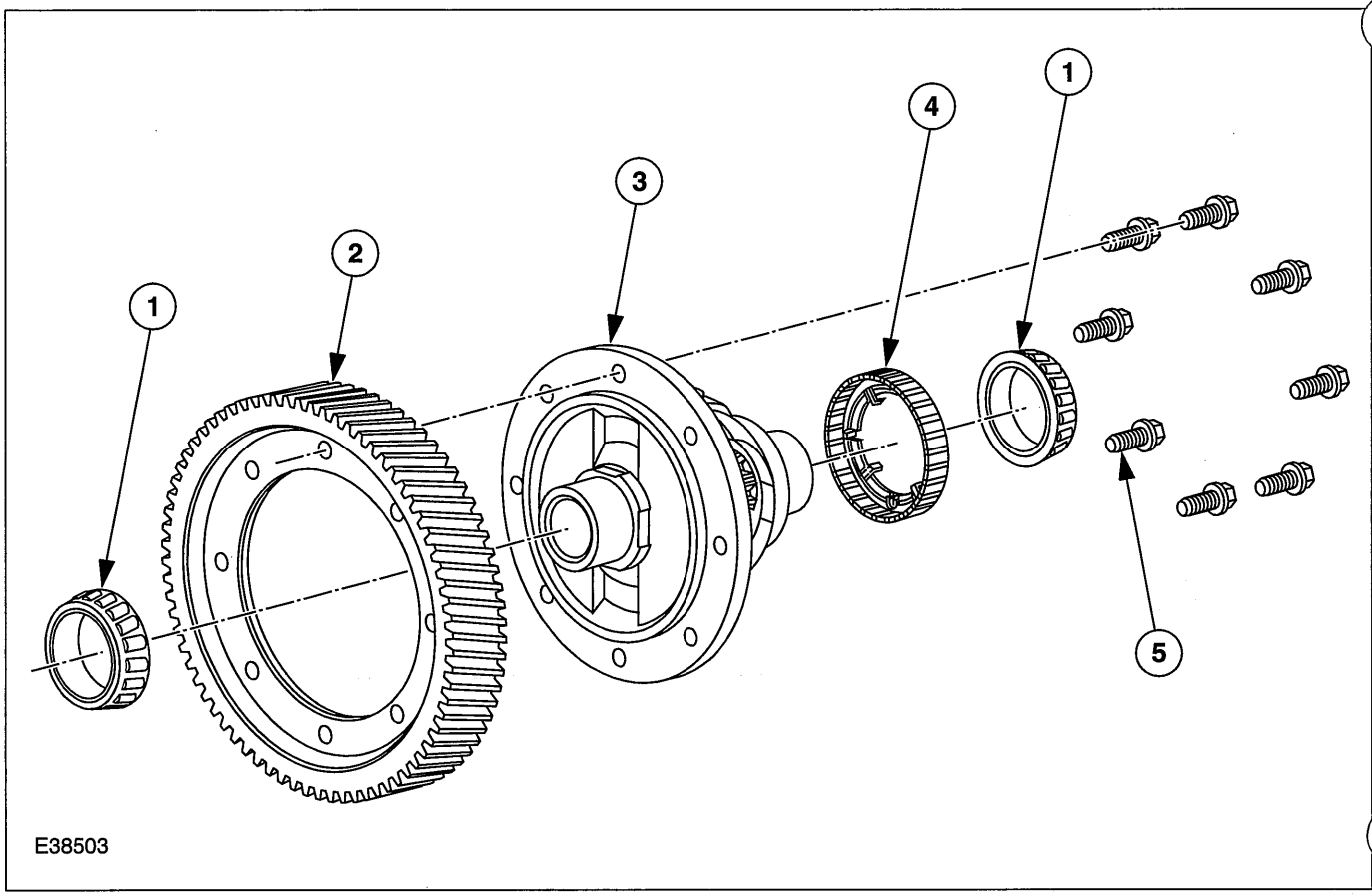


| Item | Description |
|---|---|
| 1 | Bearing |
| 2 | Crown wheel |
| 3 | Differential assembly |
| 4 | Sender wheel - Vehicle Speed Sensor (VSS) |
| 5 | Crown wheel bolts |

The differential assembly is built into the transmission housing.

The drive torque is transmitted to the differential by the crown wheel which is bolted to it.

The differential assembly contains differential pinion gears mounted on a spindle and the axle halfshaft pinion gears which connect to the front wheel axle halfshafts through helical gearing.

The axle halfshaft pinion gears can revolve around the differential pinion gears when the road wheel speeds are different (e.g when cornering).

On vehicles without Anti-lock Brake System (ABS) a VSS detects the speed of the differential assembly at the VSS sender wheel.

On vehicles with ABS the VSS sender wheel is also installed. The VSS is however not installed in this case. A plug with an O-ring closes the corresponding bore instead.

# DESCRIPTION AND OPERATION

## Internal shift mechanism

### Layout

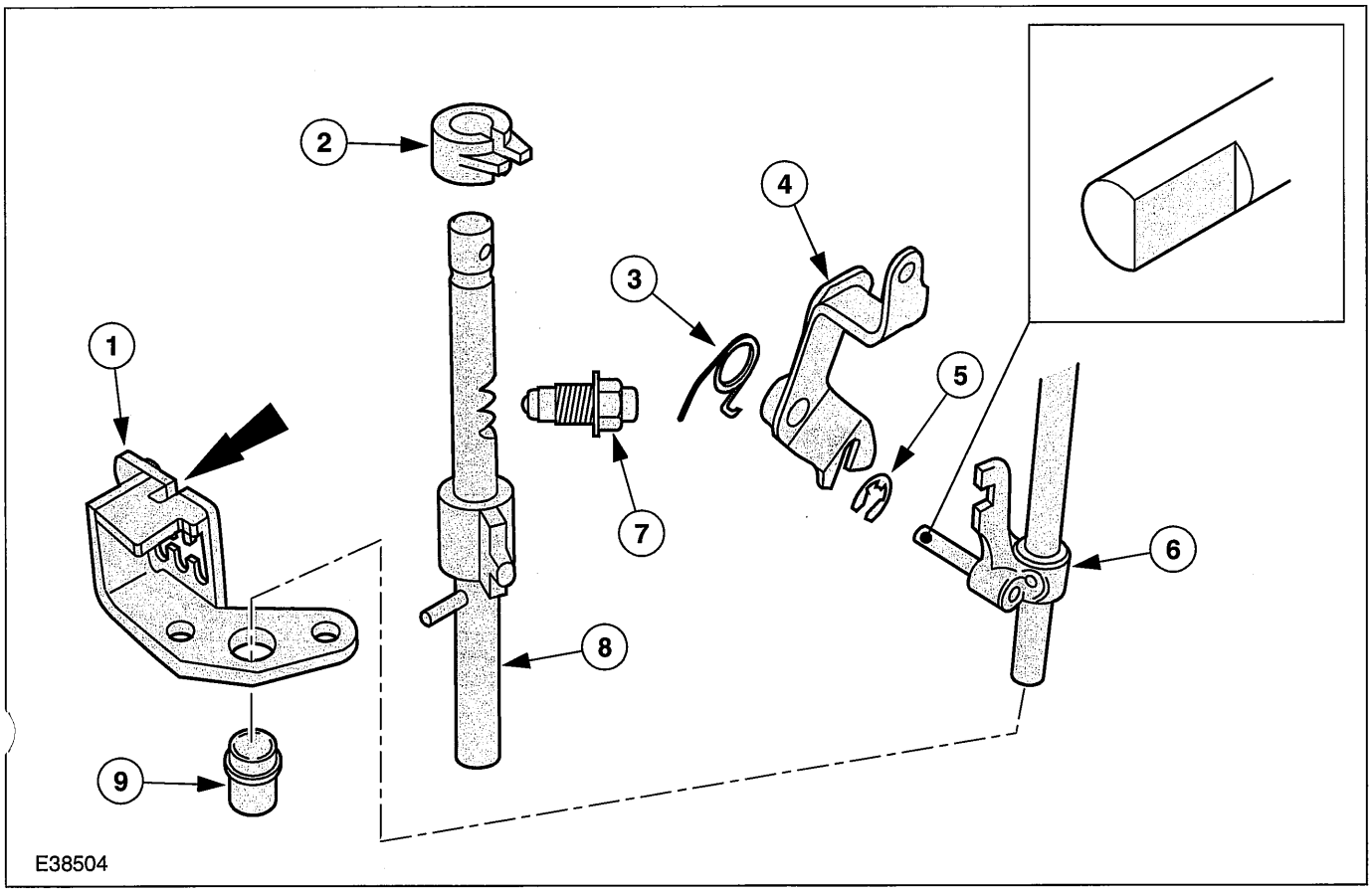


| Item | Description |
|---|---|
| 1 | Selector gate |
| 2 | Shift locking bush |
| 3 | Return spring from reverse gear position |
| 4 | Reverse gear selector shaft |
| 5 | Snap ring |
| 6 | Shift rod - 5th gear/reverse gear |
| 7 | Selector interlock |

| Item | Description |
|---|---|
| 8 | Selector shaft |
| 9 | Guide sleeve |

The shift locking bush prevents two gears from being engaged at the same time.

The selector interlock maintains engagement of the selected gear.

Both the shift and the select process is performed through the selector shaft.

## DESCRIPTION AND OPERATION

### Select movement

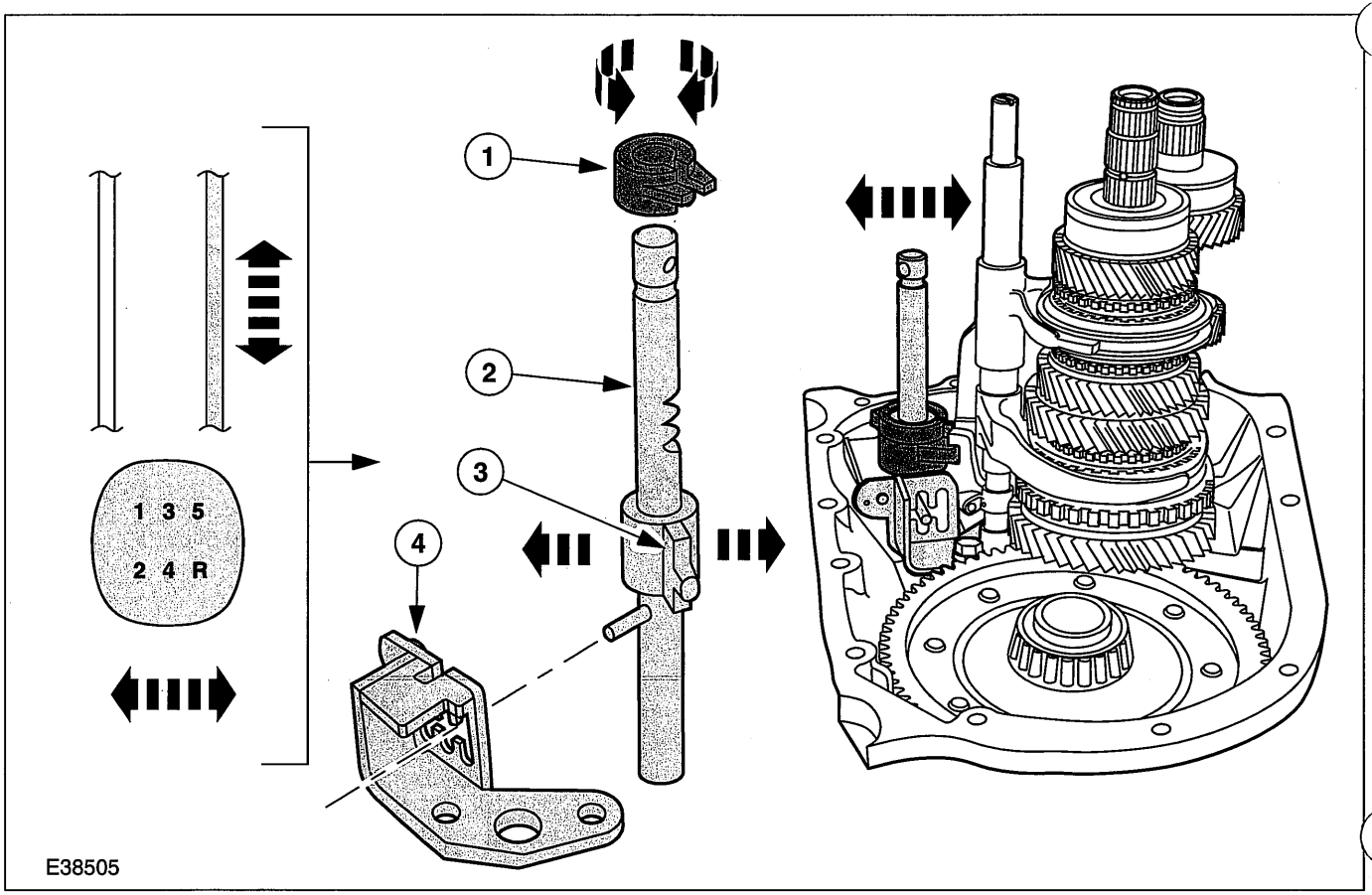


| Item | Description |
|---|---|
| 1 | Shift locking bush |
| 2 | Selector shaft |
| 3 | Selector boss |
| 4 | Selector gate |

The axial movement of the selector cable is transferred at the transmission to the selector shaft which can turn in its bearing.

If the gearshift lever is moved to the left or right, the selector shaft and the selector boss both turn together in the corresponding direction.

As this happens, the selector shaft is guided by a pin in the selector gate.

The selector boss selects the required selector fork.

At the same time the shift locking bush prevents access to other gear combinations.

## DESCRIPTION AND OPERATION

### Shift movement

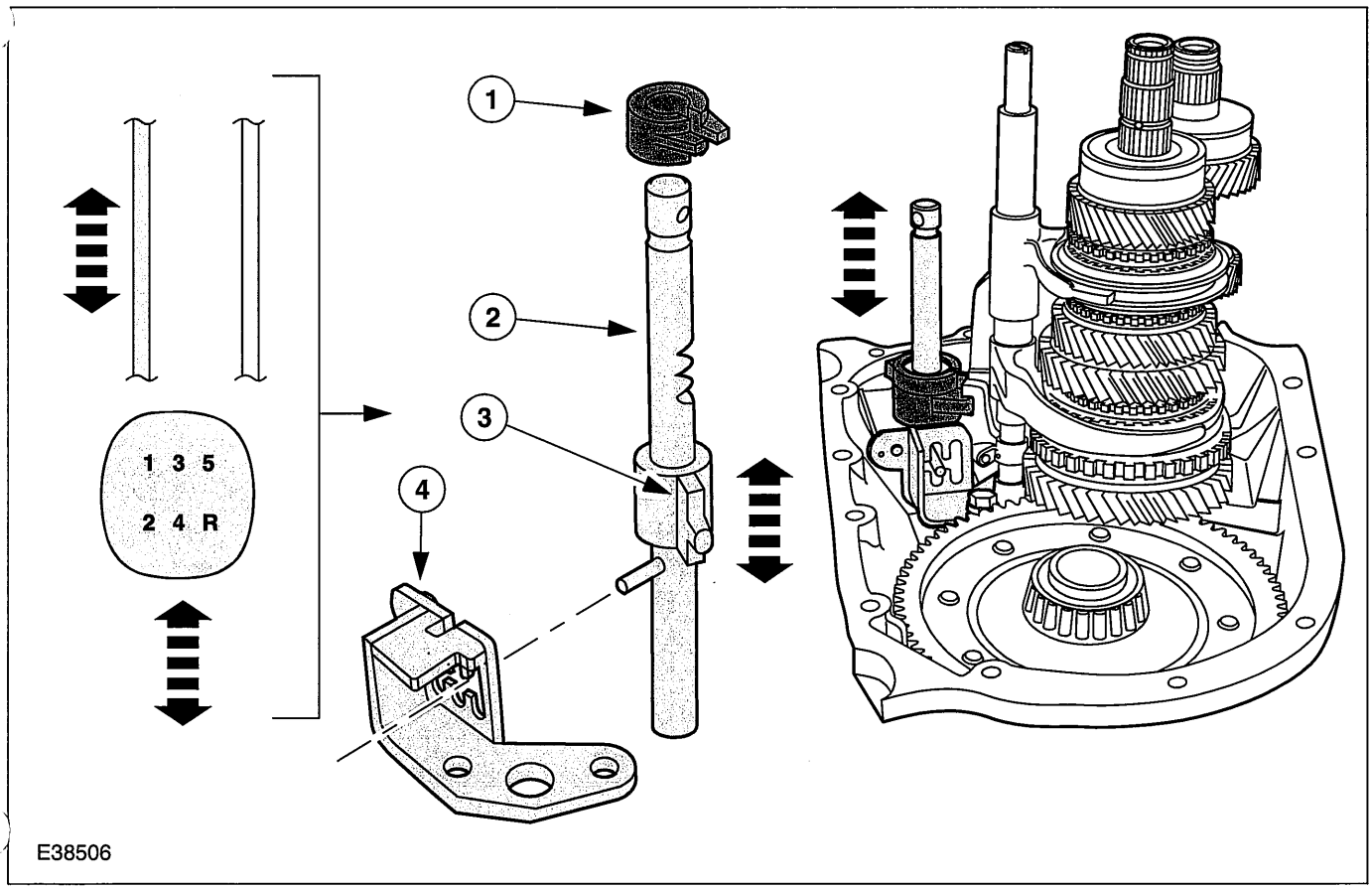


| Item | Description |
|---|---|
| 1 | Shift locking bush |
| 2 | Selector shaft |
| 3 | Selector boss |
| 4 | Selector gate |

After the gear pair to be shifted has been selected, the shift movement takes place.

Here the axial movement of the shift cable at the transmission produces an axial movement of the selector shaft.

If the gearshift lever is moved forwards or backwards, the selector shaft and the selector boss both move vertically together.

As this happens, the selector shaft is guided by a pin in the selector gate.

The selector boss shifts the required selector fork.

At the same time the shift locking bush prevents access to other gear combinations.

## DESCRIPTION AND OPERATION

### Engage reverse gear

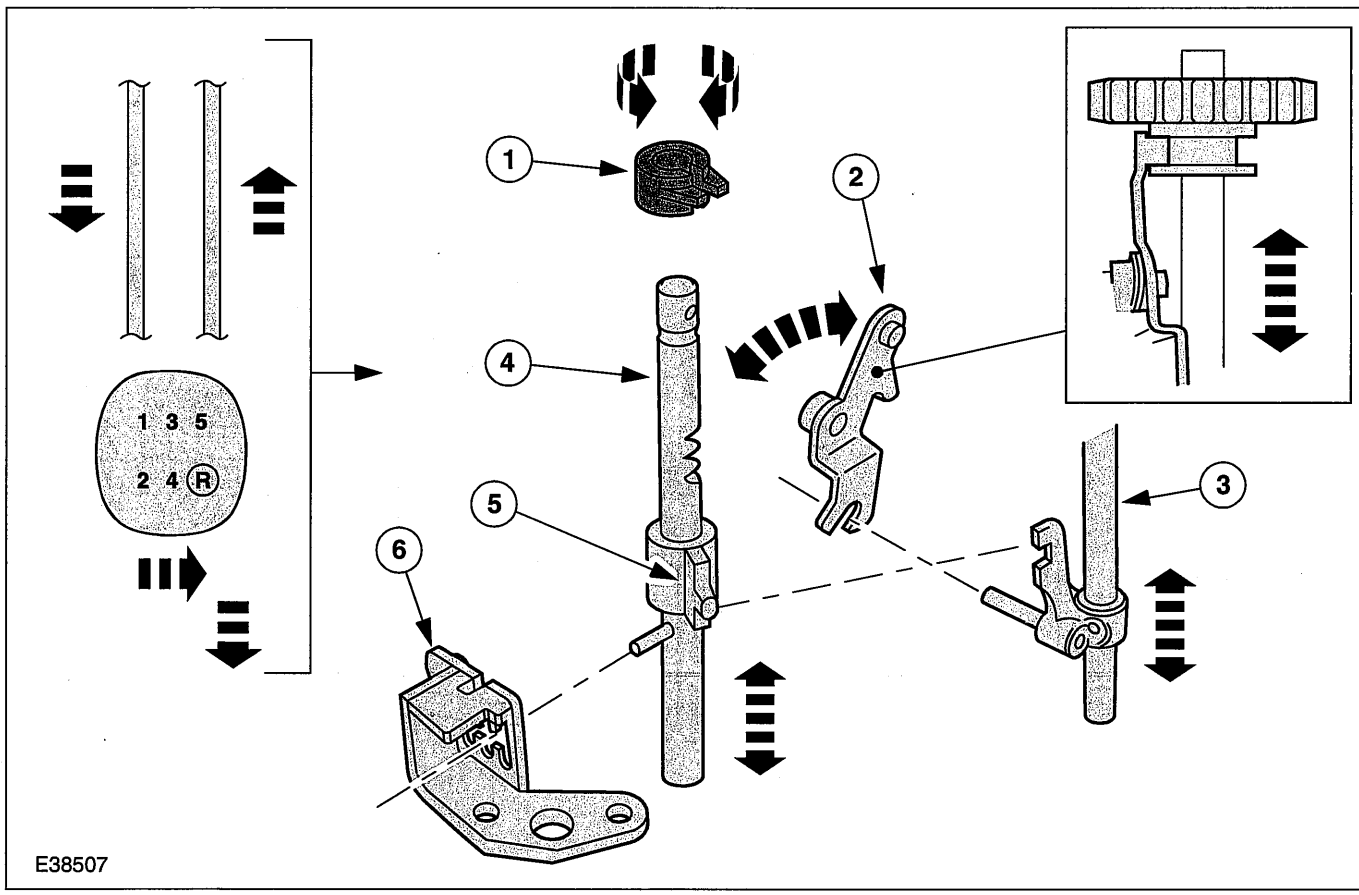


| Item | Description |
|---|---|
| 1 | Shift locking bush |
| 2 | Reverse gear selector shaft |
| 3 | Shift rod - 5th gear/reverse gear |
| 4 | Selector shaft |
| 5 | Selector boss |
| 6 | Selector gate |

In order to select reverse gear, the gearshift lever must be moved to the right over and past the reverse gear inhibit device. As this occurs the axial movement of the selector cable is transferred to the selector shaft which can turn in its bearing.

When shifting into reverse gear, the gearshift lever is moved backwards. The selector boss engages in the 5th gear/reverse gear shift rod, which in turn engages through a pin in the reverse gear selector shaft.

During the select and shift process the selector shaft is guided through the selector gate by a pin.

The reverse gear idler is slid by the reverse gear selector shaft and reverse gear is engaged.

At the same time the shift locking bush prevents access to other gear combinations.

## DESCRIPTION AND OPERATION

### Power transmission in the individual gears

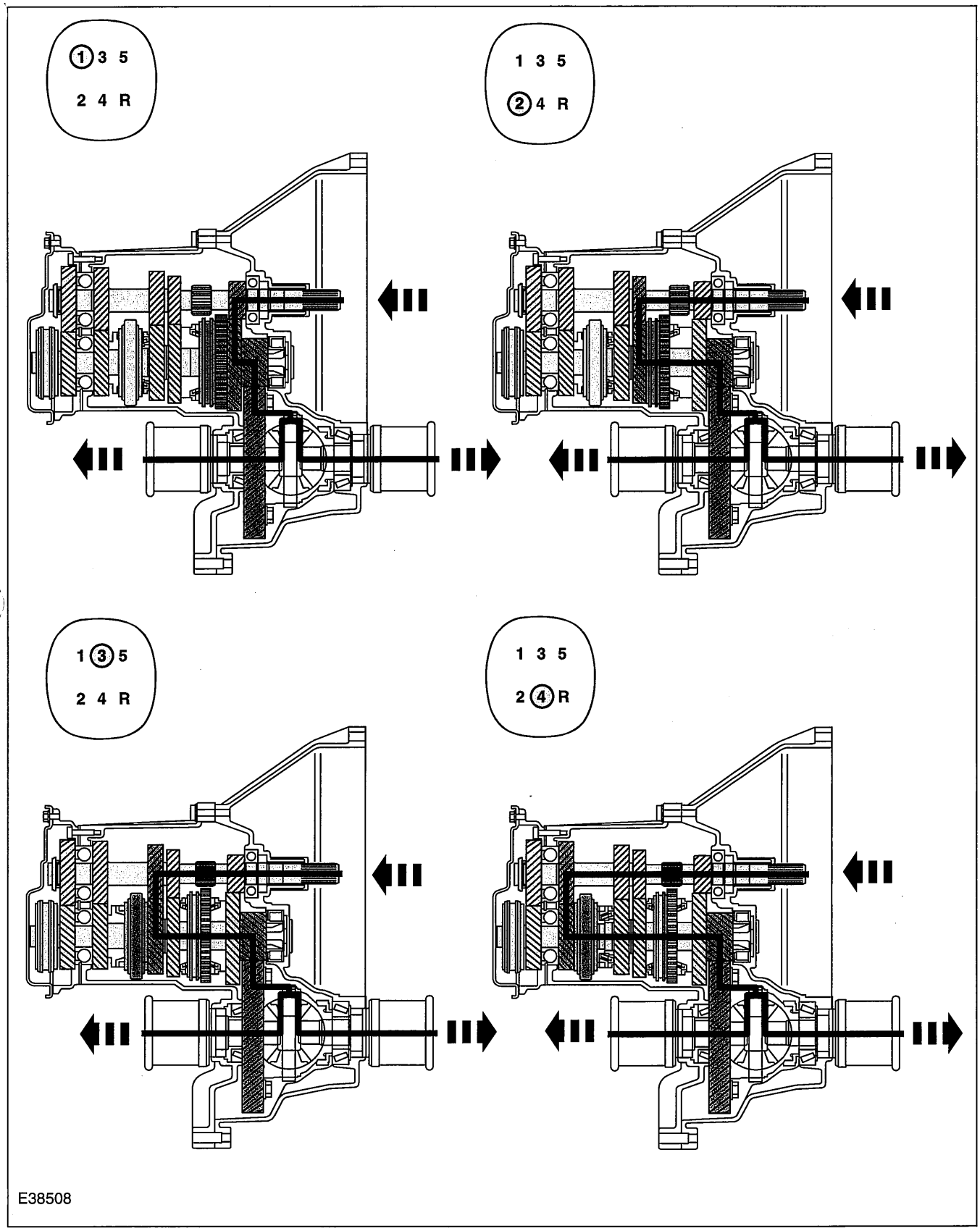

## DESCRIPTION AND OPERATION

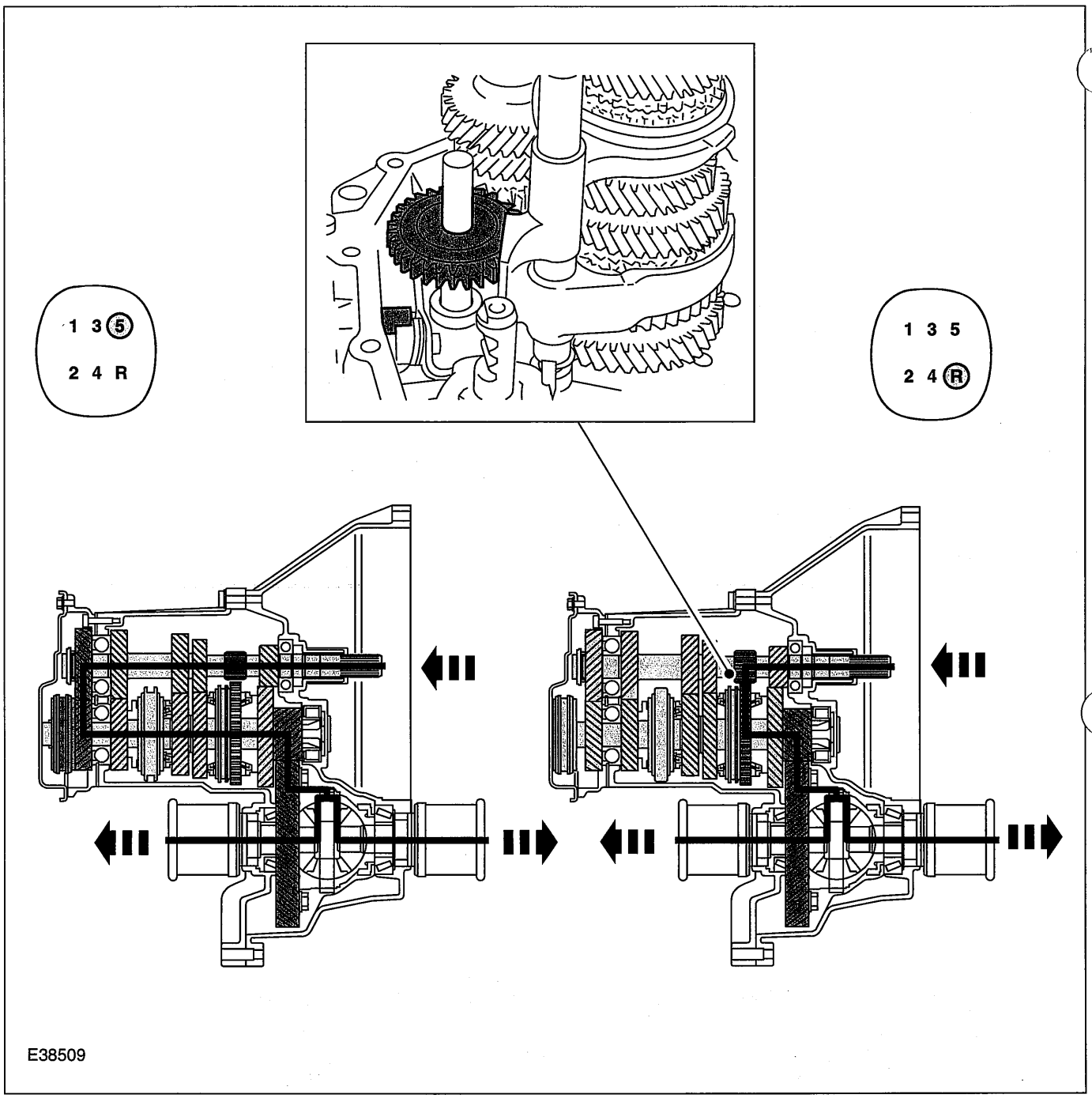

## DIAGNOSIS AND TESTING

# Manual Transaxle

REFER to: Manual Transaxle and Clutch (308-00 Manual Transmission/Transaxle and Clutch - General Information, Diagnosis and Testing).

## GENERAL PROCEDURES

# Bearing Check

1. **NOTE:Establish the cause of the damage and resolve it.**

   **Check whether the bearing cage is damaged at the top, side or at the openings is damaged because of the unprofessional use of a special tool or of the wrong tool.**

   - Install a new bearing if necessary.

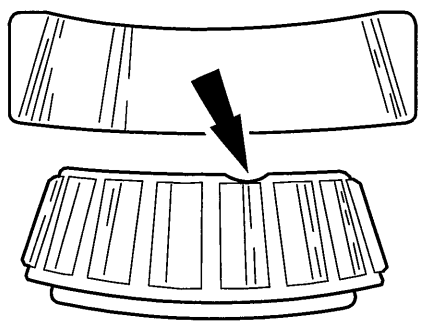

ELV1601171

2. **Check whether the ends of the taper rollers are discoloured as a result of inadequate lubrication or overheating, possibly through excessive pre-load.**
   - Install a new bearing and new seals if necessary.
   - Check the bearing is correctly lubricated.

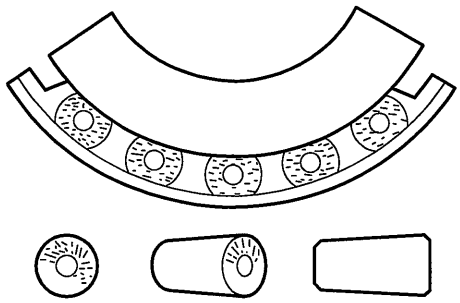

ELV1601172

3. **Check whether the ends of the taper rollers are worn away due to incorrect installation, excessive pre-load or faulty bearing seating.**
   - Install a new bearing and new seals if necessary.
   - Check the bearing is correctly lubricated.

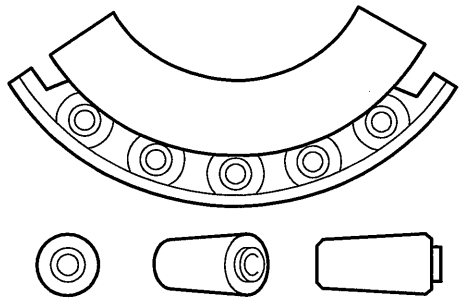

ELV1601173

4. **Check whether the bearing surfaces are grey or grey/black with deposits between the rollers.**
   - Install a new bearing and new seals if necessary.
   - Check the bearing is correctly lubricated.

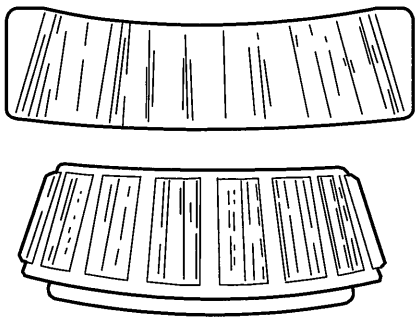

ELV1601174

5. **Check whether the bearing ring surfaces are grooved caused by static impact.**
   - Install a new bearing if its surface is rough, or if it is noisy.

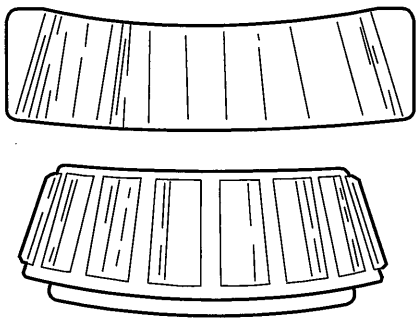

ELV1601175

## GENERAL PROCEDURES

6. **NOTE:Overheating can cause loss of surface hardness.**

   **Check for a dark blue colour caused by overheating (yellow or brown is normal) due to excessive pre-load or inadequate lubrication.**

   - Install a new bearing, new seals and check other components as necessary.

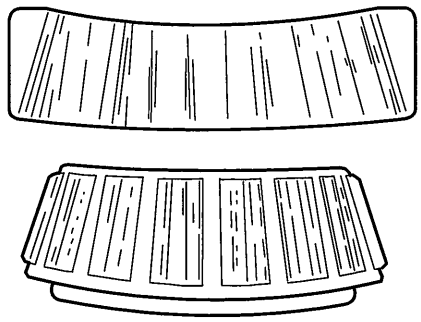

ELV1601174

7. **Check the surfaces for abrasion due to metal fatigue.**

   - Install a new bearing and clean all other affected components as necessary.

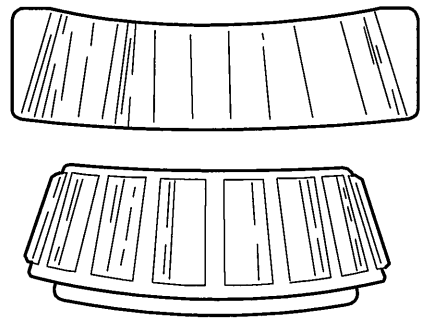

ELV1601175

## IN-VEHICLE REPAIR

# Halfshaft Seal LH(14 303 0)

**Special Tool(s)**

| | |
|---|---|
| 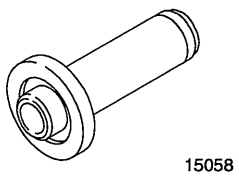 15058 | Installer, Drive Pinion Seal 205-115 (15-058) |
| 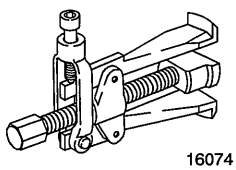 16074 | Remover, Halfshaft Seal 308-208 (16-074) |

| Materials | |
|---|---|
| **Name** | **Specification** |
| Manual transmission fluid | WSD-M2C200-C |

## Removal

1. **Remove the left-hand halfshaft.**

   **For additional information, refer to: Front Halfshaft LH (205-04 Front Drive Halfshafts, Removal and Installation).**

2. **Using the special tool, remove the halfshaft seal.**
   - Discard the seal.

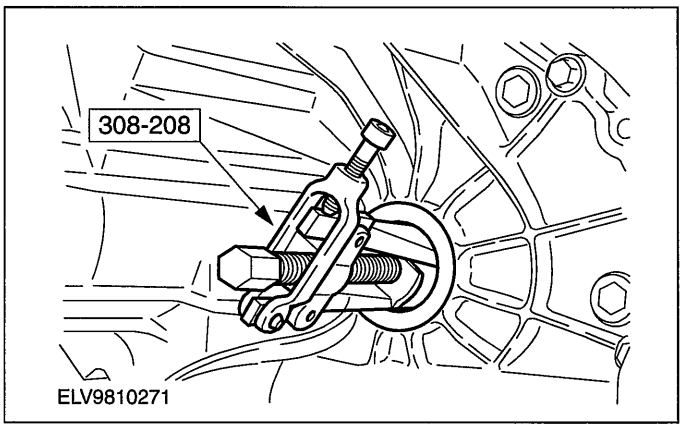


## Installation

1. **Using the special tool, install the halfshaft seal.**

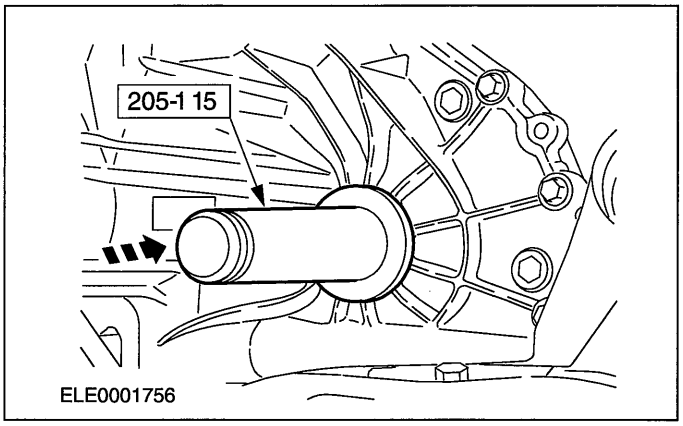


2. **Install the left-hand halfshaft.**

   **For additional information, refer to: Front Halfshaft LH (205-04 Front Drive Halfshafts, Removal and Installation).**

3. **With the vehicle on a level surface, fill the transaxle with transmission fluid until the fluid level is just below the bottom of the filler hole.**

## IN-VEHICLE REPAIR

# Halfshaft Seal RH(14 304 0)

### Special Tool(s)

| | |
|---|---|
| 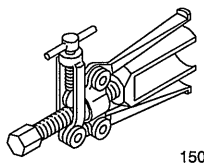 15048 | Remover, Drive Pinion Seal 205-078 (15-048) |
| 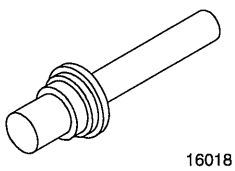 16018 | Installer, Halfshaft Seal 308-039 (16-018) |

| Materials | |
|---|---|
| **Name** | **Specification** |
| Manual transmission fluid | WSD-M2C200-C |

## Removal

1. **Remove the right-hand halfshaft.**

   **For additional information, refer to: Front Halfshaft RH (205-04 Front Drive Halfshafts, Removal and Installation).**

2. **Using the special tool, remove the halfshaft seal.**
   - Discard the seal.

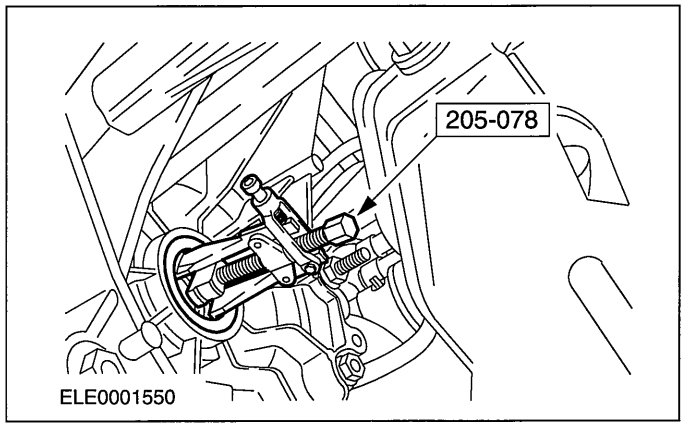


## Installation

1. **Using the special tool, install the halfshaft seal.**

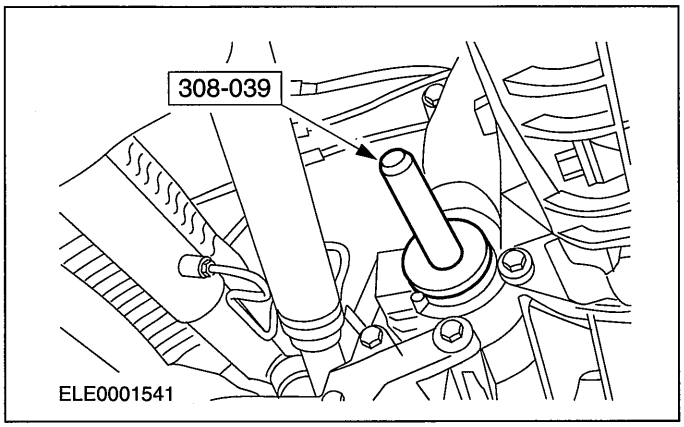


2. **Install the right-hand halfshaft.**

   **For additional information, refer to: Front Halfshaft RH (205-04 Front Drive Halfshafts, Removal and Installation).**

3. **With the vehicle on a level surface, fill the transaxle with transmission fluid until the fluid level is just below the bottom of the filler hole.**

## IN-VEHICLE REPAIR

# Vehicle Speed Sensor (VSS)(33 654 0)

## Removal

1. **Raise and support the vehicle. For additional information, refer to: (100-02 )**

   **Jacking (Description and Operation), Lifting (Description and Operation).**

2. **Disconnect the vehicle speed sensor (VSS) electrical connector.**

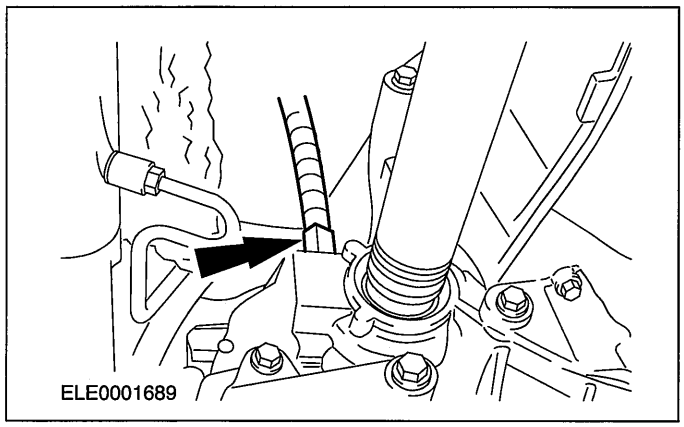


3. **Remove the VSS.**
   1. Remove the retaining pin.
   2. Remove the VSS.

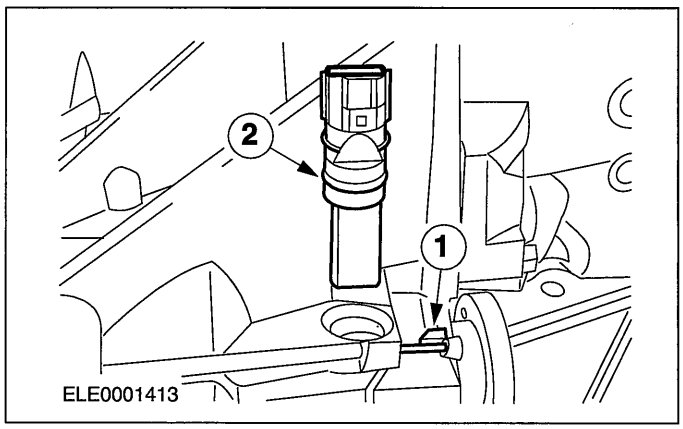


## Installation

1. **Install VSS.**
   1. Insert the VSS.
   2. Insert the retaining pin.

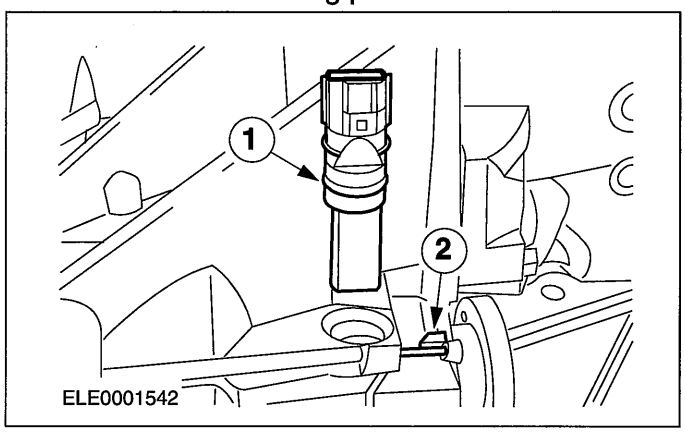


2. **Install VSS connector.**

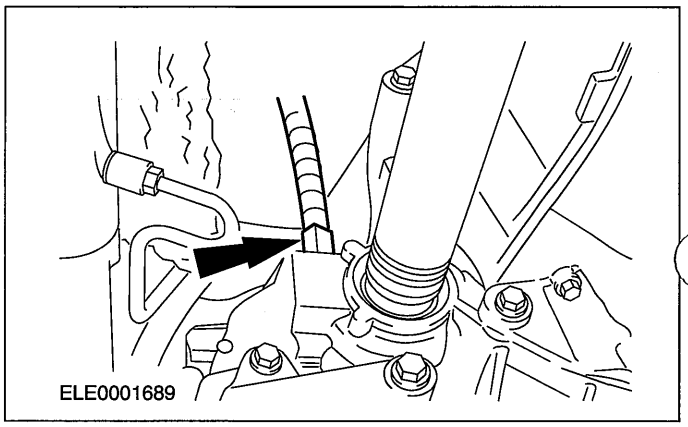


3. **Lower the vehicle.**

## REMOVAL

# Transaxle — 1.25L Duratec-16V (Sigma)/1.4L Duratec-16V (Sigma)/1.6L Duratec-16V (Sigma)(16 114 0)

### Special Tool(s)

| | |
|---|---|
| 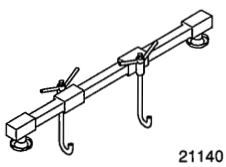 21140 | Support Bar, Engine 303-290A (21-140A) |
| 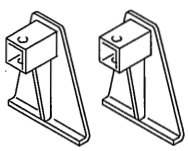 2114001 | Adapter for 303-290A 303-290-01 (21-140-01) |
| 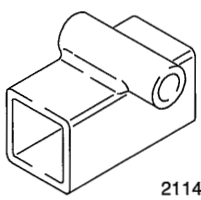 2114002 | Adapter for 303-290A 303-290-02 (21-140-02) |
| 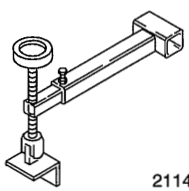 2114003 | Adapter for 303-290A 303-290-03A (21-140-03A) |
| 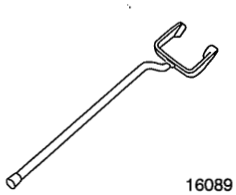 16089 | Remover, Halfshaft 308-256 (16-089) |

### General Equipment

| |
|---|
| Retaining strap |
| Transmission jack |

## Removal

All vehicles

1. **Remove the air cleaner.**

   **For additional information, refer to: Air Cleaner - 1.25L Duratec-16V (Sigma)/1.4L Duratec-16V (Sigma)/1.6L Duratec-16V (Sigma) (303-12 Intake Air Distribution and Filtering, Removal and Installation).**

2. **Remove the battery tray.**

   **For additional information, refer to: Battery Tray (414-01 Battery, Mounting and Cables, Removal and Installation).**

3. **Disconnect the powertrain control module (PCM) electrical connector.**

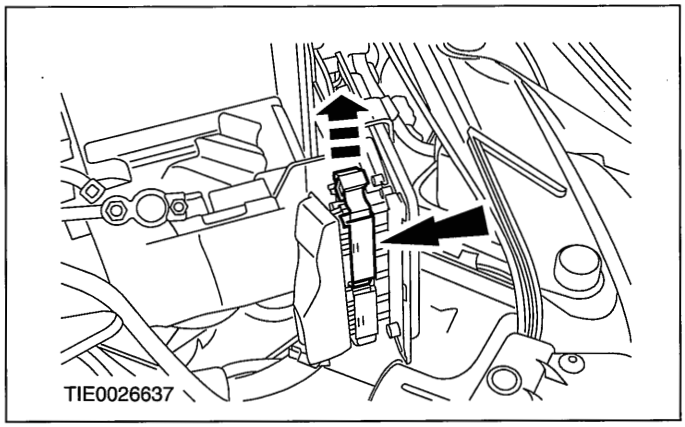


4. **Loosen the strut and spring assembly top mount nuts by three turns on both sides.**

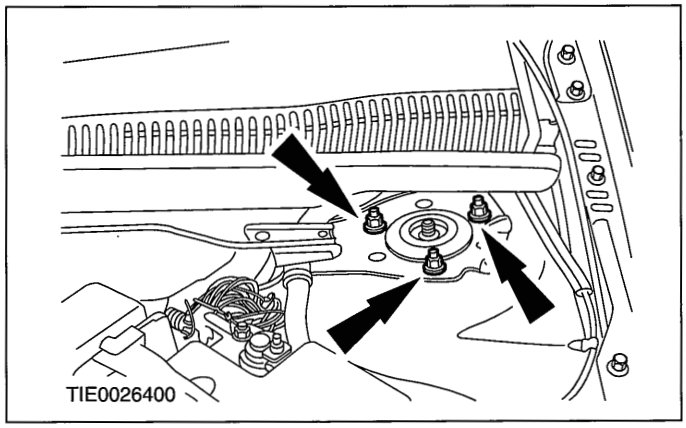

## REMOVAL

5. **Install the special tools.**

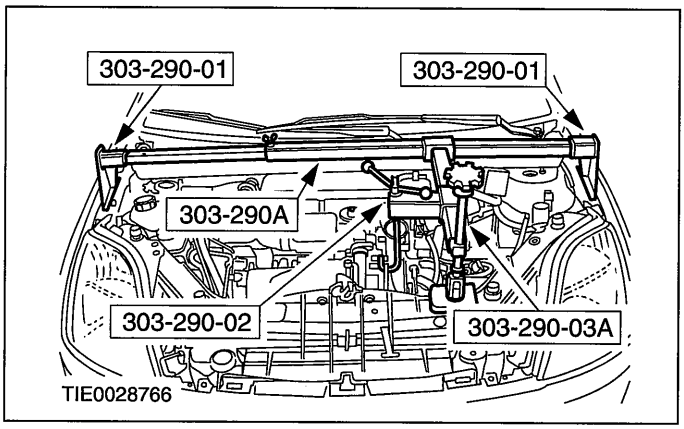


6. **Remove the transaxle upper retaining bolts.**
   - Detach the engine wiring harness bracket from the transaxle.

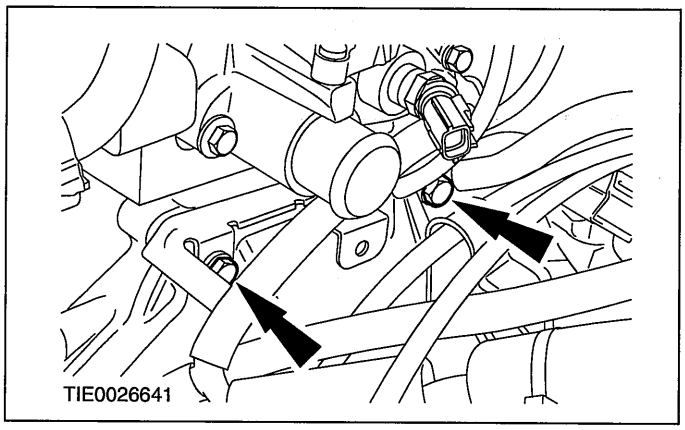


7. **Remove the front wheels and tires.**

   **For additional information, refer to: Wheel and Tire (204-04 Wheels and Tires, Removal and Installation).**

8. **Remove the starter motor.**
   - Detach the starter motor electrical connector from the starter motor.

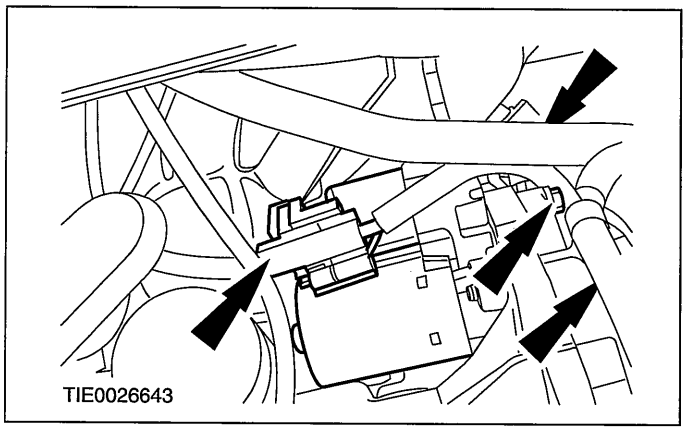


9. **Disconnect the reversing lamp switch electrical connector.**

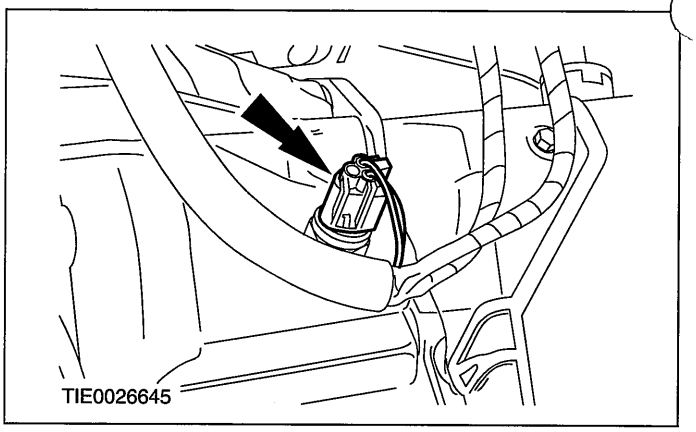


Vehicles with automated gearshift

10. **Remove the gearshift actuator cover.**

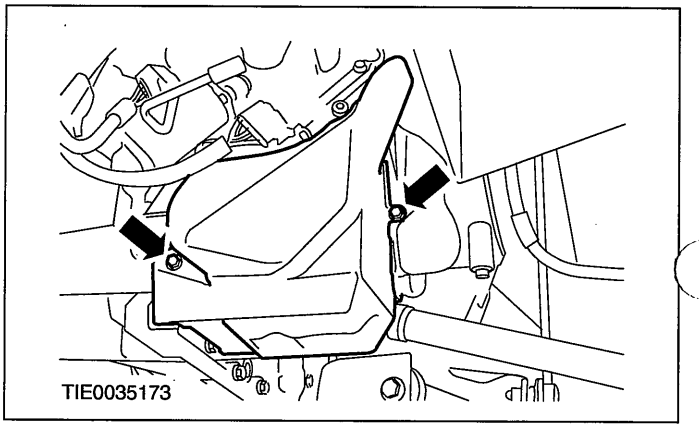


11. **Disconnect the gearshift actuator electrical connector (colored black).**

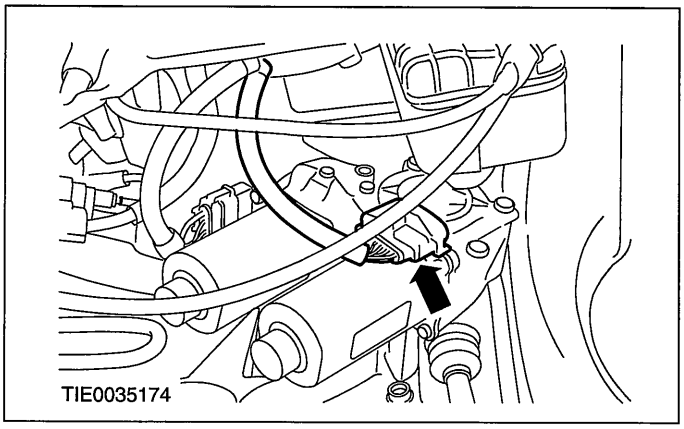

## REMOVAL

**12. Disconnect the gearshift actuator electrical connector (colored grey).**

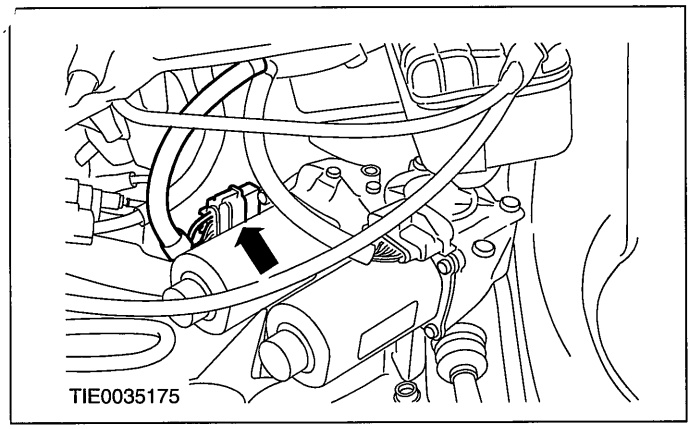


**13. ⚠CAUTION:If brake fluid is spilt on the paintwork, the affected area must be immediately washed down with cold water.**

**Disconnect the clutch slave cylinder supply line.**

- Remove the spring clip.

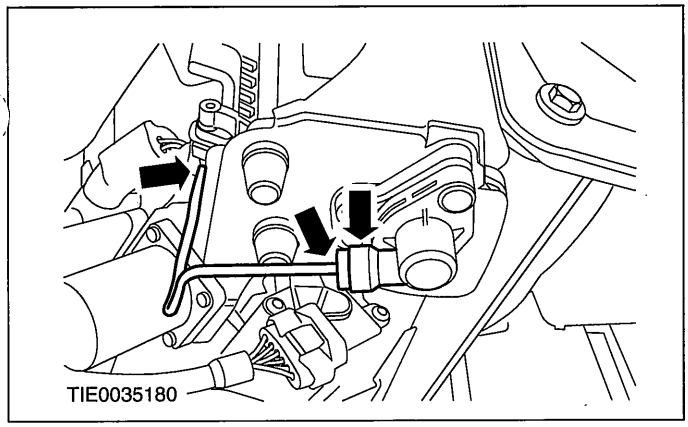


Vehicles without automated gearshift

**14. Remove the gearshift cables cover.**

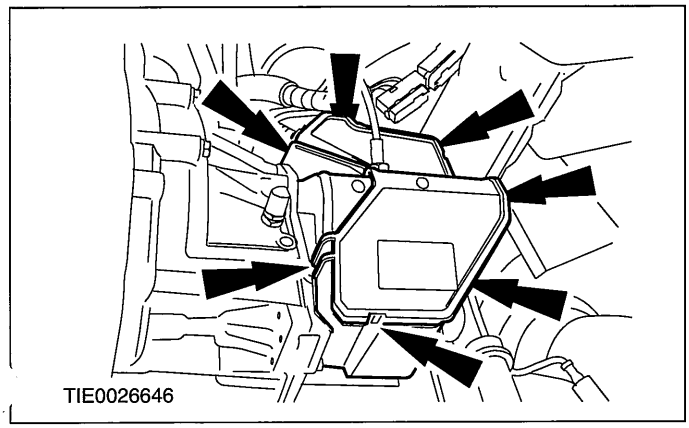


**15. Detach the gearshift cables from the transaxle.**

1. Detach the gearshift cables and the selector cable from the selector levers.
2. Turn the abutment sleeve clockwise and detach the cables from the bracket.

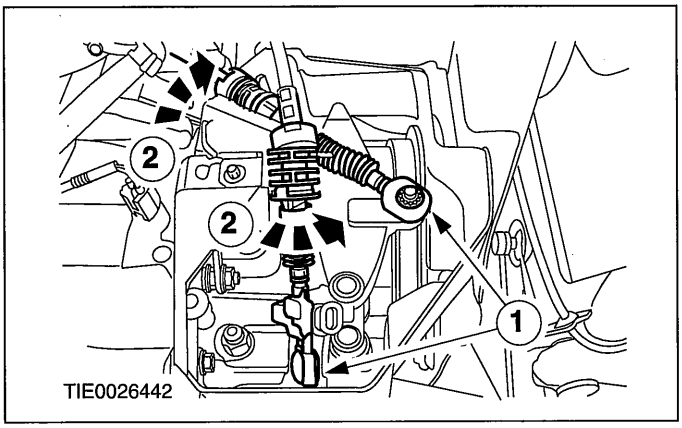


All vehicles

**16. Remove the accessory drive belt cover.**

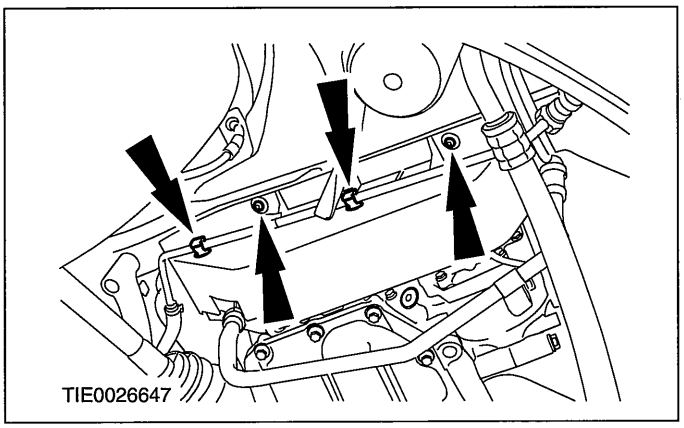


**17. Remove the engine support insulator.**

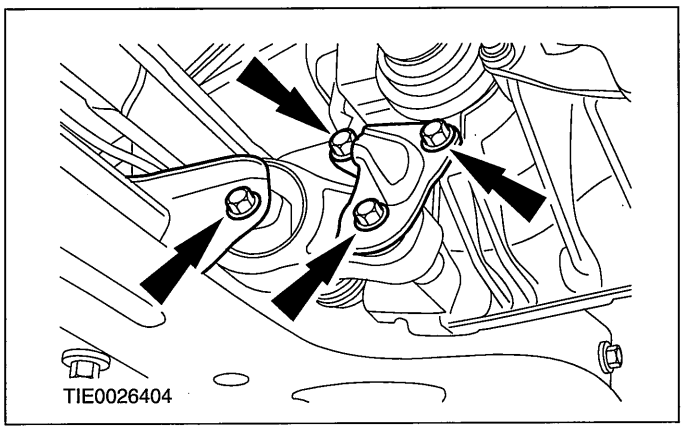


**18. ⚠CAUTION:Protect the ball joint seal using a soft cloth to prevent damage.**

**Detach the lower arm from the wheel knuckle on both sides.**

## REMOVAL

- Remove the heat shield.

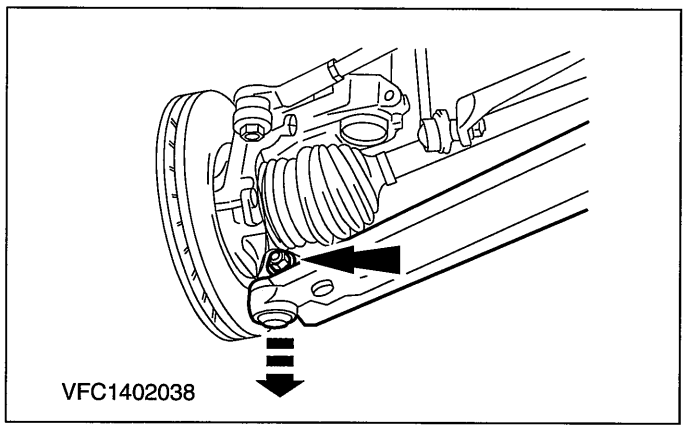


19. **CAUTIONS:**

    **⚠Support the halfshaft. The inner joint must not be bent more than 18 degrees. The outer joint must not be bent more than 45 degrees.**

    **⚠Do not damage the halfshaft oil seal.**

**NOTE:**Plug the transaxle to prevent oil loss or dirt ingress.

**Using the special tool, detach the left-hand halfshaft from the transaxle and secure it to one side.**

- Discard the snap ring.
- Allow the oil to drain into a suitable container.

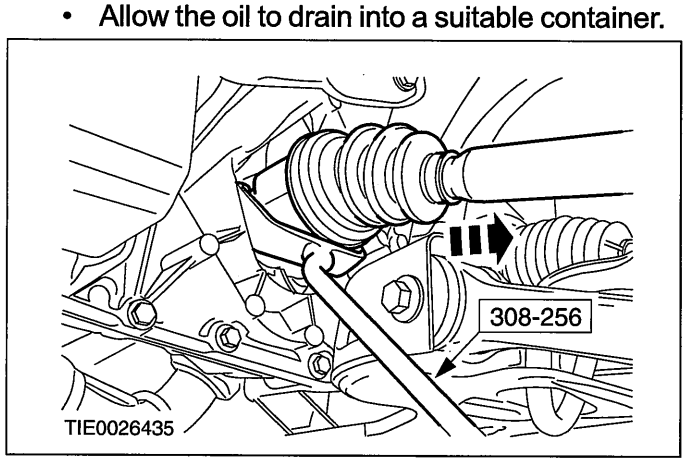


20. **NOTE:Discard the intermediate shaft center bearing cap and locknuts.**

    **Remove the intermediate shaft center bearing cap.**

    1. Remove the locknuts.
    2. Detach the heat shield.

3. Remove the center bearing cap.

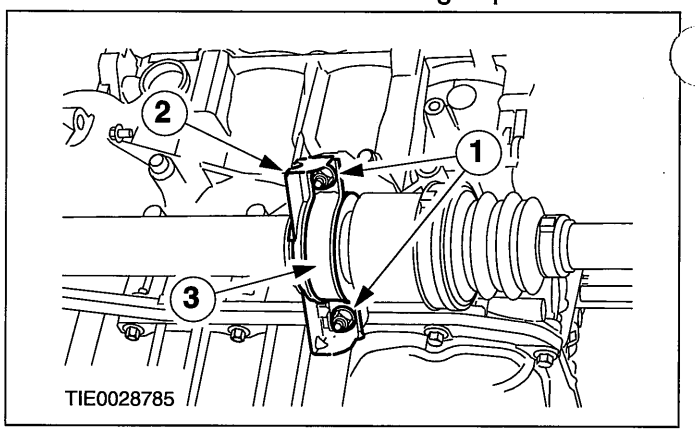


21. **CAUTIONS:**

    **⚠Support the halfshaft. The inner joint must not be bent more than 18 degrees. The outer joint must not be bent more than 45 degrees.**

    **⚠Do not damage the halfshaft oil seal.**

**NOTE:**Plug the transaxle to prevent oil loss or dirt ingress.

**Detach the halfshaft and the intermediate shaft from the transaxle and secure it to one side.**

- Allow the oil to drain into a suitable container.

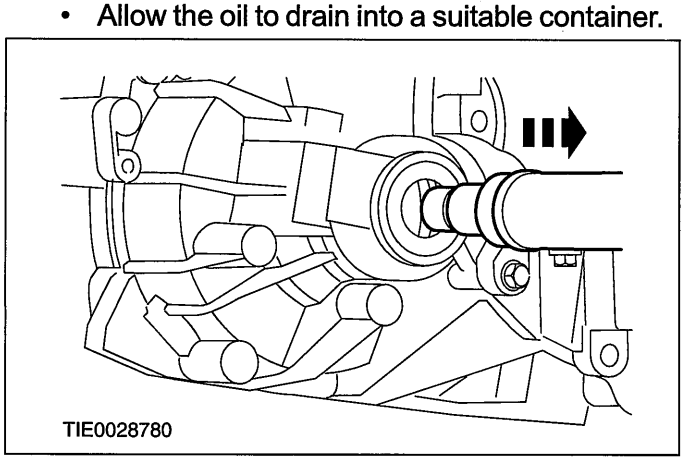


22. **Lower the vehicle.**

## REMOVAL

**23. Detach the coolant expansion tank from the bracket and position it to one side.**

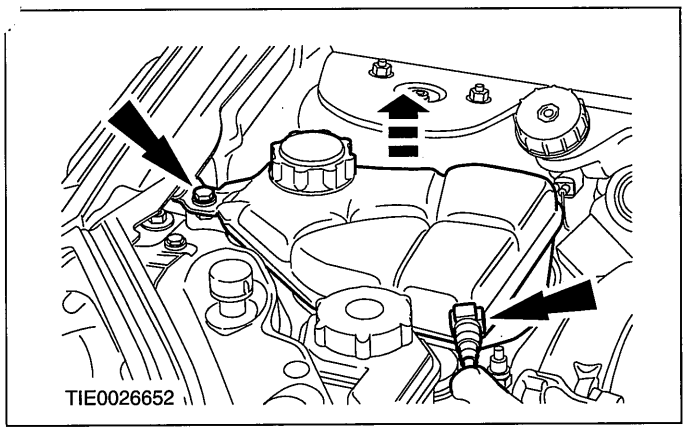


**24. ⚠CAUTION:If brake fluid is spilt on the paintwork, the affected area must be immediately washed down with cold water.**

**Disconnect the clutch slave cylinder supply line.**

- Remove the spring clip.

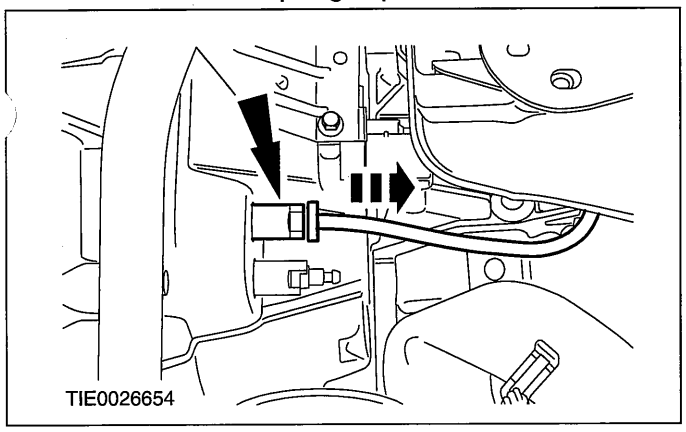


**25. Disconnect the vehicle speed sensor (VSS) electrical connector (if equipped).**

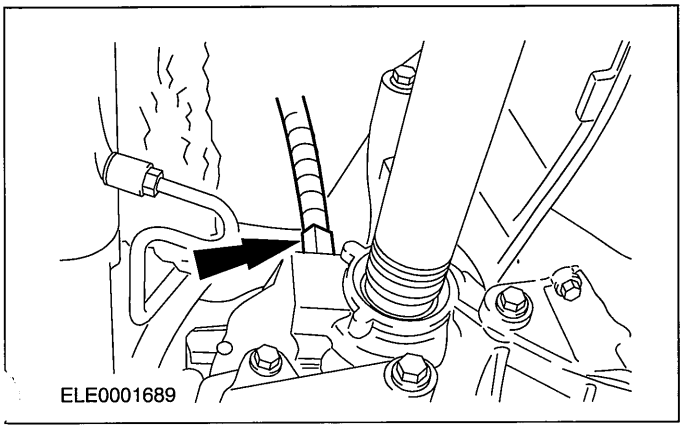


**26. Detach the exhaust flexible pipe from the catalytic converter.**

- Discard the gasket.

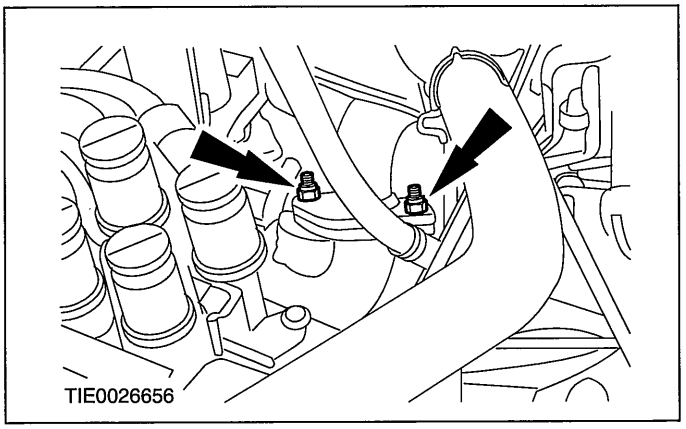


**27. Remove the battery tray support bracket.**

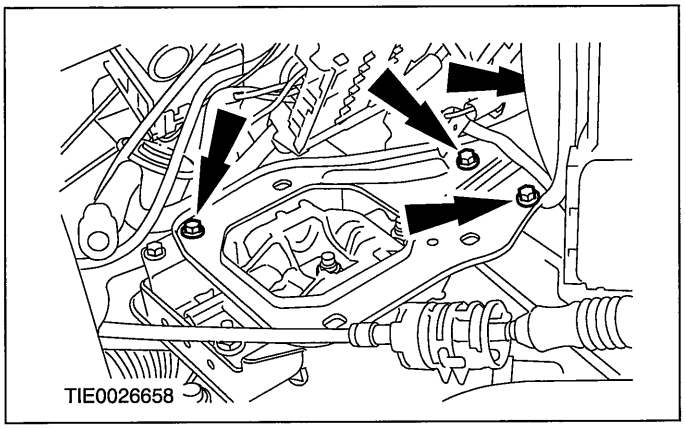


**28. Remove the engine and transaxle rear mount.**

- Discard the nuts.

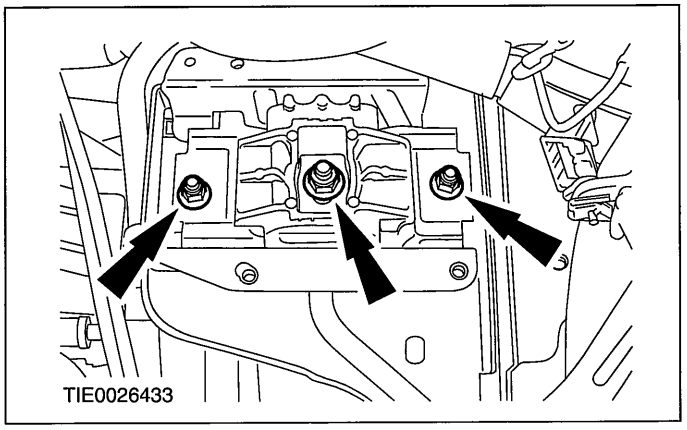

## REMOVAL

29. Using the special tools, lower the engine and transaxle assembly.

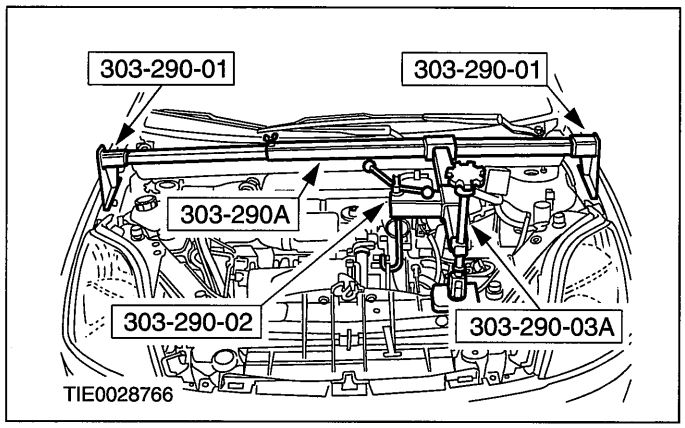


30. Remove the engine and transaxle rear mount retaining bracket.

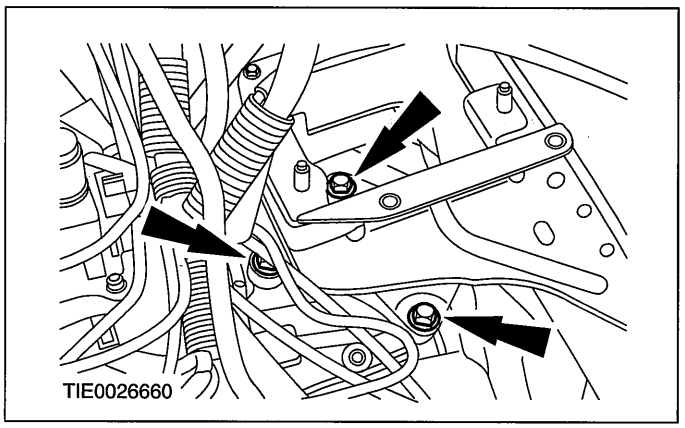


31. Remove the transaxle lower retaining bolts.

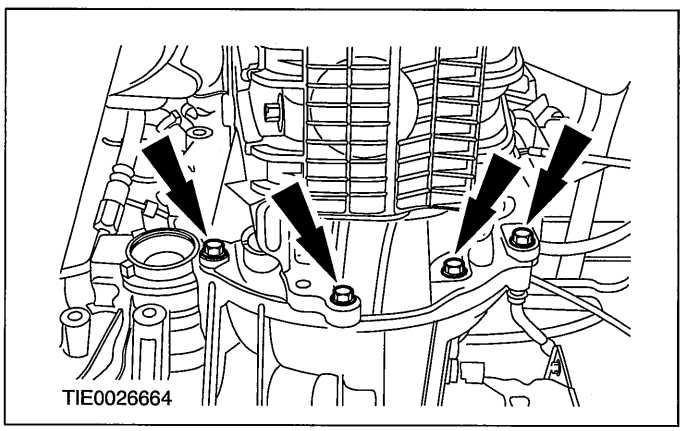


32. NOTE:Secure the transaxle with a retaining strap on the transmission jack.

Using a suitable transmission jack, support the transaxle.

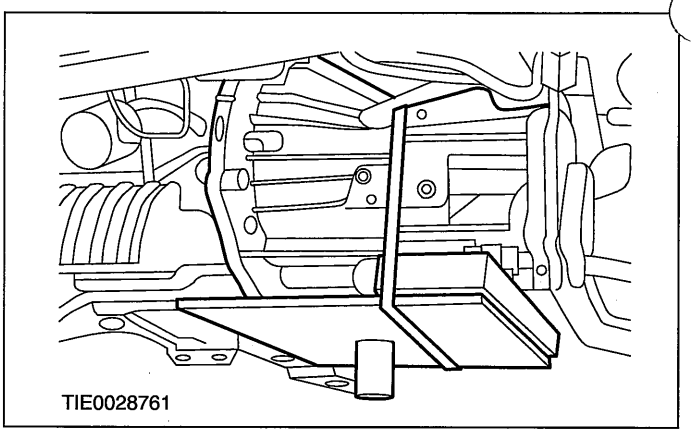


33. Remove the transaxle right-hand retaining bolts.

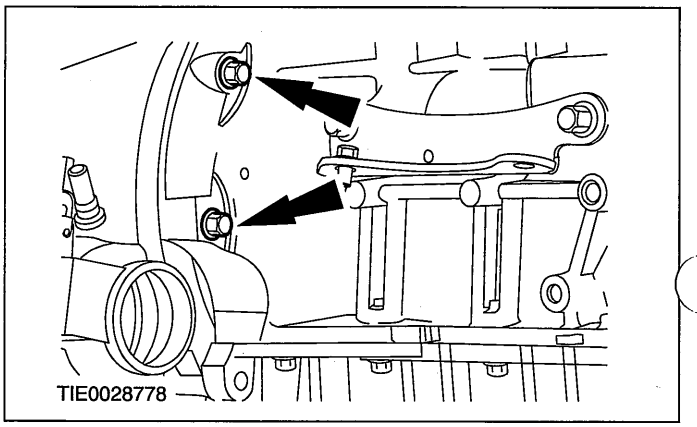


34. Remove the transaxle left-hand retaining bolt.

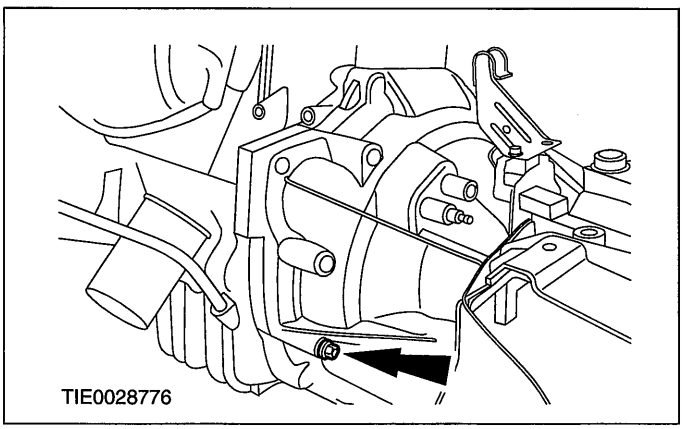

## REMOVAL

35. Using a suitable transmission jack, remove the transaxle.

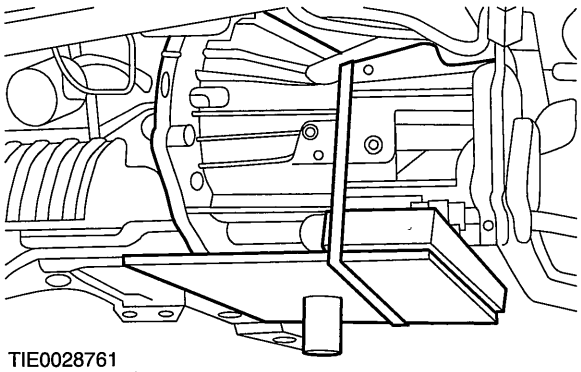

## REMOVAL

# Transaxle — 2.0L Duratec-HE (MI4)(16 114 0)

### Special Tool(s)

| | |
|---|---|
| 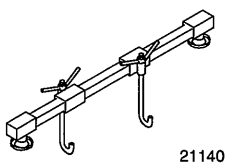 21140 | Support Bar, Engine 303-290A (21-140A) |
| 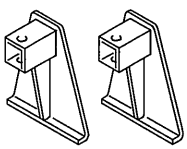 2114001 | Adapter for 303-290A 303-290-01 (21-140-01) |
| 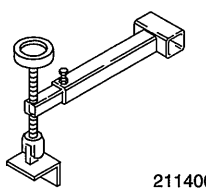 2114003 | Adapter for 303-290A 303-290-03A (21-140-03A) |
| 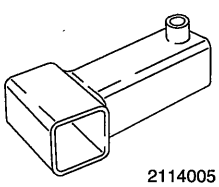 2114005 | Adapter for 303-290A 303-290-05A (21-140-05A) |
| 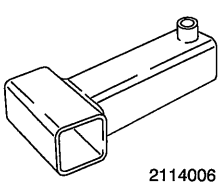 2114006 | Adapter for 303-290A 303-290-06 (21-140-06) |

### General Equipment

| |
|---|
| Retaining strap |
| Transmission jack |

## Removal

1. **Remove the air cleaner.**

   **For additional information, refer to: Air Cleaner - 2.0L Duratec-HE (MI4) (303-12 Intake Air Distribution and Filtering, Removal and Installation).**

2. **Remove the battery tray.**

   **For additional information, refer to: Battery Tray - 2.0L Duratec-HE (MI4) (414-01 Battery, Mounting and Cables, Removal and Installation).**

3. **Install the special tools.**

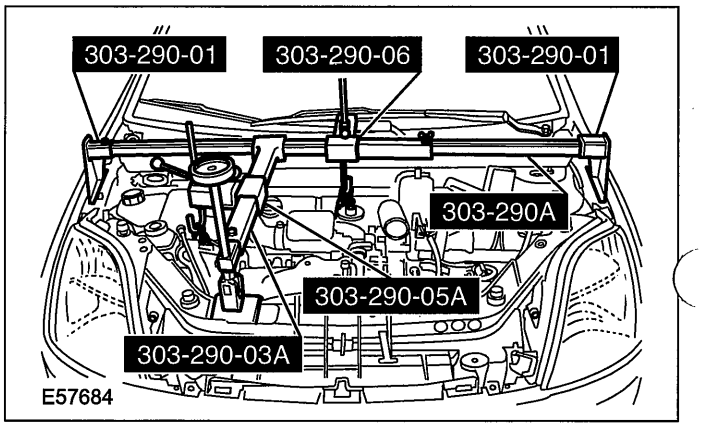


4. **Remove the engine wiring harness bracket.**

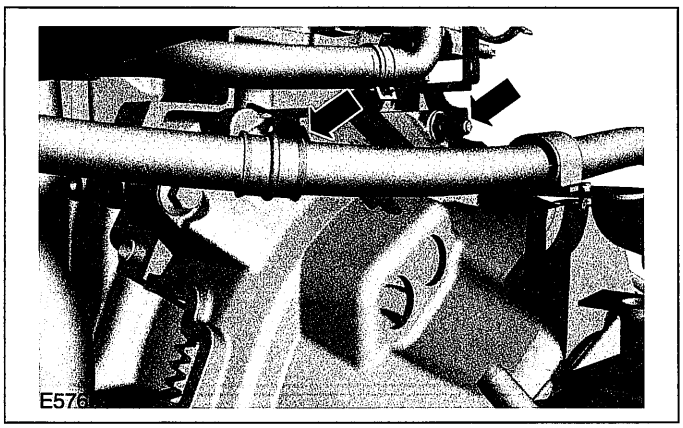

## REMOVAL

5. **Remove the transaxle upper retaining bolts.**

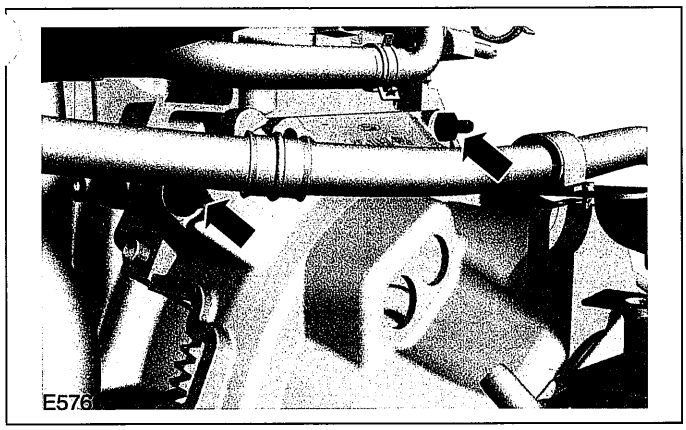


6. **Detach the power steering high-pressure line retaining bracket from the transaxle.**

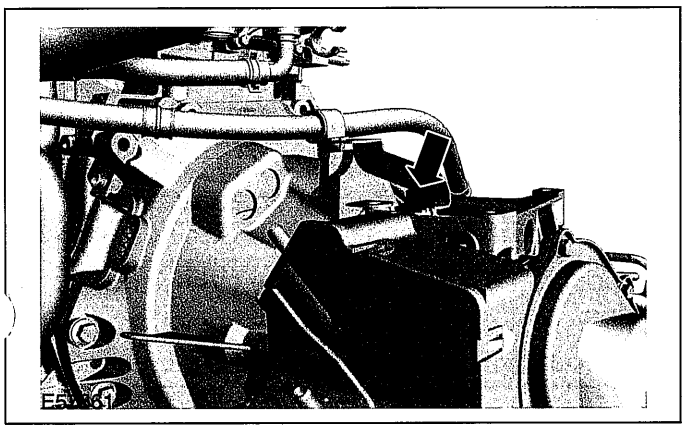

7. **Remove the front wheels and tires.**

   **For additional information, refer to: Wheel and Tire (204-04 Wheels and Tires, Removal and Installation).**

8. **Remove the wiring harness retaining bracket.**

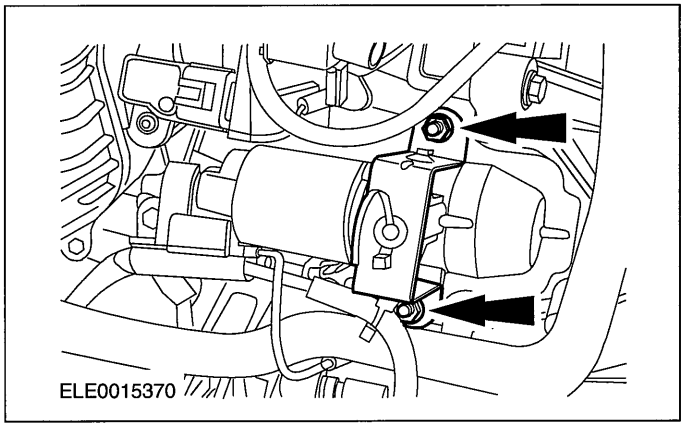


9. **Remove the starter motor.**

   - Detach the wiring harness from the retaining bracket.

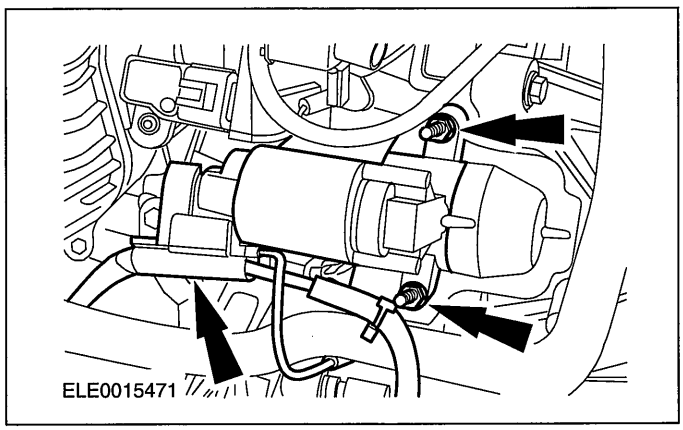


10. **Disconnect the reversing lamp switch electrical connector.**

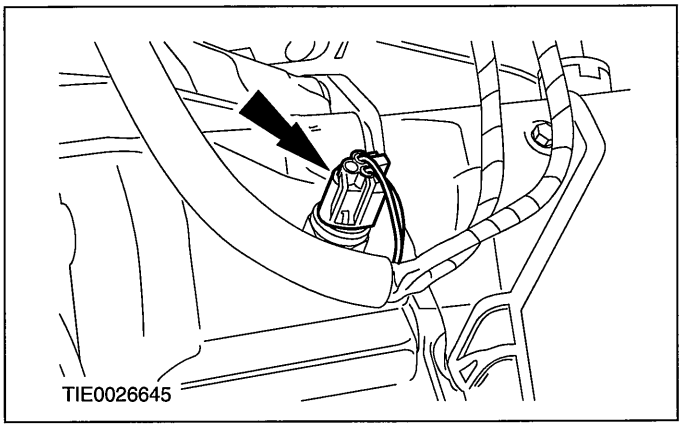


11. **Remove the gearshift cables cover.**

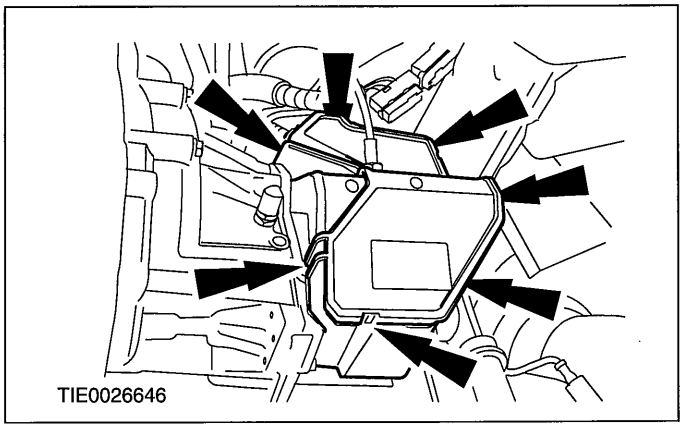


12. **Detach the gearshift cables from the transaxle.**

    1. Detach the gearshift cables and the selector cable from the selector levers.

## REMOVAL

2. Turn the abutment sleeve clockwise and detach the cables from the bracket.

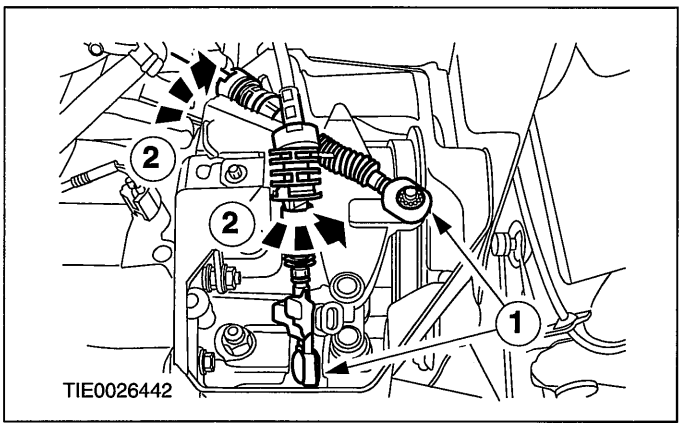


13. **Remove the accessory drive belt cover.**

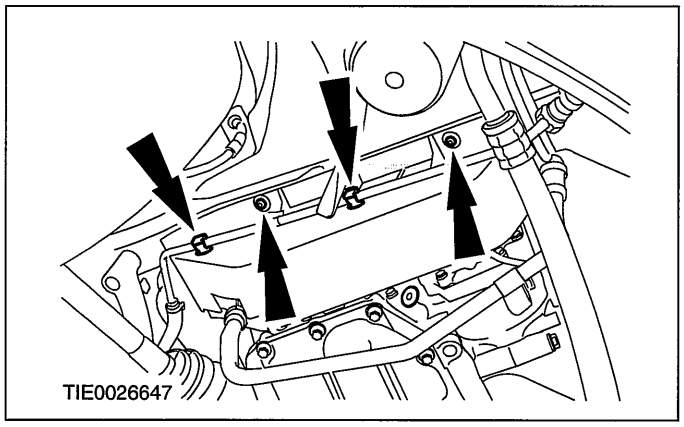


14. **Remove the engine support insulator.**

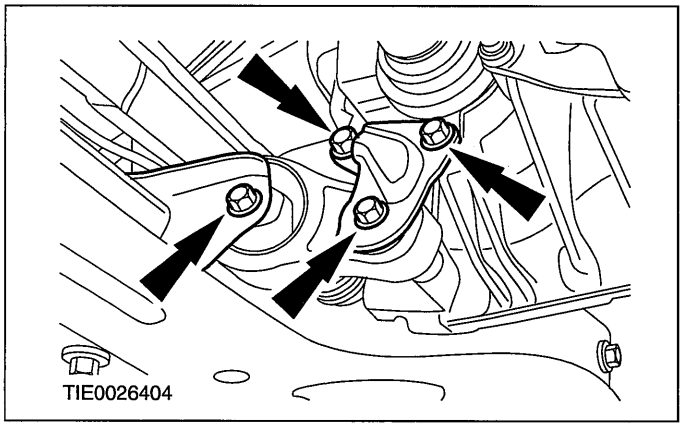


15. **Remove the left-hand halfshaft.**

    **For additional information, refer to: Front Halfshaft LH (205-04 Front Drive Halfshafts, Removal and Installation).**

16. **Remove the right-hand halfshaft.**

    **For additional information, refer to: Front Halfshaft RH (205-04 Front Drive Halfshafts, Removal and Installation).**

17. **⚠CAUTION:Over bending of the exhaust flexible pipe may cause damage resulting in failure.**

    **Support the exhaust flexible pipe with a suitable support wrap or suitable splint.**

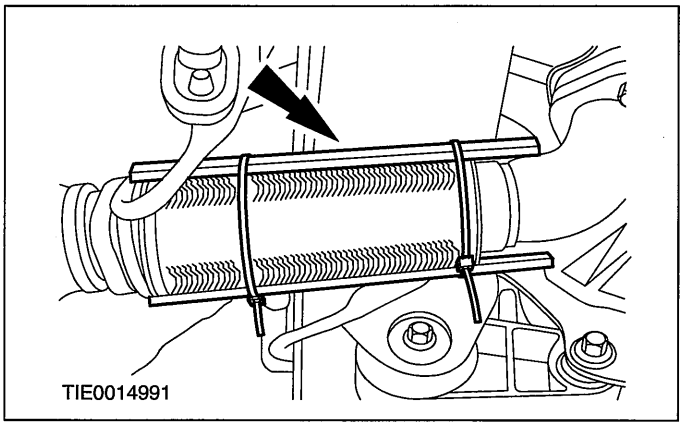


18. **Lower the vehicle.**

19. **⚠CAUTION:If brake fluid is spilt on the paintwork, the affected area must be immediately washed down with cold water.**

    **Disconnect the clutch slave cylinder supply line.**

    - Remove the spring clip.

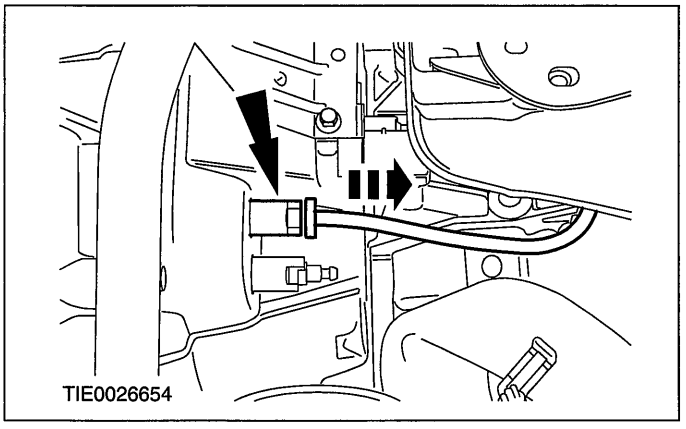


20. **Detach the exhaust flexible pipe from the catalytic converter.**

## REMOVAL

- Discard the gasket.

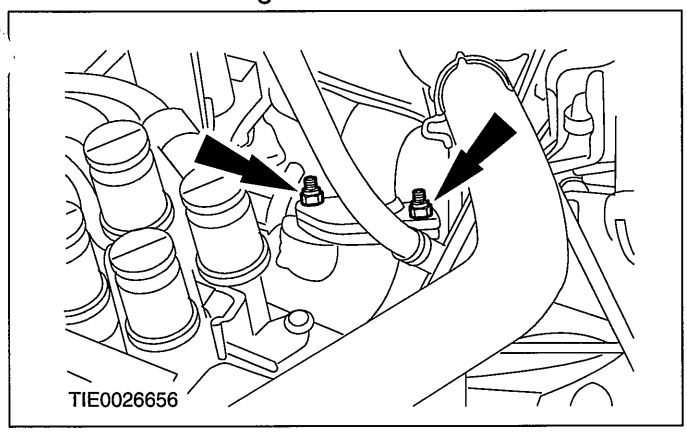


21. **Remove the battery tray support bracket.**

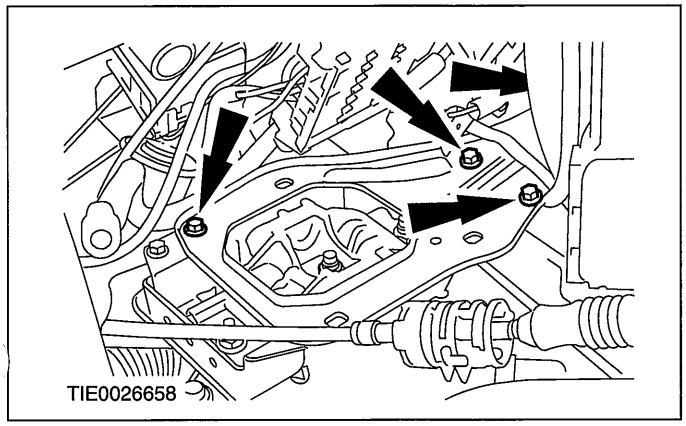


22. **Remove the engine and transaxle rear mount.**
    - Discard the nuts.

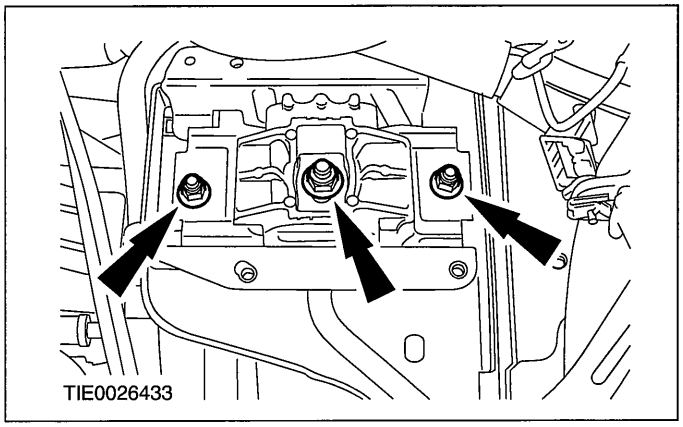


23. **Using the special tools, lower the engine and transaxle assembly.**

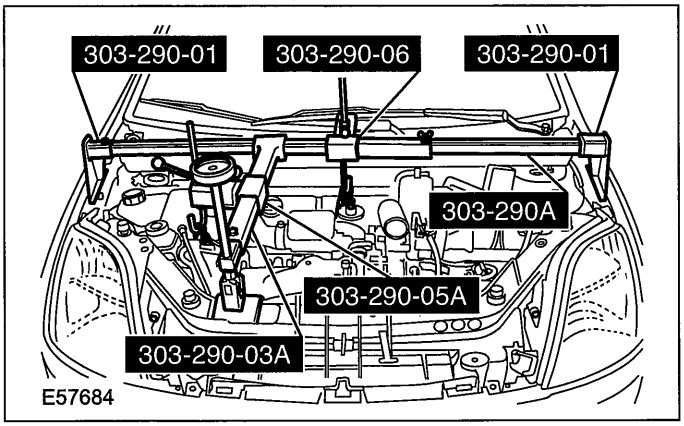


24. **Remove the engine and transaxle rear mount retaining bracket.**

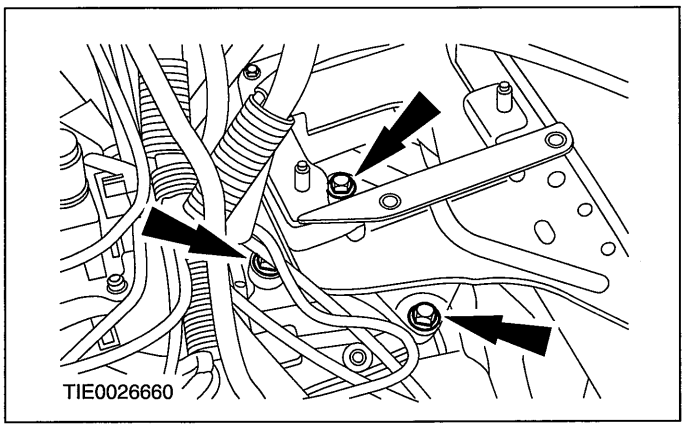


25. **Raise and support the vehicle. For additional information, refer to: (100-02 Jacking and Lifting)**

    **Jacking (Description and Operation), Lifting (Description and Operation).**

26. **Remove the transaxle lower retaining bolts.**

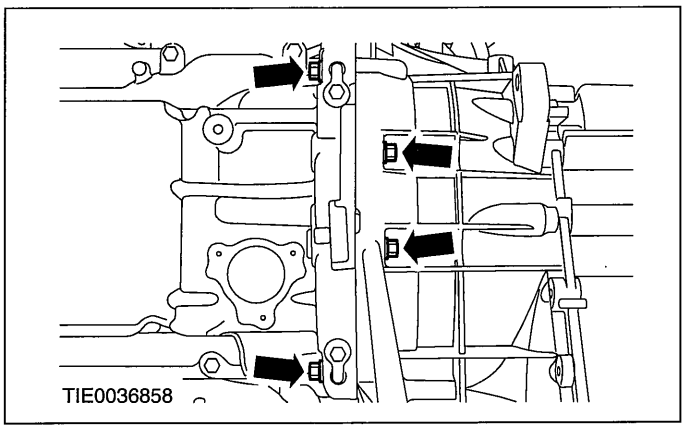


27. **NOTE:Secure the transaxle with a retaining strap on the transmission jack.**

## REMOVAL

**Using a suitable transmission jack, support the transaxle.**

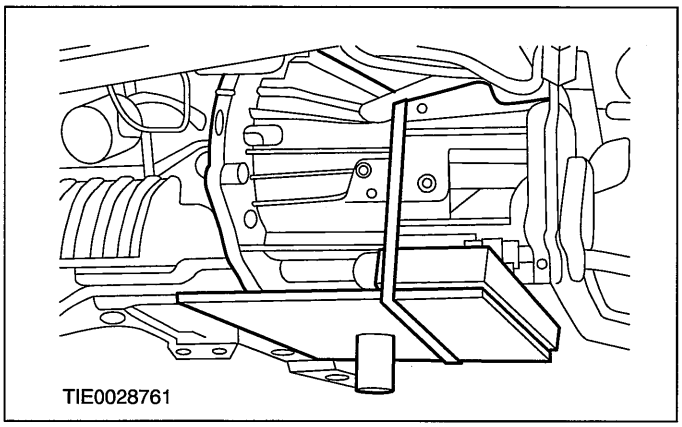


**28. Remove the transaxle right-hand retaining bolts.**

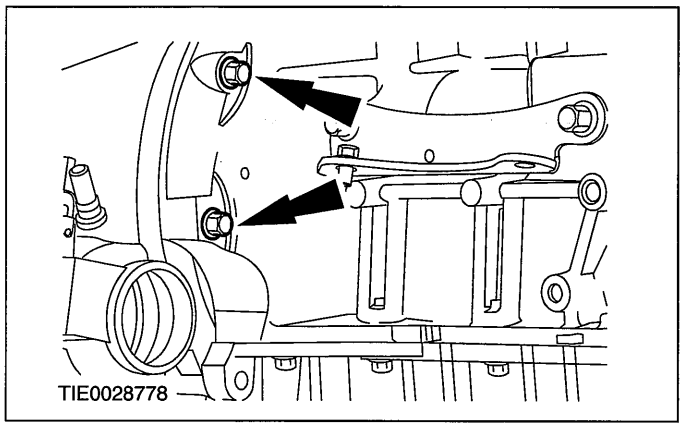


**29. Remove the transaxle left-hand retaining bolt.**

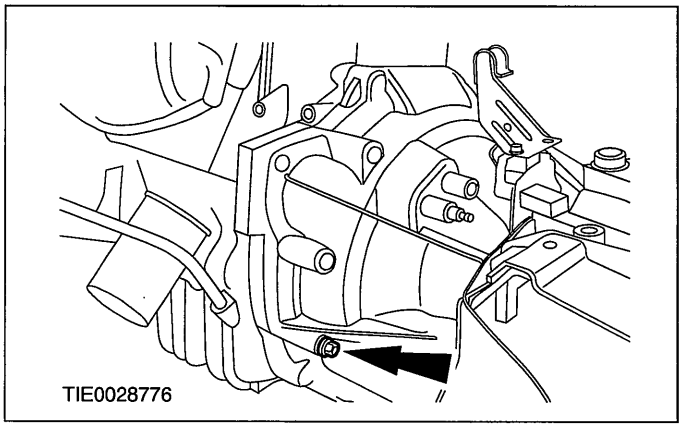


**30. Using a suitable transmission jack, remove the transaxle.**

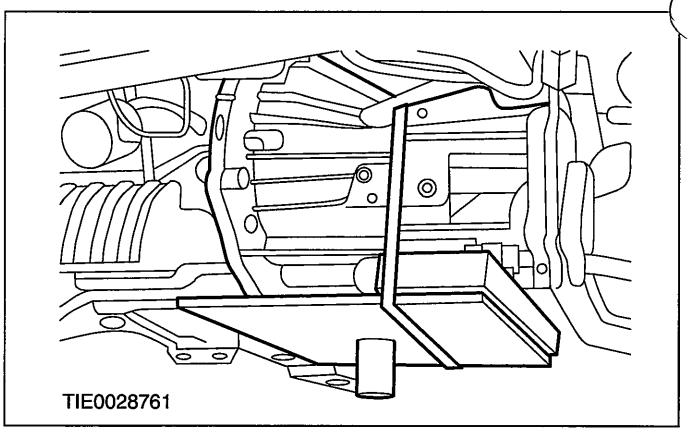

## DISASSEMBLY

# Transaxle(16 118 8)

### Special Tool(s)

| | |
|---|---|
| 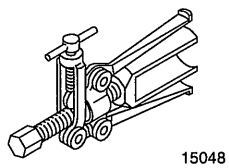 15048 | Remover, Drive Pinion Seal 205-078 (15-048) |
| 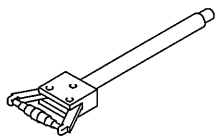 15074 | Remover, Differential Bearing Cone 205-176 (15-074) |
| 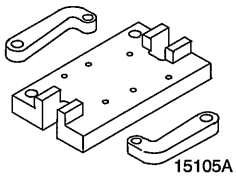 15105A | Mounting Bracket, Engine/Differential 205-329 (15-105A) |
| 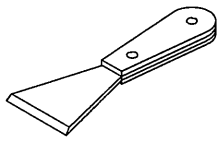 21179 | Separator, Oil Pan 303-428 (21-179) |
| 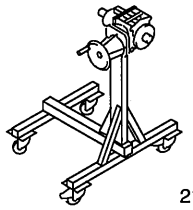 21187 | Mounting Stand 303-435 (21-187) |
| 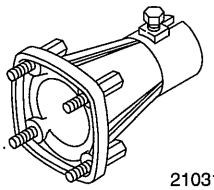 21031B | Mounting Bracket for 303-435 303-435-06 (21-031B) |

### Special Tool(s)

| | |
|---|---|
| 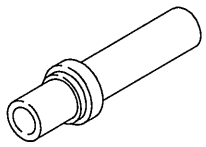 16015 | Installer, Extension Housing Bushing/Seal 308-045 (16-015) |
| 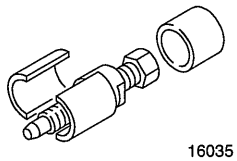 16035 | Remover, Input Shaft Fifth Gear 308-082 (16-035) |

### General Equipment

| |
|---|
| Blanking plugs |
| Drift |

### CAUTIONS:

⚠ **Use vise protectors.**

⚠ **Use a copper or plastic mallet to prevent damage.**

1. **Using the special tools, mount the transaxle on the mounting stand.**

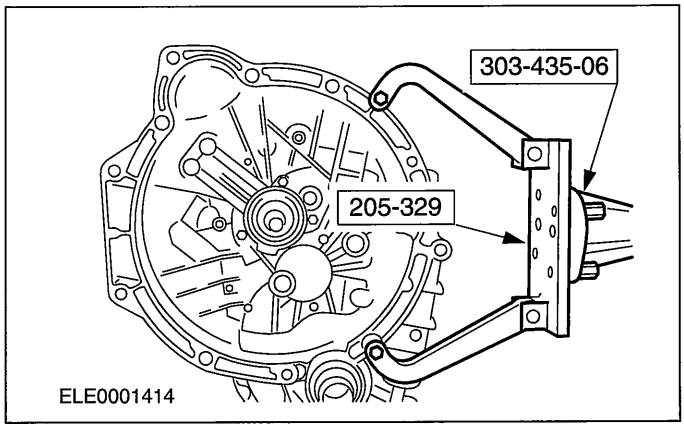


2. **Clean any grease and foreign material from the input shaft.**

## DISASSEMBLY

**3. Remove the clutch slave cylinder.**

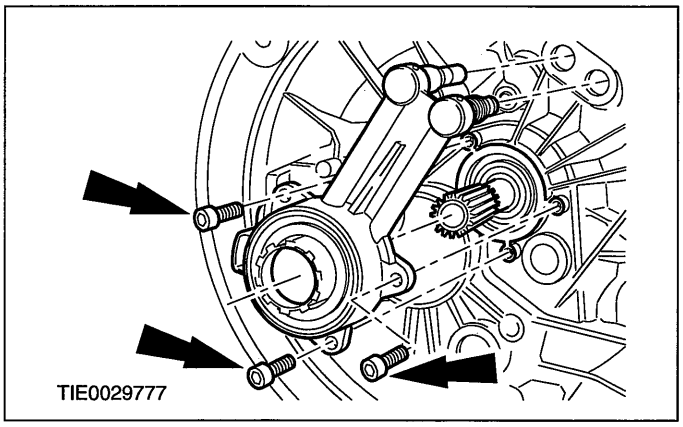


**4. Remove the vehicle speed sensor (VSS) (if equipped).**

1. Remove the retaining pin.
2. Pull out the VSS.

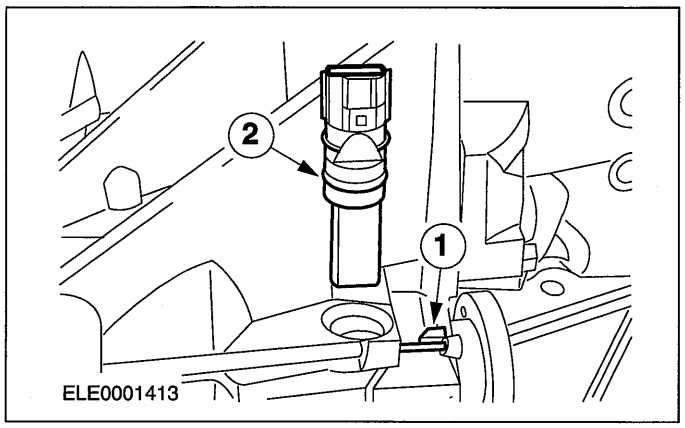


**5. Remove the selector mechanism cover.**

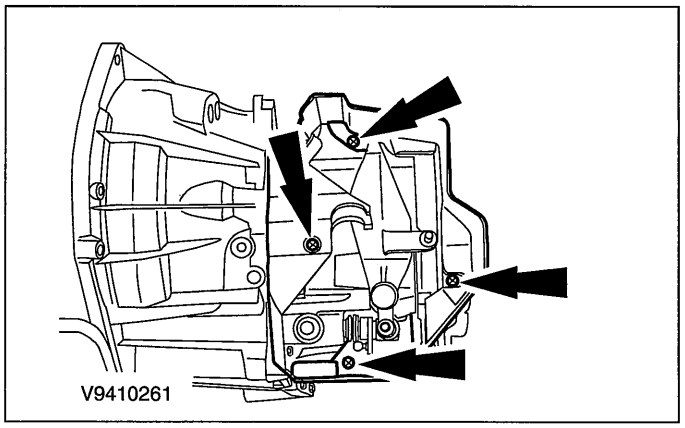


**6. Remove the gearshift lever.**

1. Remove the protective cap (if equipped).
2. Remove and discard the snap ring.

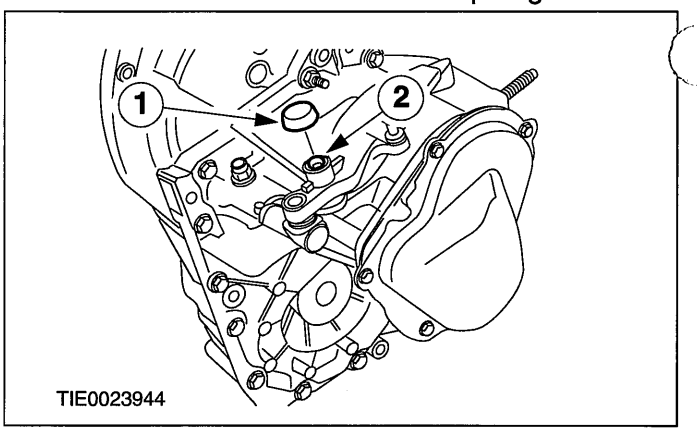


**7. Remove the gearshift cable bracket.**

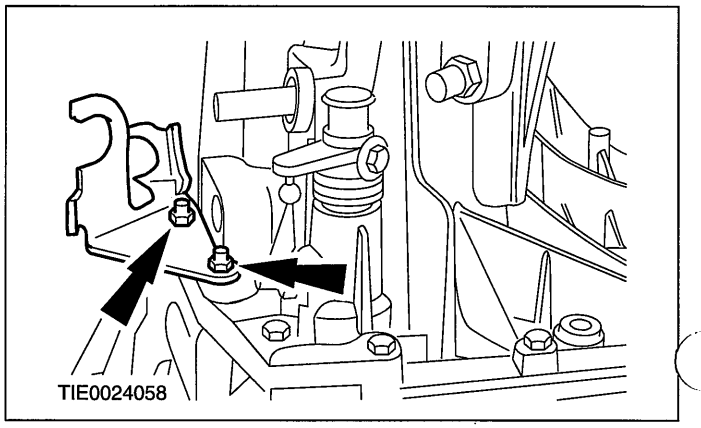


**8. Remove the selector lever.**

- Remove the bellows.

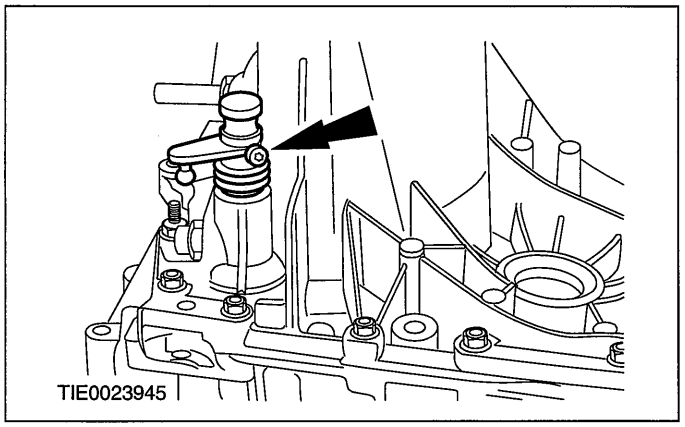

## DISASSEMBLY

**9. Remove the selector interlock mechanism.**

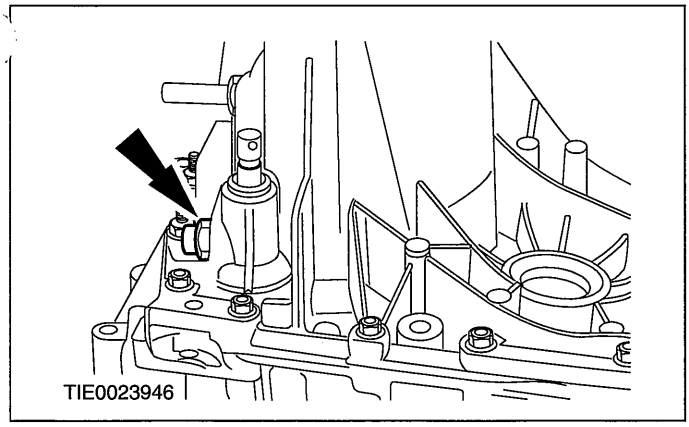


**10. Remove the fifth gear housing cover retaining bolts.**

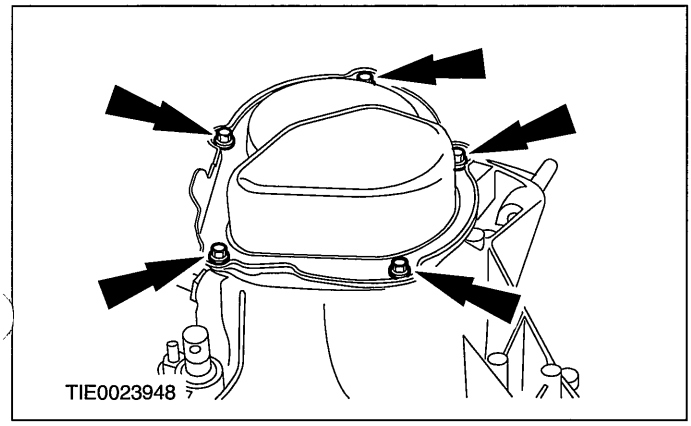


**11. Using the special tool, remove the fifth gear housing cover.**

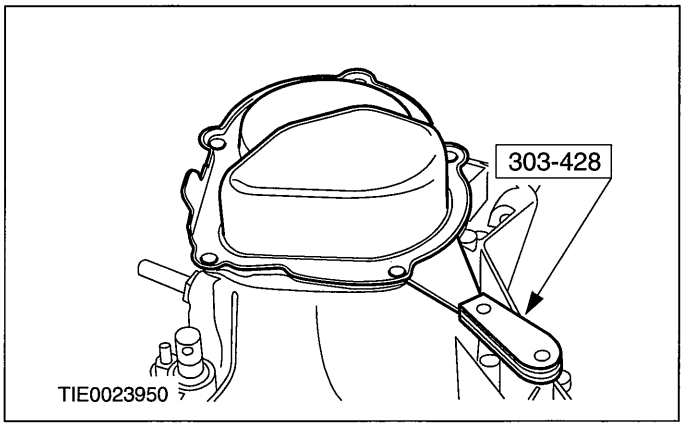


**12. Remove the fifth gear synchroniser assembly, the selector fork and the fifth gear.**

1. Remove and discard the snap ring.
2. Remove and discard the retaining pin.

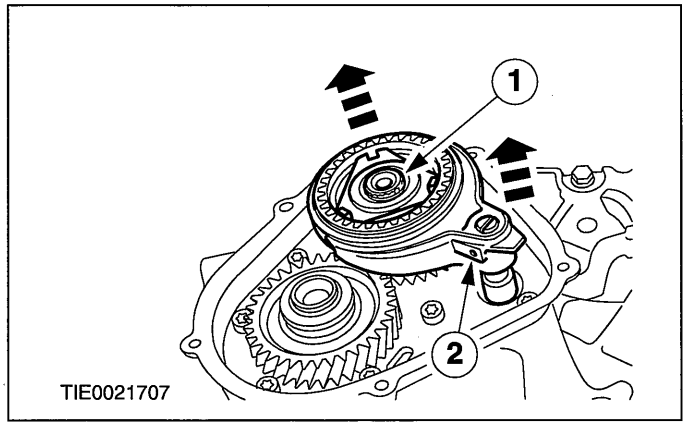


**13. NOTE:To aid assembly mark the position of the fifth gear synchroniser assembly.**

**Disassemble the fifth gear and synchroniser assembly.**

1. Snap ring.
2. Retaining plate.
3. Synchroniser assembly.
4. Synchroniser ring.
5. Fifth gear.

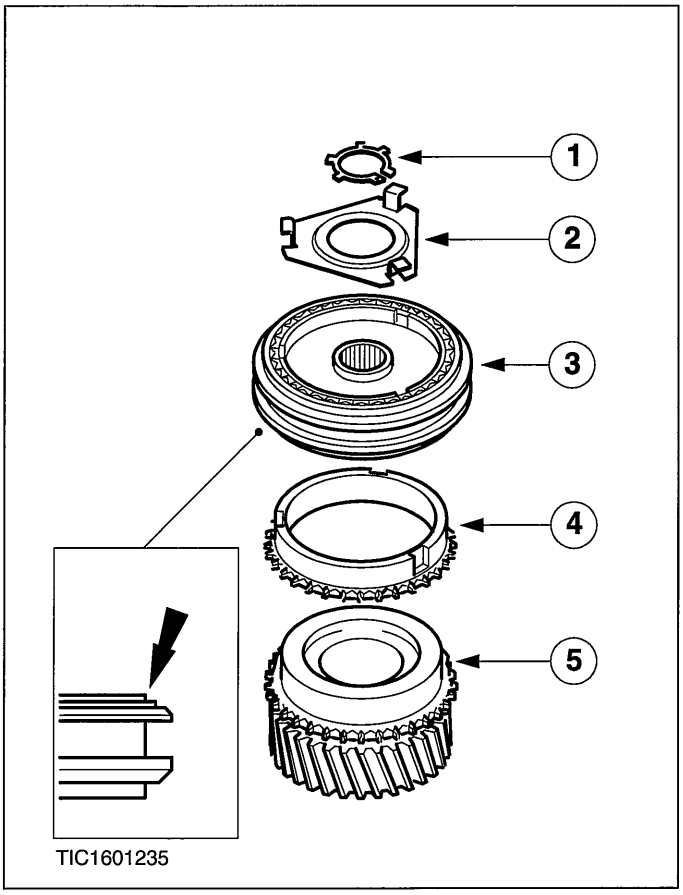


**14. Remove the fifth gear snap ring.**

## DISASSEMBLY

- Discard the snap ring.

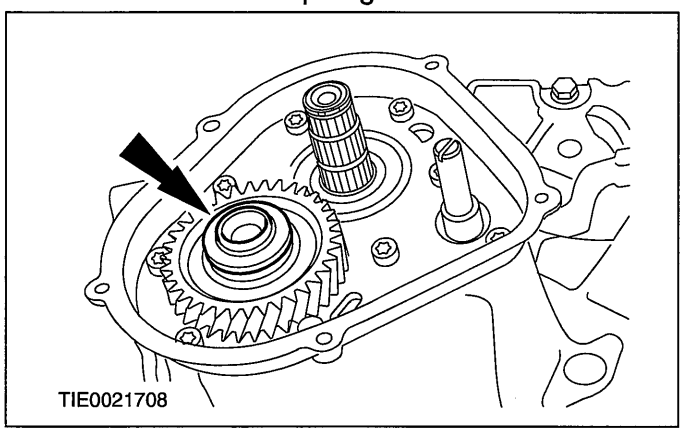


**15. Using the special tool, remove the fifth gear.**

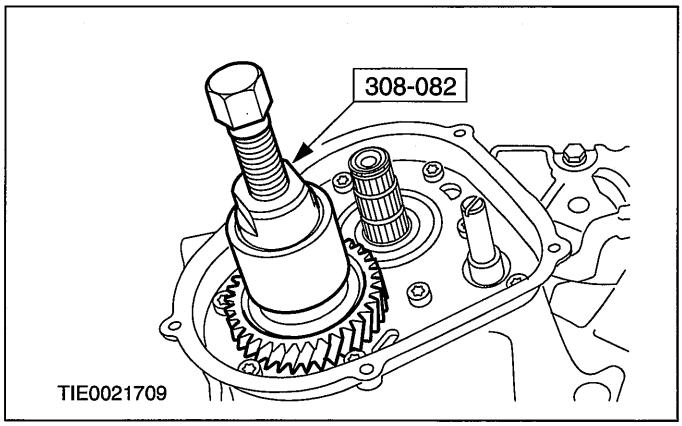


**16. Remove the fifth gear housing.**

- Discard the bolts.

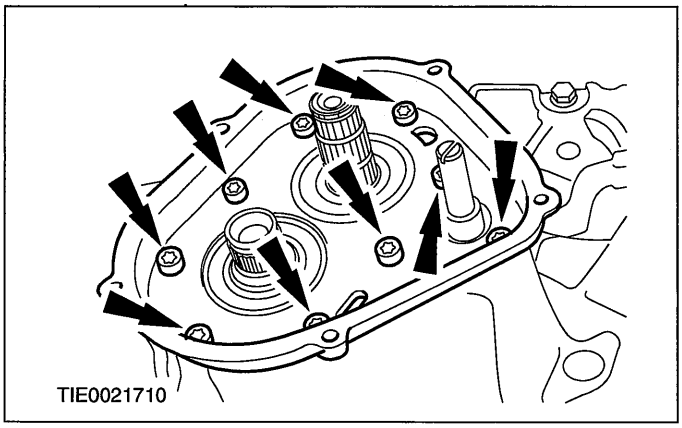


**17. Remove the fifth gear housing gasket, the snap rings and the blanking plug.**

1. Remove and discard the gasket.
2. Remove the output shaft snap ring.
3. Remove the input shaft snap ring.
4. Pull out the blanking plug.

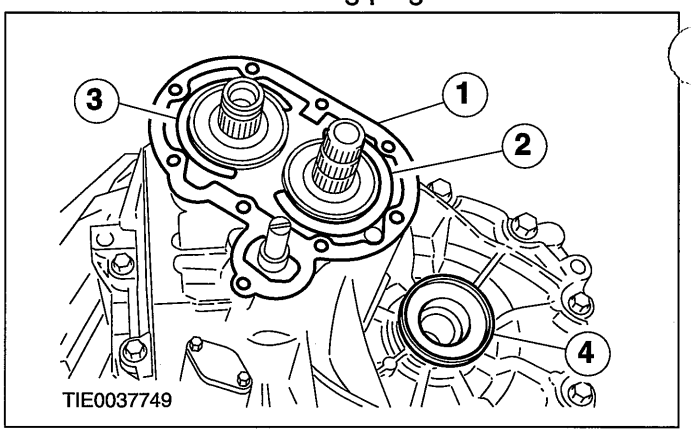


**18. Using the special tool, remove both halfshaft oil seals (left-hand side shown).**

- Only remove the reversing lamp switch if there is evidence of leakage.

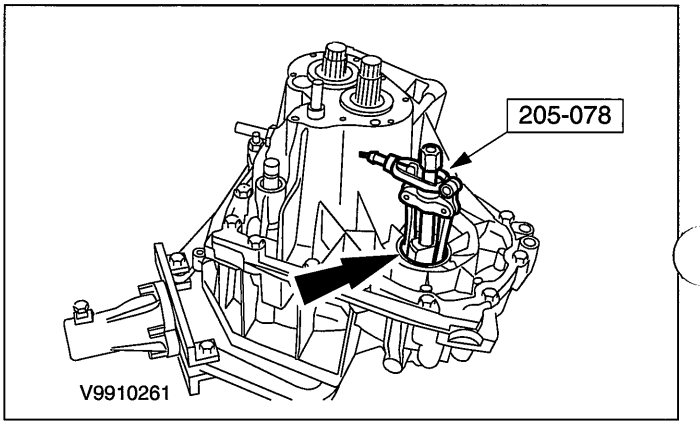


**19. Separate the two halves of the transaxle housing (14 bolts).**

- Carefully separate the transaxle housing.

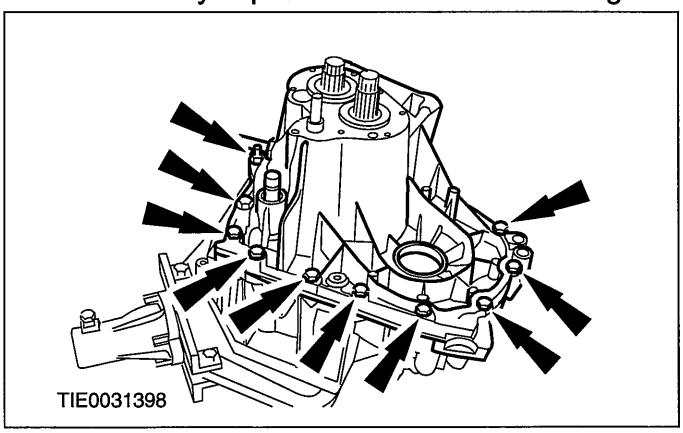


**20. Remove the selector shaft guide sleeve upper snap ring.**

1. Remove and discard the upper snap ring.

## DISASSEMBLY

2. Slide the selector shaft guide sleeve downwards.

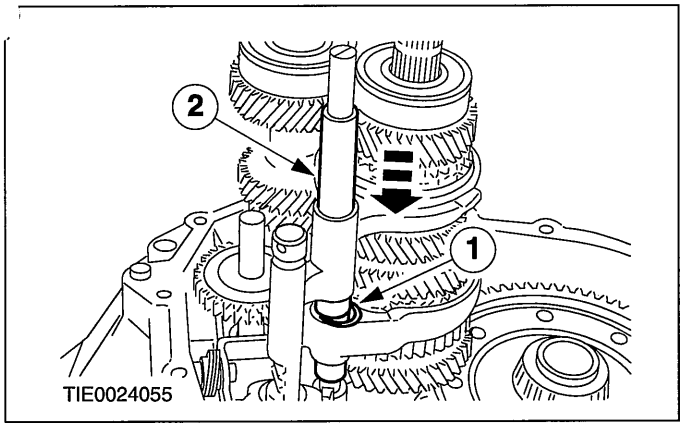


**21. Remove the selector shaft guide sleeve.**

1. Remove and discard the selector shaft guide sleeve lower snap ring.
2. Remove the selector shaft guide sleeve.

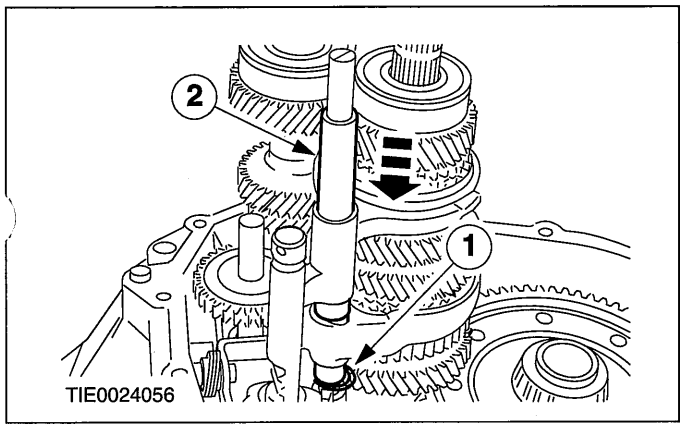


**22. NOTE:Install a rubber band to the second selector shaft to aid disassembly.**

**Remove the input shaft, the output shaft and the selector forks as an assembly.**

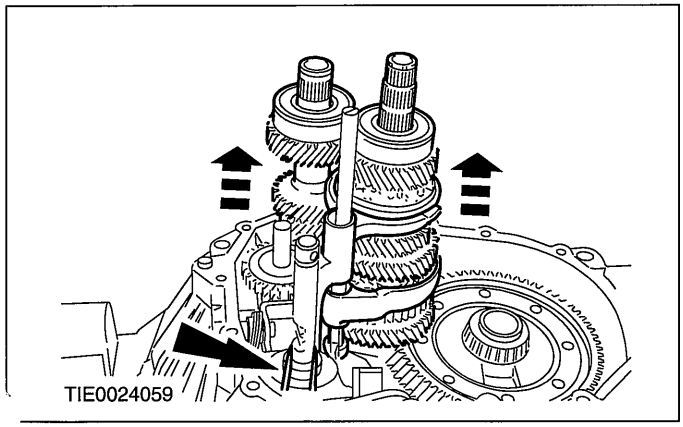


**23. Using a suitable drift remove and discard the input shaft oil seal.**

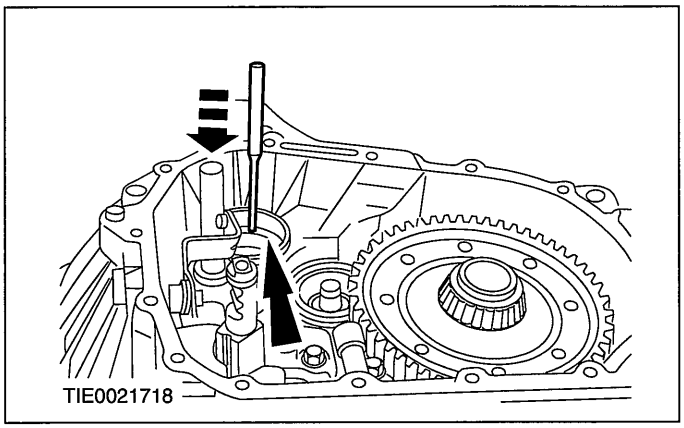


**24. Remove the differential assembly and the permanent magnet.**

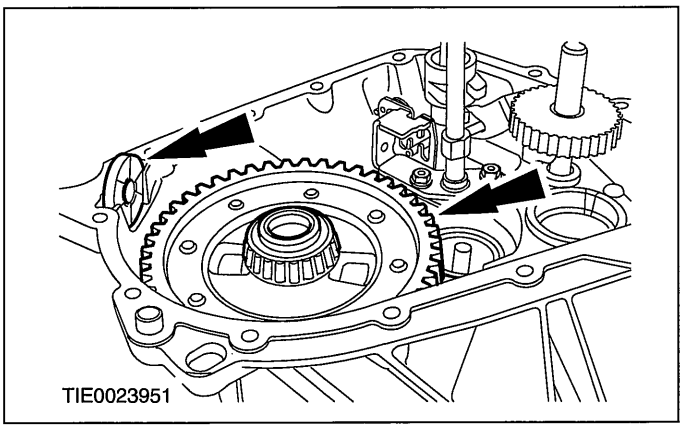


**25. Remove the reverse gear idler.**

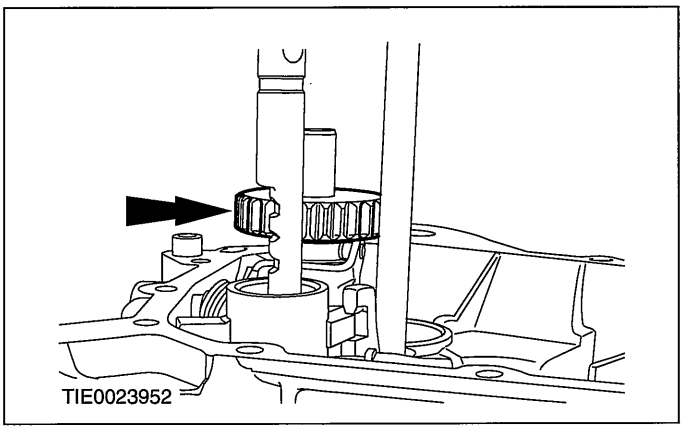


**26. Remove the selector shaft and the shift lock.**

1. Remove the shift lock.

## DISASSEMBLY

2. Remove the fifth and reverse gear selector shaft.

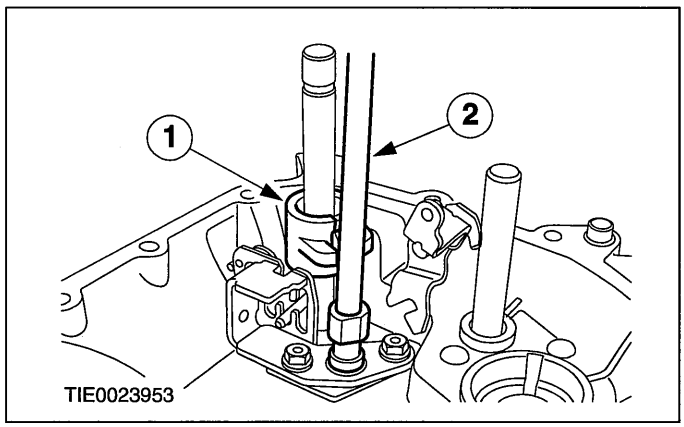


**27. Remove the output shaft roller bearing.**

- Remove the rollers and the roller cage from the output shaft roller bearing.

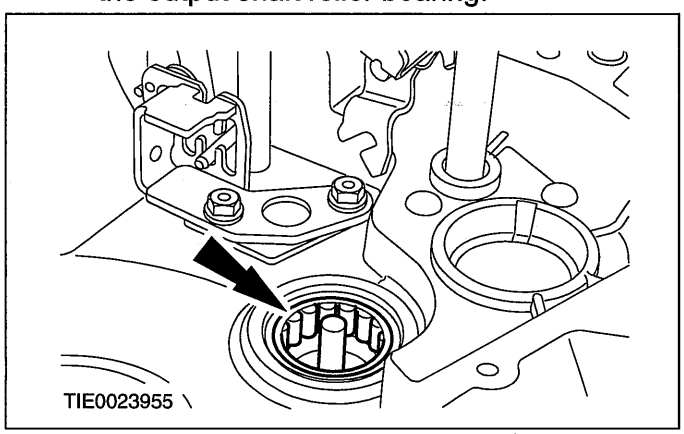


**28. ⚠CAUTION:Only use the special tool as shown, failure to do so may result in the blanking plug being pressed out of the housing.**

**Using the special tool, remove the output shaft roller bearing outer race.**

- Remove the oil funnel.

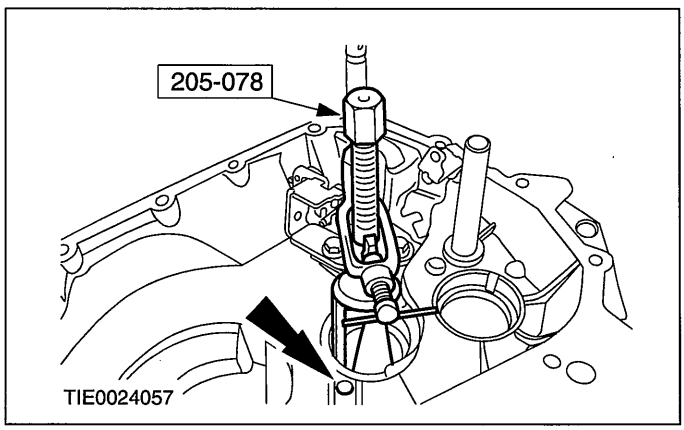


**29. Using the special tool, remove the differential bearing cup.**

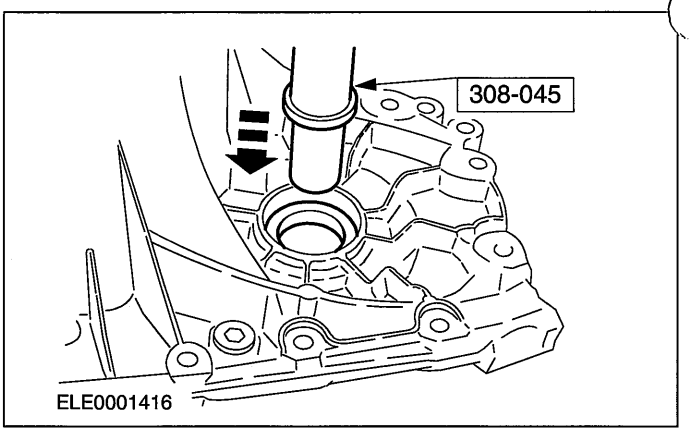


**30. NOTE:Install the special tool in the transaxle housing grooves.**

**Using the special tool, remove the differential bearing cup.**

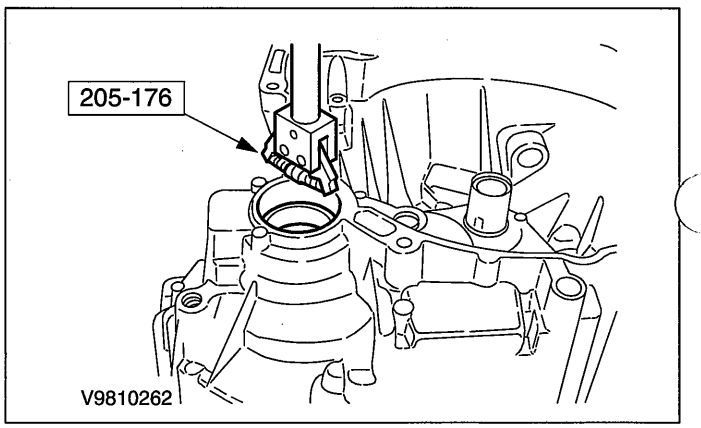

## DISASSEMBLY AND ASSEMBLY OF SUBASSEMBLIES

# Output Shaft

### Special Tool(s)

| | |
|---|---|
| 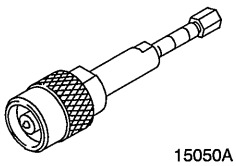 15050A | Remover, Bearing (Main Tool)<br>205-295 (15-050A) |
| 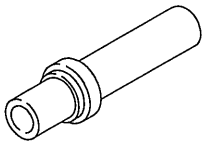 16015 | Installer, Extension Housing Bushing Oil Seal<br>308-045 (16-015) |
| 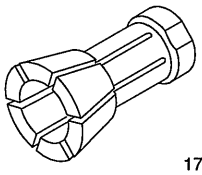 17048 | Collet for 205-295<br>307-217 (17-048) |

### General Equipment

| |
|---|
| Two-leg puller |
| Press |

### Materials

| Name | Specification |
|---|---|
| Transmission Oil | WSD-M2C200-C |

## Disassembly

**1. Remove the ball bearing and the fourth gear.**

1. Remove and discard the small snap ring.
2. Install the output shaft snap ring .
3. Using a suitable two-leg puller, remove the ball bearing.
   - Discard the output shaft snap ring and the ball bearing.
4. Remove the fourth gear and the synchronizer ring.

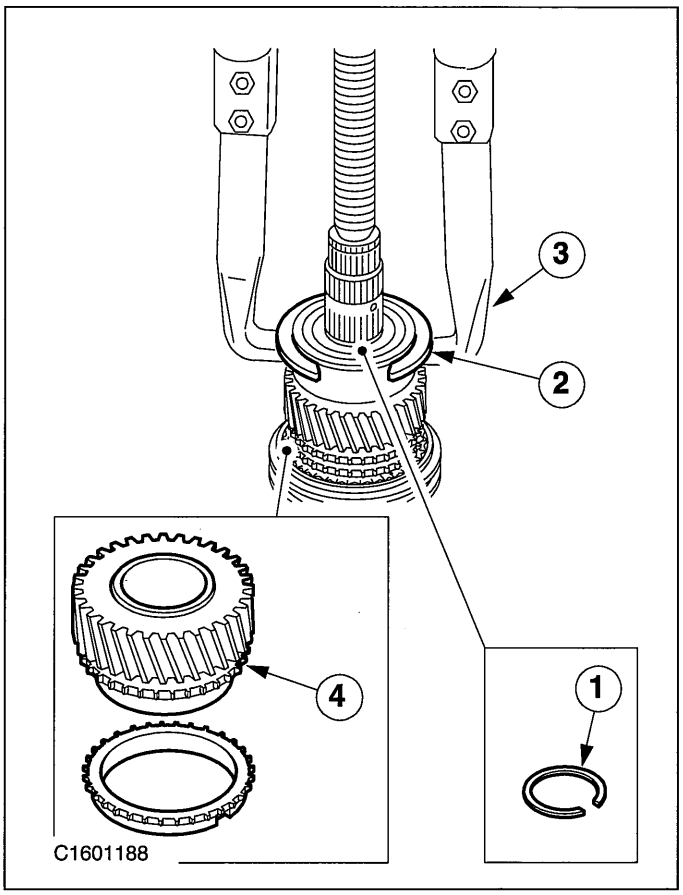


**2. Remove the third and fourth gear synchronizer assembly.**

1. Remove and discard the snap ring.
2. Remove the gear synchronizer, third and fourth gear synchronizer assembly and the third gear as an assembly.

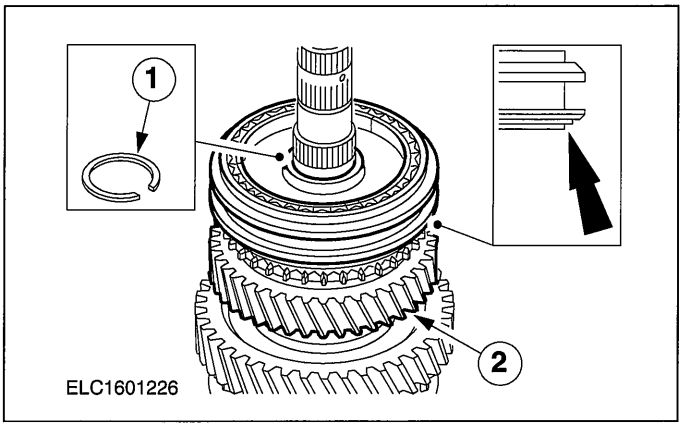


**3. Third gear synchronizer assembly.**

1. Outer synchronizer ring.
2. Synchronizer cone.

## DISASSEMBLY AND ASSEMBLY OF SUBASSEMBLIES

3. Third gear.

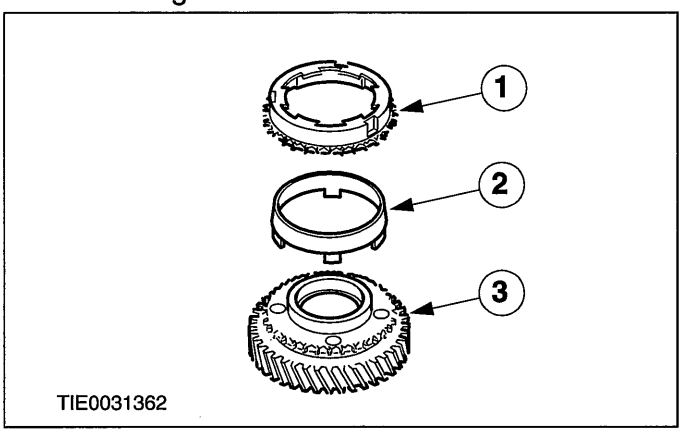


**4. Remove the second gear synchronizer assembly**

1. Retaining ring.
2. Snap rings.
3. Second gear.
4. Inner synchronizer ring.
5. Synchronizer cone.
6. Outer synchronizer ring.

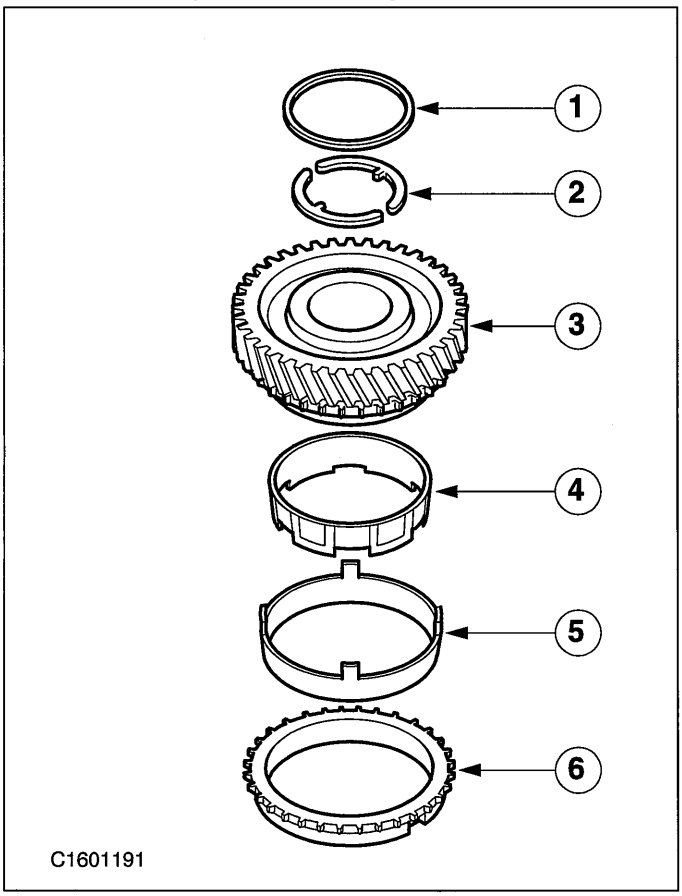


**5. NOTE:Remove the synchronizer assembly and the first gear as an assembly.**

**Remove the first and reverse gear , the gear synchronizer and synchronizer assembly.**

1. Remove and discard the snap ring.
2. Remove the first and second gear synchronizer clutch and the reverse gear .
3. Outer synchronizer ring.
4. Synchronizer cone.
5. Inner synchronizer ring.
6. First gear.

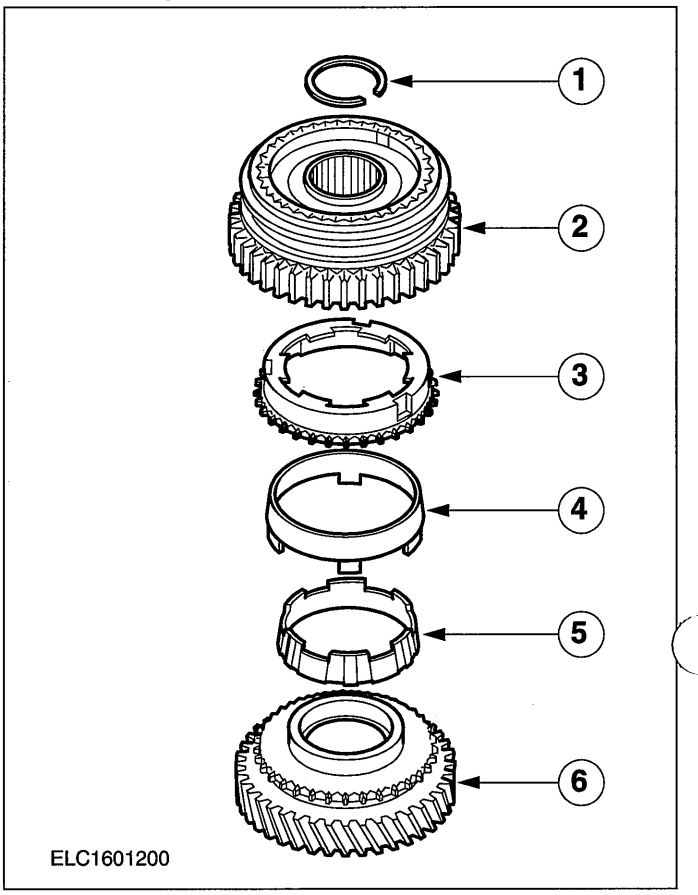


**6. ⚠CAUTION:To aid assembly mark the position of the selector ring in relation to the synchronizer hub.**

**Disassemble the synchronizer clutch.**

1. Selector ring.
2. Synchronizer spring.
3. Synchronizer lock.

## DISASSEMBLY AND ASSEMBLY OF SUBASSEMBLIES

4. Synchronizer hub.

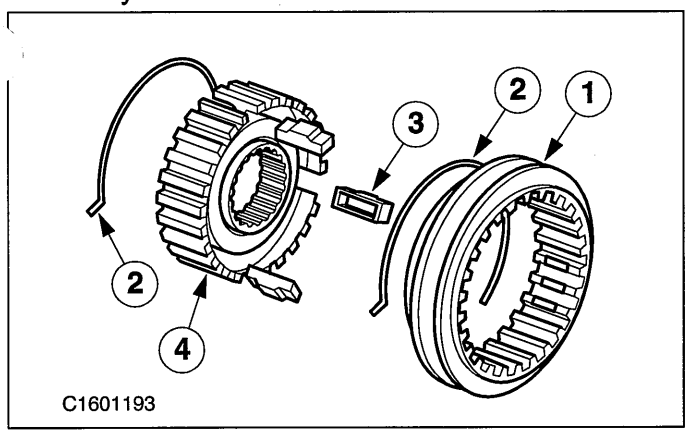


**7. Using the special tools, remove the output shaft bearing cone.**

1. Remove and discard the output shaft bearing cone snap ring.
2. Install the special tools underneath the bearing cone.
   - Discard the output shaft bearing cone.

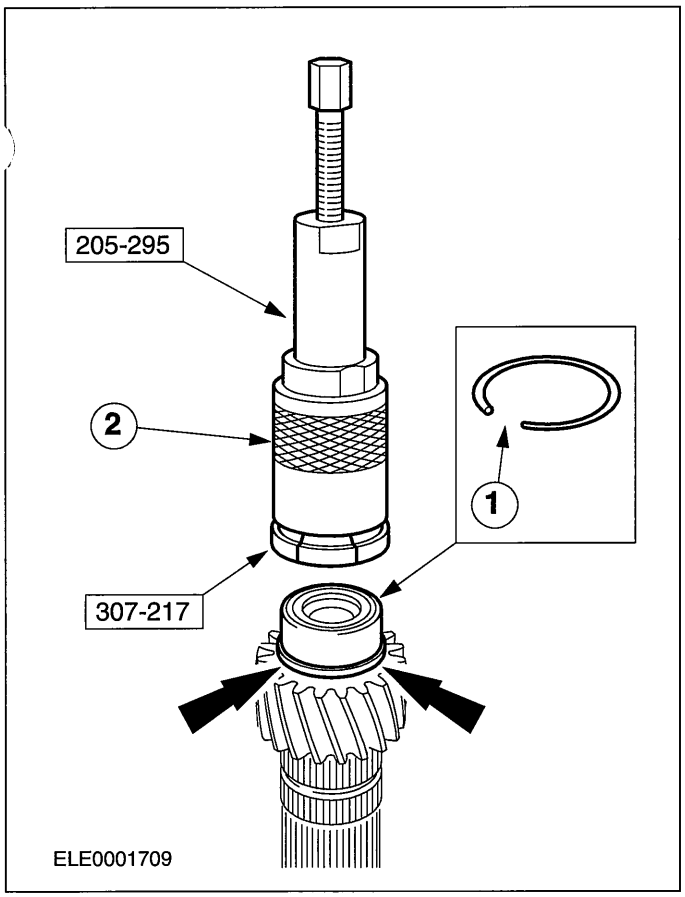


### Assembly

**1. Coat the synchronizer assembly with clean transmission oil before assembly.**

**2. Carefully clean and check all running surfaces and coat them with clean transmission oil before assembly.**

**3. NOTE:Install a new output shaft bearing cone snap ring.**

**NOTE:**Install a new output shaft bearing cone.

**Install the output shaft bearing cone.**

- Evenly heat the bearing cone to approximately 80°C and install it onto the output shaft.
- Install the snap ring.

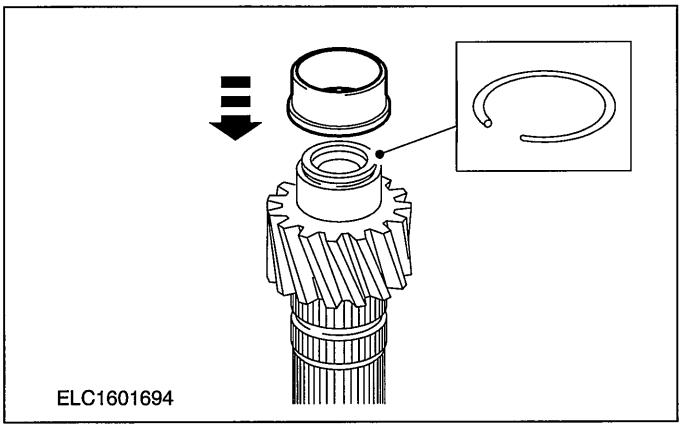


**4. NOTE:Assemble the synchronizer clutch to the marks.**

**Assemble the synchronizer clutch.**

1. Synchronizer hub.
2. Selector ring.
3. Synchronizer lock.
4. Synchronizer spring.

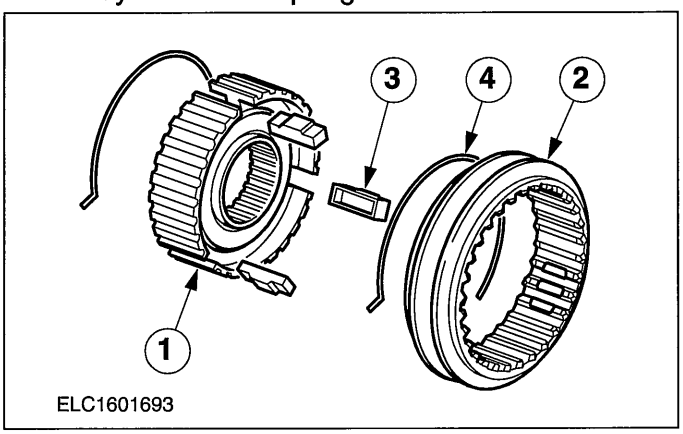


**5. NOTE:Use a new first and reverse gear snap ring.**

**Install the first and reverse gear, the gear synchronizer and synchronizer assembly.**

1. First gear.
2. Inner synchronizer ring.

## DISASSEMBLY AND ASSEMBLY OF SUBASSEMBLIES

3. Synchronizer cone.
4. Outer synchronizer ring.
5. Install the first and second gear synchronizer clutch and the reverse gear.
6. Install the snap ring.

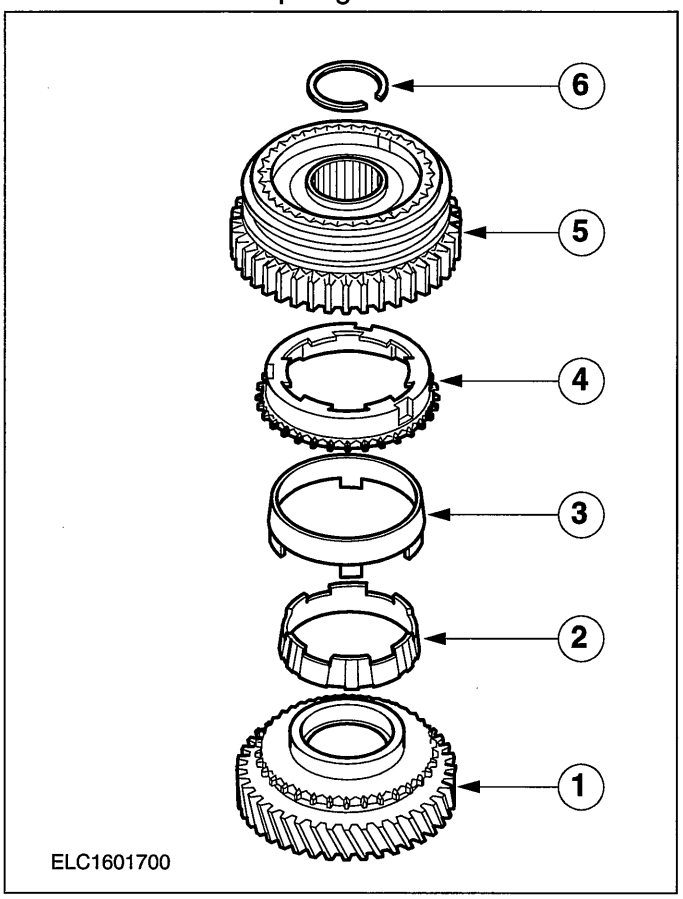


**6. NOTE:Assemble the synchronizer assembly before installation on the output shaft.**

**Install the second gear synchronizer assembly.**

1. Outer synchronizer ring.
2. Synchronizer cone.
3. Inner synchronizer ring.
4. Second gear.
5. Snap rings.
6. Retaining ring.

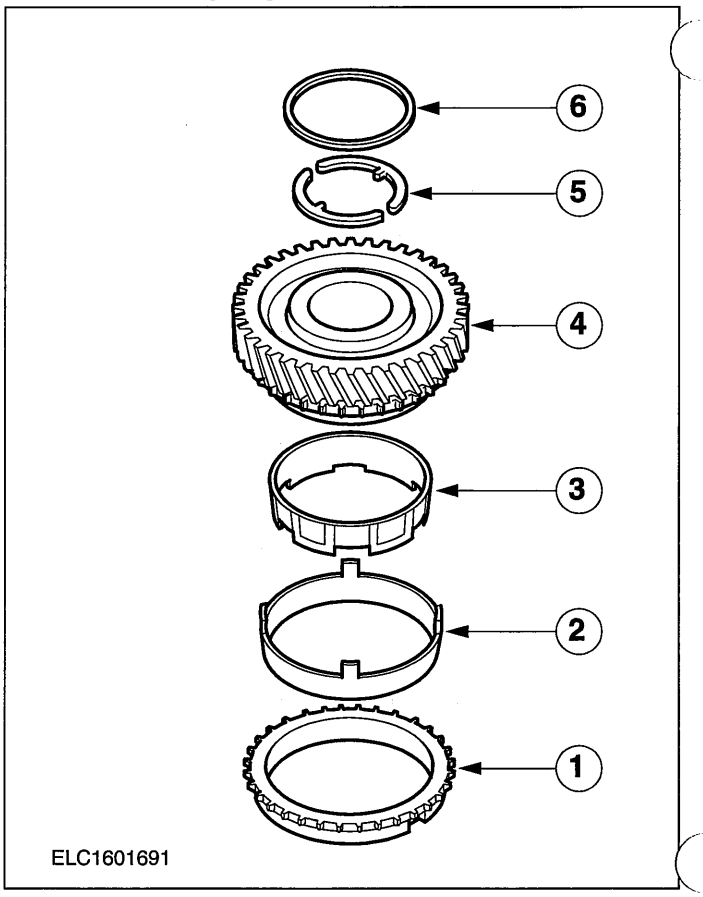


**7. Third gear synchronizer assembly.**

1. Third gear.
2. Synchronizer cone.
3. Outer synchronizer ring.

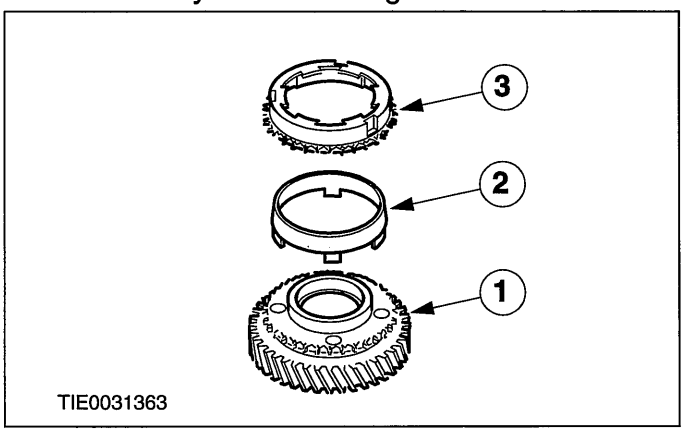


**8. NOTE:Install a new third and fourth gear synchronizer assembly snap ring.**

**NOTE:**Install the selector ring with the annular groove facing downwards and the small hub collar facing upwards.

**Install the third and fourth gear synchronizer assembly.**

## DISASSEMBLY AND ASSEMBLY OF SUBASSEMBLIES

1. Install the gear synchronizer, third and fourth gear synchronizer assembly and the third gear.
2. Install the snap ring.

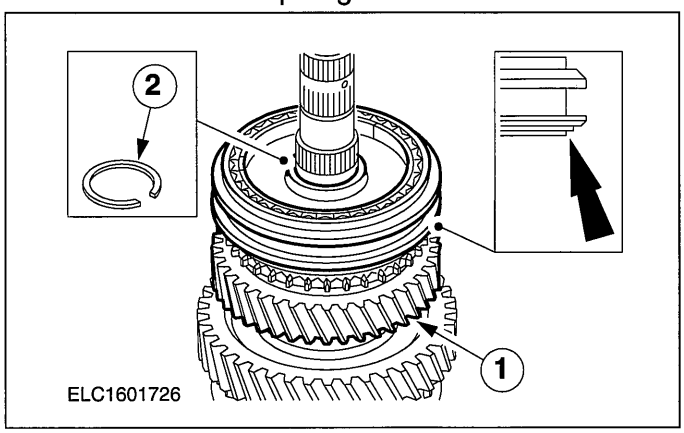


**9. NOTE:Install a new snap ring.**

**NOTE:**Install a new ball bearing.

**NOTE:**Install the ball bearing with the annular groove facing outwards.

**Using the special tool and a suitable press, install the fourth gear and the ball bearing.**

1. Install the synchronizer ring and the fourth gear.
2. Using a suitable press , install the ball bearing.

- Install the snap ring.

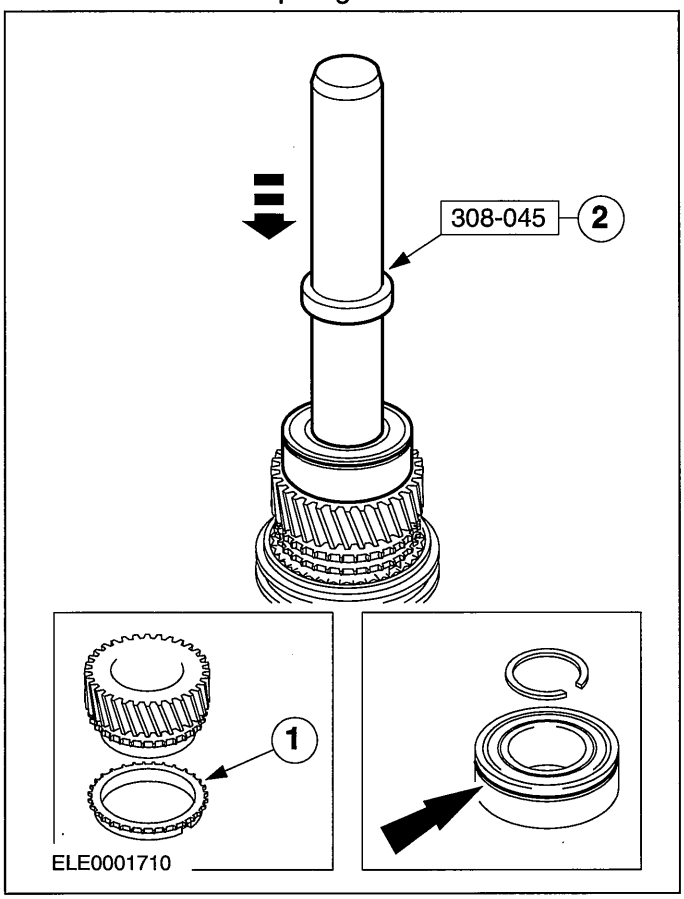

## DISASSEMBLY AND ASSEMBLY OF SUBASSEMBLIES

# Input Shaft

**Special Tool(s)**

| | |
|---|---|
| 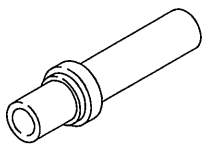 16015 | Installer, Extension Housing Bushing/Oil Seal 308-045 (16-015) |

**General Equipment**

| |
|---|
| Two-leg puller |
| Press |

| **Materials** | |
|---|---|
| **Name** | **Specification** |
| Transmission Oil | WSD-M2C200-C |

## Disassembly

1. **Using a suitable two-leg puller, remove the ball bearing.**
   1. Install the input shaft snap ring.
   2. Remove the ball bearing.
      - Discard the input shaft snap ring and the ball bearing.

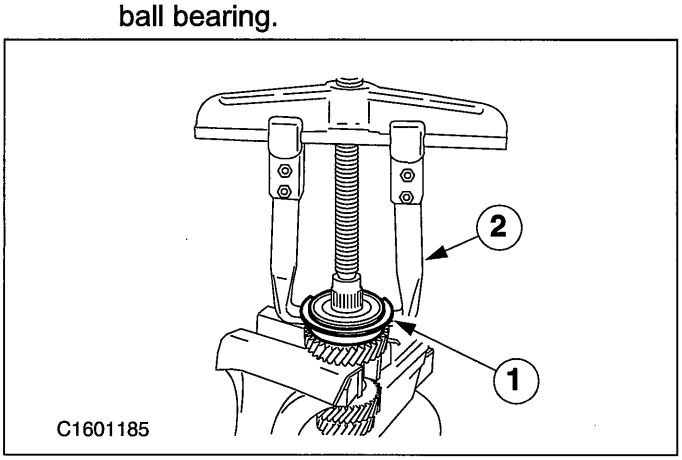


2. **Using a suitable two-leg puller remove the ball bearing.**
   - Discard the ball bearing.

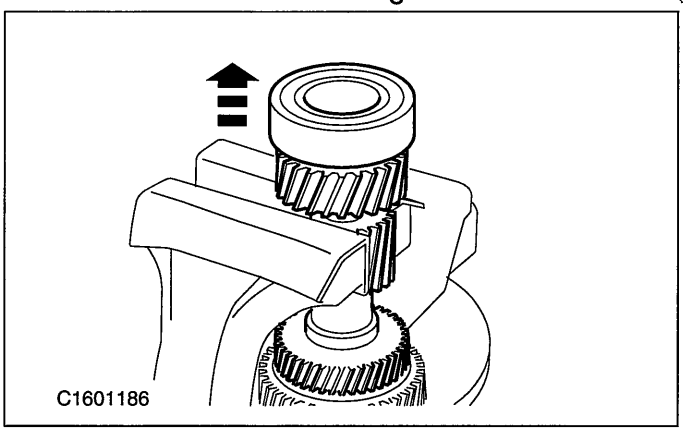


## Assembly

1. **Coat all components with clean transmission oil before assembly.**
2. **NOTE:Install a new ball bearing.**

   **Using the special tool and a suitable press , install the ball bearing.**

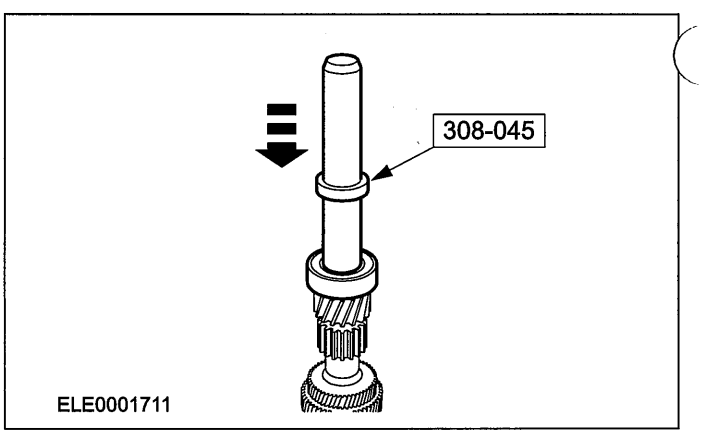


3. **NOTE:Install a new ball bearing.**

**NOTE:**The ball bearing groove must face outwards.

## DISASSEMBLY AND ASSEMBLY OF SUBASSEMBLIES

**Using the special tool and a suitable press , install the ball bearing.**

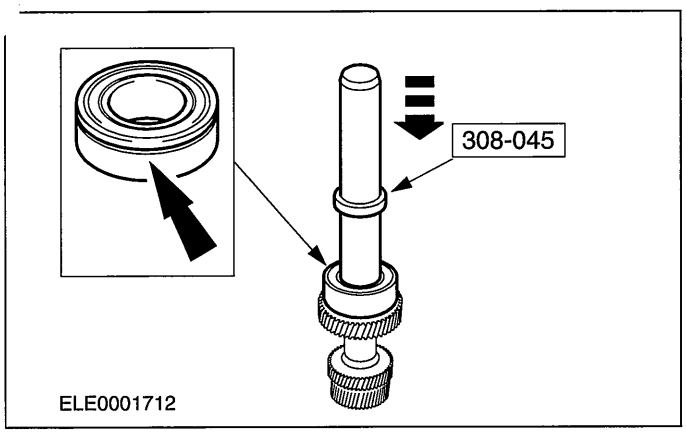

## DISASSEMBLY AND ASSEMBLY OF SUBASSEMBLIES

# Differential(16 118 6)

### Special Tool(s)

| | |
|---|---|
| 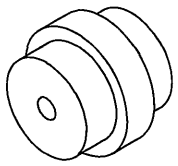 1403801 | Adapter for 204-158 (Thrust Pad)<br>204-158-01 (14-038-01) |
| 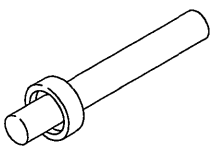 15025A | Installer, Differential Bearing<br>205-062 (15-025A) |
| 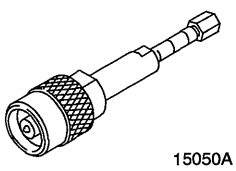 15050A | Remover, Bearing (Main Tool)<br>205-295 (15-050A) |
| 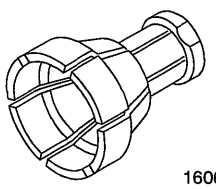 16062 | Collet for 205-295<br>308-197 (16-062) |

### General Equipment

| |
|---|
| Press |
| Drift |

| Materials | |
|---|---|
| **Name** | **Specification** |
| Transmission Oil | WSD-M2C200-C |

## Disassembly

1. **Using the special tools, remove the differential taper roller bearings.**
   1. Install the special tool.
   2. Remove the differential taper roller bearings.
3. Remove the vehicle speed sensor (VSS) sensor ring.

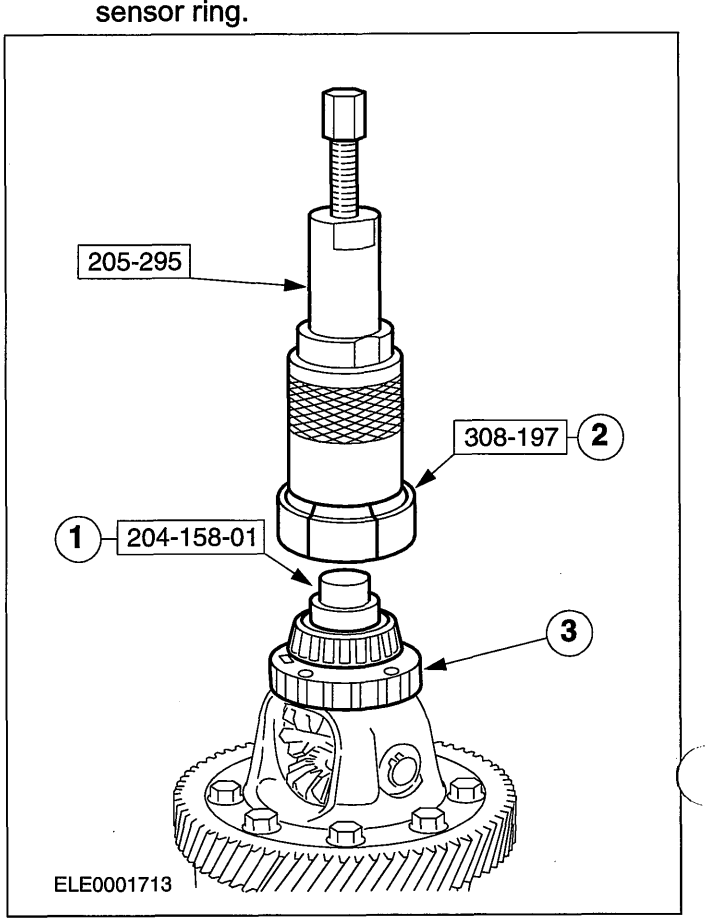


2. **Remove the differential pinions and the ring gear.**
   1. Rotate the differential pinions approximately 90 degrees in the differential case and remove them.
   2. Remove and discard the snap ring and using a suitable drift, drive out the pin.
      - Remove the two differential pinions and plastic thrust elements.
   3. Remove the ring gear retaining bolts.

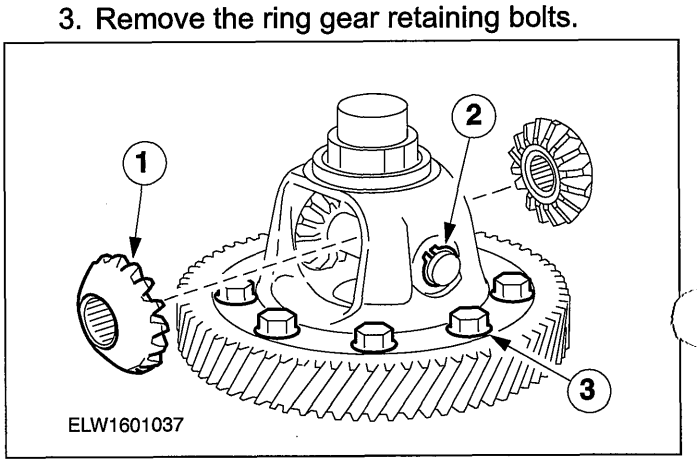

## DISASSEMBLY AND ASSEMBLY OF SUBASSEMBLIES

### Assembly

1. **NOTE:Do not lubricate the differential bearings.**

   **Carefully clean and check all components and coat them with clean transmission oil before assembly.**

2. **NOTE:Install a new differential pinion snap ring.**

   **Install the ring gear and the differential pinions.**

   1. Using the old bolts, carefully attach the ring gear to the differential case.
      - Discard the ring gear bolts.
   2. Install the two differential pinions, plastic thrust elements and using a suitable drift, install the pin and snap ring.
   3. Install the differential pinions and rotate them 90 degrees in the differential case.

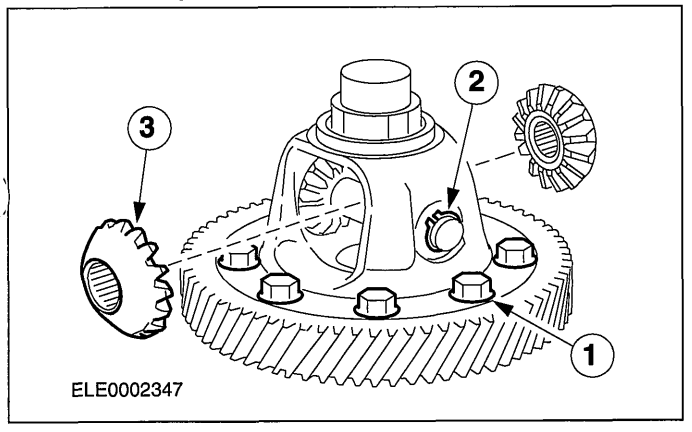


3. **NOTE:Install new ring gear retaining bolts.**

**NOTE:**Do not rest the differential on the lower differential taper roller bearing.

**Using the special tool, install the differential taper roller bearings and tighten the ring gear retaining bolts.**

1. Install new ring gear retaining bolts and tighten the bolts working diagonally.
2. Install the vehicle speed sensor (VSS) sensor ring.

3. Using the special tool, install the differential taper roller bearings.

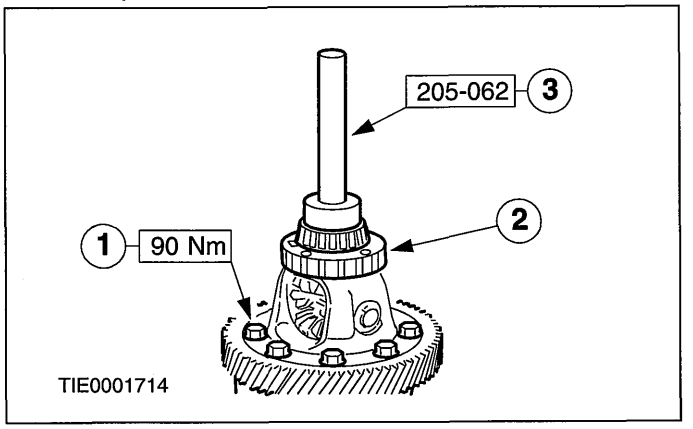

## DISASSEMBLY AND ASSEMBLY OF SUBASSEMBLIES

# Selector Plate(16 284 8)

**Overview, selector mechanism**

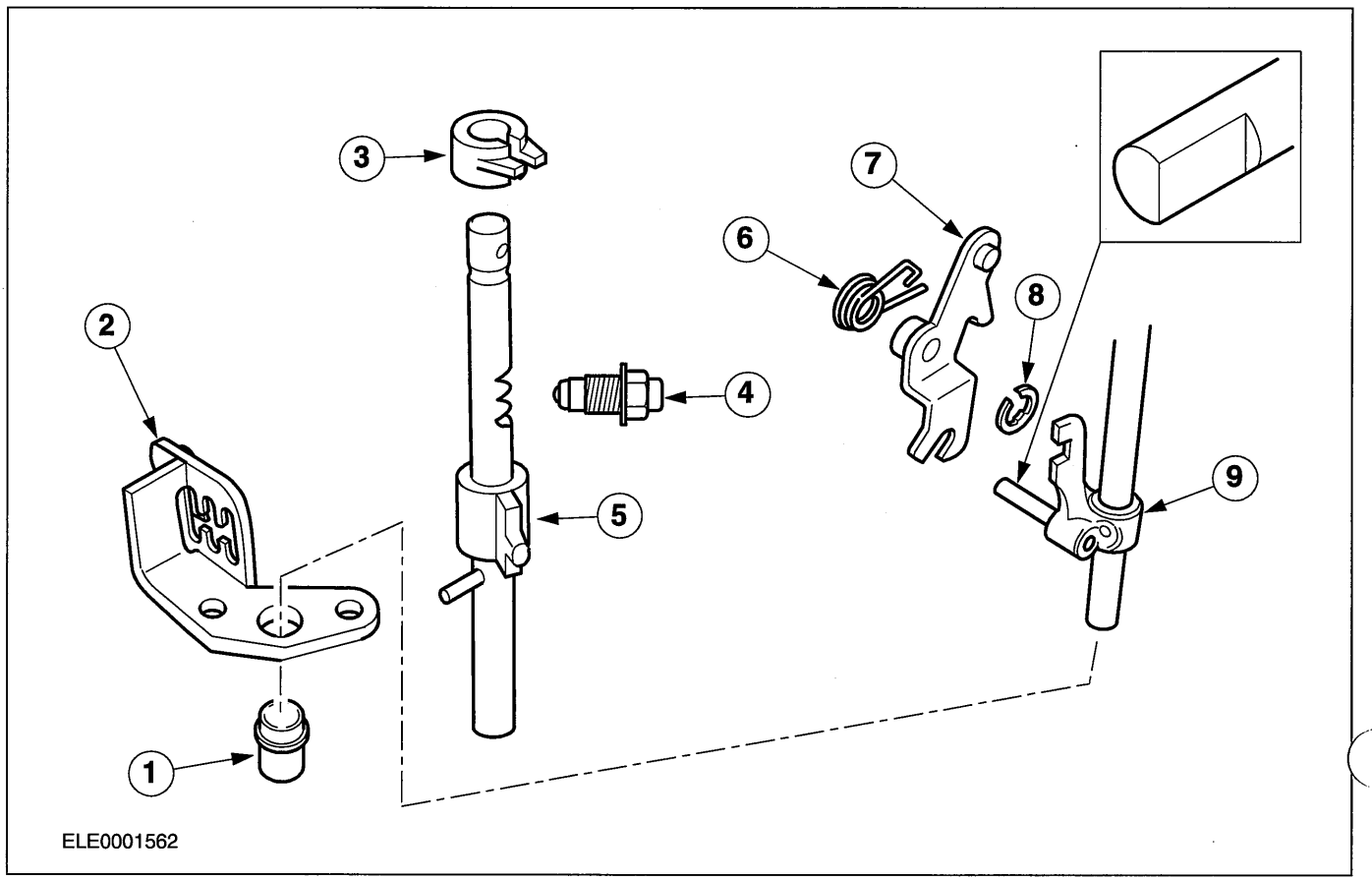


| Item | Description |
|---|---|
| 1 | Fifth and reverse gear selector shaft guide sleeve |
| 2 | Selector plate |
| 3 | Shift lock |
| 4 | Selector shaft interlock mechanism |
| 5 | Selector shaft |
| 6 | Reverse gear selector lever return spring |
| 7 | Reverse gear selector lever |
| 8 | Snap-ring |
| 9 | Fifth and reverse gear selector shaft |

## Disassembly

**1. Remove the selector mechanism.**

1. Fifth and reverse gear selector shaft.
2. Selector shaft.
3. Reverse gear selector lever .
4. Selector plate.
5. Fifth and reverse gear selector shaft guide sleeve.

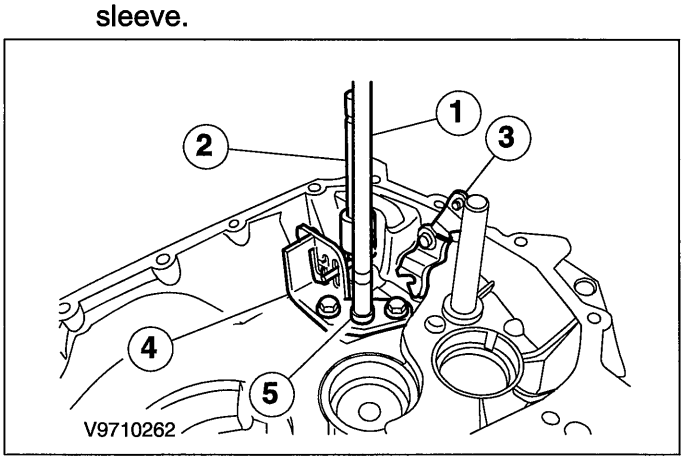


## Assembly

**1. Install the selector mechanism.**

1. Selector shaft.
2. Reverse gear selector lever.
3. Fifth and reverse gear selector shaft guide sleeve.

## DISASSEMBLY AND ASSEMBLY OF SUBASSEMBLIES

4. Selector plate.

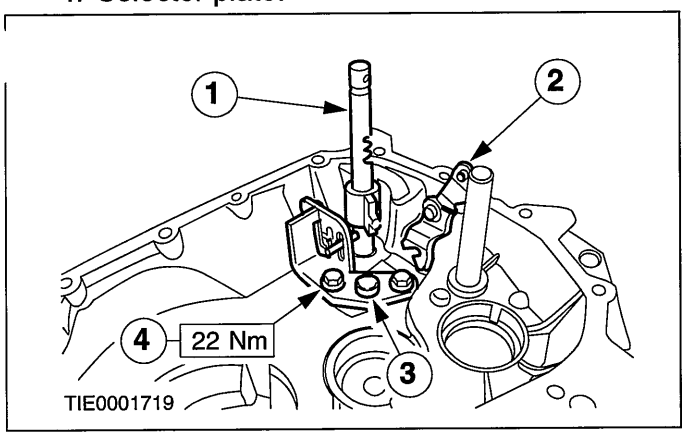

## ASSEMBLY

# Transaxle(16 118 8)

### Special Tool(s)

| | |
|---|---|
| 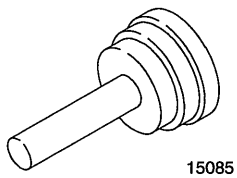 15085 | Installer, Wheel Hub Bearing Cone/Seal 205-296 (15-085) |
| 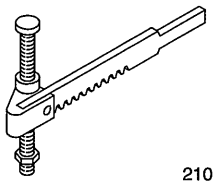 21024 | Compressor, Valve Spring 303-060 (21-024) |
| 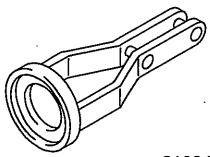 2102402 | Adapter for 303-060 303-060-02 (21-024-02) |
| 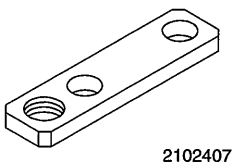 2102407 | Adapter for 303-060 303-060-07 (21-024-07) |
| 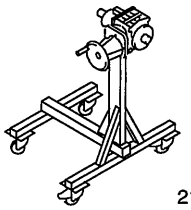 21187 | Mounting Stand 303-435 (21-187) |
| 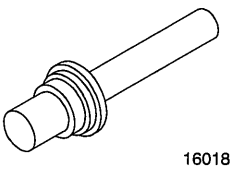 16018 | Installer, Halfshaft Seal 308-039 (16-018) |

### Special Tool(s)

| | |
|---|---|
| 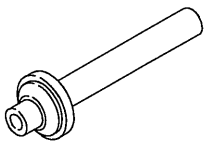 16020 | Installer, Input Shaft Bearing Cone 308-041 (16-020) |
| 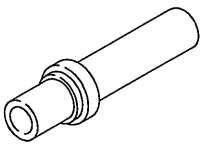 16015 | Installer, Extension Housing Bushing/Seal 308-045 (16-015) |
| 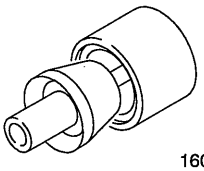 16031 | Installer, Input Shaft Snap Ring 308-076 (16-031) |

### General Equipment

| |
|---|
| Press |
| Dial indicator gauge |
| Magnetic stand for dial indicator gauge |
| Blanking plugs |
| M8 x 50 mm bolt |
| Thread die |

### Materials

| Name | Specification |
|---|---|
| Sealant | ESEE-M4G1008-A |
| Transmission Oil | WSD-M2C200-C |
| Oil Pan Sealer | WSK-M2G348-A5 |
| Silicon Sealer | WSE-M4G323-A4 |
| High Temperature Grease | ESDM-1C220-A |

1. **Clean and check all parts carefully before reassembly.**
   - Apply clean transmission oil to all running surfaces.

## ASSEMBLY

2. **⚠CAUTION:Make sure the output shaft roller bearing is installed with the scribed text uppermost.**

   **Using the special tool, install the output shaft roller bearing and the output shaft bearing cup.**

   1. Install the oil funnel.
   2. Install the output shaft roller bearing.

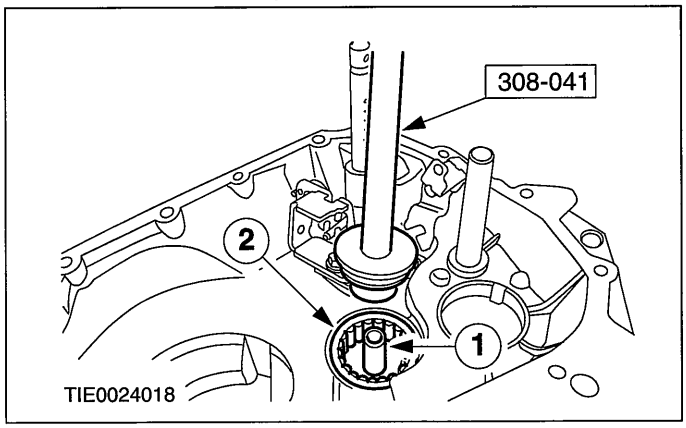


3. **Using the special tool, install the differential bearing cup.**

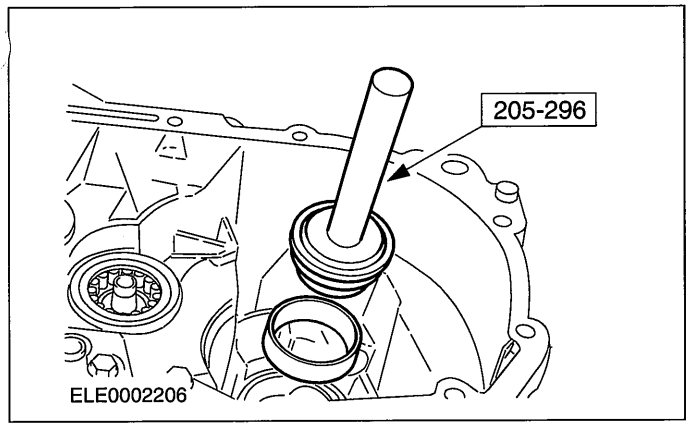


4. **Install the fifth and reverse gear selector shaft, and the shift lock.**

   1. Install the shift lock.
   2. Install the fifth and reverse gear selector shaft.

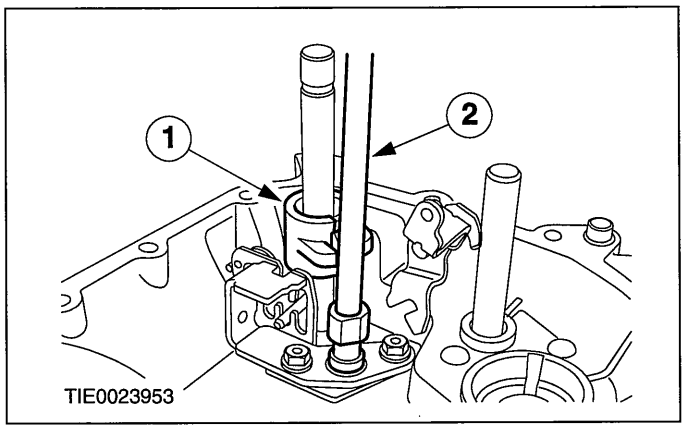


5. **Install the reverse gear idler.**

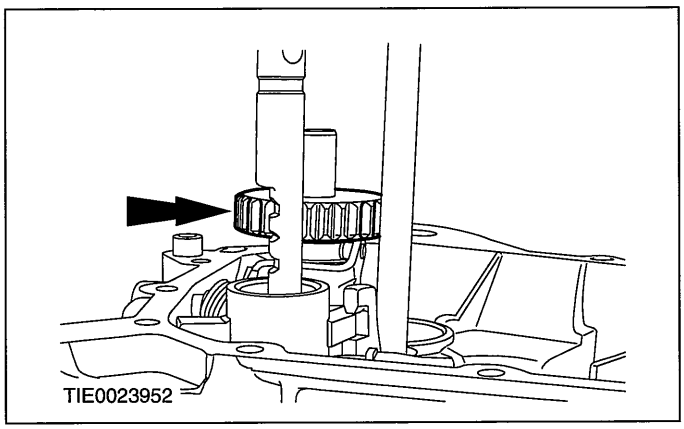


6. **Install the differential assembly and the permanent magnet.**

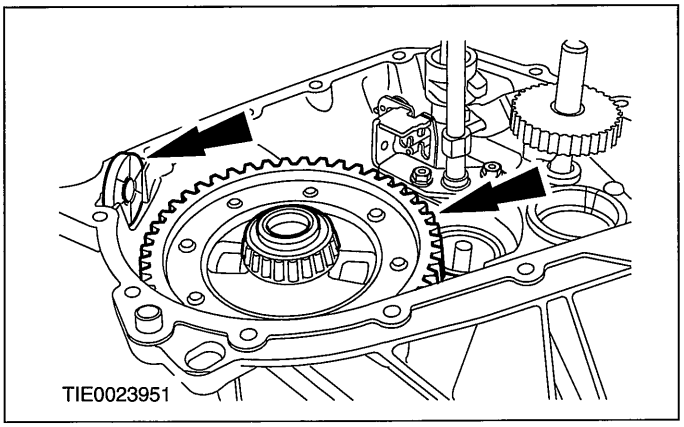


7. **Prepare the input and output shaft for installation.**

   1. Engage the input shaft and output shaft.
   2. Move the first and second gear shift forks to the installation position.

## ASSEMBLY

3. Move the third and fourth gear shift forks to the installation position.

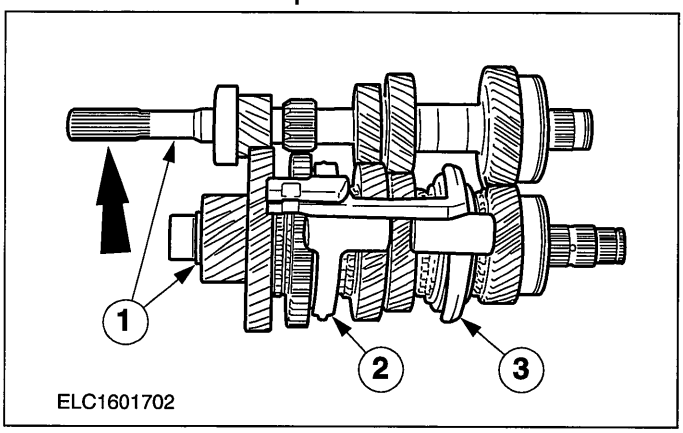


8. **NOTE:Install a rubber band to the second selector shaft to aid assembly.**

   **Install the input shaft, the output shaft and the selector forks.**

   - Insert the input shaft to a depth of approximately 50 mm and move it slightly to one side.
   - Insert the output shaft to the level of the input shaft and engage the gear wheels.
   - Install the input shaft and the output shaft.

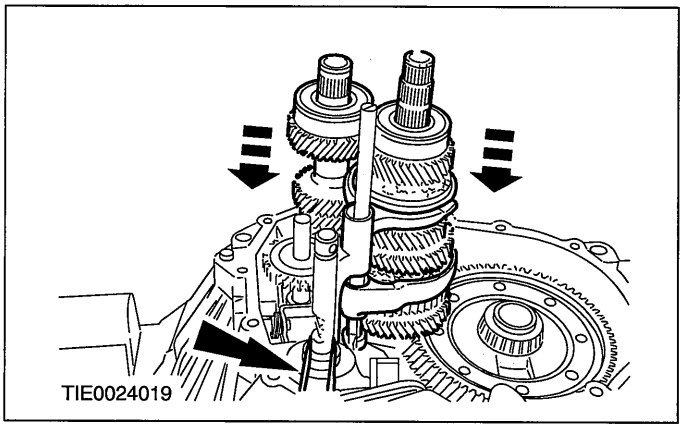


9. **NOTE:Install a new snap ring.**

   **Install the selector shaft guide sleeve lower snap ring.**

   1. Install the guide sleeve.
   2. Install the snap ring.

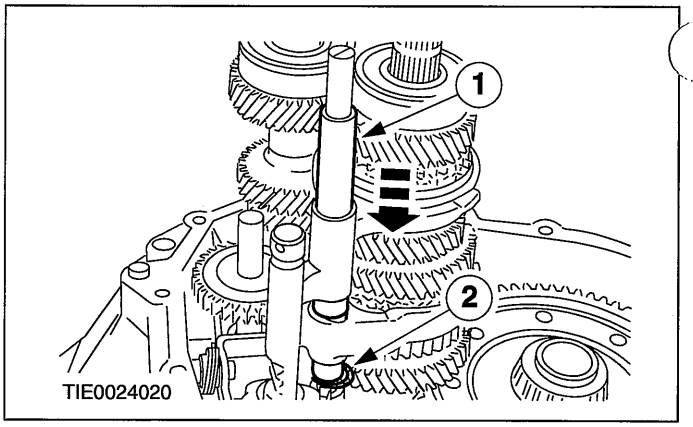


10. **NOTE:Install a new snap ring.**

    **Install the selector shaft guide sleeve upper snap ring.**

    1. Lift the guide sleeve.
    2. Install the snap ring.

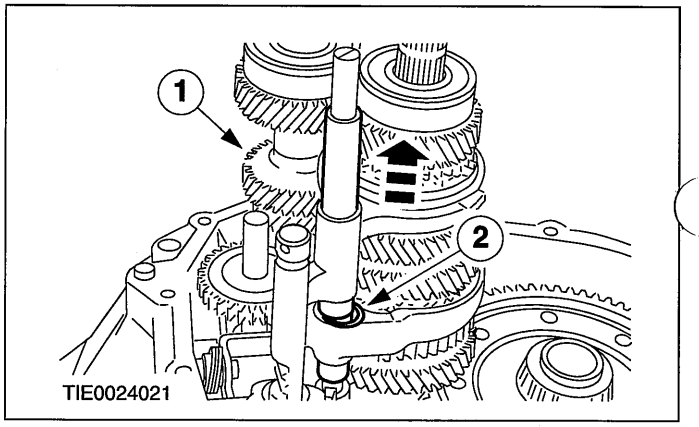


11. **Move the inner gearshift linkage to the fifth gear.**

    - Before pressing it downwards, turn the selector shaft clockwise until it reaches the reverse and fifth gear passage.

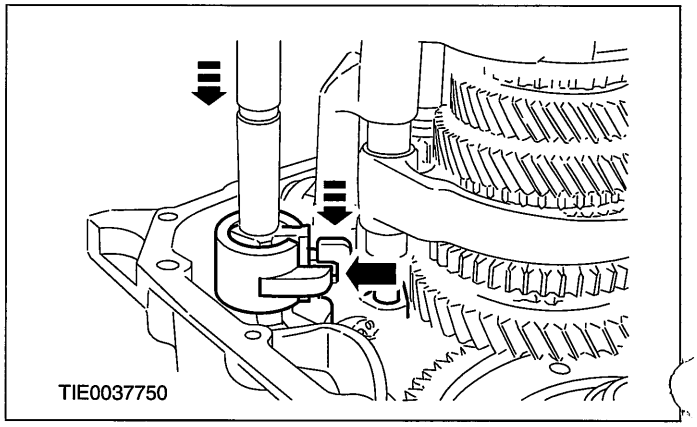


12. **Install the 3.8 mm thick measuring shim and secure it with a punch mark.**

## ASSEMBLY

1. Transaxle housing.
2. Measuring shim.
3. Bearing cup.

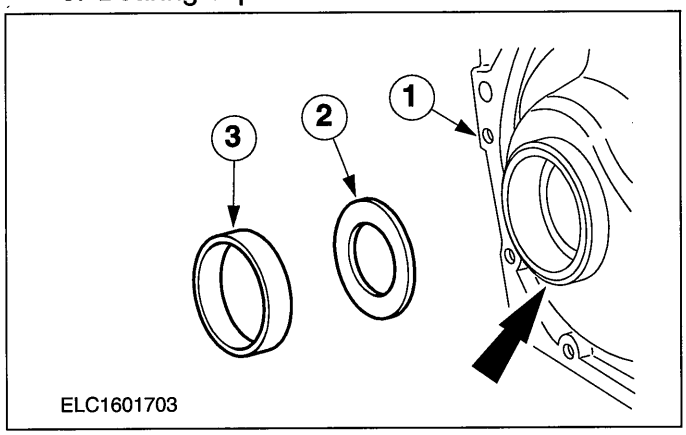


**13. NOTE:Make sure that the transaxle housing mating surfaces are clean.**

**Assemble the transaxle housing.**

- Using a M8 x 50 mm bolt install the special tool.
- Install the blanking plugs.
- Install the bolts.
- Turn the transaxle 180 degrees.

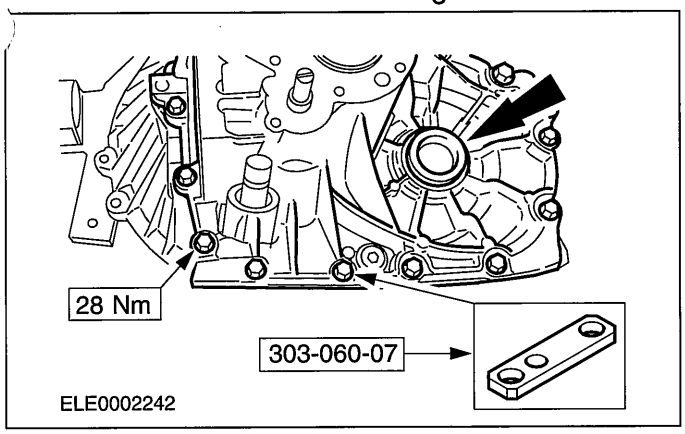


**14. Install the special tools.**

- Remove the blanking plugs.

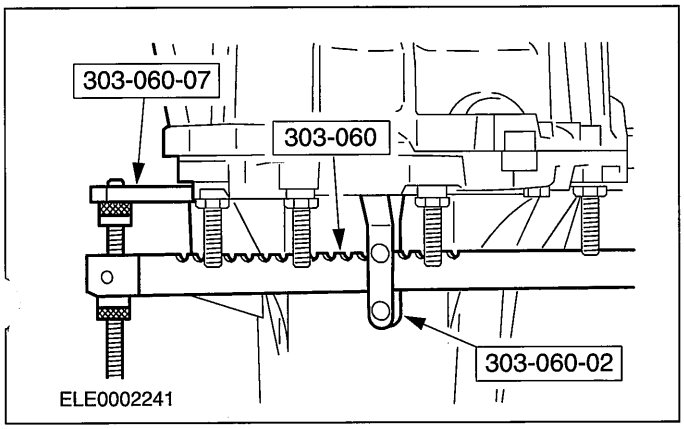


**15. Prepare the differential for measuring.**

- Turn the differential assembly approximately ten times to settle the bearings.
- Position the dial indicator gauge and magnetic stand and set the dial indicator gauge to zero.
- Pre-tension the dial indicator gauge by a minimum of 1 mm.

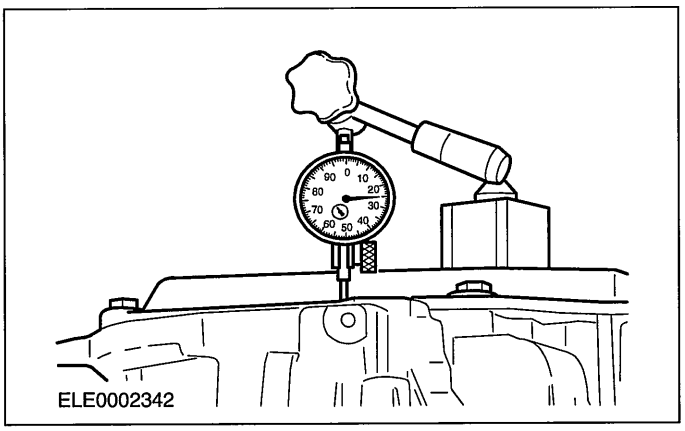


**16. NOTE:Carry out the measuring procedure three times and calculate the average value.**

**NOTE:**The adjusting shims are available from 0.1 mm to 1.1 mm in steps of 0.1 mm.

**Measure the differential end float.**

1. Using the special tool, lift the differential assembly.
2. Note the resulting measurement.

- Example: 0.73 mm + 0.74 mm + 0.72 mm divided by three = 0.73 mm.
  - The value of the thickness of the shim should be rounded down to the nearest tenth of a millimeter below if the value ends

## ASSEMBLY

in 0.05 mm and below, and rounded up to the nearest tenth of a millimeter if the value ends in 0.06 mm and above.

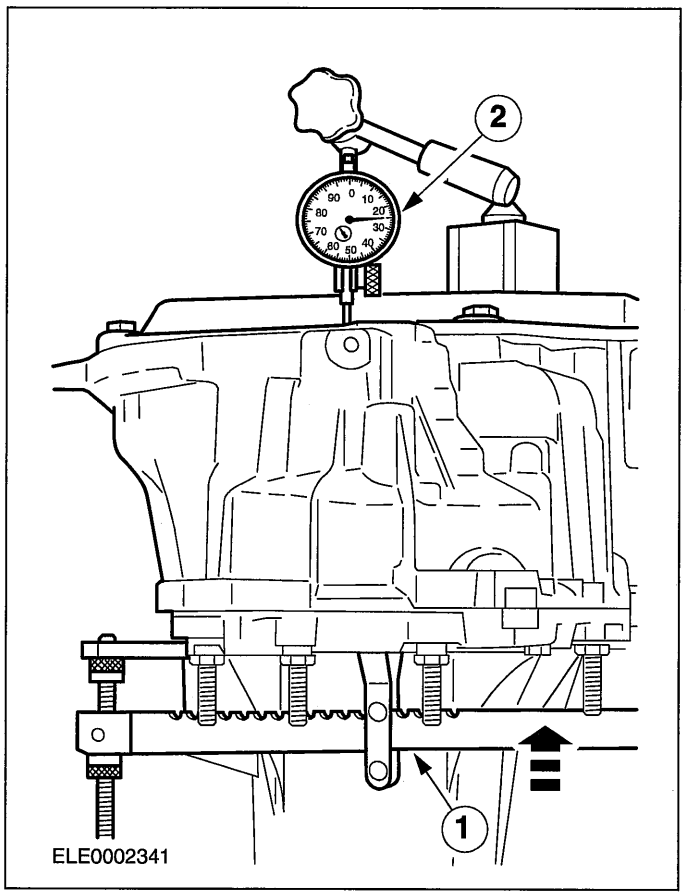


**17. Calculate the required adjusting shim thickness.**

- Thickness of adjusting shim = measuring shim (3.80 mm) + average value (0.73 mm) + bearing pre-load (0.14 mm) – thickness of the Belleville washers (4.42 mm)
  - Example: Adjusting shim = 3.80 mm + 0.73 mm + 0.14 mm – 4.42 mm = 0.25 mm.
- The thickness of the adjusting shim becomes 0.2 mm (rounded down from 0.25 mm).

**18. Separate the transaxle housing.**

- Install the blanking plugs.
- Turn the transmission approximately 180 degrees.
- Remove the dial indicator gauge, the magnetic stand and the special tools.

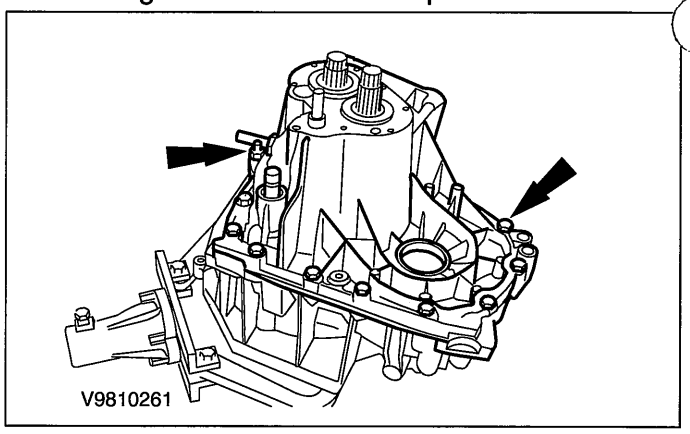


**19. Using the special tool, remove the differential bearing cup and the measuring shim.**

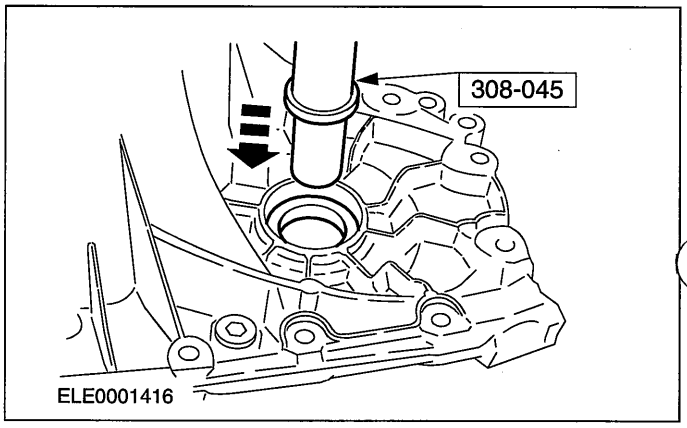


**20. ⚠CAUTION:The Belleville washers must be installed with the inner diameter of both washers touching.**

**Install the measured adjusting shim.**

1. Install the Belleville washers.
2. Install the measured adjusting shim.
3. Install the bearing cone.
   - Using a suitable center punch, secure the bearing cone.

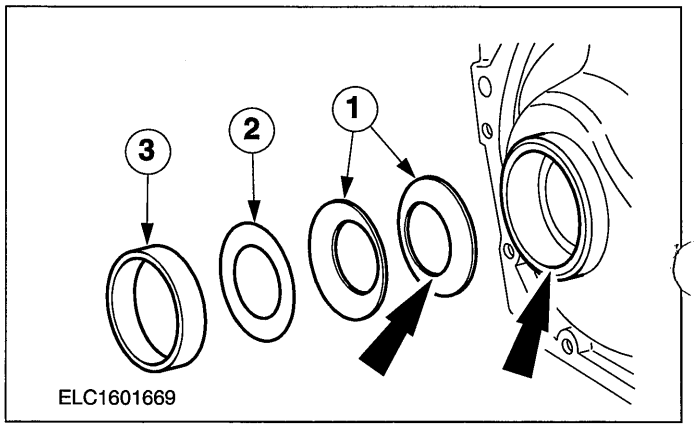

## ASSEMBLY

21. Apply sealer on the inside edge of the transaxle housing mating face.

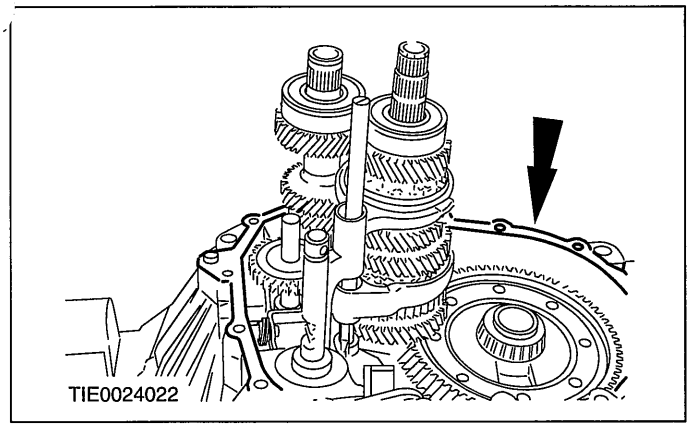


22. Assemble the transaxle housing and tighten the bolts.

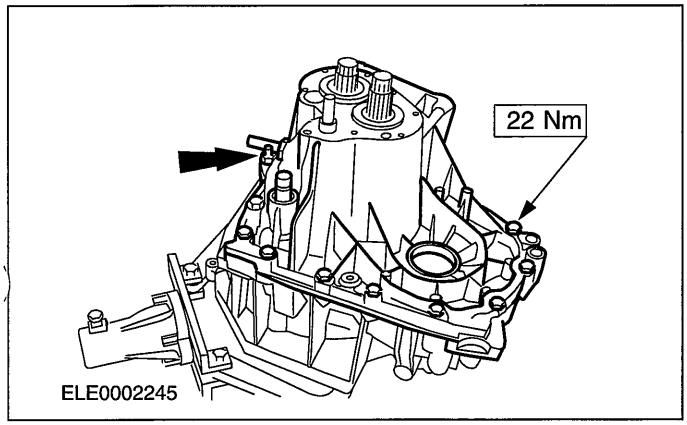


23. NOTE:Install new input and output shaft snap rings.

Raise the input and output shafts slightly and install the snap rings.

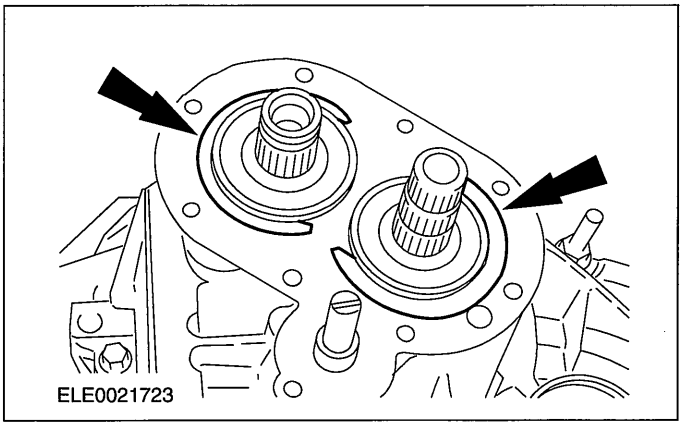


24. Using a suitable thread die, clean all the hole threads in the fifth gear housing.

25. NOTE:Install a new fifth gear housing gasket.

Install the fifth gear housing gasket.

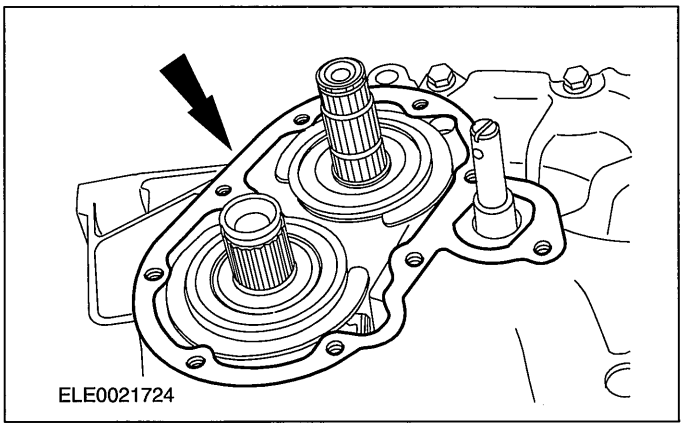


26. ⚠CAUTION:Make sure the snap rings are in the correct position. Failure to follow this instruction may cause damage to the fifth gear housing.

Turn the snap rings to the position shown.

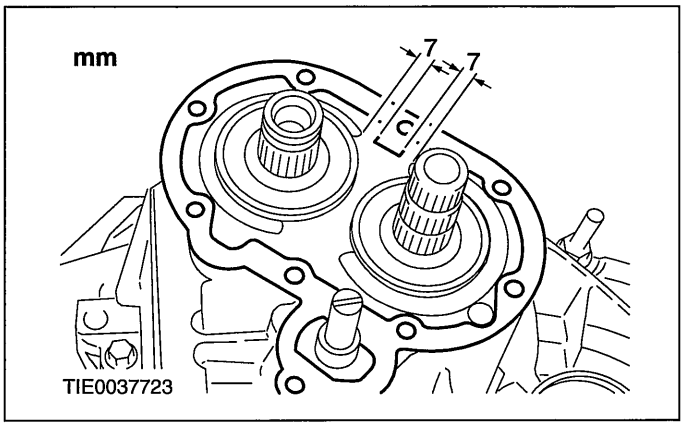


27. NOTE:Install new fifth gear housing retaining bolts.

Install the fifth gear housing.

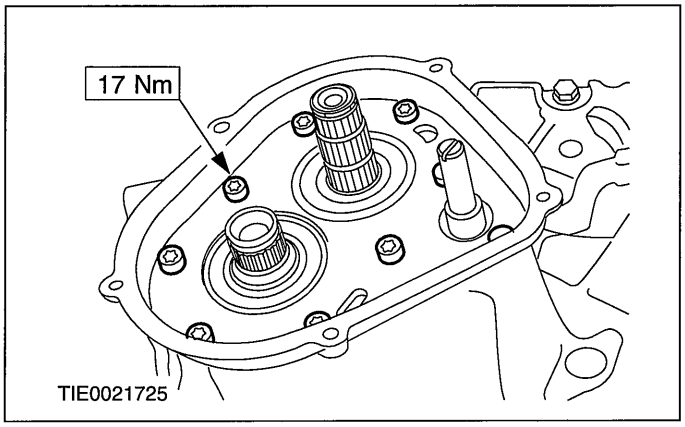


28. Remove the transaxle from the mounting stand.

## ASSEMBLY

**29. NOTE:The transaxle housing must not contact the press table. Support the input shaft splines.**

**Using the special tool and a suitable press, install the fifth gear.**

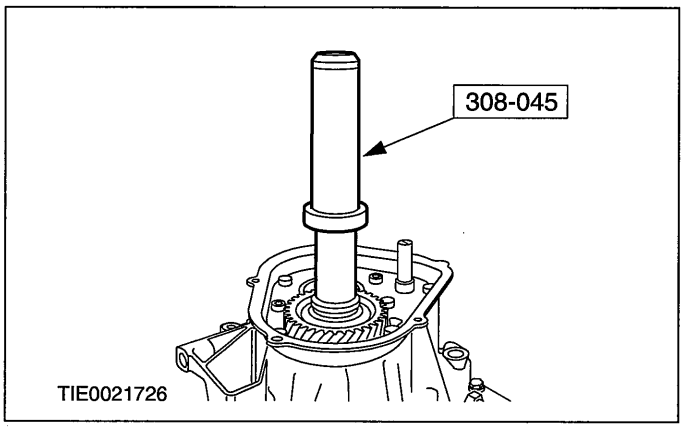


**30. Mount the transaxle on the mounting stand.**

**31. NOTE:Install a new fifth gear snap ring.**

**Install the fifth gear snap ring.**

1. Install the snap ring onto the special tool.
2. Install the special tool and push on the snap ring.

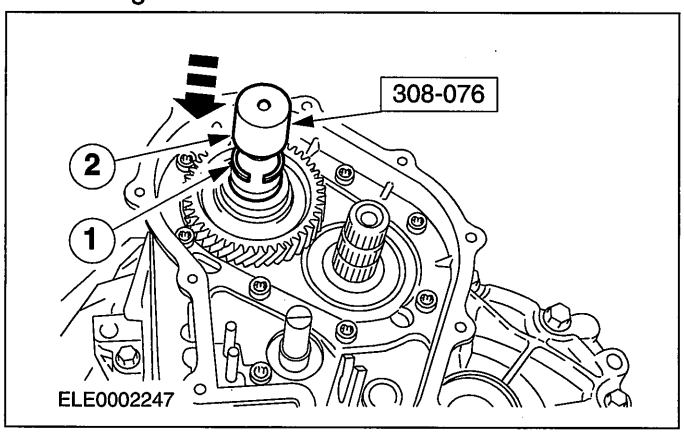


**32. Make sure that the selector shaft is in the neutral position.**

- Correct installation position for the selector shaft interlock mechanism.

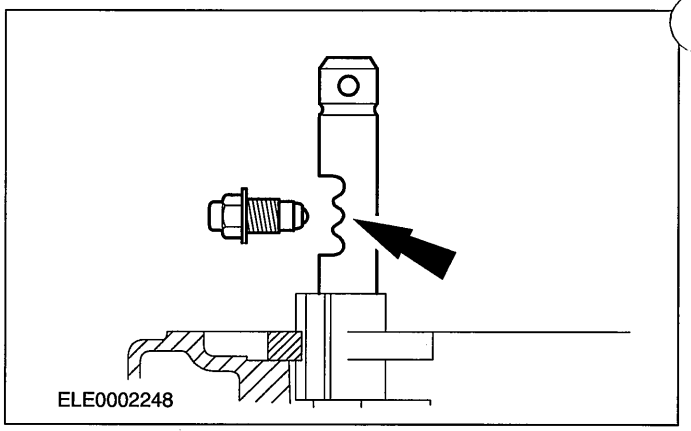


**33. Install the selector shaft interlock mechanism.**

- Apply sealant to the thread.

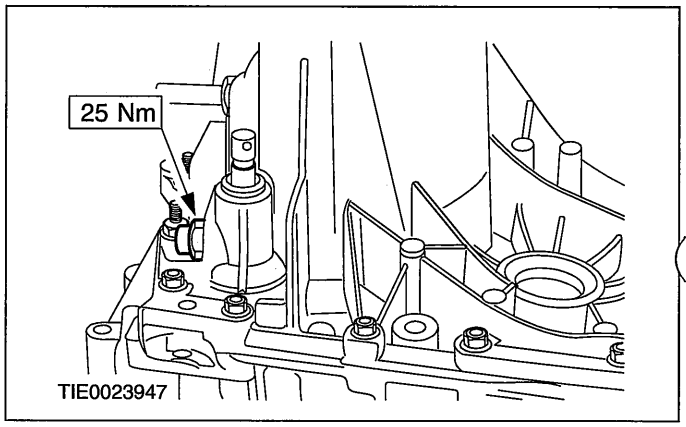


**34. NOTE:Align the gear synchronizer to the marks.**

**Assemble the fifth gear synchronizer.**

1. Fifth gear.
2. Synchronizer ring.
3. Synchronizer assembly.
4. Retaining plate.

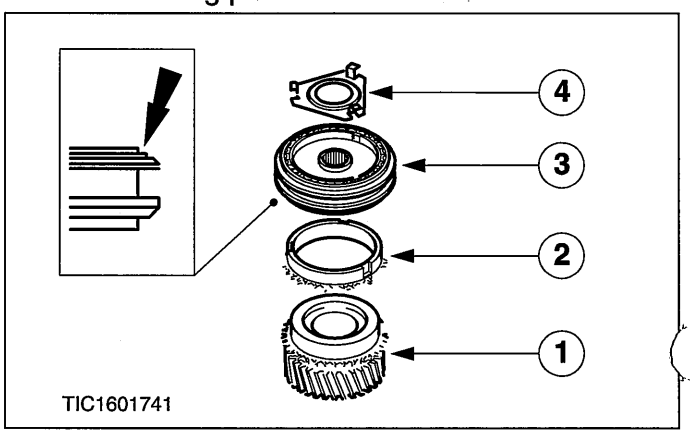

## ASSEMBLY

**35. NOTE:Install a new fifth gear synchronizer assembly snap ring.**

**NOTE:**Use a new selector fork retaining pin.

**Install the fifth gear synchronizer assembly and the selector fork.**

- Install the retaining pin.
- Install the snap ring.

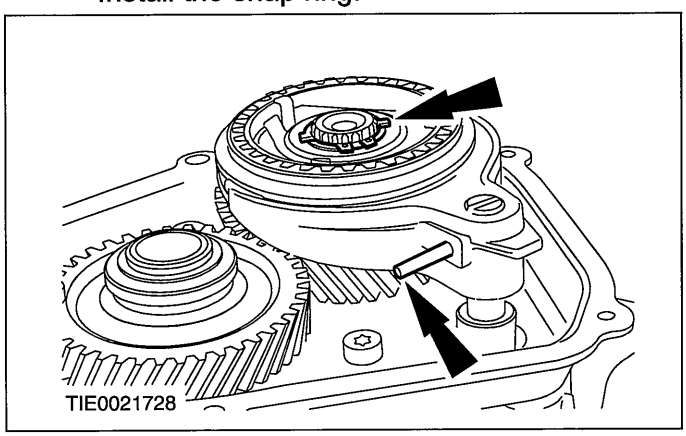


**36. Apply sealer evenly to the inside edge of the fifth gear housing mating face.**

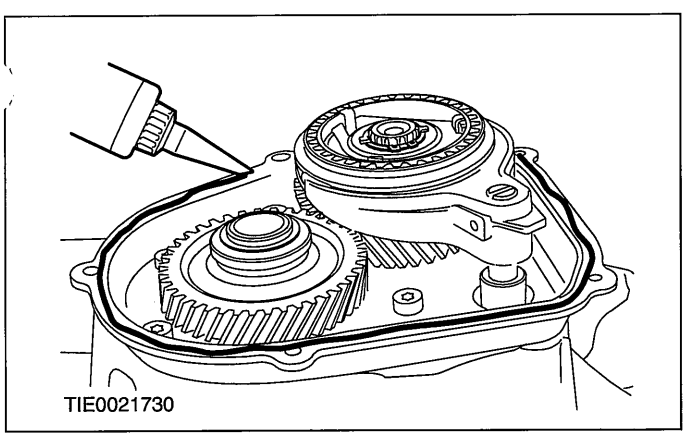


**37. Install the fifth gear housing cover.**

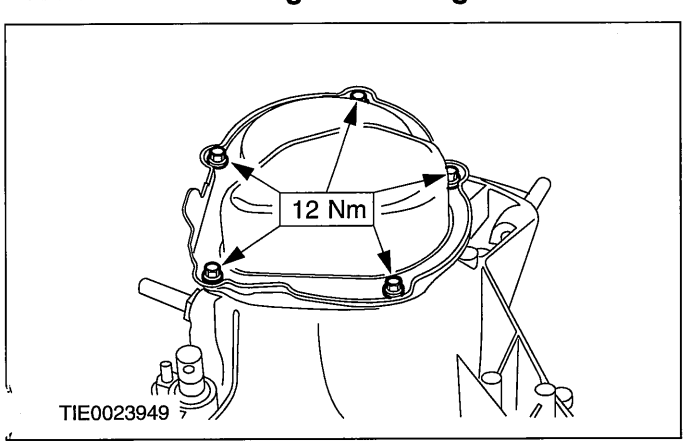


**38. Install the selector lever.**

- Install the bellows.

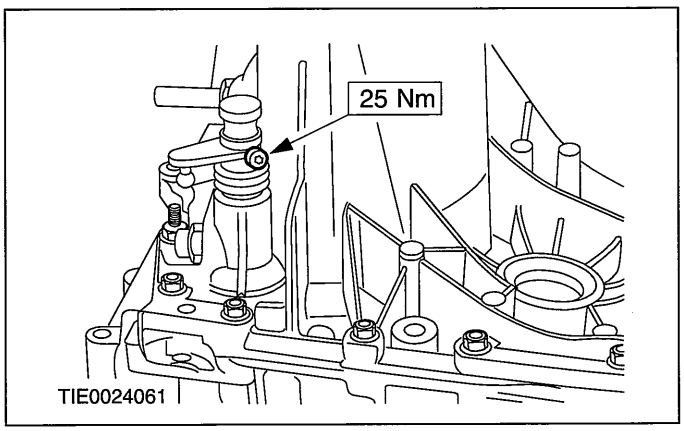


**39. Engage the fifth gear.**

- Turn the selector shaft clockwise as far as possible and push the shaft in.

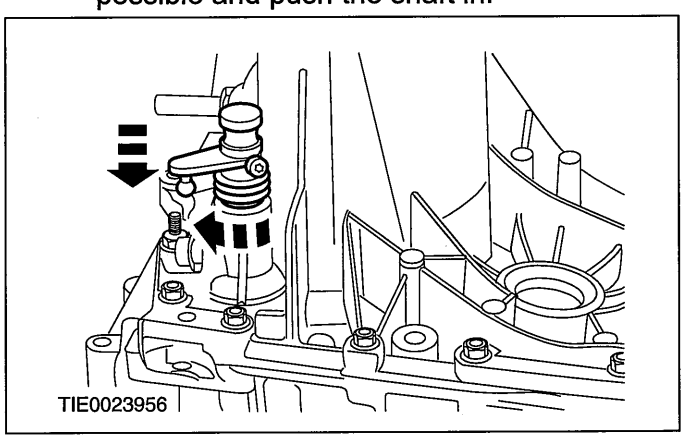


**40. NOTE:Install new halfshaft oil seals.**

**Using the special tools, install both halfshaft oil seals (left-hand side shown).**

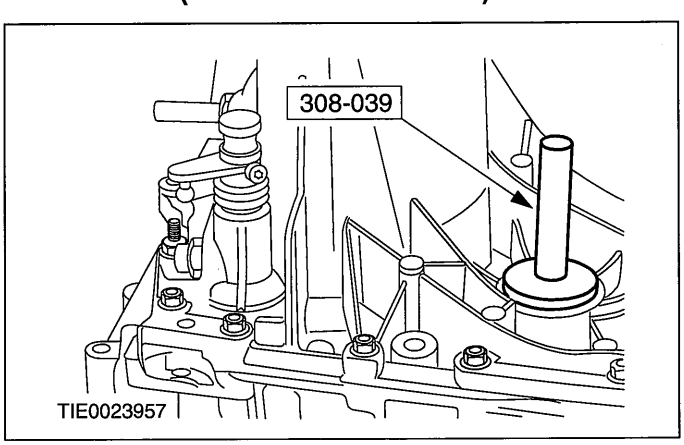

## ASSEMBLY

**41. Install the gearshift cable bracket.**

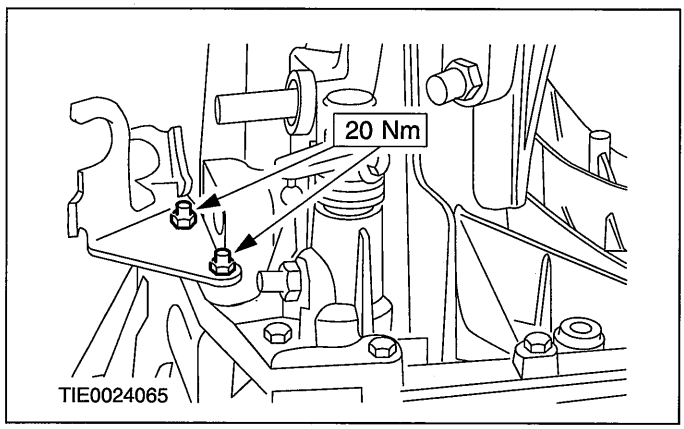


**42. NOTE:Install a new snap ring.**

**Install the gearshift lever.**

1. Install the snap ring.
2. Install the protective cap (if equipped).

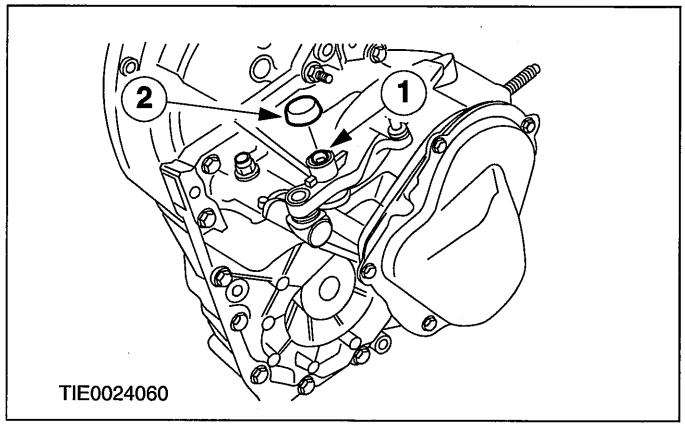


**43. Install the selector mechanism cover.**

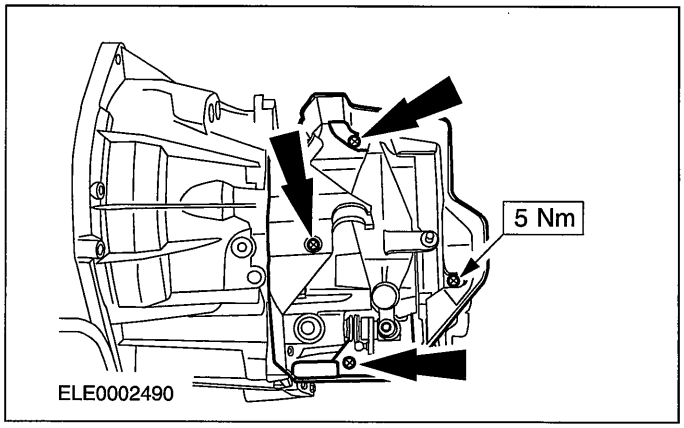


**44. Install the vehicle speed sensor (VSS) (if equipped).**

1. Push in the VSS.
2. Install the retaining pin.

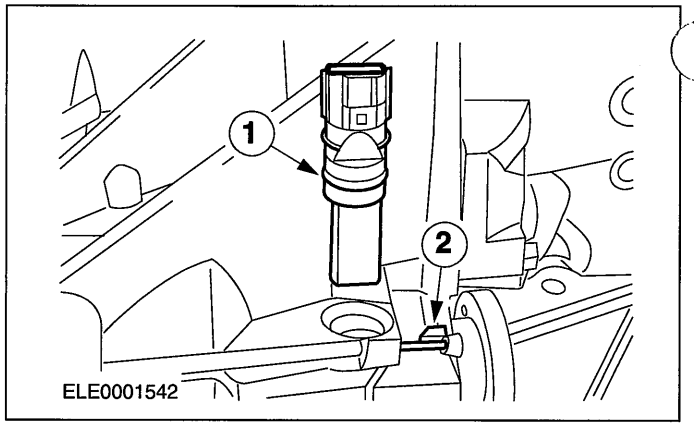


**45. ⚠CAUTION:Using suitable adhesive tape, cover the input shaft splines to prevent damage to the input shaft oil seal.**

**Position the input shaft oil seal.**

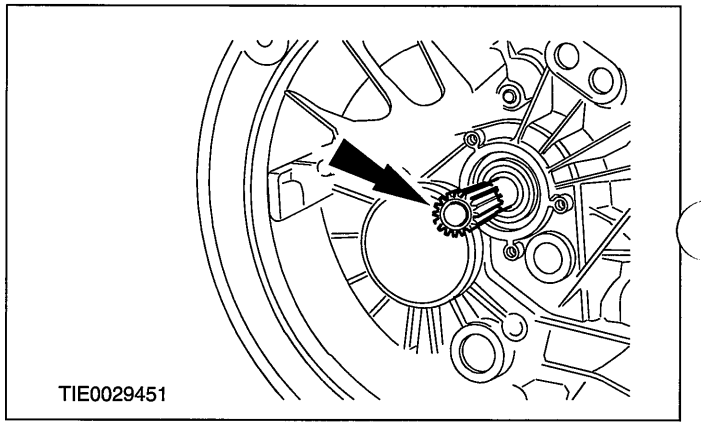


**46. ⚠CAUTION:Do not apply grease on any parts of the clutch slave cylinder.**

**Install the clutch slave cylinder.**

- Tighten the bolts evenly. In doing so, press the input shaft oil seal into the transmission housing.

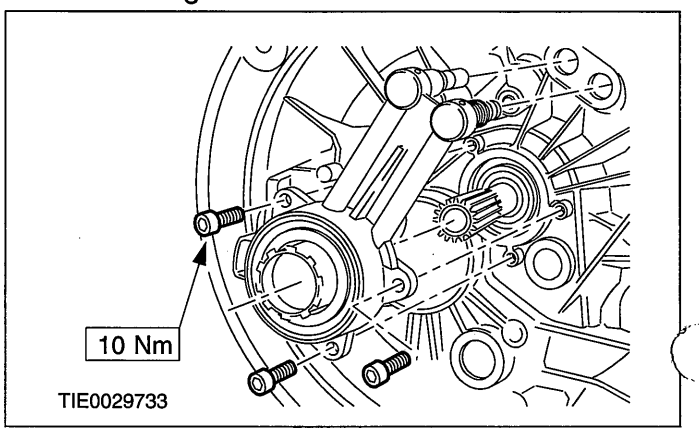

## ASSEMBLY

47. Remove the adhesive tape from the input shaft splines.
48. Coat the input shaft splines with a thin layer of grease.

## INSTALLATION

# Transaxle — 1.25L Duratec-16V (Sigma)/1.4L Duratec-16V (Sigma)/1.6L Duratec-16V (Sigma)(16 114 0)

### Special Tool(s)

| | |
|---|---|
| 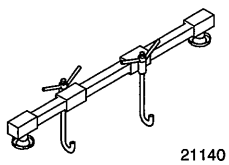 21140 | Support Bar, Engine 303-290A (21-140A) |
| 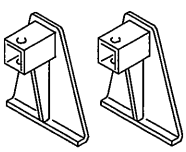 2114001 | Adapter for 303-290A 303-290-01 (21-140-01) |
| 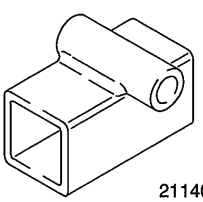 2114002 | Adapter for 303-290A 303-290-02 (21-140-02) |
| 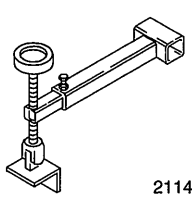 2114003 | Adapter for 303-290A 303-290-03A (21-140-03A) |

### General Equipment

| |
|---|
| Retaining strap |
| Transmission jack |

| Materials | |
|---|---|
| **Name** | **Specification** |
| Manual transmission fluid | WSD-M2C200-C |

## Installation

All vehicles

1. **CAUTIONS:**

   **⚠Use suitable retaining straps to secure the transaxle on the transmission jack.**

   **⚠Make sure that the two locating dowels are installed.**

   **Using a suitable transmission jack, install the transaxle.**

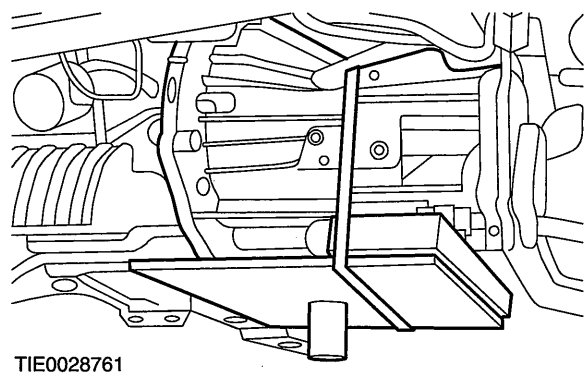


2. **Install the transaxle right-hand retaining bolts.**

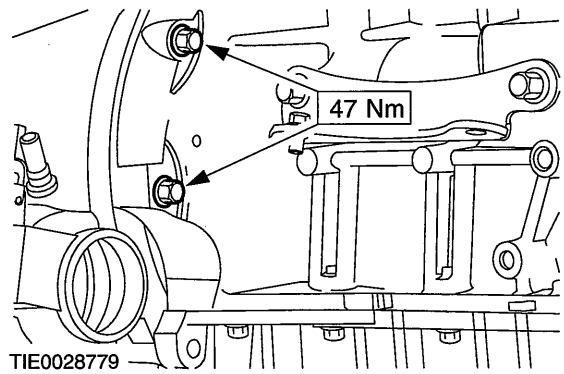


3. **Install the transaxle lower retaining bolts.**

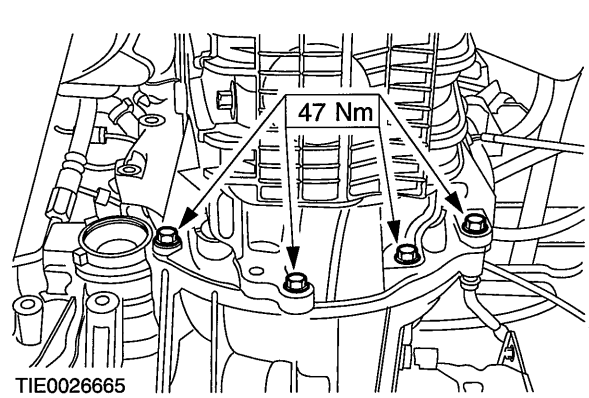

## INSTALLATION

4. **Install the transaxle left-hand retaining bolt.**

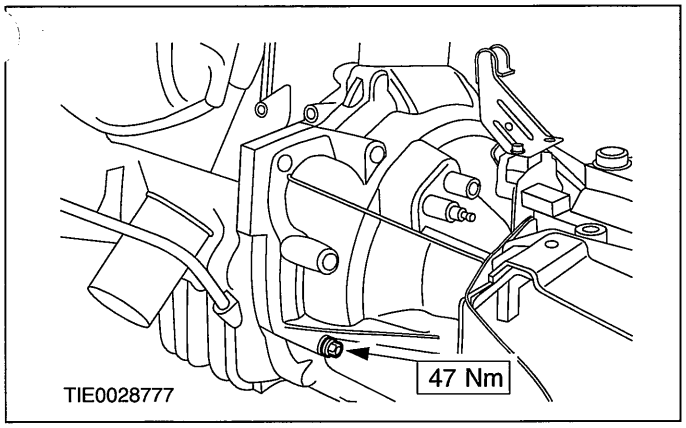


5. **Remove the retaining strap.**
6. **Remove the transmission jack.**
7. **Install the engine and transaxle rear mount retaining bracket.**

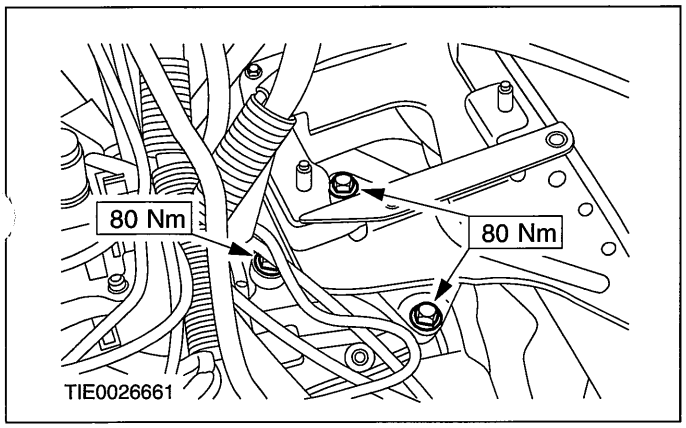


8. **Lower the vehicle.**
9. **Using the special tools, raise the engine and transaxle assembly.**

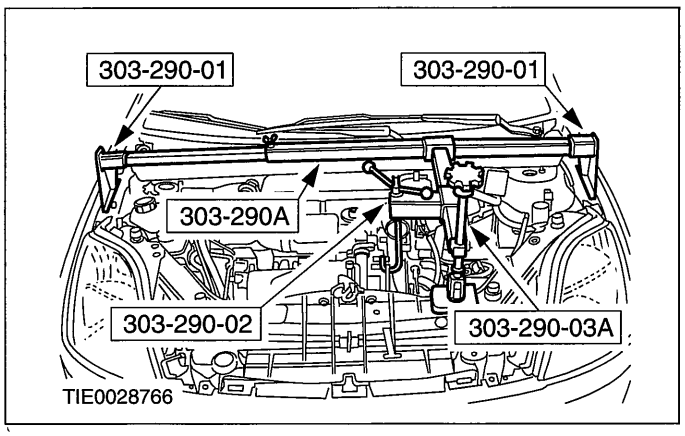


10. **NOTE:Do not tighten the engine rear mount retaining nuts at this stage.**

**NOTE:**Install new engine rear mount retaining nuts.

**Install the engine rear mount.**

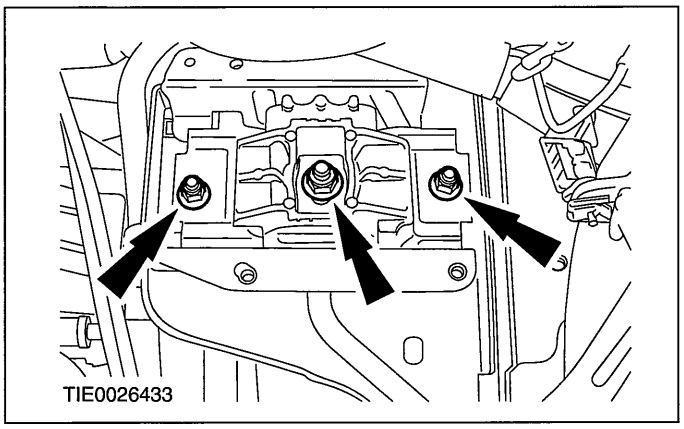


11. **Remove the special tools.**

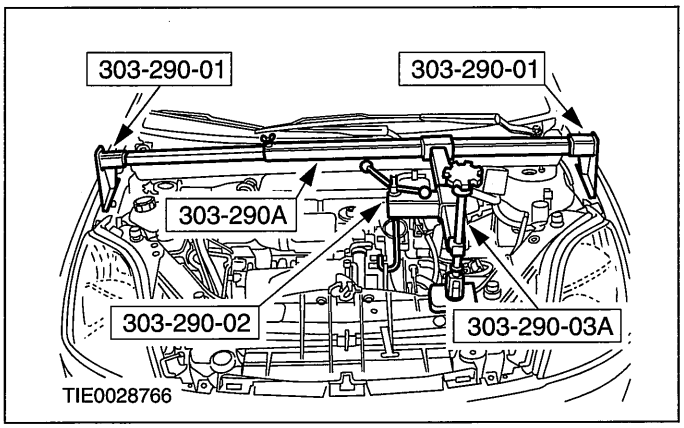


12. **NOTE:Install new exhaust flange nuts and a new exhaust flange gasket.**

**Attach the exhaust flexible pipe to the catalytic converter.**

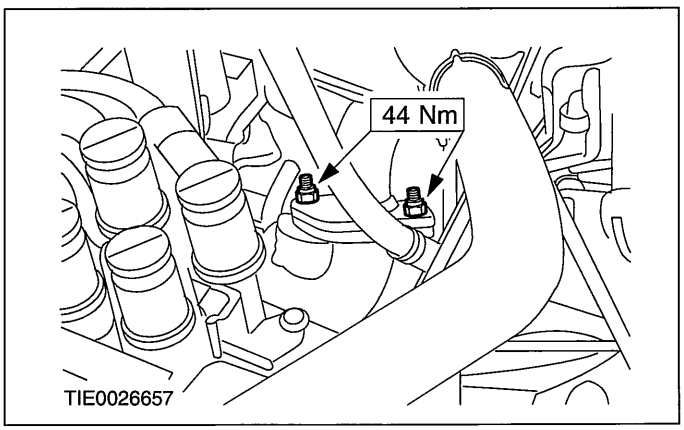

## INSTALLATION

13. **Connect the vehicle speed sensor (VSS) electrical connector (if equipped).**

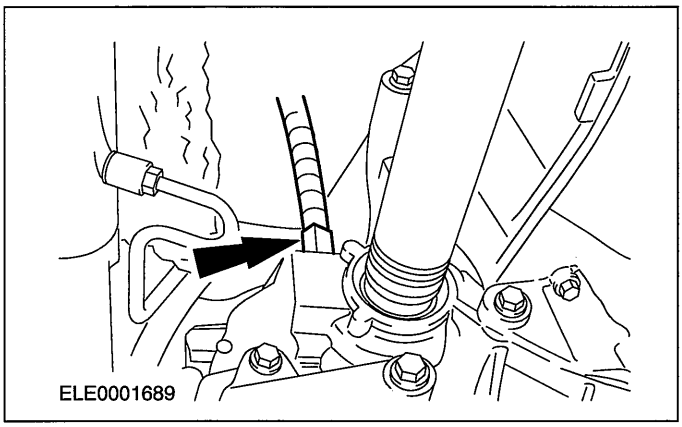


14. **⚠CAUTION:If brake fluid is spilt on the paintwork, the affected area must be immediately washed down with cold water.**

**NOTE:**Make sure the spring clip is correctly seated.

**Connect the clutch slave cylinder supply line.**

- Install the spring clip.

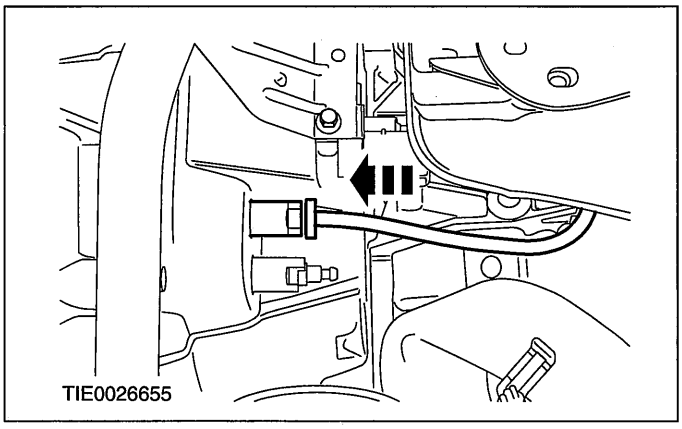


15. **Attach the coolant expansion tank to the bracket.**

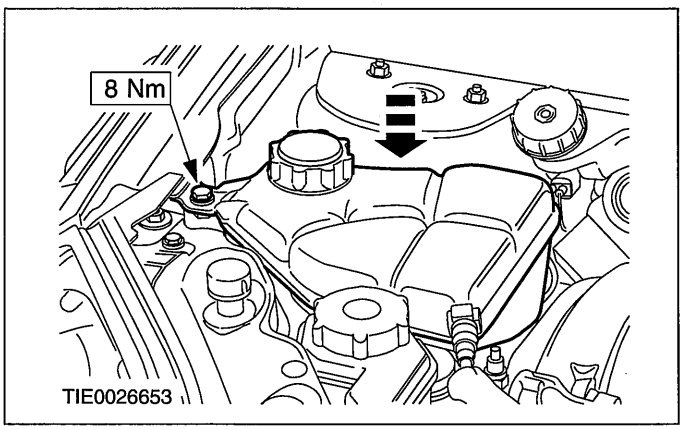


16. **Raise and support the vehicle. For additional information, refer to Section 100-02 [Jacking and Lifting].**

17. **CAUTIONS:**

**⚠Support the halfshaft. The inner joint must not be bent more than 18 degrees. The outer joint must not be bent more than 45 degrees.**

**⚠Do not damage the halfshaft oil seal.**

**Attach the right-hand halfshaft and the intermediate shaft to the transaxle.**

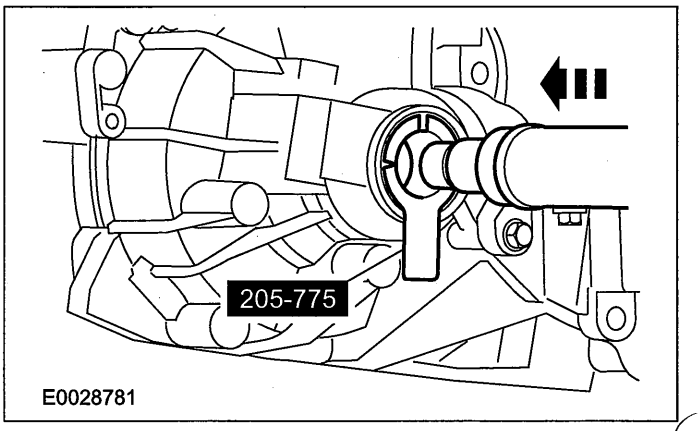


18. **NOTE:Install a new center bearing cap and locknuts.**

**Install the intermediate shaft center bearing cap.**

1. Install the center bearing cap.
2. Attach the heat shield.
3. Install the locknuts.

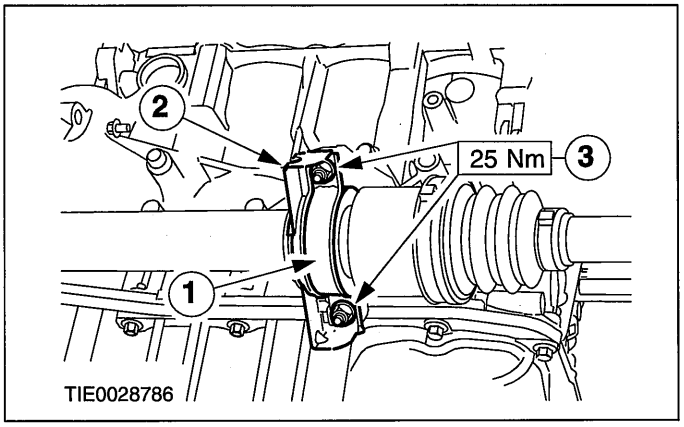


19. **CAUTIONS:**

**⚠Support the halfshaft. The inner joint must not be bent more than 18 degrees. The outer joint must not be bent more than 45 degrees.**

## INSTALLATION

⚠**Do not damage the halfshaft oil seal.**

⚠**Make sure the snap ring is correctly seated.**

**NOTE:** Install a new snap ring.

**Attach the left-hand halfshaft to the transaxle.**

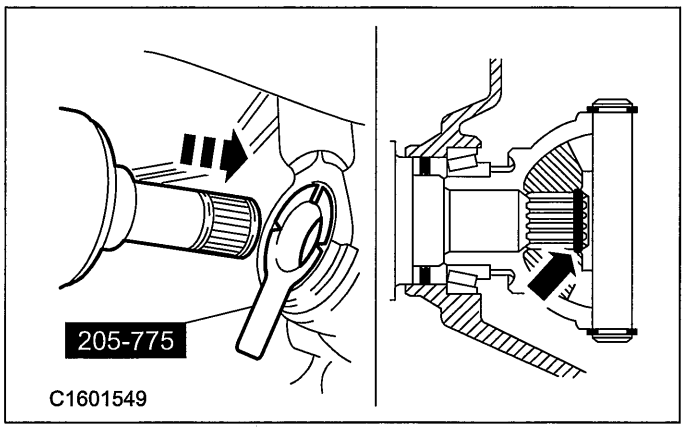


20. ⚠**CAUTION: Make sure that the heat shield is installed to prevent damage to the ball joint.**

**NOTE:** The lower arm pinch bolt must be installed from the rear of the wheel knuckle.

**Attach the lower arm to the wheel knuckle on both sides.**

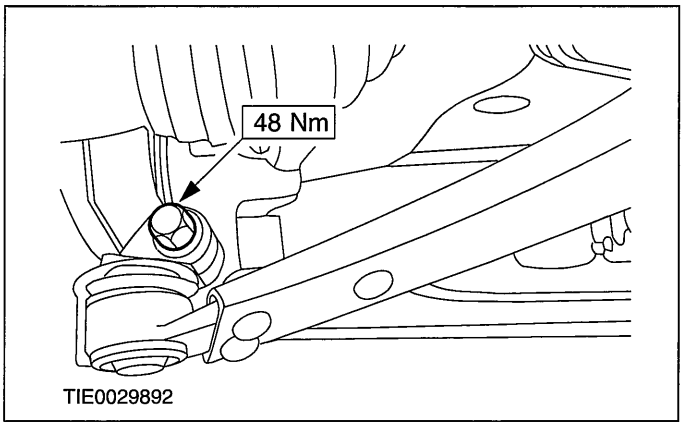


21. **Install the engine support insulator.**

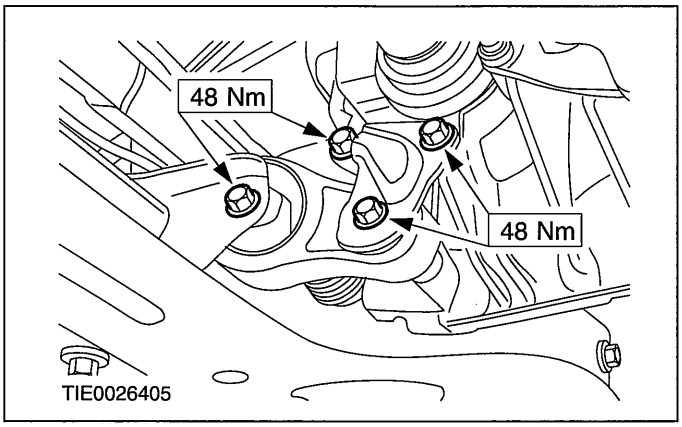


22. **Install the accessory drive belt cover.**

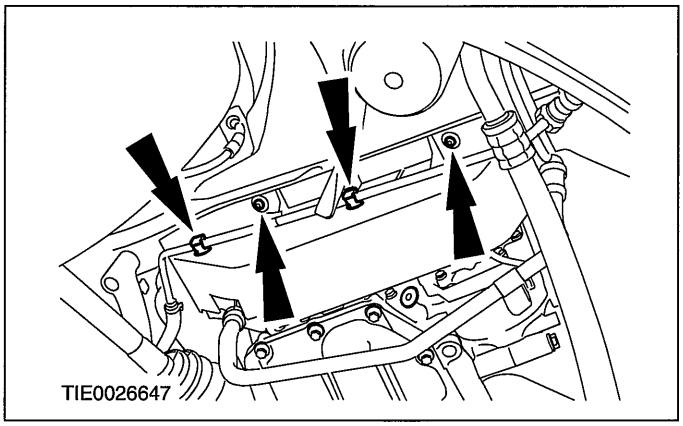


Vehicles without automated gearshift

23. **Attach the gearshift cables to the bracket and turn the abutment sleeves counterclockwise.**

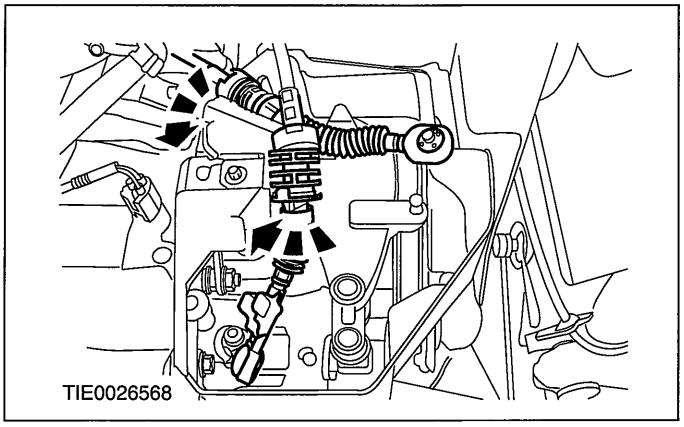

## INSTALLATION

**24. Attach the gearshift cables to the selector levers.**

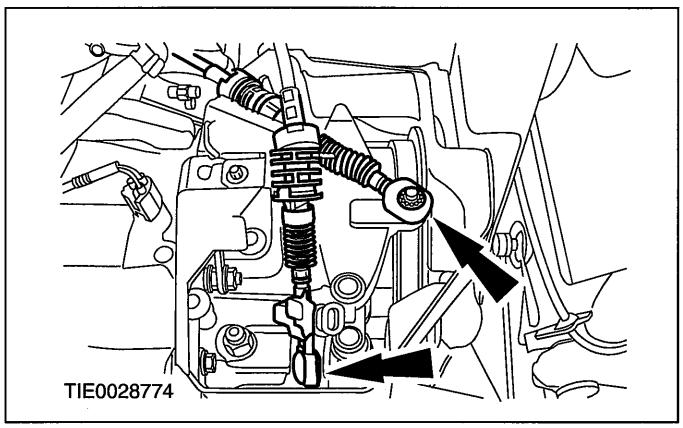


Vehicles with automated gearshift

**25. Connect the gearshift actuator electrical connector (colored grey).**

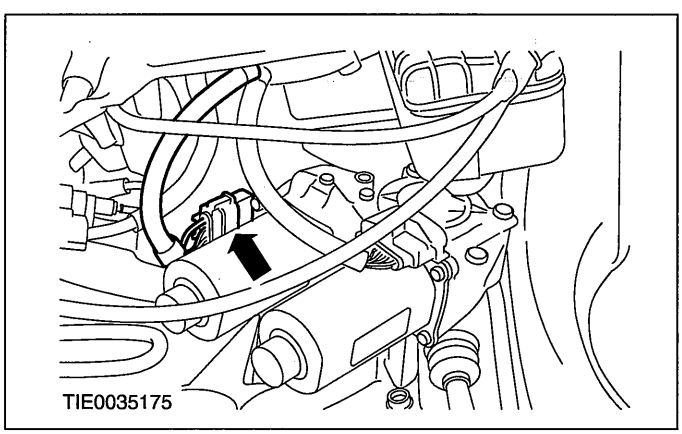


**26. Connect the gearshift actuator electrical connector (colored black).**

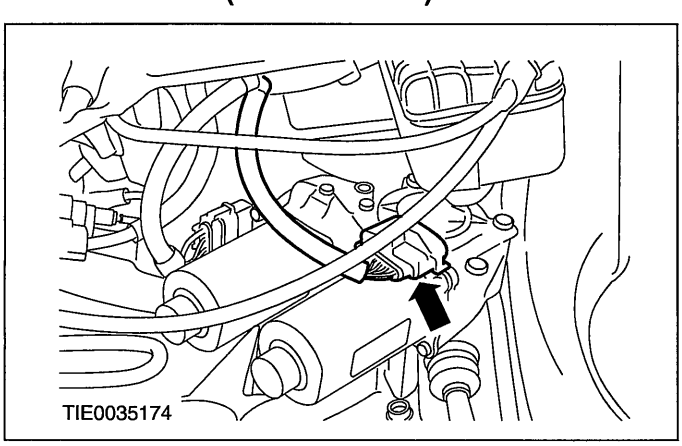


**27. Install the gearshift actuator cover.**

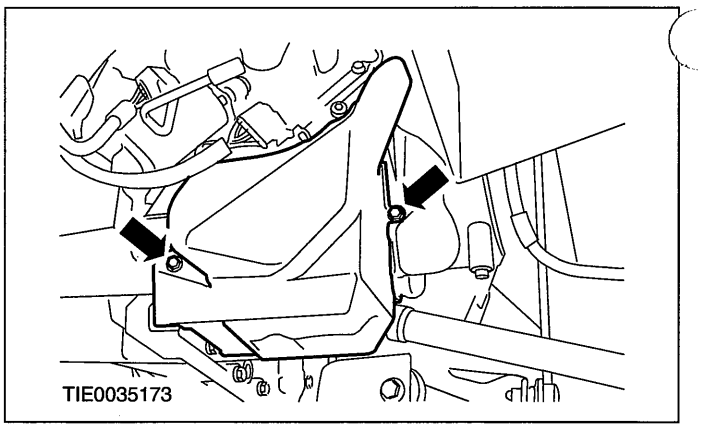


**28. Connect the clutch slave cylinder supply line.**

- Install the clip.

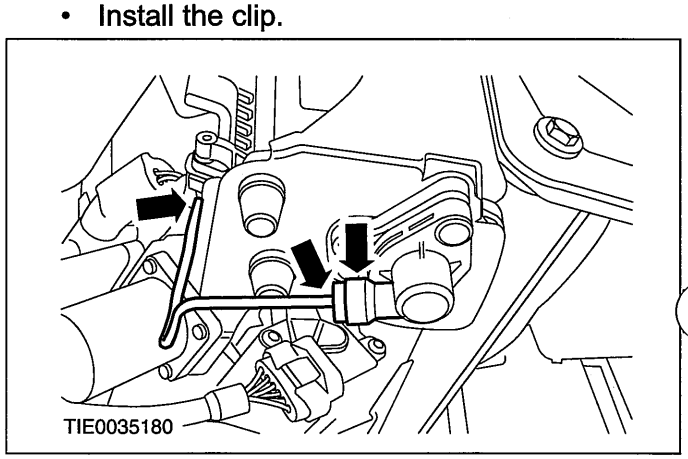


All vehicles

**29. Connect the reversing lamp switch electrical connector.**

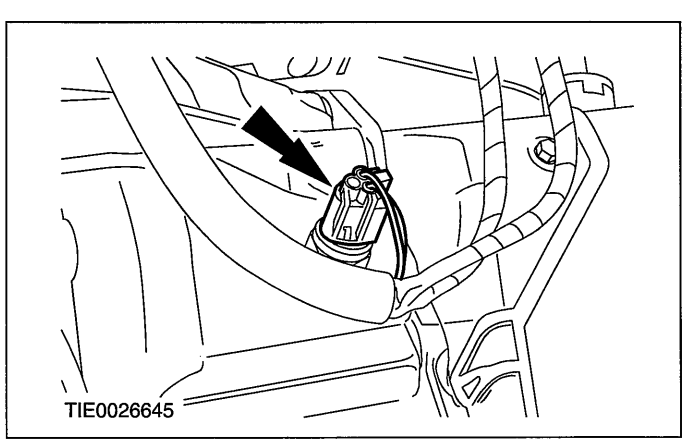


**30. Install the starter motor.**

## INSTALLATION

- Attach the starter motor electrical connector to the starter motor.

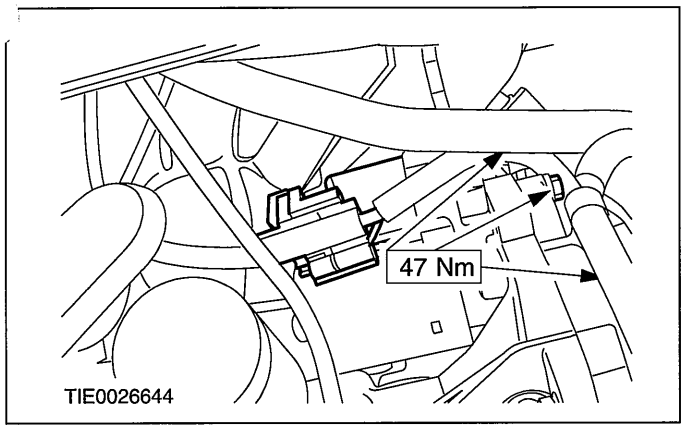


**31. Lower the vehicle.**

**32. Tighten the strut spring assembly top mount nuts on both sides.**

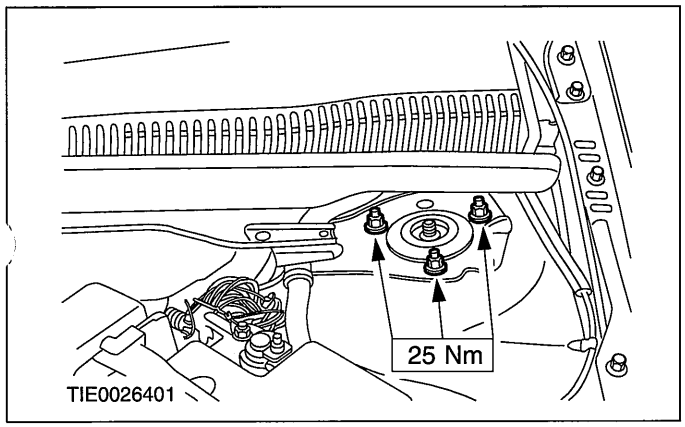


**33. Install the transaxle upper retaining bolts.**

- Attach the engine wiring harness bracket to the transaxle.

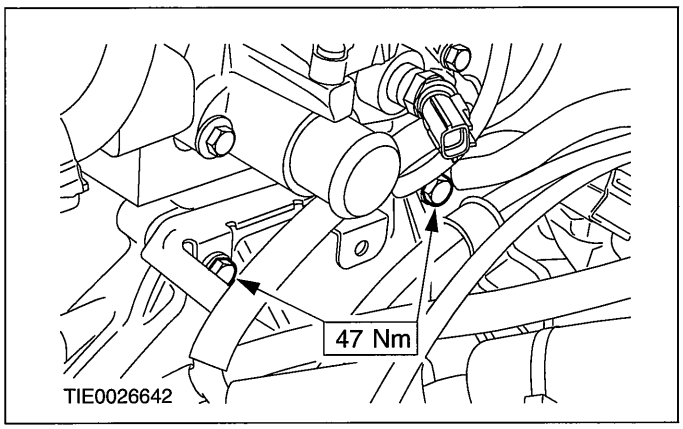


**34. Tighten the engine rear mount outer retaining nuts.**

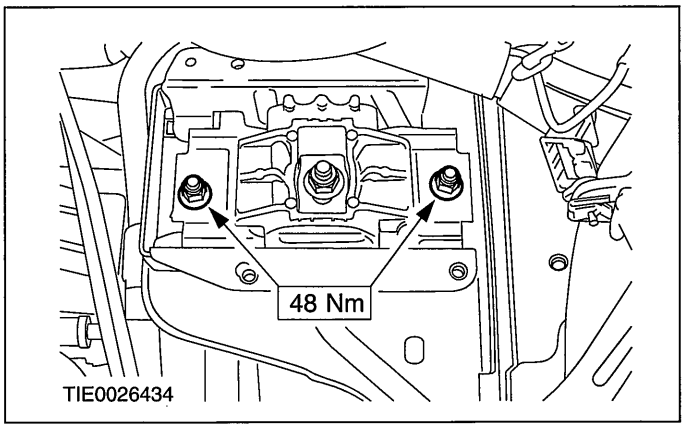


**35. Tighten the engine rear mount center retaining nut.**

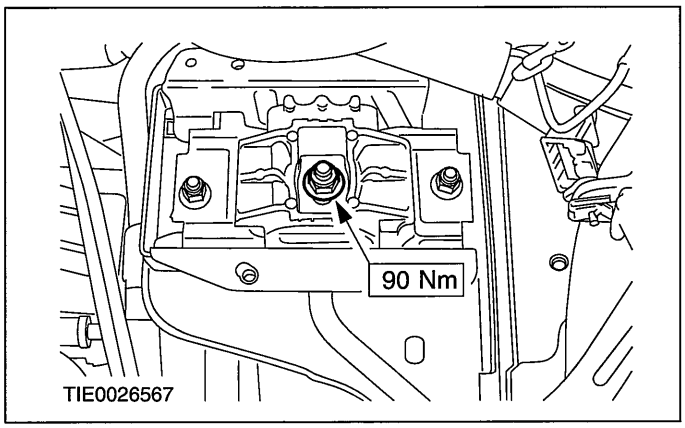


**36. Install the battery tray support bracket.**

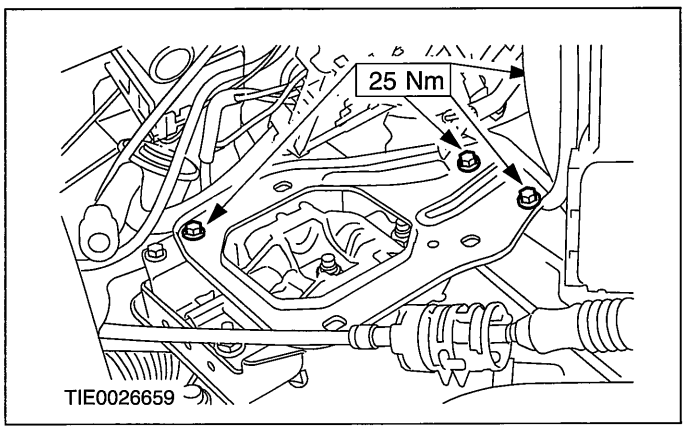

## INSTALLATION

37. **Connect the powertrain control module (PCM) electrical connector to the PCM.**

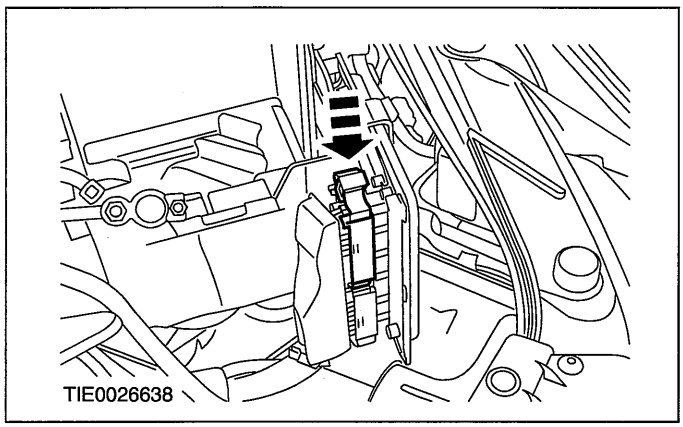


38. **Install the front wheels and tires. For additional information, refer to Section 204-04 [Wheels and Tires].**

Vehicles without automated gearshift

39. **Adjust the gearshift cables. For additional information, refer to Section 308-00 [Manual Transmission/Transaxle and Clutch - General Information].**
40. **Bleed the clutch system. For additional information, refer to Section 308-00 [Manual Transmission/Transaxle and Clutch - General Information].**

All vehicles

41. **Install the battery tray. For additional information, refer to Section 414-01 [Battery, Mounting and Cables].**
42. **With the vehicle on a level surface, fill the transaxle until the oil level is just below the bottom of the filler hole.**

Vehicles with automated gearshift

43. **⚠CAUTION:The worldwide diagnostic system (WDS) gearshift actuator bleed option must be carried out if any part of the clutch hydraulic system is opened or any new components are installed.**

**NOTE:**When the WDS gearshift actuator bleed option is selected, the learn transmission and learn clutch parameter options will automatically be completed.

**Bleed the clutch system. For additional information, refer to Section 308-00 [Manual Transmission/Transaxle and Clutch - General Information].**

## INSTALLATION

# Transaxle — 2.0L Duratec-HE (MI4)(16 114 0)

### Special Tool(s)

| | |
|---|---|
| 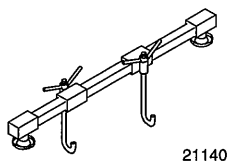 21140 | Support Bar, Engine 303-290A (21-140A) |
| 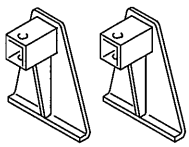 2114001 | Adapter for 303-290A 303-290-01 (21-140-01) |
| 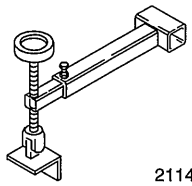 2114003 | Adapter for 303-290A 303-290-03A (21-140-03A) |
| 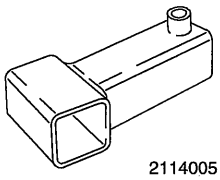 2114005 | Adapter for 303-290A 303-290-05A (21-140-05A) |
| 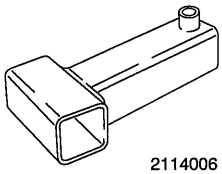 2114006 | Adapter for 303-290A 303-290-06 (21-140-06) |

### General Equipment

| |
|---|
| Retaining strap |
| Transmission jack |

### Materials

| Name | Specification |
|---|---|
| Manual transmission fluid | WSD-M2C200-C |

## Installation

1. **CAUTIONS:**

   **⚠Use suitable retaining straps to secure the transaxle on the transmission jack.**

   **⚠Make sure that the two locating dowels are installed.**

   **Using a suitable transmission jack, install the transaxle.**

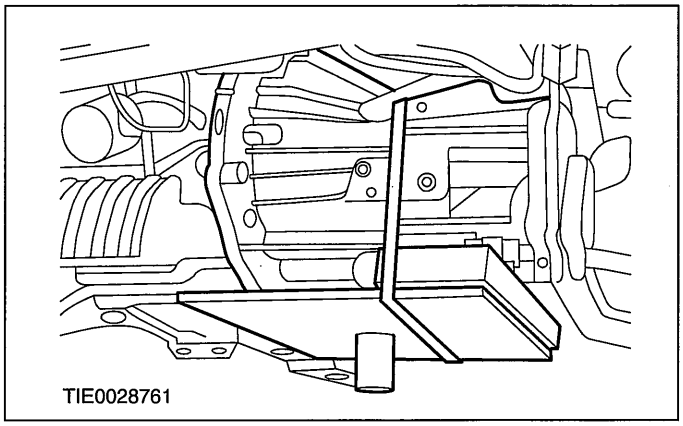


2. **Install the transaxle right-hand retaining bolts.**

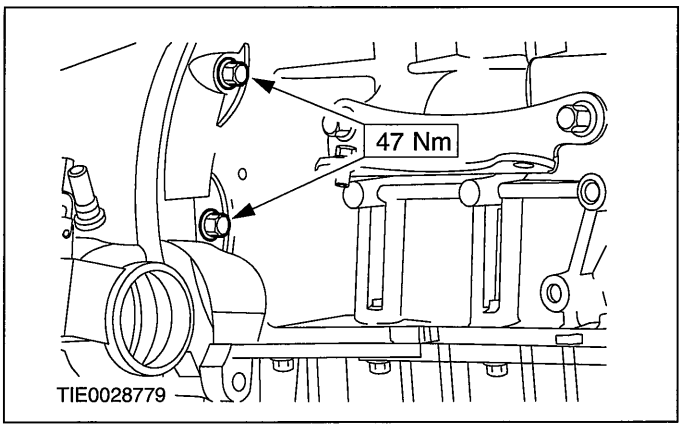

## INSTALLATION

3. Install the transaxle lower retaining bolts.

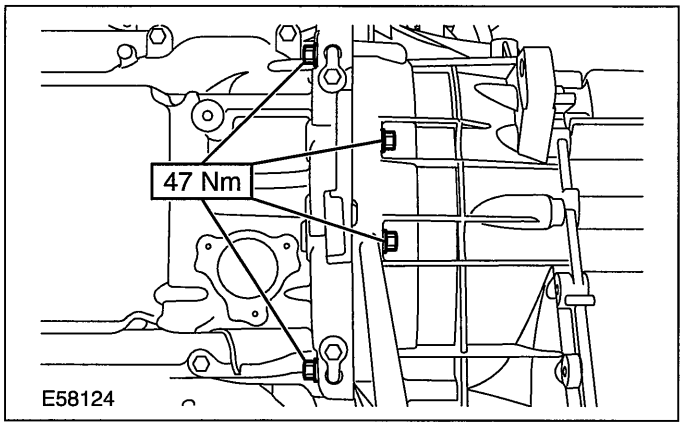


4. Install the transaxle left-hand retaining bolt.

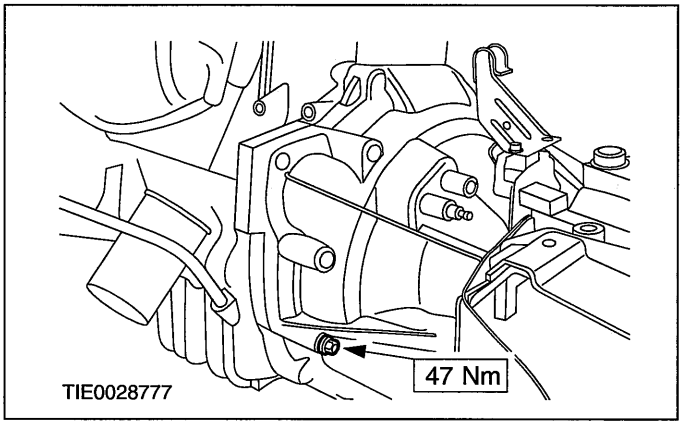


5. Remove the retaining strap.
6. Remove the transmission jack.
7. Lower the vehicle.
8. Install the engine and transaxle rear mount retaining bracket.

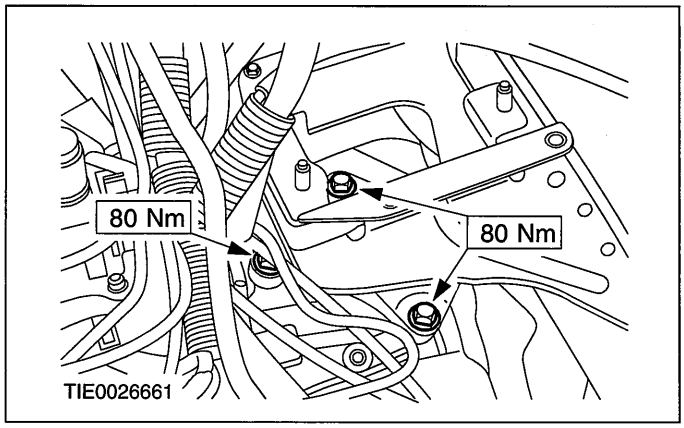


9. Using the special tools, raise the engine and transaxle assembly.

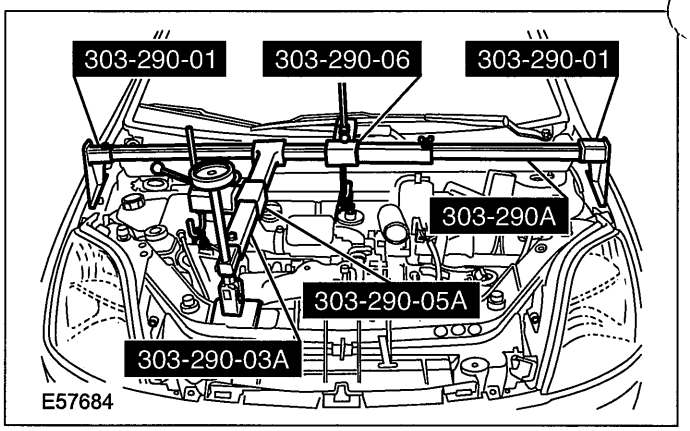


10. NOTE:Do not tighten the engine rear mount retaining nuts at this stage.

**NOTE:**Install new engine rear mount retaining nuts.

Install the engine rear mount.

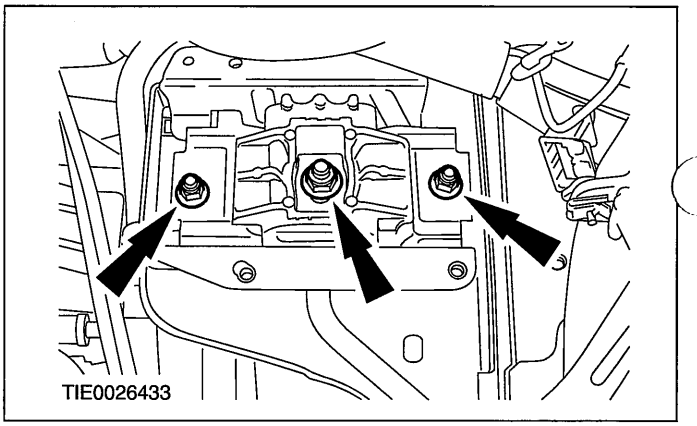


11. Remove the special tools.

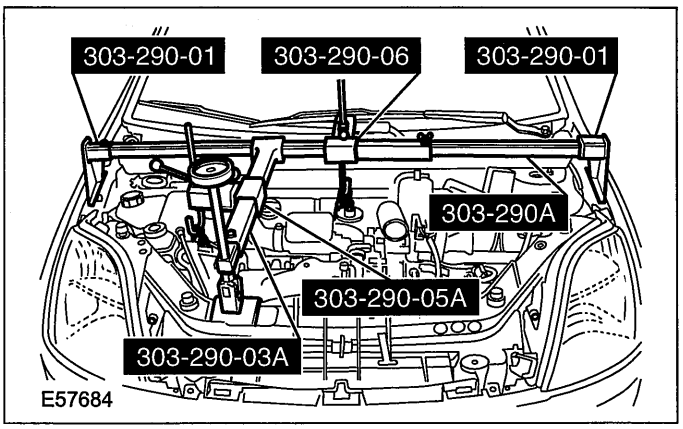


12. NOTE:Install new exhaust flange nuts and a new exhaust flange gasket.

## INSTALLATION

**Attach the exhaust flexible pipe to the catalytic converter.**

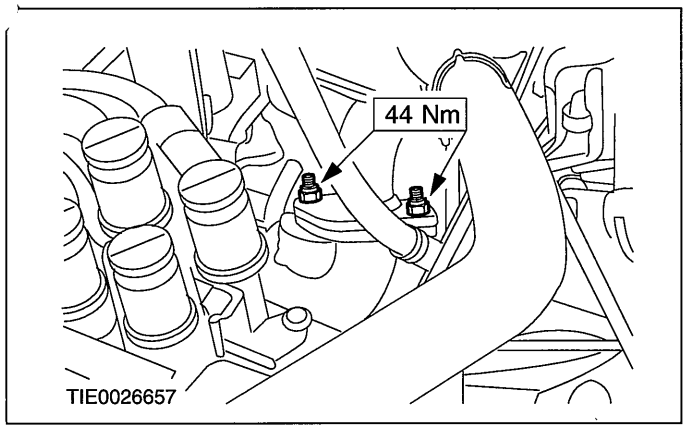


13. **⚠CAUTION:If brake fluid is spilt on the paintwork, the affected area must be immediately washed down with cold water.**

**NOTE:**Make sure the spring clip is correctly seated.

**Connect the clutch slave cylinder supply line.**

- Install the spring clip.

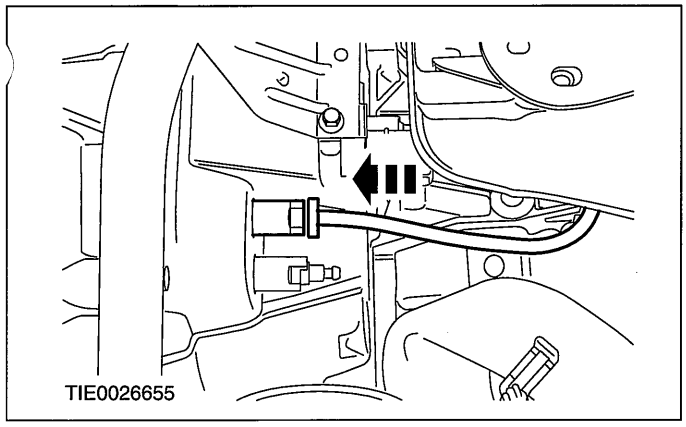


14. **Raise and support the vehicle. For additional information, refer to: (100-02 Jacking and Lifting)**

**Jacking (Description and Operation), Lifting (Description and Operation).**

15. **Remove the support wrap or suitable splint from the exhaust flexible pipe.**

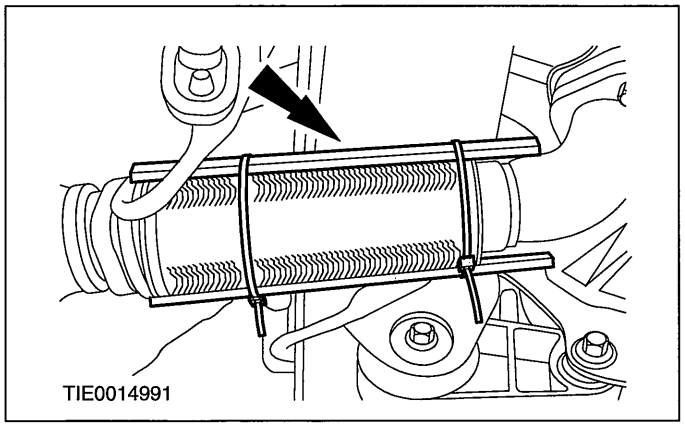


16. **Install the right-hand halfshaft.**

**For additional information, refer to: Front Halfshaft RH (205-04 Front Drive Halfshafts, Removal and Installation).**

17. **Install the left-hand halfshaft.**

**For additional information, refer to: Front Halfshaft LH (205-04 Front Drive Halfshafts, Removal and Installation).**

18. **Install the engine support insulator.**

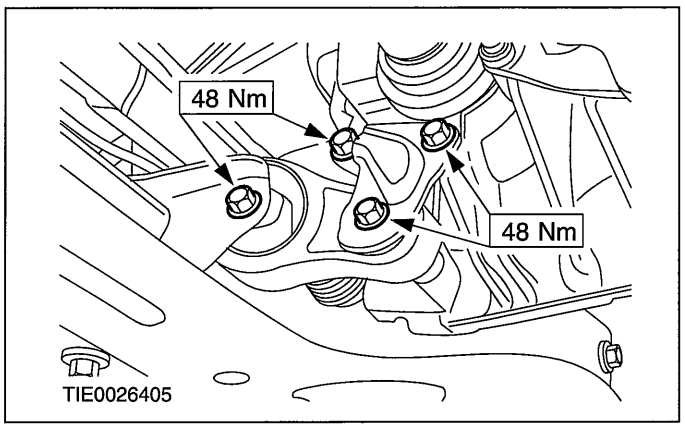


19. **Install the accessory drive belt cover.**

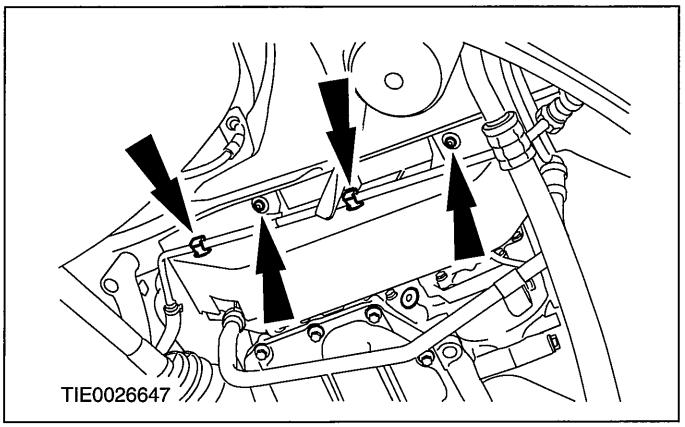

## INSTALLATION

20. **Attach the gearshift cables to the bracket and turn the abutment sleeves counterclockwise.**

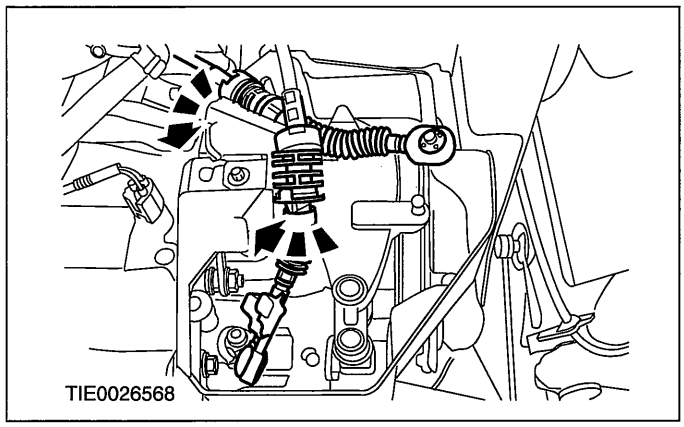


21. **Attach the gearshift cables to the selector levers.**

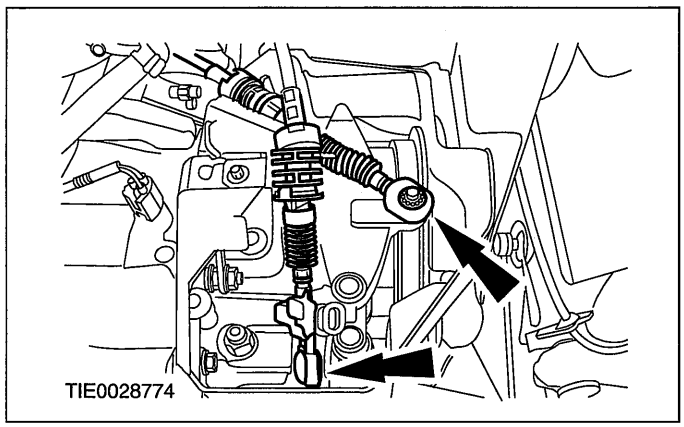


22. **Install the gearshift cables cover.**

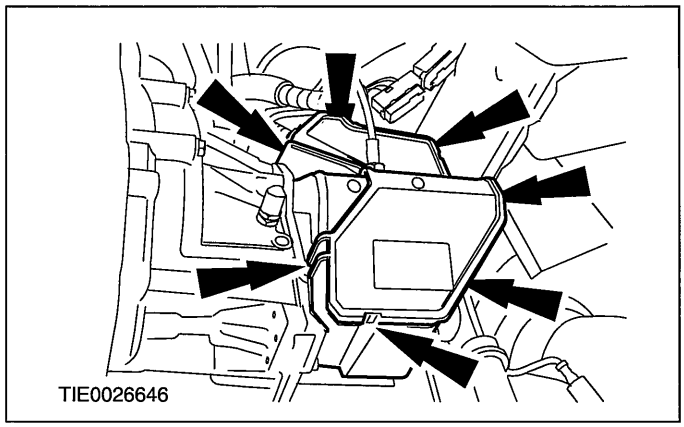


23. **Connect the reversing lamp switch electrical connector.**

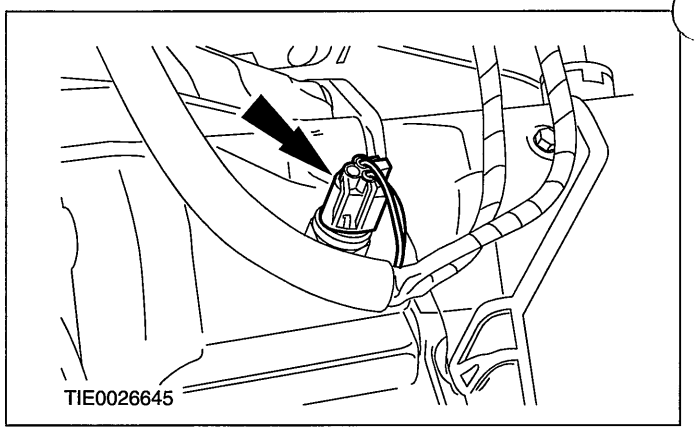


24. **Install the starter motor.**

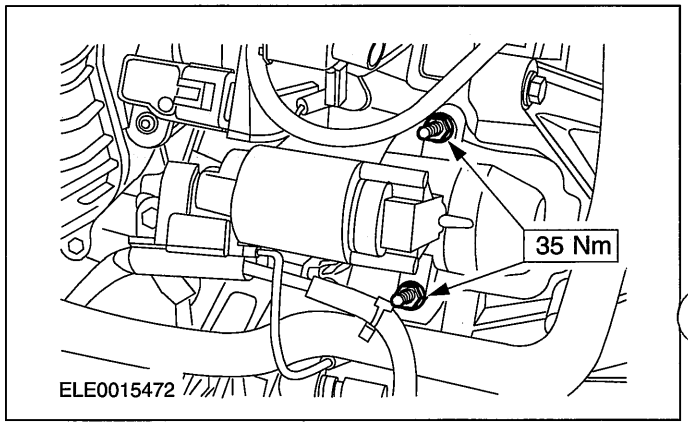


25. **Install the wiring harness retaining bracket.**
    - Attach the wiring harness to the retaining bracket.

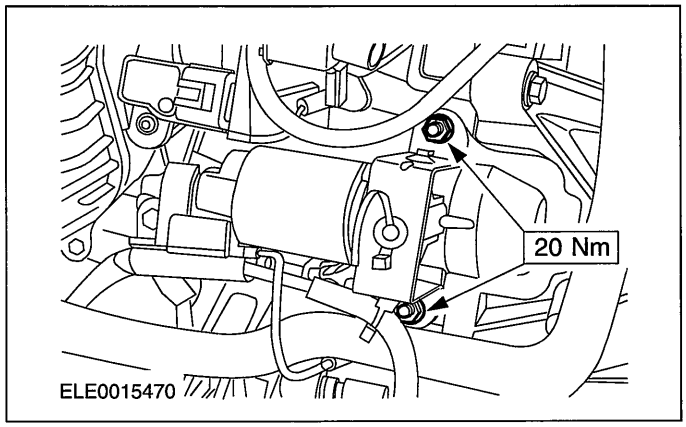


26. **Lower the vehicle.**

## INSTALLATION

27. Attach the power steering high-pressure line retaining bracket to the transaxle.

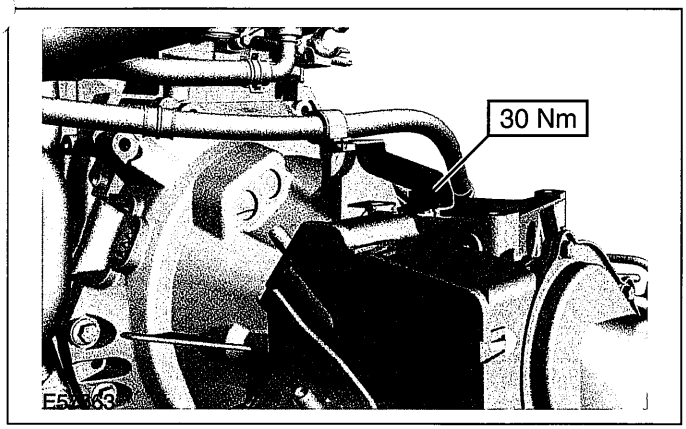


28. Install the transaxle upper retaining bolts.

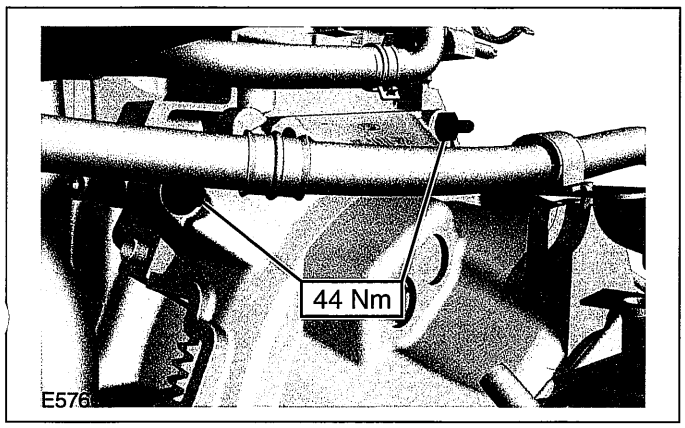


29. Install the engine wiring harness bracket.

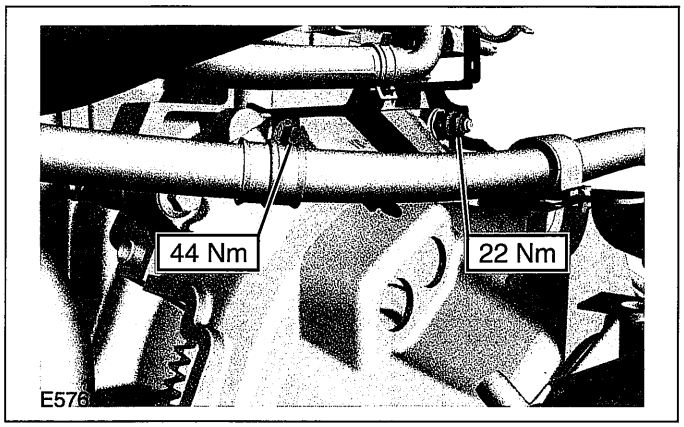


30. Tighten the engine rear mount outer retaining nuts.

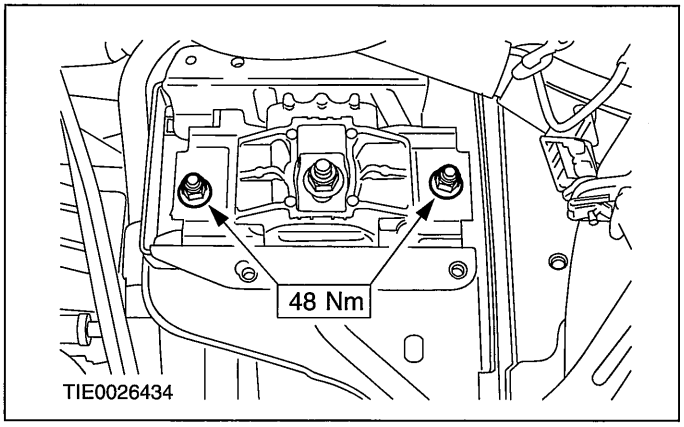


31. Tighten the engine rear mount center retaining nut.

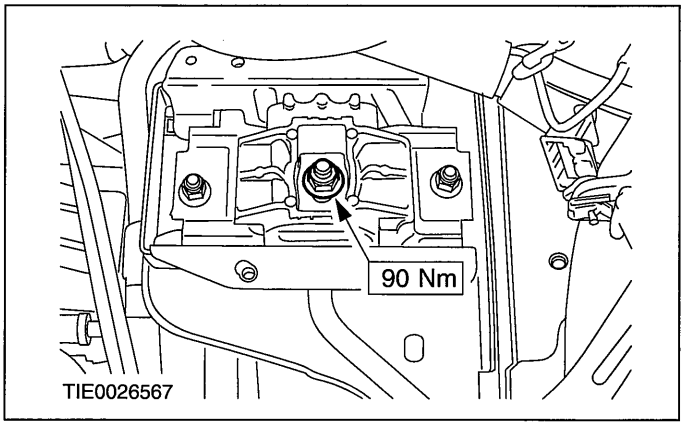


32. Install the battery tray support bracket.

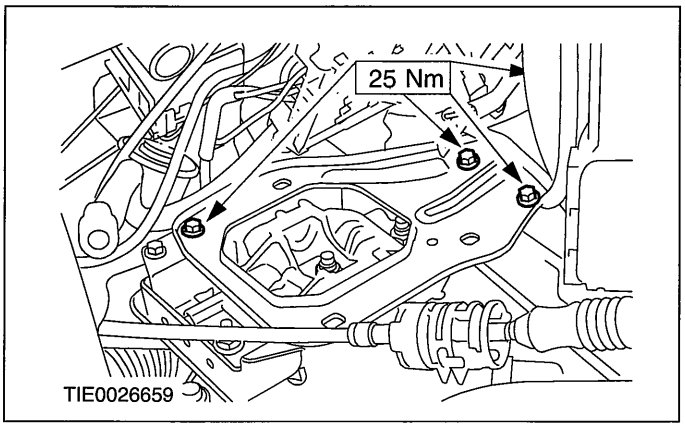


33. Install the front wheels and tires.

For additional information, refer to: Wheel and Tire (204-04 Wheels and Tires, Removal and Installation).

## INSTALLATION

34. Adjust the gearshift cables.

    For additional information, refer to: Gearshift Cable Adjustment (308-00 Manual Transmission/Transaxle and Clutch - General Information, General Procedures).

35. Bleed the clutch system.

    For additional information, refer to: Clutch System Bleeding (308-00 Manual Transmission/Transaxle and Clutch - General Information, General Procedures).

36. Install the battery tray.

    For additional information, refer to: Battery Tray - 2.0L Duratec-HE (MI4) (414-01 Battery, Mounting and Cables, Removal and Installation).

37. With the vehicle on a level surface, fill the transaxle until the fluid level is just below the bottom of the filler hole.

# SECTION 308-06 Manual Transmission/Transaxle External Controls

## VEHICLE APPLICATION:2006.0 Fiesta

CONTENTS PAGE


**SPECIFICATIONS**

Specifications..... 308-06-2

**DESCRIPTION AND OPERATION**

External Controls..... 308-06-3

**DIAGNOSIS AND TESTING**

External Controls..... 308-06-5
Inspection and Verification..... 308-06-5
Symptom Chart..... 308-06-5
Pinpoint Tests..... 308-06-5

**REMOVAL AND INSTALLATION**

Gearshift Lever..... (16 524 0) 308-06-7
Gearshift Cables..... (16 575 0) 308-06-8

## SPECIFICATIONS

### Torque Specifications

| Description | Nm | lb-ft | lb-in |
|---|---|---|---|
| Shift and selector cable bushing. | 9 | | 80 |
| Gearshift mechanism to floor assembly | 9 | | 80 |
| Exhaust flange bolts | 47 | 35 | |
| Gearshift lever | 5 | | 44 |

## DESCRIPTION AND OPERATION

# External Controls

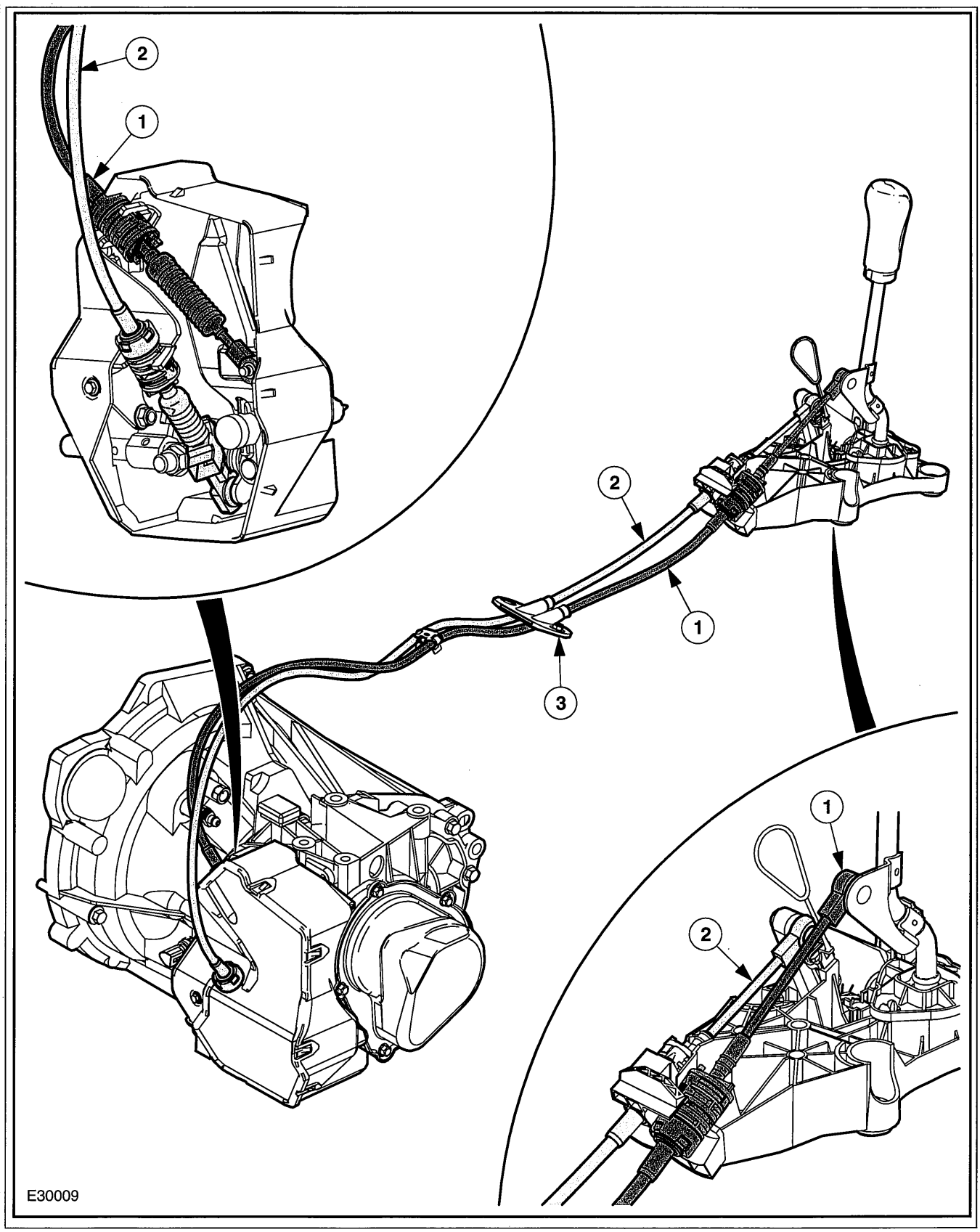

## DESCRIPTION AND OPERATION

| Item | Description |
|---|---|
| 1 | Shift cable |
| 2 | Selector cable |
| 3 | Body duct |

The selector cable is moved in an axial direction when a gear is selected with the gear lever. In the internal gearshift mechanism, this axial movement translates into the selection of the shift slot.

The shift cable is also moved in an axial direction when a gear is selected with the gear lever. In the internal gearshift mechanism, this axial movement is used to engage the corresponding gear.

The selector cable is marked black and the shift cable is marked white.

## DIAGNOSIS AND TESTING

# External Controls

### Inspection and Verification

1. Verify the customer concern.
2. Visually inspect for obvious signs of mechanical damage.
3. Make sure that the gearshift cables are correctly routed and not under any tension from other components.
4. If an obvious cause for an observed or reported concern is found, correct the cause (if possible) before proceeding to the next step.
5. If the concern is not visually evident, verify the symptom and refer to the Symptom Chart.

### Symptom Chart

| Symptom | Possible Sources | Action |
|---|---|---|
| • External controls do not operate freely. | • Gearshift cables incorrectly adjusted. | • ADJUST the gearshift cables.<br>REFER to: Gearshift Cable Adjustment - Vehicles With: 5-Speed Manual Transaxle (iB5) (308-00 Manual Transmission/Transaxle and Clutch - General Information, General Procedures). |
| | • Gearshift lever damaged.<br>• Selector mechanism damaged.<br>• Gearshift cables damaged. | • GO to Pinpoint Test A. |

### Pinpoint Tests

#### PINPOINT TEST A : STIFF GEARSHIFT

| TEST CONDITIONS | DETAILS/RESULTS/ACTIONS |
|---|---|
| **A1: CHECK THE GEARSHIFT LEVER** | |
| | 1 Detach the gearshift cables from the gearshift lever.<br>• Is the gearshift lever difficult to operate?<br>→ **Yes**<br>Install a new gearshift lever.<br>REFER to: Gearshift Lever (308-06 Manual Transmission/Transaxle External Controls, Removal and Installation).<br>→ **No**<br>GO to A2. |
| **A2: CHECK THE GEARSHIFT CABLES** | |
| | 1 Attach the gearshift cables to the gearshift lever. |

## DIAGNOSIS AND TESTING

| TEST CONDITIONS | DETAILS/RESULTS/ACTIONS |
|---|---|
| | 2 Detach the gearshift cables from the transaxle.<br>• Is the gearshift lever difficult to operate?<br>→ **Yes**<br>Install new gearshift cables.<br>REFER to: Gearshift Cables (308-06 Manual Transmission/Transaxle External Controls, Removal and Installation).<br>→ **No**<br>Install a new selector mechanism.<br>REFER to: Transaxle (308-03 Manual Transmission/Transaxle, Disassembly). |

## REMOVAL AND INSTALLATION

# Gearshift Lever(16 524 0)

### Removal

1. **Remove the gearshift lever trim panel.**
   - Disconnect the cigar lighter electrical connector.

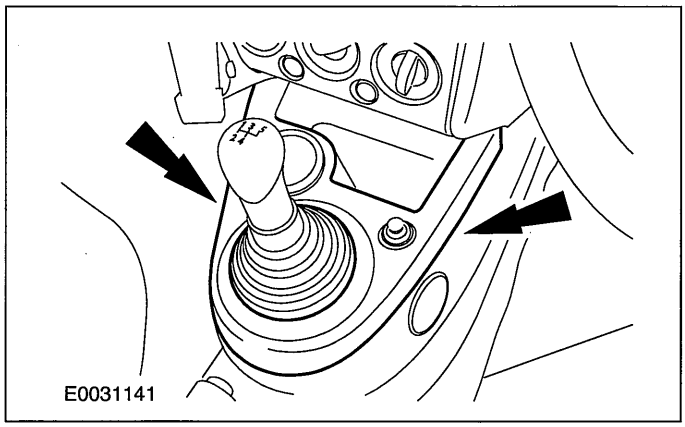


2. **Detach the gearshift cables from the gearshift lever.**

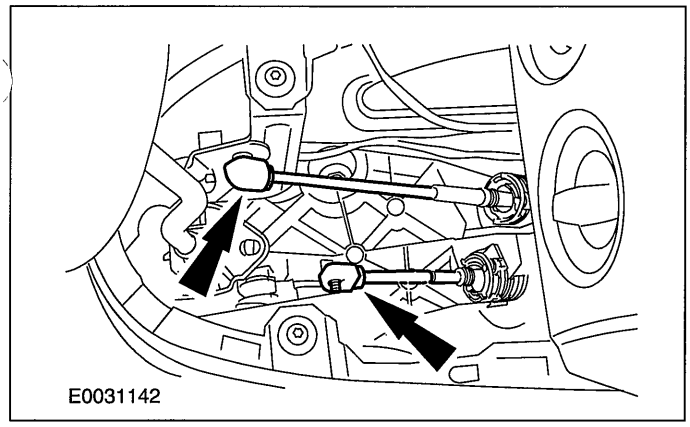


3. **Detach the gearshift cables from the retaining bracket.**
   - Turn the abutment sleeves clockwise.

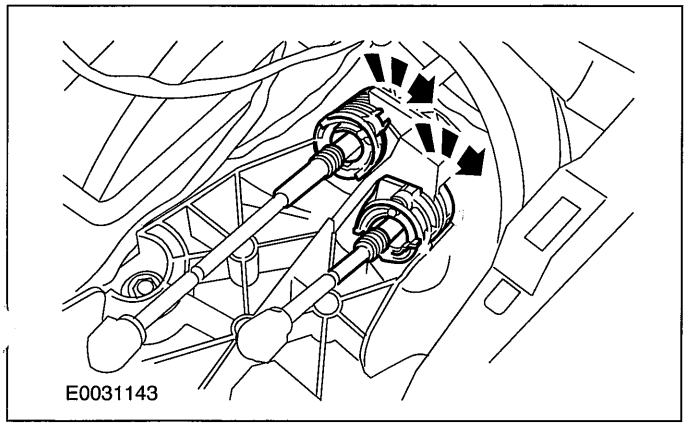


4. **Remove the gearshift lever front retaining bolts.**

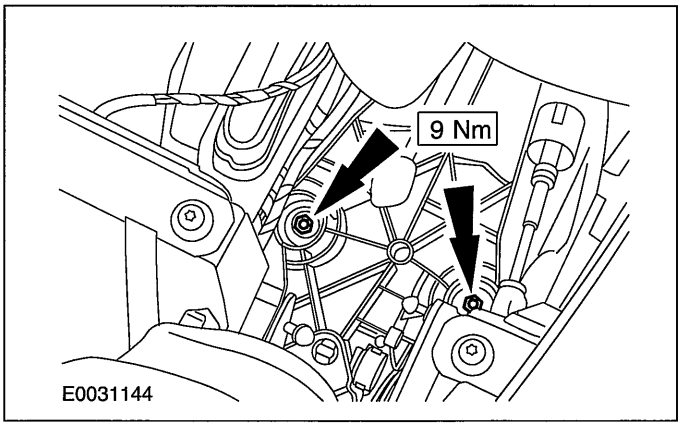


5. **Remove the gearshift lever.**
   - Remove the bolts.

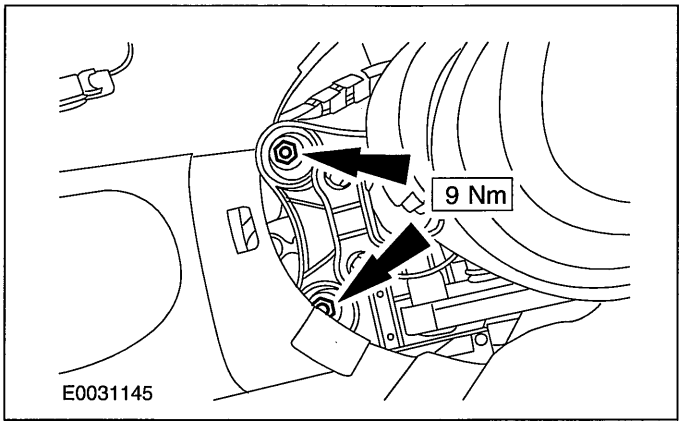


### Installation

1. **To install, reverse the removal procedure.**
2. **Adjust the gearshift cables. For additional information, refer to Section 308-00 [Manual Transmission/Transaxle and Clutch - General Information].**

## REMOVAL AND INSTALLATION

# Gearshift Cables(16 575 0)

### Removal

1. **Remove the gearshift lever.**

   **For additional information, refer to Gearshift Lever in this section.**

2. **Remove the air cleaner. For additional information, refer to Section 303-12 [Intake Air Distribution and Filtering].**
3. **Raise and support the vehicle. For additional information, refer to Section 100-02 [Jacking and Lifting].**
4. **Remove the exhaust front hanger insulator.**

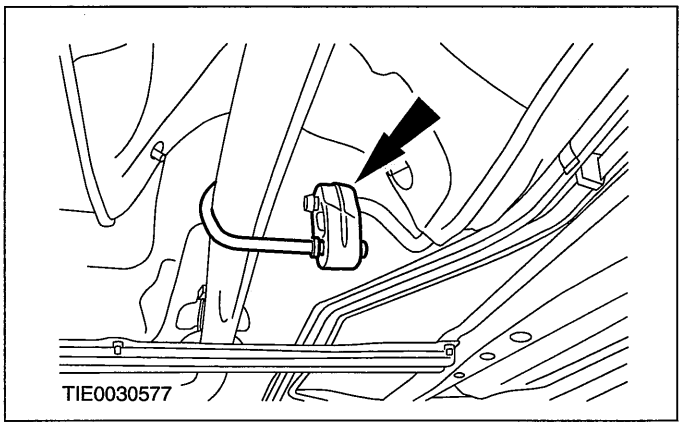


5. **Detach the exhaust heat shield from the floor panel.**
   - Slide the heat shield backwards.

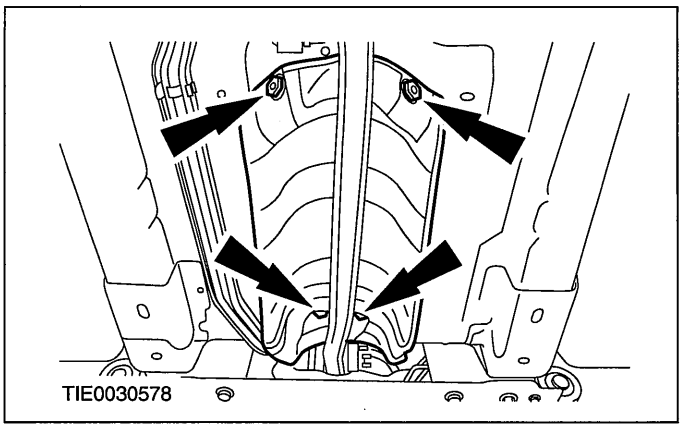


6. **Remove the gearshift cables cover.**

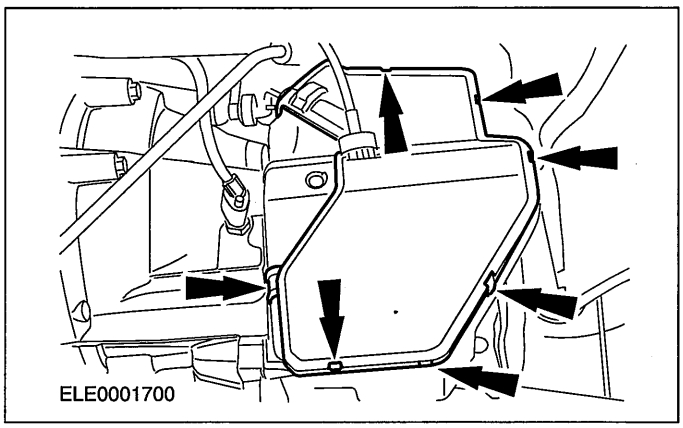


7. **Detach the gearshift cables from the transaxle.**
   1. Detach the gearshift cable and the selector cable from the selector levers.
   2. Turn the abutment sleeves clockwise and detach the cables from the bracket.

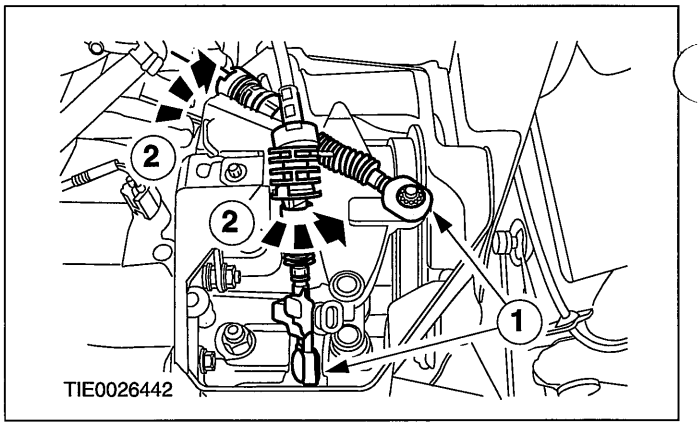


8. **Detach the gearshift cables from the retaining clip.**

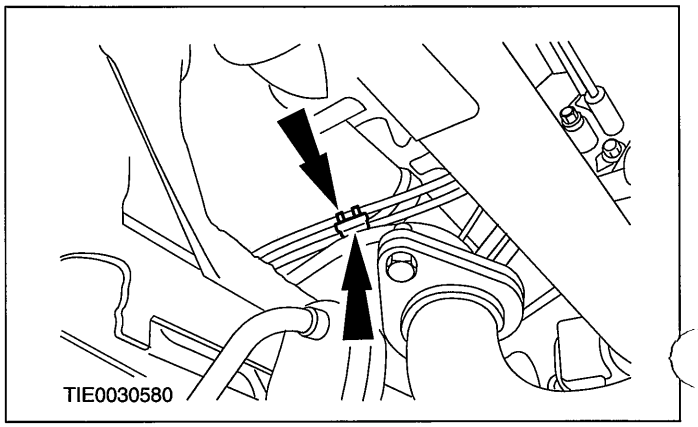

## REMOVAL AND INSTALLATION

9. Detach the selector cable from the retaining clip.

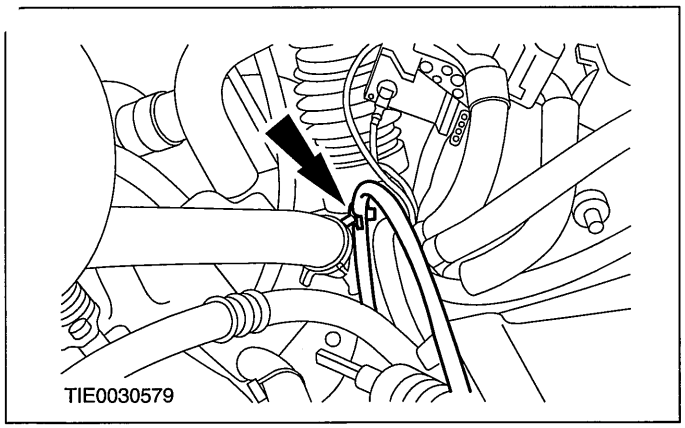


10. Lower the vehicle.
11. Remove the air distribution channel.

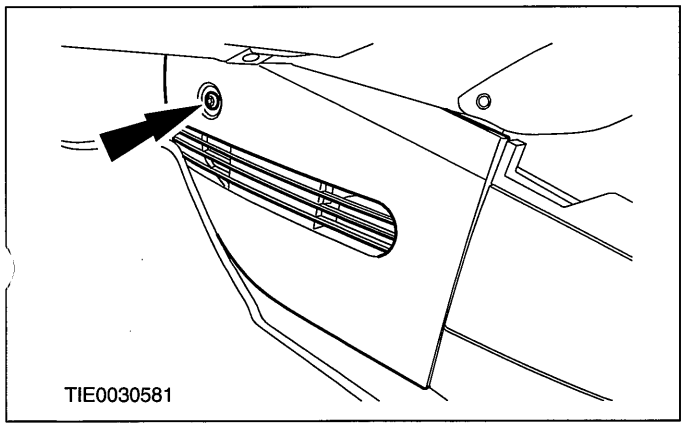


12. Cut the floor covering and the sound deadening material to gain access to the gearshift cable bushing.

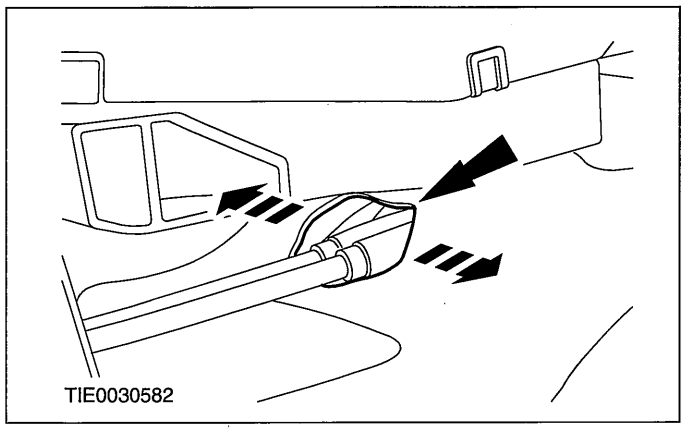


13. Detach the gearshift cables bushing from the floor panel and pull the cables through to the vehicle interior.

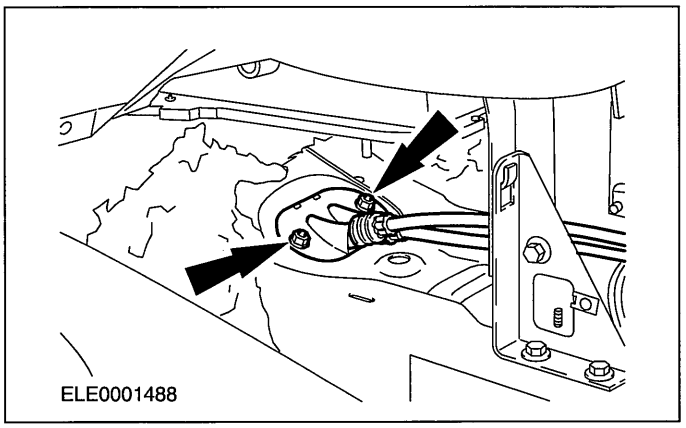


### Installation

1. NOTE:Do not bend or kink the gearshift cables.

   Feed the gearshift cables through the floor panel and attach the gearshift cables bushing.

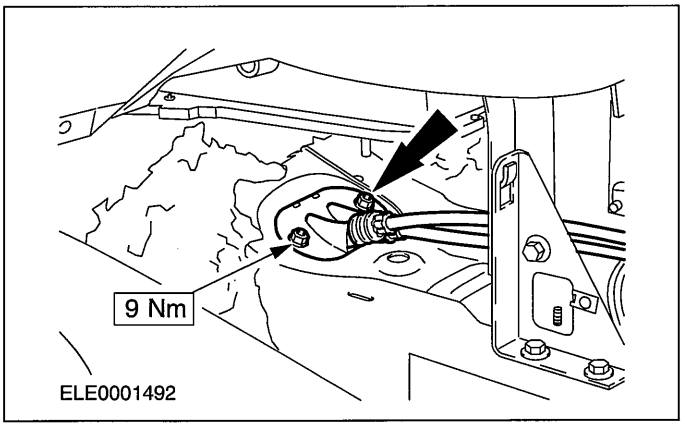


2. Install the air distribution channel.

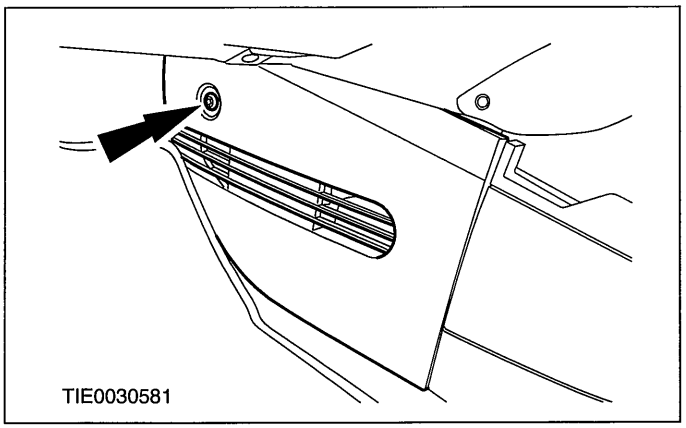

## REMOVAL AND INSTALLATION

3. **Raise and support the vehicle. For additional information, refer to Section 100-02 [Jacking and Lifting].**
4. **Attach the gearshift cables to the bracket and turn the abutment sleeves counterclockwise.**

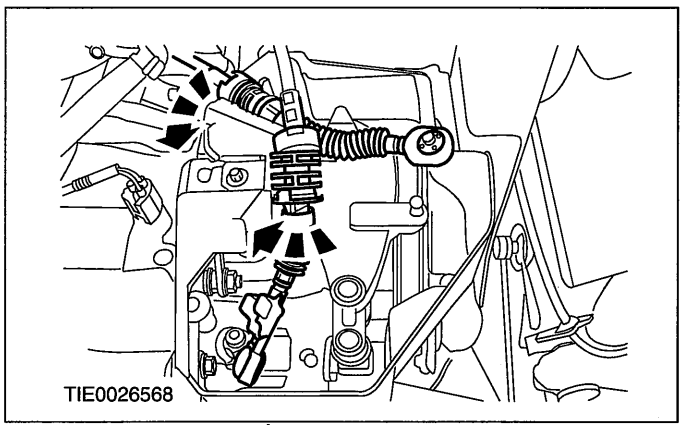


5. **Attach the gearshift cables to the selector levers.**

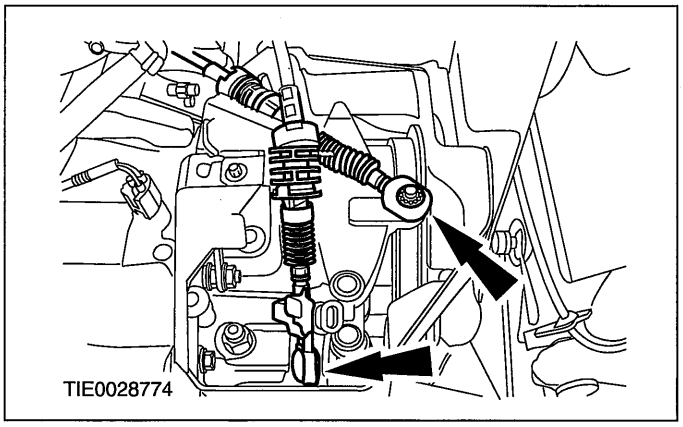


6. **Attach the exhaust heat shield to the floor panel.**
   - Slide the heat shield forwards.

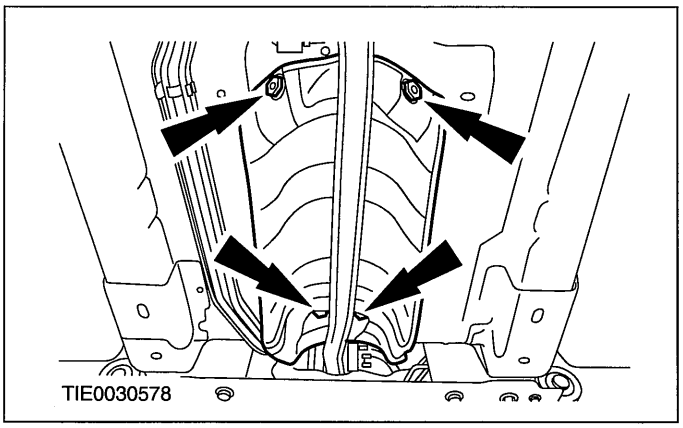


7. **Install the exhaust front hanger insulator.**

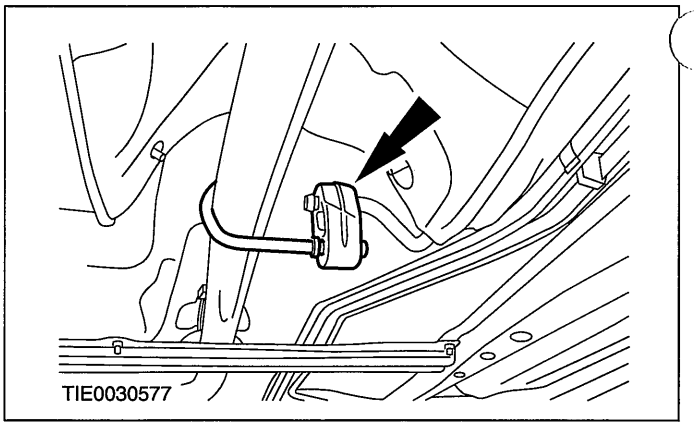


8. **Attach the gearshift cables to the retaining clip.**

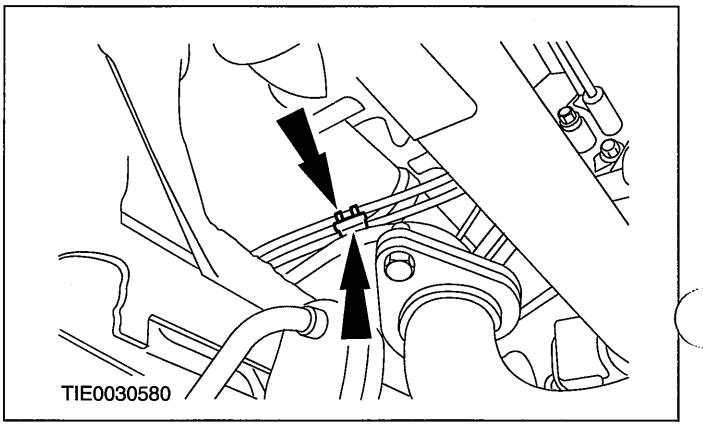


9. **Attach the selector cable to the retaining clip.**

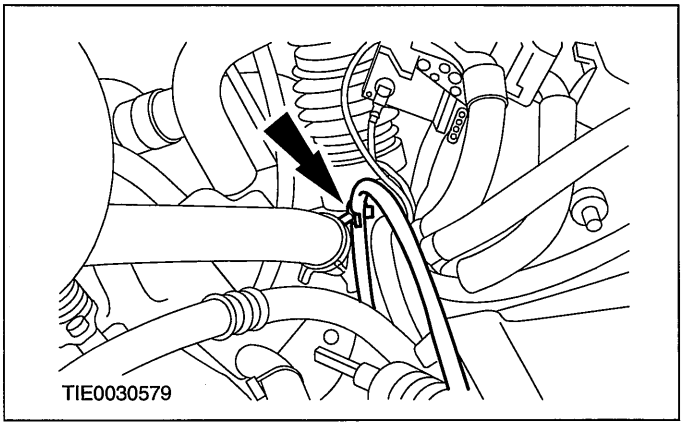


10. **Install the gearshift lever.**

    **For additional information, refer to Gearshift Lever in this section.**
11. **Install the air cleaner. For additional information, refer to Section 303-12 [Intake Air Distribution and Filtering].**

## REMOVAL AND INSTALLATION

12. Adjust the gearshift cables. For additional information, refer to Section 308-00 [Manual Transmission/Transaxle and Clutch - General Information].

# SECTION 309-00 Exhaust System

## VEHICLE APPLICATION:2006.0 Fiesta

CONTENTS PAGE

**SPECIFICATIONS**

Specifications..... 309-00-2

**DESCRIPTION AND OPERATION**

Exhaust System..... 309-00-4
Exhaust system - 1.3l, 1.4l and 1.6l petrol engines and 1.4l diesel engines..... 309-00-4

**REMOVAL AND INSTALLATION**

Catalytic Converter — 2.0L Duratec-HE (MI4)..... 309-00-6
Exhaust Flexible Pipe — 2.0L Duratec-HE (MI4)..... 309-00-8

## SPECIFICATIONS

### Lubricants, Fluids, Sealers and Adhesives

| | Specification |
|---|---|
| Lubricant | ESE-M99B 144-B |

| | Specification |
|---|---|
| Anti-seize grease | SA-M1C91 07-A |

### Torque Specifications

| Description | Nm | lb-ft | lb-in |
|---|---|---|---|
| Catalytic converter to exhaust flexible pipe retaining nuts - All except vehicles with diesel engine | 47 | 35 | - |
| Catalytic converter to turbocharger retaining nuts - Vehicles with 1.4L diesel engine | 25 | 18 | - |
| Catalytic converter to turbocharger retaining clamp - Vehicles with 1.6L diesel engine | 25 | 18 | - |
| Catalytic converter to muffler and tailpipe assembly clamp retaining nut - Vehicles with 2.0L engine | 40 | 30 | - |
| Exhaust flexible pipe to catalytic converter clamp retaining nut - Vehicles with diesel engine | 40 | 30 | - |
| Exhaust flexible pipe to exhaust manifold retaining nuts | 47 | 35 | - |
| Turbocharger heat shield upper retaining screws - Vehicles with 1.4L diesel engine | 3 | - | 27 |
| Turbocharger heat shield lower retaining bolts - Vehicles with 1.4L diesel engine | 12 | 9 | - |
| Catalytic converter heat shield retaining screws - Vehicles with 1.6L diesel engine | 4 | - | 35 |
| Exhaust flexible pipe to muffler and tailpipe assembly retaining nuts - Vehicles with diesel engine | 47 | 35 | - |
| Catalytic converter support bracket to engine block retaining nuts - Vehicles with 1.4L or 1.6L engine | 47 | 35 | - |
| Catalytic converter support bracket to engine block retaining nuts - Vehicles with 1.3L or 1.4L diesel engine | 25 | 18 | - |
| Catalytic converter support bracket to engine block retaining bolts - Vehicles with 1.6L diesel engine | 25 | 18 | - |
| Catalytic converter to support bracket retaining nuts | 25 | 18 | - |
| Catalytic converter to catalytic converter support bracket retaining bolts - Vehicles with 1.6L diesel engine | 25 | 18 | - |
| Catalytic converter to muffler and tailpipe assembly retaining nuts - Vehicles with 1.6L diesel engine | 48 | 35 | - |
| Heated oxygen sensor (HO2S) | 47 | 35 | - |
| Catalytic monitor sensor | 47 | 35 | - |

## SPECIFICATIONS

| Description | Nm | lb-ft | lb-in |
|---|---|---|---|
| Exhaust flexible pipe to front muffler pipe heat shield retaining bolts – Vehicles with 1.6L engine | 8 | - | 71 |
| Exhaust flexible pipe clamp retaining nut – Vehicles with diesel engine | 47 | 35 | - |
| Rear muffler clamp retaining nuts – All except vehicles with diesel engine | 47 | 35 | - |

## DESCRIPTION AND OPERATION

# Exhaust System

### Exhaust system - 1.3l, 1.4l and 1.6l petrol engines and 1.4l diesel engines

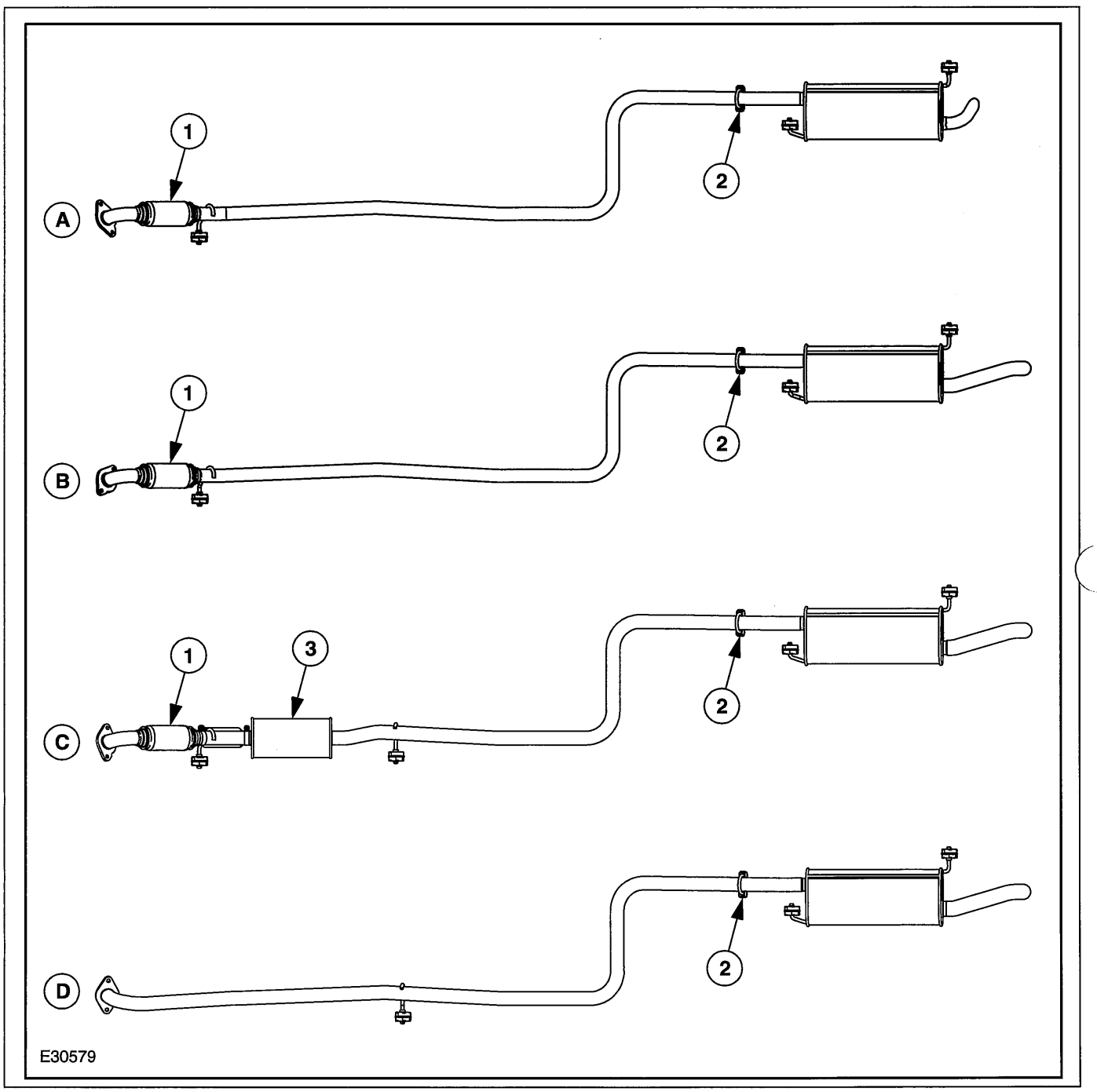


| Item | Description |
|---|---|
| A | 1.3l Duratec 8V SOHC |
| B | 1.4l Duratec 16V DOHC |
| C | 1.6l Duratec 16V DOHC |
| D | 1.4l DuraTorq TDCi |
| 1 | Flexible pipe |

| Item | Description |
|---|---|
| 2 | Servicing clamp |
| 3 | Front muffler |

## DESCRIPTION AND OPERATION

All exhaust systems are single-part systems. The final muffler can be renewed separately in service. In this case the pipe needs to be cut through, and the new final muffler needs to be secured with a servicing clamp.

## REMOVAL AND INSTALLATION

# Catalytic Converter — 2.0L Duratec-HE (MI4)

| Materials | |
|---|---|
| **Name** | **Specification** |
| Grease | SA-M1C9107-A |

**NOTE:** If installing a new catalytic converter to the original exhaust system, a new muffler and tailpipe assembly must also be installed.

1. **Raise and support the vehicle. For additional information, refer to: (100-02 Jacking and Lifting)**

   **Jacking (Description and Operation), Lifting (Description and Operation).**

2. **⚠CAUTION: Over bending of the exhaust flexible pipe may cause damage resulting in failure.**

   **Support the exhaust flexible pipe with a support wrap or splint.**

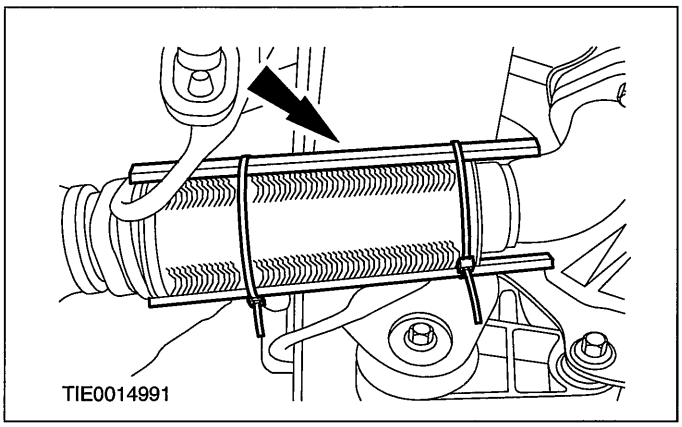


3. **Remove the components in the order indicated in the following illustration(s) and table(s).**

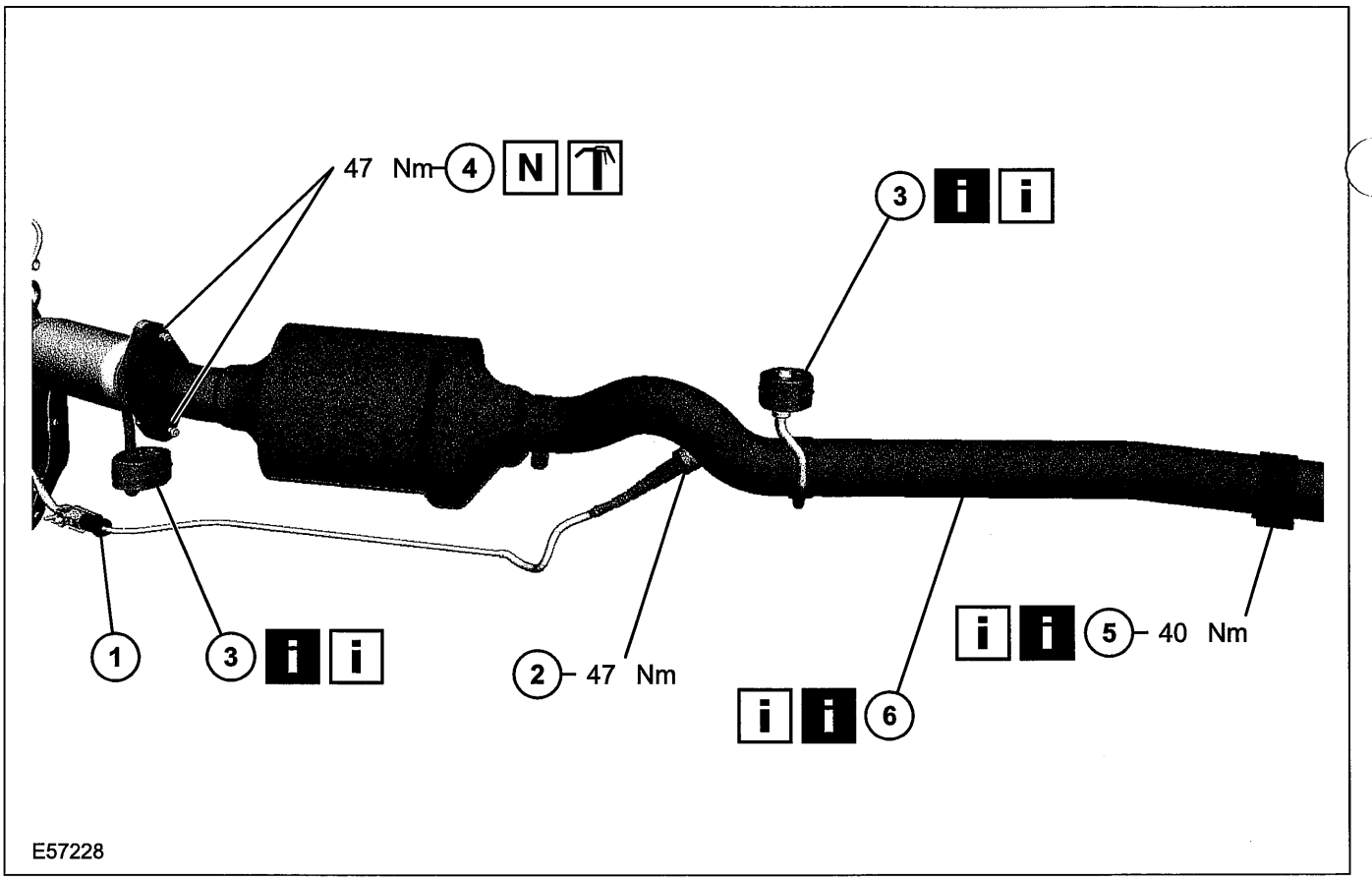


| Item | Description |
|---|---|
| 1 | Catalytic converter monitor sensor electrical connector |
| 2 | Catalytic converter monitor sensor |
| 3 | Exhaust hanger insulator |

| Item | Description |
|---|---|
| | See Removal Detail<br>See Installation Detail |
| 4 | Catalytic converter to exhaust flexible pipe retaining nuts |

## REMOVAL AND INSTALLATION

| Item | Description |
|---|---|
| 5 | Catalytic converter to muffler and tailpipe assembly retaining clamp<br>See Removal Detail<br>See Installation Detail |
| 6 | Catalytic converter. |
| | See Removal Detail<br>See Installation Detail |

**4. To install, reverse the removal procedure.**

# Removal Details

### Item 3 Exhaust hanger insulator

⚠ **CAUTION:Take care when removing the exhaust hanger insulator to prevent damage.**

### Item 5 Catalytic converter to muffler and tailpipe assembly retaining clamp

**NOTE:**Discard the catalytic converter to muffler and tailpipe assembly clamp retaining nut.

### Item 6 Catalytic converter.

⚠ **CAUTION:Using cable ties, support the muffler and tailpipe assembly to prevent damage to the exhaust hanger insulators.**

**NOTE:**Discard the catalytic converter to exhaust flexible pipe gasket.

# Installation Details

### Item 6 Catalytic converter.

**NOTE:**Remove the cable ties.

**NOTE:**Install a new catalytic converter to exhaust flexible pipe gasket.

### Item 5 Catalytic converter to muffler and tailpipe assembly retaining clamp

**NOTE:**Install a new catalytic converter to muffler and tailpipe assembly clamp retaining nut.

### Item 3 Exhaust hanger insulator

⚠ **CAUTION:Take care when installing the exhaust hanger insulator to prevent damage.**

**NOTE:**Check the exhaust hanger insulator for damage. Install a new exhaust hanger insulator if required.

## REMOVAL AND INSTALLATION

# Exhaust Flexible Pipe — 2.0L Duratec-HE (MI4)

| Materials | |
|---|---|
| Name | Specification |
| Grease | SA-M1C9107-A |

1. **Raise and support the vehicle. For additional information, refer to: (100-02 Jacking and Lifting)**

   **Jacking (Description and Operation), Lifting (Description and Operation).**

2. **Remove the components in the order indicated in the following illustration(s) and table(s).**

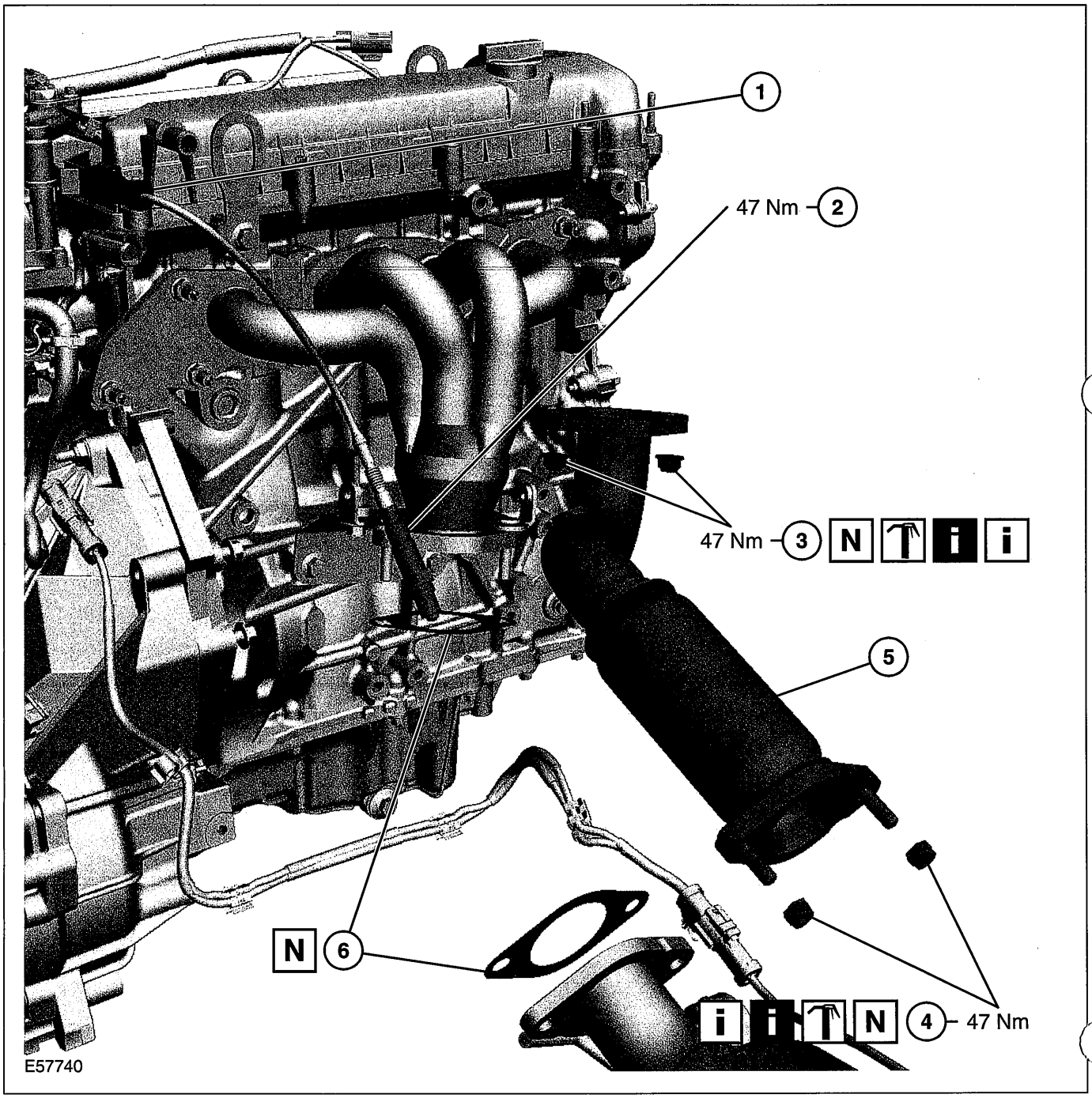

## REMOVAL AND INSTALLATION

| Item | Description |
|---|---|
| 1 | Heated oxygen sensor (HO2S) electrical connector |
| 2 | HO2S |
| 3 | Exhaust flexible pipe to exhaust manifold retaining nuts<br>See Removal Detail<br>See Installation Detail |
| 4 | Exhaust flexible pipe to muffler and tailpipe assembly retaining nuts<br>See Removal Detail<br>See Installation Detail |
| 5 | Exhaust flexible pipe |
| 6 | Exhaust flexible pipe gaskets |

**3. To install, reverse the removal procedure.**

⚠ **CAUTION:Never use jointing compound forward of the catalytic converter.**

# Removal Details

**Item 3 Exhaust flexible pipe to exhaust manifold retaining nuts**

1. ⚠**CAUTION:Over bending of the exhaust flexible pipe may cause damage resulting in failure.**

   **Support the exhaust flexible pipe with a support wrap or splint.**

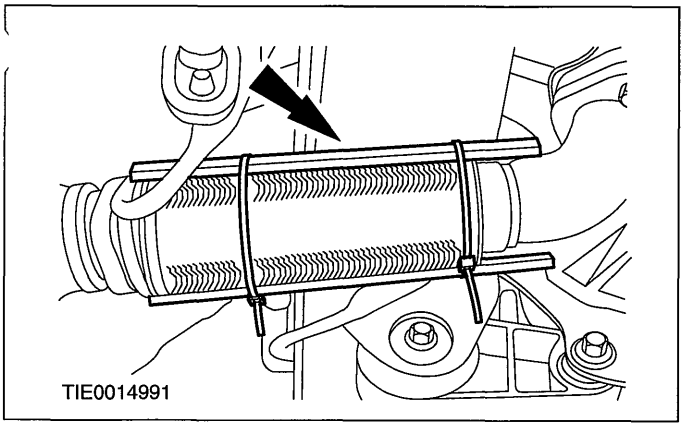


**Item 4 Exhaust flexible pipe to muffler and tailpipe assembly retaining nuts**

1. ⚠**CAUTION:Twisting the exhaust flexible pipe more than 2 degrees may cause damage resulting in failure.**

**NOTE:**Use a pry-bar to prevent the exhaust flexible pipe from twisting when removing the exhaust flexible pipe to catalytic converter retaining nuts.

   **Remove the exhaust flexible pipe to catalytic converter retaining nuts.**

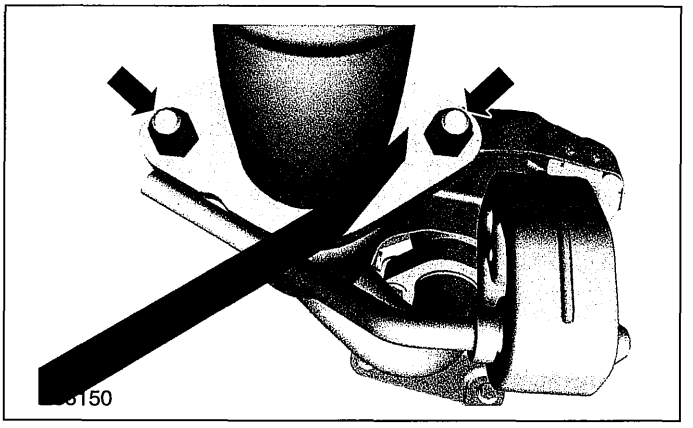


# Installation Details

**Item 4 Exhaust flexible pipe to muffler and tailpipe assembly retaining nuts**

1. ⚠**CAUTION:Twisting the exhaust flexible pipe more than 2 degrees may cause damage resulting in failure.**

**NOTE:**Use a pry-bar to prevent the exhaust flexible pipe from twisting when installing the exhaust flexible pipe to catalytic converter retaining nuts.

## REMOVAL AND INSTALLATION

**Install the exhaust flexible pipe to catalytic converter retaining nuts.**

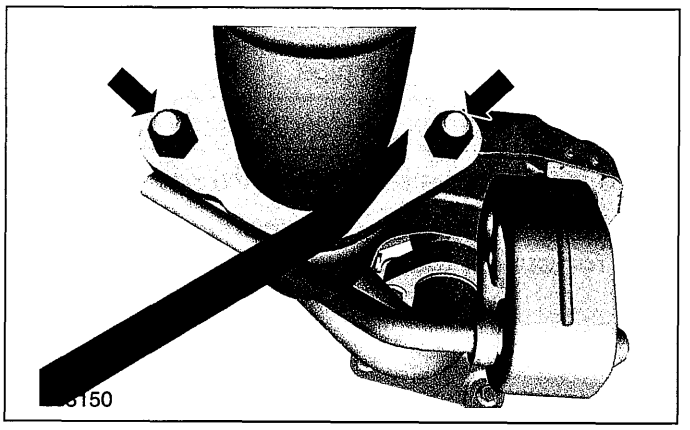


**Item 3 Exhaust flexible pipe to exhaust manifold retaining nuts**

1. **⚠CAUTION:Over bending of the exhaust flexible pipe may cause damage resulting in failure.**

   **Remove the exhaust flexible pipe support wrap or splint.**

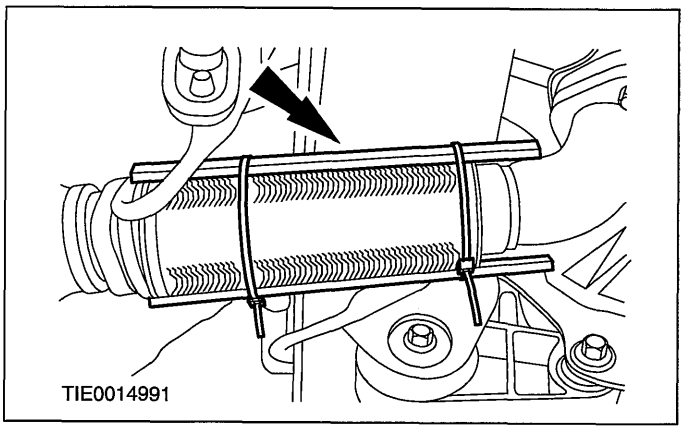

# SECTION 310-00 Fuel System - General Information

## VEHICLE APPLICATION:2006.0 Fiesta

CONTENTS PAGE

### DIAGNOSIS AND TESTING

Fuel System — 1.3L Duratec-8V (Rocam)/1.25L Duratec-16V (Sigma)/2.0L Duratec-HE (MI4)/1.4L Duratec-16V (Sigma)/1.6L Duratec-16V (Sigma) ..... 310-00-2
Inspection and Verification ..... 310-00-2

### GENERAL PROCEDURES

Fuel System Pressure Release ..... (23 420 0) 310-00-3
Fuel Tank Draining ..... (23 551 0) 310-00-4
Quick Release Coupling ..... 310-00-5
Fuel System Pressure Check — 2.0L Duratec-HE (MI4) ..... 310-00-10

## DIAGNOSIS AND TESTING

# Fuel System — 1.3L Duratec-8V (Rocam)/1.25L Duratec-16V (Sigma)/2.0L Duratec-HE (MI4)/1.4L Duratec-16V (Sigma)/1.6L Duratec-16V (Sigma)

### Inspection and Verification

1. Verify the customer concern.
2. Visually inspect for obvious signs of mechanical or electrical damage.

**Visual Inspection Chart**

| Mechanical | Electrical |
|---|---|
| – Fuel level<br>– Fuel leak(s)<br>– Fuel line(s)<br>– Fuel filter (if equipped)<br>– Fuel tank<br>– Fuel tank filler pipe<br>– Fuel filler cap | – Electrical connector(s)<br>– Wiring harness<br>– Inertia fuel shutoff (IFS) switch<br>– Fuel pump module |

3. If an obvious cause for an observed or reported concern is found, correct the cause (if possible) before proceeding to the next step
4. If the cause is not visually evident, verify the symptom and refer to WDS.

## GENERAL PROCEDURES

# Fuel System Pressure Release(23 420 0)

### Release

1. **WARNINGS:**

   **▲Do not smoke or carry lighted tobacco or open flame of any type when working on or near any fuel related components. Highly flammable vapors are always present and may ignite. Failure to follow these instructions may result in personal injury.**

   **▲The fuel system remains pressurized for a long time after the ignition is switched off. The fuel pressure must be released before attempting any repairs. Failure to follow this instruction may result in personal injury.**

   **Remove the fuel pump fuse.**

2. **Start the engine and allow to idle until the engine stalls.**
3. **Crank the engine for approximately five seconds to make sure the fuel injection supply manifold pressure has been released.**
4. **Install the fuel pump fuse.**

## GENERAL PROCEDURES

# Fuel Tank Draining(23 551 0)

### General Equipment

| |
|---|
| Fuel tank draining equipment |

### Draining

**WARNINGS:**

▲ **Do not smoke or carry lighted tobacco or open flame of any type when working on or near any fuel related components. Highly flammable vapors are always present and may ignite. Failure to follow these instructions may result in personal injury.**

▲ **The fuel system remains pressurized for a long time after the ignition is switched off. The fuel pressure must be relieved before attempting any repairs. Failure to follow these instructions may result in personal injury.**

1. **Disconnect the battery ground cable. For additional information, refer to Section 414-01 [Battery, Mounting and Cables].**
2. **Remove the fuel tank filler cap.**
3. **Using fuel tank draining equipment, drain the fuel from the fuel tank using a 12.5mm nylon drain tube.**

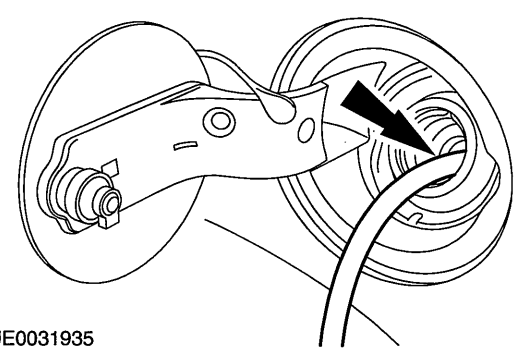

VUE0031935

## GENERAL PROCEDURES

# Quick Release Coupling

### General Equipment

| |
|---|
| Flat-bladed screwdriver |

### Disconnection

**WARNINGS:**

▲ **Do not carry lighted tobacco or open flame of any type when working on or near any fuel related components. Highly flammable vapors are always present and can ignite. Failure to follow these instructions may result in personal injury.**

▲ **This procedure involves fuel handling. Be prepared for fuel spillage at all times and always observe fuel handling precautions. Failure to follow these instructions may result in personal injury.**

⚠ **CAUTION:Fuel injection equipment is manufactured to very precise tolerances and fine clearances. It is therefore essential that absolute cleanliness is observed when working with these components. Always install blanking plugs to any open orifices or lines.**

**NOTE:**Fuel supply line connectors are white or are identified by a white band. Fuel return line connectors are red or are identified by a red band.

1. **Release the fuel system pressure.**

   **For additional information, refer to: Fuel System Pressure Release (310-00 Fuel System - General Information, General Procedures).**

2. **Disconnect the fuel line quick release coupling.**
   1. Press the fuel line quick release coupling locking tangs.
   2. Disconnect the fuel line quick release coupling.

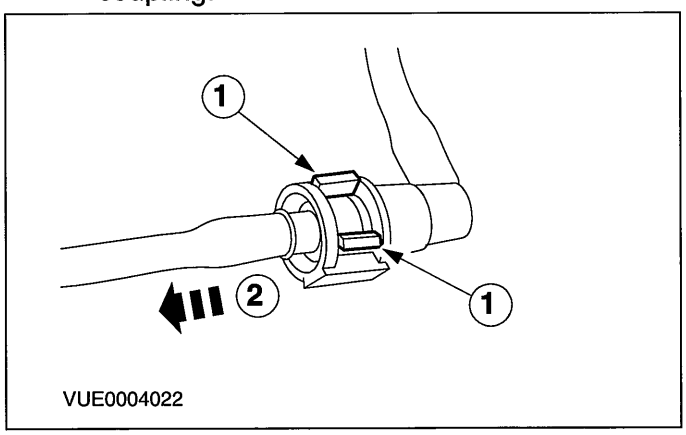


3. **Disconnect the fuel line quick release coupling.**
   1. Pull the fuel line quick release coupling locking tang.
   2. Push the clip through the fuel line quick release coupling to release the fuel line.

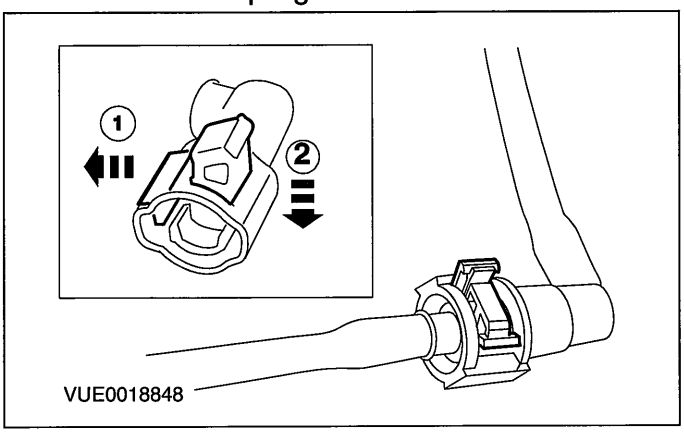


4. **Disconnect the fuel line quick release coupling.**
   1. Press the fuel line quick release coupling locking tangs.

## GENERAL PROCEDURES

2. Disconnect the fuel line quick release coupling.

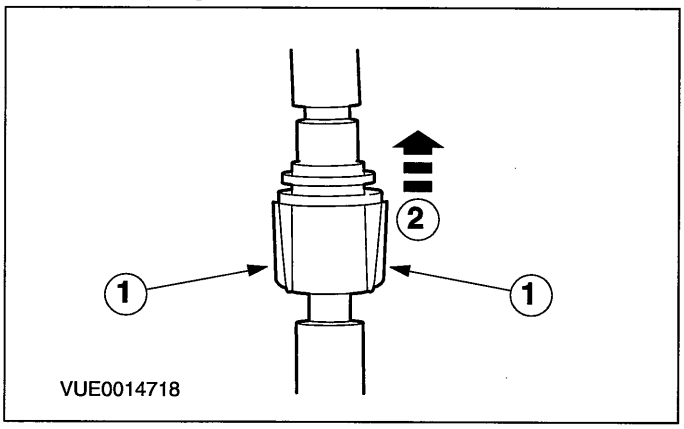


**5. Disconnect the fuel line quick release coupling.**

- Press the fuel line quick release coupling buttons and pull the fuel line to disconnect.

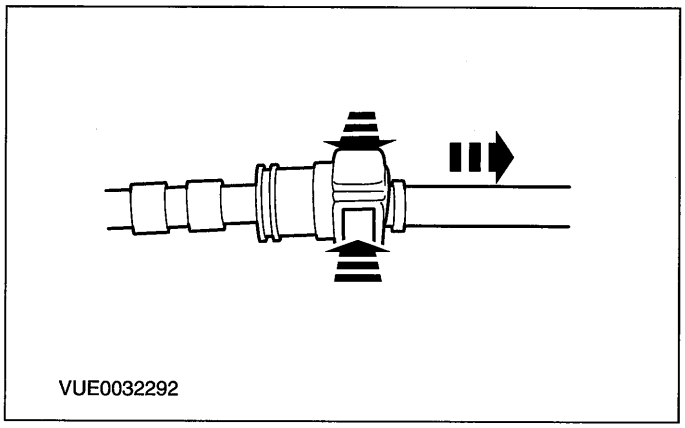


**6. Release the fuel tank vent line quick release coupling.**

- Press the fuel tank vent line quick release coupling locking release collar.

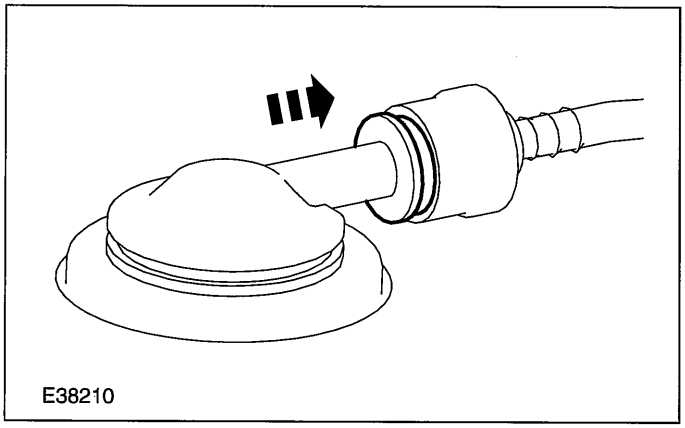


**7. Disconnect the fuel tank vent line quick release coupling.**

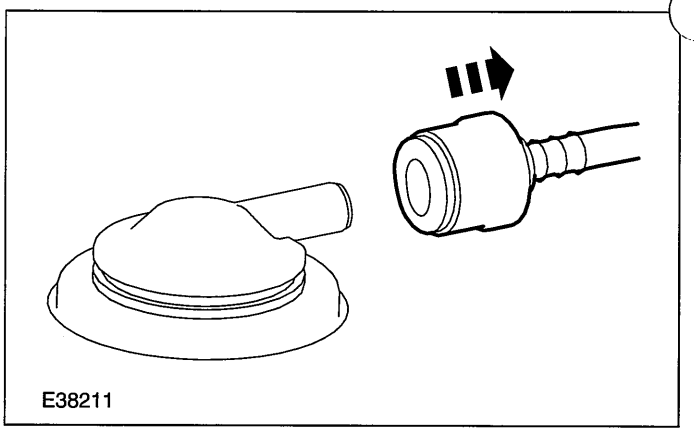


**8. Release the fuel line quick release coupling.**

- Press the fuel line quick release coupling locking release collar.

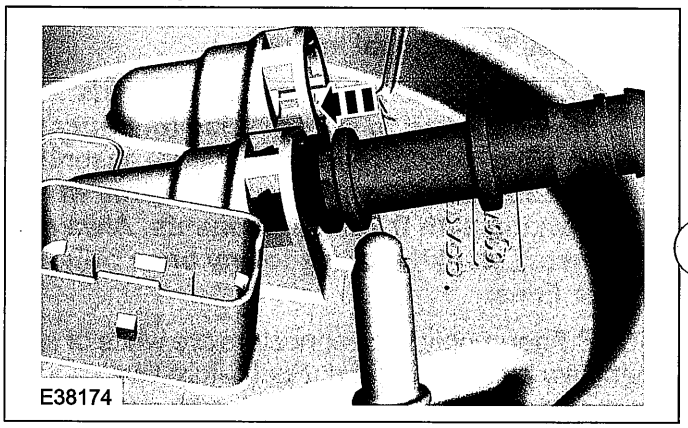


**9. Disconnect the fuel line quick release coupling.**

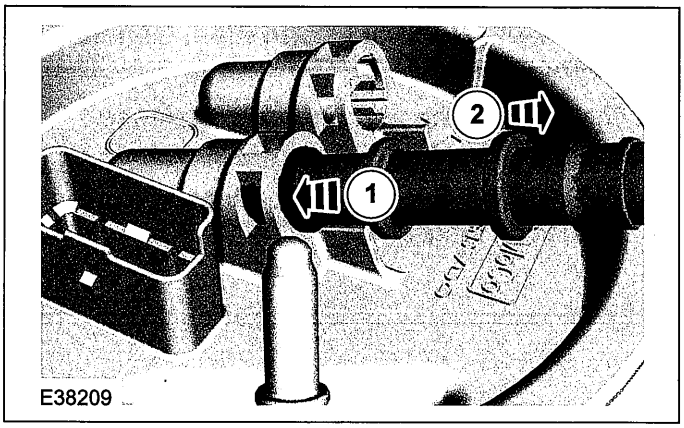

## GENERAL PROCEDURES

**10. Using a suitable Flat-bladed screwdriver release the fuel line quick release coupling secondary locking tang.**

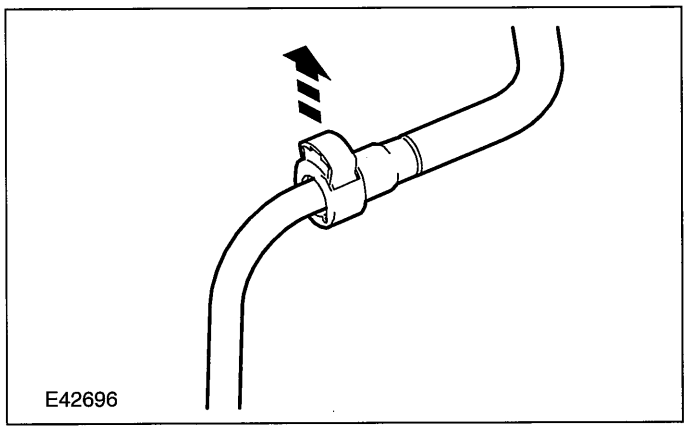


**11. Operate the fuel line quick release coupling primary locking tang.**

- Push the fuel line quick release coupling primary locking tang into from the fuel line quick release coupling.

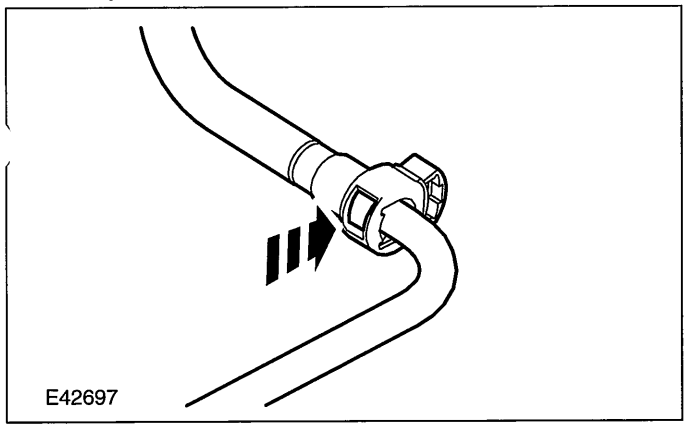


**12. Disconnect the fuel line from the fuel line quick release coupling.**

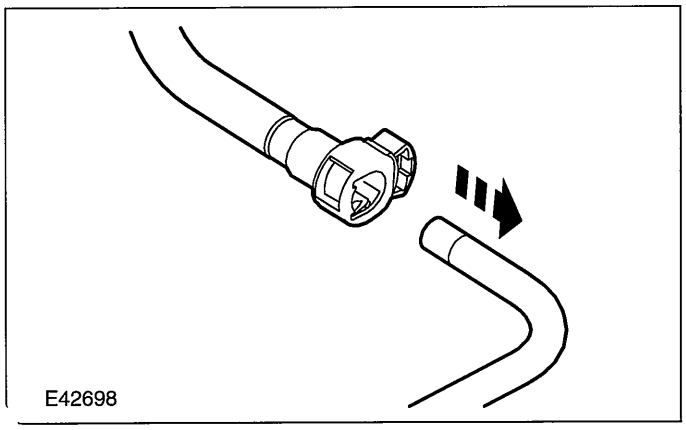


**13. Disconnect the fuel line from the fuel filter.**

1. Press the collar into the connector body.
2. Disconnect the fuel line from the fuel filter.

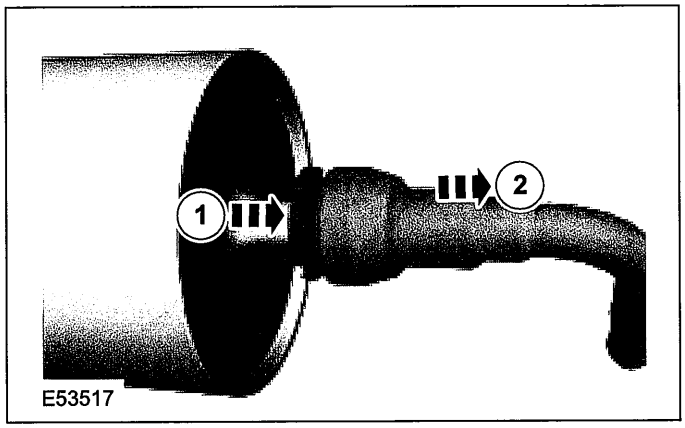


### Connect

**WARNINGS:**

▲ **Do not carry lighted tobacco or open flame of any type when working on or near any fuel related components. Highly flammable vapors are always present and can ignite. Failure to follow these instructions may result in personal injury.**

▲ **This procedure involves fuel handling. Be prepared for fuel spillage at all times and always observe fuel handling precautions. Failure to follow these instructions may result in personal injury.**

⚠ **CAUTION:Fuel injection equipment is manufactured to very precise tolerances and fine clearances. It is therefore essential that absolute cleanliness is observed when working with these components. Always install blanking plugs to any open orifices or lines.**

**NOTE:**Fuel supply line connectors are white or are identified by a white band. Fuel return line connectors are red or are identified by a red band.

**1. Push the connector on to the fuel filter.**

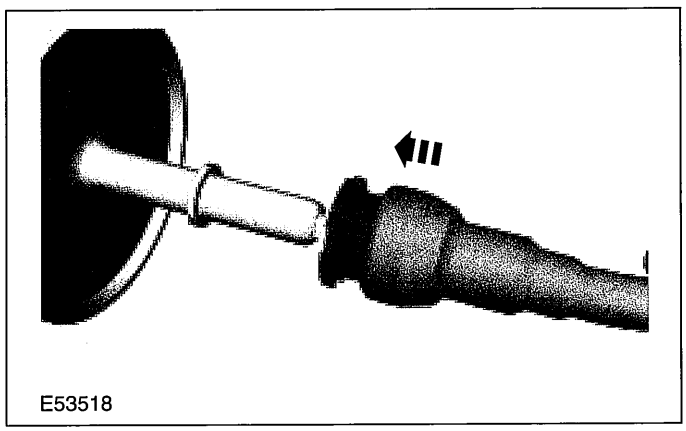

## GENERAL PROCEDURES

2. Install the fuel line to the fuel line quick release coupling.

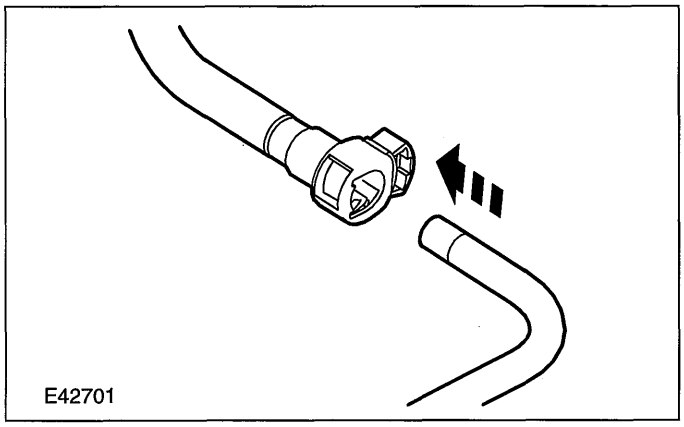


3. ⚠CAUTION:Make sure the quick release coupling primary locking tang clicks into place when installing.

   Insert the fuel line quick release coupling secondary locking tang into the fuel line quick release coupling.

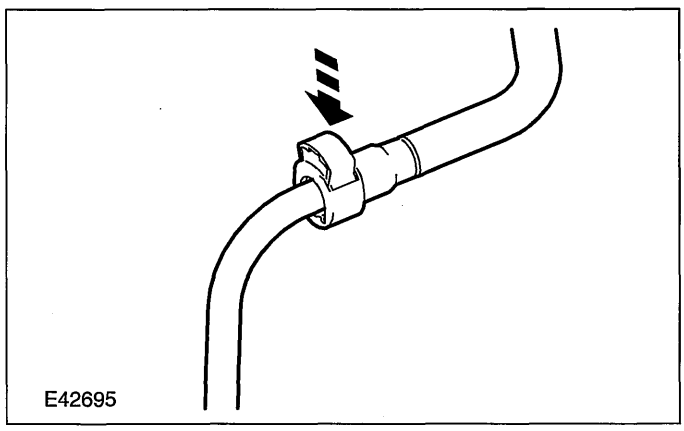


4. ⚠CAUTION:After installation, to make sure that the fuel line is fully seated, pull on the line.

   Install the fuel line quick release coupling.

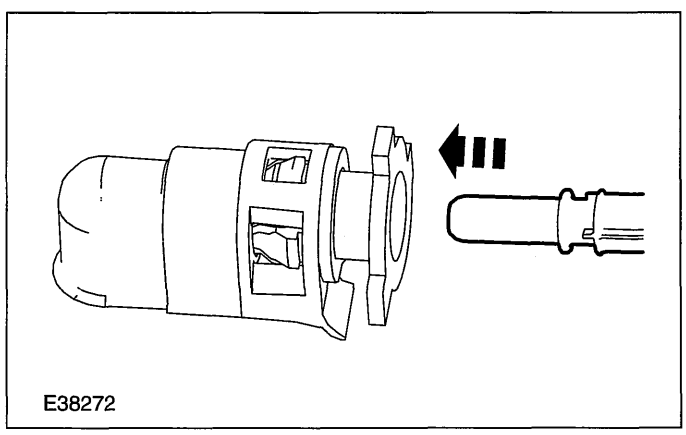


5. ⚠CAUTION:After installation , to make sure that the vent line is fully seated, pull on the line.

   Install the fuel tank vent line quick release coupling.

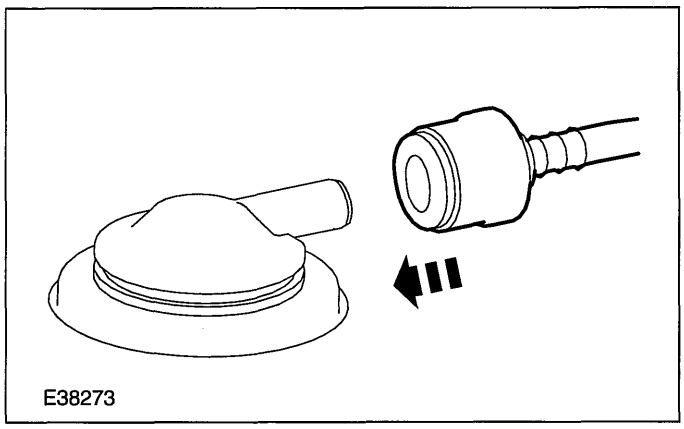


6. ⚠CAUTION:Make sure the fuel line clicks into place when installing the line. To make sure that the fuel line is fully seated, pull on the line.

   Install the fuel line quick release coupling.

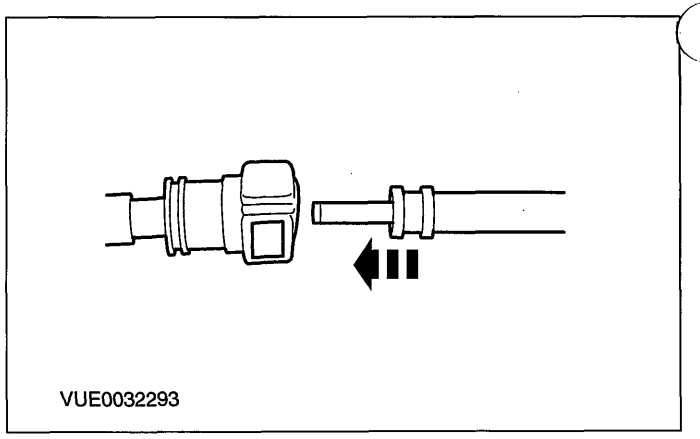


7. NOTE:Make sure the collar on the fuel line is inserted fully into the fuel line quick release coupling.

## GENERAL PROCEDURES

**Install the fuel line quick release coupling.**

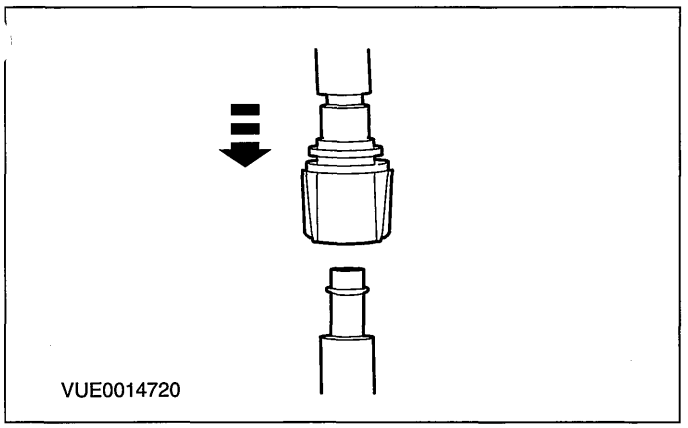


8. **NOTE:Make sure the collar on the fuel line is inserted fully into the fuel line quick release coupling before the locking tang is locked.**

   **Install the fuel line quick release coupling.**

   1. Install the fuel line quick release coupling locking tang.
   2. Rotate the fuel line quick release coupling locking tang into position.

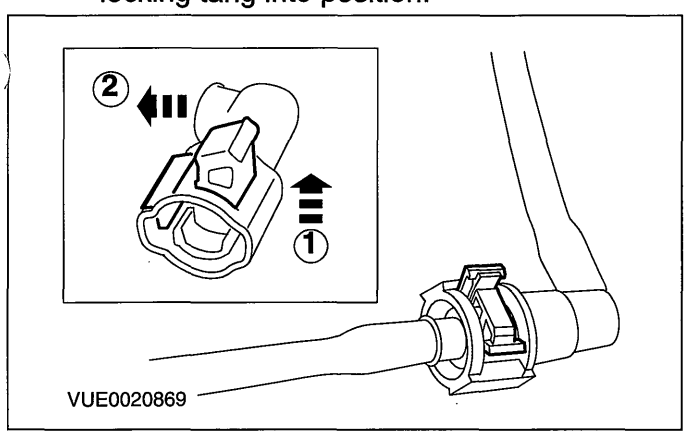


9. **NOTE:Make sure the collar on the fuel line is inserted fully into the fuel line quick release coupling before the locking tang is locked.**

   **Install the fuel line quick release coupling.**

   1. Install the fuel line quick release coupling.
   2. Press the fuel line quick release coupling locking tang into position.

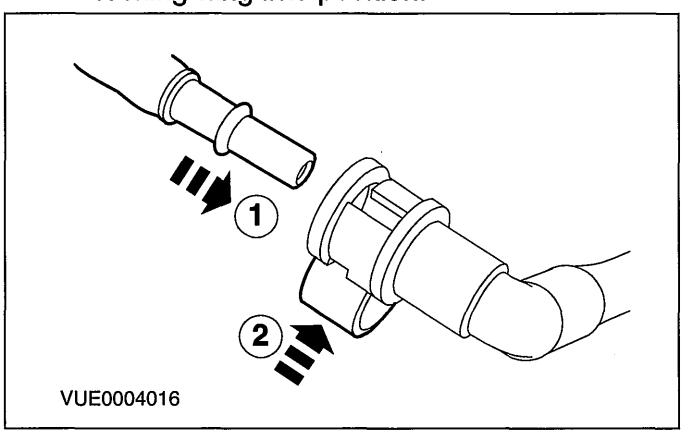

## GENERAL PROCEDURES

# Fuel System Pressure Check — 2.0L Duratec-HE (MI4)

### Special Tool(s)

| | |
|---|---|
| 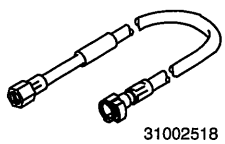 31002518 | Test Hose for 310-025 310-025-18 (23-024-10) |
| 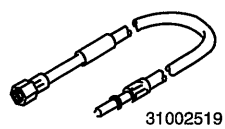 31002519 | Test Hose for 310-025 310-025-19A (23-024-11A) |

### General Equipment

| |
|---|
| Worldwide Diagnostic System (WDS) (418-F224) |

1. **▲WARNING:Do not smoke or carry lighted tobacco or open flame of any type when working on or near any fuel related components. Highly flammable vapors are always present and may ignite. Failure to follow these instructions may result in personal injury.**

**This procedure involves fuel handling. Be prepared for fuel spillage at all times and always observe fuel handling precautions. Failure to follow these instructions may result in personal injury.**

**Release the fuel system pressure.**

**For additional information, refer to: Fuel System Pressure Release (310-00 Fuel System - General Information, General Procedures).**

2. **Remove the air cleaner assembly.**

**For additional information, refer to: Air Cleaner - 2.0L Duratec-HE (MI4) (303-12 Intake Air Distribution and Filtering, Removal and Installation).**

3. **NOTE:Fuel supply line connectors are white or are identified by a white band. Fuel return line connectors are red or are identified by a red band.**

**Disconnect the fuel supply line from the fuel rail.**

**For additional information, refer to: Quick Release Coupling (310-00 Fuel System - General Information, General Procedures).**

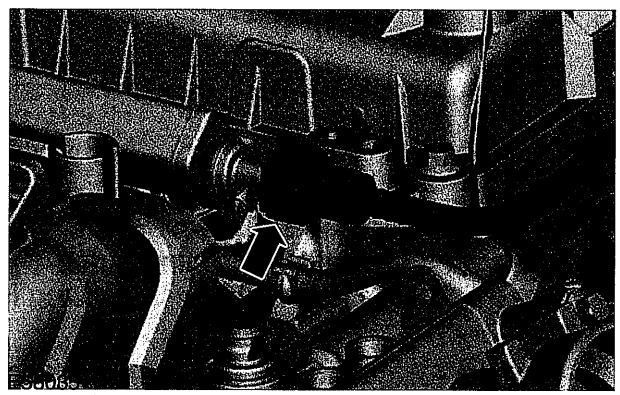

4. **Connect the special tool to the fuel rail.**

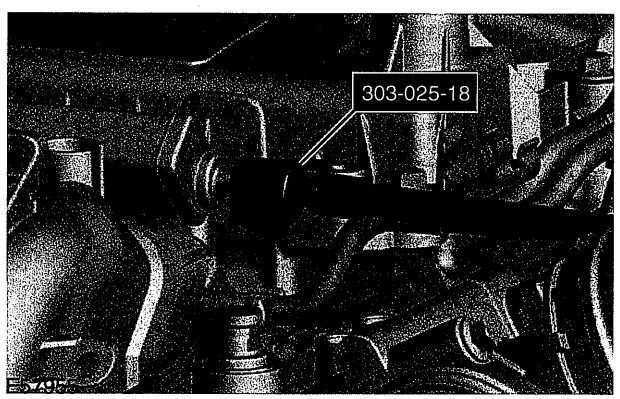


5. **Connect the special tool to the fuel rail fuel supply line.**

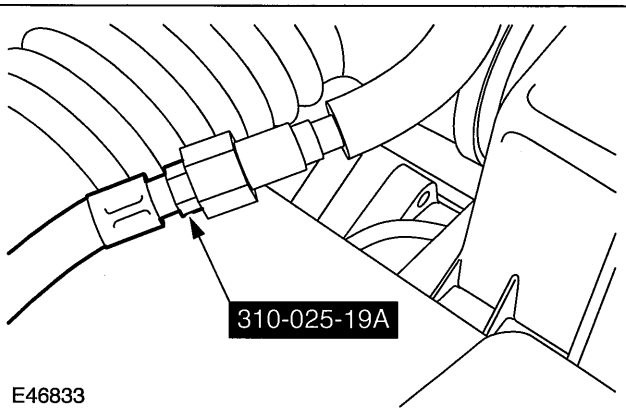

## GENERAL PROCEDURES

6. Connect the WDS pressure/vacuum transducer adapter to the special tools.

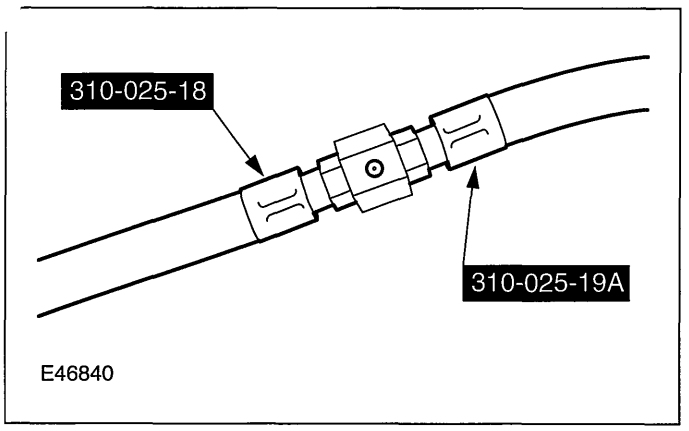


7. Connect the WDS pressure/vacuum transducer to the WDS pressure/vacuum transducer adapter.
8. NOTE:The fuel system pressure should be 3.8 ± 0.2 bar after key on and it should maintain this pressure when the engine is running.

   Using the digital multimeter function in WDS, start the engine and measure the fuel system pressure.
9. Release the fuel system pressure.

   For additional information, refer to: Fuel System Pressure Release (310-00 Fuel System - General Information, General Procedures).
10. Disconnect the WDS pressure/vacuum transducer from the WDS pressure/vacuum transducer adapter.
11. Disconnect the WDS pressure/vacuum transducer adapter from the special tools.

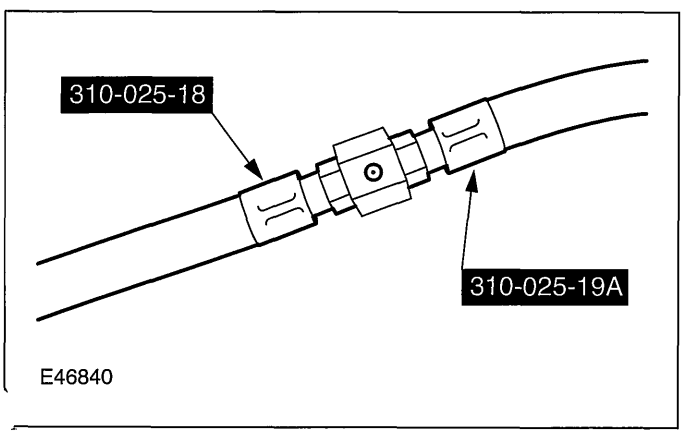


12. Disconnect the special tool from the fuel rail fuel supply line.

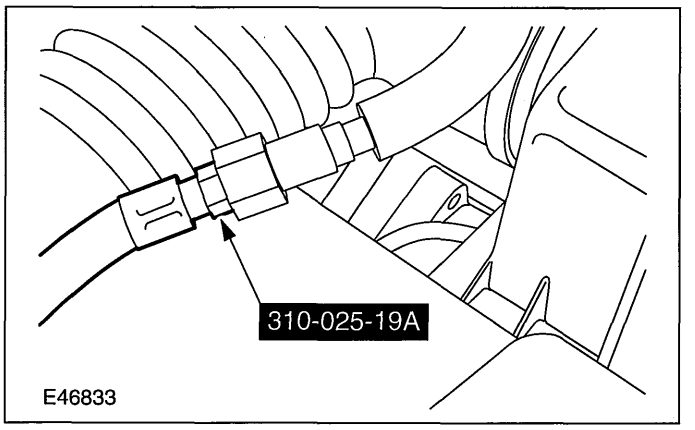


13. Disconnect the special tool from the fuel rail.

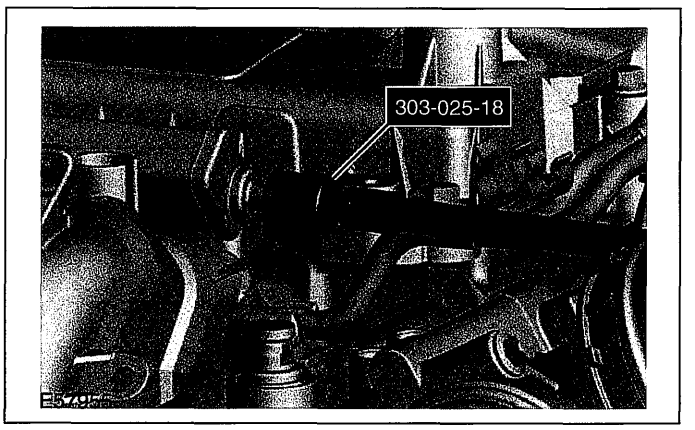


14. NOTE:Fuel supply line connectors are white or are identified by a white band. Fuel return line connectors are red or are identified by a red band.

    Connect the fuel supply line to the fuel rail.

    For additional information, refer to: Quick Release Coupling (310-00 Fuel System - General Information, General Procedures).

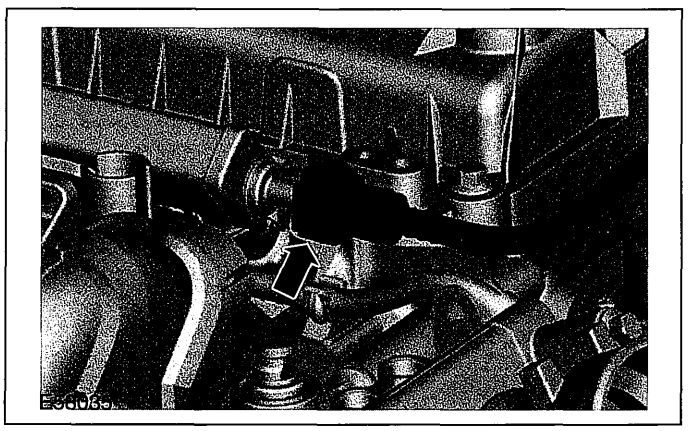

## GENERAL PROCEDURES

15. Install the air cleaner assembly.

    For additional information, refer to: Air Cleaner - 2.0L Duratec-HE (MI4) (303-12 Intake Air Distribution and Filtering, Removal and Installation).

# SECTION 310-01 Fuel Tank and Lines

## VEHICLE APPLICATION:2006.0 Fiesta

CONTENTS PAGE


**SPECIFICATIONS**

Specifications ..... 310-01-2

**DESCRIPTION AND OPERATION**

Fuel Tank and Lines — 1.25L Duratec-16V (Sigma)/1.4L Duratec-16V (Sigma)/1.6L Duratec-16V (Sigma) ..... 310-01-3
Overview ..... 310-01-3

**DIAGNOSIS AND TESTING**

Fuel Tank and Lines ..... 310-01-5

**REMOVAL AND INSTALLATION**

Fuel Tank ..... (23 554 0) 310-01-6
Fuel Pump Module ..... (23 534 0) 310-01-11
Fuel Tank Filler Pipe ..... (23 572 0) 310-01-12
Fuel Level Sensor ..... 310-01-14
Fuel Level Resistor Card ..... 310-01-15

## SPECIFICATIONS

### Torque Specifications

| Description | Nm | lb-ft | lb-in |
|---|---|---|---|
| Fuel tank support strap retaining bolts | 25 | 18 | - |
| Fuel tank filler pipe retaining bolts | 9 | - | 80 |
| Fuel pump module locking ring - All except vehicles with diesel engine | 85 | 63 | - |
| Fuel level sensor locking ring - Vehicles with diesel engine | 85 | 63 | - |
| Floor panel crossmember | 4 | - | 35 |

## DESCRIPTION AND OPERATION

# Fuel Tank and Lines — 1.25L Duratec-16V (Sigma)/1.4L Duratec-16V (Sigma)/1.6L Duratec-16V (Sigma)

### Overview

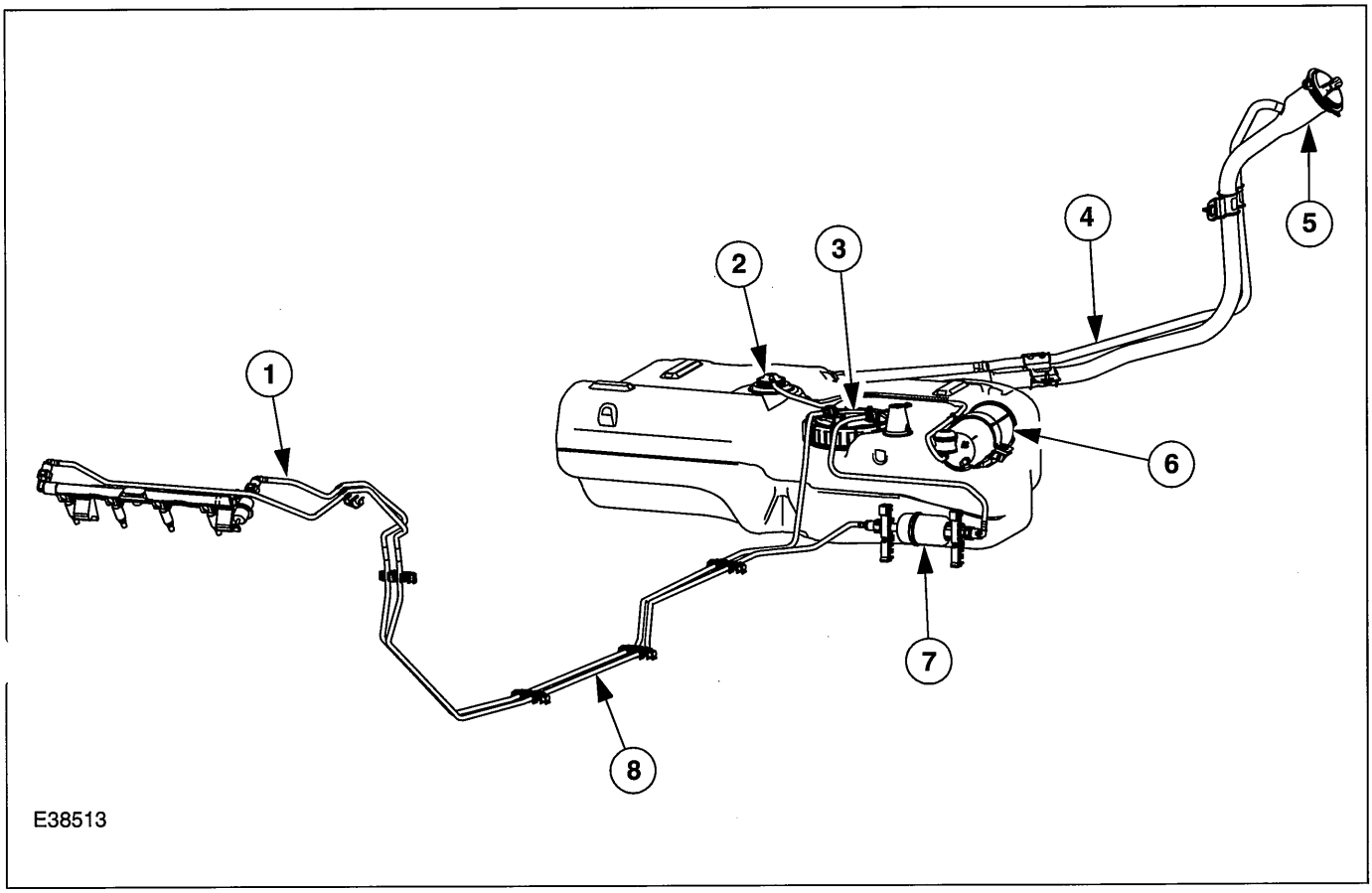


| Item | Description |
|---|---|
| 1 | Fuel return line |
| 2 | Non-return valve, Evaporative Emission (EVAP) system |
| 3 | Fuel pump unit |
| 4 | Tank breather pipe |
| 5 | Tank filler neck |
| 6 | Activated charcoal canister |
| 7 | Fuel filter |
| 8 | Fuel feed line |

The fuel tank holds 45 litres.

The fuel pump unit is located in the fuel tank. It consists of the fuel pump and the sender for the fuel gauge.

The fuel pump is electrically controlled through the fuel cut-off safety switch.

In the event of an accident, the fuel cut-off safety switch interrupts the power supply so that no more fuel can be supplied.

It is located behind a cover on the right-hand A-pillar in the footwell next to the central junction box.

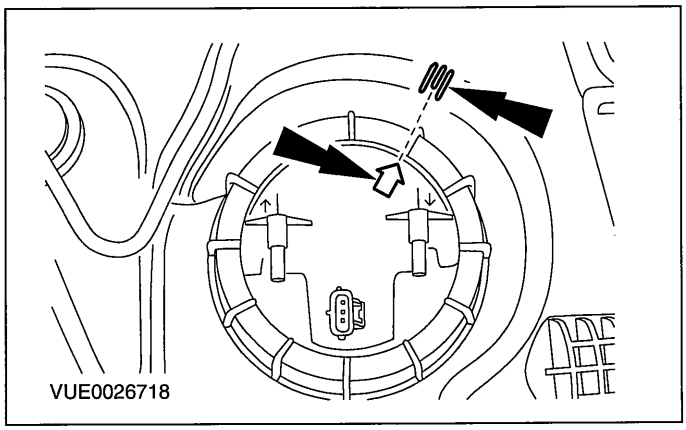


The fuel tank must be removed before the fuel pump unit can be removed.

## DESCRIPTION AND OPERATION

Care must be taken on installation, that the arrows on the fuel tank and the fuel pump unit point at each other.

If the alignment is wrong, then the fuel level shown may be incorrect.

## DIAGNOSIS AND TESTING

# Fuel Tank and Lines

All except vehicles with diesel engine,

REFER to: Fuel System - 1.3L Duratec-8V (Rocam)/1.25L Duratec-16V (Sigma)/2.0L Duratec-HE (MI4)/1.4L Duratec-16V (Sigma)/1.6L Duratec-16V (Sigma) (310-00 Fuel System - General Information, Diagnosis and Testing).

Vehicles with diesel engine,

REFER to: Fuel System - 1.4L Duratorq-TDCi (DV) Diesel/1.6L Duratorq-TDCi (DV) Diesel (310-00 Fuel System - General Information, Diagnosis and Testing).

## REMOVAL AND INSTALLATION

# Fuel Tank(23 554 0)

### Special Tool(s)

| | |
|---|---|
| 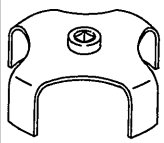 23055 | Wrench, Sender Unit, Fuel Tank<br>310-069 (23-055) |

### General Equipment

| |
|---|
| Transmission jack |

## Removal

All vehicles

**WARNINGS:**

**▲ Do not smoke or carry lighted tobacco or open flame of any type when working on or near fuel related components. Highly flammable vapors are always present and may ignite. Failure to follow these instructions may result in personal injury.**

**▲ This procedure involves fuel handling. Be prepared for fuel spillage at all times and always observe fuel handling precautions. Failure to follow these instructions may result in personal injury.**

1. **Release the fuel system pressure. For additional information, refer to Section 310-00 [Fuel System - General Information].**
2. **Drain the fuel tank. For additional information, refer to Section 310-00 [Fuel System - General Information].**
3. **Raise and support the vehicle. For additional information, refer to Section 100-02 [Jacking and Lifting].**
4. **Remove the floor panel crossmember.**

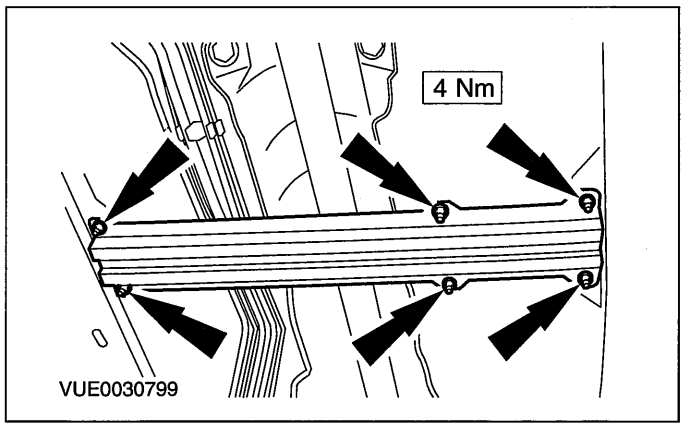


5. **Detach the exhaust system from the center exhaust hanger insulator.**

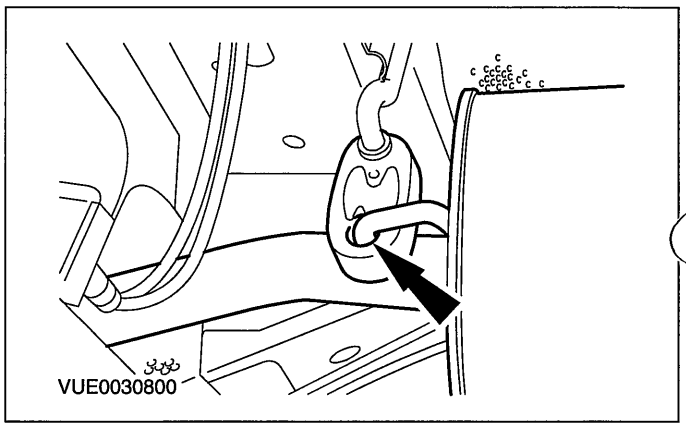


6. **NOTE:When detaching the exhaust system allow the system to be supported by the rear suspension assembly.**

   **Detach the exhaust system from the rear exhaust hanger insulator.**

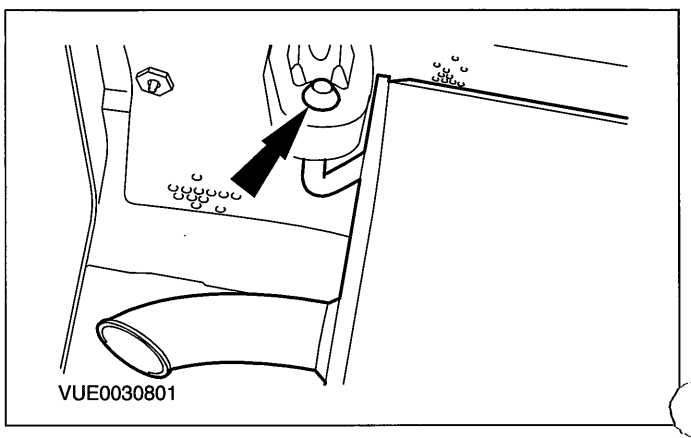

## REMOVAL AND INSTALLATION

7. **Remove the exhaust system heat shield.**

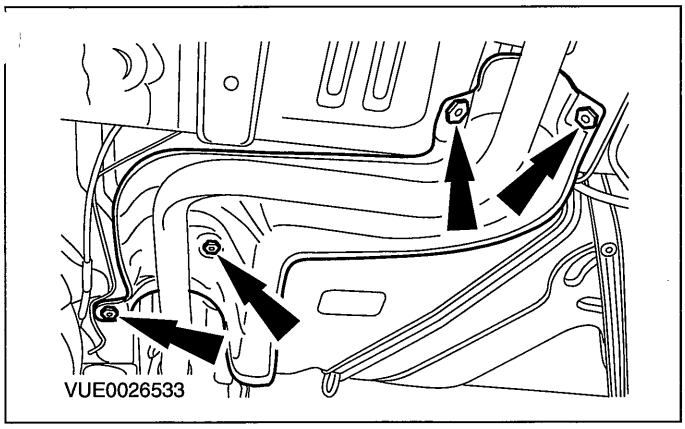


8. **⚠CAUTION:When removing the fuel tank vent and filler pipes, do not use any sharp edge tools to lever off the pipes. Failure to follow this instruction may cause damage to the pipes.**

**NOTE:**Make note of the positions of the retaining clamps to make sure they are positioned in exactly the same positions when installing.

**Disconnect the fuel tank filler pipe and the fuel tank vent pipe from the fuel tank.**

- Discard the retaining clamps.

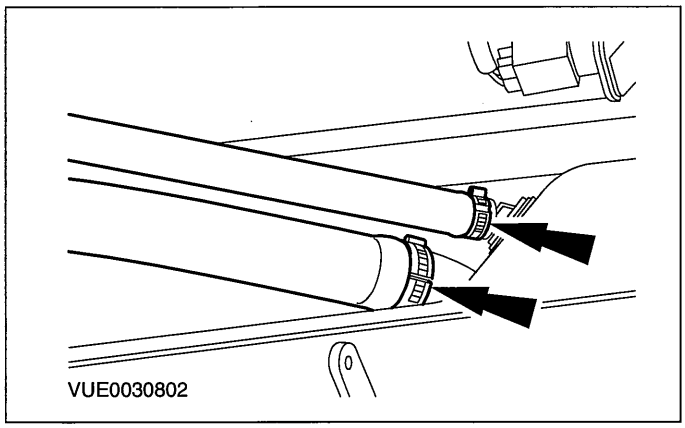


9. **⚠CAUTION:Use a suitable packing material to prevent damage to the underside of the fuel tank.**

**Using a suitable transmission jack, support the fuel tank.**

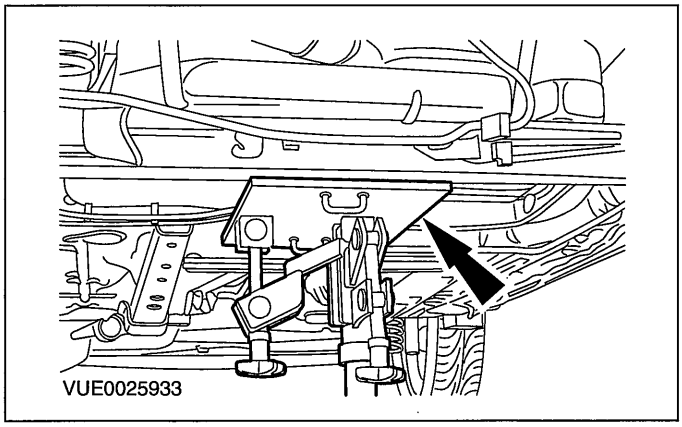


10. **Remove the fuel tank support strap rear retaining bolts.**

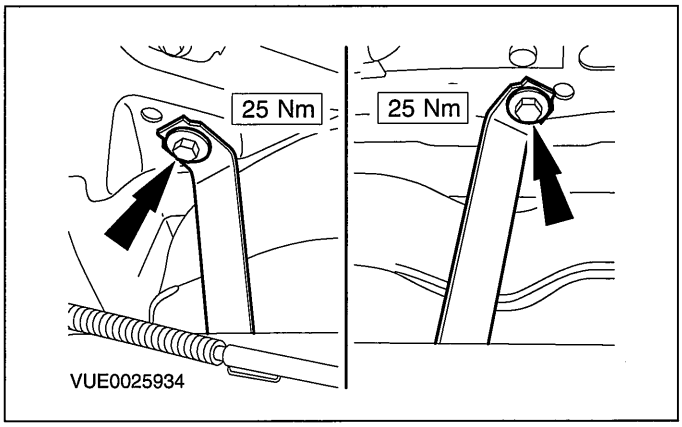


11. **NOTE:Make note of the positions of the support straps to make sure they are positioned in exactly the same positions when installing (left-hand over right-hand).**

**Remove the fuel tank support straps.**

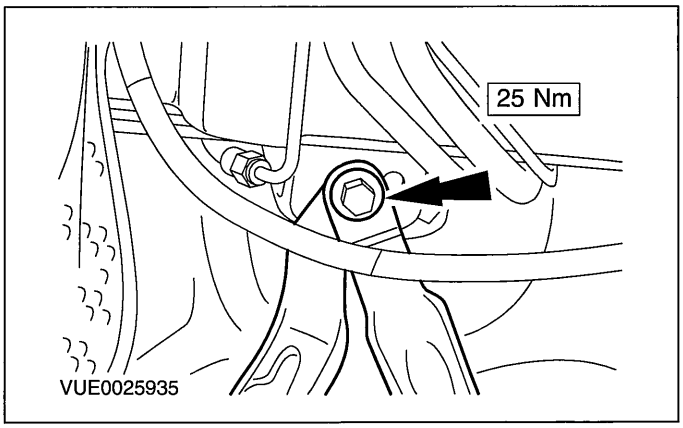

## REMOVAL AND INSTALLATION

All except vehicles with diesel engine

12. **Disconnect the fuel tank vent pipe from the evaporative emission canister. For additional information, refer to Section 310-00 [Fuel System - General Information].**

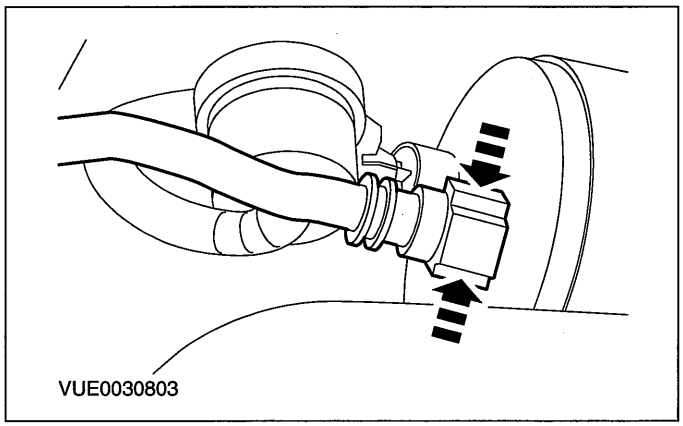


All vehicles

13. **⚠CAUTION:When lowering the fuel tank, make sure that excessive strain is not placed on the fuel lines and electrical connectors.**

**Partially lower the fuel tank.**

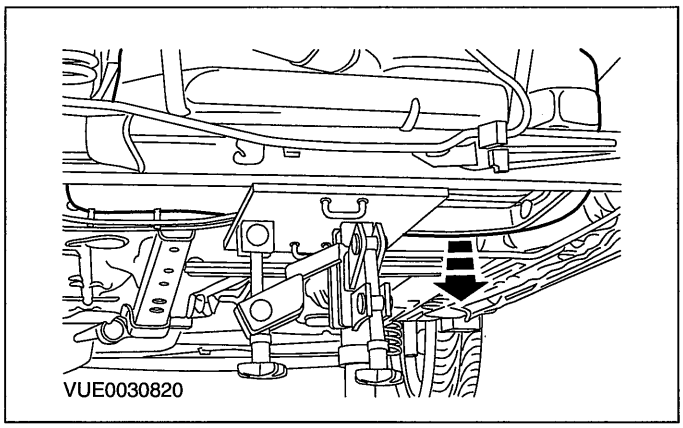


All except vehicles with diesel engine

14. **Disconnect the fuel pump module electrical connector.**

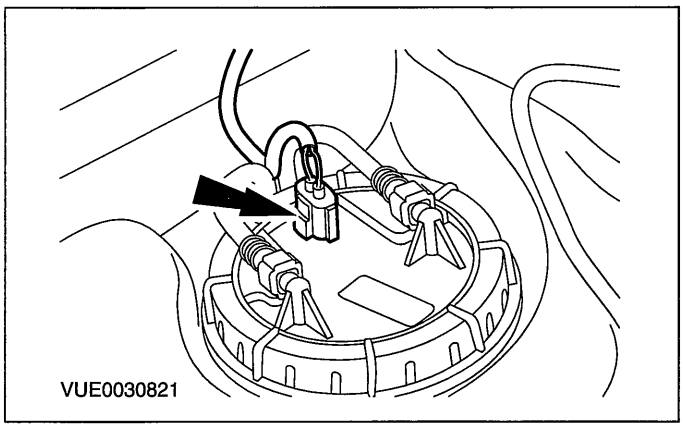


Vehicles with diesel engine

15. **Disconnect the fuel level sensor electrical connector.**

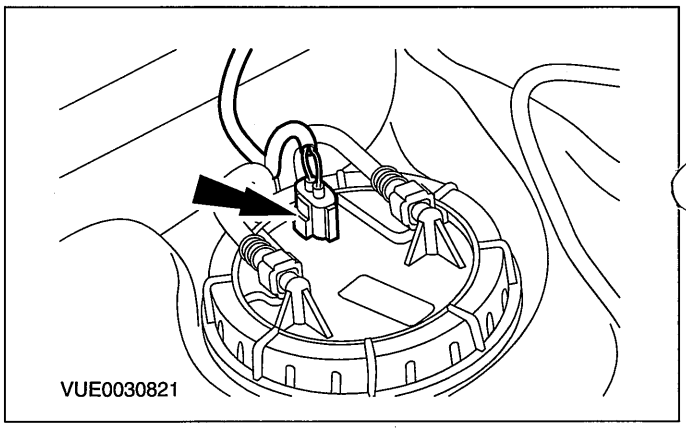


All vehicles

16. **NOTE:Make note of the color of the fuel lines to make sure they are connected in exactly the same positions when installing. Fuel supply line connectors are white or are identified by a white band. Fuel return line connectors are red or are identified by a red band.**

## REMOVAL AND INSTALLATION

**Disconnect the fuel supply and fuel return lines from the fuel tank. For additional information, refer to Section 310-00 [Fuel System - General Information].**

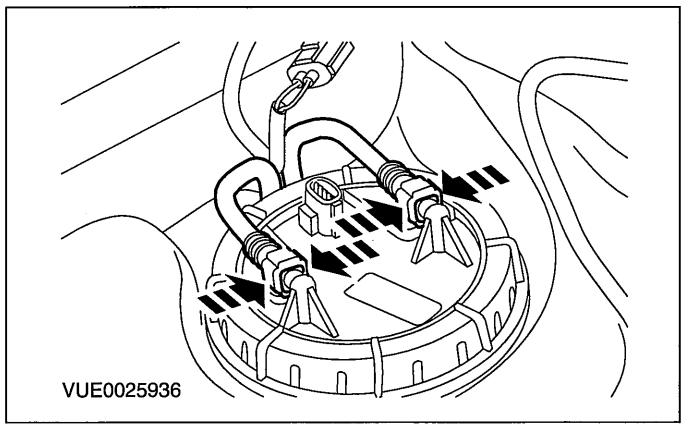


All except vehicles with diesel engine

**17. Disconnect the evaporative emissions canister pipe.**

- Squeeze the clip to release the pipe.

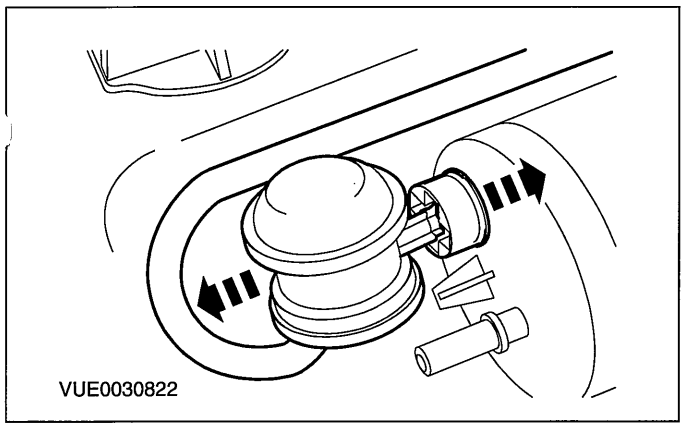


**18. Remove the evaporative emissions canister from the fuel tank.**

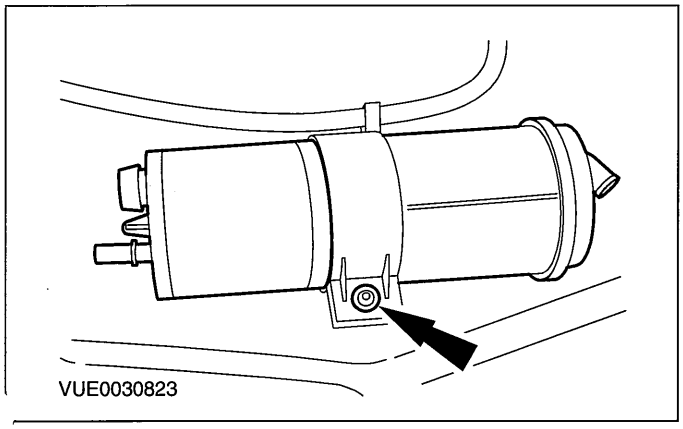


All vehicles

**19. Remove the fuel tank assembly.**

All except vehicle with diesel engine

**20. Using the special tool, loosen the fuel pump module locking ring.**

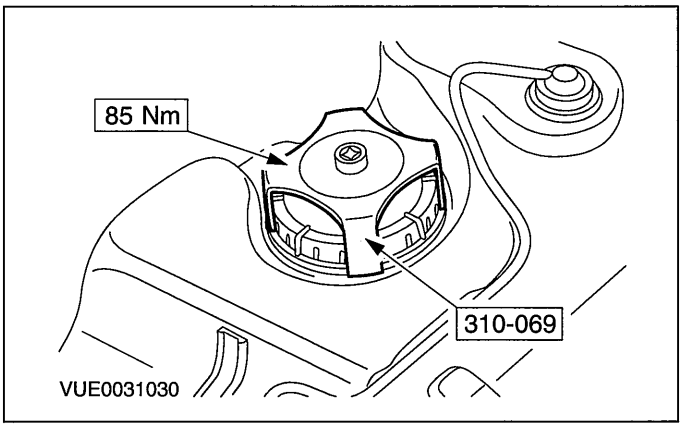


**21. ⚠CAUTION:Make sure that the float or arm are not damaged while removing or installing the fuel pump module.**

**Remove the fuel pump module.**

1. Remove the locking ring.
2. Remove the O-ring seal.
   - Discard the O-ring seal.
3. Lift the module from the fuel tank.

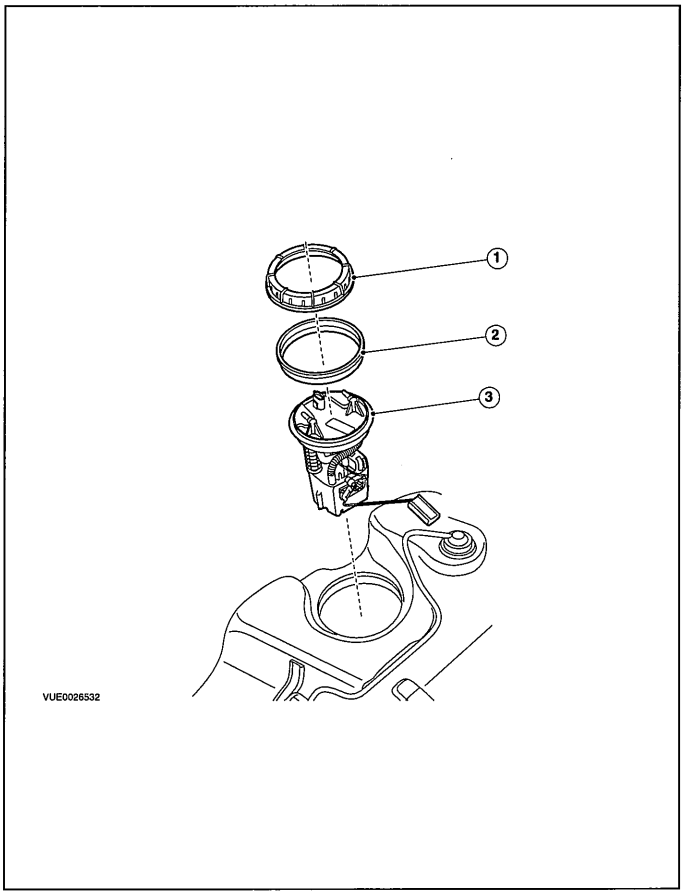

## REMOVAL AND INSTALLATION

Vehicles with diesel engine

**22. Using the special tool, loosen the fuel level sensor locking ring.**

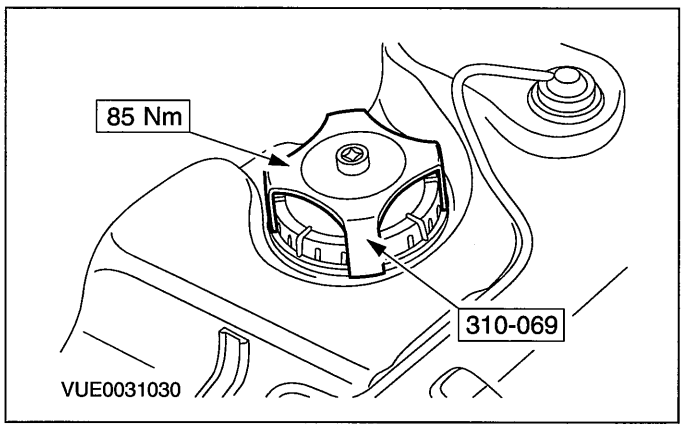


**23. ⚠CAUTION:Make sure that the float or arm are not damaged while removing or installing the fuel level sensor.**

**Remove the fuel level sensor.**

1. Remove the locking ring.
2. Remove the O-ring seal.
   - Discard the O-ring seal.
3. Lift the sensor from the fuel tank.

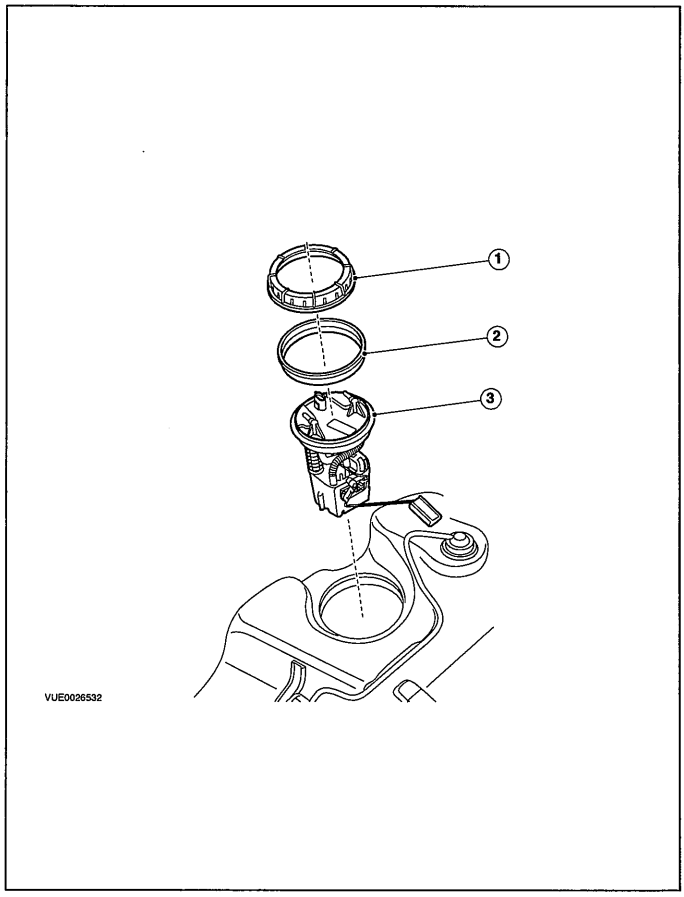


Installation

**WARNINGS:**

**▲ Do not smoke or carry lighted tobacco or open flame of any type when working on or near fuel related components. Highly flammable vapors are always present and may ignite. Failure to follow these instructions may result in personal injury.**

**▲ This procedure involves fuel handling. Be prepared for fuel spillage at all times and always observe fuel handling precautions. Failure to follow these instructions may result in personal injury.**

**CAUTIONS:**

**⚠ Make sure the fuel lines are connected in the correct fuel-flow direction. Fuel supply line connectors are white or are identified by a white band. Fuel return line connectors are red or are identified by a red band.**

**⚠ Make sure that the fuel supply and fuel return lines click into place when installing the lines. To make sure that the fuel lines are fully seated, pull on the lines.**

**NOTE:**Install a new O-ring seal.

**NOTE:**When installing the fuel tank make sure the fuel lines do not get kinked or trapped.

**NOTE:**Install new fuel filler and vent pipe retaining clamps.

**NOTE:**The fuel filler and vent pipe retaining clamps must be installed in the same position as removed.

**1. NOTE:Make sure that the arrows on the fuel tank and the fuel pump module or fuel level sensor are aligned correctly.**

**To install, reverse the removal procedure.**

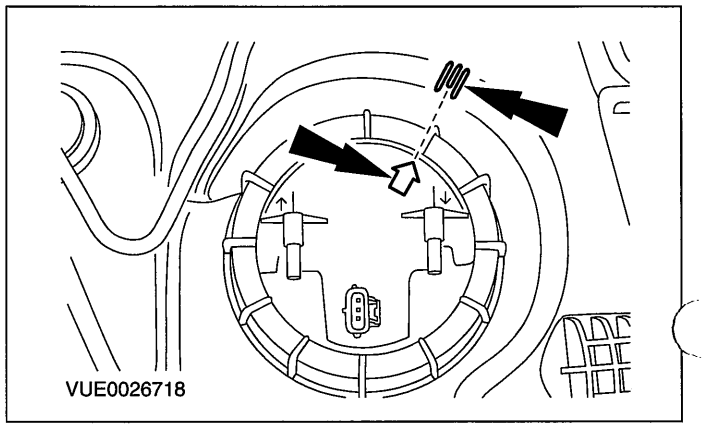

## REMOVAL AND INSTALLATION

# Fuel Pump Module(23 534 0)

## Removal

1. **Remove the fuel pump module.**

   **For additional information, refer to Fuel Tank - in this section.**

## Installation

1. **To install, reverse the removal procedure.**

## REMOVAL AND INSTALLATION

# Fuel Tank Filler Pipe(23 572 0)

### Removal

**WARNINGS:**

▲ **Do not smoke or carry lighted tobacco or open flame of any type when working on or near any fuel related components. Highly flammable vapours are always present and can ignite. Failure to follow these instructions may result in personal injury.**

▲ **This procedure involves fuel handling. Be prepared for fuel spillage at all times and always observe fuel handling precautions. Failure to follow these instructions may result in personal injury.**

1. **Disconnect the battery ground cable. For additional information, refer to Section 414-01 [Battery, Mounting and Cables].**
2. **Drain the fuel tank. For additional information, refer to Section 310-00 [Fuel System - General Information].**
3. **Raise and support the vehicle. For additional information, refer to Section 100-02 [Jacking and Lifting].**
4. **Remove the left-hand rear fender splash shield (road wheel shown removed for clarity).**

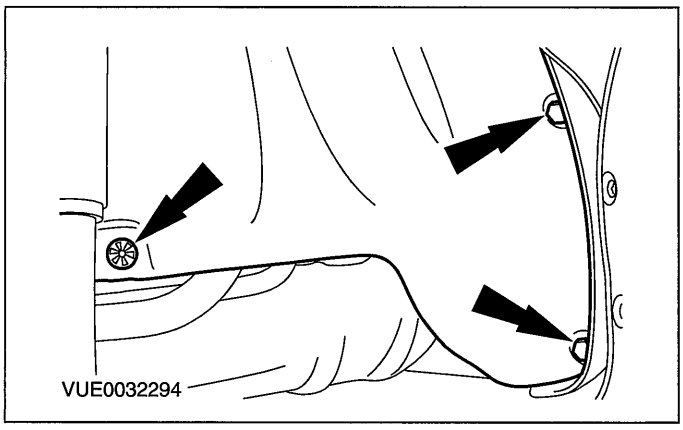


5. **Remove the fuel tank filler pipe upper retaining bolt.**

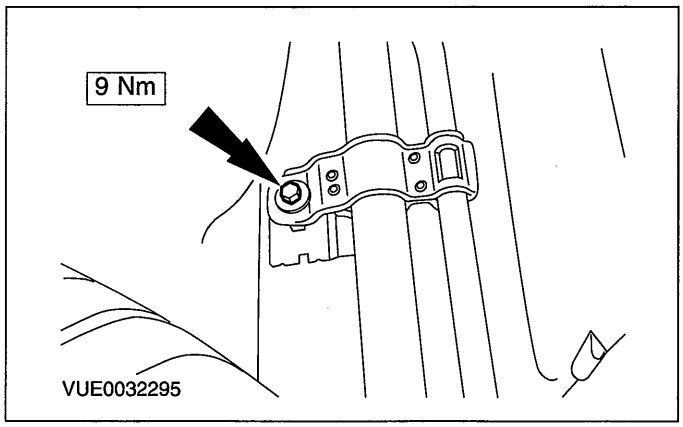


6. ⚠**CAUTION:When disconnecting the fuel tank vent and fuel tank filler pipes, do not use any sharp edge tools to lever off the pipes. Failure to follow this instructions may cause damage to the pipes.**

**NOTE:**Make note of the positions of the retaining clamps to make sure they are positioned in exactly the same positions when installing.

**Disconnect the fuel tank filler pipe and the fuel tank vent pipe from the fuel tank.**

- Discard the retaining clamps.

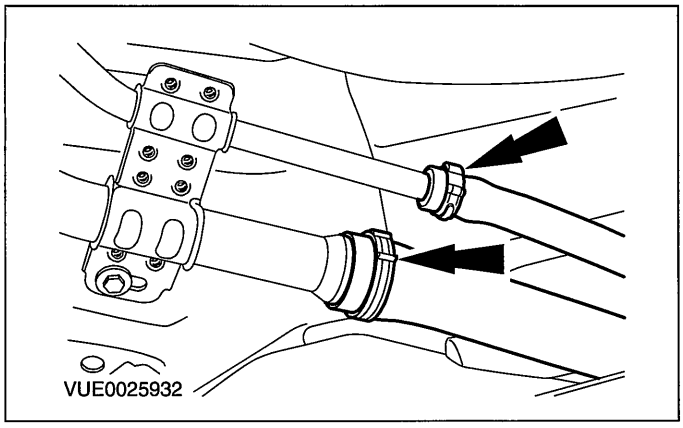

## REMOVAL AND INSTALLATION

7. **Remove the fuel tank filler pipe lower retaining bolt and remove the fuel tank filler pipe.**

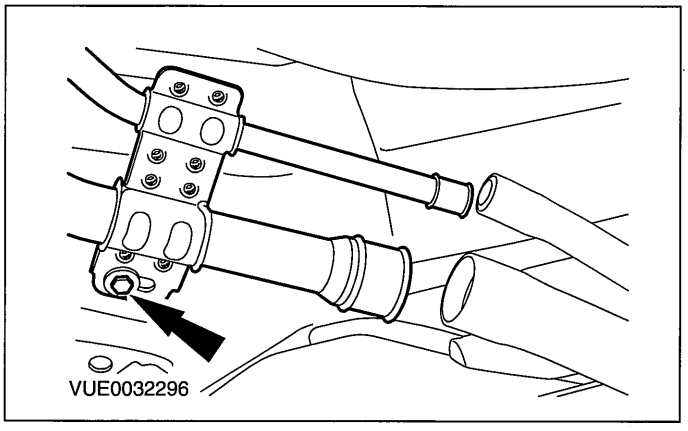


### Installation

**WARNINGS:**

▲ **Do not smoke or carry lighted tobacco or open flame of any type when working on or near any fuel related components. Highly flammable vapours are always present and can ignite. Failure to follow these instructions may result in personal injury.**

▲ **This procedure involves fuel handling. Be prepared for fuel spillage at all times and always observe fuel handling precautions. Failure to follow these instructions may result in personal injury.**

**NOTE:** Install new fuel tank filler pipe and vent pipe retaining clamps.

**NOTE:** The fuel tank filler pipe and vent pipe retaining clamps must be installed in the same position as removed.

1. **To install, reverse the removal procedure.**

## REMOVAL AND INSTALLATION

# Fuel Level Sensor

### Removal

1. **Remove the fuel level sensor.**

   **For additional information, refer to Fuel Tank in this section.**

### Installation

1. **To install, reverse the removal procedure.**

## REMOVAL AND INSTALLATION

# Fuel Level Resistor Card

## Removal

### All except vehicles with diesel engine

1. **Remove the fuel pump and sender unit.**

   **For additional information, refer to: Fuel Tank (310-01 Fuel Tank and Lines, Removal and Installation).**

### Vehicles with diesel engine

2. **Remove the fuel level sensor.**

   **For additional information, refer to: Fuel Tank (310-01 Fuel Tank and Lines, Removal and Installation).**

### All vehicles

3. **NOTE:Diesel engine variants only have 2 wires.**

   **Disconnect the fuel level resistor card electrical connectors.**

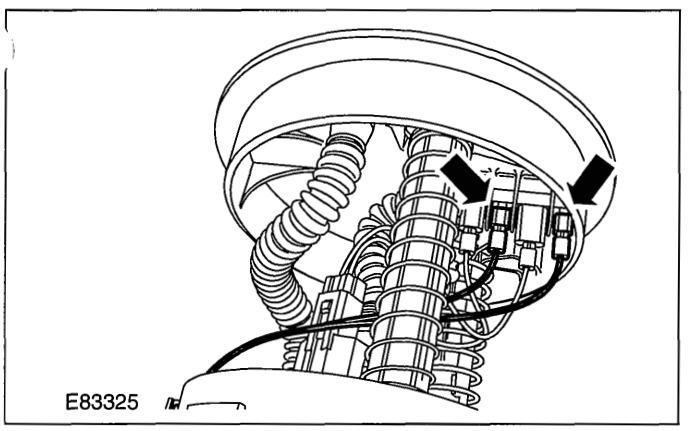


4. **Using needle nose pliers, remove the fuel level resistor card.**
   1. Press the locking tangs.
   2. Remove the fuel level resistor card.

- Discard the fuel level resistor card

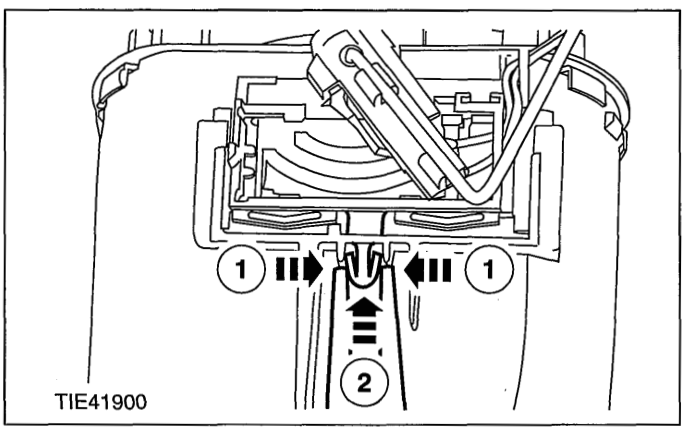


## Installation

### All vehicles

1. ⚠**CAUTION:Do not touch the fuel level resistor card surface with tools or hands. Failure to follow this instruction may result in damage to the fuel level resistor card.**

**NOTE:**Make sure that the locking tangs are in the fully locked position.

**NOTE:**Make sure that the wiring harness is routed around the fuel line, in line with the original installation.

   **Install the new fuel level resistor card into the fuel pump and sender unit or the fuel level sensor.**

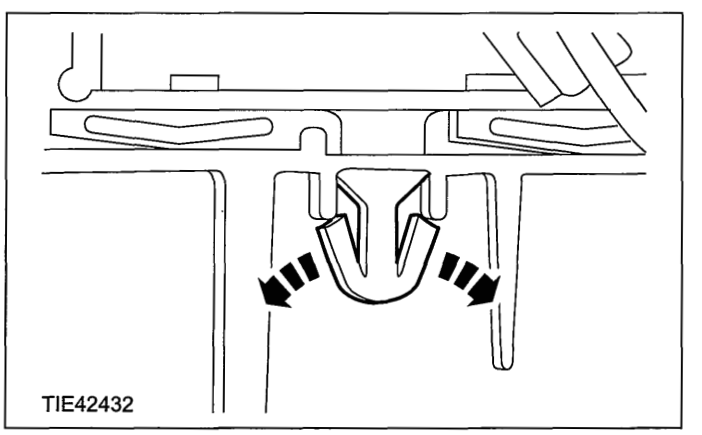


2. **NOTE:It is not important which electrical connector is connected to which fuel level resistor card related pin in the top flange.**

**NOTE:**Diesel engine variants only have 2 wires.

## REMOVAL AND INSTALLATION

**Connect the fuel level resistor card electrical connectors.**

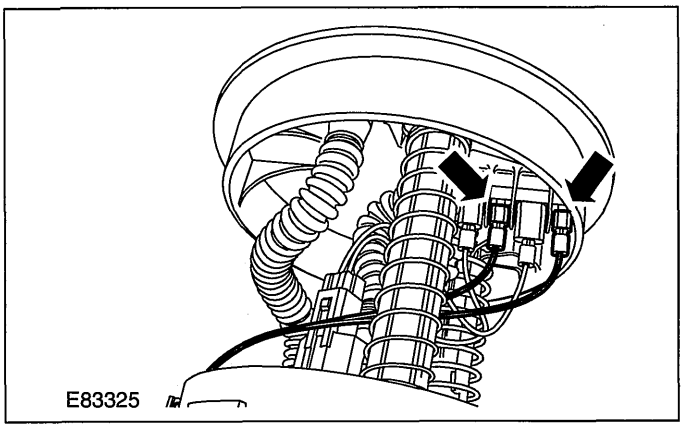


3. **Make sure that the float rod and arm are able to sweep their full ranges without contacting or fouling on any wires.**

Vehicles with diesel engine

4. **NOTE:Install a new fuel level sensor gasket.**

   **Install the fuel level sensor.**

   **For additional information, refer to: Fuel Tank (310-01 Fuel Tank and Lines, Removal and Installation).**

All except vehicles with diesel engine

5. **NOTE:Install a new fuel pump and sender unit gasket.**

   **Install the fuel pump and sender unit.**

   **For additional information, refer to: Fuel Tank (310-01 Fuel Tank and Lines, Removal and Installation).**

# SECTION 310-02A Acceleration Control — 1.3L Duratec-8V (Rocam)/1.25L Duratec-16V (Sigma)/1.4L Duratec-16V (Sigma)/1.6L Duratec-16V (Sigma)

## VEHICLE APPLICATION:2006.0 Fiesta

CONTENTS PAGE

### DESCRIPTION AND OPERATION

Acceleration Control ..... 310-02A-2
1.3L Duratec 8V ..... 310-02A-2
1.4L/1.6L Duratec 16V ..... 310-02A-2

### DIAGNOSIS AND TESTING

Acceleration Control ..... 310-02A-3
Principles of Operation ..... 310-02A-3
Diagnostic Trouble Codes ..... 310-02A-4
Inspection and Verification ..... 310-02A-6
Symptom Chart ..... 310-02A-6

## DESCRIPTION AND OPERATION

# Acceleration Control

### 1.3L Duratec 8V

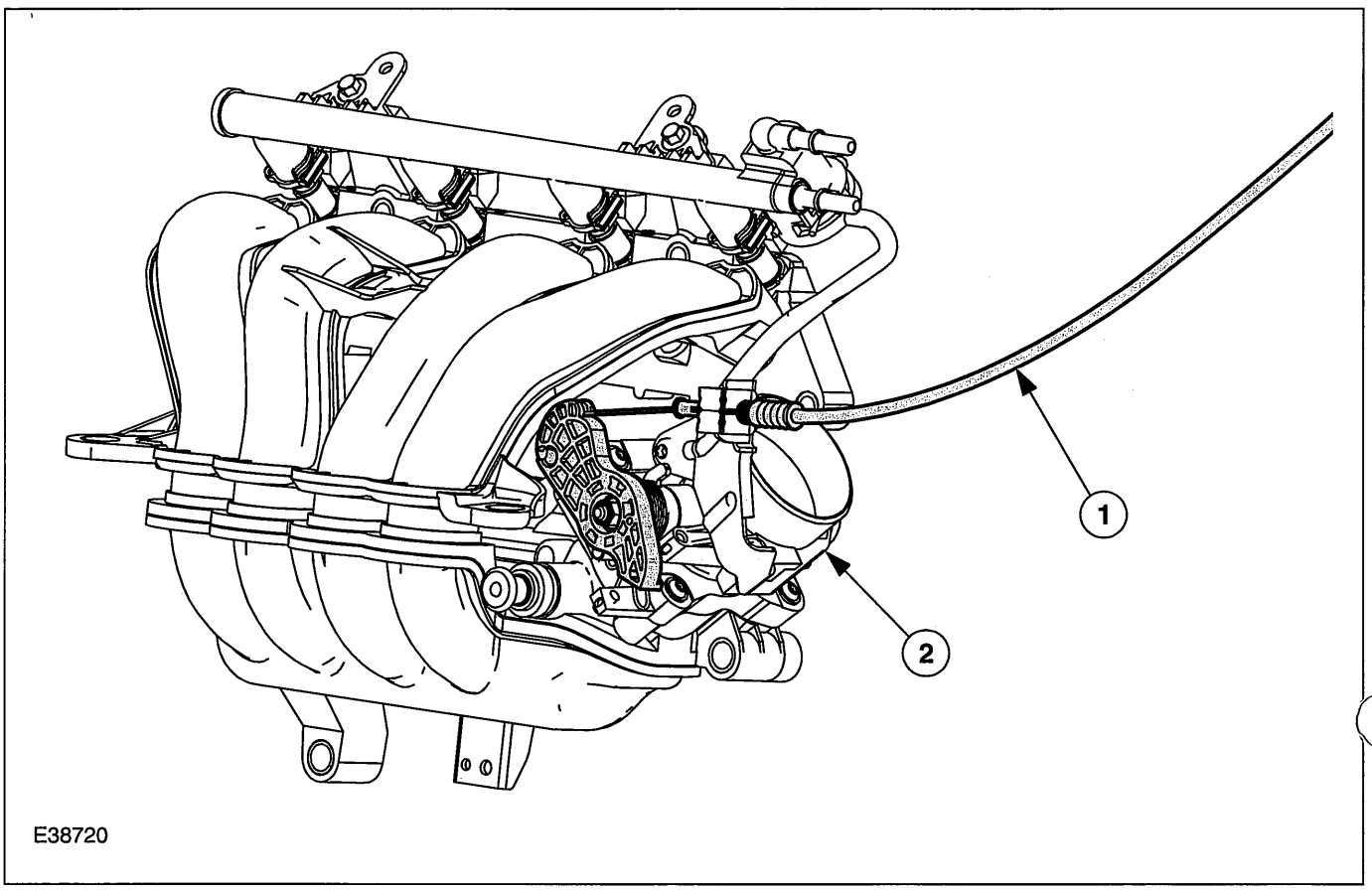


| Item | Description |
|---|---|
| 1 | Accelerator cable |
| 2 | Throttle body |

The throttle is cable operated on the 1.3L Duratec 8V engine.

There are two different throttle bodies, depending on the power of the variant.

Because the throttle flap opening angle is different, the way in which the cable is controlled at the throttle flap varies slightly between the two different variants.

### 1.4L/1.6L Duratec 16V

The 1.4L/1.6L Duratec 16V engines have an electronically controlled throttle flap control unit.

For information on the electronically controlled throttle flap control unit, please refer to Section 303-14.

## DIAGNOSIS AND TESTING

# Acceleration Control

## Principles of Operation

### System Overview

**Electronic Accelerator Control System Overview**

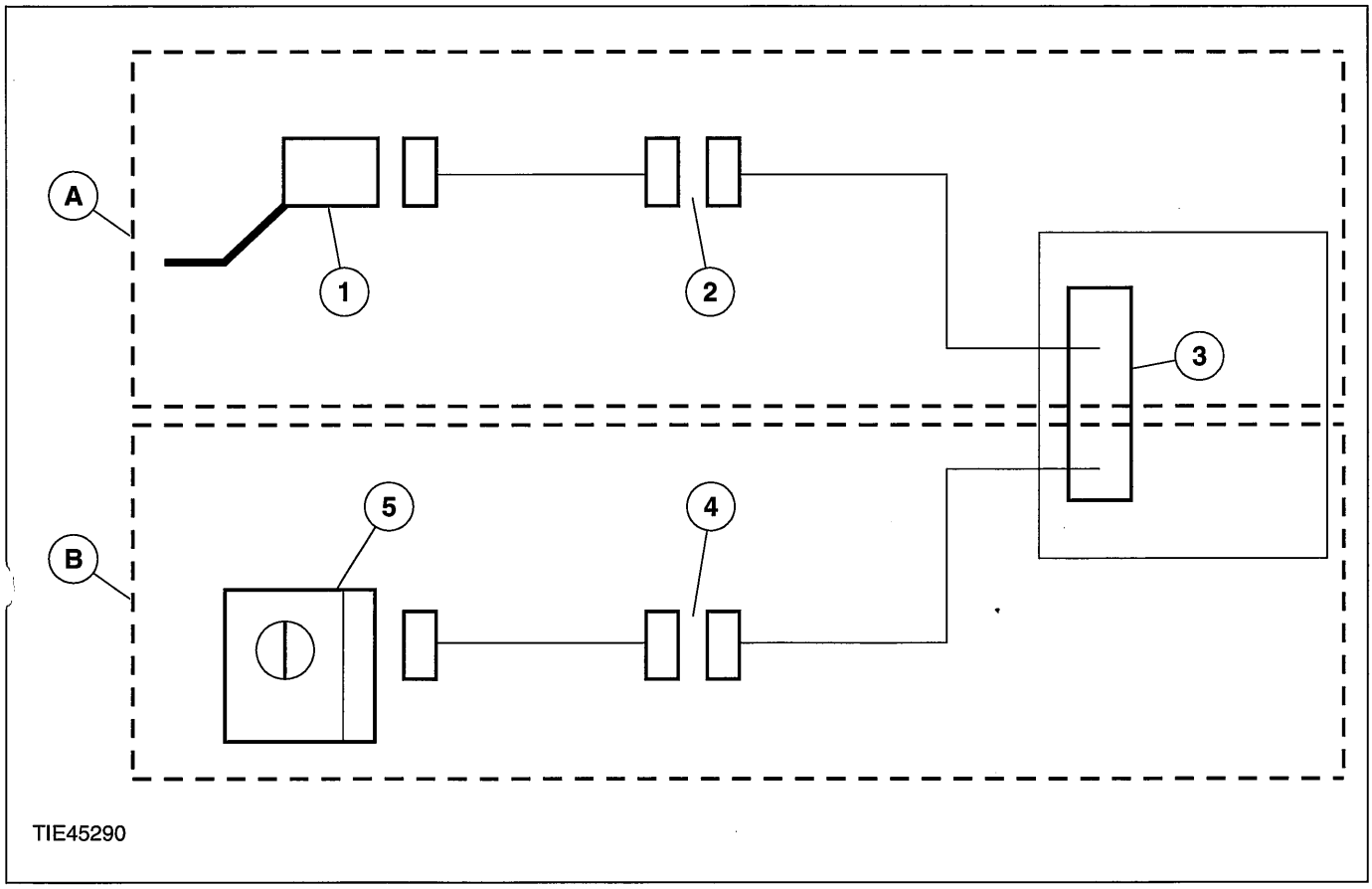


| Item | Description |
|---|---|
| A | Area "A"- accelerator pedal to powertrain control (PCM) module circuit |
| B | Area "B"- electronic throttle body to PCM circuit |
| 1 | Accelerator pedal |
| 2 | 42-way electrical connector |
| 3 | PCM |
| 4 | 16-way inline electrical connector |
| 5 | Electronic throttle body |

### Description

The system consists primarily of two circuits connected to the PCM. The two circuits are the accelerator pedal to PCM and the electronic throttle body to PCM.

### Accelerator Pedal

The accelerator pedal contains two sensors that measure the movement of the pedal and output a voltage corresponding to the pedal position.

# DIAGNOSIS AND TESTING

## Electronic Throttle Body

The electronic throttle body is similar to a mechanical throttle body used on a cable accelerator system. Instead of the cable moving the throttle plate open and closed, it uses an internal electrical motor that is driven by the PCM. The electronic throttle body has two sensors that measure the throttle plate position. The sensors output a voltage to the PCM corresponding to the plate position.

When the electronic throttle body motor is not in use, the throttle plate sits slightly open in a default position (not idle position). This position is maintained by two internal springs. One acts upwards and one downwards. Screws on the electronic throttle body will not adjust the idle speed, the idle speed is controlled by the PCM.

## PCM

The PCM reads the voltage from the pedal and converts this signal into a driver request. The driver request is realized by opening or closing the throttle body. To do this, the PCM increases or decreases power to the electronic throttle body motor. The PCM then checks the signal from the electronic throttle body throttle position (TP) sensor, to make sure that the requested position has been achieved. The PCM also monitors all the sensors to make sure that the system is functioning as expected. All electronic accelerator control system faults will be detected by the PCM and set a diagnostic trouble code (DTC) which triggers the electronic accelerator control fail message accordingly. For safety reasons, some faults will also reduce the vehicle performance.

## Diagnostic Trouble Codes

### Description

When a component electrical error is set it means that the PCM is not receiving the expected signal. This means that the concern may lie between the component and the PCM. All wiring and electrical connectors should be checked before a new component is installed. Also note that general vehicle electrical issues can have an effect on other systems. Battery voltage and relay concerns should be rectified first.

### Accelerator Pedal Codes

These are the DTCs relating to the pedal circuit. They do not imply necessarily that the accelerator pedal is at fault, but it will in any case relate to area "A" (see system overview).

- P2120 – Accelerator pedal sensor 1 electrical error
- P2122 – Accelerator pedal sensor 1 electrical error short to ground or open circuit
- P2123 – Accelerator pedal sensor 1 electrical error short to battery
- P2125 – Accelerator pedal sensor 2 electrical error
- P2127 – Accelerator pedal sensor 2 electrical error short to ground or open circuit
- P2128 – Accelerator pedal sensor 2 electrical error short to battery
- P2138 – Accelerator pedal sensor 1 & 2 ratio error

### Electronic Throttle Body Circuit Codes

These are the DTCs relating to the electronic throttle body circuit. They do not imply necessarily that the electronic throttle body is the concern, but it will in any case relate to area "B" (see system overview).

- P0120 – Throttle position (TP) sensor 1 electrical error
- P0122 – (TP) sensor 1 electrical error short to ground
- P0123 – (TP) sensor 1 electrical error short to battery or line break
- P0220 – (TP) sensor 2 electrical error
- P0222 – (TP) sensor 2 electrical error short to ground or open circuit
- P0223 – (TP) sensor 2 electrical error short to battery
- P2135 – (TP) sensor ratio error
- P2119 – Throttle plate convergence error
  - This is when the throttle plate has not moved to the requested position in the required time. This could be caused by the following:
  - The electronic throttle body motor is not receiving the necessary voltage. Check the electronic throttle body motor wiring. The PCM is not receiving the correct throttle plate position signal from the electronic throttle body. Check the TP sensor wiring from the

## DIAGNOSIS AND TESTING

PCM to the electronic throttle body including the electrical connectors in area "B" (see system overview).
  - There is an obstruction inside the throttle body bore. Remove the air cleaner outlet pipe and check for obstructions.
  - There is an obstruction inside the electronic throttle body. Remove the air cleaner outlet pipe and check that the plate moves freely against the springs and returns to a slightly open position. If it does not, install a new electronic throttle body.
- P2176 – Throttle plate adaptation error
  - When the ignition is turned off, the throttle body carries out an adaptation cycle and spring check. This can be audible after a short delay (up to 30 seconds) following the ignition key being turned to position 0 and can be visually observed with the air cleaner outlet pipe removed. The throttle plate is moved through a series of positions to check the TP sensor value and relearn the electronic throttle body characteristics. If a concern is detected during this test, P2176 DTC will be set. If there are already any of the other DTCs, the adaptation test could potentially fail. Therefore the other DTCs should be resolved first (e.g. low battery voltage) and a retest can be carried out by clearing the DTCs and keying on and off again. Check the whole area "B" (see system overview) for any concerns and if no concern is found, install a new electronic throttle body.
- P2100 – H bridge error
  - A fault has been detected on the circuit connecting the electronic throttle body motor and the PCM. Check for any other non-electronic accelerator control related DTCs and rectify them first. Check area "B" (see system overview) and if no failure is found, install a new PCM.

### PCM Related Codes

The PCM continuously monitors all the sensors. It also checks that the monitor is functioning as expected. If there is a fault with the monitor, the following DTCs will be set.

- P2107 – Processor monitoring on the main controller fault.
- P2108 -Analogue to digital converter
  - Inferred intake mass air flow lower than expected
  - Engine speed monitor ratio error
  - Pedal ratio monitor error
  - TP sensor ratio monitor error
  - Fault in torque generation
  - Fault present in engine speed limitation

Multiple sensor faults can make the PCM assume that there is a monitor fault. If other DTCs exist, rectify these first. These DTCs indicate a failure in area "A" or "B" and they are also related to the manifold absolute pressure and temperature (MAPT) sensor and the crankshaft position (CKP) sensor. If no other failures are found, install a new PCM.

### Indirect Codes

There are two brake pedal switches located under the brake pedal. Check that both of these are connected and functioning correctly. A brake pedal switch concern will only cause the "EAC FAIL" message to be displayed, it will not lead to a limited performance mode. Follow WDS instructions.

- P0571 – Brake switch error

If the voltage to the accelerator pedal and the electronic throttle body cannot be regulated correctly, the components may not operate as expected. Therefore it is important to detect if there is a concern in the supply voltage

- P0641 – Sensor voltage supply circuit 1 noisy signal
- P0642 – Sensor voltage supply circuit 1 short to ground or open circuit
- P0643 – Sensor voltage supply circuit 1 short to battery
- P0651 – Sensor voltage supply circuit 2 noisy signal
- P0652 – Sensor voltage supply circuit 2 short to ground or open circuit

## DIAGNOSIS AND TESTING

- P0653 – Sensor voltage supply circuit 2 short to battery
  - Check the power supply to the PCM (battery voltage, relays, wiring harness and electrical connectors as well as fuses). If no concern is found, install a new PCM.
- P1712 – Electronic gear shift torque demand is not a plausible signal (ASM only)
  - Follow WDS instructions.

**NOTE:** If the vehicle is in a limited performance mode, a system related DTC and the electronic accelerator control fail light message will illuminate. If there is a performance issue without these items the electronic accelerator control system is running correctly but another issue may exist elsewhere on the vehicle.

Be aware that installing new system related components without these DTCs will not improve the vehicle behavior for general issues such as:

- high fuel consumption
- poor idle quality
- poor or no engine start

### Inspection and Verification

1. Verify the customer concern.
2. Visually inspect for obvious signs of mechanical or electrical damage.

**Visual Inspection Chart**

| Mechanical | Electrical |
|---|---|
| – Accelerator pedal<br>– Linkage<br>– Accelerator cable<br>– Throttle body | • Fuse(s)<br>• Relay(s)<br>• Wiring harness<br>• Electrical connector(s)<br>• Accelerator pedal<br>• Throttle body<br>• Powertrain control module (PCM) |

3. If an obvious cause for an observed or reported concern is found, correct the cause (if possible) before proceeding to the next step.
4. If the cause is not visually evident, verify the symptom and refer to Symptom Chart.

### Symptom Chart

**Symptom Chart - Vehicles With 1.3L Engine**

| Symptom | Possible Sources | Action |
|---|---|---|
| • Accelerator pedal is hard to depress or has a rough/raspy or sticky feel | • Damaged accelerator cable. | • INSTALL a new accelerator cable. |
| | • Accelerator cable incorrectly installed. | • CHECK the accelerator cable for correct installation. |
| | • Worn or damaged throttle body. | • INSTALL a new throttle body.<br>REFER to: Throttle Body (303-04A, Removal and Installation). |
| • Accelerator pedal does not return freely | • Weak or broken throttle body return spring. | • INSTALL a new throttle body.<br>REFER to: Throttle Body (303-04A, Removal and Installation). |
| | • Worn or damaged throttle body. | • INSTALL a new throttle body.<br>REFER to: Throttle Body (303-04A, Removal and Installation). |
| • High engine idle speed | • Damaged accelerator cable. | • INSTALL a new accelerator cable. |

## DIAGNOSIS AND TESTING

| Symptom | Possible Sources | Action |
|---|---|---|
| | • Accelerator cable incorrectly installed. | • CHECK the accelerator cable for correct installation. |

**Symptom Chart - Vehicles With 1.25L, 1.4L or 1.6L Engine**

| Symptom | Possible Sources | Action |
|---|---|---|
| • Accelerator pedal is hard to depress or has a rough/raspy or sticky feel | • Accelerator pedal incorrectly installed. | • CHECK the accelerator pedal for correct installation. |
| | • Worn or damaged accelerator pedal. | • INSTALL a new accelerator pedal. |
| • Accelerator pedal does not return freely | • Accelerator pedal incorrectly installed. | • CHECK the accelerator pedal for correct installation. |
| | • Worn or damaged accelerator pedal. | • INSTALL a new accelerator pedal. |
| • High engine idle speed | • Damaged accelerator pedal. | • REFER to WDS to diagnose the system. |
| | • Throttle body. | • REFER to WDS to diagnose the system. |
| | • PCM calibration. | • REFER to WDS to diagnose the system. |
| • Poor idling | • Throttle body. | • REFER to WDS to diagnose the system. |
| | • PCM calibration. | • REFER to WDS to diagnose the system. |

# SECTION 310-02B Acceleration Control — 2.0L Duratec-HE (MI4)

## VEHICLE APPLICATION:2006.0 Fiesta

CONTENTS PAGE

**DESCRIPTION AND OPERATION**

Acceleration Control ..... 310-02B-2

**DIAGNOSIS AND TESTING**

Acceleration Control ..... 310-02B-4
Inspection and Verification ..... 310-02B-4
Symptom Chart ..... 310-02B-4

## DESCRIPTION AND OPERATION

# Acceleration Control

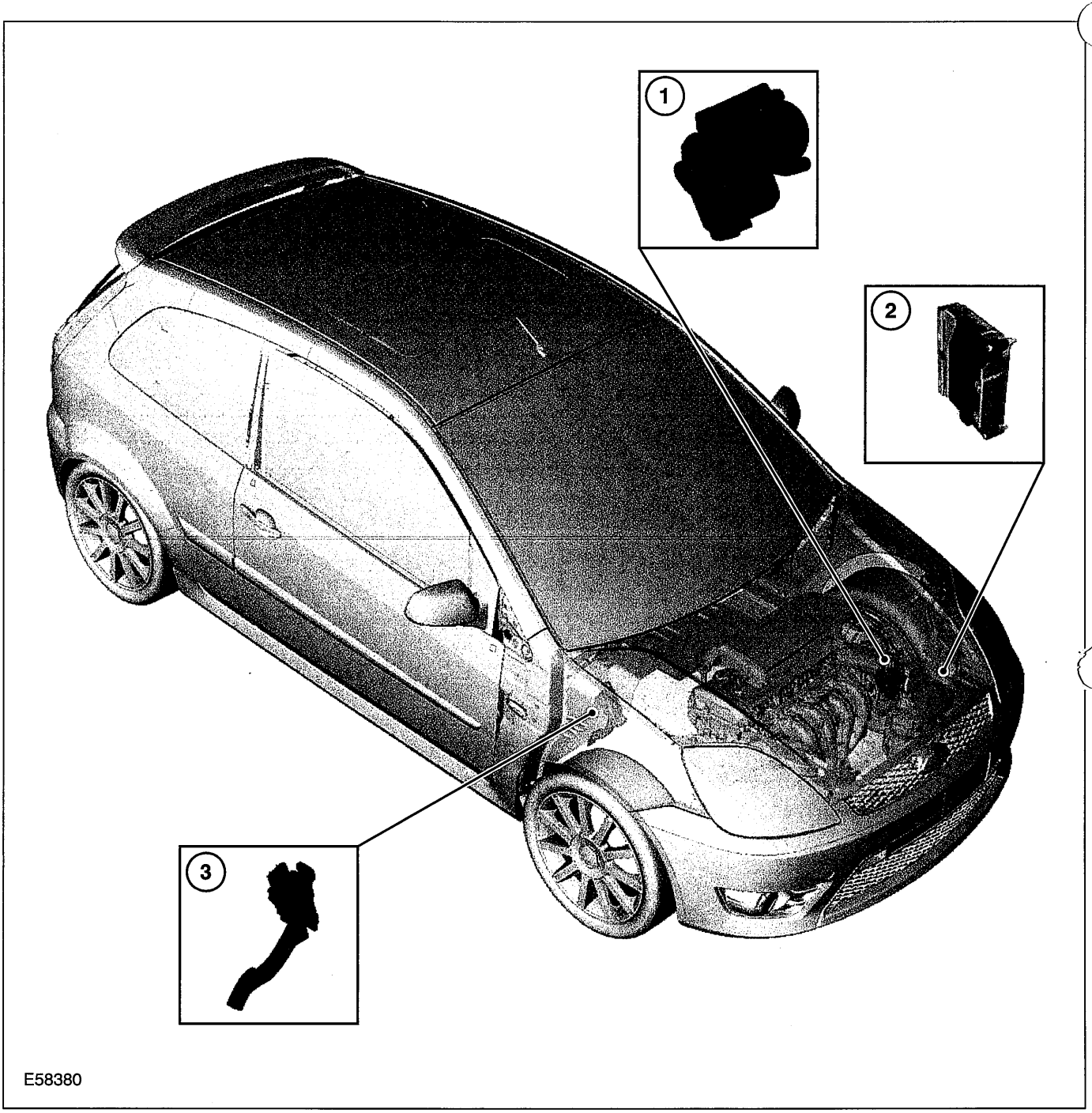


| Item | Description |
|---|---|
| 1 | Throttle body |
| 2 | Powertrain control module (PCM) |
| 3 | Accelerator pedal |

The accelerator pedal incorporates two sensors, accelerator pedal position (APP) sensor 1, and APP sensor 2. Movement of the accelerator pedal generates a percentage of reference voltage (0-5V) on APP sensor 1 and a percentage of duty-cycle output on APP sensor 2 corresponding to that accelerator pedal position.

The PCM reads the output from both the APP sensors and converts the signals into a driver requested torque. To achieve the driver requested torque, the PCM controls the position of the throttle plate, ignition timing and fuel injection timing to produce the appropriate demanded engine torque output. The PCM monitors the actual throttle plate

## DESCRIPTION AND OPERATION

position from the throttle position (TP) sensors to make sure that the requested position has been achieved.

**NOTE:**Do not install a new accelerator pedal unless a relevant accelerator pedal DTC has been stored in the PCM. For additional information refer to WDS.

The accelerator pedal is a non-serviceable component which cannot be adjusted and therefore must not be disassembled or tampered with.

The throttle body is directly controlled by the PCM and has two TP sensors, TP 1 and TP 2. The TP sensors output a voltage to the PCM that corresponds to the actual throttle plate position. When the throttle body motor is not being powered up, the throttle plate sits open at approximately 8 degrees from the closed in-bore position. This position (also referred to as the default position), is maintained within the throttle body by two internal compression return springs acting in opposing directions, these springs are a non-serviceable item.

The PCM continuously monitors both APP sensors and both TP sensors to make sure that the system is functioning as expected. All acceleration control system concerns will be detected by the PCM and the appropriate diagnostic trouble code (DTC) set. The malfunction indicator lamp (MIL), located in the instrument cluster will also be illuminated if a concern is apparent. As the acceleration control system is of a safety-critical nature, it is possible that a system concern will result in a reduced vehicle performance and a DTC stored in the PCM. For additional information refer to WDS.

## DIAGNOSIS AND TESTING

# Acceleration Control

## Inspection and Verification

1. Verify the customer concern.
2. Visually inspect for obvious signs of mechanical or electrical damage.
3. If an obvious cause for an observed or reported concern is found, correct the cause (if possible) before proceeding to the next step.
4. If the cause is not visually evident, verify the symptom and refer to Symptom Chart.

**Visual Inspection Chart**

| Mechanical | Electrical |
|---|---|
| – Accelerator pedal<br>– Electronic throttle body | • Fuse(s)<br>• Wiring harness(s)<br>• Electrical connector(s)<br>• Accelerator pedal<br>• Electronic throttle body<br>• Powertrain control module (PCM) |

## Symptom Chart

**Symptom Chart**

| Symptom | Possible Sources | Action |
|---|---|---|
| • Accelerator pedal is hard to depress or has a rough/raspy or sticky feel | • Adjacent hardware, wiring harness(s), trim(s), carpet or mat(s) incorrectly installed. | • CHECK the accelerator pedal and adjacent parts for correct installation. |
| | • Worn or damaged accelerator pedal. | • INSTALL a new accelerator pedal. |
| • Accelerator pedal does not return freely | • Adjacent hardware, wiring harness(s), trim(s), carpet or mat(s) incorrectly installed. | • CHECK the accelerator pedal and adjacent parts for correct installation. |
| | • Worn or damaged accelerator pedal. | • INSTALL a new accelerator pedal. |
| • High engine idle speed | • Damaged accelerator pedal. | • REFER to WDS to diagnose the system. |
| | • Electronic throttle body. | • REFER to WDS to diagnose the system. |
| | • PCM calibration. | • REFER to WDS to diagnose the system. |
| • Poor idling | • Electronic throttle body. | • REFER to WDS to diagnose the system. |
| | • PCM calibration. | • REFER to WDS to diagnose the system. |