320pgs

YAMAHA

YFM350X WARRIOR

Service Manual

LIT-11616-YM-37

YAMAHA

YFM350XKC
(for California)

SUPPLEMENTARY SERVICE MANUAL

LIT-11616-10-89

3GD-28197-15

FOREWORD

This Supplementary Service Manual has been prepared to introduce new service and data for the YFM350XKC. For complete service information procedures, it is necessary to use this Supplementary Service Manual together with the following manual.

YFM350XA SERVICE MANUAL (LIT-11616-07-50)
YFM350XE SUPPLEMENTARY SERVICE MANUAL (LIT-11616-08-60)
YFM350XJ SUPPLEMENTARY SERVICE MANUAL (LIT-11616-10-28)

YFM350XKC
SUPPLEMENTARY
SERVICE MANUAL

First Edition, April 1997

Printed in U.S.A.
LIT-11616-10-89

NOTICE

This manual was produced by the Yamaha Motor Company primarily for use by Yamaha dealers and their qualified mechanics. It is not possible to include all the knowledge of a mechanic in one manual, so it is assumed that anyone who uses this book to perform maintenance and repairs on Yamaha machines has a basic understanding of the mechanical ideas and the procedures of machine repair. Repairs attempted by anyone without this knowledge are likely to render the machine unsafe and unfit for use.

Yamaha Motor Company, Ltd. is continually striving to improve all its models. Modifications and significant changes in specifications or procedures will be forwarded to all authorized Yamaha dealers and will appear in future editions of this manual where applicable.

NOTE:
Designs and specifications are subject to change without notice.

IMPORTANT INFORMATION

Particularly important information is distinguished in this manual by the following notations.

⚠	The Safety Alert Symbol means ATTENTION! BECOME ALERT! YOUR SAFETY IS INVOLVED!
⚠ WARNING	Failure to follow WARNING instructions could result in severe injury or death to the machine operator, a bystander or a person inspecting or repairing the machine.
CAUTION:	A CAUTION indicates special precautions that must be taken to avoid damage to the machine.
NOTE:	A NOTE provides key information to make procedures easier or clearer.

HOW TO USE THIS MANUAL

MANUAL ORGANIZATION

This manual is intended as a handy, easy-to-read reference book for the mechanic. It is divided into chapters, sections and sub-sections. Comprehensive explanations of all installation, removal, disassembly, assembly, repair and inspection procedures are laid out with the individual steps in sequential order.

PAGE FEATURES

The circled numbers below refer to the features indicated in the sample page.

① : An abbreviation and symbol in the upper right corner of each page indicates the current chapter.

② : The current section title is shown at the top of each page.†

③ : Sub-section titles appear in smaller print than the section title.†

④ : Lines of asterisks (*) mark the beginning and end of a particularly important procedure. The steps of such procedures are marked with bullets (•).

⑤ : Important information such as fluids, special tools and torques are framed and marked with a corresponding symbol.

⑥ : A circled number refers to an illustrated part.

⑦ : A circled lower case letter refers to an illustrated dimension or alignment mark.

⑧ : An upper case letter in a box refers to other illustrated details.

⑨ : An arrow mark after a given defect suggests the recommended course of action.

† : In Chapter 3, "Periodic Inspection and Adjustment", it is usually the current sub-section title that appears at the top of each page, instead of the current section title.

EXPLODED DIAGRAMS

To help identify parts and clarify procedure steps, there are exploded diagrams at the start of each disassembly section.

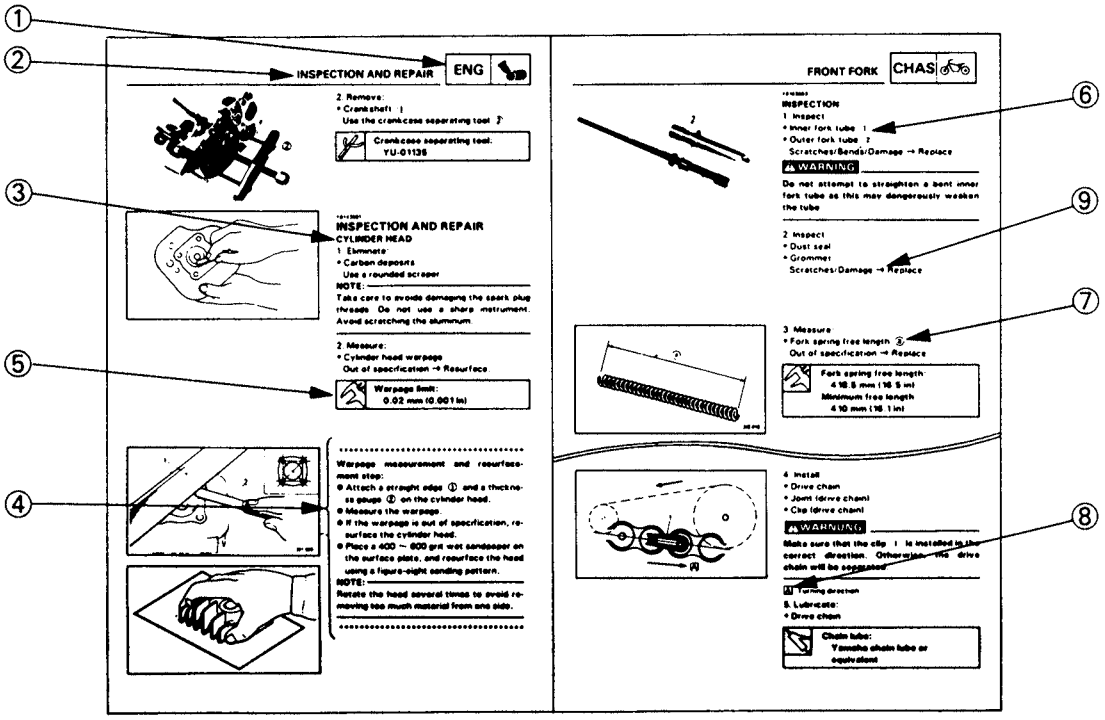

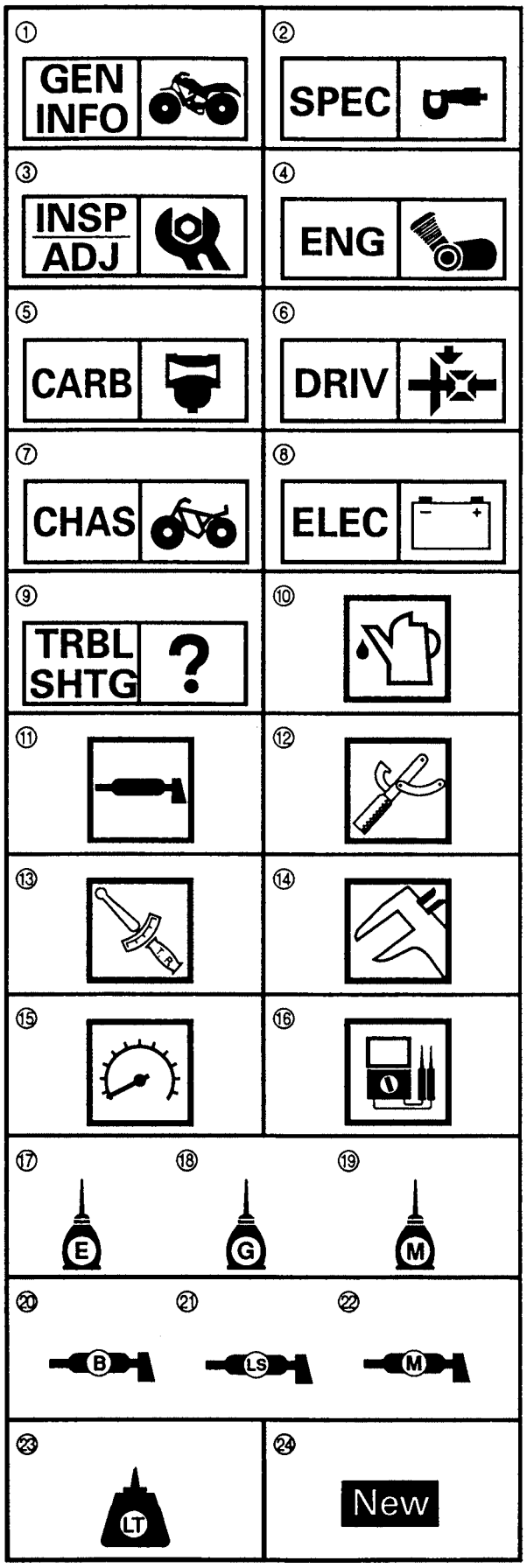

ILLUSTRATED SYMBOLS

Illustrated symbols ① to ⑨ are printed on the top right of each page and indicate the subject of each chapter.

① General information
② Specifications
③ Periodic inspections and adjustments
④ Engine
⑤ Carburetion
⑥ Drive train
⑦ Chassis
⑧ Electrical
⑨ Troubleshooting

Illustrated symbols ⑩ to ⑯ are used to identify the specifications appearing in the text.

⑩ Filling fluid
⑪ Lubricant
⑫ Special tool
⑬ Torque
⑭ Wear limit, clearance
⑮ Engine speed
⑯ Ω, V, A

Illustrated symbols ⑰ to ㉒ in the exploded diagrams indicate the types of lubricants and lubrication points.

⑰ Apply engine oil
⑱ Apply gear oil
⑲ Apply molybdenum disulfide oil
⑳ Apply wheel bearing grease
㉑ Apply lightweight lithium-soap base grease
㉒ Apply molybdenum disulfide grease

Illustrated symbols ㉓ to ㉔ in the exploded diagrams indicate where to apply a locking agent ㉓ and when to install a new part ㉔.

㉓ Apply the locking agent (LOCTITE®)
㉔ Replace

CONTENTS

SPECIFICATIONS

GENERAL SPECIFICATIONS

Model	YFM350XKC
Model code:	3GDM

MAINTENANCE SPECIFICATIONS

ENGINE

Model		YFM350XKC
Carburetor:		
I. D. mark		3GD 10
Main jet	(M.J)	#145
Main air jet	(M.A.J)	0.6
Jet needle	(J.N)	5J31
Needle jet	(N.J)	O-6M
Pilot air jet	(P.A.J.1)	1.0
Pilot air jet	(P.A.J.2)	0.7
Pilot outlet	(P.O)	0.75
Pilot jet	(P.J)	#42.5
Bypass 1	(B.P.1)	0.8
Bypass 2	(B.P.2)	0.8
Bypass 3	(B.P.3)	0.8
Pilot screw	(P.S)	2
Valve seat size	(V.S)	2.5
Starter jet	(G.S.1)	#62.5
Throttle valve size	(Th.V)	#125
Float height	(F.H)	11.4 ~ 13.4 mm (0.45 ~ 0.53 in)
Fuel level	(F.L)	2 ~ 3 mm (0.08 ~ 0.12 in)
Engine idle speed		1,450 ~ 1,550 r/min
Intake vacuum		30.7 kPa (0.307 kg/cm^2, 4.4 psi)

PERIODIC INSPECTIONS AND ADJUSTMENTS

INTRODUCTION

This chapter includes all information necessary to perform recommended inspections and adjustments. These preventive maintenance procedures, if followed, will ensure more reliable machine operation and a longer service life. In addition, the need for costly overhaul work will be greatly reduced. This information applies to machines already in service as well as new machines that are being prepared for sale. All service technicians should be familiar with this entire chapter.

PERIODIC MAINTENANCE/LUBRICATION

ITEM	ROUTINE	INITIAL			EVERY	
		1 month	3 months	6 months	6 months	1 year
Valves*	• Check valve clearance. • Adjust if necessary.	○		○	○	○
Spark plug	• Check condition. • Adjust gap and clean. • Replace if necessary.	○	○	○	○	○
Air filter	• Clean. • Replace if necessary.	Every 20~40 hours (More often in wet or dusty areas.)				
Carburetor*	• Check and adjust idle speed/starter operation. • Adjust if necessary.		○	○	○	○
Crankcase breather system*	• Check breather hose for cracks or damage. • Replace if necessary.			○	○	○
Exhaust system*	• Check for leakage. • Retighten if necessary. • Replace gasket if necessary.			○	○	○
Fuel line*	• Check fuel hose for cracks or damage. • Replace if necessary.			○	○	○
Engine oil	• Replace (Warm engine before draining.)	○		○	○	○
Engine oil filter	• Clean. • Replace if necessary.			○	○	○
Engine oil strainer	• Clean.	○		○		○
Drive chain	• Check and adjust slack/alignment/clean/lube.	○	○	○	○	○
Brake*	• Check operation/fluid leakage/See NOTE. • Correct if necessary.	○	○	○	○	○
Clutch*	• Check operation. • Adjust if necessary.	○		○	○	○
Wheels*	• Check balance/damage/runout. • Replace if necessary.	○		○	○	○
Wheel bearings*	• Check bearing assembly for looseness/damage. • Replace if damaged.	○		○	○	○
Steering system*	• Check operation. • Repair if damaged. • Check toe-in. • Adjust if necessary.	○	○	○	○	○
Upper and lower arm pivot and steering shaft*	• Lubricate every 6 months.**			○	○	○
Rear arm pivot*	• Lubricate every 6 months.**			○	○	○

ITEM	ROUTINE	INITIAL			EVERY	
		1 month	3 months	6 months	6 months	1 year
Fittings and Fasteners*	• Check all chassis fittings and fasteners. • Correct if necessary.	○	○	○	○	○
Battery*	• Check specific gravity. • Check breather pipe for proper operation. • Correct if necessary.	○	○	○	○	○

* : It is recommended that these items be serviced by a Yamaha dealer.
** : Lithium soap base grease.

NOTE:

Brake fluid replacement:

1. When disassembling the master cylinder or caliper cylinder, replace the brake fluid. Normally check the brake fluid level and add fluid as required.
2. On the inner parts of the master cylinder and caliper cylinder, replace the oil seals every two years.
3. Replace the brake hoses every four years, or if cracked or damaged.

⚠ WARNING

Indicates a potential harzard that could result in serious injuly or death.

YAMAHA

YFM350XJ

SUPPLEMENTARY SERVICE MANUAL

LIT-11616-10-28

FOREWORD

This Supplementary Service Manual has been prepared to introduce new service and data for the YFM350XJ. For complete service information procedures, it is necessary to use this Supplementary Service Manual together with the following manual.

YFM350XA SERVICE MANUAL (LIT-11616-07-50)
YFM350XE SUPPLEMENTARY SERVICE MANUAL (LIT-11616-08-60)

YFM350XJ
SUPPLEMENTARY
SERVICE MANUAL

First Edition, July 1996

Printed in U.S.A.
LIT-11616-10-28

NOTICE

This manual was produced by the Yamaha Motor Company primarily for use by Yamaha dealers and their qualified mechanics. It is not possible to include all the knowledge of a mechanic in one manual, so it is assumed that anyone who uses this book to perform maintenance and repairs on Yamaha machines has a basic understanding of the mechanical ideas and the procedures of machine repair. Repairs attempted by anyone without this knowledge are likely to render the machine unsafe and unfit for use.

Yamaha Motor Company, Ltd. is continually striving to improve all its models. Modifications and significant changes in specifications or procedures will be forwarded to all authorized Yamaha dealers and will appear in future editions of this manual where applicable.

NOTE:
Designs and specifications are subject to change without notice.

IMPORTANT INFORMATION

Particularly important information is distinguished in this manual by the following notations.

⚠	The Safety Alert Symbol means ATTENTION! BECOME ALERT! YOUR SAFETY IS INVOLVED!
⚠ WARNING	Failure to follow WARNING instructions could result in severe injury or death to the machine operator, a bystander or a person inspecting or repairing the machine.
CAUTION:	A CAUTION indicates special precautions that must be taken to avoid damage to the machine.
NOTE:	A NOTE provides key information to make procedures easier or clearer.

HOW TO USE THIS MANUAL

MANUAL ORGANIZATION

This manual is intended as a handy, easy-to-read reference book for the mechanic. It is divided into chapters, sections and sub-sections. Comprehensive explanations of all installation, removal, disassembly, assembly, repair and inspection procedures are laid out with the individual steps in sequential order.

PAGE FEATURES

The circled numbers below refer to the features indicated in the sample page.

① : An abbreviation and symbol in the upper right corner of each page indicates the current chapter.

② : The current section title is shown at the top of each page.†

③ : Sub-section titles appear in smaller print than the section title.†

④ : Lines of asterisks (*) mark the beginning and end of a particularly important procedure. The steps of such procedures are marked with bullets (•).

⑤ : Important information such as fluids, special tools and torques are framed and marked with a corresponding symbol.

⑥ : A circled number refers to an illustrated part.

⑦ : A circled lower case letter refers to an illustrated dimension or alignment mark.

⑧ : An upper case letter in a box refers to other illustrated details.

⑨ : An arrow mark after a given defect suggests the recommended course of action.

† : In Chapter 3, "Periodic Inspection and Adjustment", it is usually the current sub-section title that appears at the top of each page, instead of the current section title.

EXPLODED DIAGRAMS

To help identify parts and clarify procedure steps, there are exploded diagrams at the start of each disassembly section.

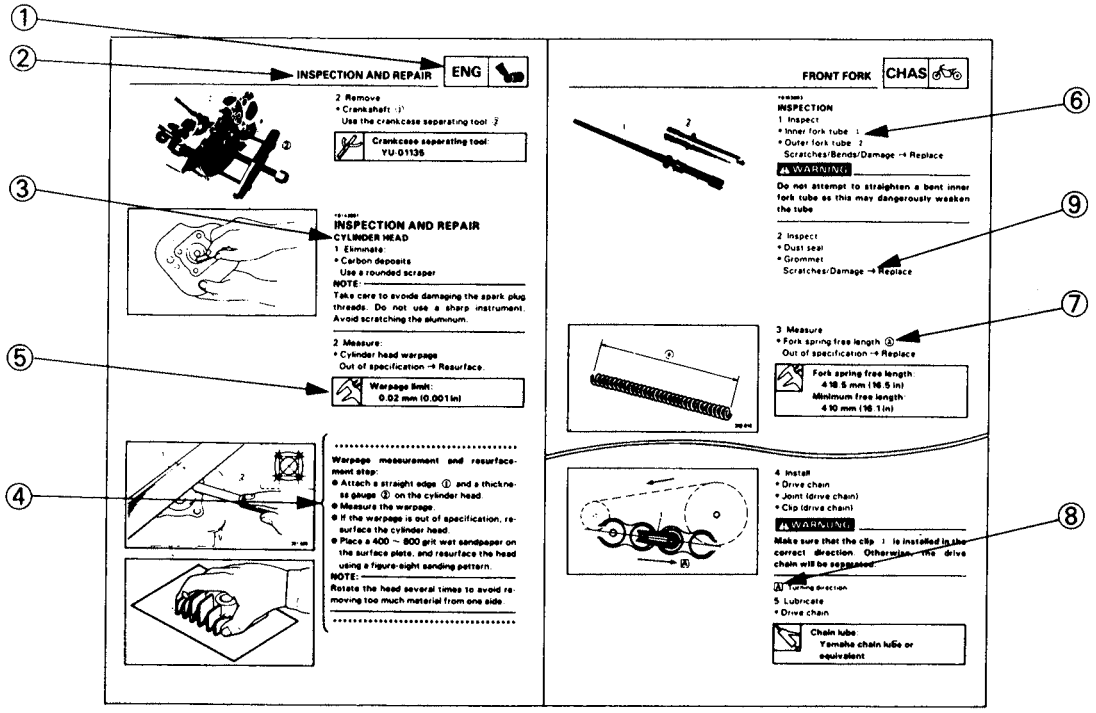

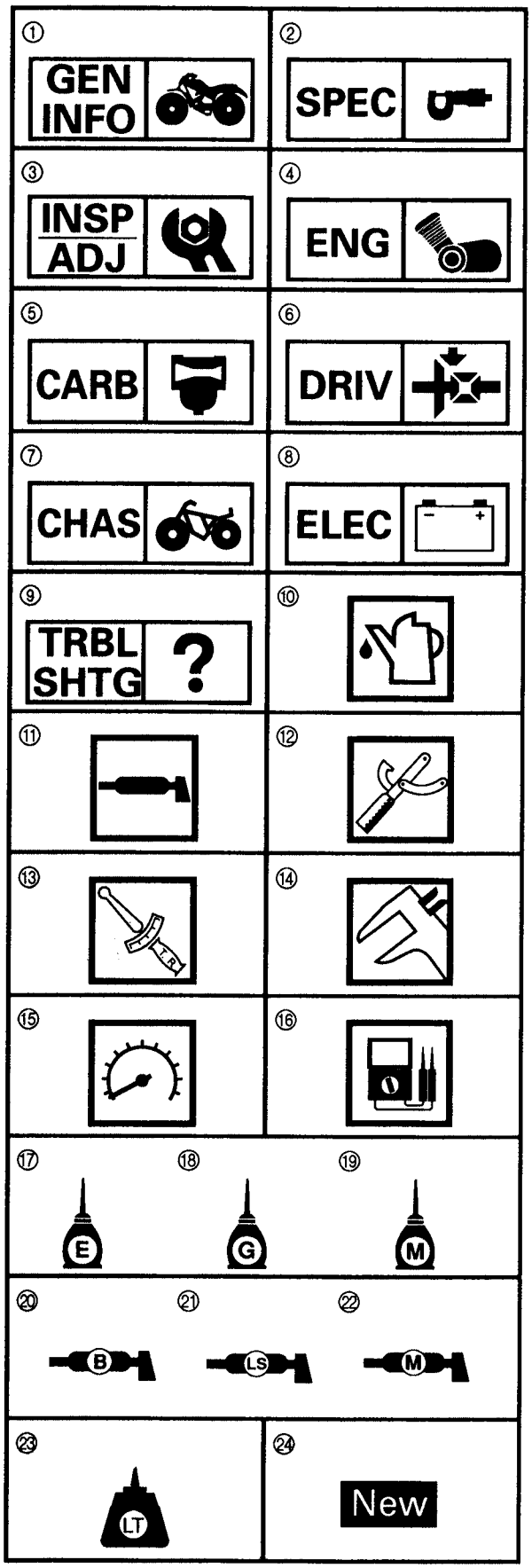

ILLUSTRATED SYMBOLS

Illustrated symbols ① to ⑨ are printed on the top right of each page and indicate the subject of each chapter.

① General information
② Specifications
③ Periodic inspections and adjustments
④ Engine
⑤ Carburetion
⑥ Drive train
⑦ Chassis
⑧ Electrical
⑨ Troubleshooting

Illustrated symbols ⑩ to ⑯ are used to identify the specifications appearing in the text.

⑩ Filling fluid
⑪ Lubricant
⑫ Special tool
⑬ Torque
⑭ Wear limit, clearance
⑮ Engine speed
⑯ Ω, V, A

Illustrated symbols ⑰ to ㉒ in the exploded diagrams indicate the types of lubricants and lubrication points.

⑰ Apply engine oil
⑱ Apply gear oil
⑲ Apply molybdenum disulfide oil
⑳ Apply wheel bearing grease
㉑ Apply lightweight lithium-soap base grease
㉒ Apply molybdenum disulfide grease

Illustrated symbols ㉓ to ㉔ in the exploded diagrams indicate where to apply a locking agent ㉓ and when to install a new part ㉔.

㉓ Apply the locking agent (LOCTITE®)
㉔ Replace

CONTENTS

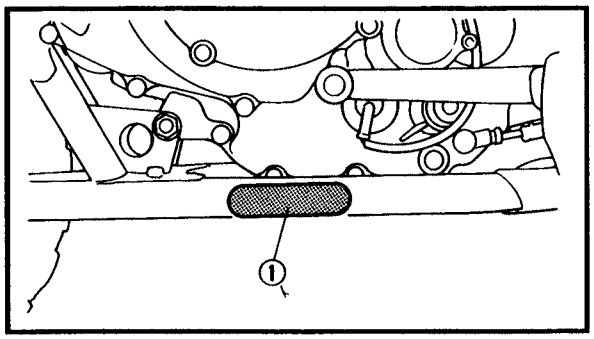

GENERAL INFORMATION

MACHINE IDENTIFICATION

VEHICLE IDENTIFICATION NUMBER

The vehicle identification number ① is stamped into the left side of the frame.

NOTE:
The vehicle identification number is used to identify the machine and may be used to register the machine with a licensing authority.

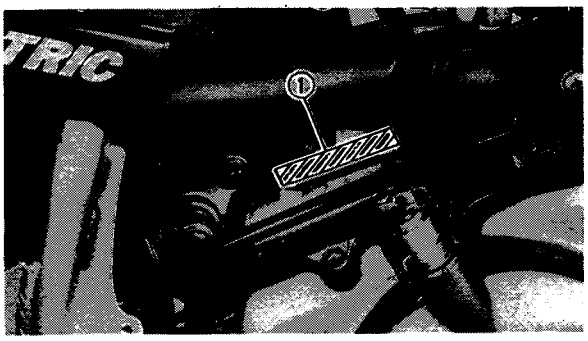

ENGINE SERIAL NUMBER

The engine serial number ① is stamped into the right side of the frame.

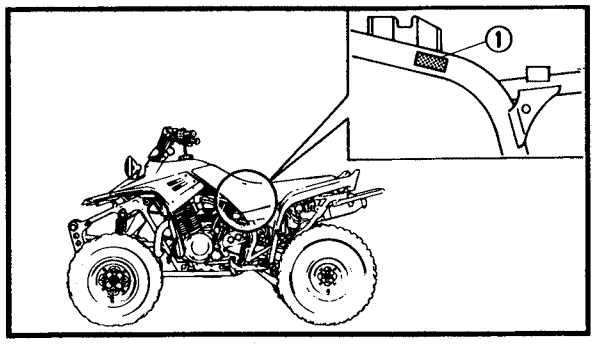

MODEL LABEL

The model label ① is affixed to the frame. This information will be needed to order spare parts.

SPECIFICATIONS

GENERAL SPECIFICATIONS

Model		YFM350X
Model code:		3GDK
Engine:		
Engine type		Air-cooled 4-stroke, SOHC
Cylinder arrangement		Forward-inclined single cylinder
Displacement		348 cm^3
Bore × stroke		83.0 × 64.5 mm (3.27 × 2.54 in)
Compression ratio		9.2:1
Compression pressure (STD)		850 kPa (8.5 kg/cm^2, 121 psi) at 350 r/min
Starting system		Electric and recoil starter
Oil type or grade:		
Engine oil		Yamalube 4 or SAE10W30 type SE motor oil, or SAE20W40 type SE motor oil
Tire:		
Type		Tubeless
Size	front	AT22 × 7-10
	rear	AT22 × 10-9
Manufacturer	front	DUNLOP
	rear	DUNLOP
Type	front	KT701
	rear	KT775B
Tire pressure (cold tire):		
Off-road riding	front	22 ~ 28 kPa (0.22 ~ 0.28 kg/cm^2, 3.13 ~ 3.98 psi)
	rear	22 ~ 28 kPa (0.22 ~ 0.28 kg/cm^2, 3.13 ~ 3.98 psi)
Brake:		
Front brake	type	Disc brake
	operation	Right hand operation
Rear brake	type	Disc brake
	operation	Left hand and right foot operation
Bulb wattage × quantity:		
Headlight		12 V 30 W / 30 W × 2
Taillight		12 V 3.8 W × 1
NEUTRAL		12 V 3.4 W × 1
REVERSE		12 V 3.4 W × 1

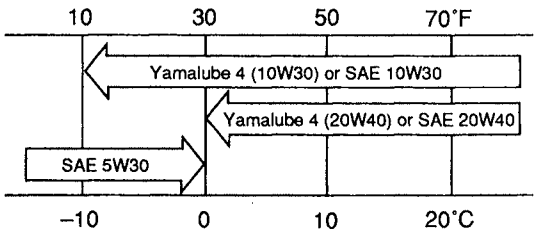

MAINTENANCE SPECIFICATIONS

ENGINE

Model		YFM350X
Crankshaft: 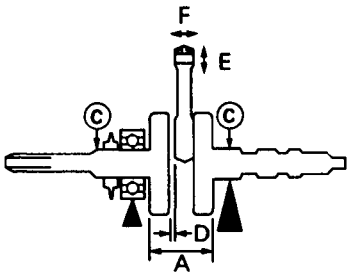		
Crank width "A"		58.95 ~ 59.00 mm (2.321 ~ 2.323 in)
Runout limit "C"		0.06 mm (0.0024 in)
Big end side clearance "D"		0.35 ~ 0.85 mm (0.014 ~ 0.033 in)
Big end radial clearance "E"		0.010 ~ 0.025 mm (0.0004 ~ 0.0010 in)
Small end free play "F"		0.8 ~ 1.0 mm (0.03 ~ 0.04 in)
<Limit>		<2 mm (0.08 in)>
Carburetor:		
I. D. mark		3GD 00
Main jet	(M.J)	#145
Main air jet	(M.A.J)	0.6
Jet needle	(J.N)	5J18-3
Needle jet	(N.J)	O-6
Pilot air jet	(P.A.J.1)	1.0
Pilot air jet	(P.A.J.2)	0.7
Pilot outlet	(P.O)	0.75
Pilot jet	(P.J)	#42.5
Bypass 1	(B.P.1)	0.8
Bypass 2	(B.P.2)	0.8
Bypass 3	(B.P.3)	0.8
Pilot screw	(P.S)	2
Valve seat size	(V.S)	2.5
Starter jet	(G.S.1)	#62.5
Throttle valve size	(Th.V)	#125
Float height	(F.H)	11.4 ~ 13.4 mm (0.45 ~ 0.53 in)
Fuel level	(F.L)	2 ~ 3 mm (0.08 ~ 0.12 in)
Engine idle speed		1,450 ~ 1,550 r/min
Intake vacuum		34 kPa (0.34 kg/cm^2, 4.8 psi)

ELECTRICAL

Model	YFM350X
C.D.I.:	
Magneto model / manufacturer	F3T43573/MITSUBISHI
Pickup coil resistance / color	459 ~ 561 Ω at 20°C (68°F) / Red – White
Source coil resistance / color	270 ~ 330 Ω at 20°C (68°F) / Brown – Green
C.D.I. unit model / manufacturer	F8T34271/MITSUBISHI
Voltage regulator:	
Type	Semi conductor-short circuit type
Model / manufacturer	SH640A-12/SHINDENGEN
No lead regulated voltage	14.2 ~ 15.2 V
Rectifier:	
Model / manufacturer	SH640A-12/SHINDENGEN
Capacity	20 A
Withstand voltage	240 V

CABLE ROUTING

① Clutch switch
② Rear brake cable
③ Clutch cable
④ Front brake hose
⑤ Throttle cable
⑥ Main switch lead
⑦ Brake hose

[A] Install the fuel tank breather hose into the hole of the handlebar cover.

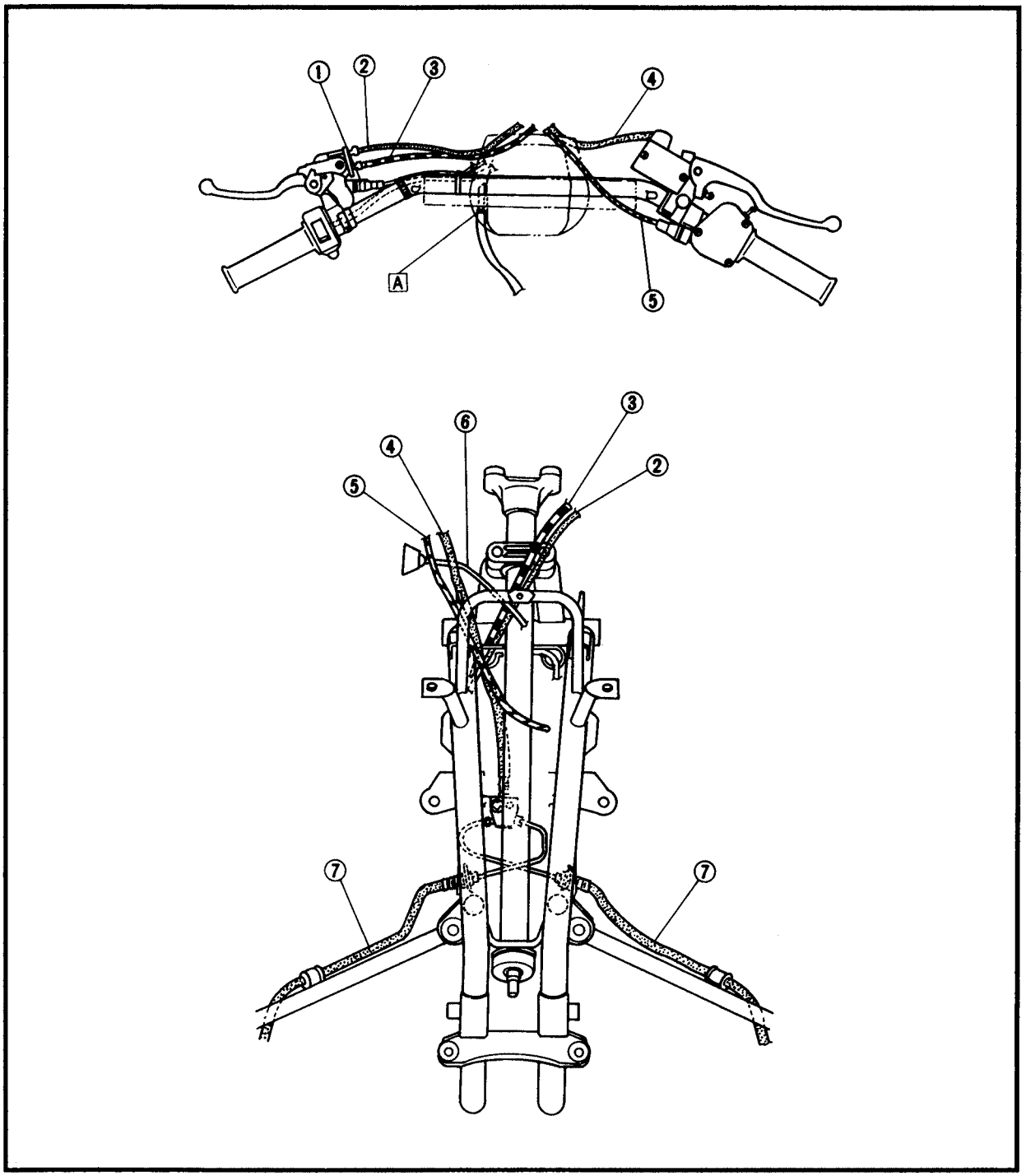

① Fuel tank breather hose
② Fuel hose
③ Crankcase breather hose
④ Starter relay
⑤ Starting circuit cut-off relay
⑥ Neutral relay
⑦ CDI unit
⑧ Main fuse
⑨ Battery breather hose
⑩ CDI magneto lead
⑪ Neutral switch lead

[A] Pass the air vent hose through hole on the fuel tank rubber damper.
[B] Pass the battery breather hose through the inside of frame bracket.
[C] Pass the battery breather hose through the guide.

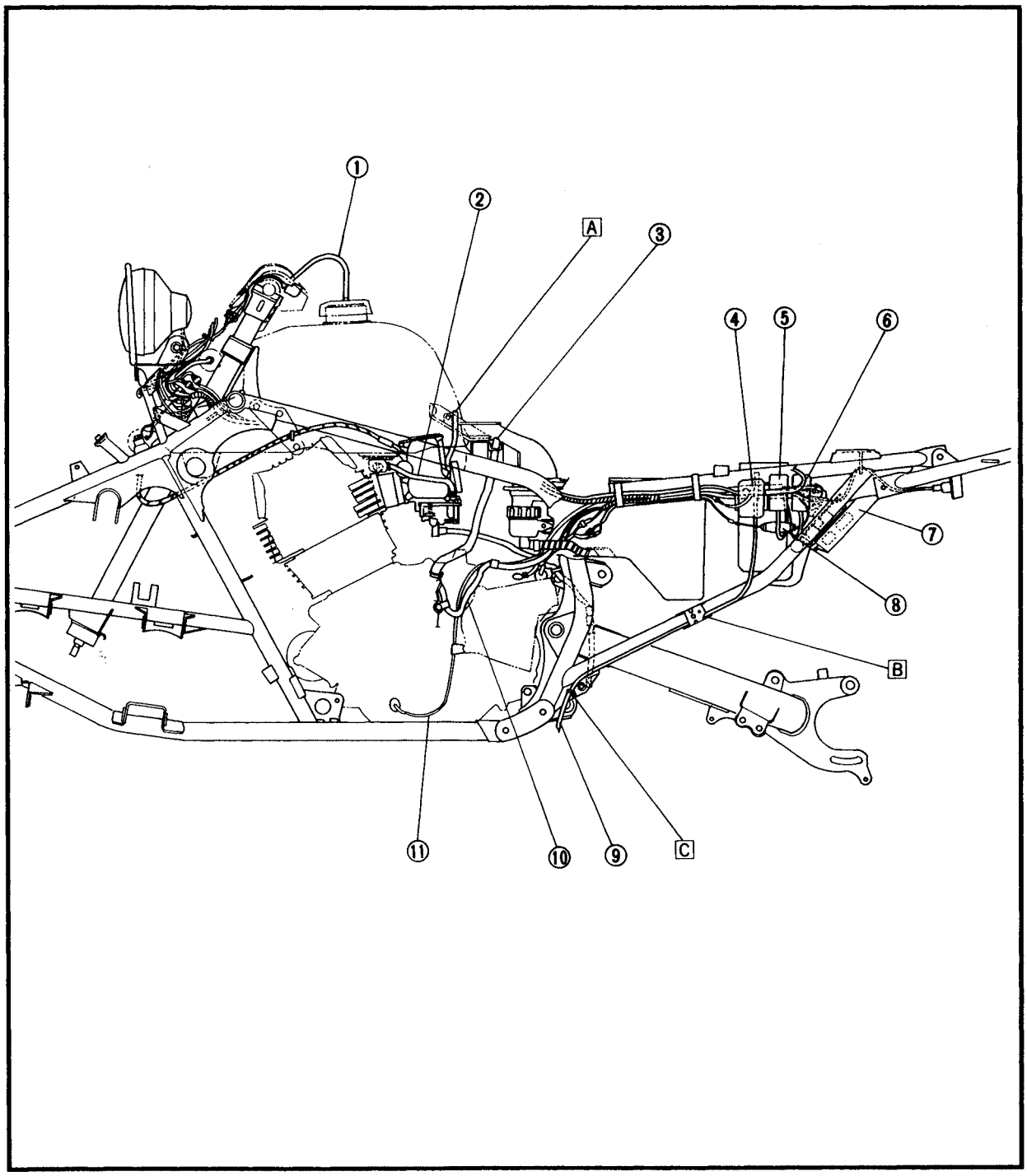

① Starter motor lead
② Starter motor
③ Lever switch
④ Rear brake cable
⑤ Rear brake hose
⑥ Rectifier/regulator
⑦ CDI unit
⑧ CDI unit lead

[A] Pass the wire harness and starter motor lead through the holder.
[B] Fasten the wire harness, starter motor lead and handlebar switch lead with the band.
[C] Route behind the starter motor lead.
[D] The leads should not protrude past the frame.

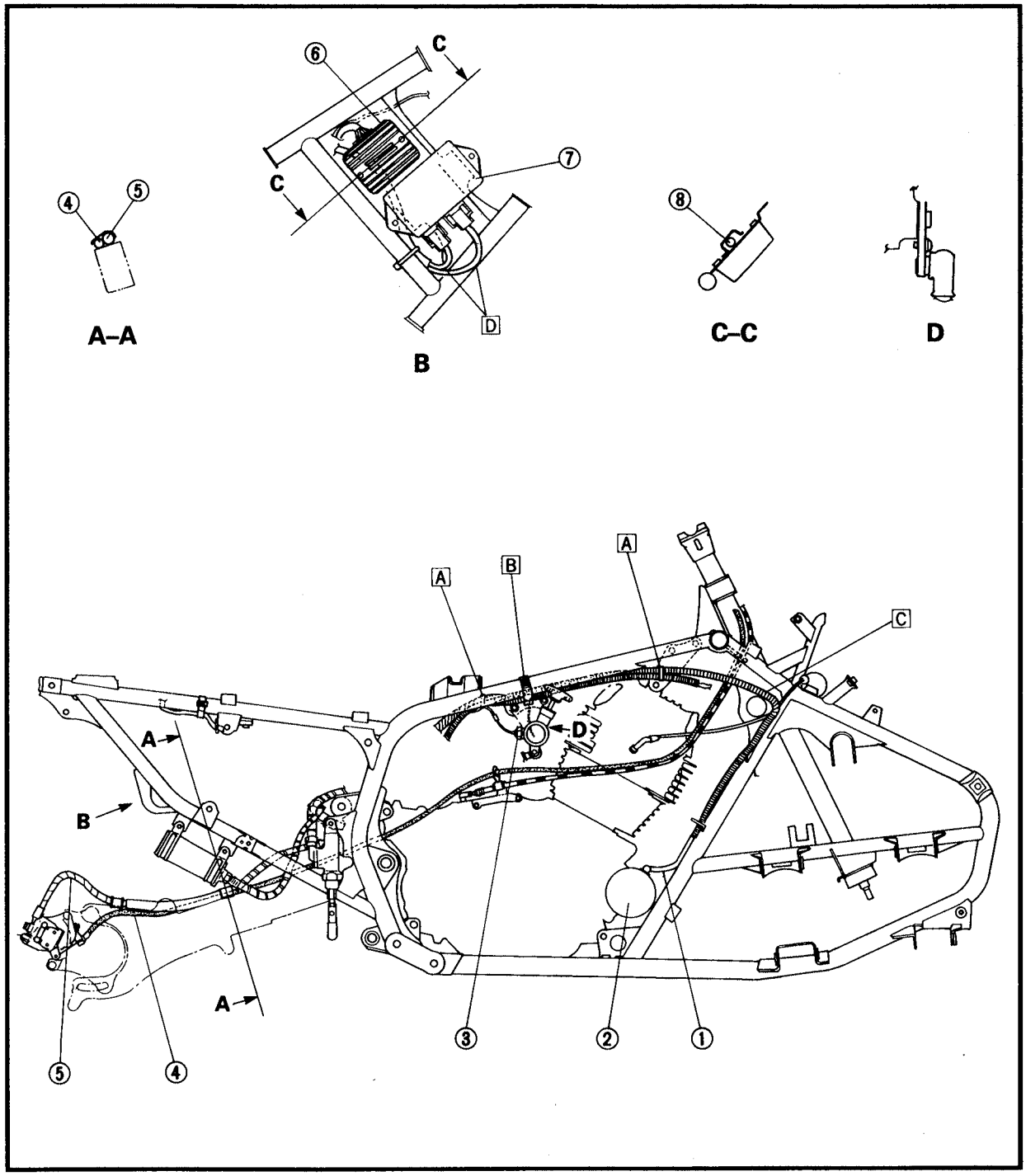

① Ignition coil
② Headlight lead
③ Neutral indicator light

[A] Align the marking tape on the wire harness with the clamp.
[B] Pass the battery leads through the hole on the rear fender.

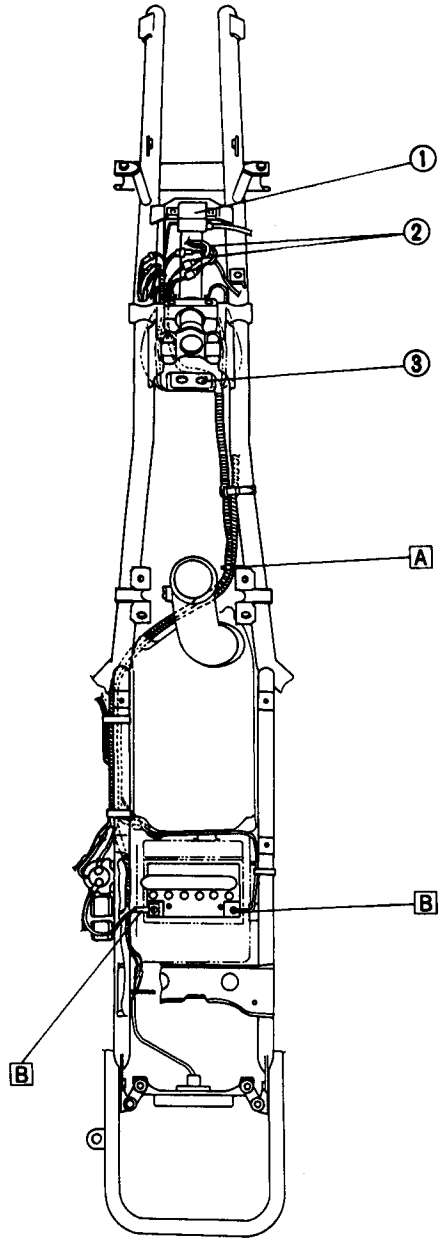

PERIODIC INSPECTIONS AND ADJUSTMENTS

INTRODUCTION

This chapter includes all information necessary to perform recommended inspections and adjustments. These preventive maintenance procedures, if followed, will ensure more reliable machine operation and a longer service life. In addition, the need for costly overhaul work will be greatly reduced. This information applies to machines already in service as well as new machines that are being prepared for sale. All service technicians should be familiar with this entire chapter.

PERIODIC MAINTENANCE/LUBRICATION

ITEM	ROUTINE	INITIAL			EVERY	
		1 month	3 months	6 months	6 months	1 year
Valves*	• Check valve clearance. • Adjust if necessary.	○		○	○	○
Spark plug	• Check condition. • Clean or replace if necessary.	○	○	○	○	○
Air filter	• Clean. • Replace if necessary.	Every 20~40 hours (More often in wet or dusty areas.)				
Carburetor*	• Check idle speed/starter operation. • Adjust if necessary.		○	○	○	○
Fuel line*	• Check fuel hose for cracks or damage. • Replace if necessary.			○	○	○
Engine oil	• Replace (Warm engine before draining).	○		○	○	○
Engine oil filter	• Clean. • Replace if necessary.			○	○	○
Engine oil strainer	• Clean.	○		○		○
Drive chain	• Check and adjust slack/alignment/clean/lube.	○	○	○	○	○
Brake*	• Check operation/fluid leakage/See NOTE. • Correct if necessary.	○	○	○	○	○
Clutch*	• Check operation. • Adjust if necessary.	○		○	○	○
Wheels*	• Check balance/damage/runout. • Replace if necessary.	○		○	○	○
Wheel bearings*	• Check bearing assembly for looseness/damage. • Replace if damaged.	○		○	○	○
Steering system*	• Check operation. • Repair if damaged. • Check toe-in. • Adjust if necessary.	○	○	○	○	○
Upper and lower arm pivot and steering shaft*	• Lubricate every 6 months.***			○	○	○
Rear arm pivot*	• Lubricate every 6 months.***			○	○	○
Fittings/Fasteners*	• Check all chassis fittings and fasteners. • Correct if necessary.	○	○	○	○	○
Battery*	• Check specific gravity. • Check breather pipe for proper operation. • Correct if necessary.	○	○	○	○	○

* : It is recommended that these items be serviced by a Yamaha dealer.
***: Lithium soap base grease.

NOTE:

Brake fluid replacement:

1. When disassembling the master cylinder or caliper cylinder, replace the brake fluid. Normally check the brake fluid level and add fluid as required.
2. On the inner parts of the master cylinder and caliper cylinder, replace the oil seals every two years.
3. Replace the brake hoses every four years, or if cracked or damaged.

ELECTRICAL

IGNITION SYSTEM

CIRCUIT DIAGRAM

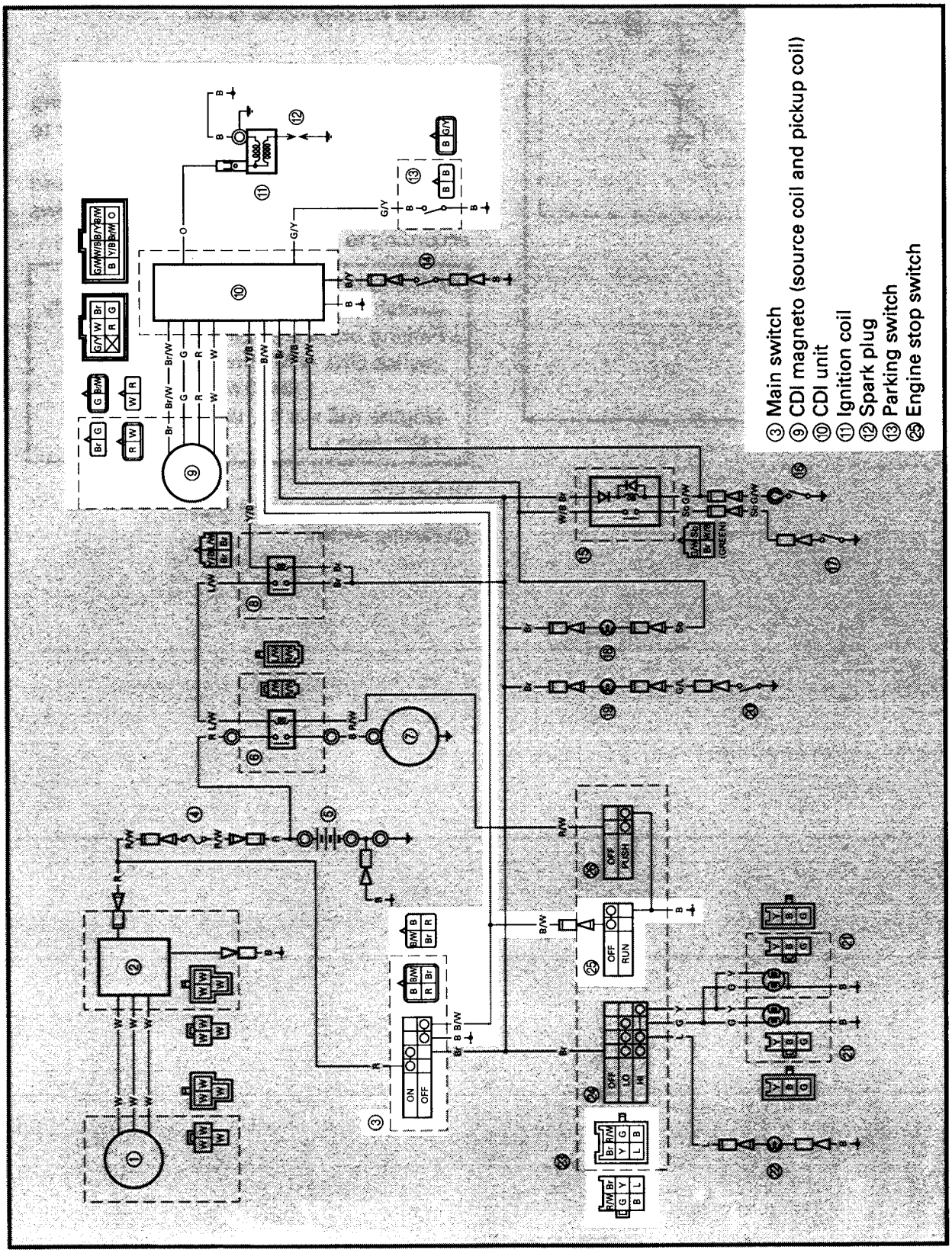

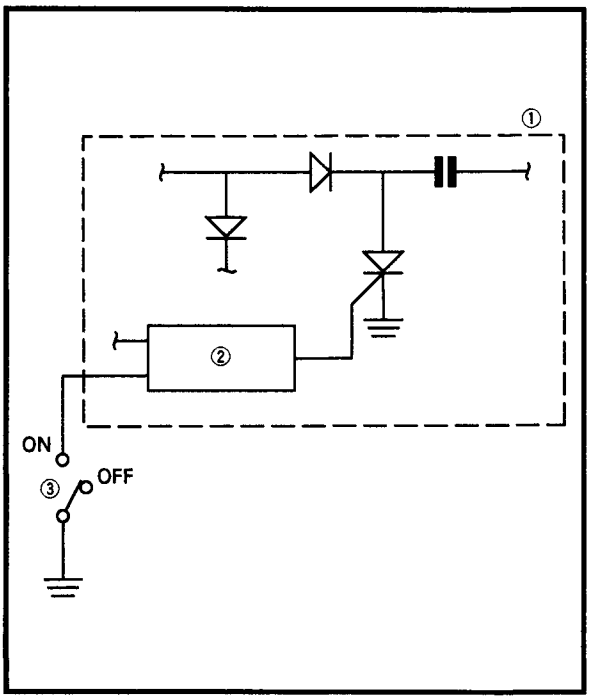

ENGINE REVOLUTION LIMITER SYSTEM

When the parking brake is applied, the engine revolution limiter system becomes activated, thereby letting the rider know that the parking brake is on.

System

A switch is newly provided on the parking brake lever on the left of the handlebar to sense the parking brake condition.
The ignition unit which receives a sensed signal becomes activated as follows according to the parking brake condition.

- Parking brake is released.
  (switch OFF) → Ignition occurs normally.
- Parking brake is applied.
  (switch ON) → Misfire occurs at 2300 r/min.
  (engine will not rev up beyond 2300 r/min.)

① CDI unit
② Ignition timing control circuit
③ Parking switch

YFM350X WIRING DIAGRAM

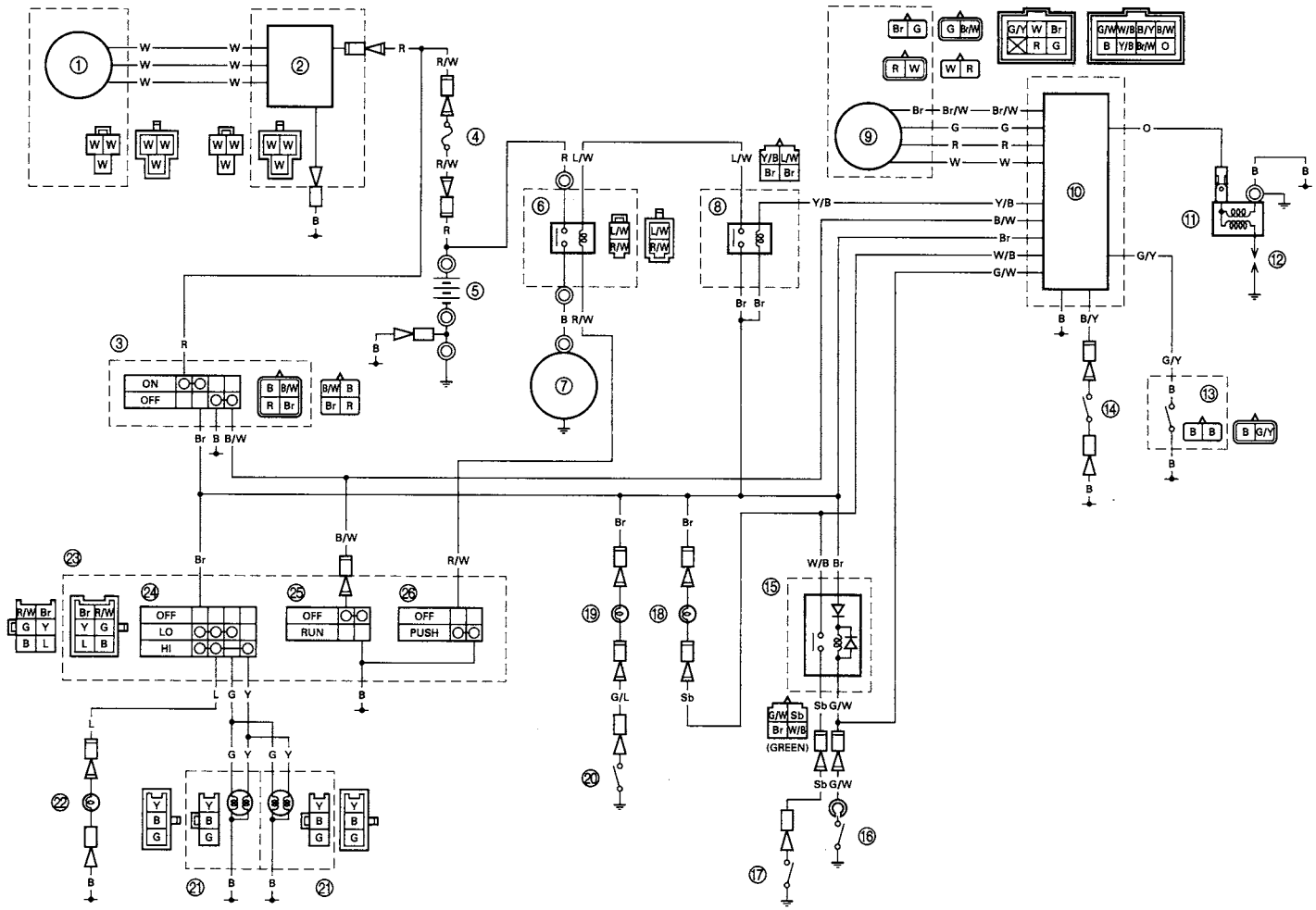

① CDI magneto (stator coil)
② Rectifier/Regulator
③ Main switch
④ Fuse (main)
⑤ Battery
⑥ Starter relay
⑦ Starter motor
⑧ Starting circuit cut-off relay
⑨ CDI magneto (source coil and pickup coil)
⑩ CDI unit
⑪ Ignition coil
⑫ Spark plug
⑬ Parking switch
⑭ Clutch switch
⑮ Neutral relay
⑯ Lever switch
⑰ Neutral switch
⑱ Neutral indicator light
⑲ Reverse indicator light
⑳ Reverse switch
㉑ Headlight
㉒ Taillight
㉓ Handlebar switch (left)
㉔ Lights switch
㉕ Engine stop switch
㉖ Start switch

COLOR CODE

B..... Black	W..... White	G/Y ..... Green/Yellow
Br ..... Brown	Y..... Yellow	L/W..... Blue/White
G ..... Green	B/W ..... Black/White	R/W ..... Red/White
L ..... Blue	B/Y ..... Black/Yellow	W/B ..... White/Black
O ..... Orange	Br/W..... Brown/White	Y/B ..... Yellow/Black
R..... Red	G/L ..... Green/Blue	
Sb..... Sky blue	G/W..... Green/White	

YAMAHA

YAMAHA MOTOR CO., LTD.
2500 SHINGAI IWATA SHIZUOKA JAPAN

PRINTED IN U.S.A.

YAMAHA

YFM350XE

SUPPLEMENTARY SERVICE MANUAL

LIT-11616-08-60

FOREWORD

This Supplementary Service Manual has been prepared to introduce new service and data for the YFM350XE. For complete service information procedures, it is necessary to use this Supplementary Service Manual together with the following manual.

YFM350XA Service Manual (LIT-11616-07-50)

YFM350XE
SUPPLEMENTARY
SERVICE MANUAL

1st Edition, July 1992

Printed in U.S.A.
LIT-11616-08-60

NOTICE

This manual was written by the Yamaha Motor Company primarily for use by Yamaha dealers and their qualified mechanics. It is not possible to put an entire mechanic's education into one manual, so it is assumed that persons using this book to perform maintenance and repairs on Yamaha machines have a basic understanding of the mechanical concepts and procedures inherent in machine repair technology. Without such knowledge, attempted repairs or service to this model may render it unfit to use and/or unsafe.

Yamaha Motor Company, Ltd. is continually striving to improve all models manufactured by Yamaha. Modifications and significant changes in specifications or procedures will be forwarded to all Authorized Yamaha dealers and will, where applicable, appear in future editions of this manual.

PARTICULARLY IMPORTANT INFORMATION

This material is distinguished by the following notation.

⚠ The Safety Alert Symbol means ATTENTION! BECOME ALERT! YOUR SAFETY IS INVOLVED!

⚠ WARNING Failure to follow WARNING instructions could result in severe injury or death to the machine operator, a bystander, or a person inspecting or repairing the machine.

CAUTION: A CAUTION indicates special precautions that must be taken to avoid damage to the machine.

NOTE: A NOTE provides key information to make procedures easier or clearer.

HOW TO USE THIS MANUAL

CONSTRACTION OF THIS MANUAL

This manual consists of chapters for the main categories of subjects. (See "Illustrated symbols")

1st title ① :	This is a chapter with its symbol on the upper right of each page.
2nd title ② :	This title appears on the upper of each page on the left of the chapter symbol. (For the chapter "Periodic inspection and adjustment" the 3rd title appears.)
3rd title ③ :	This is a final title.

MANUAL FORMAT

All of the procedures in this manual are organized in a sequential, step-by-step format. The information has been compiled to provide the mechanic with an easy to read, handy reference that contains comprehensive explanations of all disassembly, repair, assembly, and inspections.
A set of particularly important procedure ④ is placed between a line of asterisks "*" with each procedure preceded by " ● ".

IMPORTANT FEATURES

- Data and a special tool are framed in a box preceded by a relevant symbol ⑤ .
- An encircled numeral ⑥ indicates a part name, and an encircled alphabetical letter data or an alignment mark ⑦ , the others being indicated by an alphabetical letter in a box ⑧ .
- A condition of a faulty component will precede an arrow symbol and the course of action required the symbol ⑨ .

EXPLODED DIAGRAM

Each chapter provides exploded diagrams before each disassembly section for ease in identifying correct disassembly and assembly procedures.

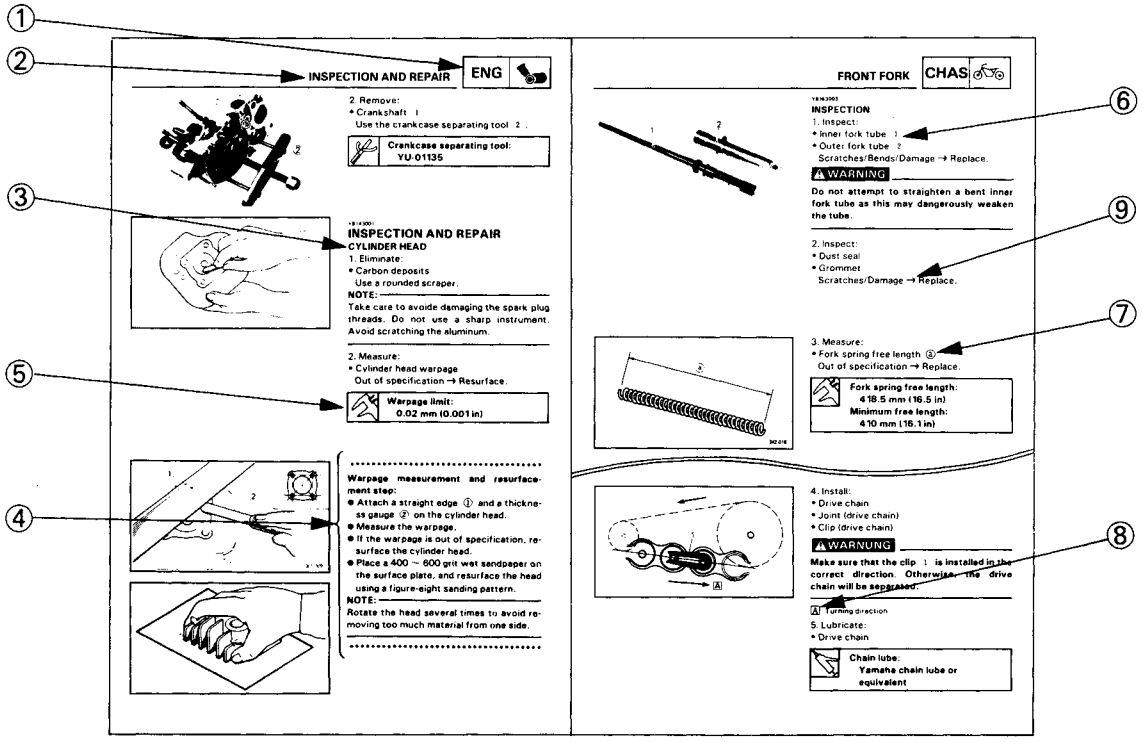

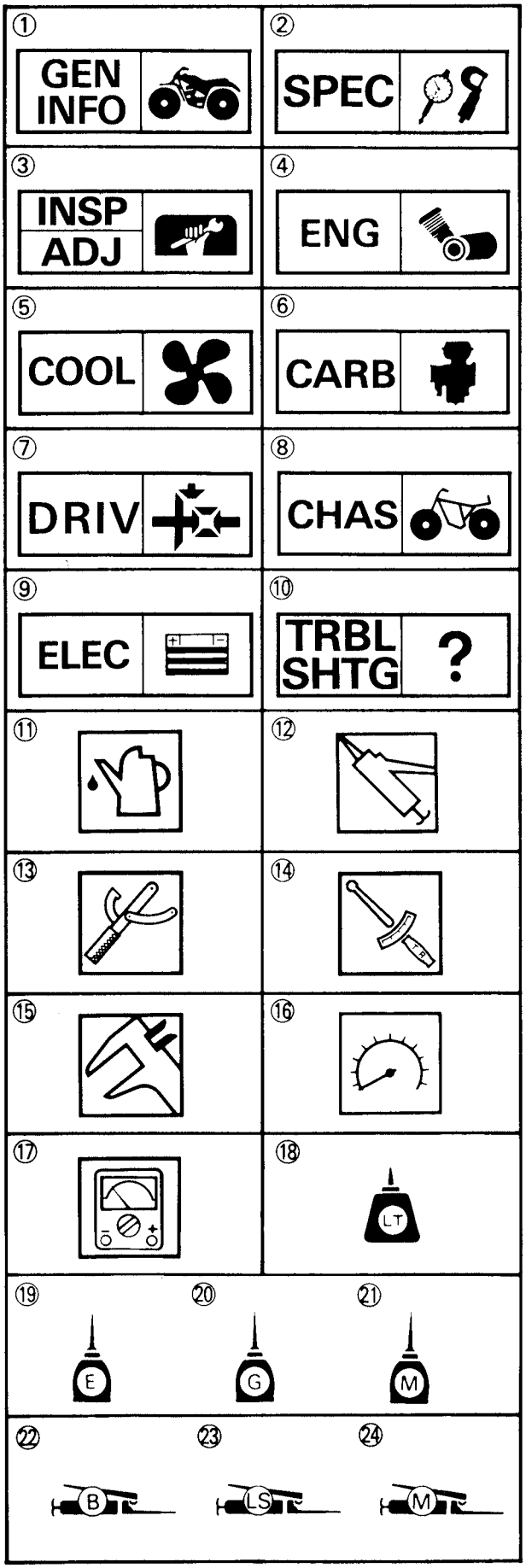

ILLUSTRATED SYMBOLS
(Refer to the illustration)

Illustrated symbols ① to ⑩ are designed as thumb tabs to indicate the chapter's number and content.

① General information
② Specifications
③ Periodic inspection and adjustment
④ Engine
⑤ Cooling system
⑥ Carburetion
⑦ Drive train
⑧ Chassis
⑨ Electrical
⑩ Troubleshooting

Illustrated symbols ⑪ to ⑰ are used to identify the specifications appearing in the text.

⑪ Filling fluid
⑫ Lubricant
⑬ Special tool
⑭ Tightening
⑮ Wear limit, clearance
⑯ Engine speed
⑰ Ω, V, A

Illustrated symbols ⑱ to ㉔ in the exploded diagram indicate grade of lubricant and location of lubrication point.

⑱ Appply locking agent (LOCTITE®)
⑲ Apply engine oil
⑳ Apply gear oil
㉑ Apply molybdenum disulfide oil
㉒ Apply wheel bearing grease
㉓ Apply lightweight lithium-soap base grease
㉔ Apply molybdenum disulfide grease

CONTENTS

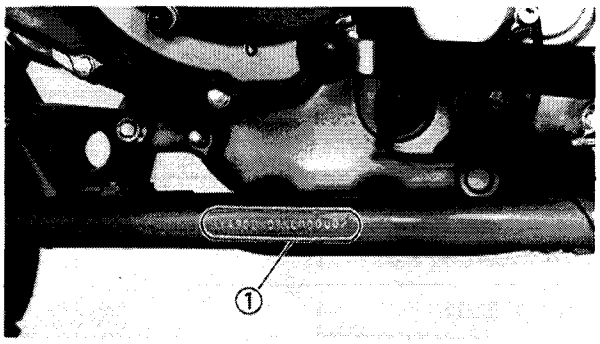

GENERAL INFORMATION

MACHINE IDENTIFICATION

VEHICLE IDENTIFICATION NUMBER

The vehicle identification number ① is stamped into the left side of the frame.

Starting serial number:
JY43GDA0*PA095101

NOTE:

The vehicle identification number is used to identify your machine and may be used to register your machine with the licensing authority in your state.

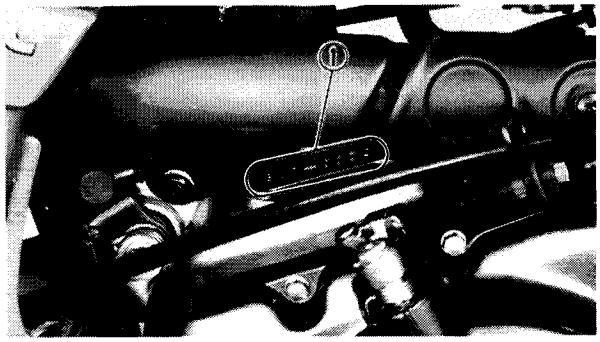

ENGINE SERIAL NUMBER

The engine serial number ① is stamped into the right side the engine.

Starting serial number:
3GD-095101

NOTE:

- The first three digits of these numbers are for model identifications; the remaining digits are the unit production number.
- Designs and specifications are subject to change without notice.

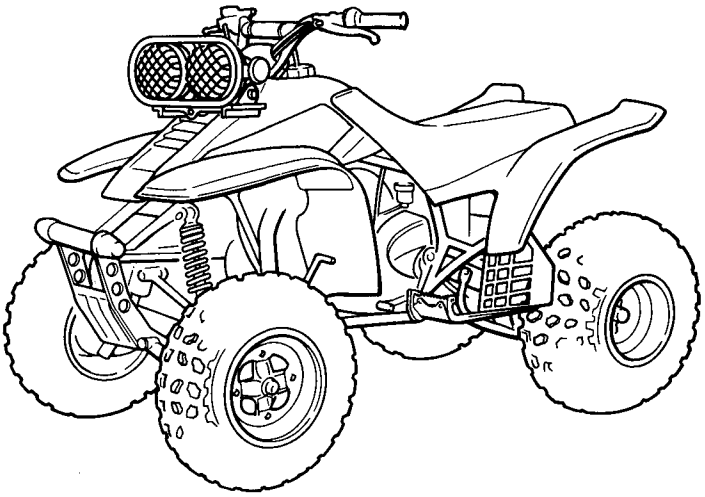

SPECIFICATIONS

GENERAL SPECIFICATIONS

Model	YFM350XE
Model code number	3GDB
Vehicle identification number	JY43GDA0*PA095101
Engine starting number	3GD-095101
Fuel:	
Type	Regular gasoline
Tank capacity	9.0 L (2.0 Imp gal, 2.4 US gal)
Reserve amount	1.9 L (0.4 Imp gal, 0.5 US gal)
Bulb wattage/Quantity:	
Headlight	30W/30W×2
Taillight	7.5W×1
Neutral light	3.4W×1
Reverse light	3.4W×1

MAINTENANCE SPECIFICATIONS

CHASSIS

Model	YFM350XE
Wheel:	
Front wheel type	Panel wheel
Rear wheel type	Panel wheel
Front rim size/Material	10×6/Aluminum
Rear rim size/Material	9×8.5/Aluminum
Rim runout limit:	
Vertical	<2.0 mm (0.08 in)>
Lateral	<2.0 mm (0.08 in)>

CABLE ROUTING

① Brake hose
② Clutch cable
③ Brake cable
④ Throttle cable
⑤ Main switch

[A] Route outside the clamp and between the wireharness and the frame pipe.
[B] Route inside the throttle cable and brake hose.

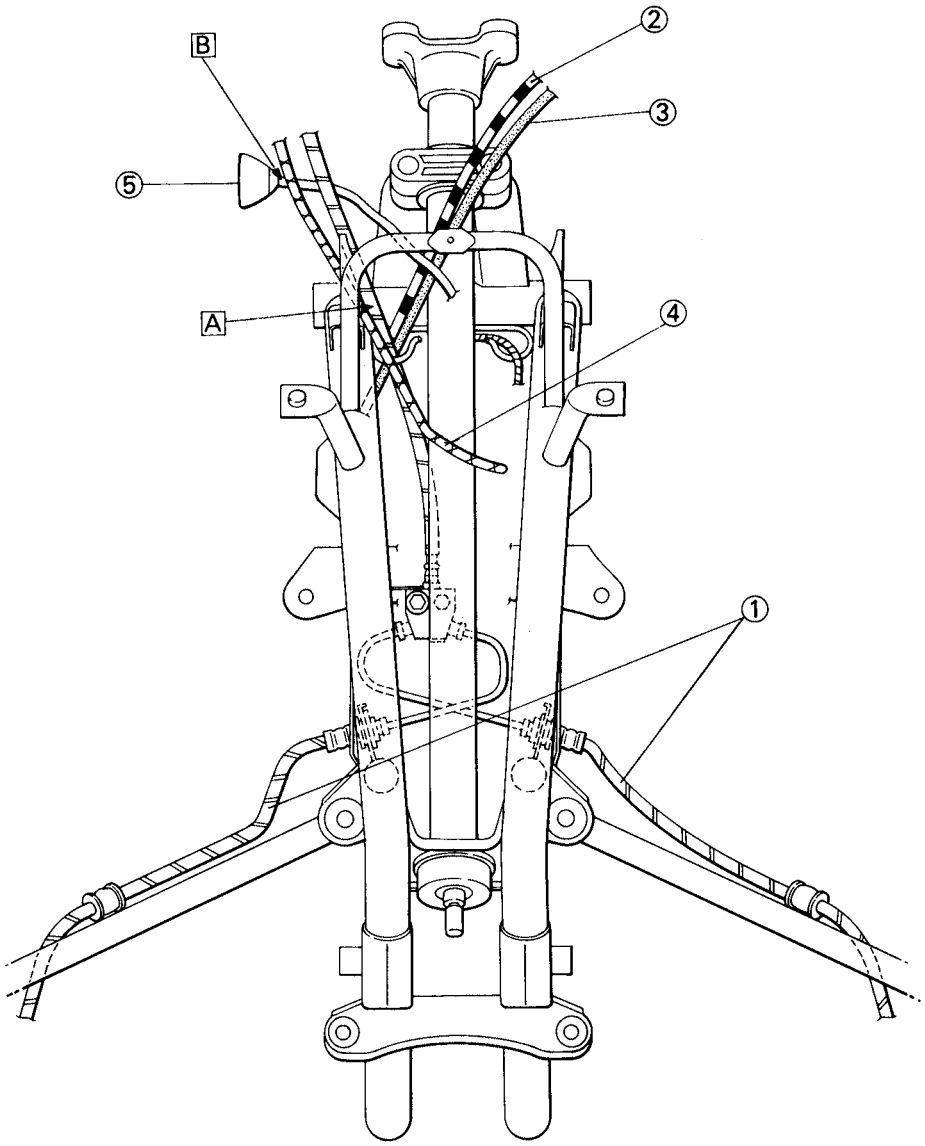

① Ground bolt
② Headlight
③ Main switch lead
④ Clutch switch lead
⑤ Handlebar switch lead
⑥ Band
⑦ Main switch
⑧ Pilot lamp
⑨ Fuel tank breather hose
⑩ Fuel hose
⑪ Air vent hose
⑫ Crankcase breather hose
⑬ Ground lead
⑭ Carburetor overflow hose
⑮ Starter relay
⑯ Starting circuit cut-off relay
⑰ Neutral switch relay
⑱ Fuse holder
⑲ Taillight lead guide
⑳ Taillight unit
㉑ Battery breather hose
㉒ Rubber boot
㉓ Reservoir hose
㉔ Clamp
㉕ Neutral switch lead
㉖ CDI magneto lead
[A] Pass the headlight leads through the hole on the headlight stay.
[B] Clamp the leads securely and the band must be tight.
[C] Install the main switch on the right side of the front panel.
[D] Pass the air vent hose through the hole on the fuel tank rubber damper.
[E] Pass the carburetor overflow hose between the rear arm head pipe and the rear shock absorber.
[F] Pass the carburetor overflow hose through the holder on the frame.
[G] Pass the brake hose along the curve of the cleaner case.
[H] Clamp the cable lead.
[I] Clamp the CDI magneto lead.
[J] Route behind the breather pipe.
[K] Pass the throttle cable through the holder.
[L] Pass the battery breather hose through the inside of frame bracket.
[M] Pass the battery breather hose through the holder.

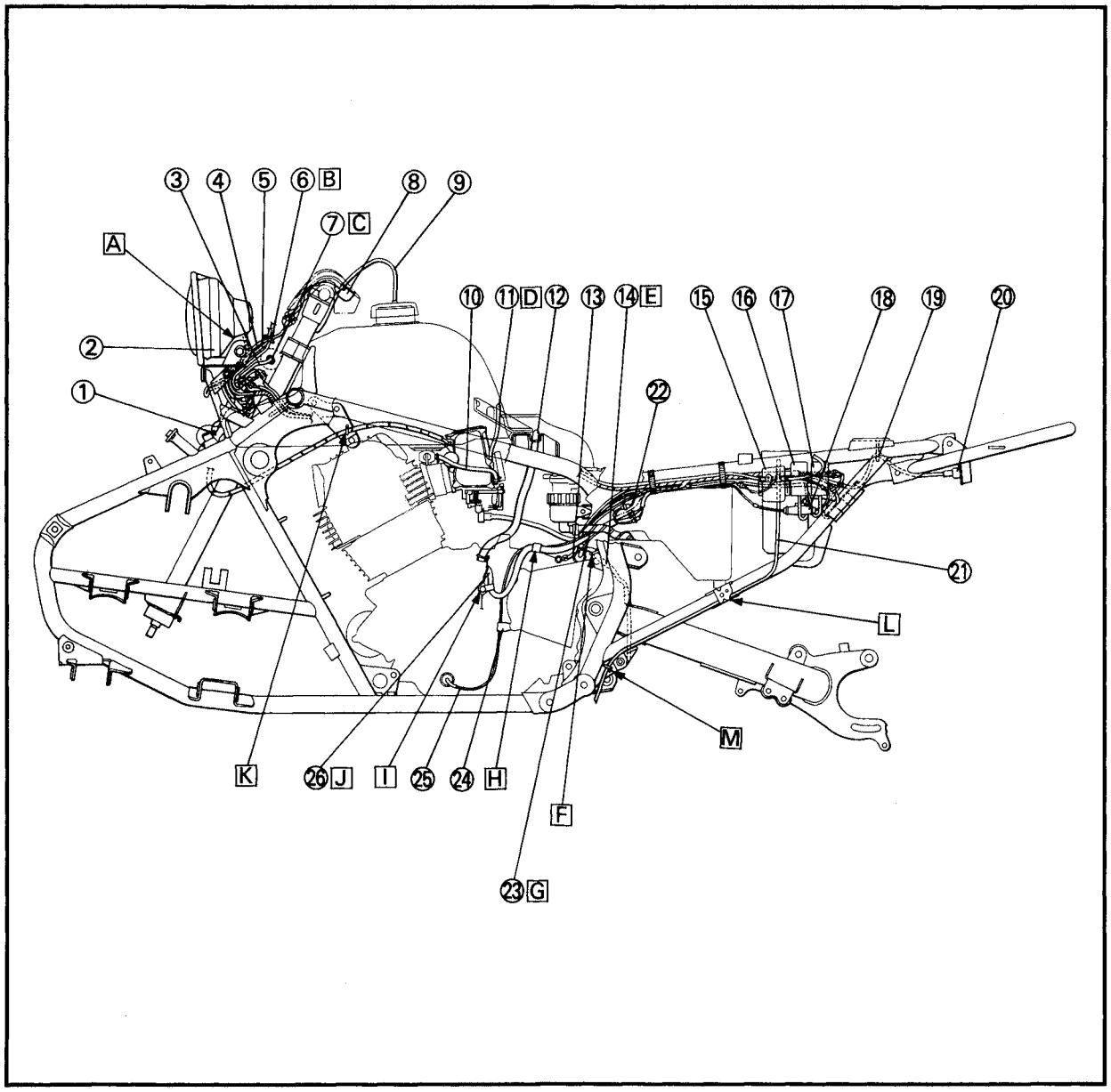

PERIODIC INSPECTIONS AND ADJUSTMENTS

THROTTLE CABLE ADJUSTMENT

NOTE:

Please insert the following step in place of the corresponding part of the 3rd step.

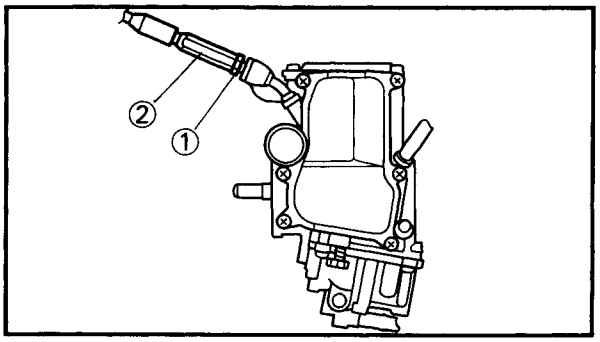

Adjustment steps:

First step:

- Loosen the locknut ①.
- Turn the adjuster ② in or out until the specified free play is obtained.

Turning in→Free play is increased.
Turning out→Free play is decreased.

- Tighten the locknut.

	Locknut: **1 Nm (0.1 m•kg, 0.7 ft•lb)**

NOTE:

If the free play cannot be adjusted here, adjust it at the throttle lever side of the cable.

YAMAHA MOTOR CO.,LTD.

PRINTED IN U.S.A

YFM350XA
SERVICE MANUAL

1st Edition, May 1990

Printed in U.S.A.
LIT-11616-07-50

NOTICE

This manual was written by the Yamaha Motor Company primarily for use by Yamaha dealers and their qualified mechanics. It is not possible to put an entire mechanic's education into one manual, so it is assumed that persons using this book to perform maintenance and repairs on Yamaha machines have a basic understanding of the mechanical concepts and procedures inherent in machine repair technology. Without such knowledge, attempted repairs or service to this model may render it unfit to use and/or unsafe.

Yamaha Motor Company, Ltd. is continually striving to improve all models manufactured by Yamaha. Modifications and significant changes in specifications or procedures will be forwarded to all Authorized Yamaha dealers and will, where applicable, appear in future editions of this manual.

TECHNICAL PUBLICATIONS
SERVICE DIVISION
MOTORCYCLE GROUP
YAMAHA MOTOR CO., LTD.

PARTICULARLY IMPORTANT INFORMATION

This material is distinguished by the following notation.

⚠ The Safety Alert Symbol means ATTENTION! BECOME ALERT! YOUR SAFETY IS INVOLVED!

⚠ WARNING Failure to follow WARNING instructions could result in severe injury or death to the motorcycle operator, a bystander, or a person inspecting or repairing the machine.

CAUTION: A CAUTION indicates special precautions that must be taken to avoid damage to the machine.

NOTE: A NOTE provides key information to make procedures easier or clearer.

HOW TO USE THIS MANUAL

CONSTRACTION OF THIS MANUAL

This manual consists of chapters for the main categories of subjects. (See "Illustrated symbols")

1st title ① :	This is a chapter with its symbol on the upper right of each page.
2nd title ② :	This title appears on the upper of each page on the left of the chapter symbol. (For the chapter "Periodic inspection and adjustment" the 3rd title appears.)
3rd title ③ :	This is a final title.

MANUAL FORMAT

All of the procedures in this manual are organized in a sequential, step-by-step format. The information has been compiled to provide the mechanic with an easy to read, handy reference that contains comprehensive explanations of all disassembly, repair, assembly, and inspections.
A set of particularly important procedure ④ is placed between a line of asterisks "✱" with each procedure preceded by " ● ".

IMPORTANT FEATURES

- Data and a special tool are framed in a box preceded by a relevant symbol ⑤ .
- An encircled numeral ⑥ indicates a part name, and an encircled alphabetical letter data or an alignment mark ⑦ , the others being indicated by an alphabetical letter in a box ⑧ .
- A condition of a faulty component will precede an arrow symbol and the course of action required the symbol ⑨ .

EXPLODED DIAGRAM

Each chapter provides exploded diagrams before each disassembly section for ease in identifying correct disassembly and assembly procedures.

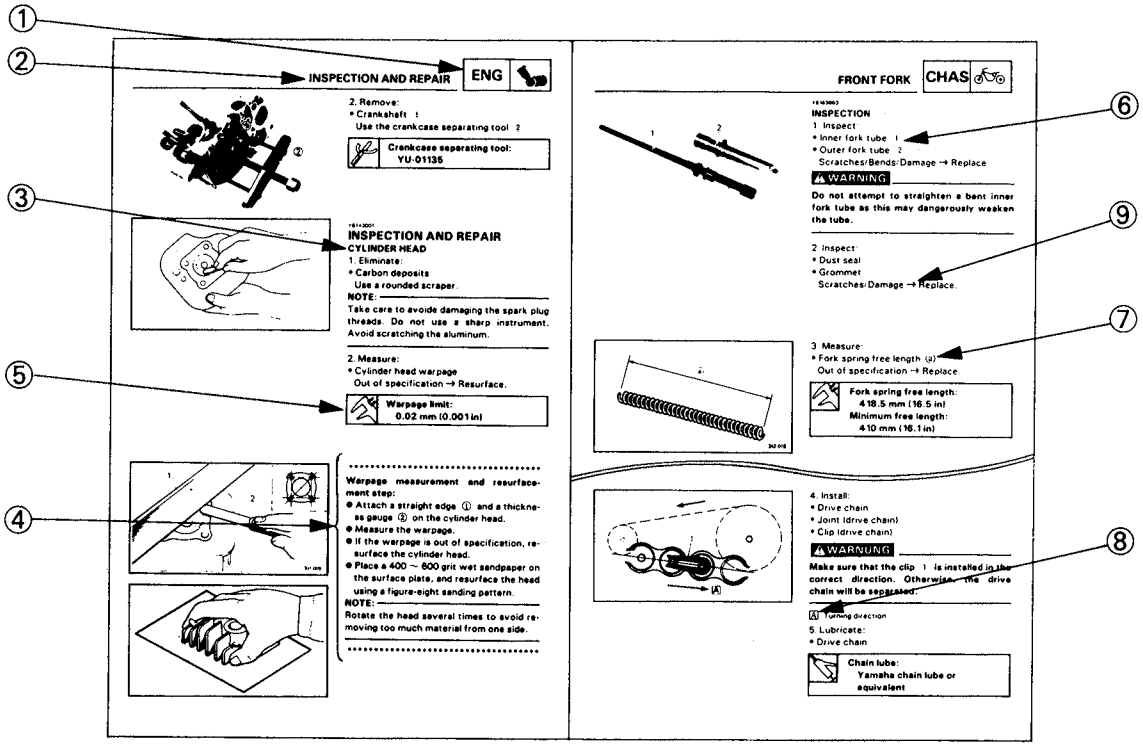

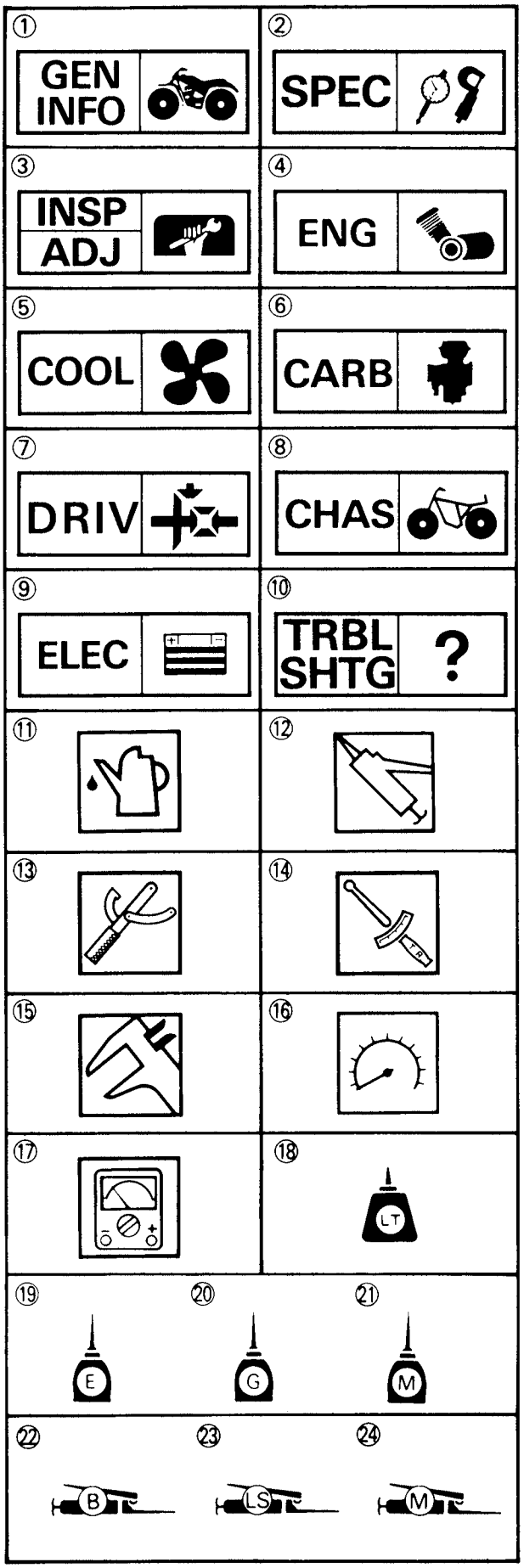

ILLUSTRATED SYMBOLS
(Refer to the illustration)

Illustrated symbols ① to ⑩ are designed as thumb tabs to indicate the chapter's number and content.

① General information
② Specifications
③ Periodic inspection and adjustment
④ Engine
⑤ Cooling system
⑥ Carburetion
⑦ Drive train
⑧ Chassis
⑨ Electrical
⑩ Troubleshooting

Illustrated symbols ⑪ to ⑰ are used to identify the specifications appearing in the text.

⑪ Filling fluid
⑫ Lubricant
⑬ Special tool
⑭ Tightening
⑮ Wear limit, clearance
⑯ Engine speed
⑰ Ω, V, A

Illustrated symbols ⑱ to ㉔ in the exploded diagram indicate grade of lubricant and location of lubrication point.

⑱ Appply locking agent (LOCTITE®)
⑲ Apply engine oil
⑳ Apply gear oil
㉑ Apply molybdenum disulfide oil
㉒ Apply wheel bearing grease
㉓ Apply lightweight lithium-soap base grease
㉔ Apply molybdenum disulfide grease

INDEX

CONTENTS

CHAPTER 1. GENERAL INFORMATION

CHAPTER 2. SPECIFICATIONS

CHAPTER 3.
PERIODIC INSPECTION AND ADJUSTMENT

CHAPTER 4.
ENGINE OVERHAUL

CHAPTER 5.
CARBURETION

CHAPTER 6.
CHASSIS

CHAPTER 7.
ELECTRICAL

CHAPTER 8.
TROUBLESHOOTING

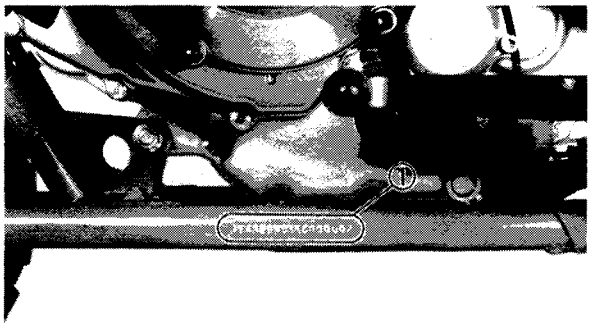

WB311001

GENERAL INFORMATION

MACHINE IDENTIFICATION

VEHICLE IDENTIFICATION NUMBER

The vehicle identification number ① is stamped into the left side of frame.

Starting serial number:
JY43GDW0*LC051101

NOTE:
The vehicle identification number is used to identify your machine and may be used to register your machine with the licensing authority in your state.

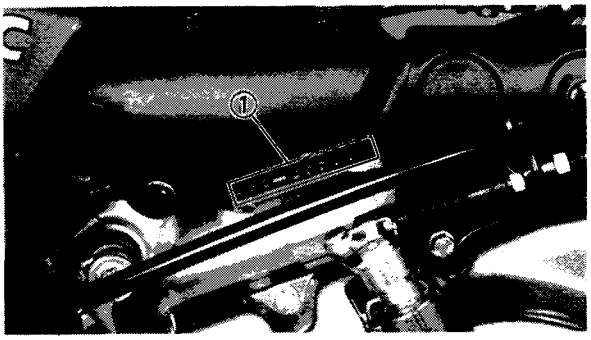

ENGINE SERIAL NUMBER

The engine serial number ① is stamped into the right side the engine.

Starting serial number:
3GD-051101

NOTE:
- The first three digits of these numbers are for model identifications; the remaining digits are the unit production number.
- Designs and specifications are subject to change without notice.

WB212001

IMPORTANT INFORMATION

PREPARATION FOR REMOVAL AND DISASSEMBLY

1. Remove all dirt, mud, dust, and foreign material before removing and disassembling.

2. Use proper tools and cleaning equipment. Refer to "SPECIAL TOOL".

3. When disassembling the machine keep mated parts together. This includes gears, cylinders, pistons, and other mated parts that have been "mated" through normal wear. Mated parts must be reused as an assembly or replaced.

4. During the machine disassembly, clean all parts and place them in trays in the order of disassembly. This will speed up assembly time and help assure that all parts are correctly reinstalled.

5. Keep away from fire.

WB212002

ALL REPLACEMENT PARTS

1. We recommend to use Yamaha genuine parts for all replacements. Use oil and/or grease recommended by Yamaha for assembly and adjustment.

WB212003

GASKETS, OIL SEALS, AND O-RINGS

1. All gaskets, seals and O-rings should be replaced when an engine is overhauled.All gaskets surfaces, oil seal lips and O-rings must be cleaned.

2. Properly oil all mating parts and bearing during reassembly. Apply grease to the oil seal lips.

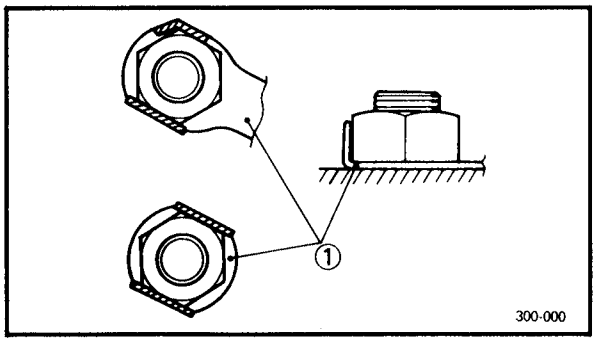

WB212004

LOCK WASHERS/PLATES AND COTTER PINS

1. All lock washers/plates ① and cotter pins must be replaced when they are removed. Lock tab(s) should be bent along the bolt or nut flat(s) after the bolt or nut has been properly tightened.

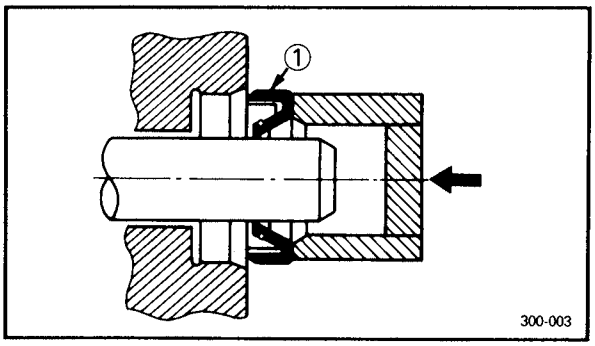

WB212005

BEARINGS AND OIL SEALS

1. Install the bearing(s) and oil seal(s) with their manufacturer's marks or numbers facing outward.(In other words, the stamped letters must be on the side exposed to view.) When installing oil seal(s), apply a light coating of light-weight lithium base grease to the seal lip(s). Oil the bearings liberally when installing.

① Oil seal

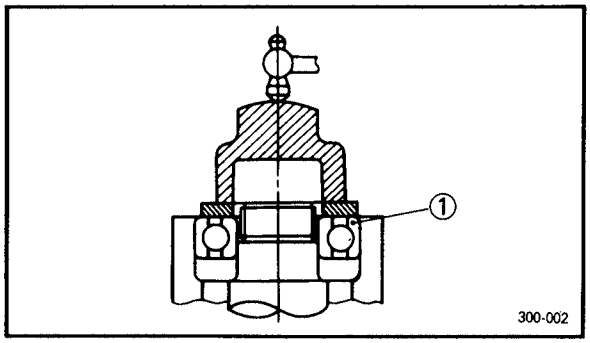

CAUTION:

Do not use compressed air to spin the bearings dry. This causes damage to the bearing surfaces.

① Bearing

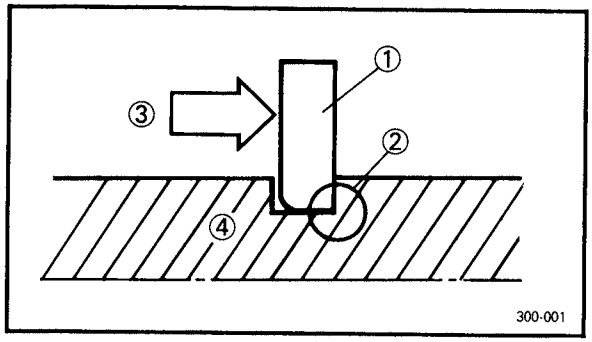

WB212006

CIRCLIPS

1. All circlips should be inspected carefully before reassembly. Always replace piston pin clips after one use. Replace distorted circlips. When installing a circlip ①, make sure that the sharp edged corner ② is positioned opposite to the thrust ③ it receives. See the sectional view.

④ Shaft

WB313001

SPECIAL TOOLS

The prepare special tools are necessary for complete and accurate tune-up and assembly. Using the correct special tool will help prevent damage caused by the use of improper tools or improvised techniques.

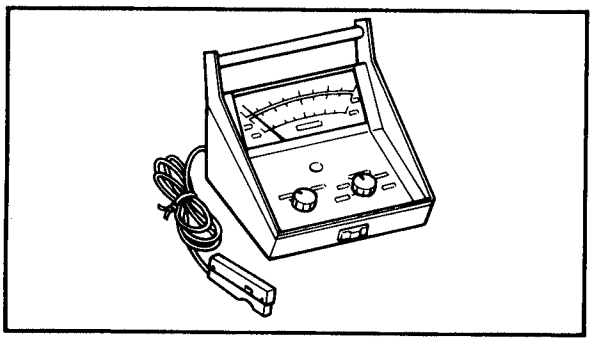

FOR TUNE UP

1. Inductive tachometer
   P/N. YU-8036-A

This tool is needed for detecting engine rpm.

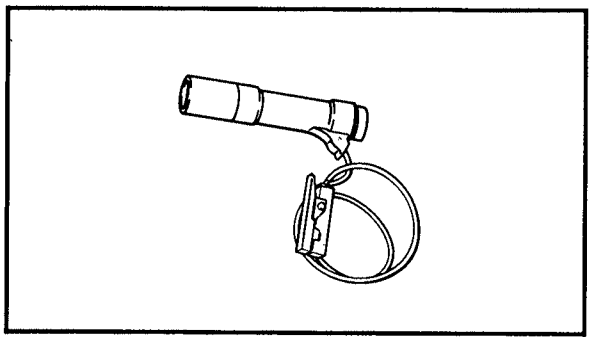

2. Inductive timing light
   P/N. YM-33277-A

This tool is necessary for checking ignition timing.

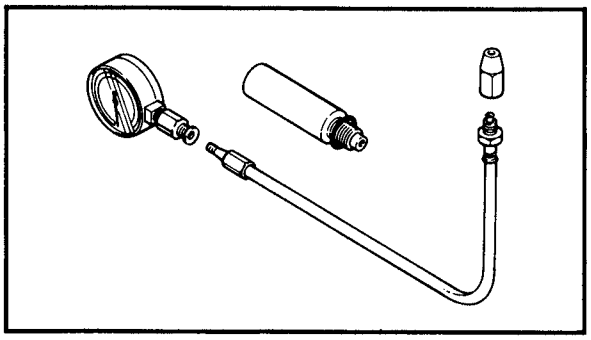

3. Compression gauge
   P/N. YU-33223

This tool is used to measure the engine compression.

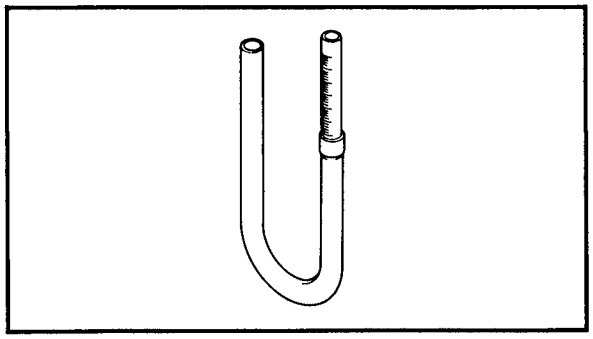

4. Fuel level gauge
   P/N. YM-01312-A

This gauge is used to measure the fuel level in the float chamber.

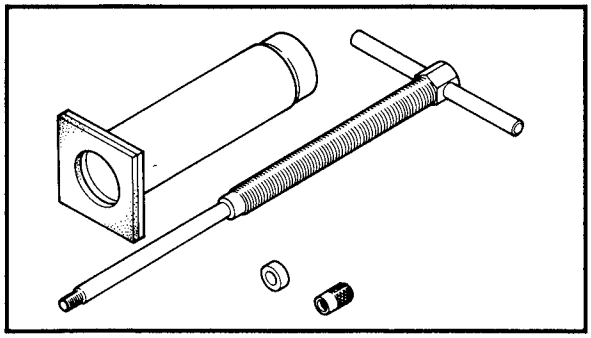

FOR ENGINE SERVICE

1. Piston pin puller
   P/N. YU-01304

This tool is used to remove the piston pin.

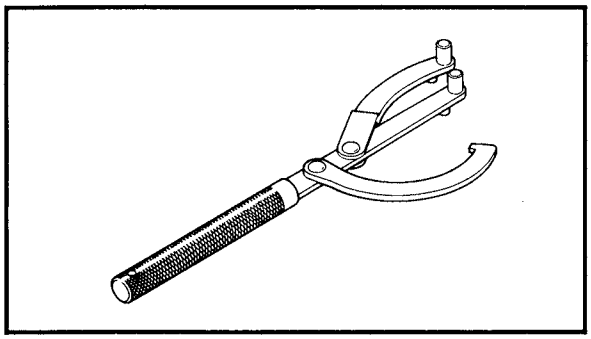

2. Rotor holder
   P/N. YU-01235

This tool is used to hold the clutch when removing or installing the clutch boss locknut.

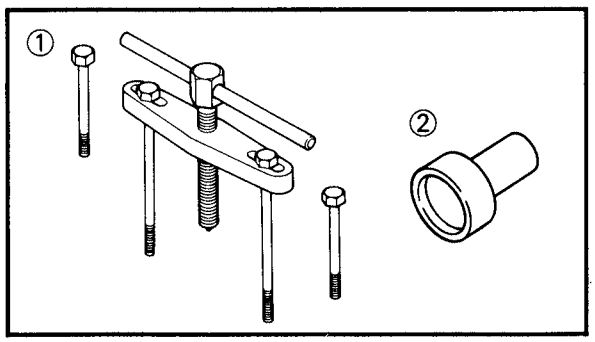

3. Crankcase separator
   P/N. YU-01135..... ①
   Adapter
   P/N. YM-1382..... ②

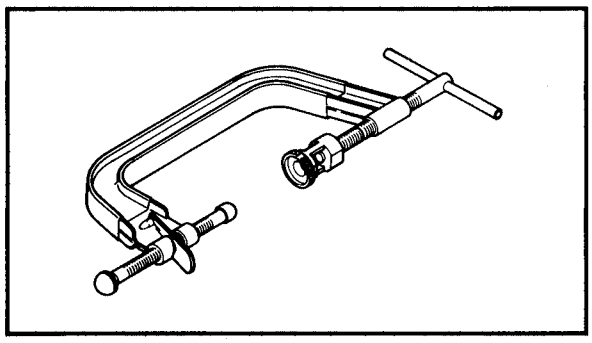

4. Valve spring compressor
   P/N. YM-04019

This tools are used to remove and install the valve assembles.

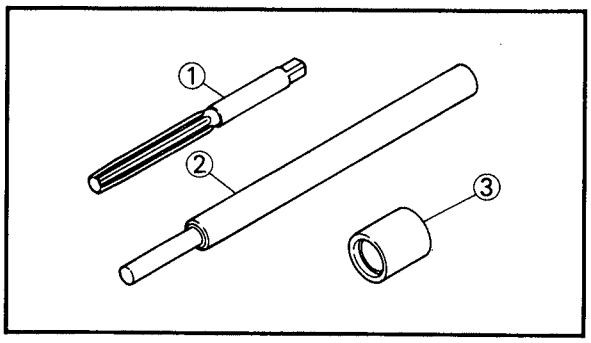

5. Valve guide remover (7.0 mm)
   P/N. YM-01227..... ①
   Valve guide reamer (7.0 mm)
   P/N. YM-01225..... ②
   Valve guide installer (7.0 mm)
   P/N. YM-4017..... ③

These tools are used to remove, install and rebore the valve guide.

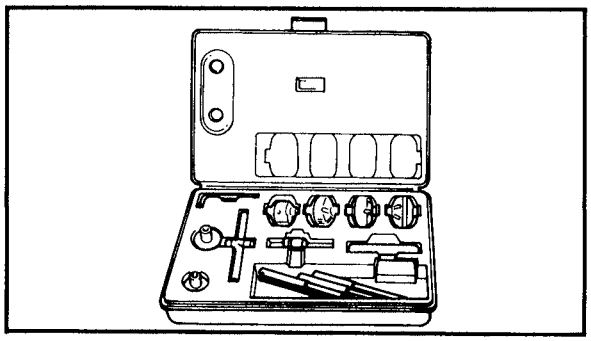

6. Valve seat cutter
   P/N. YM-91043

This tool is used to adjust the valve clearance.

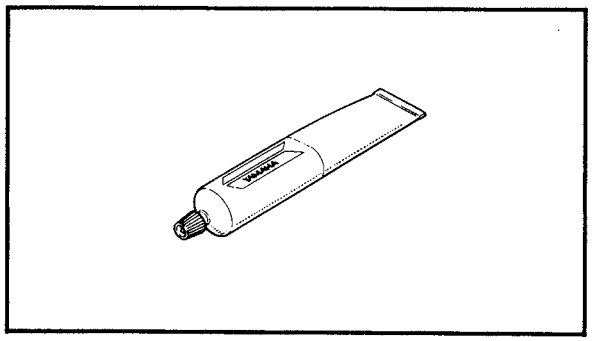

7. Quick gasket®
   P/N. ACC-11001-05-01

This sealant (bond) is used for crankcase mating surface, etc.

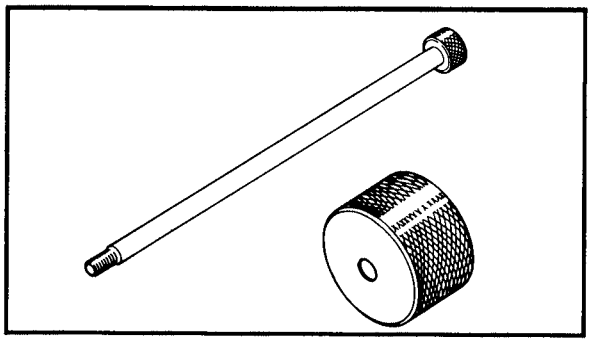

8.Slide hammer set
   P/N. YU-01083

These tools are used when removing the rocker arm shaft.

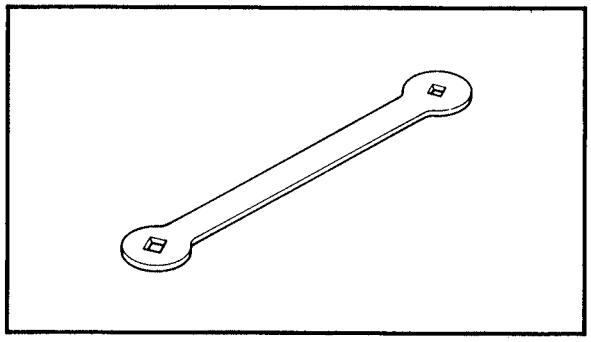

9.Valve adjusting tool
   P/N. YM-08035

This tool is used for adjusting the valve clearance.

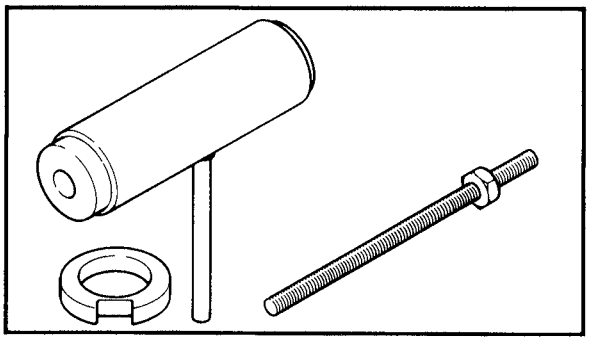

10.Crankshaft installer set
P/N. YU-90050

This tool is used for installing the crankshaft.

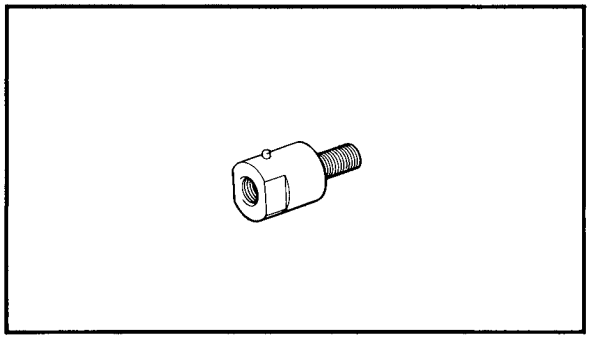

11.Adapter
P/N. YM-1383

This tool is used for installing the crankshaft.

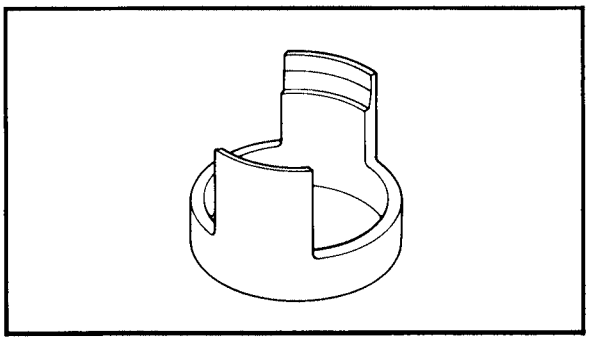

12.Spacer
P/N. YM-91044

This tool is used for installing the crankshaft.

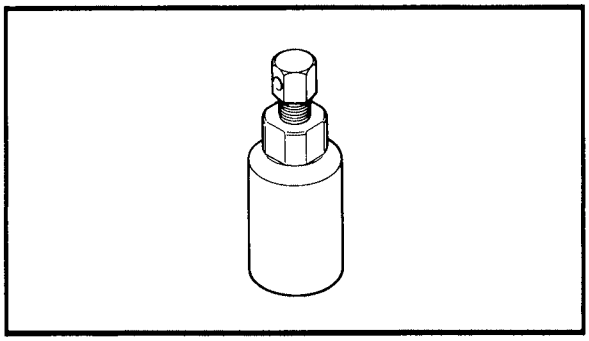

13.Flywheel puller
P/N. YM-01404

This tool used for removing the CDI rotor.

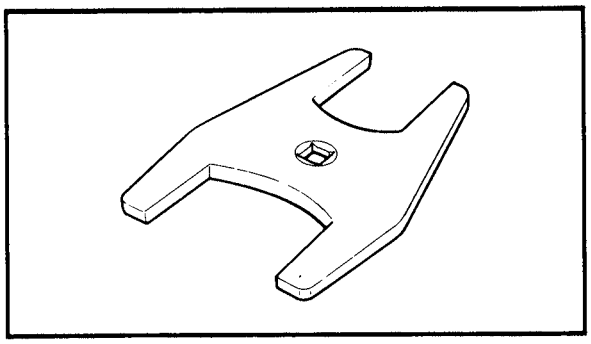

FOR CHASSIS SERVICE

1. Rear axle nut wrench
P/N. YM-37132

This tool is used to loosen and tighten the nut(Rear axle).

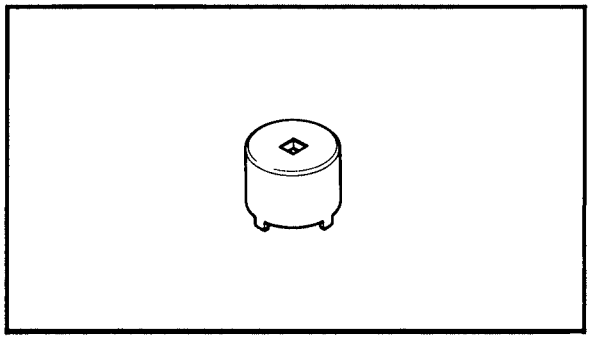

2. Ball joint wrench
   P/N. YM-01405

This tool is used to loosen and tighten the suspension ball joint.

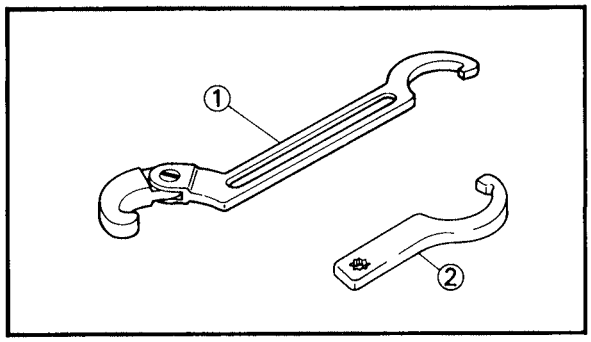

3. Ring nut wrench
   P/N. YU-01268..... ①
   P/N. YU-33975..... ②

This tool is used to loosen and tighten the steering ring nut.

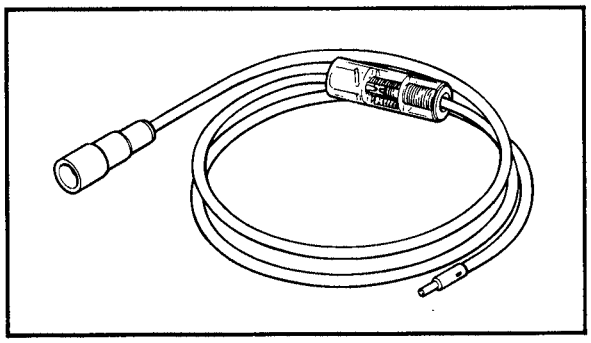

FOR ELECTRICAL COMPONENTS

1. Dynamic spark tester
   P/N. YM-34487

This instrument is necessary for checking the ignition system components.

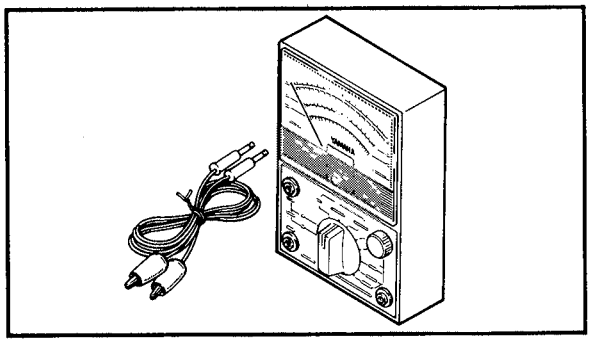

2. Pocket tester
   P/N. YU-03112

This tester is invaluable for checking the electrical system.

SPECIFICATIONS

GENERAL SPECIFICATIONS

Model	YFM350XA
Model Code Number	3GD5
Vehicle Identification Number	JY43GDW0*LC051101
Engine Starting Number	3GD-051101
Dimensions:	
Overall Length	1,840 mm (72.4 in)
Overall Width	1,080 mm (42.5 in)
Overall Height	1,080 mm (42.5 in)
Seat Height	765 mm (30.1 in)
Wheelbase	1,200 mm (47.2 in)
Minimum Ground Clearance	125 mm (4.92 in)
Basic Weight:	
With Oil and Full Fuel Tank	191 kg (421 lb)
Minimum Turning Radius	3,500 mm (138 in)
Engine:	
Engine Type	4-stroke, gasoline, SOHC,
Cylinder Arrangement	Single cylinder
Displacement	348 cm^3 (21.2 cu.in)
Bore × Stroke	83 × 64.5 mm (3.27 × 2.54 in)
Compression Ratio	9.2 × 1
Compression Pressure	834 kPa (8.5 kg/cm^2, 121 psi)
Starting System	Electric starter
Lubrication System	Wet sump
Oil Type or Grade	
Engine Oil	SAE 10W40 type SE motor oil
Oil Capacity:	
Engine Oil	
Periodic Oil Change	2.4 L (2.11 Imp qt, 2.53 US qt)
With Oil Filter Replacement	2.5 L (2.20 Imp qt, 2.64 US qt)
Total Amount	3.2 L (2.82 Imp qt, 3.38 US qt)
Air Filter	Wet type element

Model	YFM350XA	
Fuel:		
Type	Regular gasoline	
Tank Capacity	9.5 L (2.1 Imp gal, 2.5 US gal)	
Reserve Amount	1.9 L (0.4 Imp gal, 0.5 US gal)	
Carburetor:		
Type/Manufacturer	BTM36SH/MIKUNI	
Spark Plug:		
Type/Manufacturer	D8EA (NGK), X24ES-U (ND)	
Gap	0.6~0.7 mm (0.024~0.028 in)	
Clutch Type	Wet, multiple-disc	
Transmission:		
Primary Reduction System	Spar gear	
Primary Reduction Ratio	76/24 (3.167)	
Secondary Reduction System	Chain drive	
Secondary Reduction Ratio	40/13 (3.077)	
Transmission Type	Constant mesh, 6-speed forward, 1-speed reverse	
Operation	Left foot operation	
Gear Ratio 1st	36/16×20/27×29/18 (2.685)	
2nd	33/20×20/27×29/18 (1.969)	
3rd	29/23×20/27×29/18 (1.505)	
4th	27/26×20/27×29/18 (1.239)	
5th	25/28×20/27×29/18 (1.066)	
6th	23/29×20/27×29/18 (0.947)	
Reverse	33/16×33/10 (6.806)	
Chassis:		
Frame Type	Steel Tube Frame	
Caster Angle	7°	
Trail	30 mm (1.2 in)	
Tire:		
Type	Tubeless	
Size (F)	AT21×7-10	
Size (R)	AT22×10-9	
Basic Weight:		
With Oil and Full Fuel Tank	191 kg (421 lb)	
Cold Tire Pressure	Front	Rear
	30 kPa (0.3 kg/cm^2 4.3 psi)	25 kPa (0.25 kg/cm^2 3.6 psi)
Brake:		
Front Brake Type	Dual disc brake	
Operation	Right hand operation	
Rear Brake Type	Single Disc brake	
Operation	Right foot operation	

Model	YFM350XA
Suspension:	
Front Suspension	Double Wishbone
Rear Suspension	Swingarm (Link Suspension)
Shock Absorber:	
Front Shock Absorber	Coil spring/Oil damper
Rear Shock Absorber	Coil spring, Gas/Oil damper
Wheel Travel:	
Front Wheel Travel	200 mm (7.9 in)
Rear Wheel Travel	200 mm (7.9 in)
Electrical:	
Ignition System	C.D.I. Magneto
Generator System	Flywheel magneto
Battery Capacity	12V 12AH
Battery Type	GM12CZ-4A
Headlight Type	Bulb Type
Bulb Wattage/Quantity:	
Headlight	25W/25W × 2
Taillight	3.8W × 1
Neutral Light	3.4W × 1
Reverse Light	3.4W × 1

MAINTENANCE SPECIFICATIONS

ENGINE

Model	YFM350XA
Cylinder Head: Warp Limit 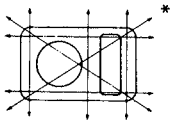	<0.03 mm (0.0012 in)> *Lines indicate straightedge measurement
Cylinder: Bore Size Taper Limit	 82.97~83.02 mm (3.267~3.269 in) <0.05 mm (0.002 in)>
Camshaft: Drive Method Cam Dimensions Intake 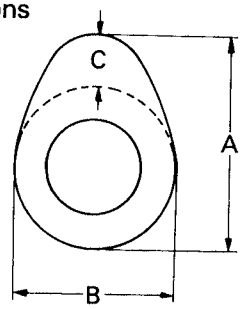 "A" "B" "C" Exhaust "A" "B" "C"	 Chain (Left) 40.62~40.72 mm (1.599~1.603 in) 32.18~32.28 mm (1.267~1.271 in) 8.67 mm (0.341 in) 40.62~40.72 mm (1.599~1.603 in) 32.18~32.28 mm (1.267~1.271 in) 8.67 mm (0.341 in)
Camshaft Runout Limit 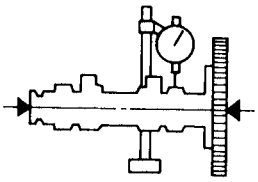 Cam Chain Type/ Nomber of Links Cam Chain Adjustment Method	<0.03 mm (0.001 in)> BF05M/90 Links Automatic
Rocker arm/Rocker arm shaft: Bearing inside diameter Shaft outside diameter Arm-to-shaft clearance	 12.00~12.02 mm (0.472~0.473 in) 11.98~11.99 mm (0.472 in) 0.009~0.037 mm (0.0004~0.0015 in)
Valve, Valve Seat, Valve Guide: Valve Clearance (Cold) IN. EX.	 0.06~0.10 mm (0.00236~0.00394 in) 0.16~0.20 mm (0.00630~0.00787 in)

Model		YFM350XA
Valve Dimensions: 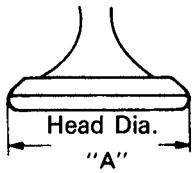 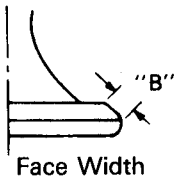 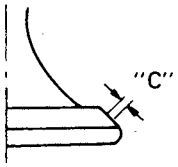 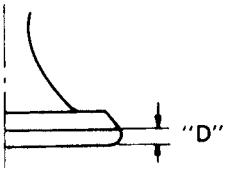		
"A" Head Dia.	IN.	39.9 ~ 40.1 mm (1.571 ~ 1.579 in)
	EX.	33.9 ~ 34.1 mm (1.335 ~ 1.343 in)
"B" Face Width	IN.	2.26 mm (0.09 in)
	EX.	2.26 mm (0.09 in)
"C" Seat Width	IN.	1.2 ~ 1.4 mm (0.047 ~ 0.055 in)
	EX.	1.2 ~ 1.4 mm (0.047 ~ 0.055 in)
"D" Margin Thickness Limit		
	IN.	1.0 ~ 1.4 mm (0.039 ~ 0.0551 in)
	EX.	0.8 ~ 1.2 mm (0.0315 ~ 0.0472 in)
Stem Outside Diameter	IN.	6.975 ~ 6.990 mm (0.2746 ~ 0.2752 in)
	EX.	6.955 ~ 6.970 mm (0.2738 ~ 0.2744 in)
Guide Inside Diameter	IN.	7.000 ~ 7.012 mm (0.2756 ~ 0.2761 in)
<Limit>		<7.5 mm (0.295 in)>
	EX.	7.000 ~ 7.012 mm (0.2756 ~ 0.2761 in)
<Limit>		<7.5 mm (0.295 in)>
Stem-to-guide Clearance	IN.	0.010 ~ 0.037 mm (0.0004 ~ 0.0015 in)
	EX.	0.030 ~ 0.057 mm (0.00118 ~ 0.00224 in)
<Limit>	IN.	0.1 mm (0.004 in)
	EX.	0.1 mm (0.004 in)
Stem Runout Limit 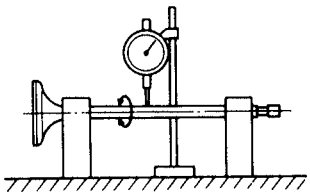		<0.01 mm (0.0004 in)>
Valve Seat Width Standard	IN.EX.	1.1 ± 0.1 mm (0.043 ± 0.004 in)

Model		YFM350XA
Valve Spring:		
Free Length		
Inner Spring	IN.	39.9 mm (1.571 in)
	EX.	39.9 mm (1.571 in)
Outer Spring	IN.	43.27 mm (0.587 in)
	EX.	43.27 mm (0.587 in)
Set Length (Valve Closed)		
Inner Spring	IN.	33.6 mm (1.323 in)
	EX.	33.6 mm (1.323 in)
Outer Spring	IN.	36.6 mm (1.441 in)
	EX.	36.6 mm (1.441 in)
Tilt Limit*		
Inner Spring	IN.&EX.	2.5° or 1.6 mm (0.0630 in)
Outer Spring	IN.&EX.	2.5° or 1.6 mm (0.0630 in)
Direction of Winding (Top view)		Inner Spring: Left; Outer Spring: Right
Piston:		
Piston Size "D"		82.040 ~ 82.050 mm (3.230 in)
Measuring Point "H"		5.5 mm (0.217 in) (From bottom line of piston skirts)
Piston Clearance		0.040 ~ 0.060 mm (0.00157 ~ 0.00236 in)
Oversize	2nd	83.5 mm (3.287 in)
	4th	84.0 mm (3.307 in)
Piston off-set		0.5 mm (0.02 in)
Piston off-set Direction		Intake side
Inside Diameter (Piston pin bore)		19.004 ~ 19.015 mm (0.75 in)
Outside Diameter (Piston pin)		18.990 ~ 18.995 mm (0.75 in)

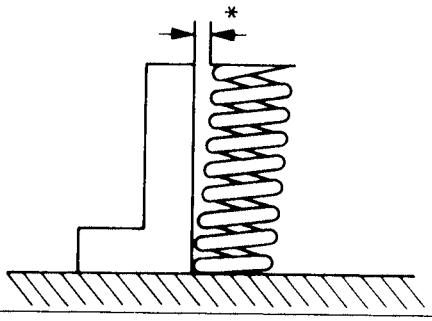

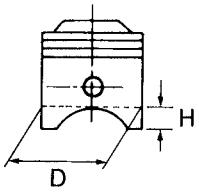

Model		YFM350XA
Piston Ring:		
Sectional Sketch		
Top Ring		Barrel
	B	1.2 mm (0.047 in)
	T	3.3 mm (0.130 in)
2nd Ring		Taper
	B	1.5 mm (0.059 in)
	T	3.4 mm (0.134 in)
Oil Ring	B	2.8 mm (0.110 in)
	T	2.5 mm (0.098 in)
End Gap (Installed)		
	Top Ring	0.20~0.40 mm (0.00787~0.0157 in)
	2nd Ring	0.20~0.40 mm (0.00787~0.0157 in)
	Oil Ring	0.30~0.90 mm (0.012~0.035 in)
Side Clearance	Top Ring	0.04~0.08 mm (0.00157~0.00315 in)
	2nd Ring	0.03~0.07 mm (0.00118~0.00276 in)
Crankshaft:		
Crank Width "A"		58.95~59.00 (2.321~2.323 in)
Big End Side Clearance "B"		0.35~0.85 mm (0.014~0.0335 in)
Runout Limit "C"		<0.06 mm (0.00236 in)>
Small End Free Play Limit "F"		0.8~1.0 mm (0.0315~0.0394 in)
Balancer Drive Method		Gear
Clutch:		
Friction Plate Thickness/ Quantity		2.94~3.06 mm (0.116~0.120 in)/7
Wear Limit		<2.8 mm (0.110 in)>
Clutch Plate Thickness/Quantity		1.5~1.7 mm (0.059~0.066 in)/4 1.9~2.1 mm (0.0748~0.0827 in)/2
Warp Limit		<0.2 mm (0.00787 in)>
Clutch Spring Free Length/Quantity		47.8 mm (1.882 in)/5
Clutch Spring Minimum Free Length		46.5 mm (1.831 in)
Clutch Release Method		Outer push (Rack & Pinon)

Model		YFM350XA
Decompression Device:		
Type		Manual
Air Filter Oil Grade (Oiled Filter)		Foam-Air-Filter Oil or SAE 10W30 SE motor oil
Carburetor:		
Type/Manufacturer/Quantity		BTM36SH/MIKUNI/1
I.D. Mark		2XK-00
Main jet	(M.J.)	#145
Main Air Jet	(M.A.J.)	ϕ0.6
Jet Needle-clip Position	(J.N.)	5J18-3
Needle Jet	(M.M.)	0-6
Pilot Jet	(P.J.)	#42.5
Pilot Ait Jet	(P.A.J_1)	ϕ1.0
	(P.A.J_2)	ϕ0.7
Pilot Screw (turns out)	(P.S.)	2
Valve Seat	(V.S.)	ϕ2.5
Starter Jet	(G.S.)	#62.5
Fuel Level	(F.L.)	3~4 mm (0.12~0.16 in)
Float Height		11.4~13.4 mm (0.45~0.53 in)
Engine Idling Speed		1,450~1,550 r/min
Vacuum Pressure at Idling Speed		33.3 kPa (250 mmHg, 9.84 inHg)
Lubrication System:		
Oil Filter Type		Wire mesh
Oil Pump Type		Trochoid pump
Tip Clearance		0.15 mm (0.006 in)
Housing and Outer Rotor Clearance		0.04~0.09 mm (0.002~0.004 in)
Side Clearance		0.04~0.09 mm (0.002~0.004 in)

TIGHTENING TORQUE:

Parts to be tightened	Parts name	Thread Size	Q'ty	Tightening Torque			Remarks
				Nm	m•kg	ft•lb	
Cylinder head	Flange bolt	M10	4	40	4.0	29.0	Oil
	Hex bolt	M8	2	20	2.0	14.0	
Cylinder body	Hex bolt	M6	1	10	1.0	7.2	
Cylinder head cover (Valve)	Hex bolt	M6	5	10	1.0	7.2	
(Sprocket)	Pan head screw	M6	2	10	1.0	7.2	
Camshaft bearing plate	Hex bolt	M6	2	8	0.8	5.8	Use lock washer.
Oil checking bolt	Bolt	M6	1	7	0.7	5.1	
Spark plug	—	M12	1	17.5	1.75	12.5	
Balancer shaft	Hex nut	M16 × 1.0	1	60	6.0	43.0	Use lock washer.
Flywheel magneto	Bolt	M10 × 1.25	1	50	5.0	36.0	
Valve clearance (Locknut)	Hex nut	M7	2	20	2.0	14.0	
Cam sprocket	Bolt	M10	1	60	6.0	43.0	
Intake side chain guide	Bolt	M6	2	10	1.0	7.2	
Oil pump	Pan head screw	M6	4	7	0.7	5.1	
Drain plug	—	M35	1	32	3.2	23	
Filter cover	Hex bolt	M6	3	10	1.0	7.2	
Carburetor	Nut	M8	2	16	1.6	11.0	
Carburetor clamp hose	Pan head screw	M5	1	2	0.2	1.4	
Muffler mount	Flange bolt	M8	3	27	2.7	19.0	
Exhaust pipe	Nut	M6	2	12	1.2	8.7	
Exhaust pipe protector	Pan head screw	M6	4	8	0.8	5.8	LT
Crankcase	Flange bolt	M6	16	10	1.0	7.2	
Case cover	Flange bolt	M6	11	10	1.0	7.2	
Clutch spring	Hex bolt	M6	5	8	0.8	7.2	
Clutch boss	Hex nut	M16	1	80	8.0	43.0	
Primary drive gear	Hex nut	M16	1	80	8.0	36.0	
Drive sprocket	Nut	M20	2	75	7.5	7.2	
Shift pedal	Hex bolt	M6	1	10	1.0	7.2	
Cam chain tensioner (Body)	Hex bolt	M6	2	10	1.0	7.2	
(Blind)	Bolt	M12	1	38	3.8	27.0	
Muffler and Exhaust pipe	Hex bolt	M8	1	20	2.0	14.0	
Pulser coil	Screw	M5	2	5	0.5	5.1	
Source coil	Screw	M6	3	7	0.7	5.1	
Recoil starter	Bolt	M6	4	10	1.0	7.2	
Starter motor	Bolt	M6	2	10	1.0	7.2	
Neutral switch	—	M10	1	20	2.0	14.0	
Reverse switch	—	M10	1	20	2.0	14.0	
Stopper lever	Bolt	M6	1	14	1.4	10.0	
Reverse shift cam stopper bolt	Bolt	M14	1	10	1.0	7.2	

CHASSIS

Model	YFM350XA
Steering System:	
Lock to Lock Angle:	
Left	40°
Right	40°
Front Suspension:	
Shock Absorber Stroke	90 mm (3.54 in)
Shock Absorber Spring Free Length	224.0 mm (8.82 in)
Spring Rate (K1)	39.2 N/mm (4.0 kg/mm, 224 lb/in)
Stroke	Zero ~ 109.5 mm (Zero ~ 4.31 in)
Optional spring	No
Rear Suspension:	
Shock Absorber Stroke	88 mm (3.46 in)
Shock Absorber Spring Free Length	240.5 mm (9.47 in)
Spring Rate (K1)	53.9 N/mm (5.5 kg/mm, 308 lb/in)
Stroke	Zero ~ 108 mm (Zero ~ 4.25 in)
Enclosed Gas Pressure (Standard)	1,176 kPa (12 kg/cm^2, 170 psi)
(Min)	784 kPa (8 kg/cm^2, 114 psi)
(Max)	1,569 kPa (16 kg/cm^2, 227 psi)
Swingarm:	
Free Play Limit:	
Side	<1.0 mm (0.04 in)>
Wheel:	
Front Wheel Type	Panel Wheel
Rear Wheel Type	Panel Wheel
Front Rim Size/Material	10×6/Aluminum
Rear Rim Size/Material	9×8.25/Aluminum
Rim Runout Limit:	
Vertical	<2.0 mm (0.08 in)>
Lateral	<2.0 mm (0.08 in)>
Front Disc Brake:	
Type	Dual disc
Disc Outside×Thickness	161×3.5 mm (6.34×0.138 in)
Pad Thickness	4.5 mm (0.177 in)
<Limit>	<1.0 mm (0.039 in)>
Rear Disc Brake:	
Type	Single disc
Disc Outside Diameter×Thickness	245×3.5 mm (9.65×0.14 in)
<Limit>	<3.0 mm (0.12 in)>
Pad Thickness	4.5 mm (0.177 in)
<Limit>	<1.0 mm (0.0394 in)>

Model	YFM350XA
Brake Lever & Brake Pedal:	
Brake Lever Free Play	4~8 mm (0.157~0.315 in) at lever end
Brake Pedal Position	10 mm (0.4 in)
Brake Pedal Free Play	8 mm (0.315 in)
Drive Chain:	
Type/Manufacturer	520V6/DAIDO
Number of links	98 links
Chain Free Play	30~40 mm (1.18~1.57 in)
Clutch lever Free Play:	5~10 mm (0.20~0.39 in)/at lever end

TIGHTENING TORQUE:

Parts to be tightened	Parts name	Thread Size	Q'ty	Tightening Torque			Remarks
				Nm	m•kg	ft•lb	
Steering Knuckles & Nut	Nut	M14×1.5	2	85	8.5	61	
Wheel Panel Nut	Nut	M10×1.25	16	45	4.5	32	
Bearing Holder & Frame	Nut	M42×1.0	1	40	4.0	29	
Steering Knuckle & Knuckle Arm	Bolt	M10×1.25	4	38	3.8	27	
Steering Knuckle & Brake Caliper	Bolt	M8×1.25	4	28	2.8	20	
Disc Brake & Front Hub	Hex bolt	M8×1.25	4	28	2.8	20	
Ball Joint & Steering Knuckle	Nut	M10×1.25	4	25	2.5	18	
Tie Rod Assembly & Knuckle Arm	Nut	M10×1.25	4	25	2.5	18	
Tie Rod Assembly & Steering Shaft	Nut	M10×1.25	2	25	2.5	18	
Tie Rod Assembly Locknut	Nut	M10×1.25	4	30	3.0	22	
Steering Shaft & Frame	Nut	M10×1.25	1	30	3.0	22	
Steering Bearing & Frame	Bolt	M8×1.25	2	23	2.3	17	
Steering Shaft & Upper Handlebar Holder	Bolt	M8×1.25	4	20	2.0	14	
Upper and Lower Arm & Frame	Bolt	M10×1.25	4	45	4.5	32	
Front Shock Absorber (Upper & Lower)	Bolt	M10×1.25	4	45	4.5	32	
Upper Engine Stay & Frame	Bolt	M8×1.25	4	33	3.3	24	
Upper Engine Stay & Engine	Bolt	M8×1.25	1	33	3.3	24	
Frame & Engine	Bolt	M10×1.25	3	55	5.5	40	
Pivot Shaft	Bolt	M16×1.5	1	85	8.5	61	
Rear Shock Absorber (Upper & Lower)	Bolt	M10×1.25	2	32	3.2	23	
Relay Arm & Frame	Bolt	M10×1.25	1	48	4.8	35	
Connecting Rod & Rear Arm	Bolt	M10×1.25	1	48	4.8	35	
Relay Arm & Connecting Rod	Bolt	M10×1.25	1	32	3.2	23	
Footrest & Frame	Bolt	M10×1.25	4	55	5.5	40	
Disc Brake & Bracket	Bolt	M8×1.25	4	28	2.8	20	
Brake Caliper & Rear Hub	Bolt	M8×1.25	2	23	2.3	17	
Wheel Panel & Wheel Shaft Collar	Nut	M10×1.25	8	45	4.5	32	
Rear Axle Ring Nut	Nut	M38×1.5	2	—	—	—	SEE NOTE
Rear Axle Nut	Nut	M14×1.5	2	120	12.0	85	
Rear Hub & Swingarm (Upper)	Bolt	M12×1.25	2	120	12.0	85	
Rear Hub & Swingarm (Lower)	Bolt	M10×1.25	2	60	6.0	43	
Brake Hose & Caliper, Master Cylinder	Bolt	M10×1.25	5	27	2.7	19	
Rear Master Cylinder & Frame	Bolt	M8×1.25	2	20	2.0	14	
Front Bumper	Bolt	M8×1.25	4	23	2.3	17	
Rear Bumper	Bolt	M8×1.25	4	23	2.3	17	
Fuel Cock & Fuel Tank	Screw	M6×1.0	2	5	0.5	3.6	

TIGHTENING TORQUE:

Parts to be tightened	Parts name	Thread Size	Q'ty	Tightening Torque			Remarks
				Nm	m•kg	ft•lb	
Pad adjuster & Lock nut (Rear brake caliper)	Nut	M8×1.25	1	16	1.6	11	
Brake hose & Frame	Bolt	M8×1.25	2	20	2.0	14	
Flare nut & Joint	Nut	M10×1.0	4	18	1.8	13	

NOTE:

Apply locking agent (LOCTITE®) to ring nuts threads.
1st: Tighten the inside ring nut 55 Nm (5.5 m•kg, 40 ft•lb).
2nd: Tighten the outside ring nut while holding the inside ring nut 190 Nm (19 m•kg, 140 ft•lb).
3rd: Loosen the inside ring nut while holding the outside ring nut 240 Nm (24 m•kg, 170 ft•lb).

ELECTRICAL

Model	YFM350XA
Voltage	12V
Ignition System: Ignition Timing (B.T.D.C.) Advanced Timing (B.T.D.C.) Advancer Type	 10° at 1,000 r/min 33° at 5,000 r/min Electrical
C.D.I: Magneto-Model/Manufacturer Pickup Coil Resistance (Color) Source Coil Resistance (Color) C.D.I. Unit-Model/Manufacteur	 F3T43573/MITSUBISHI 171~209Ω at 20°C (68°F) (Y—L) 270~330Ω at 20°C (68°F) (W/G—R) F8T30572/MITSUBISHI
Ignition Coil: -Model/Manufacturer Minimum Spark Gap Primary Winding Resistance Secondary Winding Resistance	 F6T535 6 mm (0.236 in) 0.36~0.48Ω at 20°C (68°F) 5.44~7.36KΩ at 20°C (68°F)
Spark Plug Cap: Type Resistance	 Resin type 10KΩ
F.W. Magneto: Model/Manufacturer Charging Current-(Min) -(Max) Charging Coil Resistance (Color)	 F3T43573/MITSUBISHI 12A or more at 3,000 r/min 17A or more at 8,000 r/min 0.70~0.86Ω at 20°C (68°F) (W—W)
Voltage Regulator: -Type -Model/manufacturer -No Load Regulated Voltage	 Semi conductor-Short circuit SH235-12/SHINDENGEN 14.0~15.0 V

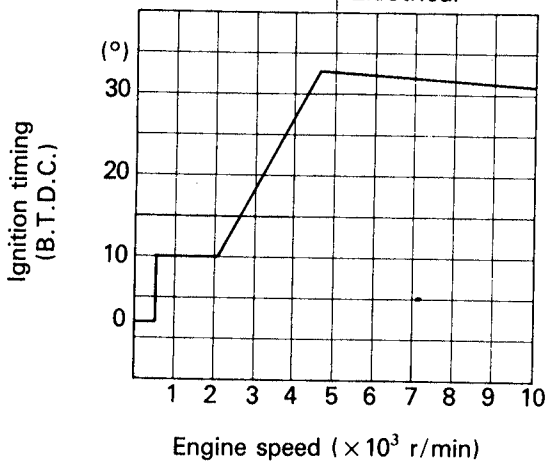

Model	YFM350XA
Rectifiter:	
-Model/Manufacturer	SH235-12/SHINDENGEN
Capacity	15A
Withstand Voltage	240V
Battery:	
Specific Gravity	1.280
Electric Starter System:	
Type	Constant Mesh
Starter Motor:	
Model/Manufacturer	DB5DT/NIPPONDENSO
Out put	0.7 Kw
Armature Coil Resistance	0.011 ~ 0.013Ω at 20°C (68°F)
Brush Overall Length	12 mm (0.47 in)
(Min)	8.5 mm (0.33 in)
Brush Spring Pressure	650 ~ 950 g (22.9 ~ 33.5 oz)
Commutator Dia	28 mm (1.10 in)
(Min)	27 mm (1.06 in)
Mica Undercut	0.6 mm (0.024 in)
Starter Switch:	
Model/Manufacturer	MS5D-191/HITACH
Amperage Rating	100A
Coil Winding Resistance	3.9 ~ 4.7Ω
Circuit Breaker:	
Type	Fuse
Amperage for Individual Circuit × Quantity	
Main	15A × 1

GENERAL TORQUE SPECIFICATIONS

This chart specifies torque for standard fasteners with standard I.S.O. pitch threads. Torque specifications for special components or assemblies are included in the applicable sections of this book. To avoid warpage, tighten multi-fastener assemblies in a crisscross fashion, in progressive stages, until full torque is reached. Unless otherwise specified, torque specifications call for clean, dry threads. Components should be at room temperature.

A (Nut)	B (Bolt)	General torque specifications		
		Nm	m•kg	ft•lb
10 mm	6 mm	6	0.6	4.3
12 mm	8 mm	15	1.5	11
14 mm	10 mm	30	3.0	22
17 mm	12 mm	55	5.5	40
19 mm	14 mm	85	8.5	6.1
22 mm	16 mm	130	13.0	94

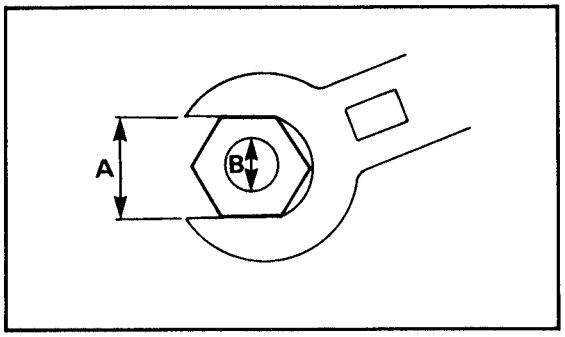

A: Distance across flats
B: Outside thread diameter

DEFINITION OF UNITS

Unit	Read	Definition	Measure
mm cm	millimeter centimeter	10^{-3} meter 10^{-2} meter	Length Length
kg	kilogram	10^3 gram	Weight
N	Newton	1 kg × m/sec^2	Force
Nm m•kg	Newton meter Meter kilogram	N × m m × kg	Torque Torque
Pa N/mm	Pascal Newton per millimeter	N/m^2 N/mm	Pressure Spring rate
L cm^3	Liter Cubic centimeter	—	Volume or capacity
r/min	Rotation per minute	—	Engine speed

LUBRICATION DIAGRAMS

① Camshaft
② Oil cleaner
③ Main axle
④ Drive axle
⑤ Crankshaft
⑥ Oil filter
⑦ Oil pump
⑧ Counter axle
⑨ Out-put axle

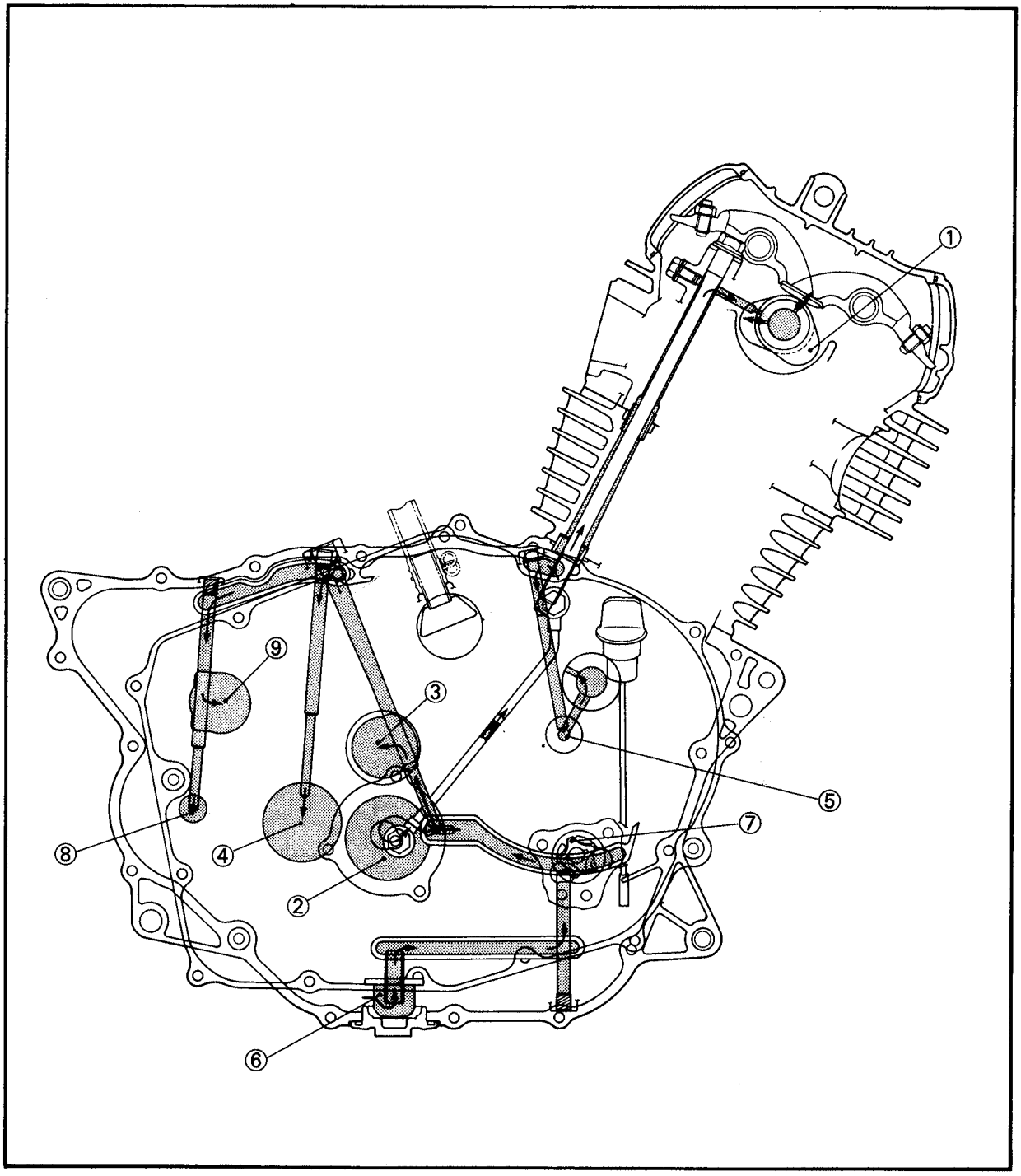

LUBRICATION DIAGRAMS

① Camshaft
② Oil cleaner
③ Main axle
④ Drive axle
⑤ Crankshaft
⑥ Oil filter
⑦ Oil pump
⑧ Counter axle
⑨ Out-put axle

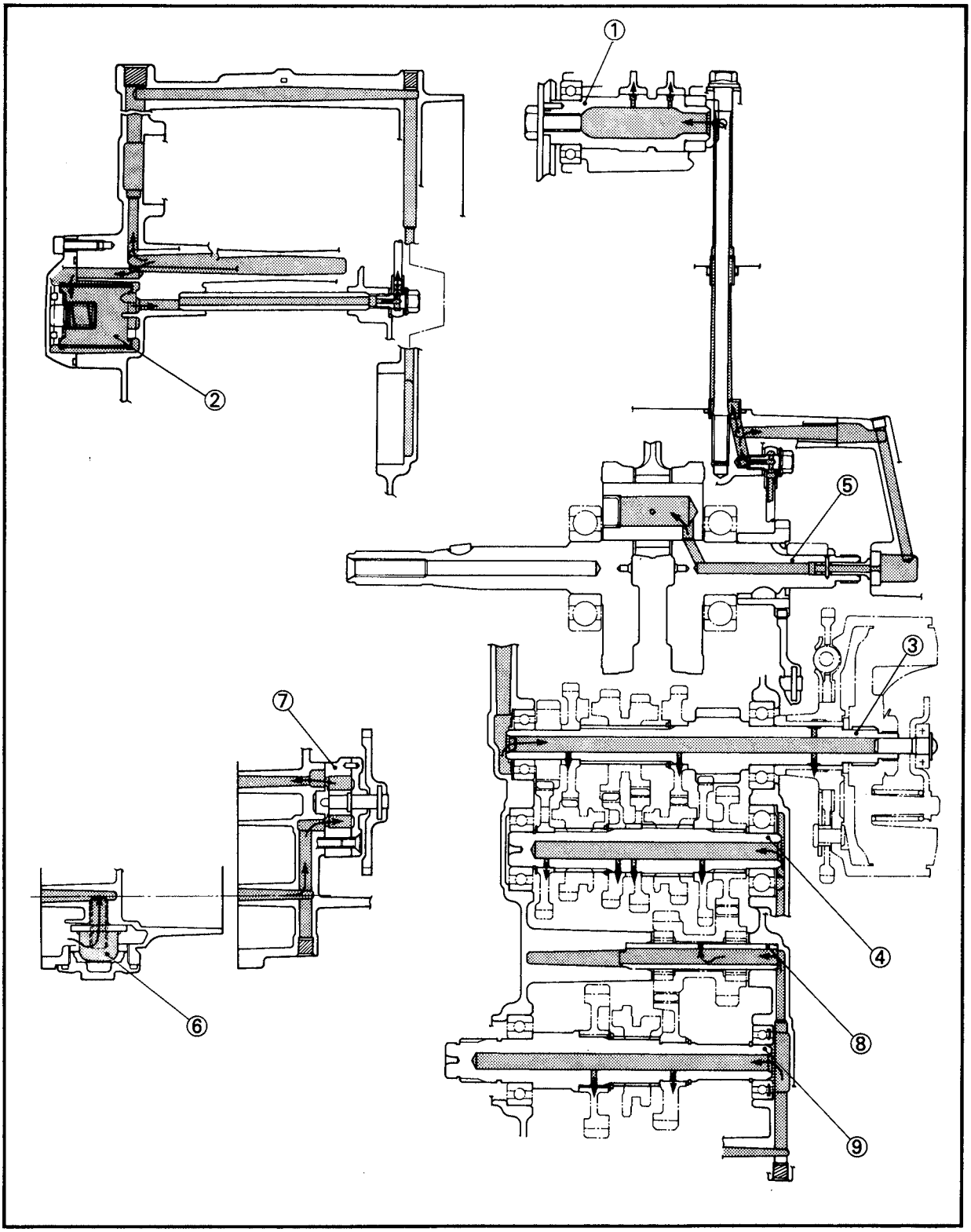

CABLE ROUTING

① Brake hose
② Clutch switch
③ Brake cable
④ Clutch cable
⑤ Brake hose
⑥ Thbrottle cable
⑦ Band
⑧ Handlebar switch (Left)
⑨ Main switch

[A] Pass the breather pipe through the hole on the handlebar protector.
[B] Route outside the clamp and between the wire harness and the frame pipe.
[C] Route inside the throttle cable and brake hose.

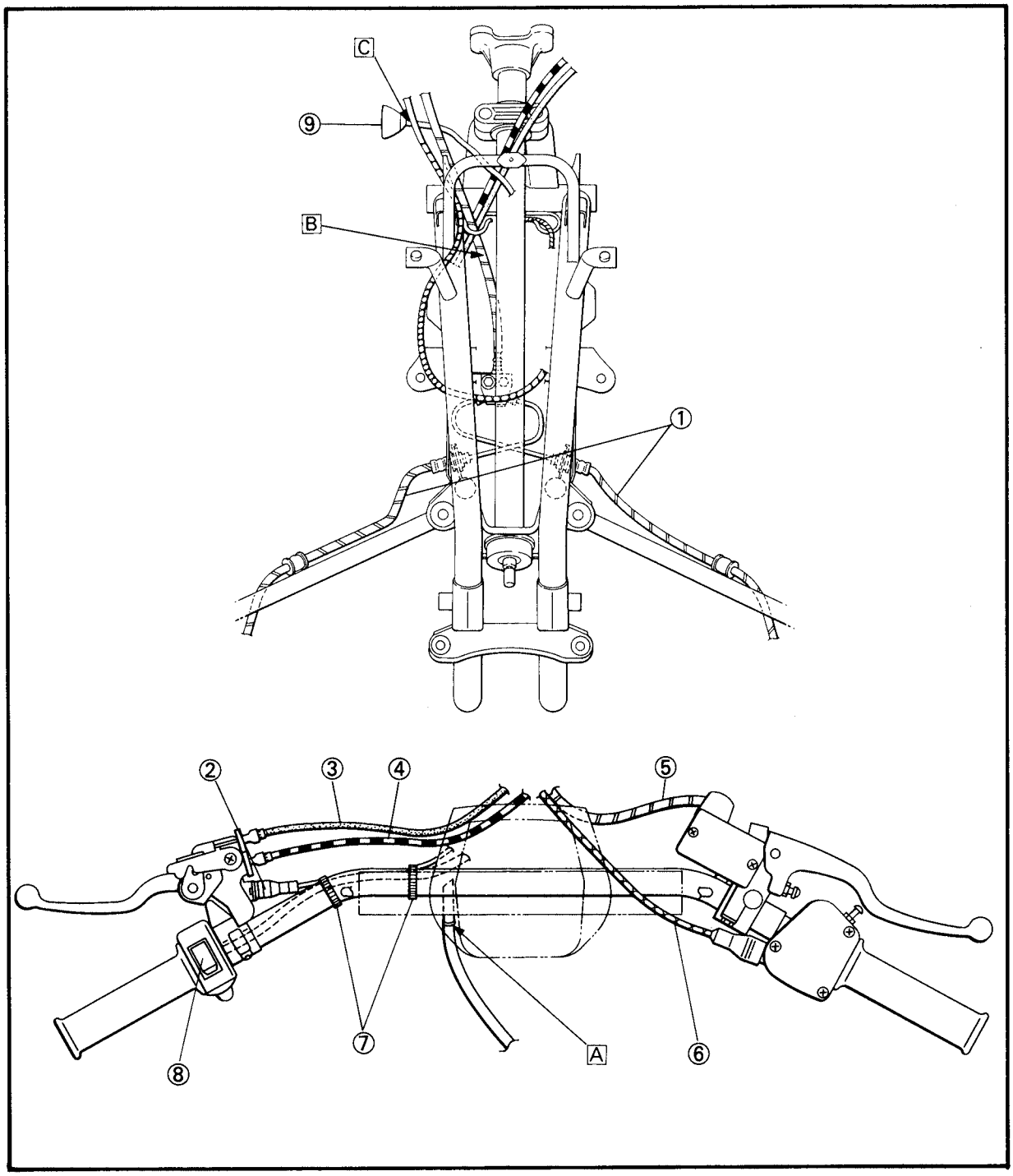

① Ground bolt
② Headlight
③ To right headlight
④ Main switch cord
⑤ Clutch switch cord
⑥ Handlebar switch lead
⑦ Band
⑧ Main switch
⑨ Pilot lamp
⑩ Air vent hose
⑪ Fuel hose
⑫ Crankcase breather hose
⑬ Ground lead
⑭ Carburetor overflow hose
⑮ Starter relay
⑯ Starting circuit cut-off relay
⑰ Neutral switch relay
⑱ Fuse holder
⑲ Taillight unit
⑳ Battery breather hose
㉑ Rubber boot
㉒ Reservoir hose
㉓ Clamp
㉔ Neutral switch lead
㉕ CDI magneto lead
㉖ Fuel tank breather hose
[A] Clamp the leads securely and the band must be tight.
[B] Install the main switch on the right side of the front panel.
[C] Pass the air vent hose through the hole on the fuel tank rubber damper.
[D] Pass the carburetor overflow hose between the rear arm head pipe and the rear shock absorber.
[E] Pass the carburetor overflow hose through the holder on the frame.
[F] Pass the brake hose along the curve of the cleaner case.
[G] Clamp the cable lead.
[H] Clamp the CDI magneto lead.
[I] Route behind the breather pipe.
[J] Pass the throttle cable through the holder.
[K] Pass the battery breather hose through the inside of frame bracket.
[L] Pass the battery breather hose through the holder.

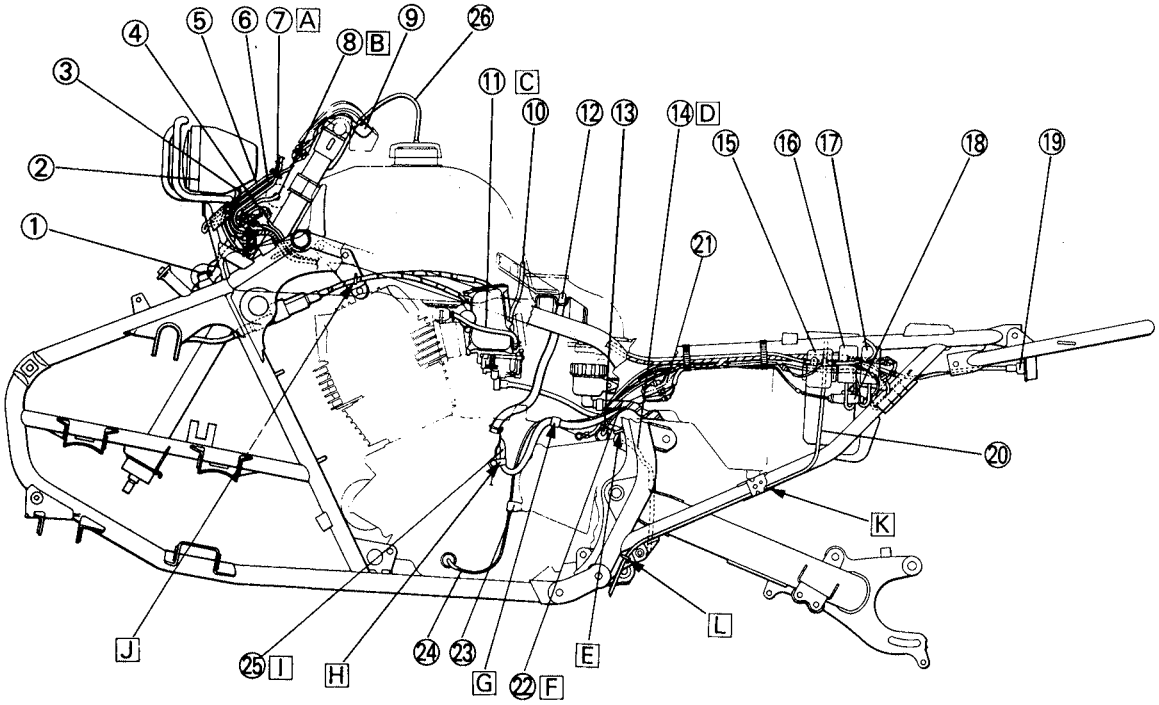

① Ground screw
② Rear shock absorber
③ Starter motor lead
④ Starter motor
⑤ Brake hose
⑥ Reverse switch
⑦ Brake cable
⑧ Brake hose
⑨ Rectifier/Regulator
⑩ CDI unit

[A] The leads must be forked up.
[B] Pass the wire harness and starter motor lead through the holder.
[C] Route the leads in front of the fuel tank securing bolt (Right side).
[D] Route behind the starter motor lead.
[E] Pass the lead through the welded holder on the frame.
[F] Route behind the clutch cable and brake cable.
[G] Route cutside the reservoir hose.

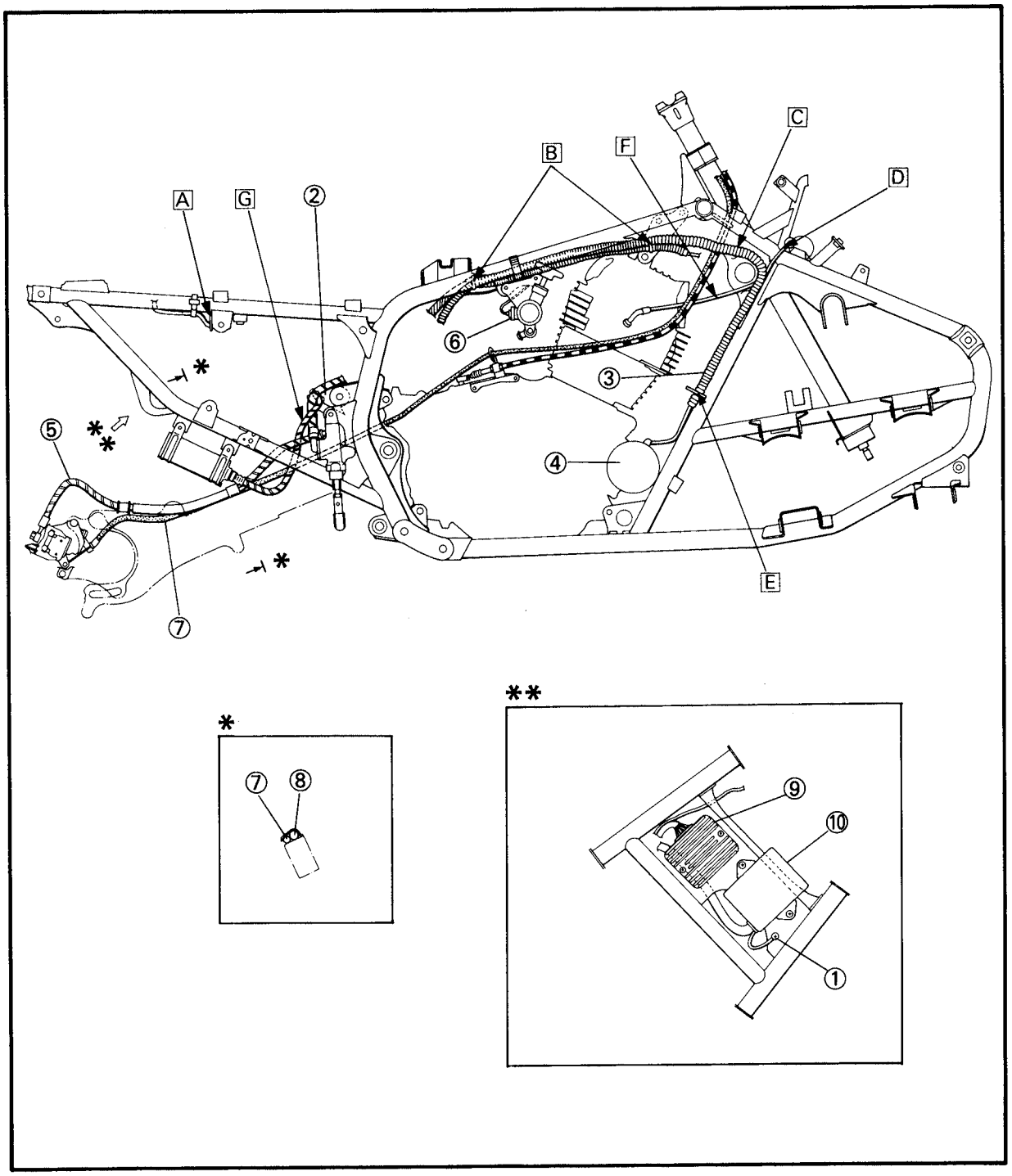

① Ignition coil
② Pilot lamp (Neutral)
③ Wire harness
④ Battery
⑤ Positive lead
⑥ Switch cord clamp
⑦ Pilot lamp (Reverse)

A Aligh the marking tape at the position of the clamp.
B Pass the leads through the hole on the rear fender.
C Route the positive lead carefully.

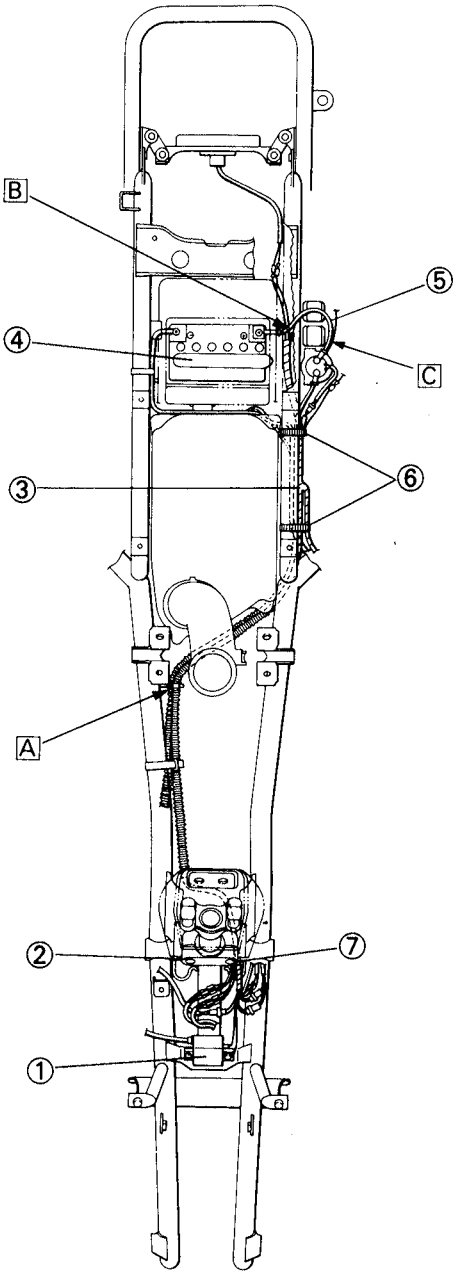

PERIODIC INSPECTIONS AND ADJUSTMENTS

INTRODUCTION

This chapter includes all information necessary to perform recommended inspections and adjustments. These preventive maintenance procedures, if followed, will ensure more reliable vehicle operation and a longer service life. The need for costly overhaul work will be greatly reduced. This information applies to vehicles already in service as well as new vehicles that are being prepared for sale. All service technicians should be familiar with this entire chapter.

PERIODIC MAINTENANCE/LUBRICATION

Item	Remarks	Initial			Every	
		1 month	3 months	6 months	6 months	1 year
Valve(s)*	Check valve clearance. Adjust if necessary.	○		○	○	○
Spark plug(s)	Check condition. Clean or replace if necessary.	○	○	○	○	○
Air filter	Clean. Replace if necessary.		○	○	○	○
Carburetor*	Check idle speed/starter operation. Adjust if necessary.		○	○	○	○
Fuel line*	Check fuel hose for cracks or damage. Replace if necessary.			○	○	○
Engine oil	Replace (Warm engine before draining).	○		○	○	○
Engine oil filter	Replace			○	○	○
Engine oil strainer	Clean	○		○		○
Drive chain	Check and adjust slack/alignment/clean/lube.	○	○	○	○	○
Brake*	Check operation. Adjust if necessary.	○	○	○	○	○
Clutch*	Check operation. Adjust if necessary.	○		○	○	○
Wheels*	Check balance/damage/runout. Repair if necessary.	○		○	○	○
Wheel bearings*	Check bearings assembly for looseness/damage. Replace if damaged.	○		○	○	○
Steering system*	Check operation/replace if damaged. Check toe-in/adjust if necessary.	○	○	○	○	○
Lower arm pivot and steering shaft*	Lubricate every 6 months.***			○	○	○
Rear arm pivot*	Lubricate every 6 months.***			○	○	○
Fittings/Fasteners*	Check all chassis fittings and fasteners. Correct if necessary.	○	○	○	○	○
Battery*	Check specific gravity. Check breather pipe for proper operation. Correct if necessary.	○	○	○	○	○

* It is recommended that these items be serviced by a Yamaha dealer.
** Medium weight wheel bearing grease.
*** Lithium soap base grease.

WB2AA003

ENGINE

VALVE CLEARANCE ADJUSTMENT

NOTE:

- The valve clearance should be adjusted when the engine is cool to the touch.
- The piston must be at Top Dead Center (TDC) on compression stroke to check or adjust the valve clearance.

1. Remove:
   - Seat

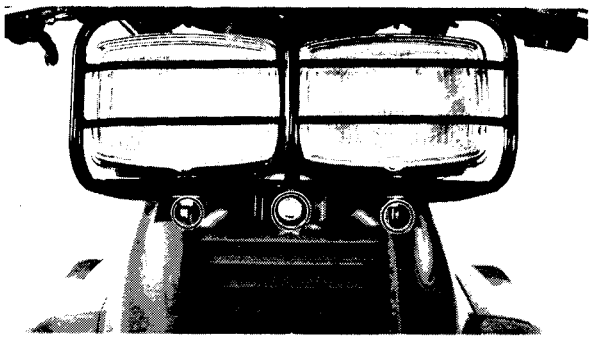

2. Remove:
   - Head lightunit assembly

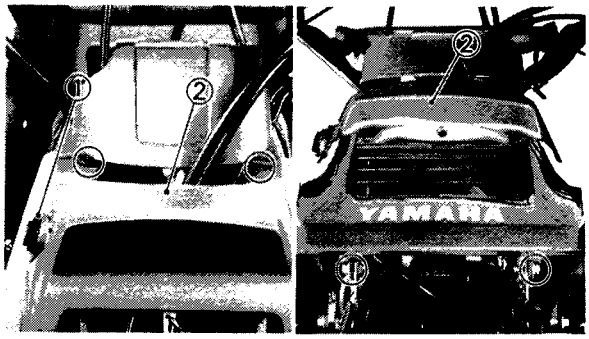

3. Remove:
   - Main switch ①
   - Front panel ②

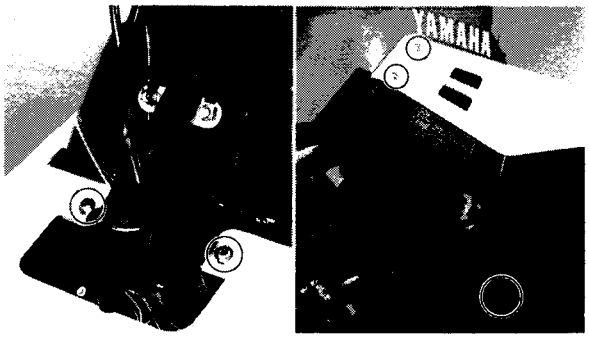

4. Remove:
   - Front fender

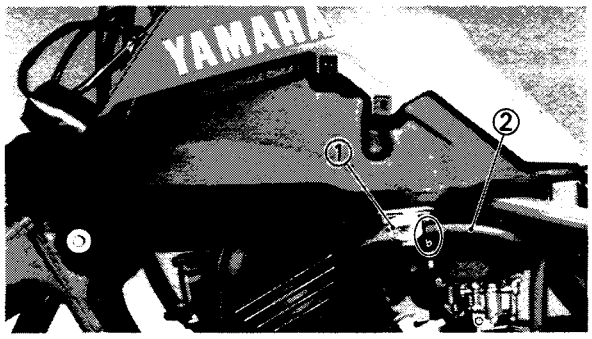

5. Turn the fuel cock to the "OFF" ① position.

6. Disconnect:
- Fuel hose ②

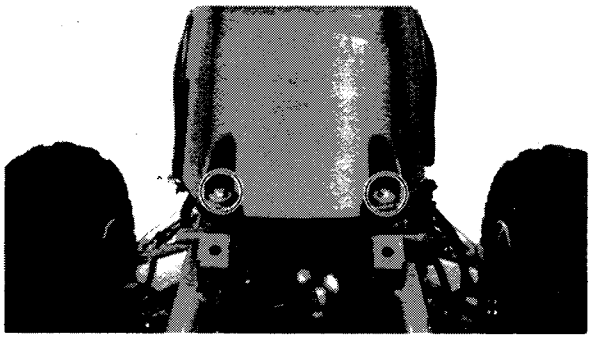

7. Remove:
- Fuel tank

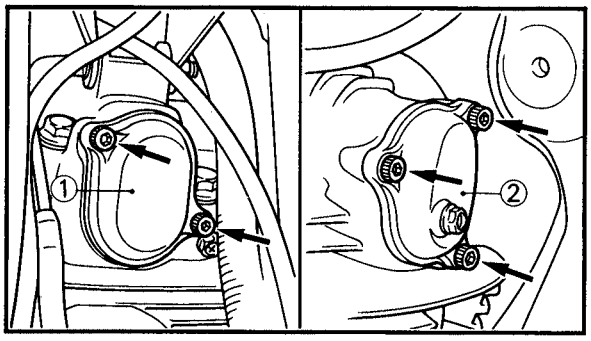

8. Remove:
- Tappet cover ① (intake)
- Tappet cover ② (exhaust)

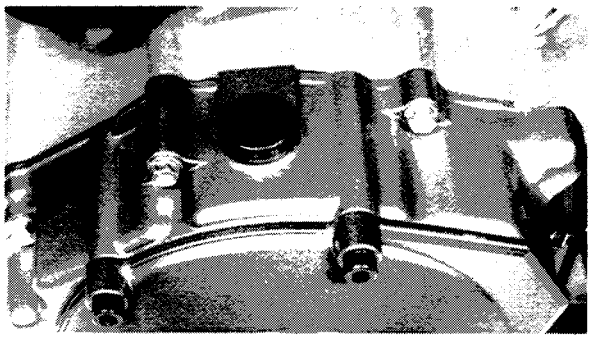

9. Remove:
- Timing window plug

10. Check:
- Valve clearance
  Out of Specification → Adjust

	Valve clearance (cold): **Intake valve** **0.06 ~ 0.10 mm** **(0.00236 ~ 0.00394 in)** **Exhaust valve** **0.16 ~ 0.20 mm** **(0.00630 ~ 0.00787 in)**

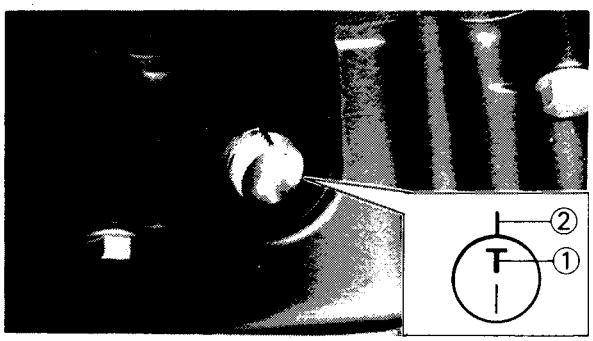

****

Checking steps:

- Turn the crankshaft counterclockwise with a wrench.
- Align the "T" mark ① on the crankshaft web with the stationary pointer ②.

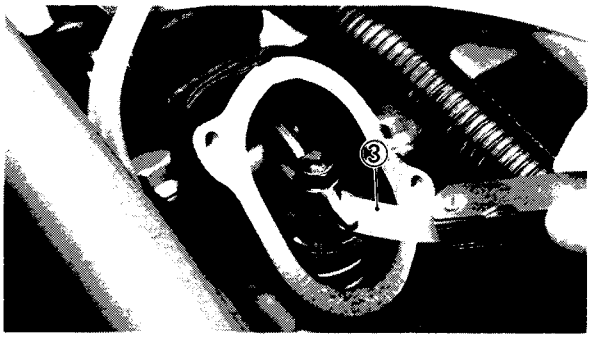

- Measure the valve clearance by using a feeler gauge ③.

****

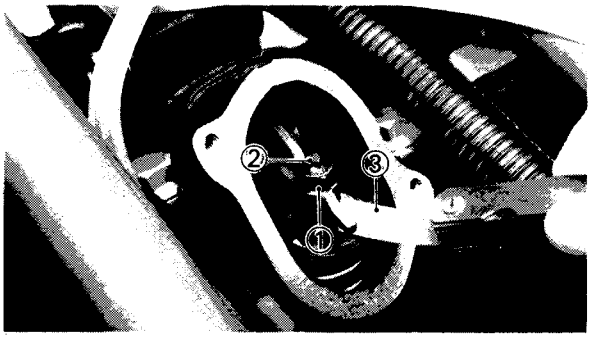

11. Adjust:
- Valve clearance

****

Adjustment steps:

- Loosen the locknut ①.
- Insert the feeler gauge ③ between the adjuster end and the valve end.

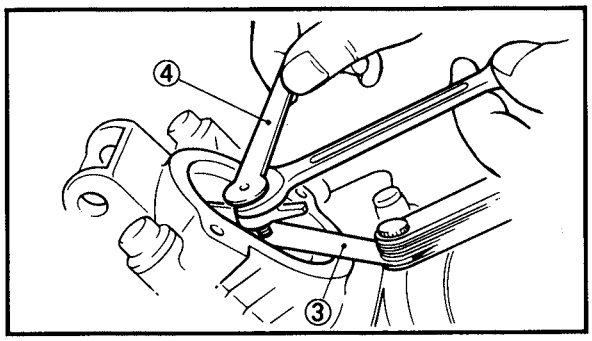

- Turn the adjuster ② in or out with the valve adjusting tool ④ until specified clearance is obtained.

Turning in → Valve clearance is decreased.
Turning out → Valve clearance is increased.

	Valve adjusting tool: **P/N YM-08035**

- Hold the adjuster to prevent it from moving and thoroughly tighten the locknut.

	Locknut: **20 Nm (2.0 m · kg, 14 ft · lb)**

- Measure the valve clearance.
- If the valve clearance is incorrect, repeat above steps until the specified clearance is obtained.

****

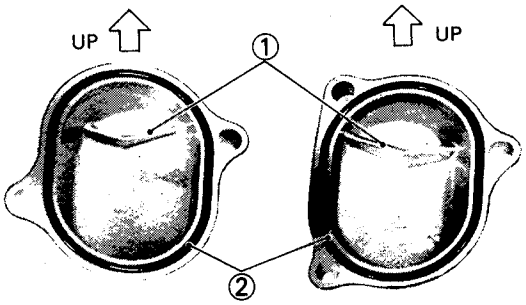

12. Install:
- Tappet cover(exhaust)
- Tappet cover(intake)

NOTE:
- Install the tappet covers with their ridge facing upward ①.
- Check the o-rings ② for damage. If damaged, replace.

	Tappet cover: 10 Nm (1.0 m · kg,7.2 ft · lb)

13. Install:
- Timing window plug

WB2AA009

SPARK PLUG INSPECTION

1. Remove:
- Spark plug

2. Inspect:
- Spark plug type
  Incorrect→Replace.

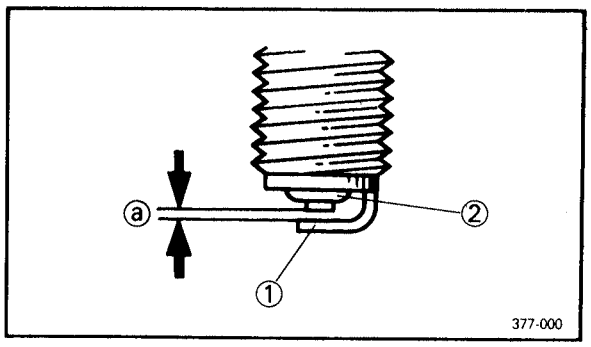

Standard spark plug:
D8EA (N.G.K.)
X24ES-U (N.D.)

3. Inspect:
- Electrode ①
  Wear/Damage→Replace.
- Insulator ②
  Abnormal color→Replace
  Normal color is a medium-to-light tan color.

4. Clean the spark plug with a spark plug cleaner or wire brush.

5. Measure:
- Plug gap ⓐ
  Use a Wire Gauge or Feeler Gauge.
  Out of specification→Replace.

Spark plug gap:
0.6 ~ 0.7 mm (0.024 ~ 0.028 in)

7. Tighten:
- Spark plug

Spark plug:
17.5 Nm (1.75 m · kg, 12.5 ft · lb)

NOTE:
- Before installing a spark plug, clean the gasket surface and plug surface.
- If a torque wrench is not available when you are installing a spark plug, a good estimate of the correct torque is 1/4 to 1/2 turns part finger tight. Have the spark plug torque to the correct value as soon as possible with a torque wrench.

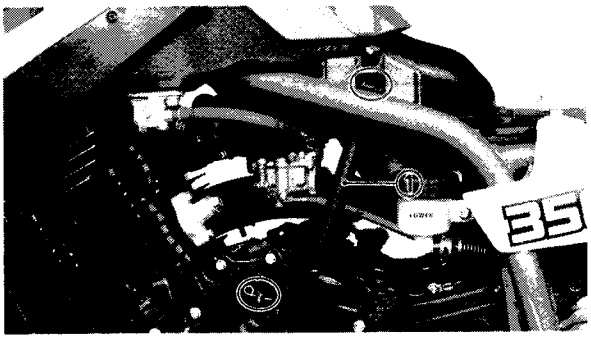

WB000001

CRANKCASE VENTILATION SYSTEM

1. Remove:
- Seat

2. Inspect:
- Crankcase ventilation hose ①
  Cracks/Damage→Replace.

WB000002

FUEL LINE

1. Inspect:
- Fuel hoses
  Cracks/Damage→Replace.

WB000003

INTAKE MANIFOLD

1. Tighten:
- Carburetor clamps
- Carburetor joint bolts
2. Inspect:
- Carburetor joint
- Gaskets
  Cracks/Damage→Replace.

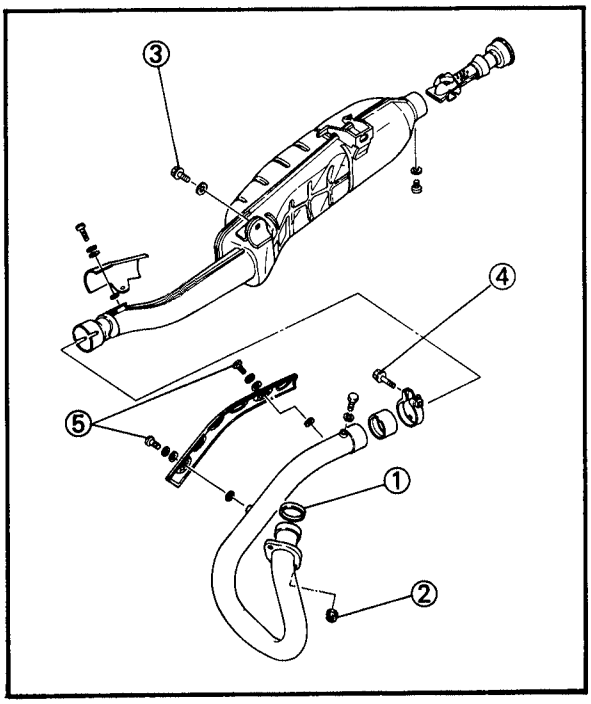

WB000004

EXHAUST SYSTEM

1. Inspect:
- Exhaust pipe gasket(s) ①
  Damage→Replace.
  Exhaust gas leakage→Repair.
2. Tighten:
- Exhaust pipe bolts
- Muffler bolts

	Exhaust pipe nut ② : **12 Nm (1.2 m · kg,8.7 ft · lb)** **Muffler mounting bolt ③ :** **27 Nm (2.7 m · kg,19 ft · lb)** **Exhaust pipe/Muffler clamp bolt ④ :** **20 Nm (2.0 m · kg,14 ft · lb)** **Protector screws ⑤ :** **8 Nm (0.8 m · kg,5.8 ft · lb)**

WB3AE004

IDLING SPEED ADJUSTMENT

1. Start the engine and let it warm up for several minutes.

2. Attach:
- Inductive tachometer (to the spark plug lead).

	Inductive tachometer: P/N YU-8036-A

3. Check:
- Engine idling speed
  Out of specification → Adjust.

	Engine idling speed: 1,450 ~ 1,550 r/min

4. Adjust:
- Engine idling speed

****

Adjustment steps:
- Turn in the pilot air screw ① until it is lightly seated.
- Turn out the pilot air screw for the specified number of turns.

Pilot air screw: 1 and 1/4 turns out

- Turn the throttle stop screw ② in or out until specified idling speed is obtained.

Turning in→Idling speed becomes higher.
Turning out→Idling speed becomes lower.

****

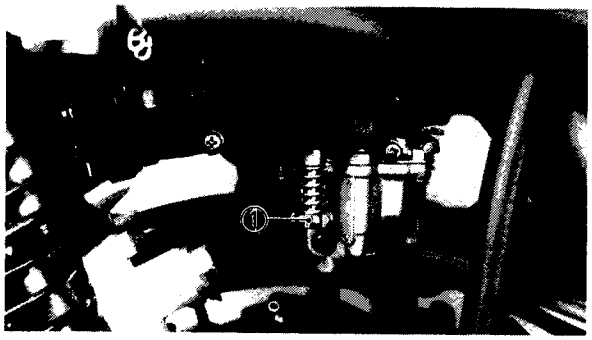

5. Adjust:
- Throttle cable free play
  Refer to "THROTTLE CABLE FREE PLAY ADJUSTMENT" section.

	Free play: **3 ~ 5 mm (0.12 ~ 0.20 in)**

WB2AA008

TIMING CHAIN ADJUSTMENT

Adjustment free.

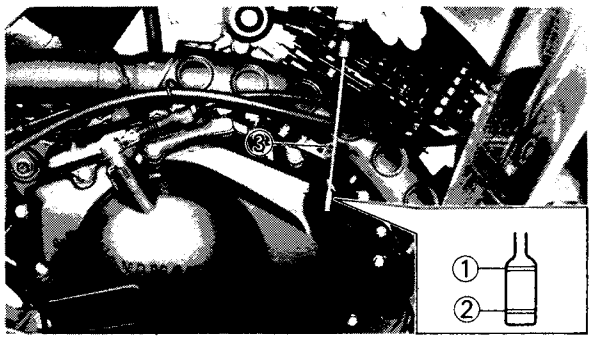

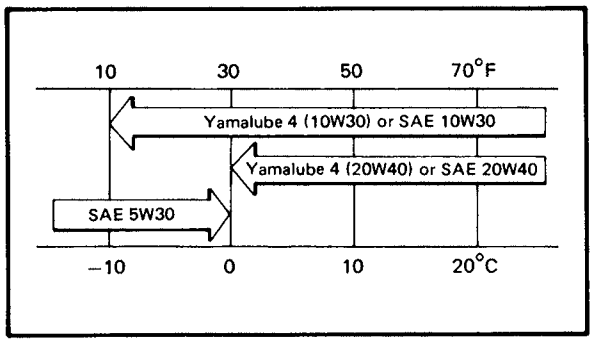

WB000005

ENGINE OIL LEVEL INSPECTION

1. Place the machine on a level surface.
2. Inspect:
- Oil level
  Oil level should be between maximum ① and minimum ② marks.
  Oil level low→Add oil to proper level.

NOTE:

Do not screw the dipstick ③. Insert the dipstick lightly when inspecting the oil level.

	Recommended oil: **Follow the left chart.**

NOTE:

Recommended oil classification:
API Service"SE","SF"type or equivalent (e.g. "SF—SE—CC","SF—SE—SD"etc).

CAUTION:

Do not allow foreign material to enter the crankcase.

3. Start the engine and let it warm up for several minutes.

4. Stop the engine and inspect the oil level once again.

NOTE:
Wait a few minutes until level settles before inspecting the oil level.

WARNING
Never attempt to remove the dipstick just after high speed operation. The heated oil could spout out, causing danger. Wait until the oil cools down.

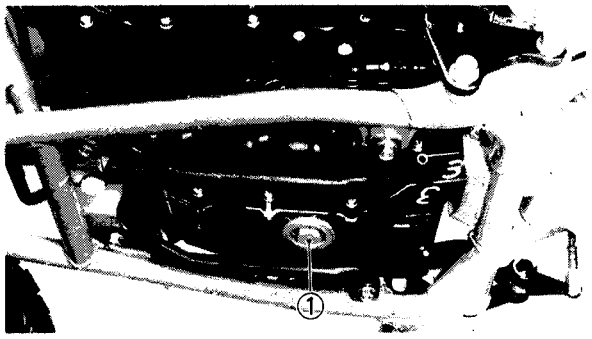

WB000006

ENGINE OIL REPLACEMENT

1. Place the machine on a level surface.
2. Start the engine and let it warn up for several minutes.
3. Stop the engine and place an oil pan under the engine.

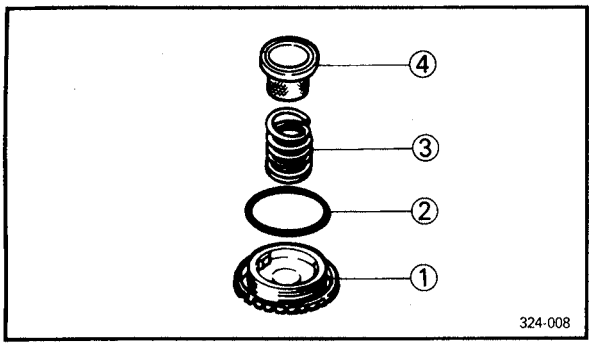

4. Remove:
- Dipstick
- Drain plug ① (crankcase)
- O-ring ②
- Compression spring ③
- Oil strainer ④

Drain the crankcase of its oil.

CAUTION:
When removing the drain plug the compression spring, oil strainer and o-ring will fall off. Take care not to lose these parts.

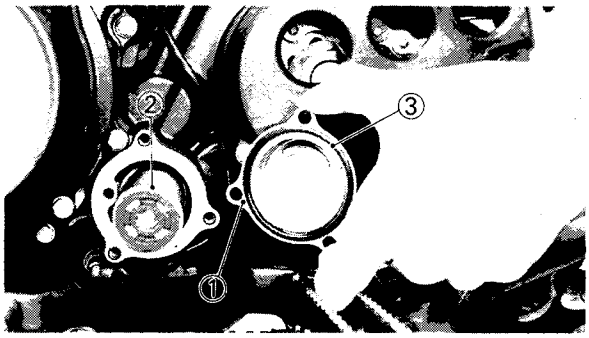

5. if the oil filter is replaced with oil change, remove the following parts and reinstall then.
- Oil filter cover ①
- Oil filter ②

****

Installation steps:
- Inspect the o-ring ③ . If it is damaged, replace it with a new one.
- Apply lithium soap base grease to the o-ring.
- Install the oil filter, o-ring and oil filter cover.

	Bolts(oil filter cover): **10 Nm (1.0 m · kg, 7.2 ft · lb)**

****

6. Install:
- Oil strainer
- Compression spring
- O-ring
- Drain plug(crankcase)

NOTE:

Inspect the o-ring. If it is damaged, replace it with a new one.

CAUTION:

Before reinstalling the drain plug, do not forget to fit the o-ring, compression spring and oil strainer. Be sure you fit each item in the correct position and order.

	Drain plug(crankcase): **43 Nm (4.3 m · kg, 31 ft · lb)**

7. Fill:
- Crankcase

	Oil quantity: **With oil filter change** **2.5L (2.2 Imp qt, 2.6 US qt)** **Without oil filter change** **2.4L (2.1 Imp qt,2.5 US qt)**

Refer to the "ENGINE OIL LEVEL INSPECTION" section.

9. Inspect:
- Oil flow

****

Inspection steps:
- Slightly loosen the oil gallery bolt ① in the cylinder head.

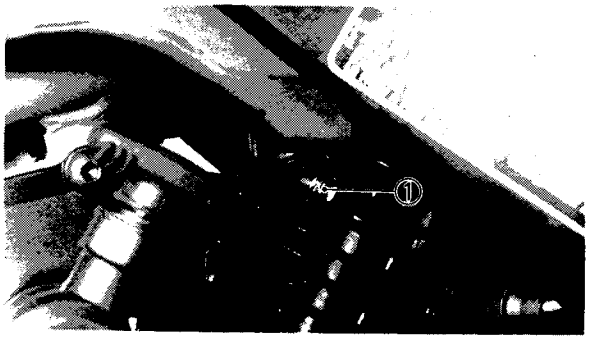

- Start the engine and keep it idling until oil begins to seep from the oil gallery plug. If no oil comes out after one minutes, stop the engine immediately so it will not engine stick.
- Restart the engine after solving the problem(s), and recheck the oil pressure.
- Tighten the oil gallery plug to specification.

Oil gallery plug:
7 Nm (0.7 m · kg ,5.1 ft · lb)

****

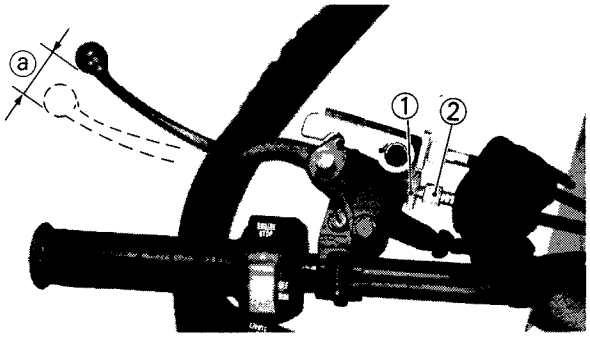

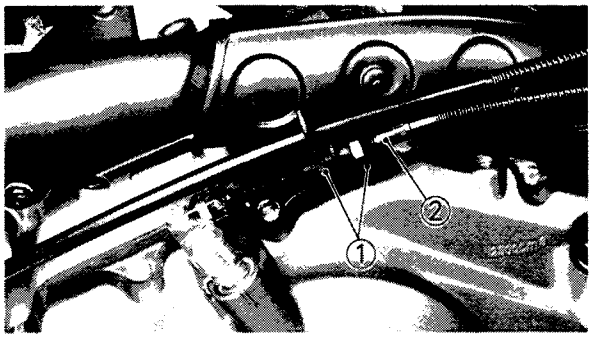

WB2AF000

CLUTCH ADJUSTMENT

1. Check:
- Clutch cable free play ⓐ
  Out of specification → Adjust.

Free play:
5 ~ 10 mm (0.2 ~ 0.4 in)
at clutch lever end

2. Adjust:
- Clutch cable free play

****

Adjustment steps:
- Loosen the locknut(s) ① .
- Turn the adjuster(s) ② in or out until the specified free play is obtained.

Turning in → Free play is increased.
Turning out → Free play is decreased.

- Tighten the locknut(s).

****

WB3AA013

IGNITION TIMING CHECK

NOTE:

Engine idling speed and throttle cable free play should be adjusted properly before checking the ignition timing.

1. Remove:
- Plug

2. Attach:
- Timing light and inductive tachometer (To the spark plug lead.)

	Timing light: **P/N YM-33277-A** **Inductive tachometer:** **P/N YU-8036-A**

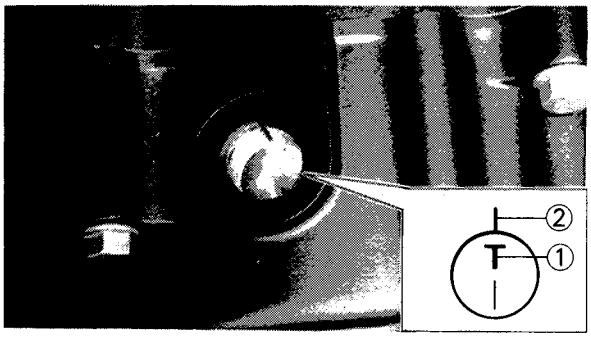

3. Check:
- Ignition timing

****

Checking steps:
- Warm up the engine and keep it at the specified speed.

	Engine speed: **1,450~1,550 r/min**

- Visually check the stationary pointer ② to verify it is within the required firing range ① indicated on the flywheel.
  Incorrect firing range→Check flywheel and /or pickup assembly(tightness damage).

****

4. Install:
- Plug

WB3AB002

COMPRESSION PRESSURE MEASUREMENT

NOTE:
Insufficient compression pressure will result in performance loss.

COMPRESSION PRESSURE MEASUREMENT

1. Check:
- Valve clearance
  Out of specification→Adjust.
  Refer to the "VALVE CLEARANCE ADJUSTMENT" section.

2. Start the engine and let it warm up for several minutes.

3. Stop the engine.

4. Remove:
- Spark plug

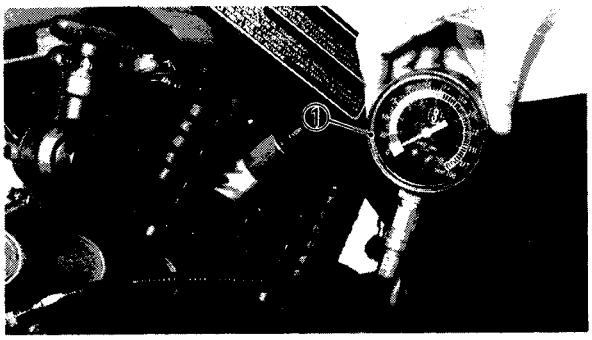

5. Attach:
- Compression gauge ①

	Compression gauge: **P/N YU-33223**

6. Measure
- Compression pressure
  Above the maximum pressure →
  Inspect cylinder head, valve surfaces, and piston crown for carbon deposits.
  Below the minimum pressure →
  Squirt a few drops of oil into affected cylinder and measure again.
- Follow the table below.

Compression pressure (With oil applied into cylinder)	
Reading	**Diagnosis**
Higher than without oil	**Worn or damaged pistons**
Same as without oil	**Defective ring(s), valves, cylinder head gasket or piston is possible.**

Compression pressure (at sea level):
Standard:
850 kPa (8.5 kg/cm², 121 psi)
Minimum:
800 kPa (8.0 kg/cm², 114 psi)
Maximum:
900 kPa (9.0 kg/cm², 128 psi)

****

Measurement steps:

- Crank over the engine with the electric starter (be sure the battery is full charged) with the throttle wide-open until the compression reading on the gauge stabilizes.

WARNING

When cranking the engine, ground all spark plug leads to prevent sparking.

- Repeat the previous steps for the other cylinders.

NOTE:

The difference of compression pressure between the highest and lowest cylinder compression readings should be 100 kpa (1 kg/cm², 14 psi) or less.

****

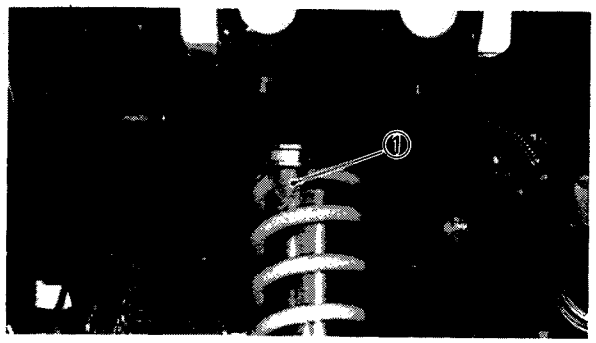

WB2AB005

AIR FILTER CLEANING

NOTE

There is the check hose ① at the bottom of the air filter case. If dust and/or water collects in this hose, clean the air filter element and air filter case.

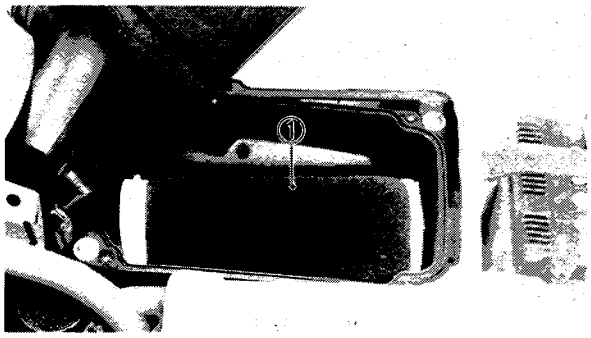

1. Remove:
- Seat
- Air filter case cover
- Air filter assembly ①

NOTE:
Turn the hook ② 90° clockwise and remove the air filter from the guide.

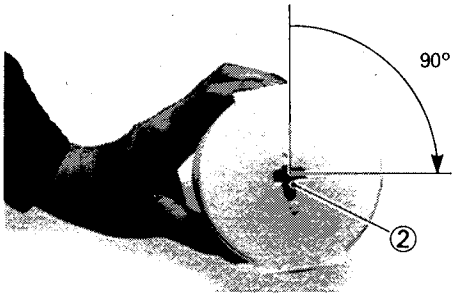

NOTE:
Each time filter maintenance is performed, check the air inlet to the filter case for obstructions. check the air cleaner joint rubber to the carburetor and manifold fittings for an air-tight seal. Tighten all fittings thoroughly to avoid the possibility of unfiltered air entering the engine.

CAUTION:
Never operate the engine with the air filter element removed. Unfiltered air will cause rapid wear of engine parts and possible engine damage. Additionally, operation without the filter element will affect carburetor tuning with subsequent poor performance and possible engine overheating.

2. Inspect:
- Air filter element
  Damaged → Replace.

3. Clean:
- Air filter element

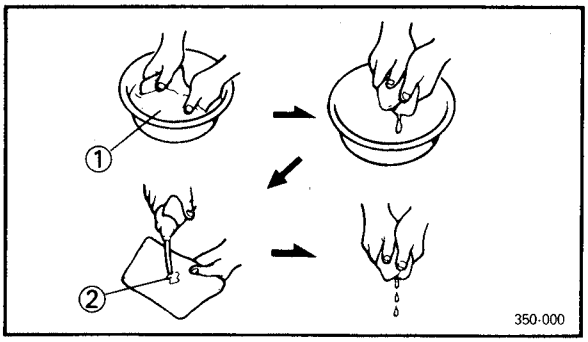

****

Cleaning steps:
- Wash the air filter gently, but thoroughly in solvent ①.

⚠WARNING
Use parts cleaning solvent only. Never use gasoline or low flash point solvents which may lead to fine or explosion.

- Squeeze the excess solvent out of the air filter and let dry.

CAUTION:

Do not twist or wring out the air filter. This could damage the foam material.

- Apply the engine oil ②.

- Squeeze out the excess oil.

NOTE:

The air filter should be wet but not dripping.

****

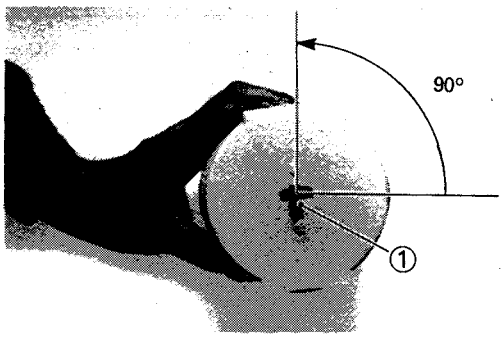

4. Install:
- Air filter
  (onto the guide)

NOTE:

Turn the hook ① 90°counterclockwise.

5. Install:
- Air filter assembly
  (into the air filter case)

NOTE:

- Insert the lobes on the element guide into the receptacles on the filter case.
- Make sure that the sealing surface of the air filter matches the sealing surface of the case so there is no air leak.

6. Install:
- Cover(air filter case)
- Seat

WB2AE009

THROTTLE CABLE ADJUSTMENT

NOTE:

Before adjusting the throttle cable free play, the engine idling speed should be adjusted.

CAUTION:

Before adjusting the throttle lever free play, make sure that the adjusters and locknuts on the carburetor side are fully tightened. If not, the throttle does not operate properly.

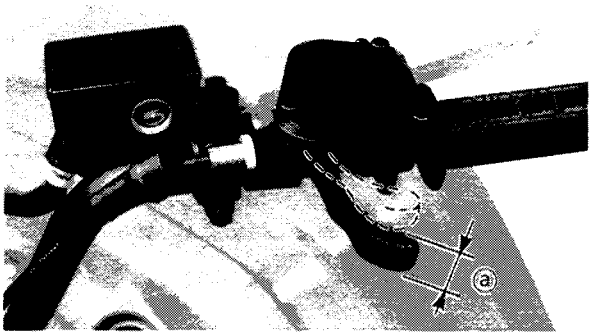

1. Check:
- Throttle cable flee play ⓐ
  Out of specification → Adjust.

	Free play: **3 ~ 5 mm (0.12 ~ 0.20 in)** **at throttle lever end.**

2. Remove
- Seat
- Main switch
- Front panel
- Front fender
- Fuel tank
  Refer to "VALVE CLEARANCE ADJUSTMENT" section.

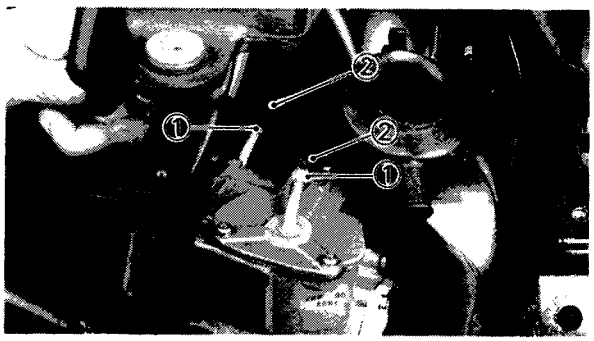

3. Adjust:
- Throttle cable free play

****

Adjustment steps:

First step:
- Loosen the locknut ①.
- Turn the adjuster ② in or out until the specified free play is obtained.

Turning in → Free play is increased.
Turning out → Free play is decreased.

- Tighten the locknut.

	Locknut: **1 Nm (0.1 m · kg, 0.7 ft · lb)**

NOTE:
If the free play cannot be adjusted here, adjust it at the throttle lever side of the cable.

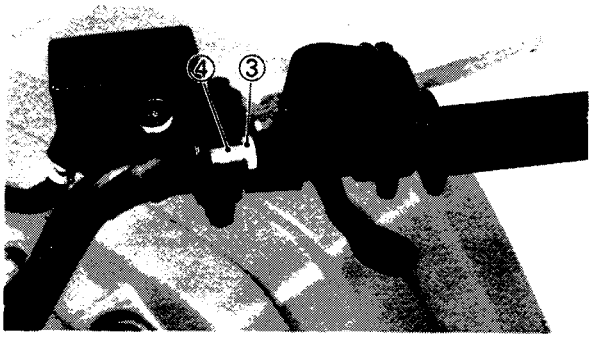

Final step:
- Loosen the locknut ③.
- Turn the adjuster ④ in or out until the specified free play is obtained.

Turning in → Free play is increased.
Turning out → Free play is decreased.

- Tighten the locknut.

⚠ WARNING
After adjusting, turn the handlebar to the right and left, making sure that the engine idling speed does not run faster.

****

4. Install:
- Fuel tank
- Front fender
- Front panel
- Main switch
- Seat

WB000007

SPEED LIMITER ADJUSTMENT

The speed limiter keeps the carburetor throttle from becoming full-open even when the throttle lever is pushed to a maximum. Screwing in the adjuster stops the engine speed from increasing.

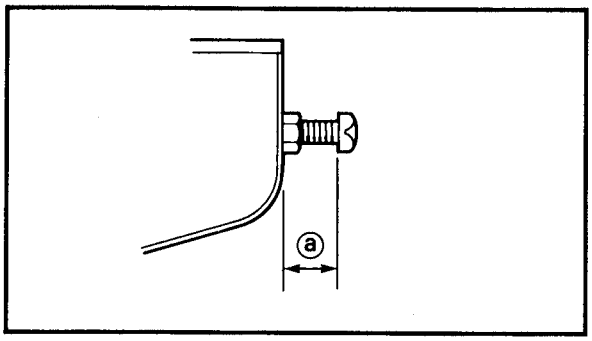

1. Adjust:
- Speed limiter length ⓐ

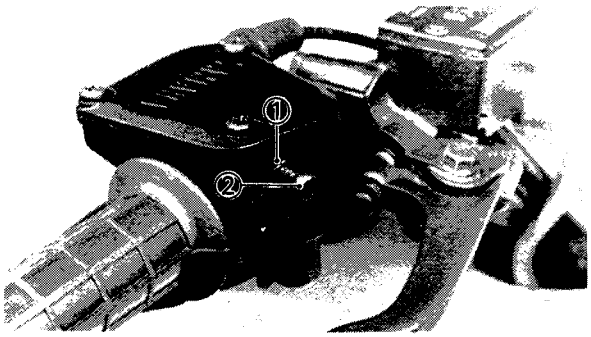

****

Adjustment steps:
- Loosen the locknut ① .
- Turn the adjuster ② in or out until the proper length is attained.

	Standard length: 12mm(0.47in)

- Tighten the locknut.

⚠ WARNING

- **Particularly for a beginner rider, the speed limiter should be screwed in completely. Screw it out little by little as riding technique improves. Never remove the speed limiter from the outset.**
- **For proper throttle lever operation do not turn out the adjuster more then 12mm (0.47in). Also adjust the throttle lever cable play always to 3 ~ 5mm(0.12 ~ 0.20in).**

****

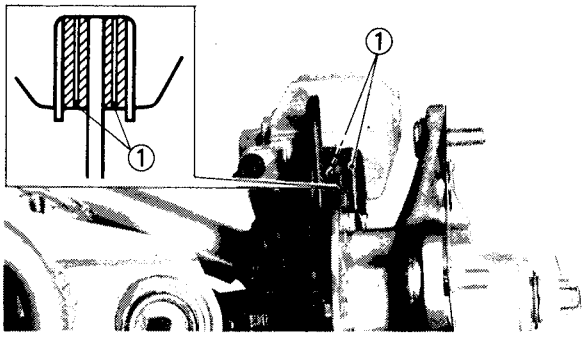

WB2A3009

CHASSIS

BRAKE PAD INSPECTION

Front brake pad:

1. Activate the brake lever or brake pedal.
2. Inspect:
- Brake pad
  Wear indicator ① almost contacts brake disc→Replace brake pad as a set.

Refer to the "BRAKE PAD REPLACEMENT" section.

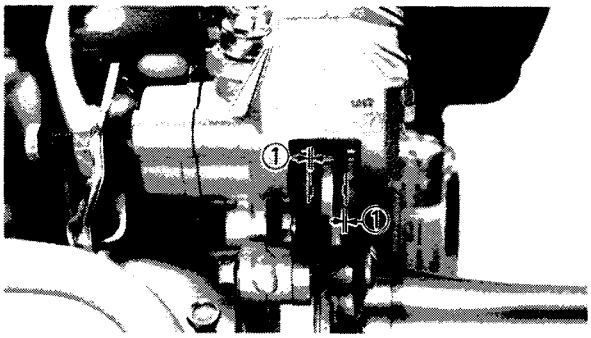

Rear brake pad:

1. Depress the brake lever.
2. Inspect:
- Brake pads
  wear indicator ① almost contacts disc → Replace pads.
  Refer to the "BRAKE PAD REPLACEMENT" section.

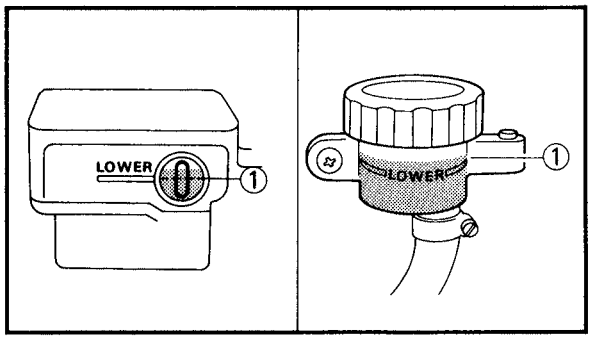

WB2A3008

BRAKE FLUID LEVEL INSPECTION

1. Place the machine on a level surface.
2. Inspect:
- Fluid level
  Fluid level is under "LOWER" level line ①
  →Replenish.

	Recommended fluid: **DOT No.4** **IfDOT No4is not available,** **No.3 can be used**

NOTE:

- If DOT No.4 is not available, DOT No.3 can be used.
- When inspecting the fluid level of the reservoir at the handlebars, make sure the master cylinder top is horizontally level.

CAUTION:

The fluid may erode painted surfaces or plastic parts. Always clean up spilled fluid immediately.

WARNING

- **Use only the designated quality fluid: otherwise, the rubber seals may deteriorate, causing leakage and poor brake performance.**
- **Refill with the same type of fluid; mixing fluids may result in a harmful chemical reaction and lead to poor performance.**
- **Be careful that water does not enter the master cylinder when refilling. Water will significantly lower the boiling point of the fluid and may result in vapor lock.**

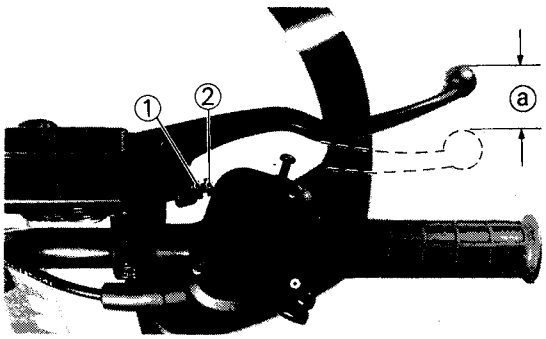

WB2A3000

FRONT BRAKE ADJUSTMENT

1. Check:
- Brake lever free play ⓐ
  Out of specification→Adjust.

	Free play: **4 ~ 8 mm (0.16 ~ 0.31 in)** **at brake lever end**

2. Adjust:
- Brake lever free play

****

Adjustment steps:

- Loosen the locknut(s) ① .
- Turn the adjuster ② in or out until the specified free play is obtained.

Turning in→Free play is increased.
Turning out→Free play is decreased.

- Tighten the locknut.

****

CAUTION:

Make sure that the brake does not drag after adjusting it.

WARNING

A soft or spongy feeling in the brake lever can indicate the presence of air in the brake system. This air must be removed by bleeding the brake system before the motorcycle is operated. Air in the system will cause greatly diminished braking capability and can result in loss of control and an accident. Inspect and bleed the system if necessary.

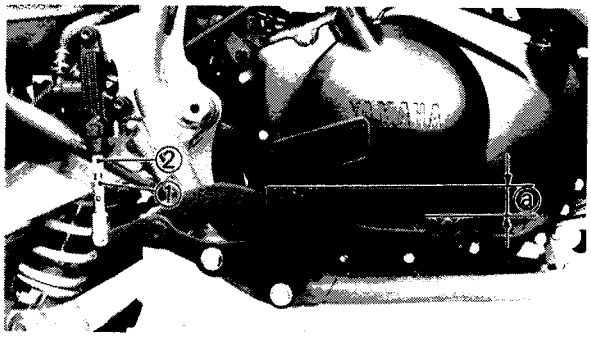

WB2A3004

REAR BRAKE ADJUSTMENT

1. Check:
- Brake pedal height ⓐ
  Out of specification→Adjust.

	Brake pedal height: **10 mm (0.4 in)** **below top of footrest**

2. Adjust:
- Brake pedal height

****

Adjustment steps:

- Loosen the locknut ①
- Turn the adjuster ② in or out until the specified pedal height is obtained.

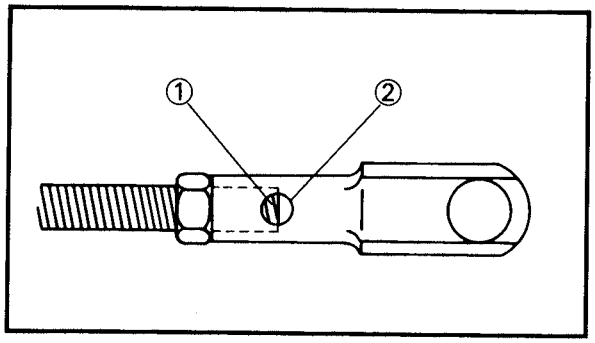

Turning in→Pedal height is increased.
Turning out→Pedal height is decreased.

⚠WARNING

After adjusting the brake pedal height, visually check the adjuster end. The adjuster end must appear within 6.25 mm (0.25 in).

- Tighten the locknut.

	Locknut: **18 Nm (1.8 m · kg, 13 ft · lb)**

****

CAUTION:

Make sure that the brake does not drag after adjusting it.

⚠WARNING

A soft or spongy feeling in the brake pedal can indicate the presence of air in the brake system. This air must be removed by bleeding the brake system before the motorcycle is operated. Air in the system will cause greatly diminished braking capability and can result in loss of control and an accident. Inspect and bleed the system if necessary.

3. Adjust:
- Brake light switch
  Refer to the "BRAKE LIGHT SWITCH ADJUSTMENT" section.

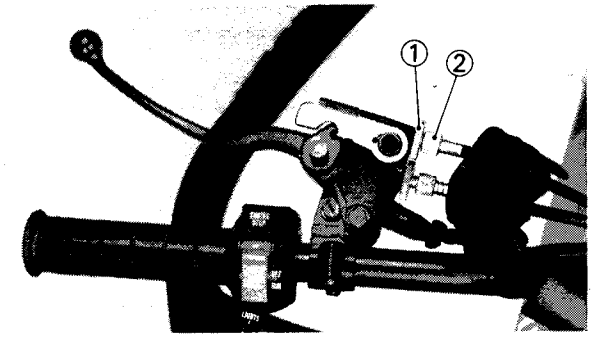

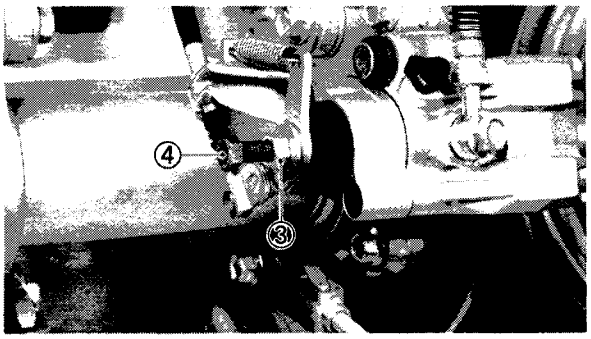

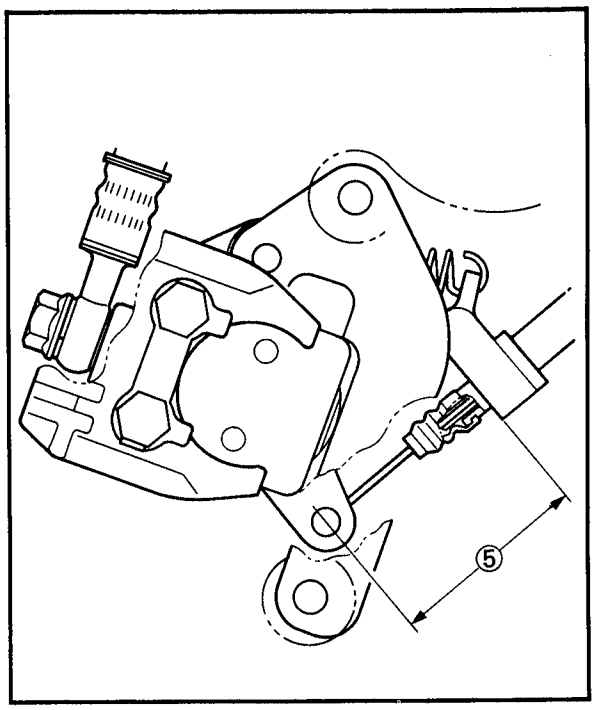

WB000008

PARKING BRAKE ADJUSTMENT

1. Adjust:
- Parking brake

****

Parking brake adjustment steps:

- Apply rear brake pedal 2 or 3 times.

- Loosen the locknut ① and fully loosen the parking brake cable adjuster ② on the left lever holder.
- Loosen the locknut ③ and adjusting bolt ④ on the rear caliper.
- Slowly screw in the adjusting bolt ④ by tool until it feels tight and screw it out 1/4 turn. Then tighten the locknut ③.

	Locknut ③ : **16 Nm (1.6 m · kg, 11 ft · lb)**

CAUTION:

When tightening the locknut, hold the adjusting bolt with a spanner so that the adjusting bolt is not turned together with the locknut.

- Adjust parking brake cable length ⑤ by turning cable adjuster ② in or out.

	Parking brake cable length: **46~50mm(1.81~1.97in)**

- Tighten the locknut ①.

WARNING

After this adjustment is performed, block the rear of the machine off the ground, and spin the rear wheels to ensure there is no brake drag. If any brake drag is noticed, perform the above step again.

****

WB2A3013

AIR BLEEDING (HYDRAULIC BRAKE SYSTEM)

WARNING

Bleed the brake system if:
- **The system has been disassembled.**
- **A brake hose has been loosened or removed.**
- **The brake fluid is very low.**
- **The brake operation is faulty.**

A dangerous loss of braking performance may occur if the brake system is not properly bled.

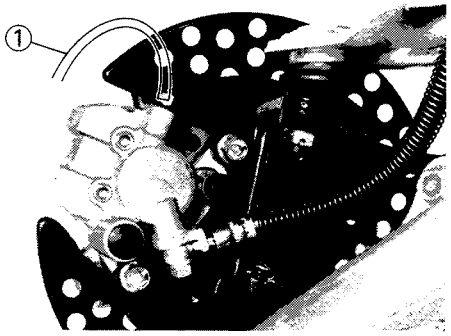

1. Bleed:
- Brake fluid

****

Air bleeding steps:
- Add proper brake fluid to the reservoir.
- Install the diaphragm. Be careful not to spill any fluid or allow the reservoir to overflow.

- Connect the clear plastic tube ① tightly to the caliper bleed screw.
- Place the other end of the tube into a container.
- Slowly apply the brake lever or pedal several times.
- Pull the lever in or push down on the pedal. Hold the lever or pedal in position.

- Loosen the bleed screw and allow the lever or pedal to travel towards its limit.
- Tighten the bleed screw when the lever or pedal limit has been reached; then release the lever or pedal.

	Bleed screw: **5 Nm (0.5 m · kg, 3.6 ft · lb)**

- Repeat above steps until the air bubbles have been removed from the system.

NOTE:

If bleeding is difficult, it may be necessary to let the brake fluid system stabilize for a few hours. Repeat the bleeding procedure when the tiny bubbles in the system have disappeared.

- Add brake fluid to proper level.

WARNING

Check the operation of the brake after bleeding the brake system.

****

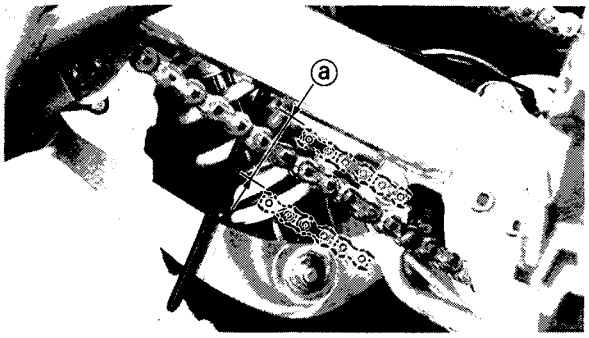

WB000009

DRIVE CHAIN SLACK ADJUSTMENT

Drive chain slack check:

1. Measure:
- Drive chain slack ⓐ
  At the position shown in the photograph.
  Out of specification → Adjust.

****

Drive chain slack measurement steps:

- Elevate the rear wheels by placing a suitable stand under the engine.
- Rotate the rear wheel several times.
- Check the chain slack several times to find the point where the chain is the tightest.

- Check the chain slack when the wheel is in this "tight chain" position.

	Drive chain slack ⓐ : 30~40mm(1.18~1.57in)

- If the slack exceeds the limit 40mm(1.6in), adjust the chain slack.

****

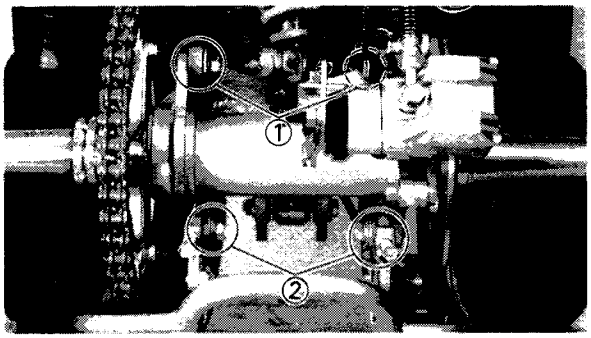

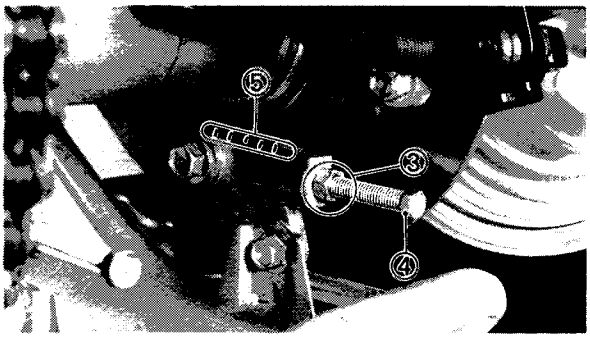

Drive chain slack adjustment:

1. Adjust:
- Drive chain slack

****

Drive chain slack adjustment steps:

- Loosen the rear wheel hub upper bolts ①.
- Loosen the rear wheel hub lower bolts ②.
- Loosen the adjuster locknut ③.

- Adjust chain slack by turning the adjuster ④.

To tighten → Turn adjuster ④ clockwise.
To loosen → **Turn adjuster ④ counter clockwise and push wheel forward.**

- Turn each adjuster exactly the same amount to maintain correct axle alignment. (There are marks ⑤ on each side of chain puller alignment.)

CAUTION:

Excessive chain slack will overload the engine and other vital parts;keep the slack within the specified limits.

- If the chain slack cannot be adjusted, replace the sprockets and drive chain as a set.
- Tighten the rear wheel hub bolt and locknut.

	Rear wheel hub lower bolt: **50 Nm (5.0 m · kg , 36 ft · lb)** **Rear wheel hub upper bolt:** **100 Nm (10 m · kg , 72 ft · lb)** **Locknuts(Chain puller)** **16 Nm (1.6 m · kg , 11 ft · lb)**

NOTE:
The chain should be cleaned and lubricated after every use of the machine.

****

WB2A4025

DRIVE CHAIN LUBRICATION

The chain consists of many parts which work against each other. If the chain is not maintained properly, it will wear out rapidly, therefore, form the habit of periodically servicing the chain. This service is especially necessary when riding in dusty conditions.
This motorcycle has a drive chain with small rubber O-rings between the chain plates. Steam cleaning, high-pressure washes, and certain solvents can damage these O-rings. Use only kerosene to clean the drive chain. Wipe it dry, and thoroughly lubricate it with SAE 30 ~ 50W motor oil. Do not use any other lubricants on the drive chain. They may contain solvents that could damage the O-rings.

Recommended lubricant:
SAE 30 ~ 50 W Motor Oil or chain lubricants suitable for "O-ring" chains.

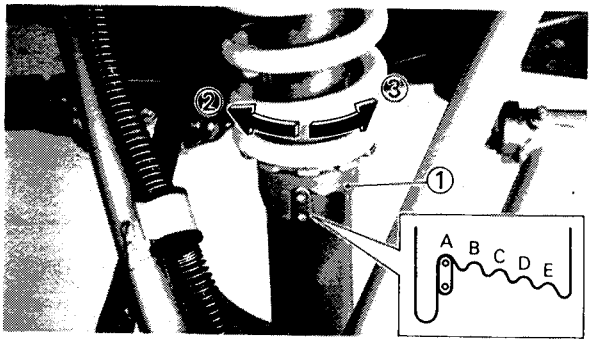

WB000010

FRONT AND REAR SHOCK ABSORBER ADJUSTMENT

Front shock absorber:
Preload:
1.Adjust:
- Spring preload
  Turn the adjuster ① to increase to or decrease the spring preload.

Turning ② way	Spring preload is increased.
Turning ③ way	Spring preload is decreased.

Adjuster position:	
Standard	A
Minimum	A
Maximum	E

Rear shock Absorber:

WARNING

This shock absorber contains highly pressurized nitrogen gas read and understand the following information before handling the shock absorber. The manufacture cannot be held responsible for property damage or personal injury that may result from improper handling.

- **Do not tamper with or attempt to open the cylinder assembly.**
- **Do not subject shock absorber to an open flame or other high hear source. This may cause the unit to explode due to excessive gas pressure.**
- **Do not deform or damage the cylinder in any way. Cylinder damage will result in poor damping performance.**

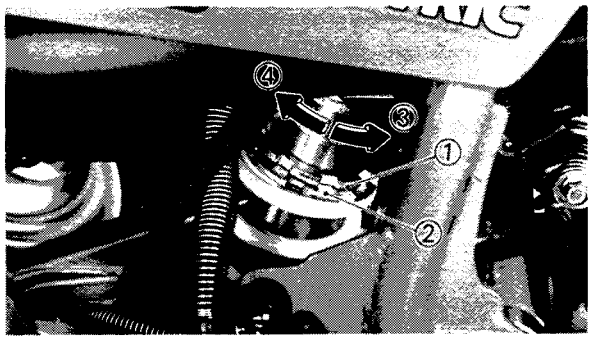

Preload:

1. Loosen:
- Locknut ①
2. Adjust:
- Spring set length
  Turn the adjuster ② to increase or decrease the spring preload.
  Use a Special wrench.

③ Decrease spring preload

④ Increase spring preload

Standard spring length:
(Installed):
228.5 mm (9.0 in)
Minimum length
(Installed):
220.5 mm (8.7 in)
Maximum length
(Installed):
235.5 mm (9.3 in)

NOTE:
One complete turn of the adjuster will change the preload 1.5mm(0.06in). Make changes in increments of 3mm(0.12in) at a time.

CAUTION:
Never attempt to turn the adjuster beyond the maximum or minimum setting.

3. Tighten:
• Locknut

Locknut:
54 Nm (5.4 m · kg,39 ft · lb)

CAUTION:
Always tighten the locknut against the spring adjuster and torque the locknut to specification.

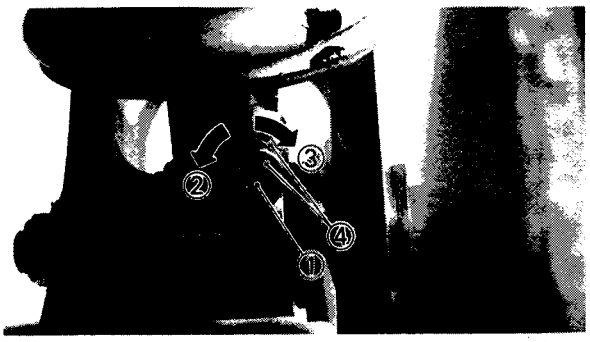

Damping:

1. Adjust:

- Damping

  Turn the adjuster ① to increase ③ or decrease ② the damping.

STD SETTING:	**15 clicks out**
MINIMUM SETTING:	**20 clicks out**
MAXIMUM SETTING:	**0 clicks out**

④ Match marks

CAUTION:

Never attempt to turn the adjuster beyond the maximum or minimum setting.

WB000011

BRAKE AND CHANGE PEDAL/BRAKE AND CLUTCH LEVERS LUBRICATION

Lubricate pivoting peats of each lever and pedal.

SAE 10W30 Motor oil

WB000012

CABLE INSPECTION AND LUBRICATION

****

Cable inspection and lubrication steps:

- Remove the two grip end that secure throttle to handlebar.
- Hold cable end high and apply several drops of lubricant to cable.
- Coat metal surface to disassembled throttle twist grip with suitable all-purpose grease to minimize friction.
- Check for damage to cable insulation. Replace any corroded or obstructed cables.
- Lubricate any cables that do not operate smoothly.

SAE 10W30 Motor oil

****

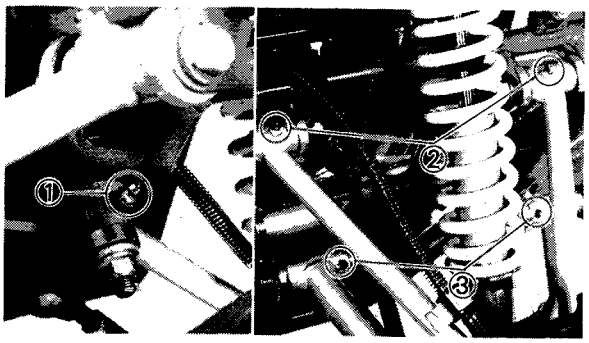

WB000013

STEERING AND SUSPENSION LUBRICATION

1.Lubricate:
- Steering shaft lower bearing ①
- Upper arm pivot ②
- Lower arm pivot ③
- Connecting rod pivot(Upper) ④
- Relay arm pivot(lower) ⑤

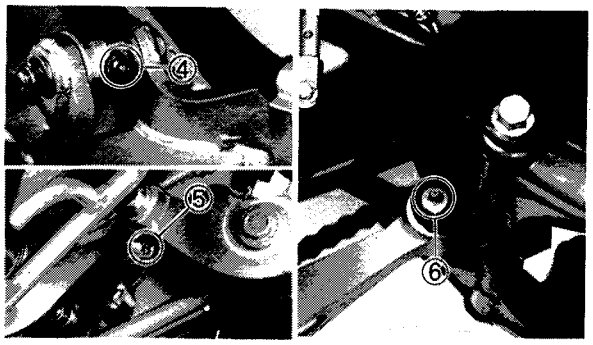

- Relay arm pivot ⑥

Use a grease gun.

	Lithium base grease

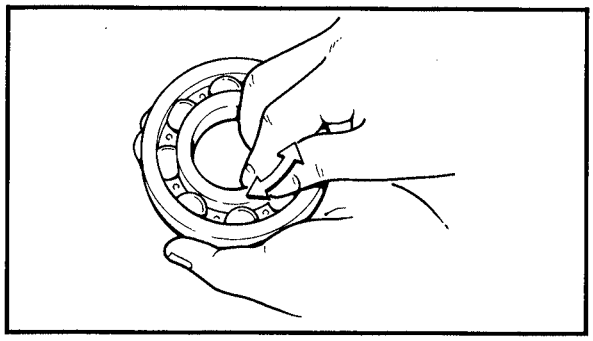

WB000014

WHEEL BEARINGS

1. Check:
- Bearing movement

  Roughness → Replace bearings.

  Raise the wheels and spin the wheel by hand. Check wheel movement and vibration while spinning the wheel.

  Roughness/Excessive vibration → Replace bearings.

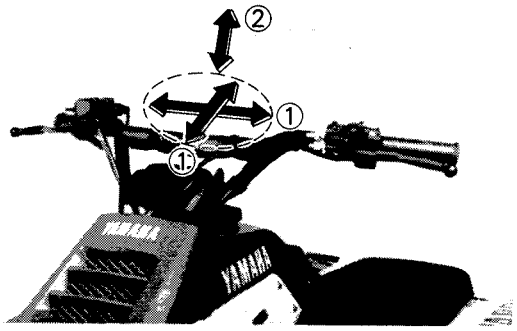

WB000015

STEERING SYSTEM

1. Check
- Steering shaft radial play ①

  Radial play → Replace upper bearing
- Steering shaft thrust play ②

  Thrust play → Replace lower bearing

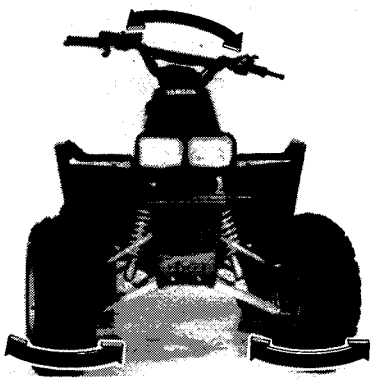

2. Check:
- Steering knuckle ball joints
- Tie-rod ball joints

  Place the machine on a level surface and turn the handlebar quickly left and right.

  Looseness between handlebar and tires → Check ball joints and replace faulty joints.

WB000016

TOE-IN ADJUSTMENT

1. Place the machine on a level surface.
2. Measure:
- Toe-in
  Out of specification → Adjust.

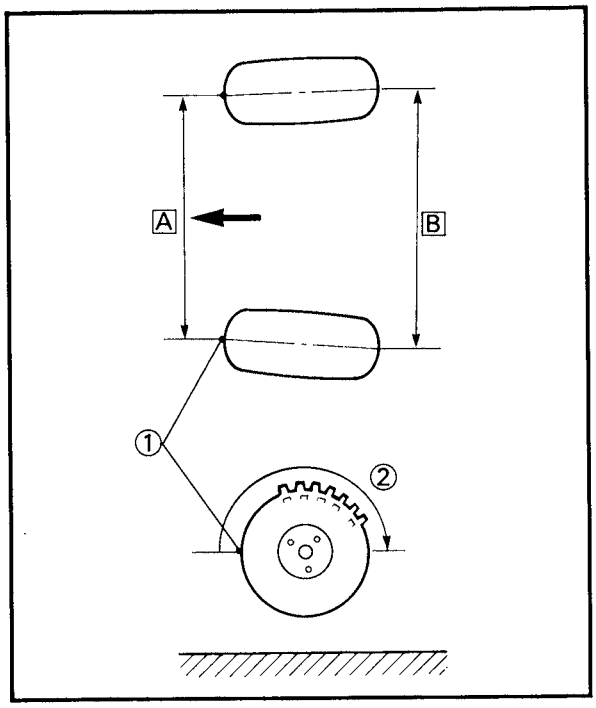

****

Toe-in measurement steps.

- Mark both front tire tread centers.
- Raise the front end of the machine so that there is no weight on the front tires.
- Fix the handlebar straight ahead.
- Measure the width A between the marks.

- Rotate the front tires 180 degrees until the marks come exactly opposite.
- Measure the width B between the marks.
- Calculate the toe-in using the formula given below.

Toe-in = B − A

	Toe-in: **17 ~ 27mm(0.67 ~ 1.06in)**

- If the toe-in is incorrect, adjust the toe-in.

****

3. Adjust:
- Toe-in

****

Adjustment steps:

- Mark both tie-rods.
  This reference point will be needed during adjustment.

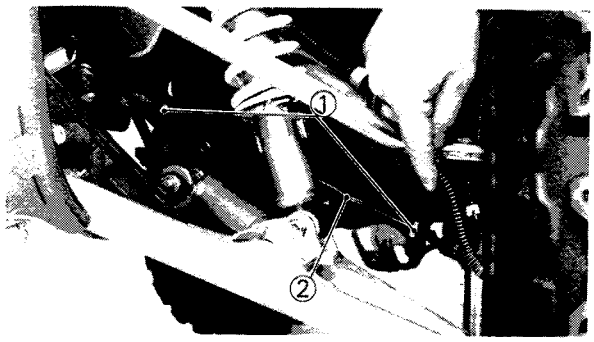

- Loosen the locknuts(tie-rod end) ① of both tie-rods.
- The same number of turns should be given to both tie-rods ② right and left until the specified toe-in is obtained, so that the lengths of the rods will be kept the same.
- Tighten the rod end locknuts of both tie-rods.

	Locknut(rod end): **30 Nm (3.0 m · kg, 22 ft · lb)**

WARNING

- **Be sure that both tie-rods are turned the same amount. If not, the machine will drift right or left even though the handlebar is positioned straight which may lead to mishandling and accident.**

- **After setting the toe-in to specification, run the machine slowly for same distance with hands placed lightly on the handlebar and check that the handlebar responds correctly. If not, turn either the right or left tie-rod within the toe-in specification.**

****

WB000017

TIRE INSPECTION

WARNING

This model is equipped with low pressure tires. It is important that they be inflated correctly and maintained at the proper pressures.

TIRE CHARACTERISTICS:

- **Tire characteristics influence the handling of ATV's. The tires listed below have been approved by Yamaha Motor Co.,Ltd. for this model. If other tire combinations are used, they can adversely affect your machine's handling characteristics and are therefore not recommended.**

	Manufac-ture	Size	Type
Font	Dunlop	AT21×7—10	KT764A
Rear	Dunlop	AT22×10—9	KT775

TIRE PRESSURE:

- **Recommend tire pressure**
  Front 30 kpa (0.30 kg/cm², 4.4 psi)
  Rear 25 kpa (0.25 kg/cm², 3.6 psi)
- **Tire pressure below the minimum specified could cause the tire to dislodge from the rim under severe riding conditions.**
  The following are minimum:
  Front 27 kpa (0.27 kg/cm², 3.9 psi)
  Rear 22 kpa (0.22 kg/cm², 3.2 psi)
- **Use no more then**
  Front 250 kpa (2.5 kg/cm², 36 psi)
  Rear 190 kpa (1.9 kg/cm², 27 psi)
  When seating the tire beads. Higher pressures may cause the tire to burst.
  Inflate the tiers very slowly and carefully.
  Fast inflation could cause the tire to burst.

1. Measure:
- Tire pressure(cold tire pressure)
  Out of specification → Adjust.

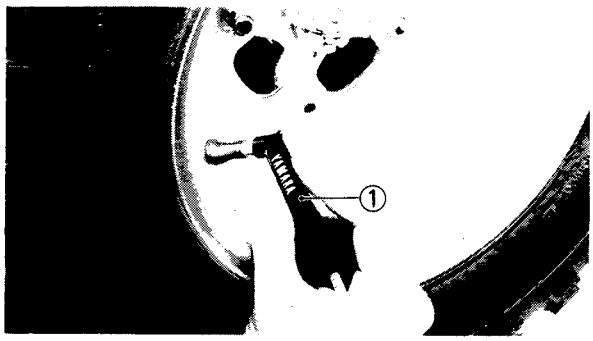

NOTE:
The low-pressure tire gauge ① is included in the standard equipment.
If dust or the like is stuck to this gauge, it dose two measurements on the tire pressure and get the second reading.

cold tire pressure	Front	Rear
Standard	30kpa (0.3kg/cm², 4.3psi)	25kpa (0.25kg/cm², 3.6psi)
Minimum	27kpa (0.27kg/cm², 3.9psi)	22kpa (0.22kg/cm², 3.2psi)
Maximum	33kpa (0.33kg/cm², 4.7psi)	28kpa (0.28kg/cm², 4.0psi)

⚠ WARNING

Uneven or improper tire pressure may adversely affect the handling of this machine and may cause loss of control.

- **Maintain proper tire pressures.**
- **Set pressures must be equal in both front tires and equal in both rear tires.**

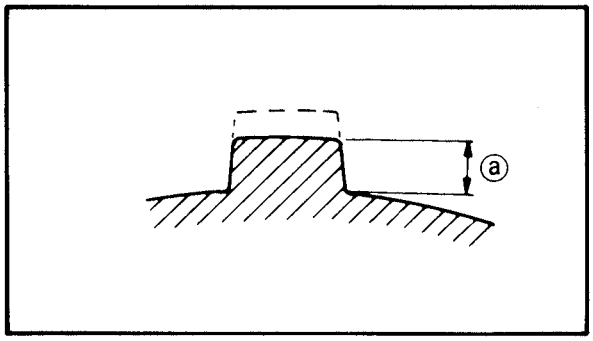

2. Inspect:
- Tire surfaces
  Wear/Damage → Replace.

Tire wear limit ⓐ :
Front and rear:3.0 mm(0.12 in)

⚠ WARNING

It is dangerous to ride with a wornout tire. When a tire wear is out of specification, replace the tire immediately.

WB2A3016

WHEEL INSPECTION

1. Inspect:
- Wheels
  Damage/Bends→Replace.

NOTE:

Always balance the wheel when a tire or wheel has been changed or replaced.

WARNING

- **Never attempt even small repairs to the wheel.**
- **Ride conservatively after installing a tire to allow it to seat itself properly on the rim.**

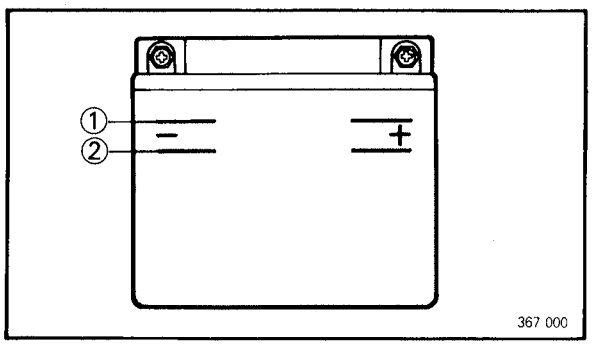

WB202000

ELACTRICAL

BATTERY INSPECTION

1. Inspect:
- Fluid level
  Fluid level should be between upper ① and lower ② level marks.
  Incorrect→Refill.

CAUTION:

Refill with distilled water only; tap water contains minerals harmful to a battery.

2. Inspect:
- Battery terminal
  Dirty terminal→Clean with wire brush.
  Poor connection→Correct.

NOTE:

After cleaning the terminals, apply grease lightly to the terminals.

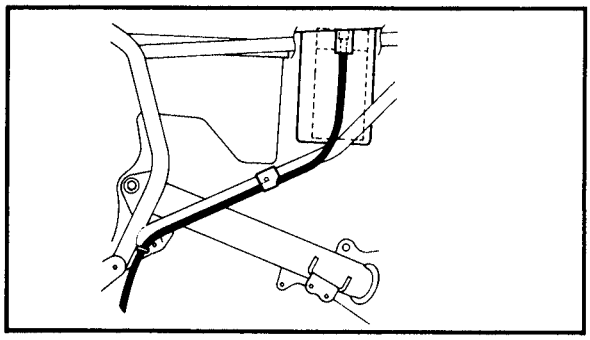

3. Inspect:
- Breather hose
  Obstruction→Remove.
  Damage→Replace.

CAUTION:

When inspecting the battery, be sure the breather hose is routed correctly. If the breather hose touches the frame or exits in such a way as to cause battery electrolyte or gas to exit onto the frame, structural and cosmetic damage to the motorcycle can occur.

4. Connect:
- Breather hose
  Be sure the hose is properly attached and routed.

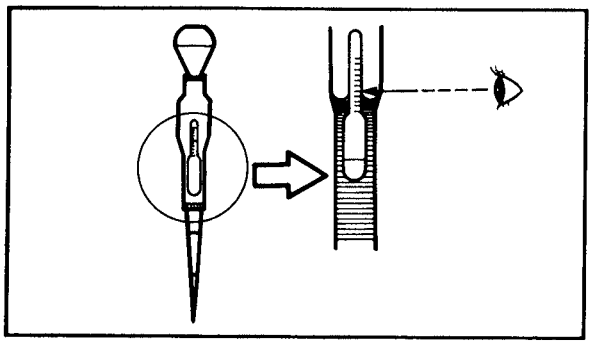

5. Check:
- Specific gravity
  Less than 1.280→Recharge battery.

Charging current:
1.2 amps/10 hrs
Specific gravity:
1.280 at 20°C (68°F)

****

Replace the battery if:
- Battery voltage will not rise to a specific value or bubbles fail to rise even after many hours of charging.
- Sulfation of one or more cells occurs, as indicated by the plates turning white, or an accumulation of material exists in the bottom of the cell.
- Specific gravity readings after a long, slow charge indicate one cell to be lower than the rest.
- Warpage or buckling of plates or insulators is evident.

****

CAUTION:

Always charge a new battery before using it to ensure maximum performance.

WARNING

Battery electrolyte is dangerous; it contains sulfuric acid and therefore is poisonous and highly caustic.

Always follow these preventive measures:

- **Avoid bodily contact with electrolyte as it can cause severe burns or permanent eye injury.**
- **Wear protective eye gear when handling or working near batteries.**

Antidote (EXTERNAL):

- **SKIN — Flush with water.**
- **EYES — Flush with water for 15 minutes and get immediate medical attention.**

Antidote (INTERNAL):

- **Drink large quantities of water or milk follow with milk of magnesia, beaten egg, or vegetable oil. Get immediate medical attention.**

Batteries also generate explosive hydrogen gas, therefore you should always follow these preventive measures:

- **Charge batteries in a well—ventilated area.**
- **Keep batteries away from fire, sparks, or open flames (e.g., welding equipment, lighted cigarettes, etc.)**
- **DO NOT SMOKE When charging or handling batteries.**

KEEP BATTERIES AND ELECTROLYTE OUT OF REACH OF CHILDREN.

WB302001

FUSE INSPECTION

CAUTION:

Don't forget to turn off the main switch when checking or replacing the fuse. Otherwise, it may cause accidental short-circuiting.

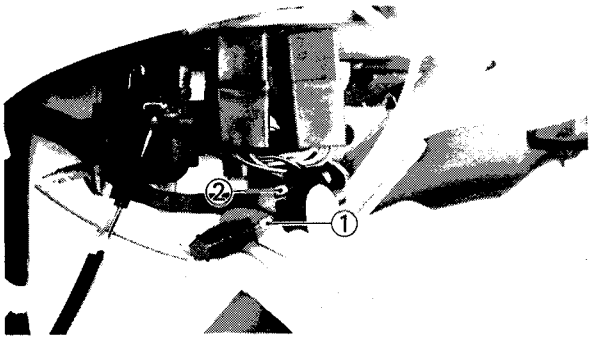

The fuse box is located under the left side rear fender.

1. Inspect:
• Fuses

Description	Amperage	Quantity
① Main	15A	1
② Reserve	15A	1

****

Inspection steps:

● Connect the pocket tester to the fuse and check it for continuity.

NOTE:

Set the tester selector to "Ω×1" position.

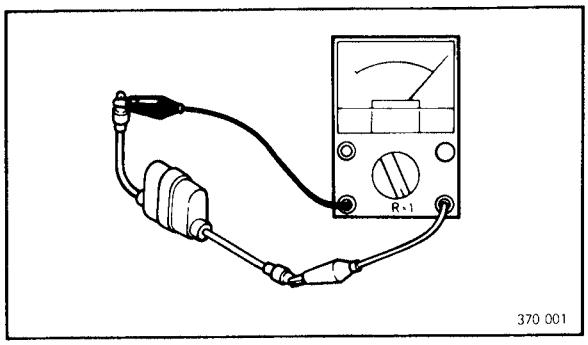

Pocket tester:
P/N YU-03112

● If the tester indicates infinity, replace the fuse.

****

2. Replace:
• Blown fuse

****

Replacement steps:

● Turn off the ignition.
● Install a new fuse of proper amperage.
● Turn on the switches to verify operation of electrical device.
● If the fuse blows immediately again, check electrical circuit.

****

⚠WARNING

Never use a fuse with a rating other then specified, or other, material in place of a fuse. An improper fuse may cause damage to the electrical system and possible cause a fire, or the lighting and/or ignition may cease to function.

WB203001

HEADLIGHT BEAM ADJUSTMENT

1. Adjust
- Headlight beam (vertical)
  Turn the adjuster ① in or out.

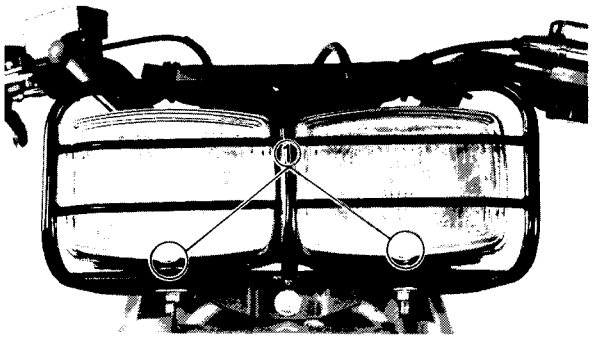

Turning in	**Headlight beam moves to upper.**
Turning out	**Headlight beam moves to lower.**

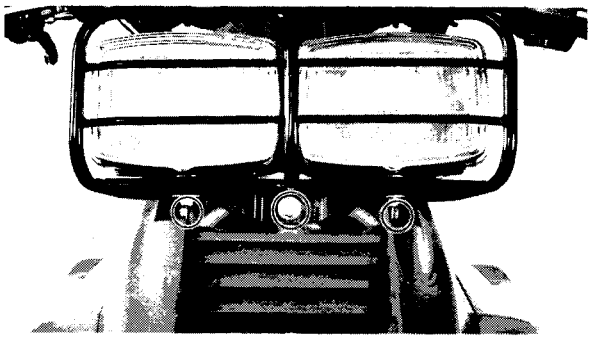

WB203003

HEADLIGHT BULB REPLACEMENT

1. Remove:
- Headlight unit assembly

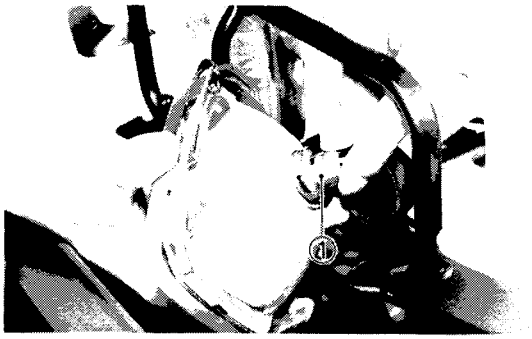

2. Remove:
- Bulb holder ①
  Turn the bulb holder counterclockwise to release bulb.
- Headlight bulb

3. Install:
- Bulb(New)

⚠ WARNING

Keep flammable products and your hands away from the bulb while it is on, it will be hot. Do not touch the bulb until it cools down.

CAUTION:

Avoid touching glass part of bulb. Also keep it free from oil otherwise, transparency of glass, bulb life and illuminous flux will be adversely affected. If oil gets on bulb, clean it with a cloth moistened thoroughly with alcohol or lacquer thinner.

ENGINE OVERHAUL

ENGINE REMOVAL

NOTE:

It is not necessary to remove the engine in order to remove the following components:
- Piston
- Clutch
- Carburetor
- AC magneto

ENGINE OIL

1. Drain:
   - Crankcase
     Refer to the "ENGINE OIL REPLACEMENT" section in the CHAPTER 3.

SEAT, HEADLIGHT UNIT AND FUEL TANK

1. Remove:
   - Seat
   - Headlight unit assembly
   - Front fender
   - Fuel tank
     Refer to the "VALVE CLEARANCE ADJUSTMENT" section in the CHAPTER 3.

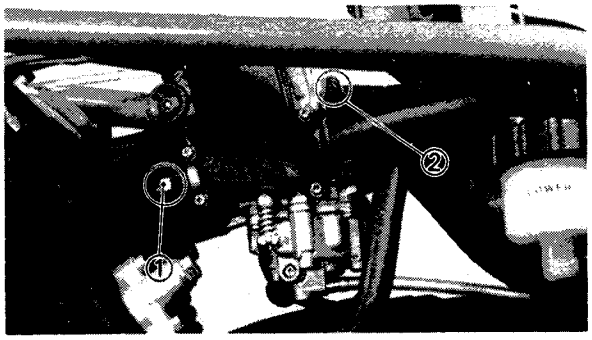

CARBURETOR

1. Loosen:
   - Carburetor joint nuts ①
   - Air cleaner joint clamp screw ②

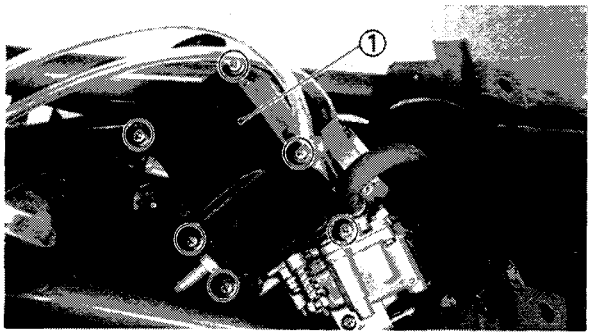

2. Remove:
   - Carburetor cover ①

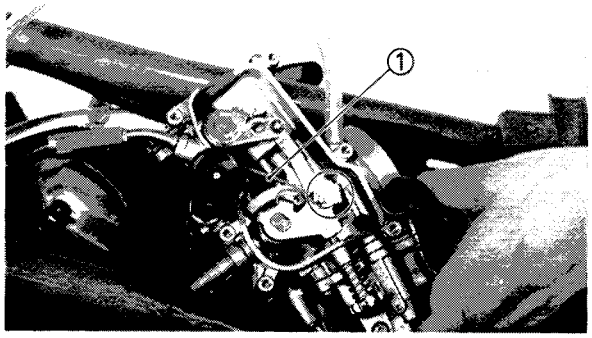

3. Disconnect:
   - Throttle cable ①
4. Remove:
   - Carburetor

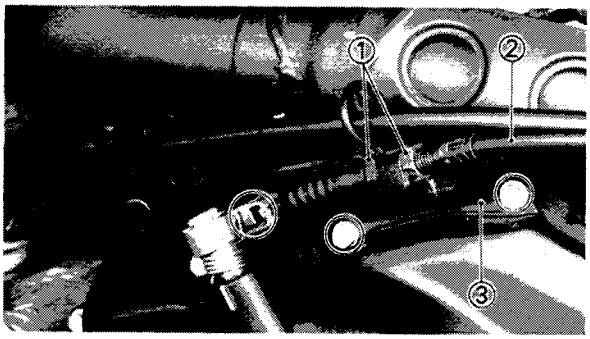

CLUTCH CABLE

1. Loosen:
   - Locknut ①
2. Disconnect:
   - Clutch cable ②

NOTE:

Loosen the clutch lever side adjuster.

   - Clutch cable holder ③

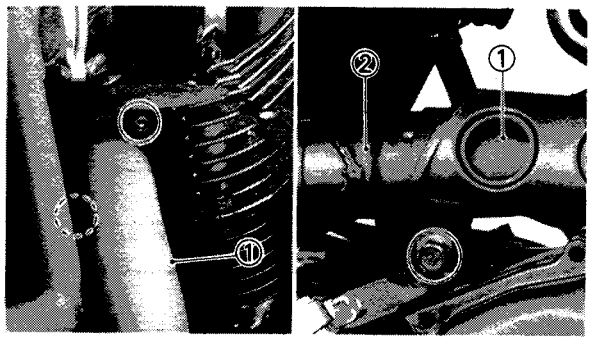

EXHAUST PIPE AND MUFFLER

1. Remove:
   - Exhaust pipe ①
   - Muffler ②

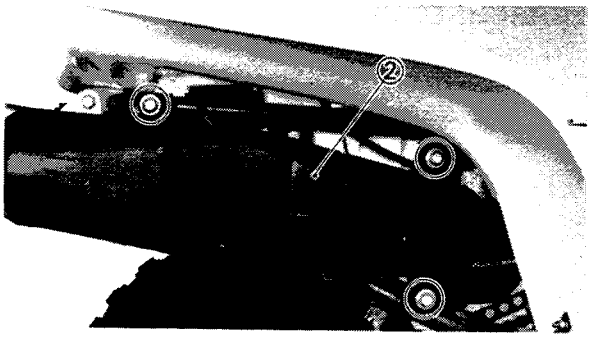

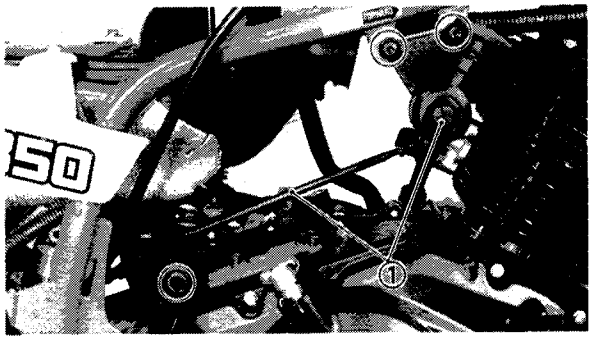

DRIVE SELECT LEVER AND CRANKCASE VENTILATION HOSE

1. Remove:
   - Drive select lever assembly ①

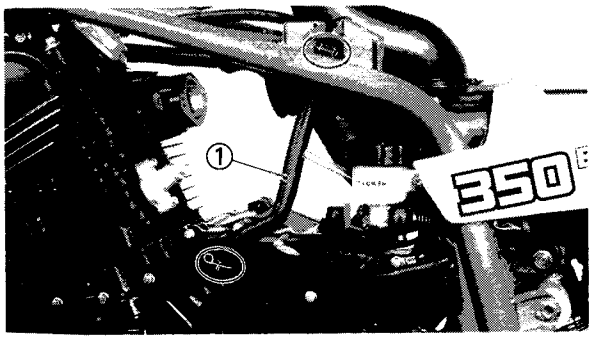

2. Remove:
   - Crankcase ventilation hose ①

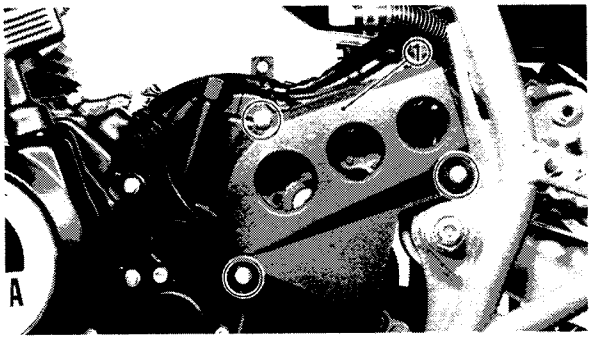

DRIVE CHAIN SPROCKET

1. Remove:
   - Drive chain sprocket cover ①

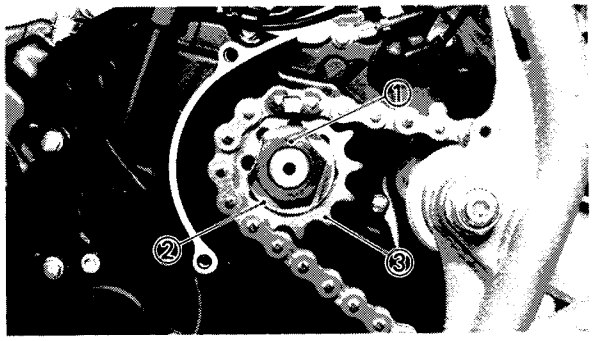

2. Remove:
   - Nut ①
   - Lock washer ②
   - Drive chain sprocket ③

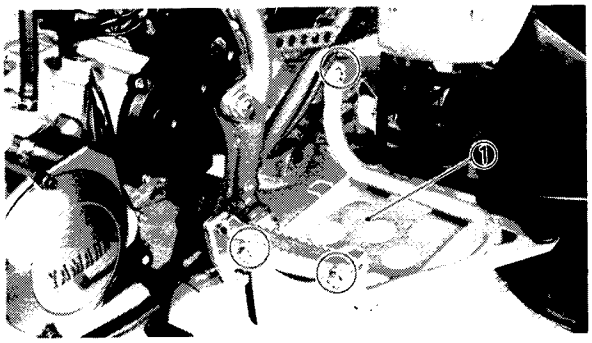

FOOTRESTS

1. Remove:
   - Footrest cover (left) ①

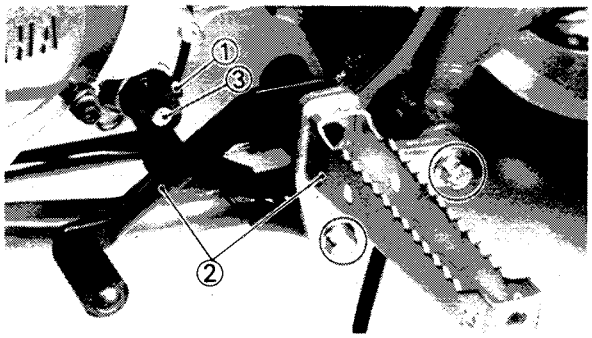

2. Remove:
   - Bolt ①
   - Left footrest and shift pedal assembly ②

③ Match mark

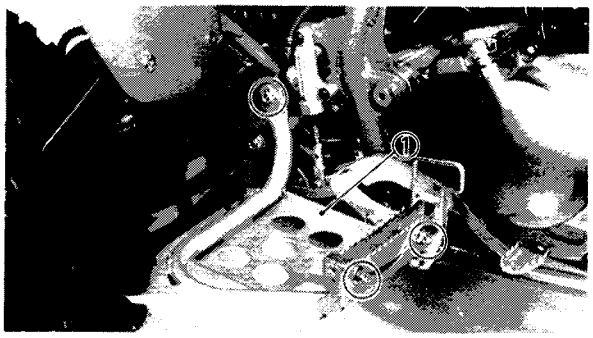

3. Remove:
   - Footrest cover (Right) ①

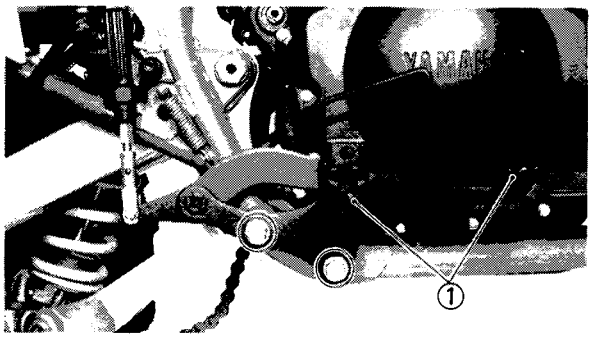

4. Remove:
   - Right footrest and brake pedal assembly ①

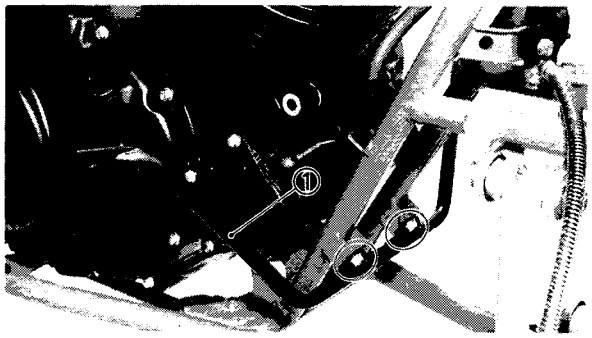

5. Remove:
   - Front fender stay ①

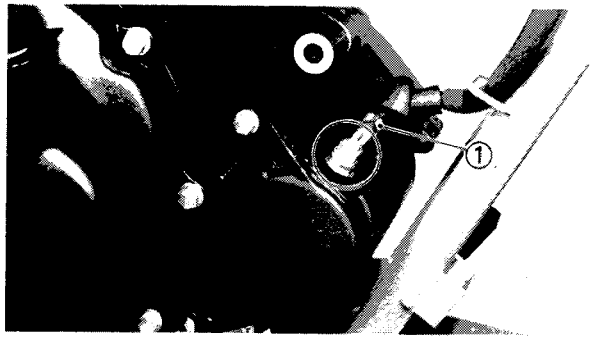

LEADS

1. Disconnect:
   - Starter motor lead ①

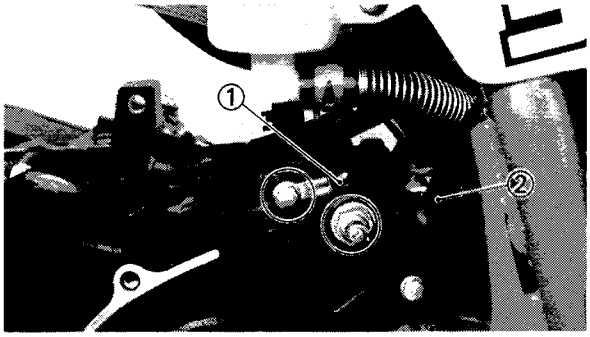

2. Disconnect:
   - Ground lead ①
   - Reverse switch lead ②

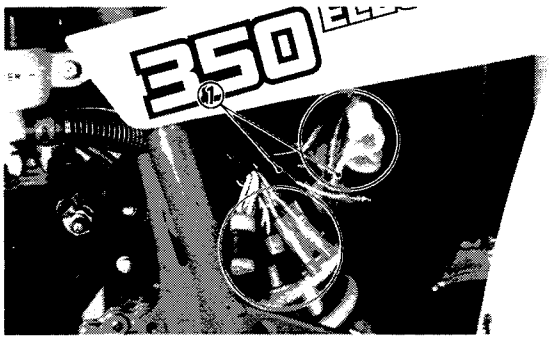

3. Disconnect:
   - CDI Magneto leads
   - Neutral switch lead ①

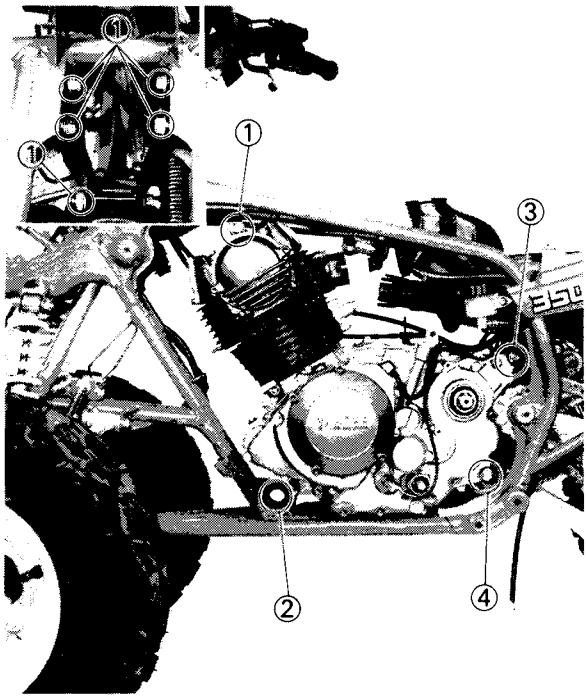

ENGINE REMOVAL

1. Remove:
   - Upper mounting bolts ①
   - Front mounting bolt ②
   - Rear upper mounting bolt ③
   - Rear lower mounting bolt ④
   - Engine assembly

ENGINE DISASSEMBLY

DECOMPRESSION CAM, CAM CHAIN SPROCKET AND CYLINDER HEAD

NOTE:

With the engine mounted, decompression cam, cam chain sprocket and cylinder head can be maintained by removing the following parts.

- Fuel tank
- Engine stays (upper)
- Carburetor
- Exhaust pipe

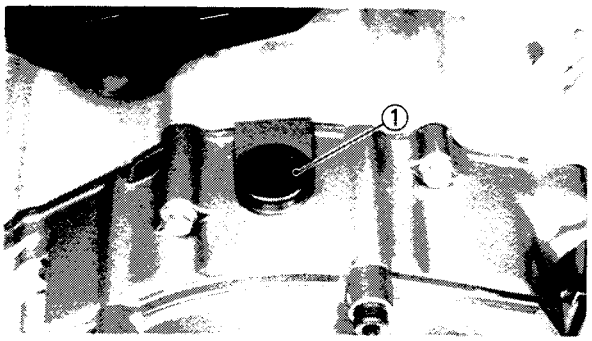

1. Remove:
   - Spark plug
   - Timing window plug ①

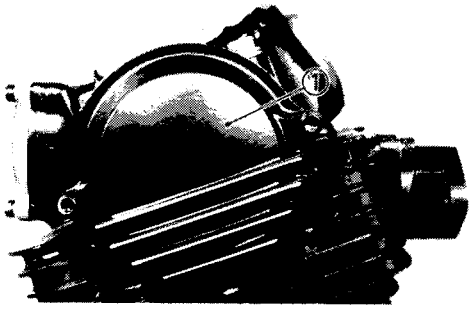

2. Remove:
   - Cylinder head side cover ①
   - O-rings

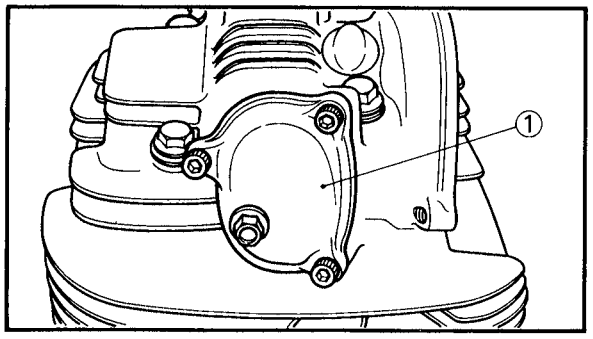

3. Remove:
   - Intake valve cover
   - O-ring
   - Exhaust valve cover ①

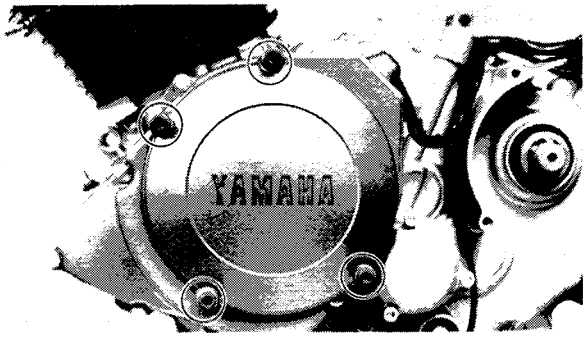

4. Remove:
   - Left crankcase cover

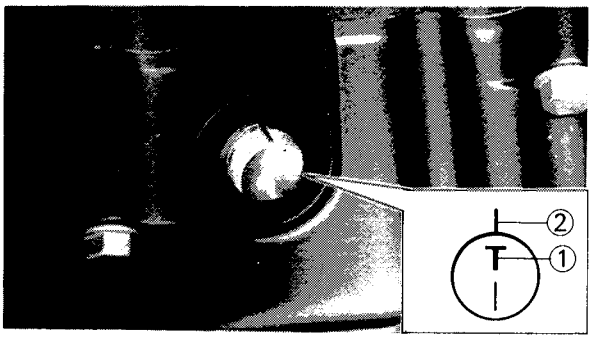

5. Turn:
   - Crankshaft
6. Align:
   - Flywheel "T" mark ①
     (with the stationary pointer ②, when piston is at TDC on compression stroke.)

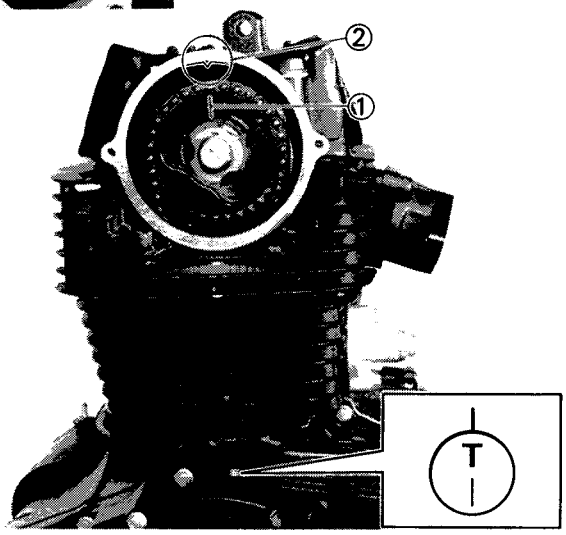

NOTE:

TDC on Compression Stroke Check:
- Both rocker arms must have a valve clearance when the cam chain sprocket mark ① is aligned with the cylinder head mark ②.
- If not, give the crankshaft one counterclockwise turn to meet the above condition.

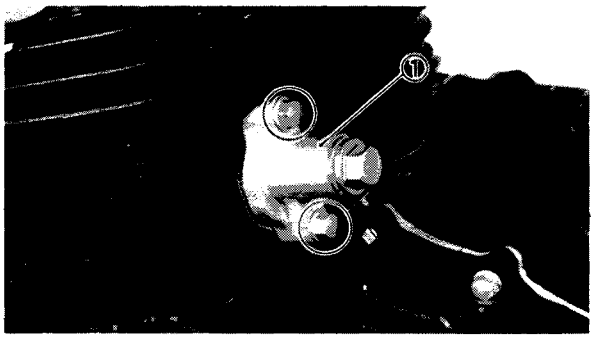

7. Remove:
   - Timing chain tensioner ①

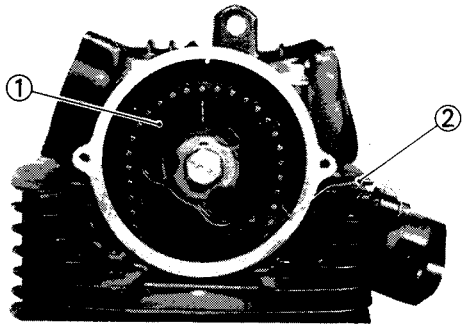

8. Remove:
   - Sprocket bolts
   - Washer
   - Sprockets ①

NOTE:

Fasten safety wire ② to the cam chain to prevent it from falling into the crankcase.

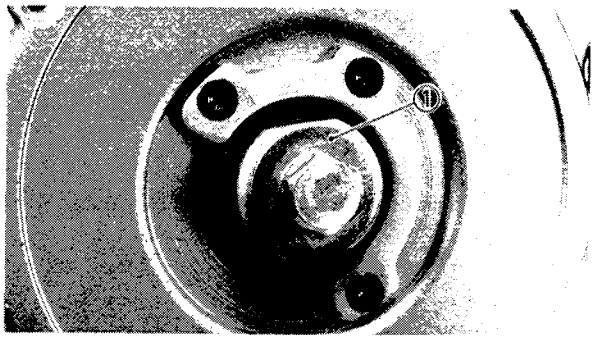

NOTE:

If difficult to loosen the cam sprocket securing bolts; hold the starter pulley ①.

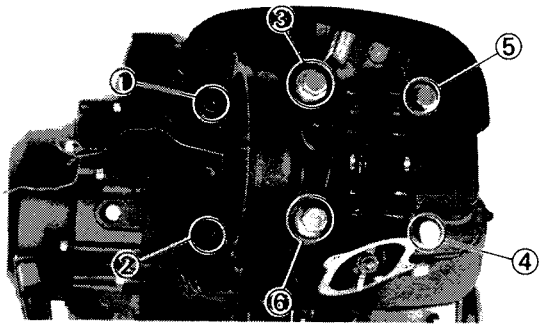

9. Remove:
   - Cylinder head

NOTE:

Loosen the bolts in their proper loosening sequence. Number means loosening sequence.

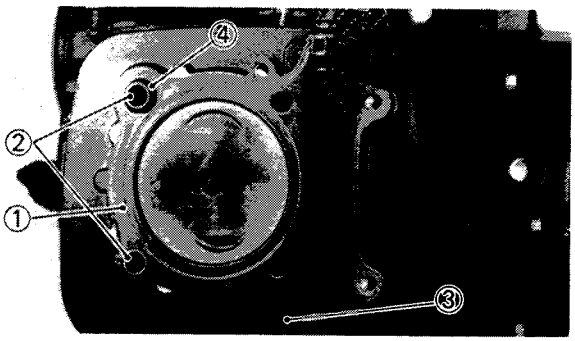

10. Remove:
    - Cylinder head gasket ①
    - Dowels ②
    - Exhaust side cam chain guide ③
    - O-ring ④

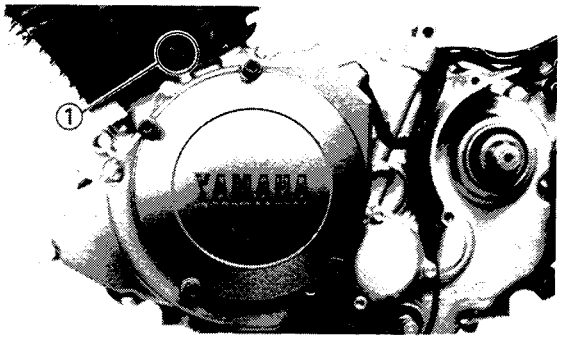

CYLINDER AND PISTON

1. Remove:
   - Bolt ①
   - Cylinder

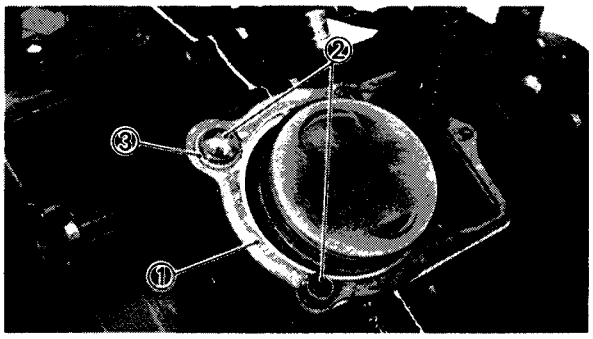

2. Remove:
   - Cylinder gasket ①
   - Dowels ②
   - O-ring ③

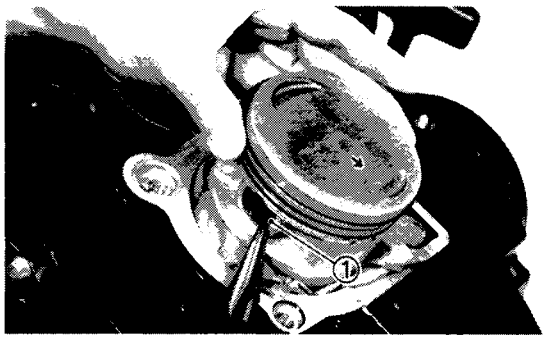

3. Remove:
   - Piston pin circlips ①

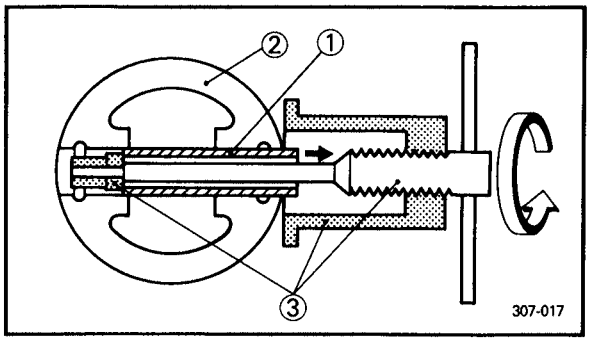

4. Remove:
   - Piston pin ①
   - Piston ②

NOTE:

- Before removing the piston pin clip, cover the crankcase with a clean rag so you will not accidentally drop the clip into the crankcase.
- Before removing the piston pin, deburr the clip groove and pin hole area. If the piston pin groove is deburred and piston pin is still difficult to remove, use Piston Pin Puller.

	Piston pin puller: **P/N. YU-01304**

CAUTION:

Do not use a hammer to drive the piston pin out.

LEFT CRANKCASE COVER AND CDI MAGNETO

NOTE:

With the engine mounted, the starter clutch, starter idle gear and CDI magneto can be maintained by removing the following parts.

- Shift lever

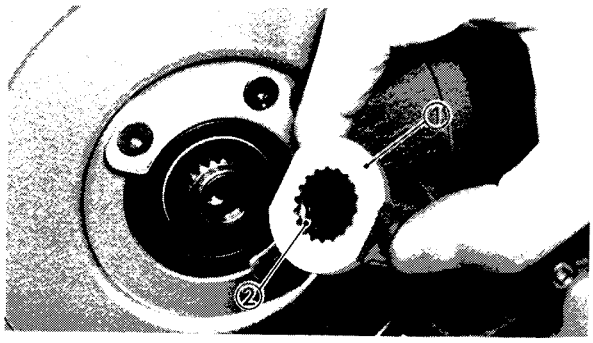

1. Remove:
   - Bolt
   - Spring washer
   - Plain washer
   - Starter pulley ①
   - O-ring ②

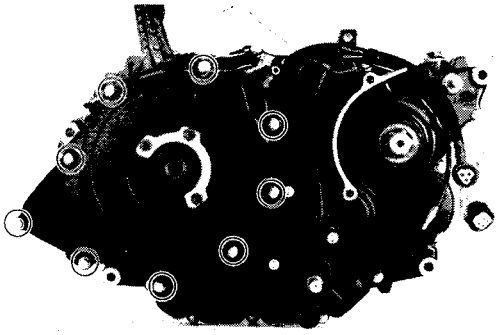

2. Remove:
   - Left crankcase cover

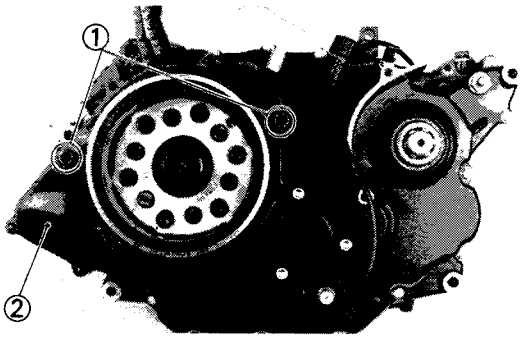

3. Remove:
   - Dowels ①
   - Gasket ②

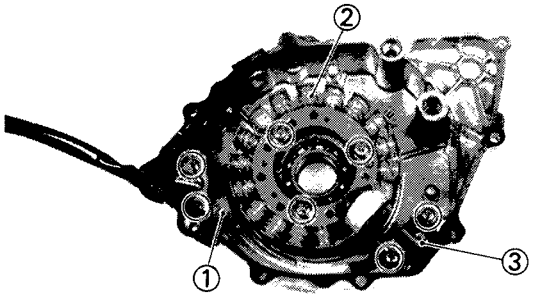

4. Remove:
   - Bracket ①
   - Source coil ②
   - Pick up coil ③

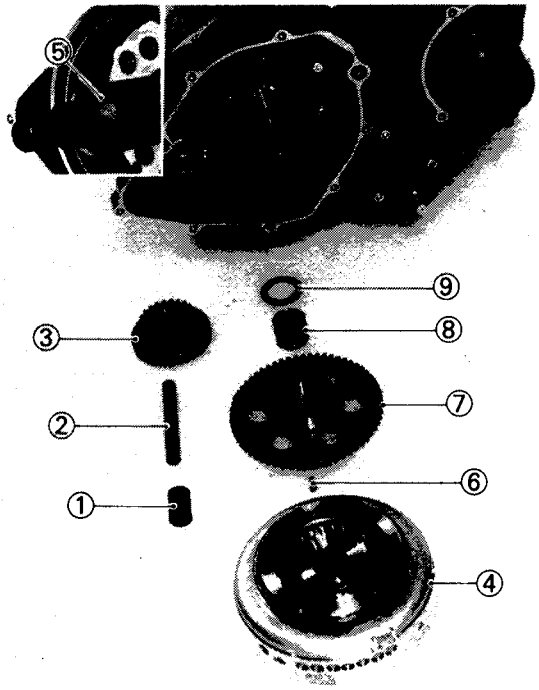

5. Remove:
   - Collar ①
   - Shaft ②
   - Idle gear ③

6. Remove:
   - CDI magneto ④

NOTE:

When removing the CDI magneto, use the flywheel puller ⑤.

	Flywheel puller: **P/N. YM-01404**

7. Remove:
   - Woodruff key ⑥
   - Driven gear (Starter) ⑦
   - Bearing ⑧
   - Washer ⑨

CAM CHAIN AND STARTER MOTOR

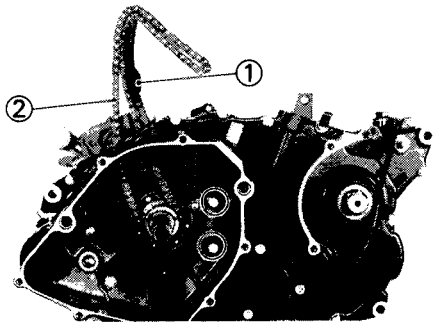

1. Remove:
   - Intake side chain guide ①
   - Cam chain ②

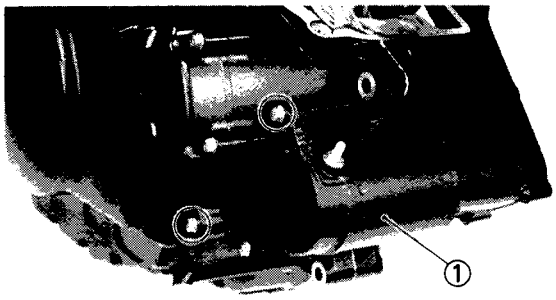

2. Remove:
   - Starter motor ①

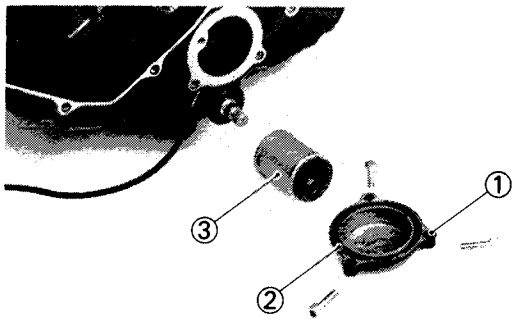

OIL FILTER AND NEUTRAL SWITCH

1. Remove:
   - Oil filter cover ①
   - O-ring ②
   - Oil filter ③

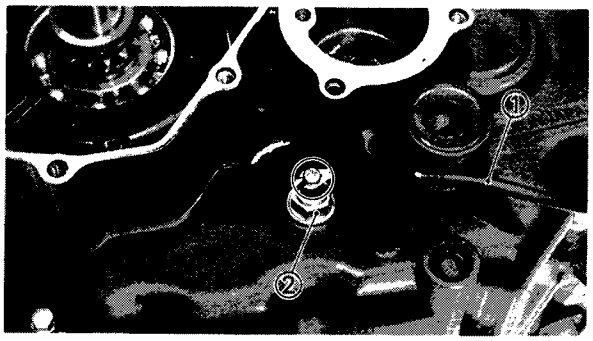

2. Disconnect:
   - Neutral switch lead ①
3. Remove:
   - Neutral switch ②

RIGHT CRANKCASE COVER

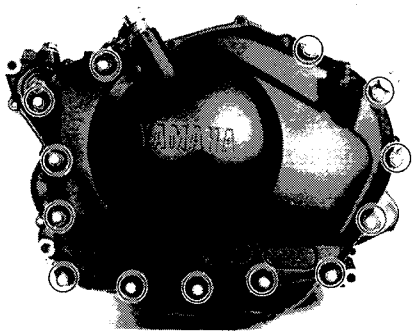

1. Remove:
   - Right crankcase cover

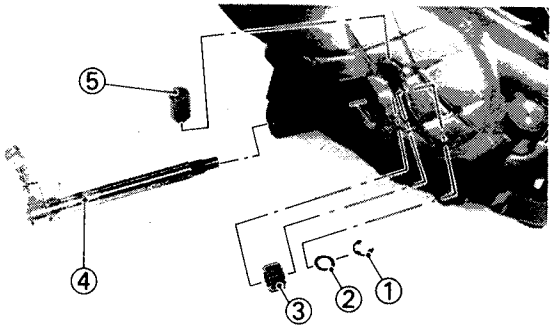

2. Remove:
   - Circlip ①
   - Washer ②
   - Pinion gear ③
   - Push lever axle ④
   - Short push rod ⑤

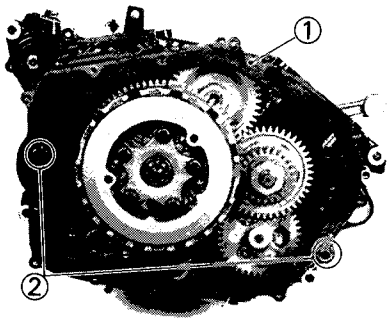

3. Remove:
   - Gasket ①
   - Dowels ②

CLUTCH

NOTE:

With the engine mounted, the clutch assembly, primary drive gear and balancer driven gear can be maintained by removing the following parts:
- Starter motor
- Crankcase cover (right)

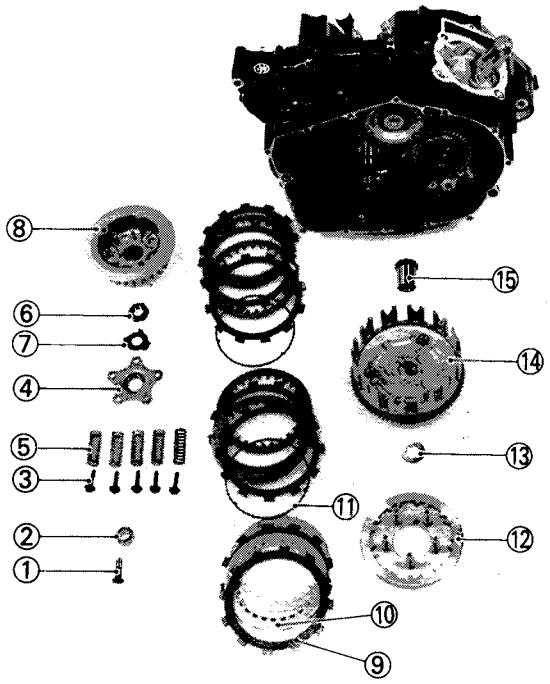

1. Remove:
   - Long push rod ①
   - Bearing ②
   - Clutch spring holding screws ③
   - Pressure plate 2 ④
   - Clutch springs ⑤
   - Nut ⑥
   - Washer ⑦
   - Clutch boss ⑧
   - Friction plates ⑨
   - Clutch plates ⑩
   - Cushion springs ⑪
   - Pressure plate 1 ⑫
   - Thrust washer ⑬
   - Clutch housing ⑭
   - Spacer ⑮

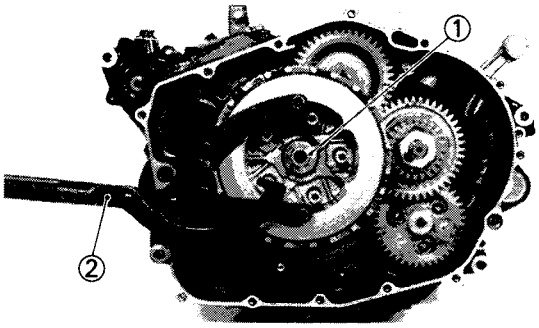

NOTE:

Loosen the nut (clutch boss) while holding the clutch boss with the rotor holder.

	**Rotor holder:** **P/N. YU-01235**

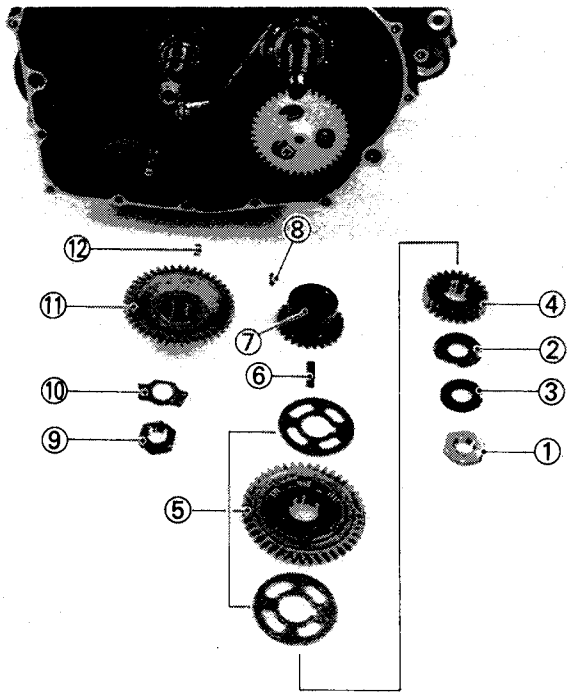

PRIMARY DRIVE GEAR AND BALANCER DRIVEN GEAR

1. Remove:
   - Nut ①
   - Lock washer ②
   - Washer ③
   - Primary drive gear ④
   - Balancer drive gear assembly ⑤
   - Key ⑥
   - Oil pump drive gear ⑦
   - Key ⑧
   - Nut ⑨
   - Lock washer ⑩
   - Balancer driven gear ⑪
   - Key ⑫

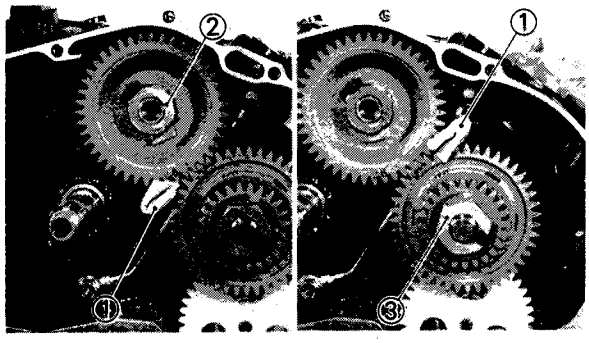

NOTE:

Place a piece of rolled rag ① or lead between gears when loosening balancer driven gear ② and primary drive gear ③.

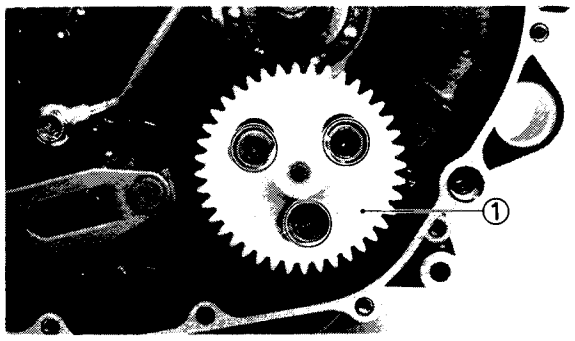

OIL PUMP

1. Remove:
   - Screws
   - Oil pump assembly ①
   - Gasket

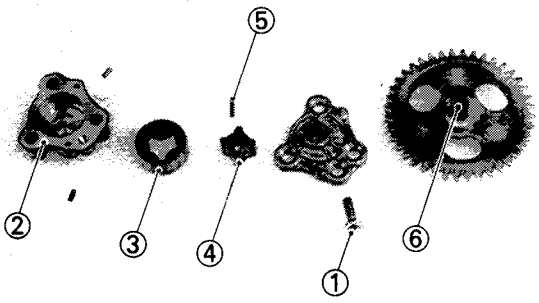

2. Remove:
   - Housing connecting screws ①
   - Oil pump housing ②
   - Outer rotor ③
   - Inner rotor ④
   - Pin ⑤
   - Oil pump shaft ⑥

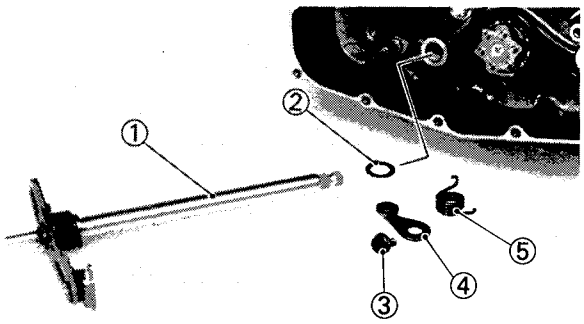

SHIFT SHAFT

1. Remove:
   - Shift shaft ①
   - Washer ②
   - Bolt ③
   - Stopper ④
   - Stopper spring ⑤

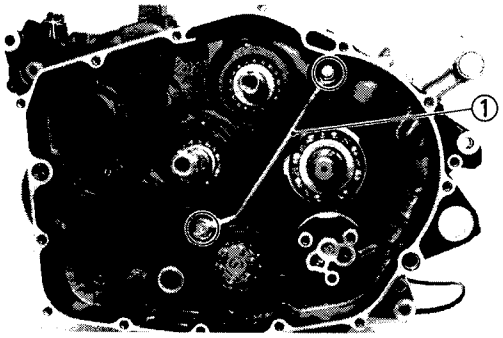

OIL PIPE

1. Remove:
   - Union bolts
   - Washers
   - Oil pipe ①

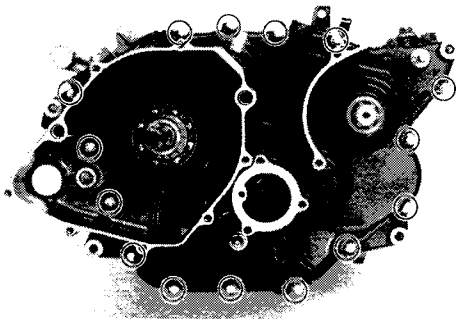

CRANKCASE

1. Remove:
   - Crankcase holding screws (from left crankcase)

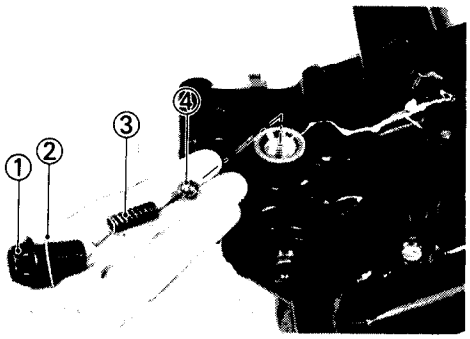

NOTE:

- Remove the reverse shift cam bolt ①, washer ②, spring ③ and ball ④ before separating crankcase.
- Loosen each screw 1/4 turn, and remove them after all are loosened.

2. Remove:
   - Right crankcase

NOTE:

As pressure is applied, alternately tap on the balancer shaft, main axle, and shift cam.

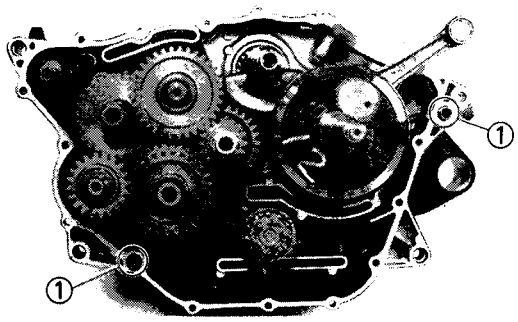

3. Remove:
   - Dowels ①

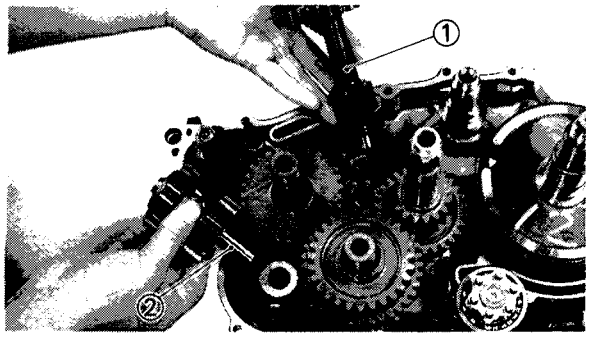

4. Remove:
   - Reverse axle assembly ①
   - Counter axle assembly ②

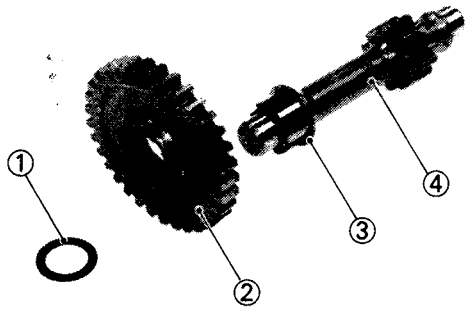

5. Remove:
   - Washer ①
   - Reverse pinion gear ②
   - Circlip ③
   - Reverse axle ④

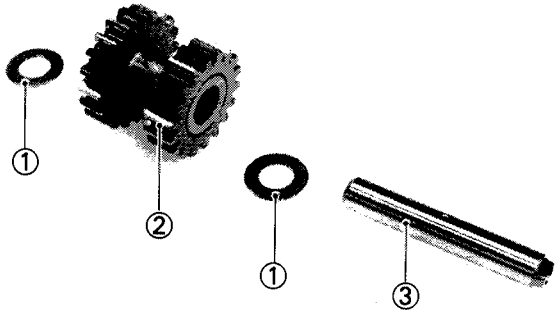

6. Remove:
   - Washer ①
   - Counter wheel gear ②
   - Washer ①
   - Counter axle ③

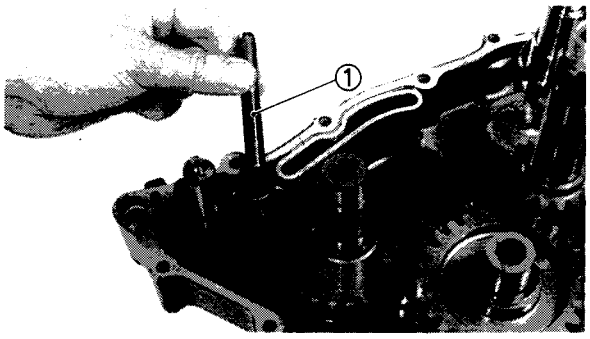

7. Remove:
   - Guide bar ①
     (from the shift fork of the out put axle)

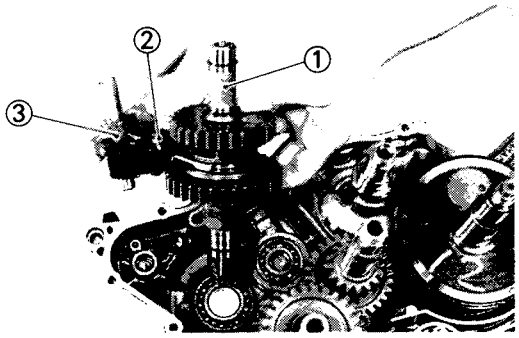

8. Remove:
   - Collar
   - Out put axle ①, shift fork ②, and shift cam ③ assembly

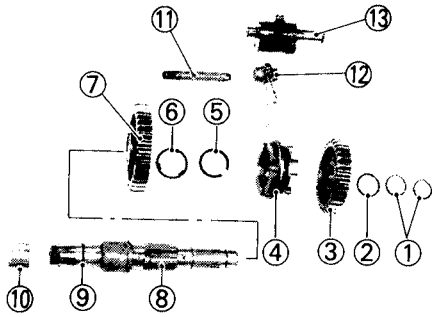

9. Remove:
   - Circlips ①
   - Washer ②
   - Forward wheel gear ③
   - Dog clutch ④
   - Circlip ⑤
   - Washer ⑥
   - Reverse wheel gear ⑦
   - Out put axle ⑧
   - O-ring ⑨
   - Collar ⑩
   - Guide bar ⑪
   - Shift fork ⑫
   - Shift cam ⑬

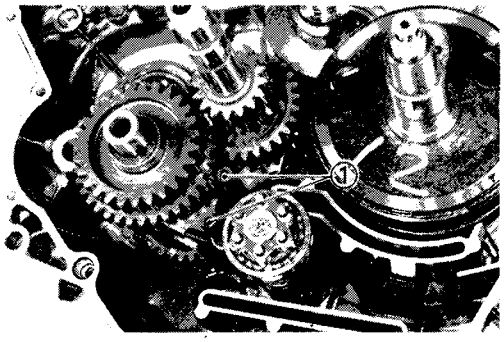

10. Remove:
    - Guide bars ①
      (from the shift forks of the main and drive axles)

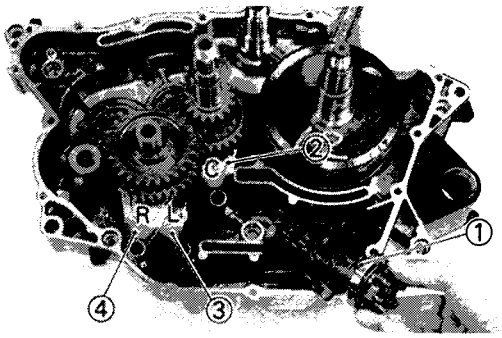

11. Remove:
    - Shift cam assembly ①
    - Shift fork "C" ②
    - Shift fork "L" ③
    - Shift fork "R" ④

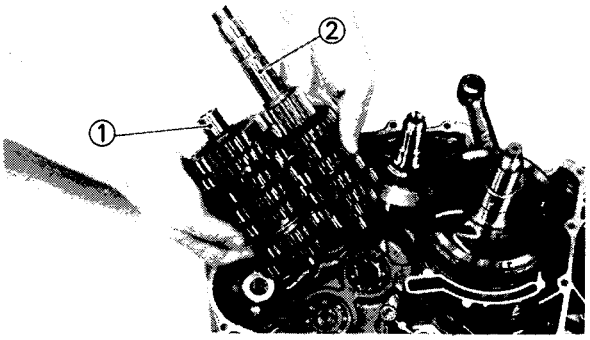

12. Remove:
    - Drive axle ① and main axle ② assembly

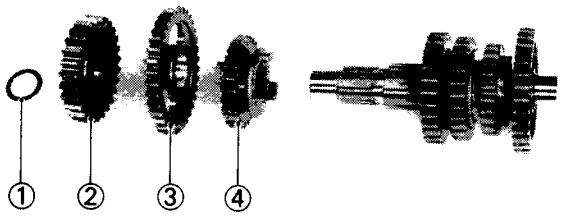

13. Remove:
    - Washer ①
    - Counter axle drive gear ②
    - 1st wheel gear ③
    - 5th wheel gear ④
    (from the drive axle)

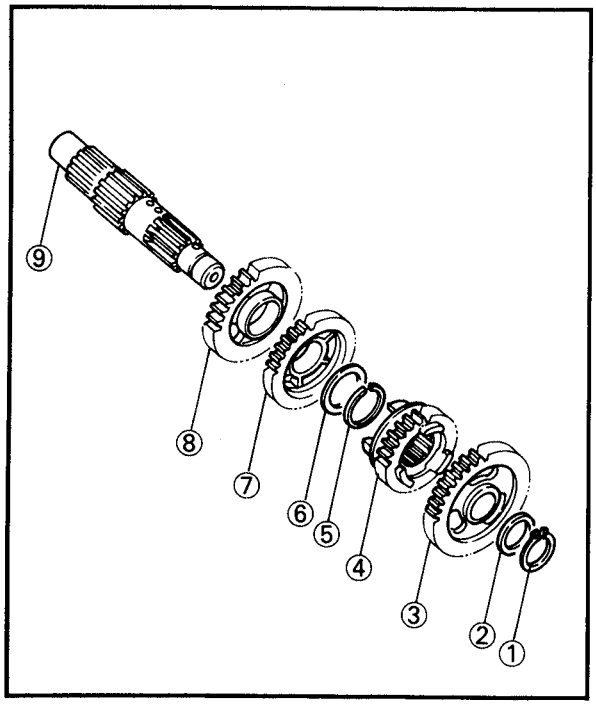

14. Remove:
    - Circlip ①
    - Washer ②
    - 2nd wheel gear ③
    - 6th wheel gear ④
    - Circlip ⑤
    - Washer ⑥
    - 4th wheel gear ⑦
    - 3rd wheel gear ⑧
    - Drive axle ⑨

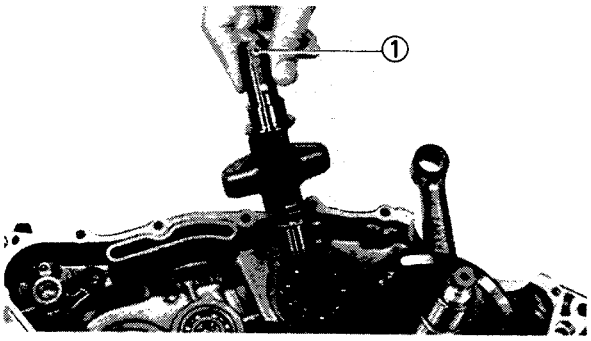

15. Remove:
    - Balancer shaft ①

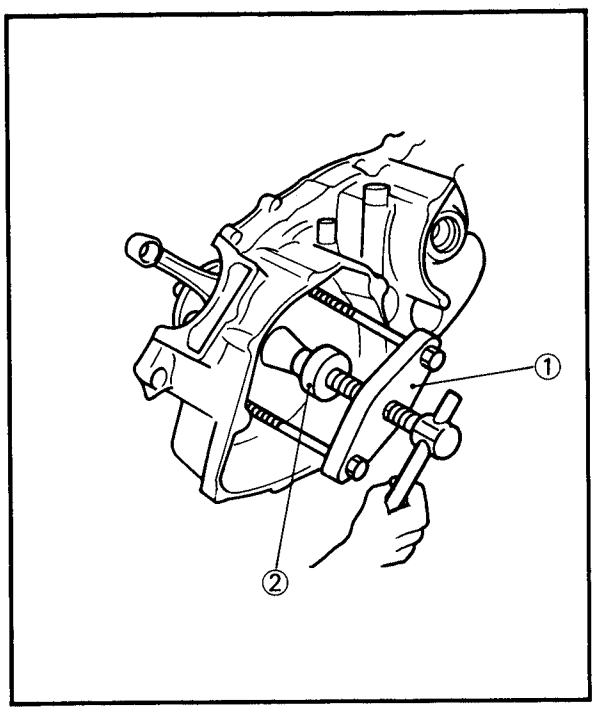

16. Remove:
    - Crankshaft

****

Removal steps:

- Attach the crankcase separating tool ① and attachment ② to the left side crankcase.

	Crankcase separating tool: **P/N. YU-01135** **Attachment:** **P/N. YM-1382**

NOTE:

Fully tighten the tool holding bolts, but make sure the tool body is parallel with the case. If necessary, one screw may be backed out slightly to level tool body.

****

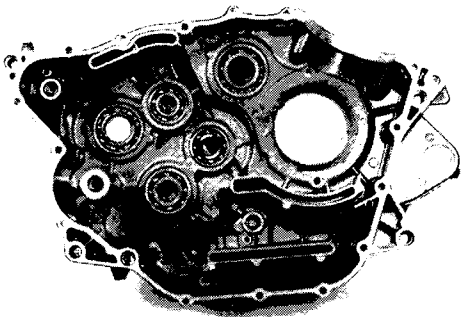

BEARINGS AND OIL SEALS

NOTE:

- It is not necessary to remove bearings and oil seals unless damaged. See Bearings and oil seals (INSPECTION AND REPAIR.)
- To facilitate bearing removal and installation, first heat the cases to approximately 95° ~ 125°C (205° ~ 257°F) using an oven. Bring the case up to proper temperature slowly.

1. Remove:
    - Oil seals

CAUTION:

- **Use a screwdriver to pry out the seal.**
- **Place a piece of wood under the screwdriver to prevent damage to the case.**

2. Remove:
    - Bearings

CRANKSHAFT/ROCKER ARMS/VALVES

NOTE:

With the engine mounted, the camshaft, rocker arms and valves can be maintained by removing the following parts:
- Fuel tank
- Engine stay (upper)
- Exhaust pipe

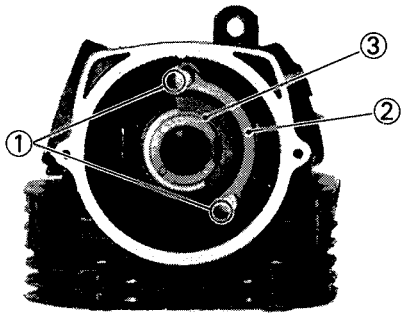

1. Straighten:
   - Lock washer tabs ①
2. Remove:
   - Lock washer ②
   - Retainer (camshaft bearing) ③

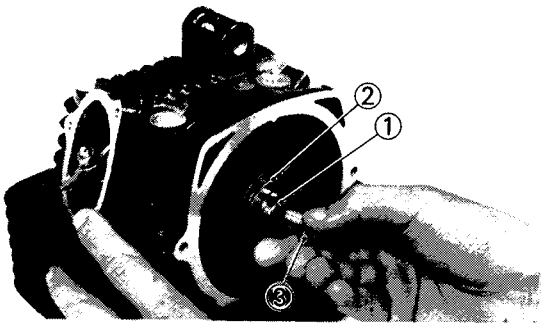

3. Remove:
   - Camshaft ①
   - Camshaft bearing ②

NOTE:

Screw in a suitable bolt ③ into the thread of the camshaft, and pull out the camshaft.

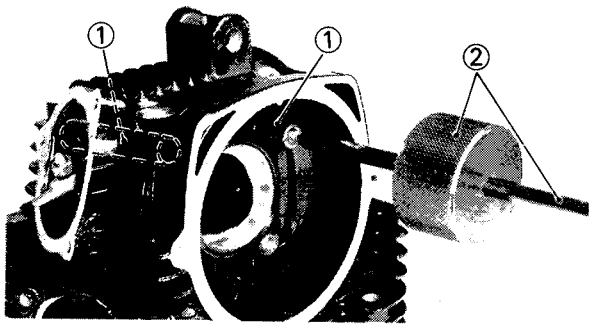

4. Remove:
   - Rocker arm shafts ①
   - Rocker arms (intake/exhaust)
     Use the slide hammer ②.

	Slide hammer set: **P/N. YU-01083**

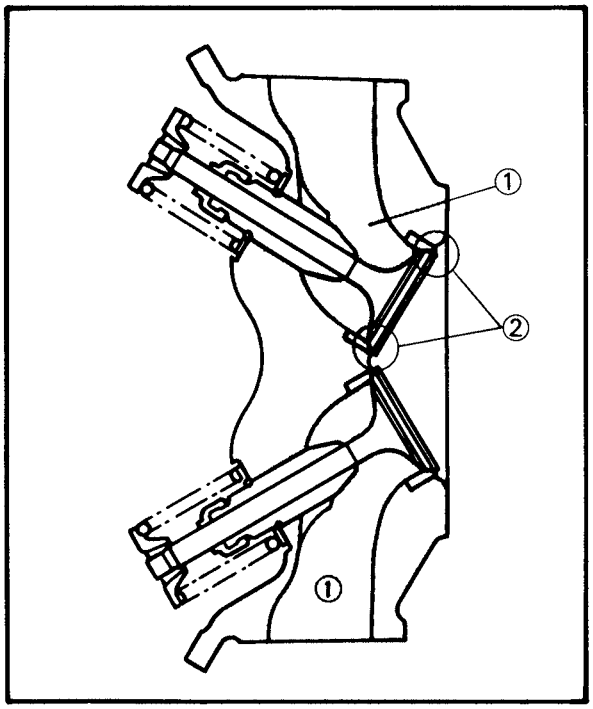

5. Check:
   - Valve sealing
     Leakage at valve seat → Inspect the valve face, valve seat and valve seat width.
     Refer to "INSPECTION AND REPAIR — VALVE SEAT".

NOTE:

Before removing the internal parts (valve, valve spring, valve seat etc.) of the cylinder head, the valve sealing should be checked.

****

Valve seat checking steps:

- Pour a clean solvent ① into the intake and exhaust ports.
- Check the valve seating.
  There should be no leakage at the valve seat ②.

****

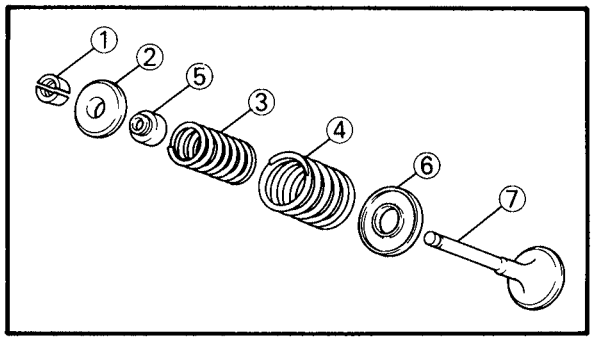

6. Remove:
   - Valve cotters ①
   - Spring retainer ②
   - Valve spring (inner) ③
   - Valve spring (outer) ④
   - Oil seal ⑤
   - Spring seat ⑥
   - Valve ⑦

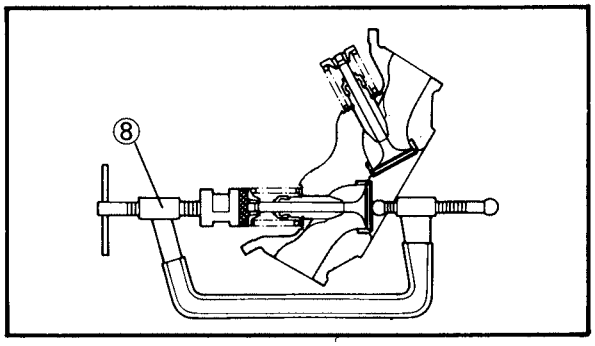

NOTE:

Remove the valve cotters while compressing the valve springs with the valve spring compressor ⑧.

Valve spring compressor:
P/N. YM-04019

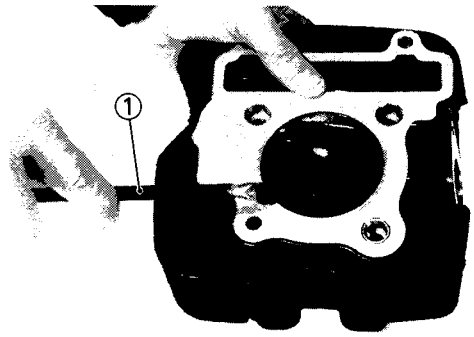

INSPECTION AND REPAIR

CYLINDER HEAD

1. Eliminate:
   - Carbon deposit
     (from combustion chamber)
     Use rounded scraper ①.

NOTE:

Do not use a sharp instrument and avoid damaging or scratching:
- Spark plug threads
- Valve seat

2. Inspect:
   - Cylinder head
     Scratches/Damage → Replace.

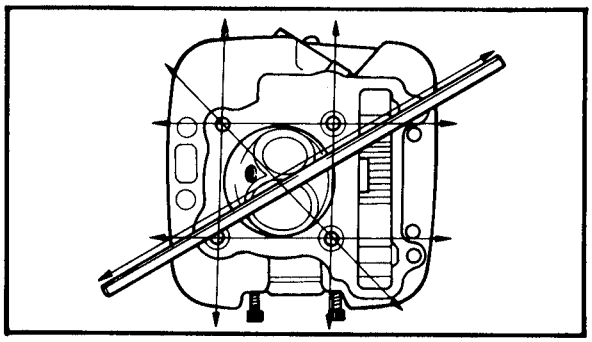

3. Measure:
   - Warpage
     Out of specification → Resurface.

Cylinder head warpage:
Less than 0.03 mm (0.0012 in)

4. Resurface:
   - Cylinder head

****

Resurfacement steps:

Place a 400 ~ 600 grit wet sandpaper on the surface plate, and resurface the head using a figure-eight sanding pattern.

NOTE:

Rotate the head several times to avoid removing too much material from one side.

****

VALVE SEAT

1. Eliminate:
   - Carbon deposit
     (from valve face and valve seat)
2. Inspect:
   - Valve seat
     Pitting/Wear→Reface the valve seat.

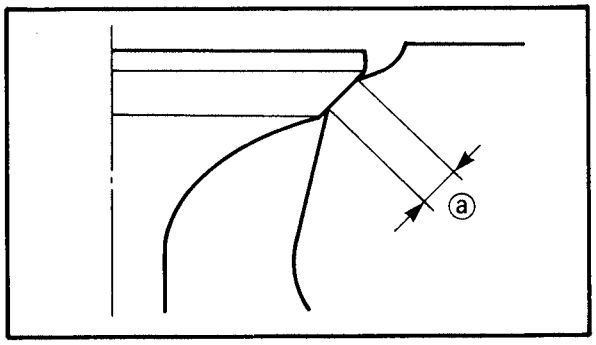

3. Measure:
   - Valve seat width ⓐ
     Out of specification→Reface valve seat.

	Valve seat width: **Intake:** **0.9~1.1 mm (0.035~0.043 in)** **Exhaust** **0.9~1.1 mm (0.035~0.043 in)**

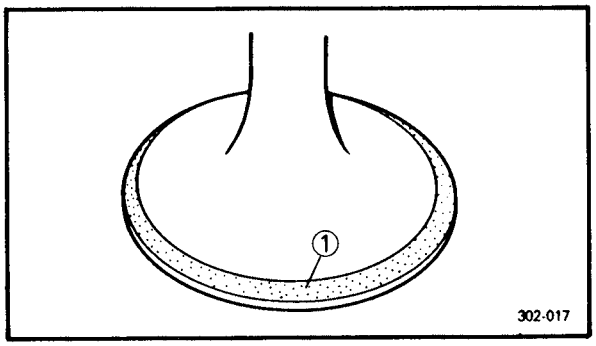

****

Measurement steps:

- Apply the Mechanic's bluing dye (Dykem) ① to the valve face.
- Install the valve into the cylinder head.
- Press the valve through the valve guide and onto the valve seat to make a clear pattern.
- Measure the valve seat width. Wherever the valve seat and valve face made contact, bluing will have been removed.
- If the valve seat width is too wide, too narrow, or seat has not centered, the valve seat must be refaced.

****

4. Reface:
   - Valve seat
     Use a 20°, 45° and 60° Valve Seat Cutter ①.

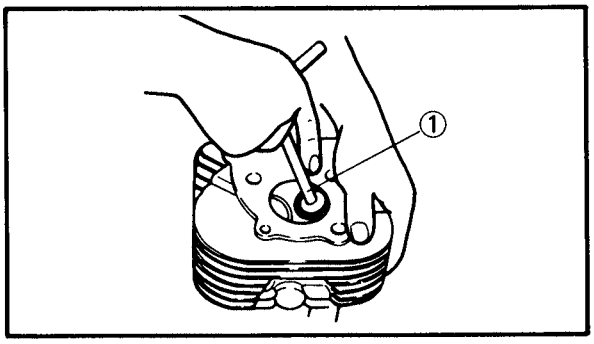

	Valve seat cutter: **P/N. YM-91043**

CAUTION:

When twisting cutter, keep an even downward pressure (4~5 kg) to prevent chatter marks.

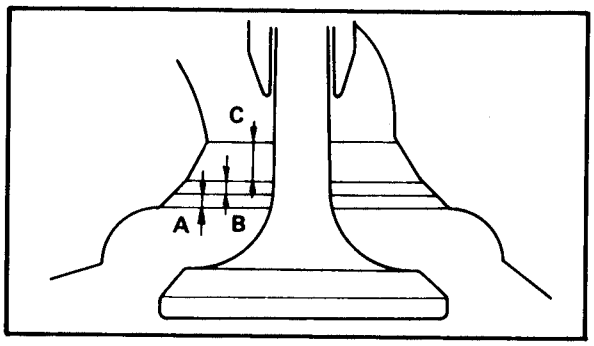

Cut sections as follows	
Section	Cutter
A	20°
B	45°
C	60°

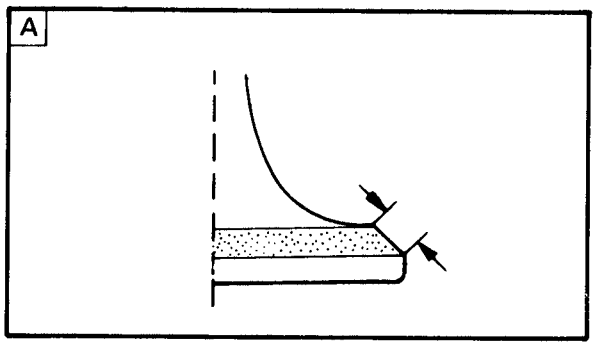

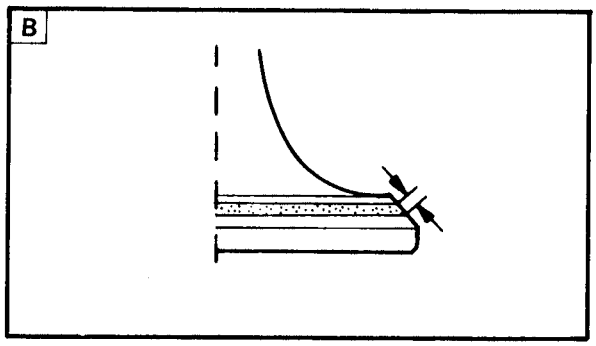

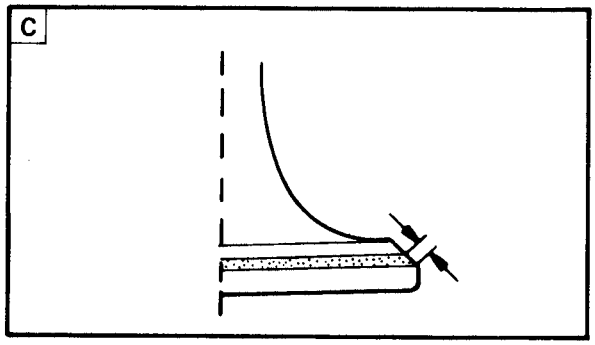

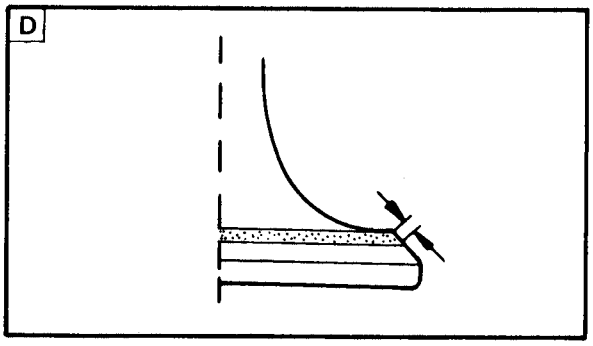

****

Refacing steps:

[A] Valve face indicates that valve seat is centered on valve face but is too wide.

Valve seat cutter set		Desired result
Use lightly	20° cutter	To reduce valve seat width to 1.0 mm (0.039 in).
	60° cutter	

[B] Valve seat is in the middle of the valve face but too narrow.

Valve seat cutter set		Desired result
Use	45° cutter	To achieve a uniform valve seat width of 1.0 mm (0.039 in).

[C] Valve seat is too narrow and right up near valve margin.

Valve seat cutter set		Desired result
Use	20° cutter, first	To center the seat and to achieve its width of 1.0 mm (0.039 in).
	45° cutter	

[D] Valve seat is too narrow and is located down near the bottom edge of the valve face.

Valve seat cutter set		Desired result
Use	60° cutter, first	To center the seat and increase its width.
	45° cutter	

****

5. Lap:
   - Valve face
   - Valve seat

NOTE:

After refacing the valve seat or replacing the valve and valve guide, the valve seat and valve face should be lapped.

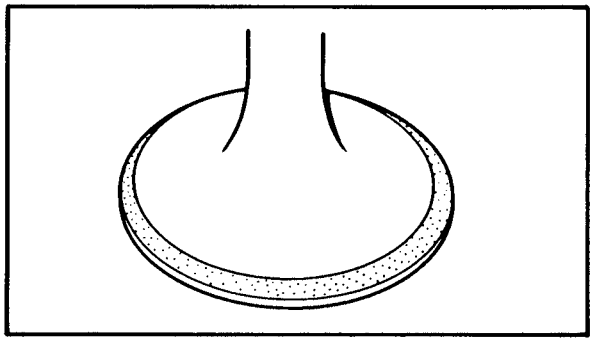

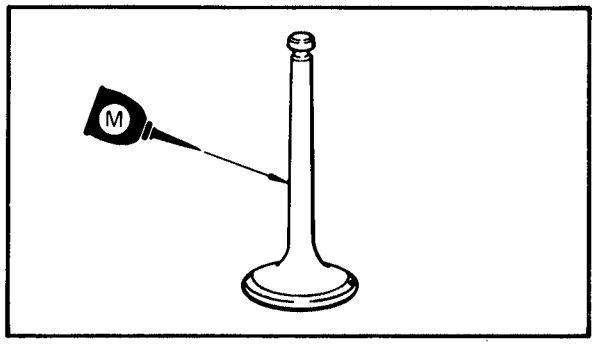

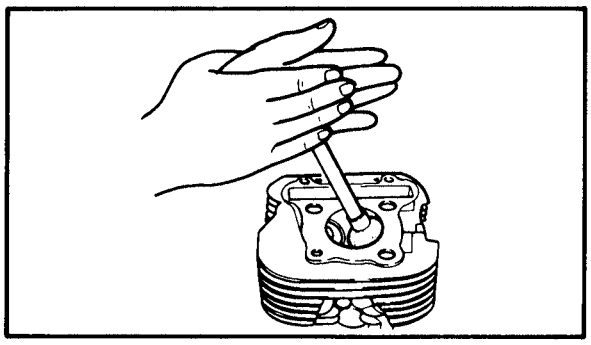

****

Lapping steps:

- Apply a coarse lapping compound to the valve face.

CAUTION:

Be sure no compound enters the gap between the valve stem and guide.

- Apply a molybdenum disulfide oil to the valve stem.
- Install the valve into the cylinder head.
- Turn the valve until the valve face and valve seat are evenly polished, then clean off all compound.

NOTE:

To obtain the best lapping results, lightly tap the valve seat while rotating the valve back and forth between your hands.

- Apply a fine lapping compound to the valve face and repeat the above steps.

NOTE:

Be sure to clean off all compound from the valve face and valve seat after every lapping operation.

- Apply the Mechanic's bluing dye (Dykem) to the valve face.
- Install the valve into the cylinder head.
- Press the valve through the valve guide and onto the valve seat to make a clear pattern.
- Measure the valve seat width again.
  If the valve seat width is out of specification, reface and lap the valve seat.

****

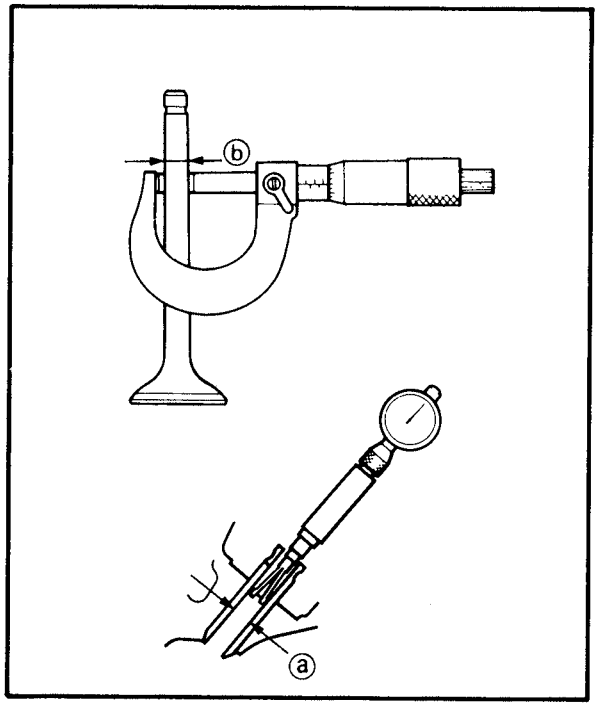

VALVE/VALVE GUIDE

1. Measure:
   - Stem-to-guide clearance

Stem-to-guide clearance =
Valve guide inside diameter ⓐ −
Valve stem diameter ⓑ

Out of specification → Replace valve guide.

Stem-to-guide clearance:
Intake 0.010 ~ 0.037 mm
(0.0004 ~ 0.0014 in)
<Limit: 0.06 mm (0.002 in)>
Exhaust 0.030 ~ 0.057 mm
(0.00120 ~ 0.00220 in)
<Limit: 0.08 mm (0.003 in)>

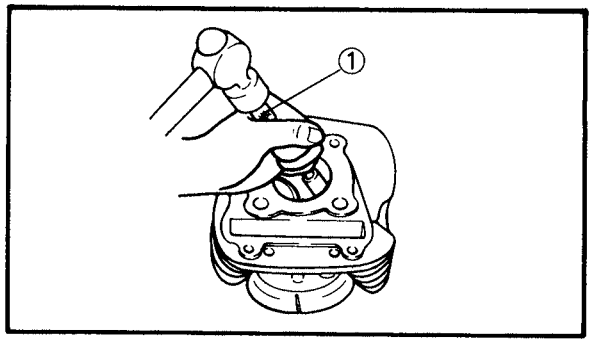

2. Replace:
   - Valve guide

****

Replacement steps:

NOTE:

Heat the cylinder head in an oven to 100°C (212°F) to ease guide removal and installation and to maintain correct interference fit.

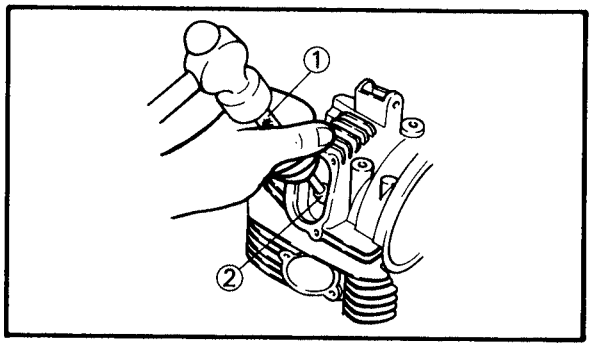

- Remove the valve guide using the Valve guide remover ①.
- Install the valve guide (new) using the valve guide installer ② and valve guide remover ①.
- After installing the valve guide, bore the valve guide using the valve guide reamer ③ to obtain proper stem-to-guide clearance.

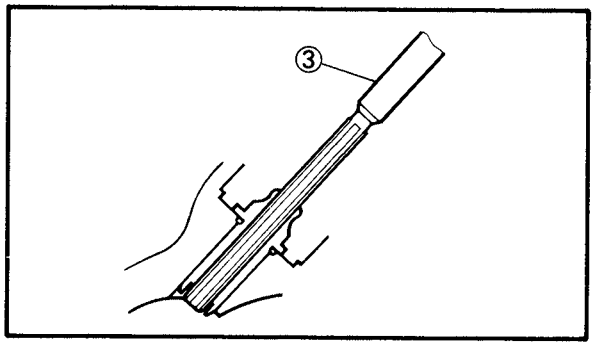

Valve guide remover:
P/N YM-01225
Valve guide installer:
P/N YM-04017
Valve guide reamer:
P/N YM-01227

NOTE:

Reface the valve seat after replacing the valve guide.

****

3. Eliminate:
   - Carbon deposit (from valve face)
4. Inspect:
   - Valve face
     Pitting/Wear→Grind the face.
   - Valve stem end
     Mushroom shape or diameter larger than rest of stem→Replace.

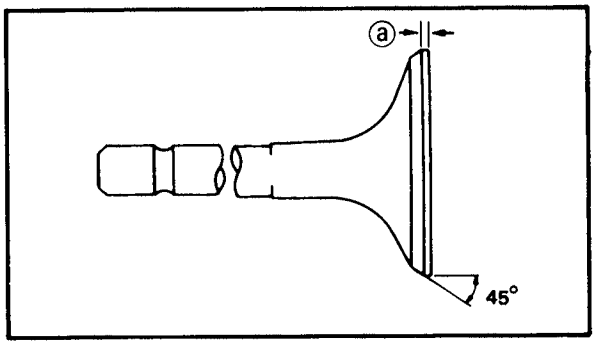

5. Measure:
   - Margin thickness ⓐ
     Out of specification→Replace.

Margin thickness:
Intake
0.8~1.2 mm (0.031~0.047 in)
Exhaust
0.8~1.2 mm (0.031~0.047 in)

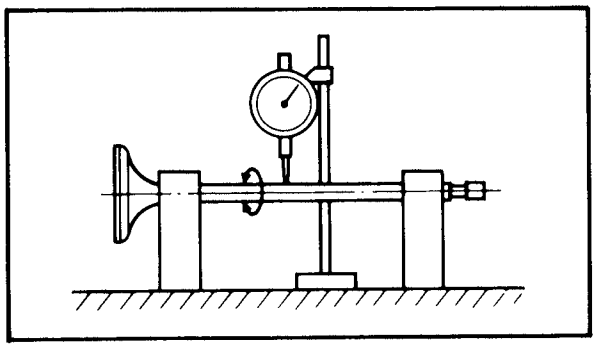

6. Measure:
   - Runout (valve stem)
     Out of specification→Replace.

Runout:
Less than 0.01 mm (0.0004 in)

NOTE:
- Always replace the guide if the valve is replaced.
- Always replace the oil seal if the valve is removed.

CAMSHAFT

1. Inspect:
   - Cam lobes
     Pitting/Scratches/Blue discoloration →Replace.

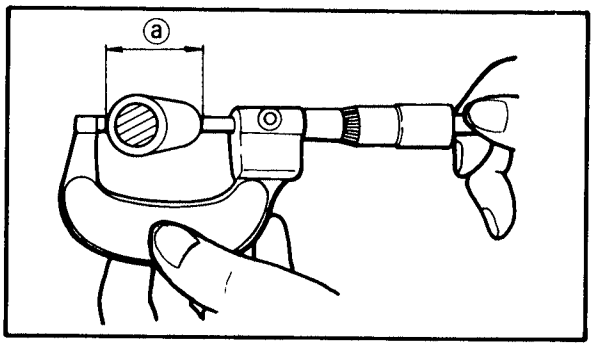

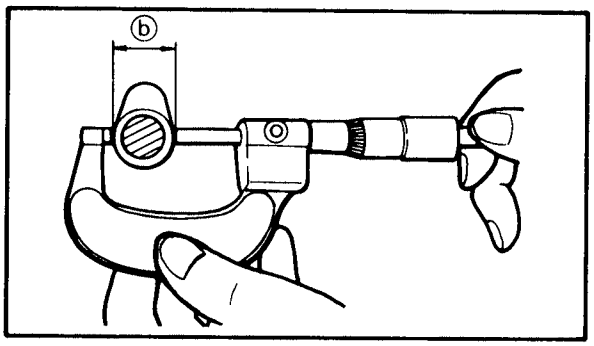

2. Measure:
   - Cam lobes length ⓐ and ⓑ.
     Out of specification→Replace.

Cam lobe length:
Intake
ⓐ **40.62 ~ 40.72 mm (1.599 ~ 1.603 in)**
ⓑ **32.18 ~ 32.28 mm (1.267 ~ 1.271 in)**
Exhaust
ⓐ **40.62 ~ 40.72 mm (1.599 ~ 1.603 in)**
ⓑ **32.18 ~ 32.28 mm (1.267 ~ 1.271 in)**

ROCKER ARM/ROCKER ARM SHAFT

1. Inspect:
   - Rocker arm shaft
     Blue discoloration/Grooves→Replace, then inspect lubrication system.
2. Inspect:
   - Bore (rocker arm shaft) ①
   - Cam lobe contact surface ②
   - Adjuster surface ③
     Wear/Pitting/Scratches/Blue discoloration →Replace, then inspect lubrication system.

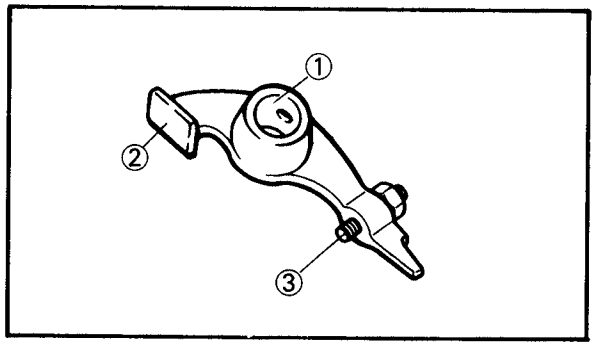

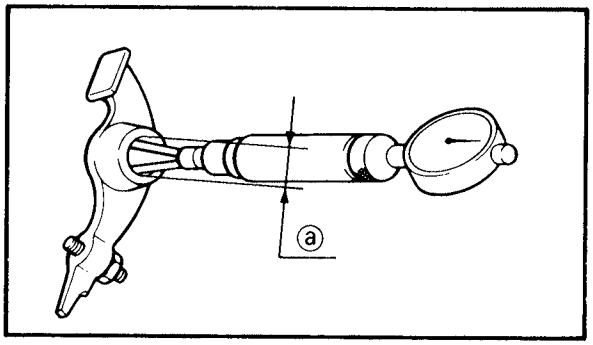

3. Measure:
   - Arm-to-shaft clearance
     Out of specification→Replace as a set.

Arm-to-shaft clearance =
Bore size (rocker arm shaft) ⓐ −
Outside diameter (rocker arm shaft) ⓑ

Arm-to-shaft clearance:
0.009 ~ 0.037 mm
(0.0003 ~ 0.0015 in)
<Limit: 0.10 mm (0.004 in)>

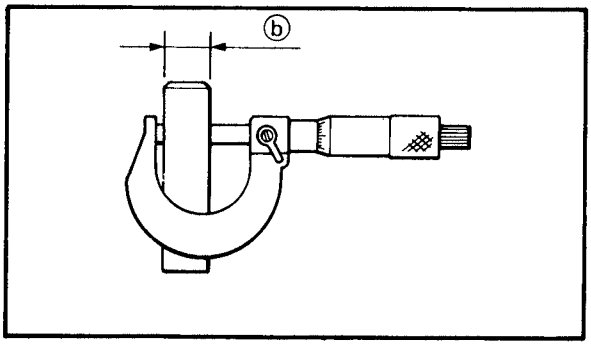

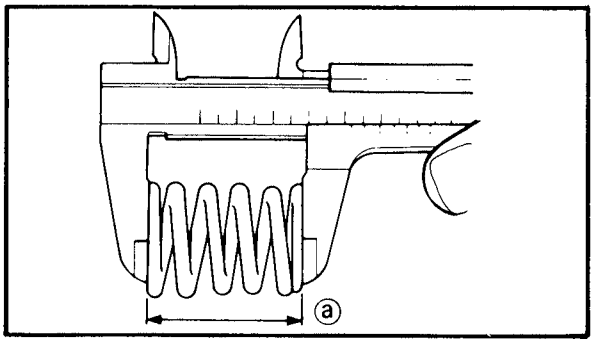

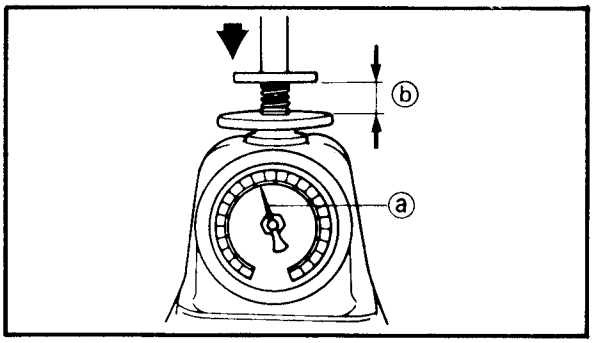

VALVE SPRING

1. Measure:
   - Free length ⓐ (valve spring)
     Out of specification→Replace.

Free length (valve spring):
Inner spring
39.9 mm (1.57 in)
Outer spring
43.27 mm (1.70 in)

2. Measure:
   - Compressed force ⓐ (valve spring)
     Out of specification→Replace.

ⓑ Installed length

Compressed force (valve spring):
Inner spring
10.7~12.3 kg at 33.6 mm
(23.59~27.12 lb at 1.323 in)
Outer spring
24.0~25.6 kg at 36.6 mm
(52.91~56.44 lb at 1.441 in)

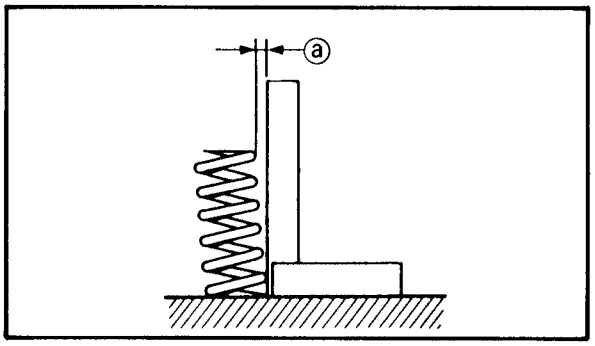

3. Measure:
   - Spring tilt ⓐ
     Out of specification→Replace.

Spring tilt:
Inner spring
1.6 mm (0.063 in)
Outer spring
1.6 mm (0.063 in)

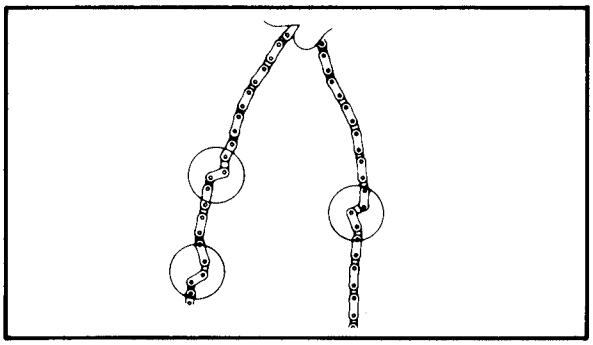

TIMING CHAIN/CHAIN GUIDE/SPROCKET

1. Inspect:
   - Timimg chain
     Stiff/Cracks→Replace timing chain and sprocket as a set.

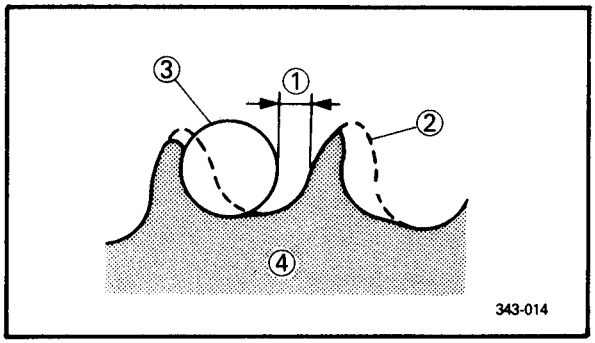

2. Inspect:
   - Sprocket
     Wear/Damage→Replace sprocket and timing chain as a set.

① 1/4 tooth
② Correct
③ Roller
④ Sprocket

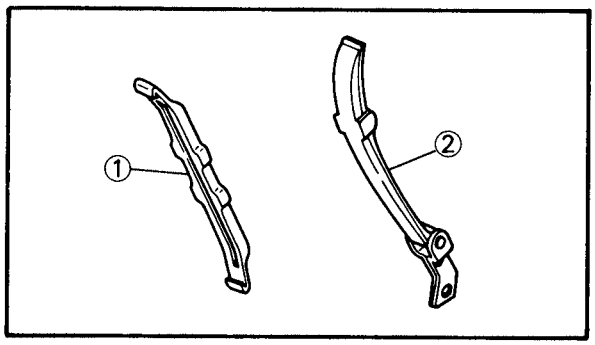

3. Inspect:
   - Chain guide ① (exhaust side)
   - Chain guide ② (intake side)
     Wear/Damage→Replace.

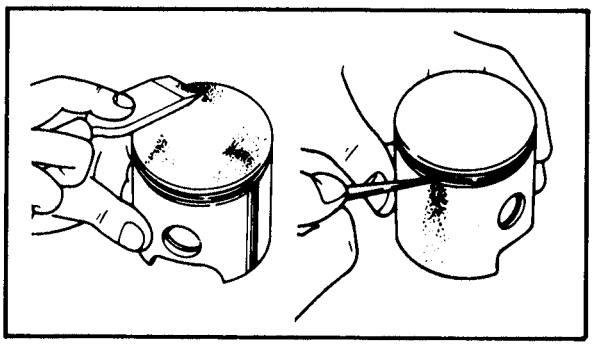

CYLINDER/PISTON

1. Eliminate:
   - Carbon deposits
     (from the piston crown and ring grooves)
2. Inspect:
   - Piston wall
     Wear/Scratches/Damage→Replace.

3. Eliminate:
   - Score marks and lacquer deposits
     From the sides of piston.
     Use a 600~800 grit wet sandpaper.

NOTE:

Sand in a crisscross pattern. Do not sand excessively.

4. Inspect:
   - Cylinder wall
     Wear/Scratches→Rebore or replace.

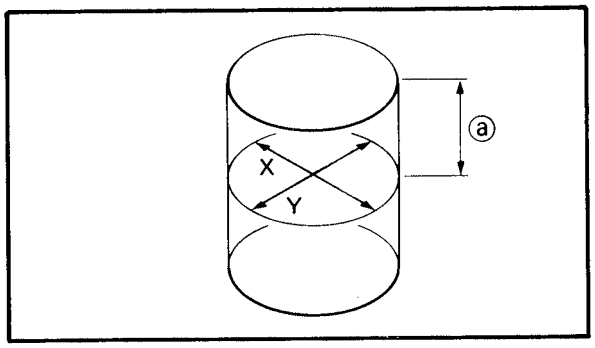

5. Measure:
   • Piston-to-cylinder clearance

****

Piston-to-cylinder clearance measurement steps:

First steps

- Measure the cylinder bore "C" with a cylinder bore gauge.

ⓐ 40 mm (1.57 in) from the cylinder top

NOTE:

Measure the cylinder bore "C" in parallel to and at right angles to the crankshaft.
Then, find the average of the measurements.

	Cylinder Bore "C": **82.97 ~ 83.02 mm** **(3.267 ~ 3.269 in)** **<Limit: 83.10 mm (3.272 in)>**
	$C = \frac{X+Y}{2}$

- If out of the specification, rebore or replace the cylinder, and the piston and piston rings as a set.

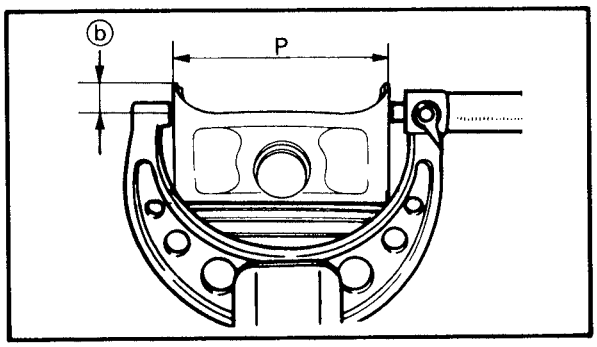

2nd steps

- Measure the piston skirt diameter "P" with a micrometer.

ⓑ 4 mm (0.16 in) from the piston bottom edge

	Piston skirt diameter "P": **82.04 ~ 82.05 mm** **(3.2299 ~ 3.2303 in)**

- If out of the specification, replace the piston and piston rings as a set.

3rd steps

- Find the piston-to-cylinder clearance with following formula.

Piston-to-cylinder clearance = **Cylinder bore "C" –** **Piston skirt diameter "P"**
Piston-to-cylinder clearance: **0.040 ~ 0.060 mm** **(0.0016 ~ 0.0024 in)** **<Limit: 0.15 mm (0.006 in)>**

- If out of the specification, rebore or replace the cylinder, and replace the piston and piston rings as a set.

****

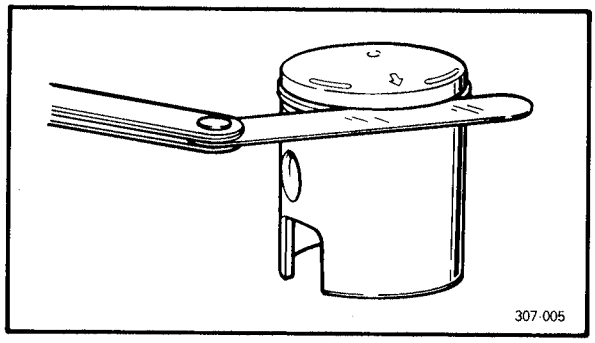

PISTON RING

1. Measure:
   - Side clearance
     Out of specification→Replace piston, and rings as a set.

NOTE:

Eliminate carbon deposit from piston ring grooves and rings before measuring side clearance.

Side clearance:
Top ring
0.04~0.08 mm
(0.0016~0.0031 in)
2nd ring
0.03~0.07 mm
(0.0012~0.0028 in)

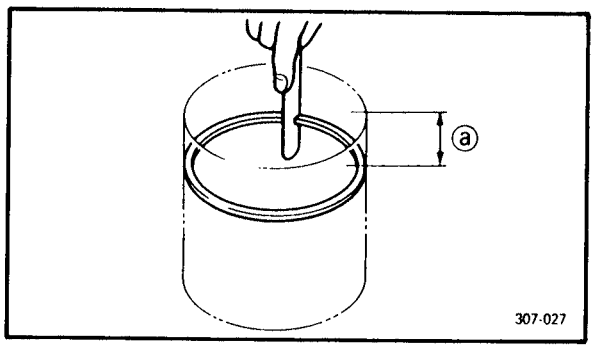

2. Position:
   - Piston ring (into the cylinder)

NOTE:

Push the ring with the piston crown so that the ring will be at a right angle to cylinder bore.

ⓐ : 20 mm (0.8 in)

3. Measure:
   - Eng gap
     Out of specification→Replace.

NOTE:

You cannot measure end gap on expander spacer of oil control ring. If oil control ring rails show excessive gap, replace all three rings.

End Gap:
Top ring
0.20 ~ 0.40 mm
(0.008 ~ 0.016 in)
2nd ring
0.20 ~ 0.40 mm
(0.008 ~ 0.016 in)
Oil ring
0.30 ~ 0.90 mm
(0.012 ~ 0.036 in)

PISTON PIN

1. Inspect:
   - Piston pin
     Blue discoloration/Grooves → Replace, then inspect lubrication system.

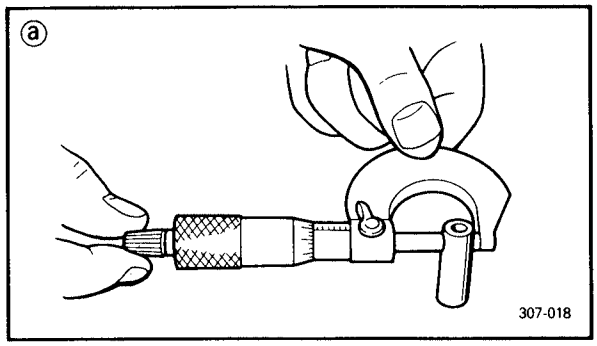

2. Measure:
   - Outside diameter ⓐ (piston pin):
     Out of specification → Replace.

Outside diameter (piston pin):
18.990 ~ 18.995 mm (0.75 in)

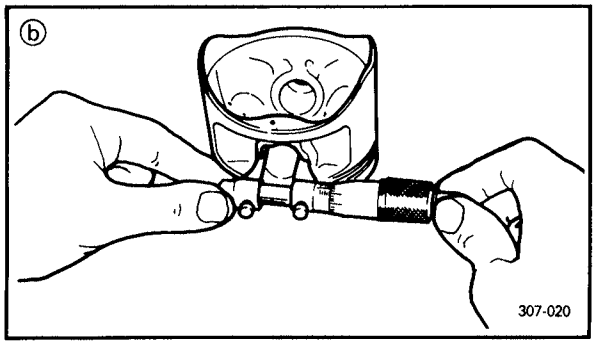

3. Measure:
   - Piston pin-to-piston clearance
     Out of specification → Replace piston.

Piston pin-to-piston clearance =
Bore size (piston pin) ⓑ −
Outside diameter (piston pin) ⓐ

Piston pin-to-piston clearance:
0.014 ~ 0.02 mm
(0.0006 ~ 0.0008 in)
<Limit: 0.07 mm (0.003 in)>

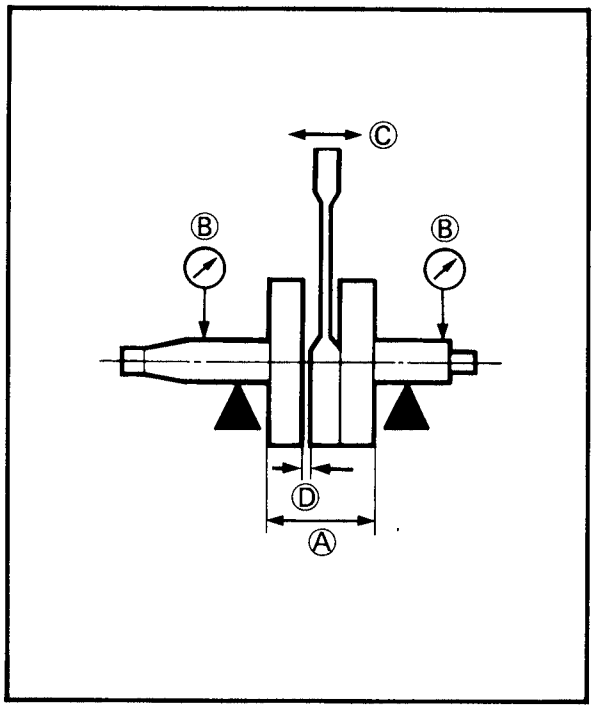

CRANKSHAFT/CONNECTING ROD

1. Measure:
   - Crank width Ⓐ
     Out of specification→Replace crankshaft.

Crank width:
58.95~59.00 mm
(2.321~2.323 in)

- Runout Ⓑ
  Out of specification→Replace crankshaft and/or bearing.

Runout:
Less than 0.06 mm (0.002 in)

- Small end free play Ⓒ
  Out of specification→Replace big end bearing, crank pin and/or connecting rod.

Small end free play:
0.8~1.0 mm (0.031~0.039 in)

- Side clearance Ⓓ
  Out of specification→Replace connecting rod.

Big end side clearance:
0.35~0.85 mm
(0.014~0.033 in)

ELECTRIC STARTER DRIVES

1. Inspect:
   - Roller ① operation
     Unsmooth operation→Replace one-way clutch.

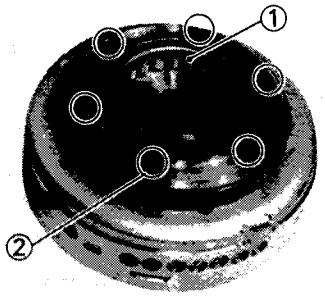

****

Replacement points:

- Tighten the bolts to specification.

Bolts (starter clutch): ②
30 Nm (3.0 m•kg, 22 ft•lb)
Apply LOCTITE®

- Calk the end of the bolts using a punch.

****

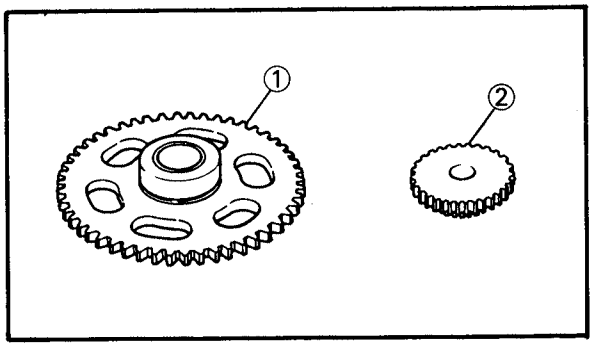

2. Inspect:
   - Starter wheel gear teeth ①
   - Idle gear teeth ②

   Burrs/Chips/Roughness/Wear→Replace.

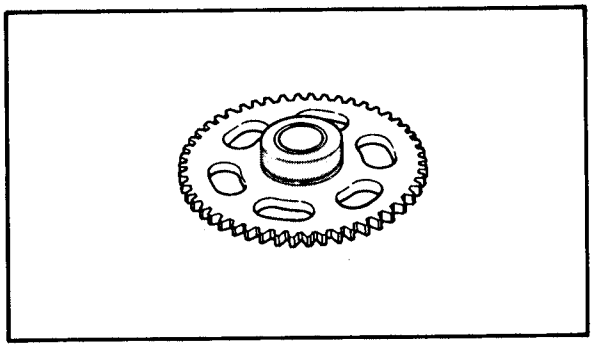

3. Inspect:
   - Contacting surfaces

   Pitting/Wear/Damage→Replace.

4. Check:
   - Starter clutch operation

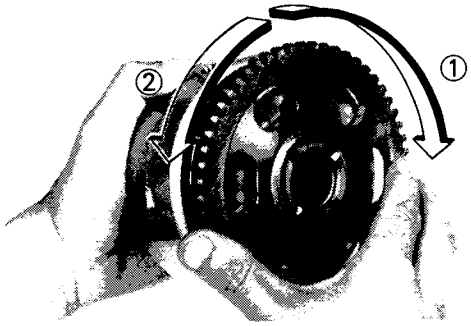

****

Clutch operation checking steps:

- Install the starter wheel gear to the starter clutch, and hold the starter clutch.
- When turning the wheel gear clockwise ①, the starter clutch and the wheel gear should be engaged.
  If not, the starter clutch is faulty. Replace it.
- When turning the wheel gear counterclockwise ②, the wheel gear should turn freely.
  If not, the starter clutch is faulty. Replace it.

****

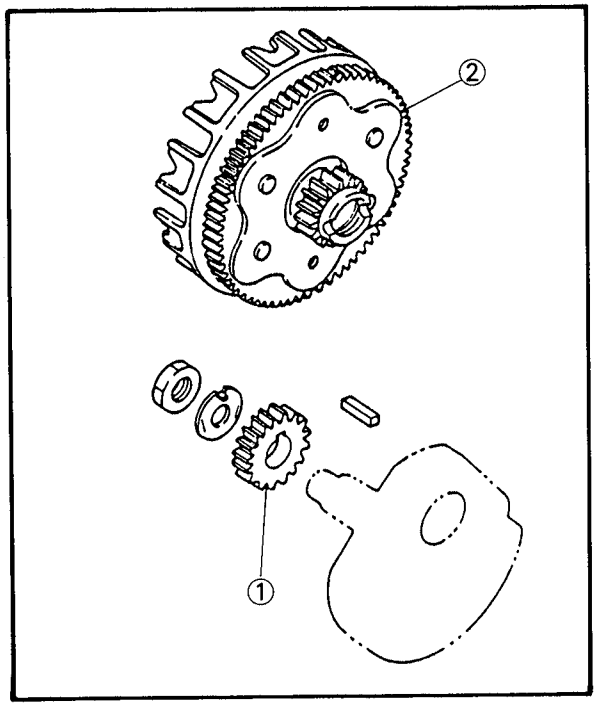

PRIMARY DRIVE

1. Inspect:
   - Primary drive gear ①
   - Primary driven gear ②

   Wear/Damage→Replace both gears.
   Excessive noises during operation→Replace both gears.

Primary reduction ratio:		
No. of teeth		Ratio
Drive	Driven	
24	76	3.167

CLUTCH

1. Inspect:
   - Friction plate
     Damage/Wear→Replace friction plate as a set.

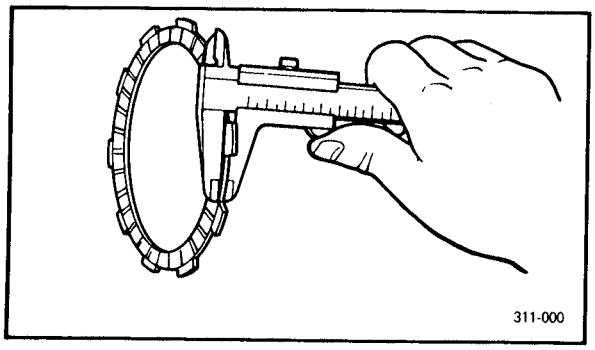

2. Measure:
   - Friction plate thickness
     Out of specification→Replace friction plate as a set.
     Measure at all four points.

Thickness:
2.94~3.06 mm (0.116~0.120 in)
<Limit: 2.8 mm (0.11 in)>

3. Inspect:
   - Clutch plate
     Damage→Replace clutch plate as a set.

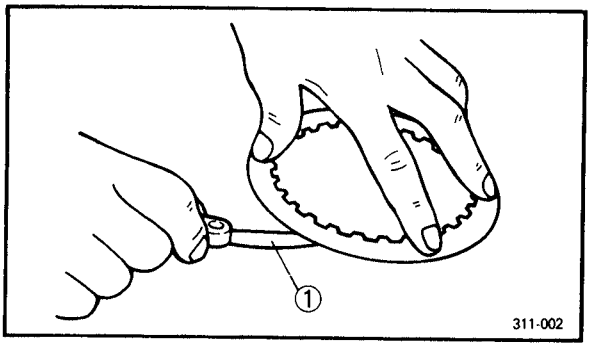

4. Measure:
   - Clutch plate warpage
     Out of specification→Replace clutch plate as a set.
     Use a surface plate and feeler gauge ①.

Warp limit:
Less than 0.2 mm (0.008 in)

5. Inspect:
   - Clutch spring
     Damage→Replace as a set.

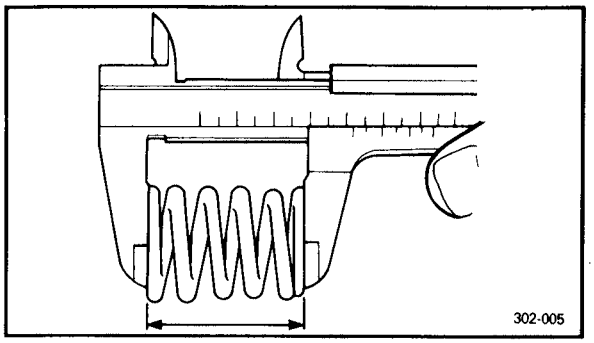

6. Measere:
   - Clutch spring free length
     Out of specification→Replace spring as a set.

Free length (clutch spring):
47.8 mm (1.88 in)
<Limit: 46.5 mm (1.83 in)>

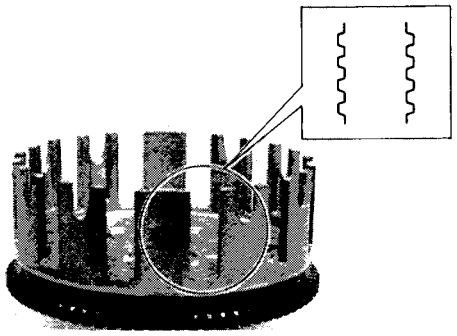

7. Inspect:
   - Clutch housing dogs
     Cracks/Pitting (edges):
     Moderate→Deburr.
     Severe→Replace clutch housing.

NOTE:

Pitting on friction plate dogs of clutch housing will cause erratic operation.

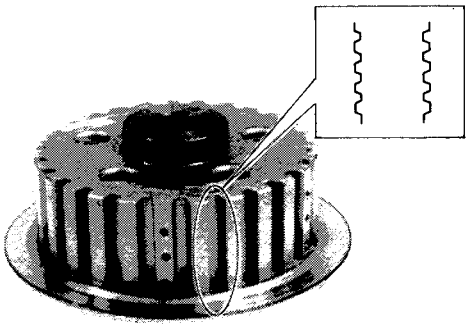

8. Inspect:
   - Clutch housing bearing
     Damage→Replace.
9. Inspect:
   - Clutch boss spline
     Pitting:
     Moderate→Deburr.
     Severe→Replace.

NOTE:

Pitting on clutch plate splines of clutch boss will cause erratic operation.

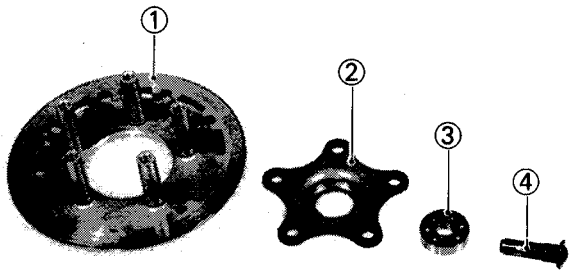

10. Inspect:
    - Pressure plate 1 ①
    - Pressure plate 2 ②
    - Bearing ③
    - Long push rod ④
      Damage→Replace.

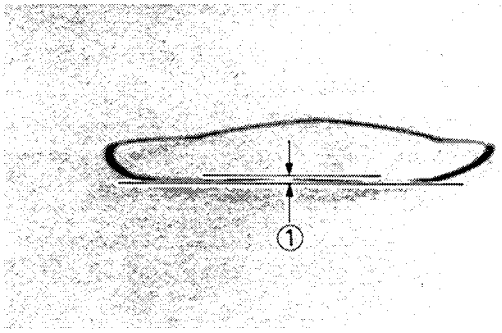

11. Measure:
    - Cushion spring height ①
      Out of specification→Replace.

Cushion spring height:
3.3±0.15 mm (0.128±0.0059 in)

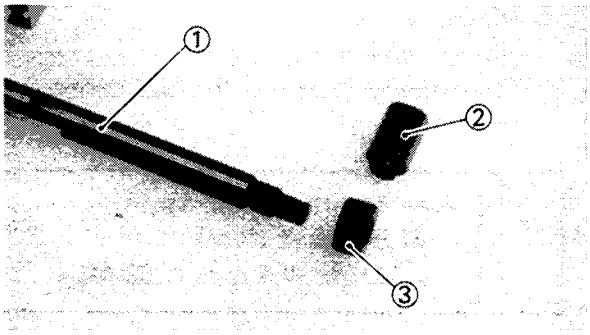

12. Inspect:
    - Push lever axle ①
    - Short push rod ②
    - Pinion gear ③

    Damage→Replace

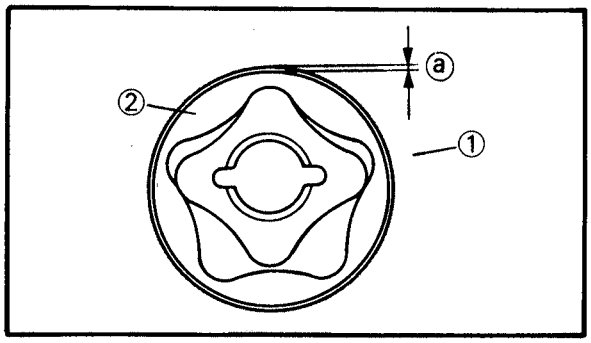

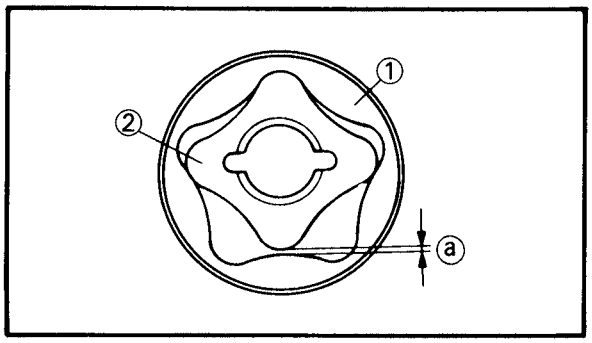

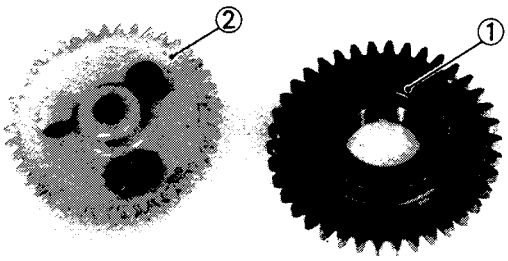

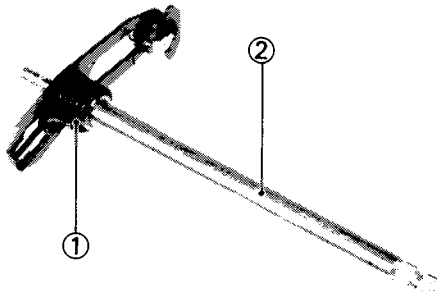

OIL PUMP

1. Measure:
    - Side clearance ⓐ

    Use a feeler gauge

    Out of specification→Replace oil pump assembly.

	Side clearance: **0.04~0.09 mm (0.002~0.004 in)** **<Limit>:** **0.09 mm (0.004 in)**

2. Measure:
    - Tip clearance ⓐ

    Use a feeler gauge.

    Out of specification→Replace oil pump assembly.

	Tip clearance: **0.0~0.15 mm (0.0~0.006 in)** **<Limit>:** **0.20 mm (0.008 in)**

3. Inspect:
    - Oil pump drive gear teeth ①
    - Oil pump driven gear teeth ②

    Wear/Cracks/Damage→Replace.

SHIFTER

1. Inspect:
    - Shift return spring ①

    Damage→Replace.
    - Shift shaft ②

    Damage/Bends/Wear→Replace.

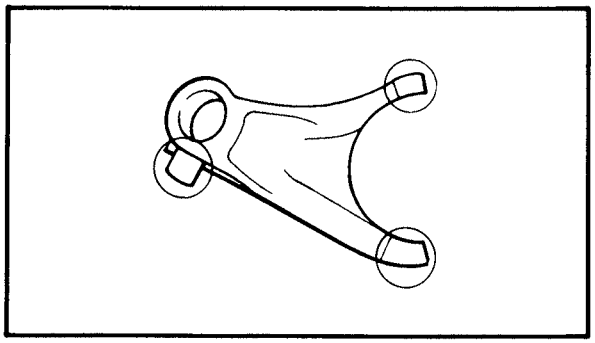

2. Inspect:
   - Shift forks
     On the gear and shift cam contact surfaces.
     Wear/Chafing/Bends/Damage→Replace.

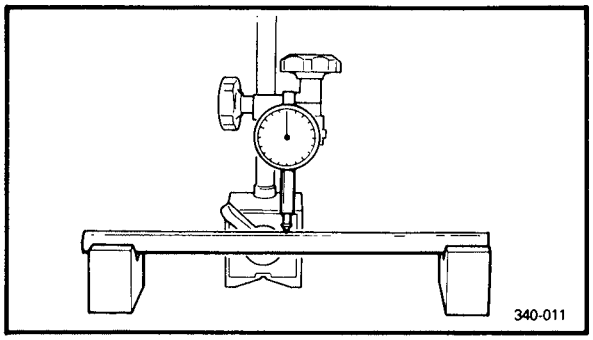

3. Measure:
   - Runout (guide bar)
     Out of specification→Replace.

Runout:
Less than 0.8 mm (0.032 in)

WARNING

Do not attempt to straighten a bent guide bar.

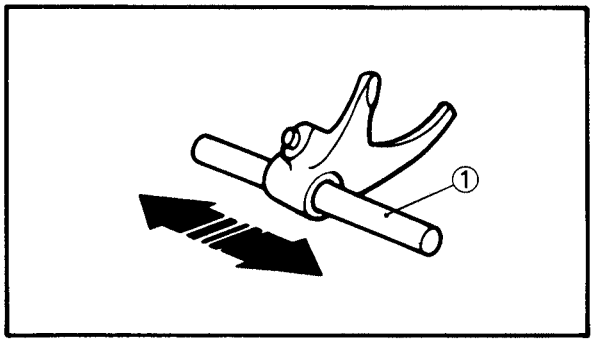

4. Check:
   - Shift fork movement
     On its guide bar ①.
     Unsmooth operation→Replace fork and/or guide bar.

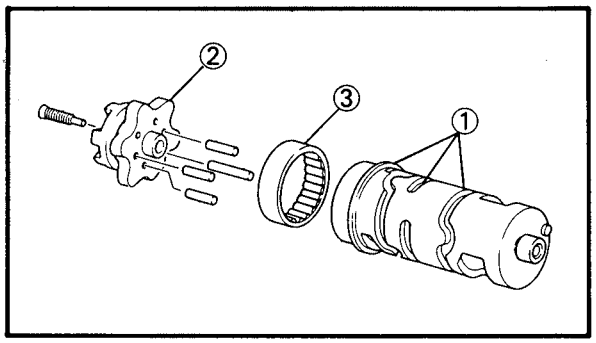

5. Inspect:
   - Shift cam grooves ①
     Wear/Damage/Scratches→Replace.
   - Shift cam segment ②
     Damage/Wear→Replace.
   - Shift cam bearing ③
     Roughness/Sluggishness→Replace.

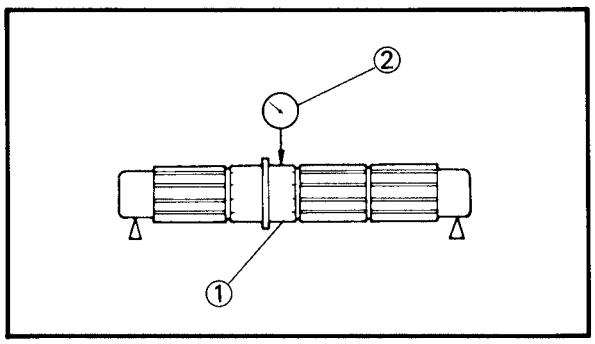

TRANSMISSION

1. Measure:
   - Axle runout (main and drive axles) ①
     Use centering device and Dial Gauge ②.
     Out of specification→Replace.

Runout:
Less than 0.08 mm (0.0031 in)

2. Inspect:
   - Gear teeth
     Blue discoloration/Pitting/Wear→Replace.
   - Mating dogs
     Rounded edges/Cracks/Missing portions→Replace.

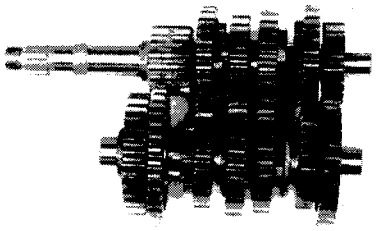

3. Check:
   - Gear movement (transmission)
     Unsmooth operation→Repair.

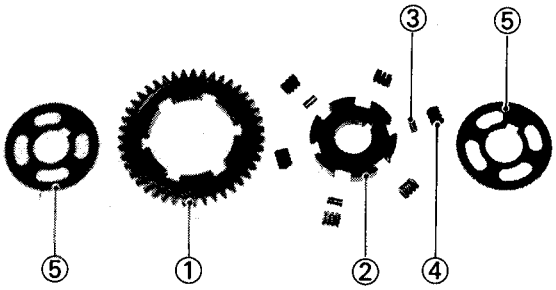

BALANCER DRIVE GEAR

1. Inspect:
   - Balancer drive gear ①
   - Boss ②
   - Pins ③
   - Springs ④
   - Washers ⑤
     Damage/Wear/Fatigue→Replace.

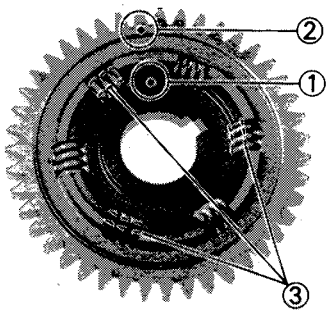

2. Align:
   - Boss match mark ①
     (with the drive gear mark ②)

NOTE:

Be sure to install a pin ③ to every other spring.

CRANKCASE

1. Inspect:
   - Case halves
   - Bearing seat
   - Fitting
     Damage→Replace.

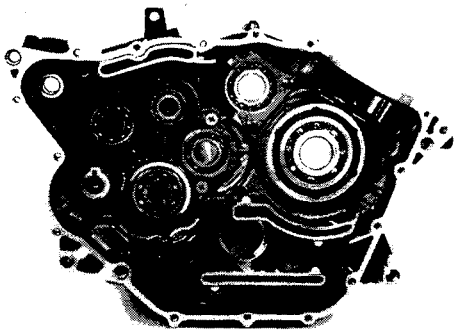

BEARINGS AND OIL SEALS

1. Inspect:
   - Bearing
     Clean and lubricate, then rotate inner race with finger.
     Roughness→Replace bearing (see Removal).
2. Inspect:
   - Oil seals
     Damage/Wear→Replace (see Removal).

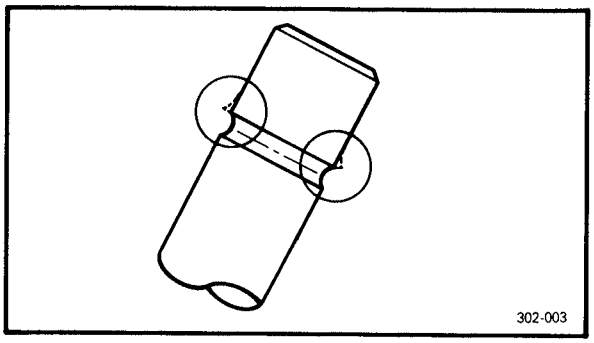

ENGINE ASSEMBLY AND ADJUSTMENT

CAMSHAFT/ROCKER ARMS/VALVES

1. Deburr:
   - Valve stem end
     Use an oil stone to smooth the stem end.

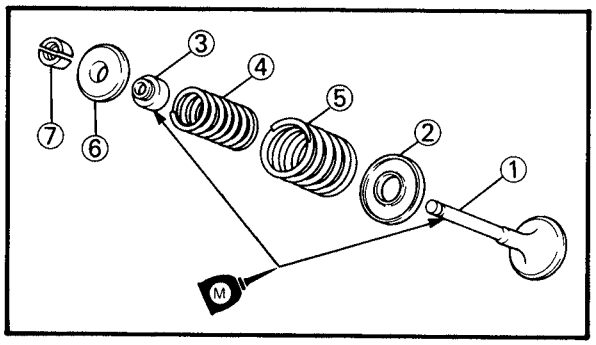

2. Apply:
   - High-Quality molybdenum disulfide motor oil (to the valve stem and oil seal.)
3. Install:
   - Valve ①
   - Spring seat ②
   - Oil seal ③
   - Valve spring (inner) ④
   - Valve spring (outer) ⑤
   - Spring retainer ⑥
   - Valve cotter ⑦

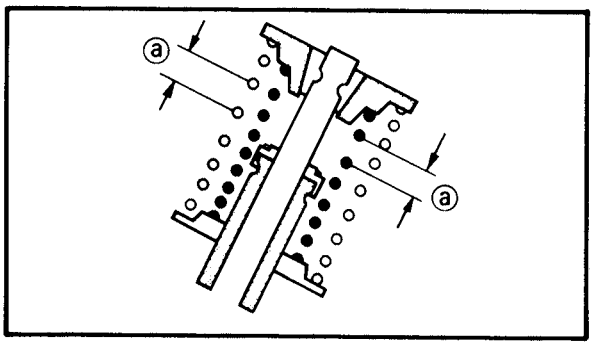

NOTE:

All valve springs must be installed with the larger pitch ⓐ upward as shown.

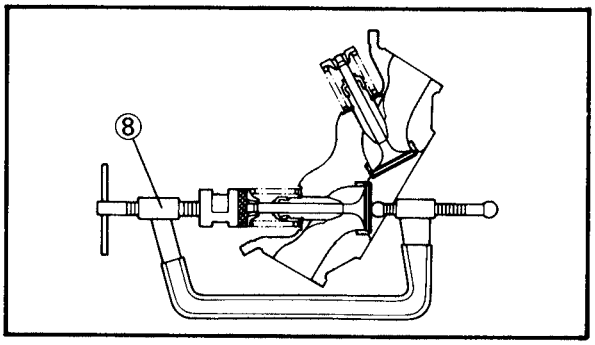

NOTE:

Compress the valve spring with the valve, spring compressor ⑧ and then, install the valve cotters.

Valve spring compressor:
P/N YM-04019

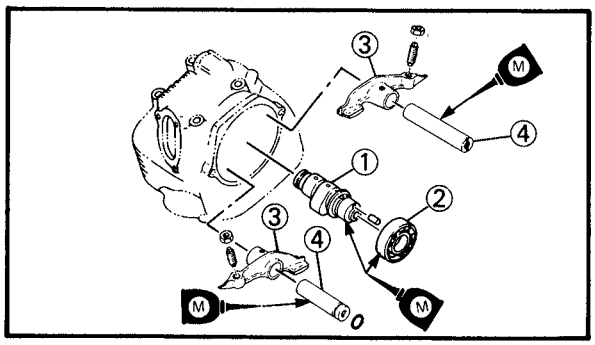

4. Apply:
   - Engine oil
     (to the bearing of the camshaft)
   - High-Quality molybdenum disulfide motor oil
     (to the rocker arm and shaft)
5. Install:
   - Camshaft ①
   - Camshaft bearing ②
   - Rocker arm ③
   - Rocker arm shaft ④

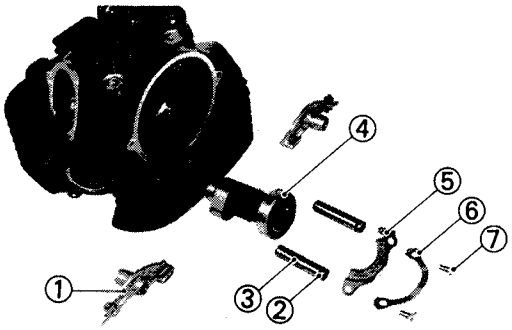

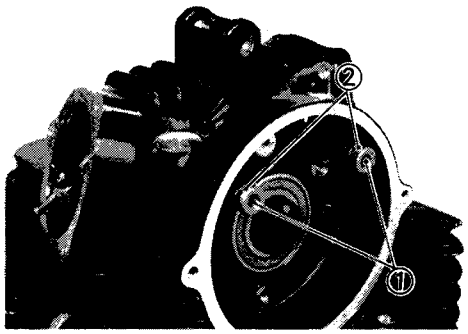

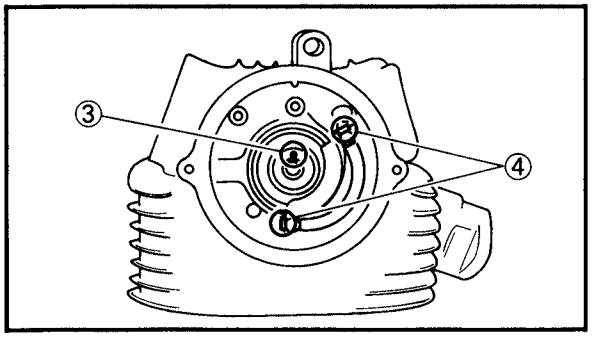

6. Install:
   - Rocker arms ①
   - O-ring ②
   - Rocker arm shafts ③
   - Camshaft ④
   - Stopper plate ⑤
   - Lock washer ⑥
   - Bolts ⑦

NOTE:

- Insert the rocker arm shaft into the rocker arm through the cam chain cavity.
- Inside thread ① face cam chain cavity.
- Install the O-rings ② on the rocker arm shafts.
- Be sure the camshaft pin ③ faces upward.
- The stopper plate tab ④ should be bent along the bolt flat.

ROCKER ARM, AND CAMSHAFT

① Adjuster locknut
② Adjuster
③ Rocker arm
④ Valve retainer
⑤ Spring seat
⑥ Oil seal
⑦ Inner spring
⑧ Outer spring
⑨ Valve
⑩ Circlip
⑪ Valve guide
⑫ Rocker arm shaft
⑬ O-ring
⑭ Camshaft
⑮ Stopper plate
⑯ Lock washer
⑰ Bearing

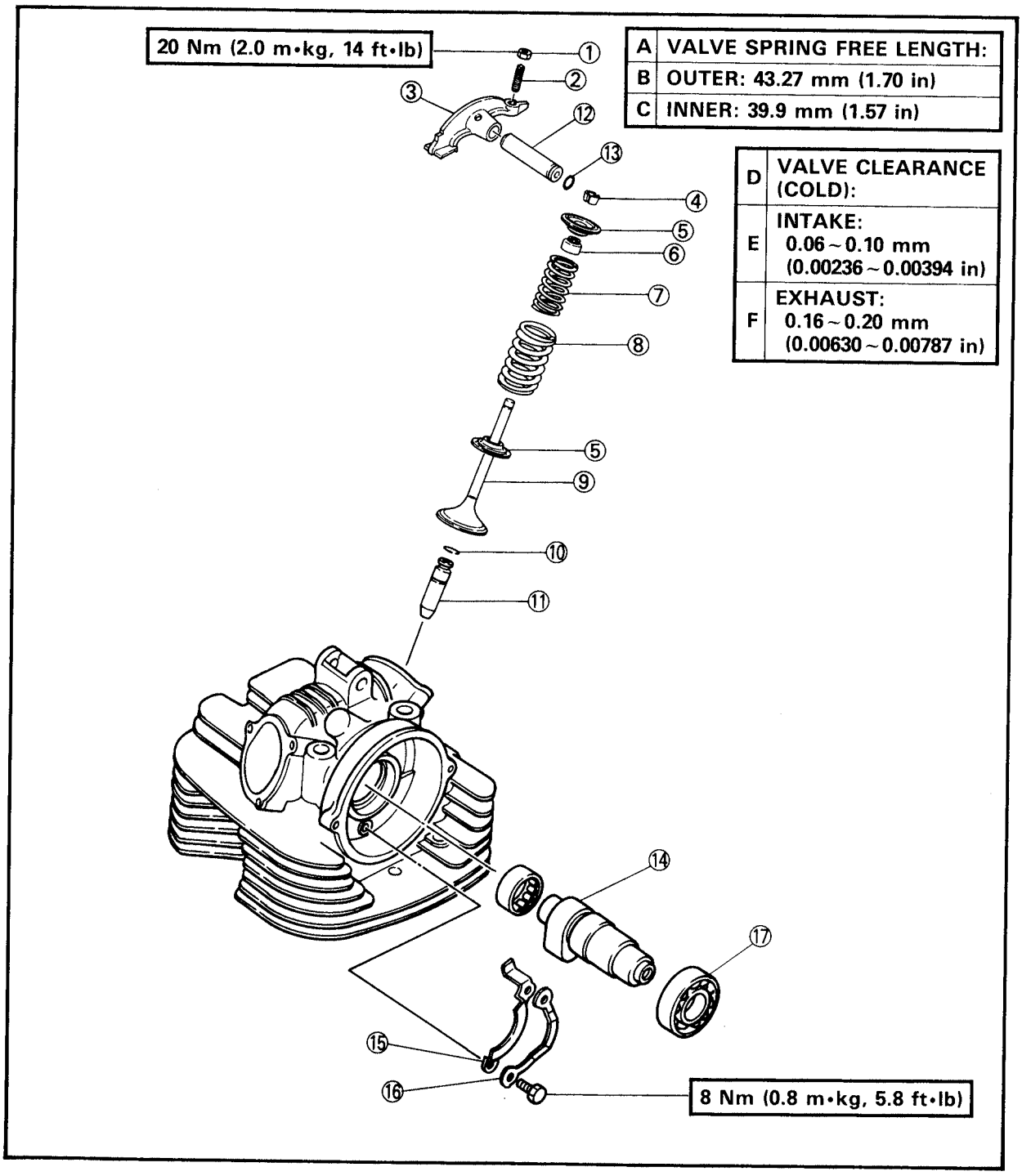

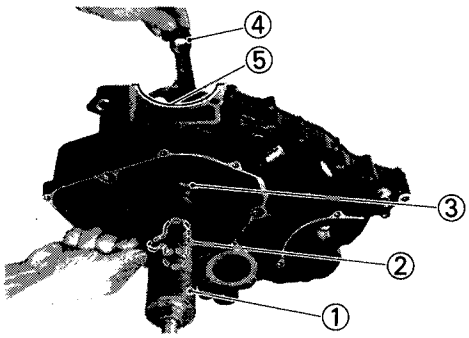

TRANSMISSION/BALANCER/CRANKSHAFT

1. Install:
   - Crankshaft
     (into the left crankcase)

	Crankshaft installer set ①: **P/N YU-90050** **Adapter ②:** **P/N YM-1383** **Spacer ③:** **P/N YM-91044**

CAUTION:

To protect the crankshaft against scratches or to facilitate the operation of the installation, apply the engine oil to each bearing.

NOTE:

- Be sure the connecting rod ④ is in cylinder sleeve hole ⑤.

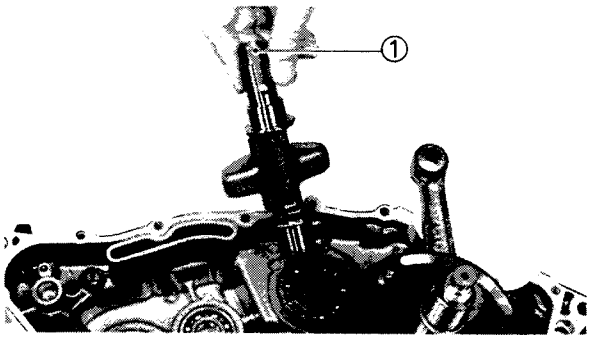

2. Install:
   - Balancer shaft

NOTE:

Be sure the thread ① side face upward.

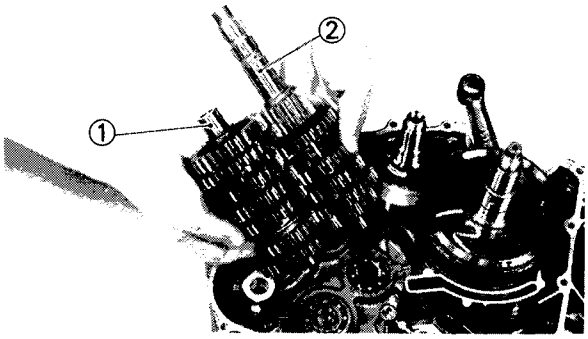

3. Install:
   - Drive axle ① and main axle ② assembly

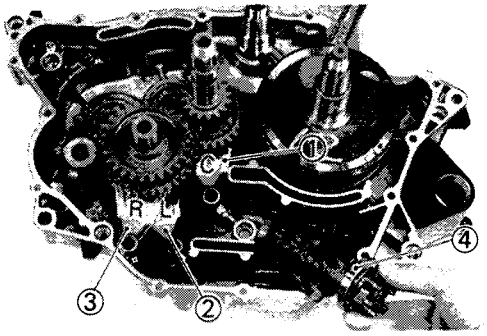

4. Install:
   - Shift fork "C" ①
   - Shift fork "L" ②
   - Shift fork "R" ③
   - Shift cam assembly ④

NOTE:

- Mesh the shift fork "L" with the 6th wheel gear and "R" with the 5th wheel gear on the drive axle.
- Mesh the shift fork "C" with the 3rd/4th pinion gear on the main axle.
- Install the shift forks with the embossed letters should face upward.

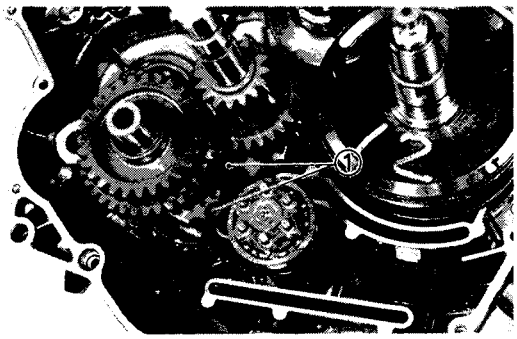

5. Install:
   - Guide bars ①

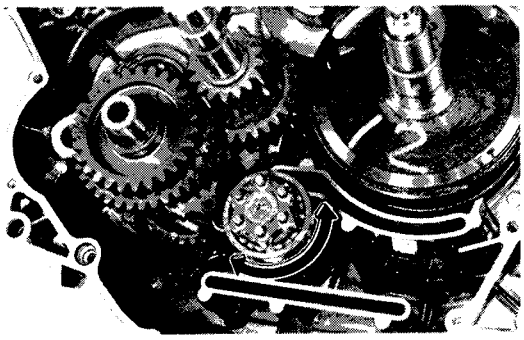

6. Check:
   - Shifter operation
     Unsmooth operation→Repair.

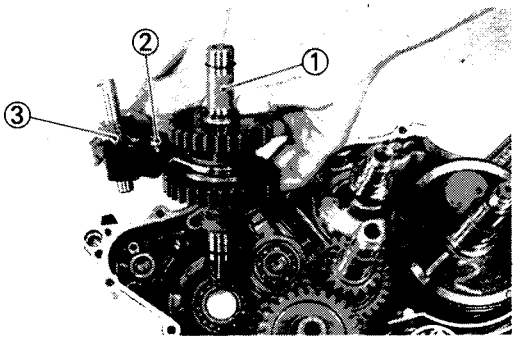

7. Install:
   - Output axle ①, shift fork ②, and shift cam ③ assembly
   - Collar

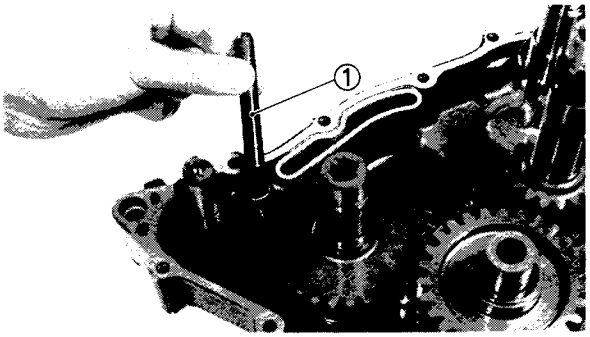

8. Install:
   - Guide bar ①
     (into the shift fork of the output axle)

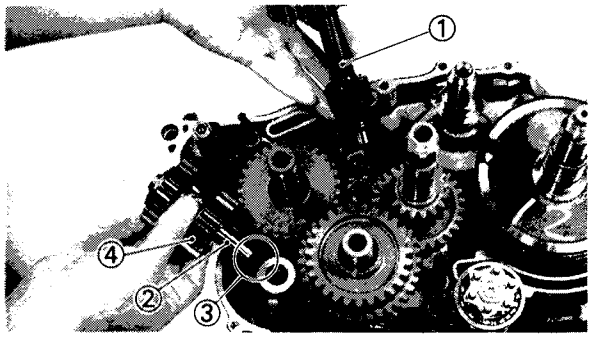

9. Install:
   - Reverse axle assembly ①
   - Counter axle assembly ②

NOTE:

- Insert the counter axle cutting side ③ into the crankcase.
- The small cutside diameter gear ④ must face to counter axle cutting side.

CRANKSHAFT AND BALANCER SHAFT

① Balancer driven gear
② Bearing
③ Straight key
④ Balancer shaft
⑤ Washer
⑥ Balancer drive gear
⑦ Boss
⑧ Woodruff key
⑨ Crank: Right:
⑩ Connecting rod
⑪ Big-end bearing
⑫ Crank pin
⑬ Crank: Left:

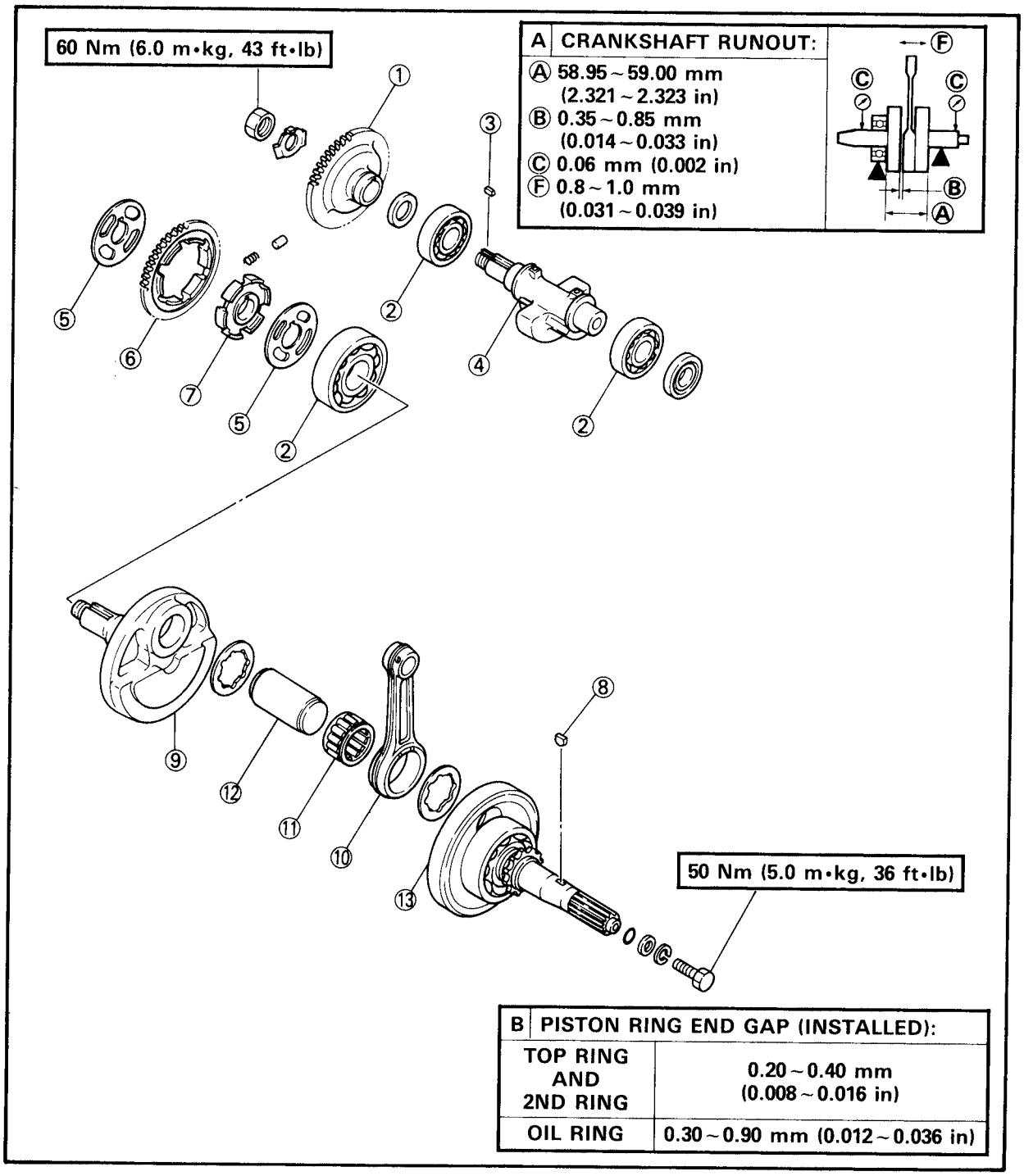

A	CRANKSHAFT RUNOUT:
Ⓐ	58.95 ~ 59.00 mm (2.321 ~ 2.323 in)
Ⓑ	0.35 ~ 0.85 mm (0.014 ~ 0.033 in)
Ⓒ	0.06 mm (0.002 in)
Ⓕ	0.8 ~ 1.0 mm (0.031 ~ 0.039 in)

B	PISTON RING END GAP (INSTALLED):
TOP RING AND 2ND RING	0.20 ~ 0.40 mm (0.008 ~ 0.016 in)
OIL RING	0.30 ~ 0.90 mm (0.012 ~ 0.036 in)

TRANSMISSION AND SHIFTER

Transmission

① Bearing
② Reverse axle
③ Circlip
④ Reverse pinion gear (34T)
⑤ Plain washer
⑥ Drive sprocket
⑦ Oil seal
⑧ Collar
⑨ O-ring
⑩ Output axle
⑪ Reverse wheel gear (33T)
⑫ Dog clutch
⑬ Forward wheel gear (29T)
⑭ Counter axle (10T)
⑮ Counter wheel gear (20T/14T)
⑯ 2nd wheel gear (33T)
⑰ 6th wheel gear (23T)
⑱ 4th wheel gear (27T)
⑲ 3rd wheel gear (29T)
⑳ 5th wheel gear (25T)
㉑ Drive axle
㉒ 1st wheel gear (36T)
㉓ Counter axle drive gear (27T)
㉔ 2nd pinion gear (20T)
㉕ 6th pinion gear (29T)
㉖ 3rd/4th pinion gear (23T/26T)
㉗ 5th pinion gear (28T)
㉘ Main axle (1st pinion gear: 16T)

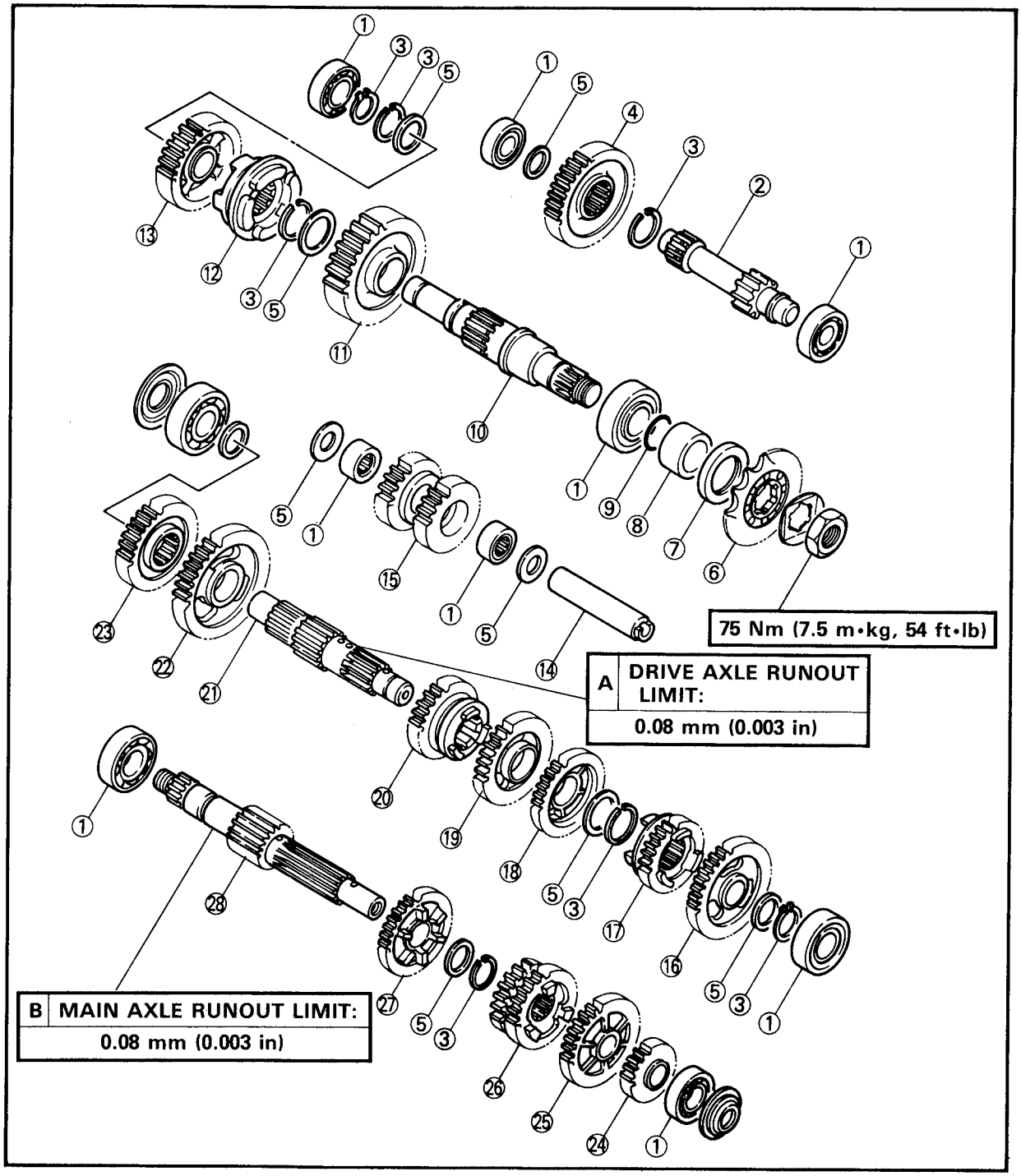

Shifter

① Output axle shift cam
② Output axle shift fork
③ Output axle guide bar
④ Shift fork "R"
⑤ Shift fork "C"
⑥ Shift fork "L"
⑦ Guide bar
⑧ Shift shaft
⑨ Shift cam assembly
⑩ Stopper

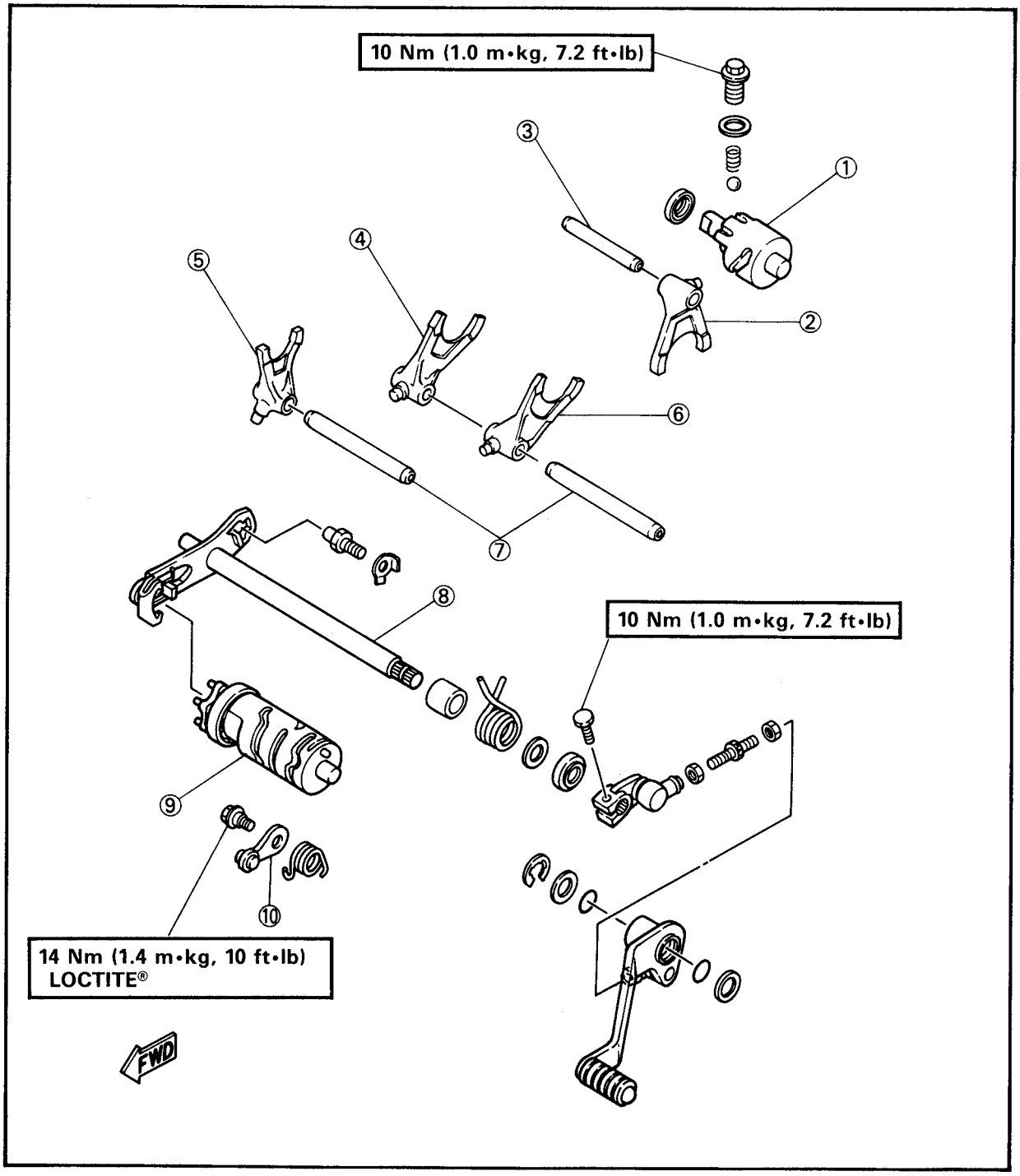

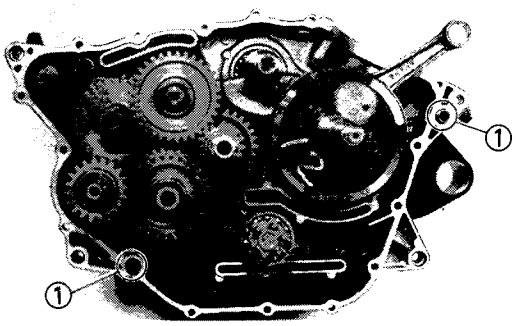

CRANKCASE

1. Apply:
   - Sealant
     (to matching surface of both case halves)

	Sealant (Quick Gasket®): **ACC-11001-05-01** **Yamaha Bond No.4:** **90890-05143**

2. Install:
   - Dowel pins ①
3. Fit the right crankcase onto the left case.
   Tap lightly on the case with a soft hammer.

CAUTION:

Before installing and torquing the crankcase holding screws, be sure to check whether the transmission is functioning properly by manually rotating the shift cam either way.

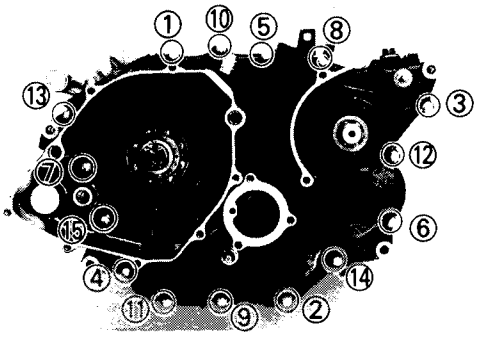

4. Tighten:
   - Screws (crankcase)

NOTE:

Tighten the bolts starting with the lowest numbered one.

	Screws (crankcase): **10 Nm (1.0 m•kg, 7.2 ft•lb)**

5. Apply:
   - 4-stroke engine oil
     To the crank pin, bearing and oil delivery hole.

6. Check:
   - Crankshaft and transmission operation
     Unsmooth operation→Repair.

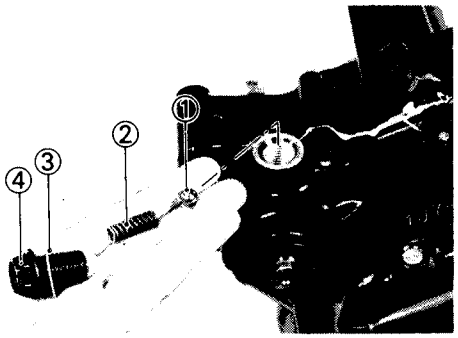

7. Install:
   - Ball ①
   - Spring ②
   - Washer ③
   - Reverse shift cam bolt ④

	Reverse shift cam bolt: **10 Nm (1.0 m•kg, 7.2 ft•lb)**

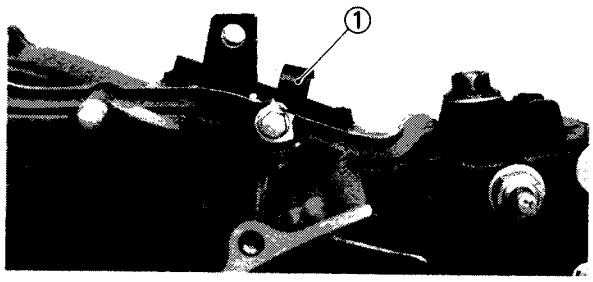

NOTE:

Install the clamp ① on screw No. 8.

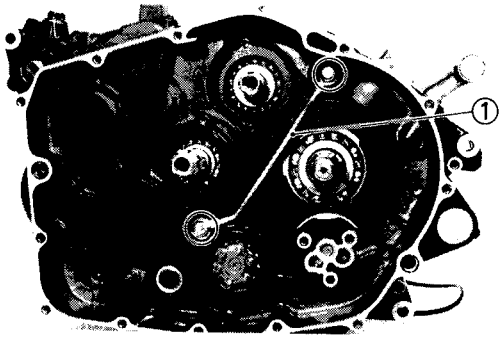

OIL PIPE

1. Install:
   - Washers
   - Oil pipe ①
   - Union bolts

	Union bolts: **16 Nm (1.6 m•kg, 11 ft•lb)**

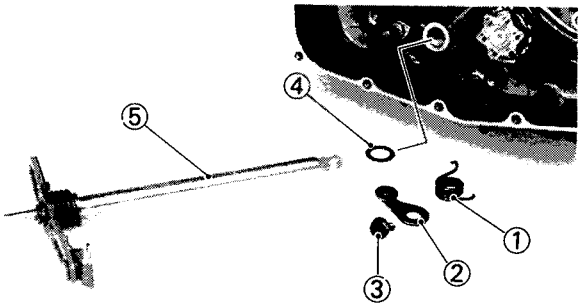

SHIFT SHAFT

1. Install:
   - Stopper spring ①
   - Stopper ②
   - Bolt ③
   - Washer ④
   - Shift shaft ⑤

	Stopper bolt: **14 Nm (1.4 m•kg, 10 ft•lb)**

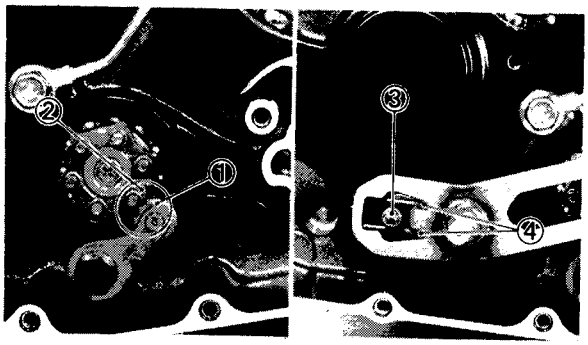

NOTE:

- Mesh the stopper lever roller ① with the segment cam ②.
- Insert the stopper pin ③ between shift shaft springs ④.

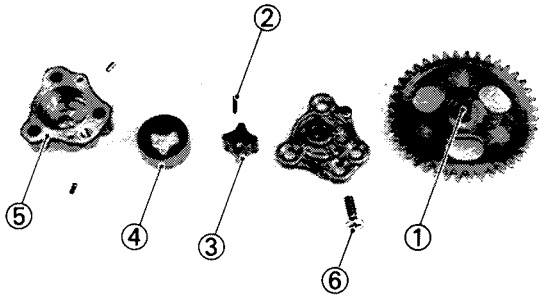

OIL PUMP

1. Install:
   - Oil pump shaft ①
   - Pin ②
   - Inner rotor ③
   - Outer rotor ④
   - Oil pump housing ⑤
   - Housing connecting screw ⑥

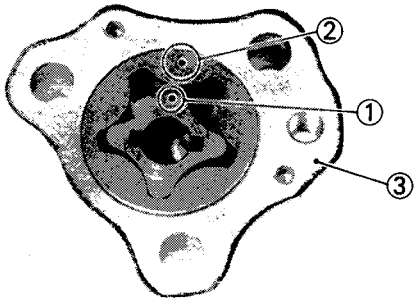

	Housing connecting screw: 7 Nm (0.7 m•kg, 5.1 ft•lb)

- Gasket

NOTE:

Align the inner rotor mark ① with the outer rotor mark ② in the pump housing ③.
Then insert the pump shaft into the inner rotor.

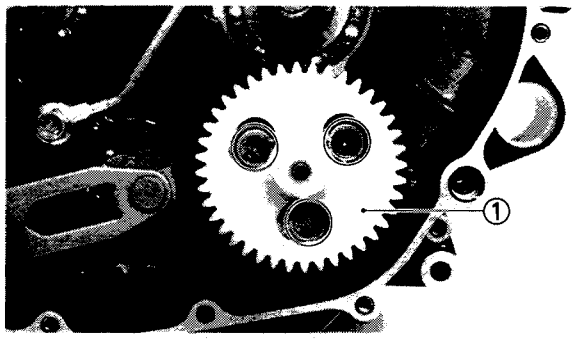

2. Install:
   - Oil pump assembly ①

	Oil pump screw: 7 Nm (0.7 m•kg, 5.1 ft•lb)

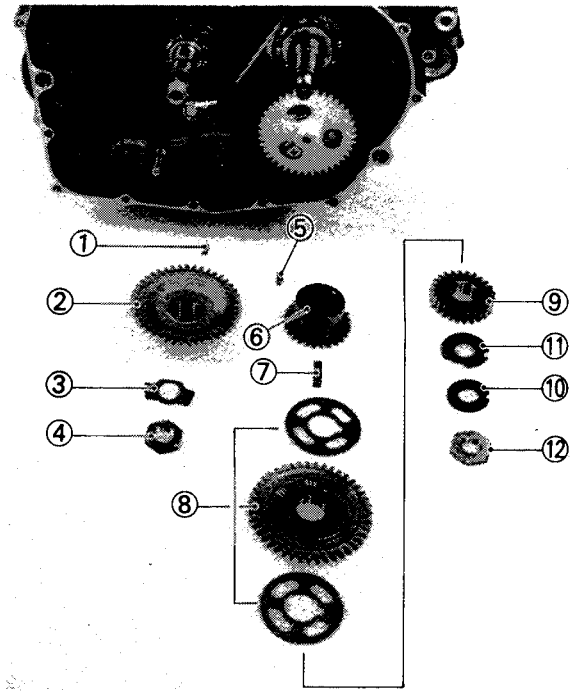

BALANCER DRIVEN GEAR AND PRIMARY DRIVE GEAR

1. Install:
   - Key ①
   - Balancer driven gear ②
   - Lock washer ③
   - Nut ④
   - Key ⑤
   - Oil pump drive gear ⑥
   - Key ⑦
   - Balancer drive gear assembly ⑧
   - Primary drive gear ⑨
   - Washer ⑩
   - Lock washer ⑪
   - Nut ⑫

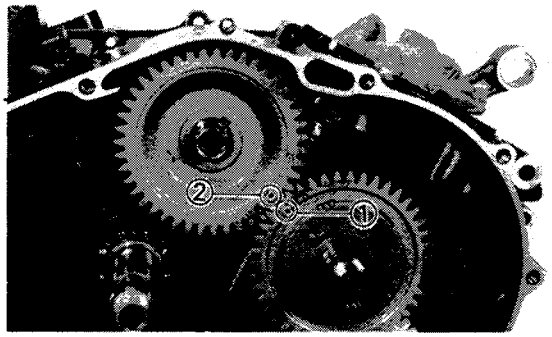

NOTE:

Align the balancer drive gear mark ① with the balancer driven gear mark ②.

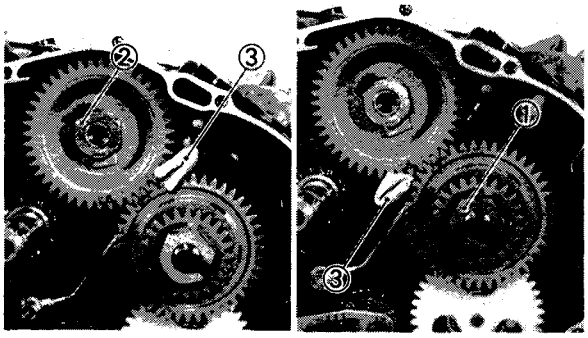

2. Tighten:
   - Primary drive gear securing nut ①
   - Balancer driven gear securing nut ②

	Primary drive gear nut: **80 Nm (8.0 m•kg, 58 ft•lb)** **Balancer driven gear nut:** **60 Nm (6.0 m•kg, 43 ft•lb)**

NOTE:

Place a piece of rolled rag ③ or lead between gears when loosening balancer driven gear ② and primary drive gear ①.

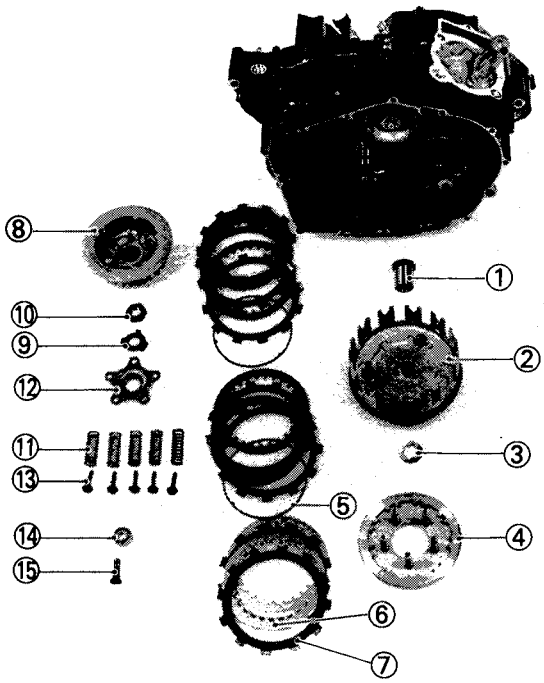

CLUTCH

1. Install:
   - Spacer ①
   - Clutch housing ②
   - Thrust washer ③
   - Pressure plate 1 ④
   - Cushion springs ⑤
   - Clutch plates ⑥
   - Friction plates ⑦
   - Clutch boss ⑧
   - Washer ⑨
   - Nut ⑩
   - Clutch springs ⑪
   - Pressure plate 2 ⑫
   - Clutch spring holding screws ⑬
   - Bearing ⑭
   - Long push rod ⑮

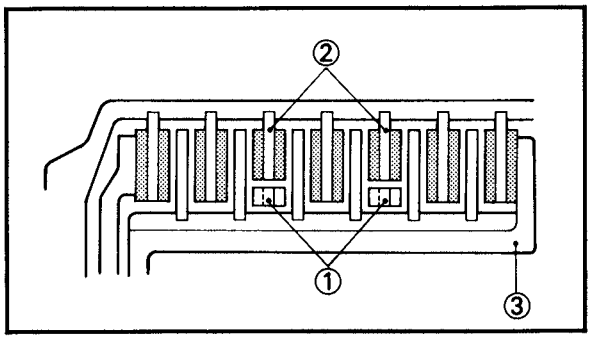

NOTE:

- Be sure the cushion springs ① is installed under the 3rd and 5th friction plates (narrow one ②) from the clutch boss ③ side.

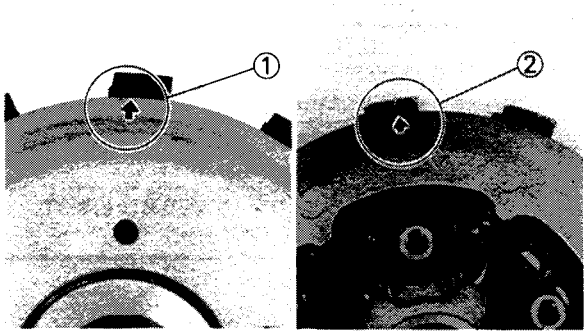

- Align the pressure plate 1 arrow mark ① with the clutch boss arrow mark ②.

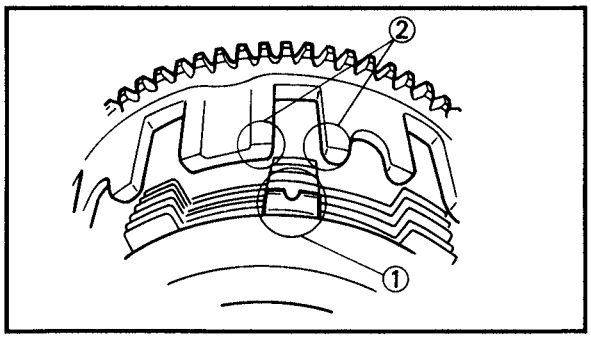

- Align the friction plate mark ① with the clutch housing marks ②.

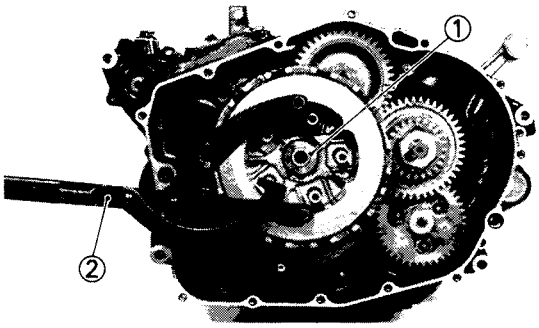

- Tighten clutch boss securing nut ① using rotor holding tool ② (YU-01235).

	Clutch boss nut: **80 Nm (8.0 m•kg, 58 ft•lb)**

- Tighten clutch spring holding screws.

	Clutch spring screw: **10 Nm (1.0 m•kg, 7.2 ft•lb)**

CLUTCH

① Push lever
② Push lever axle
③ Short push rod
④ Pinion gear
⑤ Long push rod
⑥ O-ring
⑦ Pressure plate 2
⑧ Clutch spring
⑨ Clutch boss
⑩ Cushion spring
⑪ Clutch plate
⑫ Friction plate
⑬ Pressure plate
⑭ Clutch housing
⑮ Primary drive gear
⑯ key

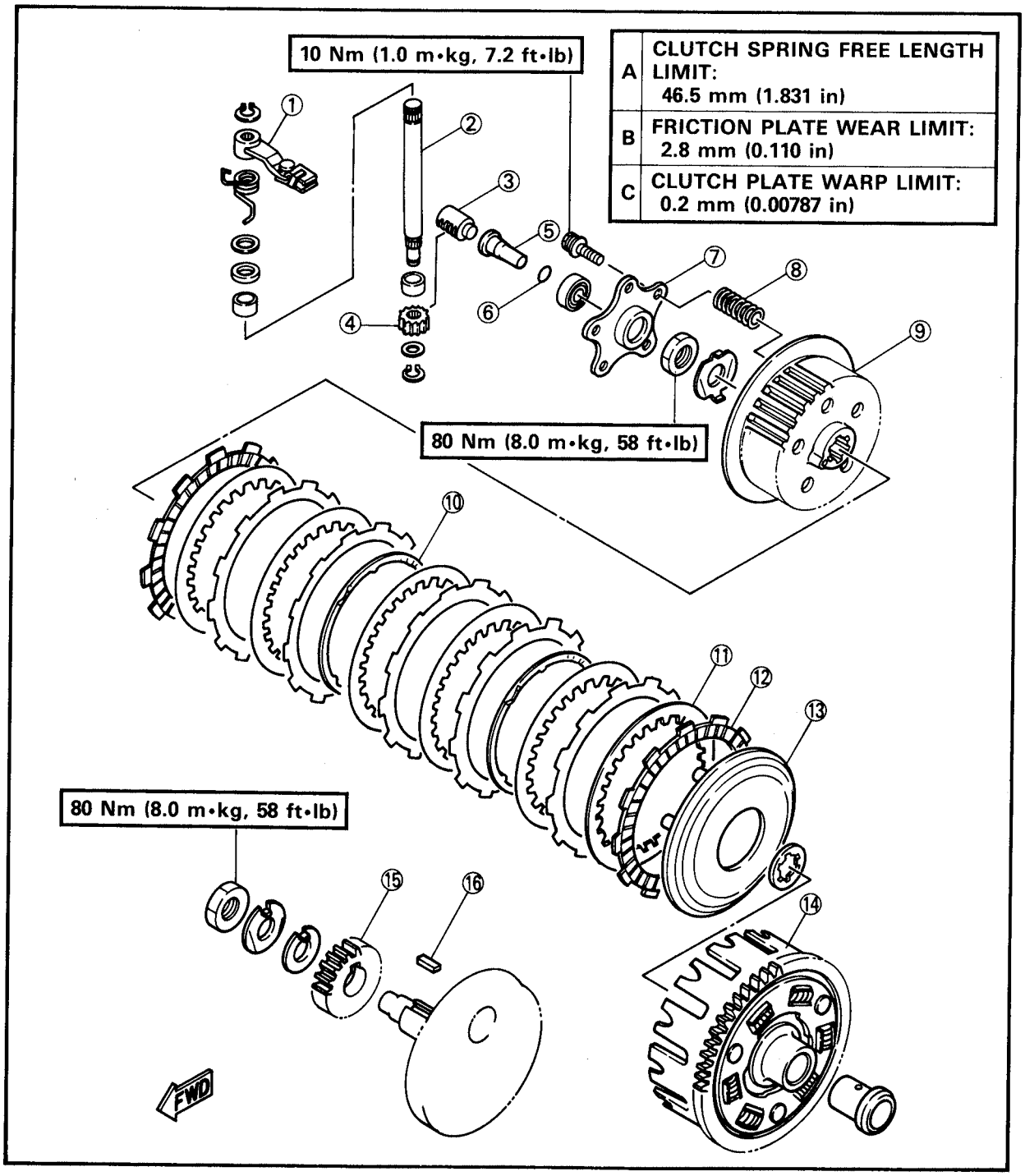

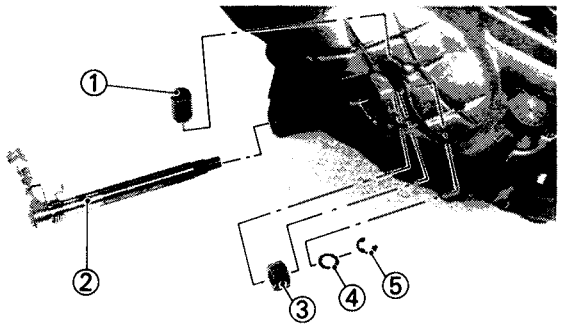

RIGHT CRANKCASE COVER

1. Install:
   - Short push rod ①
   - Push lever axle ②
   - Pinion gear ③
   - Washer ④
   - Circlip ⑤

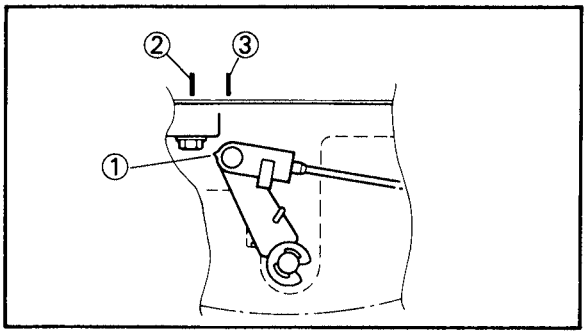

NOTE:

Align the punch mark ① on the push lever with the center of ribs ②, ③ on the crankcase.

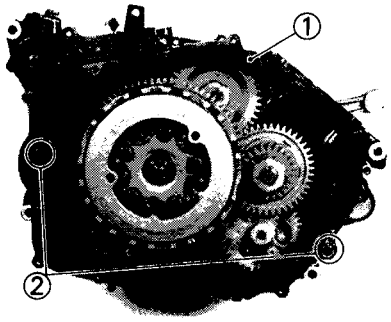

2. Install:
   - Gasket ①
   - Dowels ②

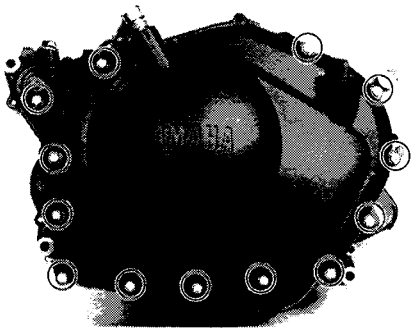

3. Install:
   - Right crankcase cover

	Right crankcase cover screw: 10 Nm (1.0 m•kg, 7.2 ft•lb)

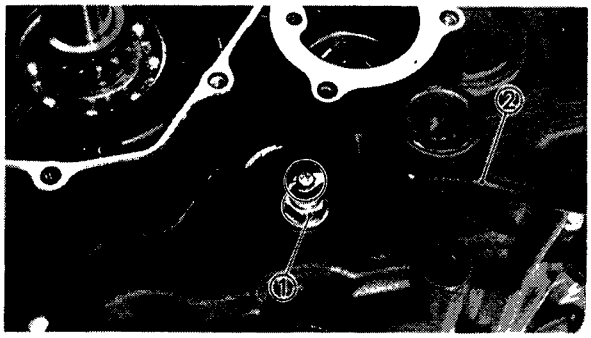

NEUTRAL SWITCH AND OIL FILTER

1. Install:
   - Neutral switch ①
   - Neutral switch lead ②

	Neutral switch: 20 Nm (2.0 m•kg, 14 ft•lb)

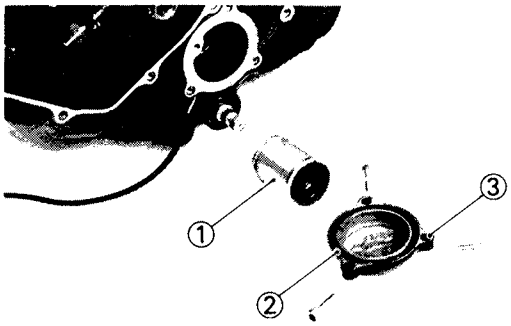

2. Install:
   - Oil filter ③
   - O-ring ②
   - Oil filter cover ③

	Oil filter cover hexagon bolt: 10 Nm (1.0 m•kg, 7.2 ft•lb)

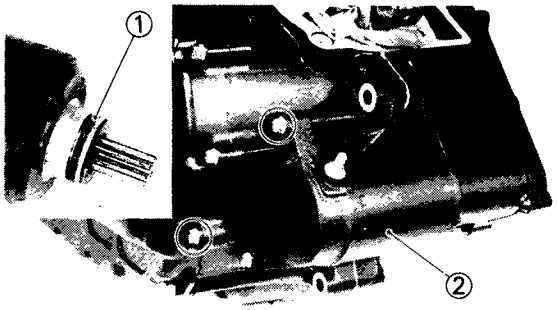

STARTER MOTOR AND CAM CHAIN

1. Install:
   - O-ring ①
   - Starter motor ②

	Starter motor bolt: 10 Nm (1.0 m•kg, 7.2 ft•lb)

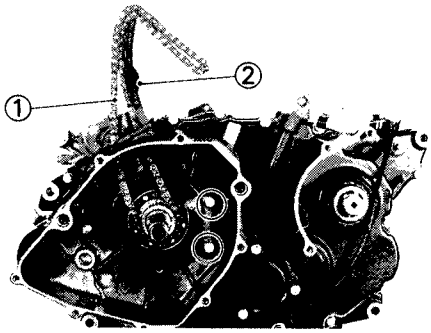

2. Install:
   - Cam chain ①
   - Intake side chain guide ②

	Intake side chain guide bolt: 10 Nm (1.0 m•kg, 7.2 ft•lb)

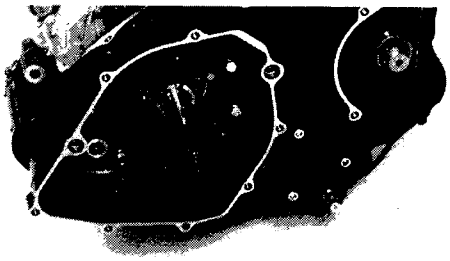

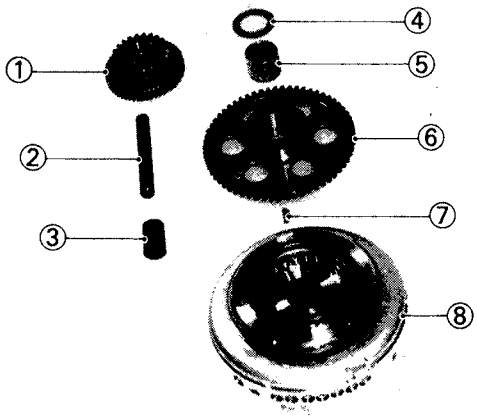

CDI MAGNETO AND LEFT CRANKCASE

1. Install:
   - Idler gear ①
   - Shaft ②
   - Collar ③
   - Washer ④
   - Bearing ⑤
   - Gear ⑥
   - Key ⑦
   - CDI rotor ⑧

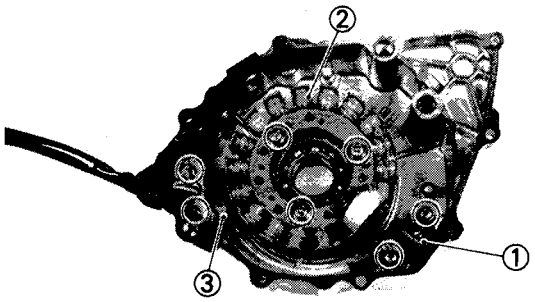

2. Install:
   - Pick up coil ①
   - Source coil ②
   - Bracket ③

	Source/Pick up coil screws: 10 Nm (1.0 m•kg, 7.2 ft•lb)

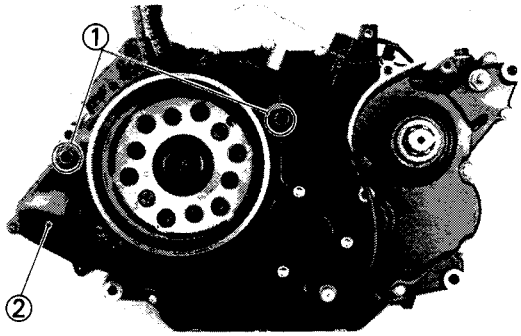

3. Install:
   - Dowels ①
   - Gasket ②

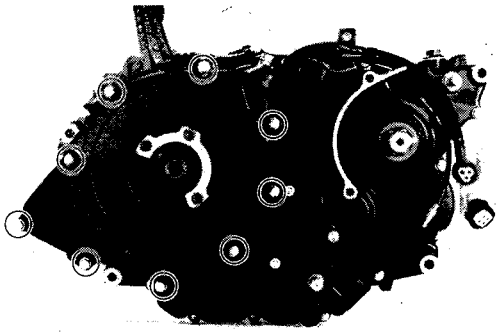

4. Install:
   - Left crankcase cover

	Left crankcase cover bolts: 10 Nm (1.0 m•kg, 7.2 ft•lb)

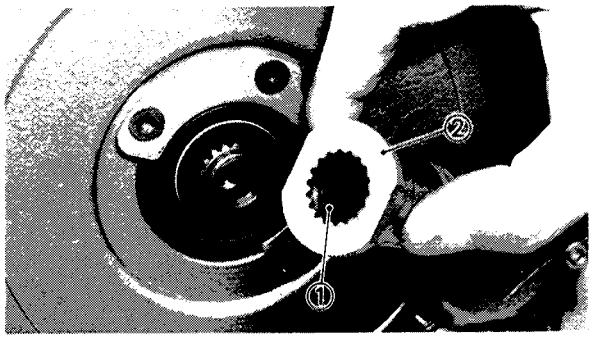

5. Install:
   - O-ring ①
   - Starter pully ②
   - Plain washer
   - Spring washer
   - Bolt

	Flywheel magneto bolt: 50 Nm (5.0 m•kg, 36 ft•lb)

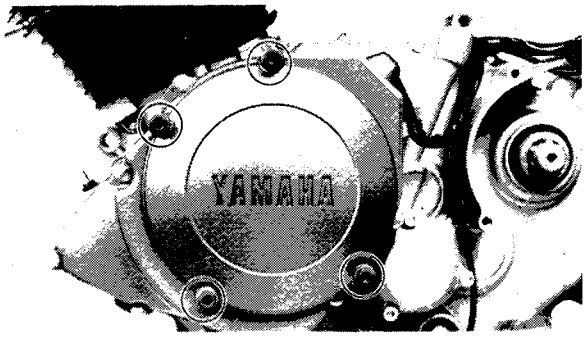

6. Install:
   - Left crankcase cover

	Crankcase cover bolt: 10 Nm (1.0 m•kg, 7.2 ft•lb)

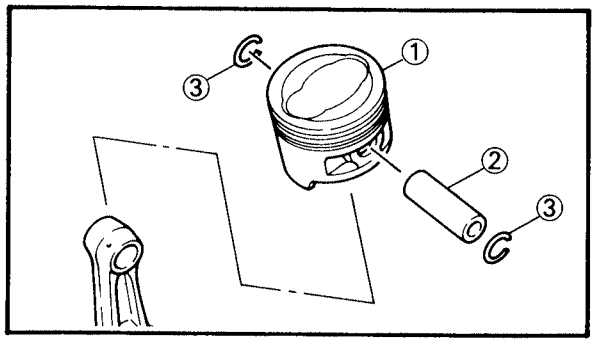

CYLINDER HEAD/CYLINDER/PISTON

1. Install:
   - Piston ①
   - Piston pin ②
   - Piston pin clips ③ (new)

NOTE:

- The arrow on the piston must point to the front of the engine.
- Before installing the piston pin clip, cover the crankcase with a clean towel or rag so you will not accidentally drop the pin clip and material into the crankcase.

2. Apply:
   - 4-stroke engine oil
     To the piston pin, piston ring grooves and piston skirt areas.

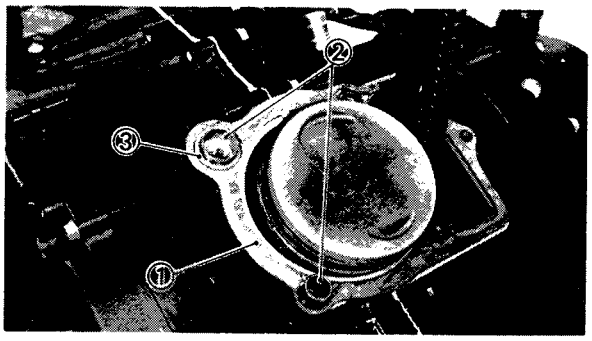

3. Install:
   - Cylinder gasket ①
   - Dowels ②
   - O-rings ③

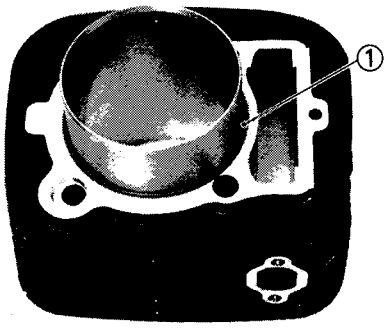

4. Install:
   - O-ring ①
     (onto cylinder sleeve)

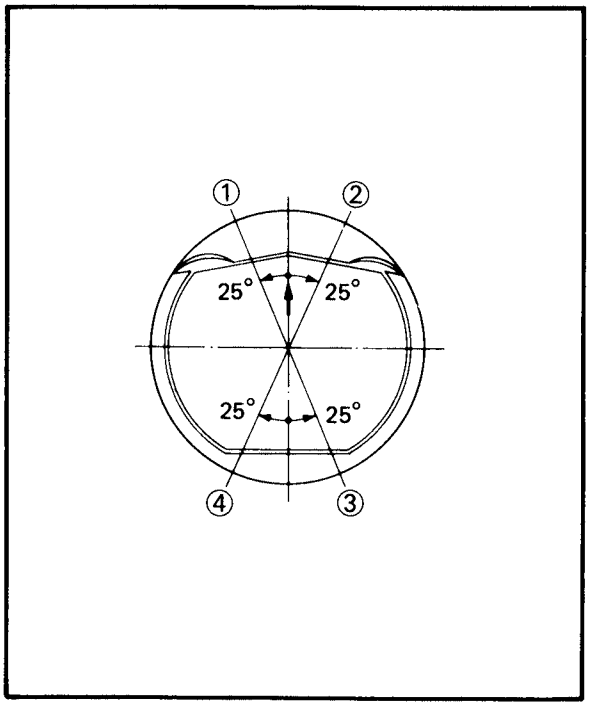

4. Offset the piston ring end gaps as shown.

NOTE:

- Be sure to check the manufacturer's marks or numbers stamped on the rings are on the top side of the rings.
- Before installing the cylinder, apply a liberal coating of 4-stroke engine oil to the piston rings.

① Top ring
② Oil ring (Lower rail)
③ 2nd ring
④ Oil ring (Upper rail)

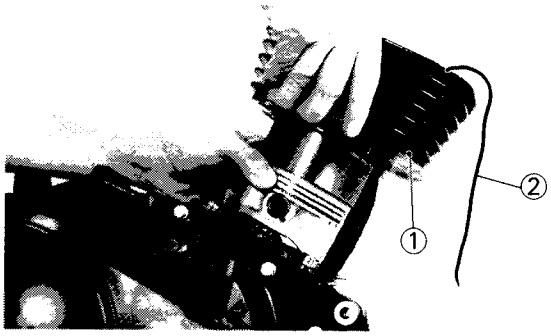

5. Install:
   - Cylinder ①
   - Bolts (cylinder)
     Temporary tighten

NOTE:

- Install the cylinder with one hand while compressing the piston rings with the other hand.
- Fasten a safety wire ② to the timing chain, and pass the timing chain through the chain cavity.

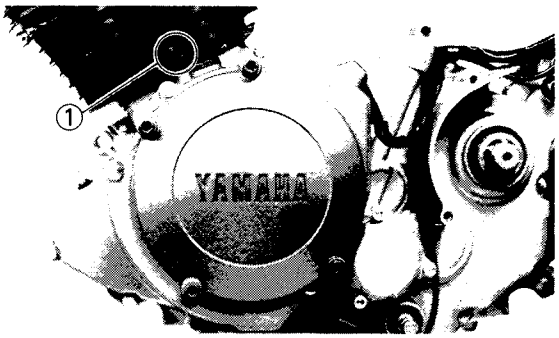

6. Install:
   - Bolt ①

	Cylinder securing bolt: **10 Nm (1.0 m•kg, 7.2 ft•lb)**

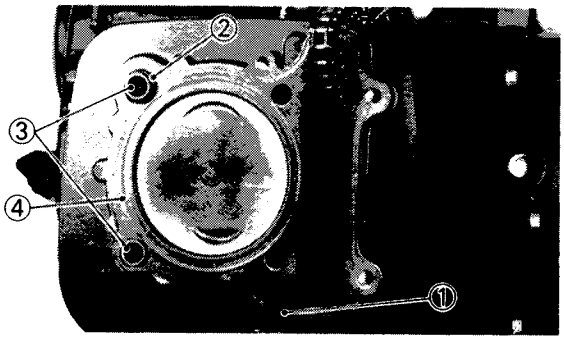

7. Install:
   - Chain guide (exhaust) ①
   - O-ring ②
   - Dowel pins ③
   - Gasket (new) ④

PISTON AND CYLINDER

① Cylinder
② O-ring (New)
③ Cylinder gasket (New)
④ Dowel
⑤ O-ring (New)
⑥ Top ring
⑦ 2nd ring
⑧ Oil ring
⑨ Piston
⑩ Piston pin
⑪ Piston pin clip (New)
⑫ Oil ring (Lower rail)
⑬ Oil ring (Upper rail)

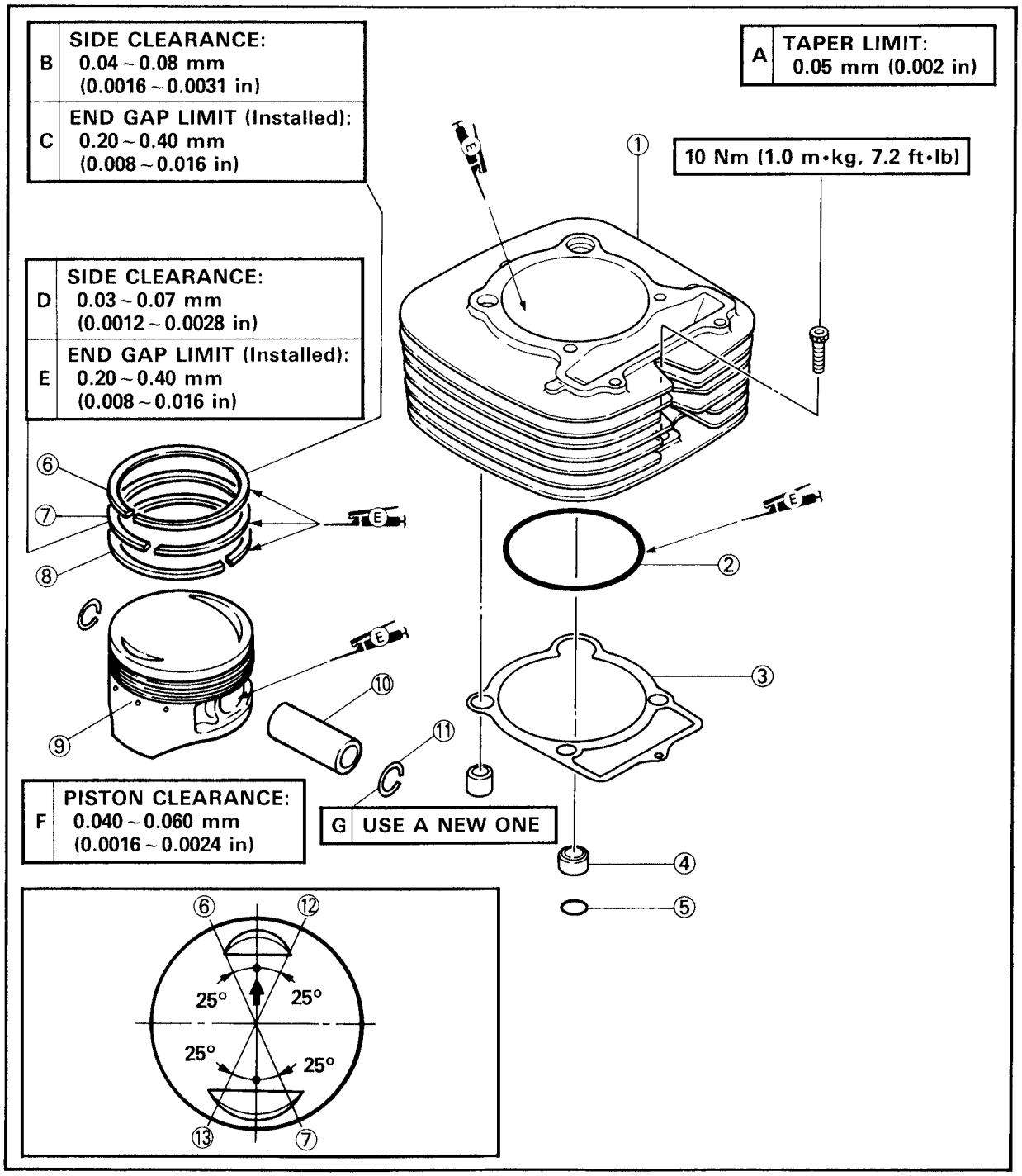

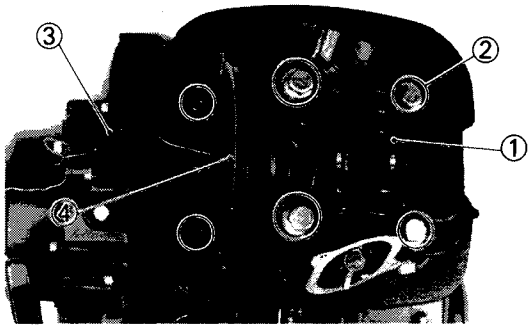

8. Install:
   - Cylinder head assembly ①
   - Bolts (cylinder head) ②

NOTE:

Fasten a safety wire ③ to the timing chain ④ so that it may not drop into the crankcase.

9. Tighten:
   - Bolts (cylinder head)

	Flange bolt: **40 Nm (4.0 m•kg, 29 ft•lb)** **Hexagon bolt:** **20 Nm (2.0 m•kg, 14 ft•lb)**

NOTE:

Tighten the bolts starting with the lowest numbered one.

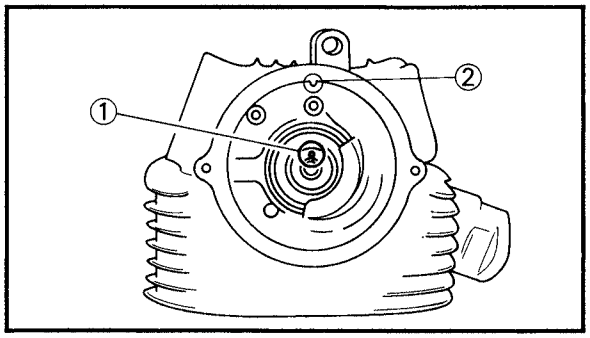

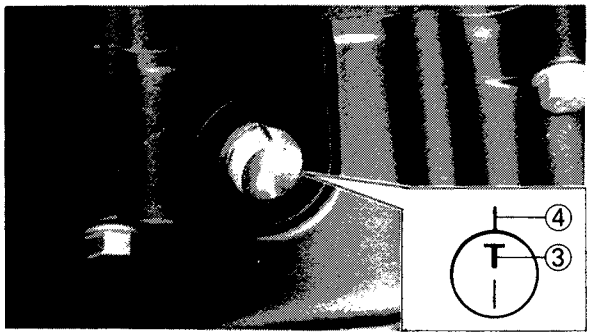

10. Install:
    - Cam sprocket

****

Cam sprocket installing steps:

- Rotate the camshaft to align the camshaft pin ① with the cylinder head match mark ②.
- Remove the timing plug.
- Turn the starter pulley counterclockwise until the "T" mark ③ is aligned with the stationary pointer ④ on the crankcase spacer.
- Place the timing chain onto the cam sprocket.
- Install the cam sprocket onto the camshaft, and finger tighten the sprocket bolt.

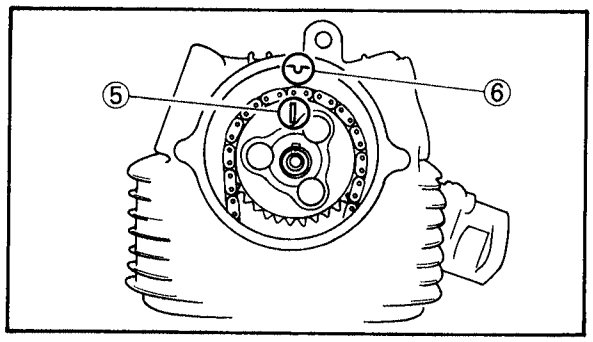

NOTE:

Be sure the match mark ⑤ on the cam sprocket is aligned with the match mark ⑥ on the cylinder head.

- Turn the camshaft clockwise and counterclockwise to remove the timing chain slack.
- Insert your finger into the timing chain tensioner hole, and push the timing chain guide inward.
- While pushing the timing chain guide, make sure that cam sprocket match mark ⑤ is aligned with the cylinder head match mark ⑥.
- If marks is aligned, tighten the cam sprocket bolt.

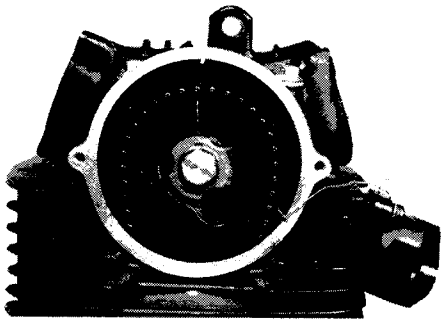

	Bolt (cam sprocket): **60 Nm (6.0 m•kg, 43 ft•lb)**

NOTE:

Tighten the bolt (cam sprocket) while holding the starter pulley ⑦.

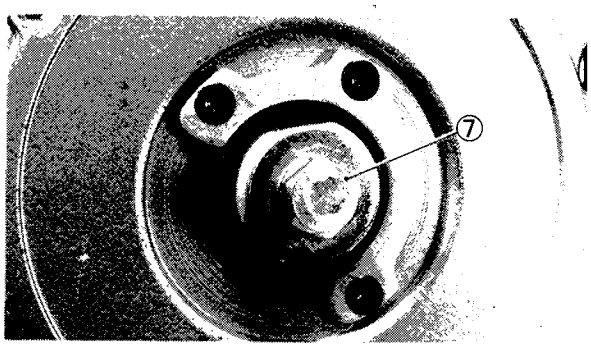

- If marks do not align, change the meshing position of sprocket and chain.

****

11. Install:
    - Cam chain tensioner

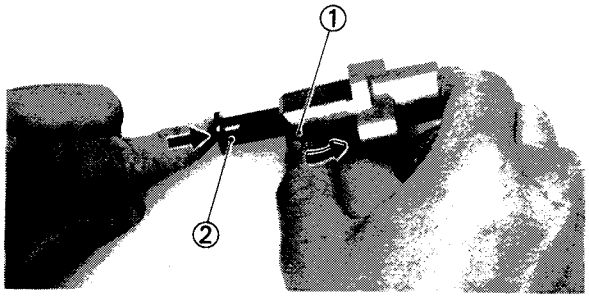

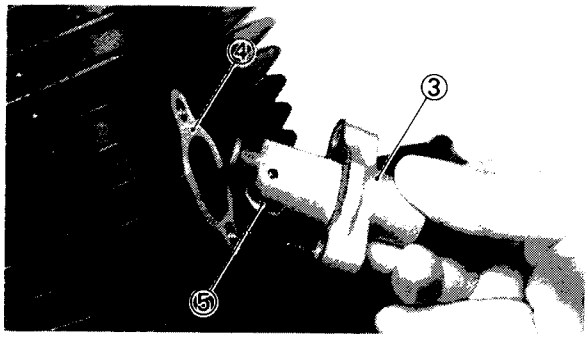

****

Cam chain tensioner installation steps:

- Remove the tensioner end cap bolt and spring.
- Release the cam chain tensioner one-way cam ①.
- Push the tension rod assembly ② into the body.
- Install the tensioner ③ with a new gasket ④ onto the cylinder.

CAUTION:

The one-way cam ⑤ should be faced downward.

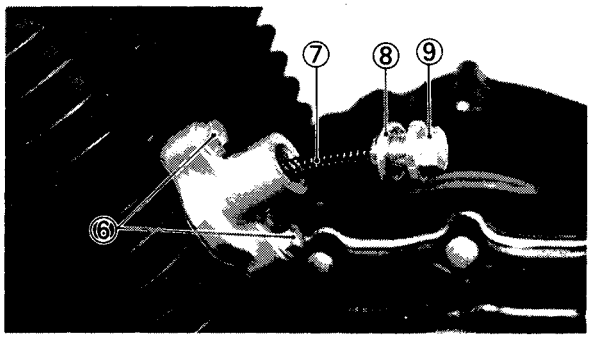

Tensioner Body Bolts ⑥:
10 Nm (1.0 m•kg, 7.2 ft•lb)

- Install the spring ⑦, washer ⑧ and end cap bolt ⑨.

Tensioner End Cap Bolt:
38 Nm (3.8 m•kg, 27 ft•lb)

****

12. Adjust:
    - Valve clearance
      Refer to "VALVE CLEARANCE ADJUSTMENT" section in the CHAPTER 3.

Intake valve (cold):
0.06 ~ 0.10 mm
(0.00236 ~ 0.00394 in)
Exhaust valve (cold):
0.16 ~ 0.20 mm
(0.00630 ~ 0.00787 in)

13. Install:
    - Crankcase cover (left) ①

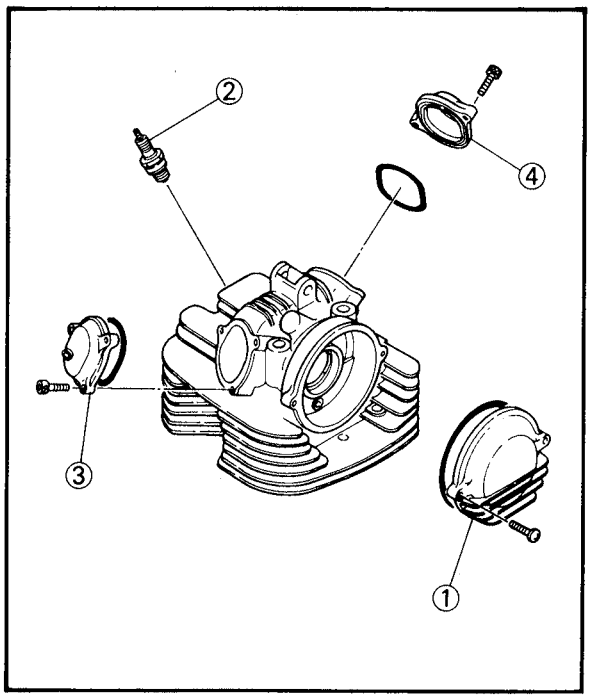

14. Install:
    - Cam sprocket cover ①
    - Spark plug ②
    - Tappet cover ③ (exhaust)
    - Tappet cover ④ (intake)

Screws (Cam sprocket cover):
10 Nm (1.0 m•kg, 7.2 ft•lb)
Spark plug:
17.5 Nm (1.75 m•kg, 12.5 ft•lb)
Bolts (tappet covers):
10 Nm (1.0 m•kg, 7.2 ft•lb)

NOTE:

- Apply lithium soap base grease to the O-rings.
- Install the tappet covers with its ridge facing upward.

CYLINDER HEAD AND CAM CHAIN SPROCKET

① Intake valve cover
② O-ring
③ Cam chain tensioner
④ Gasket
⑤ Intake side cam chain guide
⑥ Cylinder head side cover
⑦ Cam chain sprocket
⑧ Cam chain
⑨ Cylinder head gasket
⑩ O-ring
⑪ Exhaust side cam chain guide
⑫ Dowel
⑬ Exhaust valve cover

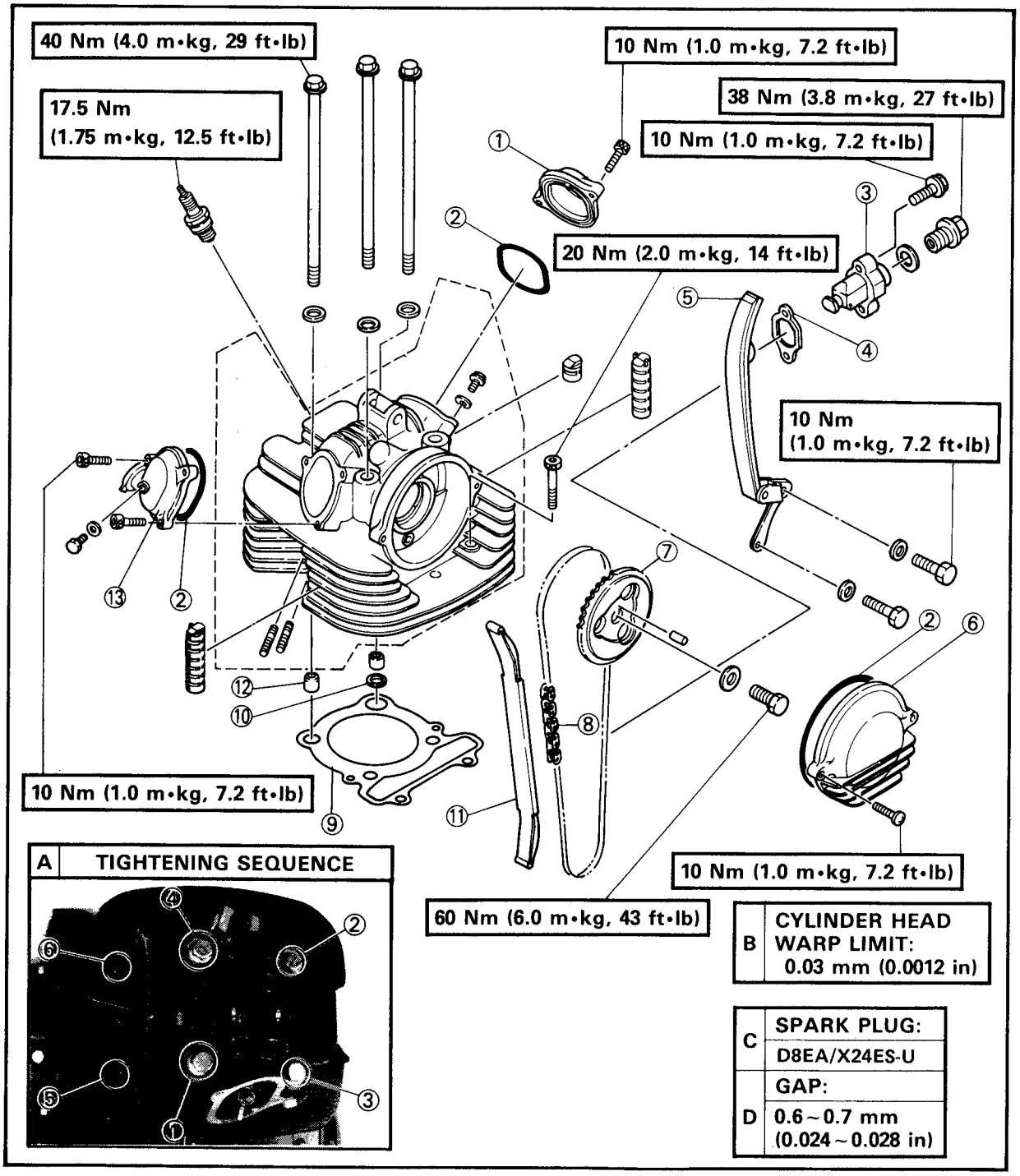

REMOUNTING ENGINE

Reverse the "ENGINE REMOVAL" procedure. Note the following points.

WARNING

Securely support the machine so there is no danger of it falling over.

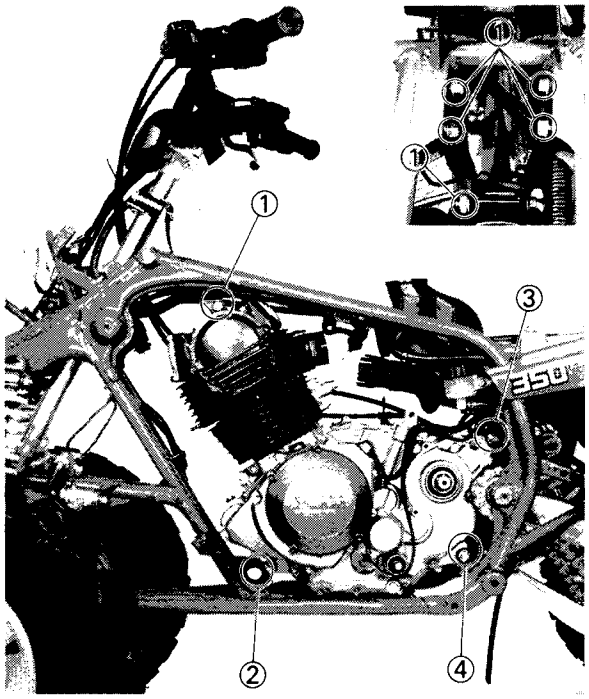

1. Install:
   - Engine assembly
2. Install:
   - Engine stay ① (front – upper)
   - Bolt ② (front – lower)
   - Engine stay ③ (rear – upper)
   - Bolt ④ (rear – lower)

NOTE:

All mounting bolts should be installed from the right of the machine.

	Nuts (engine mounting bolts): 33 Nm (3.3 m•kg, 24 ft•lb)

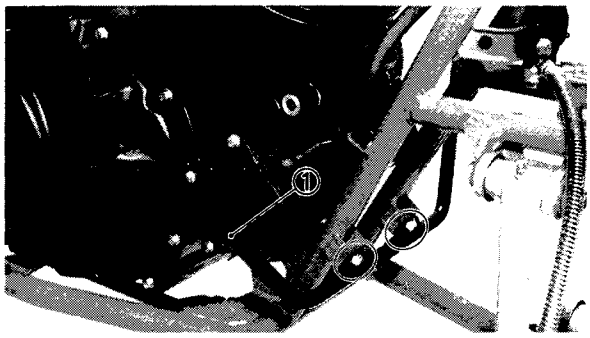

3. Install:
   - Front fender stay ①

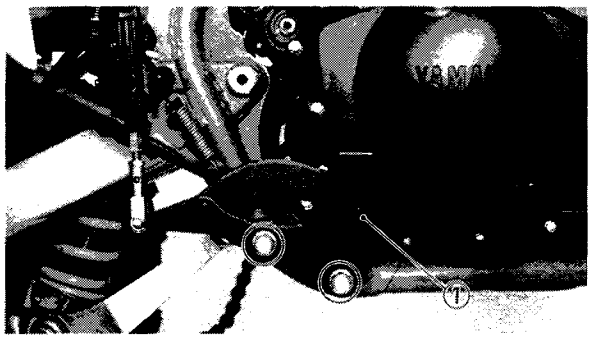

4. Install:
   - Footrest ① (right)
     (with brake pedal, master cylinder and reservoir tank as one unit)

	Bolts (footrest and frame) 55 Nm (5.5 m•kg, 40 ft•lb) **Bolts (master cylinder and frame) 20 Nm (2.0 m•kg, 14 ft•lb)**

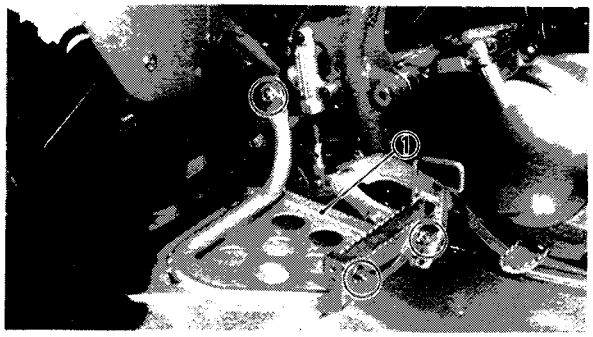

5. Install:
   - Footrest cover (right) ①

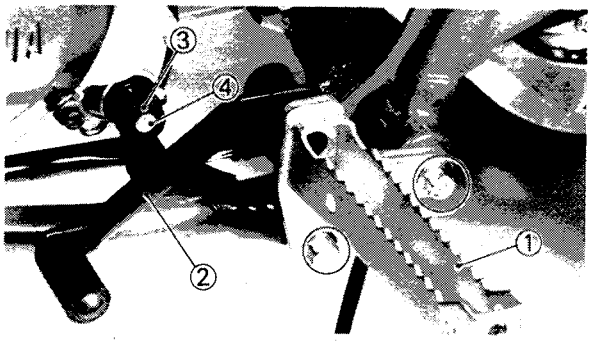

6. Install:
   - Footrest ① (left)
   - Shift pedal assembly ②

	Bolt (shift pedal): **10 Nm (1.0 m•kg, 7.2 ft•lb)** **Bolts (footrest and frame):** **55 Nm (5.5 m•kg, 40 ft•lb)**

NOTE:

Align the opening ③ of the shift pedal with the mark ④ of the shift shaft.

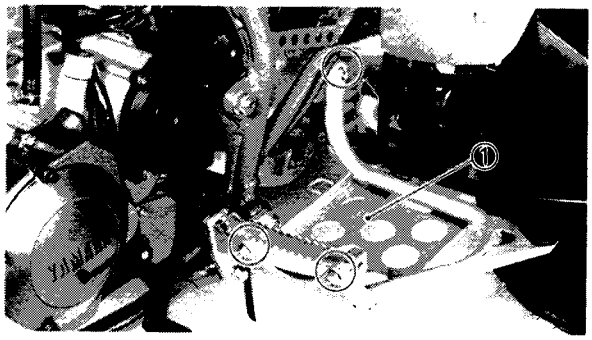

7. Install:
   - Footrest cover (left) ①

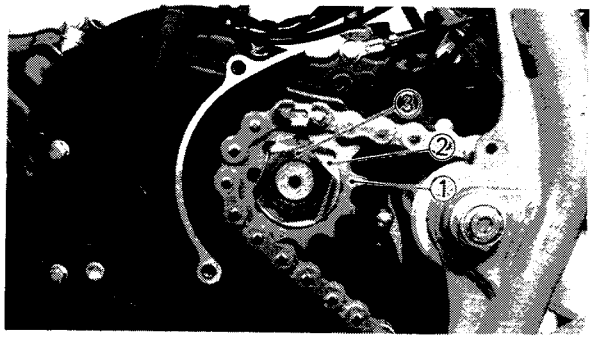

8. Install:
   - Drive chain sprocket ①
   - Lock washer ②
   - Nut ③

	Drive chain sprocket nut: **75 Nm (7.5 m•kg, 54 ft•lb)**

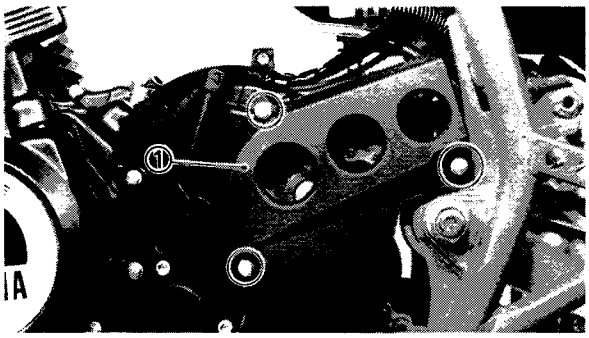

9. Install:
   - Drive chain sprocket cover ①

	Drive chain sprocket cover bolt: 10 Nm (1.0 m•kg, 7.2 ft•lb)

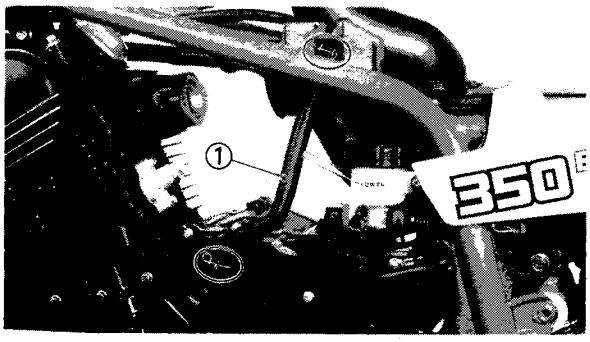

10. Install:
    - Crankcase ventilation hose ①

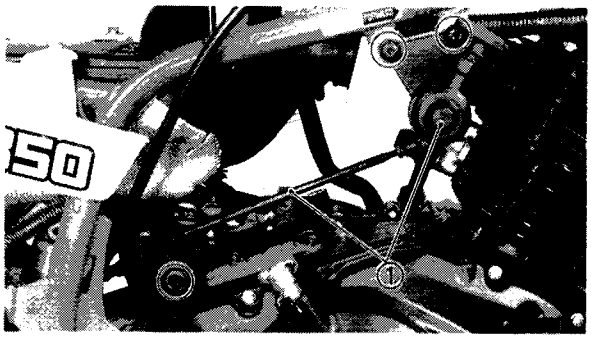

11. Install:
    - Drive select lever assembly ①

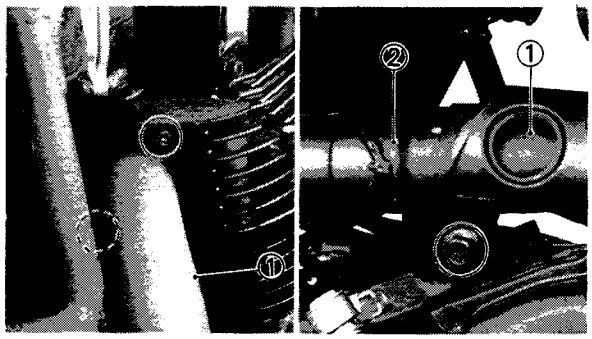

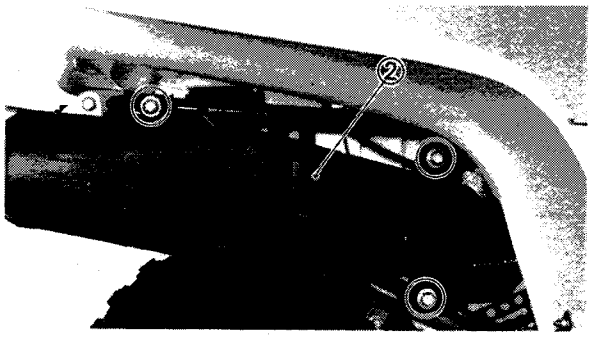

12. Install:
    - Exhaust pipe ①
    - Muffler ②

	Bolts (exhaust pipe and cylinder): 12 Nm (1.2 m•kg, 8.7 ft•lb) **Bolts (clamp): 20 Nm (2.0m•kg, 14 ft•lb)** **Bolts (muffler and frame): 27 Nm (2.7 m•kg, 19 ft•lb)**

13. Adjust:
    - Clutch (release lever free play)
      Refer to the "CLUTCH ADJUSTMENT" section in the CHAPTER 3.
14. Adjust:
    - Cable slack (parking brake cable)
      Refer to the "PARKING BRAKE ADJUSTMENT" section in the CHAPTER 3.
15. Bleed:
    - Brake fluid
      Refer to the "AIR BLEEDING (HYDRAULIC BRAKE SYSTEM)" section in the CHAPTER 3.
16. Fill:
    - Crankcase
      Refer to the "ENGINE OIL REPLACEMENT" section in the CHAPTER 3.
17. Install.
    - Fuel tank
    - Front fender
    - Headlight unit assembly
    - Seat
      Refer to the "VALVE CLEARANCE ADJUSTMENT" section in the CHAPTER 3.

CARBURETION

CARBURETOR

① Carburetor cap
② Spring
③ Needle holder
④ Jet needle
⑤ Pilot screw
⑥ Piston valve
⑦ Pilot jet
⑧ Main nozzle
⑨ Main jet
⑩ Float
⑪ Coasting enricher rubber diaphragm
⑫ Cover
⑬ Throttle stop screw
⑭ Starter plunger assembly
⑮ Valve seat assembly
⑯ Float pin
⑰ Drain screw
⑱ Accelerator plunger

Specifications

MAIN JET (M.J.)	#145
MAIN AIR JET (M.A.J.)	φ0.6
JET NEEDLE (J.N.)	5J18-3
PILOT JET (P.J.)	#42.5
PILOT AIR JET (P.A.J. 1)	φ1.0
(P.A.J. 2)	φ0.7
PILOT SCREW	2 turns out
FLOAT VALVE SEAT	φ2.5
ENGINE IDLE SPEED	1,450 ~ 1,550 r/min

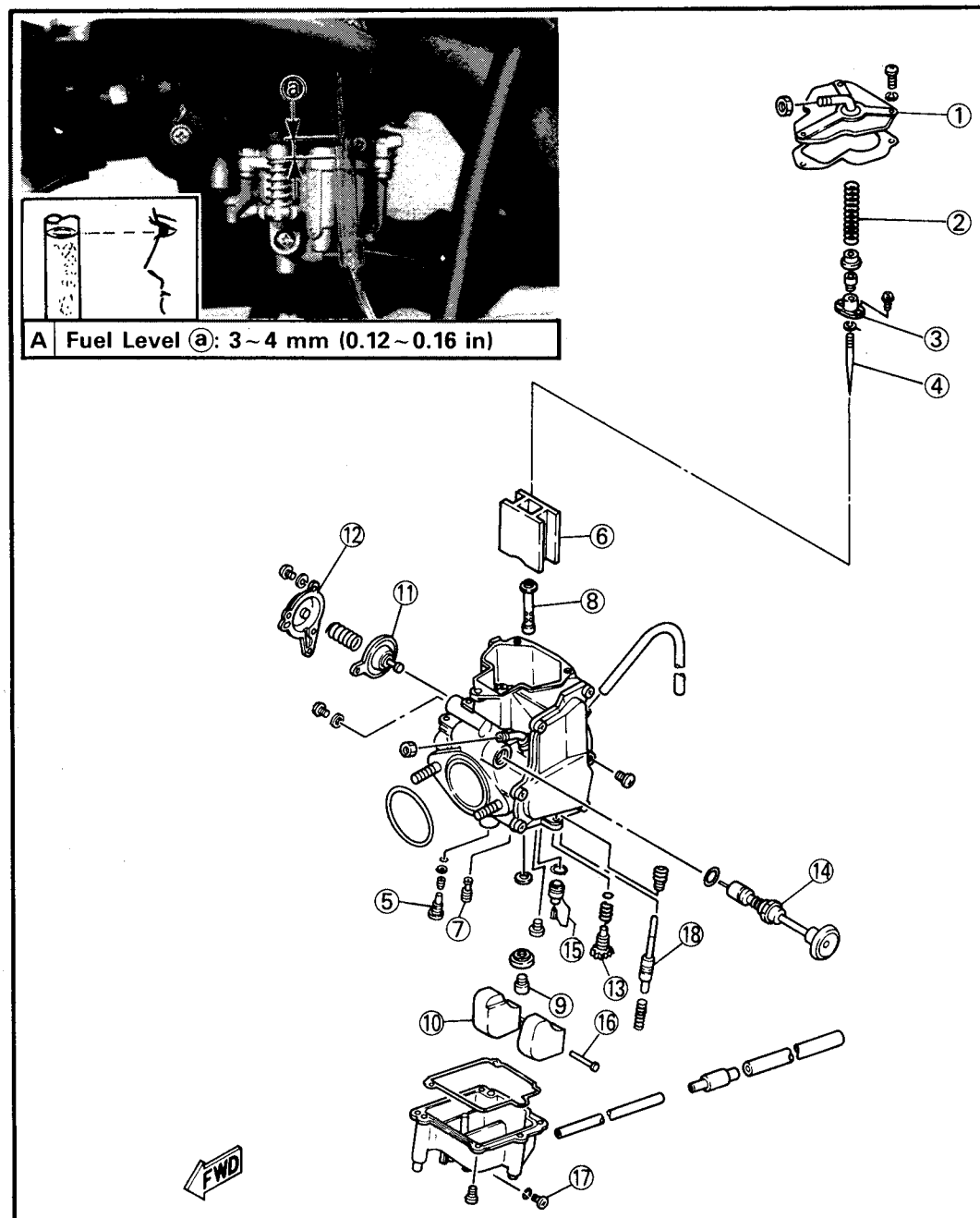

SECTION VIEW

① Air
② Mixture
③ Fuel
④ Air inlet
⑤ Starter valve
⑥ Mixture outlet
⑦ Starter jet
⑧ Starter bleed pipe
⑨ Pilot air circuit
⑩ Pilot outlet
⑪ Pilot screw
⑫ Pilot jet
⑬ Bypass hole
⑭ Throttle valve
⑮ Main jet
⑯ Main nozzle
⑰ Jet needle
⑱ Main air jet
⑲ Piston valve
⑳ Pilot air jet No. 1
㉑ Pilot air jet No. 2
㉒ Fuel joint
㉓ Float
㉔ Needle valve
㉕ Valve seat
㉖ Diaphragm assembly
㉗ Check valve
㉘ Plunger

A COASTING ENRICHER SYSTEM
B MAIN & SLOW SYSTEM
C FLOAT SYSTEM
D STARTER SYSTEM
E ACCELERATION PUMP SYSTEM

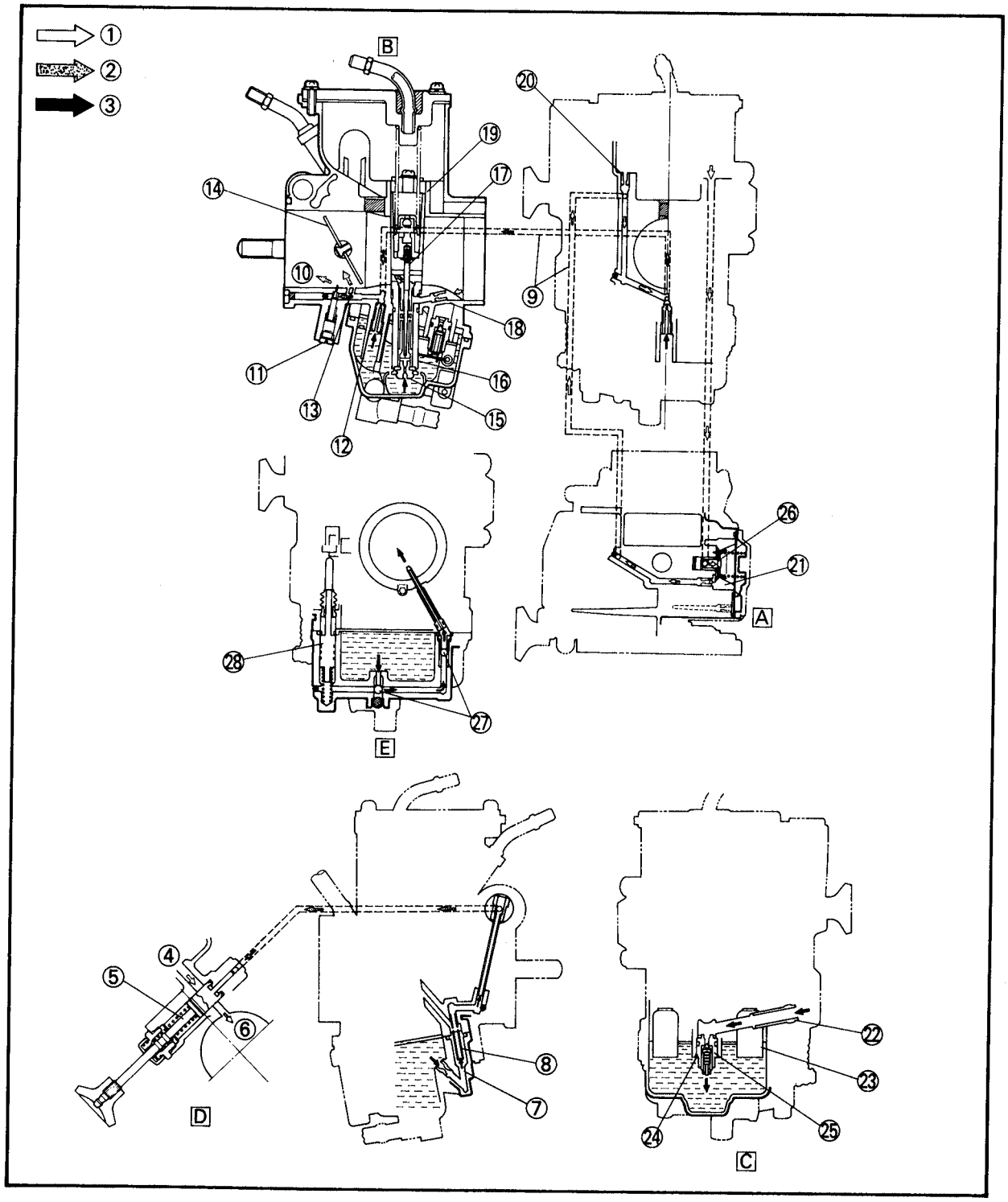

REMOVAL

1. Remove:
   - Seat

NOTE:

Pull the seat lever upward, and pull the seat.

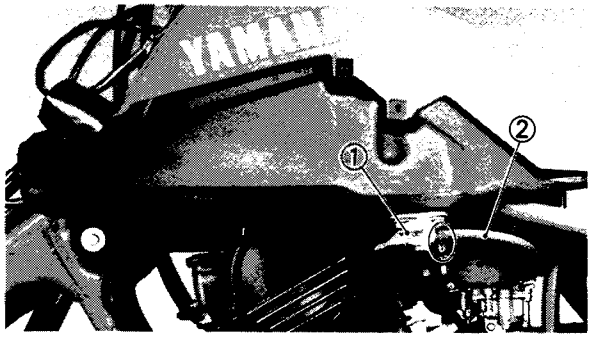

2. Turn the fuel cock to "OFF" ① position.
3. Disconnect:
   - Fuel hose ②
     (from the fuel cock)

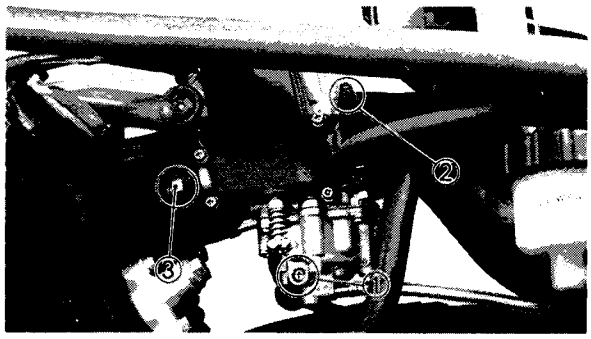

4. Loosen:
   - Drain screw ①
     Drain the float chamber of its fuel.

5. Loosen:
   - Screw ② (clamp)

6. Remove:
   - Nuts ③ (intake manifold)

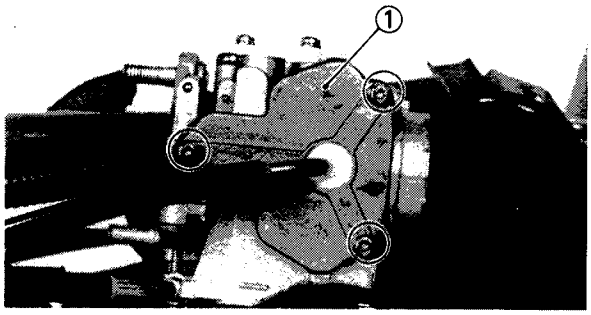

7. Remove:
   - Top cover ① (with piston valve)

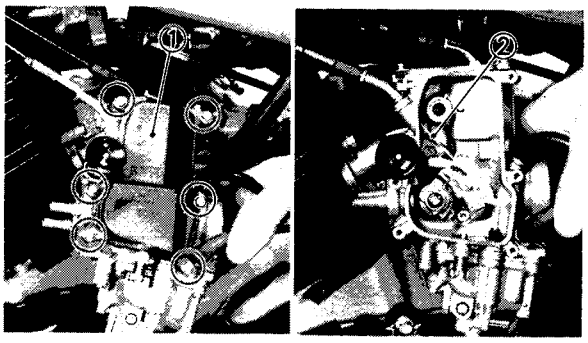

8. Remove:
   - Rink cover ①
   - Throttle cable ② (throttle valve and plunger)

DISASSEMBLY

NOTE:

The following parts can be cleaned and inspected without disassembly.
- Throttle stop screw
- Pilot screw

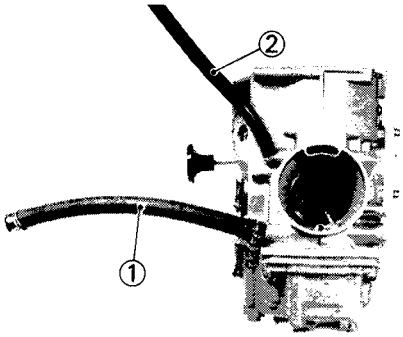

1. Disconnect:
   - Fuel hose ①
   - Air ventilation hose ②

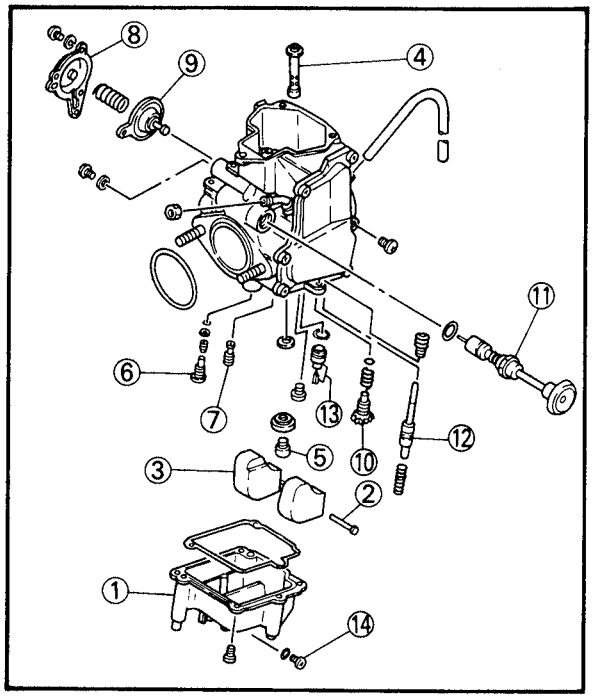

2. Remove:
   - Float chamber ①
   - Float pin ②
   - Float ③
   - Main nozzle ④
   - Main jet ⑤
   - Pilot screw ⑥
   - Pilot jet ⑦
   - Cover ⑧
   - Coasting enricher rubber diaphragm ⑨
   - Throttle stop screw ⑩
   - Starter plunger assembly ⑪
   - Accelerator plunger ⑫
   - Valve seat assembly ⑬
   - Drain screw ⑭

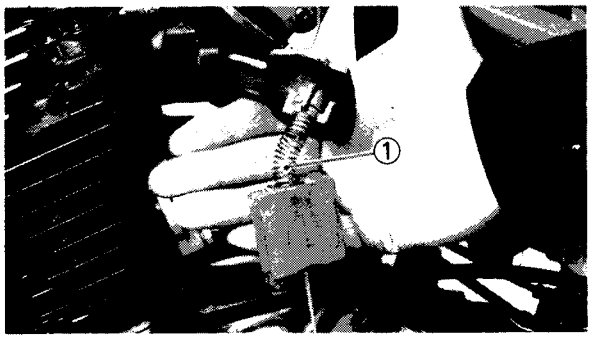

3. Disconnect:
   - Throttle cable ①
     (from the piston valve)

NOTE:

Disconnect the throttle cable while compressing the spring by hand.

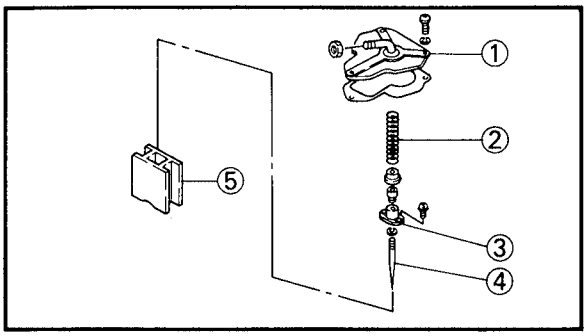

4. Remove:
   - Carburetor cap ①
   - Spring ②
   - Needle holder ③
   - Jet needle ④
   - Piston valve ⑤

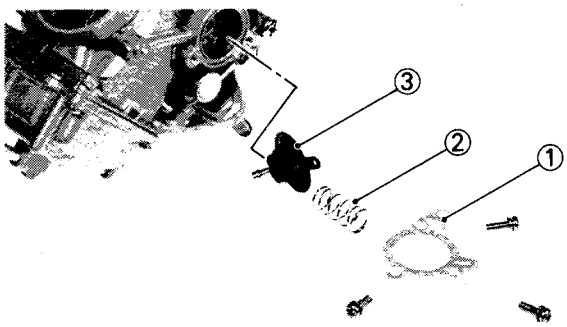

5. Remove:
   - Cover ①
   - Spring ②
   - Coasting enricher rubber diaphragm ③

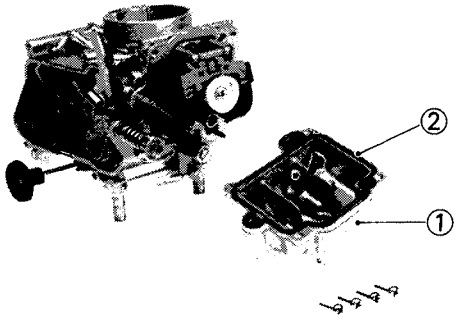

6. Remove:
   - Float chamber cover ①
   - O-ring ②

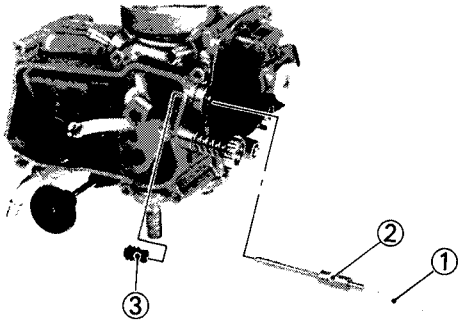

7. Remove:
   - Spring ①
   - Accelerator plunger ②
   - Rubber cap ③

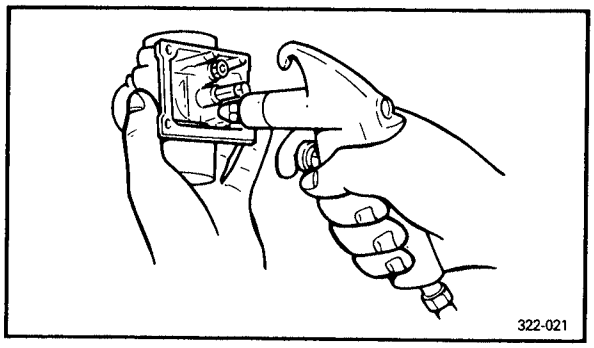

INSPECTION

1. Inspect:
   - Carburetor body
     Crack/Damage→Replace.
     Contamination→Clean.

NOTE:

- Use a petroleum based solvent for cleaning.
- Blow out all passages and jets with compressed air.

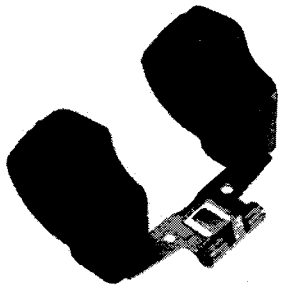

2. Inspect:
   - Floats
     Damage→Replace.

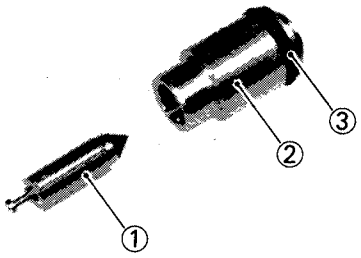

3. Inspect:
   - Float needle valve ①
   - Seat ②
   - O-ring ③
     Damage/Wear/Contamination→Replace as a set.

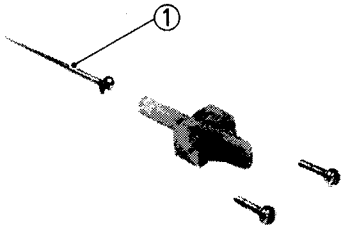

4. Inspect:
   - Jet needle ①
     Damage/Bends/Wear→Replace.

5. Inspect:
   - Starter plunger
     Wear/Damage→Replace.

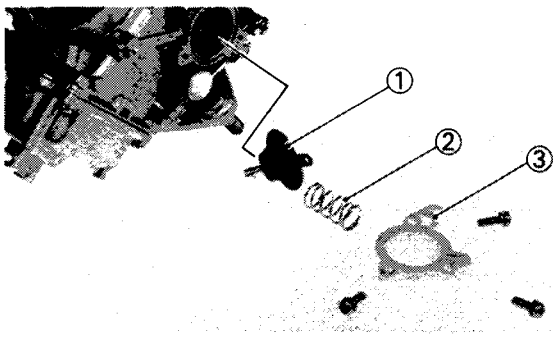

6. Inspect:
   - Coasting enricher rubber diaphragm ①
   - Spring ②
   - Cover ③

   Damage/Tears (diaphragm)→Replace.

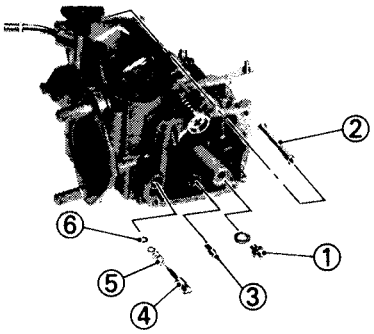

7. Inspect:
   - Main jet ①
   - Main nozzle ②
   - Pilot jet ③

   Contamination→Blow out.
   - Pilot screw ④
   - Spring ⑤
   - O-ring ⑥

   Damage→Replace.

8. Inspect:
   - Piston valve

   Wear/Damage→Replace.

9. Check:
   - Free movement

   Stick→Replace.

   Insert the throttle valve into the carburetor body, and check for free movement.

ASSEMBLY

Reverse the "DISASSEMBLY" procedures. Note the following points.

CAUTION:

Before reassembling, wash the all parts with clean gasoline.

1. Tighten:
   - Pilot jet
   - Main jet

	**Pilot jet:** **1 Nm (0.1 m•kg, 0.7 ft•lb)** **Main jet:** **1 Nm (0.1 m•kg, 0.7 ft•lb)** **Screws (float chamber):** **2 Nm (0.2 m•kg, 1.4 ft•lb)** **Screws (needle valve holder):** **1 Nm (0.1 m•kg, 0.7 ft•lb)**

2. Adjust:
   - Pilot screw

Pilot screw: **2 turns out**

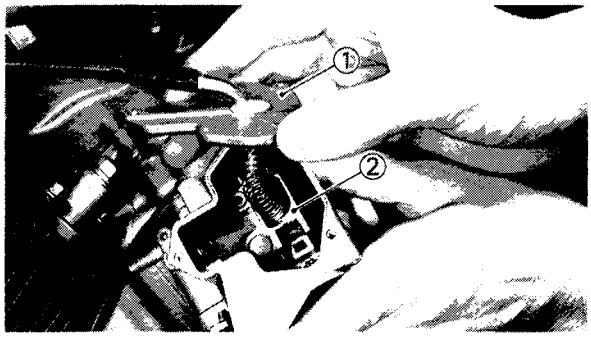

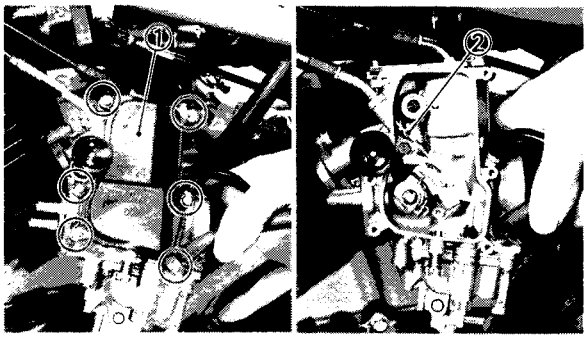

INSTALLATION

Reverse the "REMOVAL" procedures. Note the following points.

1. Install:
   - Piston valve ② (with jet needle)
   - Top cover (with throttle valve)

	Screw (top cover): **2 Nm (0.2 m•kg, 1.4 ft•lb)**

2. Install:
   - Throttle cable ②
     (throttle valve and plunger)
   - Rink cover ①

	Screws (rink cover): **2 Nm (0.2 m•kg, 1.4 ft•lb)**

3. Install:
   - Carburetor

	Nuts (intake manifold): **10 Nm (1.0 m•kg, 7.2 ft•lb)**

4. Check:
   - Cables routing
   - Hoses routing
     Incorrect→Correct.
     Refer to the "CABLE ROUTING" section in the CHAPTER 2.
5. Check:
   - Throttle cable operation
     Unsmooth operation→Repair.

6. Adjust:
   - Idle speed
     Refer to "IDLE SPEED ADJUSTMENT" section in the CHAPTER 3.
7. Adjust:
   - Throttle cable free play
     Refer to "THROTTLE CABLE FREE PLAY ADJUSTMENT" section in the CHAPTER 3.

FLOAT HEIGHT ADJUSTMENT

NOTE:

After the float, valve seat and needle valve are installed to the carbureter body, float height should be adjusted.

1. Hold the carburetor in an upside down position.

2. Mesure:
   - Float height ①
     Out of specification→Adjust.

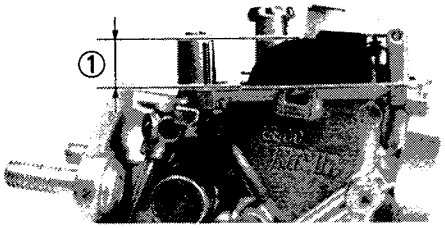

Float height (F.H.):
11.4~13.4 mm (0.45~0.53 in)

NOTE:

- Measure the distance from the mating surface of the float chamber (gasket removed) to the top of the float.
- The float arm should be resting on the needle valve, but not compressing the needle valve.

3. Adjust:
   - Float height

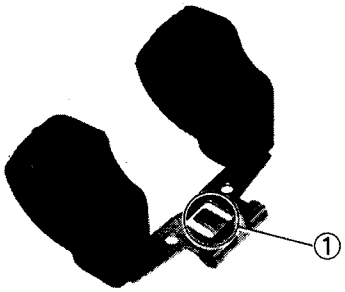

****

Adjustment steps:

- Inspect the valve seat and needle valve. If either is worn, replace them both.
- If both are fine, adjust the float height by bending the float tang ① on the float.
- Recheck the float height.

****

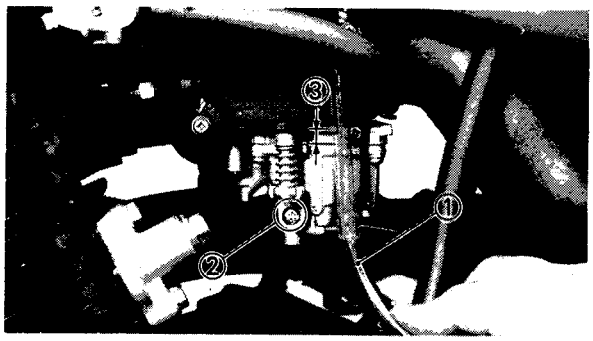

FUEL LEVEL ADJUSTMENT

1. Place the machine on a level place.
2. Use a garage jack under the engine to ensure that the carburetor is positioned vertically.
3. Attach the Fuel level gauge ① to the float chamber nozzle.

	Fuel level gauge: **P/N YM-01312**

4. Loosen the drain screw ②, and warm up the engine for several minutes.
5. Measure:
   - Fuel level ③
     Out of specification→Adjust.

	Fuel level: **3~4 mm (0.12~0.16 in)** **below the carburetor body edge.**

6. Adjust:
   - Fue level

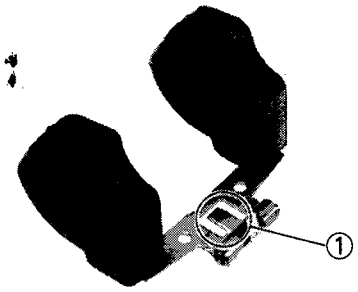

****

Adjustment steps:

- Remove the carburetor.
- Inspect the valve seat and needle valve.
- If either is worn, replace them both.
- If both are fine, adjust the float height by bending the float tang ① on the float.
- Recheck the fuel level.

****

WIRE CYLINDER

REMOVAL

1. Remove:
   - Front fender
   - Fuel tank
2. Unhook the rubber band and slide the band.
3. Open:
   - Cover (wire cylinder)
4. Disconnect:
   - Throttle cable (throttle lever side) ①
   - Piston valve cable (carburetor side) ②
   - Throttle valve cable (carburetor side) ③

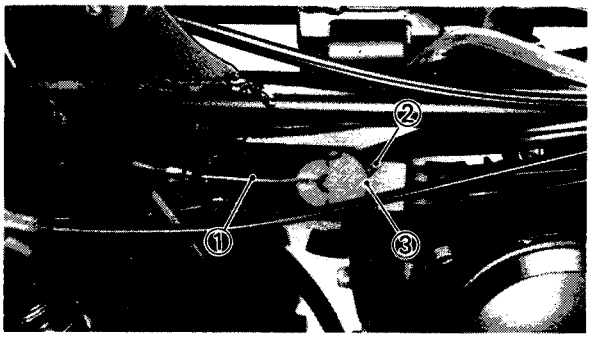

CAUTION:

Before removing the piston valve cable and throttle valve cable, make sure that the adjusters and locknuts on the carburetor side are fully tightened. If not, the throttle does not operate properly.

5. Remove:
   - Sliders
   - Spring

NOTE:

When removing the sliders, the spring will fall out. Take care not to lose this part.

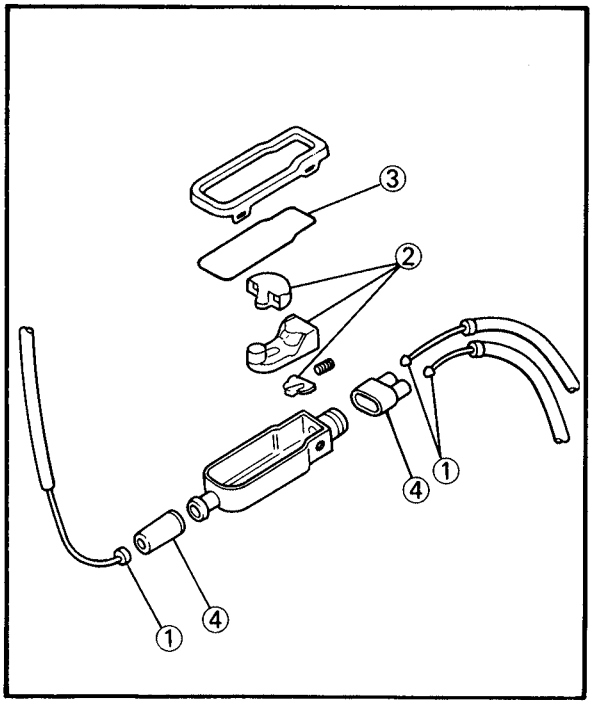

INSPECTION

1. Inspect:
   - Cable ends ① (throttle cable, piston valve cable and throttle valve cable)
     Damage→Replace.
   - Sliders ②
     Cranks/Wear→Replace.
   - O-ring ③
   - Rubber boots ④
     Damage→Replace.

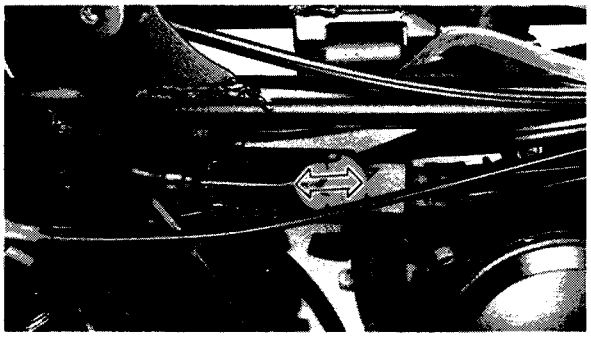

2. Check:
   - Slider operation
     Unsmooth operation→Repair.

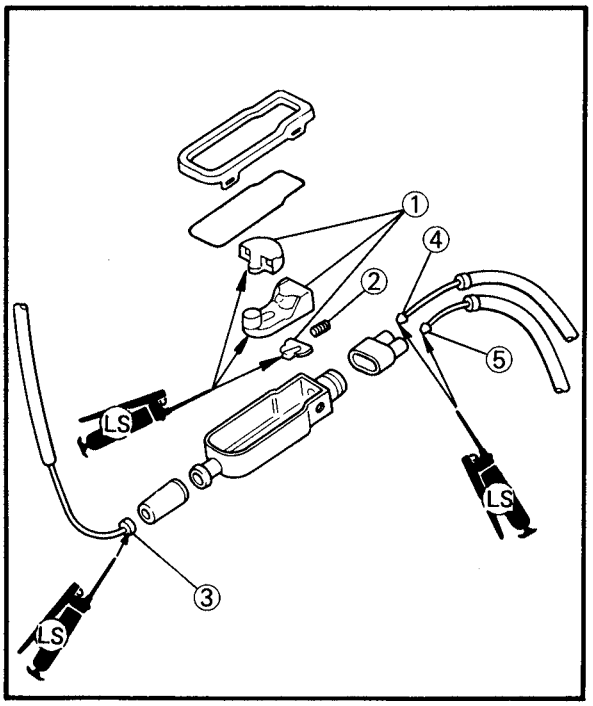

INSTALLATION

1. Apply:
   - Lithium base grease
     to the sliders and cable ends.
2. Install:
   - Sliders ①
   - Spring ②

NOTE:

Before installing the sliders, do not forget to fit the spring.

3. Connect:
   - Throttle cable (throttle lever side) ③
   - Piston valve cable (carburetor side) ④
   - Throttle valve cable (carburetor side) ⑤

NOTE:

Before connecting the cables, insert the throttle cable (Throttle lever side) into the rubber band.

CAUTION:

Before installing the piston valve cable and throttle valve cable, make sure that the adjusters and locknuts on the carburetor side are fully tightened. If not, the throttle does not operate properly.

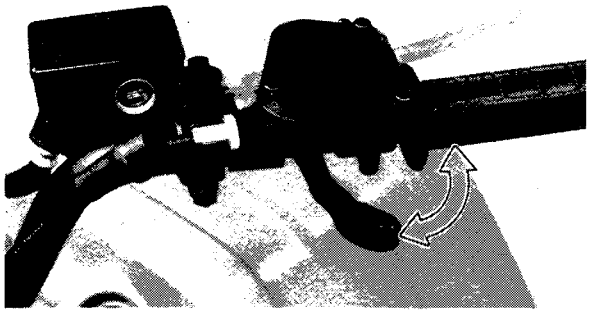

4. Install:
   - Cover (wire cylinder)
5. Check:
   - Cable operation
     Unsmooth operation→Repair.
6. Hook the rubber band securely.

CHASSIS

FRONT WHEEL AND WHEEL HUB

① Steering knuckle nut
② Washer
③ Collar
④ Oil seal
⑤ Bearing
⑥ Wheel panel nut
⑦ Disc cover (Outer)
⑧ Wheel hub
⑨ Spacer
⑩ Brake disc
⑪ Disc cover (Inner)
⑫ Steering knuckle

A	TIRE SIZE:
	AT21 × 7-10
B	WEAR LIMIT:
	3.0 mm (0.12 in)

C	RIM SIZE:
	10 × 6
D	RIM RUNOUT LIMIT:
RADIAL: 2.0 mm (0.08 in)	
LATERAL: 2.0 mm (0.08 in)	

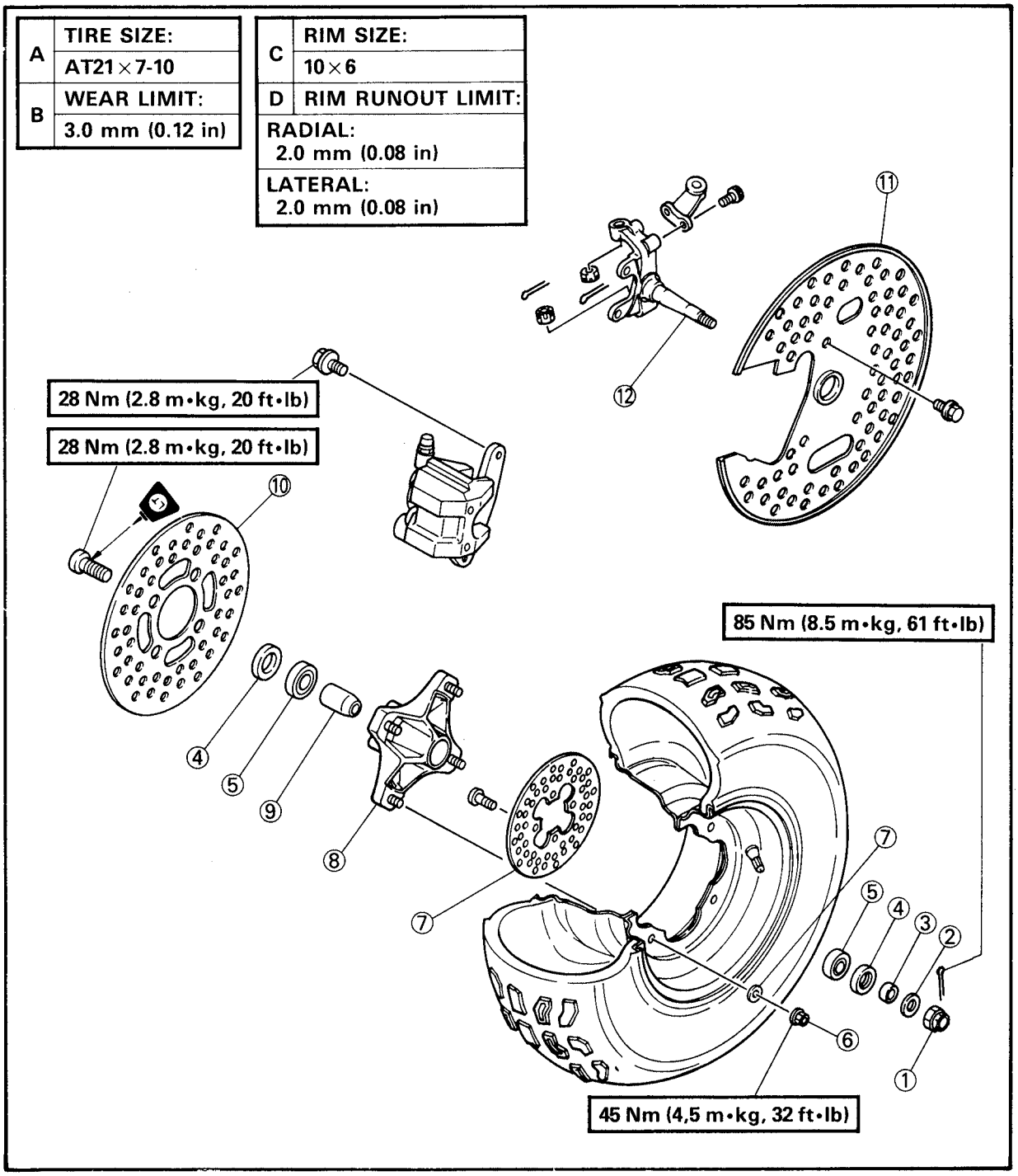

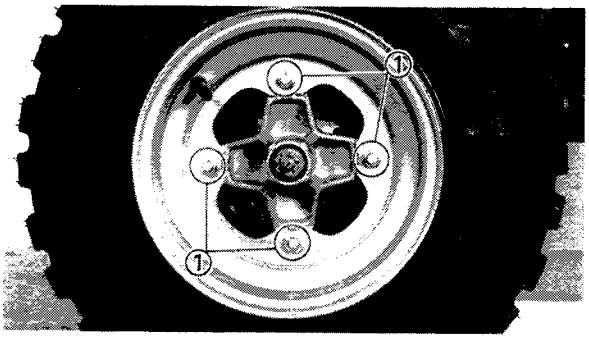

REMOVAL

1. Elevate the front wheels by placing a suitable stand under the front of the frame.
2. Remove:
   - Wheel panel nut ①
   - Front wheel
   - Disc cover (Outer)

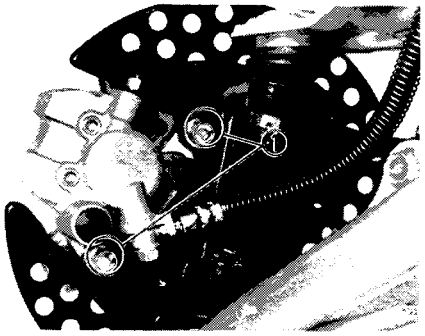

3. Remove:
   - Front brake caliper bolt ①

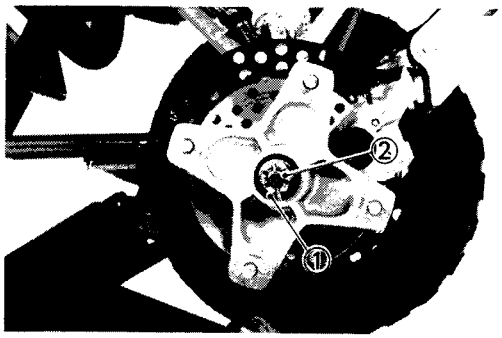

4. Remove:
   - Cotter pin ①
   - Steering knuckle nut ②
   - Washer

5. Remove:
   - Caliper ①

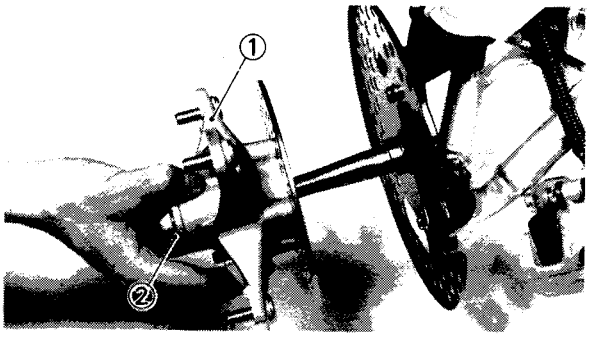

6. Remove:
   - Front wheel hub and brake disc assembly ①
   - Collar ②

CAUTION:

Make sure the machine is properly supported.

NOTE:

Do not depress the brake lever when the brake caliper is off the disc otherwise the brake pads will be forced shut.

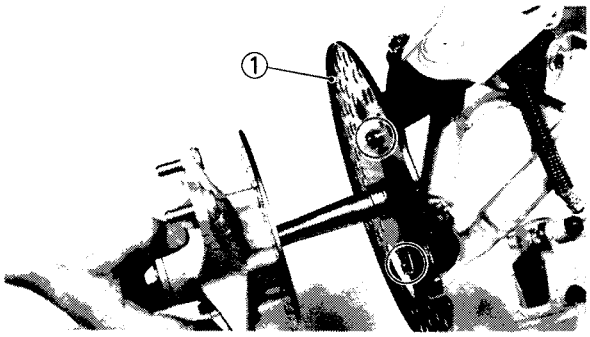

7. Remove:
   - Disc cover (inner) ①

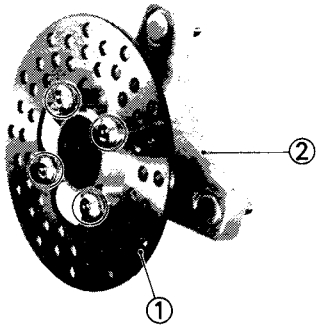

8. Remove:
   - Front brake disc ①
   - Front wheel hub ②

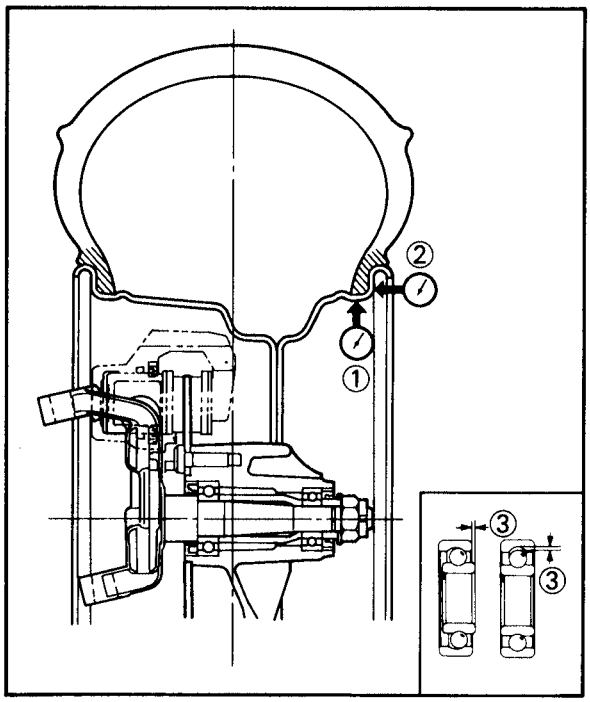

INSPECTION

1. Inspect:
   - Wheel
     Cracks/Bends/Warpage→Replace.
2. Measure:
   - Wheel runout
     Over specified limit→Replace, wheel or check bearing play ③.

Rim runout limits:
Radial ①: 2.0 mm (0.08 in)
Lateral ②: 2.0 mm (0.08 in)

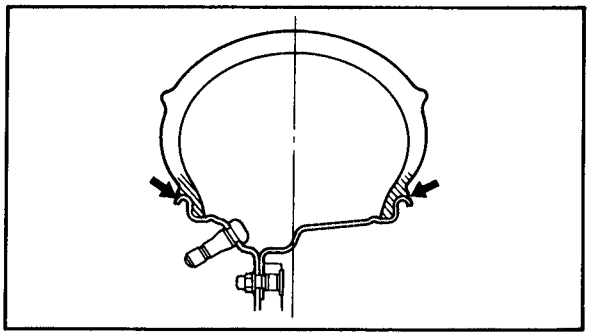

WARNING

•After mounting a tire, ride conservatively to allow proper tire to rim seating. Failure to do so may cause an accident resulting in machine damage and possible operator injury.

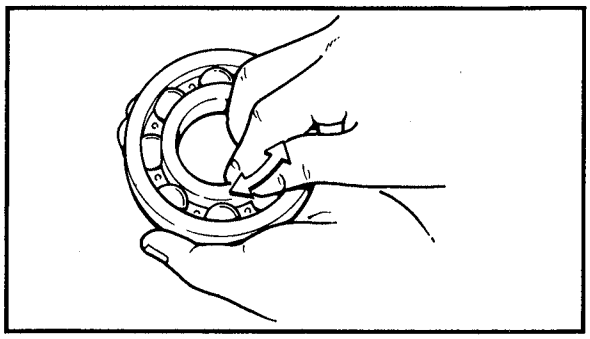

3. Inspect:
   •Wheel bearings
   Wheel hub play/Wheel turns roughly→ Replace.

****

Wheel bearing replacement steps:

- Clean wheel hub exterior.
- Drive bearing out by pushing spacer aside and tapping around perimeter of bearing inner race. Use soft metal drift punch and hammer. The spacer ① " floats" between bearings. Remove both bearings as described.

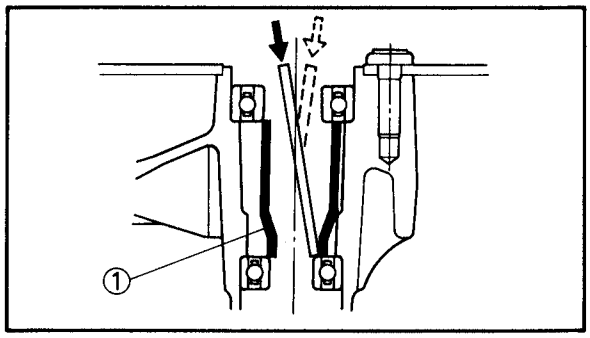

WARNING

Eye protection is recommended when using striking tools.

- To install the wheel bearing, reverse the above sequence. Use a socket that matches outside diameter of bearing outer race to drive in bearing.

CAUTION:

Do not strike the center race or balls of bearing. Contact should be made only with the outer race.

****

INSTALLATION

When installing the front wheel, reverse the removal procedure. Note the following points.

1. Apply:
   •Lithium base grease
   Lightly grease to the oil seal and bearing.

2. Install:
   - Front brake disc
   - Disc cover (inner)
   - Front brake caliper
   - Axle nut

	Front brake disc: **28 Nm (2.8 m•kg, 20 ft•lb)** **Front brake caliper:** **28 Nm (2.8 m•kg, 20 ft•lb)** **Axle nut:** **85 Nm (8.5 m•kg, 61 ft•lb)**

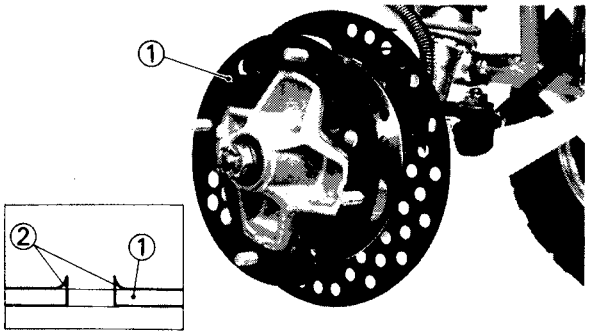

3. Install:
   - Disc cover (outer)
   - Front wheels

NOTE:

- Install the disc cover (Outer) ① with punched burns ② on the hub side.

4. Tighten:
   - Nuts (front wheel)

	Nuts (front wheel): **45 Nm (4.5 m•kg, 32 ft•lb)**

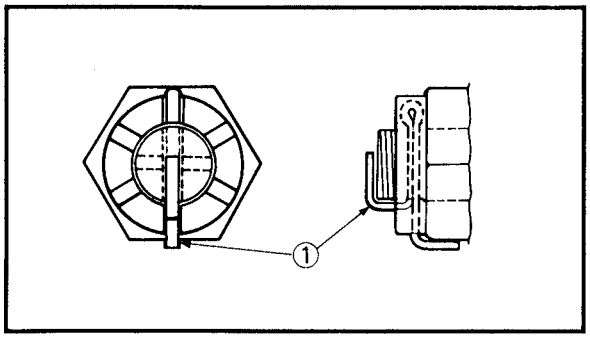

5. Install:
   - Cotter pin (new) ①

NOTE:

Do not loosen the axle nut after torque tightening. If the axle nut groove is not aligned with the cotter pin hole, align groove with the hole by tightening up on the axle nut.

⚠ WARNING

Always use a new cotter pin.

REAR WHEEL AND WHEEL HUB

① Wheel panel nut
② Axle nut
③ Washer
④ Wheel boss
⑤ Drive chain
⑥ Driven sprocket
⑦ Nut
⑧ Sprocket boss
⑨ Dust cover
⑩ Oil seal
⑪ Bearing
⑫ Wheel hub
⑬ Spacer
⑭ Brake disc boss
⑮ Brake disc
⑯ Rear axle

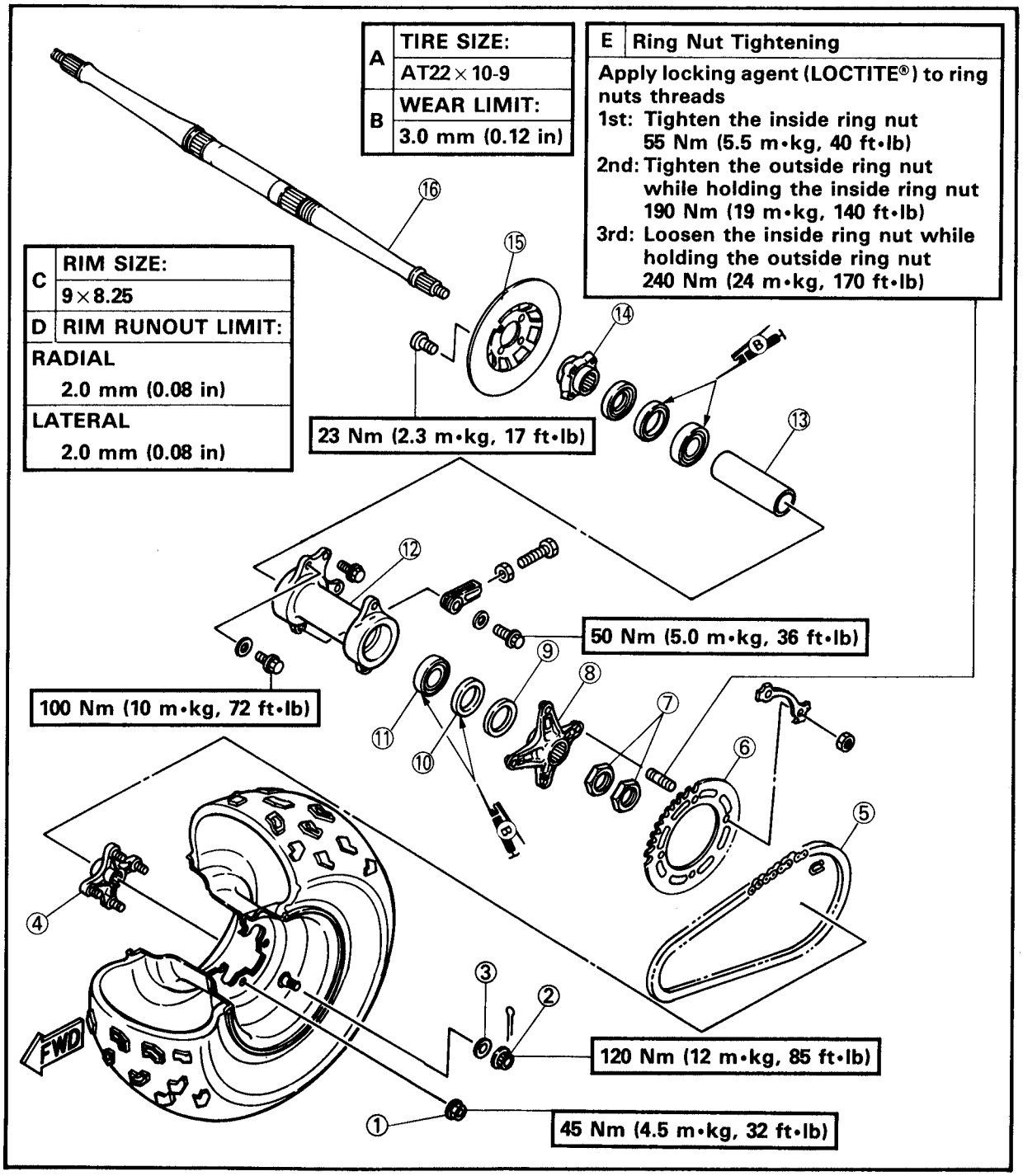

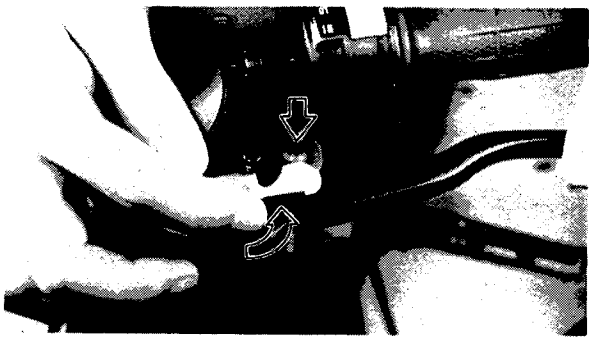

REMOVAL

1. Place the machine on a level place.
2. Loosen:
   - Nuts (rear wheel)
     Apply the parking brake.
3. Elevate the rear wheels by placing the suitable stand under the rear of frame.

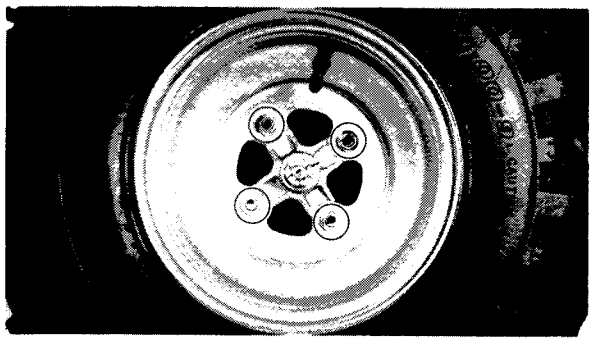

4. Remove:
   - Nuts (rear wheel)
   - Rear wheel

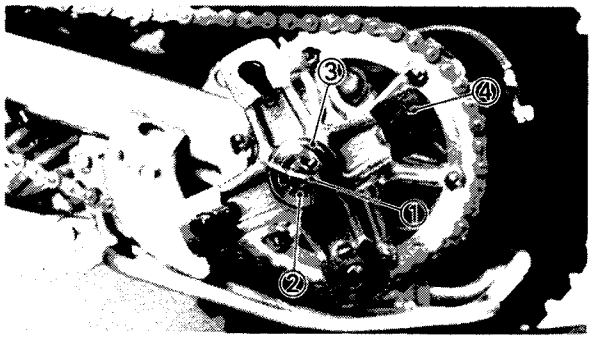

5. Remove:
   - Cotter pin ①
   - Axle nut ②
   - Plain washer ③
   - Wheel hub ④

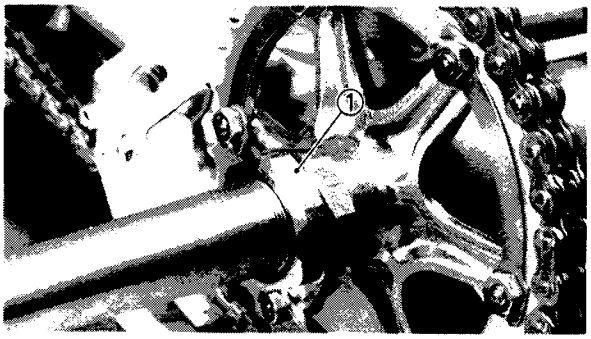

6. Remove:
   - Nut ①

	Rear axle nut wrench: **YM-37132**

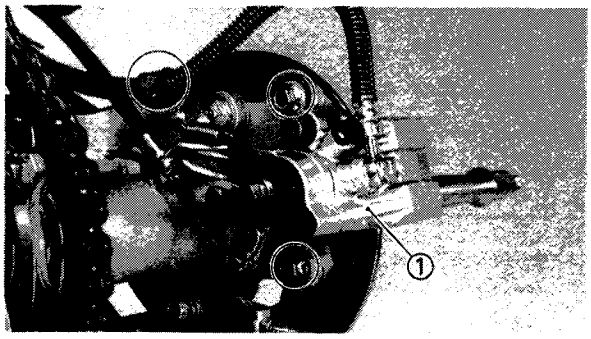

7. Remove:
   - Rear brake caliper assembly ①

NOTE:

Do not depress the parking brake lever and brake pedal when the brake caliper is off the disc otherwise the brake pads will be forced shut.

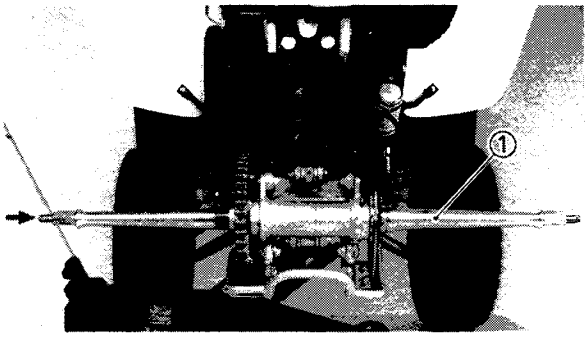

8. Remove:
   - Rear axle ①
     From the right side
   - Brake disc

CAUTION:

- **Never directly tap the axle end with a hammer, this will result in damage to the axle thread ① and spline ②.**
- **Install the wheel boss ③ and suitable socket ④ on the axle end to protect the thread and spline from damage.**

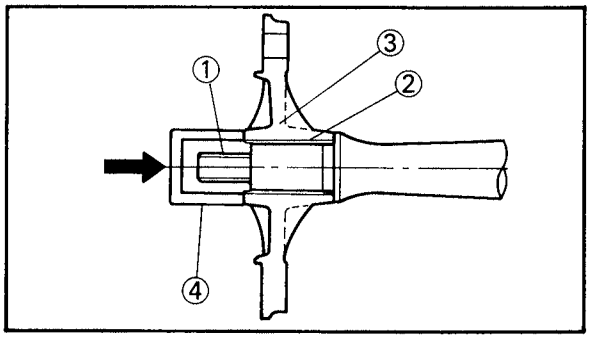

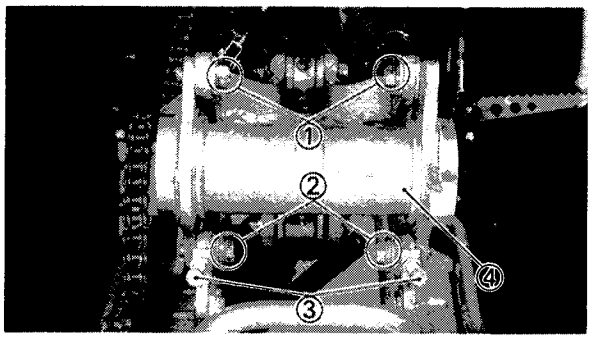

9. Remove:
   - Driven sprocket and sprocket boss assembly
   - Bolts (upper wheel hub) ①
   - Bolts (lower wheel hub) ②
   - Tensioner assembly ③
   - Wheel hub ④

INSPECTION

1. Inspect:
   - Wheel
     Refer to "FRONT WHEEL—INSPECTION" section
2. Measure:
   - Wheel runout
     Refer to "FRONT WHEEL—INSPECTION" section.

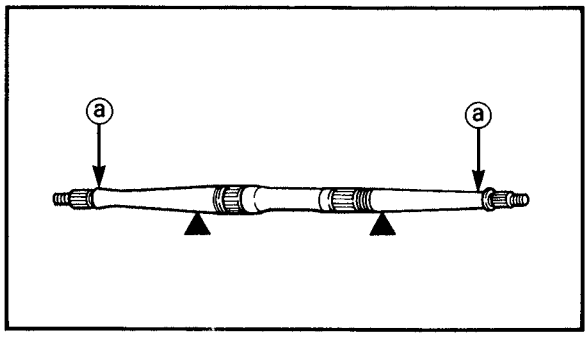

3. Inspect:
   - Rear axle runout ⓐ
     Out of specification→Replace.

Rear axle runout limit:
1.5 mm (0.06 in)

⚠ WARNING

Do not attempt to straighten a bent axle.

4. Inspect:
   - Oil seals
     Damage→Replace.
5. Check:
   - Bearings
     Bearings allow play in the final gear housing and rear hub or rear axle turns roughly→Replace. Refer to "FRONT WHEEL" section.

INSTALLATION

When installing the rear wheel, reverse the removal procedure. Note the following points.

Wheel hub installation

1. Apply:
   - Lithium base grease
     Lightly grease to the oil seals and bearing.
2. Install:
   - Wheel hub
   - Tensioner assembly

	**Bolts (wheel hub—lower):** **50 Nm (5.0 m•kg, 36 ft•lb)** **Bolts (wheel hub—upper):** **100 Nm (10.0 m•kg, 72 ft•lb)**

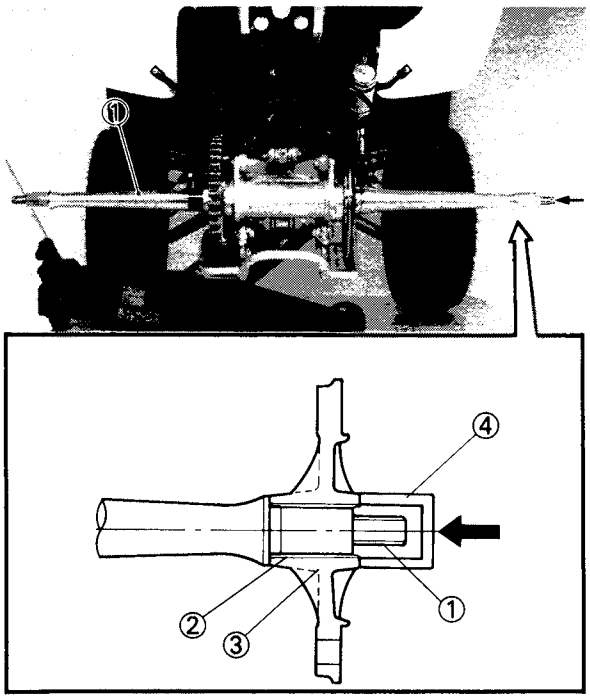

Rear axle installation

1. Install:
   - Brake disc
   - Rear axle ①
     Tap the RIGHT END axle.

CAUTION:

- **Never directly tap the axle end with a hammer, this will result in damage to the axle thread ① and spline ②.**
- **Install the wheel boss ③ and suitable socket ④ on the axle end to protect the thread and spline from damage.**

2. Install:
   - Drive sprocket and sprocket boss assembly

3. Apply the brake pedal and parking brake.
4. Install:
   •Nut (rear axle)

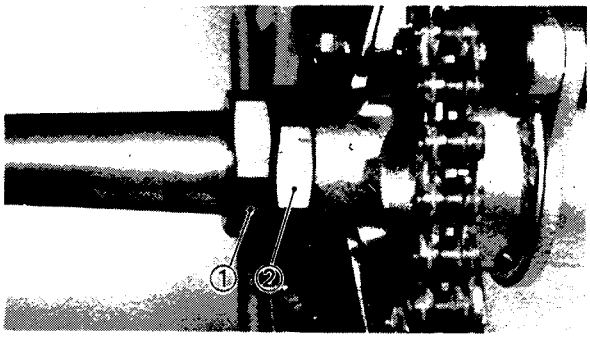

5. Tighten:
   •Nuts (rear axle) ①, ②

****

Nuts tightening steps:

NOTE:

Before tightening the nuts, apply the LOCTITE® to the thread portion of the rear axle.

- Finger tighten the inside nut ② while checking the ring gear engagement.
- Tighten the inside nut with Rear axle nut wrench to specification while holding the rear axle.

	Rear axle nut wrench: **YM-37132**

	Inside nut (first tightening): **55 Nm (5.5 m•kg, 40 ft•lb)**

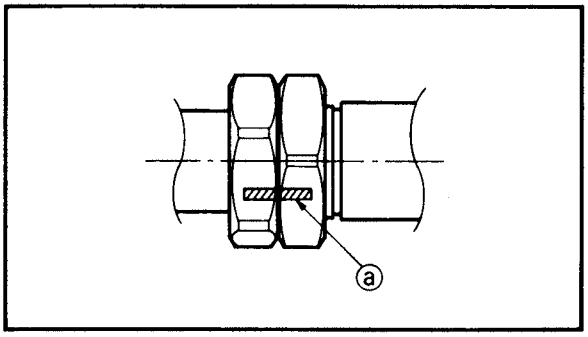

- Hold the inside nut ② and tighten the outside nut ① with Rear axle nut wrench to specification.

	Outside nut: **190 Nm (19.0 m•kg, 140 ft•lb)**

- Draw the line ⓐ on inside and outside nut.
- Hold the outside nut ① and tighten BACK the inside nut ② with Rear axle nut wrench to specification.

	Inside nut (final tightening): **240 Nm (24.0 m•kg, 170 ft•lb)**

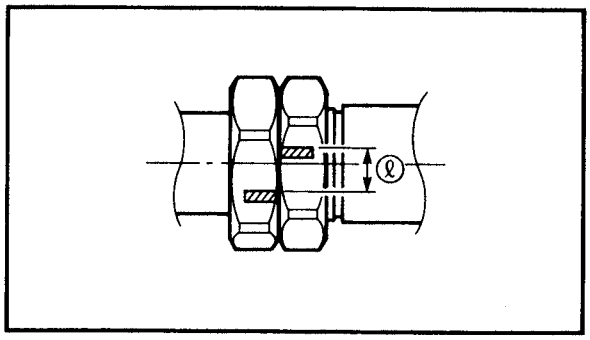

- Measure the distance ℓ between lines. If distance ℓ is less than 3 mm (0.12 in), retighten BACK the inside nut.

****

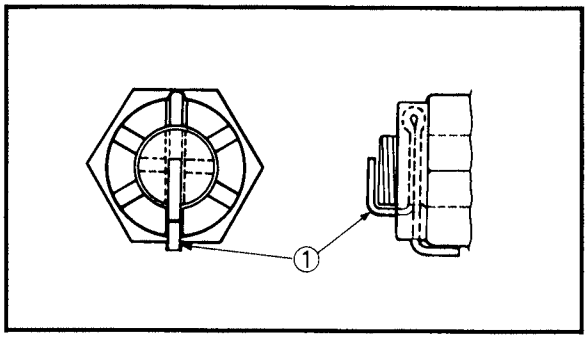

6. Tighten:
   - Axle nuts

	Axle nuts: **120 Nm (12.0 m•kg, 85 ft•lb)**

7. Install:
   - Cotter pins (new) ①

NOTE:

Do not loosen the axle nut after torque tightening. If the axle nut groove is not aligned with the cotter pin hole, align groove with the hole by tightening up on the axle nut.

⚠ WARNING

Always use a new cotter pin.

8. Install:
   - Rear wheels

9. Tighten:
   - Nuts (rear wheel)

	Nuts (rear wheel): **45 Nm (4.5 m•kg, 32 ft•lb)**

10. Adjust:
    - Drive chain slack
      Refer to "CHAPTER 3. DRIVE CHAIN SLACK ADJUSTMENT" section.

FRONT BRAKE

BRAKE CALIPER AND BRAKE DISC

① Brake disc
② Brake pads
③ Caliper piston assembly
④ Piston seal kit
⑤ Shim
⑥ Air bleed screw
⑦ Retaining bolt

NOTE:

- Drain the brake fluid before removing the brake hose.
- Always replace the brake pads as a set.

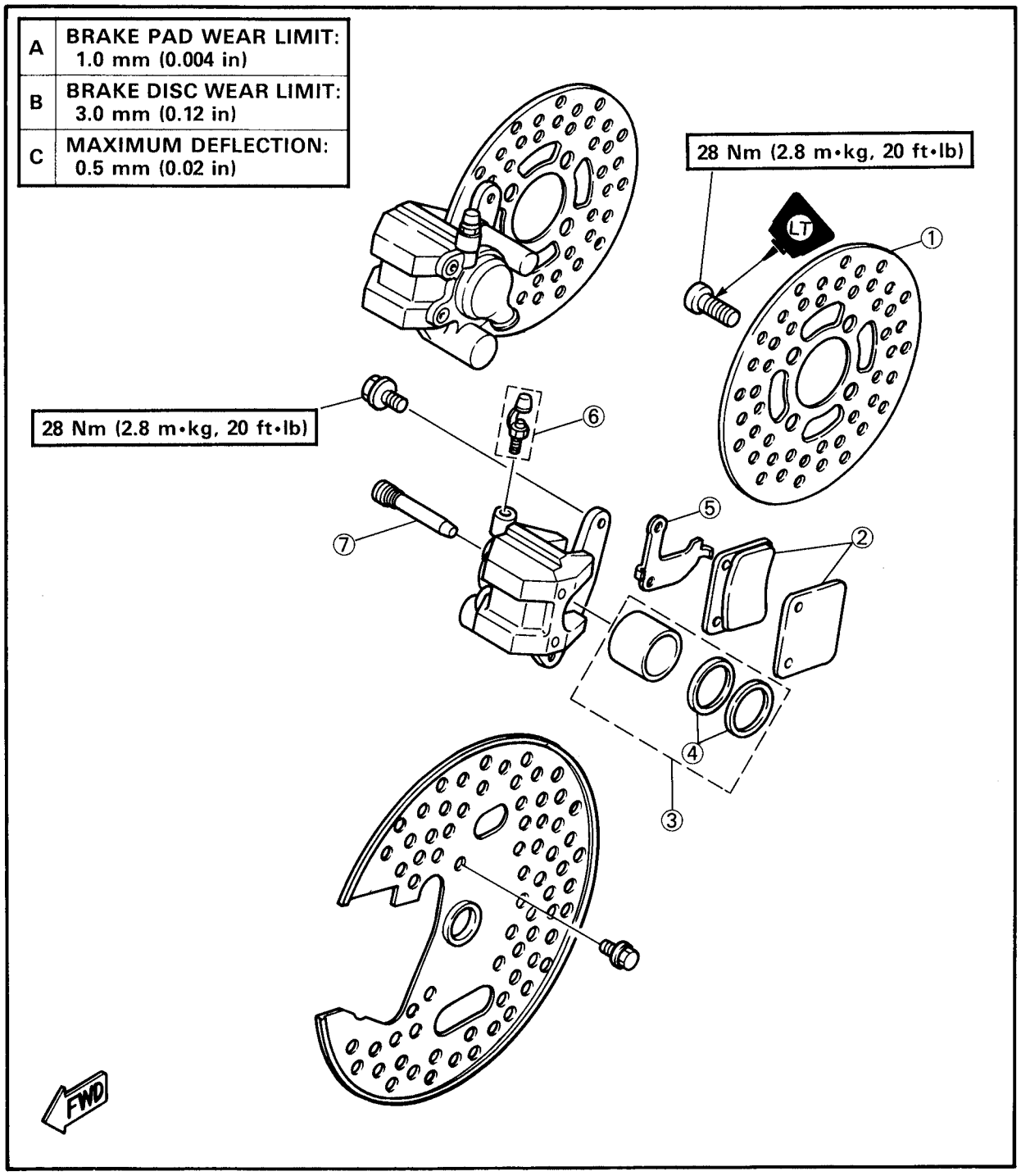

BRAKE HOSE AND MASTER CYLINDER

① Copper washers
② Master cylinder kit
③ Brake pipe
④ Clip
⑤ Brake hose

NOTE:
Always use a new brake pipe after removal.

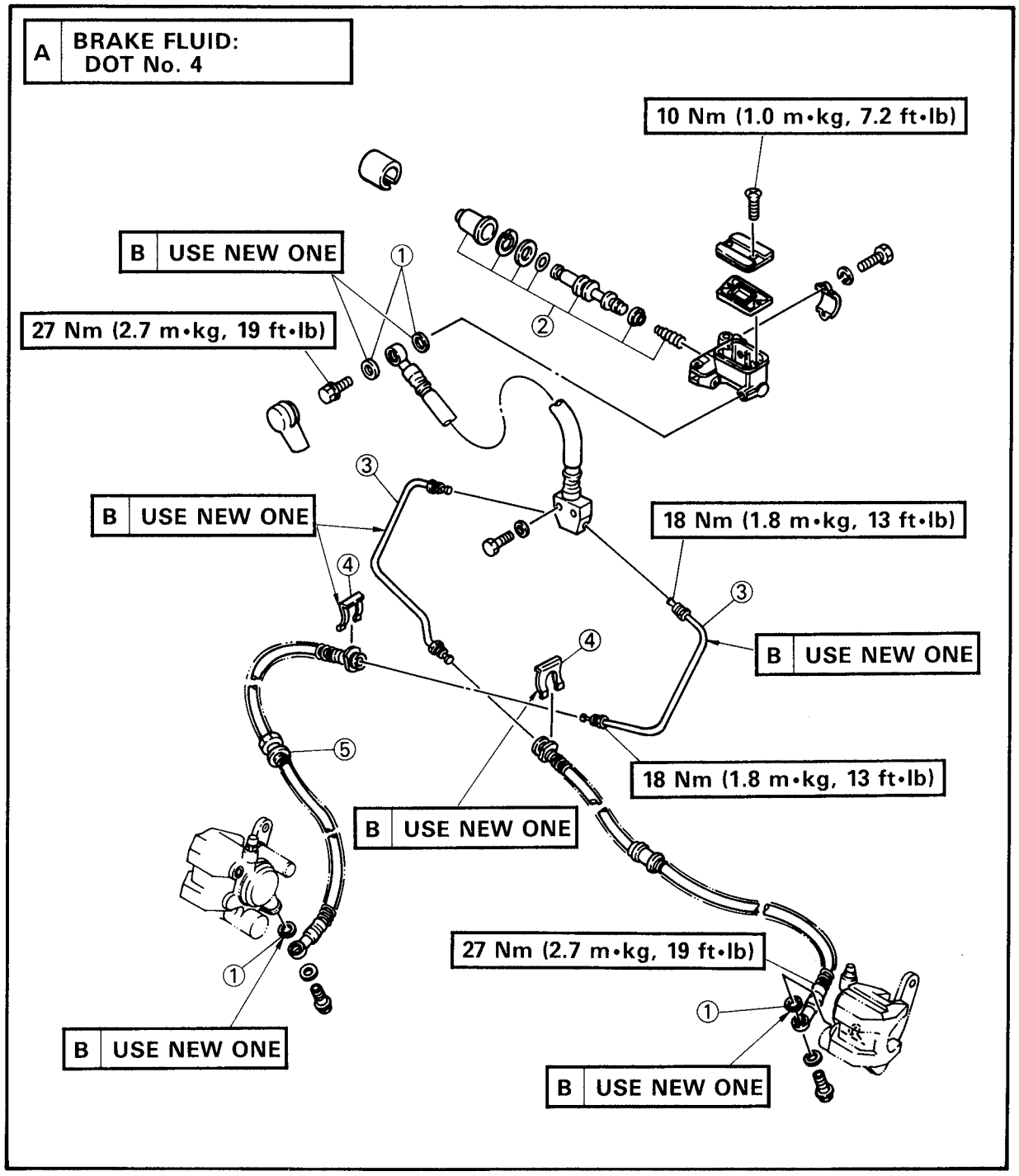

CAUTION:

Disc brake components rarely require disassembly. DO NOT:

- **Disassemble components unless absolutely necessary.**
- **Use solvents on internal brake component.**
- **Use contaminated brake fluid for cleaning.**
- **Use only clean brake fluid.**
- **Allow brake fluid to come in contact with the eyes otherwise eye injury may occur.**
- **Allow brake fluid to contact painted surfaces or plastic parts otherwise damage may occur.**
- **Disconnect any hydraulic connection otherwise the entire system must be disassembled, drained, cleaned, and then properly filled and bled after reassembly.**

NOTE:

Drain the brake fluid before removing brake hose.

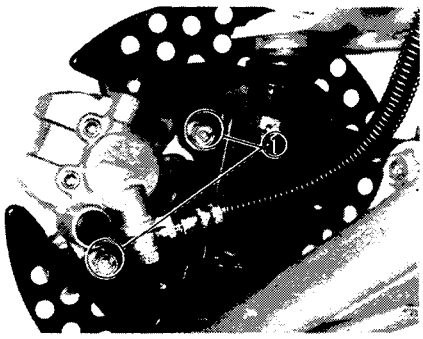

BRAKE PAD REPLACEMENT

1. Remove:
   - Front wheel
   - Disc cover (outer)
   - Steering knuckle nut
   - Bolt (caliper) ①

2. Remove:
   - Front wheel hub ①
   - Retaing bolt ②
   - Brake pads ③

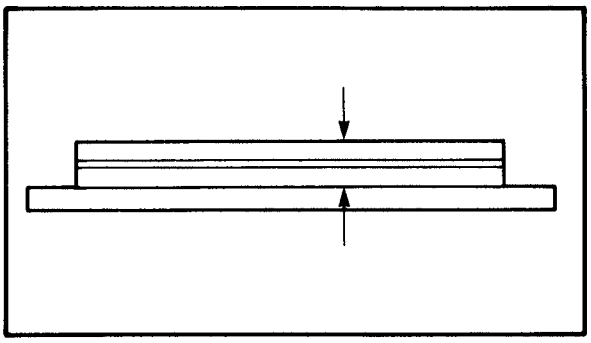

NOTE:

Replace pads as a set if either is found to be worn to the wear limit.

Brake pad wear limit:
1.0 mm (0.04 in)

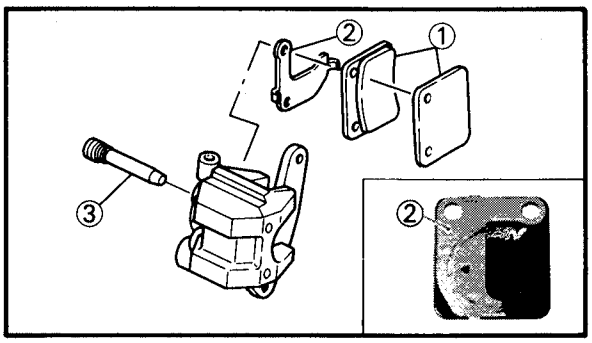

3. Install:
   - Pads (new) ①
   - Shim ②
   - Retaining bolt ③

NOTE:

Be sure to install the shim ② at piston side.

Retaining bolt:
18 Nm (1.8 m•kg, 13 ft•lb)

4. Install:
   - Caliper

Bolt (caliper):
28 Nm (2.8 m•kg, 20 ft•lb)

   - Steering knuckle

Axle nut:
85 Nm (8.5 m•kg, 61 ft•lb)

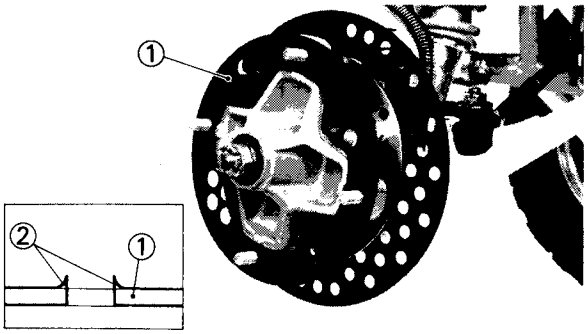

5. Install:
   - Disc cover (outer) ①
   - Front wheel

Nut (wheel panel):
45 Nm (4.5 m•kg, 32 ft•lb)

NOTE:

Install the disc cover (outer) ① with punched burrs ② on the hub side.

CALIPER

Caliper removal

1. Remove:
   - Front wheel
   - Disc cover (outer)
   - Steering knucke

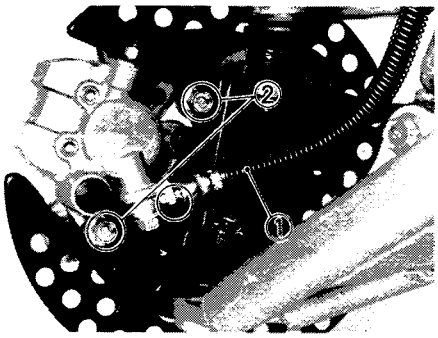

- Brake hose ①
  Drain the brake fluid.
- Bolt (caliper) ②
- Disc cover (inner)
- Brake pads
- Pad spring

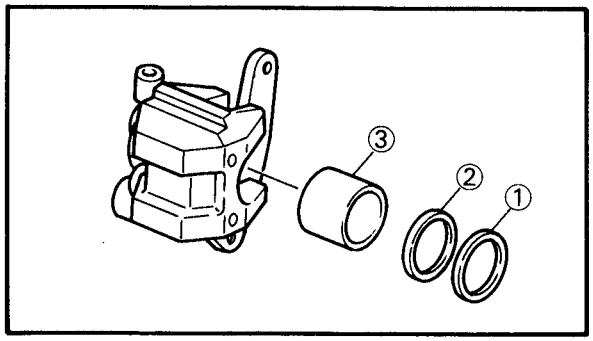

Caliper disassembly

1. Remove:
   - Dust seal ①
   - Piston seal ②
   - Piston ③
     Use compressed air and proceed carefully.

⚠ WARNING

- **Cover piston with rag and use extreme caution when expelling piston from cylinder.**
- **Never attempt to pry out piston.**

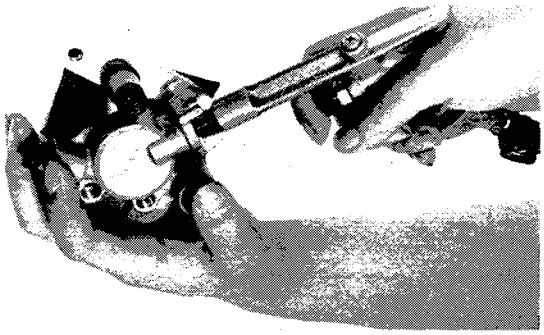

****

Caliper piston removal steps:

- Insert the rag into the caliper to lock the piston.
- Blow compressed air into the hose joint opening to force out the piston from the caliper body.

****

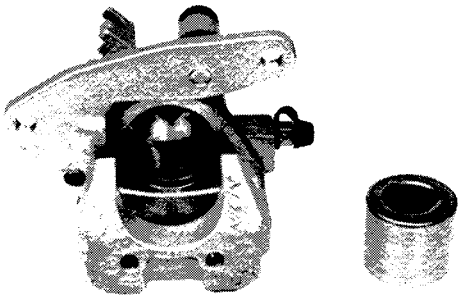

Inspection

1. Inspect:
   - Piston
     Rust/Wear→Replace.
   - Caliper cylinder body
     Wear/Scratches→Replace.

Installation

1. Assemble:
   - Brake caliper(s)
     Reverse disassembly steps.

⚠ WARNING

- **All internal parts should be cleaned in new brake fluid only.**

- **Internal parts should be lubricated with brake fluid when installed.**

	Recommend brake fluid: **DOT #4** **If DOT #4 is not available, #3 can be used.**

- **Replace the dust seal, piston seal and clip whenever a caliper is disassembled.**

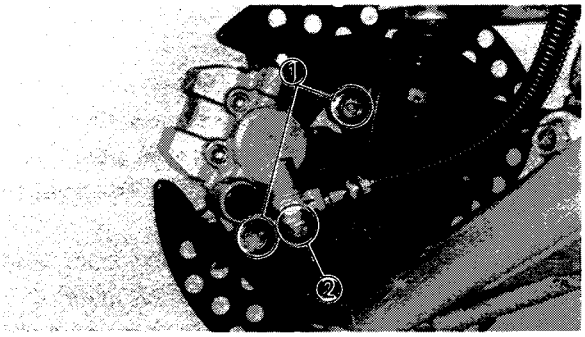

2. Tighten:
   - Bolt (caliper) ①

	Bolt (caliper): **28 Nm (2.8 m•kg, 20 ft•lb)**

   - Bolt (brake hose) ②

	Bolt (brake hose): **27 Nm (2.7 m•kg, 19 ft•lb)**

3. Bleed the air completely from the brake system.

4. Install:
   - Steering knuckle

	Axle nut: **85 Nm (8.5 m•kg, 61 ft•lb)**

   - Disc cover (outer)
   - Front wheel

	Nut (wheel panel): **45 Nm (4.5 m•kg, 32 ft•lb)**

AIR BLEEDING

⚠ WARNING

Bleed the brake system if:
- **The system has been disassembled.**
- **A brake hose has been loosened or removed.**
- **The brake fluid is very low.**
- **The brake operation is faulty.**

A dangerous loss of braking performance may occur if the brake system is not properly bled.

****

Air bleeding steps:
- Add proper brake fluid to the reservoir.
- Install diaphragm.
  Be careful not to spill any fluid or allow the reservoir to overflow.
- Connect the clear plastic tube (4.5 mm, 3/16 in inside dia.) tightly to the caliper bleed screw ①.
- Place the other end of the tube into a container.
- Slowly apply the brake lever several times. (*)
- Pull the lever in. Hold the lever in position.
- Loosen the bleed screw and allow the lever to travel towards its limit.
- Tighten the bleed screw when the lever limit has been reached; then release the lever. (**)
- Repeat steps (*) to (**) until all of the air bubbles have been removed from the system.

****

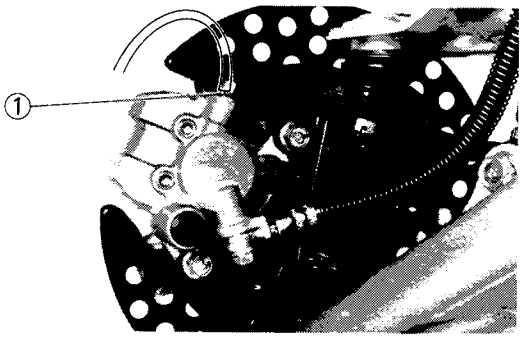

NOTE:

If bleeding is difficult, it may be necessary to let the brake fluid system stabilize for few hours. Repeat the bleeding procedure when the tiny bubbles in system have disappeared.

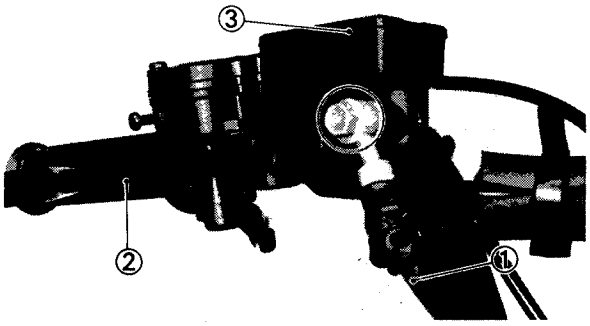

MASTER CYLINDER DISASSEMBLY

Master cylinder removal

NOTE:

Drain the brake fluid before removing the master cylinder.

1. Remove:
   - Brake hose ①
   - Brake lever ② and spring
   - Master cylinder assembly ③

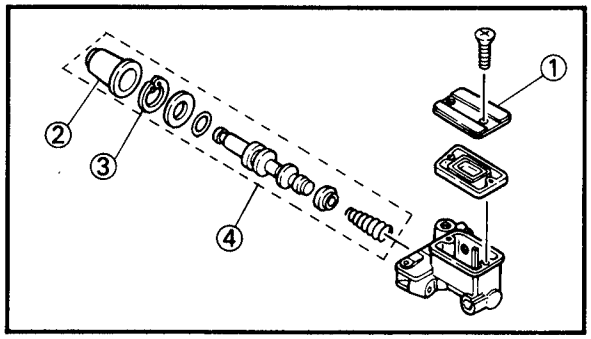

Master cylinder disassembly

1. Remove:
   - Cap ①
     Drain remaining fluid.
   - Master cylinder dust boot ②
   - Circlip ③
   - Master cylinder kit ④

NOTE:

Be sure to reinstall the larger diameter lips of the cylinder cups first.

Inspection

1. Inspect:
   - Master cylinder body
     Scratches/Wear→Replace.

NOTE:

Clean all passages with new brake fluid.

   - Brake hoses
     Cracks/Wear/Damage→Replace.
   - Master cylinder kit
     Scratches/Wear→Replace.

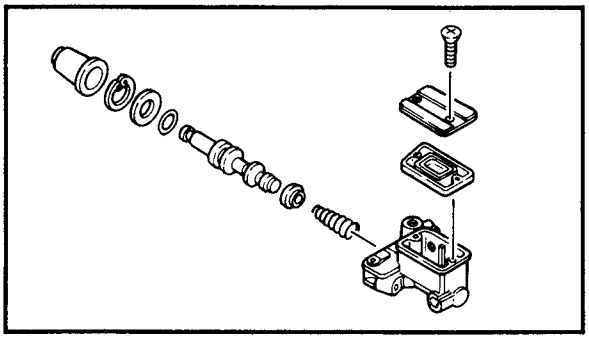

Installation

1. Assemble:
   - Master cylinder
     Reverse disassembly steps.

⚠ WARNING

Internal parts shoud be lubricated with brake fluid when installed.

2. Install:
   - Master cylinder
   - Brake hose (with copper washers)
   - Brake lever

NOTE:
Grease the pivot point.

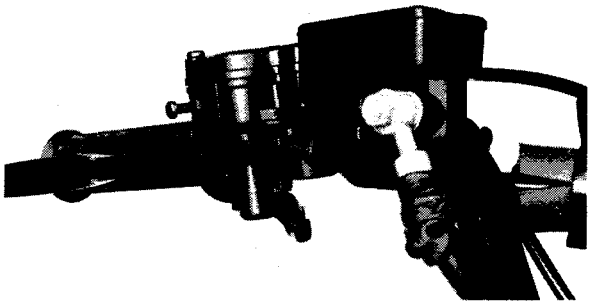

3. Tighten:
   - Master cylinder bolts
   - Brake hose

	Master cylinder: **10 Nm (1.0 m•kg, 7.2 ft•lb)** **Brake hose:** **27 Nm (2.7 m•kg, 19 ft•lb)**

4. Bleed the air completely from the brake system.
5. Tighten:
   - Master cylinder cap

	Master cylinder cap: **2 Nm (0.2 m•kg, 1.4 ft•lb)**

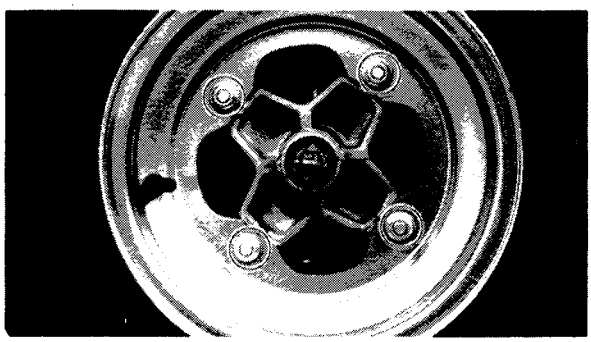

BRAKE DISC

1. Remove:
   - Front wheel
   - Disc cover (outer)

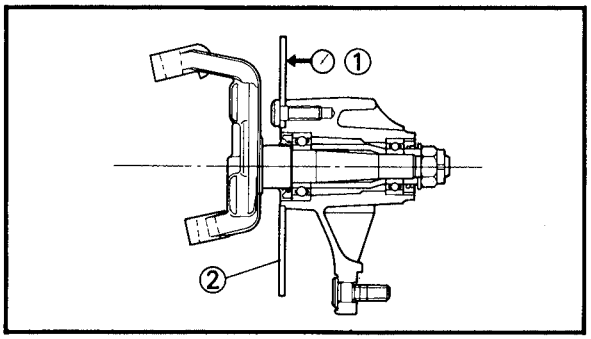

2. Inspect:
   - Brake disc ②
     Wear/Deflection
     Out of specification→Replace.

	Maximum deflection: **0.15 mm (0.006 in)** **Minimum disc thickness:** **3.0 mm (0.12 in)**

① Dial gauge

3. Install:
   - Disc cover (outer)
   - Front wheel
     Refer to "FRONT WHEEL—INSTALLATION" section.

REAR BRAKE

① Bleed screw
② Brake pad
③ Caliper piston assembly
④ Brake caliper
⑤ Brake disc
⑥ Shim
⑦ Copper washer
⑧ Union bolt
⑨ Master cylinder kit

NOTE:

- Be sure to position the shim so that its arrow mark ⑩ points in the direction of the disc plate rotation ⑪.

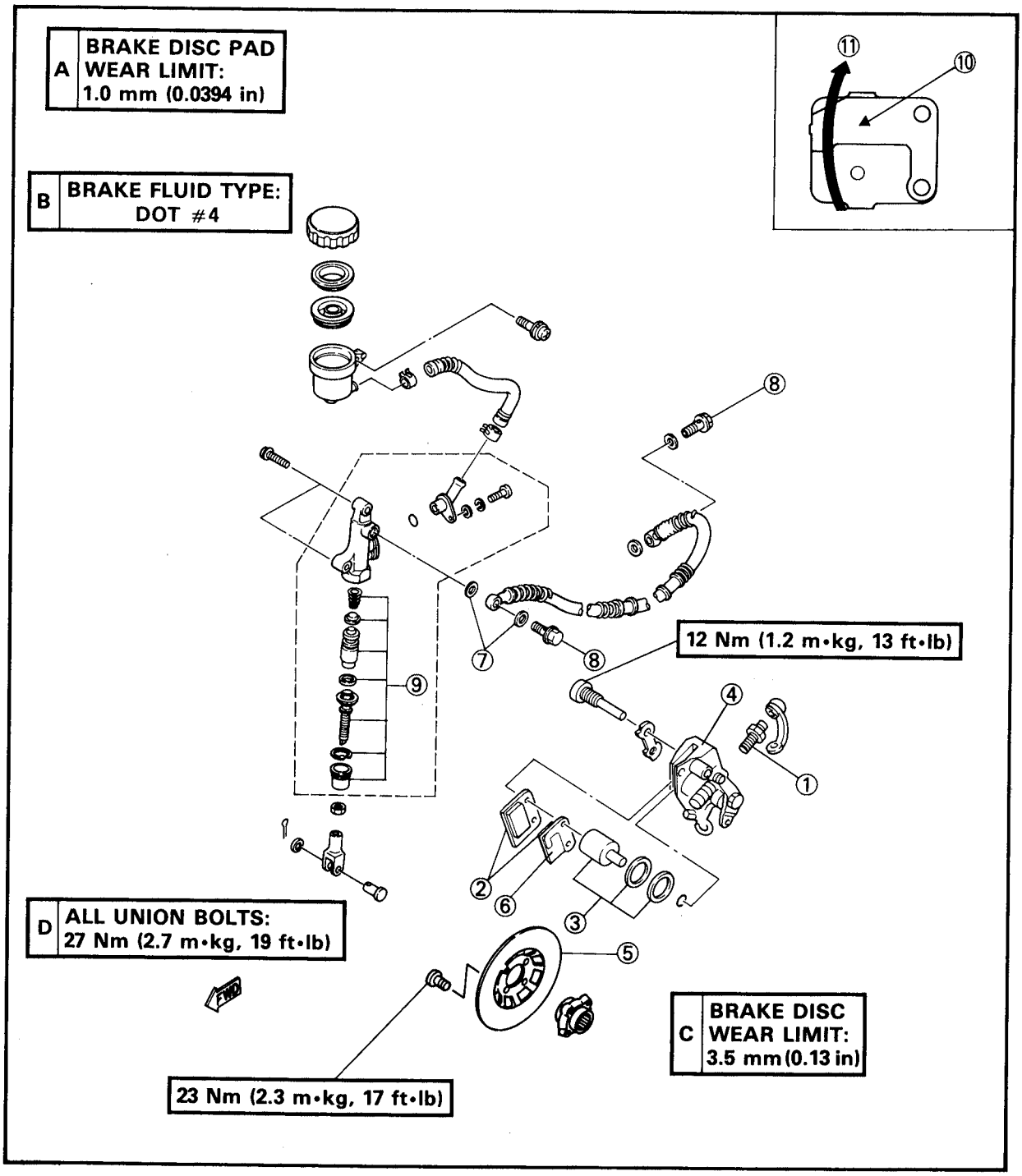

CAUTION:

Disc brake components rarely require disassembly. DO NOT:

- **Disassemble components unless absolutely necessary.**
- **Use solvents on internal brake component.**
- **Use contaminated brake fluid for cleaning. Use only clean brake fluid.**
- **Allow brake fluid to come in contact with the eyes otherwise eye injury may occur.**
- **Allow brke fluid to contact painted surfaces or plastic parts otherwise damage may occur.**
- **Disconnect any hydraulic connection otherwise the entire system must be disassembled, drained, cleaned, and then properly filled and bled after reassembly.**

NOTE:

Drain the brake fluid before removing brake hose.

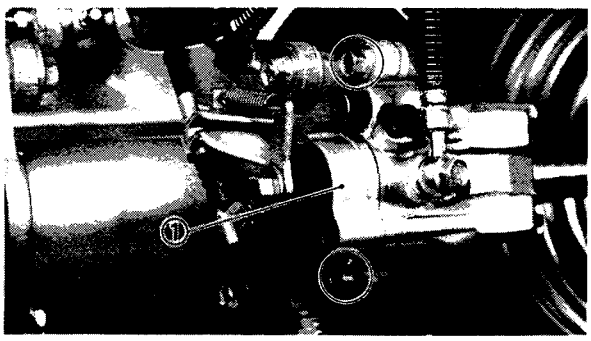

BRAKE PAD REPLACEMENT

1. Remove:
   - Brake caliper ①

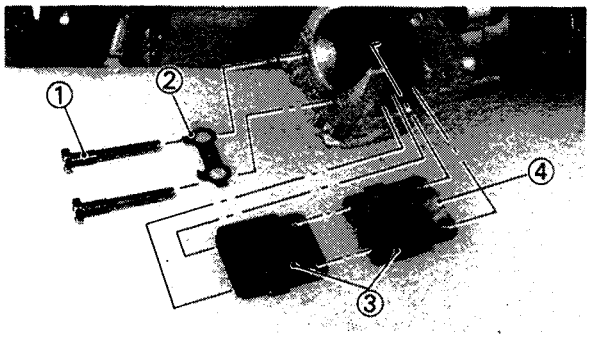

2. Remove:
   - Pad retaining bolts ①
   - Lock washer ②
   - Pad ③
   - Shim ④
   - Pad spring

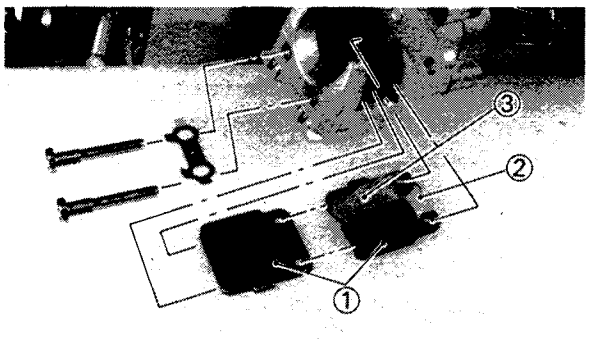

3. Install:
   - Pad spring (new)
   - Pads (new) ①
   - Shim ②

NOTE:

- Be sure to position the shim so that its arrow mark ③ points in the direction of the disc plate rotation.
- Replace pads as a set if either is found to be worn to the wear limit.

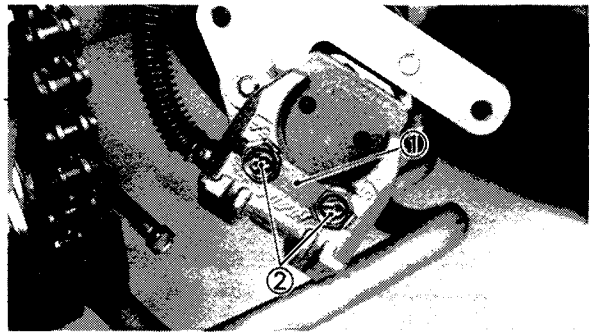

4. Install:
   - Lock washer (new) ①
   - Pad retaining bolts ②

	Pad retaining bolts: **18 Nm (1.8 m•kg, 13 ft•lb)**

5. Install:
   - Brake caliper

	Brake caliper bolts: **23 Nm (2.3 m•kg, 17 ft•lb)**

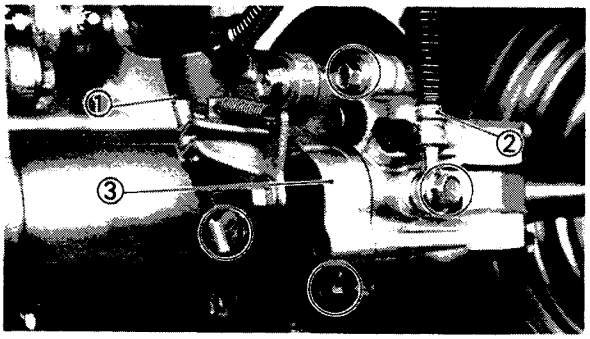

CALIPER DISASSEMBLY

1. Disconnect:
   - Parking brake cable ①
   - Brake hose ②
2. Remove:
   - Brake caliper ③

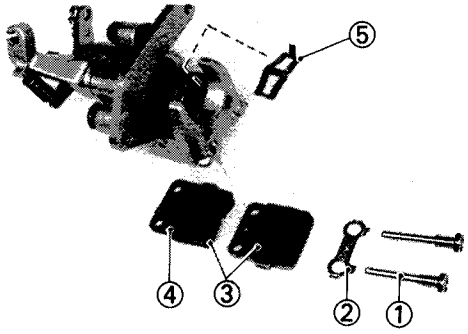

3. Remove:
   - Pad retaining bolts ①
   - Lock washer ②
   - Pad ③
   - Shim ④
   - Pad spring ⑤

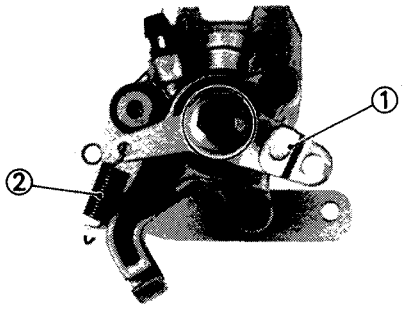

4. Remove:
   - Parking brake lever ①
   - Spring ②

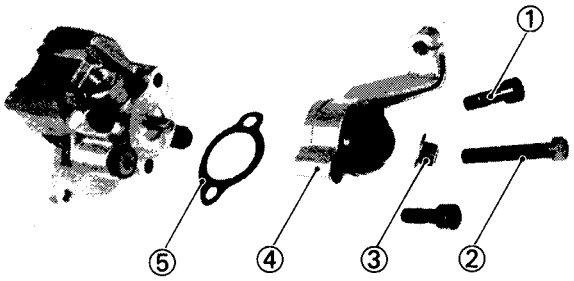

5. Remove:
   - Bolt ①
   - Adjuster ②
   - Locknut ③
   - Parking brake case assembly ④
   - Gasket ⑤

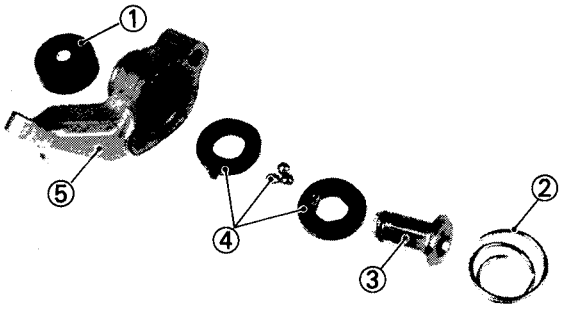

6. Remove:
   - Cover ①
   - Spring ②
   - Adjuster nut ③
   - Bearing ④
   - Parking brake case ⑤

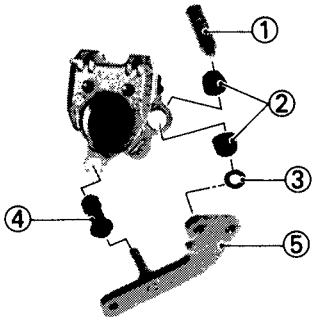

7. Remove:
   - Caliper bracket bolt ①
   - Cover ②
   - Washer ③
   - Cover ④
   - Bracket ⑤

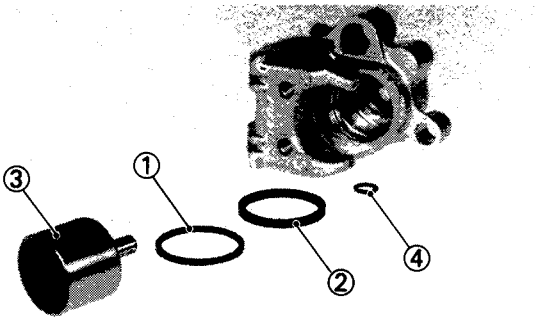

8. Remove:
   - Dust seal ①
   - Piston seal ②
   - Piston ③
   - O-ring ④

Use compressed air and proceed carefully.

⚠ WARNING

- **Cover piston with rag and use extreme caution when expelling piston from cylinder.**
- **Never attempt to pry out piston.**

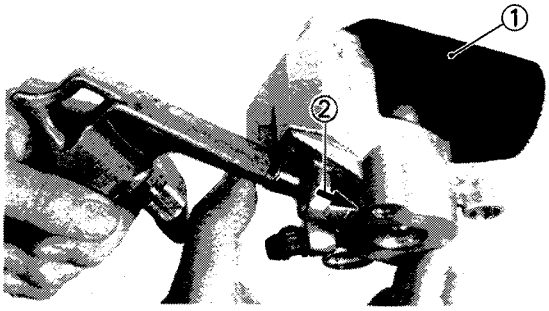

****

Caliper piston removal steps:

- Insert the rag ① into the caliper to lock the piston.
- Blow compressed air ② into the hose joint opening to force out the piston from the caliper body.

****

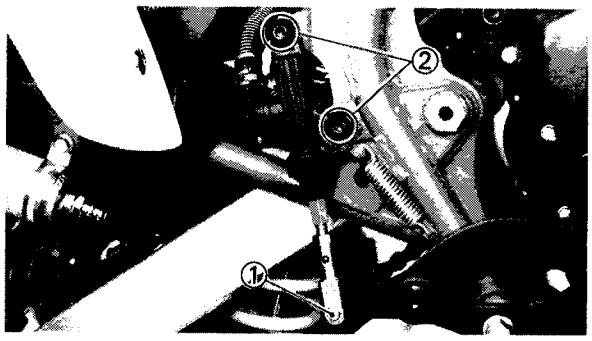

MASTER CYLINDER DISASSEMBLY

1. Remove:
   - Cotter pin
   - Washer
   - Pivot pin ①
   - Bolts ②

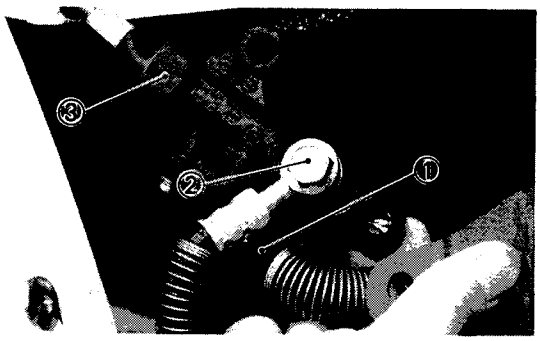

2. Remove:
   - Brake hose ①
   - Union bolt ②
   - Washer
   - Master cylinder assembly ③

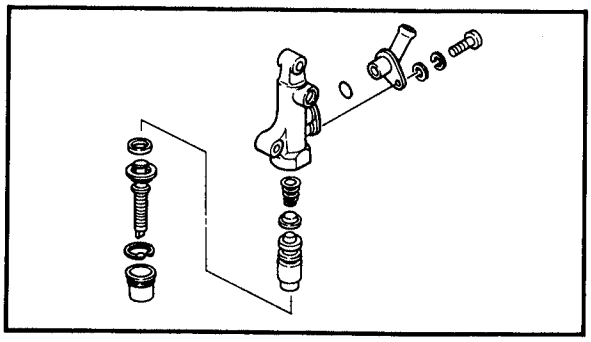

3. Remove:
   - Master cylinder kit
     (from master cylinder body)

INSPECTION AND REPAIR

Refer to front brake inspection and repair except for following items.

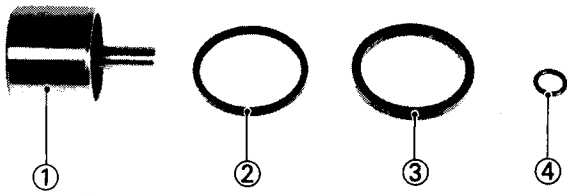

1. Inspect:
   - Caliper piston ①
   - Dust seal ②
   - Piston seal ③
   - O- ring ④

Damage/Scratches → Replace as a set.

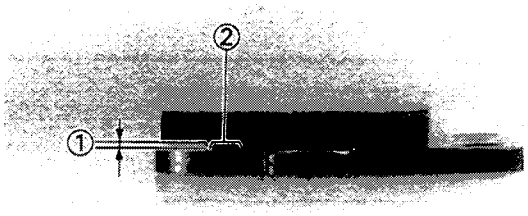

2. Inspect:
   - Brake pad

   Over wear limit ① → Replace as a set.

Brake pad wear limit:
1.0 mm (0.0394 in)

② Wear indicator

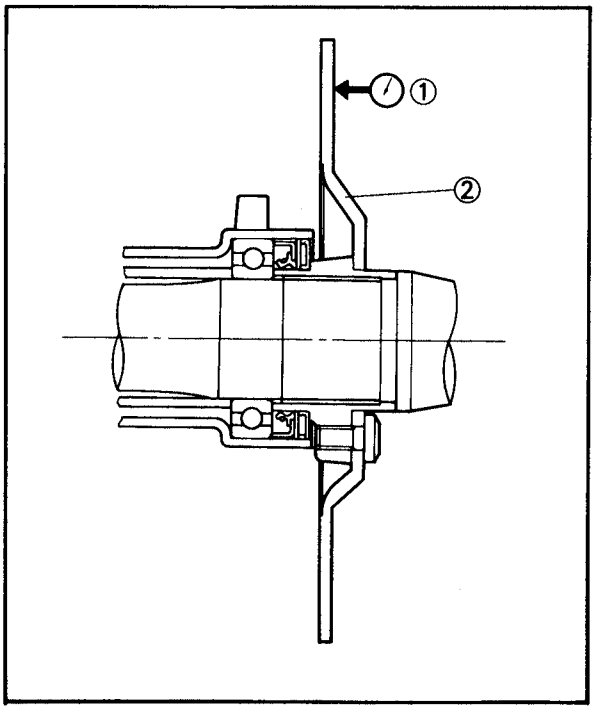

3. Inspect:
   - Brake disc ②

   Wear/Deflection

   Out of specification → Replace.

Maximum deflection:
0.15 mm (0.006 in)
Minimum disc thickness:
3.5 mm (0.13 in)

① Dial gauge

ASSEMBLY

Refer to front brake assembly except for following items.

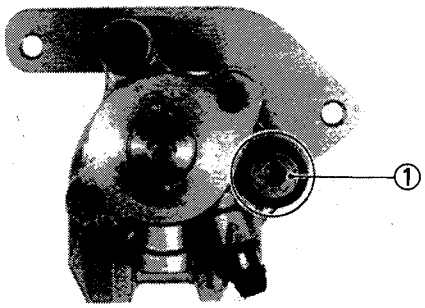

Caliper

1. Tighten:

	Caliper bracket bolt ① **23 Nm (2.3 m•kg, 17 ft•lb)**

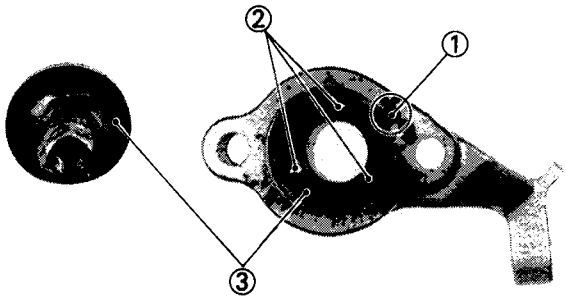

2. Mesh the bearing race tab ① with parking brake case slit.
3. Apply wheel bearing grease to the bearing ball ② and races ③.

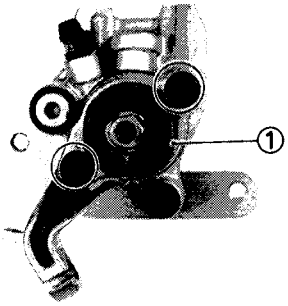

4. Tighten
   - Parking brake case ①

	Parking brake case bolt: **28 Nm (2.8 m•kg, 20 ft•lb)** **Apply LOCTITE**

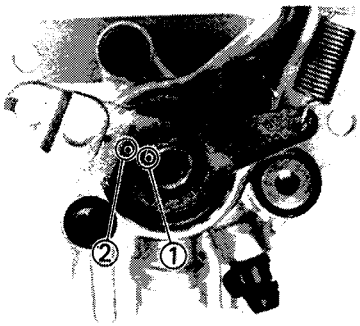

5. Align the adjuster nut mark ① with the parking brake lever mark ②.

6. Tighten:

	Pad retaining bolt: **18 Nm (1.8 m•kg, 13 ft•lb)** **Brake caliper bolt:** **23 Nm (2.3 m•kg, 17 ft•lb)** **Brake union bolt:** **27 Nm (2.7 m•kg, 19 ft•lb)**

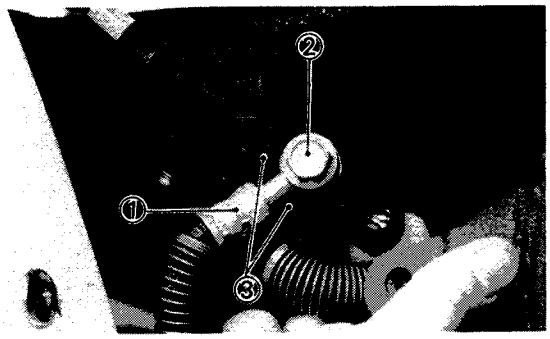

Master Cylinder

1. Assemble:
   - Master cylinder

	Master cylinder bolt: **20 Nm (2.0 m•kg, 14 ft•lb)**

2. Install:
   - Brake hose ①

	Union bolt ②: **27 Nm (2.7 m•kg, 19 ft•lb)**

CAUTION:

Be sure the brake hose should be installed between bosses ③.

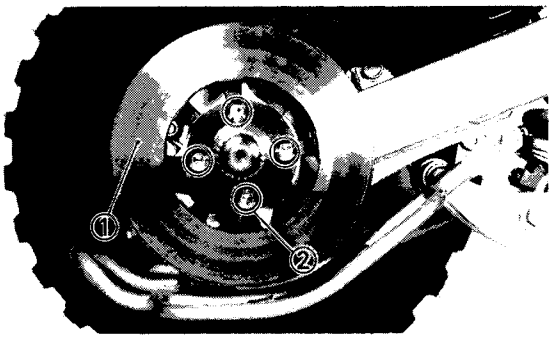

Brake Disc

1. Install:
   - Brake disc ①

	Brake disc bolts ②: **28 Nm (2.8 m•kg, 20 ft•lb)**

AIR BLEEDING

Refer to "Front Brake Air Bleeding".

FRONT SUSPENSION

① Thrust cover
② Bushing
③ Front upper arm
④ Collar
⑤ Front lower arm
⑥ Shock absorber
⑦ Steering knuckle

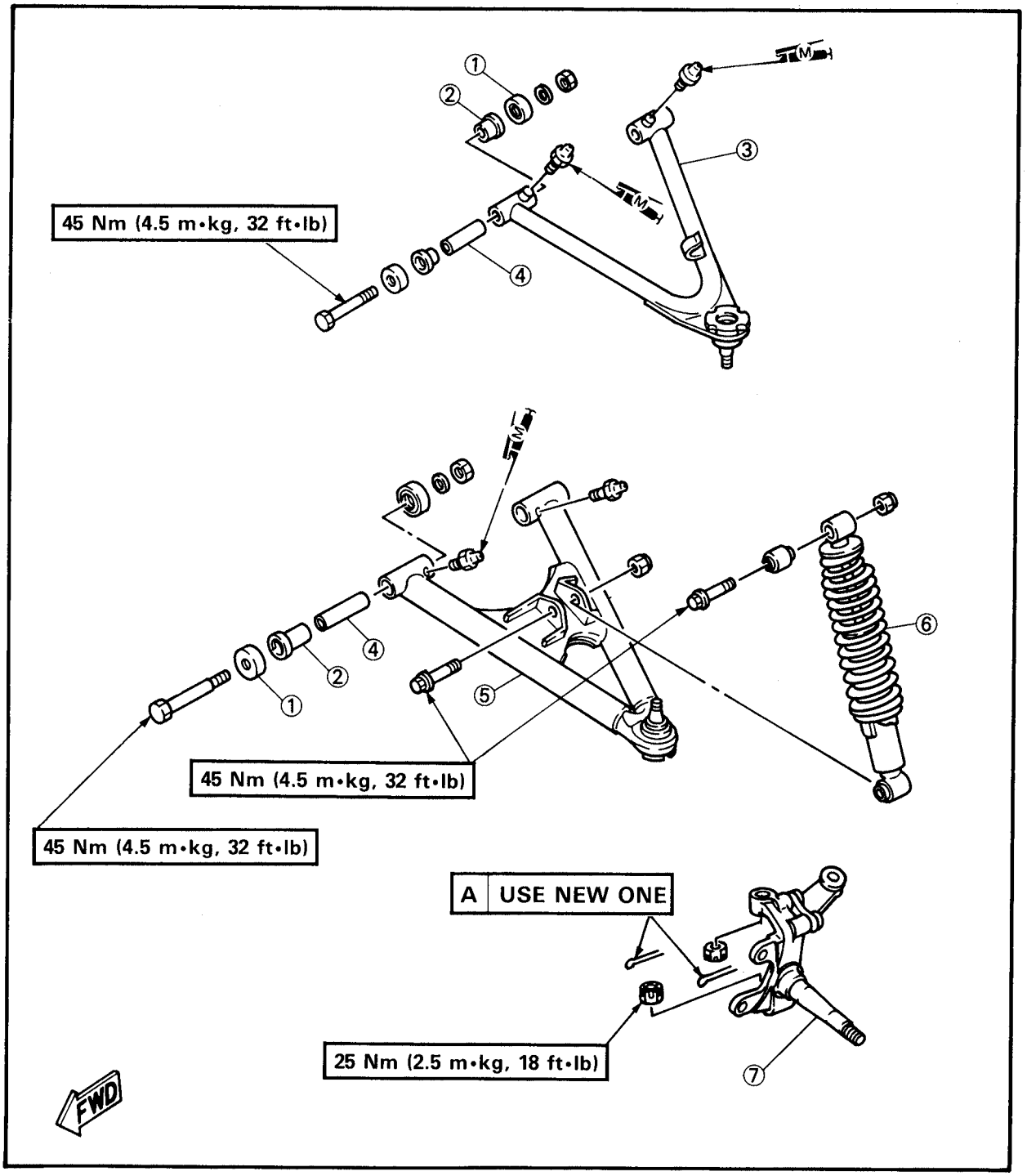

REMOVAL

1. Remove:
   - Front wheel
   - Front brake
   - Wheel hub

   Refer to FRONT WHEEL AND WHEEL HUB.

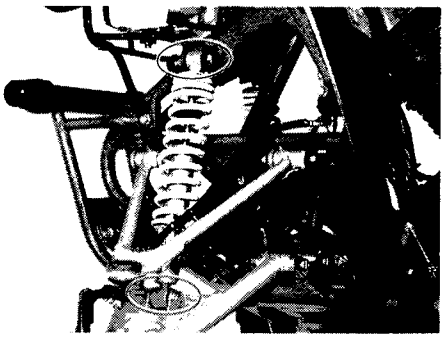

2. Remove:
   - Front shock absorber

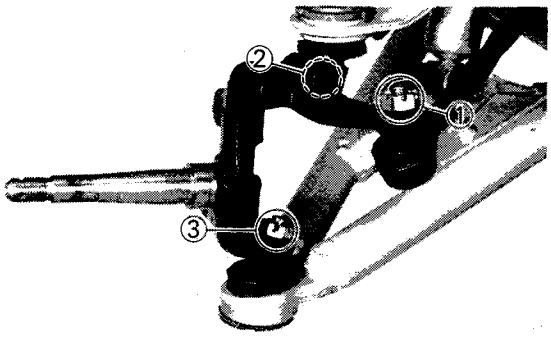

3. Remove:
   - Cotter pins
   - Nut (left-hand-thread ball joint] ①
   - Nut (front uper arm) ②
   - Nut (front lower arm) ③

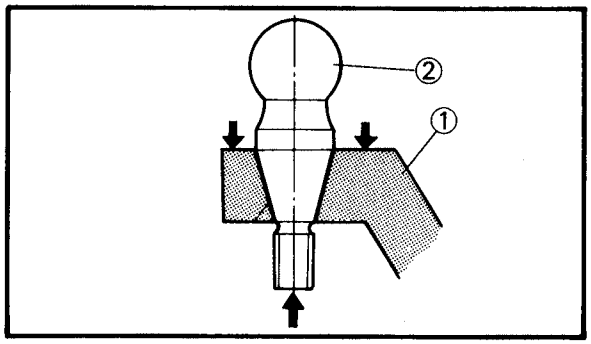

4. Remove:
   - Steering knuckle ①

NOTE:

Use the General puller to separate ball joint ② and steering knuckle.

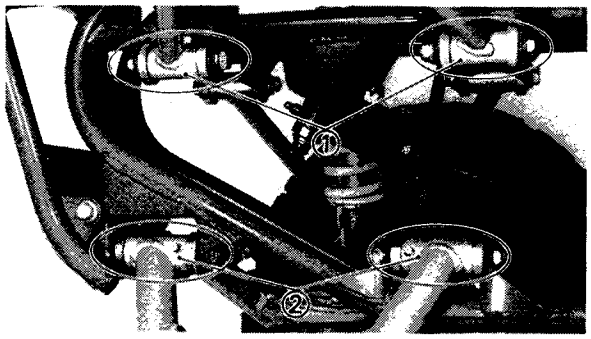

5. Remove:
   - Front upper arms ①
   - Front lower arms ②

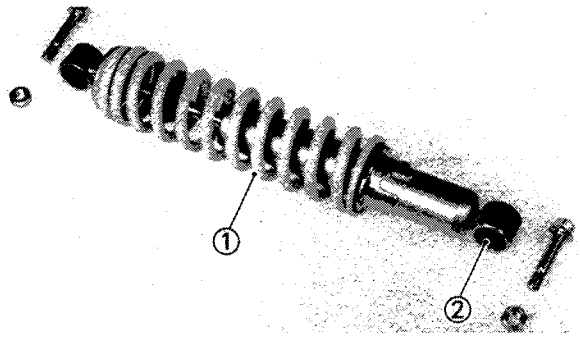

INSPECTION

1. Inspect:
   - Front shock absorber
     Oil leaks/Damage→Replace.
   - Spring ①
   - Bushing ②
     Damage→Replace.

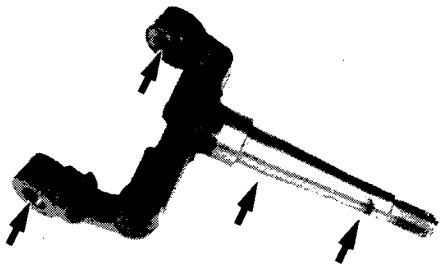

2. Inspect:
   - Steering knuckle
     Damage/Pitting→Replace.

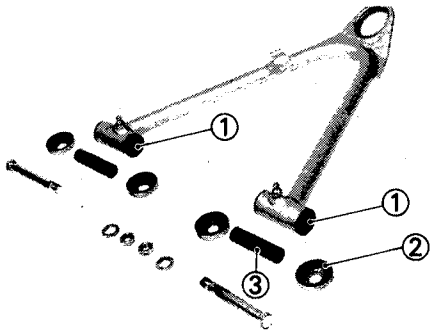

3. Inspect:
   - Front upper arm
   - Bushing ①
     Pitting/Damage→Replace.
   - Thrust cover ②
     Damage→Replace.
   - Collar ③
     Damage→Replace.

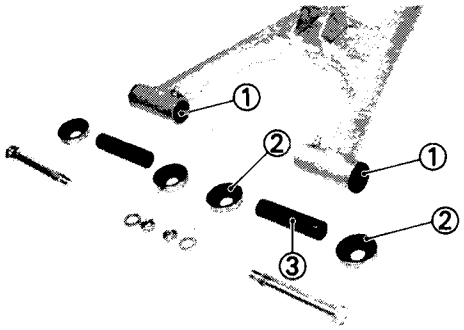

4. Inspect:
   - Front lower arm
   - Bushing ①
     Pitting/Damage→Replace.
   - Thrust cover ②
     Damage→Replace.
   - Collar ③
     Damage→Replace.

INSTALLATION

Reverse removal steps.

1. Grease:

	Ball joint: **Molybdenum grease** **Bushing, Thrust cover:** **Lithium soap base grease**

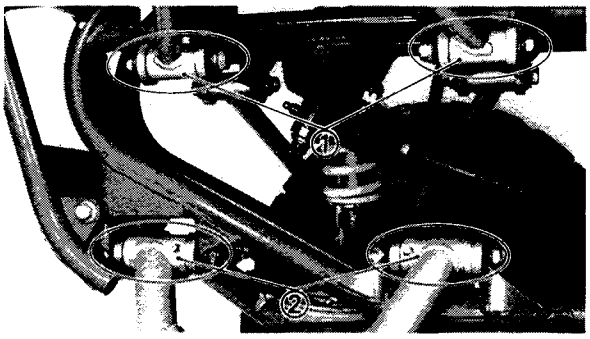

2. Tighten:

	Front arm **(upper and lower) ①, ②:** **45 Nm (4.5 m•kg, 32 ft•lb)**

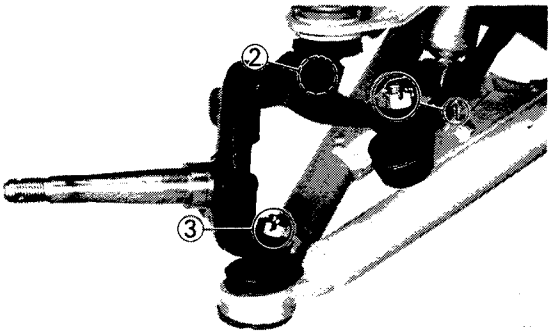

3. Install:
   - Steering knuckle

	Nut **(left-hand-thread ball joint) ①:** **25 Nm (2.5 m•kg, 18 ft•lb)** **Nut (front upper arm) ②:** **25 Nm (2.5 m•kg, 18 ft•lb)** **Nut (front lower arm) ③:** **25 Nm (2.5 m•kg, 18 ft•lb)**

4. Install:
   - Cotter pin (new)

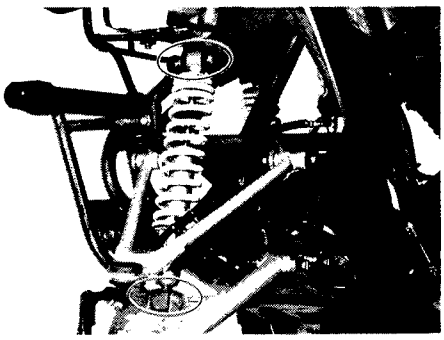

5. Install:
   - Front shock absorber

	Front shock absorber bolt: **45 Nm (4.5 m•kg, 32 ft•lb)**

STEERING SYSTEM

① Lower bearing
② Dust seal
③ Upper bearing
④ Steering shaft
⑤ Right-hand-thread ball joint
⑥ Tie-rod
⑦ Steering knuckle
⑧ Left-hand-thread ball joint
⑨ Oil seal
⑩ Bearing reatiner
⑪ Bearing
⑫ Collar

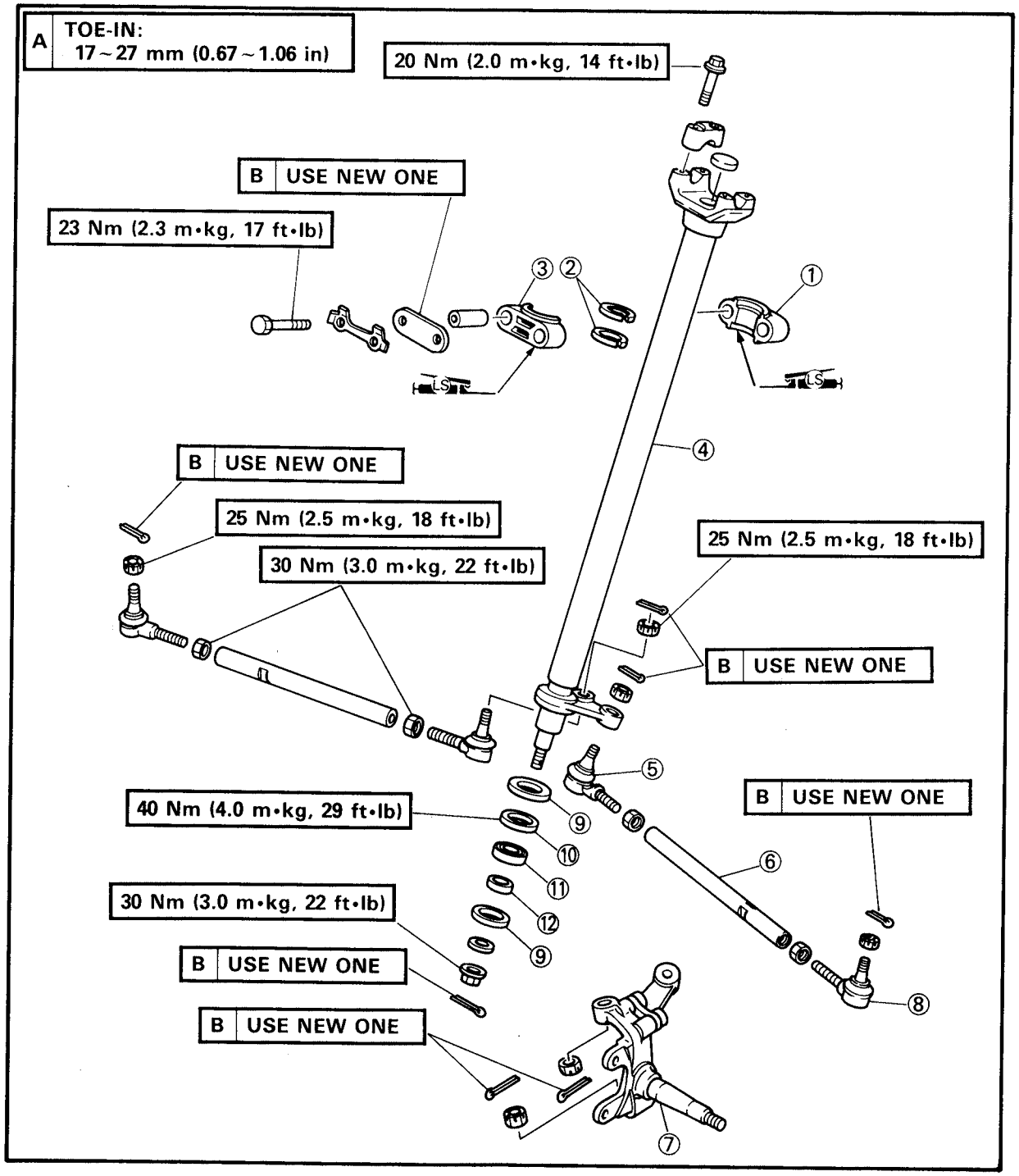

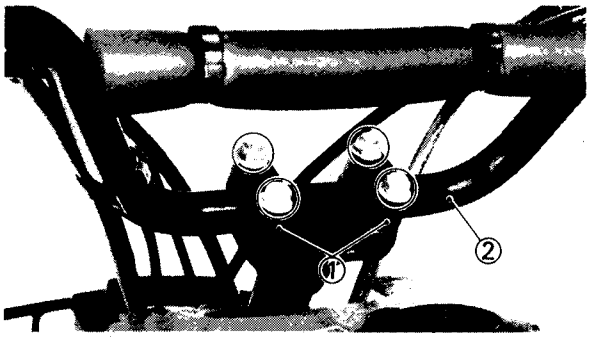

REMOVAL

1. Remove:
   - Headlight unit assembly
   - Front panel
   - Upper handlebar holder ①
   - Handlebar assembly ②

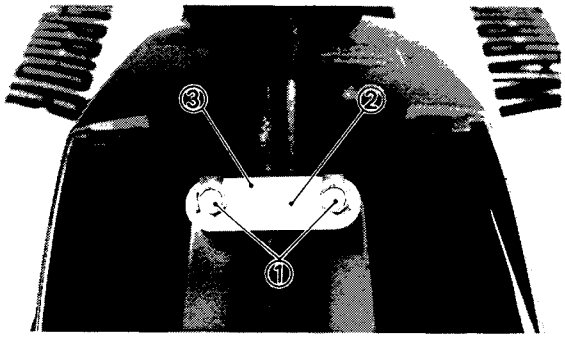

2. Remove:
   - Bolt ①
   - Lock washer ②
   - Bracket ③
   - Upper bearing

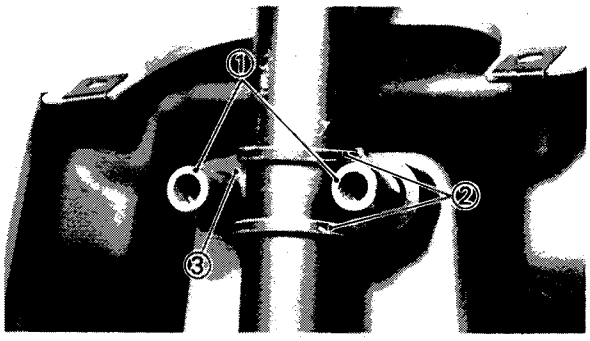

3. Remove:
   - Collars ①
   - Dust seals ②
   - Lower bearing ③

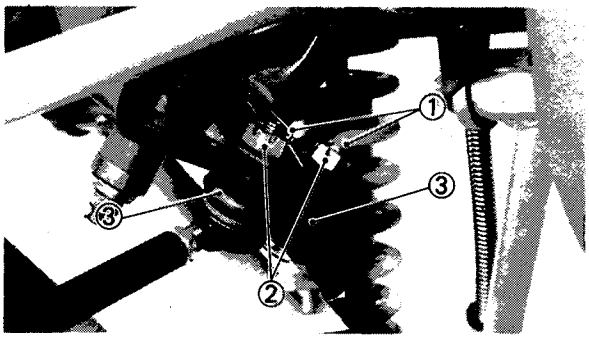

4. Remove:
   - Cotter pins ①
   - Nut (right-hand-thread ball joint) ②
5. Disconnect:
   - Tie-rod assembly ③

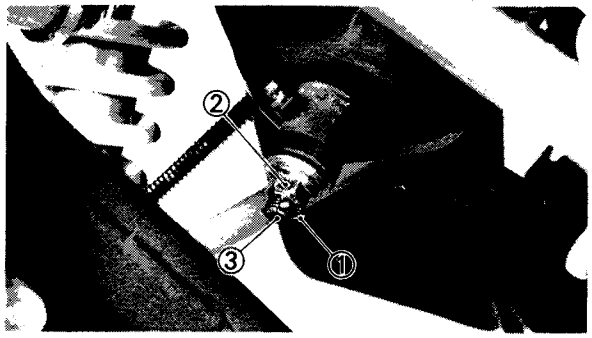

6. Remove
   - Cotter pin ①
   - Nut ②
   - Steering shaft ③

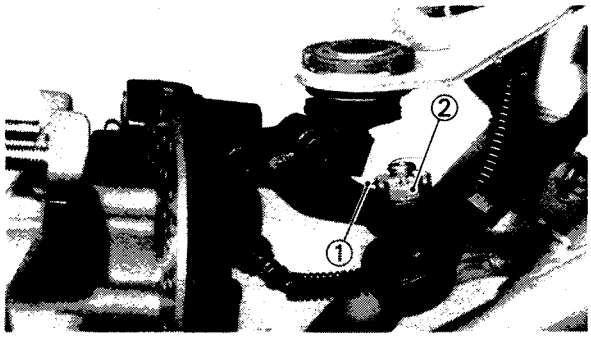

7. Remove:
   - Front wheel
     (Refer to Front wheel and wheel hub)
   - Cotter pin ①
   - Nut (left-hand-thread ball joint) ②

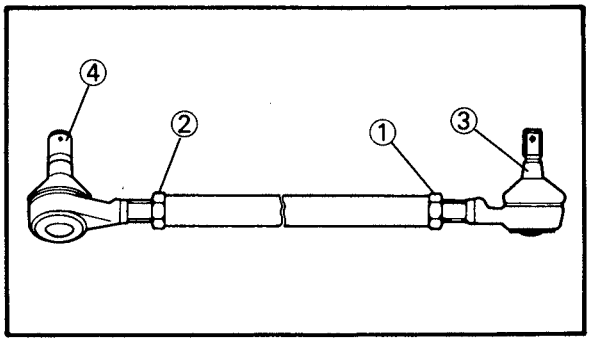

8. Loosen:
   - Left-hand-thread locknut ①
   - Right-hand-thread locknut ②
9. Remove:
   - Left-hand-thread ball joint ③
   - Right-hand-thread ball joint ④

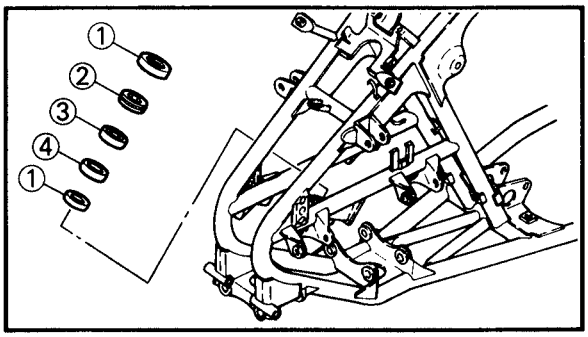

10. Remove:
    - Oil seals ①
    - Bearing retainer ②

	**Damper rod holder:** **YM-01327**

- Bearing ③
- Collar ④

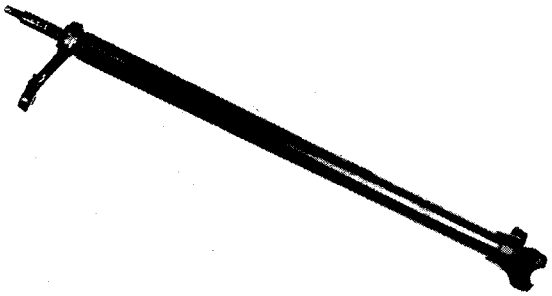

INSPECTION

1. Inspect:
   - Steering shaft
     Bends→Replace.

⚠ WARNING

Do not attempt to straighten a bent shaft; this may dangerously weaken the shaft.

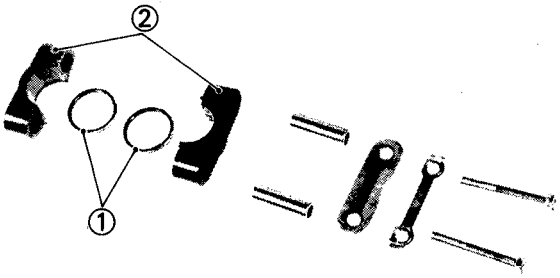

2. Inspect:
   - Dust seals ①
   - Steering shaft bushings ②
     Wear/Damage→Replace.

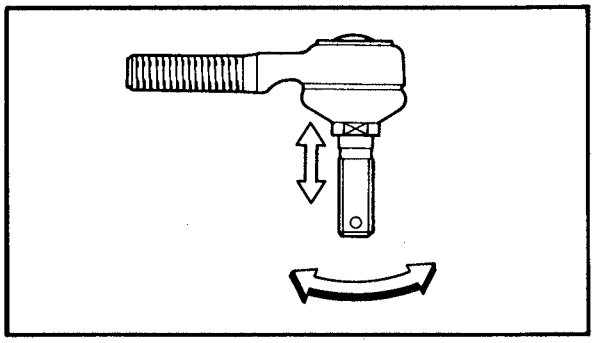

3. Check:
   - Tie-rod ball joint free play and movement
     Exists free play→Replace tie-rod ball joint.
     Turns roughly→Replace tie-rod ball joint.
4. Inspect:
   - Thrust cover
     Wear/Damage→Replace.

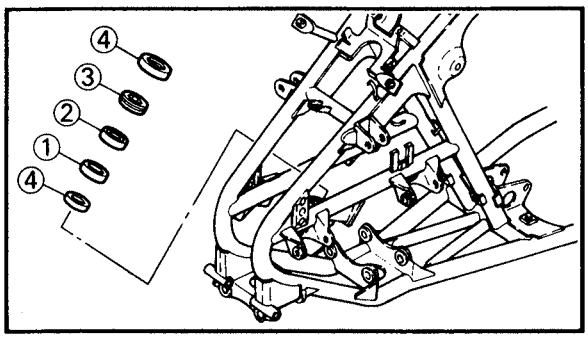

INSTALLATION

When installing the tie-rod, reverse the removal procedure. Note the following points.

1. Install:
   - Collar ①
   - Bearing ②
   - Bearing retainer ③

	**Damper rod holder:** **YM-01327**

   - Oil seals ④
2. Apply:
   - Lithium base grease
     Lightly grease to the steering shaft, bushings.
3. Assembly:
   - Steering tie-rod

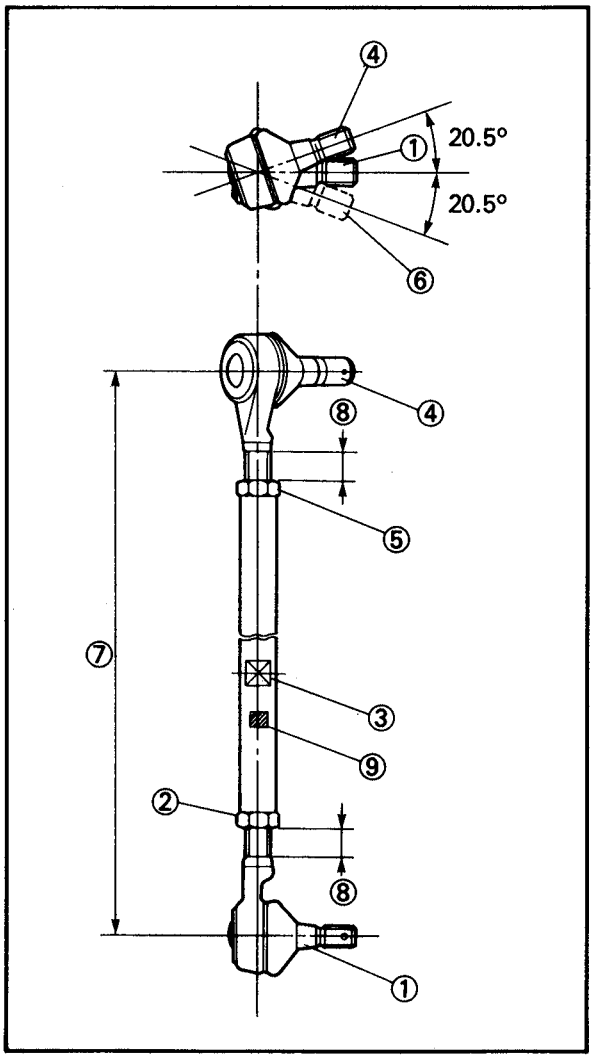

****

Tie-Rod assembly steps:

- Install the left-hand-thread ball joint ① and nut ② into the flattened portions ③ side of the tie-rod.
- Install the right-hand-thread ball joint ④ and nut ⑤ into the opposite side of the flattened portions ③.
- Adjust the tie-rod length ⑦.

	**Tie-rod length:** **325 mm (12.8 in)**

Turn the right-hand-thread ball joint ④ 20.5° Counterclockwise from the left-hand-thread ball joint ① for the left tie-rod assembly and the ball joint ⑥ 20.5° clockwise for right tie-rod aseembly.

NOTE:

The ball joint thread length ⑧ must be the same.

- Tighten:

	Nuts ②, ⑤: **30 Nm (3.0 m•kg, 22 ft•lb)**

- Mark:
  White paint ⑨ on the flattened portions side of the right tie-rod assembly.

****

3. Tighten:

	Tie-rod ball joint nuts: **25 Nm (2.5 m•kg, 18 ft•lb)** **Steering shaft nut:** **30 Nm (3.0 m•kg, 22 ft•lb)** **Steering bearing bolts:** **23 Nm (2.3 m•kg, 17 ft•lb)**

4. Install:
   - Upper handlebar holder

	Upper handlebar holder bolts: **20 Nm (2.0 m•kg, 14 ft•lb)**

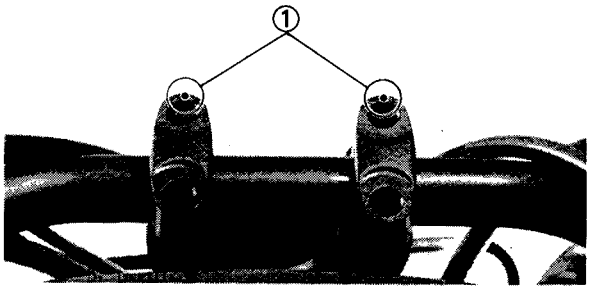

NOTE:

Be sure the upper handlebar holder mark ① face to front.

5. Adjust:
   - Toe-in

REAR SHOCK ABSORBER AND SWINGARM

① Rear shock absorber
② Reservoir tank
③ Swingarm
④ Drive chain guide
⑤ Pivot shaft
⑥ Thrust cover 1/2
⑦ Spacer
⑧ Oil seal
⑨ Bearing
⑩ Collar 1/2
⑪ Drive chain protector
⑫ Connecting rod
⑬ Relay arm
⑭ Rear guard

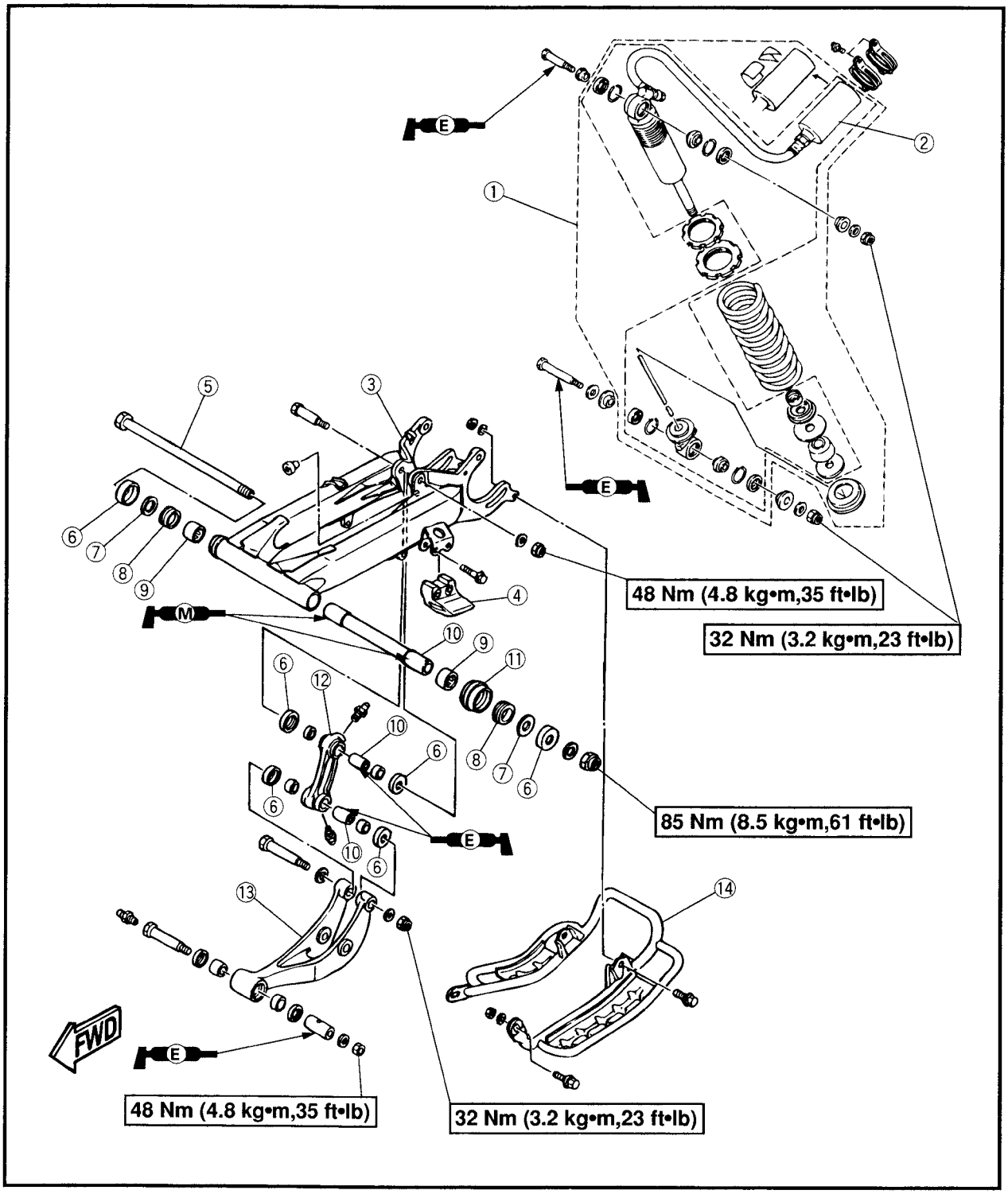

HANDLING THE REAR SHOCK ABSORBER AND GAS CYLINDER

WARNING

This rear shock absorber and gas cylinder contain highly compressed nitrogen gas. Before handling the rear shock absorber or gas cylinder, read and make sure you understand the following information. the manufacturer cannot be held responsible for property damage or personal injury that may result from improper handling of the rear shock absorber and gas cylinder.

- **Do not tamper or attempt to open the rear shock absorber or gas cylinder.**
- **Do not subject the rear shock absorber or gas cylinder to an open flame or any other source of high heart. High heat can cause an explosion due to excessive gas pressure.**
- **Do not deform or damage the rear shock absorber or gas cylinder in any way. If the rear shock absorber, gas cylinder or both are damaged, damping performance will suffer.**

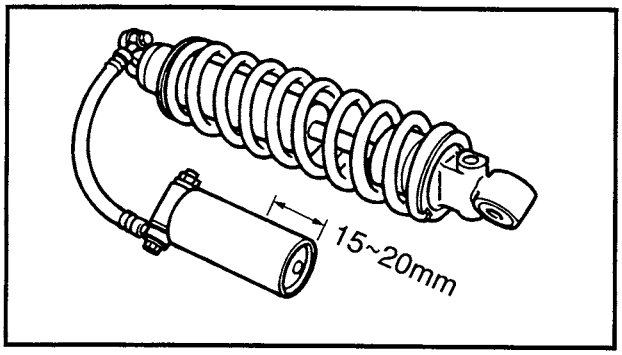

DISPOSING OF A REAR SHOCK ABSORBER AND GAS CYLINDER

Gas pressure must be released before disposing of shock absorber. To do so, drill ① a 2~3 mm (0.08~0.12 in) hole through the gas chamber wall at a point 25~30 mm (1.0~1.2 in) from the bottom end of the gas chamber.

WARNING

Wear eye protection to prevent eye damage from released gas or metal chips.

REMOVING THE REAR SHOCK ABSORBER

1. Remove
   - Reservoir tank
   - Connecting rod - to - swingarm bolt
   - Rear shock absorber upper bolt
   - Rear shock absorber
   - Connecting rod
   - Relay arm

NOTE:

While removing the connecting rod - to - swing arm bolt, hold the swingarm so that it does not drop down.

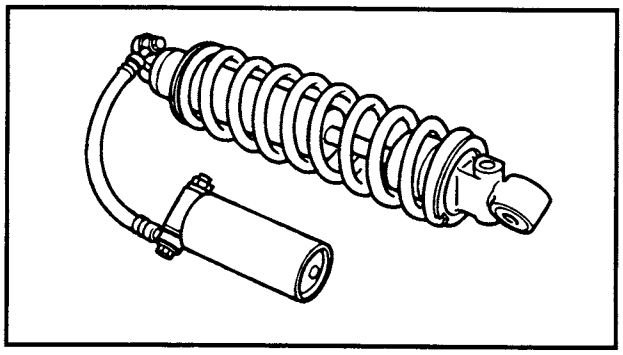

CHECKING THE REAR SHOCK ABSORBER

1. Check:
   - Shock absorber
     Oil leaks → Replace the rear shock absorber assembly.
   - Shock absorber rod
     Bends/damage → Replace the rear shock absorber assembly.
   - Spring
     Fatigue → Replace the rear shock absorber assembly.
     Move the spring up and down.
   - Gas cylinder
     Damage/gas leaks → Replace the rear shock absorber assembly.

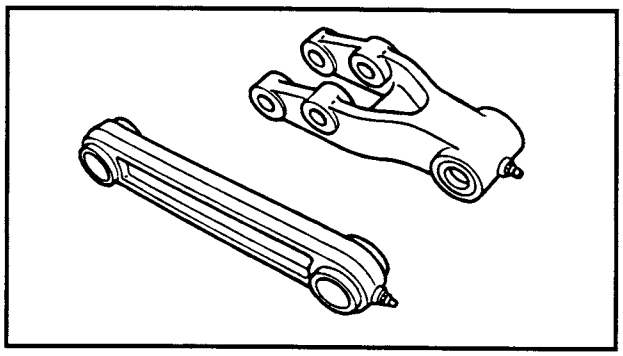

CHECKING THE RELAY ARM AND CONNECTING ARM

1. Check:
   - Relay arm
   - Connecting arm
     Damage/wear → Replace.
   - Bushings
   - Spacers
   - Oil seals
     Damage/pitting/scratches → Replace.

INSTALLING THE REAR SHOCK ABSORBER

1. Install:
   - Connecting arm
   - Relay arm
   - Rear shock absorber

NOTE:

When installing the rear shock absorber, lift up the swingarm.

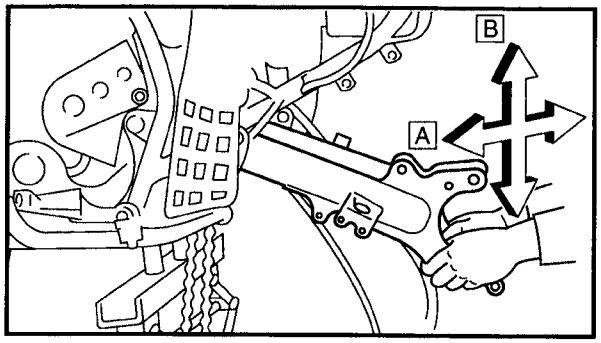

REMOVING THE SWINGARM

NOTE:

Before removing the drive chain and the sprockets, measure the drive chain slack and a ten link section of the drive chain.

1. Check
   - Swingarm free play

****

Checking steps:

- Check the tightening torque of the pivot shaft nut.

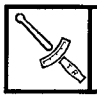	**Pivot shaft nut:** **85 Nm (8.5 m•kg, 61 ft•lb)**

- Check the swingarm side play [A] by moving it from side to side.
  If side play is noticeable, check the collar, spacers, bearings, bushings and frame pivot.
- Check the swingarm vertical movement [B] by moving it up and down.
  If vertical movement is tight or rough, or if there is binding, check the collar, spacers, bearings, bushings and frame pivot.

****

2. Remove:
   - Pivot shaft nut
   - Pivot shaft
   - Swingarm

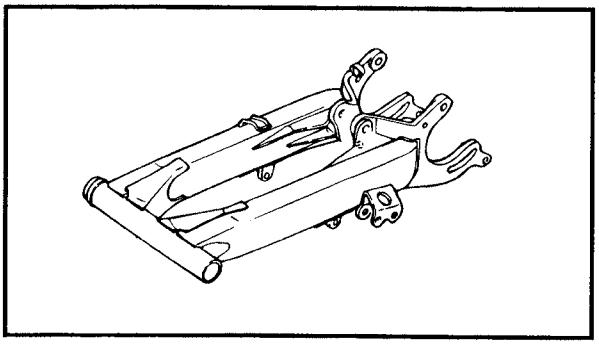

CHECKING THE SWINGARM

1. Check:
   - Swingarm
     Bends/cracks/damage → Replace.

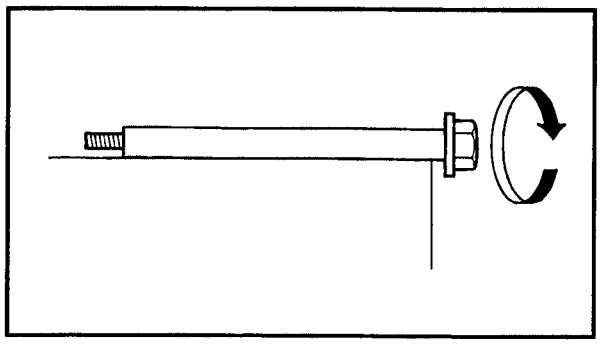

2. Check:
   - Pivot shaft
     Roll the axle on a flat surface.
     Bends → Replace.

WARNING

Do not attempt to straighten a bent pivot shaft.

3. Clean:
   - Pivot shaft
   - Collar
   - Spacers
   - Bearings
   - Thrust cover

Recommended cleaning solvent:
Kerosine

4. Check:
   - Spacers
   - Oil seals
     Damage/wear → Replace.
   - Bearings
   - Collar
     Damage/pitting → Replace.

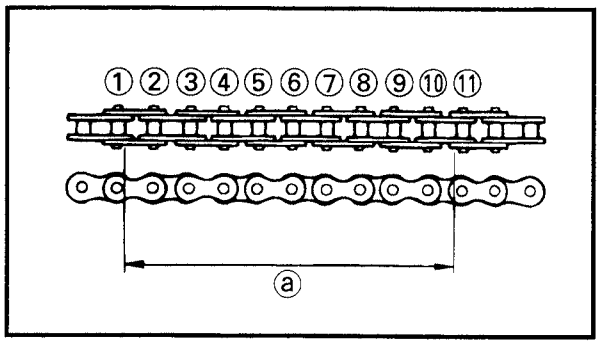

CHECKING THE DRIVE CHAIN

1. Measure:
   - Ten-link section ⓐ of the drive chain
     Out of specification → Replace the drive chain.

Max. ten-link drive chain section:
152.5 mm (6 in)

NOTE:

- While measuring the ten - link section, push down on the drive chain to increase its tension.
- Measure the length between drive chain roller ① and ⑪ as shown.
- Perform this measurement at two or three different places.

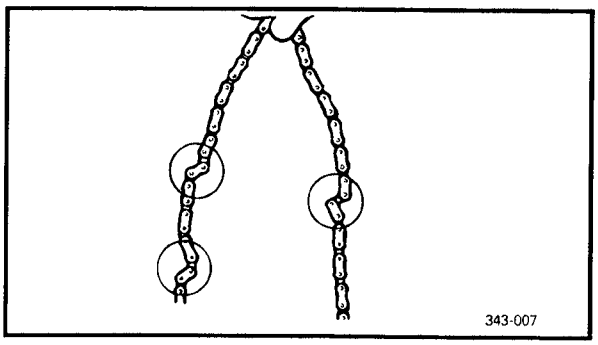

2. Check:
   - Drive chain
     Stiffness → Clean and lubricate or replace.

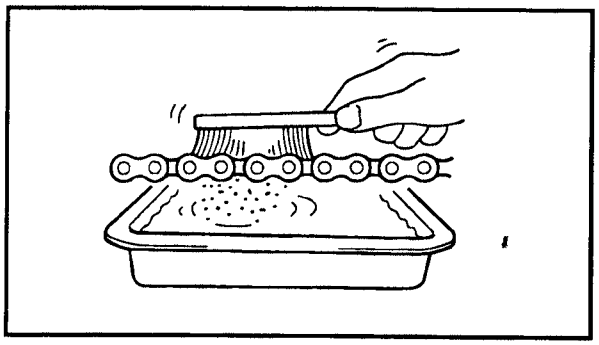

3. Clean:
   - Drive chain

****

- Wipe the drive chain with a clean cloth.
- Put the drive chain in kerosine and remove any remaining dirt.
- Remove the drive chain from the kerosine and completely dry it.

4. Lubricate:
   - Drive chain

Recommended lubricant:
Engine oil or
chain lubricant suitable

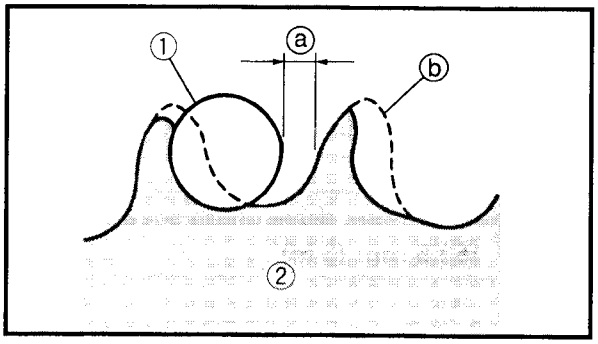

5. Check:
   - Drive sprocket
   - Driven sprocket
     More than 1/4 tooth a wear → Replace the drive chain sprockets as a set.
     Bent teeth → Replace the drive chain sprockets as a set.

ⓑ Correct
① Drive chain roller
② Drive chain sprocket

INSTALLING THE SWINGARM

1. Install:
   - Collar
     (to swing arm)

NOTE:

Apply the lithium soap base grease on the bearing and bushing when installing.

ELECTRICAL

YFM350XA CIRCUIT DIAGRAM

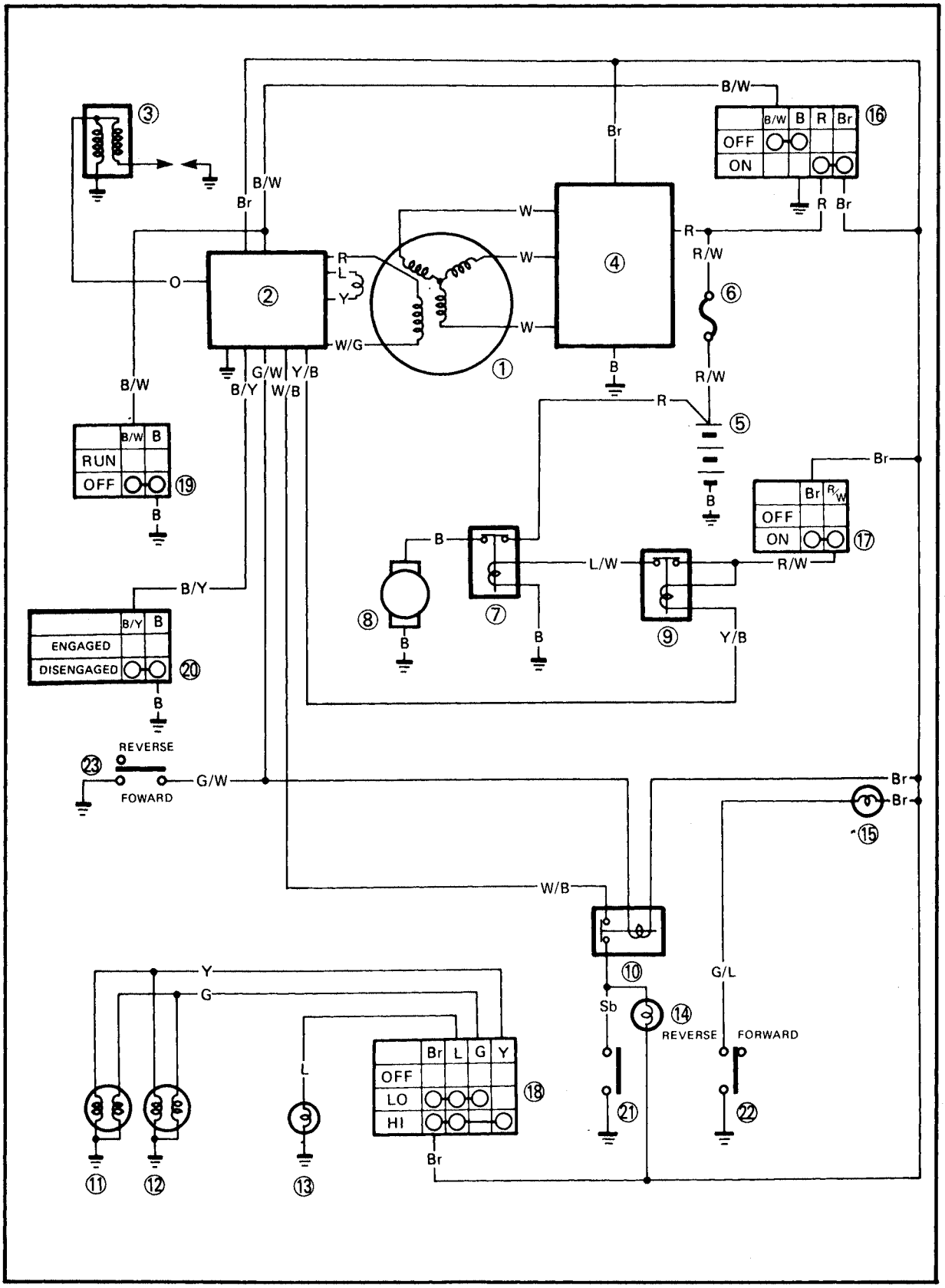

YFM350XA CIRCUIT DIAGRAM

① CDI Magneto
② CDI unit
③ Ignition coil
④ Rectifier/Regulator
⑤ Battery
⑥ Fuse
⑦ Starter relay
⑧ Starter motor
⑨ Starting circuit cut-off relay
⑩ Neutral relay
⑪ Headlight (Left)
⑫ Headlight (Right)
⑬ Taillight
⑭ "NEUTRAL" indicator light
⑮ "REVERSE" indicator light
⑯ Main switch
⑰ "START" switch
⑱ "LIGHTS" (Dimmer) switch
⑲ "ENGINE STOP" switch
⑳ Clutch switch
㉑ Neutral switch
㉒ Reverse switch
㉓ Lever switch

COLOR CODE

B . . . . . Black
Br . . . . . Brown
G . . . . . Green
L . . . . . Blue
O . . . . . Orange
R . . . . . Red
Sb . . . . . Skyblue
W . . . . . White
Y . . . . . Yellow
B/W . . . . . Black/White
B/Y . . . . . Black/Yellow
G/L . . . . . Green/Blue
G/W . . . . . Green/White
L/W . . . . . Blue/White
R/W . . . . . Red/White
W/B . . . . . White/Black
W/G . . . . . White/Green
Y/B . . . . . Yellow/Black

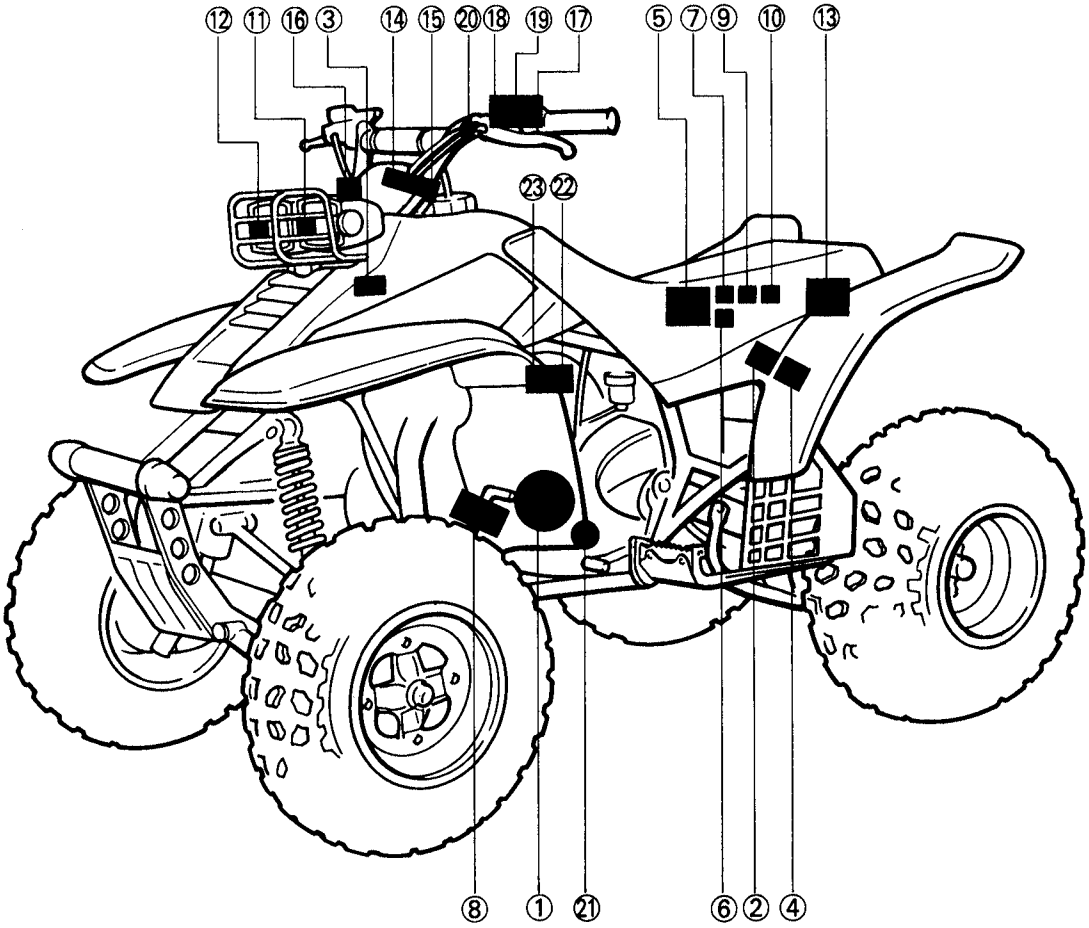

ELECTRICAL COMPONENTS

① Wireharness
② Neutral switch lead
③ Starting circuit cut-off relay
④ Neutral relay
⑤ Starter relay
⑥ Fuse
⑦ Battery
⑧ Rectifier/Regulator
⑨ Neutral switch
⑩ Reverse switch
⑪ CDI unit
⑫ Ignition coil
⑬ Main switch
⑭ "NEUTRAL" indicator light
⑮ "REVERSE" indicator light

SPECIFICATIONS	RESISTANCE
IGNITION COIL:	
PRIMARY	0.72 ~ 0.98Ω
SECONDARY	5.06 ~ 6.84kΩ
PICK-UP COIL	180 ~ 220Ω
SOURCE COIL	270 ~ 330Ω
CHARGING COIL	0.70 ~ 0.86Ω

A	BATTERY:
B	CAPACITY: 12V, 12AH
C	SPECIFIC GRAVITY: 1.280

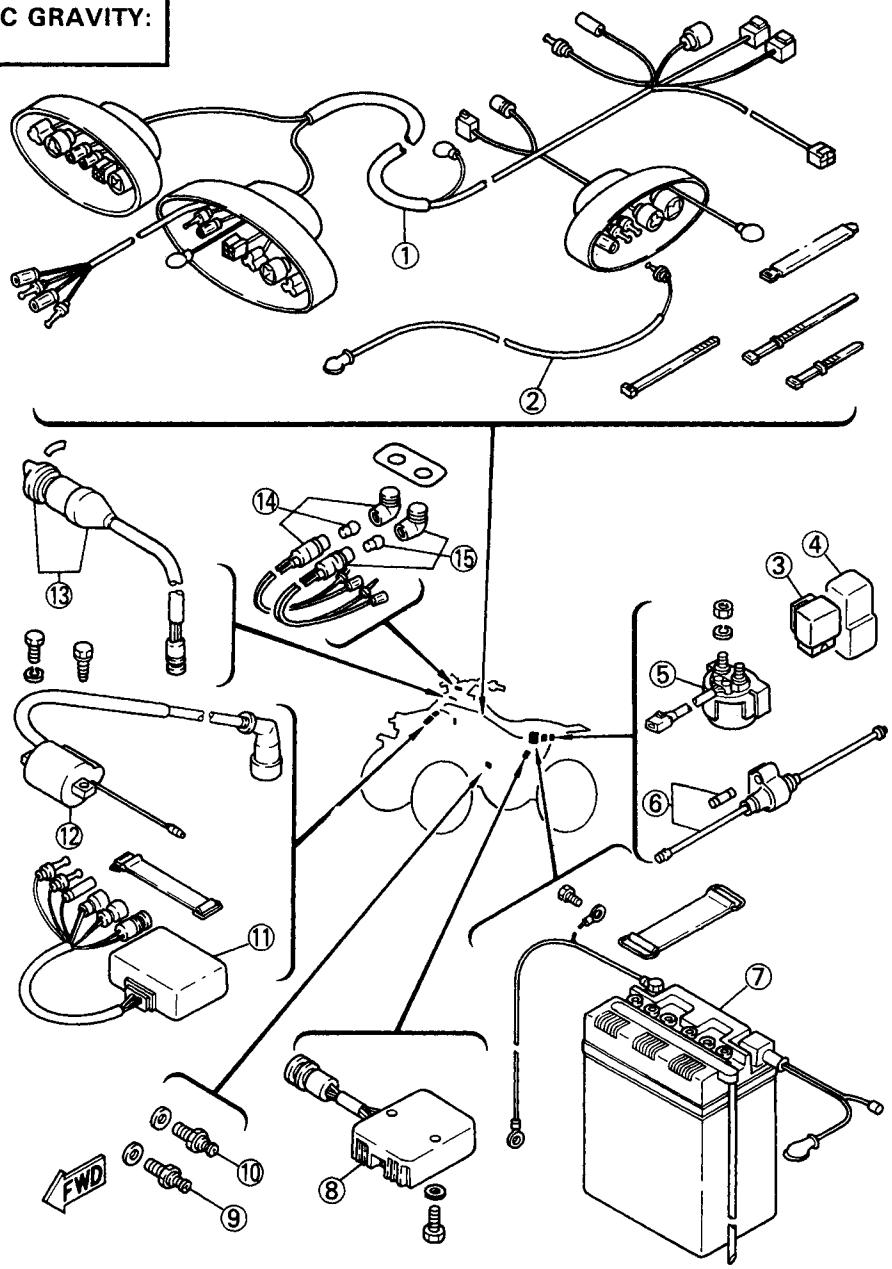

CHECKING OF SWITCHES

Check the switches for the continuity between the terminals to determine correct connection.

Read the following for switch inspection.

SWITCH CONNECTION AS SHOWN IN MANUAL

The manual contains a connection chart as shown left showing the terminal connections of the switches (e.g., main switch, handlebar switch, brake switch, lighting switch, etc.)

The extreme left column indicates the switch positions and the top line indicates the colors of leads connected with the terminals in the switch component.

"○—○" indicates the terminals between which there is a continuity of electricity; i.e., a closed circuit at the respective switch positions.

	B	B/W	R	Br	L/W	L/R
ON			○	○	○	○
OFF	○	○				
LOCK	○	○				
P	○	○	○			○

In this chart:
"R and Br" and "L/W and L/R" are continuous with the "ON" switch position.

"B and B/W" is continuous with the "OFF" switch position.

"B and B/W" is continuous with the "LOCK" switch position.

"B and B/W" and "R and L/R" are continuous with the "P" switch position.

CHECKING SWITCH FOR TERMINAL CONNECTION

Before checking the switch, refer to the connection chart as shown above and check for the correct terminal connection (closed circuit) by the color combination.

To explain how to check the switch, the main switch is taken for example in the following.

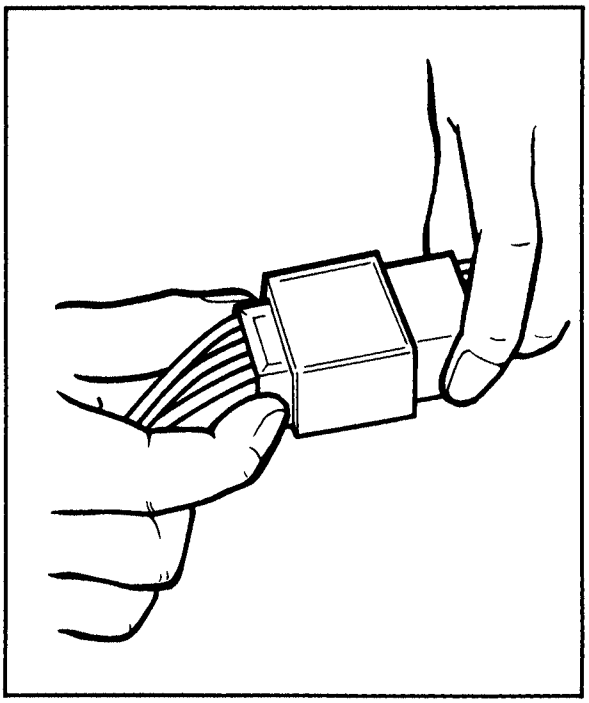

1. Disconnect the main switch coupler from the wireharness.

CAUTION:

Never disconnect the main switch coupler by pulling the leads. Otherwise, leads may be pulled off the terminals inside the coupler.

2. Inspect whether any lead is off the terminal inside the coupler. If it is, repair it.

NOTE:

If the coupler is clogged with mud or dust, blow it off by compressed air.

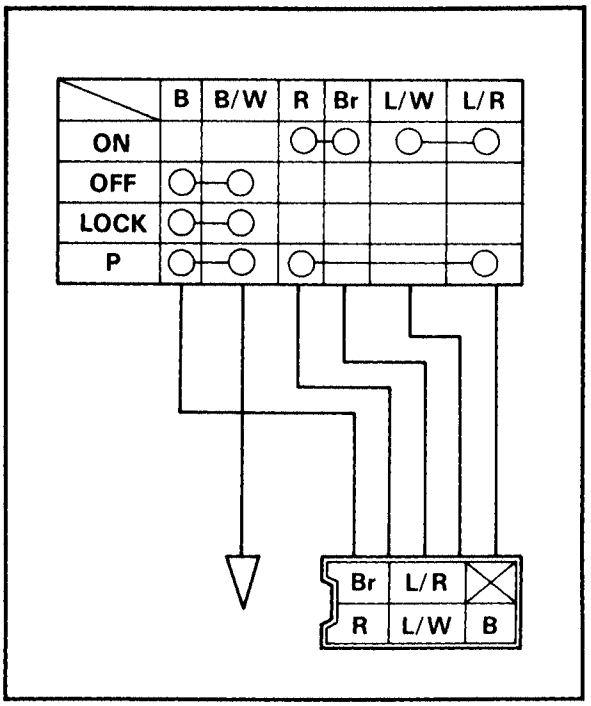

3. Use the connection chart to check the color combination for continuity (a closed circuit). In this example, the continuity is as follows.

   "R and Br" and "L/W and L/R" are continuous with the "ON" switch position.

   "B and B/W" is continuous with the "OFF" switch position.

   "B and B/W" is continuous with the "LOCK" switch position.

   "B and B/W" and "R and L/R" are continuous with the "P" switch position.

   Please note that there is no continuity (an open circuit) at all for the color combinations other than the above.

4. Check the switch component for the continuity between "R and Br".

****

Checking steps:

- Turn the switch key to the "ON", "OFF", "LOCK", and "P" several times.
- Set the pocket tester selector to the "Ω × 1".
- Connect the tester (+) lead to the "R" lead terminal in the coupler and the (−) lead to the "Br" lead terminal.

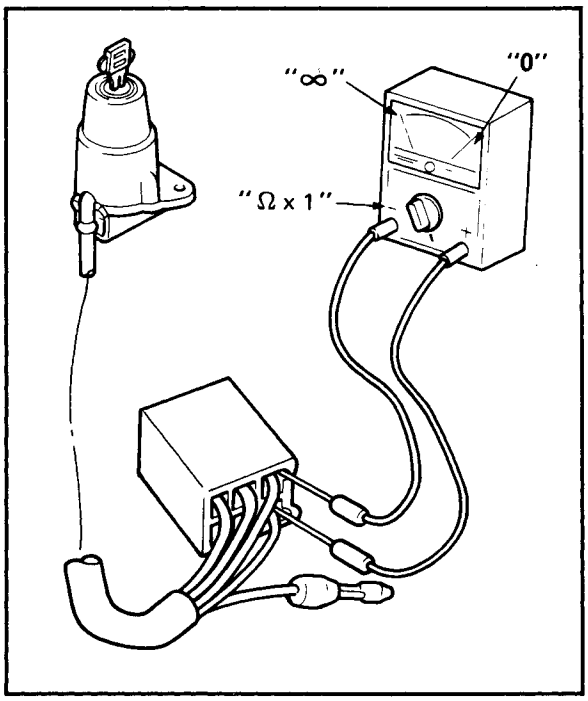

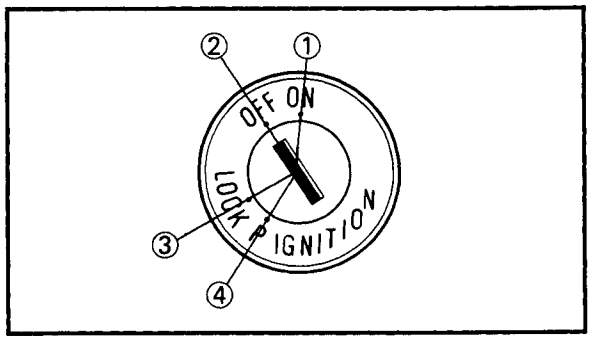

NOTE:

Use thin probes for checking the continuity. Otherwise, the probes may contact other terminals inside the coupler.

- Check the continuity between "R" and "Br" at the respective switch positions of "ON" ①, "OFF" ②, "LOCK" ③, and "P" ④. There must be continuity (the tester indicating "0") at the "ON" switch position, and there must be no continuity (the tester indicating "∞") at "OFF", "LOCK", or "P". There is something wrong between "R" and "Br" if there is no continuity at the "ON" position or if there is some continuity either at the "OFF" or "LOCK" or "P".

NOTE:

Check the switch for continuity several times.

****

5. Next go on to checking of the continuity between "B and B/W", "L/W and L/R", and "R and L/R" at the respective switch positions, as in the same manner mentioned above.

6. If there is something wrong with any one of the combinations, replace the switch component.

CHECKING OF BULBS (FOR HEADLIGHT, TAIL/BRAKE LIGHT, FLASHER LIGHT, METER LIGHT, ETC.)

Check the bulb terminal continuity for the condition of the bulb.

KINDS OF BULBS

The bulbs used in the motorcycle are classified as shown left by the shape of the bulb socket.

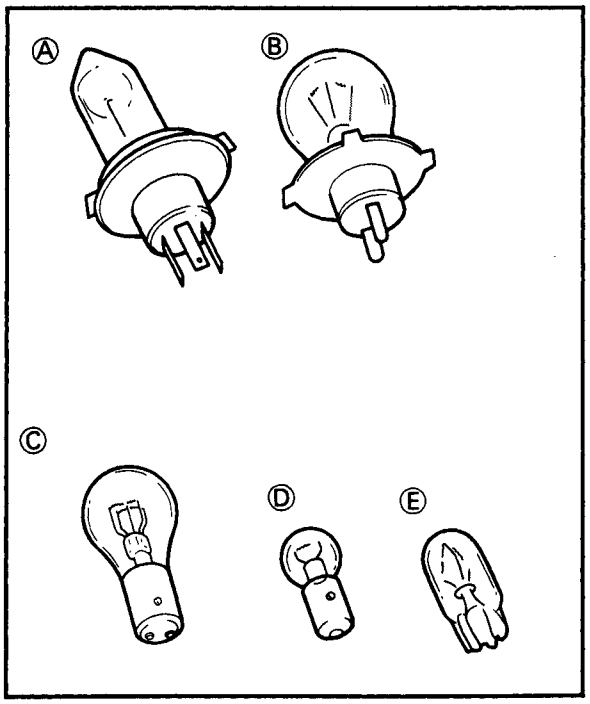

Ⓐ and Ⓑ are mainly used for the headlight.

Ⓒ is mainly used for the flasher light and tail/brake light.

Ⓓ and Ⓔ are mainly used for the meter light and other indicator lights.

CHECKING BULB CONDITION

1. Remove the bulb.

NOTE:

- Bulbs of the Ⓐ and Ⓑ type uses a bulb holder. Remove the bulb holder before removing the bulb itself. Most of the bulb holders for this type can be removed by turning them counterclockwise.
- Most of the bulbs of Ⓒ and Ⓓ type can be removed from the bulb sockets by pushing and turning them counterclockwise.
- Bulbs of the Ⓔ type can be removed from the bulb sockets by simply pulling them out.

CAUTION:

Be sure to hold the socket firmly when removing the bulb. Never pull the lead. Otherwise, the lead may be pulled off the terminal in the coupler.

⚠ WARNING

Keep flammable products or your hands away from the headlight bulb while it is on. It will be hot. Do not touch the bulb until it cools down.

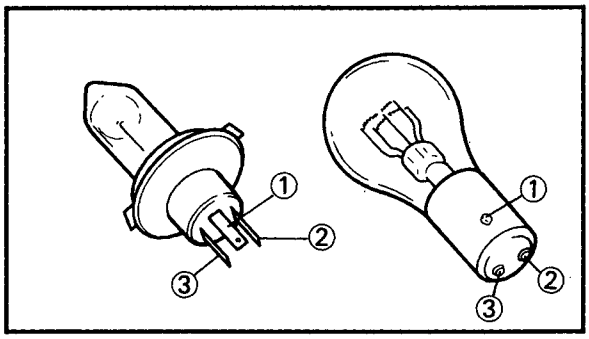

2. Check the bulb terminals for continuity.

****

Checking steps:

- Set the pocket tester selector to the "Ω × 1".
- Connect the tester leads to the respective bulb terminals. Take for example a 3-terminal bulb as shown left. First check the continuity between the ① and ② terminals by connecting the tester (+) lead to the ① terminal and the tester (−) lead to the ② terminal. Then check the continuity between the ① and ③ terminals by connecting the tester (+) lead still to the ① terminal and the tester (−) lead to the ③ terminal. If the tester shows "∞" in either case, replace the bulb.

****

3. Check the bulb socket by installing a proven bulb to it. As in the checking of bulbs, connect the pocket tester leads to the respective leads of the socket and check for continuity in the same manner as mentioned above.

ELECTRIC STARTING SYSTEM

CIRCUIT DIAGRAM

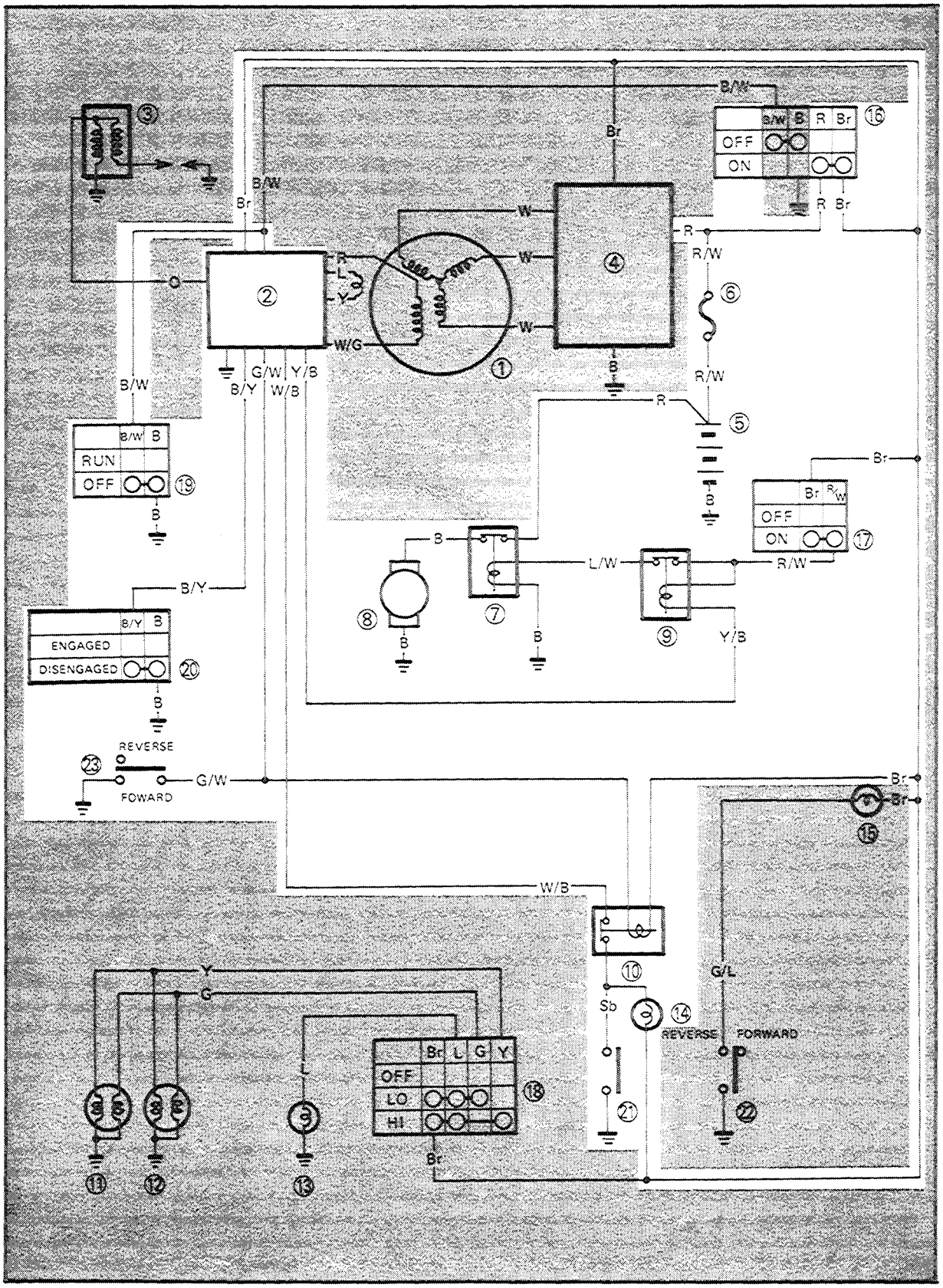

② CDI unit
⑤ Battery
⑥ Fuse
⑦ Starter relay
⑧ Starter motor
⑨ Starting circuit cut-off relay
⑩ Neutral relay
⑭ "NEUTRAL" indicator light
⑯ Main switch
⑰ "START" switch
⑲ "ENGINE STOP" switch
⑳ Clutch switch
㉑ Neutral switch
㉓ Lever switch

COLOR CODE

B.....Black
Br.....Brown
G.....Green
Gy.....Gray
L.....Blue
O.....Orange
R.....Red
Sb.....Skyblue
W.....White
Y.....Yellow
B/W.....Black/White
B/Y.....Black/Yellow
G/L.....Green/Blue
G/Y.....Green/Yellow
L/W.....Blue/White
R/W.....Red/White
W/B.....White/Black
Y/B.....Yellow/Black

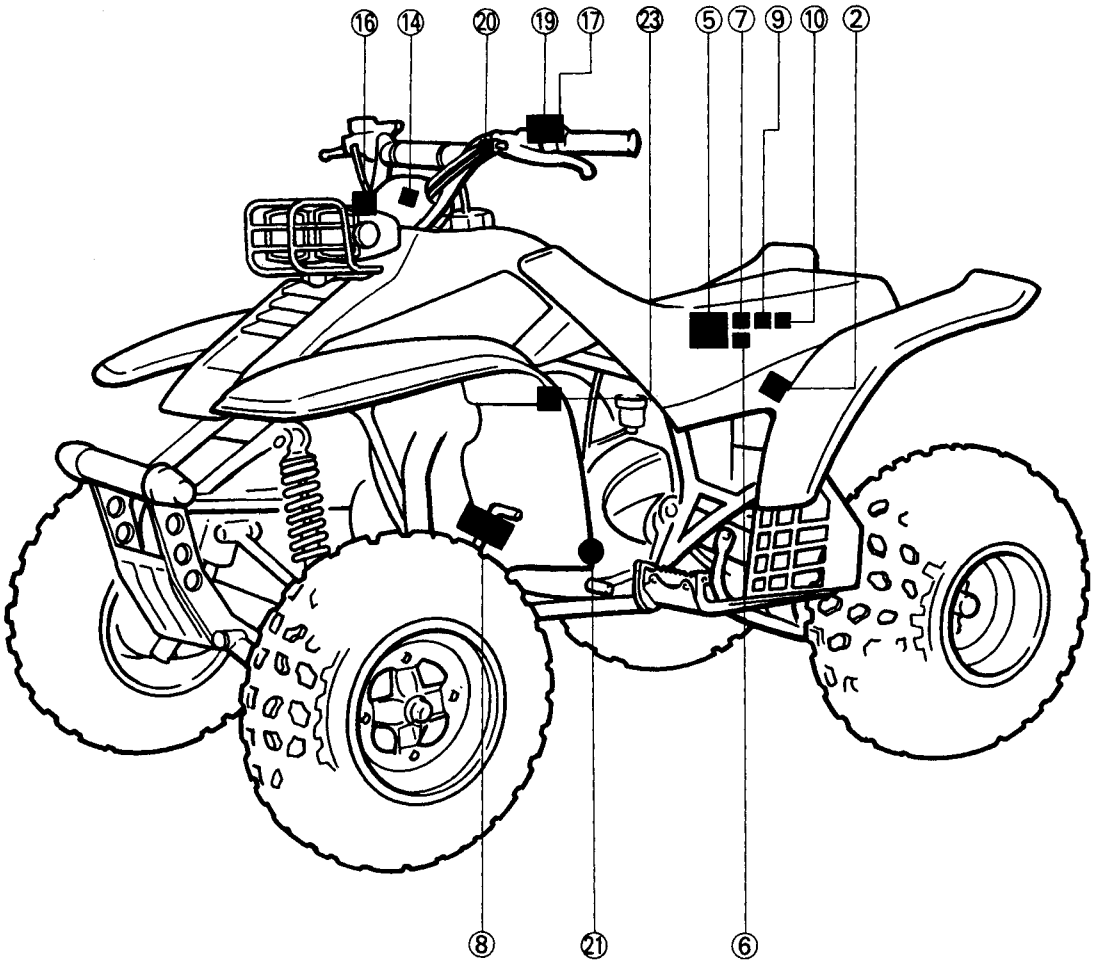

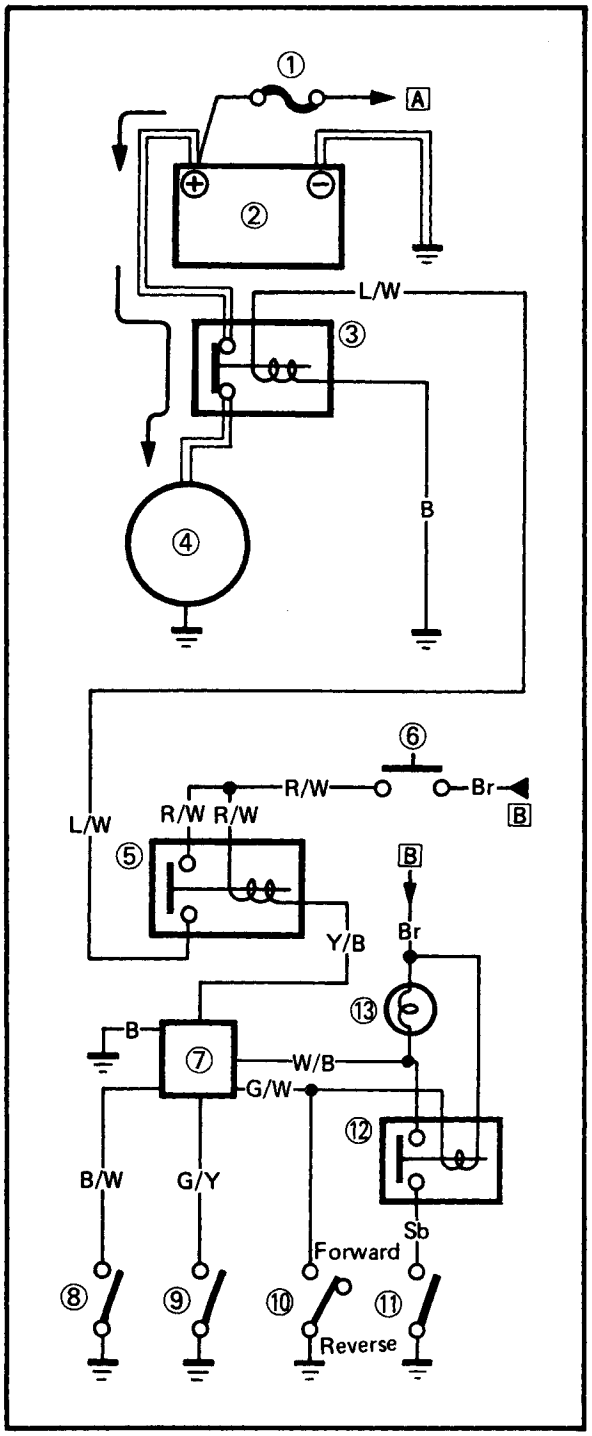

STARTING CIRCUIT OPERATION

The starting circuit on this model consist of the starter motor, starter relay, neutral switch, starting circuit cut-off relay, clutch switch, neutral relay and lever switch. If the main switch is on and the "ENGINE STOP" switch is RUN, the starter motor can be operated only if:

- The transmission is in neutral (the neutral switch is on) and the select lever is in forward (the lever switch is closed).

  or

- Pull in the clutch lever (the clutch switch is closed).

NOTE:

The starter motor can be operated irrespective of the engine stop switch ("OFF" or "RUN"); however, the engine can be started if the engine stop switch is at "RUN".

The starting circuit cut-off relay prevents the starter from operating when the transmission is in gear or select lever is in reverse, and clutch is engaged. In this instance, the starting circuit cut-off relay is off so that current cannot reach the starter motor.

① Fuse
② Battery
③ Starter relay
④ Starter motor
⑤ Starting circuit cut-off relay
⑥ "START" switch
⑦ CDI unit
⑧ "ENGINE STOP" switch
⑨ Clutch switch
⑩ Lever switch
⑪ Neutral switch
⑫ Neutral relay
⑬ "NEUTRAL" indicator light
A TO MAIN SWITCH
B FROM MAIN SWITCH

TROUBLESHOOTING

STARTER MOTOR DOES NOT OPERATE.

Procedure

Check:

1. Battery
2. Fuse
3. Main switch conduct
4. "START" switch conduct
5. "ENGINE STOP" switch conduct
6. Clutch switch conduct
7. Starter motor
8. Starter relay
9. Starting circuit cut-off relay
10. Neutral relay
11. Neutral switch conduct
12. Lever switch conduct
13. Wiring connection

NOTE:

- Remove the following parts before troubleshooting.

1) Seat
2) Front panel
3) Front fender

- Use the following special tools in this troubleshooting.

	**Pocket Tester:** **YU-03112**

CAUTION:

To avoid damaging the CDI unit, do not test it by applying the battery voltage to it.

1. Battery

- Check the battery condition. Refer to "CHAPTER 2. BATTERY INSPECTION" section.

Specific Gravity:
1.280 at 20°C (68°F)

INCORRECT → Refill battery fluid. Clean battery terminals. Recharge or replace battery.

CORRECT ↓

2. Fuse

- Connect the Pocket Tester (Ω × 1) to the fuse.
- Check the fuse for continuity.

NOCONTINUITY → Replace fuse.

CONTINUITY ↓

*

*

3. Main switch conduct

- Disconnect the main switch coupler (Red, Brown, Black/White and Black) from the wireharness.
- Connect the Pocket Tester (Ω × 1) to the main switch coupler (Black/White ①, Black ②, Red ③ and Brown ④).

First Check [A] :
Tester (+) Lead→Black/White ① Lead
Tester (−) Lead→Black ② Lead
Second Check [B] :
Tester (+) Lead→Red ③ Lead
Tester (−) Lead→Brown ④ Lead

A

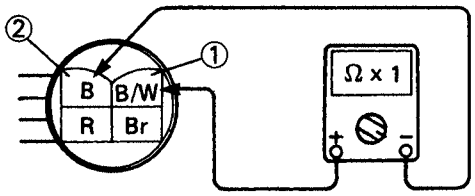

B

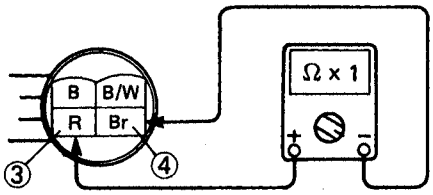

- Turn the main switch to ON and OFF.
- Check the main switch for continuity.

Switch Position	Good Condition	Bad Condition		
First Check (Black/White—Black) [A] :				
ON	×	○	×	○
OFF	○	×	×	○

Switch Position	Good Condition	Bad Condition		
Second Check (Red—Brown) [B] :				
ON	○	×	×	○
OFF	×	○	×	○

○: Continuity ×: Nocontinuity

- Connect the main switch coupler.

INCORRECT → Replace main switch.

CORRECT

4. "START" switch conduct

- Disconnect the "START" switch couplers (Green, Brown, Yellow and Blue) and (Black, Black/White and Red/White) from the wireharness.
- Connect the Pocket Tester (Ω × 1) to the "START" switch coupler (Brown ① and Red/White ②).

Tester (+) Lead→Brown ① Lead
Tester (−) Lead→Red/White ② Lead

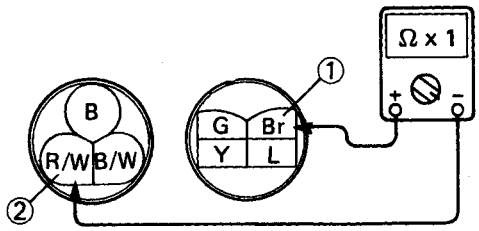

- Push the "START" switch and release it.
- Check the "START" switch for continuity.

Switch Position	Good Condition	Bad Condition		
Push (ON)	○	×	×	○
Release (OFF)	×	○	×	○

○: Continuity ×: Nocontinuity

- Connect the "START" switch coupler.

INCORRECT → Replace "START" switch.

CORRECT ↓

5. "ENGINE STOP" switch conduct

- Disconnect the "ENGINE STOP" switch coupler (Black, Black/White and Red/White) from the wireharness.
- Connect the Pocket Tester (Ω × 1) to the "ENGINE STOP" switch coupler (Black/White ① and Black ②).

Tester (+) Lead→Black/White ① Lead
Tester (−) Lead→Black ② Lead

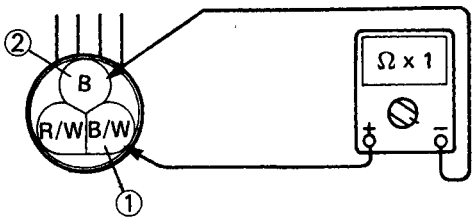

- Turn the "ENGINE STOP" switch to RUN and OFF.
- Check the "ENGINE STOP" switch for continuity.

Switch Position	Good Condition	Bad Condition		
RUN	×	○	×	○
OFF	○	×	×	○

○: Continuity ×: Nocontinuity

- Connect the "ENGINE STOP" switch coupler.

INCORRECT → Replace "ENGINE STOP" switch.

CORRECT ↓

6. Clutch switch conduct

- Disconnect the clutch switch leads (Black/Yellow and Black) from the wireharness.
- Connect the Pocket Tester (Ω×1) to the clutch switch leads (Black/Yellow ① and Black ②).

Tester (+) Lead→Black/Yellow ① Lead
Tester (−) Lead→Black ② Lead

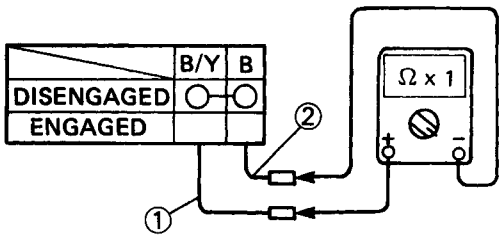

- Grab the clutch lever and release the clutch lever.
- Check the clutch switch for continuity.

Lever Position	Good Condition	Bad Condition		
Grab Lever	○	×	×	○
Release Lever	×	×	○	○

○: Continuity ×: Nocontinuity

- Connect the clutch switch leads.

INCORRECT → Replace clutch switch.

CORRECT ↓

*

*

7. Starter motor

- Connect the battery (12V) to the starter motor cable ① using the jumper lead ②*.

Battery (+) Terminal ③→ Starter Motor Cable

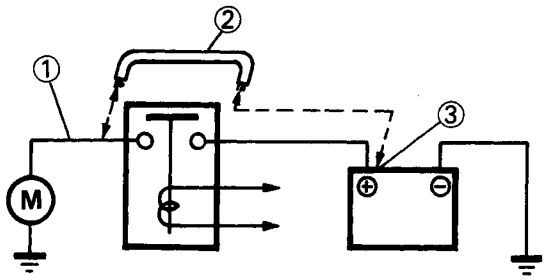

- Check the starter motor operation.

*

⚠ WARNING

- **A wire for the jumper lead must have the equivalent capacity as that of the battery lead or more, otherwise it may cause the jumper lead to be burned.**
- **This check is likely to produce sparks, so be sure that no flammable gas or fluid is in the vicinity.**

DOES NOT MOVE

Repair or replace starter motor.

MOVES

8. Starter relay

- Disconnect the starter relay coupler (Blue/White and Black).
- Connect the starter relay coupler (Blue/White ④ and Black ⑥) to the battery (12V).

Battery (+) Lead ③→Blue/White ④ Lead
Battery (−) Lead ⑤→Black ⑥ Lead

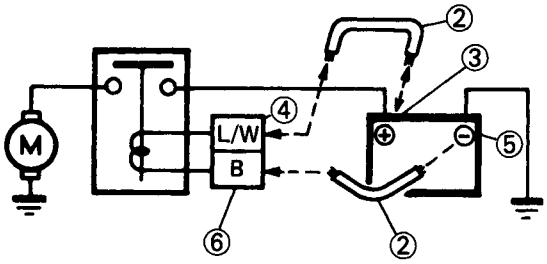

- Check the starter motor operation.
- Connect the starter relay coupler.

DOES NOT MOVE

Replace starter relay.

MOVES

*

*

9. Starting circuit cut-off relay

- Disconnect the starting circuit cut-off relay ① coupler (Red/White, Red/White, Blue/White and Yellow/Black) from the wire-harness.

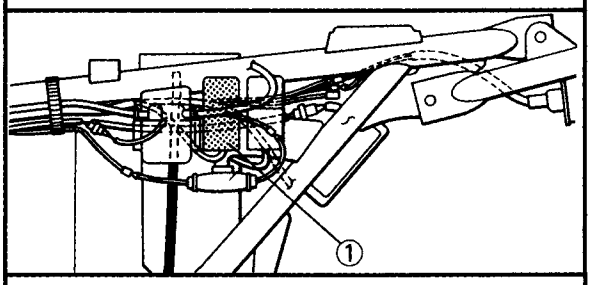

- Connect the starting circuit cut-off relay coupler (Yellow/Black ③, Red/White ④, Red/White ⑤ and Blue/White ⑥) to the Pocket Tester (Ω × 1) and battery (12V) ②.

Tester (+) Lead→Red/White ⑤ Lead
Tester (−) Lead→Blue/White ⑥ Lead
Battery (+) Lead→Yellow/Black ③ Lead
Battery (−) Lead→Red/White ④ Lead

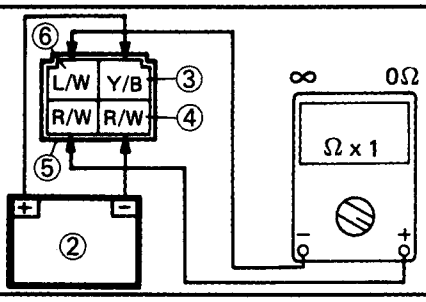

- Check the starting circuit cut-off relay for continuity.

	Good Condition	Bad Condition		
Battery Connected	○	○	×	×
Battery Disconnected	×	○	×	○

○: Continuity ×: Discontinuity

- Connect the starting circuit cut-off relay coupler.

INCORRECT → Replace starting circuit cut-off relay.

CORRECT

*

*

10. Neutral relay

- Disconnect the neutral relay ① coupler (Green/Yellow, Brown, White/Black and Sky blue) from the wireharness.

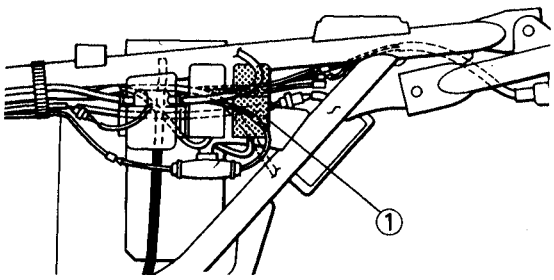

- Connect the neutral relay coupler (Green/Yellow ③, Brown ④, White/Black ⑤ and Sky blue ⑥) to the Pocket Tester (Ω × 1) and battery (12V) ②.

Tester (+) Lead→White/Black ⑤ Lead
Tester (−) Lead→Sky blue ⑥ Lead
Battery (+) Lead→Brown ④ Lead
Battery (−) Lead→Green/Yellow ③ Lead

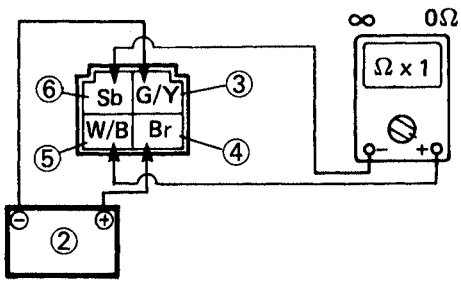

- Check the neutral relay for continuity.

	Good Condition	Bad Condition		
Battery Connected	○	○	×	×
Battery Disconnected	×	○	×	○

○: Continuity ×: Discontinuity

- Connect the neutral relay coupler.

INCORRECT → Replace neutral relay.

CORRECT

*

*

11. Neutral switch conduct

- Disconnect the neutral switch lead (Sky blue) from the wireharness.
- Connect the Pocket Tester (Ω × 1) to the neutral switch lead (Sky blue ①) and engine.

Tester (+) Lead→Sky blue ① Lead
Tester (−) Lead→Engine (Ground ②)

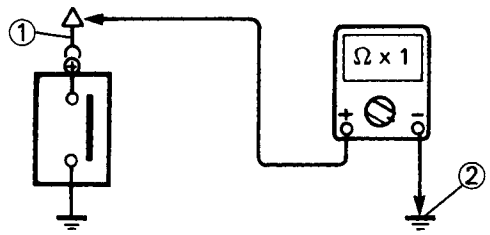

- Shift the neutral and reverse.
- Check the neutral switch for continuity.

Transmission Position	Good Condition	Bad Condition		
In neutral	○	○	×	×
In gear	×	○	×	○

○: Continuity ×: Nocontinuity

- Connect the neutral switch lead.

INCORRECT → Replace reverse switch.

CORRECT

12. Lever switch conduct

- Disconnect the lever switch lead (Green/White) from the wireharness.
- Connect the Pocket Tester (Ω × 1) to the lever switch lead (Green/White ①) and engine.

Tester (+) Lead→Green/White ① Lead
Tester (−) Lead→Engine (Ground ②)

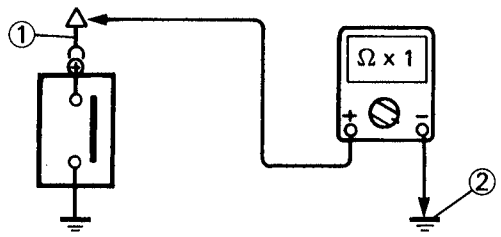

- Shift the neutral and gear.
- Check the lever switch for continuity.

Transmission Position	Good Condition	Bad Condition		
Forward	○	○	×	×
Reverse	×	○	×	○

○: Continuity ×: Nocontinuity

- Connect the reverse switch lead.

INCORRECT → Replace lever switch.

CORRECT ↓

13. Wiring connection
(Entire electrical starting system)

- Check the entire electrical starting system for connections. Refer to "WIRING DIAGRAM" section.

POOR CONNECTION → Correct.

CORRECT ↓

CDI unit is faulty. Replace it.

CHARGING SYSTEM

CIRCUIT DIAGRAM

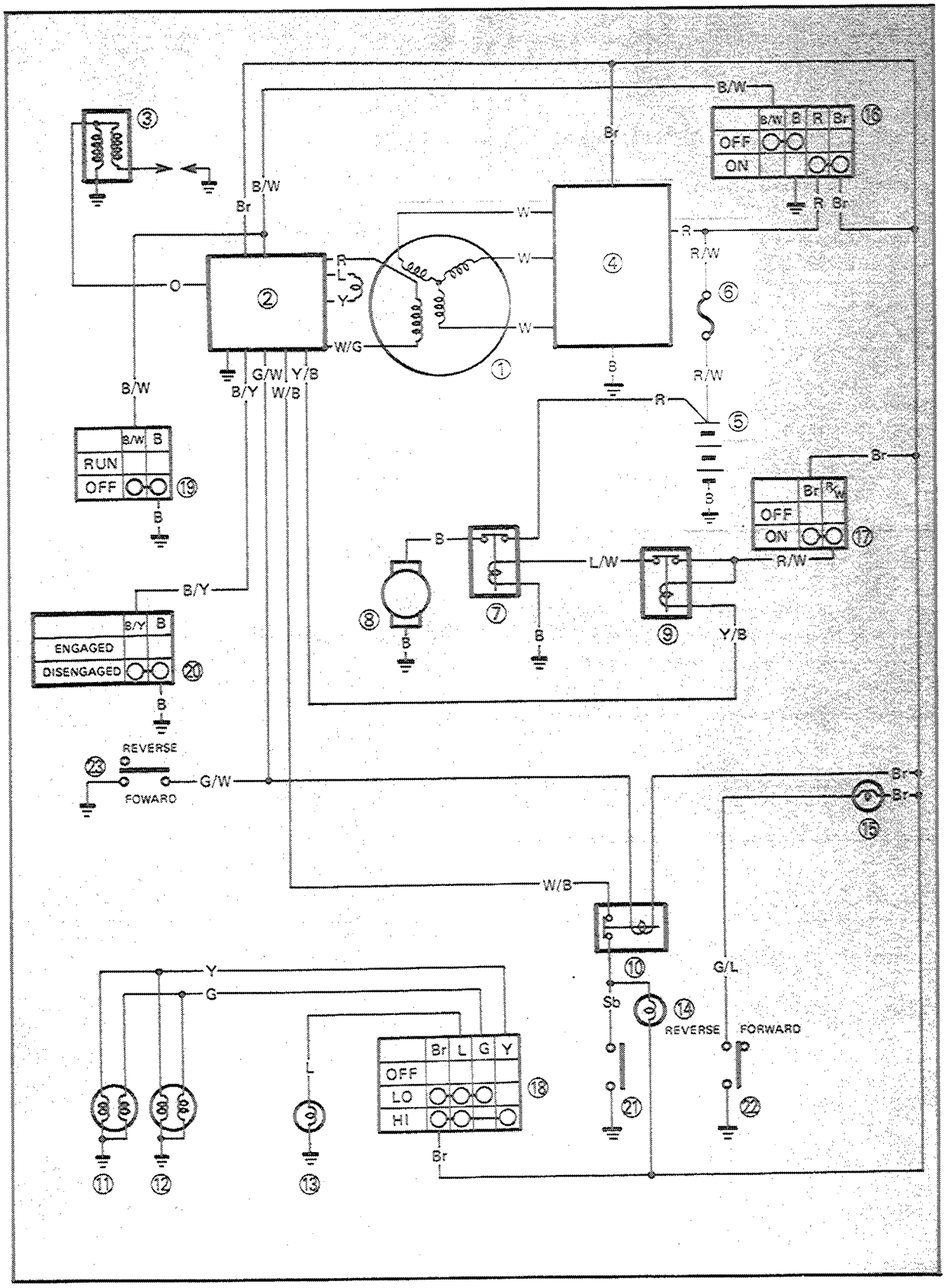

① CDI Magneto
④ Rectifier/Regulator
⑤ Battery
⑥ Fuse

COLOR CODE

B	Black
Br	Brown
G	Green
L	Blue
O	Orange
R	Red
Sb	Skyblue
W	White
Y	Yellow
B/W	Black/White
B/Y	Black/Yellow
G/L	Green/Blue
G/W	Green/White
L/W	Blue/White
R/W	Red/White
W/B	White/Black
W/G	White/Green
Y/B	Yellow/Black

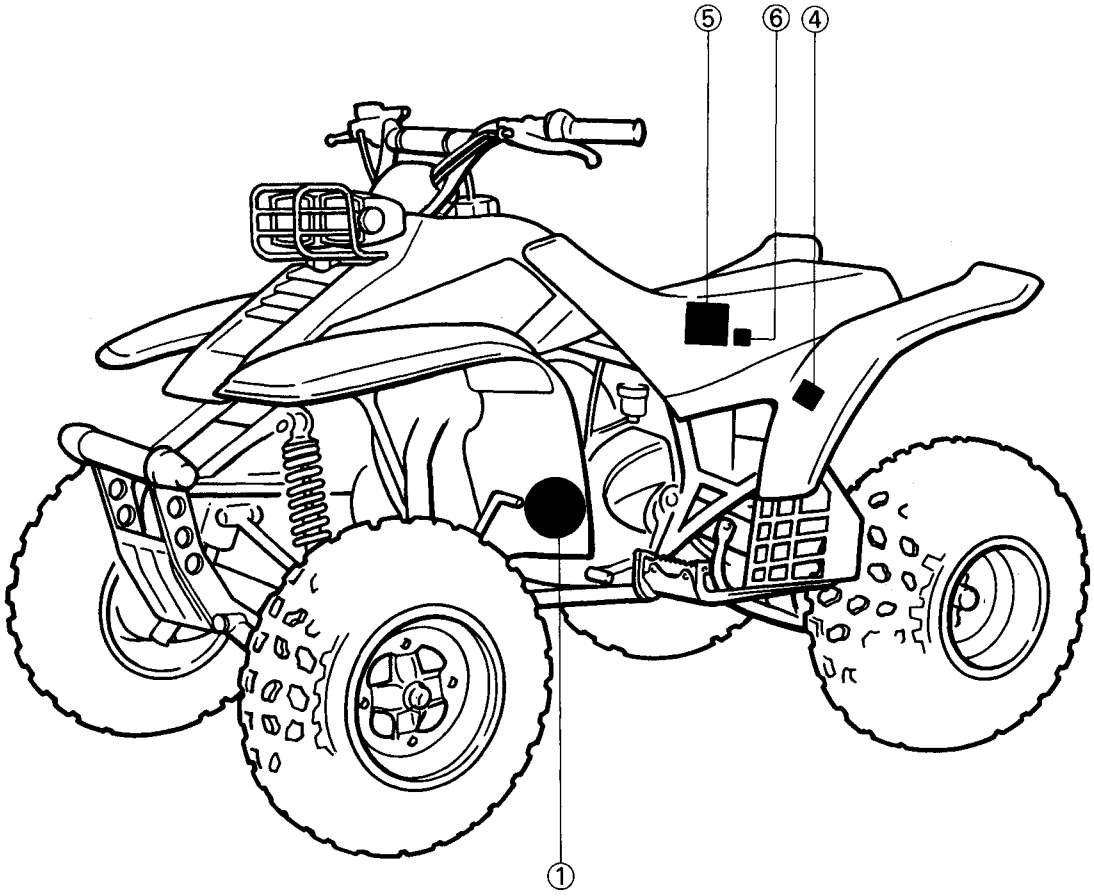

TROUBLESHOOTING

THE BATTERY IS NOT CHARGED.

Procedure

Check;

1. Fuse
2. Battery
3. Charging voltage
4. Charging coil resistance
5. Wiring connection (Entire charging system)

NOTE:

- Remove the following parts before troubleshooting.
  1) Seat
- Use the following special tool(s) in this troubleshooting.

Inductive tachometer: P/N. YU-08036	**Pocket tester: P/N. YU-03112**

1. Fuse

- Check the fuse condition. Refer to the "FUSE INSPECTION" section in the CHAPTER 3.

INCORRECT → Fuse is faulty, replace it.

CORRECT ↓

2. Battery

- Check the battery condition. Refer to the "BATTERY INSPECTION" section in the CHAPTER 3.

Specific gravity: 1.280 at 20°C (68°F)

INCORRECT →
- Refill battery fluid.
- Clean battery terminals.
- Recharge or replace battery.

CORRECT ↓

3. Charging voltage

- Connect the Inductive tachometer to the spark plug lead.

- Connect the Pocket tester (DC20V) to the battery.

Tester (+) lead→Battery positive terminal
Tester (−) lead→Battery negative terminal

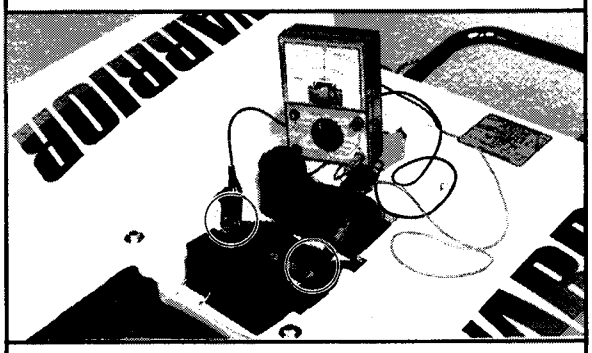

- Turn the "LIGHT" (Dimmer) switch to "OFF" position.
- Start the engine.
- Accelerate the engine to specifications and check the charging voltage.

Charging voltage:
14 ~ 15V at 5,000 r/min

MEETS SPECIFICATION → Charging system is good.

OUT OF SPECIFICATION ↓

4. Charging coil resistance

- Disconnect the CDI magneto leads from the wireharness.
- Connect the Pocket tester (Ω × 1) to the charging coil leads.

Charging coil (1):
Tester (+) lead→White lead ①
Tester (−) lead→White lead ②

Charging coil (2):
Tester (+) lead→White lead ①
Tester (−) lead→White lead ③

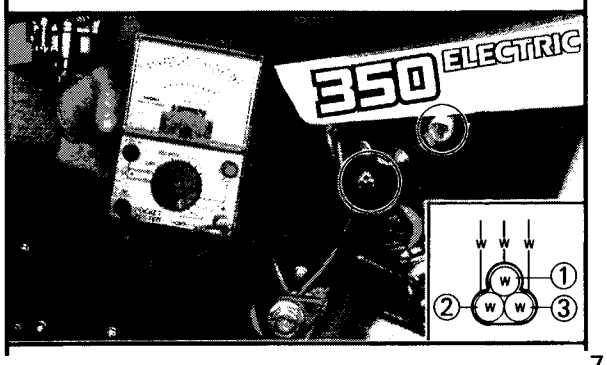

- Check the charging coils for specificated resistance.

Charging coil resistance:
0.70 ~ 0.86Ω at 20°C (68°F)
(White — White)

OUT OF SPECIFICATION → Charging coils are faulty, replace them.

BOTH RESISTANCES MEET SPECIFICATIONS ↓

5. Wiring connection

- Check the entire charging system for connections. Refer to the "WIRING DIAGRAM" section.

POOR CONNECTION → Correct.

CORRECT ↓

Rectifire/Regulator is faulty, replace it.

IGNITION SYSTEM

CIRCUIT DIAGRAM

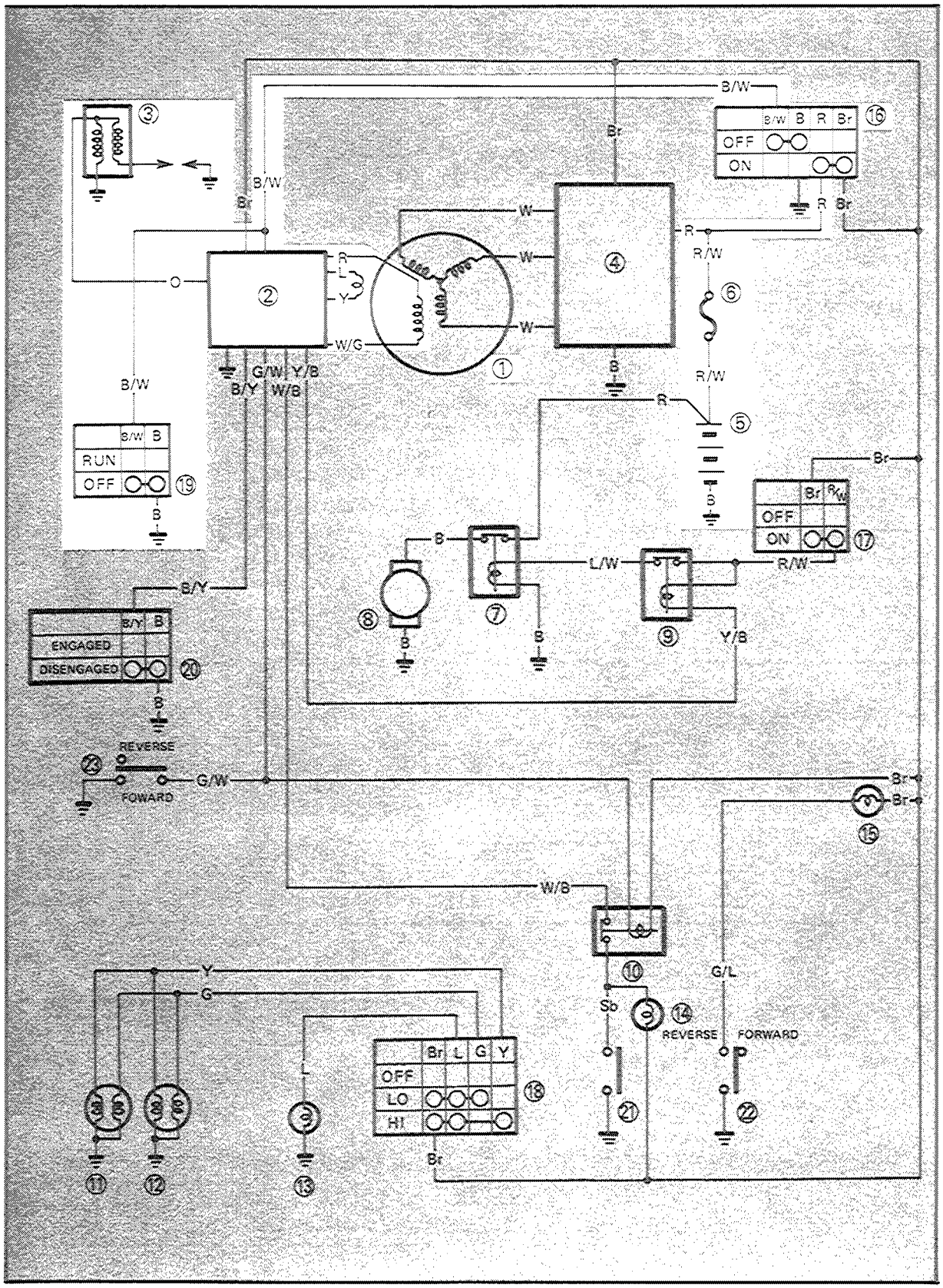

① CDI magneto
② CDI unit
③ Ignition coil
⑤ Battery
⑯ Main switch
⑲ "ENGINE STOP" switch

COLOR CODE

B	Black
Br	Brown
G	Green
L	Blue
O	Orange
R	Red
Sb	Skyblue
W	White
Y	Yellow
B/W	Black/White
B/Y	Black/Yellow
G/L	Green/Blue
G/W	Green/White
L/W	Blue/White
R/W	Red/White
W/B	White/Black
W/G	White/Green
Y/B	Yellow/Black

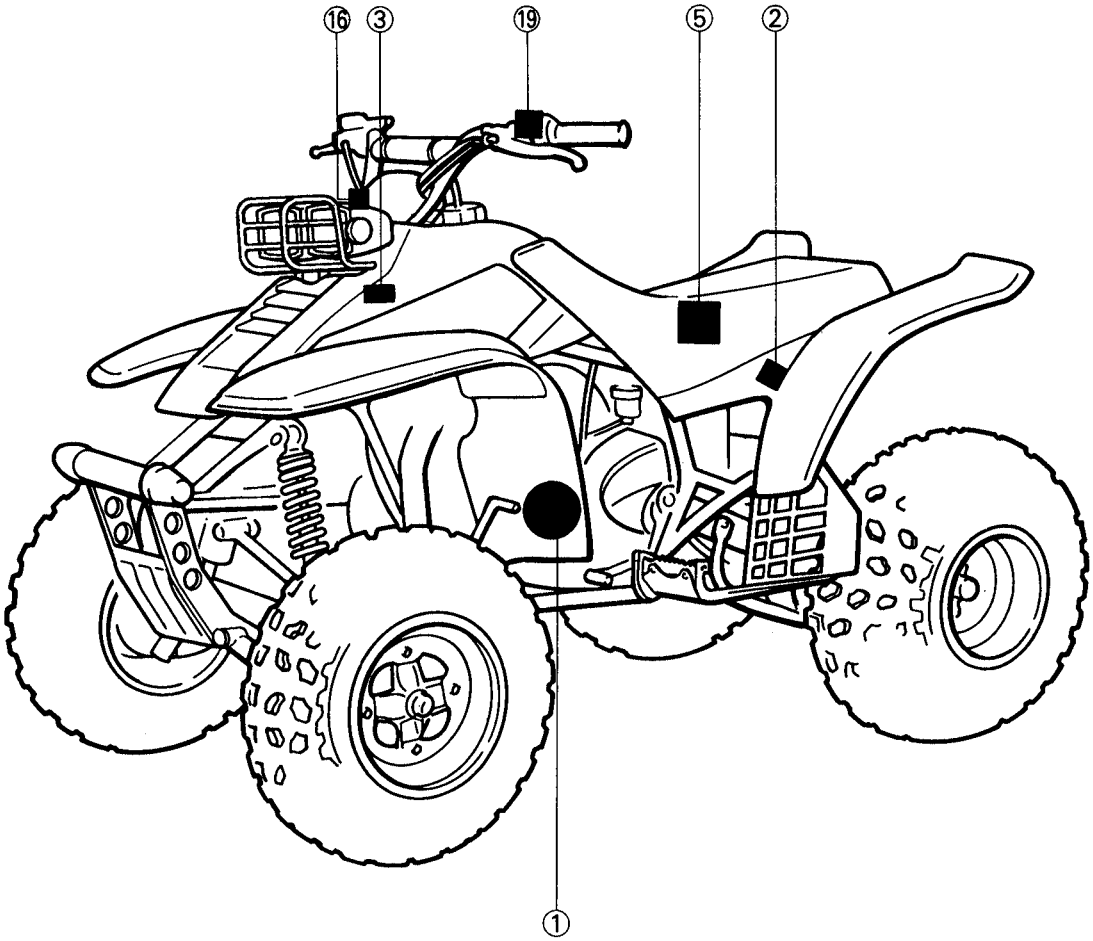

TROUBLESHOOTING

IF IGNITION SYSTEM SHOULD BECOME INOPERATIVE (NO SPARK OR INTERMITTENT SPARK)

Procedure

Check;

1. Spark plug
2. Ignition spark gap
3. Spark plug cap resistance
4. Ignition coil resistance
5. Main switch
6. "ENGINE STOP" switch
7. Source coil resistance
8. Pickup coil resistance
9. Wiring connection (Ignition system)

NOTE:

- Remove the following parts before troubleshooting.
  1) Headlight unit assembly
  2) Seat
  3) Front panel
  4) Fuel tank cover
  5) Front fender
  6) Fuel tank
- Use the following special tools in this troubleshooting.

Pocket Tester: **YU-03112**	**Dynamic Coil Tester:** **YM-34487**

1. Spark plug

- Check the spark plug type condition and gap. Refer to the "SPARK PLUG INSPECTION" section in the CHAPTER 3.

Standard Spark Plug:
D8EA (NGK) or X24ES-U (ND)

Spark Plug Gap:
0.6 ~ 0.7 mm (0.024 ~ 0.028 in)

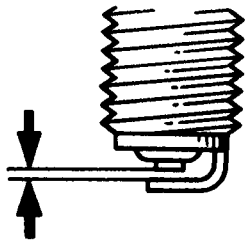

INCORRECT → Repair or replace spark plug.

CORRECT → *

*

2. Ignition spark gap

- Disconnect the spark plug cap from the spark plug.
- Connect the Dynamic Spark Tester ① between the spark plug ② and spark plug cap ③, and set the specified spark gap.

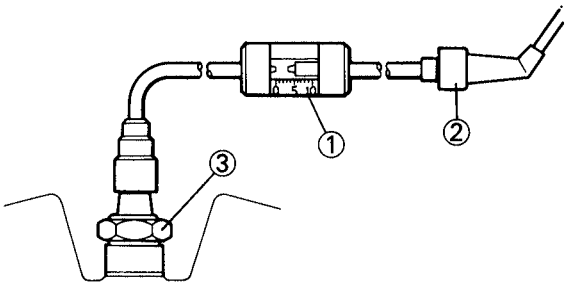

- Turn the main switch to "ON" and "ENGINE STOP" switch to "RUN", then, shift the gear in neutral.
- Start the engine.
- Check the ignition spark condition.

Minimum Spark Gap:
6 mm (0.24 in)

SPARK → Ignition circuit is good.

OUT OF SPECIFICATION

3. Spark plug cap resistance

- Remove the spark plug cap.
- Connect the Pocket Tester (Ω × 1k) to the spark plug cap.

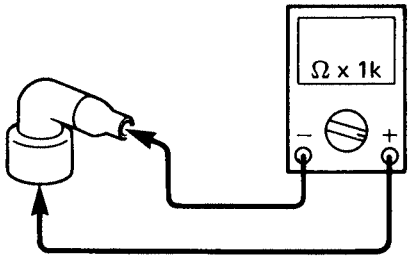

- Check the spark plug cap for specificated resistance.

Spark Plug Cap Resistance:
10kΩ at 20°C (68°F)

OUT OF SPECIFICATION → Replace spark plug cap.

MEETS SPECIFICATION

*

*

4. Ignition coil resistance

- Disconnect the ignition coil lead (Orange) from the wireharness.
- Connect the Pocket Tester to the ignition coil.

Primary Coil: (Ω × 1)
Tester (+) Lead → Orange ① Terminal
Tester (−) Lead → Ignition Coil Base
Secondary Coil: (Ω × 1k)
Tester (+) Lead → Spark Plug lead ②
Tester (−) Lead → Ignition Coil Base

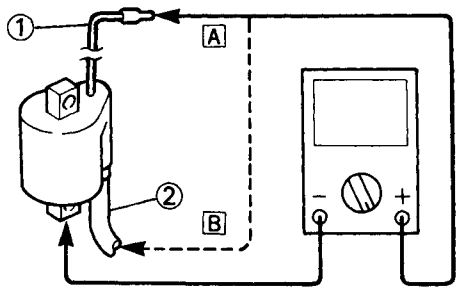

- Measure the primary and secondary coil resistances.

Primary Coil Resistance A :
0.36 ~ 0.48Ω at 20°C (68°F)
Secondary Coil Resistance B :
5.44 ~ 7.36kΩ at 20°C (68°F)

OUT OF SPECIFICATION

Replace ignition coil.

MEETS BOTH SPECIFICATIONS

*

*

5. Main switch

- Disconnect the main switch coupler ① from the wireharness.
- Check the switch component for the continuity between "Black/White ② and Black ③". Refer to the "CHECKING OF SWITCHES" section.

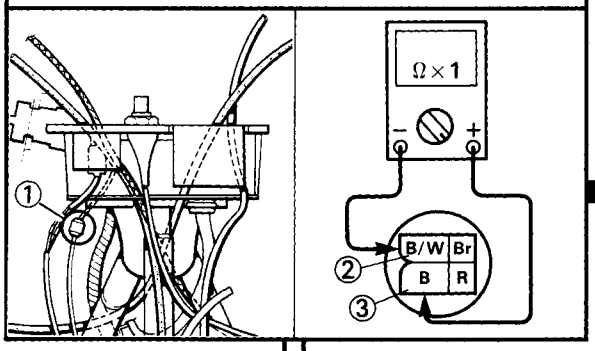

INCORRECT

Replace main switch.

CORRECT

6. "ENGINE STOP" switch

- Disconnect the "ENGINE STOP" switch coupler ① from the wireharness.
- Check the switch component for the continuity between "Black/White ② and Black ③". Refer to the "CHECKING OF SWITCHES" section.

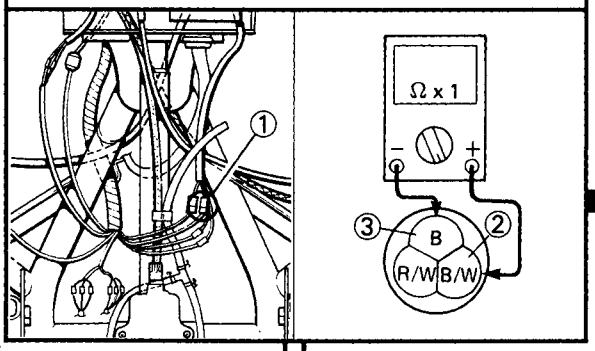

INCORRECT

Replace handlebar switch.

CORRECT

*

*

7. Source coil resistance

- Disconnect the CDI magneto coupler ① from the wireharness.
- Connect the Pocket Tester (Ω × 100) to the source coil.

Tester (+) Lead → White/Green ② Terminal
Tester (−) Lead → Red ③ Terminal

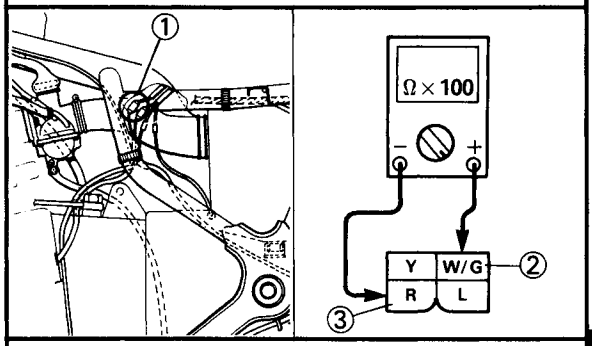

- Measure the source coil resistance.

Source Coil Resistance:
270 ~ 330Ω at 20°C (68°F)

OUT OF SPECIFICATION → Replace source coil.

MEETS SPECIFICATION

8. Pickup coil resistance

- Disconnect the CDI magneto coupler ① from the wireharness.
- Connect the Pocket Tester (Ω × 100) to the pickup coil.

Tester (+) Lead → Blue ② Terminal
Tester (−) Lead → Yellow ③ Terminal

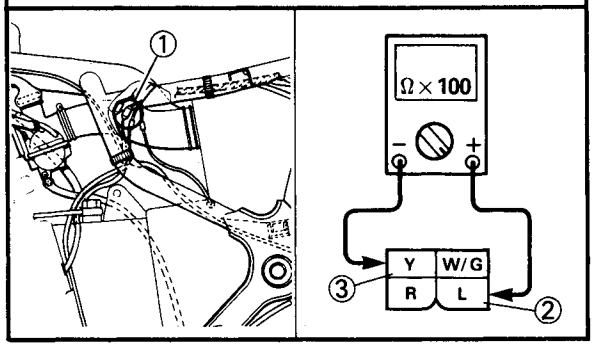

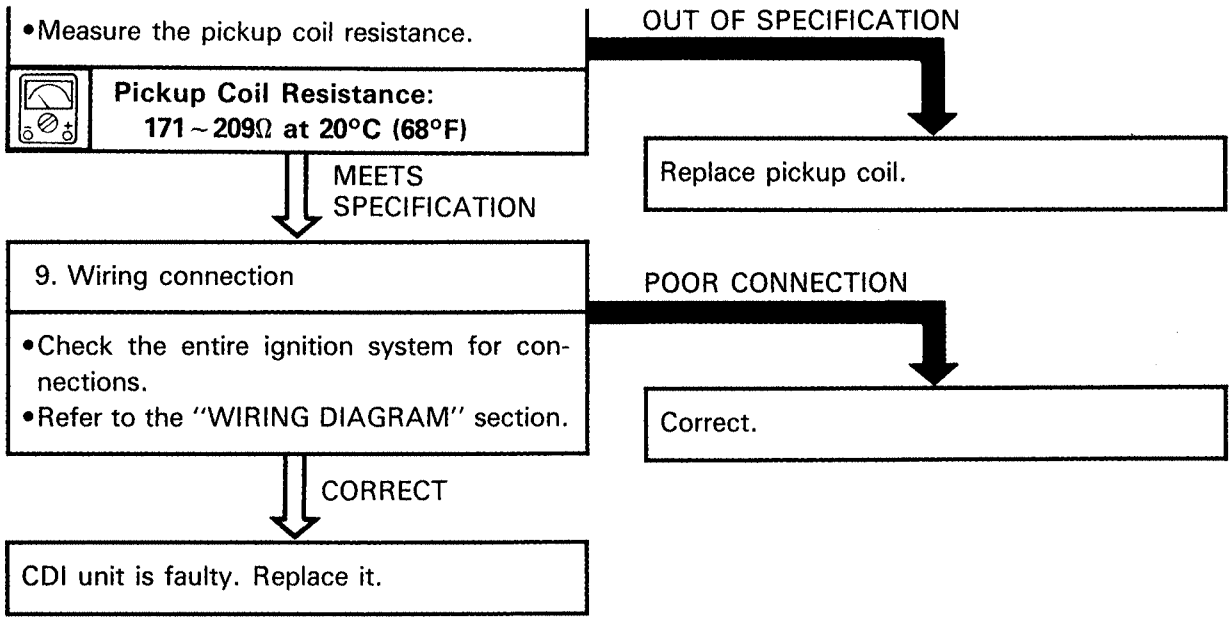
•Measure the pickup coil resistance.
Pickup Coil Resistance:
171 ~ 209Ω at 20°C (68°F)
OUT OF SPECIFICATION
Replace pickup coil.
MEETS SPECIFICATION
9. Wiring connection
•Check the entire ignition system for connections.
•Refer to the "WIRING DIAGRAM" section.
POOR CONNECTION
Correct.
CORRECT
CDI unit is faulty. Replace it.

① CDI Magneto
④ Rectifier/Regulator
⑤ Battery
⑥ Fuse
⑪ Headlight (Left)
⑫ Headlight (Right)
⑬ Taillight
⑯ Main switch
⑱ "LIGHTS" (Dimmer) switch

COLOR CODE

B	Black
Br	Brown
G	Green
L	Blue
O	Orange
R	Red
Sb	Skyblue
W	White
Y	Yellow
B/W	Black/White
B/Y	Black/Yellow
G/L	Green/Blue
G/W	Green/White
L/W	Blue/White
R/W	Red/White
W/B	White/Black
W/G	White/Green
Y/B	Yellow/Black

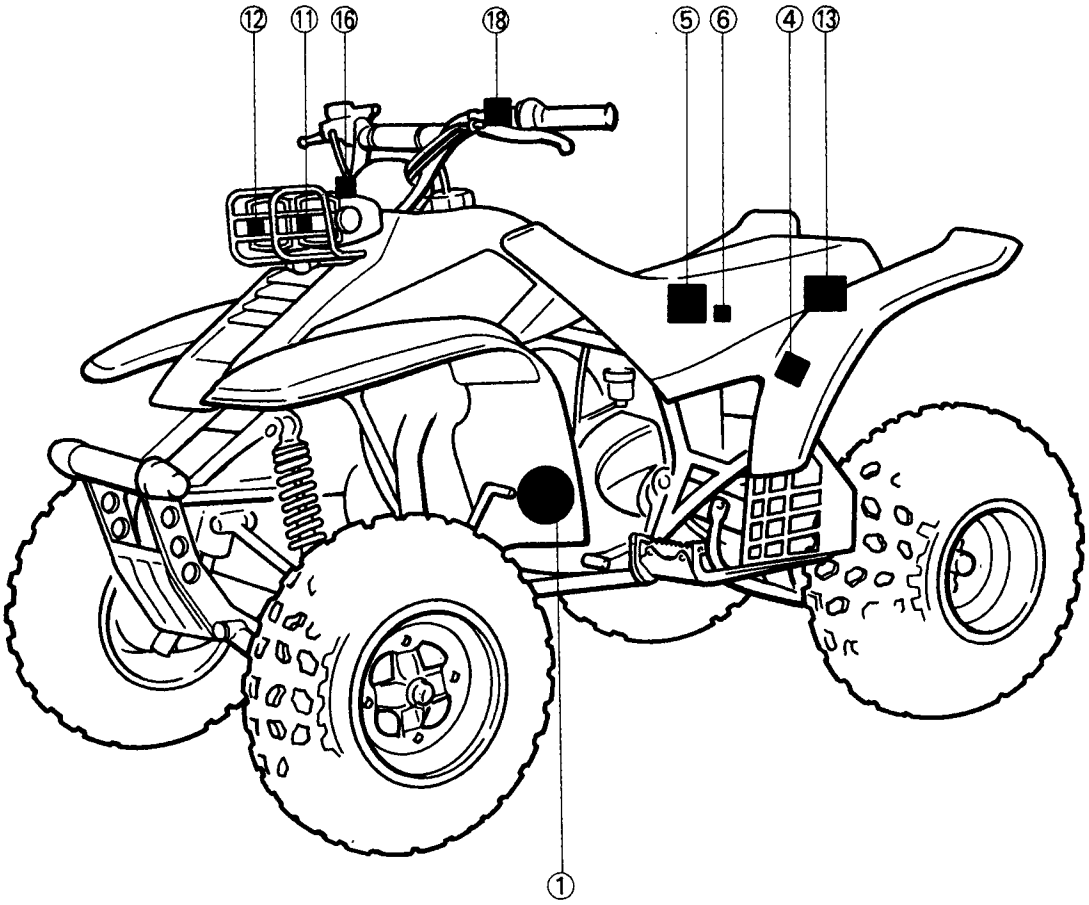

LIGHTING SYSTEM

CIRCUIT DIAGRAM

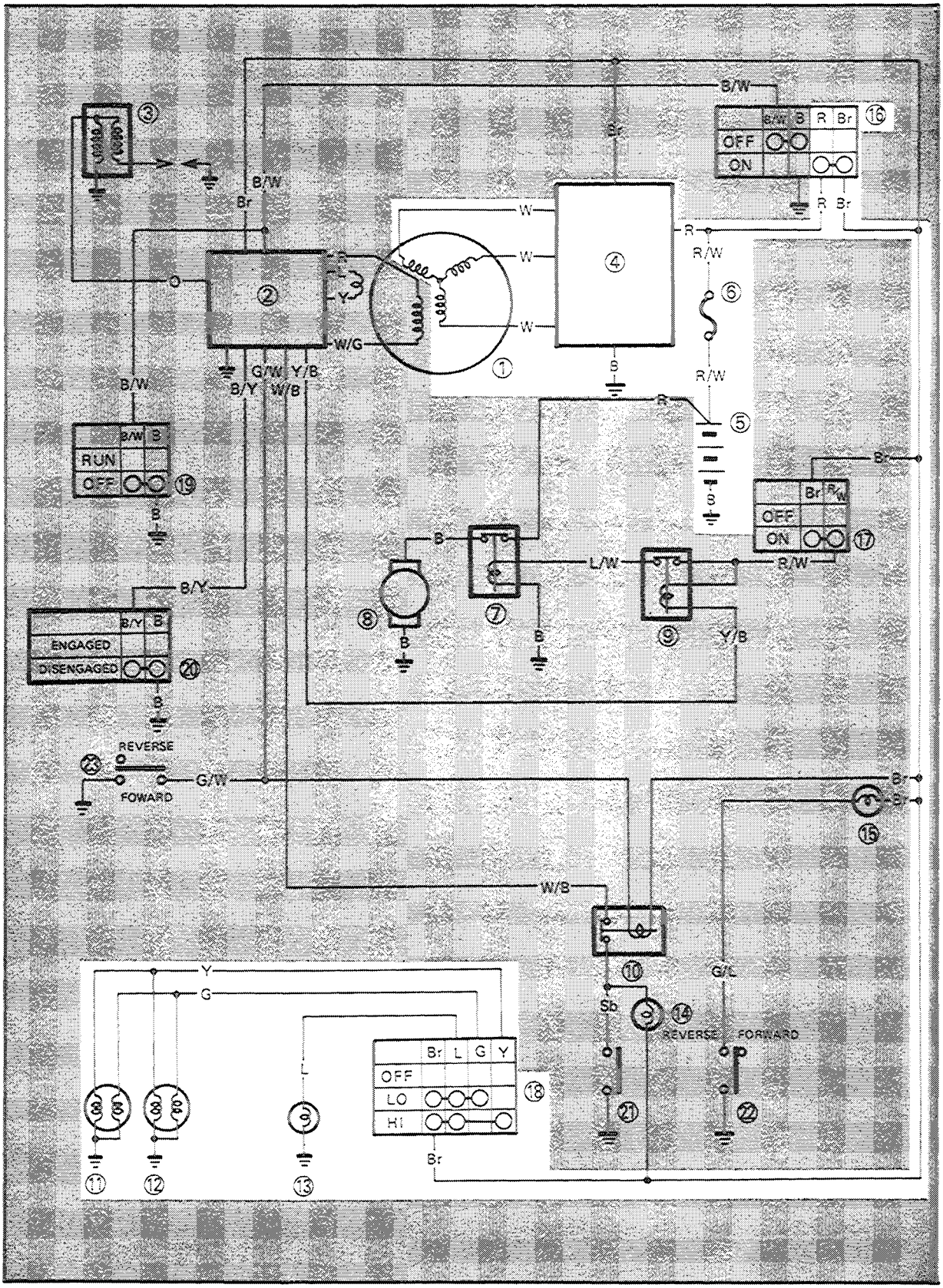

TROUBLESHOOTING

HEADLIGHT TAIL LIGHT DO NOT COME ON

Procedure

Check;

1. Bulb and bulb socket
2. Battery
3. Fuse
4. "LIGHTS" (Dimmer) switch
5. Main switch
6. Wiring connection (Lighting system)

NOTE:

- Remove the following parts before troubleshooting.
  1) Front panel 2) Seat
- Use the following special tool in this troubleshooting.

Pocket Tester:
YU-03112

1. Bulb and bulb socket

- Remove the bulb.
  Refer to "CHAPTER 3. HEADLIGHT BULB REPLACEMENT".
- Check the bulb and bulb socket for continuity. Refer to the "CHECKING OF BULBS" section.

NOCONTINUITY → Replace bulb.

CONTINUITY ↓

2. Battery

- Check the battery condition.
- Check the battery fluid level, battery terminals and specific gravity.
  Refer to the "BATTERY INSPECTION" section in the CHAPTER 3.

Specific Gravity:
1.280 at 20°C (68°F)

INCORRECT →
- Refill battery fluid.
- Clean battery terminals.
- Recharge or replace battery.

CORRECT ↓

*

*

3. Fuse

- Connect the Pocket Tester "Ω×1" to the fuse.
- Check the fuse for continuity.

NOCONTINUITY → Replace fuse.

CONTINUITY ↓

4. "LIGHTS" (Dimmer) switch

- Check the switch component for the continuity between "Brown ① and Blue ②", "Brown ① and Green ③" and "Brown ① and Yellow ④".
  Refer to the "CHECKING OF SWITCHES" section.

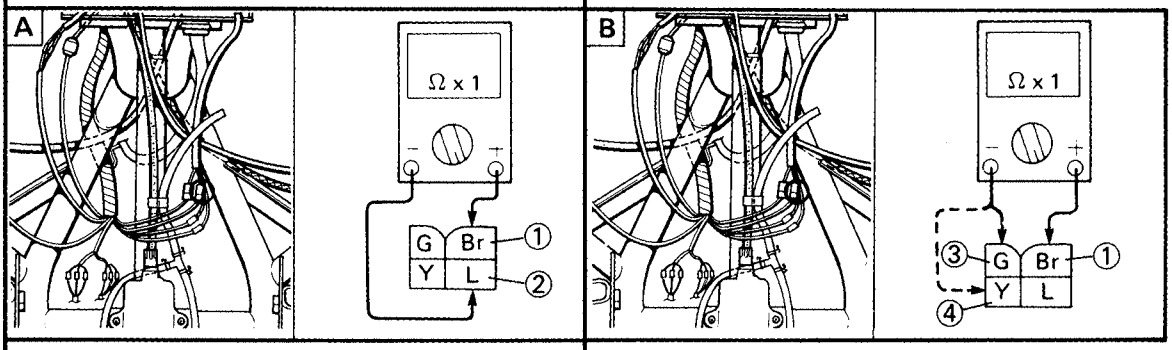

A Headlight
B Taillight

INCORRECT → Replace handlebar switch.

CORRECT ↓

5. Main switch

- Disconnect the main switch coupler ① from the wireharness.
- Check the switch component for the continuity between "Red ② and Red ③".
  Refer to the "CHECKING OF SWITCHES" section.

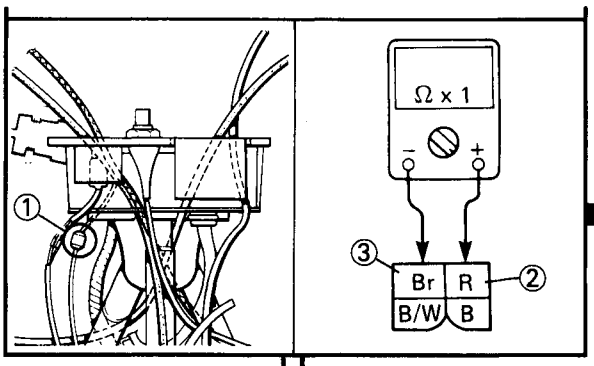

INCORRECT

Replace main switch.

CORRECT

6. Wiring connection

- Check entire lighting system for connections. Refer to "WIRING DIAGRAM" section.

POOR CONNECTION

Correct.

OK

Check the charging system.

SIGNAL SYSTEM

CIRCUIT DIAGRAM

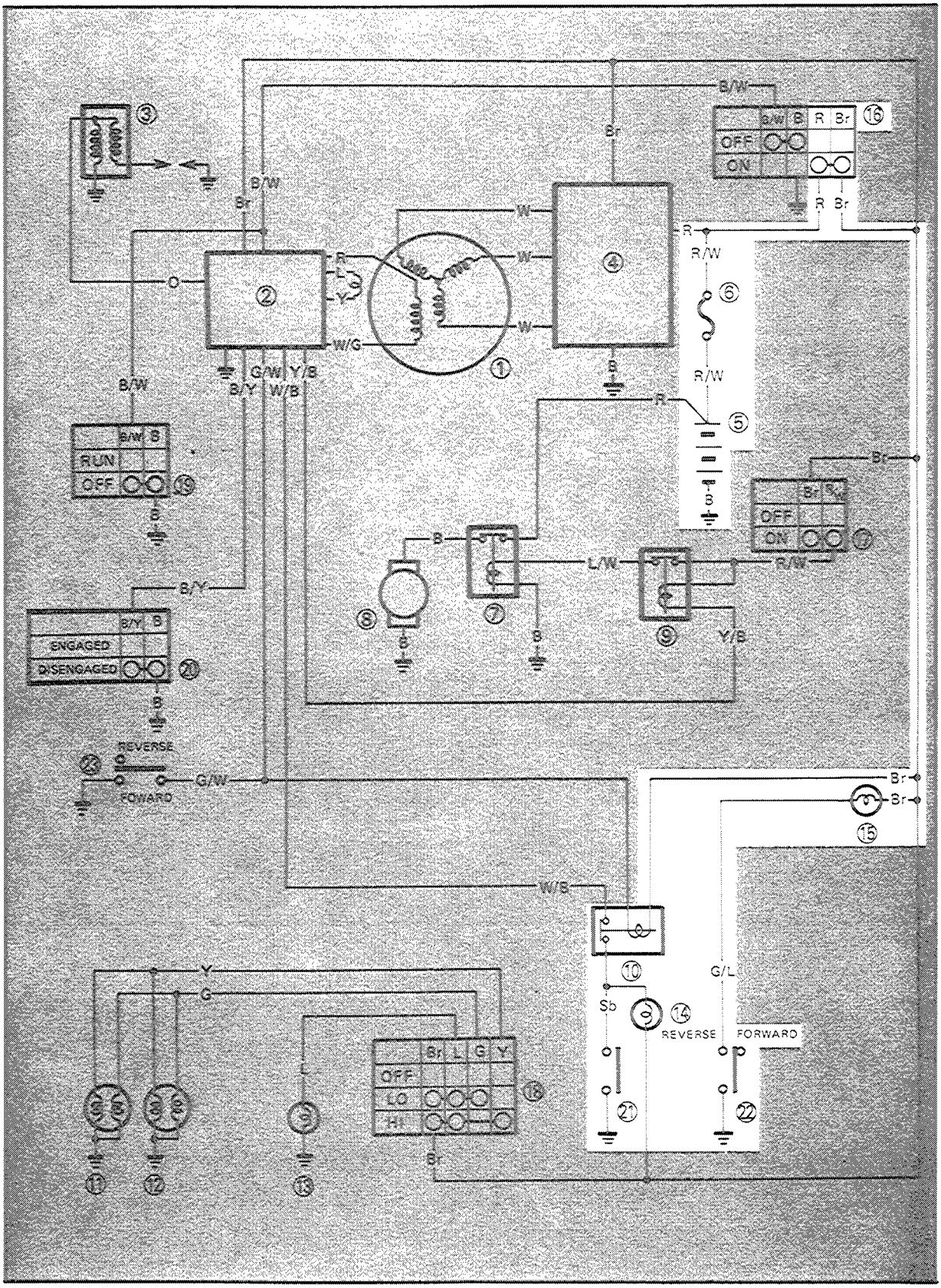

⑤ Battery
⑥ Fuse
⑩ Neutral relay
⑭ "NEUTRAL" indicator light
⑮ "REVERSE" indicator light
⑯ Main switch
㉑ Neutral switch
㉒ Reverse switch

COLOR CODE

B.....Black
Br.....Brown
G.....Green
L.....Blue
O.....Orange
R.....Red
Sb.....Skyblue
W.....White
Y.....Yellow
B/W.....Black/White
B/Y.....Black/Yellow
G/L.....Green/Blue
G/W.....Green/White
L/W.....Blue/White
R/W.....Red/White
W/B.....White/Black
W/G.....White/Green
Y/B.....Yellow/Black

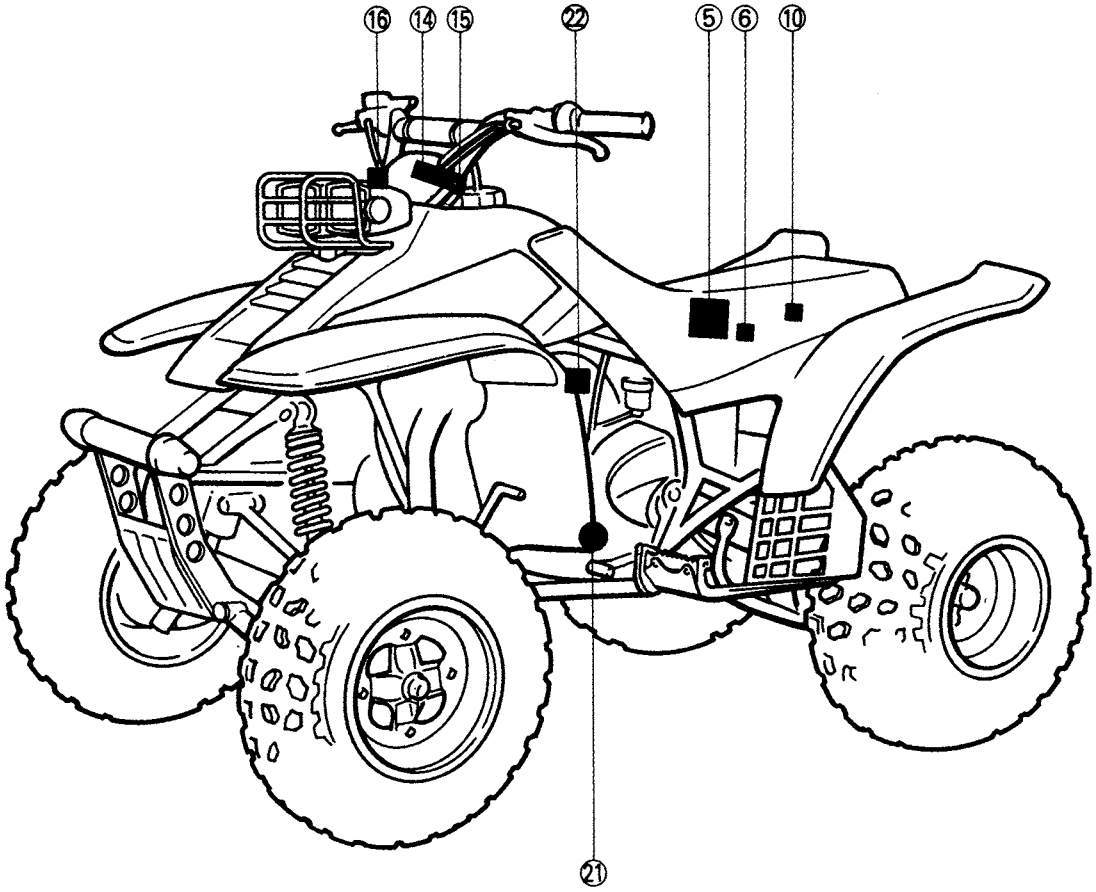

TROUBLESHOOTING

"NEUTRAL" INDICATOR LIGHT AND "REVERSE INDICATOR LIGHT" DO NOT COME ON.

Procedure

Check;

1. Fuse
2. Battery
3. Main switch
4. Wiring connection
   (Entire signal system)

NOTE:

- Remove the following parts before troubleshooting.
- Front cover
- Handlebar cover
- Seat
- Fuel tank
- Use the following special tool(s) in this troubleshooting.

Pocket Tester:
P/N. YU-03112

1. Fuse

- Remove the fuse.
- Connect the Pocket Tester (Ω × 1) to the fuse.
- Check the fuse for continuity.

NO CONTINUITY → Replace fuse.

CONTINUITY ↓

2. Battery

Check the battery condition. Refer to the "BATTERY INSPECTION" section in the CHAPTER 3.

Specific Gravity:
1.280 at 20°C (68°F)

INCORRECT →
- Refill battery fluid.
- Clean battery terminals.
- Recharge or replace battery.

CORRECT ↓
*

*

3. Main switch

- Disconnect the main switch lead ① from the wireharness.
- Check the switch component for the continuity between "Red ② and Brown ③". Refer to the "CHECKING OF SWITCHES" section.

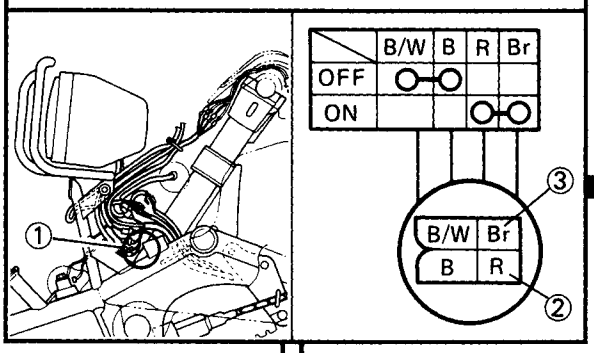

Main switch is faulty, replace it.

CORRECT

4. Wiring connection

Check the entire signal system for connections. Refer to the "WIRING DIAGRAM" section.

POOR CONNECTION

Correct.

CORRECT

Check condition of each circuit for signal system. Refer to "SIGNAL SYSTEM CHECK" section.

SIGNAL SYSTEM CHECK

1. "NEUTRAL" indicator light does not come on.

1. Bulb and bulb socket

Check the bulb and bulb socket for continuity.

NO CONTINUITY → Bulb and/or bulb socket are faulty, replace.

CONTINUITY ↓

2. Neutral switch

- Disconnect the neutral switch coupler ① from the wireharness.
- Check the switch component for the continuity between "Sky blue" lead ② and frame earth ③.

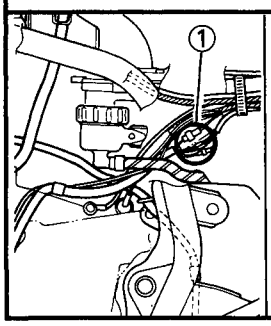

	Sb	Earth
IN NEUTRAL	O	O
IN GEAR		

② ③

INCORRECT → Neutral switch is faulty, replace it.

CORRECT ↓

3. Voltage

- Connect the Pocket Tester (DC20V) to the bulb socket connector.

Tester (+) Lead→"Brown" ① lead
Tester (−) Lead→Frame earth ②

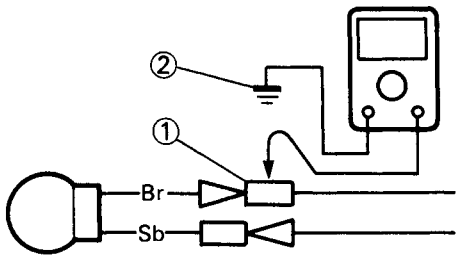

- Turn the main to "ON".
- Shift in neutral.
- Check for voltage (12V) on the "Brown" lead and frame earth.

OUT OF SPECIFICATION → Wiring circuit from main switch to bulb socket connector is faulty, repair.

MEETS SPECIFICATION (12V) ↓

This circuit is good.

SIGNAL SYSTEM CHECK

1. "REVERSE SIGNAL SYSTEM" indicator light does not come on.

1. Bulb and bulb socket

Check the bulb and bulb socket for continuity.

NO CONTINUITY → Bulb and/or bulb socket are faulty, replace.

CONTINUITY ↓

2. Reverse switch

- Disconnect the reverse switch coupler ① from the wireharness.
- Check the switch component for the continuity between "Green/Blue" ② and frame earth.

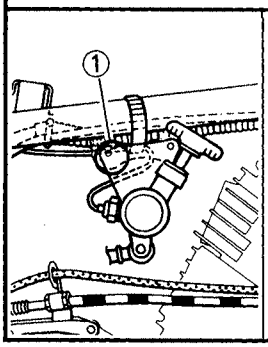

	G/L	Earth
IN REVERSE	○	○
FORWARD		

① ②

INCORRECT → Reverse switch is faulty, replace it.

CORRECT ↓

3. Voltage

- Connect the Pocket Tester (DC20V) to the bulb socket connector.

Tester (+) Lead→"Brown" ① lead
Tester (−) Lead→Frame earth ②

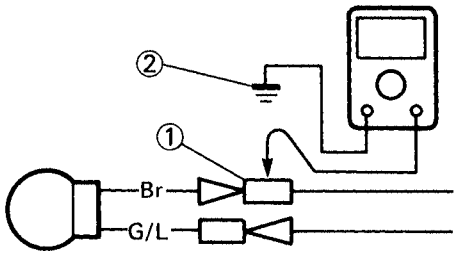

OUT OF SPECIFICATION → Wiring circuit from main switch to bulb socket connector is faulty, repair.

- Turn the main switch to "ON".
- Shift in "FORWARD".
- Check for voltage (12V) on the "Brown" lead and frame earth.

MEETS SPECIFICATION (12V) ↓

This circuit is good.

TROUBLESHOOTING

NOTE:

The following troubleshooting does not cover all the possible causes of trouble. It should be helpful, however, as a guide to troubleshooting. Refer to the relative procedure in this manual for inspection, adjustment and replacement of parts.

STARTING FAILURE/HARD STARTING

FUEL SYSTEM	PROBABLE CAUSE
Fuel tank	• Empty • Clogged fuel filter • Clogged fuel breather hose • Deteriorated fuel or fuel containing water or foreign material
Fuel cock	• Clogged fuel hose
Carburetor	• Deteriorated fuel, fuel containing water or foreign material • Clogged pilot jet • Clogged pilot air passage • Sucked-in air • Deformed float • Groove-worn needle valve • Improperly sealed valve seat • Improperly adjusted fuel level • Improperly set pilot jet • Clogged starter jet • Malfunctioning starter plunger
Air cleaner	• Clogged air filter

STARTING FAILURE/HARD STARTING

ELECTRICAL SYSTEM	PROBABLE CAUSE
Spark plug	•Improper plug gap •Worn electrodes •Wire between terminals broken •Improper heat range •Faulty spark plug cap
Ignition coil	•Broken or shorted primary/secondary •Faulty spark plug lead •Broken body
CDI unit system	•Faulty CDI unit •Faulty source coil •Faulty pick-up coil •Broken woodruff key
Switches and wiring	•Faulty main switch •Faulty "START" switch •Faulty "ENGINE STOP" switch •Faulty "NEUTRAL" switch •Broken or shorted wiring
Starter motor	•Faulty starter motor •Faulty starter relay •Faulty circuit cut-off relay
Battery	•Faulty battery

COMPRESSION SYSTEM	PROBABLE CAUSE
Cylinder and cylinder head	•Loose spark plug •Loose cylinder head or cylinder •Broken cylinder head gasket •Broken cylinder gasket •Worn, damaged or seized cylinder •Improperly sealed valve •Improperly contacted valve and valve seat •Improper valve timing •Broken valve spring
Piston and piston rings	•Improperly installed piston ring •Worn, fatigued or broken piston ring •Seized piston ring •Seized or damaged piston
Crankcase and crankshaft	•Improperly seated crankcase •Seized crankshaft
Valve train	•Improperly adjusted valve clearance •Improperly adjusted valve timing

POOR IDLE SPEED PERFORMANCE

POOR IDLE SPEED PERFORMANCE	PROBABLE CAUSE
Carburetor	•Improperly returned starter plunger •Clogged or loose pilot jet •Clogged pilot air jet •Improperly adjusted idle speed (Throttle stop screw) •Improperly adjusted throttle cable play •Flooded carburetor
Electrical system	•Faulty battery •Faulty spark plug •Faulty CDI unit •Faulty pickup coil •Faulty ignition coil
Valve train	•Improperly adjusted valve clearance
Air cleaner	•Clogged air filter

POOR MEDIUM AND HIGH SPEED PERFORMANCE

POOR MEDIUM AND HIGH SPEED PERFORMANCE	PROBABLE CAUSE
Refer to "Starting failure/Hard starting". (Fuel system, electrical system, compression system and valve train)	
Carburetor	•Improper jet needle clip position •Improperly adjusted fuel level •Clogged or loose main jet
Air cleaner	•Clogged air filter

FAULTY GEAR SHIFTING

HARD SHIFTING

Refer to "CLUTCH DRAGGING".

SHIFT PEDAL DOES NOT MOVE

	PROBABLE CAUSE
Shift shaft	• Bent shift shaft
Shift cam and shift fork	• Groove jammed with impurities • Seized shift fork • Bent shift fork guide bar
Transmission	• Seized transmission gear • Jammed impurities • Incorrectly assembled transmission
Shift guide	• Broken shift guide

JUMP-OUT GEAR

	PROBABLE CAUSE
Shift shaft	• Improperly adjusted shift lever position • Improperly returned stopper lever
Shift fork	• Worn shift fork
Shift cam	• Improper thrust play • Worn shift cam groove
Transmission	• Worn gear dog

CLUTCH SLIPPING/DRAGGING

CLUTCH SLIPPING

	PROBABLE CAUSE
Clutch	• Loose clutch spring • Fatigued clutch spring • Worn friction plate • Worn clutch plate • Incorrectly assembled clutch
Engine oil	• Low oil level • Improper quality (Low viscosity) • Deterioration

CLUTCH DRAGGING

	PROBABLE CAUSE
Clutch	•Warped pressure plate •Unevenly tensioned clutch springs •Match marks not aligned •Loose clutch boss nut •Burnt primary driven gear bushing •Bent clutch plate •Swollen friction plate •Broken clutch boss
Transmission oil	•High oil level •Improper quality (High viscosity) •Deterioration

OVERHEATING

OVERHEATING

	PROBABLE CAUSE
Ignition system	•Improper spark plug gap •Improper spark plug heat range •Faulty CDI unit
Fuel system	•Improper carburetor main jet (Improper setting) •Improperly adjusted fuel height •Clogged air cleaner element
Compression system	•Heavy carbon build-up
Engine oil	•Incorrect oil level •Improper oil viscosity •Inferior oil quality
Brake	•Dragging brake

FAULTY BRAKE

POOR BRAKING EFFECT

	PROBABLE CAUSE
Disc brake	•Worn brake pad •Worn brake disc •Air in brake fluid •Leaking brake fluid •Faulty cylinder kit cup •Faulty caliper kit seal •Loose union bolt •Broken brake hose •Oily or greasy brake disc •Oily or greasy brake pad •Improper brake fluid level

SHOCK ABSORBER MALFUNCTION

MALFUNCTION	PROBABLE CAUSE
	• Bent or damaged damper rod • Damaged oil seal lip • Fatigued shock absorber spring

INSTABLE HANDLING

INSTABLE HANDLING	PROBABLE CAUSE
Handlebars	• Improperly installed or bent
Steering	• Incorrect toe-in • Bent steering shaft • Improperly installed steering shaft • Damaged bearing or bearing race • Bent tie-rods • Deformed steering knuckles
Tires	• Uneven tire pressures on both sides • Incorrect tire pressure • Unevenly worn tires
Wheels	• Deformed wheel • Loose bearing • Bent or loose wheel axle • Excessive wheel run-out
Frame	• Twisted • Damaged frame • Improperly installed bearing race
Swingarm	• Worn bearing or bush • Bent or damaged

FAULTY LIGHTING SYSTEM

HEADLIGHT DARK	PROBABLE CAUSE
	• Improper bulb • Too many electric accessories • Hard charging (Broken charging coil and/or faulty rectifier/regulator) • Incorrect connection • Improperly grounded • Poor contacts (main or light switch) • Bulb life expired

BULB BURNT OUT	PROBABLE CAUSE
	• Improper bulb • Faulty battery • Faulty rectifier/regulator • Improperly grounded • Faulty main and/or light switch • Bulb life expired

YFM350XA WIRING DIAGRAM

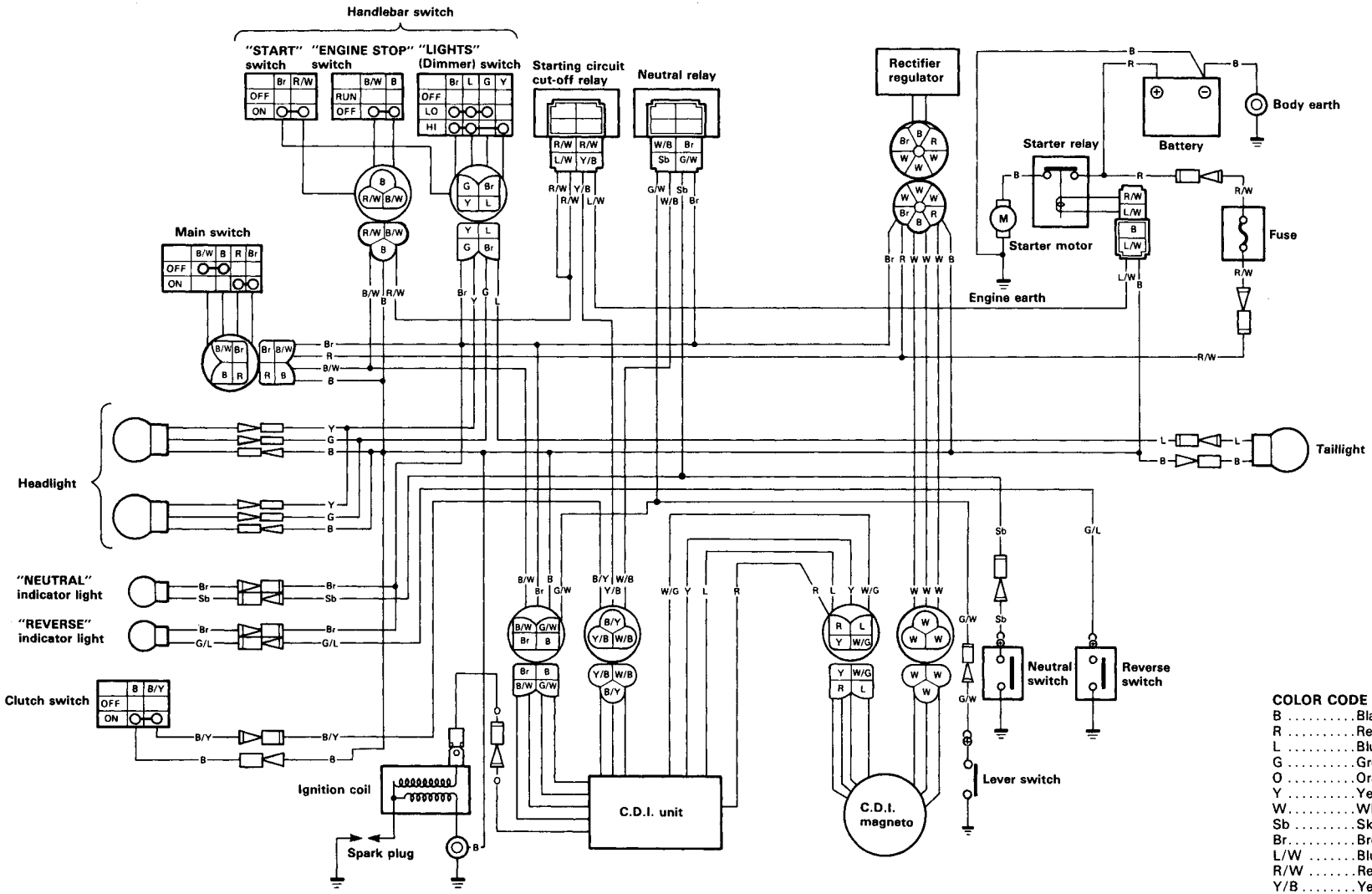

COLOR CODE

B	Black
R	Red
L	Blue
G	Green
O	Orange
Y	Yellow
W	White
Sb	Sky blue
Br	Brown
L/W	Blue/White
R/W	Red/White
Y/B	Yellow/Black
G/W	Green/White
G/L	Green/Blue
B/Y	Black/Yellow
B/W	Black/White
W/B	White/Black
W/G	White/Green

PROTECT YOUR INVESTMENT

Use Genuine YAMAHA Parts And Accessories

LIT-11616-YM-37

YAMAHA MOTOR CORPORATION, U.S.A.
PRINTED IN U.S.A.