YAMAHA

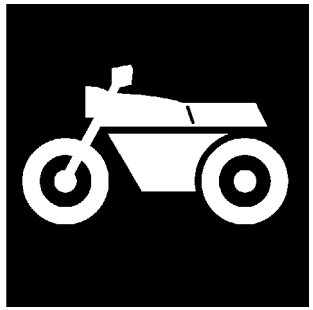

PARTS CATALOGUE
CATALOGO DE REPUESTOS

YBA125 (3P01) MIDDLE NEAR EAST
YBA125 (3P41) MEXICO

1C3P0-200S2

( )

YAMAHA
GENUINE
Parts & Accessories

YBA125
PARTS CATALOGUE
©2006 by Yamaha Motor Co., Ltd.
1st edition, September 2006
All rights reserved.
Any reprinting or unauthorized use
without the written permission of
Yamaha Motor Co., Ltd.
is expressly prohibited.
Printed in Japan.

YBA125
CATALOGO DE REPUESTOS
©2006 por Yamaha Motor Co., Ltd.
1ª edición, septiembre 2006
Todos los derechos reservados.
Toda reproducción o uso no autorizado
sin el consentimiento escrito de
Yamaha Motor Co., Ltd.
quedan expresamente prohibidos
Impreso en Japón.

FOREWORD

This Parts Catalogue is related to the parts for the model(s) on the cover page. When you are ordering replacement parts, please refer to this Parts Catalogue and quote both part numbers and part names correctly.

1. Modifications or additions which have been made after the issue of the Parts Catalogue will be announced in the Parts News.
   It is advisable that you make the necessary corrections to the Parts Catalogue according to the Parts News.

2. Abbreviations
   The following abbreviations are used in this Parts Catalogue.

   “UR” Use specified parts number.
   “UN” Use as many as needed.
   “AP” Alternate Parts
   “LM” Locally Made (Parts need to be ordered locally)
   “F#” Frame No. (Applicable machine No.)
   “O/S” Over Size

3. The number of components for assembly
   - Parts, which are to be supplied in an assembly, are listed with a dot (.) in front of the part name as shown below.
   - The numeral appearing to the right of each component part indicates the quantity of parts for each assembly unit.

PART NO.	DESCRIPTION	Q’TY	REMARKS
2F5–83310–60	FRONT FLASHER LIGHT ASSY	2	
115–83311–60	.BULB (6V–18W)	1	

4. Applicable colours of graphics are represented in the “REMARKS” as shown below.

PART NO.	DESCRIPTION	Q’TY	REMARKS
2N4–24110–00–X5	FUEL TANK COMP.	2	MXR
3J1–24240–10	.GRAPHIC, FUEL TANK	1	FOR MXR

5. Note that the illustrations for reference in finding parts numbers are not to be used for assembling. When assembling, please use the applicable service manual.

6. The asterisk (*) before a reference number indicates modified items after the first edition.

PROLOGO

Este catálogo de repuestos corresponde a las piezas para el o los modelos que figuran en la página de portada. Al formular el pedido de repuestos, se ruega citar este catálogo y especificar correctamente el número y el nombre de las piezas.

1. Las modificaciones y agregados que se hayan realizado después de la edición de este Catálogo de Repuestos, serán anunciados en las Informaciones de Recambios.
   Es recomendable que se hagan las correcciones necesarias en el Catálogo de Repuestos de acuerdo con las Informaciones de Recambios.

2. Abreviaciones
   En este. Catálogo de Repuestos se emplean las siguientes abreviaciones.

   "UR" Usar el número de partes especificado
   "UN" Usar la cantidad necesaria
   "AP" Piezas sustitutivas
   "LM" Fabricación local (Hay que pedir los repuestos en las cercanías)
   "F#" Nº de bastidor (Nº aplicable a la máquina)
   "O/S" Sobredimensionado

3. La cantidad de componentes para el montaje
   - Los componentes, suministrados como conjunto, se describen con un punto (.) que precede al nombre del parte como se indica a continuación.
   - La numeración que aparece a la derecha de cada descripción indica la cantidad de partes por cada unidad de conjunto.

CODIGO Nº	DESCRIPCION	CANT.	OBSERVACIONES
2F5–83310–60	ENSAMBLAJE DE LA LUZ	2	
115–83311–60	.BOMBILLA (6V–18W)	1	

4. Los colores de los componentes se indican como sigue en la columna de "OBSERVACIONES".

CODIGO Nº	DESCRIPCION	CANT.	OBSERVACIONES
2N4–24110–00–X5	COMP. DEL TANQUE	2	MXR
3J1–24240–10	.GRAFICO, DEL TANQUE	1	PARA MXR

5. Debe tenerse en cuenta que las ilustraciones sirven como guia para la búsqueda de los números de partes y no deben usarse para el montaje. Durante el montaje, se recomienda usar el manual de taller correspondiente.

6. EL asterisco (*) antes del número de referencia indica los elementos modificados después de la primera edición.

7. Applicable Serial No.

Frame Serial No.

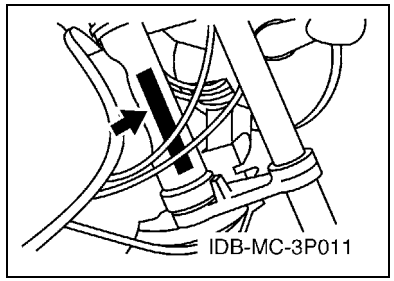

Engine Serial No.

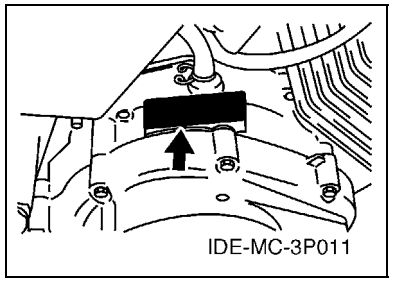

8. Applicable Colour Code (The (*) mark shows Model colour.)

Abbreviation	Colour Name	Colour Code
BG(*)	BLACK GOLD	00H9
LVS(*)	LAVENDER SILVER	00EV
LYNM9(*)	LIGHT YELLOWISH GRAY ME 9	0752
VRC7(*)	VIVID RED COCKTAIL 7	0580

9. Applicable Starting Serial No.

Frame Serial No.

Serial No.	Name Of Q'ty Column	Model Code

Engine Serial No.

Serial No.	Name Of Q'ty Column	Model Code

7. Números de serie

Nº de Serie del bastidor

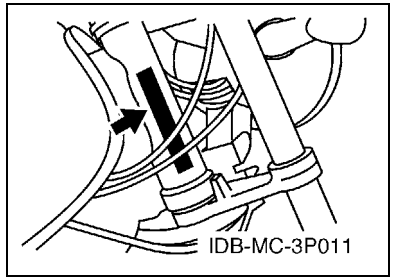

Nº de Serie del motor

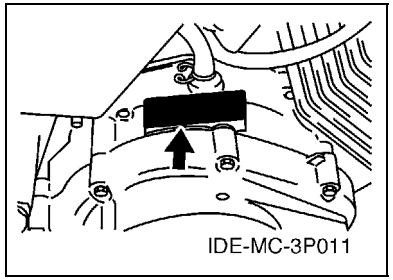

8. Códigos de color aplicables (El símbolo (*) muestra el color de modelo.)

Abreviatura	Nombre de color	Código de color
BG(*)	BLACK GOLD	00H9
LVS(*)	LAVENDER SILVER	00EV
LYNM9(*)	LIGHT YELLOWISH GRAY ME 9	0752
VRC7(*)	VIVID RED COCKTAIL 7	0580

9. Nº de serie inicial aplicable

Nº de Serie del bastidor

Nº de serie	Nombre de la columna de cantidades	Código de Modelo

Nº de Serie del motor

Nº de serie	Nombre de la columna de cantidades	Código de Modelo

CONTENTS

ENGINE

CYLINDER 1
CRANKSHAFT & PISTON 3
VALVE 4
CAMSHAFT & CHAIN 5
OIL PUMP 6
INTAKE 7
CARBURETOR 8
EXHAUST 10
CRANKCASE 11
CRANKCASE COVER 1 12
STARTER 13
STARTER CLUTCH 14
CLUTCH 15
TRANSMISSION 16
SHIFT CAM & FORK 17
SHIFT SHAFT 18

CHASSIS

FRAME 19
FENDER 20
SIDE COVER 23
REAR ARM & SUSPENSION 24
STEERING 25
FRONT FORK 27
FUEL TANK 29
SEAT 30
FRONT WHEEL 31
FRONT BRAKE CALIPER 32
REAR WHEEL 33
STEERING HANDLE & CABLE 35
FRONT MASTER CYLINDER 36
STAND & FOOTREST 37
GENERATOR 40
STARTING MOTOR 41
FLASHER LIGHT 42
METER 43
HEADLIGHT 44
TAILLIGHT 45
HANDLE SWITCH & LEVER 46
ELECTRICAL 1 47
ELECTRICAL 2 48

INDEX

NUMERICAL INDEX 49

CONTENIDO

MOTOR

CILINDRO 1
CIGUENAL & PISTON 3
VALVULA 4
ARBOL DE LEVAS & CADENA 5
BOMBA DE ACEITE 6
ADMISION 7
CARBURADOR 8
DESCARGA 10
CARTER 11
CUBIERTA DE CARTER 1 12
ARRANQUE 13
EMBRAGUE DEL ARRANQUE 14
EMBRAGUE 15
TRANSMISION 16
LEVA DE CAMBIO & HORQUILLA 17
EJE DE CAMBIO & PEDAL 18

SHASIS

CUADRO 19
GUARDABARRO 20
CUBIERTA LATERAL 23
BRAZO TRASERO & SUSPENSION 24
DIRECCION 25
HORQUILLA DELANTERA 27
DEPOSITO DE COMBUSTIBLE 29
ASIENTO 30
RUEDA DELANTERA 31
CALIBRE FRENO DELANTERA 32
RUEDA TRASERA 33
MANILLAR & CABLE 35
CILINDRO MAESTRO DELANTERO 36
SOPORTE & APOYAPIE 37
GENERADOR 40
MOTOR DE ARRANQUE 41
LUZ DE DESTELLADOR 42
MEDIDOR 43
FARO DELANTERO 44
LUZ DE COLA 45
INTERRUPTOR DE MANILLAR&PALANC 46
EQUIPO ELECTRICO 1 47
EQUIPO ELECTRICO 2 48

INDICE

INDICE NUMERICO 49

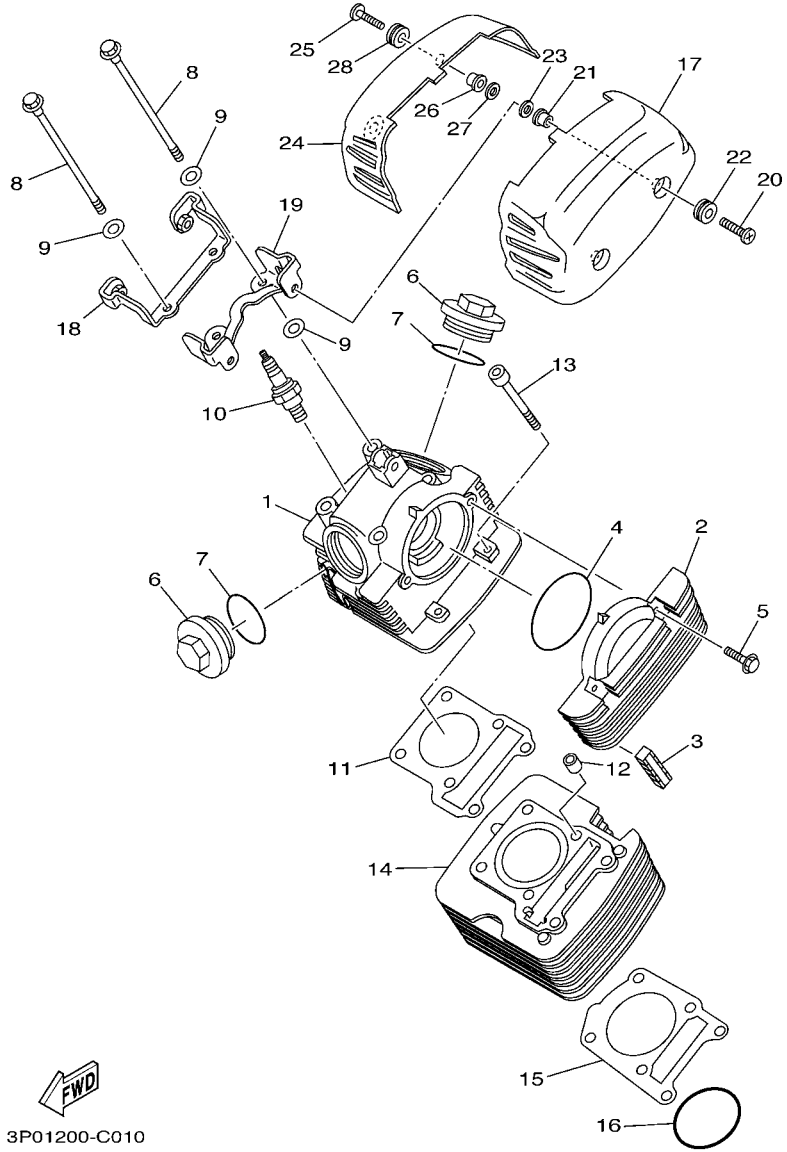

FIG. 1 CYLINDER CILINDRO

REF. NO.	PART NO. CODIGO Nº	DESCRIPTION DESCRIPCION	3P01	3P41				REMARKS OBSERVACIONES
1	4LS–E1111–01	HEAD, CYLINDER 1 CULATA CILINDRO 1	1	1				
2	4LS–E1185–00	COVER, CYLINDER HEAD SIDE 3 CUBIERTA CULATA CIL.LAT.3	1	1				
3	4LS–E1161–00	ABSORBER 1 AMORTIGUADOR 1	10	10				
4	93210–71462	O-RING ANILLO O	1	1				
5	95027–06020	BOLT, FLANGE PERNO, DE BRIDA	2	2				
6	4LS–E1186–00	COVER, CYLINDER HEAD SIDE 1 CUBIERTA CULATA CIL.LAT.1	2	2				
7	93210–44889	O-RING ANILLO O	2	2				
8	90105–087A2	BOLT, FLANGE TORNILLO	4	4				
9	90201–08609	WASHER, PLATE ARANDELA PLANA	8	8				
10	94700–00834	PLUG, SPARK (NGK CR7HSA) BUJIA (NGK CR7HSA)	1	1				
11	4LS–E1181–00	GASKET, CYLINDER HEAD 1 JUNTA, DE CULATA 1	1	1				
12	91810–14804	PIN, DOWEL PASADOR DE CLAVIJA	2	2				
13	90110–06802	BOLT, HEXAGON SOCKET HEAD TORNILLO ALLEN	2	2				
14	4LS–E1310–01	CYLINDER CILINDRO	1	1				
15	4LS–E1351–00	GASKET, CYLINDER JUNTA, DE CILINDRO	1	1				
16	93210–57897	O-RING ANILLO O	1	1				
17	5US–E1191–00	COVER, CYLINDER HEAD 1 TAPA CULATA DE CILINDRO 1	1	1				
18	5US–E1142–10	BRACKET, CYLINDER HEAD COVER 2 SOPORTE DE CULATA DE CINDRO CU	1	1				
19	5US–E1152–00	BRACKET, CYLINDER HEAD COVER SOPORTE DE CULATA DE CINDRO CU	1	1				
20	90150–06809	SCREW, ROUND HEAD TORNILLO CABEZA REDONDA	2	2				
21	90560–06201	SPACER SEPARADOR	2	2				
22	90480–13018	GROMMET TAPON	2	2				
23	90202–06239	WASHER, PLATE ARANDELA DE PLANA	2	2				
24	5US–E1192–00	COVER, CYLINDER HEAD 2 TAPA CULATA DE CILINDRO 2	1	1				
25	90150–06809	SCREW, ROUND HEAD TORNILLO CABEZA REDONDA	2	2				
26	90560–06201	SPACER SEPARADOR	2	2				
27	90202–06239	WASHER, PLATE ARANDELA DE PLANA	2	2				

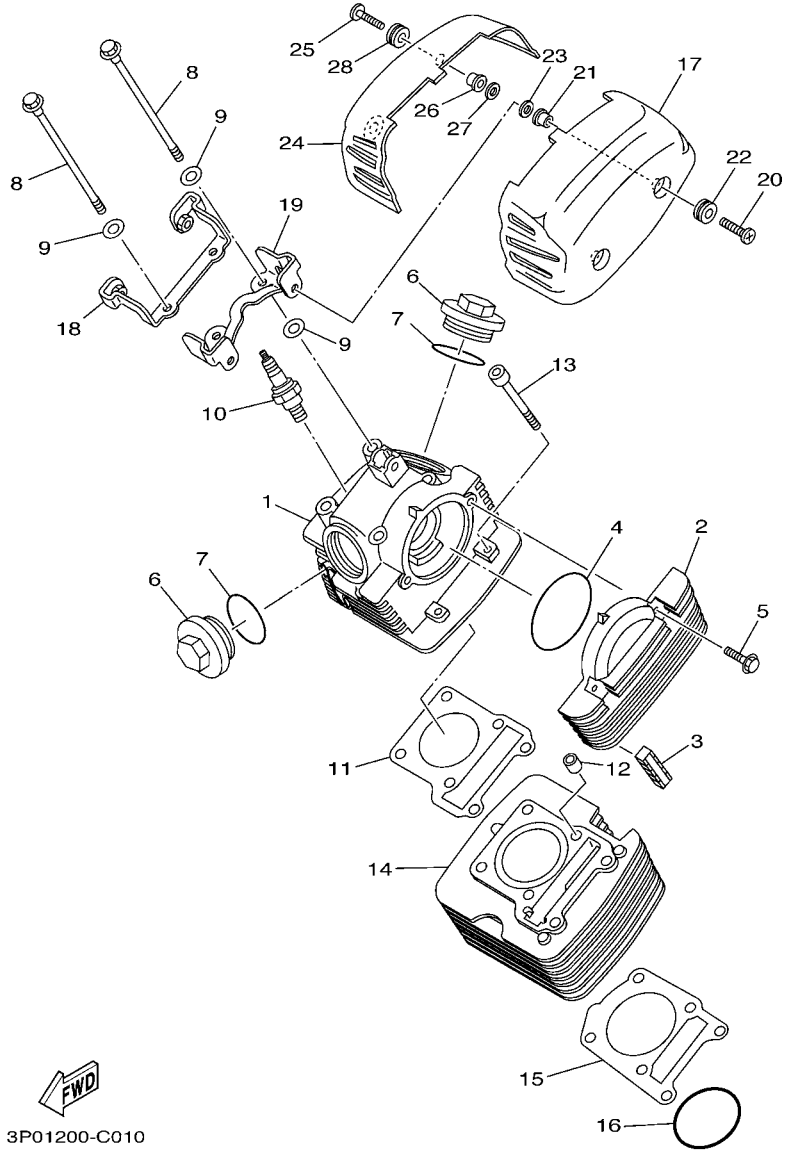

FIG. 1 CYLINDER CILINDRO

REF. NO.	PART NO. CODIGO Nº	DESCRIPTION DESCRIPCION	3P01	3P41				REMARKS OBSERVACIONES
28	90480–13018	GROMMET TAPON	2	2				

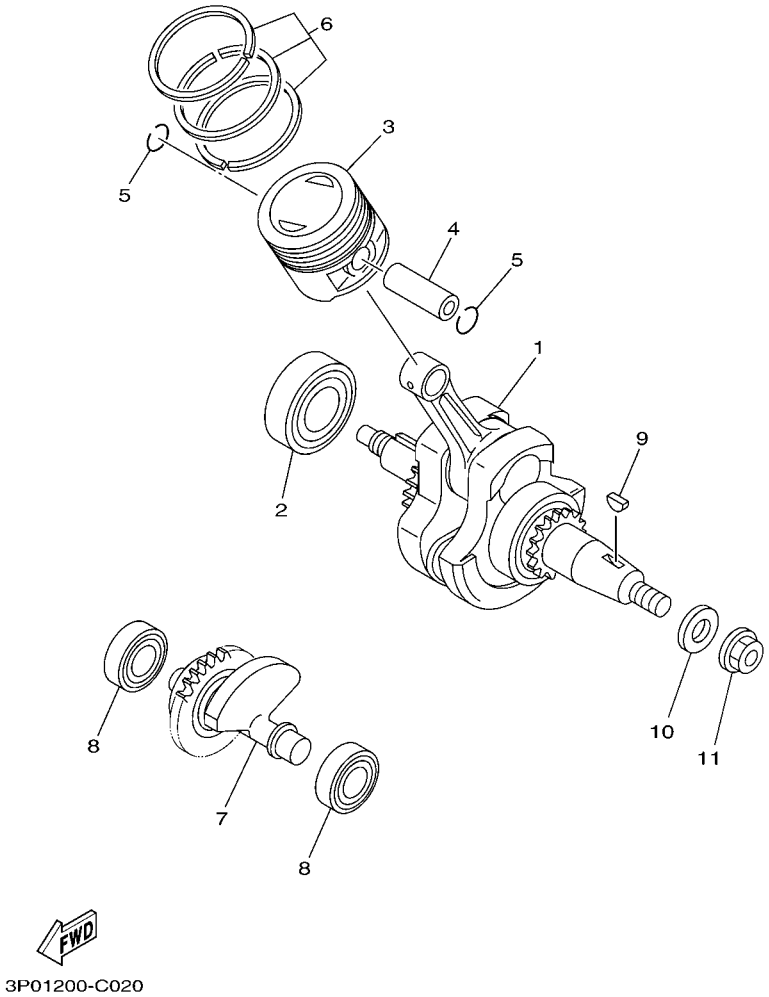

FIG. 2 CRANKSHAFT & PISTON CIGUENAL & PISTON

REF. NO.	PART NO. CODIGO Nº	DESCRIPTION DESCRIPCION	3P01	3P41				REMARKS OBSERVACIONES
1	5US–E1400–00	CRANKSHAFT ASSY CIGUENAL COMPLETO	1	1				
2	93306–205X3	BEARING COJINETE	1	1				
3	4LS–E1631–01	PISTON (STD) PISTON (NORMA)	1	1				
	4LS–11636–00	PISTON (0.50MM O/S) PISTON (0.50MM O/S)	1	1				AP AP
	4LS–11638–00	PISTON (1.00MM O/S) PISTON (1.00MM O/S)	1	1				AP AP
4	4LS–E1633–00	PIN, PISTON PASADOR, PISTON	1	1				
5	93450–16812	CIRCLIP SEGURO	2	2				
6	4LS–11603–00	PISTON RING SET (STD) JUEGO DE ANILLOS (NORMA)	1	1				
	4LS–11605–00	PISTON RING SET (0.50MM O/S) JUEGO DE ANILLOS (0.50MM O/S)	1	1				AP AP
	4LS–11607–00	PISTON RING SET (1.00MM O/S) JUEGO DE ANILLOS (1.00MM O/S)	1	1				AP AP
7	4LS–E1500–01	BALANCER ASSY COMPENSADOR COMPLETA	1	1				
8	93306–202YD	BEARING COJINETE	2	2				
9	90280–03017	KEY, WOODRUFF CUNA WOODRUFF	1	1				
10	90201–122H1	WASHER, PLATE ARANDELA PLANA	1	1				
11	95707–12500	NUT, FLANGE TUERCA DE BRIDA	1	1				

FIG. 3 VALVE VALVULA

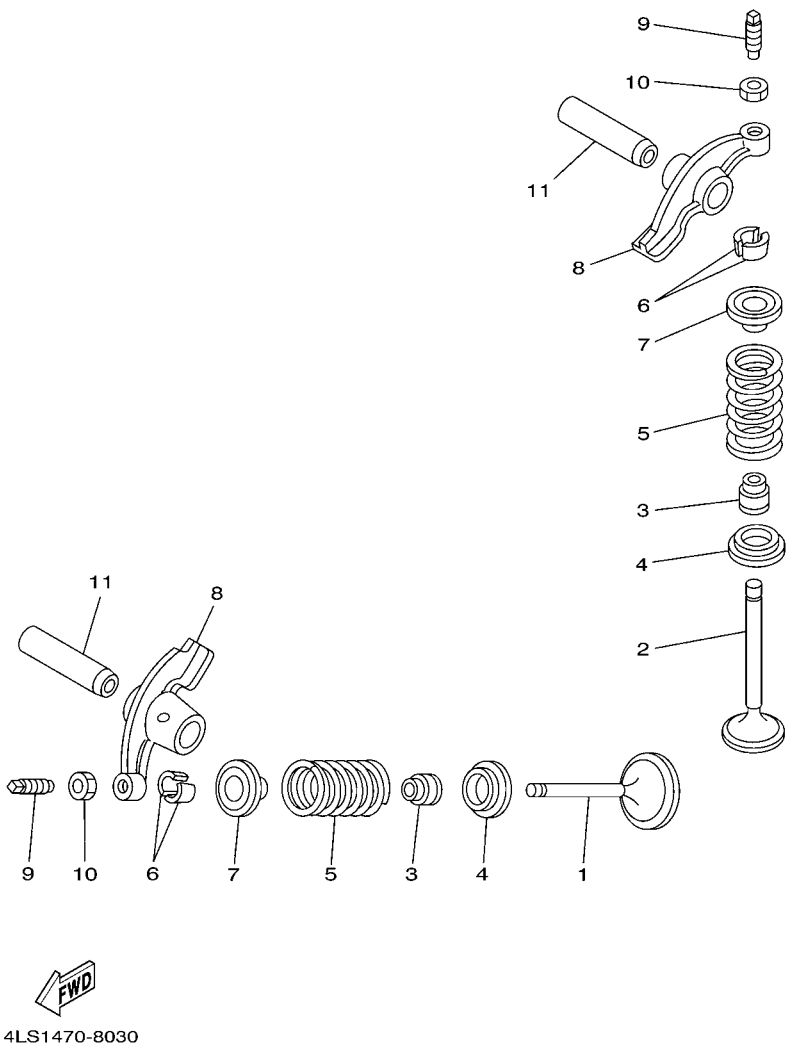

REF. NO.	PART NO. CODIGO Nº	DESCRIPTION DESCRIPCION	3P01	3P41				REMARKS OBSERVACIONES
1	4LS–E2111–00	VALVE, INTAKE VALVULA DE ADMISION	1	1				
2	4LS–E2121–10	VALVE, EXHAUST VALVULA DE ESCAPE	1	1				
3	4LS–E2119–00	SEAL, VALVE STEM SELLO DE ACEITE VALVULA	2	2				
4	4LS–E2116–00	SEAT, VALVE SPRING ASIENTO RESORTE DE VALVULA	2	2				
5	5YY–E2113–00	SPRING, VALVE INNER RESORTE VALVULA INTERNA	2	2				
6	4LS–E2118–00	COTTER, VALVE SEGURO DE VALVULA	4	4				
7	4LS–E2117–00	RETAINER, VALVE SPRING RETEN RESORTE DE VALVULA	2	2				
8	5YY–E2151–00	ARM, VALVE ROCKER BRAZO DE BALANCIN DE VALVULA	2	2				
9	4LS–E2159–01	SCREW, VALVE ADJUSTING TORNILLO DE AJUSTE DE VALVULA	2	2				
10	90170–05302	NUT TUERCA	2	2				
11	4LS–E2156–00	SHAFT, ROCKER 2 EJE DE BALANCIN	2	2				

FIG. 4 CAMSHAFT & CHAIN ARBOL DE LEVAS & CADENA

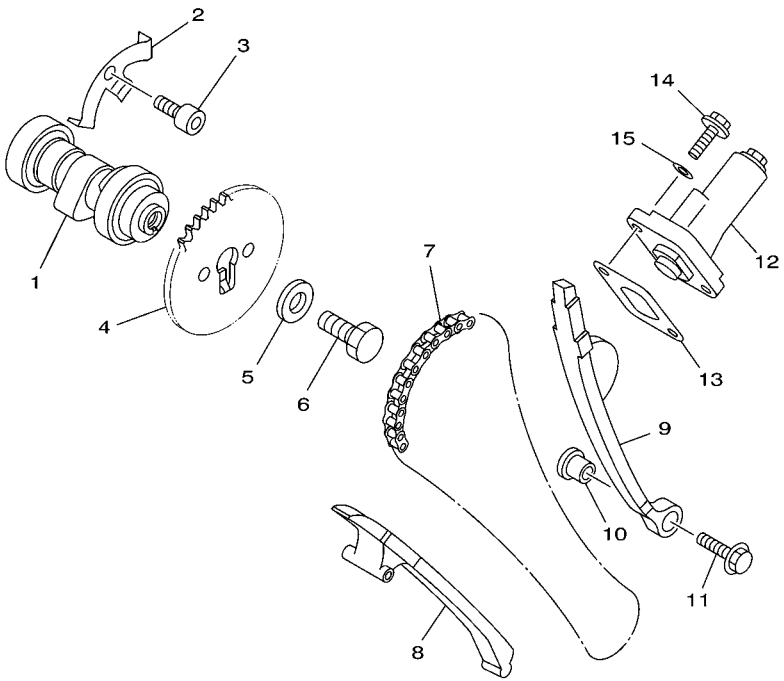

4LS1470-8040

REF. NO.	PART NO. CODIGO Nº	DESCRIPTION DESCRIPCION	3P01	3P41				REMARKS OBSERVACIONES
1	4LS–E2170–00	CAMSHAFT ASSY 1 ARBOL DE LEVAS COMPLETO 1	1	1				
2	4LS–E111F–00	PLATE PLACA	1	1				
3	90110–06810	BOLT, HEXAGON SOCKET HEAD TORNILLO ALLEN	1	1				
4	4LS–E2176–00	SPROCKET, CAM CHAIN CATALINA DE CADENA	1	1				
5	90201–08326	WASHER, PLATE ARANDELA PLANA	1	1				
6	90101–08590	BOLT TORNILLO	1	1				
7	94568–43088	CHAIN CADENA	1	1				
8	4LS–E2231–00	GUIDE, STOPPER 1 TOPE DE GUIA 1	1	1				
9	4LS–E2241–10	GUIDE, STOPPER 2 TOPE DE GUIA 2	1	1				
10	4LS–E5598–00	COLLAR COLLAR	1	1				
11	90105–06812	BOLT, FLANGE TORNILLO	1	1				
12	4LS–E2210–00	TENSIONER ASSY, CAM CHAIN TENSOR CADENA DE LEVA	1	1				
13	4LS–E2213–00	GASKET, TENSIONER CASE EMPAQUE DE CAJA TENSOR	1	1				
14	95027–06016	BOLT, FLANGE PERNO, DE BRIDA	2	2				
15	90430–06817	GASKET JUNTA	2	2				

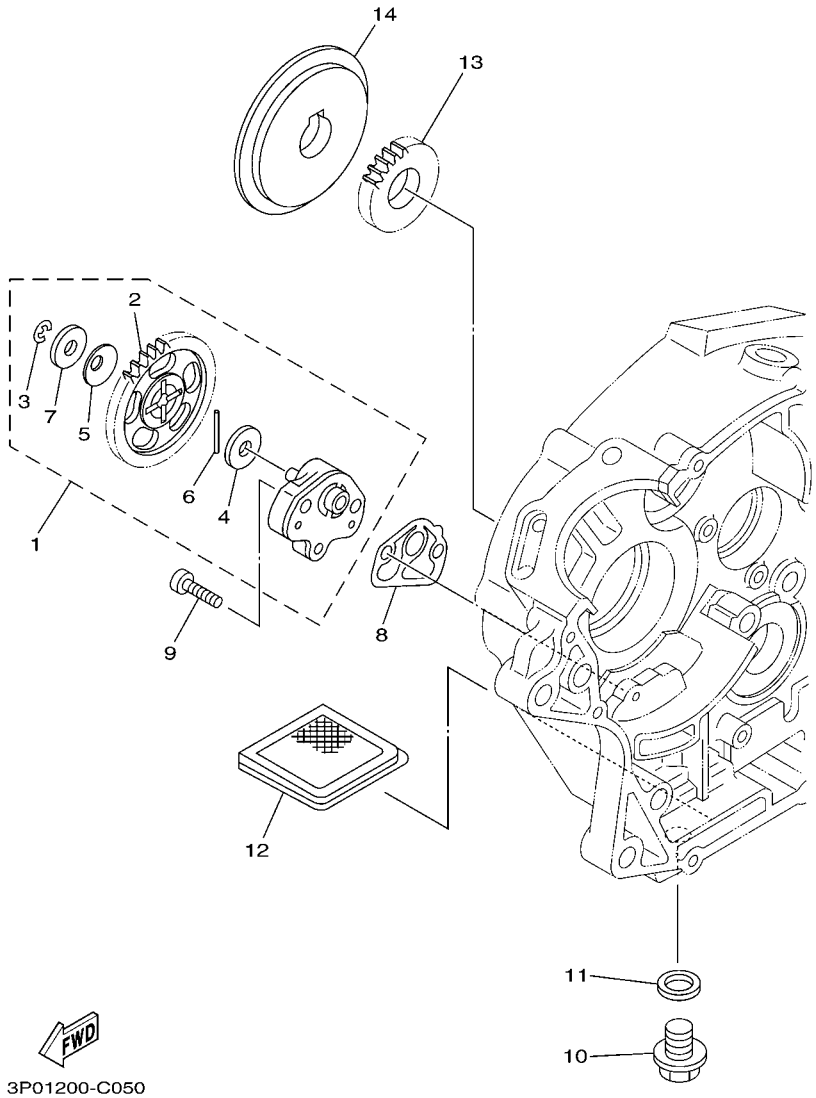

FIG. 5 OIL PUMP — BOMBA DE ACEITE

REF. NO.	PART NO. CODIGO Nº	DESCRIPTION DESCRIPCION	3P01	3P41				REMARKS OBSERVACIONES
1	5YY–E3300–00	OIL PUMP ASSY BOMBA DE ACEITE COMPLETA	1	1				
2	5KA–E3325–20	.GEAR, PUMP DRIVEN .ENGRANAJE IMPULSOR DE BOMBA	1	1				
3	99001–05600	.CIRCLIP .PRESILLA REDONDA	1	1				
4	90201–07641	.WASHER, PLATE .ARANDELA PLANA	1	1				
5	90208–07052	.WASHER, CONICAL SPRING .ARANDELA DE RESORTE CONICO	1	1				
6	93602–20800	.PIN, DOWEL .PASADOR DE CLAVIJA	1	1				
7	90201–07800	.WASHER, PLATE .ARANDELA PLANA	1	1				
8	4LS–E3329–00	GASKET, PUMP COVER EMPAQUE TAPA DE BOMBA	1	1				
9	90155–06802	SCREW, FLAT FILLISTER TORNILLO CABEZA PLANA RAN.	2	2				
10	90340–12097	PLUG, STRAIGHT SCREW TORNILLO, DE DRENAJE	1	1				
11	90430–12227	GASKET JUNTA	1	1				
12	4LS–E3411–00	STRAINER, OIL FILTRO DE ACEITE	1	1				
13	4LS–E3324–00	GEAR, PUMP DRIVE (22T) ENGRANAJE TRACC. DE BOMBA(22T)	1	1				
14	4LS–E3451–00	FILTER,ROTARY FILTRE ROTATIVO	1	1				

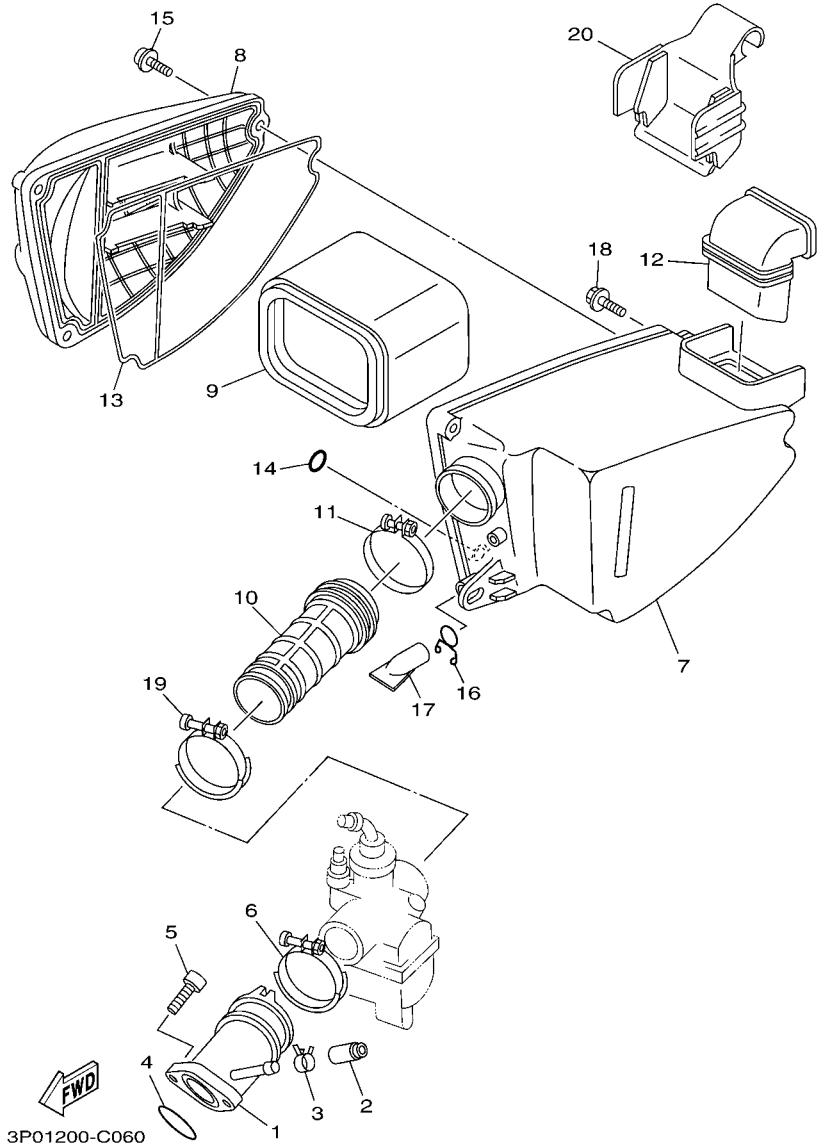

FIG. 6 INTAKE — ADMISION

REF. NO.	PART NO. CODIGO Nº	DESCRIPTION DESCRIPCION	3P01	3P41				REMARKS OBSERVACIONES
1	5DG–E3586–01	JOINT, CARBURETOR 1 TOBERA DE CARBURADOR 1	1	1				
2	4LS–E3569–00	PLUG, BLIND TAPON CIEGO	1	1				
3	90467–10819	CLIP PRESILLA	1	1				
4	93210–30611	O-RING ANILLO O	1	1				
5	91317–06020	BOLT PERNO	2	2				
6	90450–45802	HOSE CLAMP ASSY BRIDA, MANGUERA	1	1				
7	3P4–E4411–00	CASE, AIR CLEANER 1 CAJA FILTRO DEL AIRE 1	1	1				
8	5US–E4412–00	CAP, CLEANER CASE 1 TAPA CAJA DEL FILTRO 1	1	1				
9	5US–E4450–00	ELEMENT ASSY, AIR CLEANER ELEMENTO COMP.FILTRO DE AIRE	1	1				
10	5US–E4453–00	JOINT, AIR CLEANER 1 UNION DEL FILTRO DEL AIRE 1	1	1				
11	5US–E4456–00	BAND BANDA	1	1				
12	5US–E4437–00	DUCT CONDUCTO	1	1				
13	5US–E4452–00	SEAL SELLO	1	1				
14	5US–E4476–00	SEAL SELLO	1	1				
15	97607–05220	SCREW,WITH WASHER TORNILLO CAB CON PLANA C/ARAN	3	3				
16	90467–11106	CLIP PRESILLA	1	1				
17	4LS–E443E–00	PIPE, DRAIN TUBO, DRENAJE	1	1				
18	90119–06108	BOLT, WITH WASHER TORNILLO CON ARANDELA	2	2				
19	5US–E4456–00	BAND BANDA	1	1				
20	5US–F1665–00	GUIDE, MUD GUARD GUIA DE GUARDAFANGO	1	1				

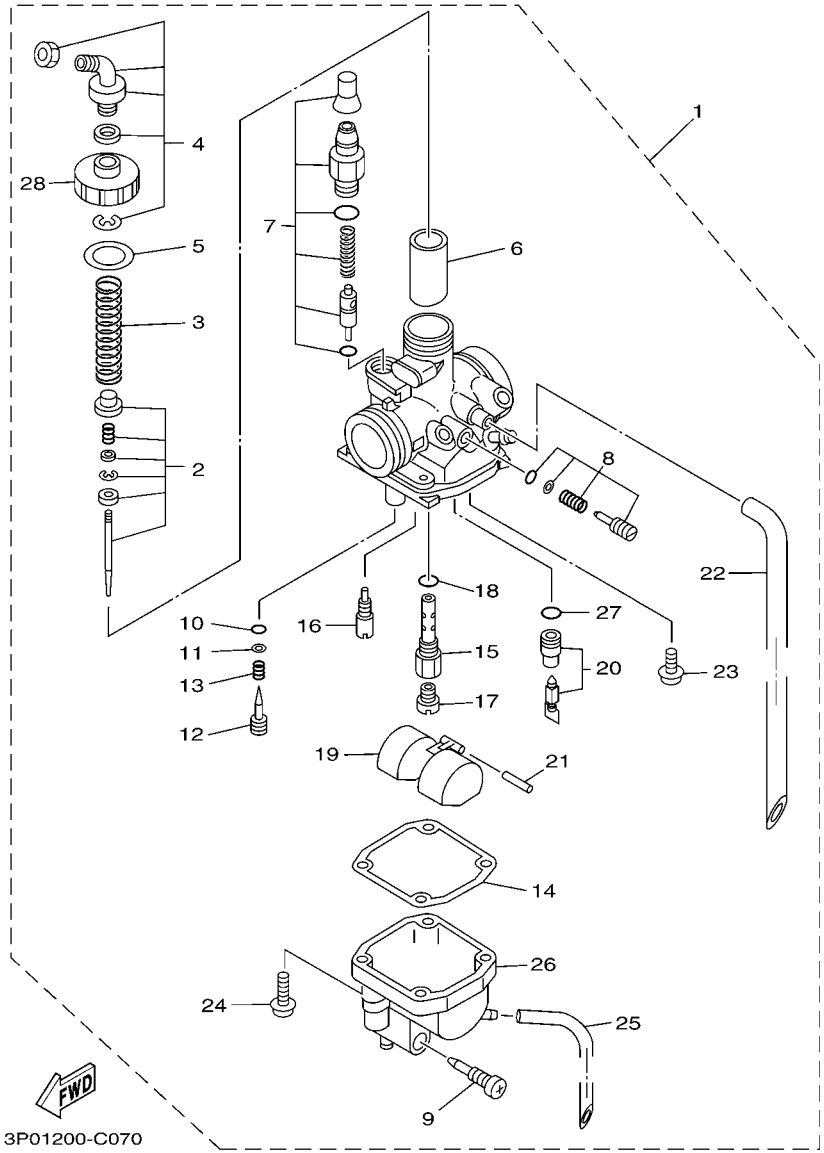

FIG. 7 CARBURETOR CARBURADOR

REF. NO.	PART NO. CODIGO Nº	DESCRIPTION DESCRIPCION	3P01	3P41				REMARKS OBSERVACIONES
1	5US–E4101–00	CARBURETOR ASSY 1 CARBURADOR COMPLETO 1	1	1				
2	5US–1490J–00	.NEEDLE SET .CJTO. AGUJA	1	1				
3	4LS–14131–00	.SPRING, THROTTLE VALVE .RESORTE VALVULA DE ACELERACIO	1	1				
4	5DG–14106–00	.CABLE ADJUST SCREW SET .TORNILLO AJUSTADOR DE CABLE	1	1				
5	4LS–14126–00	.GASKET .EMPAQUE	1	1				
6	5HH–14112–25	.VALVE, THROTTLE 1 .VALVULA DE ACELERACION 1	1	1				
7	4LS–1410A–00	.STARTER SET .JUEGO DE ARRANQUE	1	1				
8	5HH–14103–00	.THROTTLE SCREW SET .CJTO. TORNILLO DEL RALENTI	1	1				
9	4LS–14191–00	.PLUG, DRAIN .TORNILLO, DE DRENAJE	1	1				
10	3H1–14147–00	.O-RING .ANILLO O	1	1				
11	3H1–14962–00	.WASHER .ARANDELA	1	1				
12	4LS–14923–20	.SCREW, PILOT .TORNILLO DE AJUSTE	1	1				
13	174–14134–00	.SPRING, AIR ADJUSTING .RESORTE AJUSTE DE VALVULA	1	1				
14	24W–14184–00	.GASKET, FLOAT CHAMBER .JUNTA, CAMARA DE BOYA	1	1				
15	4LS–14145–00	.SETTER, NEEDLE JET .ESPREA	1	1				
16	3H1–14142–17	.JET, PILOT (# 17.5) .SURTIDOR DE RALENTI (# 17.5)	1	1				
17	620–1423A–69	.JET, MAIN (#92.5) .ESPREA PRINCIPAL (#92.5)	1	1				
18	583–14561–00	.O-RING .ANILLO O	1	1				
19	5HH–14185–00	.FLOAT .BOYA	1	1				
20	5KA–14107–15	.NEEDLE VALVE SET .VALVULA DE AGUJA	1	1				
21	127–14186–00	.PIN, FLOAT .PASADOR DE LA BOYA	1	1				
22	4LS–14197–10	.PIPE .TUBO RESPIRADERO	1	1				
23	97607–03106	.SCREW,WITH WASHER .TORNILLO CAB CON PLANA C/ARAN	1	1				
24	97607–04114	.SCREW,WITH WASHER .TORNILLO CAB CON PLANA C/ARAN	4	4				
25	2AL–14196–00	.PIPE .TUBO DE DRENASE	1	1				
26	4LS–14181–00	.BODY, FLOAT CHAMBER 1 .CUERPO DE CAMARA DE BOIA	1	1				
27	878–14147–00	.O-RING .ANILLO O	1	1				

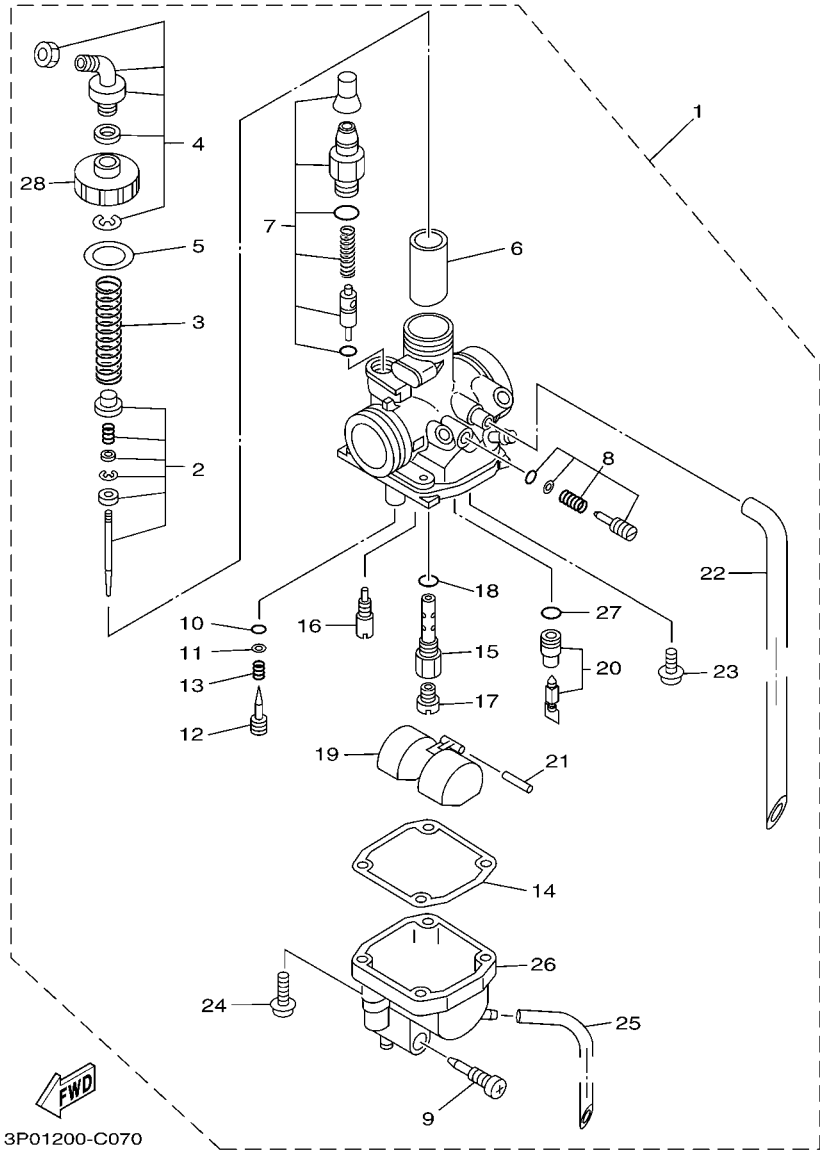

FIG. 7 CARBURETOR CARBURADOR

REF. NO.	PART NO. CODIGO Nº	DESCRIPTION DESCRIPCION	3P01	3P41				REMARKS OBSERVACIONES
28	4LS–14158–00	.TOP, MIXING CHAMBER .TECHO DE CAMARA DE MEZCLA	1	1				

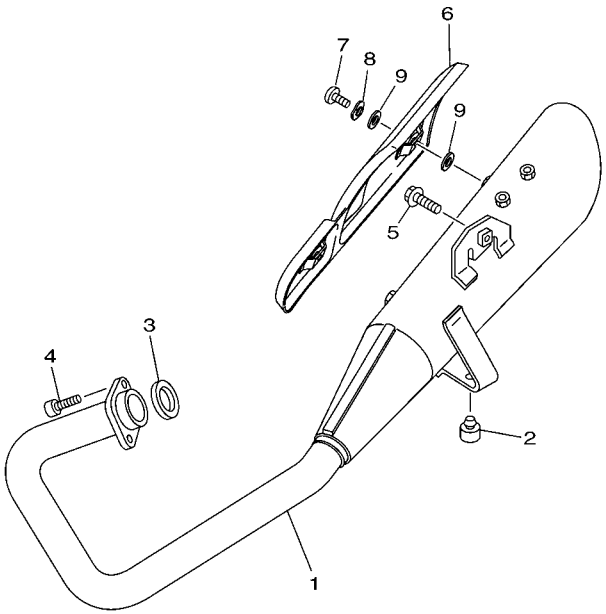

3P01200-C080

FIG. 8 EXHAUST DESCARGA

REF. NO.	PART NO. CODIGO Nº	DESCRIPTION DESCRIPCION	3P01	3P41				REMARKS OBSERVACIONES
1	5US–E4703–10	MUFFLER COMP. 1 SILENCIADOR COMPL. 1	1	1				
2	5US–F7114–00	STOPPER, MAIN STAND TOPE DE PUNTAL PRINCIPAL	1	1				
3	3AH–E4613–00	GASKET, EXHAUST PIPE JUNTA, TUBO DE ESCAPE	1	1				
4	91317–06020	BOLT PERNO	2	2				
5	95827–08020	BOLT, FLANGE TORNILLO	1	1				
6	5US–E4718–00	PROTECTOR, MUFFLER 1 PROTECTOR DE SILENCIADOR 1	1	1				
7	98980–06010	SCREW, BIND TORNILLO DE LIGAR	2	2				
8	90206–06090	WASHER, WAVE ARANDELA ONDULADA	2	2				
9	90202–05800	WASHER, PLATE ARANDELA DE PLANA	4	4				

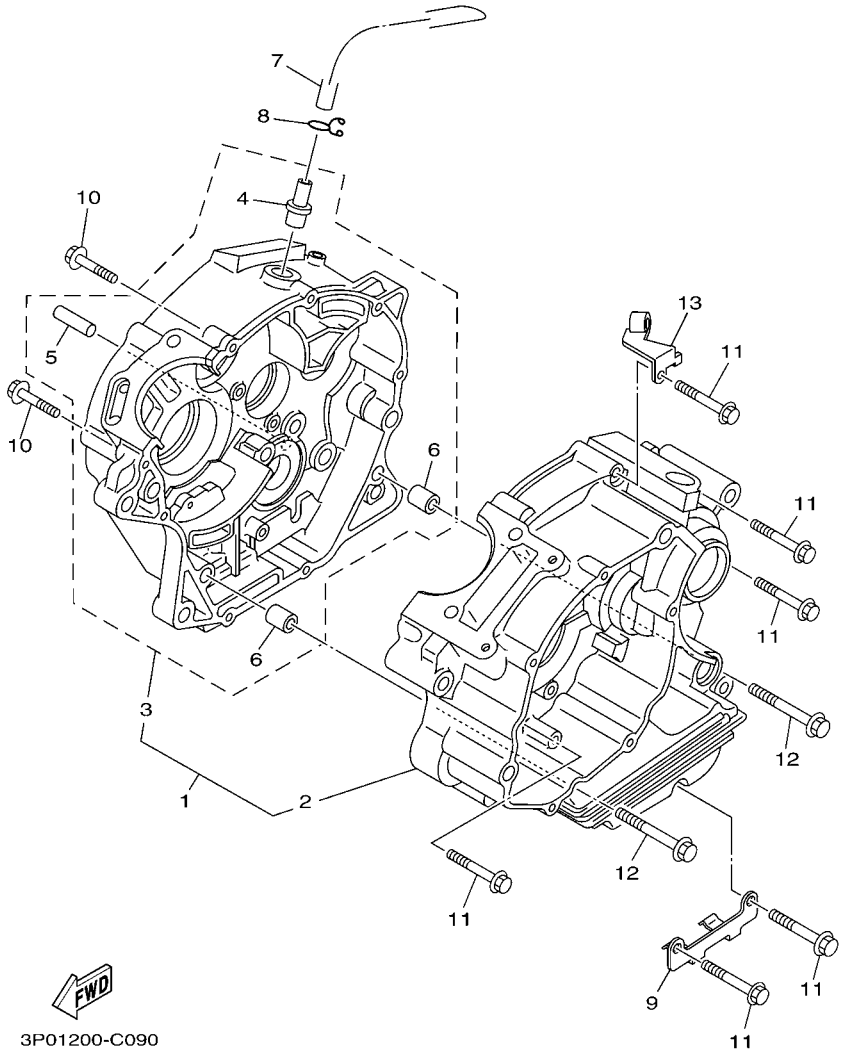

FIG. 9 CRANKCASE CARTER

REF. NO.	PART NO. CODIGO Nº	DESCRIPTION DESCRIPCION	3P01	3P41				REMARKS OBSERVACIONES
1	5US–WE515–00	CRANKCASE ASSY CARTER COMPLETO	1	1				
2	5US–E5111–00	.CRANKCASE 1 .CARTER MANIVELA 1	1	1				
3	4LS–WE512–00	.CRANKCASE 2 .CARTER 2	1	1				
4	4LS–E1167–00	..PIPE, BREATHER 2 ..CUBIERTA RESPIRADERO 2	1	1				
5	93608–30839	..PIN, DOWEL ..PASADOR DE CLAVIJA	1	1				
6	91830–21014	..PIN, DOWEL ..PASADOR DE CLAVIJA	2	2				
7	4LS–E1166–00	PIPE, BREATHER 1 TUBO RESPIRADERO 1	1	1				
8	90467–13042	CLIP PRESILLA	1	1				
9	90462–16818	CLAMP BRIDA	1	1				
10	90105–06802	BOLT, FLANGE TORNILLO	2	2				
11	90105–06800	BOLT, FLANGE TORNILLO	6	6				
12	90105–06801	BOLT, FLANGE TORNILLO	2	2				
13	4LS–E5441–00	HOLDER, CLUTCH CABLE SOSTEN DE CABLE DE EMBRAGUE	1	1				

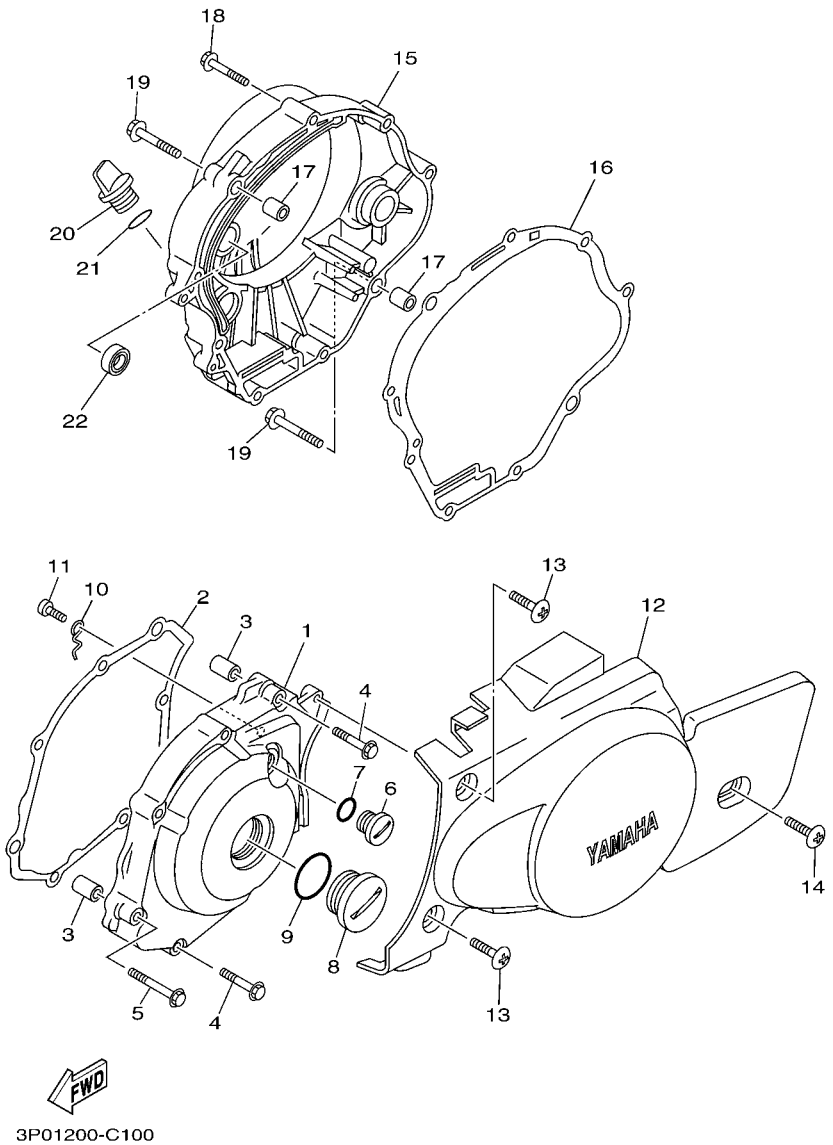

FIG. 10 CRANKCASE COVER 1 CUBIERTA DE CARTER 1

REF. NO.	PART NO. CODIGO Nº	DESCRIPTION DESCRIPCION	3P01	3P41				REMARKS OBSERVACIONES
1	4LS–YE541–00	COVER, CRANKCASE 1 CUBIERTA DE CARTER 1	1	1				
2	4LS–E5451–00	GASKET, CRANKCASE COVER 1 EMPAQ DE CUBIERTA DE CARTER	1	1				
3	91830–21014	PIN, DOWEL PASADOR DE CLAVIJA	2	2				
4	95027–06035	BOLT, FLANGE PERNO, DE BRIDA	5	5				
5	95027–06045	BOLT, FLANGE PERNO, DE BRIDA	2	2				
6	90340–14810	PLUG, STRAIGHT SCREW TORNILLO, DE DRENAJE	1	1				
7	93210–14899	O-RING ANILLO O	1	1				
8	90340–32812	PLUG, STRAIGHT SCREW TORNILLO, DE DRENAJE	1	1				
9	93210–328A4	O-RING ANILLO O	1	1				
10	4LS–E5191–00	PLATE PLACA	1	1				
11	98507–06010	SCREW, PAN HEAD TORNILLO DE CABEZA PLANA	1	1				
12	5US–E5418–00	COVER, CHAIN CASE CUBIERTA CAJA DE CADENA	1	1				
13	90150–06813	SCREW, ROUND HEAD TORNILLO CABEZA REDONDA	2	2				
14	90150–06812	SCREW, ROUND HEAD TORNILLO CABEZA REDONDA	1	1				
15	5US–YE542–01	COVER, CRANKCASE 2 TAPA DE CARTER DERECHA	1	1				
16	4LS–E5461–00	GASKET, CRANKCASE COVER 2 JUNTA TAPA CARTER DERECHO 2	1	1				
17	91830–21014	PIN, DOWEL PASADOR DE CLAVIJA	2	2				
18	95027–06035	BOLT, FLANGE PERNO, DE BRIDA	7	7				
19	95027–06045	BOLT, FLANGE PERNO, DE BRIDA	2	2				
20	4LS–E5362–10	PLUG, OIL LEVEL TAPON DEL NIVEL DE ACEITE	1	1				
21	93210–19809	O-RING ANILLO O	1	1				
22	93101–10838	OIL SEAL SELLO ACEITE	1	1				

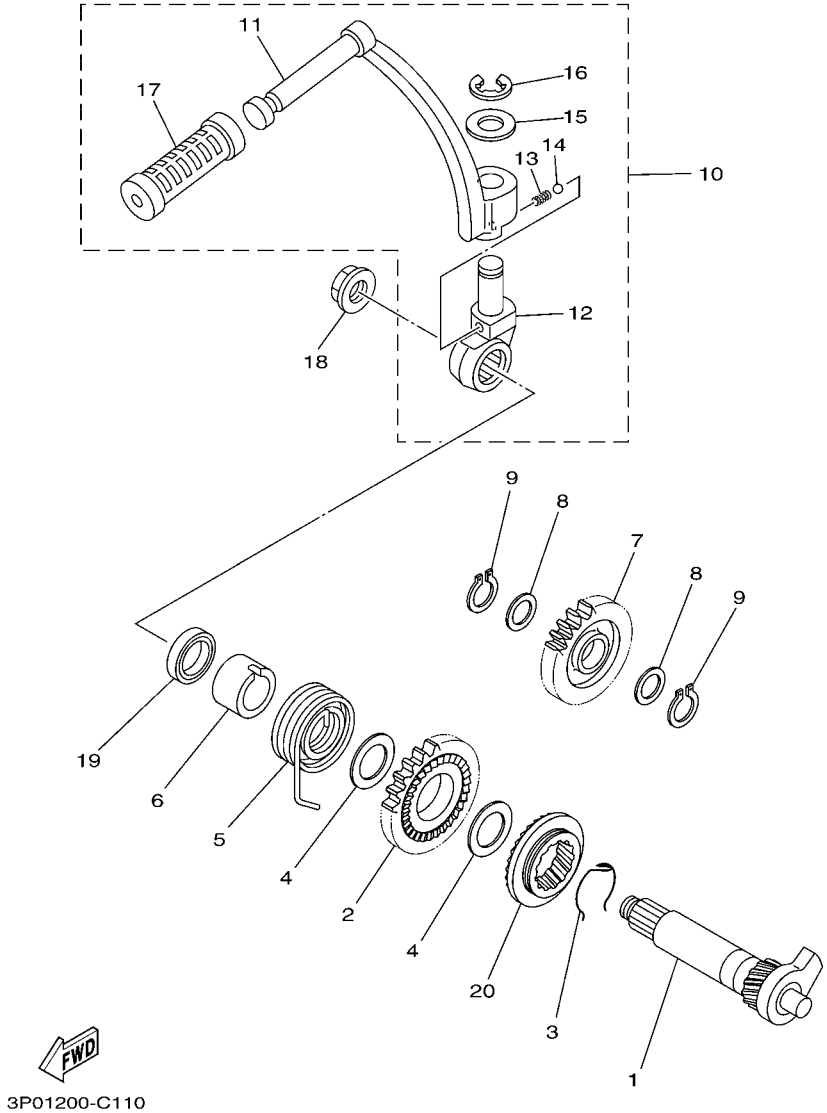

FIG. 11 STARTER ARRANQUE

REF. NO.	PART NO. CODIGO Nº	DESCRIPTION DESCRIPCION	3P01	3P41				REMARKS OBSERVACIONES
1	5US–E5661–02	AXLE, KICK EJE DE PEDAL DE ARRANQUE	1	1				
2	5YY–E5641–00	GEAR, KICK (28T) ENGRANAJE PEDAL ARRANQUE (28T)	1	1				
3	90468–26048	CLIP PRESILLA	1	1				
4	90201–202L3	WASHER, PLATE (0.5T) ARANDELA DE PLACA(0.5T)	2	2				
5	90508–26667	SPRING, TORSION RESORTE DE TORSION	1	1				
6	5YY–E5666–00	SPACER SEPARADOR	1	1				
7	5YY–E5651–01	GEAR, KICK IDLE PINON LIBRE, PEDAL ARRANQUE	1	1				
8	90201–15800	WASHER, PLATE ARANDELA PLANA	2	2				
9	99009–15400	CIRCLIP PRESILLA REDONDA	2	2				
10	5US–E5620–00	KICK CRANK ASSY PEDAL DE ARRANQUE COMPLETO	1	1				
11	36L–E5611–00	.CRANK, KICK .MANIVELA DE PEDAL DE ARRANQU	1	1				
12	5US–E5621–00	.BOSS, KICK CRANK .COPA DE MANIVELA DE PEDAL	1	1				
13	90501–12081	.SPRING, COMPRESSION .RESORTE DE COMPRESION	1	1				
14	93507–32819	.BALL .ESFERA	1	1				
15	90201–153A1	.WASHER, PLATE .ARANDELA PLANA	1	1				
16	99001–10600	.CIRCLIP .PRESILLA REDONDA	2	2				
17	36L–E5618–00	.COVER, KICK LEVER .GOMA PROTECTORA, PEDAL	1	1				
18	90179–12659	NUT TUERCA	1	1				
19	93109–20821	OIL SEAL SELLO ACEITE	1	1				
20	5YY–E5671–00	WHEEL, RATCHET RUEDA DE TRINQUETE	1	1				

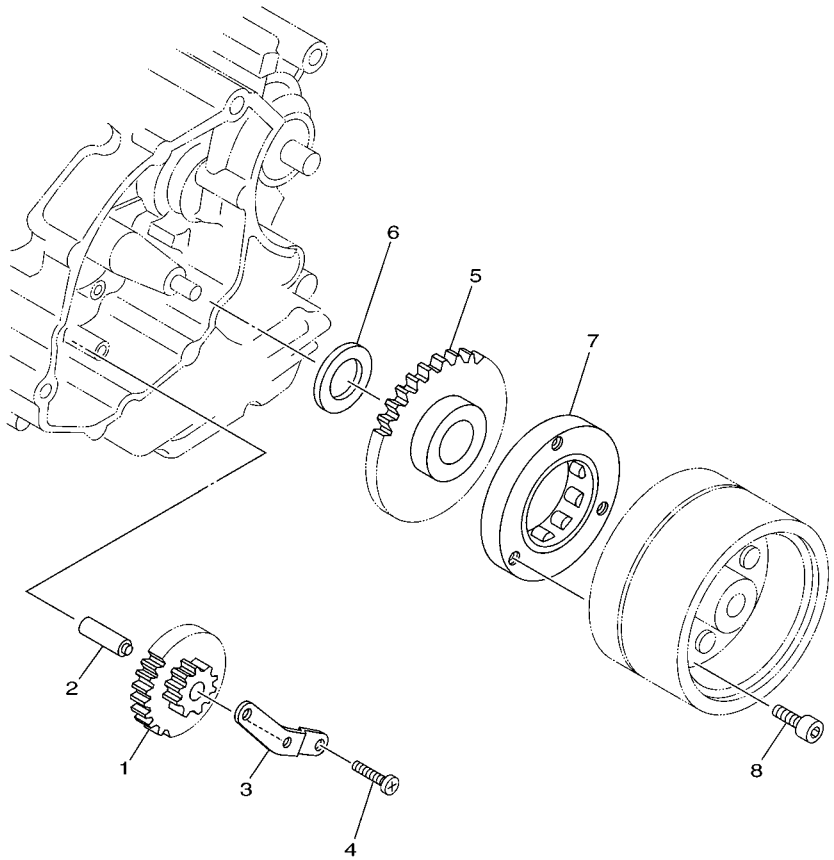

3P01200-C120

FIG. 12 STARTER CLUTCH EMBRAGUE DEL ARRANQUE

REF. NO.	PART NO. CODIGO Nº	DESCRIPTION DESCRIPCION	3P01	3P41				REMARKS OBSERVACIONES
1	3LN–15512–00	GEAR, IDLER 1 ENGRENAJE NEUTRO	1	1				
2	5US–E5521–00	SHAFT 1 EJE 1	1	1				
3	5US–E5532–00	PLATE, IDLE GEAR PLACA DE ENGRENAJE NEUTRO	1	1				
4	9850N–06012	SCREW, PAN HEAD TORNILLO DE CABEZA CON PLANA	2	2				
5	5AP–15517–00	GEAR, IDLER 2 ENGRENAJE POSICION 2DA	1	1				
6	90201–25290	WASHER, PLATE ARANDELA PLANA	1	1				
7	5US–E5590–00	STARTER ONE-WAY ASSY ENSAMBLE GUIA CADENA ARRANQUE	1	1				
8	90110–08802	BOLT, HEXAGON SOCKET HEAD TORNILLO ALLEN	3	3				

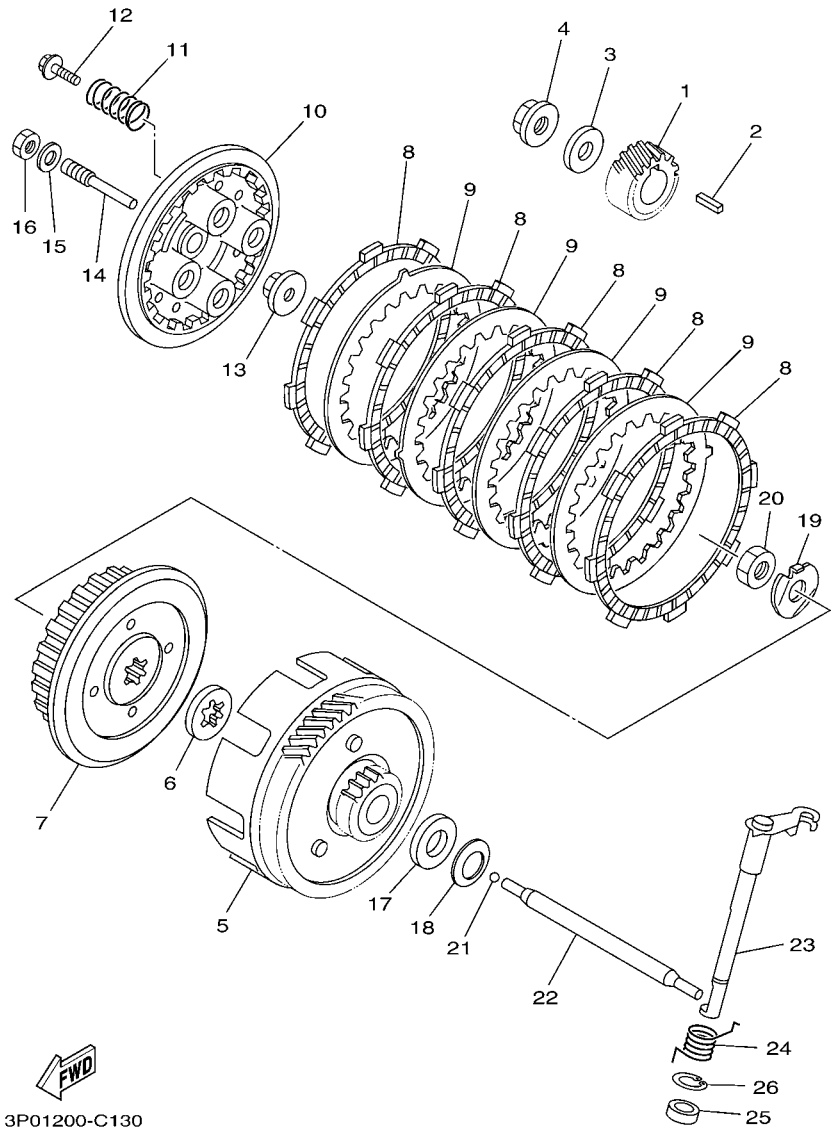

FIG. 13 CLUTCH EMBRAGUE

REF. NO.	PART NO. CODIGO Nº	DESCRIPTION DESCRIPCION	3P01	3P41				REMARKS OBSERVACIONES
1	401–16111–10	GEAR, PRIMARY DRIVE (19T) ENGRANAJE TRACC.PRIMARIA (19T)	1	1				
2	90282–05001	KEY, STRAIGHT (5MMX16MM) CHAVETA, RECTA (5MMX16MM)	1	1				
3	90201–122H1	WASHER, PLATE ARANDELA PLANA	1	1				
4	90179–12659	NUT TUERCA	1	1				
5	5RE–E6150–00	PRIMARY DRIVEN GEAR COMP. CAMPANA DE EMBRAGUE	1	1				
6	4LS–E6154–00	PLATE, THRUST 1 ARANDELA, DE EMPUJE 1	1	1				
7	4LS–E6371–00	BOSS, CLUTCH CUBO, DE EMBRAGUE	1	1				
8	5KA–E6321–00	PLATE, FRICTION PLACA DE FRICCION	5	5				
9	5RE–E6324–00	PLATE, CLUTCH 1 PLACA DE EMBRAGUE	4	4				
10	5RE–E6351–00	PLATE, PRESSURE 1 PLATO DE PRESION	1	1				
11	90501–216A6	SPRING, COMPRESSION RESORTE DE COMPRESION	4	4				
12	90119–05801	BOLT, WITH WASHER TORNILLO CON ARANDELA	4	4				
13	4LS–E6358–00	PLATE, PUSH PLACA DE EMPUJE	1	1				
14	4LS–E6356–00	ROD, PUSH 1 VARILLA DE EMPUJE 1	1	1				
15	92907–06200	WASHER ARANDELA	1	1				
16	9530N–06600	NUT TUERCA	1	1				
17	4LS–E6164–00	PLATE, THRUST 2 PLACA DE EMPUJE 2	1	1				
18	90208–17032	WASHER, CONICAL SPRING ARANDELA DE RESORTE CONICO	1	1				
19	90215–12815	WASHER, LOCK ARANDELA DE CIERRE	1	1				
20	90170–12060	NUT TUERCA	1	1				
21	93503–16807	BALL ESFERA	1	1				
22	4LS–E6357–00	ROD, PUSH 2 VARILLA DE EMPUJE 2	1	1				
23	4LS–E6381–00	PUSH LEVER COMP. CONJ. PALANCA DE EMPUJE	1	1				
24	90508–14857	SPRING, TORSION RESORTE DE TORSION	1	1				
25	93102–12877	OIL SEAL SELLO ACEITE	1	1				
26	99009–20500	CIRCLIP PRESILLA REDONDA	1	1				

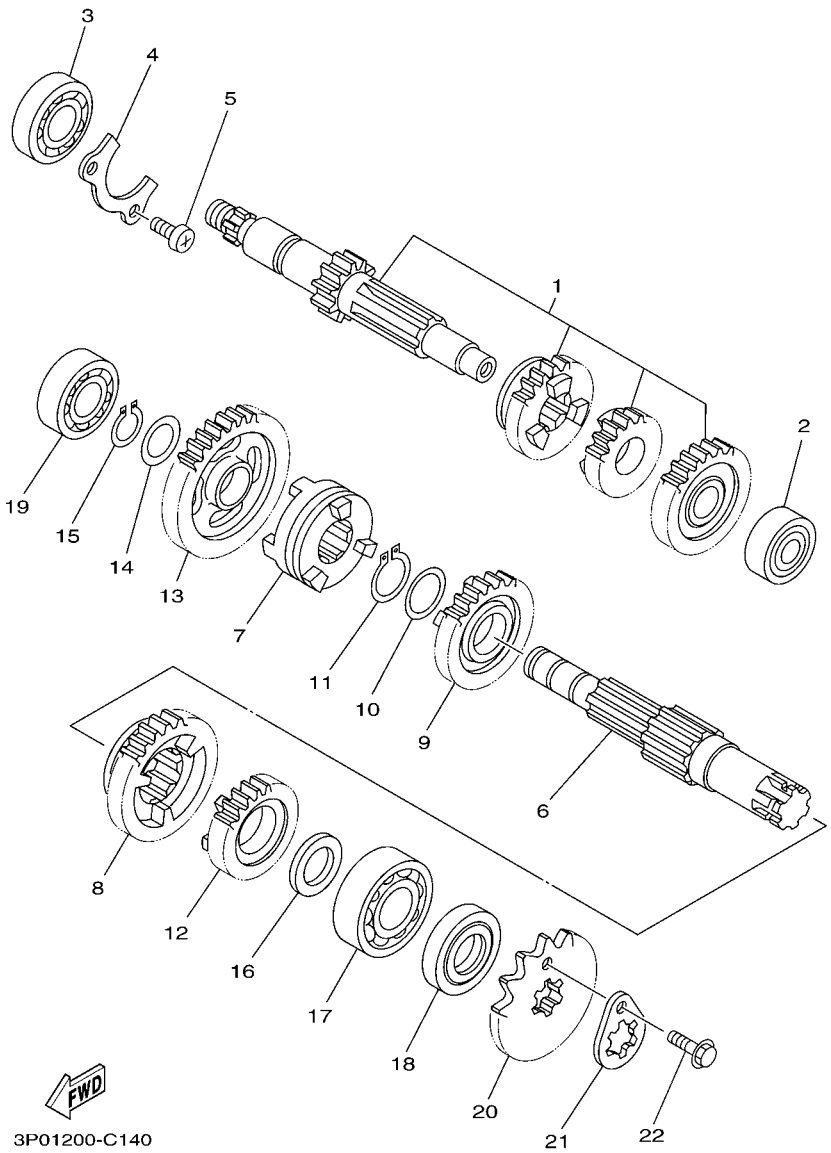

FIG. 14 TRANSMISSION TRANSMISION

REF. NO.	PART NO. CODIGO Nº	DESCRIPTION DESCRIPCION	3P01	3P41				REMARKS OBSERVACIONES
1	4LS–E7410–01	MAIN AXLE COMP. EJE PRINCIPAL COMPLETO	1	1				
2	93306–210Y4	BEARING COJINETE	1	1				
3	93306–203X2	BEARING COJINETE	1	1				
4	4LS–E7471–00	PLATE, COVER PLACA, DE CUBIERTA	1	1				
5	90157–06802	SCREW, PAN HEAD TORNILLO CABEZA CONICA PLANA	2	2				
6	4LS–E7402–00	DRIVE AXLE ASSY EJE DE TRACCION COMPLETO	1	1				
7	4LS–E7285–00	CLUTCH, DOG ENGRENAJE DE ENGATE	1	1				
8	4LS–E7221–00	GEAR, 2ND WHEEL (27T) ENGRANAJE RUEDA DE 2DA (27T)	1	1				
9	4LS–E7231–00	GEAR, 3RD WHEEL (24T) ENGRANAJE RUEDA DE 3RA (24T)	1	1				
10	90201–20266	WASHER, PLATE (T=1.0) ARANDELA, PLACA (T=1.0)	1	1				
11	93410–20038	CIRCLIP SEGURO	1	1				
12	4LS–E7241–00	GEAR, 4TH WHEEL (21T) ENGRANAJE DE RUEDA 4TA (21T)	1	1				
13	4LS–E7211–00	GEAR, 1ST WHEEL (33T) ENGRANAJE RUEDA DE 1 RA (33T)	1	1				
14	90201–15700	WASHER, PLATE ARANDELA PLANA	1	1				
15	99009–15400	CIRCLIP PRESILLA REDONDA	1	1				
16	90201–20272	WASHER, PLATE ARANDELA PLANA	1	1				
17	93306–204Y6	BEARING COJINETE	1	1				
18	93102–20876	OIL SEAL SELLO ACEITE	1	1				
19	93306–202YE	BEARING COJINETE	1	1				
20	93822–15808	SPROCKET, DRIVE (15T) CORONA (15T)	1	1				
21	4LS–E7456–00	HOLDER, SPROCKET SOPORTE DE CORONA	1	1				
22	95027–06010	BOLT, FLANGE PERNO, DE BRIDA	1	1				

FIG. 15 SHIFT CAM & FORK — LEVA DE CAMBIO & HORQUILLA

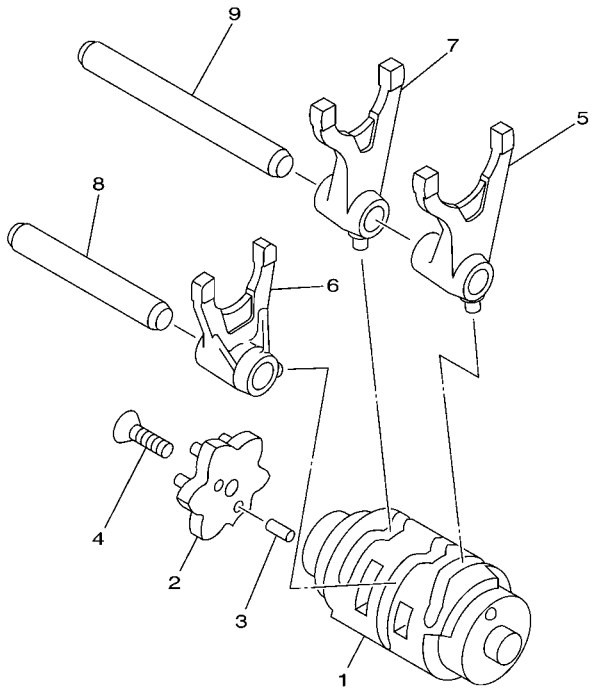

4LS1470-8140

REF. NO.	PART NO. CODIGO Nº	DESCRIPTION DESCRIPCION	3P01	3P41				REMARKS OBSERVACIONES
1	4LS–E8540–00	SHIFT CAM ASSY LEVA DEL CAMBIO COMPLETA	1	1				
2	4LS–E8185–00	SEGMENT SEGMENTO DE RETENCION	1	1				
3	93604–10011	PIN, DOWEL PASADOR DE CLAVIJA	2	2				
4	90149–06830	SCREW TORNILLO DE REGLAJE	1	1				
5	4LS–E8511–00	FORK, SHIFT 1 HORQUILLA DEL CAMBIO 1	1	1				
6	4LS–E8512–00	FORK, SHIFT 2 HORQUILLA DEL CAMBIO 2	1	1				
7	4LS–E8513–00	FORK, SHIFT 3 HORQUILLA DEL CAMBIO 3	1	1				
8	36L–E8531–00	BAR, SHIFT FORK GUIDE 1 BARRA GUIA HORQ. CAMBIO 1	1	1				
9	36L–E8535–00	BAR, SHIFT FORK GUIDE 2 BARRA GUIA HORQ .CAMBIO 2	1	1				

FIG. 16 SHIFT SHAFT — EJE DE CAMBIO & PEDAL

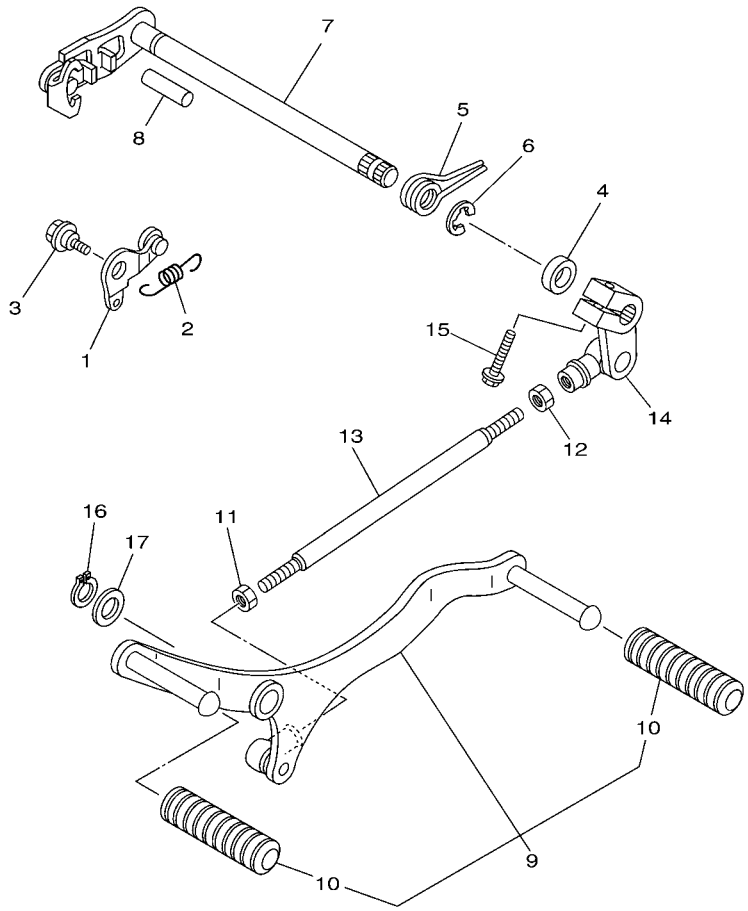

3P01200-C160

REF. NO.	PART NO. CODIGO Nº	DESCRIPTION DESCRIPCION	3P01	3P41				REMARKS OBSERVACIONES
1	4LS–E8140–01	STOPPER LEVER ASSY PALANCA DE TOPE COMPLETA	1	1				
2	4LS–E8337–00	SPRING RESORTE	1	1				
3	90109–06001	BOLT PERNO	1	1				
4	93102–12875	OIL SEAL SELLO ACEITE	1	1				
5	90508–32837	SPRING, TORSION RESORTE DE TORSION	1	1				
6	99001–10600	CIRCLIP PRESILLA REDONDA	1	1				
7	4LS–E8101–01	SHIFT SHAFT ASSY EJE SELECTOR COMPLETO	1	1				
8	93608–30839	PIN, DOWEL PASADOR DE CLAVIJA	1	1				
9	5US–E8110–00	SHIFT PEDAL ASSY PEDAL DE CAMBIO COMPLETO	1	1				
10	5US–E8113–00	.COVER, SHIFT PEDAL .FUNDA DEL PEDAL DEL CAMBIO	2	2				
11	90170–06228	NUT(COUNTER CLOCKWISE) TUERCA	1	1				
12	95304–06700	NUT TUERCA	1	1				
13	5US–E8115–00	ROD, SHIFT VARILLA DEL CAMBIO	1	1				
14	5US–E8112–00	ARM, SHIFT BRAZO DEL CAMBIO	1	1				
15	97027–06020	BOLT PERNO	1	1				
16	99009–15400	CIRCLIP PRESILLA REDONDA	1	1				
17	90201–152L1	WASHER, PLATE ARANDELA PLANA	1	1				

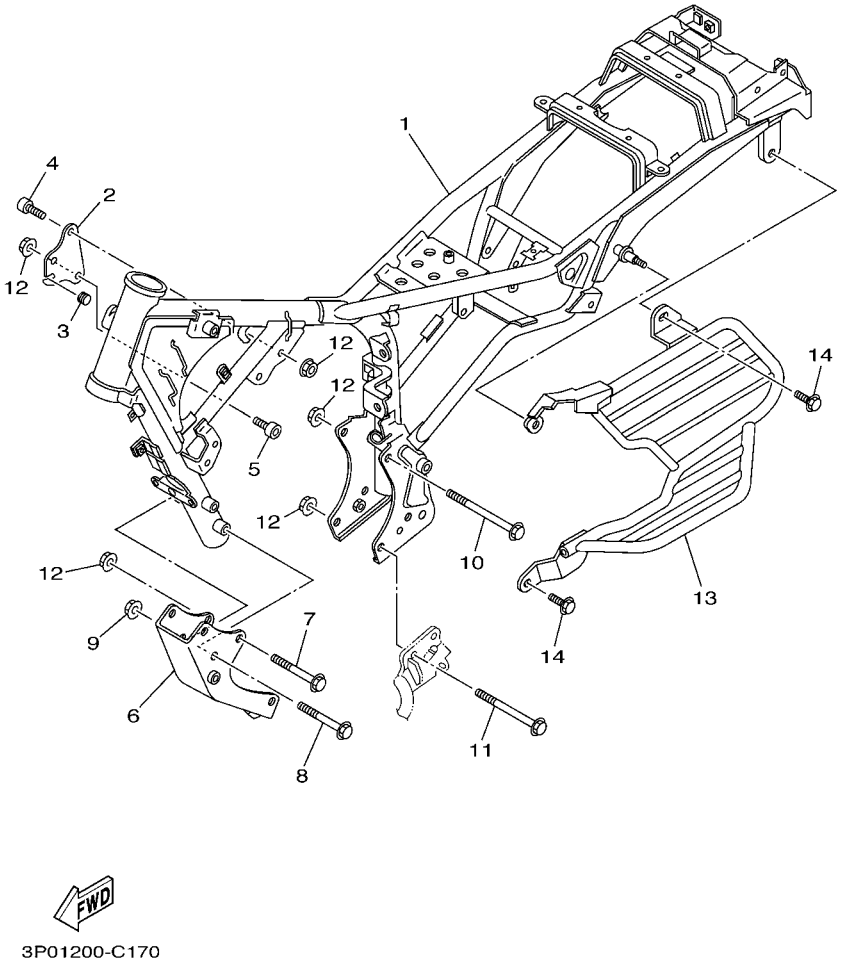

FIG. 17 FRAME CUADRO

REF. NO.	PART NO. CODIGO Nº	DESCRIPTION DESCRIPCION	3P01	3P41				REMARKS OBSERVACIONES
1	3P4–F1110–00	FRAME COMP. ARMAZON COMPLETO	1	1				
2	5US–F1315–00	STAY, ENGINE 2 SOPORTE DE MOTOR 2	1	1				
3	5US–F139X–00	DAMPER AMORTIGUADOR	1	1				
4	9131N–08040	BOLT PERNO	2	2				
5	9131N–08040	BOLT PERNO	1	1				
6	5US–F1316–00	STAY, ENGINE 3 SOPORTE DE MOTOR 3	1	1				
7	90105–088A6	BOLT, FLANGE TORNILLO	2	2				
8	95817–10080	BOLT, FLANGE TORNILLO	2	2				
9	95707–10500	NUT, FLANGE TUERCA DE BRIDA	2	2				
10	90105–08006	BOLT, FLANGE TORNILLO	1	1				
11	95817–08120	BOLT, FLANGE TORNILLO	1	1				
12	95707–08500	NUT, FLANGE TUERCA DE BRIDA	7	7				
13	5US–F1298–00	PROTECTOR, FOOT REST PROTECTOR	1	1				
14	95807–08020	BOLT, FLANGE TORNILLO	2	2				

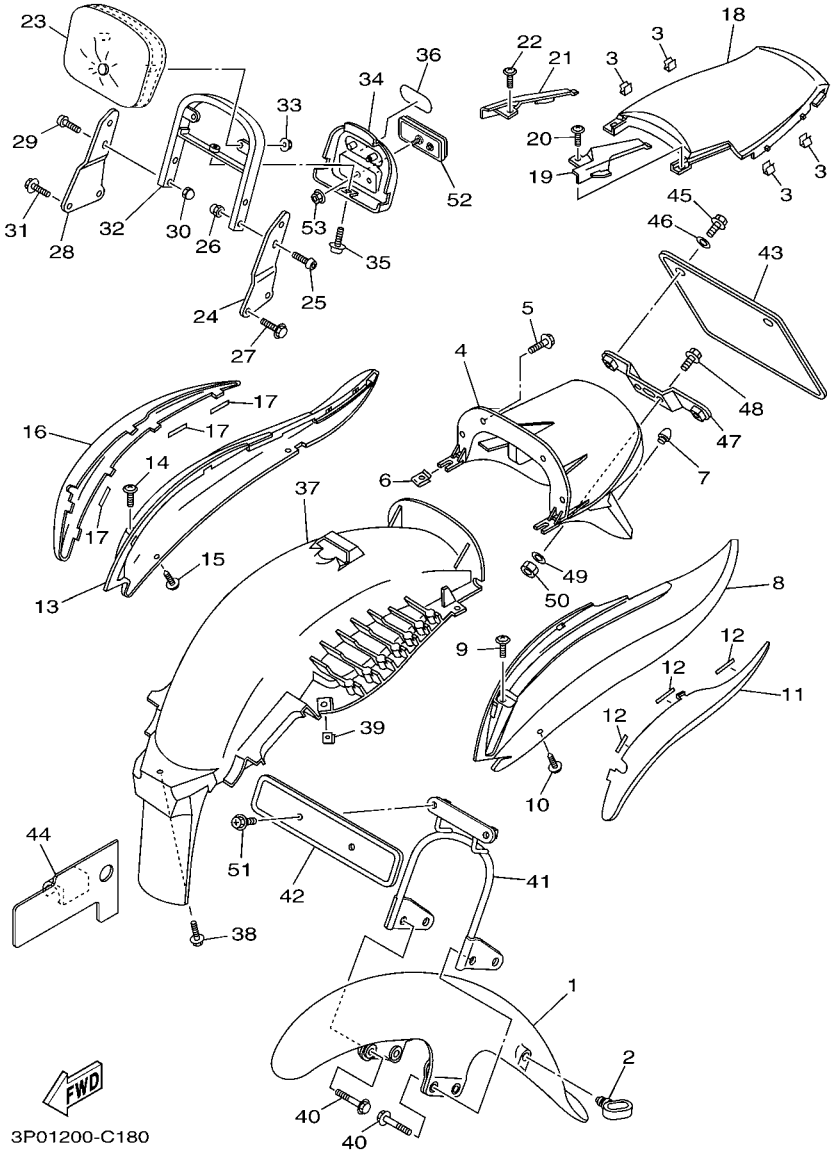

FIG. 18 FENDER — GUARDABARRO

REF. NO.	PART NO. CODIGO Nº	DESCRIPTION DESCRIPCION	3P01	3P41				REMARKS OBSERVACIONES
1	5US–F1510–20	FRONT FENDER COMP. GUARDABARRO DELANTERO COMPLETO	1	1				UR FOR LYNM9 UR PARA LYNM9
	5US–F1510–30	FRONT FENDER COMP. GUARDABARRO DELANTERO COMPLETO	1	1				UR FOR VRC7 UR PARA VRC7
	5US–F1510–40	FRONT FENDER COMP. GUARDABARRO DELANTERO COMPLETO	1	1				UR FOR LVS UR PARA LVS
	5US–F1510–00	FRONT FENDER COMP. GUARDABARRO DELANTERO COMPLETO		1				UR FOR BG UR PARA BG
2	5DG–F1518–00	HOLDER, CABLE SOPORTE DE CABLE	1	1				
3	5US–F8457–00	CLIP PRESILLA	4	4				
4	5US–F1611–00	FENDER, REAR GUARDABARRO TRASERO	1	1				
5	90119–06108	BOLT, WITH WASHER TORNILLO CON ARANDELA	4	4				
6	90183–05042	NUT, SPRING TUERCA DE RESORTE	2	2				
7	5US–F1639–00	DAMPER 2 AMORTIGUADOR 2	1	1				
8	5US–F163A–20	COVER, REAR FENDER 1 CUBIERTA TRAS GUARDABARRO 1	1	1				UR FOR LYNM9 UR PARA LYNM9
	5US–F163A–30	COVER, REAR FENDER 1 CUBIERTA TRAS GUARDABARRO 1	1	1				UR FOR VRC7 UR PARA VRC7
	5US–F163A–40	COVER, REAR FENDER 1 CUBIERTA TRAS GUARDABARRO 1	1	1				UR FOR LVS UR PARA LVS
	5US–F163A–00	COVER, REAR FENDER 1 CUBIERTA TRAS GUARDABARRO 1		1				UR FOR BG UR PARA BG
9	90159–06178	SCREW, WITH WASHER TORNILLO CON VALONA	1	1				
10	90160–05806	SCREW, ROUND TAPPING TORNILLO REDONDO ROSCA HEMBRA	2	2				
11	5US–F171L–00	MOLE, SIDE COVER 1 MUELLE , CUBIERTA LATERAL 1	1	1				
12	5US–F173T–00	TAPE 1 CINTA 1	3	3				
13	5US–F163E–20	COVER, REAR FENDER 2 CUBIERTA TRAS GUARDABARRO 2	1	1				UR FOR LYNM9 UR PARA LYNM9
	5US–F163E–30	COVER, REAR FENDER 2 CUBIERTA TRAS GUARDABARRO 2	1	1				UR FOR VRC7 UR PARA VRC7
	5US–F163E–40	COVER, REAR FENDER 2 CUBIERTA TRAS GUARDABARRO 2	1	1				UR FOR LVS UR PARA LVS
	5US–F163E–00	COVER, REAR FENDER 2 CUBIERTA TRAS GUARDABARRO 2		1				UR FOR BG UR PARA BG
14	90159–06178	SCREW, WITH WASHER TORNILLO CON VALONA	1	1				
15	97707–50016	SCREW, TRUSS HEAD TAPPING TORNILLO	2	2				
16	5US–F171M–00	MOLE, SIDE COVER 2 MUELLE, CUBIERTA LATERAL 2	1	1				
17	5US–F173T–00	TAPE 1 CINTA 1	3	3				
18	5US–F4756–20	COVER, TAIL CUBIERTA DE COLA	1	1				UR FOR LYNM9 UR PARA LYNM9

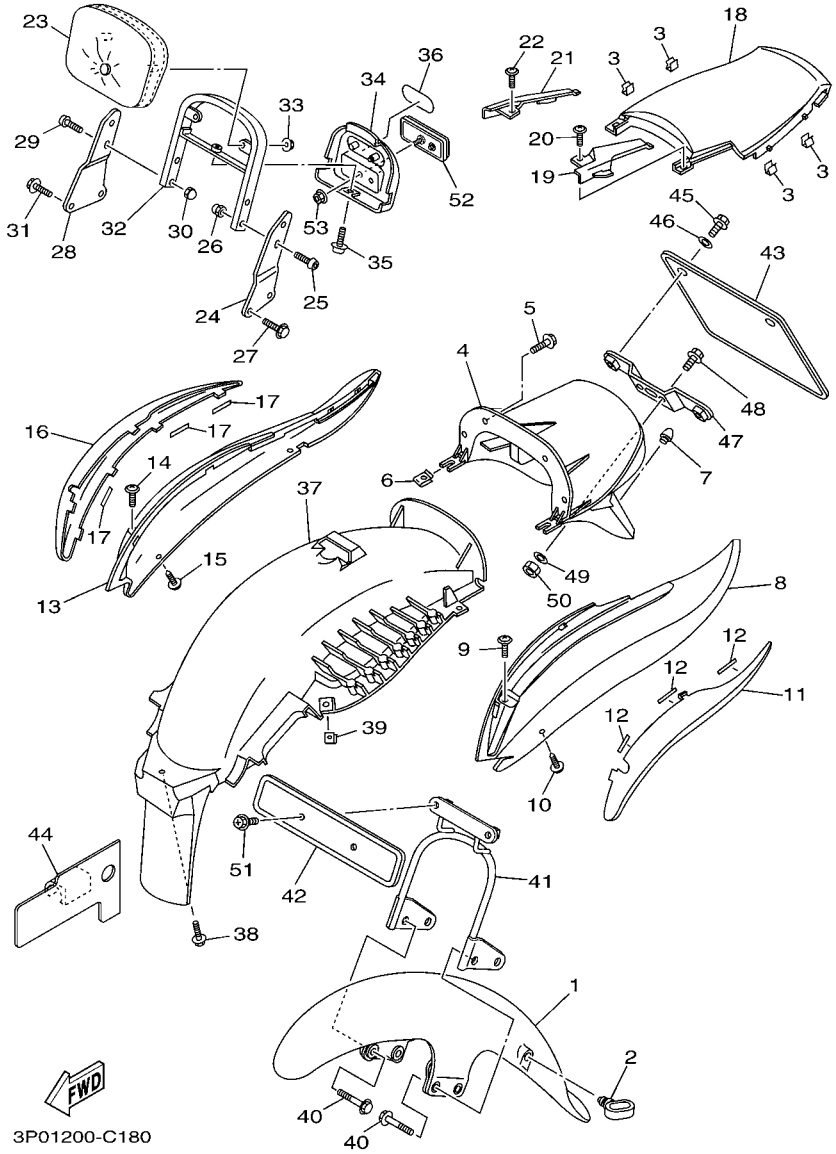

FIG. 18 FENDER GUARDABARRO

REF. NO.	PART NO. CODIGO Nº	DESCRIPTION DESCRIPCION	3P01	3P41				REMARKS OBSERVACIONES
18	5US–F4756–30	COVER, TAIL CUBIERTA DE COLA	1	1				UR FOR VRC7 UR PARA VRC7
	5US–F4756–40	COVER, TAIL CUBIERTA DE COLA	1	1				UR FOR LVS UR PARA LVS
	5US–F4756–00	COVER, TAIL CUBIERTA DE COLA		1				UR FOR BG UR PARA BG
19	5US–F172A–20	PANEL 1 PANEL 1	1	1				UR FOR LYNM9 UR PARA LYNM9
	5US–F172A–30	PANEL 1 PANEL 1	1	1				UR FOR VRC7 UR PARA VRC7
	5US–F172A–40	PANEL 1 PANEL 1	1	1				UR FOR LVS UR PARA LVS
	5US–F172A–00	PANEL 1 PANEL 1		1				UR FOR BG UR PARA BG
20	90159–06178	SCREW, WITH WASHER TORNILLO CON VALONA	1	1				
21	5US–F172F–20	PANEL 2 PANEL 2	1	1				UR FOR LYNM9 UR PARA LYNM9
	5US–F172F–30	PANEL 2 PANEL 2	1	1				UR FOR VRC7 UR PARA VRC7
	5US–F172F–40	PANEL 2 PANEL 2	1	1				UR FOR LVS UR PARA LVS
	5US–F172F–00–H9	PANEL 2 PANEL 2		1				UR FOR BG UR PARA BG
22	90159–06178	SCREW, WITH WASHER TORNILLO CON VALONA	1	1				
23	5US–F840F–00	BACK REST ASSY COJIN DEL RESPALDO	1	1				
24	5US–F164F–00	STAY 1 APOYO 1	1	1				
25	90111–08816	BOLT,HEX. SOCKET BUTTON TORNILLO	2	2				
26	90176–08804	NUT, CROWN TUERCA CORONA	2	2				
27	95817–08020	BOLT, FLANGE TORNILLO	2	2				
28	5US–F164G–00	STAY 2 APOYO 2	1	1				
29	90111–08816	BOLT,HEX. SOCKET BUTTON TORNILLO	2	2				
30	90176–08804	NUT, CROWN TUERCA CORONA	2	2				
31	95817–08020	BOLT, FLANGE TORNILLO	2	2				
32	5US–F164H–00	STAY 3 APOYO 3	1	1				
33	95707–06500	NUT, FLANGE TUERCA DE BRIDA	2	2				
34	5US–F842M–00	COVER 1 CUBIERTA 1	1	1				
35	97607–06216	SCREW,WITH WASHER TORNILLO CAB CON PLANA C/ARAN	1	1				
36	5US–F157B–00	EMBLEM EMBLEMA	1	1				

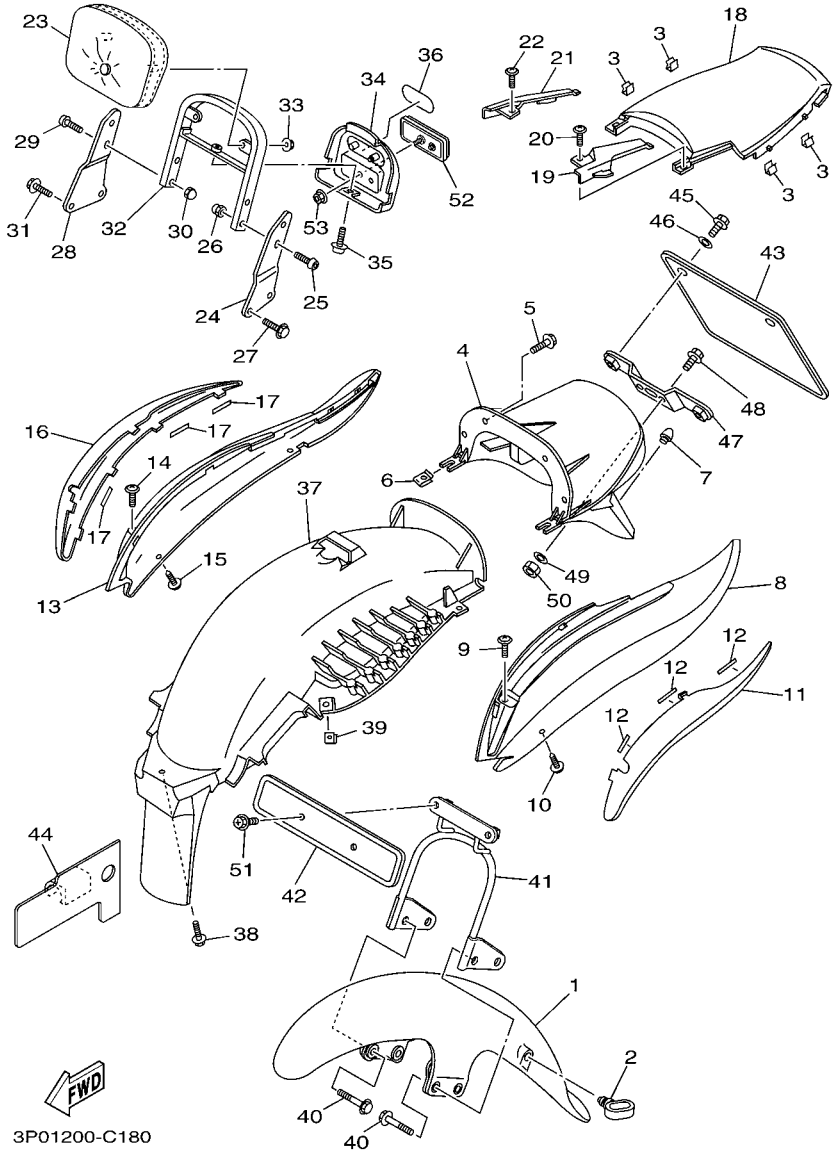

FIG. 18 FENDER — GUARDABARRO

REF. NO.	PART NO. CODIGO Nº	DESCRIPTION DESCRIPCION	3P01	3P41				REMARKS OBSERVACIONES
37	5US–F1629–00	GUARD, MUD GUARDABARRO INFERIOR	1	1				
38	90119–06108	BOLT, WITH WASHER TORNILLO CON ARANDELA	1	1				
39	90183–05042	NUT, SPRING TUERCA DE RESORTE	2	2				
40	95827–06025	BOLT, FLANGE TORNILLO	4	4				
41	5US–F1581–00	STAY, PLATE FITTING 1 SOPORTE PLACA ACCESORIA 1	1	1				
42	5US–F3485–00	PLATE, NUMBER PLACA DE LICENCIA	1	1				
43	5US–F1681–10	PLATE, LICENSE PLACA DE LICENCIA	1	1				
44	5US–F1621–10	FLAP CHARNELA	1	1				
45	95807–06012	BOLT, FLANGE TORNILLO	2	2				
46	90201–06811	WASHER, PLATE ARANDELA PLANA	2	2				
47	5US–H4751–00	BRACKET, LICENSE SOPORTE DE LICENCIA	1	1				
48	95807–06012	BOLT, FLANGE TORNILLO	2	2				
49	90201–06380	WASHER, PLATE ARANDELA PLANA	2	2				
50	95307–06600	NUT TUERCA	2	2				
51	90159–05844	SCREW, WITH WASHER TORNILLO CON VALONA	2	2				
52	5US–H5110–00	REFLECTOR ASSY REFLECTOR COMPLETO	1	1				
53	95707–05500	NUT, FLANGE TUERCA DE BRIDA	1	1				

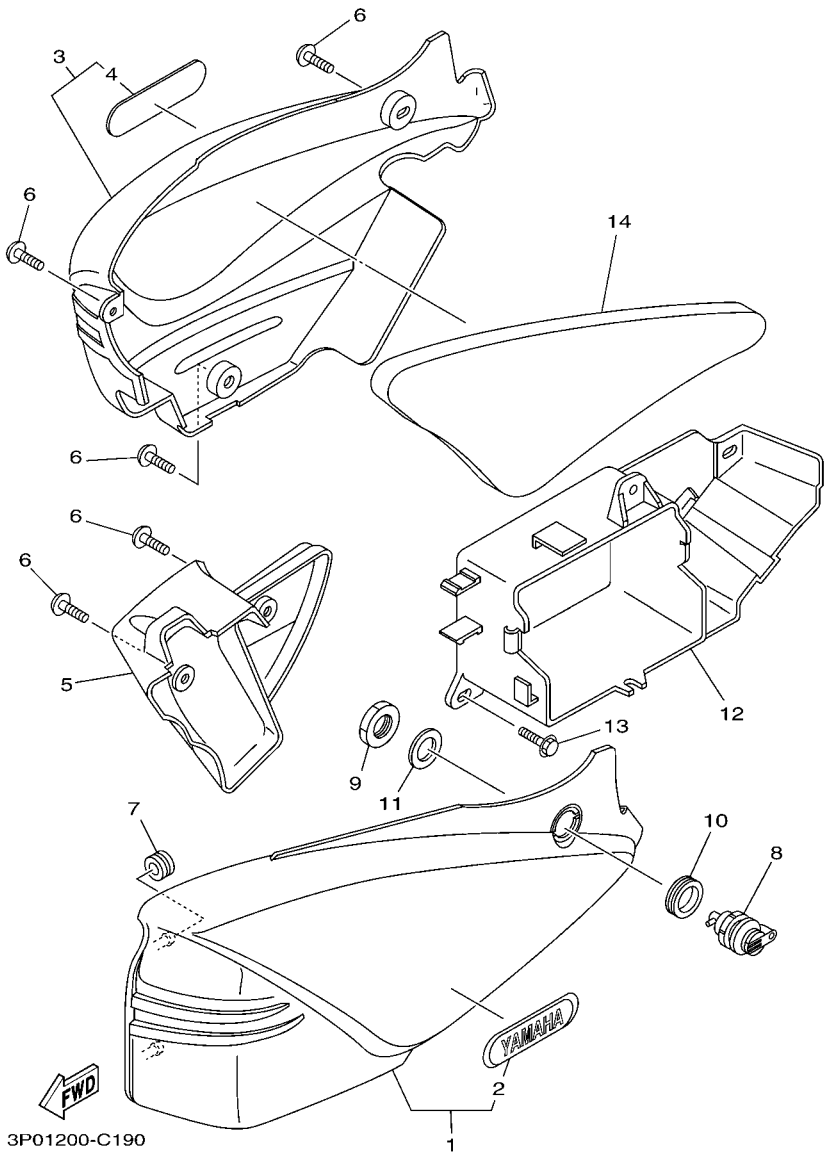

FIG. 19 SIDE COVER — CUBIERTA LATERAL

REF. NO.	PART NO. CODIGO Nº	DESCRIPTION DESCRIPCION	3P01	3P41				REMARKS OBSERVACIONES
1	5US–F1710–20	SIDE COVER ASSY 1 CUBIERTA LATERAL COMPLETA 1	1	1				UR FOR LYNM9 UR PARA LYNM9
	5US–F1710–30	SIDE COVER ASSY 1 CUBIERTA LATERAL COMPLETA 1	1	1				UR FOR VRC7 UR PARA VRC7
	5US–F1710–40	SIDE COVER ASSY 1 CUBIERTA LATERAL COMPLETA 1	1	1				UR FOR LVS UR PARA LVS
	5US–F1710–50	SIDE COVER ASSY 1 CUBIERTA LATERAL COMPLETA 1		1				UR FOR BG UR PARA BG
2	5US–F173B–10	.EMBLEM 3D .EMBLEMA 3D	1	1				
3	5US–F1720–20	SIDE COVER ASSY 2 CUBIERTA LATERAL COMPLETA 2	1	1				UR FOR LYNM9 UR PARA LYNM9
	5US–F1720–30	SIDE COVER ASSY 2 CUBIERTA LATERAL COMPLETA 2	1	1				UR FOR VRC7 UR PARA VRC7
	5US–F1720–40	SIDE COVER ASSY 2 CUBIERTA LATERAL COMPLETA 2	1	1				UR FOR LVS UR PARA LVS
	5US–F1720–50	SIDE COVER ASSY 2 CUBIERTA LATERAL COMPLETA 2		1				UR FOR BG UR PARA BG
4	5US–F174B–10	.EMBLEM 3D .EMBLEMA 3D	1	1				
5	5US–F1731–00	COVER, SIDE 3 TAPA LATERAL 3	1	1				
6	90150–06806	SCREW, ROUND HEAD TORNILLO CABEZA REDONDA	6	6				
7	90480–13426	GROMMET TAPON	2	2				
8	2YA–F1780–00	LOCK ASSY CERRADURA COMPLETA	1	1				
9	90170–22800	NUT TUERCA	1	1				
10	90480–24186	GROMMET TAPON	1	1				
11	90201–225A4	WASHER, PLATE (T=1.0) ARANDELA PLANA (T=1.0)	1	1				
12	5US–F177G–00	BOX, BATTERY CAJA DE BATERIA	1	1				
13	90119–06839	BOLT, WITH WASHER TORNILLO CON ARANDELA	3	3				
14	5US–F1717–00	DAMPER AMORTIGUADOR	1	1				

FIG. 20 REAR ARM & SUSPENSION BRAZO TRASERO & SUSPENSION

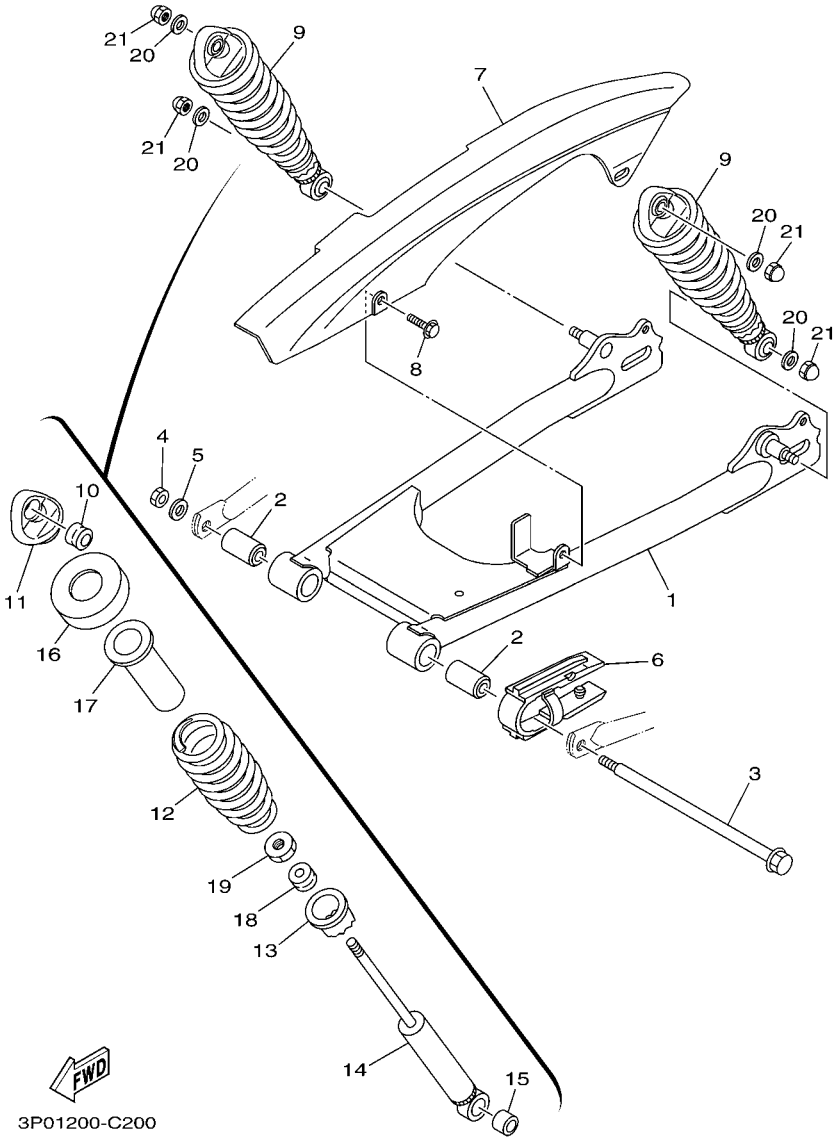

REF. NO.	PART NO. CODIGO Nº	DESCRIPTION DESCRIPCION	3P01	3P41				REMARKS OBSERVACIONES
1	5US–F2110–00	REAR ARM COMP. BRAZO TRASERO COMPLETO	1	1				
2	36L–F2123–00	BUSH 1 BUJE 1	2	2				
3	5US–F2141–00	SHAFT, PIVOT EJE DEL BARCULANTE	1	1				
4	90170–12065	NUT TUERCA	1	1				
5	92907–12200	WASHER ARANDELA	1	1				
6	5US–F2151–00	SEAL, GUARD SELLO DE GUARDA	1	1				
7	5US–F2311–00	CASE, CHAIN CABRECADENA	1	1				
8	90119–06044	BOLT, WITH WASHER TORNILLO CON ARANDELA	2	2				
9	5US–F2210–02	SHOCK ABSORBER ASSY, REAR AMORTIGUADOR TRASERO COMPLETO	2	2				
10	5US–F2216–00	.BUSH, REAR SHOCK ABSORBER .BUJE DEL AMORTIGUADOR TRASERO	1	1				
11	5US–F2219–00	.BRACKET, UPPER .SOPORTE SUPERIOR	1	1				
12	5US–F2212–02	.SPRING .RESORTE	1	1				
13	5US–F2239–00	.ADJUSTER .AJUSTADOR	1	1				
14	5US–F2201–02	.DAMPER SUB ASSY .SUBENSAMBLE DE AMORTIGUADOR	1	1				
15	5US–F2226–00	.BUSH, SHOCK ABSORBER LOWER .BUJE DE AMORTIGUADOR INFERIO	1	1				
16	5US–F2211–00	.COVER .CUBIERTA	1	1				
17	5US–F2221–00	.COVER .CUBIERTA	1	1				
18	5US–F2247–00	.RUBBER GROMMET .RUBBER GROMMET	1	1				
19	5US–F2251–00	.NUT 1 .TUERCA 1	1	1				
20	90201–106F2	WASHER, PLATE ARANDELA PLANA	4	4				
21	90176–10073	NUT, CROWN TUERCA CORONA	4	4				

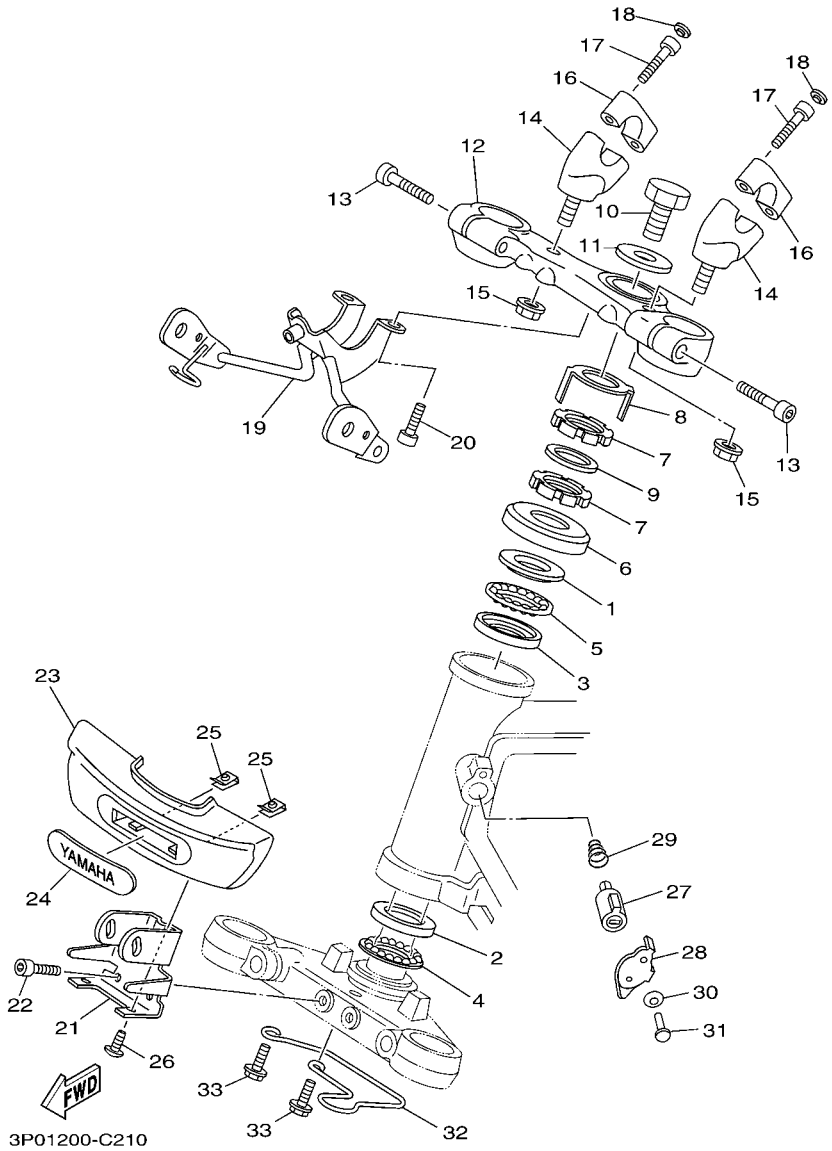

FIG. 21 STEERING DIRECCION

REF. NO.	PART NO. CODIGO Nº	DESCRIPTION DESCRIPCION	3P01	3P41				REMARKS OBSERVACIONES
1	5UC–F3414–00	RACE, BALL 4 BASE DE BOLA 4	1	1				
2	36L–F3412–00	RACE, BALL 2 PISTA DE BOLAS 2	1	1				
3	5UC–F3413–00	RACE, BALL 3 BASE DE BOLA 3	1	1				
4	4LS–F341E–10	RETAINER, BALL BEARING RETEN DE COJINETE	1	1				
5	5US–F341E–00	RETAINER, BALL BEARING RETEN DE COJINETE	1	1				
6	5US–F3416–00	COVER, BALL RACE 2 CUBIERTA DE BASE DE BOLA 2	1	1				
7	90179–25033	NUT TUERCA	2	2				
8	4LS–F3418–00	WASHER, SPECIAL ARANDELA ESPECIAL	1	1				
9	90202–26142	WASHER, PLATE ARANDELA DE PLANA	1	1				
10	90101–14800	BOLT TORNILLO	1	1				
11	90209–15800	WASHER ARANDELA DE SEPARACION	1	1				
12	5US–F3435–00	CROWN, HANDLE PLATINA SUPERIOR	1	1				
13	90110–08801	BOLT, HEXAGON SOCKET HEAD TORNILLO ALLEN	2	2				
14	5US–F3442–00	HOLDER, HANDLE LOWER SOPORTE DE MANUBRIO INFERIOR	2	2				
15	90185–10804	NUT, SELF-LOCKING TUERCA AUTOBLOCANTE	2	2				
16	5US–F3441–00	HOLDER, HANDLE UPPER SOPORTE DE MANUBRIO	2	2				
17	90110–08800	BOLT, HEXAGON SOCKET HEAD TORNILLO ALLEN	4	4				
18	90338–08163	PLUG TAPON	4	4				
19	5US–F317E–00	STAY SOPORTE	1	1				
20	91317–06016	BOLT PERNO	2	2				
21	5US–F3174–00	STAY, HEADLIGHT SOPORTE DEL FARO DELANTERO	1	1				
22	91317–06016	BOLT PERNO	2	2				
23	5US–F3391–00	PANEL, FRONT PANEL DELANTERO	1	1				
24	5US–F1781–00	EMBLEM 1 EMBLEMA 1	1	1				
25	90183–05042	NUT, SPRING TUERCA DE RESORTE	2	2				
26	97707–50012	SCREW, TRUSS HEAD TAPPING TORNILLO	2	2				
27	36L–F3480–00	STEERING LOCK ASSY CERRADURA DE DIRECCION COMPL.	1	1				

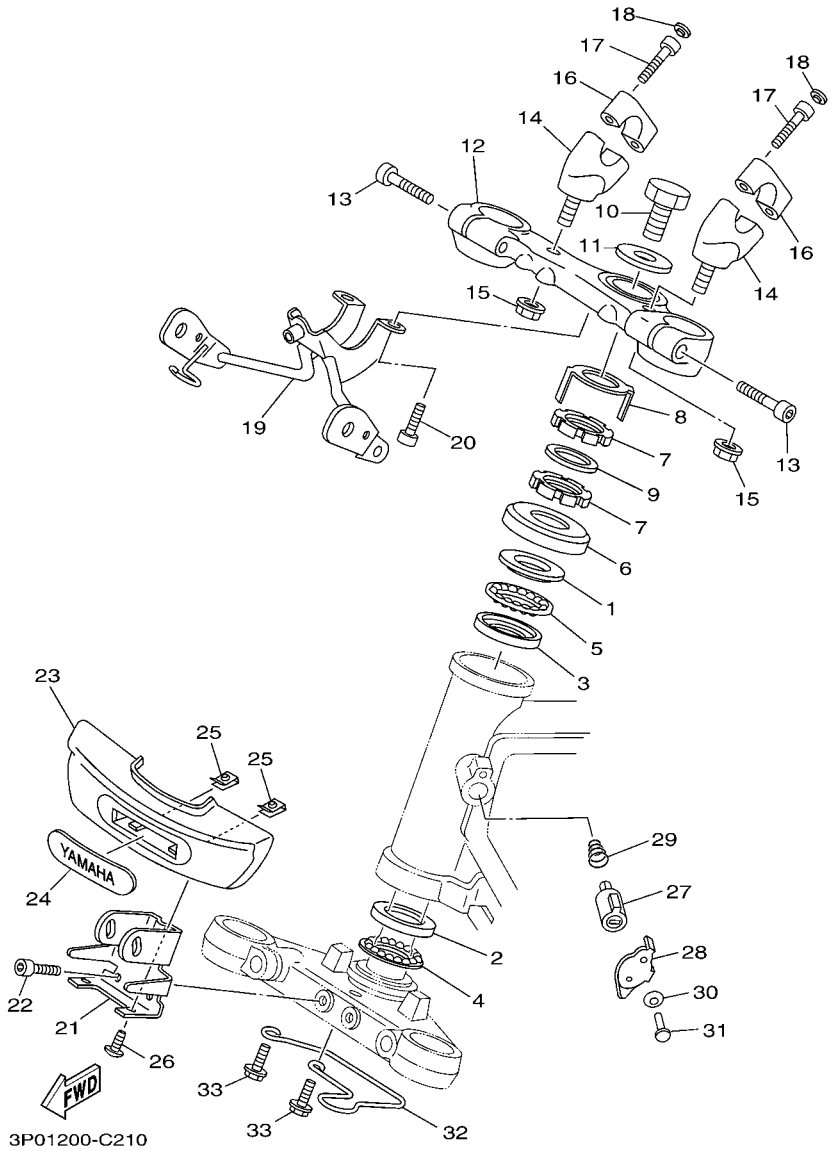

FIG. 21 STEERING DIRECCION

REF. NO.	PART NO. CODIGO Nº	DESCRIPTION DESCRIPCION	3P01	3P41				REMARKS OBSERVACIONES
28	5US–F3484–00	CAP, HANDLE LOCK TAPA DE CERRADURA DE MANUBRIO	1	1				
29	90502–09024	SPRING, CONICAL RESORTE CONICO	1	1				
30	90208–04029	WASHER, CONICAL SPRING ARANDELA DE RESORTE CONICO	1	1				
31	90269–04003	RIVET REMACHE	1	1				
32	5US–F3466–00	CLAMP GRAMPA	1	1				
33	95807–06012	BOLT, FLANGE TORNILLO	2	2				

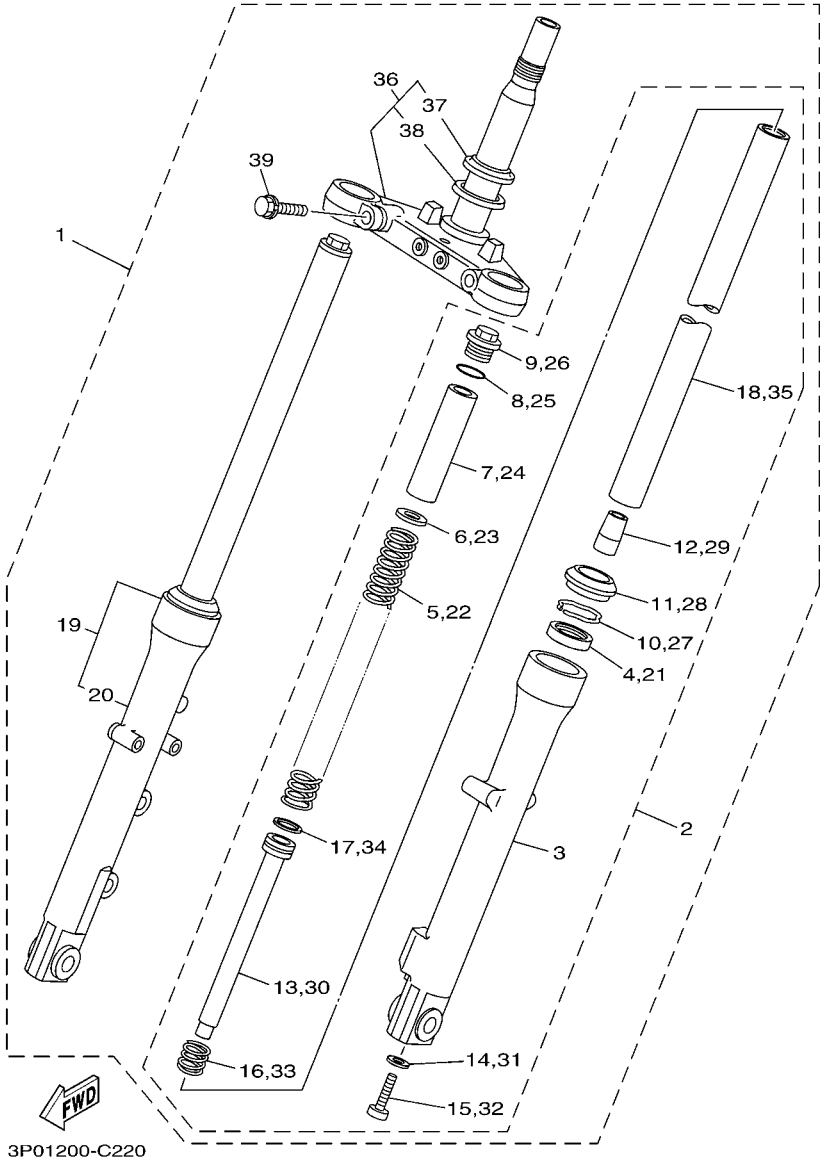

FIG. 22 FRONT FORK HORQUILLA DELANTERA

REF. NO.	PART NO. CODIGO Nº	DESCRIPTION DESCRIPCION	3P01	3P41				REMARKS OBSERVACIONES
1	5US–F3100–01	FRONT FORK ASSY HORQUILLA DELANTERA COMPLETA	1	1				
2	5US–F3102–00	FRONT FORK ASSY (L.H) HORQUILLA DELANTERA COMPL.(MI)	1	1				
3	5US–F3106–01	.OUTER TUBE COMP. (L.H) .TUBO EXTERIOR COMPLETO (MI)	1	1				
4	4LS–F3145–00	.OIL SEAL .RETEN DE ACEITE	1	1				
5	5US–F3141–00	.SPRING, FRONT FORK .RESORTE HORQUILLA DELANT.	1	1				
6	4LS–E3142–00	.GASKET .EMPAQUE	1	1				
7	5US–F3118–00	.SPACER .SEPARADOR	1	1				
8	5US–F3147–00	.O-RING .ARO	1	1				
9	5US–F3194–00	.SCREW, BOOT BAND .TORNILLO DE BANDA DE FUNDA	1	1				
10	4LS–F3153–00	.RING, SNAP .ANILLO DE ENGANCHE	1	1				
11	4LS–F3144–00	.SEAL, DUST .GUARDAPOLVO	1	1				
12	36L–F3173–00	.SPINDLE, TAPER .VASTAGO AHUSADO	1	1				
13	5US–F3170–00	.CYLINDER COMP., FRONT FORK .CILINDRO COMPL DE HORQ DELAN	1	1				
14	36L–F3158–00	.GASKET .EMPAQUE	1	1				
15	36L–F3181–00	.BOLT, HEXAGON SOCKET HEAD .TORNILLO CABEZAHEXAGONAL	1	1				
16	36L–F3152–00	.SPRING, SUB .RESORTE DE SUBENSAMBLE	1	1				
17	36L–F3157–00	.RING, PISTON .ANILLO DEL PISTON	1	1				
18	5US–F3110–00	.INNER TUBE COMP.1 .TUBO INTERIOR COMPLETO 1	1	1				
19	5US–F3103–01	FRONT FORK ASSY (R.H) HORQUILLA DELANTERA COMPL.(MD)	1	1				
20	5US–F3107–00	.OUTER TUBE COMP. (R.H) .TUBO EXTERIOR COMPLETO (MD)	1	1				
21	4LS–F3145–00	.OIL SEAL .RETEN DE ACEITE	1	1				
22	5US–F3141–00	.SPRING, FRONT FORK .RESORTE HORQUILLA DELANT.	1	1				
23	4LS–E3142–00	.GASKET .EMPAQUE	1	1				
24	5US–F3118–00	.SPACER .SEPARADOR	1	1				
25	5US–F3147–00	.O-RING .ARO	1	1				
26	5US–F3194–00	.SCREW, BOOT BAND .TORNILLO DE BANDA DE FUNDA	1	1				
27	4LS–F3153–00	.RING, SNAP .ANILLO DE ENGANCHE	1	1				

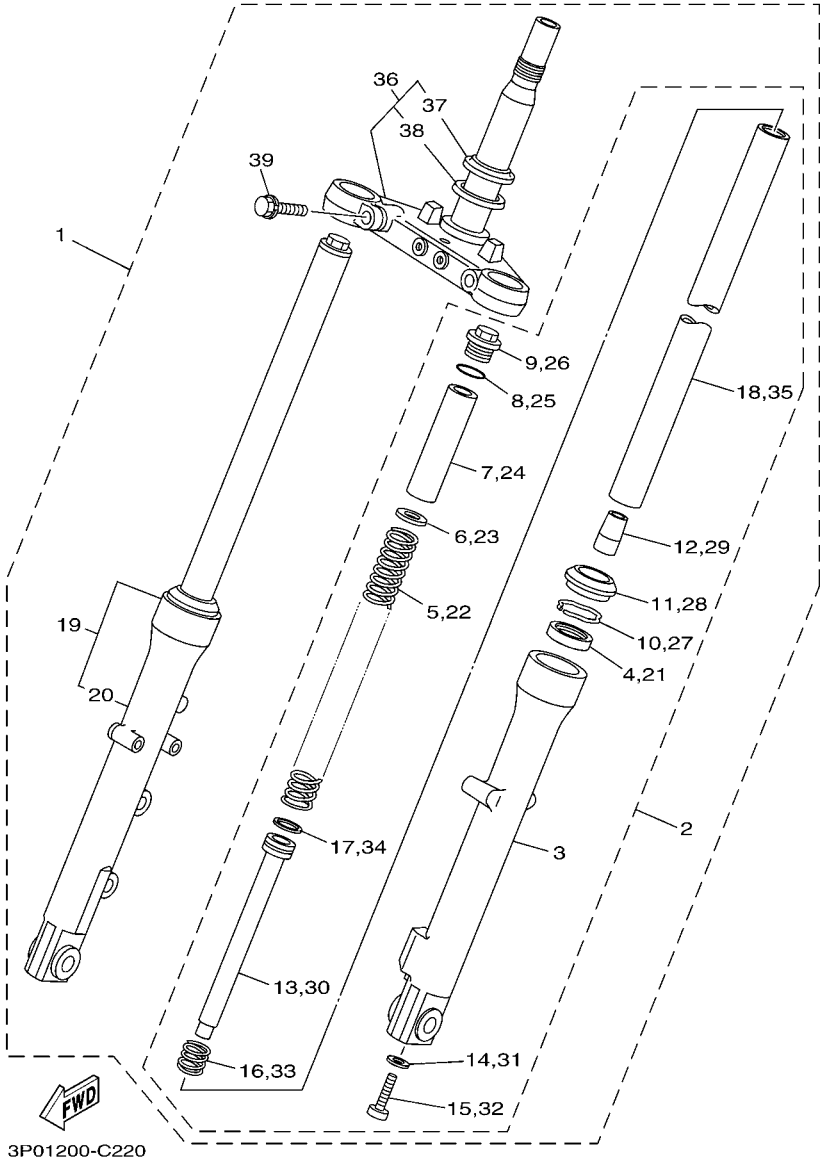

FIG. 22 FRONT FORK HORQUILLA DELANTERA

REF. NO.	PART NO. CODIGO Nº	DESCRIPTION DESCRIPCION	3P01	3P41				REMARKS OBSERVACIONES
28	4LS–F3144–00	.SEAL, DUST .GUARDAPOLVO	1	1				
29	36L–F3173–00	.SPINDLE, TAPER .VASTAGO AHUSADO	1	1				
30	5US–F3170–00	.CYLINDER COMP., FRONT FORK .CILINDRO COMPL DE HORQ DELAN	1	1				
31	36L–F3158–00	.GASKET .EMPAQUE	1	1				
32	36L–F3181–00	.BOLT, HEXAGON SOCKET HEAD .TORNILLO CABEZAHEXAGONAL	1	1				
33	36L–F3152–00	.SPRING, SUB .RESORTE DE SUBENSAMBLE	1	1				
34	36L–F3157–00	.RING, PISTON .ANILLO DEL PISTON	1	1				
35	5US–F3110–00	.INNER TUBE COMP.1 .TUBO INTERIOR COMPLETO 1	1	1				
36	5US–F331X–00	BRACKET, UNDER MENSULA INFERIOR	1	1				
37	36L–F3411–00	.RACE, BALL 1 .PISTA DE BOLAS 1	1	1				
38	5UD–F3144–00	.SEAL, DUST .GUARDAPOLVO	1	1				
39	36L–F3346–01	BOLT 1 PERNO 1	2	2				

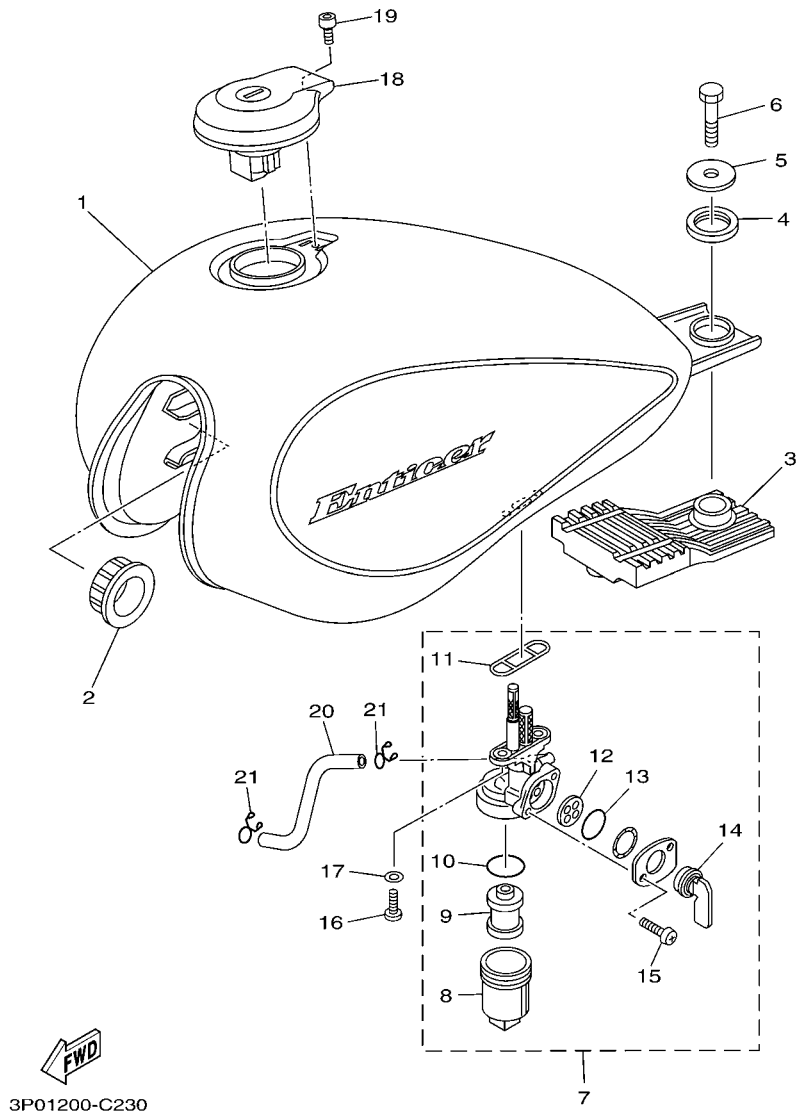

FIG. 23 FUEL TANK — DEPOSITO DE COMBUSTIBLE

REF. NO.	PART NO. CODIGO Nº	DESCRIPTION DESCRIPCION	3P01	3P41				REMARKS OBSERVACIONES
1	5US–F4100–50	FUEL TANK ASSY TANQUE COMBUSTIBLE COMPL.	1	1				UR FOR LYNM9 UR PARA LYNM9
	5US–F4100–60	FUEL TANK ASSY TANQUE COMBUSTIBLE COMPL.	1	1				UR FOR VRC7 UR PARA VRC7
	5US–F4100–70	FUEL TANK ASSY TANQUE COMBUSTIBLE COMPL.	1	1				UR FOR LVS UR PARA LVS
	5US–F4100–30	FUEL TANK ASSY TANQUE COMBUSTIBLE COMPL.		1				UR FOR BG UR PARA BG
2	5US–F4181–00	DAMPER, LOCATING 1 AMORTIGUADOR DE MONTAJE 1	2	2				
3	5US–F4182–00	DAMPER, LOCATING 2 AMORTIGUADOR DE MONTAJE 2	1	1				
4	5US–F4183–00	DAMPER, LOCATING 3 AMORTIGUADOR DE MONTAJE 3	1	1				
5	90201–08569	WASHER, PLATE ARANDELA PLANA	1	1				
6	97007–08016	BOLT PERNO	1	1				
7	5US–F4500–00	FUEL COCK ASSY 1 GRIFO DE COMBUSTIBLE 1	1	1				
8	4UU–F4521–00	.CUP, FILTER .COPA DE FILTRO	1	1				
9	4UU–F4515–00	.NET, FILTER 2 .RED DE FILTRO 2	1	1				
10	4UU–F4565–00	.GASKET .EMPAQUE	1	1				
11	4UU–F4512–00	.GASKET .EMPAQUE	1	1				
12	4UU–F4523–00	.VALVE .VALVULA	1	1				
13	4US–F4534–00	.SEAL, COCK .SELLO DE GRIFO	1	1				
14	5US–F4524–00	.LEVER, COCK .LLAVE DEL GRIFO	1	1				
15	98507–03008	.SCREW, PAN HEAD .TORNILLO DE CABEZA PLANA	2	2				
16	90149–06011	SCREW TORNILLO DE REGLAJE	2	2				
17	90202–05193	WASHER, PLATE ARANDELA DE PLANA	2	2				
18	5US–WF461–00	TANK CAP BODY ASSY TAPA DE DEPOSITO COMPLETO	1	1				
19	91317–05010	BOLT PERNO	1	1				
20	5US–F4311–00	PIPE, FUEL 1 TUBO DE COMBUSTIBLE 1	1	1				
21	90467–09006	CLIP PRESILLA	2	2				

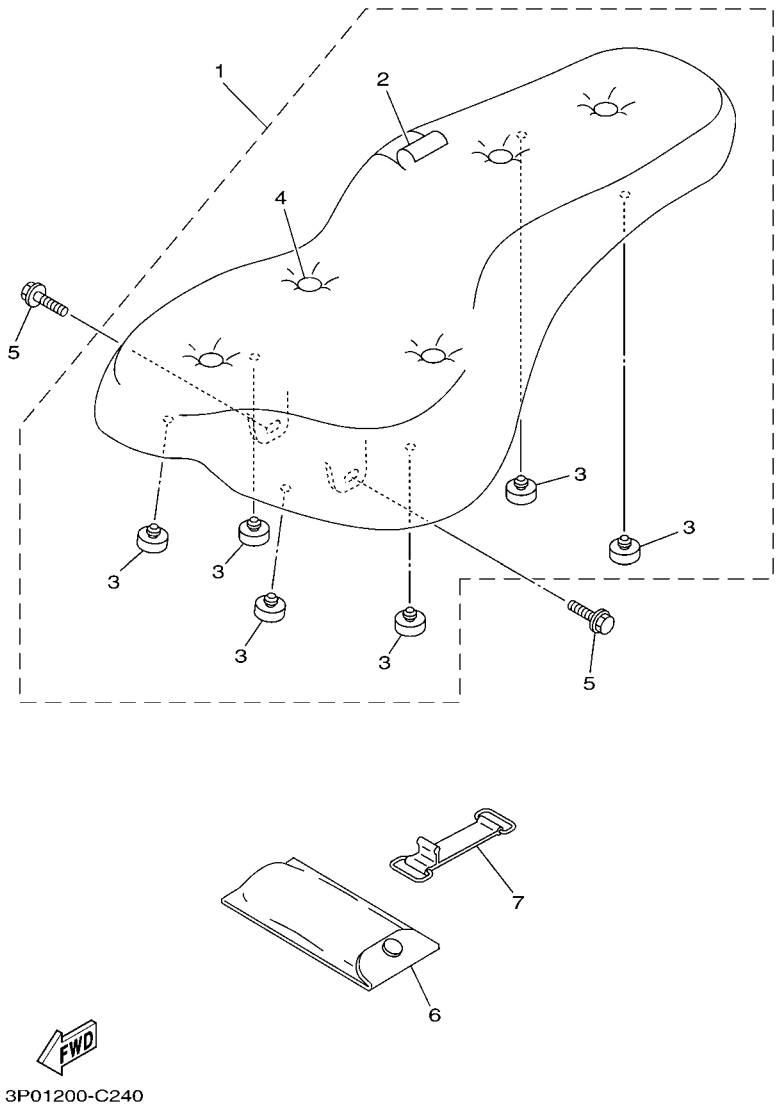

FIG. 24 SEAT ASIENTO

REF. NO.	PART NO. CODIGO Nº	DESCRIPTION DESCRIPCION	3P01	3P41				REMARKS OBSERVACIONES
1	5US–F4730–00	DOUBLE SEAT ASSY SILLIN DOBLE COMPLETO	1	1				
2	5US–F470F–00	.SEAT COVER COMP. .FUNDADE SILLIN	1	1				
3	4LS–F4741–00	.PAD, SEAT .COJIN DE ASIENTO	6	6				
4	5US–F471F–00	.BUTTON .BUTTON	5	5				
5	90119–06060	BOLT, WITH WASHER TORNILLO CON ARANDELA	2	2				
6	5US–F8100–00	TOOL KIT JUEGO DE HERRAMIENTAS	1	1				
7	5US–H2131–00	BAND, BATTERY TIRANTE DE BATERIA	1	1				

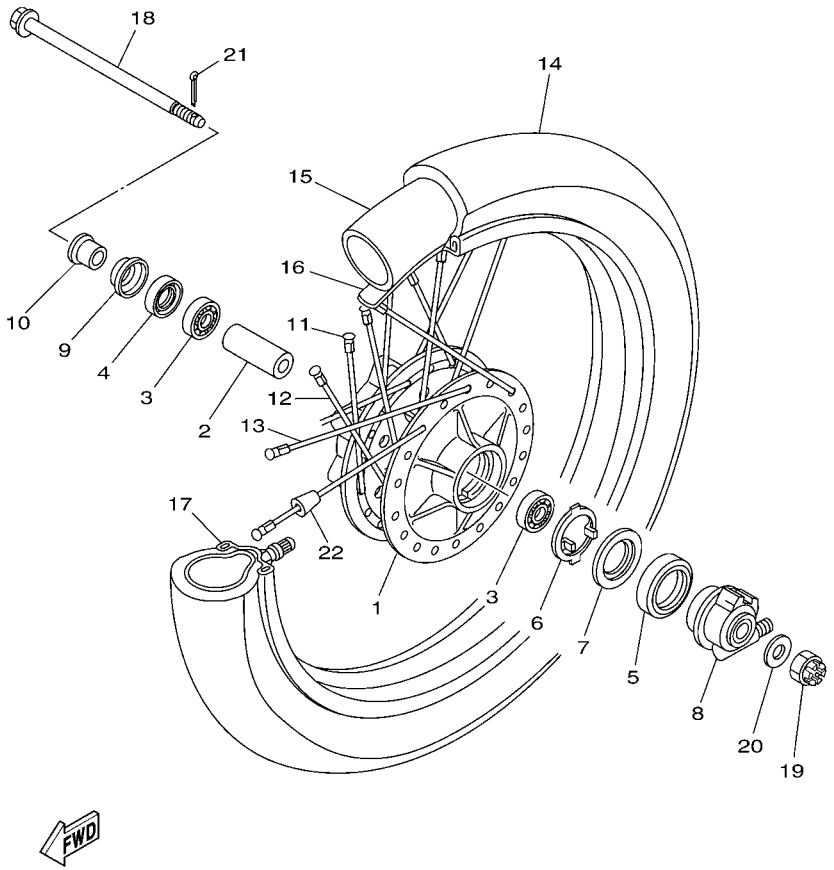

3P01200-C250

FIG. 25 FRONT WHEEL — RUEDA DELANTERA

REF. NO.	PART NO. CODIGO Nº	DESCRIPTION DESCRIPCION	3P01	3P41				REMARKS OBSERVACIONES
1	5US–F5111–10	HUB, FRONT MASA DELANTERA	1	1				
2	5US–F5117–10	SPACER, BEARING ESPACIADOR DE COJINETE	1	1				
3	93306–202Y0	BEARING COJINETE	2	2				
4	93104–22805	OIL SEAL SELLO ACEITE	1	1				
5	93105–45017	OIL SEAL SELLO ACEITE	1	1				
6	4UU–F5149–00	CLUTCH, METER EMBRAGUE DEL CUENTAKMS	1	1				
7	4UU–F5846–00	RETAINER, CLUTCH RETEN DEL EMBRAGUE	1	1				
8	5US–F5190–00	GEAR UNIT ASSY UNIDAD DE ENGRANAJE COMPLETA	1	1				
9	5US–F5118–00	COVER, HUB DUST CUBIERTA DE MASA PARA POLVO	1	1				
10	90387–1500N	COLLAR ESPACIADOR	1	1				
11	5US–F5395–00	NIPPLE, SPOKE NIPLE	36	36				
12	5US–F5196–00	SPOKE, INNER 1 RAYOS INTERNO 1	18	18				
13	5US–F5197–00	SPOKE, OUTER 1 RAYOS EXTERNO 1	18	18				
14	94127–18810	TIRE (2.75-18) NEUMATICO (2.75-18)	1	1				
15	94225–18823	TUBE (2.50-18) TUBO (2.50-18)	1	1				
16	94325–18822	BAND, RIM (2.50-18) BANDA DE ARO (2.50-18)	1	1				
17	5US–F5144–00	RIM (1.60-18) ARO (1.60-18)	1	1				
18	5US–F5181–00	AXLE, WHEEL EJE DE LA RUEDA	1	1				
19	90171–14020	NUT, CASTLE TUERCA ENTALLADA	1	1				
20	92907–14200	WASHER ARANDELA	1	1				
21	91401–30030	PIN, COTTER PASADOR DE CHAVETA	1	1				
22	4LS–F5398–00	BALANCER, WHEEL CONTRAPESO DE RUEDA	1	1				UN UN

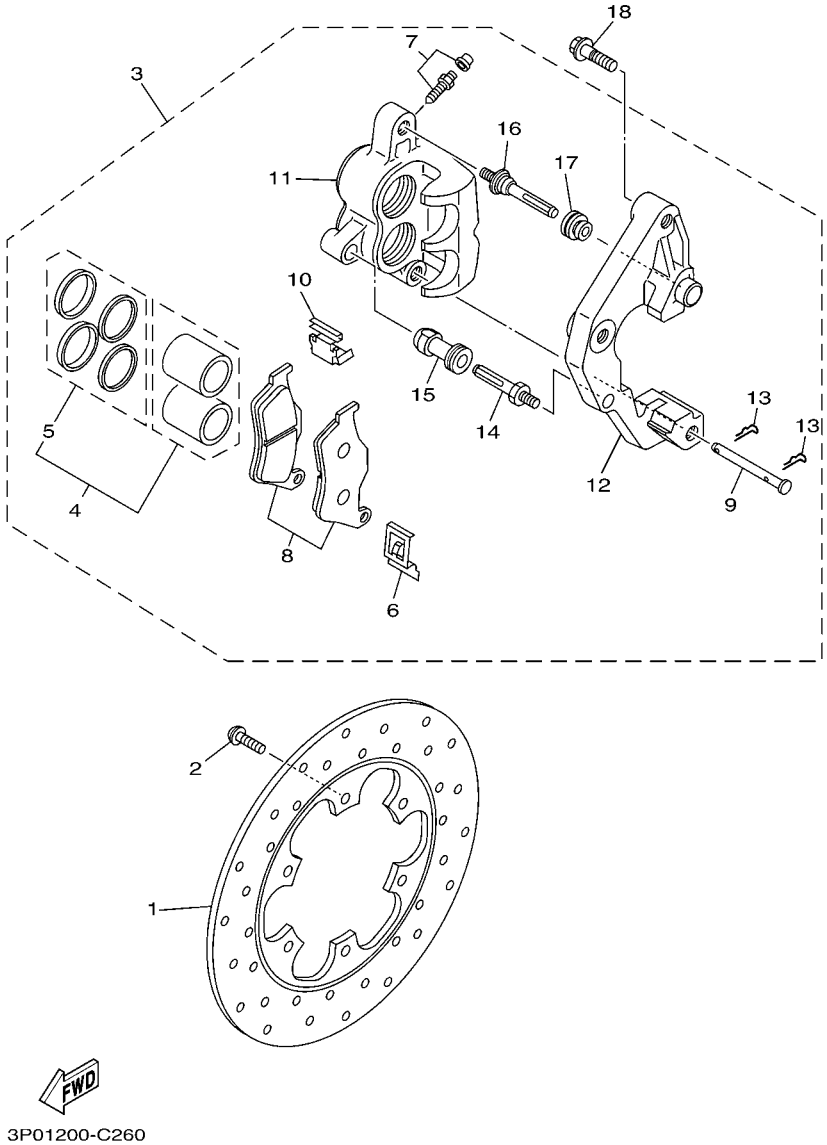

FIG. 26 FRONT BRAKE CALIPER CALIBRE FRENO DELANTERA

REF. NO.	PART NO. CODIGO Nº	DESCRIPTION DESCRIPCION	3P01	3P41				REMARKS OBSERVACIONES
1	5US–F582U–00	DISK, BRAKE (RIGHT) DISCO DE FRENO (DERECHO)	1	1				
2	90110–06819	BOLT, HEXAGON SOCKET HEAD TORNILLO ALLEN	6	6				
3	5US–F580U–00	CALIPER ASSY (RIGHT) CALIBRE COMPLETO (DERECHO)	1	1				
4	5US–W0057–00	.PISTON ASSY, CALIPER .PISTON COMPLETO PINZA	1	1				
5	5US–W0047–00	..CALIPER SEAL KIT ..JUEGO DE RETENES DE PINZA	1	1				
6	5US–F5977–00	.SPRING, RETURN .RESORTE DE RETORNO	1	1				
7	5US–W0048–00	.BLEED SCREW KIT .CJTO TORNILLO DE PURGA	1	1				
8	5US–W0045–00	.BRAKE PAD KIT .JUEGO DE COJIN DE FRENO	1	1				
9	5US–F5744–00	.PIN 2 .PASADOR 2	1	1				
10	5US–F5827–00	.SHIM, CALIPER .CUNA DE CALIBRE	1	1				
11	5US–W0157–00	.CALIPER BODY .CUERPO DE CALIBRE	1	1				
12	5US–W0913–00	.BRACKET .SOPORTE	1	1				
13	5US–W0016–00	.CLIP .PRESILLA	2	2				
14	5US–W0032–00	.SECONDARY PIN .SECUNDARIO DE PASADOR	1	1				
15	5US–W0068–00	.INSULATOR .AISLANTE	1	1				
16	5US–W0028–00	.PRIMARY PIN .PRIMARIA DE PASADOR	1	1				
17	5US–W0053–00	.DUST COVER .DUST COVER	1	1				
18	90105–10815	BOLT, FLANGE TORNILLO	2	2				

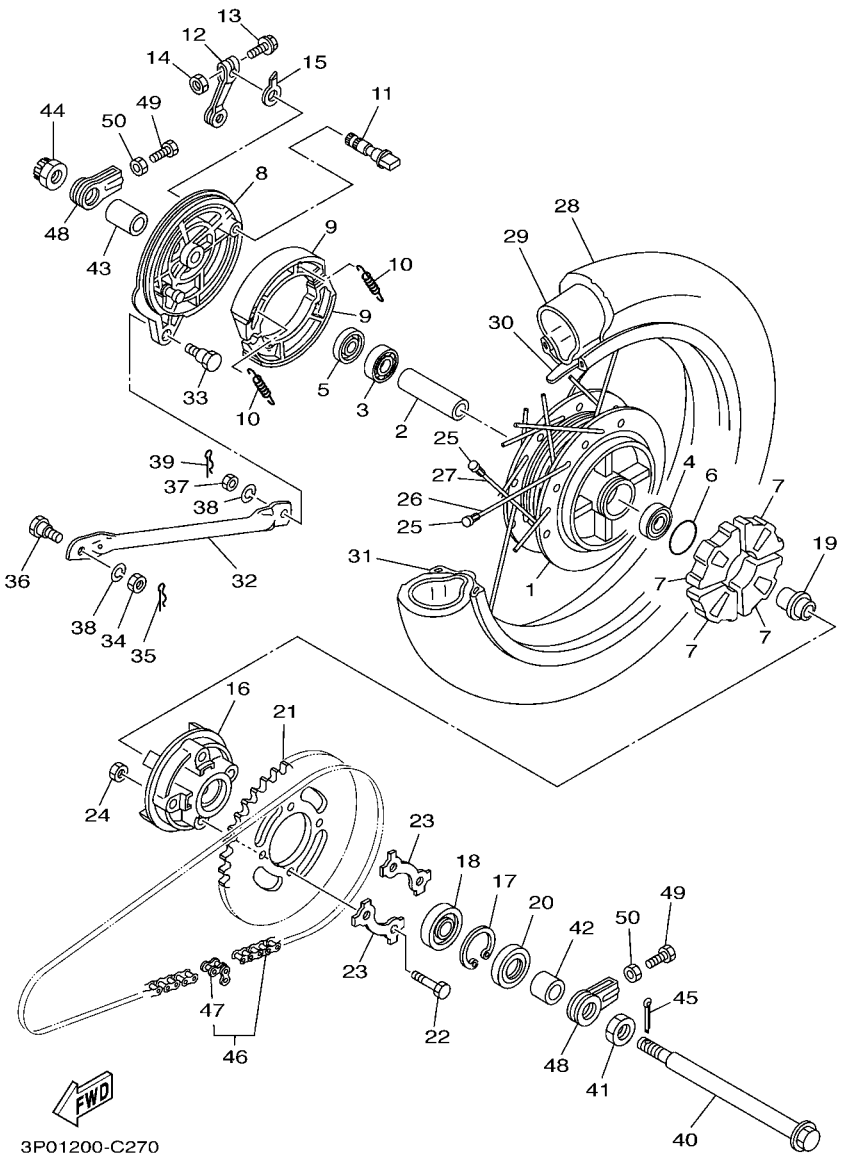

FIG. 27 REAR WHEEL — RUEDA TRASERA

REF. NO.	PART NO. CODIGO Nº	DESCRIPTION DESCRIPCION	3P01	3P41				REMARKS OBSERVACIONES
1	5US–F5311–00	HUB, REAR MASA TRASERA	1	1				
2	5US–F5317–00	SPACER, BEARING ESPACIADOR DE COJINETE	1	1				
3	93306–202Y0	BEARING COJINETE	1	1				
4	93306–202Y1	BEARING COJINETE	1	1				
5	93104–22805	OIL SEAL SELLO ACEITE	1	1				
6	93210–42807	O-RING ANILLO O	1	1				
7	36L–F5364–00	DAMPER AMORTIGUADOR	4	4				
8	5US–F5321–00	PLATE, BRAKE SHOE PLACA DE ZAPATA DE FRENO	1	1				
9	36L–F5330–00	BRAKE SHOE COMP. ZAPATA DE FRENO COMPLETA	2	2				
10	90506–16036	SPRING, TENSION RESORTE DE TENSION	2	2				
11	36L–F5351–00	CAMSHAFT ARBOL DE LEVAS	1	1				
12	5US–F5355–00	LEVER, CAMSHAFT PALANCA DE ARBOL DE LEVAS	1	1				
13	90101–06809	BOLT TORNILLO	1	1				
14	9530N–06600	NUT TUERCA	1	1				
15	36L–F533A–00	PLATE, INDICATOR PLACA INDICADOR	1	1				
16	36L–F5366–00	CLUTCH, HUB EMBRAGUE DE MASA	1	1				
17	93420–42801	CIRCLIP SEGURO	1	1				
18	93306–004Y0	BEARING COJINETE	1	1				
19	5US–F5387–00	AXLE, SPROCKET EJE DE CORONA	1	1				
20	93106–26801	OIL SEAL SELLO ACEITE	1	1				
21	5YY–F5445–00	SPROCKET, DRIVEN (45T) CORONA (45T)	1	1				
22	90109–08361	BOLT PERNO	4	4				
23	36L–F5412–00	WASHER ARANDELA	2	2				
24	90179–08168	NUT TUERCA	4	4				
25	5US–F5395–00	NIPPLE, SPOKE NIPLE	36	36				
26	5US–F5396–00	SPOKE, INNER 2 RAYOS INTERNO 2	18	18				
27	5US–F5397–00	SPOKE, OUTER 2 RAYOS EXTERNO 2	18	18				

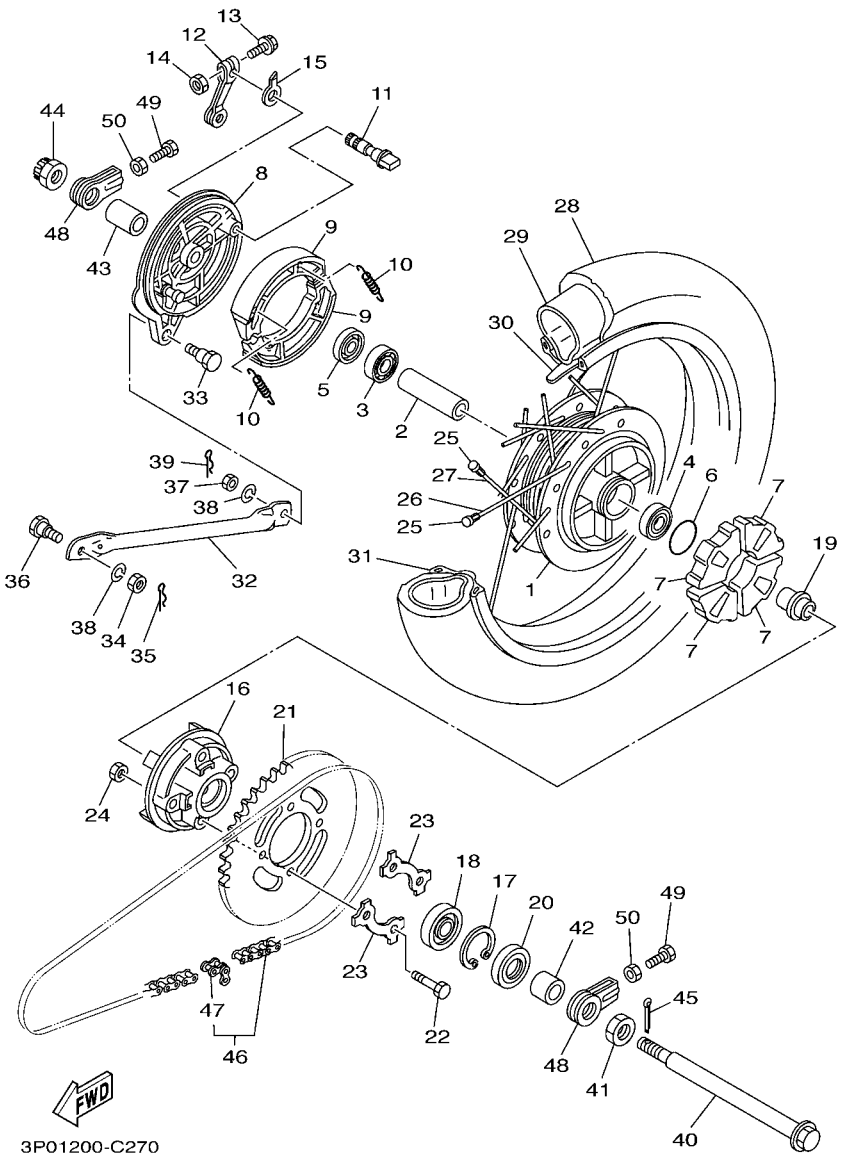

FIG. 27 REAR WHEEL — RUEDA TRASERA

REF. NO.	PART NO. CODIGO Nº	DESCRIPTION DESCRIPCION	3P01	3P41				REMARKS OBSERVACIONES
28	94112–16800	TIRE NEUMATICO	1	1				
29	94212–16800	TUBE TUBO	1	1				
30	94312–16800	BAND, RIM BANDA DE ARO	1	1				
31	5US–F5344–00	RIM (2.50-16) ARO (2.50-16)	1	1				
32	5US–F5371–00	BAR, TENSION BARRA TENSORA	1	1				
33	90109–08063	BOLT PERNO	1	1				
34	9530N–08600	NUT TUERCA	1	1				
35	90468–12007	CLIP PRESILLA	1	1				
36	90109–08368	BOLT PERNO	1	1				
37	9530N–08700	NUT TUERCA	1	1				
38	92907–08100	WASHER, SPRING ARANDELA	2	2				
39	91401–20015	PIN, COTTER PASADOR DE CHAVETA	1	1				
40	5US–F5381–00	AXLE, WHEEL EJE DE RUEDA	1	1				
41	90170–20224	NUT TUERCA	1	1				
42	5US–F5376–00	COLLAR, WHEEL COLLAR DE RUEDA	1	1				
43	5US–F5377–00	COLLAR, WHEEL COLLAR DE RUEDA	1	1				
44	90171–14020	NUT, CASTLE TUERCA ENTALLADA	1	1				
45	91401–30030	PIN, COTTER PASADOR DE CHAVETA	1	1				
46	94580–88130	CHAIN (DID428HG-130LL) CADENA (DID428HG-130LL)	1	1				
47	94680–88001	.JOINT, CHAIN (DID 428HG) .CONECTOR DE CADENA(DID 428HG)	1	1				
48	36L–F5388–00	PULLER, CHAIN 1 TIRADOR DE CADENA 1	2	2				
49	90153–08011	SCREW, HEXAGON TORNILLO HEXAGONAL	2	2				
50	95307–08700	NUT TUERCA	2	2				

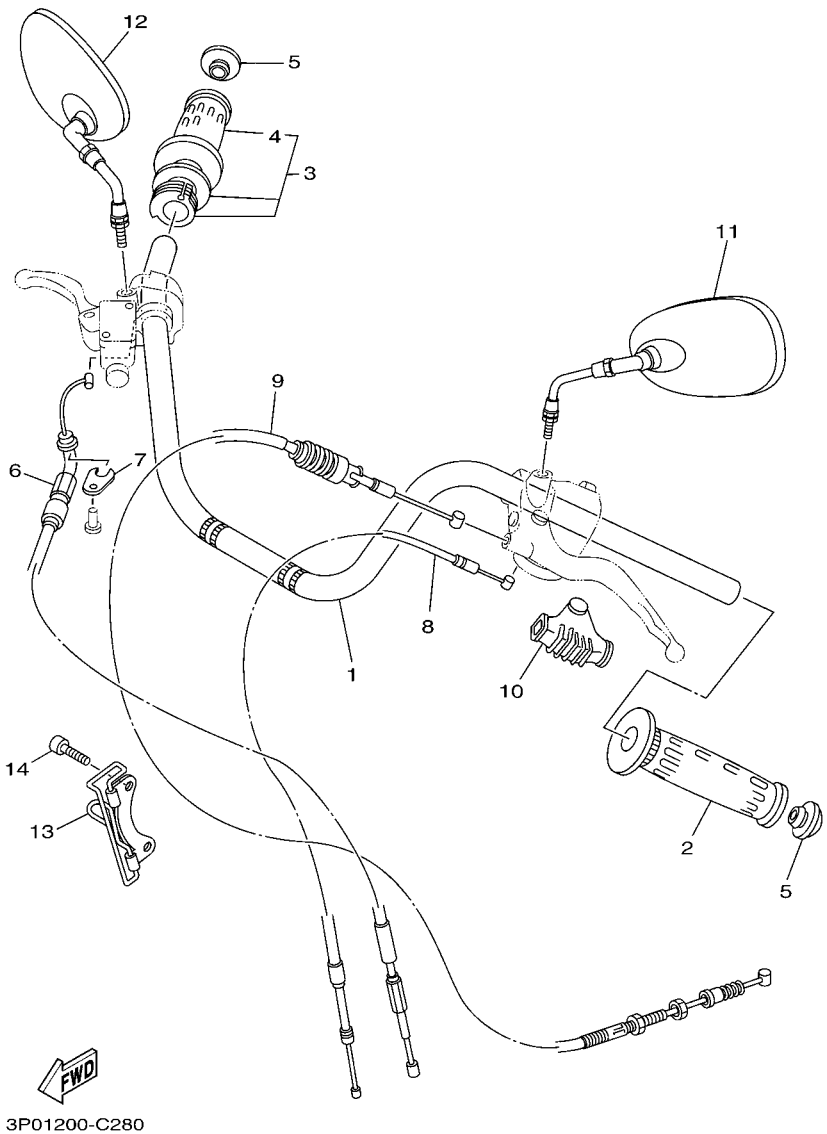

FIG. 28 STEERING HANDLE & CABLE MANILLAR & CABLE

REF. NO.	PART NO. CODIGO Nº	DESCRIPTION DESCRIPCION	3P01	3P41				REMARKS OBSERVACIONES
1	5US–F6111–00	HANDLEBAR MANUBRIO	1	1				
2	5US–F6241–00	GRIP EMPUNADURA	1	1				
3	5US–F6240–00	GRIP ASSY EMPUNADURA COMPLETA	1	1				
4	5US–F6242–00	.GRIP (RIGHT) .EMPUNADURA (MD)	1	1				
5	5US–F628J–00	CAP, GRIP TAPA EMPUNADURA	2	2				
6	5US–F6311–00	CABLE, THROTTLE 1 CABLE DE ACELERADOR 1	1	1				
7	5US–F6393–00	HOLDER SOPORTE	1	1				
8	5US–F6331–00	CABLE, STARTER 1 CABLE DE ARRANQUE	1	1				
9	5US–F6335–00	CABLE, CLUTCH CABLE DE EMBRAGUE	1	1				
10	5US–F6372–00	COVER, HANDLE LEVER 1 CUBIERTA DE PALANCA DE MANUB 1	1	1				
11	5US–F6280–00	REAR VIEW MIRROR ASSY (LEFT) ESPEJO COMPLETO (IZQUIERDO)	1	1				
12	5US–F6290–00	REAR VIEW MIRROR ASSY (RIGHT) ESPEJO COMPLETO (DERECHO)	1	1				
13	5US–F5886–00	HOLDER, BRAKE HOSE SOPORTE DE MANGUERA FRENO	1	1				
14	95827–06012	BOLT, FLANGE TORNILLO	1	1				

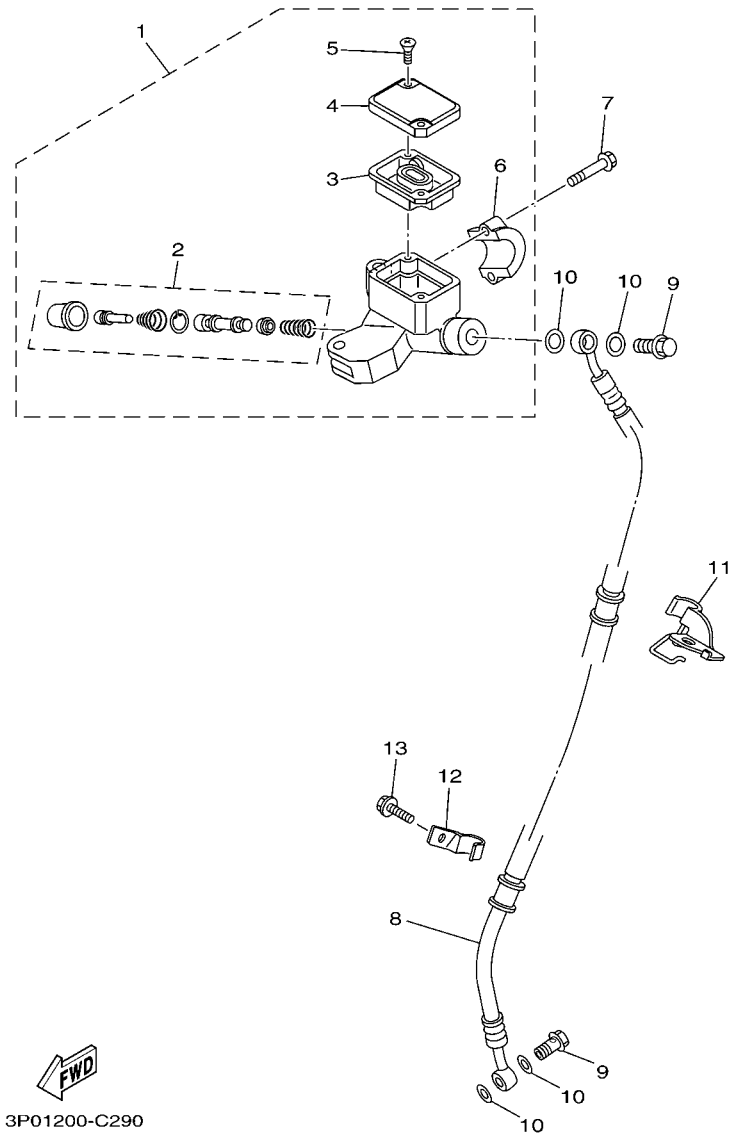

FIG. 29 FRONT MASTER CYLINDER CILINDRO MAESTRO DELANTERO

REF. NO.	PART NO. CODIGO Nº	DESCRIPTION DESCRIPCION	3P01	3P41				REMARKS OBSERVACIONES
1	5US–F583T–00	MASTER CYLINDER ASSY CILINDRO MAESTRO COMPLETO	1	1				
2	5US–W0041–00	.CYLINDER KIT, MASTER .JUEGO DE CILINDRO MAESTRO	1	1				
3	5US–25854–00	.DIAPHRAGM, RESERVOIR .DIAFRAGMA TANQUE RESERVA	1	1				
4	5US–25852–00	.CAP, RESERVOIR .TAPA DE TANQUE DE RESERVA	1	1				
5	98706–04012	.SCREW, FLAT HEAD .TORNILLO DE CABEZA PLANA	2	2				
6	5US–25867–00	.BRACKET, MASTER CYLINDER .SOPORTE DE CILINDRO MAESTRO	1	1				
7	90105–06818	BOLT, FLANGE TORNILLO	2	2				
8	5US–F5872–00	HOSE, BRAKE 1 MANGUERA DE FRENO 1	1	1				
9	90401–10813	BOLT, UNION PERNO DE UNION	2	2				
10	90201–10815	WASHER, PLATE ARANDELA PLANA	4	4				
11	5US–F5875–00	HOLDER, BRAKE HOSE 1 SOPORTE DE MANGUERA FRENO 1	1	1				
12	5US–F6279–10	GUIDE, CABLE GUIA DE CABLE	1	1				
13	91317–06014	BOLT PERNO	1	1				

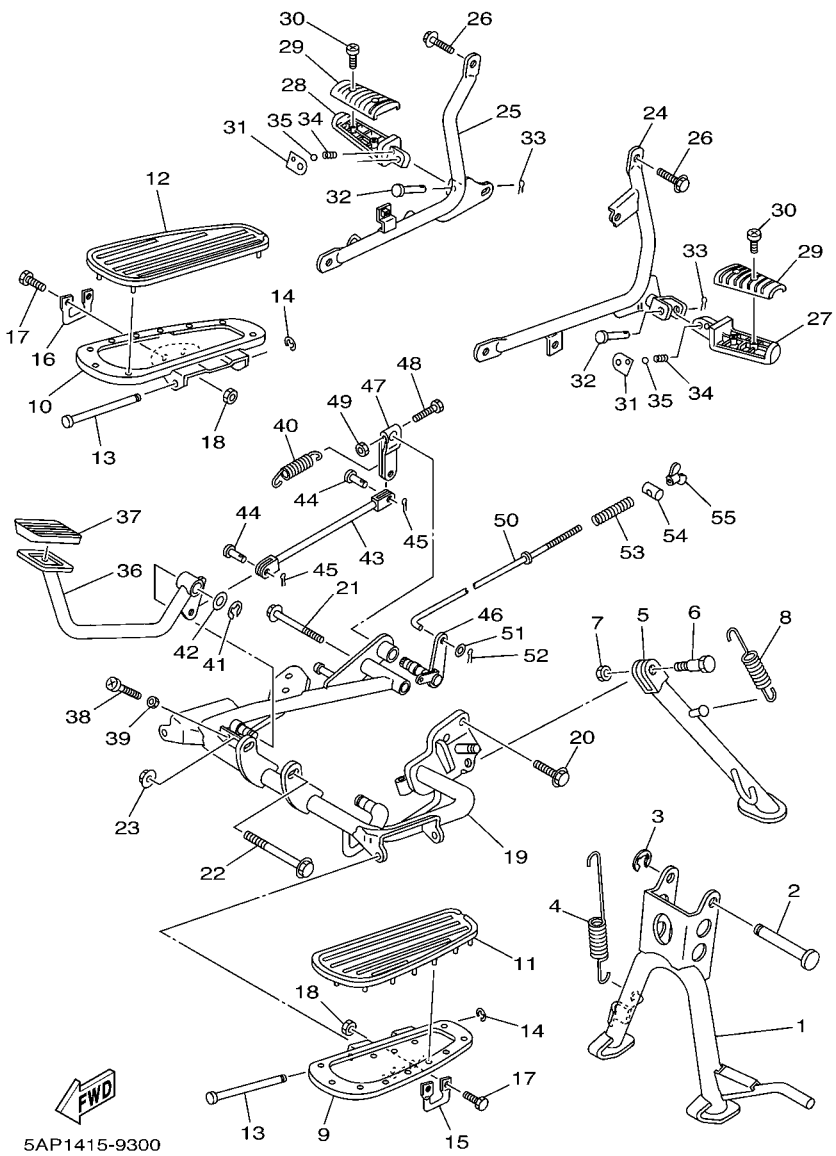

FIG. 30 STAND & FOOTREST — SOPORTE & APOYAPIE

REF. NO.	PART NO. CODIGO Nº	DESCRIPTION DESCRIPCION	3P01	3P41				REMARKS OBSERVACIONES
1	5US–F7111–00	STAND, MAIN PUNTAL PRINCIPAL	1	1				
2	5US–F7112–00	SHAFT, MAIN STAND EJE DE PUNTAL PRINCIPAL	1	1				
3	93430–12008	CIRCLIP SEGURO	1	1				
4	90506–35517	SPRING, TENSION RESORTE DE TENSION	1	1				
5	5US–F7311–00	STAND, SIDE PUNTAL LATERAL	1	1				
6	90109–10474	BOLT PERNO	1	1				
7	95307–10700	NUT TUERCA	1	1				
8	90506–28146	SPRING, TENSION RESORTE DE TENSION	1	1				
9	5US–F7411–00	FOOTREST 1 APOYAPIE 1	1	1				
10	5US–F7421–00	FOOTREST 2 APOYAPIE 2	1	1				
11	5US–F7413–00	COVER, FOOTREST CUBIERTA DE APOYAPIE	1	1				
12	5AP–F7423–00	COVER, FOOTREST CUBIERTA DE APOYAPIE	1	1				
13	5US–F744G–00	PIN PASADOR	2	2				
14	99001–06600	CIRCLIP PRESILLA REDONDA	2	2				
15	5US–F744E–00	HOOK 1 GANCHO	1	1				
16	5US–F744F–00	HOOK 2 GANCHO	1	1				
17	97007–06014	BOLT PERNO	4	4				
18	95309–06700	NUT TUERCA	4	4				
19	5US–F7452–00	BRACKET, FOOTREST 1 SOPORTE, DE APOYAPIE 1	1	1				
20	95807–08025	BOLT, FLANGE TORNILLO	1	1				
21	95817–08090	BOLT, FLANGE TORNILLO	1	1				
22	90105–10849	BOLT, FLANGE TORNILLO	1	1				
23	95707–10500	NUT, FLANGE TUERCA DE BRIDA	1	1				
24	5US–F7432–00	BRACKET 1 SOPORTE 1	1	1				
25	5US–F7442–00	BRACKET 2 SOPORTE 2	1	1				
26	95807–08020	BOLT, FLANGE TORNILLO	2	2				
27	5US–F7431–00	FOOTREST, REAR 1 APOYAPIE POSTERIOR 1	1	1				

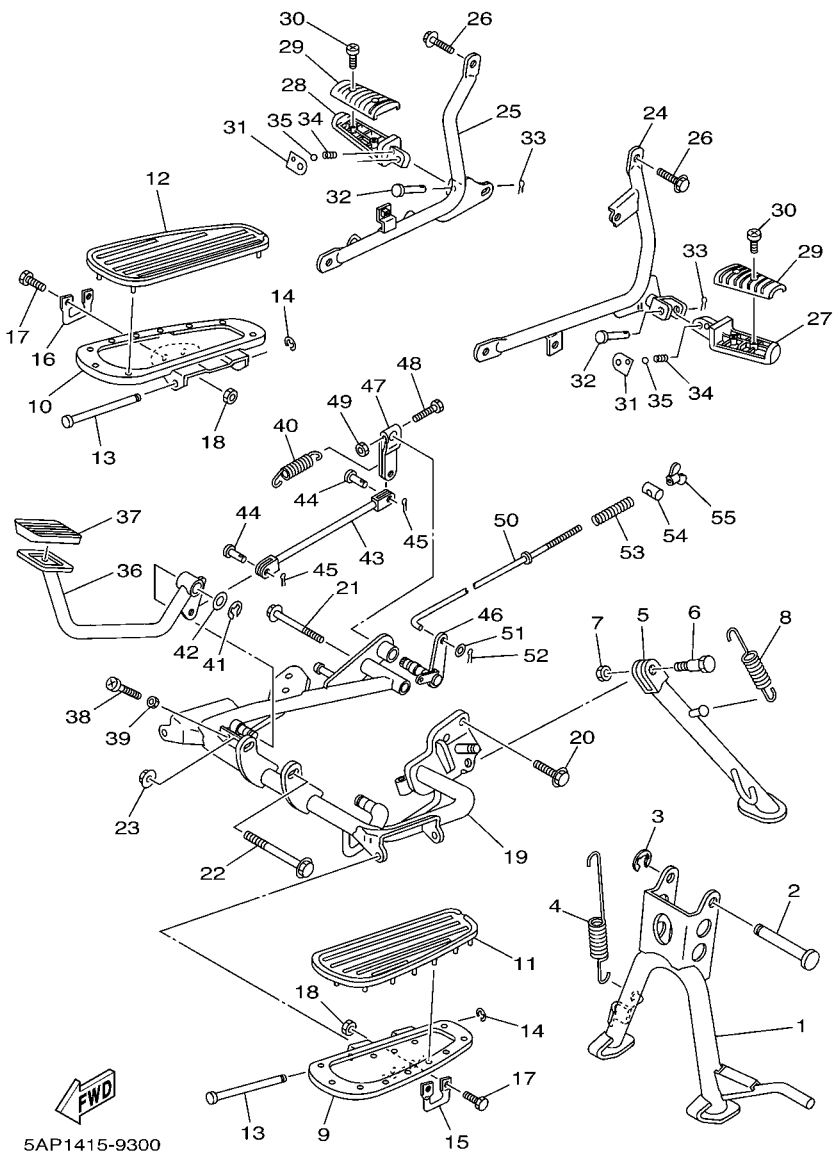

FIG. 30 STAND & FOOTREST — SOPORTE & APOYAPIE

REF. NO.	PART NO. CODIGO Nº	DESCRIPTION DESCRIPCION	3P01	3P41				REMARKS OBSERVACIONES
28	5US–F7441–00	FOOTREST, REAR 2 APOYAPIE POSTERIOR 2	1	1				
29	5US–F7433–00	COVER, REAR FOOTREST CUBIERTA APOYAPIE TRASERO	2	2				
30	98517–06012	SCREW, PAN HEAD TORNILLO DE CABEZA CON PLANA	4	4				
31	5US–F7437–00	WASHER, SPECIAL ARANDELA ESPECIAL	2	2				
32	91701–06032	PIN, CLEVIS PASADOR DE ABRAZADERA	2	2				
33	91401–20012	PIN, COTTER PASADOR DE CHAVETA	2	2				
34	90501–12743	SPRING, COMPRESSION RESORTE DE COMPRESION	2	2				
35	93501–04805	BALL BOLA	2	2				
36	5US–F7211–00	PEDAL, BRAKE PEDAL DE FRENO	1	1				
37	5US–F7285–00	CAP TAPA	1	1				
38	98507–06020	SCREW, PAN HEAD TORNILLO DE CABEZA CON PLANA	1	1				
39	95307–06700	NUT TUERCA	1	1				
40	90506–20223	SPRING, TENSION RESORTE DE TENSION	1	1				
41	99009–15400	CIRCLIP PRESILLA REDONDA	1	1				
42	90201–152L1	WASHER, PLATE ARANDELA PLANA	1	1				
43	5US–F7247–00	ROD 1 COJIN DE FRENO	1	1				
44	91701–08018	PIN, CLEVIS PASADOR DE ABRAZADERA	2	2				
45	91401–16012	PIN, COTTER PASADOR DE CHAVETA	2	2				
46	5US–F7204–00	LEVER ASSY 1 PALANCA COMPLETA	1	1				
47	5US–F7262–00	LEVER PALANCA	1	1				
48	90101–06278	BOLT TORNILLO	1	1				
49	95307–06600	NUT TUERCA	1	1				
50	5US–F7231–00	ROD, BRAKE VARILLA DE FRENO	1	1				
51	9290N–06600	WASHER ARANDELA	1	1				
52	91401–20012	PIN, COTTER PASADOR DE CHAVETA	1	1				
53	90501–10245	SPRING, COMPRESSION RESORTE DE COMPRESION	1	1				
54	90249–12008	PIN PASADOR	1	1				

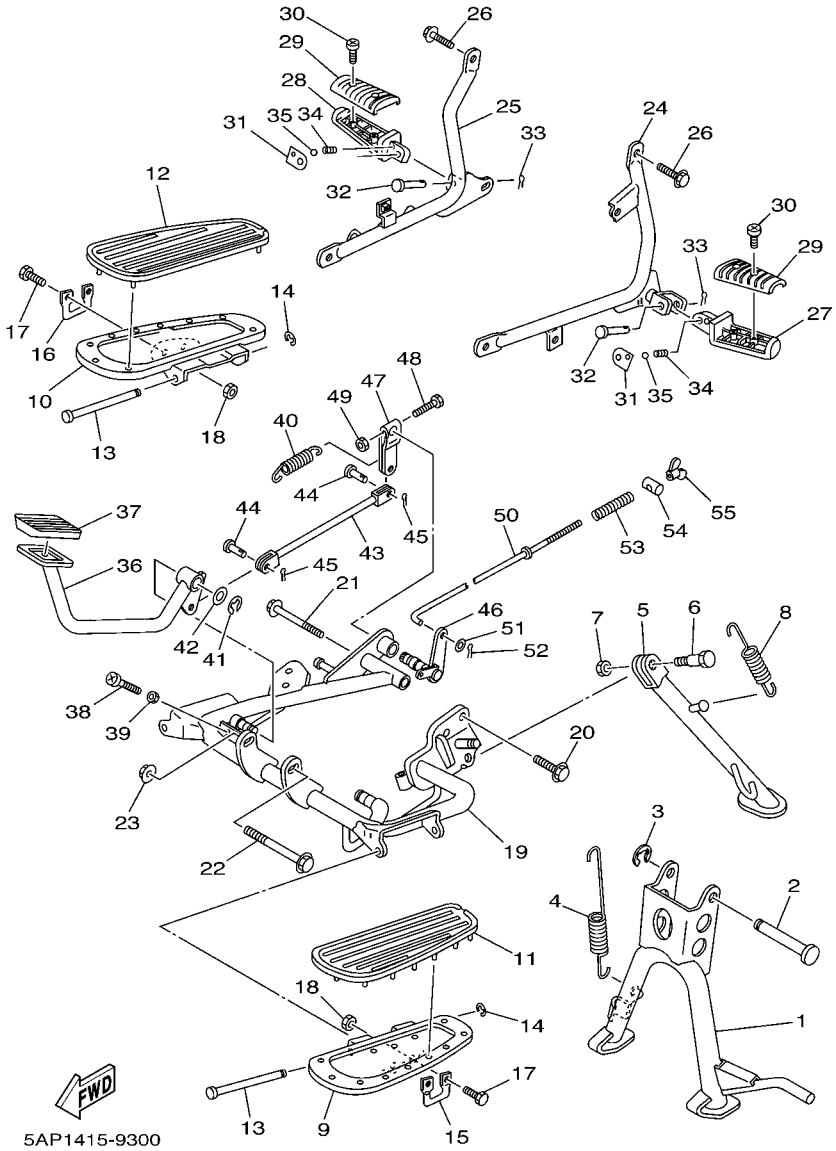

FIG. 30 STAND & FOOTREST — SOPORTE & APOYAPIE

REF. NO.	PART NO. CODIGO Nº	DESCRIPTION DESCRIPCION	3P01	3P41				REMARKS OBSERVACIONES
55	90179–06806	NUT TUERCA	1	1				

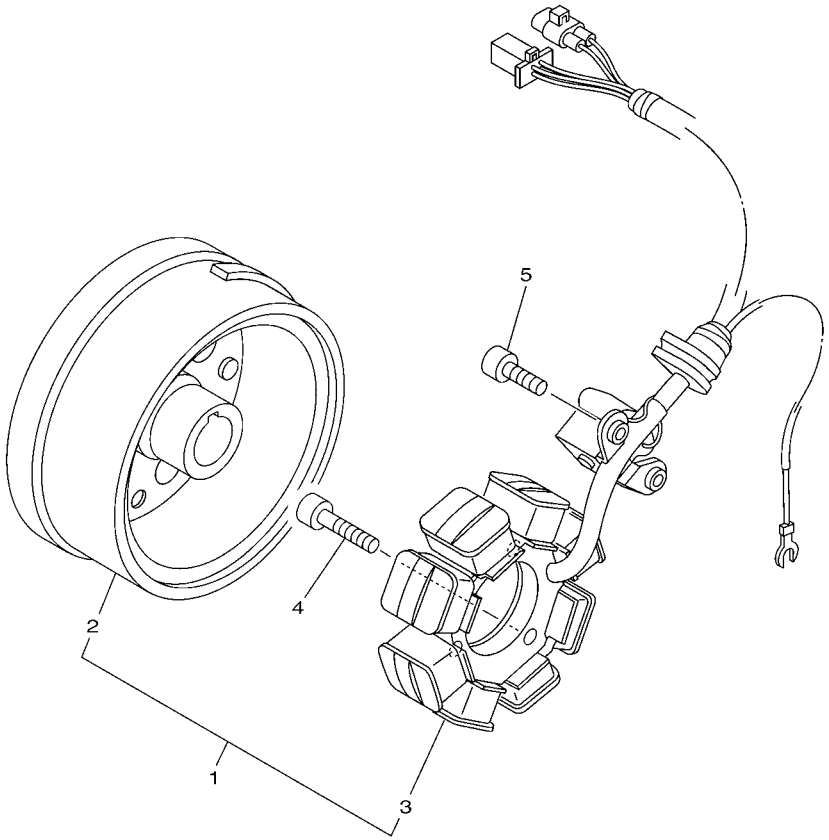

3P01200-C310

FIG. 31 GENERATOR GENERADOR

REF. NO.	PART NO. CODIGO Nº	DESCRIPTION DESCRIPCION	3P01	3P41				REMARKS OBSERVACIONES
1	5US–H1400–00	AC MAGNET GENERATOR ASSY GENERADOR MAGNETO C.A.	1	1				
2	5US–H1450–00	.ROTOR ASSY .ROTOR COMPLETO	1	1				
3	5US–H1410–00	.STATOR ASSY .ESTATOR COMPLETO	1	1				
4	90110–06811	BOLT, HEXAGON SOCKET HEAD TORNILLO ALLEN	3	3				
5	90110–06806	BOLT, HEXAGON SOCKET HEAD TORNILLO ALLEN	2	2				

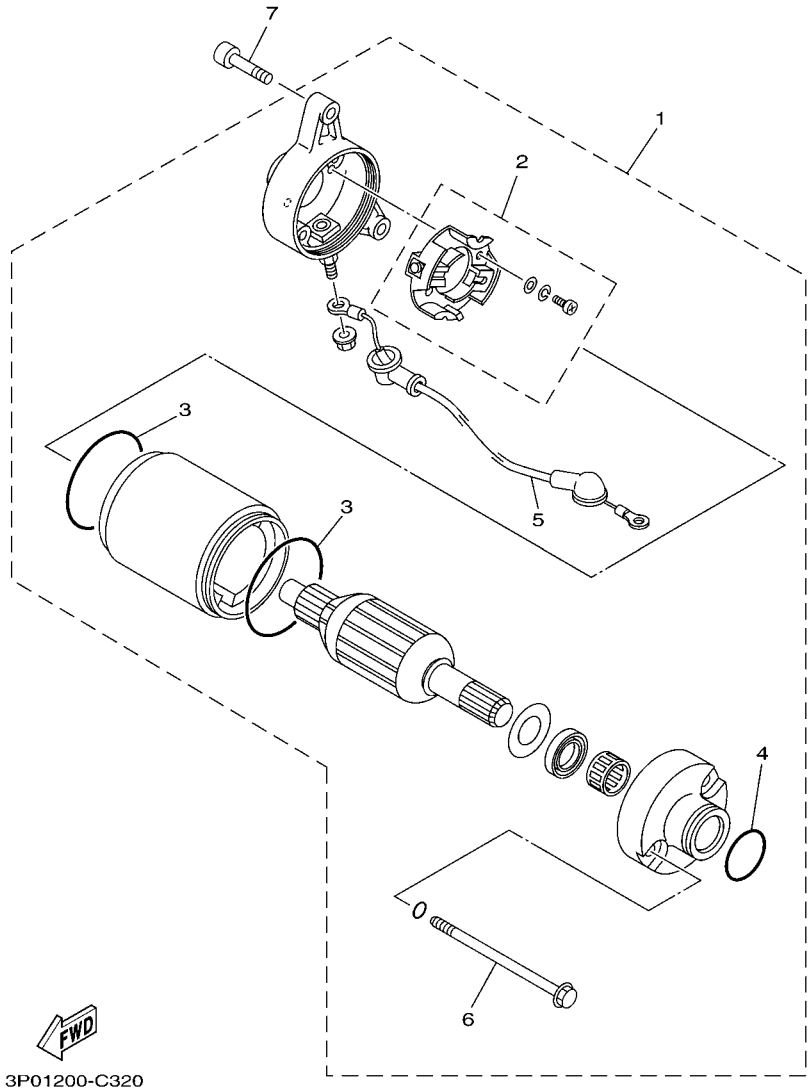

FIG. 32 STARTING MOTOR MOTOR DE ARRANQUE

REF. NO.	PART NO. CODIGO Nº	DESCRIPTION DESCRIPCION	3P01	3P41				REMARKS OBSERVACIONES
1	5US–H1800–00	STARTING MOTOR ASSY MOTOR DE ARRANQUE COMPLETO	1	1				
2	5US–H1801–00	.BRUSH SET .JUEGO DE ESCOBILLA	1	1				
3	93210–56803	.O-RING .ANILLO O	2	2				
4	93210–25804	.O-RING .ANILLO O	1	1				
5	5US–H183G–00	.CORD COMP. .CABLE DEL MOTOR COMPL.	1	1				
6	90105–05800	.BOLT, FLANGE .TORNILLO	2	2				
7	9502N–06025	BOLT, FLANGE PERNO, DE BRIDA	2	2				

FIG. 33 FLASHER LIGHT LUZ DE DESTELLADOR

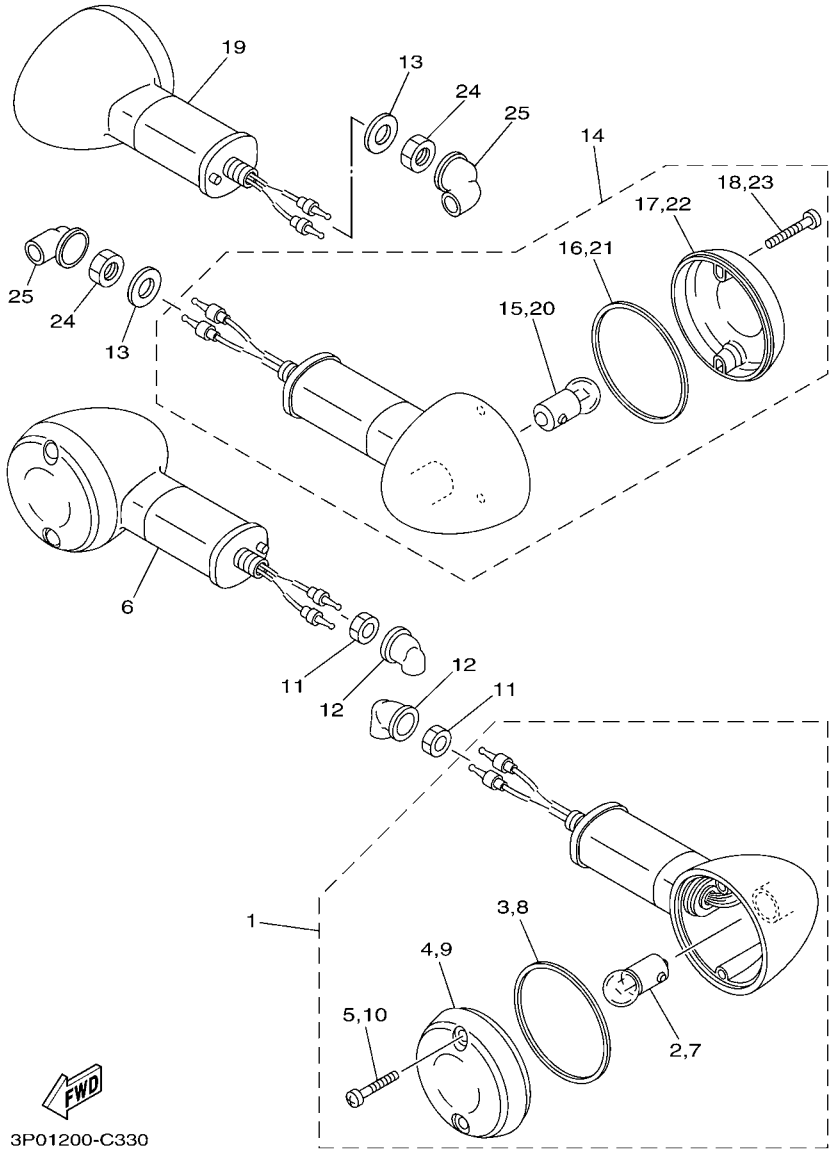

REF. NO.	PART NO. CODIGO Nº	DESCRIPTION DESCRIPCION	3P01	3P41				REMARKS OBSERVACIONES
1	5US–H3310–00	FRONT FLASHER LIGHT ASSY 1 DESTELLADOR DE LUZ DELANT.	1	1				
2	36L–H3311–00	.BULB, FLASHER (12V-10W) .BOMBILLA (12V-10W)	1	1				
3	5US–H3313–00	.GASKET, FLASHER LENS .EMPAQUE DE LENTE DESTELLADOR	1	1				
4	5US–H3312–00	.LENS, FLASHER .LENTE DE DESTELLADOR	1	1				
5	5US–H3333–00	.SCREW, LENS FITTING .TORNILLO ACCESORIO DE LENTE	2	2				
6	5US–H3320–00	FRONT FLASHER LIGHT ASSY 2 DESTELLADOR DE LUZ DELANT.	1	1				
7	36L–H3311–00	.BULB, FLASHER (12V-10W) .BOMBILLA (12V-10W)	1	1				
8	5US–H3313–00	.GASKET, FLASHER LENS .EMPAQUE DE LENTE DESTELLADOR	1	1				
9	5US–H3312–00	.LENS, FLASHER .LENTE DE DESTELLADOR	1	1				
10	5US–H3333–00	.SCREW, LENS FITTING .TORNILLO ACCESORIO DE LENTE	2	2				
11	95304–12600	NUT TUERCA	2	2				
12	5US–H3365–00	CAP TAPON	2	2				
13	90201–12749	WASHER, PLATE ARANDELA PLANA	2	2				
14	5US–H3330–00	REAR FLASHER LIGHT ASSY 1 DESTELLADOR DE LUZ TRAS.COMPL.	1	1				
15	36L–H3311–00	.BULB, FLASHER (12V-10W) .BOMBILLA (12V-10W)	1	1				
16	5US–H3313–00	.GASKET, FLASHER LENS .EMPAQUE DE LENTE DESTELLADOR	1	1				
17	5US–H3312–00	.LENS, FLASHER .LENTE DE DESTELLADOR	1	1				
18	5US–H3333–00	.SCREW, LENS FITTING .TORNILLO ACCESORIO DE LENTE	2	2				
19	5US–H3340–00	REAR FLASHER LIGHT ASSY 2 DESTELLADOR DE LUZ TRAS.COMPL.	1	1				
20	36L–H3311–00	.BULB, FLASHER (12V-10W) .BOMBILLA (12V-10W)	1	1				
21	5US–H3313–00	.GASKET, FLASHER LENS .EMPAQUE DE LENTE DESTELLADOR	1	1				
22	5US–H3312–00	.LENS, FLASHER .LENTE DE DESTELLADOR	1	1				
23	5US–H3333–00	.SCREW, LENS FITTING .TORNILLO ACCESORIO DE LENTE	2	2				
24	95304–12600	NUT TUERCA	2	2				
25	5US–H3365–00	CAP TAPON	2	2				

FIG. 34 METER MEDIDOR

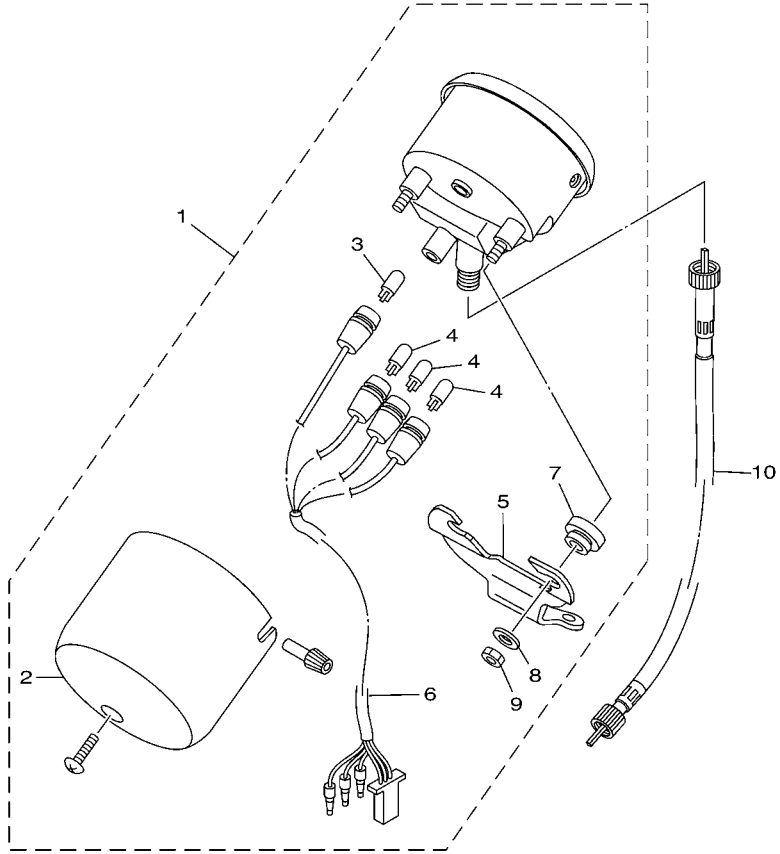

3P01200-C340

REF. NO.	PART NO. CODIGO Nº	DESCRIPTION DESCRIPCION	3P01	3P41				REMARKS OBSERVACIONES
1	5US–H3570–00	SPEEDOMETER ASSY VELOCIMETRO COMPLETO	1	1				
2	5US–H3507–00	.COVER, SPEEDOMETER .CUBIERTA DE VELOCIMETRO	1	1				
3	5US–H3517–00	.BULB (12V-1.7W) .AMPOLLETA (12V-1.7W)	1	1				
4	5US–H3518–00	.BULB, METER (14V-3.0W) .AMPOLLETA (14V-3.0W)	3	3				
5	5US–H3519–00	.BRACKET, METER .SOPORTE DE MEDIDOR	1	1				
6	5US–H3509–00	.SOCKET CORD ASSY .ENCASTRE DE CABLE COMPLETO	1	1				
7	5US–H3523–00	.DAMPER .AMORTIGUADOR	3	3				
8	5US–H3524–00	.WASHER, SPECIAL .ARANDELA ESPECIAL	3	3				
9	95301–05600	.NUT .TUERCA HEXAGONAL	3	3				
10	5US–H3550–10	SPEEDOMETER CABLE ASSY CABLE DE VELOCIMETRO COMPLETO	1	1				

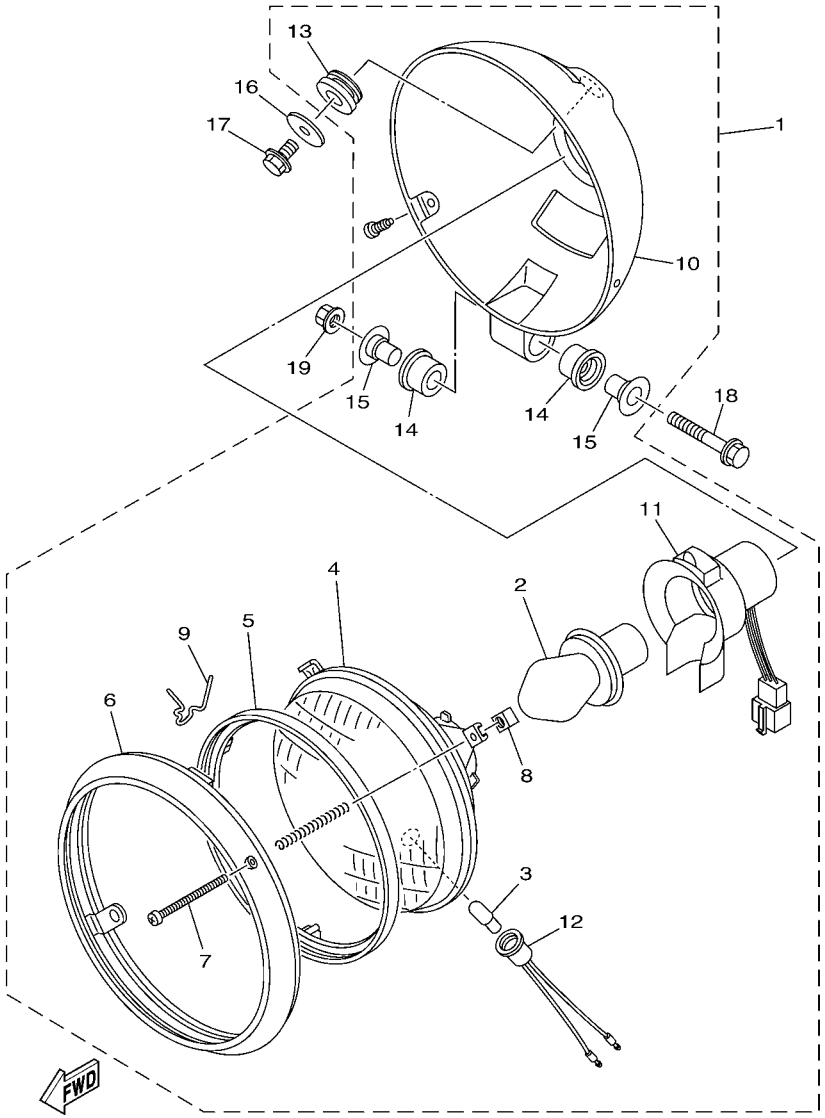

3P01200-C350

FIG. 35 HEADLIGHT FARO DELANTERO

REF. NO.	PART NO. CODIGO Nº	DESCRIPTION DESCRIPCION	3P01	3P41				REMARKS OBSERVACIONES
1	5US–H4300–00	HEADLIGHT ASSY FARO DELANTERO COMPLETO	1	1				
2	4LS–H4314–00	.BULB, HEADLIGHT (12V-35/35W) .BOMBILLA (12V-35/35W)	1	1				
3	4LS–H3516–00	.BULB .AMPOLLETA	1	1				
4	5US–H4321–00	.LENS ASSY .LENTE COMPLETO	1	1				
5	5US–H4395–00	.RING, RETAINING .ANILLO DE RETEN	1	1				
6	5US–H4315–00	.RIM, HEADLIGHT .ARO DE FARO DELANTERO	1	1				
7	5US–H4331–00	.SCREW, RIM ADJUSTING .TORNILLO DE AJUSTE DE ARO	1	1				
8	5US–H4334–00	.NUT, ADJUSTING .TUERCA DE AJUSTE	1	1				
9	5US–H4124–00	.SPRING, SET .JUEGO DE RESORTES	1	1				
10	5US–H4130–00	.BODY ASSY, HEADLIGHT .CUERPO COMPL FARO DELANTERO	1	1				
11	5US–H4340–00	.SOCKET CORD ASSY 1 .ENCASTRE DE CABLE COMPLETO	1	1				
12	5US–H4350–00	.SOCKET CORD ASSY 2 .ENCASTRE DE CABLE COMPLETO	1	1				
13	5US–H4164–00	.DAMPER .AMORTIGUADOR	1	1				
14	5US–H4163–00	.DAMPER .AMORTIGUADOR	2	2				
15	5US–H4145–00	.COLLAR, BODY FITTING .COLLAR ACCESORIO DE CUERPO	2	2				
16	90201–060A3	WASHER, PLATE ARANDELA PLANA	1	1				
17	95807–06014	BOLT, FLANGE TORNILLO	1	1				
18	95824–06045	BOLT, FLANGE TORNILLO	1	1				
19	95704–06500	NUT, FLANGE TUERCA DE BRIDA	1	1				

FIG. 36 TAILLIGHT LUZ DE COLA

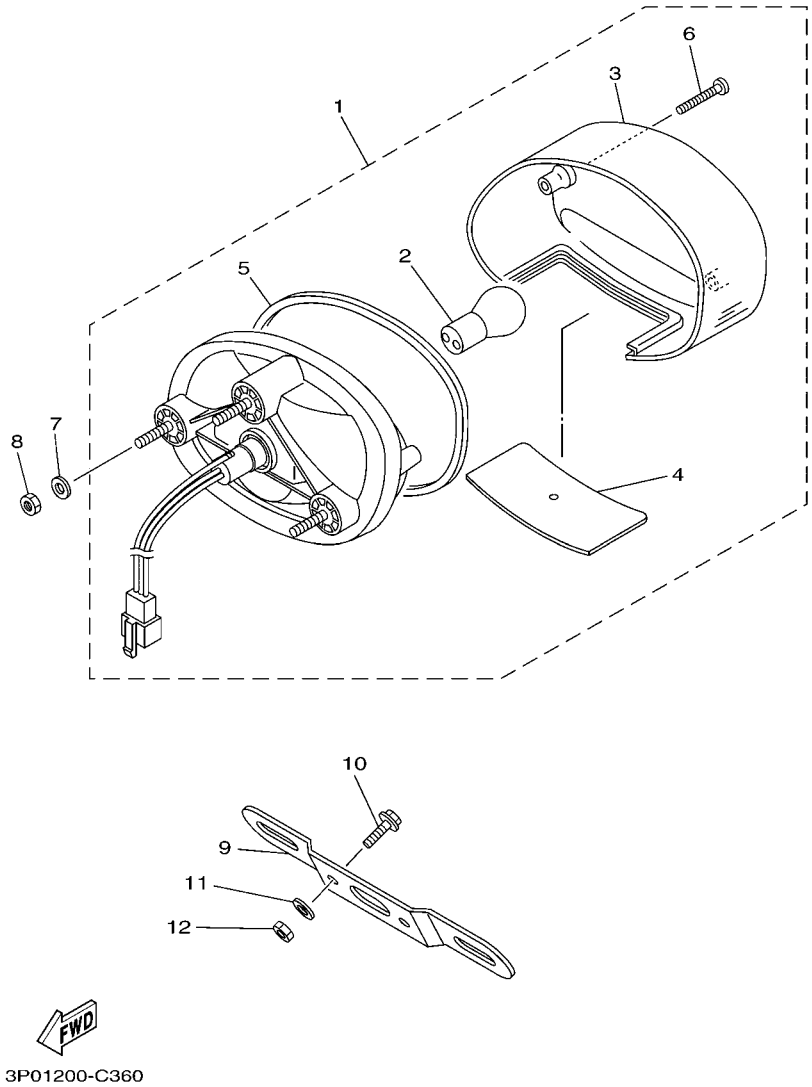

REF. NO.	PART NO. CODIGO Nº	DESCRIPTION DESCRIPCION	3P01	3P41				REMARKS OBSERVACIONES
1	5US–H4700–00	TAILLIGHT ASSY FARO TRASERO COMPLET.	1	1				
2	36L–H4714–10	.BULB (12V-21/5W) .BOMBILLA (12V-21/5W)	1	1				
3	5US–H4721–00	.LENS, TAILLIGHT .LENTE DE FARO TRASERO	1	1				
4	5US–H4743–00	.LENS, LICENCE LIGHT .LENTE DE LUZ DE LICENCIA	1	1				
5	5US–H4723–00	.GASKET, TAIL LENS .EMPAQUE LENTE FARO TRASERO	1	1				
6	9770N–40620	.SCREW, TAPPING .TORNILLO ROSCA HEMBRA	2	2				
7	90201–06380	WASHER, PLATE ARANDELA PLANA	3	3				
8	95607–06100	NUT, U TUERCA AUTOBLOCANTE	3	3				
9	5US–H4751–00	BRACKET, LICENSE SOPORTE DE LICENCIA	1	1				
10	95807–06012	BOLT, FLANGE TORNILLO	2	2				
11	90201–06380	WASHER, PLATE ARANDELA PLANA	2	2				
12	95307–06600	NUT TUERCA	2	2				

FIG. 37 HANDLE SWITCH & LEVER INTERRUPTOR DE MANILLAR&PALANC

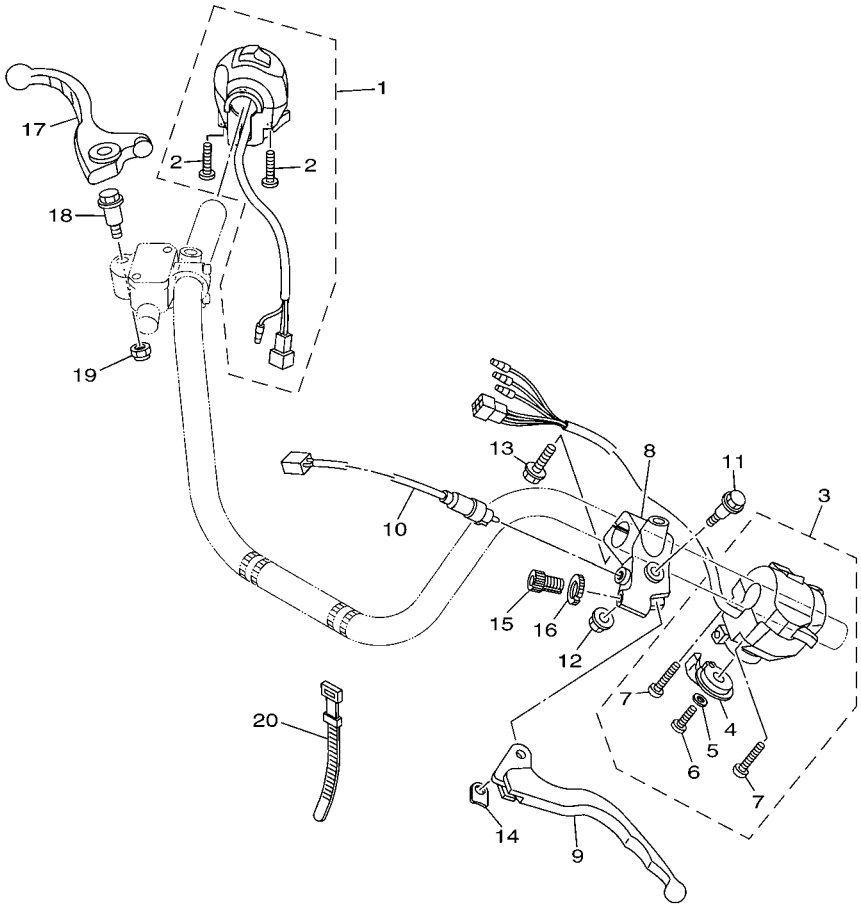

REF. NO.	PART NO. CODIGO Nº	DESCRIPTION DESCRIPCION	3P01	3P41				REMARKS OBSERVACIONES
1	5US–H3975–30	SWITCH, HANDLE 2 INTERRUPTOR DE MANIJA 2	1	1				
2	98507–06918	.SCREW, PAN HEAD .TORNILLO DE CABEZA PLANA	2	2				
3	5US–H3973–00	SWITCH, HANDLE 3 INTERRUPTOR DE MANIJA 3	1	1				
4	4TL–H3941–00	.LEVER, STARTER .PALANCA DE ARRANQUE	1	1				
5	92907–06200	.WASHER .ARANDELA	1	1				
6	98507–06008	.SCREW, PAN HEAD .TORNILLO DE CABEZA PLANA	1	1				
7	98507–06035	.SCREW, PAN HEAD .TORNILLO DE CABEZA PLANA	2	2				
8	5US–H2911–00	HOLDER, LEVER 1 SOPORTE DE LEVA 1	1	1				
9	5US–H3912–00	LEVER 1 PALANCA 1	1	1				
10	5US–H2917–00	SWITCH INTERRUPTOR	1	1				
11	90109–06863	BOLT PERNO	1	1				
12	95707–06300	NUT, NYLON TUERCA DE BRIDA	1	1				
13	97507–06425	BOLT, WITH WASHER PERNO CON ARANDELA	1	1				
14	36L–H3929–V0	PLATE, SPRING PLACA DE RESORTE	1	1				
15	90123–08046	BOLT PERNO	1	1				
16	90179–08148	NUT TUERCA	1	1				
17	5US–H3922–10	LEVER 2 PALANCA 2	1	1				
18	90109–06811	BOLT PERNO	1	1				
19	90185–06802	NUT, SELF-LOCKING TUERCA AUTOBLOCANTE	1	1				
20	36L–H3936–00	BAND, SWITCH CORD BANDA DE CABLE DE INTERRUPTOR	4	4				

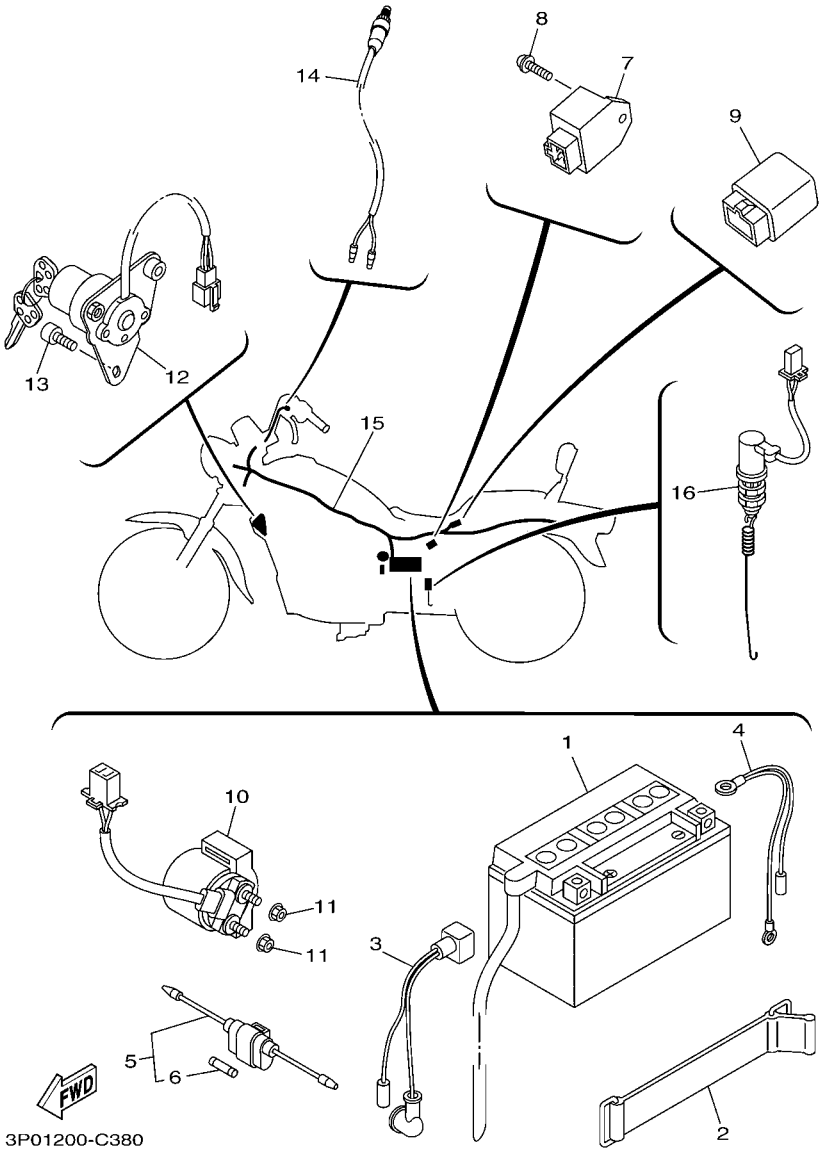

FIG. 38 ELECTRICAL 1 — EQUIPO ELECTRICO 1

REF. NO.	PART NO. CODIGO Nº	DESCRIPTION DESCRIPCION	3P01	3P41				REMARKS OBSERVACIONES
1	5US–H2100–10	BATTERY ASSY BATERIA COMPLETA	1	1				
2	5US–H2124–00	BAND, BATTERY BANDA DE BATERIA	1	1				
3	5US–H2115–00	WIRE, PLUS LEAD CABLE CONDUCTOR POSITIVO	1	1				
4	5US–H2116–00	WIRE, MINUS LEAD CABLE CONDUCTOR NEGATIVO	1	1				
5	36L–H2150–V0	FUSE HOLDER ASSY PORTA-FUSIBLES COMPLETO	1	1				
6	36L–H2151–V0	.FUSE (10A) .FUSIBLE (10A)	2	2				
7	5KA–H1960–00	RECTIFIER & REGULATOR ASSY RECTIFICADOR Y REGULADOR	1	1				
8	97607–06216	SCREW,WITH WASHER TORNILLO CAB CON PLANA C/ARAN	1	1				
9	5US–H1950–00	RELAY ASSY RELE COMPLETO	1	1				
10	5US–H1940–00	STARTER RELAY ASSY CONJUNTO ARRANCADOR RELEVO	1	1				
11	95707–06500	NUT, FLANGE TUERCA DE BRIDA	2	2				
12	5US–H2510–10	MAIN SWITCH ASSY CONJUNTO DE LLAVE IGNICION	1	1				
13	91317–06014	BOLT PERNO	1	1				
14	5US–H3980–00	FRONT STOP SWITCH ASSY INTERRUP. DE PARADA DELANTERO	1	1				
15	5US–H2590–20	WIRE HARNESS ASSY CONJUNTO DE CABLES	1	1				
16	5US–H2530–00	STOP SWITCH ASSY INTERRUPTOR DE PARADA COMPLETO	1	1				

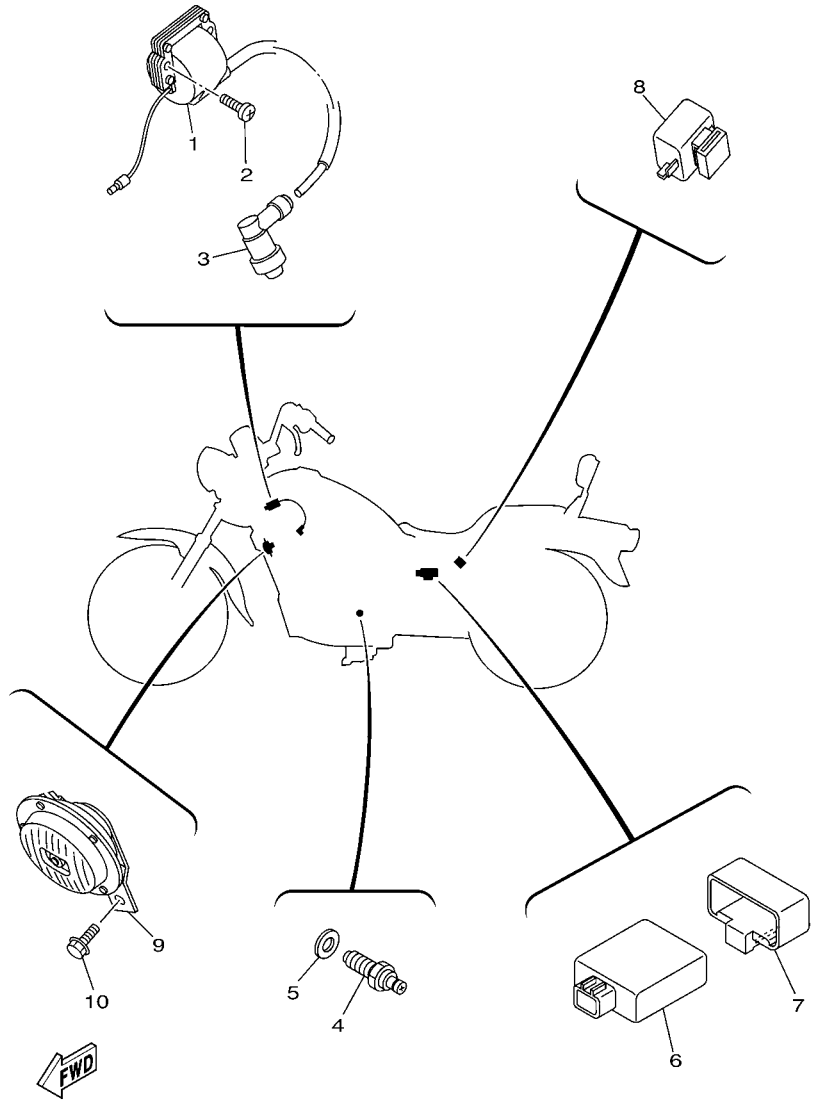

3P01200-C390

FIG. 39 ELECTRICAL 2 — EQUIPO ELECTRICO 2

REF. NO.	PART NO. CODIGO Nº	DESCRIPTION DESCRIPCION	3P01	3P41				REMARKS OBSERVACIONES
1	5US–H2310–00	IGNITION COIL ASSY BOBINA DE ENCENDIDO COMPLETA	1	1				
2	98907–06025	SCREW, BIND TORNILLO DE LIGAR	2	2				
3	4LS–H2370–00	PLUG CAP ASSY TAPON DE BUJIA COMPLT	1	1				
4	4LS–H2540–00	NEUTRAL SWITCH ASSY INTERRUPTOR NEUTRAL COMPL	1	1				
5	90430–10148	GASKET JUNTA	1	1				
6	5US–H5540–00	C.D.I. UNIT ASSY UNIDAD C.D.I. COMPLETA	1	1				
7	5US–H5546–10	BAND BANDA	1	1				
8	4LS–H3350–00	FLASHER RELAY ASSY RELE DE DESTELLADOR COMPL.	1	1				
9	5US–H3371–10	HORN BOCINA	1	1				
10	95827–06012	BOLT, FLANGE TORNILLO	1	1				

NUMERICAL INDEX
INDICE NUMERICO

PART NO. CODIGO Nº	REF. NO.
4LS–11603–00	2 – 6
4LS–11605–00	2 – 6
4LS–11607–00	2 – 6
4LS–11636–00	2 – 3
4LS–11638–00	2 – 3
5HH–14103–00	7 – 8
5DG–14106–00	7 – 4
5KA–14107–15	7 – 20
4LS–1410A–00	7 – 7
5HH–14112–25	7 – 6
4LS–14126–00	7 – 5
4LS–14131–00	7 – 3
174–14134–00	7 – 13
3H1–14142–17	7 – 16
4LS–14145–00	7 – 15
3H1–14147–00	7 – 10
878–14147–00	7 – 27
4LS–14158–00	7 – 28
4LS–14181–00	7 – 26
24W–14184–00	7 – 14
5HH–14185–00	7 – 19
127–14186–00	7 – 21
4LS–14191–00	7 – 9
2AL–14196–00	7 – 25
4LS–14197–10	7 – 22
620–1423A–69	7 – 17
583–14561–00	7 – 18
5US–1490J–00	7 – 2
4LS–14923–20	7 – 12
3H1–14962–00	7 – 11
3LN–15512–00	12 – 1
5AP–15517–00	12 – 5
401–16111–10	13 – 1
5US–25852–00	29 – 4
5US–25854–00	29 – 3
5US–25867–00	29 – 6
4LS–E1111–01	1 – 1
4LS–E111F–00	4 – 2
5US–E1142–10	1 – 18
5US–E1152–00	1 – 19
4LS–E1161–00	1 – 3
4LS–E1166–00	9 – 7
4LS–E1167–00	9 – 4
4LS–E1181–00	1 – 11
4LS–E1185–00	1 – 2
4LS–E1186–00	1 – 6
5US–E1191–00	1 – 17
5US–E1192–00	1 – 24

PART NO. CODIGO Nº	REF. NO.
4LS–E1310–01	1 – 14
4LS–E1351–00	1 – 15
5US–E1400–00	2 – 1
4LS–E1500–01	2 – 7
4LS–E1631–01	2 – 3
4LS–E1633–00	2 – 4
4LS–E2111–00	3 – 1
5YY–E2113–00	3 – 5
4LS–E2116–00	3 – 4
4LS–E2117–00	3 – 7
4LS–E2118–00	3 – 6
4LS–E2119–00	3 – 3
4LS–E2121–10	3 – 2
5YY–E2151–00	3 – 8
4LS–E2156–00	3 – 11
4LS–E2159–01	3 – 9
4LS–E2170–00	4 – 1
4LS–E2176–00	4 – 4
4LS–E2210–00	4 – 12
4LS–E2213–00	4 – 13
4LS–E2231–00	4 – 8
4LS–E2241–10	4 – 9
4LS–E3142–00	22 – 6
	22 – 23
5YY–E3300–00	5 – 1
4LS–E3324–00	5 – 13
5KA–E3325–20	5 – 2
4LS–E3329–00	5 – 8
4LS–E3411–00	5 – 12
4LS–E3451–00	5 – 14
4LS–E3569–00	6 – 2
5DG–E3586–01	6 – 1
5US–E4101–00	7 – 1
3P4–E4411–00	6 – 7
5US–E4412–00	6 – 8
5US–E4437–00	6 – 12
4LS–E443E–00	6 – 17
5US–E4450–00	6 – 9
5US–E4452–00	6 – 13
5US–E4453–00	6 – 10
5US–E4456–00	6 – 11
	6 – 19
5US–E4476–00	6 – 14
3AH–E4613–00	8 – 3
5US–E4703–10	8 – 1
5US–E4718–00	8 – 6
5US–E5111–00	9 – 2
4LS–E5191–00	10 – 10

PART NO. CODIGO Nº	REF. NO.
4LS–E5362–10	10 – 20
5US–E5418–00	10 – 12
4LS–E5441–00	9 – 13
4LS–E5451–00	10 – 2
4LS–E5461–00	10 – 16
5US–E5521–00	12 – 2
5US–E5532–00	12 – 3
5US–E5590–00	12 – 7
4LS–E5598–00	4 – 10
36L–E5611–00	11 – 11
36L–E5618–00	11 – 17
5US–E5620–00	11 – 10
5US–E5621–00	11 – 12
5YY–E5641–00	11 – 2
5YY–E5651–01	11 – 7
5US–E5661–02	11 – 1
5YY–E5666–00	11 – 6
5YY–E5671–00	11 – 20
5RE–E6150–00	13 – 5
4LS–E6154–00	13 – 6
4LS–E6164–00	13 – 17
5KA–E6321–00	13 – 8
5RE–E6324–00	13 – 9
5RE–E6351–00	13 – 10
4LS–E6356–00	13 – 14
4LS–E6357–00	13 – 22
4LS–E6358–00	13 – 13
4LS–E6371–00	13 – 7
4LS–E6381–00	13 – 23
4LS–E7211–00	14 – 13
4LS–E7221–00	14 – 8
4LS–E7231–00	14 – 9
4LS–E7241–00	14 – 12
4LS–E7285–00	14 – 7
4LS–E7402–00	14 – 6
4LS–E7410–01	14 – 1
4LS–E7456–00	14 – 21
4LS–E7471–00	14 – 4
4LS–E8101–01	16 – 7
5US–E8110–00	16 – 9
5US–E8112–00	16 – 14
5US–E8113–00	16 – 10
5US–E8115–00	16 – 13
4LS–E8140–01	16 – 1
4LS–E8185–00	15 – 2
4LS–E8337–00	16 – 2
4LS–E8511–00	15 – 5
4LS–E8512–00	15 – 6

PART NO. CODIGO Nº	REF. NO.
4LS–E8513–00	15 – 7
36L–E8531–00	15 – 8
36L–E8535–00	15 – 9
4LS–E8540–00	15 – 1
3P4–F1110–00	17 – 1
5US–F1298–00	17 – 13
5US–F1315–00	17 – 2
5US–F1316–00	17 – 6
5US–F139X–00	17 – 3
5US–F1510–00	18 – 1
5US–F1510–20	18 – 1
5US–F1510–30	18 – 1
5US–F1510–40	18 – 1
5DG–F1518–00	18 – 2
5US–F157B–00	18 – 36
5US–F1581–00	18 – 41
5US–F1611–00	18 – 4
5US–F1621–10	18 – 44
5US–F1629–00	18 – 37
5US–F1639–00	18 – 7
5US–F163A–00	18 – 8
5US–F163A–20	18 – 8
5US–F163A–30	18 – 8
5US–F163A–40	18 – 8
5US–F163E–00	18 – 13
5US–F163E–20	18 – 13
5US–F163E–30	18 – 13
5US–F163E–40	18 – 13
5US–F164F–00	18 – 24
5US–F164G–00	18 – 28
5US–F164H–00	18 – 32
5US–F1665–00	6 – 20
5US–F1681–10	18 – 43
5US–F1710–20	19 – 1
5US–F1710–30	19 – 1
5US–F1710–40	19 – 1
5US–F1710–50	19 – 1
5US–F1717–00	19 – 14
5US–F171L–00	18 – 11
5US–F171M–00	18 – 16
5US–F1720–20	19 – 3
5US–F1720–30	19 – 3
5US–F1720–40	19 – 3
5US–F1720–50	19 – 3
5US–F172A–00	18 – 19
5US–F172A–20	18 – 19
5US–F172A–30	18 – 19
5US–F172A–40	18 – 19

PART NO. CODIGO Nº	REF. NO.
5US–F172F–00–H9	18 – 21
5US–F172F–20	18 – 21
5US–F172F–30	18 – 21
5US–F172F–40	18 – 21
5US–F1731–00	19 – 5
5US–F173B–10	19 – 2
5US–F173T–00	18 – 12
	18 – 17
5US–F174B–10	19 – 4
5US–F177G–00	19 – 12
2YA–F1780–00	19 – 8
5US–F1781–00	21 – 24
5US–F2110–00	20 – 1
36L–F2123–00	20 – 2
5US–F2141–00	20 – 3
5US–F2151–00	20 – 6
5US–F2201–02	20 – 14
5US–F2210–02	20 – 9
5US–F2211–00	20 – 16
5US–F2212–02	20 – 12
5US–F2216–00	20 – 10
5US–F2219–00	20 – 11
5US–F2221–00	20 – 17
5US–F2226–00	20 – 15
5US–F2239–00	20 – 13
5US–F2247–00	20 – 18
5US–F2251–00	20 – 19
5US–F2311–00	20 – 7
5US–F3100–01	22 – 1
5US–F3102–00	22 – 2
5US–F3103–01	22 – 19
5US–F3106–01	22 – 3
5US–F3107–00	22 – 20
5US–F3110–00	22 – 18
	22 – 35
5US–F3118–00	22 – 7
	22 – 24
5US–F3141–00	22 – 5
	22 – 22
4LS–F3144–00	22 – 11
	22 – 28
5UD–F3144–00	22 – 38
4LS–F3145–00	22 – 4
	22 – 21
5US–F3147–00	22 – 8
	22 – 25
36L–F3152–00	22 – 16
	22 – 33

PART NO. CODIGO Nº	REF. NO.
4LS–F3153–00	22 – 10
	22 – 27
36L–F3157–00	22 – 17
	22 – 34
36L–F3158–00	22 – 14
	22 – 31
5US–F3170–00	22 – 13
	22 – 30
36L–F3173–00	22 – 12
	22 – 29
5US–F3174–00	21 – 21
5US–F317E–00	21 – 19
36L–F3181–00	22 – 15
	22 – 32
5US–F3194–00	22 – 9
	22 – 26
5US–F331X–00	22 – 36
36L–F3346–01	22 – 39
5US–F3391–00	21 – 23
36L–F3411–00	22 – 37
36L–F3412–00	21 – 2
5UC–F3413–00	21 – 3
5UC–F3414–00	21 – 1
5US–F3416–00	21 – 6
4LS–F3418–00	21 – 8
5US–F341E–00	21 – 5
4LS–F341E–10	21 – 4
5US–F3435–00	21 – 12
5US–F3441–00	21 – 16
5US–F3442–00	21 – 14
5US–F3466–00	21 – 32
36L–F3480–00	21 – 27
5US–F3484–00	21 – 28
5US–F3485–00	18 – 42
5US–F4100–30	23 – 1
5US–F4100–50	23 – 1
5US–F4100–60	23 – 1
5US–F4100–70	23 – 1
5US–F4181–00	23 – 2
5US–F4182–00	23 – 3
5US–F4183–00	23 – 4
5US–F4311–00	23 – 20
5US–F4500–00	23 – 7
4UU–F4512–00	23 – 11
4UU–F4515–00	23 – 9
4UU–F4521–00	23 – 8
4UU–F4523–00	23 – 12
5US–F4524–00	23 – 14

NUMERICAL INDEX
INDICE NUMERICO

PART NO. CODIGO Nº	REF. NO.
4US–F4534–00	23 – 13
4UU–F4565–00	23 – 10
5US–F470F–00	24 – 2
5US–F471F–00	24 – 4
5US–F4730–00	24 – 1
4LS–F4741–00	24 – 3
5US–F4756–00	18 – 18
5US–F4756–20	18 – 18
5US–F4756–30	18 – 18
5US–F4756–40	18 – 18
5US–F5111–10	25 – 1
5US–F5117–10	25 – 2
5US–F5118–00	25 – 9
5US–F5144–00	25 – 17
4UU–F5149–00	25 – 6
5US–F5181–00	25 – 18
5US–F5190–00	25 – 8
5US–F5196–00	25 – 12
5US–F5197–00	25 – 13
5US–F5311–00	27 – 1
5US–F5317–00	27 – 2
5US–F5321–00	27 – 8
36L–F5330–00	27 – 9
36L–F533A–00	27 – 15
5US–F5344–00	27 – 31
36L–F5351–00	27 – 11
5US–F5355–00	27 – 12
36L–F5364–00	27 – 7
36L–F5366–00	27 – 16
5US–F5371–00	27 – 32
5US–F5376–00	27 – 42
5US–F5377–00	27 – 43
5US–F5381–00	27 – 40
5US–F5387–00	27 – 19
36L–F5388–00	27 – 48
5US–F5395–00	25 – 11
	27 – 25
5US–F5396–00	27 – 26
5US–F5397–00	27 – 27
4LS–F5398–00	25 – 22
36L–F5412–00	27 – 23
5YY–F5445–00	27 – 21
5US–F5744–00	26 – 9
5US–F580U–00	26 – 3
5US–F5827–00	26 – 10
5US–F582U–00	26 – 1
5US–F583T–00	29 – 1
4UU–F5846–00	25 – 7

PART NO. CODIGO Nº	REF. NO.
5US–F5872–00	29 – 8
5US–F5875–00	29 – 11
5US–F5886–00	28 – 13
5US–F5977–00	26 – 6
5US–F6111–00	28 – 1
5US–F6240–00	28 – 3
5US–F6241–00	28 – 2
5US–F6242–00	28 – 4
5US–F6279–10	29 – 12
5US–F6280–00	28 – 11
5US–F628J–00	28 – 5
5US–F6290–00	28 – 12
5US–F6311–00	28 – 6
5US–F6331–00	28 – 8
5US–F6335–00	28 – 9
5US–F6372–00	28 – 10
5US–F6393–00	28 – 7
5US–F7111–00	30 – 1
5US–F7112–00	30 – 2
5US–F7114–00	8 – 2
5US–F7204–00	30 – 46
5US–F7211–00	30 – 36
5US–F7231–00	30 – 50
5US–F7247–00	30 – 43
5US–F7262–00	30 – 47
5US–F7285–00	30 – 37
5US–F7311–00	30 – 5
5US–F7411–00	30 – 9
5US–F7413–00	30 – 11
5US–F7421–00	30 – 10
5AP–F7423–00	30 – 12
5US–F7431–00	30 – 27
5US–F7432–00	30 – 24
5US–F7433–00	30 – 29
5US–F7437–00	30 – 31
5US–F7441–00	30 – 28
5US–F7442–00	30 – 25
5US–F744E–00	30 – 15
5US–F744F–00	30 – 16
5US–F744G–00	30 – 13
5US–F7452–00	30 – 19
5US–F8100–00	24 – 6
5US–F840F–00	18 – 23
5US–F842M–00	18 – 34
5US–F8457–00	18 – 3
5US–H1400–00	31 – 1
5US–H1410–00	31 – 3
5US–H1450–00	31 – 2

PART NO. CODIGO Nº	REF. NO.
5US–H1800–00	32 – 1
5US–H1801–00	32 – 2
5US–H183G–00	32 – 5
5US–H1940–00	38 – 10
5US–H1950–00	38 – 9
5KA–H1960–00	38 – 7
5US–H2100–10	38 – 1
5US–H2115–00	38 – 3
5US–H2116–00	38 – 4
5US–H2124–00	38 – 2
5US–H2131–00	24 – 7
36L–H2150–V0	38 – 5
36L–H2151–V0	38 – 6
5US–H2310–00	39 – 1
4LS–H2370–00	39 – 3
5US–H2510–10	38 – 12
5US–H2530–00	38 – 16
4LS–H2540–00	39 – 4
5US–H2590–20	38 – 15
5US–H2911–00	37 – 8
5US–H2917–00	37 – 10
5US–H3310–00	33 – 1
36L–H3311–00	33 – 2
	33 – 7
	33 – 15
	33 – 20
5US–H3312–00	33 – 4
	33 – 9
	33 – 17
	33 – 22
5US–H3313–00	33 – 3
	33 – 8
	33 – 16
	33 – 21
5US–H3320–00	33 – 6
5US–H3330–00	33 – 14
5US–H3333–00	33 – 5
	33 – 10
	33 – 18
	33 – 23
5US–H3340–00	33 – 19
4LS–H3350–00	39 – 8
5US–H3365–00	33 – 12
	33 – 25
5US–H3371–10	39 – 9
5US–H3507–00	34 – 2
5US–H3509–00	34 – 6
4LS–H3516–00	35 – 3

PART NO. CODIGO Nº	REF. NO.
5US–H3517–00	34 – 3
5US–H3518–00	34 – 4
5US–H3519–00	34 – 5
5US–H3523–00	34 – 7
5US–H3524–00	34 – 8
5US–H3550–10	34 – 10
5US–H3570–00	34 – 1
5US–H3912–00	37 – 9
5US–H3922–10	37 – 17
36L–H3929–V0	37 – 14
36L–H3936–00	37 – 20
4TL–H3941–00	37 – 4
5US–H3973–00	37 – 3
5US–H3975–30	37 – 1
5US–H3980–00	38 – 14
5US–H4124–00	35 – 9
5US–H4130–00	35 – 10
5US–H4145–00	35 – 15
5US–H4163–00	35 – 14
5US–H4164–00	35 – 13
5US–H4300–00	35 – 1
4LS–H4314–00	35 – 2
5US–H4315–00	35 – 6
5US–H4321–00	35 – 4
5US–H4331–00	35 – 7
5US–H4334–00	35 – 8
5US–H4340–00	35 – 11
5US–H4350–00	35 – 12
5US–H4395–00	35 – 5
5US–H4700–00	36 – 1
36L–H4714–10	36 – 2
5US–H4721–00	36 – 3
5US–H4723–00	36 – 5
5US–H4743–00	36 – 4
5US–H4751–00	18 – 47
	36 – 9
5US–H5110–00	18 – 52
5US–H5540–00	39 – 6
5US–H5546–10	39 – 7
5US–W0016–00	26 – 13
5US–W0028–00	26 – 16
5US–W0032–00	26 – 14
5US–W0041–00	29 – 2
5US–W0045–00	26 – 8
5US–W0047–00	26 – 5
5US–W0048–00	26 – 7
5US–W0053–00	26 – 17
5US–W0057–00	26 – 4

PART NO. CODIGO Nº	REF. NO.
5US–W0068–00	26 – 15
5US–W0157–00	26 – 11
5US–W0913–00	26 – 12
4LS–WE512–00	9 – 3
5US–WE515–00	9 – 1
5US–WF461–00	23 – 18
4LS–YE541–00	10 – 1
5US–YE542–01	10 – 15
90101–06278	30 – 48
90101–06809	27 – 13
90101–08590	4 – 6
90101–14800	21 – 10
90105–05800	32 – 6
90105–06800	9 – 11
90105–06801	9 – 12
90105–06802	9 – 10
90105–06812	4 – 11
90105–06818	29 – 7
90105–08006	17 – 10
90105–087A2	1 – 8
90105–088A6	17 – 7
90105–10815	26 – 18
90105–10849	30 – 22
90109–06001	16 – 3
90109–06811	37 – 18
90109–06863	37 – 11
90109–08063	27 – 33
90109–08361	27 – 22
90109–08368	27 – 36
90109–10474	30 – 6
90110–06802	1 – 13
90110–06806	31 – 5
90110–06810	4 – 3
90110–06811	31 – 4
90110–06819	26 – 2
90110–08800	21 – 17
90110–08801	21 – 13
90110–08802	12 – 8
90111–08816	18 – 25
	18 – 29
90119–05801	13 – 12
90119–06044	20 – 8
90119–06060	24 – 5
90119–06108	6 – 18
	18 – 5
	18 – 38
90119–06839	19 – 13
90123–08046	37 – 15

PART NO. CODIGO Nº	REF. NO.
90149–06011	23 – 16
90149–06830	15 – 4
90150–06806	19 – 6
90150–06809	1 – 20
	1 – 25
90150–06812	10 – 14
90150–06813	10 – 13
90153–08011	27 – 49
90155–06802	5 – 9
90157–06802	14 – 5
90159–05844	18 – 51
90159–06178	18 – 9
	18 – 14
	18 – 20
	18 – 22
90160–05806	18 – 10
90170–05302	3 – 10
90170–06228	16 – 11
90170–12060	13 – 20
90170–12065	20 – 4
90170–20224	27 – 41
90170–22800	19 – 9
90171–14020	25 – 19
	27 – 44
90176–08804	18 – 26
	18 – 30
90176–10073	20 – 21
90179–06806	30 – 55
90179–08148	37 – 16
90179–08168	27 – 24
90179–12659	11 – 18
	13 – 4
90179–25033	21 – 7
90183–05042	18 – 6
	18 – 39
	21 – 25
90185–06802	37 – 19
90185–10804	21 – 15
90201–060A3	35 – 16
90201–06380	18 – 49
	36 – 7
	36 – 11
90201–06811	18 – 46
90201–07641	5 – 4
90201–07800	5 – 7
90201–08326	4 – 5
90201–08569	23 – 5
90201–08609	1 – 9

NUMERICAL INDEX
INDICE NUMERICO

PART NO. CODIGO Nº	REF. NO.
90201–106F2	20 – 20
90201–10815	29 – 10
90201–122H1	2 – 10
	13 – 3
90201–12749	33 – 13
90201–152L1	16 – 17
	30 – 42
90201–153A1	11 – 15
90201–15700	14 – 14
90201–15800	11 – 8
90201–20266	14 – 10
90201–20272	14 – 16
90201–202L3	11 – 4
90201–225A4	19 – 11
90201–25290	12 – 6
90202–05193	23 – 17
90202–05800	8 – 9
90202–06239	1 – 23
	1 – 27
90202–26142	21 – 9
90206–06090	8 – 8
90208–04029	21 – 30
90208–07052	5 – 5
90208–17032	13 – 18
90209–15800	21 – 11
90215–12815	13 – 19
90249–12008	30 – 54
90269–04003	21 – 31
90280–03017	2 – 9
90282–05001	13 – 2
90338–08163	21 – 18
90340–12097	5 – 10
90340–14810	10 – 6
90340–32812	10 – 8
90387–1500N	25 – 10
90401–10813	29 – 9
90430–06817	4 – 15
90430–10148	39 – 5
90430–12227	5 – 11
90450–45802	6 – 6
90462–16818	9 – 9
90467–09006	23 – 21
90467–10819	6 – 3
90467–11106	6 – 16
90467–13042	9 – 8
90468–12007	27 – 35
90468–26048	11 – 3
90480–13018	1 – 22

PART NO. CODIGO Nº	REF. NO.
90480–13018	1 – 28
90480–13426	19 – 7
90480–24186	19 – 10
90501–10245	30 – 53
90501–12081	11 – 13
90501–12743	30 – 34
90501–216A6	13 – 11
90502–09024	21 – 29
90506–16036	27 – 10
90506–20223	30 – 40
90506–28146	30 – 8
90506–35517	30 – 4
90508–14857	13 – 24
90508–26667	11 – 5
90508–32837	16 – 5
90560–06201	1 – 21
	1 – 26
91317–05010	23 – 19
91317–06014	29 – 13
	38 – 13
91317–06016	21 – 20
	21 – 22
91317–06020	6 – 5
	8 – 4
9131N–08040	17 – 4
	17 – 5
91401–16012	30 – 45
91401–20012	30 – 33
	30 – 52
91401–20015	27 – 39
91401–30030	25 – 21
	27 – 45
91701–06032	30 – 32
91701–08018	30 – 44
91810–14804	1 – 12
91830–21014	9 – 6
	10 – 3
	10 – 17
92907–06200	13 – 15
	37 – 5
92907–08100	27 – 38
92907–12200	20 – 5
92907–14200	25 – 20
9290N–06600	30 – 51
93101–10838	10 – 22
93102–12875	16 – 4
93102–12877	13 – 25
93102–20876	14 – 18

PART NO. CODIGO Nº	REF. NO.
93104–22805	25 – 4
	27 – 5
93105–45017	25 – 5
93106–26801	27 – 20
93109–20821	11 – 19
93210–14899	10 – 7
93210–19809	10 – 21
93210–25804	32 – 4
93210–30611	6 – 4
93210–328A4	10 – 9
93210–42807	27 – 6
93210–44889	1 – 7
93210–56803	32 – 3
93210–57897	1 – 16
93210–71462	1 – 4
93306–004Y0	27 – 18
93306–202Y0	25 – 3
	27 – 3
93306–202Y1	27 – 4
93306–202YD	2 – 8
93306–202YE	14 – 19
93306–203X2	14 – 3
93306–204Y6	14 – 17
93306–205X3	2 – 2
93306–210Y4	14 – 2
93410–20038	14 – 11
93420–42801	27 – 17
93430–12008	30 – 3
93450–16812	2 – 5
93501–04805	30 – 35
93503–16807	13 – 21
93507–32819	11 – 14
93602–20800	5 – 6
93604–10011	15 – 3
93608–30839	9 – 5
	16 – 8
93822–15808	14 – 20
94112–16800	27 – 28
94127–18810	25 – 14
94212–16800	27 – 29
94225–18823	25 – 15
94312–16800	27 – 30
94325–18822	25 – 16
94568–43088	4 – 7
94580–88130	27 – 46
94680–88001	27 – 47
94700–00834	1 – 10
95027–06010	14 – 22

PART NO. CODIGO Nº	REF. NO.
95027–06016	4 – 14
95027–06020	1 – 5
95027–06035	10 – 4
	10 – 18
95027–06045	10 – 5
	10 – 19
9502N–06025	32 – 7
95301–05600	34 – 9
95304–06700	16 – 12
95304–12600	33 – 11
	33 – 24
95307–06600	18 – 50
	30 – 49
	36 – 12
95307–06700	30 – 39
95307–08700	27 – 50
95307–10700	30 – 7
95309–06700	30 – 18
9530N–06600	13 – 16
	27 – 14
9530N–08600	27 – 34
9530N–08700	27 – 37
95607–06100	36 – 8
95704–06500	35 – 19
95707–05500	18 – 53
95707–06300	37 – 12
95707–06500	18 – 33
	38 – 11
95707–08500	17 – 12
95707–10500	17 – 9
	30 – 23
95707–12500	2 – 11
95807–06012	18 – 45
	18 – 48
	21 – 33
	36 – 10
95807–06014	35 – 17
95807–08020	17 – 14
	30 – 26
95807–08025	30 – 20
95817–08020	18 – 27
	18 – 31
95817–08090	30 – 21
95817–08120	17 – 11
95817–10080	17 – 8
95824–06045	35 – 18
95827–06012	28 – 14
	39 – 10

PART NO. CODIGO Nº	REF. NO.
95827–06025	18 – 40
95827–08020	8 – 5
97007–06014	30 – 17
97007–08016	23 – 6
97027–06020	16 – 15
97507–06425	37 – 13
97607–03106	7 – 23
97607–04114	7 – 24
97607–05220	6 – 15
97607–06216	18 – 35
	38 – 8
97707–50012	21 – 26
97707–50016	18 – 15
9770N–40620	36 – 6
98507–03008	23 – 15
98507–06008	37 – 6
98507–06010	10 – 11
98507–06020	30 – 38
98507–06035	37 – 7
98507–06918	37 – 2
9850N–06012	12 – 4
98517–06012	30 – 30
98706–04012	29 – 5
98907–06025	39 – 2
98980–06010	8 – 7
99001–05600	5 – 3
99001–06600	30 – 14
99001–10600	11 – 16
	16 – 6
99009–15400	11 – 9
	14 – 15
	16 – 16
	30 – 41
99009–20500	13 – 26

PART NO. CODIGO Nº	REF. NO.